# GENERAL NOTES:

1. ALL WORK MUST COMPLY WITH THE CODES LISTED BELOW AND IN THE SPECIFICATIONS
2. THIS STRUCTURE HAS BEEN DESIGNED IN ACCORDANCE WITH THE PROVISIONS OF THE INTERNATIONAL BUILDING CODE, 2015 EDITION, AS ADOPTED BY THE NORTH CAROLINA STATE BUILDING CODE, 2018 EDITION, EFFECTIVE JANUARY, 2019.
3. VERIFY ALL DRAWINGS FOR COORDINATION BETWEEN TRADES, LOCATE SLOTS, SLEEVES AND TRENCHES AS REQUIRED FOR MECHANICAL TRADES. PROVIDE AND INSTALL ANCHORS, INSERTS, HANGERS, ETC. AS REQUIRED FOR VARIOUS TRADES.
4. SUBMIT SHOP DRAWINGS FOR APPROVAL BEFORE PROCEEDING WITH THE WORK. THE CONTRACTOR MUST CHECK ALL DIMENSIONS AND ACCEPT FULL RESPONSIBILITY FOR DIMENSIONAL CORRECTNESS.
5. UNDER NO CIRCUMSTANCES CAN THE REPRODUCTION OF CONTRACT DRAWINGS BE USED AS SHOP DRAWINGS.
6. LOADING APPLIED TO THE STRUCTURE DURING THE PROCESS OF CONSTRUCTION MUST NOT EXCEED THE SAFE LOAD-CARRYING CAPACITY OF THE STRUCTURAL MEMBERS. THE LIVE LOADINGS USED IN THE DESIGN OF THIS STRUCTURE ARE INDICATED IN THE “DESIGN CRITERIA NOTES”. DO NOT APPLY ANY CONSTRUCTION LOADS UNTIL ALL STRUCTURAL FRAMING IS PROPERLY CONNECTED TOGETHER AND UNTIL ALL TEMPORARY BRACING IS IN PLACE.
7. IN ACCORDANCE WITH GENERALLY ACCEPTED CONSTRUCTION PRACTICES, CONTRACTOR WILL BE SOLELY AND COMPLETELY RESPONSIBLE FOR CONDITION OF JOB SITE INCLUDING SAFETY OF ALL PERSONS AND PROPERTY DURING PERFORMANCE OF THE WORK.
8. THE DUTY OF THE ARCHITECT IN CONDUCTING CONSTRUCTION REVIEW OF CONTRACTOR'S PERFORMANCE IS NOT INTENDED TO INCLUDE REVIEW OF ADEQUACY OF CONTRACTOR'S SAFETY MEASURES IN, ON, OR NEAR THE CONSTRUCTION SITE.
9. TYPICAL DETAILS AND GENERAL NOTES APPLY TO ALL PARTS OF THE JOB EXCEPT WHERE SPECIFICALLY DETAILED OR NOTED OTHERWISE.
10. INFORM THE PROFESSIONAL OF RECORD IN WRITING OF ANY DEVIATION FROM THE CONTRACT DOCUMENTS. THE CONTRACTOR IS NOT RELIEVED OF THE RESPONSIBILITY OF SUCH DEVIATION BY THE PROFESSIONAL OF RECORD REVIEW OF SHOP DRAWINGS, PRODUCT DATA, ETC. UNLESS THE CONTRACTOR HAS SPECIFICALLY INFORMED THE PROFESSIONAL OF RECORD OF SUCH DEVIATION AT THE TIME OF SUBMISSION, AND THE PROFESSIONAL OF RECORD HAS GIVEN WRITTEN APPROVAL TO THE SPECIFIC DEVIATION.

FOUNDATION:

1. FOUNDATIONS FOR THIS STRUCTURE HAVE BEEN DESIGNED IN ACCORDANCE WITH THE RECOMMENDATIONS IN THE GEOTECHNICAL EXPLORATION REPORT, PREPARED BY HIGHLANDS ENVIRONMENTAL SOLUTION, INC. AND DATED FEBRUARY 6, 2025.
2. PERFORM ALL EARTHWORK IN ACCORDANCE WITH THE RECOMMENDATIONS IN THE GEOTECHNICAL ENGINEERING REPORT.
3. THE ENTIRE STRUCTURE SHALL BE FOUNDED ON VERY WELL COMPACTED STRUCTURAL FILL OR UNDISTURBED SOIL WITH A DESIGN BEARING PRESSURE OF 1500 P.S.F.
4. PRIOR TO PLACING FOUNDATION CONCRETE, ALL FOUNDATION EXCAVATIONS MUST BE INSPECTED BY THE GEOTECHNICAL ENGINEER TO VERIFY THE EXTENT OF ANY LOOSE, SOFT, OR UNSATISFACTORY SOIL AND TO VERIFY THE DESIGN BEARING PRESSURE. THE GEOTECHNICAL ENGINEER WILL PROVIDE DIRECTION FOR CORRECTIVE ACTION WHERE REQUIRED.
5. DO NOT INSTALL FOUNDATION WORK UNTIL IT HAS BEEN COORDINATED WITH ADJACENT UNDERGROUND UTILITIES. FOOTINGS MUST BE SLEEVED OR LOWERED WHERE REQUIRED. DO NOT INSTALL UTILITIES UNDER ISOLATED COLUMN FOOTINGS. INSTALL UTILITIES PERPENDICULAR TO WALL FOOTINGS.
6. DO NOT PUT IN UNBALANCED BACKFILL AGAINST FOUNDATION WALLS UNLESS WALLS ARE SECURELY BRACED AGAINST OVERTURNING.
7. FROST LINE DEPTH IS 24" BELOW GRADE. BOTTOM OF EXTERIOR FOUNDATIONS MUST BEAR A MINIMUM OF 24" BELOW FINAL GRADE. LOWER FOOTINGS AS REQUIRED TO MAINTAIN COVERAGE.

CAST IN PLACE CONCRETE:

1. CAST IN PLACE CONCRETE MUST COMPLY WITH THE AMERICAN CONCRETE INSTITUTE (ACI- 318-14), COMMENTARY, (ACI-318R-14), AND THE SPECIFICATIONS FOR STRUCTURAL CONCRETE (ACI 301).
2. DETAILING OF ALL CONCRETE STEEL REINFORCEMENT MUST BE IN ACCORDANCE WITH THE MANUAL OF STANDARD PRACTICE FOR DETAILING REINFORCED CONCRETE STRUCTURES (ACI-315).
3. ALL CONCRETE MUST BE NORMAL WEIGHT, UNLESS OTHERWISE NOTED, CONCRETE HAVING A MINIMUM COMPRESSIVE STRENGTH AT 28 DAYS AS FOLLOWS:
   A. SLAB ON GRADE 4,500 PSI
   B. FOOTINGS 3,000 PSI
   C. CONCRETE EXPOSED TO WEATHER MUST BE AIR ENTRAINED.
4. ALL REINFORCING MUST BE AS FOLLOWS:
   A. REINFORCING BARS - ASTM A-615, GRADE 60
   B. WELDED REINFORCING BARS - ASTM A706, GRADE 60
   C. EPOXY COATED REINFORCING BARS – ASTM A775
   WELDED WIRE FABRIC - ASTM A-1064 FLAT SHEET TYPE, ROLL TYPE NOT ACCEPTABLE.

CAST IN PLACE CONCRETE CONTINUED:

5. WELDED WIRE FABRIC MUST BE PROPERLY SUPPORTED PRIOR TO PLACING CONCRETE. HOOKING OF FABRIC IS NOT PERMITTED.
6. UNLESS OTHERWISE NOTED, REINFORCING STEEL MARKED CONTINUOUS (CONT.) MUST BE LAPPED PER THE REINFORCING LAP SCHEDULE.
7. HOLD ALL REINFORCING STEEL SECURELY IN PLACE TO PREVENT DISLOCATION DURING THE POURING OPERATION. SUPPORT SLAB REINFORCING BARS ON HIGH CHAIRS AND BAR SPACERS OF SUITABLE DESIGN, OR CONCRETE BLOCKS HAVING THE SAME MINIMUM COMPRESSIVE STRENGTH OF THE CONCRETE SLAB.
8. DO NOT PLACE CONCRETE UNTIL ALL EMBEDDED WORK HAS BEEN INSTALLED, TESTED AND INSPECTED.
9. EXCEPT AS OTHERWISE SHOWN MINIMUM PROTECTION (CONCRETE COVER) FOR REINFORCING STEEL MUST BE AS FOLLOWS:

   CONCRETE SURFACES CAST AGAINST SOIL: 3"
   CONCRETE SURFACES EXPOSED TO EARTH OR WEATHER:1-1/2" FOR #5 BARS AND SMALLER; 2" FOR #6 BARS AND LARGER
   INTERIOR CONCRETE SURFACES: 3/4" FOR SLABS; 1-1/2" FOR BEAMS & COLUMNS

POST-INSTALLED ANCHOR:

1. POST-INSTALLED ANCHORS MUST COMPLY WITH THE AMERICAN CONCRETE INSTITUTE (ACI- 318-11). SUBMIT CALCULATIONS DEMONSTRATING THAT THE PRODUCT IS CAPABLE OF ACHIEVING THE PERFORMANCE VALUES INDICATED IN THE DRAWINGS. PRODUCT MUST HAVE AN ICC ESR SHOWING COMPLIANCE WITH THE RELEVANT BUILDING CODE.
2. ANCHOR CAPACITY IS DEPENDENT ON SPACING BETWEEN ADJACENT ANCHORS AND EDGE DISTANCE. INSTALL ANCHORS IN ACCORDANCE WITH SPACING AND EDGE DISTANCES INDICATED IN THE DRAWINGS.
3. INSTALL ANCHORS PER THE MANUFACTURER INSTRUCTIONS, AS INCLUDED IN THE ANCHOR PACKAGING.
4. DRILL CORRECT HOLE SIZES FOR MECHANICAL ANCHORS WITH CARBIDE-TIPPED DRILL BITS MEETING THE DIAMETER REQUIREMENTS OF ANSI B212.15.
5. DRILL HOLES WITH A HAMMER DRILL UNLESS OTHERWISE NOTED.
6. DO NOT DISTURB OR APPLY LOAD TO ADHESIVE ANCHORS PRIOR TO FULL CURE OF THE ADHESIVE.
7. ADHESIVE ANCHOR SUBJECT TO SUSTAINED TENSION LOADS MUST BE INSTALLED BY A PERSON CERTIFIED BY AN APPLICABLE CERTIFICATION PROGRAM. CERTIFICATION MUST INCLUDE WRITTEN AND PERFORMANCE TESTS IN ACCORDANCE WITH ACI/CRSI ADHESIVE ANCHOR INSTALLER CERTIFICATION PROGRAM. SUBMIT INSTALLER CERTIFICATION PRIOR TO INSTALLATION.

ROUGH CARPENTRY:

1. ROUGH CARPENTRY MUST COMPLY WITH THE NATIONAL FOREST PRODUCTS ASSOCIATION (NFPA) “NATIONAL DESIGN SPECIFICATION FOR WOOD CONSTRUCTION”.
2. UNLESS OTHERWISE NOTED, ALL NAILING MUST BE IN ACCORDANCE WITH THE “FASTENING SCHEDULE” SHOWN IN TABLE 2304.10.1 OF THE INTERNATIONAL BUILDING CODE.
3. ALL WOOD FRAMING MUST MEET THE REQUIREMENTS OF PS 20 “AMERICAN SOFTWOOD LUMBER STANDARD” AND THE FOLLOWING MINIMUM REQUIREMENTS:
   A. MOISTURE CONTENT - SEASONED, WITH 19% MAXIMUM MOISTURE CONTENT
   B. GRADE – NO.1
   C. SPECIES – SOUTHERN PINE GRADED UNDER SPIB RULES
4. CONSTRUCTION PANELS MUST COMPLY WITH PS1 “U.S. PRODUCT STANDARD FOR CONSTRUCTION AND INDUSTRIAL PLYWOOD” FOR PLYWOOD CONSTRUCTION PANELS AND THE FOLLOWING:
   A. ROOF SHEATHING – ¾" APA RATED SHEATHING, EXTERIOR EXPOSURE DURABILITY CLASSIFICATION.
5. STAGGER ALL END JOINTS FOR SHEATHING 4'-0". ALL ROOF SHEATHING MUST BE PLACED PERPENDICULAR TO THE DIRECTION OF THE SUPPORTING MEMBER. ALL END JOINTS MUST BE MADE ON SUPPORTING MEMBERS.
6. ALL SHEATHING MUST BE NAILED AS FOLLOWS:
   A. ROOF SHEATHING - 10d NAILS @ 6" O/C EDGE NAILING AND 12" O/C FIELD NAILING
7. STORE LUMBER AND PLYWOOD ON LEVEL RACKS AND KEEP FREE OF GROUND TO AVOID WARPING. STACK TO INSURE PROPER VENTILATION AND DRAINAGE.
8. PRESSURE TREAT ALL WOOD MEMBERS PERMANENTLY EXPOSED TO WEATHER, SILL PLATES AROUND THE BUILDING PERIMETER, OR ANY WOOD IN CONTACT WITH CONCRETE OR MASONRY IN ACCORDANCE WITH THE SPECIFICATIONS.
9. PROVIDE JOIST BRIDGING, BRACING, ETC. AS REQUIRED BY THE SPECIFICATIONS. IN ADDITION, CROSS BRIDGING OR FULL DEPTH BLOCKING IS REQUIRED AT ROOF RAFTERS NOT RECEIVING CEILING SHEATHING AND AT WALL STUDS NOT RECEIVING SHEATHING ON BOTH FACES. UNLESS OTHERWISE NOTED, CROSS BRIDGING MUST BE SIMPSON TBC (OR EQUIVALENT). MAXIMUM BRIDGING/BLOCKING SPACING MUST BE AT 8'-0" O.C. OR AT 1/3 POINTS OF MEMBER SPAN WHICHEVER IS LESS. COORDINATE EXTENTS OF WALL AND CEILING SHEATHING WITH ARCHITECTURAL DRAWINGS.
10. COORDINATE JOIST LOCATIONS WITH PLUMBING, MECHANICAL AND ARCHITECTURAL REQUIREMENTS PRIOR TO INSTALLATION.
11. PROVIDE METAL FRAMING CONNECTORS OF SIZE TO FIT MEMBERS AND OF SUFFICIENT STRENGTH TO DEVELOP THE FULL STRENGTH OF THE SUPPORTED MEMBER, COMPLETE WITH SPECIAL NAILS AS REQUIRED.

ROUGH CARPENTRY CONTINUED:

12. AT A MINIMUM, PROVIDE GALVANIZED METAL FRAMING CONNECTORS IN ACCORDANCE WITH ASTM A653, GRADE A (STRUCTURAL QUALITY). GALVANIZE METAL FRAMING CONNECTORS IN CONTACT WITH PRESSURE TREATED WOOD IN ACCORDANCE WITH ASTM A 653 WITH A G185 COATING.
13. STEEL PLATE CONNECTORS MUST COMPLY WITH ASTM A36 SPECIFICATIONS. BOLTS CONNECTING TO WOOD MEMBERS MUST COMPLY WITH ASTM A307 AND MUST BE ¾" DIAMETER UNLESS OTHERWISE NOTED.
14. METAL FASTENERS (NAILS, BOLTS, SCREWS, ETC.) IN CONTACT WITH PRESSURE TREATED WOOD MUST BE GALVANIZED PER ASTM A-153 WITH G185 COATING.
15. WHERE MULTIPLE FRAMING MEMBERS ARE INDICATED, SCAB CONTINGENT MEMBERS TOGETHER WITH 16d NAILS AT 12" ON CENTER, ALTERNATING AT 2 INCHES FROM EACH EDGE, UNLESS OTHERWISE NOTED.

CONCRETE MASONRY:

1. MASONRY CONSTRUCTION MUST COMPLY WITH THE MASONRY SOCIETY “BUILDING CODE FOR MASONRY STRUCTURES” (TMS 402-2016) AND “SPECIFICATION FOR MASONRY STRUCTURES” (TMS 602-2016).
2. CONCRETE MASONRY UNITS MUST CONFORM TO ASTM C90 AND BE MADE WITH LIGHTWEIGHT AGGREGATE. THE COMPRESSIVE STRENGTH OF MASONRY, F'm, EXPRESSED AS FORCE PER UNIT OF NET CROSS-SECTIONAL AREA, MUST BE 2,000 PSI AT 28 DAYS.
3. MORTAR MUST CONFORM TO ASTM C270, TYPE S. AGGREGATE FOR MORTAR MUST COMPLY WITH ASTM C144.
4. GROUT MUST CONFORM TO ASTM C476 AND MUST HAVE A MINIMUM 28 DAY COMPRESSIVE STRENGTH OF 2,500 PSI. SLUMP AT POINT OF PLACEMENT MUST BE BETWEEN 8 AND 11 INCHES.
5. ALL REINFORCING BARS MUST CONFORM TO ASTM A615, GRADE 60. SHOP FABRICATED BARS SHOWN TO BE BENT OR HOOKED. BARS MUST BE LAPPED AS FOLLOWS: #4-20", #5-30", #6-54", #7-63", #8-72", #9-81".
6. REBAR DOWELS MUST BE THE SAME SIZE AND SPACING AS VERTICAL REINFORCING FROM FOUNDATION. DOWELS MUST HAVE STANDARD ACI HOOKS.
7. PROVIDE BAR POSITIONERS FOR VERTICAL REINFORCING AT A MAXIMUM SPACING OF 200 BAR DIAMETERS, AT GROUT LIFT HEIGHTS, OR BAR SPLICE LOCATIONS, WHICHEVER IS LESS.
8. GROUTING MUST BE STOPPED 1-1/2" BELOW THE TOP OF A COURSE SO AS TO FORM A KEY AT THE POUR JOINT.
9. ALL BOLTS, ANCHORS, ETC. PLACED IN THE WALL, MUST BE GROUTED SOLID INTO POSITION.
10. GROUT ALL CELLS SOLID BELOW FINISHED FIRST FLOOR.
11. HORIZONTAL JOINT REINFORCING MUST BE STANDARD 9 GAGE LADDER TYPE IN CMU WALLS AT 16" ON-CENTER. JOINT REINFORCING MUST COMPLY WITH ASTM A951.
12. DISCONTINUE ALL HORIZONTAL REINFORCING AT CONTROL JOINTS EXCEPT FOR BOND BEAMS AT JOIST BEARING ELEVATIONS. HORIZONTAL BOND BEAMS MUST HAVE CONTINUOUS REINFORCING AS SHOWN IN THE SECTIONS AND DETAILS.

OPEN WEB STEEL JOIST:

1. OPEN-WEB STEEL JOIST MUST COMPLY WITH THE STANDARD SPECIFICATION FOR OPEN WEB JOISTS OF THE STEEL JOIST INSTITUTE (SJI), LATEST EDITION.
2. OPEN-WEB STEEL JOIST MUST HAVE A MINIMUM BEARING LENGTH AS FOLLOWS:
   A. ON STEEL - 'K' SERIES = 2 ½”
   B. ON MASONRY – AS DETAILED
3. WELD ALL STEEL JOISTS WHEREVER THEY BEAR ON STRUCTURAL STEEL MEMBERS, IN ACCORDANCE WITH THE S.J.I AND THE A.I.S.C SPECIFICATIONS
4. PREPARE AND SUBMIT SHOP DRAWINGS INDICATING THE JOIST LAYOUT, SPECIAL CONNECTIONS, AND ACCESSORIES. INCLUDE MARK, NUMBER, TYPE, LOCATION, AND SPACING OF JOISTS AND BRIDGING.
5. THE JOIST MANUFACTURER IS RESPONSIBLE FOR CONTINUOUS JOIST BRIDGING LINES SATISFYING THE REQUIREMENTS OF THE SJI SPECIFICATION FOR THE TOP AND BOTTOM CHORDS OF ALL STEEL JOISTS, AS WELL AS ANY ADDITIONAL BRIDGING / BRACING SHOWN ON THE DRAWINGS OR REQUIRED FOR JOISTS SUBJECTED TO NET UPLIFT OF OTHER SPECIAL LOADS. PROVIDE JOIST BRIDGING REQUIRED AT CHANGES OF JOIST DEPTHS AND AT ENDS OF ALL BRIDGING LINES UNLESS SUCH ENDS ARE PROPERLY ANCHORED INTO THE INTERSECTING INTERIOR OR END WALLS.
6. ROOF JOISTS MUST BE DESIGNED FOR A NET UPLIFT OF 15 PSF. A SINGLE LINE OF BOTTOM CHORD BRIDGING MUST BE PROVIDED NEAR THE FIRST BOTTOM CHORD PANEL POINTS WHENEVER UPLIFT LOADS OCCUR.
7. INSTALL JOIST BRIDGING AND CONNECTIONS COMPLETELY PRIOR TO PLACING ANY CONSTRUCTION LOADS ON THE JOISTS. CONSTRUCTION LOADING MUST NOT EXCEED THE JOIST DESIGN LOAD.
8. REINFORCE CONCENTRATED LOADS EXCEEDING 100 POUNDS AND NOT LOCATED AT JOIST PANEL POINTS PER THE TYPICAL DETAIL.

STEEL DECK:

1. STEEL DECK MUST CONFORM TO THE LATEST EDITION OF THE AMERICAN IRON AND STEEL INSTITUTE (AISI), “SPECIFICATION FOR THE DESIGN OF COLD-FORMED STEEL STRUCTURAL STEEL MEMBERS” AND THE STEEL DECK INSTITUTE (SDI) “DESIGN MANUAL FOR ROOF DECKS”.
2. ATTACH ROOF DECK TO SUPPORTS WITH 3/4" DIAMETER ARC SPOT WELDS IN ALL RIBS WHERE SIDELAPS OCCUR AND AT 6 INCHES ON CENTER ALONG SUPPORTS. FASTEN ADJACENT DECK UNITS ALONG SIDELAPS WITH WELDS AT 1/5 POINTS BETWEEN SUPPORTS. FASTEN EDGEMOST DECK PANEL TO SUPPORTS WITH 5/8" DIAMETER ARC SPOT WELDS AT SAME SPACING AS SIDELAP FASTENERS.
3. AS AN ALTERNATIVE TO ARC SPOT WELDS, MECHANICAL FASTENERS MAY BE USED. INSTALL POWDER-ACTUATED FASTENERS OR SCREW FASTENERS IN ACCORDANCE WITH THE MANUFACTURER'S RECOMMENDATIONS. PROVIDE EQUIVALENT LOAD VALUES SHOWING THE MECHANICAL FASTENERS MEET OR EXCEED THE PROVIDED LOAD CRITERIA. FASTENERS MUST BE SDI LISTED FOR DIAPHRAGM DESIGN AND WIND UPLIFT. FASTENERS MUST BE RECOGNIZED BY ICC-ES FOR DIAPHRAGM SHEAR STRENGTH IN ACCORDANCE WITH THE LATEST VERSION OF ICC-ES AC43.
4. SPAN DECK PERPENDICULAR TO SUPPORTS, CONTINUOUS OVER A MINIMUM OF THREE SPANS. PROVIDE FULL SHEETS ON EDGES OF DIAPHRAGMS.
5. WELDING MUST BE IN ACCORDANCE WITH AWS D1.3, “STRUCTURAL WELDING CODE - SHEET STEEL”. FIELD WELDS MUST BE WIRE BRUSHED AND PAINTED WITH RICH ZINC PAINT.
6. PROVIDE SUPPORTS ON ALL SIDES OF DECK OPENINGS MEASURING GREATER THAN 12" ON ANY SIDE OF OPENING. SPAN SUPPORTS BETWEEN ADJACENT BEAMS OR JOISTS ON TWO SIDES. UNLESS OTHERWISE NOTED USE L4X4X1/4. COORDINATE OPENING SIZES, LOCATIONS, AND DETAILS WITH ARCHITECTURAL, MECHANICAL, PLUMBING, AND ELECTRICAL DRAWINGS.
7. DO NOT HANG OR SUPPORT ANY PERMANENT LOADS FROM METAL ROOF DECK.
8. DURING STEEL DECK ERECTION DISTRIBUTE CONSTRUCTION LOADS TO PREVENT DAMAGE TO DECK. CONCENTRATED CONSTRUCTION LOADS OF 150 POUNDS OR LESS DISTRIBUTED OVER A 1'-0" WIDE SECTION OF DECK MUST NOT REQUIRE ANY FURTHER DISTRIBUTION. USE WORKING PLATFORMS FOR CONCENTRATED LOADS OF OVER 150 POUNDS, SUCH THAT THE RESULTING UNIFORM CONSTRUCTION LOAD ON THE DECK DOES NOT EXCEED 50 PSF.


WALKER the GROUP ARCHITECTURE incorporated
PO BOX 541, NEW BERN, NC 28563
252-636-8778


NORTH CAROLINA PROFESSIONAL ENGINEER SEAL 022830 07/28/2025 KEVIN M. ROOMSBURG


NRW ENGINEERING
Structural Consultants
748 Lord Dunmore Drive, Suite 101
Virginia Beach, VA 23464
Phone 757-474-0612
Fax 757-474-0919
NC license C-1393


**CRAVEN COMMUNITY COLLEGE-PUBLIC SAFETY TRAINING CENTER**

**Executive Pkwy**
**New Bern, NC 28562**

**BID DOCUMENTS**

**SCO # 24-27879-01A**

| No. | Date | Revisions |
|---|---|---|

Project Number: 2407.SAFE
Date: 07/28/2025
Drawn: DFS
Checked: KMR
Scale: AS NOTED
Drawing Title: GENERAL NOTES

Sheet Number: 115 Of 155
Drawing Number: S001

# GENERAL NOTES:

UNISTRUT:

1. FRAMING SHALL BE A STRUT TYPE METAL FRAMING SYSTEM (STRUT SYSTEM) MANUFACTURED BY ATKORE UNISTRUT OR APPROVED EQUAL.

2. STRUT SYSTEM AND COMPONENTS MUST BE SUPPLIED FROM A SINGLE APPROVED MANUFACTURER.

3. THE MANUFACTURER SHALL HAVE AT LEAST 10 YEARS EXPERIENCE IN MANUFACTURING STRUT SYSTEMS.

4. THE MANUFACTURER MUST CERTIFY IN WRITING ALL COMPONENTS SUPPLIED HAVE BEEN PRODUCED IN ACCORDANCE WITH AN ESTABLISHED QUALITY ASSURANCE PROGRAM.

5. WORK SHALL MEET THE REQUIREMENTS OF THE FOLLOWING STANDARDS:

   A. FEDERAL, STATE AND LOCAL CODES
   B. NORTH AMERICAN SPECIFICATION FOR THE DESIGN OF COLD-FORMED STEEL STRUCTURAL MEMBERS, 2016.
   C. AMERICAN SOCIETY FOR TESTING AND MATERIALS (ASTM)
   D. METAL FRAMING MANUFACTURER'S ASSOCIATION (MFMA)

6. SUBMIT THE FOLLOWING:

   A. ASSEMBLY DRAWINGS NECESSARY TO INSTALL THE STRUT SYSTEM IN COMPLIANCE WITH THE CONTRACT DRAWINGS
   B. UNISTRUT CONNECTION DRAWINGS OR CUT SHEETS
   C. PERTINENT MANUFACTURERS PUBLISHED DATA

7. ALL MATERIAL IS TO BE DELIVERED TO THE WORK SITE IN ORIGINAL FACTORY PACKAGING TO AVOID DAMAGE TO THE FINISH.

8. UPON DELIVERY TO THE WORK SITE, ALL COMPONENTS SHALL BE PROTECTED FROM THE ELEMENTS BY A SHELTER OR OTHER COVERING.

9. MANUFACTURER SHALL WARRANT FOR 1 YEAR FROM THE SHIPMENT DATE THAT PRODUCTS WILL BE FREE FROM DEFECTS IN MATERIAL OR MANUFACTURE. IN THE EVENT OF ANY SUCH DEFECT IN VIOLATION OF THE WARRANTY, MANUFACTURER SHALL HAVE THE OPTION TO REPAIR OR REPLACE ANY SUCH DEFECTIVE PRODUCT.

10. INSTALLER SHALL WARRANT FOR 1 YEAR FROM THE DATE OF COMPLETION OF WORK THAT THE WORK WILL BE FREE OF DEFECTS IN INSTALLATION. IN THE EVENT OF ANY SUCH DEFECT IN VIOLATION OF THE WARRANTY, INSTALLER SHALL HAVE THE OPTION TO REPAIR OR REPLACE ANY SUCH DEFECTIVE PRODUCT.

11. ALL CHANNEL MEMBERS SHALL BE FABRICATED CONFORMING TO ONE OF THE FOLLOWING ASTM SPECIFICATIONS:

    A. ASTM A1011 SS GR 33, PLAIN FINISH
    B. ASTM A1011 SS GR 33, PERMA-GREEN (GR) E-COAT FINISH

12. ALL FITTINGS SHALL BE FABRICATED CONFORMING TO ONE OF THE FOLLOWING ASTM SPECIFICATIONS:

    A. CARBON STEEL: ALL CARBON STEEL FITTINGS SHALL BE FABRICATED FROM STEEL THAT MEETS/EXCEEDS THE PHYSICAL REQUIREMENTS OF ASTM A1011 SS GRADE 33 AND CONFORMS TO ONE OF THE FOLLOWING ASTM SPECIFICATIONS:

       1. A 575
       2. A576
       3. A 36
       4. A 635
       5. A 1059
       6. A 1046

13. ANY SUBSTITUTIONS OF PRODUCT OR MANUFACTURER MUST BE APPROVED IN WRITING TEN DAYS PRIOR TO BID DATE BY THE PROFESSIONAL OF RECORD.

14. THE INSTALLER SHALL INSPECT THE WORK AREA PRIOR TO INSTALLATION. IF WORK AREA CONDITIONS ARE UNSATISFACTORY, INSTALLATION SHALL NOT PROCEED UNTIL SATISFACTORY CORRECTIONS ARE COMPLETED.

15. INSTALLATION SHALL BE ACCOMPLISHED BY A FULLY TRAINED MANUFACTURER AUTHORIZED INSTALLER.

16. SET STRUT SYSTEM COMPONENTS INTO FINAL POSITION TRUE TO LINE, LEVEL AND PLUMB, IN ACCORDANCE WITH APPROVED DRAWINGS.

17. ANCHOR MATERIAL FIRMLY IN PLACE, AND TIGHTEN ALL CONNECTIONS TO THEIR RECOMMENDED TORQUES.

18. SET SCREWS INSTALLATION TORQUE: 125 IN-LBS (FROM ATKORE UNISTRUT)

19. UPON COMPLETION OF THIS SECTION OF WORK, REMOVE ALL PROTECTIVE WRAPS AND DEBRIS. REPAIR ANY DAMAGE DUE TO INSTALLATION OF THIS SECTION OF WORK.

20. DURING INSTALLATION, IT SHALL BE THE RESPONSIBILITY OF THE INSTALLER TO PROTECT THIS WORK FROM DAMAGE.

21. UPON COMPLETION OF THIS SCOPE OF WORK, IT SHALL BECOME THE RESPONSIBILITY OF THE GENERAL CONTRACTOR TO PROTECT THIS WORK FROM DAMAGE

STRUCTURAL DELEGATED DESIGNS AND DEFERRED SUBMITTALS:

1. STRUCTURAL DELEGATED DESIGNS AND SUBSEQUENT DEFERRED SUBMITTALS ARE FOR ELEMENTS, PARTS, OR PORTIONS OF THE OVERALL STRUCTURAL SYSTEM THAT ARE INDICATED OR REFERRED TO ON THESE DRAWINGS AND THAT ARE CRITICAL TO THE PERFORMANCE OF THE OVERALL STRUCTURAL SYSTEMS. DESIGN CRITERIA HAS BEEN PROVIDED FOR THESES ITEMS IN THE STRUCTURAL NOTES, PLANS, AND DETAILS.

2. STRUCTURAL DEFERRED SUBMITTALS ARE COMPLETE PACKAGES TO BE SUBMITTED FOR REVIEW THAT INCLUDE DRAWINGS AND CALCULATIONS FOR ALL DELEGATED DESIGN ITEMS AND THEIR CONNECTIONS. DEFERRED SUBMITTALS SHALL BEAR THE STAMP AND SIGNATURE OF THE DESIGN PROFESSIONAL, REGISTERED IN THE STATE OF NORTH CAROLINA, RESPONSIBLE FOR THEIR DESIGN.

3. THE STRUCTURAL ENGINEER OF RECORD WILL REVIEW STRUCTURAL DEFERRED SUBMITTALS TO VERIFY DESIGN CRITERIA IS COMPLIANT WITH THE APPROVED CONSTRUCTIONS DOCUMENTS.

4. DESIGN RESPONSIBILITY FOR THE FOLLOWING ENGINEERED SYSTEMS AND COMPONENT PARTS IS DELEGATED TO A QUALIFIED DELEGATED REGISTERED PROFESSIONAL ENGINEER SELECTED BY THE CONTRACTOR. STRUCTURAL DELEGATED DESIGN ITEMS REQUIRING DEFERRED SUBMITTALS INCLUDE, BUT ARE NOT LIMITED TO:

   A. OPEN WEB STEEL JOISTS, BRIDGING, BRACING, CONNECTIONS, AND RELATED COMPONENTS.
   B. SPORTS LIGHT POLE FOUNDATIONS

5. REFER TO S001 AND S002 FOR APPLICABLE DESIGN STANDARDS AND CRITERIA, DESIGN LOADS AND SERVICEABILITY LIMITS.

6. INCLUDE SIGNED SEALS FOR WORK DESIGNED BY THE DELEGATED ENGINEER. DO NOT START FABRICATION OF THE DELEGATED SYSTEM OR COMPONENT PART OR FIELD CONSTRUCTION THAT MAY BE AFFECTED BY THE SYSTEM OR COMPONENT PART WITHOUT SUBMITTAL REVIEW BY THE STRUCTURAL ENGINEER OF RECORD.

NON-STRUCTURAL DELEGATED DESIGNS AND DEFERRED SUBMITTALS:

1. NON-STRUCTURAL DELEGATED DESIGNS AND SUBSEQUENT DEFERRED SUBMITTALS ARE FOR ITEMS NOT INCLUDED IN THE STRUCTURAL DELEGATED DESIGN SECTION. THESE ARE ITEMS THAT ARE NOT CRITICAL TO THE OVERALL PERFORMANCE OF THE STRUCTURAL SYSTEM BUT THAT IMPART LOADS AND FORCES TO THE STRUCTURAL SYSTEMS.

2. NON-STRUCTURAL DEFERRED SUBMITTALS SHALL BEAR THE STAMP AND SIGNATURE OF THE DESIGN PROFESSIONAL, REGISTERED IN THE STATE OF NORTH CAROLINA, RESPONSIBLE FOR THE DESIGN.

3. THE STRUCTURAL ENGINEER OF RECORD WILL REVIEW NON-STRUCTURAL DEFERRED SUBMITTALS TO VERIFY DESIGN CRITERIA IS COMPLIANT WITH THE APPROVED CONSTRUCTIONS DOCUMENTS.

4. IF THE STRUCTURAL DRAWINGS INCLUDE LOADS TO ACCOMMODATE NON-STRUCTURAL ELEMENTS, THE CONTRACTOR MUST SUBMIT DOCUMENTATION INDICATING THAT THE NON-STRUCTURAL ELEMENTS COMPLY WITH THE LOADING CRITERIA PROVIDED HEREIN. SUCH DOCUMENTATION SHALL BEAR THE STAMP AND SIGNATURE OF THE DESIGN PROFESSIONAL RESPONSIBLE FOR THE DESIGN.

5. WHEN THE NON-STRUCTURAL DEFERRED SUBMITTAL INDICATES THAT THE ELEMENT WILL IMPART FORCES IN EXCESS OF LOADS THAT ARE INDICATED ON THE STRUCTURAL DRAWINGS, THE CONTRACTOR MUST SUBMIT A DETAILED GRAPHICAL REPRESENTATION OF THOSE DESIGN LOADS, INCLUDING MAGNITUDE, AND LOCATION. THE GRAPHIC MUST BE ACCOMPANIED BY DOCUMENTATION INDICATING THAT THE NON-STRUCTURAL ELEMENT DESIGN COMPLIES WITH THE LOADING CRITERIA PROVIDED HEREIN. THE LETTER MUST BEAR THE STAMP AND SIGNATURE OF THE DESIGN PROFESSIONAL RESPONSIBLE FOR THE DESIGN.

6. NON-STRUCTURAL DELEGATED DESIGN ITEMS REQUIRING DEFERRED SUBMITTALS SHALL INCLUDE BUT ARE NOT LIMITED TO:

   A. COLD FORMED STEEL STUDS/JOISTS/HEADER/JAMBS/TRUSSES
   B. METAL STAIRS AND RAILS
   C. UNISTRUT CHANNELS AND ASSOCIATED COMPONENTS

DESIGN CRITERIA NOTES:

1. LOADS USED IN THE DESIGN OF THIS STRUCTURE ARE AS FOLLOWS:

2. UNIFORM LIVE LOADS:

   A. SLAB ON GRADE 100 PSF
   B. HANDRAILS 50 PLF
   C. ROOF 20 PSF

3. CONCENTRATED LIVE LOADS:

   A. HANDRAIL: 200# CONCENTRATED LOAD*
      *CONCENTRATED LIVE LOAD NOT CONCURRENT WITH UNIFORM LIVE LOAD

4. ROOF SNOW LOADS:
   GROUND SNOW LOAD Pg = 10 PSF
   SNOW EXPOSURE FACTOR Ce = 1.0
   SNOW LOAD IMPORTANCE FACTOR I =1.0
   THERMAL FACTOR Ct=1.0
   FLAT ROOF SNOW LOAD: Pf = 7 PSF
   RAIN ON SNOW SURCHARGE LOAD= 12 PSF

4. WIND LOADS:
   RISK CATEGORY = II
   ULTIMATE WIND SPEED = 132 MPH
   NOMINAL WIND SPEED (ASD) = 102.2MPH
   EXPOSURE CATEGORY (MAIN WINDFORCE-RESISTING SYSTEM): C
   EXPOSURE CATEGORY (COMPONENTS AND CLADDING): C
   INTERNAL PRESSURE COEFFICIENT: +/- 0.18 (ENCLOSED)

   COMPONENTS AND CLADDING: WIND PRESSURE TO BE USED FOR DESIGN OF EXTERIOR COMPONENTS AND CLADDING MATERIALS NOT SPECIFICALLY DESIGNED ON THESE DRAWINGS MUST BE PER TABLE BELOW:

| COMPONENTS AND CLADDING WIND PRESSURES | | | | | | | | | | |
|---|---|---|---|---|---|---|---|---|---|---|
| AREA (SF) | ROOF ZONES | | | | | | WALL ZONES | | | |
| | 1 | | 2 | | 3 | | 4 | | 5 | |
| A<10 | +19.2 | -47.2 | +19.2 | -79.1 | +19.2 | -119.1 | +43.2 | -46.8 | +43.2 | -57.5 |
| A≥100 | +16.0 | -43.2 | +16.0 | -51.2 | +16.0 | -51.2 | +36.8 | -40.4 | +36.8 | -44.8 |

INTERPOLATE BETWEEN AREAS INDICATED.
CORNER ZONES EQUAL 3.5 FEET.

REFER TO SKETCH BELOW FOR ZONE DEFINITIONS.

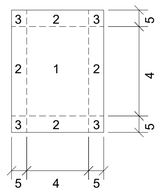


**ZONES**

5. SEISMIC LOADS:
   RISK CATEGORY II
   IMPORTANCE FACTOR Ie = 1.00
   Ss = 12.9%g
   S1 = 6.4%g
   SOIL SITE CLASS D (ASSUMED)
   Sds = 0.138
   Sd1 = 0.102
   SEISMIC DESIGN CATEGORY B

## STRUCTURAL ABBREVIATIONS LIST

| | |
|---|---|
| AB | ANCHOR BOLT |
| ALT | ALTERNATE |
| ARCH | ARCHITECT, ARCHITECTURAL |
| BLDG | BUILDING |
| BOTT | BOTTOM |
| BRDG | BRIDGING |
| BRG | BEARING |
| CMU | CONCRETE MASONRY UNIT |
| CJ | CONTROL JOINT |
| CLR | CLEAR |
| COL | COLUMN |
| CONC | CONCRETE |
| COND | CONDITION |
| CONN | CONNECTION |
| CONST | CONSTRUCTION |
| CONT | CONTINUOUS |
| DIA | DIAMETER |
| DIAG | DIAGONAL |
| DWG | DRAWING |
| DWGS | DRAWINGS |
| ELEC | ELECTRICAL |
| ELEV | ELEVATION |
| EXIST | EXISTING |
| EXP | EXPANSION |
| FOUND | FOUNDATION |
| FNDN | FOUNDATION |
| FOB | FACE OF BRICK |
| FTG | FOOTING |
| GALV | GALVANIZED |
| GC | GENERAL CONTRACTOR |
| HORIZ | HORIZONTAL |
| HS | HIGH STRENGTH |
| HT | HEIGHT |
| INSUL | INSULATION |
| ISO | ISOLATION |
| L | ANGLE |
| LLH | LONG LEG HORIZONTAL |
| LLV | LONG LEG VERTICAL |
| MANUF | MANUFACTURED/MANUFACTURER |
| MAS | MASONRY |
| MAX | MAXIMUM |
| MECH | MECHANICAL |
| MIN | MINIMUM |
| OPG | OPENING |
| OPP | OPPOSITE |
| PJF | PREMOLDED JOINT FILLER |
| PL | PLATE |
| PSI | POUNDS PER SQUARE INCH |
| PSF | POUNDS PER SQUARE FOOT |
| REF | REFERENCE |
| REINF | REINFORCE,REINFORCING |
| REQ'D | REQUIRED |
| SCHED | SCHEDULE |
| SECT | SECTION |
| SJ | SAWED JOINT |
| SPECS | SPECIFICATIONS |
| STD | STANDARD |
| TYP | TYPICAL |
| UON | UNLESS OTHERWISE NOTED |
| VERT | VERTICAL |
| WWF | WELDED WIRE FABRIC |
| W/ | WITH |
| W/O | WITHOUT |
| CL | CENTERLINE |
| OC | ON CENTER |
| Ø | DIAMETER |
| ° | DEGREES |
| ± | PLUS OR MINUS |


WALKER the GROUP ARCHITECTURE incorporated
PO BOX 541, NEW BERN, NC 28563
252-636-8778


NORTH CAROLINA PROFESSIONAL 022830 07/28/2025 ENGINEER KEVIN M. ROONSBURG


NRW ENGINEERING
Structural Consultants
748 Lord Dunmore Drive, Suite 101
Virginia Beach, VA 23464
Phone 757-474-0612
Fax 757-474-0919
NC license C-1393


**CRAVEN COMMUNITY COLLEGE-PUBLIC SAFETY TRAINING CENTER**

**Executive Pkwy**
**New Bern, NC 28562**

**BID DOCUMENTS**

**SCO # 24-27879-01A**

Revisions

| No. | Date |
|---|---|

Project Number: 2407.SAFE
Date: 07/28/2025
Drawn: DFS
Checked: KMR
Scale: AS NOTED
Drawing Title: GENERAL NOTES AND ABBREVIATIONS

Sheet Number: 116 Of 155
Drawing Number: S002

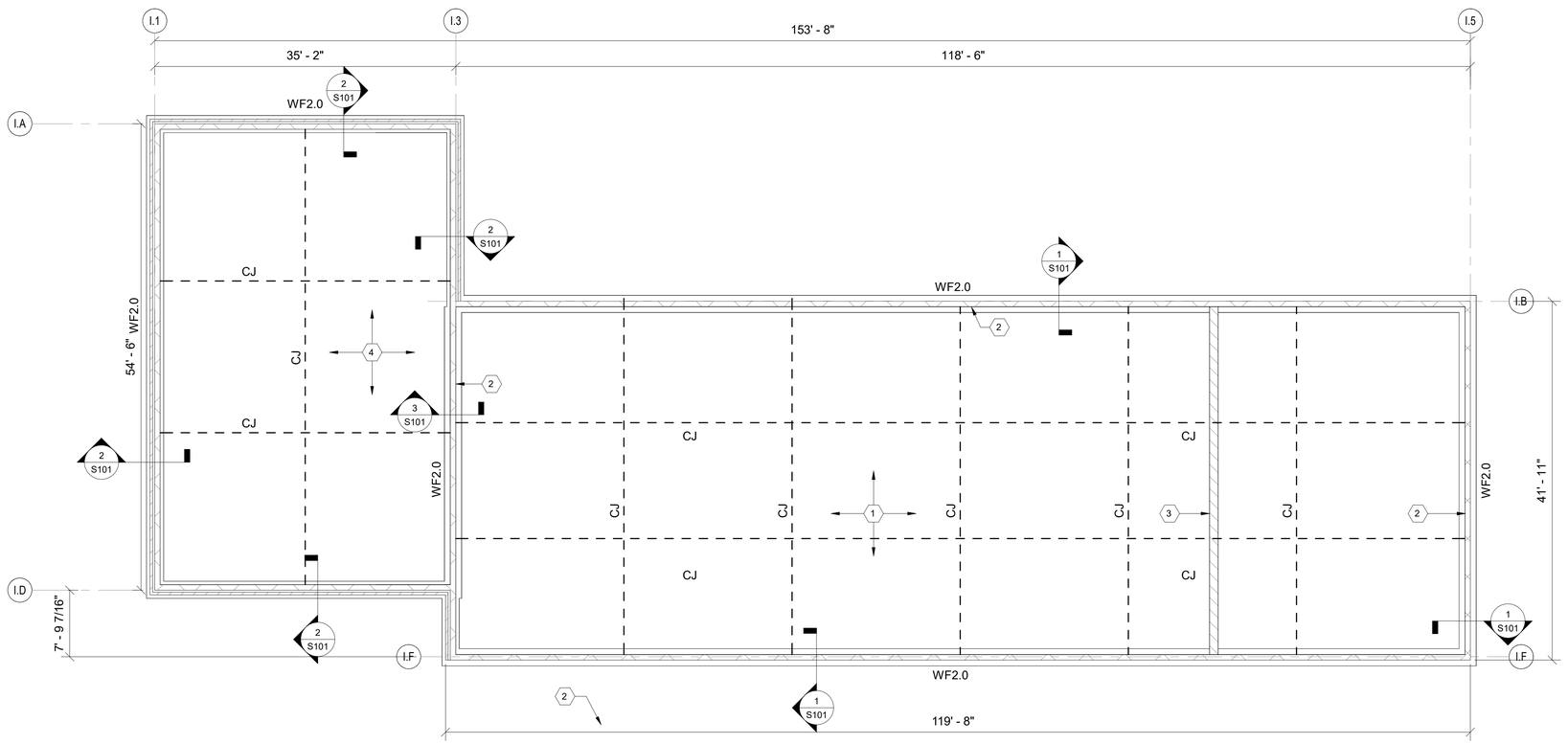


## INDOOR RANGE FOUNDATION PLAN

SCALE: 1/8" = 1'-0"

PLAN NORTH

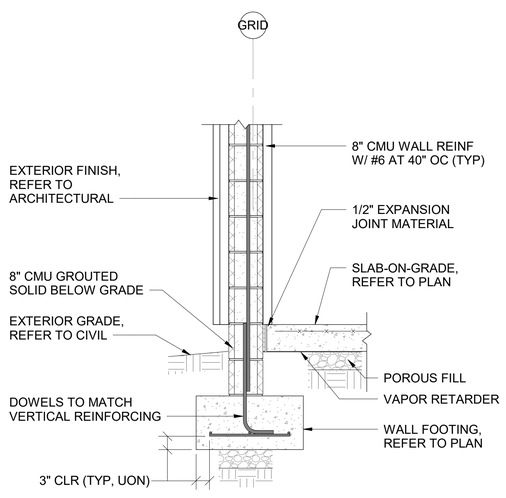


### 1 SECTION

SCALE: 3/4" = 1'-0" (S101)

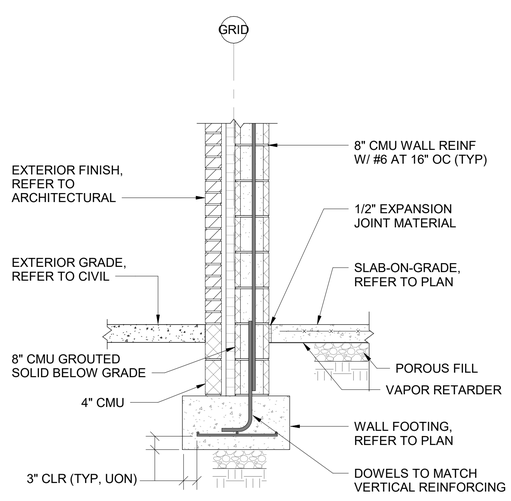


### 2 SECTION

SCALE: 3/4" = 1'-0" (S101)

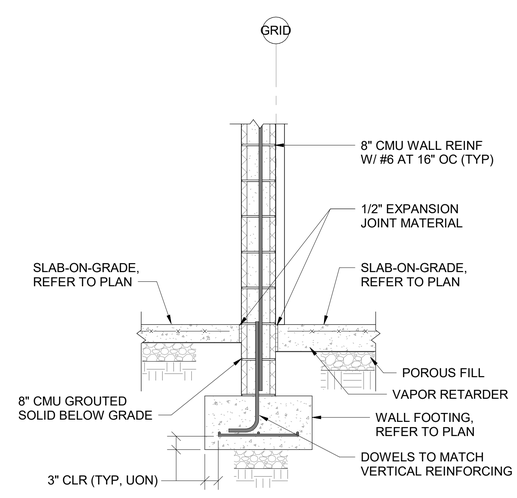


### 3 SECTION

SCALE: 3/4" = 1'-0" (S101)

## GENERAL SHEET NOTES

1. DATUM FOR ALL ELEVATIONS GIVEN ON THIS PLAN IS FINISHED FIRST FLOOR ELEVATION = 0'-0". REFER TO CIVIL DRAWINGS FOR ACTUAL ELEVATION.
2. TOP OF CONCRETE SLAB IS AT 0'-0" UNLESS OTHERWISE INDICATED THUS [+____] ON PLAN.
3. WALL FOOTINGS NOTED THUS WFX.X. REFER TO WALL FOOTING SCHEDULE ON S501 FOR SIZE AND REINFORCING.
4. UNLESS NOTED THUS (-___), TOP OF ALL WALL FOOTINGS SHALL BE AT -1'-4" BELOW DATUM.
5. THE SYMBOL CJ INDICATES SLAB CONTROL JOINT, AND MAY BE CONSTRUCTION JOINT OR SAWED JOINT. REFER TO TYPICAL SLAB CONTROL JOINT DETAILS ON SHEET S-501.
6. NO FOUNDATION WORK SHALL BE INSTALLED UNTIL ALL UNDERGROUND UTILITIES, ETC. HAVE BEEN COORDINATED WITH FOUNDATION LOCATIONS AND ELEVATIONS.
7. FOR TYPICAL DETAILS AND GENERAL NOTES, REFER TO SHEETS S501 AND S502 .

## # NEW WORK KEYNOTES

1. PROVIDE 6" CONCRETE SLAB-ON-GRADE OVER 15 MIL VAPOR RETARDER ON 4" POROUS FILL MATERIAL. REINFORCE SLAB WITH 6x6 - W2.9xW2.9 WELDED WIRE FABRIC PLACED 1 1/2" FROM TOP OF SLAB.
2. GROUT ALL MASONRY WALL CELLS SOLID FULL HEIGHT OF WALL WITH 4000 PSI CONCRETE FULL HEIGHT IN SHOOTING RANGE AREA.
3. 12" WIDE x 4" DEEP TRENCH, SEE TYPICAL DETAIL ON SHEET S501
4. PROVIDE 4" CONCRETE SLAB-ON-GRADE OVER 15 MIL VAPOR RETARDER ON 4" POROUS FILL MATERIAL. REINFORCE SLAB WITH 6x6 - W2.9xW2.9 WELDED WIRE FABRIC PLACED 1 1/2" FROM TOP OF SLAB.

## GRAPHIC SCALE(S)

SCALE: 1/8"=1'-0" 0 4' 8' 16'

SCALE: 3/4"=1'-0" 0 1' 2' 3'


WALKER the GROUP ARCHITECTURE incorporated
PO BOX 541, NEW BERN, NC 28563
252-636-8778


NORTH CAROLINA PROFESSIONAL ENGINEER SEAL 022830 07/28/2025 KEVIN M. ROONSBURG


NRW ENGINEERING
Structural Consultants
748 Lord Dunmore Drive, Suite 101
Virginia Beach, VA 23464
Phone 757-474-0612
Fax 757-474-0919
NC license C-1393


**CRAVEN COMMUNITY COLLEGE-PUBLIC SAFETY TRAINING CENTER**

**Executive Pkwy**
**New Bern, NC 28562**

**BID DOCUMENTS**

**SCO # 24-27879-01A**

Revisions

| No. | Date |
|---|---|

| | |
|---|---|
| Project Number 2407.SAFE | Date 07/28/2025 |
| Drawn DFS | Checked KMR |
| Scale AS NOTED | |

Drawing Title
**INDOOR RANGE FOUNDATION PLAN AND SECTIONS**

Sheet Number
117 Of 155

Drawing Number
**S101**

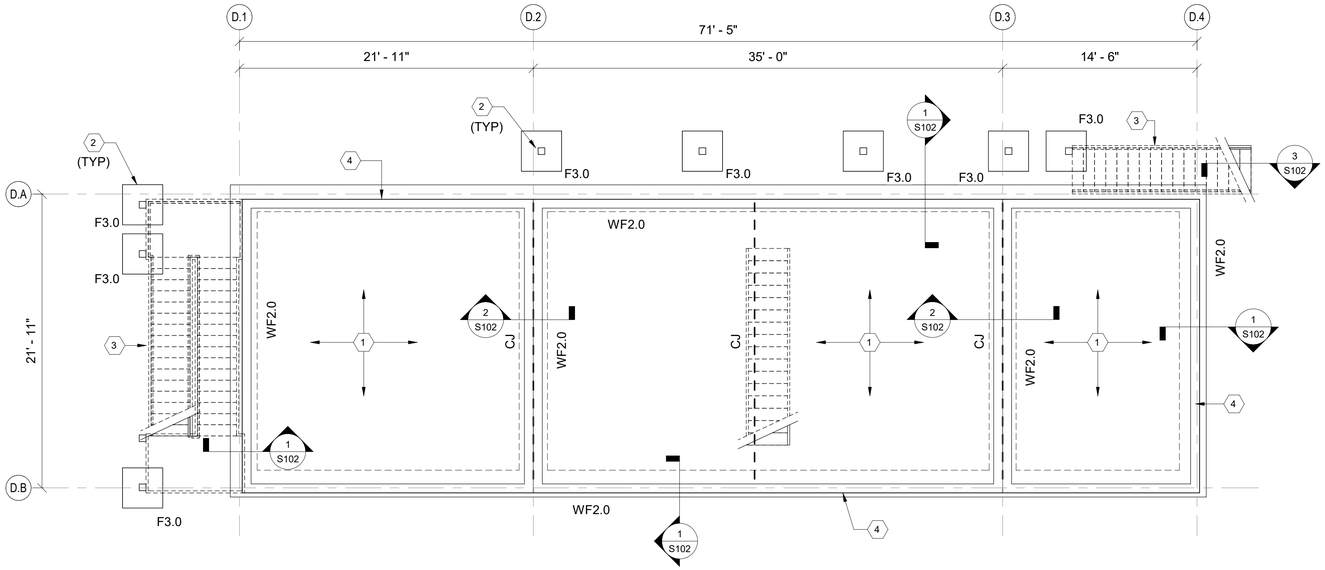


## WHP DRILL-BURN BUILDING FOUNDATION PLAN

SCALE: 3/16" = 1'-0"

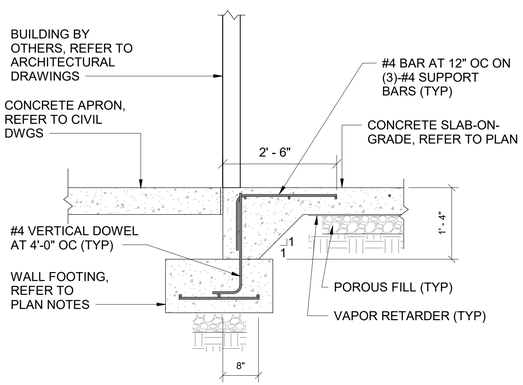


1 **SECTION**

SCALE: 3/4" = 1'-0" (S102)

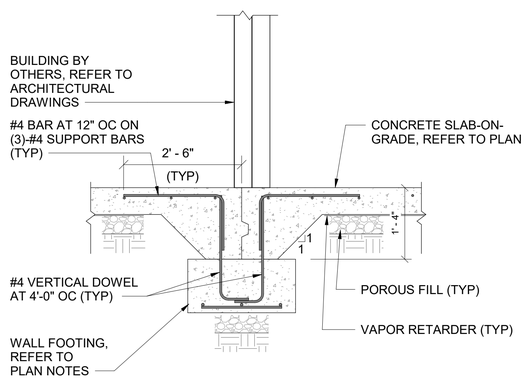


2 **SECTION**

SCALE: 3/4" = 1'-0" (S102)

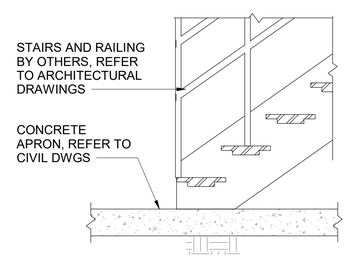


3 **SECTION**

SCALE: 3/4" = 1'-0" (S102)

## GENERAL SHEET NOTES

1. DATUM FOR ALL ELEVATIONS GIVEN ON THIS PLAN IS FINISHED FIRST FLOOR ELEVATION = 0'-0". REFER TO CIVIL DRAWINGS FOR ACTUAL ELEVATION.
2. TOP OF CONCRETE SLAB IS AT 0'-0" UNLESS OTHERWISE INDICATED THUS [+____] ON PLAN.
3. WALL FOOTINGS NOTED THUS WFX.X. REFER TO WALL FOOTING SCHEDULE ON S501 FOR SIZE AND REINFORCING.
4. UNLESS NOTED THUS (-___), TOP OF ALL WALL FOOTINGS MUST BE AT -1'-4" BELOW DATUM.
5. UNLESS NOTED THUS (-___), TOP OF ALL COLUMN FOOTINGS MUST BE AT -0'-6" BELOW DATUM.
6. THE SYMBOL CJ INDICATES SLAB CONTROL JOINT, AND MAY BE CONSTRUCTION JOINT OR SAWED JOINT. REFER TO TYPICAL SLAB CONTROL JOINT DETAILS ON SHEET S-501.
7. NO FOUNDATION WORK SHALL BE INSTALLED UNTIL ALL UNDERGROUND UTILITIES, ETC. HAVE BEEN COORDINATED WITH FOUNDATION LOCATIONS AND ELEVATIONS.
8. FOR TYPICAL DETAILS AND GENERAL NOTES, REFER TO SHEETS S501 AND S502 .
9. GENERAL CONTRACTOR TO PROVIDE CONCRETE FILL FOR LEVELS ABOVE FIRST FLOOR. CONCRETE SLAB IS 4 INCH THICK NORMAL WEIGHT CONCRETE WITH FIBER MESH REINFORCING AND A MINIMUM COMPRESSIVE STRENGTH OF 4000 PSI AT 28 DAYS. REFER TO ARCHITECTURAL DRAWINGS FOR LOCATIONS OF ELEVATED SLABS.

## # NEW WORK KEYNOTES

1. PROVIDE 8" CONCRETE SLAB-ON-GRADE OVER 15 MIL VAPOR RETARDER ON 4" POROUS FILL MATERIAL. REINFORCE SLAB WITH #4 AT 12" O.C. EACH WAY PLACED 1 1/2" FROM TOP OF SLAB.
2. COLUMNS BY OTHERS
3. STAIRS BY OTHERS
4. BUILDING BY OTHERS

## GRAPHIC SCALE(S)

SCALE: 3/16"=1'-0" 0 4' 8' 12'

SCALE: 3/4"=1'-0" 0 1' 2' 3'


WALKER the GROUP ARCHITECTURE incorporated
PO BOX 541, NEW BERN, NC 28563
252-636-8778


NORTH CAROLINA PROFESSIONAL ENGINEER SEAL 022830 07/28/2025 KEVIN M. ROOMSBURG


NRW ENGINEERING
Structural Consultants
748 Lord Dunmore Drive, Suite 101
Virginia Beach, VA 23464
Phone 757-474-0612
Fax 757-474-0919
NC license C-1393


**CRAVEN COMMUNITY COLLEGE-PUBLIC SAFETY TRAINING CENTER**

**Executive Pkwy**
**New Bern, NC 28562**

**BID DOCUMENTS**

**SCO # 24-27879-01A**

| No. | Date | Revisions |
|---|---|---|

Project Number: 2407.SAFE
Date: 07/28/2025
Drawn: DFS
Checked: KMR
Scale: AS NOTED

Drawing Title: **BID ALTERNATE 01 WHP DRILL/BURN BUILDIMG FOUNDATION PLAN AND SECTIONS**

Sheet Number: 118 Of 155

Drawing Number: **S102**

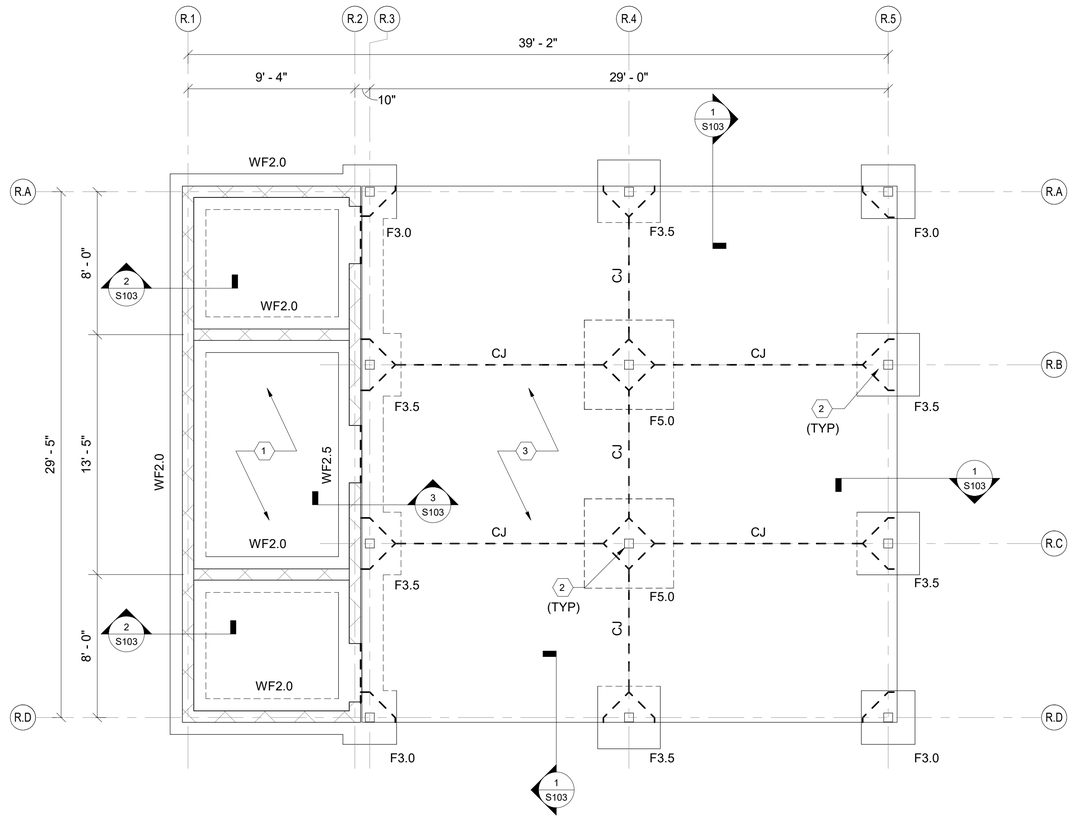


## REHAB SHELTER FOUNDATION PLAN

SCALE: 1/4" = 1'-0"

PLAN NORTH

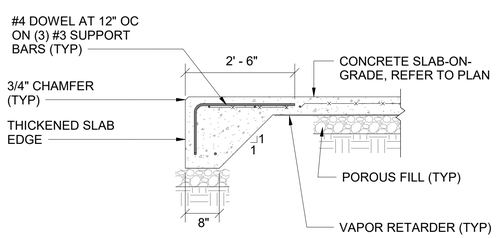


## 1 SECTION

SCALE: 3/4" = 1'-0" (S103)

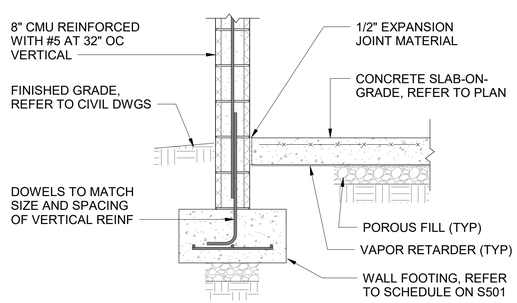


## 2 SECTION

SCALE: 3/4" = 1'-0" (S103)

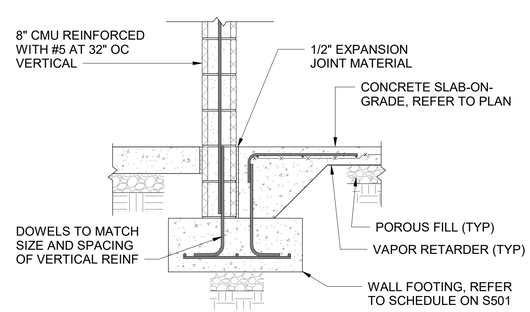


## 3 SECTION

SCALE: 3/4" = 1'-0" (S103)

## GENERAL SHEET NOTES

1. DATUM FOR ALL ELEVATIONS GIVEN ON THIS PLAN IS FINISHED FIRST FLOOR ELEVATION = 0'-0". REFER TO CIVIL DRAWINGS FOR ACTUAL ELEVATION.
2. TOP OF CONCRETE SLAB IS AT 0'-0" UNLESS OTHERWISE INDICATED THUS [+____] ON PLAN.
3. WALL FOOTINGS NOTED THUS WFX.X. REFER TO WALL FOOTING SCHEDULE ON S501 FOR SIZE AND REINFORCING.
4. UNLESS NOTED THUS (-___), TOP OF ALL WALL FOOTINGS SHALL BE AT -1'-4" BELOW DATUM.
5. UNLESS NOTED THUS (-___), TOP OF ALL COLUMN FOOTINGS SHALL BE AT -1'-4" BELOW DATUM.
6. THE SYMBOL CJ INDICATES SLAB CONTROL JOINT, AND MAY BE CONSTRUCTION JOINT OR SAWED JOINT. REFER TO TYPICAL SLAB CONTROL JOINT DETAILS ON SHEET S-501.
7. NO FOUNDATION WORK SHALL BE INSTALLED UNTIL ALL UNDERGROUND UTILITIES, ETC. HAVE BEEN COORDINATED WITH FOUNDATION LOCATIONS AND ELEVATIONS.
8. FOR TYPICAL DETAILS AND GENERAL NOTES, REFER TO SHEETS S501 AND S502 .

## # NEW WORK KEYNOTES

1. PROVIDE 6" CONCRETE SLAB-ON-GRADE OVER 15 MIL VAPOR RETARDER ON 4" POROUS FILL MATERIAL. REINFORCE SLAB WITH 6x6 - W2.9xW2.9 WELDED WIRE FABRIC PLACED 1 1/2" FROM TOP OF SLAB.
2. CANOPY COLUMNS BY OTHERS
3. PROVIDE 4" CONCRETE SLAB-ON-GRADE OVER 15 MIL VAPOR RETARDER ON 4" POROUS FILL MATERIAL. REINFORCE SLAB WITH 6x6 - W2.9xW2.9 WELDED WIRE FABRIC PLACED 1 1/2" FROM TOP OF SLAB.

## GRAPHIC SCALE(S)

SCALE: 1/4"=1'-0" 0 2' 4' 8'

SCALE: 3/4"=1'-0" 0 1' 2' 3'


WALKER the GROUP ARCHITECTURE incorporated
PO BOX 541, NEW BERN, NC 28563
252-636-8778


NORTH CAROLINA PROFESSIONAL ENGINEER SEAL 022830 07/28/2025 KEVIN M. ROOMSBURG


NRW ENGINEERING
Structural Consultants
748 Lord Dunmore Drive, Suite 101
Virginia Beach, VA 23464
Phone 757-474-0612
Fax 757-474-0919
NC license C-1393


**CRAVEN COMMUNITY COLLEGE-PUBLIC SAFETY TRAINING CENTER**

**Executive Pkwy**
**New Bern, NC 28562**

**BID DOCUMENTS**

**SCO # 24-27879-01A**

| No. | Date | Revisions |
|---|---|---|

Project Number: 2407.SAFE
Date: 07/28/2025
Drawn: DFS
Checked: KMR
Scale: AS NOTED

Drawing Title: **BID ALTERNATE 03 REHAB SHELTER FOUNDATION PLAN AND SECTIONS**

Sheet Number: 119 Of 155

Drawing Number: **S103**

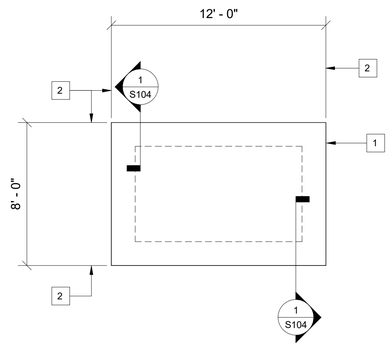


## GATEHOUSE FOUNDATION PLAN

SCALE: 1/4" = 1'-0"

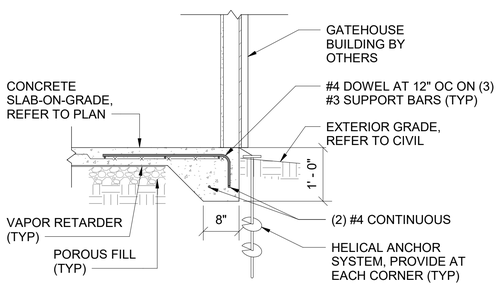


## 1 SECTION

SCALE: 3/4" = 1'-0" (S104)

## GENERAL SHEET NOTES

1. DATUM FOR ALL ELEVATIONS GIVEN ON THIS PLAN IS FINISHED FIRST FLOOR ELEVATION = 0'-0". REFER TO CIVIL DRAWINGS FOR ACTUAL ELEVATION.
2. TOP OF CONCRETE SLAB IS AT +0'-0" UNLESS OTHERWISE INDICATED THUS [+____ ] ON PLAN.
3. UNLESS OTHERWISE NOTED PROVIDE 4" CONCRETE SLAB ON GRADE ON 6 MIL VAPOR BARRIER ON 4" POROUS FILL. REINFORCE SLAB WITH 6 x 6 - W2.9 x W2.9 WWF PLACED 1" CLEAR FROM TOP OF SLAB.
4. NO FOUNDATION WORK SHALL BE INSTALLED UNTIL ALL UNDERGROUND UTILITIES, ETC. HAVE BEEN COORDINATED WITH FOUNDATION LOCATIONS AND ELEVATIONS.
5. FOR TYPICAL DETAILS AND GENERAL NOTES, REFER TO SHEETS S501 AND S502.

## # NEW WORK KEYNOTES

1. GATEHOUSE BUILDING BY OTHERS.
2. EDGE OF SLAB.

## GRAPHIC SCALE(S)

SCALE: 1/4"=1'-0" 0 2' 4' 8'

SCALE: 3/4"=1'-0" 0 1' 2' 3'


WALKER the GROUP ARCHITECTURE incorporated
PO BOX 541, NEW BERN, NC 28563
252-636-8778


NORTH CAROLINA PROFESSIONAL ENGINEER SEAL 022830 07/28/2025 KEVIN M. ROOMSBURG


NRW ENGINEERING
Structural Consultants
748 Lord Dunmore Drive, Suite 101
Virginia Beach, VA 23464
Phone 757-474-0612
Fax 757-474-0919
NC license C-1393


**CRAVEN COMMUNITY COLLEGE-PUBLIC SAFETY TRAINING CENTER**

**Executive Pkwy**
**New Bern, NC 28562**

**BID DOCUMENTS**

**SCO # 24-27879-01A**

| No. | Date | Revisions |
|---|---|---|

Project Number: 2407.SAFE
Date: 07/28/2025
Drawn: DFS
Checked: KMR
Scale: AS NOTED
Drawing Title: BID ALTERNATE 05 GATEHOUSE FOUNDATION PLAN AND SECTIONS



Drawing Number: S104

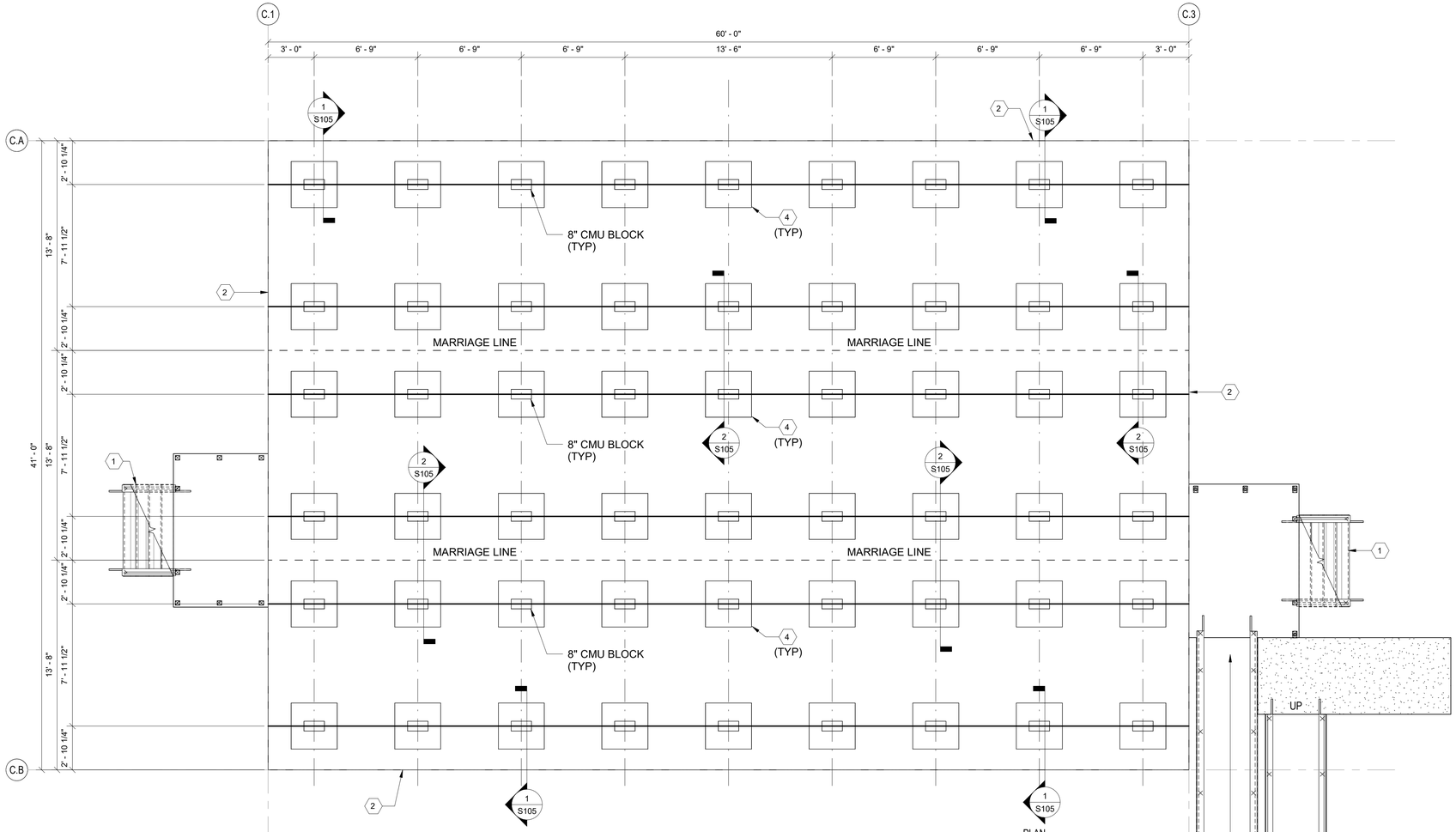


## CLASSROOM BUILDING FOUNDATION PLAN

SCALE: 1/4" = 1'-0"

PLAN NORTH

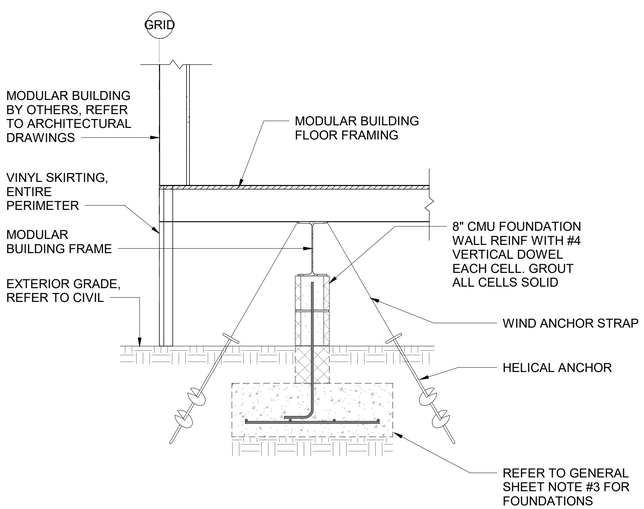


1 **SECTION**

SCALE: 3/4" = 1'-0" (S105)

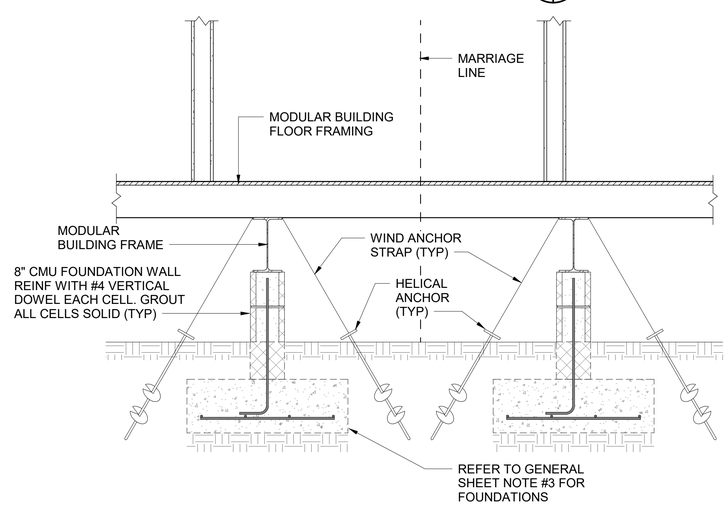


2 **SECTION**

SCALE: 3/4" = 1'-0" (S105)

## GENERAL SHEET NOTES

1. DATUM FOR ALL ELEVATIONS GIVEN ON THIS PLAN IS FINISHED FIRST FLOOR ELEVATION = 0'-0". REFER TO CIVIL DRAWINGS FOR ACTUAL ELEVATION.
2. ALL TEMPORARY TRAILERS INSTALLED ON THIS PROJECT MUST BE APPROVED FOR INSTALLATION WITHIN A 132MPH (3-SECOND GUST) WIND ZONE.
3. THE FOUNDATION REQUIREMENTS DEPICTED HEREON ARE APPROXIMATE. THE CONTRACTOR MUST PROVIDE A FOUNDATION PIER PLAN, FOOTING DETAILS, STRAPPING PLANS, AND DETAILS FOR THE MOBILE STRUCTURE SELECTED. THIS INFORMATION MUST BE PREPARED BY A NORTH CAROLINA REGISTERED PROFESSIONAL ENGINEER AND MUST BE SUBMITTED TO THE CONTRACTING OFFICER FOR APPROVAL PRIOR TO ERECTION.
4. THE CONTRACTOR MUST PROVIDE ELEVATED ALUMINUM LANDINGS, STEPS AND HANDICAP ACCESSIBLE RAMPS TO ACCESS THE TEMPORARY TRAILER IN THE GENERAL ARRANGEMENT AS INDICATED.
5. NO FOUNDATION WORK SHALL BE INSTALLED UNTIL ALL UNDERGROUND UTILITIES, ETC. HAVE BEEN COORDINATED WITH FOUNDATION LOCATIONS AND ELEVATIONS.
6. FOR TYPICAL DETAILS AND GENERAL NOTES, REFER TO SHEETS S501 AND S502 .

## # NEW WORK KEYNOTES

1. ALUMINUM STAIRS BY MODULAR BUILDING MANUFACTURER
2. FACE OF MODULAR BUILDING (BY OTHERS)
3. ALUMINUM RAMP BY MODULAR BUILDING MANUFACTURER
4. 3'x3'x1' FOOTING WITH (4)-#4 BOTTOM EACH WAY

## GRAPHIC SCALE(S)

SCALE: 1/4"=1'-0" 0 2' 4' 8'

SCALE: 3/4"=1'-0" 0 1' 2' 3'


WALKER the GROUP ARCHITECTURE incorporated
PO BOX 541, NEW BERN, NC 28563
252-636-8778


NORTH CAROLINA PROFESSIONAL ENGINEER SEAL 022830 07/28/2025 KEVIN M. ROOMSBURG


NRW ENGINEERING
Structural Consultants
748 Lord Dunmore Drive, Suite 101
Virginia Beach, VA 23464
Phone 757-474-0612
Fax 757-474-0919
NC license C-1393


**CRAVEN COMMUNITY COLLEGE-PUBLIC SAFETY TRAINING CENTER**

**Executive Pkwy**
**New Bern, NC 28562**

**BID DOCUMENTS**

**SCO # 24-27879-01A**

| No. | Date | Revisions |
|---|---|---|

Project Number: 2407.SAFE
Date: 07/28/2025
Drawn: DFS
Checked: KMR
Scale: AS NOTED

Drawing Title: **BID ALTERNATE 02 MODULAR CLASSROOM FOUNDATION PLAN**

Sheet Number: 122 Of 155

Drawing Number: **S105**

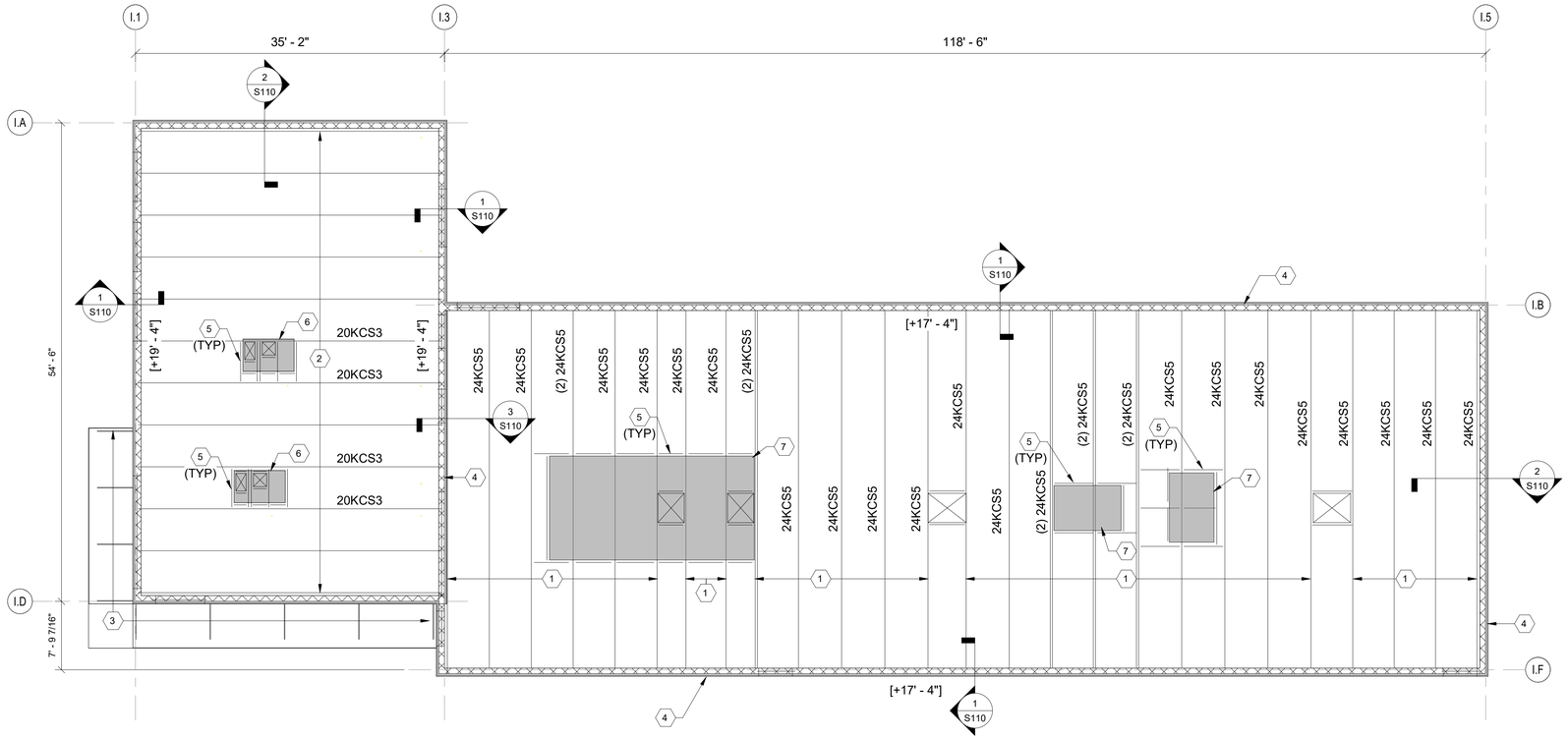


## INDOOR RANGE ROOF FRAMING PLAN

SCALE: 1/8" = 1'-0"

PLAN NORTH

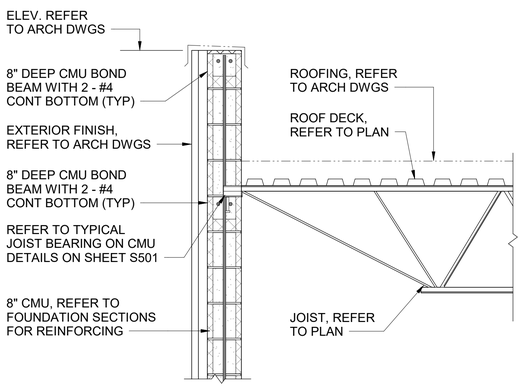


1 **SECTION**

SCALE: 3/4" = 1'-0" (S110)

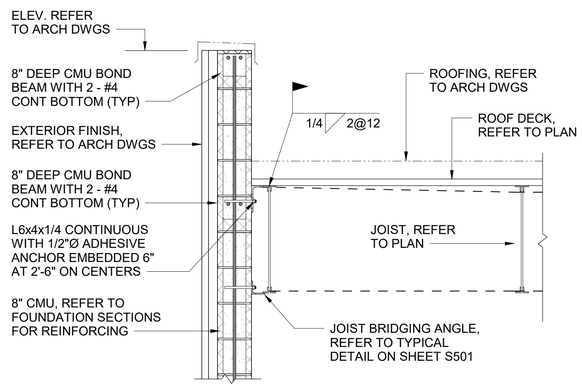


2 **SECTION**

SCALE: 3/4" = 1'-0" (S110)

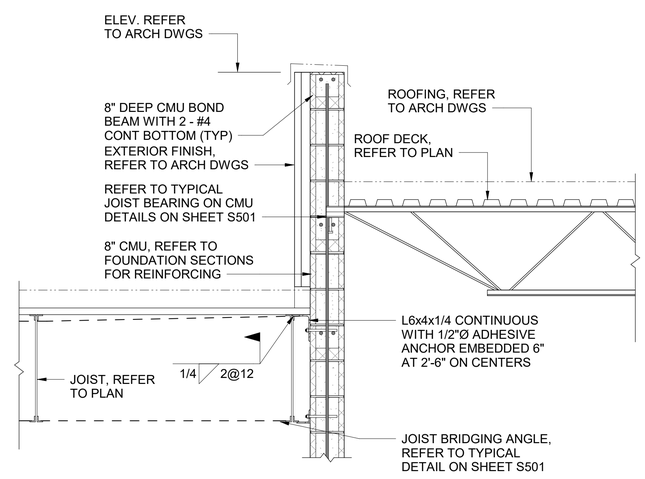


3 **SECTION**

SCALE: 3/4" = 1'-0" (S110)

## GENERAL SHEET NOTES

1. DATUM FOR ALL ELEVATIONS GIVEN ON THIS PLAN IS FINISHED FIRST FLOOR ELEVATION = 0'-0". REFER TO CIVIL DRAWINGS FOR ACTUAL ELEVATION
2. THE TERM JOIST BEARING ELEVATION INDICATES TOP OF CONCRETE IN BOND BEAM SUPPORTING JOIST BEARING PLATES. JOIST BEARING ELEVATIONS ARE INDICATED THUS [+_____] ON PLAN.
3. ROOF CONSTRUCTION IS 1-1/2" DEEP, 20 GA. TYPE 'B' GALVANIZED STEEL ROOF DECK SUPPORTED ON OPEN WEB STEEL JOIST ON MASONRY BEARING WALLS AND STEEL BEAMS.
4. FOR LOCATION AND DIMENSIONS OF ROOF OPENINGS SEE ARCHITECTURAL AND MECHANICAL DRAWINGS.
5. UNLESS OTHERWISE SHOWN PROVIDE ANGLE 4" x 4" x 3/8" FRAMING AROUND ALL MECHANICAL AND ARCHITECTURAL ROOF OPENINGS.
6. MECHANICAL UNITS SHALL BE SUPPORTED ON OR SUSPENDED FROM A MINIMUM OF 3 JOIST AND AT PANEL POINTS ONLY. PROVIDE STEEL SUB FRAMING IF REQUIRED.
7. STAGGER JOIST AS REQUIRED TO OBTAIN REQUIRED BEARING ON BEAMS AND WALLS.
8. FOR LINTEL SCHEDULE SEE TYPICAL DETAIL SHEET. LINTELS ARE NOTED ON PLAN THUS: FOR EXACT LOCATION SEE ARCHITECTURAL AND MECHANICAL DRAWINGS.
9. FOR TYPICAL DETAILS AND GENERAL NOTES REFER TO SHEET S001, S002, S501 AND S502

## # NEW WORK KEYNOTES

1. 24KCS5 JOIST AT 5'-0" ON CENTERS MAX.
2. 20KCS3 JOIST AT 5'-0" ON CENTERS, MAX. UON.
3. CANOPY FRAMING BY OTHERS.
4. GROUT ALL MASONRY WALL CELLS SOLID FULL HEIGHT IN SHOOTING RANGE AREA.
5. L4x4x3/8 SPANNING BETWEEN JOISTS DIRECTLY UNDER CURB TIGHT TO UNDERSIDE OF ROOF DECK.
6. ROOF TOP MECHANICAL UNITS, REFER TO MECHANICAL DRAWINGS.
7. INDOOR RANGE ROOF TOP MECHANICAL UNITS, REFER TO VENDOR DRAWINGS

## GRAPHIC SCALE(S)

SCALE: 3/16"=1'-0" 0 4' 8' 12'

SCALE: 3/4"=1'-0" 0 1' 2' 3'


WALKER the GROUP ARCHITECTURE incorporated
PO BOX 541, NEW BERN, NC 28563
252-636-8778


NORTH CAROLINA PROFESSIONAL ENGINEER SEAL 022830 07/28/2025 KEVIN M. ROOMSBURG


NRW ENGINEERING
Structural Consultants
748 Lord Dunmore Drive, Suite 101
Virginia Beach, VA 23464
Phone 757-474-0612
Fax 757-474-0919
NC license C-1393


**CRAVEN COMMUNITY COLLEGE-PUBLIC SAFETY TRAINING CENTER**

**Executive Pkwy**
**New Bern, NC 28562**

**BID DOCUMENTS**

**SCO # 24-27879-01A**

Revisions

| No. | Date |
|---|---|

Project Number: 2407.SAFE
Date: 07/28/2025
Drawn: DFS
Checked: KMR
Scale: AS NOTED
Drawing Title: INDOOR RANGE ROOF FRAMING PLAN AND SECTIONS

Sheet Number: 123 Of 155

Drawing Number: S110

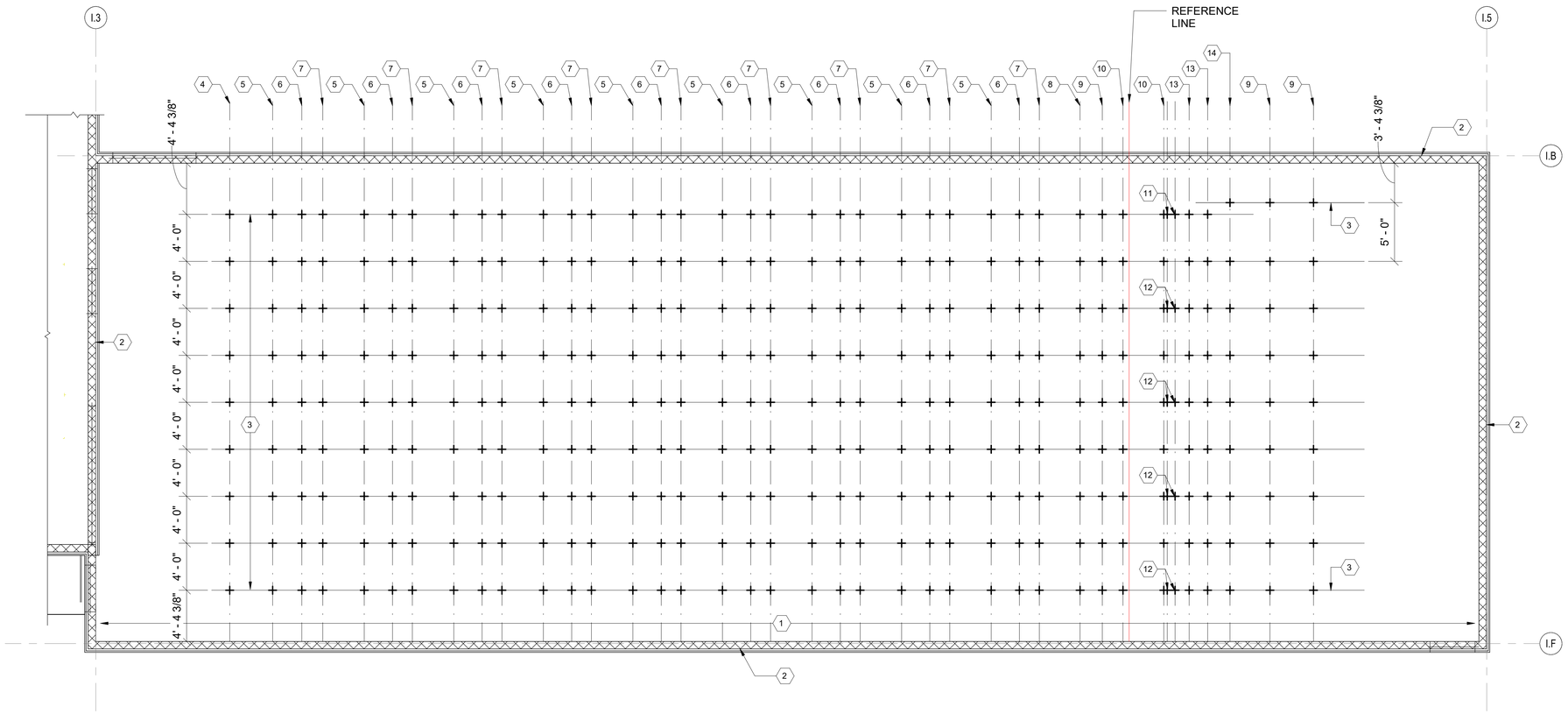


## INDOOR RANGE BOTTOM CHORD PLAN

SCALE: 3/16" = 1'-0"

PLAN NORTH

## GENERAL SHEET NOTES

1. DATUM FOR ALL ELEVATIONS GIVEN ON THIS PLAN IS FINISHED FIRST FLOOR ELEVATION = 0'-0". REFER TO CIVIL DRAWINGS FOR ACTUAL ELEVATION
2. STAGGER JOIST AS REQUIRED TO OBTAIN REQUIRED BEARING ON BEAMS AND WALLS.
3. FOR LINTEL SCHEDULE SEE TYPICAL DETAIL SHEET. LINTELS ARE NOTED ON PLAN THUS: FOR EXACT LOCATION SEE ARCHITECTURAL AND MECHANICAL DRAWINGS.
4. FOR TYPICAL DETAILS AND GENERAL NOTES REFER TO SHEET S001, S002, S501 AND S502

## # NEW WORK KEYNOTES

1. 24KCS5 JOIST BOTTOM CHORD. REFER TO ROOF FRAMING PLAN SHEET S106.
2. GROUT ALL MASONRY WALL CELLS SOLID WITH 4000 PSI CONCRETE FULL HEIGHT IN SHOOTING RANGE AREA.
3. UNISTRUT CHANNELS FOR SUPPORT OF ACTION TARGET BALLISTIC BAFFLES.
4. HANGING BAFFLE POINT LOADS ALONG LINE, WT = 170 LBS EACH
5. HANGING BAFFLE POINT LOADS ALONG LINE, WT = 255 LBS EACH
6. HANGING BAFFLE POINT LOADS ALONG LINE, WT = 500 LBS EACH
7. HANGING BAFFLE POINT LOADS ALONG LINE, WT = 190 LBS EACH
8. HANGING BAFFLE POINT LOADS ALONG LINE, WT = 230 LBS EACH
9. HANGING BAFFLE POINT LOADS ALONG LINE, WT = 300 LBS EACH
10. HANGING BAFFLE POINT LOADS ALONG LINE, WT = 155 LBS EACH
11. HANGING BAFFLE POINT LOADS, WT = 275 LBS
12. HANGING BAFFLE POINT LOADS, WT = 60 LBS
13. HANGING BAFFLE POINT LOADS ALONG LINE, WT = 80 LBS EACH
14. HANGING BAFFLE POINT LOADS ALONG LINE, WT = 150 LBS EACH

## GRAPHIC SCALE(S)

SCALE: 3/16"=1'-0" 0 4' 8' 12'

SCALE: 3/4"=1'-0" 0 1' 2' 3'


WALKER the GROUP ARCHITECTURE incorporated
PO BOX 541, NEW BERN, NC 28563
252-636-8778


NORTH CAROLINA PROFESSIONAL ENGINEER SEAL 022830 07/28/2025 KEVIN M. ROOMSBURG


NRW ENGINEERING
Structural Consultants
748 Lord Dunmore Drive, Suite 101
Virginia Beach, VA 23464
Phone 757-474-0612
Fax 757-474-0919
NC license C-1393


# CRAVEN COMMUNITY COLLEGE- PUBLIC SAFETY TRAINING CENTER

Executive Pkwy
New Bern, NC 28562

BID DOCUMENTS

SCO # 24-27879-01A

| No. | Date | Revisions |
|---|---|---|

Project Number: 2407.SAFE
Date: 07/28/2025
Drawn: DFS
Checked: KMR
Scale: AS NOTED
Drawing Title: INDOOR RANGE BOTTOM CHORD PLAN

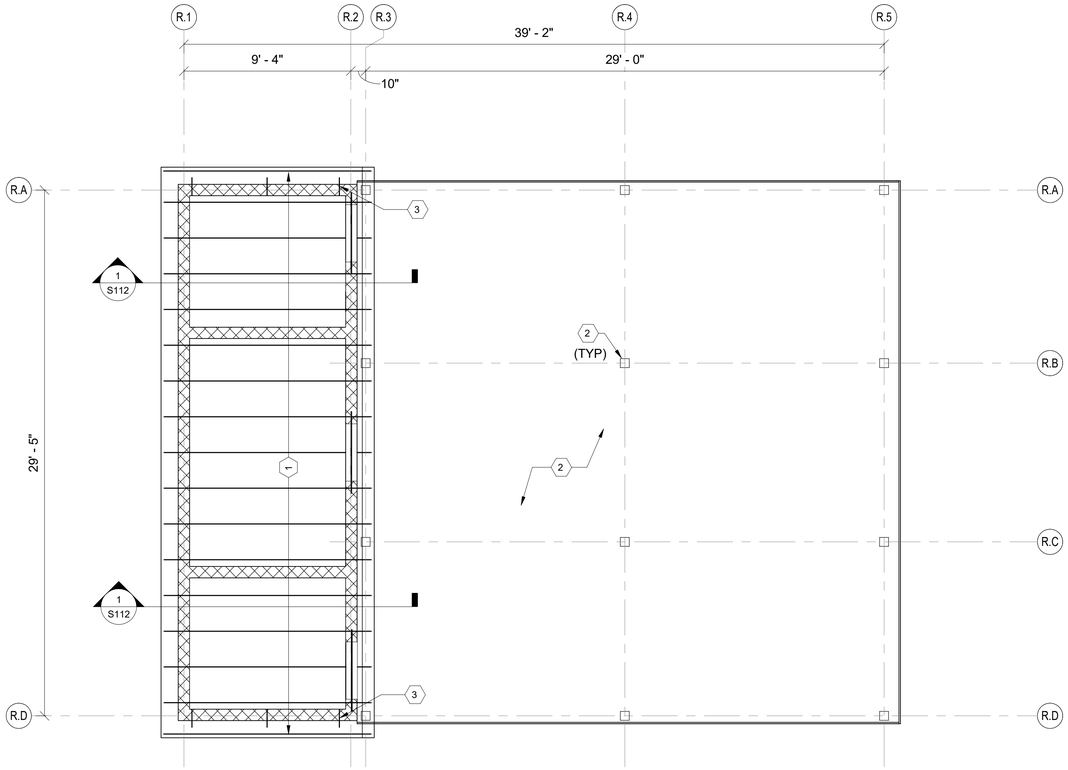


## REHAB SHELTER ROOF FRAMING PLAN

SCALE: 1/4" = 1'-0"

PLAN NORTH

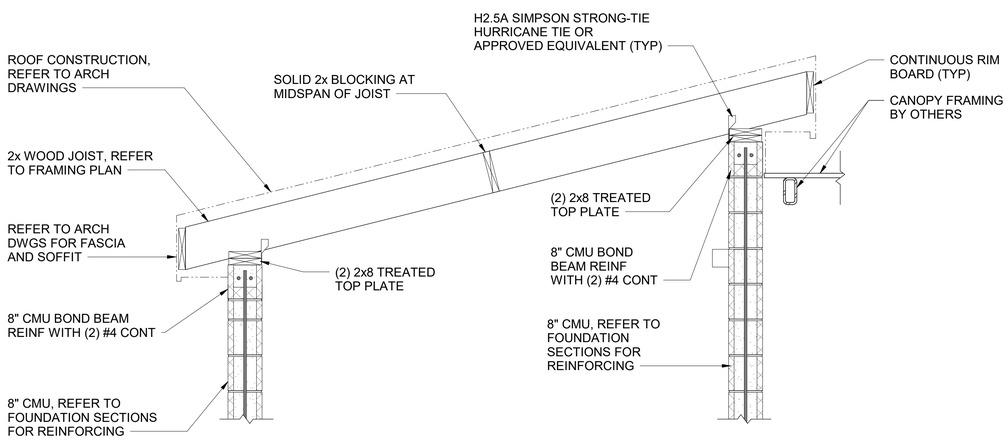


## 1 SECTION

SCALE: 3/4" = 1'-0" (S112)

## GENERAL SHEET NOTES

1. DATUM FOR ALL ELEVATIONS GIVEN ON THIS PLAN IS FINISHED FIRST FLOOR ELEVATION = 0'-0". REFER TO CIVIL DRAWINGS FOR ACTUAL ELEVATION.
2. ROOF CONSTRUCTION IS 5/8" APA RATED SHEATHING SUPPORTED ON 2X WOOD JOISTS BEARING ON MASONRY BEARING WALLS.
3. FOR LINTEL SCHEDULE SEE TYPICAL DETAIL SHEET. LINTELS ARE NOTED ON PLAN THUS: FOR EXACT LOCATION SEE ARCHITECTURAL AND MECHANICAL DRAWINGS.
4. FOR TYPICAL DETAILS REFER TO SHEETS S501 AND S502.
5. GENERAL NOTES REFER TO SHEETS S001 AND S002.

## # NEW WORK KEYNOTES

1. 2x10 WOOD JOIST AT 24" OC.
2. CANOPY FRAMING AND COLUMNS BY OTHERS
3. 2x10 OUTLOOKERS. (TYP)

## GRAPHIC SCALE(S)

SCALE: 1/4"=1'-0" 0 2' 4' 8'

SCALE: 3/4"=1'-0" 0 1' 2' 3'


WALKER the GROUP ARCHITECTURE incorporated
PO BOX 541, NEW BERN, NC 28563
252-636-8778


NORTH CAROLINA PROFESSIONAL SEAL 022830 07/28/2025 ENGINEER KEVIN M. ROOMSBURG


NRW ENGINEERING
Structural Consultants
748 Lord Dunmore Drive, Suite 101
Virginia Beach, VA 23464
Phone 757-474-0612
Fax 757-474-0919
NC license C-1393


**CRAVEN COMMUNITY COLLEGE-PUBLIC SAFETY TRAINING CENTER**

**Executive Pkwy**
**New Bern, NC 28562**

**BID DOCUMENTS**

**SCO # 24-27879-01A**

| Revisions | |
|---|---|
| No. | Date |

Project Number: 2407.SAFE
Date: 07/28/2025
Drawn: DFS
Checked: KMR
Scale: AS NOTED

Drawing Title: BID ALTERNATE 03 REHAB SHELTER ROOF FRAMING PLAN AND SECTIONS

Sheet Number: 125 Of 155

Drawing Number: S112

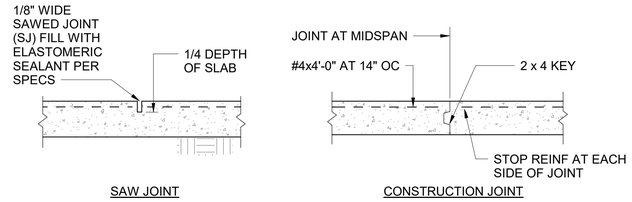


CONTROL JOINT MAY BE SAW JOINT OR CONST JOINT AT CONTRACTOR'S OPTION

## TYPICAL SLAB CONTROL JOINT DETAIL

NOT TO SCALE

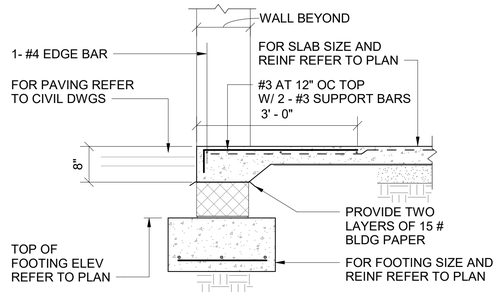


## TYPICAL SILL DETAIL

NOT TO SCALE

## WALL FOOTING SCHEDULE

| MARK | DIMENSIONS | | REINFORCING | | | | NOTES |
|---|---|---|---|---|---|---|---|
| | | | LONGITUDINAL | | TRANSVERSE | | |
| | WIDTH | DEPTH | QUANTITY | SIZE | SIZE | SPACING | |
| WF2.0 | 2' - 0" | 1' - 0" | 3 | 5 | 4 | 4' - 0" | |
| WF2.5 | 2' - 6" | 1' - 0" | 4 | 4 | 4 | 4' - 0" | |
| WF3.0 | 3' - 0" | 1' - 0" | 4 | 4 | 4 | 4' - 0" | |

## COLUMN FOOTING SCHEDULE

| MARK | DIMENSIONS | | | TOP AND BOTTOM REINFORCING | | | | REMARKS |
|---|---|---|---|---|---|---|---|---|
| | | | | SHORT WAY | | LONG WAY | | |
| | WIDTH | LENGTH | DEPTH | QUANTITY | SIZE | QUANTITY | SIZE | |
| F3.0 | 3' - 0" | 3' - 0" | 1' - 0" | 5 | 4 | 5 | 4 | |
| F3.5 | 3' - 6" | 3' - 6" | 1' - 4" | 5 | 4 | 5 | 4 | |
| F5.0 | 5' - 0" | 5' - 0" | 1' - 4" | 6 | 5 | 6 | 5 | |

## REINFORCEMENT LAP SPLICE SCHEDULE

| BAR SIZE | LAP LENGTH |
|---|---|
| #4 | 19" |
| #5 | 24" |
| #6 | 29" |
| #7 | 42" |
| #8 | 48" |
| #9 | 54" |

LAP LENGTH APPLIES TO CONCRETE REINFORCING BAR SPLICES FOR CONTINUOUS REINFORCEMENT

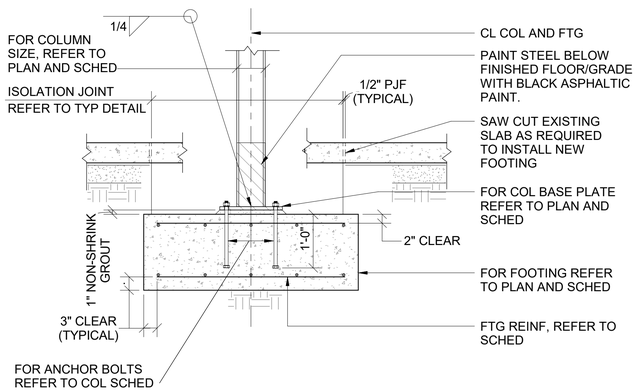


## TYPICAL COLUMN AND FOOTING DETAIL

NOT TO SCALE

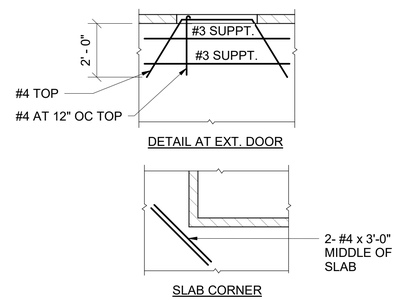


## TYPICAL DETAIL SHOWING SLAB REINFORCING AT EXT. DOORS & CORNERS

NOT TO SCALE

## MASONRY AND PRECAST CONCRETE LINTEL SCHED FOR CMU PARTITIONS

| WALL WIDTH | TOP AND BOTTOM REINFORCING | | |
|---|---|---|---|
| | 4' SPAN & LESS CLEAR SPAN | OVER 4' TO 6' CLEAR SPAN | OVER 6' TO 8' CLEAR SPAN |
| 8" | 2 - # 4 | 2 - # 4 | 2 - # 5 |

## NOTES:

1. FOR SIZE AND LOCATION OF OPENINGS REFER TO ARCH DRAWINGS.
2. BEARING SHALL BE 8" MINIMUM EACH END.
3. LINTELS UP TO 6'-4" SPAN SHALL BE 7 5/8" DEEP. LINTELS OVER 6'-4" SPAN SHALL BE 15 5/8" DEEP.
4. FOR HEAD DETAILS REFER TO ARCHITECTURAL DRAWINGS.
5. IN ADDITION TO MASONRY LINTELS AND AS REQUIRED BY ARCHITECTURAL DETAILS PROVIDE 4" x 6" x 5/16" LOOSE LINTELS AND 6" x 6" x 5/16" ATTACHED LINTELS FOR BRICK SUPPORT.
6. FOR SPANS OVER 6'-4" LINTEL ANGLE SHALL BE ATTACHED TO MASONRY OR PRECAST LINTEL WITH 3/4" DIAMETER EXPANSION BOLTS AT 3'-0" OC (MIN 3 PER ANGLE).
7. STEEL LINTEL ANGLES SHALL BE GALVANIZED, REFER TO SPECS
8. REINFORCING STEEL MUST CONFORM TO ASTM GRADE 60.
9. CONTRACTOR SHALL SUBMIT FOR APPROVAL SHOP DRAWINGS AND SCHEDULES SHOWING SIZE, DETAILS, LOCATION, ETC. FOR ALL LINTELS IN CMU WALLS.

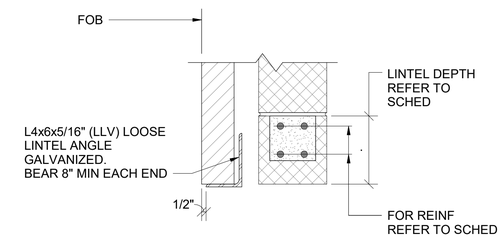


LOOSE STEEL BRICK SUPPORT

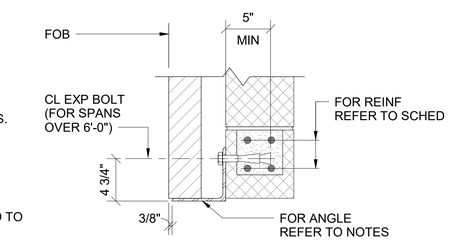


ATTACHED STEEL BRICK SUPPORT

## TYPICAL LINTEL DETAILS

NOT TO SCALE

* WHERE JOISTS OCCUR ON BOTH SIDES OF WALL PROVIDE SEPARATE BRG PLATE INSTALLED AS SHOWN OR PROVIDE COMMON PLATE; WIDTH TO SUIT: 7" AT 8" CMU, 11" AT 12" CMU

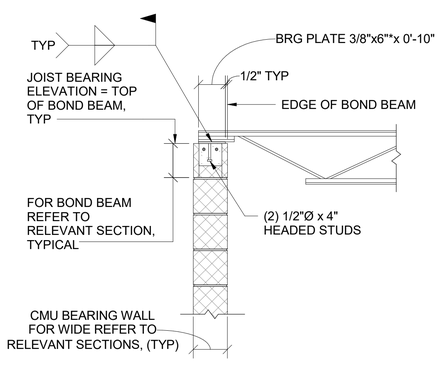


'K' - SERIES

## TYPICAL JOIST BEARING ON CMU DETAILS

NOT TO SCALE

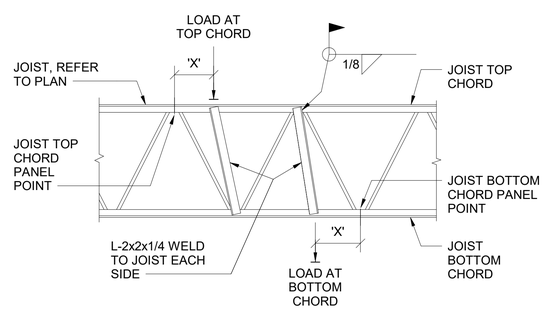


PROVIDE WEB REINFORCEMENT IF LOAD EXCEEDS 100 LBS AND 'X' IS GREATER THAN 6". LOADS SHALL BE APPLIED CONCENTRIC TO CHORDS. CONNECTION OF LOAD TO CHORD SHALL ENGAGE BOTH ANGLES OF CHORD. DO NOT USE C-CLAMPS OR BEAM CLAMPS ON CHORD ANGLE LEGS.

## TYPICAL ADDED REINF AT JOIST SUPPORTING LOADS BETWEEN PANEL POINTS

NOT TO SCALE

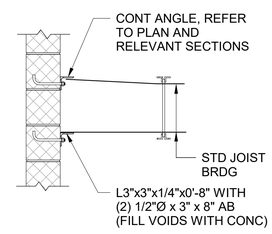


TYPICAL CONDITION

## TYPICAL JOIST BRIDGING ANCHORAGE DETAILS

NOT TO SCALE

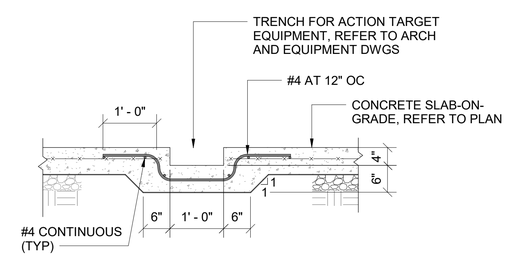


## TYPICAL DETAILS FOR SLAB TRENCH

NOT TO SCALE


WALKER the GROUP ARCHITECTURE incorporated
PO BOX 541, NEW BERN, NC 28563
252-636-8778

NORTH CAROLINA PROFESSIONAL ENGINEER SEAL 022830 07/28/2025 KEVIN M. ROOMSBURG

NRW ENGINEERING
Structural Consultants
748 Lord Dunmore Drive, Suite 101
Virginia Beach, VA 23464
Phone 757-474-0612
Fax 757-474-0919
NC license C-1393


**CRAVEN COMMUNITY COLLEGE- PUBLIC SAFETY TRAINING CENTER**

**Executive Pkwy**
**New Bern, NC 28562**

**BID DOCUMENTS**

**SCO # 24-27879-01A**

Revisions

| No. | Date |
|---|---|

Project Number: 2407.SAFE
Date: 07/28/2025
Drawn: DFS
Checked: KMR
Scale: AS NOTED
Drawing Title: TYPICAL DETAILS

Sheet Number: 126 Of 155
Drawing Number: S501

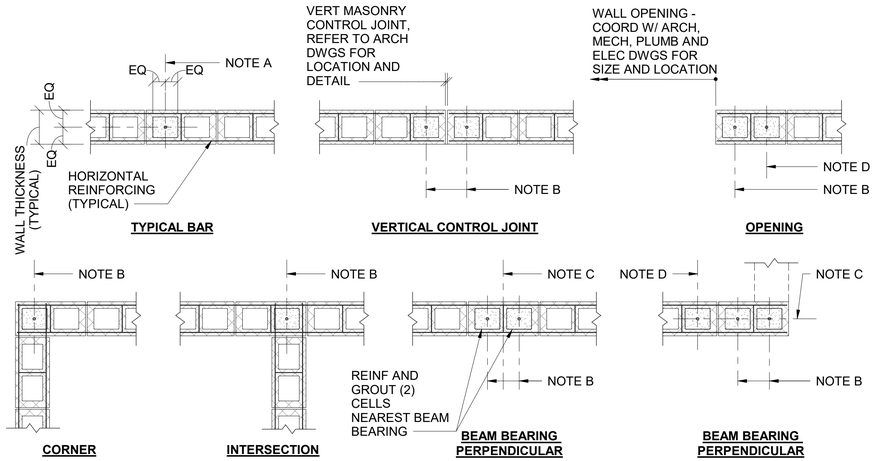


NOTES:

A. VERTICAL WALL REINFORCING BAR AS SPECIFIED REFER TO OTHER DETAILS AND SECTIONS FOR SIZE AND SPACING.

B. VERTICAL WALL REINFORCING BAR AS SPECIFIED. #4 BAR WHERE NOT OTHERWISE SPECIFIED.

C. CENTERLINE OF BEAM/GIRDER ABOVE, SEE FRAMING PLAN FOR EXACT LOCATION.

D. ADDITIONAL VERTICAL WALL REINFORCING BARS MAY BE REQUIRED, REFER TO PLANS AND OTHER DETAILS.

## TYPICAL CONCRETE MASONRY VERTICAL WALL REINFORCING DETAILS

NOT TO SCALE

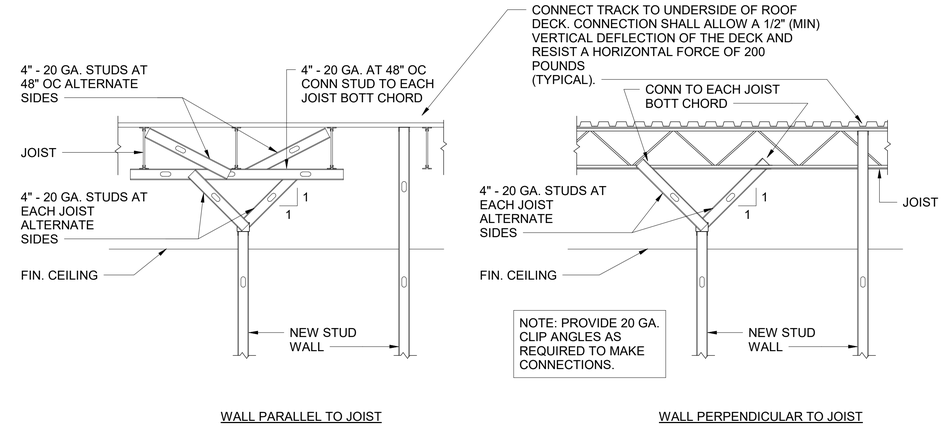


## TYPICAL METAL STUD WALL BRACING DETAILS

SCALE: 1/2" = 1'-0"

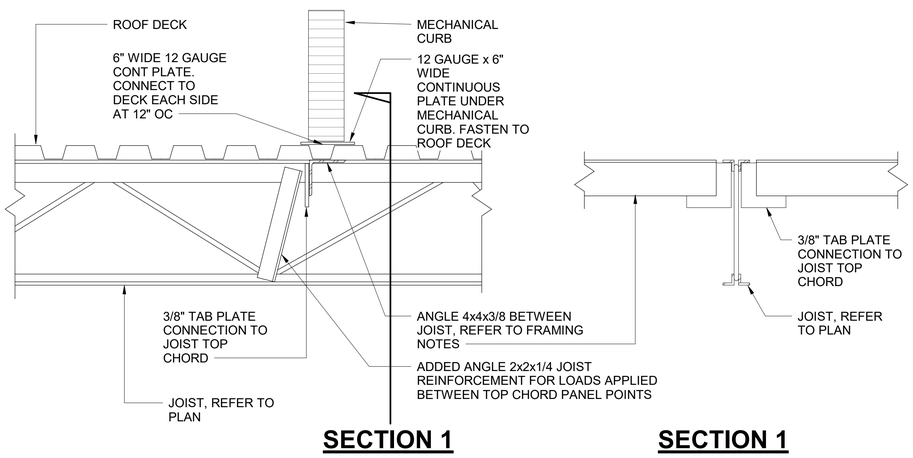


## TYPICAL ROOF OPENING AND MECHANICAL CURB SUPPORT DETAIL

NOT TO SCALE

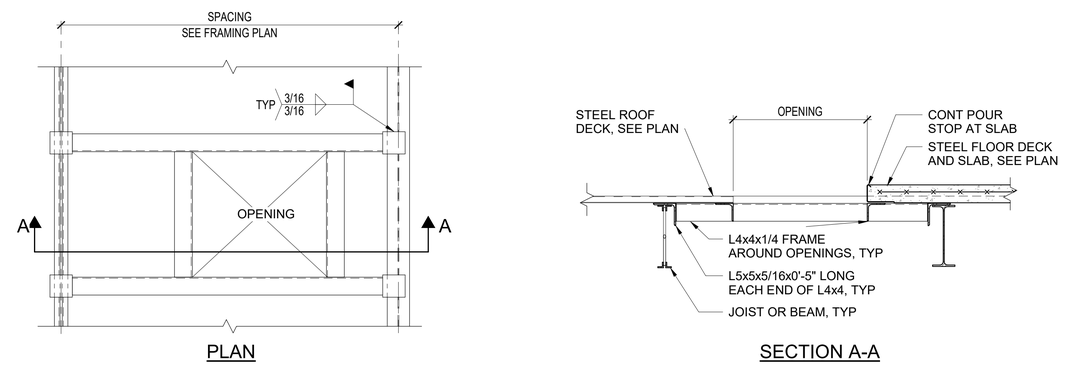


## TYPICAL ROOF OPENING

NOT TO SCALE


WALKER the GROUP ARCHITECTURE incorporated
PO BOX 541, NEW BERN, NC 28563
252-636-8778

NORTH CAROLINA PROFESSIONAL ENGINEER SEAL 022830 07/28/2025 KEVIN M. ROOMSBURG

NRW ENGINEERING
Structural Consultants
748 Lord Dunmore Drive, Suite 101
Virginia Beach, VA 23464
Phone 757-474-0612
Fax 757-474-0919
NC license C-1393


**CRAVEN COMMUNITY COLLEGE-PUBLIC SAFETY TRAINING CENTER**

**Executive Pkwy**
**New Bern, NC 28562**

**BID DOCUMENTS**

**SCO # 24-27879-01A**

Revisions

| No. | Date |
|---|---|

Project Number: 2407.SAFE
Date: 07/28/2025
Drawn: DFS
Checked: KMR
Scale: AS NOTED
Drawing Title: TYPICAL DETAILS

Sheet Number: 127 Of 155
Drawing Number: S502