GENERAL NOTES

GENERAL ITEMS

GENERAL NOTES ON THIS DRAWING ARE APPLICABLE TO EACH HVAC DRAWING OF THIS SET. SEE EACH DRAWING FOR SPECIFIC NOTES APPLICABLE TO THAT DRAWING.

COORDINATE THAT OUTSIDE AIR INTAKE OPENINGS FOR VENTILATION AIR ARE LOCATED AT LEAST 10 FEET MEASURED IN ANY DIRECTION FROM ANY HAZARDOUS OR NOXIOUS CONTAMINANT SOURCE SUCH AS FLUES, VENTS, CHIMNEYS, GAS METERS, GAS REGULATORS, PLUMBING VENTS, ETC., UNLESS TOP OF SUCH INTAKE OPENING IS 3 FEET OR GREATER BELOW ANY OF THE LISTED ITEMS.

OVERHEAD PIPING IN SPACES WITHOUT HUNG CEILINGS SHALL BE RUN AS CLOSE TO ROOF DECK AS PRACTICAL, AS CLOSE TO PARALLEL JOISTS AS POSSIBLE AND ABOVE LIGHTING FIXTURES TO CONCEAL PIPING.

OVERHEAD DUCTWORK AND PIPING IN SPACES WITH CEILINGS SHALL BE CONCEALED UNLESS OTHERWISE NOTED.

PROVIDE PIPE SLEEVES LARGE ENOUGH TO ALLOW FOR REQUIRED LATERAL MOVEMENT OF PIPING.

COORDINATE LOCATION OF GRILLES, REGISTERS, DIFFUSERS, THERMOSTATS AND OTHER WALL OR CEILING MOUNTED HVAC ACCESSORIES WITH REFLECTED CEILING PLAN, LIGHTING FIXTURE LAYOUT AND ACCESSORIES INSTALLED BY OTHER TRADES SO AS TO PRESENT A NEAT AND ATTRACTIVE INSTALLATION THROUGHOUT THE ENTIRE BUILDING. IT IS THE INTENT FOR GRILLES, REGISTERS AND DIFFUSERS TO BE INSTALLED IN THE CENTER OF CEILING PANELS.

EQUIPMENT ON THE ROOF SHALL BE INSTALLED SO AT LEAST 10 FEET OF CLEARANCE SHALL BE MAINTAINED BETWEEN EQUIPMENT AND THE ROOF EDGE.

THE DIAMETER OF THE SUPPLY PIPE AT ANY GAS FIRED EQUIPMENT SHALL NOT BE OF A SMALLER SIZE THAN THE INLET CONNECTION TO THE EQUIPMENT.

ARRANGE PIPING AND DUCTWORK, PARTICULARLY ABOVE CEILING AS REQUIRED TO CLEAR STRUCTURE, DUCTS, CONDUITS, ETC. ALLOWING SPACE FOR PIPE HANGERS, EXPANSION LOOPS AND ACCESS TO VALVES, FILTERS, AND MAINTENANCE OF EQUIPMENT.

CONTRACTOR SHALL VERIFY REQUIRED REFRIGERANT PIPE SIZES AND QUANTITIES WITH EQUIPMENT MANUFACTURER FOR THE INDICATED INSTALLATION.

COORDINATE LOCATION AND INSTALLATION OF EQUIPMENT WITH OTHER TRADES.

DO NOT SCALE DRAWINGS. SEE ARCHITECTURAL DRAWINGS FOR LOCATIONS OF DOORS, WINDOWS, ETC.

THERMOSTATS AND SENSORS SHALL BE LOCATED IN THE ROOMS INDICATED. INSTALL AT APPROX. 46" ABOVE FINISH FLOOR TO MATCH THE HEIGHT OF WALL SWITCHES OR OTHER WALL MOUNTED DEVICES.

PIPING, DUCTWORK, VENTS, ETC., EXTENDING THROUGH EXTERIOR WALLS AND ROOF SHALL BE FLASHED AND COUNTER FLASHED IN A WEATHERPROOF MANNER.

VALVES AND SPECIALTIES SHALL BE LINE SIZE EXCEPT FOR CONTROL VALVES OR UNLESS NOTED OTHERWISE.

EXTEND DRAIN LINES AS INDICATED. ROUTING SHALL NOT INTERFERE WITH PASSAGEWAYS AND MAINTENANCE. DRAINS FROM AIR CONDITIONING CONDENSATE DRAIN PANS SHALL BE TRAPPED. SLOPE CONDENSATE DRAIN PIPING AT 1/4" PER FOOT. VERIFY INVERT IS ESTABLISHED AFTER AIR HANDLING UNIT IS INSTALLED BUT PRIOR TO DUCTWORK INSTALLATION.

INDOOR MECHANICAL EQUIPMENT CONTAINING AIR CONDITIONING COILS SHALL BE OUTFITTED WITH A MOISTURE SENSOR LOCATED IN THE DRAIN P-TRAP. THE SENSOR SHALL BE WIRED TO DE-ENERGIZE THE EQUIPMENT IF WATER RISES ABOVE THE DRAIN OUTLET.

ROOFTOP UNITS CONTAINING AIR CONDITIONING COILS SHALL BE OUTFITTED WITH A MOISTURE SENSOR IN THE PRIMARY DRAIN PAN. THE SENSOR SHALL BE WIRED TO DE-ENERGIZE THE EQUIPMENT IF WATER IS SENSED IN THE DRAIN PAN. INDOOR MECHANICAL EQUIPMENT CONTAINING AIR CONDITIONING COILS SHALL BE OUTFITTED WITH A MOISTURE SENSOR LOCATED IN THE DRAIN P-TRAP. THE SENSOR SHALL BE WIRED TO DE-ENERGIZE THE EQUIPMENT IF WATER RISES ABOVE THE DRAIN OUTLET.

PIPING AND DUCTWORK INSULATION SHALL BE RUN CONTINUOUSLY THROUGH NON-RATED FLOORS, WALLS, ROOF AND PARTITIONS, UNLESS OTHERWISE INDICATED.

NO PIPING SHALL BE SMALLER THAN 3/4" UNLESS OTHERWISE NOTED.

PIPING SHALL BE SUPPORTED IN ACCORDANCE WITH THE SPECIFICATIONS. ADDITIONAL SUPPORTS OR HANGERS SHALL BE ADJACENT TO ELBOWS, TO PREVENT WEIGHT OF PIPING BEING PLACED ON THE EQUIPMENT.

CORRECT SETTING ON BALANCING FITTINGS SHALL BE PERMANENTLY MARKED.

LOCATE AND SIZE CONCRETE PADS AND CURBS FOR MECHANICAL EQUIPMENT IN ACCORDANCE WITH ACTUAL EQUIPMENT PURCHASED.

FOR LOCATION OF MOTOR STARTERS, SEE ELECTRICAL DRAWINGS.

SHEET METAL

PROVIDE A MINIMUM OF THREE TIMES THE FAN DIAMETER OF STRAIGHT DUCTWORK OFF THE SUPPLY AIR FAN DISCHARGE BEFORE ANY TAKEOFFS OR ELBOWS.

DUCTWORK SHALL BE CONSTRUCTED TO THE SMACNA STATIC PRESSURE CLASSIFICATION OF 2 IN. WG AND SEAL CLASS "A".

MAINTENANCE

EQUIPMENT WITH FILTERS SHALL BE INSTALLED SO THAT FILTERS CAN BE EASILY REMOVED AND REPLACED.

EQUIPMENT INSTALLED ABOVE CEILINGS SHALL BE MOUNTED APPROX. 12" ABOVE CEILING (UON) FOR MAINTENANCE ACCESS.

INSTALL PIPE RUNS AT LEAST 6" ABOVE CEILING TILES. WHERE PRACTICAL INSTALL VALVES, AND OTHER MAINTAINABLE DEVICES LOW ENOUGH TO REACH WITH A 6' LADDER.

PROVIDE ACCESS TO ANY INSPECTION OR MAINTAINABLE DEVICE, EQUIPMENT, ETC. - ACCESS OR ACCESS DOOR SHALL BE OF ADEQUATE SIZE TO WORK ON DEVICE.

EXAMINE MANUFACTURER'S LITERATURE TO DETERMINE RECOMMENDED CLEARANCES. THESE CLEARANCES, IN ADDITION TO MINIMUM CLEARANCES REQUIRED BY THE NATIONAL ELECTRICAL CODE, SHALL BE ESTABLISHED AND MAINTAINED. THE CONTRACTOR SHALL BE RESPONSIBLE FOR COORDINATING THESE REQUIREMENTS WITH ALL OTHER TRADES.

INTERDISCIPLINARY COORDINATION

IF THIS CONTRACTOR SHOULD ELECT TO PROPOSE ANY EQUIPMENT THAT HAS DIFFERENT PHYSICAL OR ELECTRICAL CHARACTERISTICS, ETC. WHEN COMPARED TO THE BASIS OF DESIGN EQUIPMENT, THIS CONTRACTOR IS RESPONSIBLE FOR COORDINATING THESE CHANGES WITH THE OTHER TRADES PRIOR TO BID AND AGAIN AFTER ORDERING OF EQUIPMENT. IF THERE SHOULD BE ANY ADDITIONAL WORK INCURRED BY THE OTHER TRADES AS A RESULT OF THIS CONTRACTOR'S EQUIPMENT SELECTION, ALL COSTS ASSOCIATED WITH THE ADDITIONAL WORK SHALL BE BORNE BY THIS CONTRACTOR.

TESTING, ADJUSTING, AND BALANCING (TAB)

AIRSIDE AND WATERSIDE TAB SHALL BE PERFORMED ON ALL DUCTED AND NON-DUCTED HVAC SYSTEMS. NON-DUCT HVAC SYSTEMS, INCLUDE, BUT ARE NOT LIMITED TO, UNIT HEATERS, CABINET UNIT HEATERS, BASEBOARD HEATERS, DUCTLESS MINI-SPLITS, DESTRATIFICATION FANS, LARGE CEILING FANS, INFRARED SPACE HEATERS, AIR CURTAINS, ETC. IT SHALL BE THE RESPONSIBILITY OF THE TAB CONTRACTOR TO DETERMINE APPROPRIATE TESTING, ADJUSTING AND BALANCING PROCEDURES FOR SYSTEMS NOT LISTED BY THE PROCEDURAL STANDARDS CERTIFYING BODY (NEBB, AABC, ETC.).

APPLICABLE CODES

2018 NORTH CAROLINA ENERGY CONSERVATION CODE
2018 NORTH CAROLINA FUEL GAS CODE
2018 NORTH CAROLINA MECHANICAL CODE

LEGENDS AND ABBREVIATIONS

1	WORK NOTE DESIGNATION
	DETAIL/RISER/ENLARGED PLAN
	SHEET WHERE SHOWN/CUT
BF-1	BARREL FAN DESIGNATION
DSS-1	DUCTLESS SPLIT SYSTEM DESIGNATION
EF-1	EXHAUST FAN DESIGNATION
EUH-1	ELECTRIC UNIT HEATER DESIGNATION
GUH-1	GAS FIRED UNIT HEATER DESIGNATION
HP-1	HEAT PUMP DESIGNATION
L-1	LOUVER DESIGNATION
RTU-1	ROOFTOP UNIT DESIGNATION
FS	FAN SWITCH
TC	TIME CLOCK
T	WALL THERMOSTAT/TEMPERATURE SENSOR
TH	WALL TEMPERATURE/HUMIDITY SENSOR
BDD	BACKDRAFT DAMPER
	VOLUME DAMPER
X / XXX	GRILLE, REGISTER, OR DIFFUSER MARK (CFM AS INDICATED)
	SUPPLY AIR/OUTSIDE AIR DUCT SECTION
	RETURN AIR DUCT SECTION
	EXHAUST AIR DUCT SECTION
	SUPPLY AIR/OUTSIDE AIR DUCT SECTION THROUGH ROOF
	RETURN AIR DUCT SECTION THROUGH ROOF
	EXHAUST AIR DUCT SECTION THROUGH ROOF
	DUCT TURNING UP
	DUCT TURNING DOWN
	CEILING DIFFUSER WITH FLEXIBLE DUCTWORK
	RETURN REGISTER WITH DUCTWORK
	EXHAUST GRILLE WITH DUCTWORK
	MITERED ELBOW WITH TURNING VANES
	FLEXIBLE DUCT CONNECTOR
	PIPE TURNING UP
	PIPE TURNING DOWN
	PIPE CAPPED
	PLUG VALVE
	GAS REGULATOR/STEAM TRAP
	UNION
D	CONDENSATE DRAIN PIPING
G	NATURAL GAS PIPING
RL	REFRIGERANT LIQUID PIPING
RS	REFRIGERANT SUCTION PIPING

APPROX	APPROXIMATELY
CFH	CUBIC FEET PER HOUR
CFM	CUBIC FEET PER MINUTE
COP	COEFFICIENT OF PERFORMANCE
EA	EXHAUST AIR
EDB	ENTERING DRY BULB TEMPERATURE
EWB	ENTERING WET BULB TEMPERATURE
ESP	EXTERNAL STATIC PRESSURE
FT	FEET
HP	HORSEPOWER
IN	INCH
LBS	POUNDS
LDB	LEAVING DRY BULB TEMPERATURE
LWB	LEAVING WET BULB TEMPERATURE
MAX	MAXIMUM
MBH	1000 BRITISH THERMAL UNITS PER HOUR
MCA	MINIMUM CIRCUIT AMPS
MIN	MINIMUM
MOCP	MAXIMUM OVERCURRENT PROTECTION
NC	NOISE CRITERIA
OA	OUTSIDE AIR
OED	OPEN ENDED DUCT
PSIG	POUND PER SQUARE INCH GAUGE
RA	RETURN AIR
SA	SUPPLY AIR
SENS	SENSIBLE
SF	SQUARE FEET
TYP	TYPICAL
UON	UNLESS OTHERWISE NOTED
V	VOLTS
W	WATT
WG	WATER GAUGE
WMS	WIRE MESH SCREEN
°F	DEGREE FAHRENHEIT
Ø	PHASE/DIAMETER

WALKER the GROUP ARCHITECTURE incorporated
PO BOX 541, NEW BERN, NC 28563
252-636-8778

NORTH CAROLINA PROFESSIONAL SEAL 058819 ENGINEER TIMOTHY N. HAHN

CRAVEN COMMUNITY COLLEGE-PUBLIC SAFETY TRAINING CENTER

525 Executive Pkwy
New Bern, NC 28562

BID DOCUMENTS

SCO # 24-27879-01A

Revisions

No.	Date

Project Number: 2407.SAFE
Date: 07/28/25
Drawn: MTF
Checked: ETS
Scale: AS NOTED
Drawing Title

LEGEND, NOTES AND ABBREVIATIONS

Sheet Number
Of 34

Drawing Number
M-001

Pace COLLABORATIVE MECHANICAL ELECTRICAL ENGINEERS WWW.PACE-ENGINEERING.COM

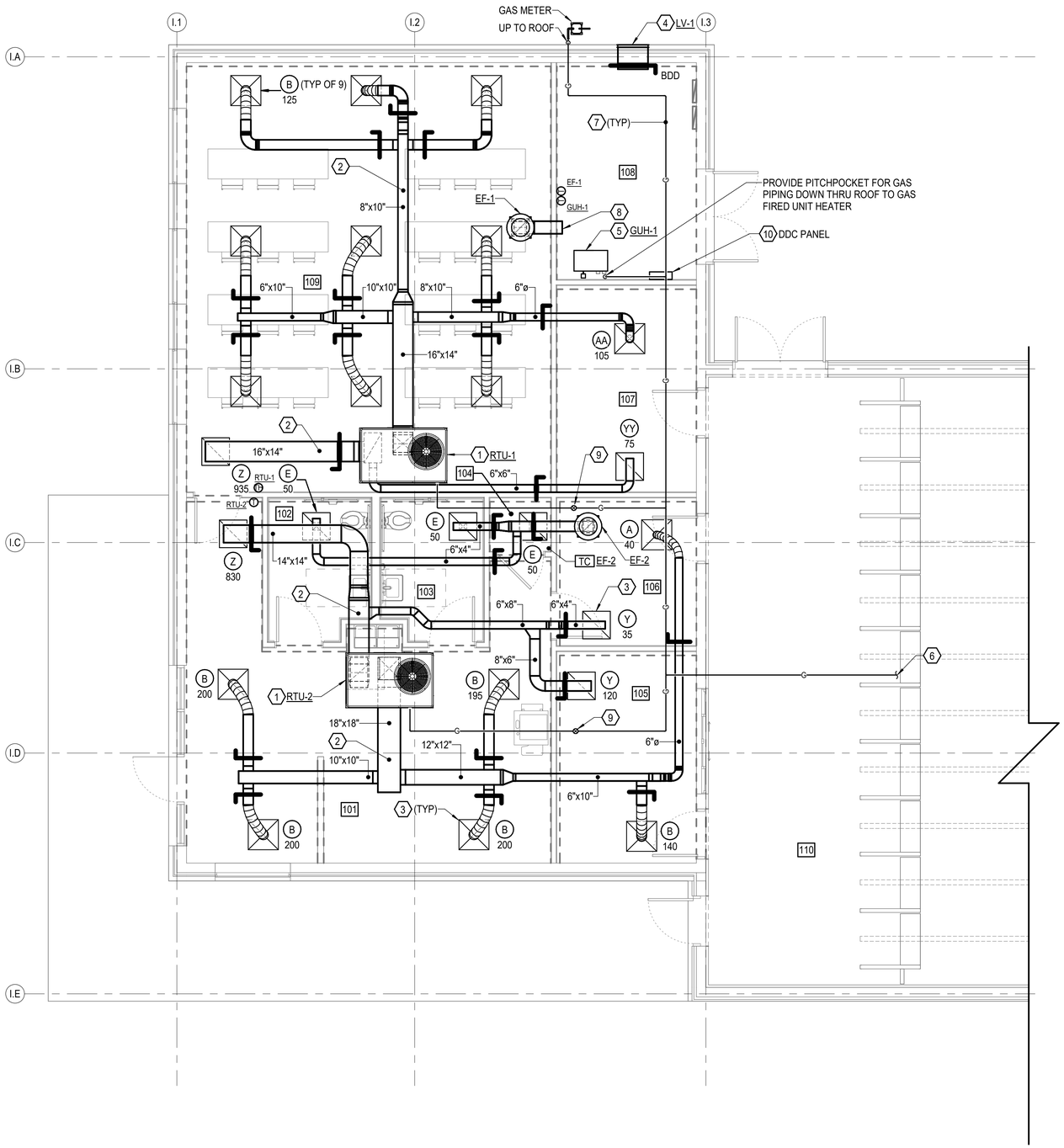

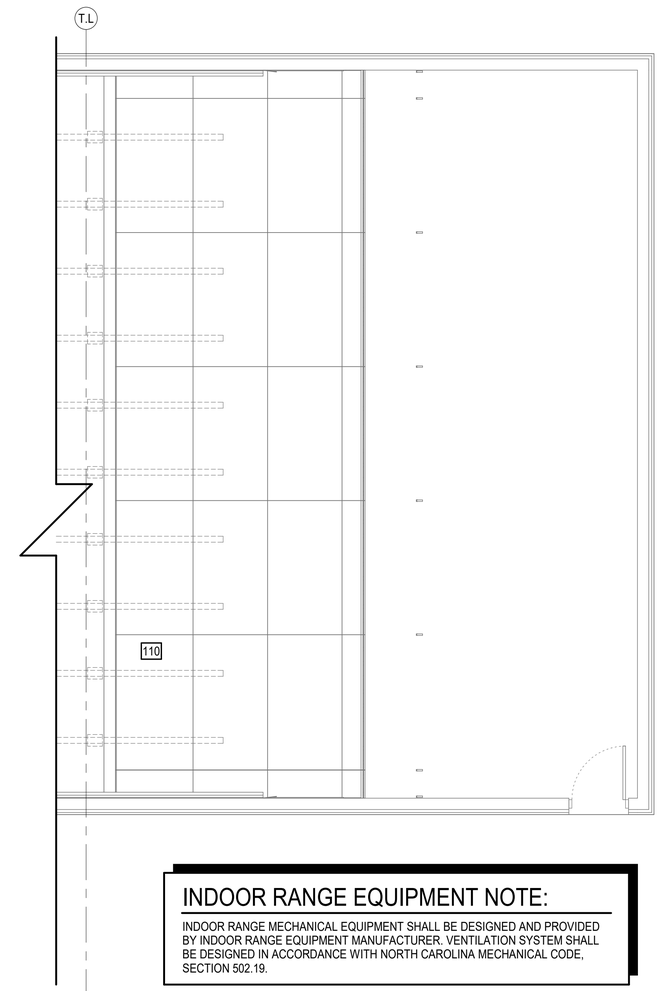

1ST FLOOR ROOM SCHEDULE

ROOM #	ROOM NAME
101	LOBBY/BULLPEN
102	UNISEX
103	UNISEX
104	JAN.
105	CONTROL ROOM
106	RANGE VESTIBULE
107	TARGET STORAGE
108	MECH/ELECT.
109	BRIEFING ROOM
110	RANGE

NOTES THIS SHEET

1. PROVIDE ROOFTOP UNIT, CURB, AND ALL ASSOCIATED APPURTENANCES COMPLETE. PROVIDE CONDENSATE PIPING, TRAP, AND SPILL ON ROOF.
2. PROVIDE DUCTWORK, INSULATION, HANGERS, AND SUPPORTS COMPLETE.
3. PROVIDE DIFFUSER/GRILL AND ALL ASSOCIATED APPURTENANCES COMPLETE.
4. PROVIDE LOUVER COMPLETE.
5. PROVIDE UNIT HEATER, VENT PIPING, COMBUSTION PIPING, HANGERS, AND SUPPORTS COMPLETE. TERMINATE AT ROOF WITH CONCENTRIC VENT IN ACCORDANCE WITH MANUFACTURER'S INSTRUCTIONS.
6. CONNECT GAS PIPING TO STATE INDOOR RANGE EQUIPMENT MANUFACTURER. COORDINATE WITH GENERAL CONTRACTOR EXACT ROUTING.
7. PROVIDE GAS PIPING ON ROOF AND ROOF SUPPORTS COMPLETE. ROOF SUPPORTS SHALL BE 5'-0" ON CENTER.
8. PROVIDE OPEN ENDED DUCT WITH WIRE MESH SCREEN.
9. PROVIDE GAS REGULATOR AND LOCATE MINIMUM 10'-0" AWAY FROM RTU OUTSIDE AIR INTAKE. PIPING DOWNSTREAM SHALL BE NO LESS THAN THE EQUIPMENT CONNECTION SIZE.
10. PROVIDE DDC CONTROL PANEL COMPLETE.

INDOOR RANGE EQUIPMENT NOTE:

INDOOR RANGE MECHANICAL EQUIPMENT SHALL BE DESIGNED AND PROVIDED BY INDOOR RANGE EQUIPMENT MANUFACTURER. VENTILATION SYSTEM SHALL BE DESIGNED IN ACCORDANCE WITH NORTH CAROLINA MECHANICAL CODE, SECTION 502.19.

INDOOR RANGE FLOOR PLAN

SCALE: 1/4" = 1'-0"

GRAPHIC SCALE(S)

1/4" = 1'-0" 5' 0' 5' 10'

WALKER the GROUP ARCHITECTURE incorporated
PO BOX 541, NEW BERN, NC 28563
252-636-8778

NORTH CAROLINA PROFESSIONAL SEAL 058819 ENGINEER TIMOTHY N. HAHN

CRAVEN COMMUNITY COLLEGE-PUBLIC SAFETY TRAINING CENTER

525 Executive Pkwy
New Bern, NC 28562

BID DOCUMENTS

SCO # 24-27879-01A

No.	Date	Revisions

Project Number: 2407.SAFE
Date: 07/28/25
Drawn: MTF
Checked: ETS
Scale: AS NOTED

Drawing Title

INDOOR RANGE FLOOR PLAN

Sheet Number
Of 34

Drawing Number

M-101

PACE COLLABORATIVE MECHANICAL ELECTRICAL ENGINEERS WWW.PACE-ENGINEERING.COM

NOTES THIS SHEET

1. PROVIDE HEATER AND SUPPORTS COMPLETE. MOUNT TOP OF HEATER 4" BELOW CEILING.
2. PROVIDE EXHAUST FAN, DUCTWORK, HANGERS, SUPPORTS, AND MANUFACTURER'S APPROVED WALL CAP COMPLETE.
3. PROVIDE FAN AND WALL MOUNT COMPLETE. MOUNT BOTTOM OF FAN 9'-0" ABOVE FINISHED FLOOR.
4. PROVIDE DUCTLESS SPLIT SYSTEM INDOOR UNIT, HANGERS, AND SUPPORTS COMPLETE. MOUNT 8'-0" ABOVE FINISHED FLOOR.
5. PROVIDE DUCTLESS SPLIT SYSTEM OUTDOOR UNIT, CONCRETE CURB,AND ASSOCIATED APPURTENANCES COMPLETE.
6. PROVIDE REFRIGERANT PIPING, INSULATION, JACKETING, HANGERS, AND SUPPORTS COMPLETE.
7. PROVIDE CONDENSATE DRAIN PIPING, INSULATION, HANGERS, AND SUPPORTS. TERMINATE 6" ABOVE SPLASHBLOCK.

REHAB SHELTER EQUIPMENT NOTE:

EQUIPMENT SHOWN WITHIN THIS REHAB SHELTER SHALL ALSO BE INSTALLED WITHIN THE SECOND REHAB SHELTER NOT SHOWN ON DRAWINGS. EQUIPMENT TAGS SHALL BE UNIQUE FOR EACH BUILDING, REFER TO SCHEDULES ON SHEET M-601 FOR EQUIPMENT TAGS AND TOTAL EQUIPMENT COUNT.

BID ALTERNATE NOTE:

REFER TO GI001 FOR BID ALTERNATE INFORMATION.

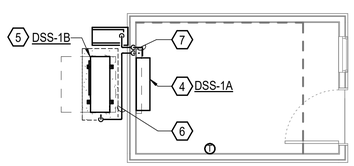

GATEHOUSE MECHANICAL PLAN
SCALE: 1/4" = 1'-0"

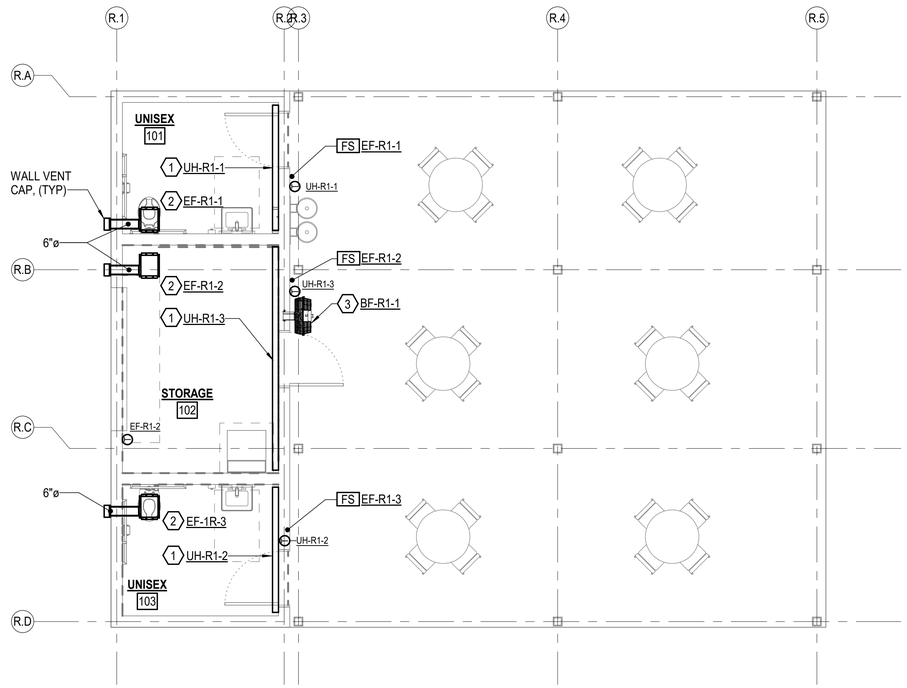

REHAB SHELTER MECHANICAL PLAN
SCALE: 1/4" = 1'-0"

GRAPHIC SCALE(S)

1/4" = 1'-0" 5' 0' 5' 10'

PACE COLLABORATIVE
MECHANICAL ELECTRICAL ENGINEERS
WWW.PACE-ENGINEERING.COM

WALKER the GROUP ARCHITECTURE incorporated
PO BOX 541, NEW BERN, NC 28563
252-636-8778

NORTH CAROLINA PROFESSIONAL SEAL 058819 ENGINEER TIMOTHY N. HAHN

CRAVEN COMMUNITY COLLEGE-PUBLIC SAFETY TRAINING CENTER

525 Executive Pkwy
New Bern, NC 28562

BID DOCUMENTS

SCO # 24-27879-01A

No.	Date	Revisions

Project Number: 2407.SAFE
Date: 07/28/25
Drawn: MTF
Checked: ETS
Scale: AS NOTED
Drawing Title: REHAB SHELTER AND GATEFLOOR PLAN
Sheet Number: 34
Drawing Number: M-102

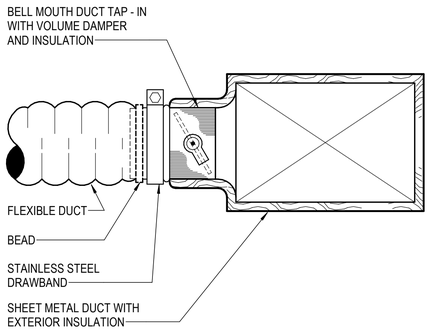

FLEXIBLE DUCT INSTALLATION DETAIL
NO SCALE

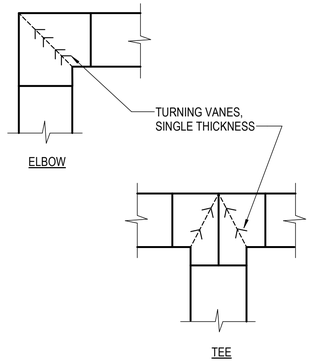

DUCTWORK FITTING DETAILS
NO SCALE

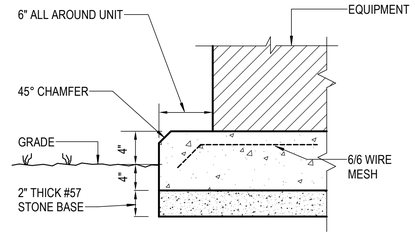

NOTE: CONCRETE SHALL BE 3,500 PSI WITH A MAX W/C RATIO OF 0.58 AND AN AIR CONTENT OF 5-7%

CONCRETE PAD DETAIL - EXTERIOR
NO SCALE

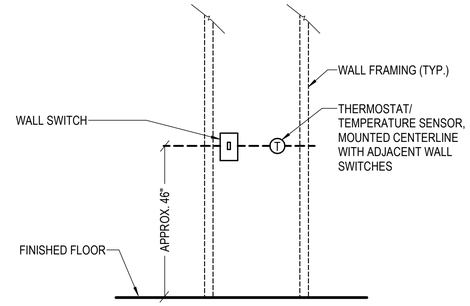

SWITCH/THERMOSTAT MOUNTING HEIGHT DETAIL
NO SCALE

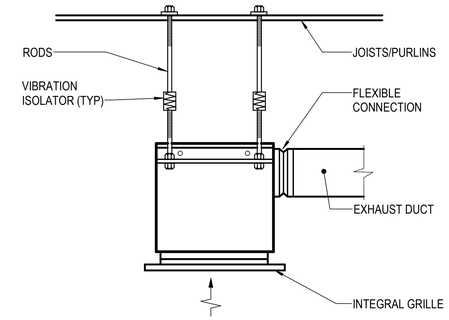

CABINET EXHAUST FAN DETAIL
NO SCALE

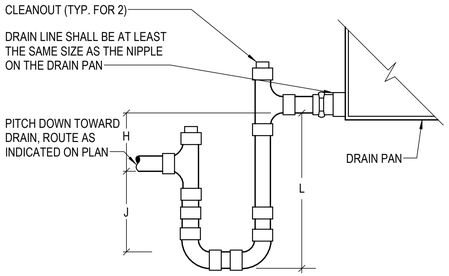

DRAIN PAN TRAPPING FOR SECTION UNDER NEGATIVE PRESSURE:

L = H + J + PIPE DIAMETER WHERE:

H = 1 INCH FOR EACH INCH OF NEGATIVE PRESSURE PLUS 1 INCH

J = 1/2 H

DRAIN PAN TRAPPING FOR SECTION UNDER POSITIVE PRESSURE:

L = H + J + PIPE DIAMETER WHERE:

H = 1/2 INCH (MINIMUM)

J = 1/2 INCH PLUS THE UNIT POSITIVE STATIC PRESSURE AT COIL DISCHARGE (LOADED FILTERS)

CONDENSATE DRAIN TRAP
NO SCALE

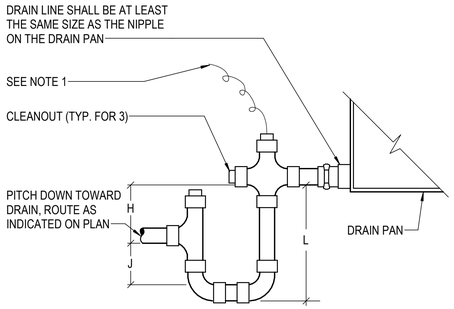

DRAIN PAN TRAPPING FOR SECTION UNDER NEGATIVE PRESSURE:

L = H + J + PIPE DIAMETER WHERE:

H = 1 INCH FOR EACH INCH OF NEGATIVE PRESSURE PLUS 1 INCH

J = 1/2 H

DRAIN PAN TRAPPING FOR SECTION UNDER POSITIVE PRESSURE:

L = H + J + PIPE DIAMETER WHERE:

H = 1/2 INCH (MINIMUM)

J = 1/2 INCH PLUS THE UNIT POSITIVE STATIC PRESSURE AT COIL DISCHARGE (LOADED FILTERS)

NOTES:

1. FOR INDOOR AIR HANDLING UNITS, UNITARY AIR CONDITIONERS, AND DEHUMIDIFIERS, PROVIDE RECTORSEAL EZ TRAP 83230 EXT-230 WITH INTEGRAL OVERFLOW SENSOR, OR APPROVED EQUAL.
2. FOR ROOF MOUNTED HVAC UNITS, THE CONTRACTOR SHALL PROVIDE MOISTURE SENSOR IN DRAIN PAN TO DE-ENERGIZE UNIT SHOULD PRIMARY DRAIN GET CLOGGED.

INDOOR CONDENSATE DRAIN TRAP DETAIL
NO SCALE

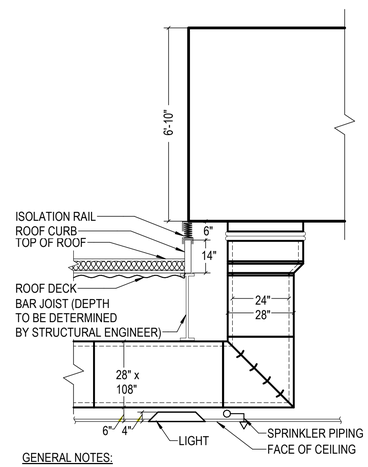

GENERAL NOTES:

RTU FOOTPRINT (90-130 TONS, NO GAS SECTION) IS 36'x12' WITH 8' ALL AROUND FOR SERVICE CLEARANCE.

BOTTOM OF BAR JOIST TO FACE OF CEILING BELOW RTU'S MIN. 34".

SECTION AT LARGE RTU
NO SCALE

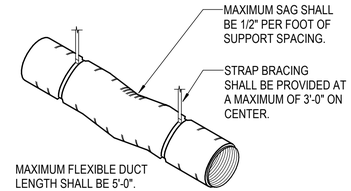

INSULATED FLEXIBLE DUCTWORK DETAIL
NO SCALE

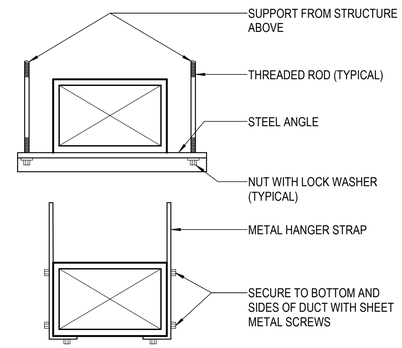

NOTE: FOR ANGLE SIZE AND HANGER STRAP GAUGE, SEE SMACNA LOW PRESSURE DUCT CONSTRUCTION STANDARDS.

DUCT SUPPORT DETAIL
NO SCALE

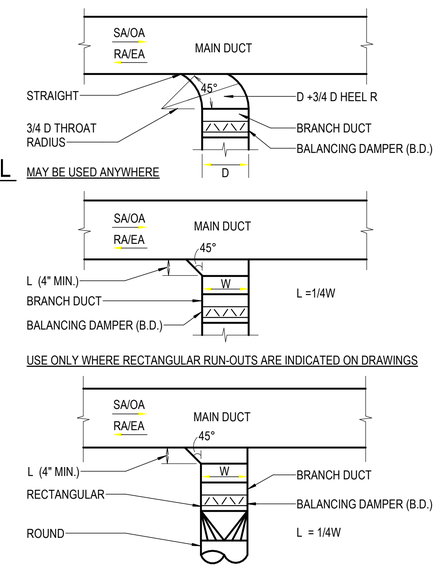

BRANCH CONNECTION DETAILS
NO SCALE

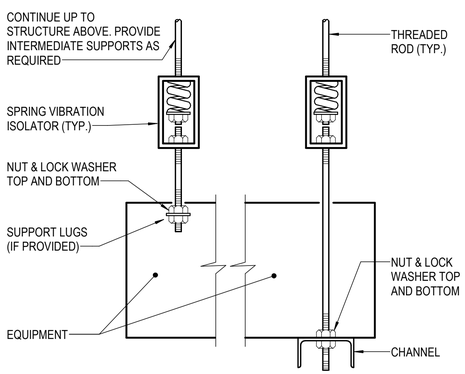

SUSPENDED EQUIPMENT SUPPORT DETAIL
NO SCALE

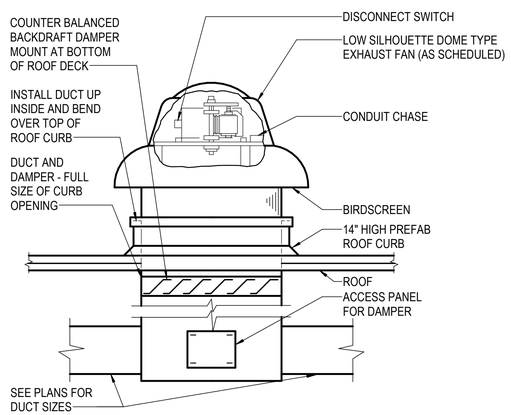

ROOF EXHAUST FAN DETAIL (W/ DUCTWORK)
NO SCALE

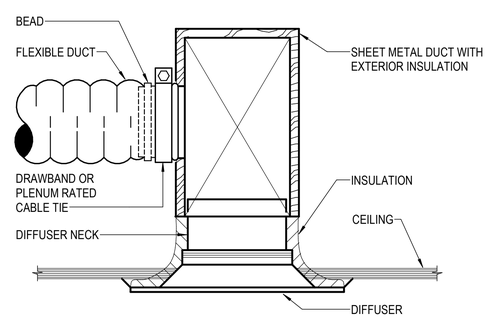

INSTALL PER THIS DETAIL WHERE SPACE ABOVE CEILING IS LIMITED

NO SCALE

CEILING DIFFUSER INSTALLATION DETAIL
NO SCALE

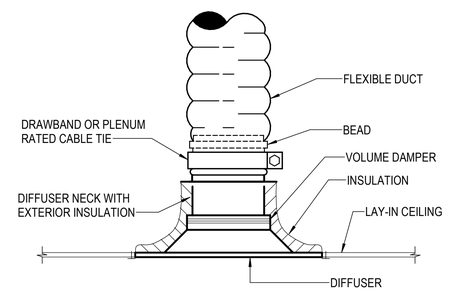

TYPICAL INSTALLATION DETAIL
NO SCALE

WALKER the GROUP ARCHITECTURE incorporated
PO BOX 541, NEW BERN, NC 28563
252-636-8778

NORTH CAROLINA PROFESSIONAL SEAL 058819 ENGINEER TIMOTHY N. HAHN

CRAVEN COMMUNITY COLLEGE- PUBLIC SAFETY TRAINING CENTER

525 Executive Pkwy New Bern, NC 28562

BID DOCUMENTS

SCO # 24-27879-01A

No.	Date	Revisions

Project Number 2407.SAFE	Date 07/28/25
Drawn MTF	Checked ETS
Scale AS NOTED	

Drawing Title

DETAILS

Sheet Number

Of 34

Drawing Number

M-501

Pace COLLABORATIVE MECHANICAL ELECTRICAL ENGINEERS WWW.PACE-ENGINEERING.COM

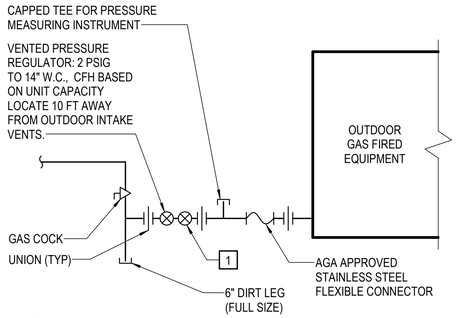

NOTES

1 **PROVIDE OVERPRESSURE PROTECTION DEVICE FOR ANY REGULATORS WITH UPSTREAM GAS PRESSURE OVER 2 PSIG PER 2021 VFGC 416.**

OUTDOOR EQUIPMENT GAS CONNECTION DETAIL

NO SCALE

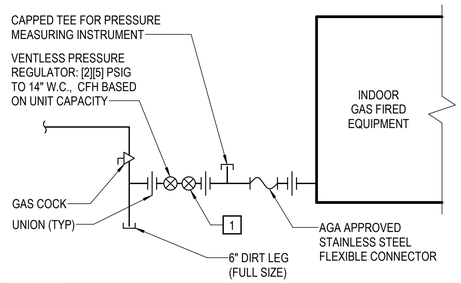

NOTES

1 **PROVIDE OVERPRESSURE PROTECTION DEVICE FOR ANY REGULATORS WITH UPSTREAM GAS PRESSURE OVER 2 PSIG PER 2021 VFGC 416.**

INDOOR EQUIPMENT GAS CONNECTION DETAIL

NO SCALE

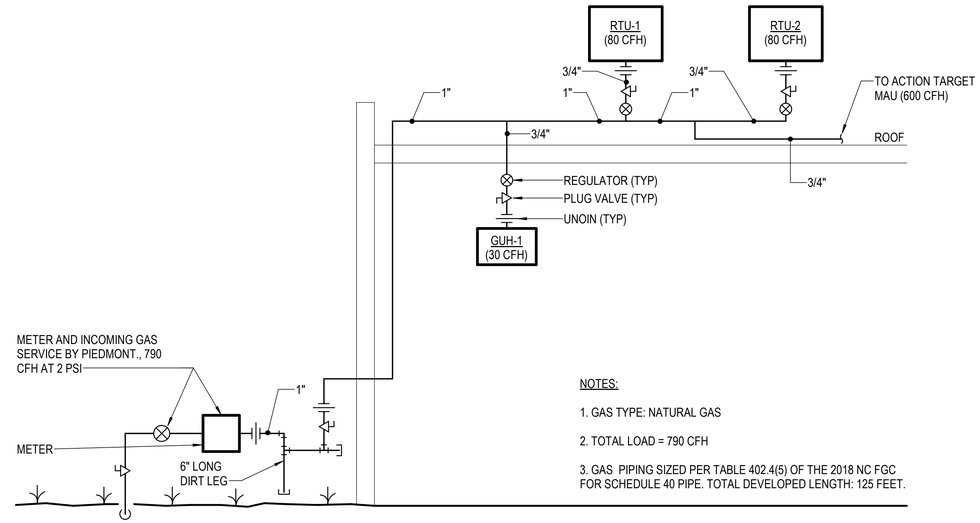

NOTES:

1. GAS TYPE: NATURAL GAS
2. TOTAL LOAD = 790 CFH
3. GAS PIPING SIZED PER TABLE 402.4(5) OF THE 2018 NC FGC FOR SCHEDULE 40 PIPE. TOTAL DEVELOPED LENGTH: 125 FEET.

GAS RISER DIAGRAM

NO SCALE

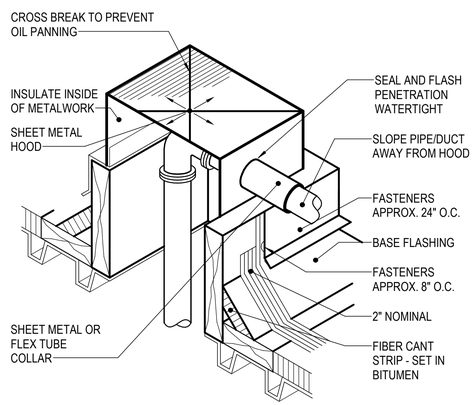

PIPE ROOF PENETRATION DETAIL

NO SCALE

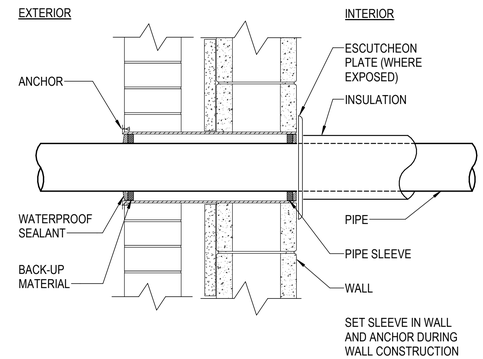

PIPE SLEEVE THRU WALL DETAIL

NO SCALE

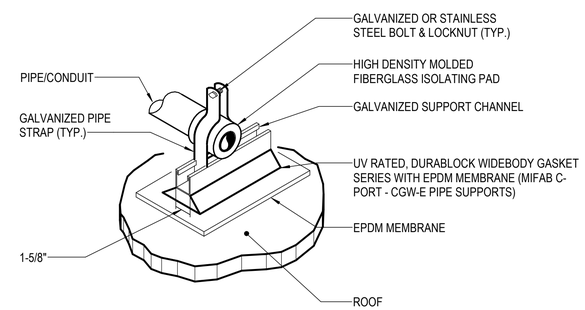

NOTE: COORDINATE PIPE ROOF SUPPORT SPACING REQUIREMENTS WITH MANUFACTURER.

ROOFTOP PIPE SUPPORT DETAIL

NO SCALE

WALKER the GROUP ARCHITECTURE incorporated
PO BOX 541, NEW BERN, NC 28563
252-636-8778

NORTH CAROLINA PROFESSIONAL SEAL 058819 ENGINEER TIMOTHY N. HAHN

CRAVEN COMMUNITY COLLEGE-PUBLIC SAFETY TRAINING CENTER

525 Executive Pkwy
New Bern, NC 28562

BID DOCUMENTS

SCO # 24-27879-01A

No.	Date	Revisions

Project Number: 2407.SAFE
Date: 07/28/25
Drawn: MTF
Checked: ETS
Scale: AS NOTED
Drawing Title: **DETAILS**

Sheet Number
Of 34

Drawing Number
M-502

PACE COLLABORATIVE
MECHANICAL ELECTRICAL ENGINEERS
WWW.PACE-ENGINEERING.COM

LOUVER SCHEDULE - INDOOR RANGE

TAG	SERVICE	SIZE (IN.) WxH	FREE AREA (SF)	C.F.M.	SERVES	REMARKS
LV-1	INTAKE	24 X 24	1.6	680	EF-1	SEE NOTES

NOTES:
1. SELECTIONS BASED ON GREENHECK.
2. PROVIDE WITH BIRDSCREEN.
3. PROVIDE ALUMINUM STORMPROOF CONSTRUCTION.
4. PROVIDE COLOR CHART FOR FINISH SELECTION BY ARCHITECT.
5. PROVIDE "KYNAR" FINISH OR EQUAL.
6. LOUVER SHALL BE LISTED FOR AMCA 550 HIGH VELOCITY WIND-DRIVEN RAIN RESISTANCE.

DUCTLESS SPLIT SYSTEM HEAT PUMP SCHEDULE

			FAN DATA	HEATING DATA		ELECTRIC DATA INDOOR UNIT					ELECTRIC DATA OUTDOOR UNIT					
TAG	LOCATION	TOTAL COOLING CAPACITY M.B.H.	SUPPLY AIR C.F.M.	TOTAL M.B.H	COP	M.C.A.	M.O.C.P.	VOLTS	PHASE	TAG	M.C.A.	M.O.C.P.	VOLTS	PHASE	REFRIGERANT TYPE	REMARKS
DSS-1A	GATEHOUSE	18.0	320	19.0	3.4	INDOOR UNIT POWERED BY OUTDOOR UNIT				DSS-1B	11.0	28.0	208	1	R-410A	SEE NOTES

NOTES:
1. SELECTIONS BASED ON MITSUBISHI ELECTRIC.
2. COOLING CAPACITY BASED ON 95° F AMBIENT. HEATING CAPACITY BASED ON 47°F AMBIENT. HEATING CAPACITY AT 17°F AMBIENT SHALL BE 13.6 MBH.
3. PROVIDE INDOOR UNIT WITH COIL FREEZE PROTECTION, REMOTE MOUNTED THERMOSTAT, HIGH SIDE WALL CASSETTE CONFIGURATION.
4. INDOOR UNIT POWERED FROM OUTDOOR UNIT. IF AN ALTERNATE UNIT IS PROVIDED THAT REQUIRES SEPARATE POWER CONNECTIONS, ELECTRICAL CONTRACTOR TO PROVIDE ALL ADDITIONAL DISCONNECTS, BREAKERS, WIRING, AS REQUIRED FOR A FULLY FUNCTIONAL SYSTEM.

GRILLE, REGISTER & DIFFUSER SCHEDULE

TAG	TYPE	SERVICE	C.F.M. RANGE	NECK SIZE	MAX. P.D.	MODEL NUMBER	REMARKS
A	DIFFUSER	SUPPLY	50 - 110	6"	0.1	TDCA-AA	LAY-IN, 24x24 PANEL, 4-WAY BLOW PATTERN
AA	DIFFUSER	SUPPLY	105	6"	1.1	TDCA-AA	SURFACE MOUNT, 24x24 PANEL, 4-WAY BLOW PATTERN
B	DIFFUSER	SUPPLY	115 - 230	8"	0.1	TDCA-AA	LAY-IN, 24x24 PANEL, 4-WAY BLOW PATTERN
C	SIDEWALL GRILLE	SUPPLY	105	6 x 6	0.1	300FL	SURFACE MOUNT, 8x8 PANEL, 35° DEFLECTION, 1/2" BLADE SPACING
E	GRILLE	EXHAUST	50	6 x 6	0.1	350FL	SURFACE MOUNT, 24x24 PANEL, 35° DEFLECTION, 1/2" BLADE SPACING
Y	GRILLE	RETURN	35 - 120	6 x 6	0.1	350FL	LAY-IN, 24x24 PANEL, 35° DEFLECTION, 1/2" BLADE SPACING
YY	GRILLE	RETURN	75	6 x 6	0.1	350FL	SURFACE MOUNT, 24x24 PANEL, 35° DEFLECTION, 1/2" BLADE SPACING
Z	GRILLE	RETURN	830 - 935	16 x 16	0.1	350FL	LAY-IN, 24x24 PANEL, 35° DEFLECTION, 1/2" BLADE SPACING

THE FOLLOWING NOTES ARE TYPICAL UNLESS OTHERWISE NOTED:
1. SELECTIONS BASED ON TITUS.
2. PROVIDE ALUMINUM DIFFUSERS AND REGISTERS WITH OPPOSED BLADE VOLUME DAMPERS, BAKED STANDARD WHITE ENAMEL FINISH (INCLUDING HEAD OF SCREWS), MAXIMUM NC=25 AT HIGHEST CFM AND PROVIDE SQUARE TO ROUND TRANSITION AS REQUIRED.
3. PROVIDE 4-WAY PATTERN CEILING DIFFUSERS, U.O.N. ON PLANS OR SCHEDULE.
4. MAXIMUM PRESSURE DROP SHALL INCLUDE VOLUME DAMPER WHERE DAMPER IS PROVIDED.

FAN SCHEDULE - INDOOR RANGE

TAG	LOCATION	FAN TYPE	C.F.M.	E.S.P. (IN. WG.)	DRIVE	ELECTRICAL DATA H.P.	VOLTS	PHASE	REMARKS
EF-1	ROOF	DOWNBLAST	680	0.35	DIRECT	1/8	115	1	SEE NOTES
EF-2	ROOF	DOWNBLAST	150	0.50	DIRECT	1/6	115	1	SEE NOTES

NOTES:
1. SELECTIONS BASED ON GREENHECK.
2. PROVIDE DIRECT DRIVE FANS WITH ELECTRONIC SPEED CONTROLLER.
3. PROVIDE ROOF TOP CENTRIFUGAL FANS WITH CHATTERPROOF BACKDRAFT DAMPER, INTREGAL ELECTRICAL DISCONNECT, ALUMINUM CONSTRUCTION, REMOVABLE DOME, BIRDSCREEN AND MANUFACTURER'S ROOF CURB.

ELECTRIC UNIT HEATER SCHEDULE

TAG	NOMINAL CFM	TYPE	WATTS	NO. OF STEPS	VOLTS	PHASE	REMARKS
UH-R1-1	-	RADIANT COVE	900	1	120	1	SEE NOTES
UH-R1-2	-	RADIANT COVE	900	1	120	1	SEE NOTES
UH-R1-3	-	RADIANT COVE	1250	1	120	1	SEE NOTES
UH-R2-1	-	RADIANT COVE	900	1	120	1	SEE NOTES
UH-R2-2	-	RADIANT COVE	900	1	120	1	SEE NOTES
UH-R2-3	-	RADIANT COVE	1250	1	120	1	SEE NOTES

NOTES:
1. SELECTION BASED ON MARKEL.
2. PROVIDE WITH REMOTE WALL MOUNTED THERMOSTAT, AND MOUNTING BRACKETS.

FAN SCHEDULE - REHAB SHELTER

TAG	FAN TYPE	C.F.M.	E.S.P. (IN. WG.)	DRIVE	ELECTRICAL DATA H.P.	WATTS	VOLTS	PHASE	REMARKS
EF-R1-1	CEILING	70	0.30	DIRECT	-	15	120	1	SEE NOTES
EF-R1-2	CEILING	70	0.30	DIRECT	-	15	120	1	SEE NOTES
EF-R1-3	CEILING	100	0.30	DIRECT	-	21	120	1	SEE NOTES
BF-R1-1	BARRELL	-	-	DIRECT	.5	-	120	1	SEE NOTES
EF-R2-1	CEILING	70	0.30	DIRECT	-	15	120	1	SEE NOTES
EF-R2-2	CEILING	70	0.30	DIRECT	-	15	120	1	SEE NOTES
EF-R2-3	CEILING	100	0.30	DIRECT	-	21	120	1	SEE NOTES
BF-R2-1	BARRELL	-	-	DIRECT	.5	-	120	1	SEE NOTES

NOTES:
1. CEILING TYPE SELECTIONS BASED ON GREENHECK. BARRELL TYPE SELECTIONS BASED ON BAF.
2. PROVIDE DIRECT DRIVE FANS WITH ELECTRONIC SPEED CONTROLLER.
3. PROVIDE CABINET CEILING FANS WITH CHATTERPROOF BDD, INTEGRAL ELECTRICAL DISCONNECT, DUCT FLANGE, INTEGRAL OFF-WHITE ALUMINUM INTAKE GRILLE, AND ROUND WALL CAP.

ROOFTOP UNIT (GAS HEATING/ELECTRIC COOLING) SCHEDULE

	SUPPLY FAN DATA				DX COOLING DATA						GAS HEATING DATA		ELECTRICAL DATA						
TAG	S.A. C.F.M.	O.A. C.F.M.	E.S.P.	H.P.	TOTAL CAPACITY M.B.H.	SENS. CAPACITY M.B.H.	E.D.B. (°F)	E.W.B. (°F)	L.D.B. (°F)	L.W.B. (°F)	INPUT M.B.H.	OUTPUT M.B.H.	M.C.A.	M.O.C.P.	VOLTS	PHASE	REFRIGERANT TYPE	OPERATING WEIGHT LBS.	REMARKS
RTU-1	1230	210	0.5	1.7	43.2	35.2	77.2	65.0	50.0	49.5	80	64.8	16.9	25.0	460	3	R-454B	750	SEE NOTES
RTU-2	975	60	0.5	1.2	33.7	26.5	75.8	62.5	50.0	49.8	80	64.8	14.8	20.0	460	3	R-454B	675	SEE NOTES

NOTES:
1. SELECTION BASED ON DAIKIN.
2. CONDENSER ENTERING AIR: 95°F.
3. EXTERNAL STATIC PRESSURE INCLUDES SUPPLY AND RETURN DUCT SYSTEM ONLY.
4. PROVIDE UNITS WITH MERV 8 FILTER, VFD SA FAN, ROOF CURB WITH VIBRATION ISOLATION RAILS, FULL MODULATING GAS HEAT, AND PHASE FAILURE/PHASE REVERSAL RELAY. PROVIDE A MEANS OF DISCONNECT.
5. PROVIDE UNITS WITH MODULATING HOT GAS REHEAT, INVERTER SCROLL COMPRESSOR, AND BACNET INTERFACE.

BID ALTERNATE NOTE:

REFER TO GI001 FOR BID ALTERNATE INFORMATION.

GAS FIRED UNIT HEATER SCHEDULE - INDOOR RANGE

TAG	INPUT CAPACITY (C.F.H.)	M.B.H. OUTPUT CAPACITY	APPROX. C.F.M.	MOUNTING HEIGHT (FT)	EXHAUST VENT CONNECTION	INTAKE VENT CONNECTION	MOTOR H.P.	ELECTRICAL DATA VOLTS	PHASE	REMARKS
GUH-1	30	24.9	505	7'-6"	3"	3"	1/15	115	1	SEE NOTES

NOTES:
1. SELECTION BASED ON MODINE MODEL HDS.
2. PROVIDE WITH REMOTE WALL MOUNTED THERMOSTAT, INTEGRAL ELECTRICAL DISCONNECT AND PROPELLER.
3. PROVIDE SEPARATED COMBUSTION UNIT HEATER WITH 30° DEFLECTOR HOOD, INTERNAL OVERLOAD PROTECTION, CONTROL TRANSFORMER, MULTI-TRY IGNITION WITH 100% LOCKOUT, FAN RELAY, SINGLE-STAGE NATRUAL GAS VALVE, INTEGRAL DISCONNECT, FAN GUARD, SIDE ACCESS FOR BURNERS AND CONTROLS, ALUMINIZED STEEL HEAT EXCHANGER, MANUFACTURER'S VERTICAL CONCENTRIC VENT KIT, AND MANUFACTURER'S SUSPENSION KIT.

WALKER the GROUP ARCHITECTURE incorporated
PO BOX 541, NEW BERN, NC 28563
252-636-8778

NORTH CAROLINA PROFESSIONAL SEAL 058819 ENGINEER TIMOTHY N. HAHN

CRAVEN COMMUNITY COLLEGE- PUBLIC SAFETY TRAINING CENTER

525 Executive Pkwy New Bern, NC 28562

BID DOCUMENTS

SCO # 24-27879-01A

Revisions

No.	Date

Project Number: 2407.SAFE
Date: 07/28/25
Drawn: MTF
Checked: ETS
Scale: AS NOTED
Drawing Title: SCHEDULES

Sheet Number
Of 34

Drawing Number
M-601

Pace COLLABORATIVE MECHANICAL ELECTRICAL ENGINEERS WWW.PACE-ENGINEERING.COM

BUILDING AUTOMATION SYSTEM INTEGRATION NOTE:

THE FOLLOWING FACILITY SHALL BE CONTROLLED BY A DIRECT DIGITAL CONTROL BUILDING AUTOMATION SYSTEM UTILIZING ASHRAE STANDARD 135 (BACnet) AS THE COMMUNICATION BACKBONE BETWEEN ALL CONTROLLERS. FOR EQUIPMENT CONTROLLERS THAT DO NOT NATIVELY COMMUNICATE VIA BACnet, A PROTOCOL CONVERTER SHALL BE PROVIDED TO ALLOW INTEGRATION INTO THE BAS VIA BACnet. ANY SPECIAL SOFTWARE REQUIRED TO ACCESS AN INTEGRATED EQUIPMENT CONTROLLER SHALL BE PROVIDED AND INSTALLED ON BAS WORKSTATION. THIS SYSTEM WILL NEED TO INTEGRATE INTO THE CAMPUS SCHNEIDER ELECTRIC SYSTEM.

BID ALTERNATE NOTE:

REFER TO GI001 FOR BID ALTERNATE INFORMATION.

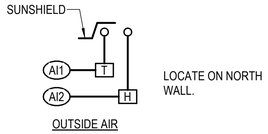

BUILDING DDC CONTROLLER		
INPUTS		
ANALOG	AI1	OA TEMPERATURE
	AI2	OA HUMIDITY

BUILDING GLOBAL POINT (DDC)

NO SCALE

SEQUENCE OF OPERATION

EF-R1-2: EXHAUST FAN SHALL BE CONTROLLED BY THERMOSTAT ACTIVATION. WHEN THE SPACE TEMPERATURE RISES ABOVE 85°F, THE ASSOCIATEDEXHAUST FAN SHALL BE ENERGIZED. WHEN THE SPACE TEMPERATURE IS BELOW 85°F, THE ASSOCIATED EXHAUST FAN SHALL BE DE-ENERGIZED.

EF-2: EXHAUST FAN SHALL BE CONTROLLED BY 7-DAY PROGRAMMABLE TIME CLOCK. EXHAUST FAN SHALL ENERGIZE DURING OCCUPIED HOURS.

EF-R1, EF-R1-3: EXHAUST FAN SHALL ENERGIZED WITH ASSOICATED LIGHT SWITCH. SEE ELECTRICAL DOCUMENTS FOR ADDITIONAL REQUIREMENTS.

EXHAUST FAN CONTROLS

NO SCALE

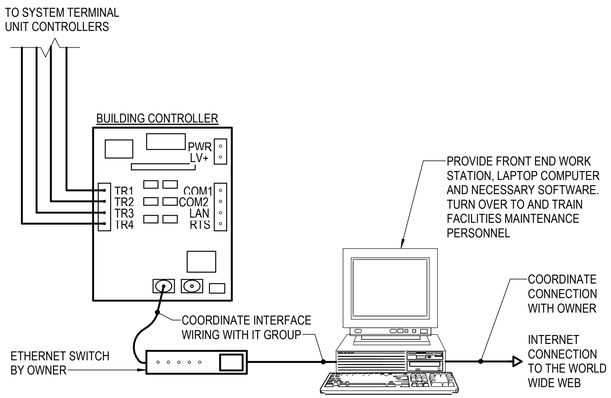

DDC CONTROL SYSTEM GENERAL ARCHITECTURE

NO SCALE

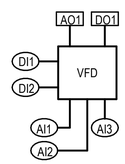

VFD		
LOCAL DDC CONTROLLER		
INPUTS		
ANALOG	AI1	SPEED, %
	AI2	KWH CONSUMPTION
	AI3	CURRENT, AMPS
DIGITAL	DI1	DRIVE STATUS
	DI2	DRIVE FAULT
OUTPUTS		
ANALOG	AO1	SPEED CONTROL
DIGITAL	DO1	ENABLE/DISABLE

VFD CONTROL DIAGRAM (TYP U.O.N.)

NO SCALE

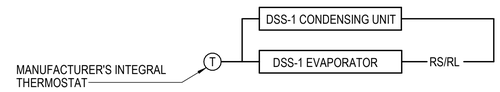

SEQUENCE OF OPERATION

COOLING: UNIT SHALL BE CONTROLLED BY THE MANUFACTURERS INTEGRAL THERMOSTAT. WHEN THE SPACE TEMPERATURE RISES ABOVE THE COOLING SETPOINT (75°F), THE THERMOSTAT SHALL ENERGIZE THE DSS UNITS AND ENERGIZE THE INDOOR UNIT SUPPLY FAN. WHEN THE SPACE TEMPERATURE DROPS BELOW THE THERMOSTAT SETPOINT, THE OPPOSITE SHALL OCCUR.

HEATING: UPON A FALL IN SPACE TEMPERATURE BELOW HEATING SETPOINT (68°F), THE THERMOSTAT SHALL ENERGIZE THE INDOOR UNIT SUPPLY FAN AND OUTDOOR COMPRESSORS. UPON A FURTHER DROP IN TEMPERATURE, THE UNITS ELECTRIC HEATING COIL SHALL BE ENERGIZED. UPON A RISE IN SPACE TEMPERATURE ABOVE HEATING SETPOINT, THE OPPOSITE SHALL OCCUR.

DUCTLESS SPLIT SYSTEM CONTROLS

NO SCALE

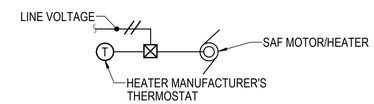

NOTE: MULTIPLE UNITS EXIST FOR EACH DESIGNATION.

SEQUENCE OF OPERATION

UNIT SHALL BE CONTROLLED BY A WALL MOUNTED THERMOSTAT. UPON A FALL IN SPACE TEMPERATURE BELOW 65°F, THE UNIT SHALL BE ENERGIZED. UPON A RISE IN SPACE TEMPERATURE ABOVE 68°F, THE OPPOSITE SHALL OCCUR.

UNIT HEATER CONTROLS

NO SCALE

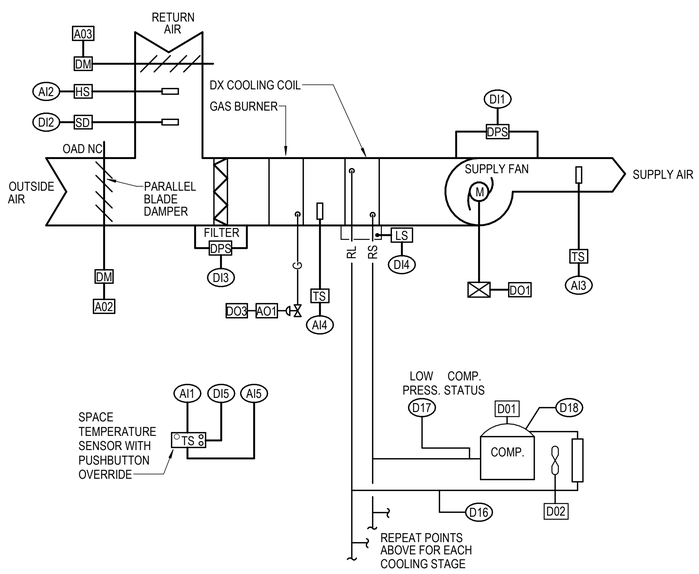

AHUCV		
LOCAL DDC CONTROLLER		
INPUTS		
ANALOG	AI1	SPACE TEMPERATURE
	AI2	HUMIDITY SENSOR
	AI3	SUPPLY AIR TEMPERATURE
	AI4	HW COIL DISCHARGE AVERAGE
	AI5	SPACE TEMPERATURE SETPOINT
DIGITAL	DI1	SUPPLY AIR FAN STATUS
	DI2	SMOKE DETECTOR
	DI3	DIRTY FILTER
	DI4	CONDENSATE HI-LEVEL
	DI5	UNOCCUPIED OVERRIDE
	DI6	REFRIG. HIGH PRESSURE ALARM
	DI7	REFRIG. LOW PRESSURE ALARM
	DI8	COMPRESSOR ALARM
OUTPUTS		
ANALOG	AO1	MODULATING GAS CONTROL
	AO2	OUTSIDE AIR DAMPER CONTROL
	AO3	RETURN AIR DAMPER CONTROL
DIGITAL	DO1	SUPPLY AIR FAN START
	DO2	CONDENSER FAN ON/OFF
	DO3	GAS HEAT ON/OFF

SEQUENCE OF OPERATION

OCCUPIED MODE: WHEN THE SYSTEM IS INDEXED TO OCCUPIED OR SYSTEM IS MANUALLY INDEXED FROM UNOCCUPIED TO OCCUPIED MODE BY OVERRIDE BUTTON INTEGRAL TO SPACE TEMPERATURE SENSOR, THE RESPECTIVE COOLING/HEATING DEVICE SHALL MODULATE TO MAINTAIN RESPECTIVE PROGRAMMED TEMPERATURE SETTINGS (75°F COOLING, 68°F HEATING). THE SUPPLY FAN SHALL RUN CONTINUOUSLY. THE OUTSIDE AIR DAMPER SHALL OPEN.

UNOCCUPIED MODE: WHEN THE SYSTEM IS INDEXED TO UNOCCUPIED, THE UNIT WILL BE DE-ENERGIZED UNTIL SPACE TEMPERATURE RISES ABOVE OR FALLS BELOW PROGRAMMED SETBACK TEMPERATURES (80°F COOLING, 60° HEATING). THE RESPECTIVE COOLING/HEATING DEVICE SHALL BE ACTIVATED. THE OUTSIDE AIR DAMPER SHALL BE CLOSED.

COOLING-OCCUPIED: THE SUPPLY FAN SHALL BE ENERGIZED WHEN THE SYSTEM IS INDEXED TO OCCUPIED. IF THE SPACE TEMPERATURE RISES ABOVE THE COOLING SETPOINT (74°F) THEN THE COMPRESSOR SHALL MODULATE TO MAINTAIN SETPOINT. WHEN THE SPACE TEMPERATURE DROPS BELOW THE SETPOINT, THE OPPOSITE SHALL OCCUR.

HEATING-OCCUPIED: THE SUPPLY FAN SHALL BE ENERGIZED WHEN THE SYSTEM IS INDEXED TO OCCUPIED. IF THE SPACE TEMPERATURE DROPS BELOW THE HEATING SETPOINT (68°F) THEN THE GAS BURNER SHALL MODULATE TO MAINTAIN SETPOINT. WHEN THE SPACE TEMPERATURE RISES ABOVE THE SETPOINT, THE OPPOSITE SHALL OCCUR.

REHEAT: WHEN THE SYSTEM IS IN OCCUPIED COOLING MODE AND UPON A RISE IN SPACE HUMIDITY ABOVE 60 PERCENT, THE CHILLED WATER VALVE SHALL OPEN FULLY AND THE HOT WATER REHEAT CONTROL VALVE SHALL MODULATE OPEN TO MAINTAIN SPACE TEMPERATURE SETPOINT. UPON A FALL IN SPACE HUMIDITY BELOW 50 PERCENT, THE HOT WATER COIL CONTROL VALVE SHALL BE FULLY CLOSED TO THE COIL AND THE CHILLED WATER COIL CONTROL VALVE SHALL RETURN TO COOLING OPERATION.

CONDENSATE HIGH LEVEL PROTECTION: IF CONDENSATE HIGH LEVEL SWITCH IS ACTIVATED, UNIT SHALL BE DE-ACTIVATED AND AN ALARM INITIATED.

MORNING WARM-UP: THE UNIT SHALL EMPLOY OPTIMUM START. PRIOR TO OCCUPIED STATUS, THE UNIT SHALL GO INTO MORNING WARM-UP. AHU CW COIL CONTROL VALVE SHALL BE CLOSED TO THE COIL. THE OA DAMPER SHALL BE CLOSED. THE SUPPLY FAN SHALL BE ENERGIZED AND THE HW VALVE SHALL BE FULLY OPEN TO THE COIL UNTIL OCCUPIED SPACE TEMPERATURE SETPOINT IS ACHIEVED.

MORNING COOL-DOWN: THE UNIT SHALL EMPLOY OPTIMUM START. PRIOR TO OCCUPIED STATUS, THE UNIT SHALL GO INTO MORNING COOL-DOWN. THE OA DAMPER SHALL FULLY CLOSE, THE SUPPLY FAN SHALL BE ENERGIZED, THE CW VALVE SHALL MODULATE TO MAINTAIN A 55°F LEAVING AIR TEMPERATURE AND THE HOT WATER VALVE SHALL BE FULLY CLOSED TO THE COIL.

ALARMS: ALARM FOR DIRTY FILTER: WHEN PRESSURE DROP EXCEEDS 0.5" WG ABOVE INITIAL PRESSURE DROP. ALARM IF LEAVING AIR TEMPERATURE EXCEEDS 60°F IN COOLING MODE OR DROPS BELOW 50°F IN HEATING MODE. ALARM IF SUPPLY FAN FAILS TO START OR FAILS DURING OPERATION. ALARM ON DETECTION OF HIGH CONDENSATE LEVEL.

CONSTANT VOLUME AHU CONTROL DIAGRAM

NO SCALE

WALKER the GROUP ARCHITECTURE incorporated
PO BOX 541, NEW BERN, NC 28563
252-636-8778

CRAVEN COMMUNITY COLLEGE-PUBLIC SAFETY TRAINING CENTER

525 Executive Pkwy
New Bern, NC 28562

BID DOCUMENTS

SCO # 24-27879-01A

No.	Date	Revisions

Project Number	Date
2407.SAFE	07/28/25
Drawn	**Checked**
MTF	ETS

Scale
AS NOTED

Drawing Title

CONTROLS

Sheet Number
Of 34

Drawing Number

M-701

PACE COLLABORATIVE
MECHANICAL ELECTRICAL ENGINEERS
WWW.PACE-ENGINEERING.COM