THE LINE SHOWN ABOVE IS EXACTLY ONE INCH LONG AT FULL SCALE

FIRE PROTECTION ZONE SCHEDULE

ITEMS	DESCRIPTION / LOCATION	APPROXIMATE AREA SERVED (SQ.FT.)	SERVED BY ZONE CONTROL ASSEMBLY
1	FREE STANDING EMERGENCY CARE AREA - INSTITUTIONAL OCCUPANCY	9,500	ZONE 1
2	IMAGING AREA - BUSINESS OCCUPANCY	2,500	ZONE 2
3	CANOPY - DRY TYPE SYSTEM	1,121	ZONE 3

NOTES:

SPRINKLER NOTE

SPRINKLER PLANS AS SHOWN ARE FOR BIDDING PURPOSES ONLY. THE SPRINKLER CONTRACTOR IS TO OBTAIN A CURRENT WATER FLOW TEST AND PROVIDE HYDRAULIC CALCULATIONS FOR SYSTEM PIPE SIZING IN ACCORDANCE WITH NFPA 13 2019. THE SPRINKLER CONTRACTOR IS TO SUBMIT SHOP DRAWINGS AND HYDRAULIC CALCULATION, PIPING LAYOUT AND SIZING. SHOP DRAWINGS AND CALCULATIONS SHALL BE SEALED AND SIGNED BY A NICET LEVEL IV DESIGNER OR A PROFESSIONAL ENGINEER.

FLOW TEST DATA

LOCATION - CONWAY MEDICAL CENTER HWY 707
TEST PERFORMED BY....GRAND STRAND WATER AND SEWER AUTHORITY
STATIC PRESSURE.....68 PSI
DYNAMIC PRESSURE.....56 PSI
FLOW .....1250 GPM
DATE.....3/25/2025

SPRINKLER SYSTEMS HAZARD CLASSIFICATIONS

DENOTES AREA BEING PROTECTED BY AUTOMATIC WET SPRINKLERS.
OCCUPANCY CLASSIFICATION.....LIGHT HAZARD
DESIGN DENSITY.....0.10 GPM/S.F.
REMOTE HYDRAULIC AREA.....1,500 S.F.
MAXIMUM SPRINKLER COVERAGE....225 S.F.
OUTSIDE HOSE STREAM.....100 GPM
DURATION OF SUPPLY.....30 MINUTES

DENOTES AREA BEING PROTECTED BY AUTOMATIC WET SPRINKLERS.
OCCUPANCY CLASSIFICATION.....ORDINARY HAZARD, GROUP 1
DESIGN DENSITY.....0.15 GPM/S.F.
REMOTE HYDRAULIC AREA.....1,500 S.F.
MAXIMUM SPRINKLER COVERAGE....130 S.F.
OUTSIDE HOSE STREAM.....250 GPM
DURATION OF SUPPLY.....60-90 MINUTES

DENOTES AREA BEING PROTECTED BY AUTOMATIC WET SPRINKLERS.
OCCUPANCY CLASSIFICATION.....ORDINARY HAZARD, GROUP 2
DESIGN DENSITY.....0.20 GPM/S.F.
REMOTE HYDRAULIC AREA.....1,500 S.F.
MAXIMUM SPRINKLER COVERAGE....130 S.F.
OUTSIDE HOSE STREAM.....250 GPM
DURATION OF SUPPLY.....60-90 MINUTES

DENOTES AREA BEING PROTECTED BY AUTOMATIC DRY SPRINKLERS.
OCCUPANCY CLASSIFICATION.....LIGHT HAZARD
DESIGN DENSITY.....0.10 GPM/S.F.
REMOTE HYDRAULIC AREA.....1,500 S.F.
MAXIMUM SPRINKLER COVERAGE....225 S.F.
OUTSIDE HOSE STREAM.....100 GPM
DURATION OF SUPPLY.....30 MINUTES

FIRE PROTECTION GENERAL NOTES

DESIGN CRITERIA:

REFER TO THE FOLLOWING PUBLICATIONS OF THE NATIONAL FIRE PROTECTION ASSOCIATION (NFPA) FOR THE DESIGN OF THE FIRE PROTECTION SYSTEM ON THIS PROJECT:

1. NFPA 13, (2019) - STANDARD FOR THE INSTALLATION OF SPRINKLER SYSTEMS.
2. NFPA 25, (2020) - STANDARD FOR THE TESTING, INSPECTION, AND MAINTENANCE OF WATER BASED FIRE PROTECTION SYSTEMS.

GENERAL NOTES:

A. DESIGN THE SPRINKLER SYSTEM THROUGHOUT PROPOSED SCOPE OF WORK IN ACCORDANCE WITH NFPA 13.

B. ALL PIPING, VALVE, SPRINKLER HEADS, HANGERS, ETC. SHALL BE UL LISTED AND FM APPROVED.

C. DESIGN SHALL BE PERFORMED BY NICET LEVEL IV DESIGNER OR A PROFESSIONAL ENGINEER LICENSED IN THE STATE OF SOUTH CAROLINA AND SHALL BE SIGNED AND SEALED AS APPLICABLE. PROVIDE FIRE PROTECTION SYSTEM DESIGN AND SHOP DRAWINGS, MEETING ALL REQUIREMENTS OF THE CONTRACT DOCUMENTS.

D. HYDRAULICALLY CALCULATE THE SYSTEM SIZING IN ACCORDANCE WITH NFPA 13. CONDUCT A NEW FLOW TEST AT THE NEAREST FIRE HYDRANTS IN ACCORDANCE WITH NFPA 291 TO UTILIZE AS A BASIS FOR HYDRAULIC CALCULATIONS. SUBMIT TEST TO ARCHITECT IN WRITING.

E. DESIGN THE SYSTEM USING SPRINKLER HEADS THAT ARE FM APPROVED, QUICK RESPONSE TYPE, SEMI-RECESSED HEADS IN ALL AREAS, EXCEPT WHERE SPECIFICALLY PROHIBITED IN UNFINISHED AREAS WITHOUT CEILINGS. USE QUICK RESPONSE ROUGH BRASS UPRIGHT HEADS WITH FRANGIBLE GLASS ELEMENT. FLEXIBLE SPRINKLER HEADS ARE PROHIBITED.

F. ALL HEADS SHALL HAVE A K FACTOR OF 5.6 - 5.8. TEMPERATURE RATINGS OF ALL SPRINKLER HEADS SHALL BE IN ACCORDANCE WITH THE LATEST EDITION OF NFPA 13.

G. COORDINATE PIPE ROUTING WITH DUCT ROUTING, EQUIPMENT LOCATIONS, ELECTRICAL INSTALLATIONS, AND BUILDING STRUCTURAL MEMBERS. AVOID PENETRATING ANY MAIN STRUCTURAL BEAM.

H. HYDRAULIC CALCULATIONS SHALL TAKE INTO ACCOUNT ALL FITTINGS, OFFSETS, HARDWARE, DEVICES, CHARACTERISTICS AND TRIM DETERMINED NECESSARY FOR A COMPLETE SPRINKLER INSTALLATION.

I. CENTER SPRINKLER HEADS IN CEILING TILES IN AREAS WITH LAY-IN TILES AND VISUALLY ALIGN IN AREAS WITH HARD CEILINGS.

J. ELEVATIONS OF SPRINKLER PIPING AND HEADS MUST BE DETERMINED BY PROPOSED CEILING HEIGHTS. REFER TO ARCHITECTURAL DRAWINGS FOR REFLECTED CEILING PLANS.

K. PROVIDE SEISMIC BRACING FOR ALL PIPING IN ACCORDANCE WITH NFPA 13. PROVIDE SHOP DRAWINGS OF ALL SEISMIC CALCULATIONS, SIGNED AND SEALED BY A PROFESSIONAL ENGINEER LICENSED IN THE STATE OF SOUTH CAROLINA.

L. SPRINKLER HEADS AND ASSOCIATED BRANCH PIPING SHALL BE LOCATED AND SUPPORTED IN ACCORDANCE WITH NFPA 13.

M. TEST SPRINKLER SYSTEM, CONTROLS, PIPING, AND MONITORING IN ACCORDANCE WITH NFPA 25.

N. CAGES SHALL BE ADDED TO THE IT ROOMS WITH HIGHER TEMPERATURE HEADS.

O. ALL MATERIALS AND EQUIPMENT SHALL BE INSTALLED AND COMPLETED IN A WORKMANLIKE MANNER AND IN ACCORDANCE WITH THE BEST METHODS AND PRACTICES. ANY MATERIAL WHICH DOES NOT PRESENT AN ORDERLY AND REASONABLY NEAT AND WORKMANLIKE APPEARANCE, SHALL BE REMOVED AND REPLACED WHEN SO DIRECTED BY THE OWNER. THE REMOVAL AND REPLACEMENT OF THIS WORK SHALL BE DONE WHEN DIRECTED IN WRITING BY THE OWNER AT THE CONTRACTOR'S EXPENSE.

P. INCLUDE TEMPORARY COVERAGE AND SUPPLIES AS REQUIRED SO THAT NO AREA IS LEFT IMPAIRED DURING PERIODS WHERE NO SPRINKLER WORK IS BEING PERFORMED AND ALL OCCUPIED AREAS HAVE SPRINKLER COVERAGE AT ALL TIMES EXCEPT AS ALLOWED BY THE OWNER. AT NO TIME MAY SPRINKLER SYSTEM AND FIRE ALARM SYSTEMS BE IMPAIRED AT THE SAME TIME. INVERT HEADS TO UPRIGHT HEADS DURING CONSTRUCTION WHERE CEILINGS ARE TEMPORARILY REMOVED.

Q. SEE CIVIL PLAN - C8.0, FOR FIRE SPRINKLER PIPING 5'-0" BEYOND BUILDING. DIVISION 21 SHALL BE RESPONSIBLE FOR PIPING WITHIN BUILDING AND ONLY UP TO 5'-0" BEYOND BUILDING ENVELOPE.

CONTRACTOR COORDINATION

THE GENERAL CONTRACTOR SHALL TAKE THE LEAD IN PREPARING COORDINATION DRAWINGS. SUCH DRAWINGS SHALL BE ARRANGED AND DESIGNED THROUGH AND FROM COORDINATION WITH ALL OTHER MAJOR AND MINOR SUBCONTRACTORS. PROVIDE PLAN VIEWS, SECTIONS, AND ELEVATIONS AS REQUIRED TO FULLY COORDINATE ALL NEW WORK. DRAW TO SCALE (AT NOT LESS THAN 3/8"=1'0"). DRAWINGS SHALL SHOW, BUT NOT BE LIMITED TO: ALL WALL RATINGS, DUCTWORK, AIR DISTRIBUTION, MECHANICAL EQUIPMENT, MECHANICAL PIPING, FIRE PROTECTION PIPING, PLUMBING PIPING, CABLE TRAYS, LIGHTING FIXTURES, CEILING GRID, CEILING HEIGHT, MAJOR BEAMS AND JOISTS (WITH ELEVATIONS MARKED), FIRE, SAFETY, AND SECURITY ALARM DEVICES (WHERE CEILING MOUNTED), ELECTRICAL CONDUITS LARGER THAN 2 INCH DIAMETER, ELECTRICAL BUSWAY AND REQUIRED CLEARANCES, AND ANY EQUIPMENT PROVIDED BY OTHERS THAT PROTRUDE INTO THE CEILING CAVITIES OR IMPEDE THE LOCATION OR ACCESS TO ABOVE CEILING PIPING, DUCTWORK, OR OTHER EQUIPMENT. SECTIONS SHALL BE CUT THROUGH AREAS SHOWING MATERIALS AND SYSTEMS OF ALL CONTRACTS. IT IS IMPORTANT TO NOTE THAT FABRICATION CANNOT BEGIN UNTIL COORDINATION DRAWINGS HAVE BEEN APPROVED.

THE CONTRACTOR SHALL OBTAIN A COPY OF THE FINAL SITE LATEST VENDOR DRAWINGS PRIOR TO PROCURING OR INSTALLING ANY EQUIPMENT. ANY REWORK REQUIRED BY THE CONTRACTOR'S FAILURE TO OBTAIN THESE DRAWINGS SHALL BE AT THE CONTRACTOR'S EXPENSE AND SHALL NOT RESULT IN ANY ADDITIONAL TIME TO THE PROJECT. THE CONTRACTOR SHALL MEET THE REPRESENTATIVE OF THE VENDOR PRIOR TO THE START OF WORK. ALL WORK SHALL COMPLY WITH ALL VENDOR REQUIREMENTS. THE CONTRACTOR SHALL BE RESPONSIBLE FOR ALL WORK SHOWN ON THESE DRAWINGS AND ALL WORK SHOWN ON THE VENDOR DRAWINGS. THE PHRASE "SUPPLIED BY CUSTOMER" (OR DERIVATIVES) MEANS "PROVIDED BY CONTRACTOR."

FIRE SPRINKLER AIR COMPRESSOR SCHEDULE

MARK	TYPE	CFM(@10 PSI)	CAPACITY (GAL. @ 18 PSI)	HP	AMP	VOLTAGE	PHASE	BASIS OF DESIGN	REMARKS
FSAC-1	HOT WATER RECIRCULATOR	3.03	695	1/3	4.3	120	1	GENERAL AIR PRODUCTS - MODEL SERIES OLRV	1 - 7

1. PUMP MOTOR TO HAVE INTEGRAL THERMAL OVERLOAD.
2. PROVIDE WITH HARD WIRED KIT.
3. DISCONNECT TO BE PROVIDED BY DIVISION 26.
4. PUMP SHALL BE POWERED FROM EMERGENCY POWER.
5. RISER MOUNTED AIR COMPRESSOR WITH RISER MOUNTED BRACKET, UNION AND 30" STAINLESS STEEL FLEX HOSE .
6. PROVIDE WITH VAPOR PHASE CORROSION INHIBITOR SYSTEM MODEL VPS-500A WITH WALL MOUNTING CLAMP.
7. PROVIDE WITH MOTOR LINE STARTER MODEL MG00A SHIPPED SEPERATELY FROM COMPRESSOR PROVIDED BY DIV. 21 AND INSTALLED BY DIV. 26.

FIRE PROTECTION LEGEND

PIPING SYMBOLS

- F — FIRE PROTECTION SUPPLY PIPING
- FIRE PROTECTION DEMOLITION PIPING
- SIAMESE FIRE DEPARTMENT CONNECTION
- F.S. — WATERFLOW DETECTOR
- T.S. — OS&Y VALVE
- PLUG
- BACKFLOW PREVENTER
- Y-TYPE STRAINER
- Y-TYPE STRAINER WITH HOSE DRAIN VALVE
- D — FIRE PROTECTION DRAIN
- PRESSURE GAGE
- CAP
- ELBOW, 90°
- ELBOW, 90° TURNED UP
- ELBOW, 90° TURNED DOWN
- ELBOW, 45°
- TEE
- TEE, OUTLET TURNED UP
- TEE, OUTLET TURNED DOWN
- CONCENTRIC REDUCER
- ECCENTRIC REDUCER (STRAIGHT INVERT)
- UNION
- FLEXIBLE PIPE CONNECTION
- ELECTRICALLY OPERATED VALVE
- CHECK VALVE
- BUTTERFLY VALVE
- A — FIRE PROTECTION COMPRESSED AIR SUPPLY

MISC. SYMBOLS

- 0000 — ROOM NUMBER
- POINT OF CONNECTION BETWEEN NEW AND EXISTING WORK
- POINT BETWEEN EXISTING WORK TO REMAIN AND EXISTING WORK TO BE REMOVED
- HD — HEAT DETECTOR
- SD — SMOKE DETECTOR
- WET PIPE FIRE PROTECTION VALVE
- DRY PIPE FIRE PROTECTION VALVE
- PRE-ACTION FIRE PROTECTION VALVE
- FIRE DEPT HOSE VALVE W/CAP
- WATER MOTOR GONG
- SPARE SPRINKLER CABINET
- FACP — FIRE ALARM CONTROL PANEL
- FAAP — FIRE ALARM ANNUNICIATOR PANEL
- FAGAP — FIRE ALARM GRAPHIC ANNUNICIATOR PANEL

ABBREVIATIONS

(EX), EXIST.	EXISTING
FS	FLOW SWITCH
TS	TAMPER SWITCH
FDV	FIRE DEPARTMENT VALVE
FDC	FIRE DEPARTMENT CONNECTION
FVC	FIRE VALVE CABINET
FHC	FIRE HOSE CABINET
MIN.	MINIMUM
TYP.	TYPICAL
U/G	UNDER GROUND
GPM	GALLONS PER MINUTE
CAP	CAPACITY
P.S.	PRESSURE SWITCH
RX	REMOVE EXISTING

NOTES

1. SEE SHEET FX501 FOR DETAILS.
2. SOME SYMBOLS AND ABBREVIATIONS SHOWN ON THIS SHEET MAY NOT APPLY.

ENVIRONMENTS FOR HEALTH ARCHITECTURE
e4h
888.781.8441 817.226.1917 501 Elm St., Ste 500, Dallas, TX 75202 e4harchitecture.com

© 2024 E4H - Environments For Health, LLC

CMC CONWAY MEDICAL CENTER with Novant Health

PROGRAM MANAGER
MEADOWS AND OHLY
1450 MATTHEWS TOWNSHIP PARKWAY
SUITE 210
540.389.5318

ARCHITECT
E4H ARCHITECTURE
817.226.1917

MEP ENGINEER
HARRELL DESIGN GROUP, PC
10720 SIKES PLACE, SUITE 100
CHARLOTTE, NC 28277
704.814.1320

STRUCTURAL ENGINEER
HART GAUGLER & ASSOCIATES
8300 N. CENTRAL EXPRESSWAY
SUITE 600
469.523.5225

CIVIL ENGINEER
DEVELOPMENT RESOURCE GROUP, LLC
4703 OLEANDER DRIVE
MYRTLE BEACH, SC 29577
843.839.3350

MEDICAL EQUIPMENT PLANNER
MAZZETTI+GBA
615.376.3108

CMC CONWAY MEDICAL CENTER
CMC Socastee FSED
6016 HIGHWAY 707
MYRTLE BEACH, SC

PROJECT NUMBER: 3024096.00 HDG PROJECT NUMBER: 24019

Δ	DATE	DESCRIPTION

SOUTH CAROLINA HARRELL DESIGN GROUP, PC No. C02713 CERTIFICATE OF AUTHORIZATION

NOT FOR CONSTRUCTION

ARCH NAME ARCH ##

ORIG SUBMISSION: 05.30.2025
CURRENT:

SHEET TITLE AND NUMBER:

FX0.01

GENERAL NOTES, SYMBOLS & LEGENDS

THE LINE SHOWN ABOVE IS EXACTLY ONE INCH LONG AT 30 SCALE

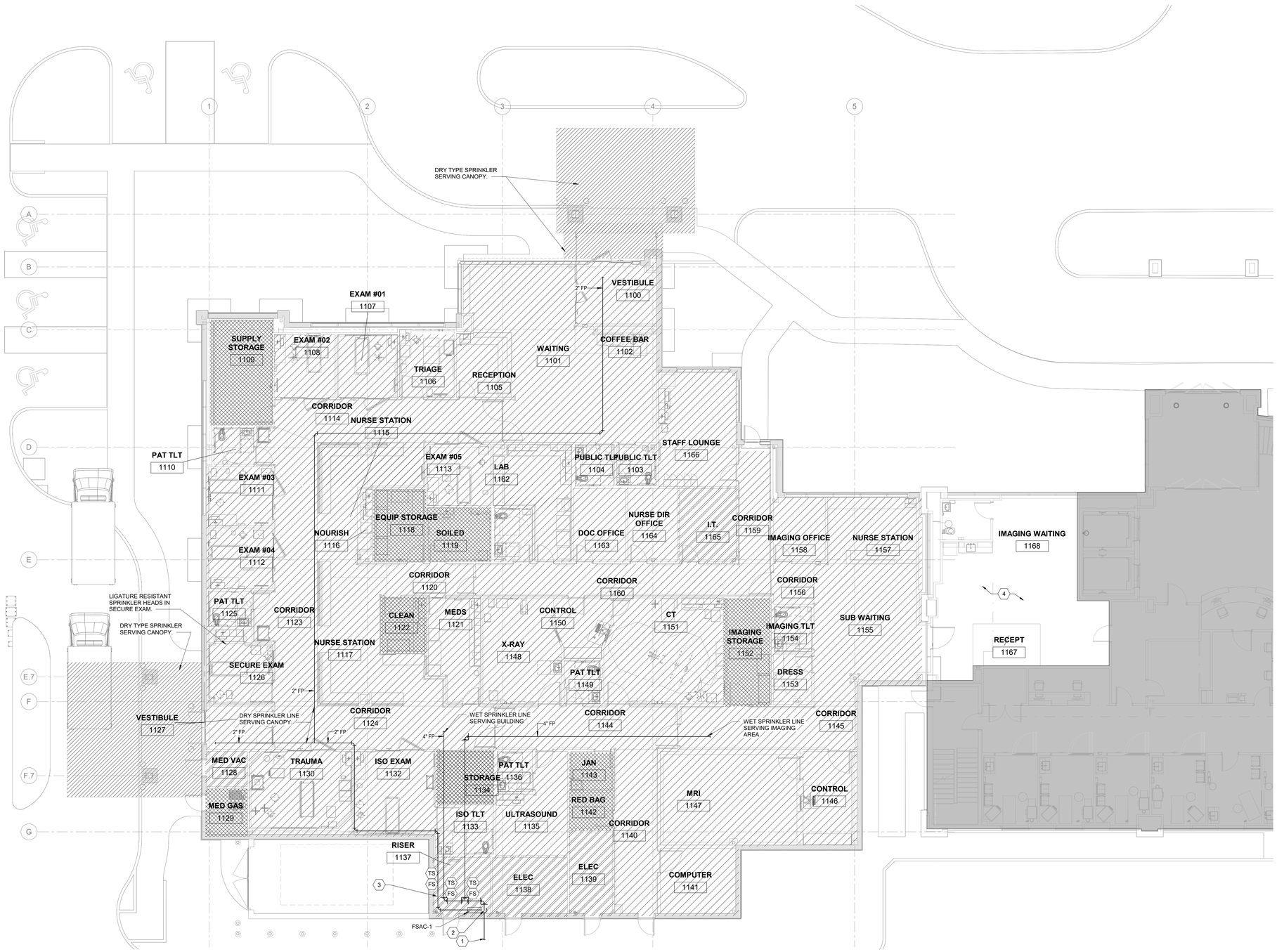

1 **FIRE PROTECTION - FLOOR PLAN**

1/8" = 1'-0"

0 2' 4' 8'

GENERAL NOTES

1. REFER TO SHEET FX001 FOR LEGEND, ABBREVIATIONS, SCHEDULES AND GENERAL NOTES.

SHEET KEYNOTES

1. SEE SHEET C8.0 FOR MORE INFORMATION.
2. PIPE MOUNTED COMPRESSOR AND CHECK VALVE ASSEMBLY.
3. PROVIDE PRESSURE SENSOR FOR DRY SPRINKLER ZONE. SENSOR SHALL BE MONITORED BY OTHERS.
4. RELOCATE EXISTING SPRINKLER HEADS TO ACCOMMODATE REVISED CEILING LAYOUT.

WALL RATING LEGEND

- SMOKE PARTITION
- 1 HR FIRE BARRIER
- 1 HR FIRE / SMOKE BARRIER
- 2 HR FIRE BARRIER
- 2 HR FIRE / SMOKE BARRIER
- 3 HR FIRE BARRIER
- 3 HR FIRE / SMOKE BARRIER
- 4 HR FIRE BARRIER
- 4 HR FIRE / SMOKE BARRIER
- FIRE RATED DOOR

ENVIRONMENTS FOR HEALTH ARCHITECTURE
e4h
888.781.8441 817.226.1917 501 Elm St., Ste 500, Dallas, TX 75202 e4harchitecture.com

© 2024 E4H - Environments For Health, LLC

CMC CONWAY MEDICAL CENTER with Novant Health

PROGRAM MANAGER
MEADOWS AND OHLY
1450 MATTHEWS TOWNSHIP PARKWAY
SUITE 210
540.389.5318

ARCHITECT
E4H ARCHITECTURE
817.226.1917

MEP ENGINEER
HARRELL DESIGN GROUP, PC
10720 SIKES PLACE, SUITE 100
CHARLOTTE, NC 28277
704.814.1320

STRUCTURAL ENGINEER
HART GAUGLER & ASSOCIATES
830N. CENTRAL EXPRESSWAY
SUITE 600
469.523.5525

CIVIL ENGINEER
DEVELOPMENT RESOURCE GROUP, LLC
4703 OLEANDER DRIVE
MYRTLE BEACH, SC 29577
843.839.3350

MEDICAL EQUIPMENT PLANNER
MAZZETTI+GBA
615.376.3108

CMC CONWAY MEDICAL CENTER
CMC Socastee FSED

6016 HIGHWAY 707
MYRTLE BEACH, SC

PROJECT NUMBER: 30240966.00 HDG PROJECT NUMBER: 24019

Δ	DATE	DESCRIPTION

SOUTH CAROLINA HARRELL DESIGN GROUP, PC No. C02713 CERTIFICATE OF AUTHORIZATION

NOT FOR CONSTRUCTION

ARCH NAME ARCH ##

ORIG SUBMISSION: 05.30.2025

CURRENT:

SHEET TITLE AND NUMBER:

FX1.01

FLOOR PLAN - FIRE PROTECTION

THE BAR SHOWN ABOVE IS EXACTLY ONE INCH LONG AT THIS SHEETS ORIGINAL PAGE SIZE

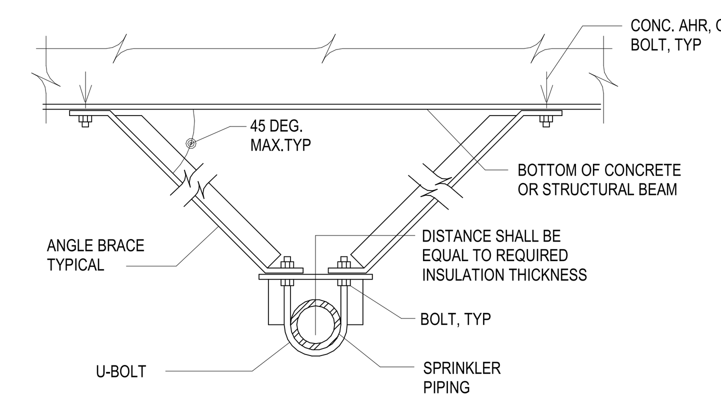

TRANSVERSE BRACE DETAIL

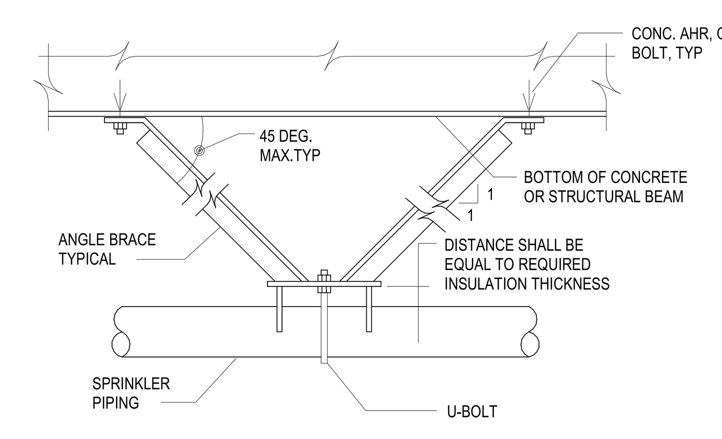

LONGITUDINAL BRACE DETAIL

NOTES:

A. DETAILS SHOWN ARE FOR PIPE BRACING, OTHER EQUIPMENT BRACING SHALL BE SIMILAR.

B. PL SIZES SHALL BE COORDINATED WITH PIPING, AND EQUIPMENT ACTUAL SIZES.

C. BRACE SIZES, SPACINGS, LOCATIONS, AND ATTACHMENTS SHALL BE AS SPECIFIED. BRACES SHALL BE FULLY COORDINATED WITH STRUCTURAL FRAMING AND WITH ALL OTHER BUILDING MATERIALS AND SERVICES.

D. TRANSVERSE AND LONGITUDINAL BRACES MAY BE COMBINED WHERE REQUIRED TO RESIST MOTIONS IN BOTH DIRECTIONS AT THE SAME TIME.

E. PIPING CLAMPS MAY BE UTILIZED IN LIEU OF WELDING AT BLACK STEEL OR OTHER PIPING MATERIALS.

5 SEISMIC BRACING DETAIL
NOT TO SCALE

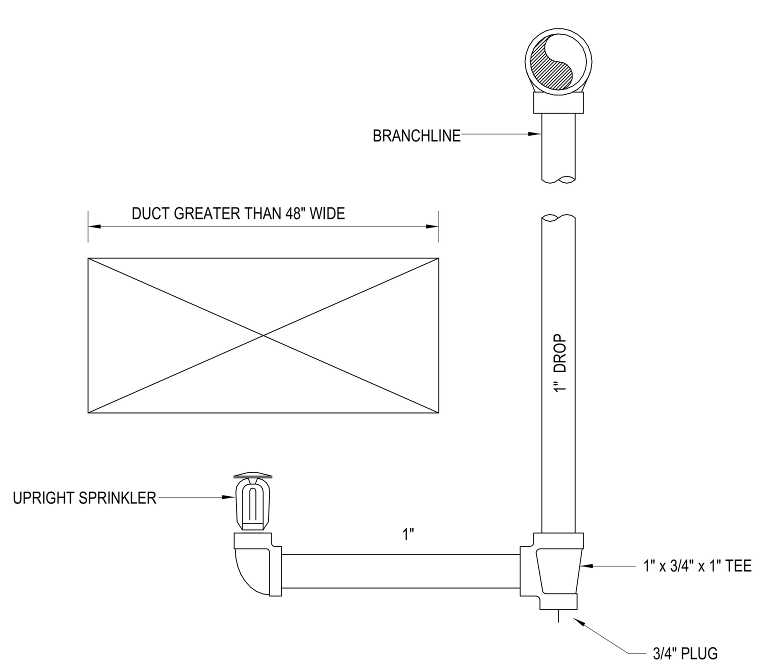

4 DUCT SPRINKLER DETAIL
NOT TO SCALE

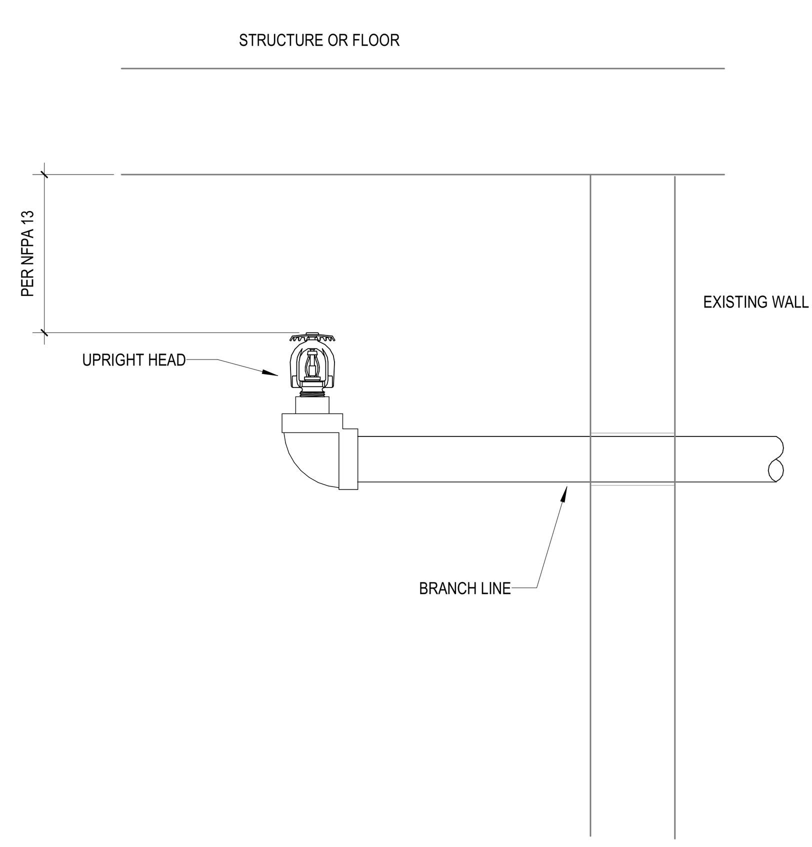

3 TYPICAL UPRIGHT HEAD THROUGH WALL DETAIL
NO SCALE

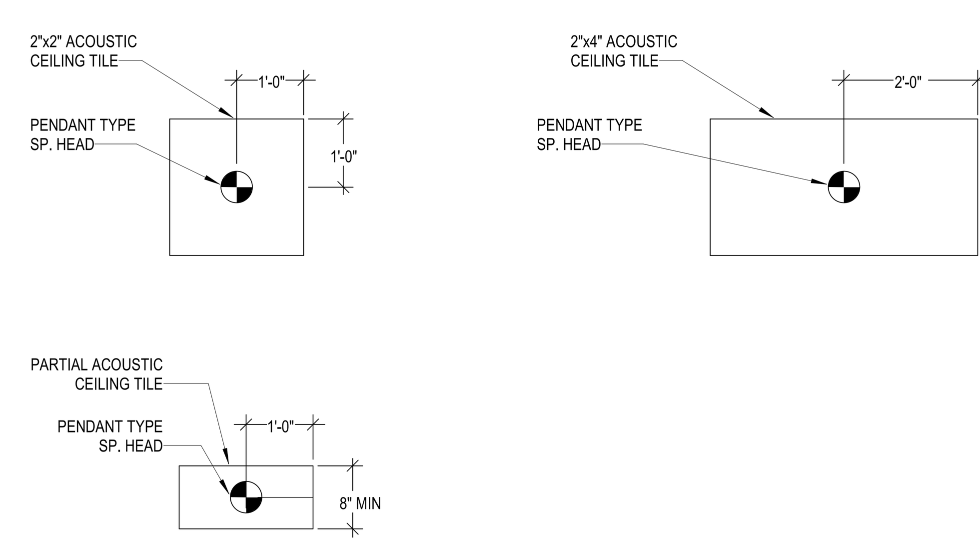

2 SPRINKLER HEAD LOCATION
NOT TO SCALE

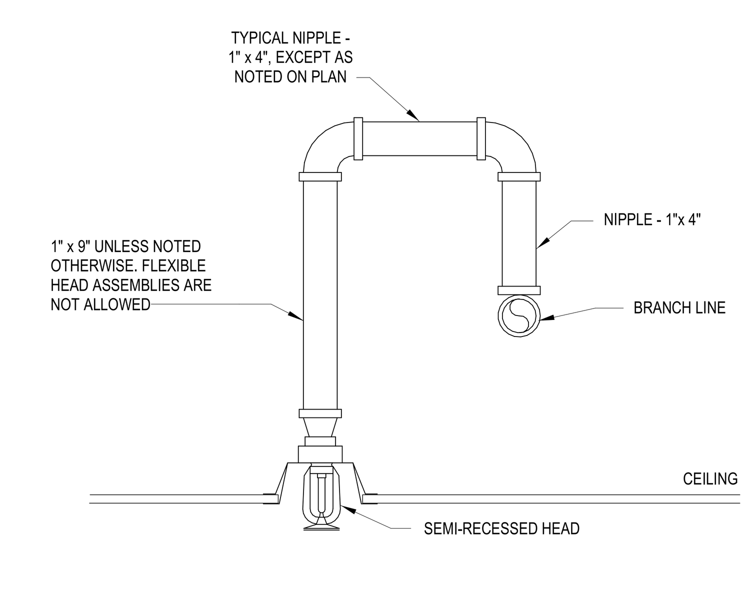

1 SEMI-RECESSED SPRINKLER HEAD DETAIL
NOT TO SCALE

e4h ENVIRONMENTS FOR HEALTH ARCHITECTURE
888.781.8441 817.226.1917 501 Elm St. Ste 500, Dallas, TX 75202 e4harchitecture.com
© 2024 E4H - Environments For Health, LLC

CMC CONWAY MEDICAL CENTER with Novant Health

PROGRAM MANAGER
MEADOWS AND OHLY
1450 MATTHEWS TOWNSHIP PARKWAY
SUITE 210
540.589.5318

ARCHITECT
E4H ARCHITECTURE
817.226.1917

MEP ENGINEER
HARRELL DESIGN GROUP, PC
10720 SIKES PLACE, SUITE 100
CHARLOTTE, NC 28277
704.814.1320

STRUCTURAL ENGINEER
HART GAUGLER & ASSOCIATES
8350 N. CENTRAL EXPRESSWAY
SUITE 600
469.923.9225

CIVIL ENGINEER
DEVELOPMENT RESOURCE GROUP, LLC
4703 OLEANDER DRIVE
MYRTLE BEACH, SC 29577
843.839.3350

MEDICAL EQUIPMENT PLANNER
MAZZETTI+GBA
615.376.3108

CMC CONWAY MEDICAL CENTER
CMC Socastee FSED
6016 HIGHWAY 707
MYRTLE BEACH, SC

PROJECT NUMBER: 3024096.00 HDG PROJECT NUMBER: 24019

Δ	DATE	DESCRIPTION

SOUTH CAROLINA CERTIFICATE OF AUTHORIZATION HARRELL DESIGN GROUP, PC No. 002713

NOT FOR CONSTRUCTION

ARCH NAME ARCH ##

ORIG SUBMISSION: 05.30.2025
CURRENT:

SHEET TITLE AND NUMBER:

FX5.01

FIRE PROTECTION DETAILS

SYMBOL LEGEND

SYMBOL	DESCRIPTION
	PIPE TURNING DOWN
	PIPE TURNING UP
	PIPE CAP
	TEE TURNING DOWN
	TEE TURNING UP
	CIRCUIT SETTER
	SHUT-OFF VALVE
	CHECK VALVE
	BALANCING VALVE (PLUG TYPE)
	PRESSURE REDUCING VALVE
FD	FLOOR DRAIN
RD	ROOF DRAIN
ORD	OVERFLOW ROOF DRAIN
FCO	FLOOR CLEANOUT
CO	END-OF-LINE CLEANOUT
WCO	WALL CLEANOUT
YCO	YARD CLEANOUT
SA-A	SHOCK ARRESTER (SUFFIX INDICATES PDI SIZE)
	UNION
FPHB	FROST PROOF HOSE BIB
HB	HOSE BIB
TP	TRAP PRIMER
	DIRECTION OF FLOW
	POINT OF DEMOLITION
	CONNECT TO EXISTING
	FLEXIBLE CONNECTOR
	MIXING VALVE

ABBREVIATIONS

A	MEDICAL AIR
ABV	ABOVE
AFF	ABOVE FINISH FLOOR
BLW	BELOW
BF	BARRIER FREE
BFF	BELOW FINISH FLOOR
CA	COMPRESSED AIR
CO	CLEANOUT
CO2	CARBON DIOXIDE
CONT	CONTINUATION
DCW	DOMESTIC COLD WATER
DFU	SANITARY DRAINAGE FIXTURE UNITS
DHW	DOMESTIC HOT WATER
DHWR	DOMESTIC HOT WATER RETURN
DN	DOWN
(EX), EXIST.	EXISTING
FCO	FLOOR CLEANOUT
FD	FLOOR DRAIN
FR, FRM	FROM
FLR	FLOOR
FPHB	FROST PROOF HOSE BIBB
HB	HOSE BIBB
I.E., INV. EL.	INVERT ELEVATION
LAV	LAVATORY
MH	MOUNTING HEIGHT
N	NITROGEN
NO	NITROUS OXIDE
N.O.	NORMALLY OPEN
N.C.	NORMALLY CLOSED
O	OXYGEN
ORD	OVERFLOW ROOF DRAIN
ORL	OVERFLOW RAINWATER LEADER
PSI	POUNDS PER SQUARE INCH
RD	ROOF DRAIN
RO	REVERSE OSMOSIS
RWL	RAINWATER LEADER
SA	SHOCK ARRESTOR
SAN, S	SANITARY
SD	STORM DRAIN
ST	STORM
SS	SERVICE SINK
TD	TRENCH DRAIN
TW	TEMPERED WATER
TYP	TYPICAL
V	VENT or VACUUM
VB	VACUUM BREAKER
VTR	VENT THRU ROOF
WAGD	WASTE ANESTHETIC GAS DISPOSAL
WCO	WALL CLEANOUT

THE LINE SHOWN ABOVE IS EXACTLY ONE INCH LONG AT THIS SHEETS ORIGINAL PAGE SIZE

PIPE LEGEND

NEW PIPE	PIPE DESCRIPTION
CW	DOMESTIC COLD WATER
HW	DOMESTIC HOT WATER
HWR	DOMESTIC HOT WATER RETURN
S	SANITARY DRAIN & WASTE
V	VENT
RWL	RAIN WATER LEADER
ORWL	OVERFLOW RAIN WATER LEADER
MA	MEDICAL AIR
MV	MEDICAL VACUUM
O	OXYGEN

WATER HAMMER ARRESTOR SCHEDULE

SYMBOL	FIXTURE UNITS	MAX. FLUID TEMP.	CONNECTED PIPE SIZE	REMARKS
WHA-A	1 - 11	180°F	1/2"	LOCATE IN ACCORDANCE WITH PDI WH 201 STANDARD/PROVIDE ACCESS DOORS AS REQUIRED
WHA-B	12 - 32	180°F	3/4"	LOCATE IN ACCORDANCE WITH PDI WH 201 STANDARD/PROVIDE ACCESS DOORS AS REQUIRED
WHA-C	33 - 60	180°F	1"	LOCATE IN ACCORDANCE WITH PDI WH 201 STANDARD/PROVIDE ACCESS DOORS AS REQUIRED
WHA-D	61 - 113	180°F	1 1/4"	LOCATE IN ACCORDANCE WITH PDI WH 201 STANDARD/PROVIDE ACCESS DOORS AS REQUIRED
WHA-E	114 - 154	180°F	1 1/2"	LOCATE IN ACCORDANCE WITH PDI WH 201 STANDARD/PROVIDE ACCESS DOORS AS REQUIRED
WHA-F	155 - 330	180°F	2"	LOCATE IN ACCORDANCE WITH PDI WH 201 STANDARD/PROVIDE ACCESS DOORS AS REQUIRED

NOTES: PROVIDE WHA-B FOR TOILET ROOMS WITH FLUSH VALVE TOILETS.

RECIRCULATING PUMP SCHEDULE

MARK	TYPE	(GPM)	HEAD (FEET)	HP	WATTS	VOLTAGE	PHASE	BASIS OF DESIGN	REMARKS
RP-1	HOT WATER RECIRCULATOR	4	20	1/2	350	120	1	GRUDFOS - ALPHA2-26-99	1 - 8

1. PROVIDE WITH 1" FLANGE KIT AND AQUASTAT. PUMP MOTOR TO HAVE INTEGRAL THERMAL OVERLOAD.
2. PROVIDE WITH HARD WIRED KIT.
3. DISCONNECT TO BE PROVIDED BY DIVISION 26.
4. PUMP SHALL BE POWERED FROM EMERGENCY POWER.
5. LEAD FREE CONSTRUCTION.
6. MULTI-SPEED PUMP. SET TO MAINTAIN WATER TEMPERATURE 130 F.
7. PROVIDE WITH ONE WAY CHECK VALVE.
8. PROVIDE WITH CIRCUIT SETTER AND SET TO 4 GPM.

WATER HEATER SCHEDULE

MARK	LOCATION	TYPE	MIN. STORAGE CAPACITY (GAL.)	GPH RECOVERY	PLUMBING						ELECTRIC	BASIS OF DESIGN	REMARKS
					CW	HW	DRAIN	EWT (DEG F)	LWT (DEG F)	KW	VOLT/PHASE		
EWH-1	RM 1137	ELECTRIC	80	68	3/4"	3/4"	3/4"	68	130	12	480/3	A.O.SMITH DEN-80	NOTES 1, 2
EWH-2	RM 1137	ELECTRIC	80	68	3/4"	3/4"	3/4"	68	130	12	480/3	A.O.SMITH DEN-80	NOTES 1, 2

NOTES:
1. DISCONNECT TO BE PROVIDED BY DIV 26.
2. PROVIDE WITH WATER HEATER PAN. BASIS OF DESIGN - HOLD RIGHT: QP-28.

GENERAL PLUMBING NOTES

A. THE CONTRACTOR IS REQUIRED TO VISIT THE SITE AND BECOME FAMILIAR WITH SITE CONDITIONS AND VERIFY ALL POINTS OF CONNECTIONS PRIOR TO SUBMITTING A BID.

B. COORDINATE PLUMBING PIPING WITH OTHER TRADES TO AVOID CONFLICTS AND INTERFERENCES.

C. SLOPE WATER PIPING FOR DRAINAGE WITH DRAIN VALVES INSTALLED AT LOW POINTS.

D. PROVIDE ACCESS PANELS AT CONCEALED VALVES, WATER HAMMER ARRESTORS AND OTHER DEVICES ABOVE HARD CEILINGS AND WALLS.

E. PROVIDE CLEANOUTS WITH TOPS DESIGNED FOR SPECIFIC FLOOR FINISHES SUCH AS CARPET, TILE, ETC. UNLESS NOTED OTHERWISE.

F. COORDINATE WALL AND FLOOR PENETRATIONS AND INSTALL SLEEVES IN FLOORS.

G. REFER TO EQUIPMENT DETAILS FOR VENT PIPING AND VALVING NOT INDICATED ON THE PLANS.

H. DO NOT SCALE DRAWINGS. REFERENCE ARCHITECTURAL DRAWINGS FOR LOCATIONS OF DOORS, WINDOWS, WALLS, ETC.

I. INSTALL CLEANOUTS AT BASE OF ALL SANITARY AND STORM STACKS, AT ALL CHANGE IN DIRECTIONS GREATER THAN 45° AND IN STRAIGHT RUNS AT LEAST EVERY 50 FT.

J. LOCATE VERTICAL SUPPLY, STORM DRAINS, SANITARY WASTE, AND VENT PIPING IN WALLS OR PARTITIONS, UNLESS NOTED OTHERWISE.

K. LOCATE VENT, DOMESTIC SUPPLY AND MEDICAL GAS SUPPLY PIPING ABOVE CEILING , UNLESS NOTED OTHERWISE. LOCATE SANITARY AND STORM PIPING BELOW FINISHED FLOOR, UNLESS NOTED OTHERWISE.

L. EXTEND VENTS UP AND COLLECT VENTS ABOVE THE CEILING.

M. PROVIDE FOR ACCESS TO EQUIPMENT REQUIRING CLEANING, ADJUSTMENT OR MAINTENANCE.

N. FIRESTOP ALL PENETRATIONS THROUGH RATED WALL AND FLOORS. USE UL LISTED PENETRATION MATERIALS.

O. COORDINATE ALL PHASES OF WORK AND INTERRUPTIONS IN SERVICE.

P. THESE ENGINEERING DRAWINGS ARE DIAGRAMMATIC. PROVIDE WORK AND MATERIAL FOR A COMPLETE INSTALLATION. MAKE PROPER HOT AND COLD WATER, WASTE, VENT, ETC., PIPING CONNECTION TO FIXTURES AND EQUIPMENT. PROVIDE PIPE ESCUTCHEONS, DIELECTRIC UNIONS, DRIP PANS, PIPE LABELS. VALVE TAGS, ANCHORS, SUPPORT SEALS, SLEEVE SEALS, ISOLATION VALVES, CLEANOUTS, ETC. IN QUANTITIES FOR A COMPLETE SYSTEM. PROVIDE EQUIPMENT, PLUMBING FIXTURES, TRIM HARDWARE AND / OR DEVICES UTILIZED IN THIS CLASS OF WORK, THOUGH NOT SPECIFICALLY MENTIONED OR SHOWN ON THESE DRAWINGS, BUT ARE NECESSARY FOR THE SATISFACTORY COMPLETION OF THE WORK.

Q. PROVIDE INSULATION ON NEW PIPING PER SPECIFICATIONS.

R. LOCATE PIPING STACKS AND RISERS OUTSIDE OF LOAD BEARING WALLS.

S. ALL PLUMBING FIXTURES TO BE SEALED AT FLOOR OR WALL USING SANITARY SEALANT APPROVED FOR THE PURPOSE.

T. PIPING SHALL NOT BE ROUTED ABOVE IT ROOMS, ELECTRICAL ROOMS, ELECTRICAL EQUIPMENT, OR UNDERNEATH ELECTRICAL ROOMS.

U. PIPE HANGERS, BRACES AND RESTRAINTS SHALL ADEQUATELY SUPPORT THE SYSTEM HORIZONTALLY AND VERTICALLY AND SHALL ALLOW FOR MOVEMENT WITHOUT TRANSMITTING STRESS OR VIBRATION TO THE STRUCTURE. HANGERS ON INSULATED PIPING SHALL BE PROVIDED WITH AND SHALL BE SIZED TO ACCOMMODATE HANGER SHIELDS. HORIZONTAL SOIL, WASTE AND VENT PIPING HUNG FROM BUILDING CONSTRUCTION SHALL BE SUPPORTED AT NOT OVER 5 FEET NEXT TO FITTINGS. PROVIDE ADDITIONAL SUPPORT AT JOINT, CHANGES IN DIRECTION AND ELSEWHERE AS REQUIRED TO MAINTAIN PROPER ALIGNMENT.

V. CLEAN FIXTURES, ADJUST VALVES, AND LEAVE THE SYSTEM IN GOOD WORKING ORDER. REMOVE DEBRIS AND RUBBISH AND REPAIR ANY DAMAGE CAUSED BY THE WORK.

W. PROVIDE SUPPORT DEVICES. ALL LOCATIONS SHOULD BE COORDINATED WITH OTHER TRADES PRIOR TO INSTALLATION. DO NOT USE THE SUPPORTS OF OTHER TRADES.

X. PROVIDE SEISMIC BRACING FOR ALL PIPING IN ACCORDANCE WITH NFPA 13. PROVIDE SHOP DRAWINGS OF ALL SEISMIC CALCULATIONS, SIGNED AND SEALED BY A PROFESSIONAL ENGINEER LICENSED IN THE STATE OF SOUTH CAROLINA.

Y. SEE CIVIL PLAN - C8.0, FOR DOMESTIC SUPPLY, SANITARY AND STORM PIPING 5'-0" BEYOND BUILDING OR PORTE-COCHERES. DIVISION 22 SHALL BE RESPONSIBLE FOR PIPING WITHIN BUILDING AND ONLY UP TO 5'-0" BEYOND BUILDING ENVELOPE OR PORTE-COCHERES.

CONTRACTOR COORDINATION

THE GENERAL CONTRACTOR SHALL TAKE THE LEAD IN PREPARING COORDINATION DRAWINGS. SUCH DRAWINGS SHALL BE ARRANGED AND DESIGNED THROUGH AND FROM COORDINATION WITH ALL OTHER MAJOR AND MINOR SUBCONTRACTORS. PROVIDE PLAN VIEWS, SECTIONS, AND ELEVATIONS AS REQUIRED TO FULLY COORDINATE ALL NEW WORK. DRAW TO SCALE (AT NOT LESS THAN 3/8"=1'0"). DRAWINGS SHALL SHOW, BUT NOT BE LIMITED TO: ALL WALL RATINGS, DUCTWORK, AIR DISTRIBUTION, MECHANICAL EQUIPMENT, MECHANICAL PIPING, FIRE PROTECTION PIPING, PLUMBING PIPING, CABLE TRAYS, LIGHTING FIXTURES, CEILING GRID, CEILING HEIGHT, MAJOR BEAMS AND JOISTS (WITH ELEVATIONS MARKED), FIRE, SAFETY, AND SECURITY ALARM DEVICES (WHERE CEILING MOUNTED), ELECTRICAL CONDUITS LARGER THAN 2 INCH DIAMETER, ELECTRICAL BUSWAY AND REQUIRED CLEARANCES, AND ANY EQUIPMENT PROVIDED BY OTHERS THAT PROTRUDE INTO THE CEILING CAVITIES OR IMPEDE THE LOCATION OR ACCESS TO ABOVE CEILING PIPING, DUCTWORK, OR OTHER EQUIPMENT. SECTIONS SHALL BE CUT THROUGH AREAS SHOWING MATERIALS AND SYSTEMS OF ALL CONTRACTS. IT IS IMPORTANT TO NOTE THAT FABRICATION CANNOT BEGIN UNTIL COORDINATION DRAWINGS HAVE BEEN APPROVED.

THE CONTRACTOR SHALL OBTAIN A COPY OF THE FINAL SITE LATEST VENDOR DRAWINGS PRIOR TO PROCURING OR INSTALLING ANY EQUIPMENT. ANY REWORK REQUIRED BY THE CONTRACTOR'S FAILURE TO OBTAIN THESE DRAWINGS SHALL BE AT THE CONTRACTOR'S EXPENSE AND SHALL NOT RESULT IN ANY ADDITIONAL TIME TO THE PROJECT. THE CONTRACTOR SHALL MEET THE REPRESENTATIVE OF THE VENDOR PRIOR TO THE START OF WORK. ALL WORK SHALL COMPLY WITH ALL VENDOR REQUIREMENTS. THE CONTRACTOR SHALL BE RESPONSIBLE FOR ALL WORK SHOWN ON THESE DRAWINGS AND ALL WORK SHOWN ON THE VENDOR DRAWINGS. THE PHRASE "SUPPLIED BY CUSTOMER" (OR DERIVATIVES) MEANS "PROVIDED BY CONTRACTOR."

ZONE AREA ALARM PANEL SCHEDULE

SYMBOL	OXYGEN	MEDICAL AIR	VACUUM	LINE PRESS. ALARM W/ DIGITAL GAUGES READOUT	MANUFACTURER
	HIGH/LOW LINE PRESS.	HIGH/LOW LINE PRESS.	HIGH/LOW LINE PRESS.		
AP-1-3 SEE PLAN FOR LOCATIONS	●	●	●	●	BEACON MEDAES

NOTE:
1. BASIS OF DESIGN FOR MEDICAL GAS ALARM PANEL IS BEACON MEDAES.
2. AP-1 TO MONITOR MEDICAL GAS PRESSURE, PANEL LOCATED AT NURSE STATION.

MEDICAL VACUUM PUMP SCHEDULE

MARK	TYPE	(SCFM)	TYPE	HP PER PUMP	VOLTAGE	PHASE	BASIS OF DESIGN	REMARKS
VP-1	MEDICAL VACUUM PUMP - DUPLEX	8	DUPLEX - OIL LESS ROTARY	3	480	3	BEACONMEDAES VDV-03D-030V-BD	1 - 3

1. DISCONNECT TO BE PROVIDED BY DIVISION 26.
2. PROVIDE WITH 120 GALLON HORZONTAL RECEIVER AND CONTROLER.
3. SKID MOUNTED.

PLUMBING FIXTURE SCHEDULE

MARK	DESCRIPTION	SAN	VENT	HW	CW	REMARKS
P-101	FLOOR MTD WATER CLOSET (ADA) - PUBLIC REST ROOM	4"	2"	-	1½"	ELONGATED BOWL, SIPHON JET, ADA RIM HEIGHT WITH HARD-WIRED DUAL FLUSH SENSOR FLUSH VALVE, ANTI-MICROBIAL SURFACE, OPEN-FRONT HEAVY-DUTY SEAT LESS COVER, PROVIDE WITH REMOTE MOUNTED TRANSFORMER LOCATED ABOVE CEILING AND ALIGNED WITH FIXTURE PROVIDE LOW VOLTAGE WIRE TO REACH FLUSH VALVE SENSOR CONNECTION. AMERICAN STANDARD MODEL#3451001, SLOAN MODEL # 111 ESS 1.6 FV.
P-102	FLOOR MTD WATER CLOSET (ADA) - PATIENT REST ROOM	4"	2"	-	1½"	ELONGATED BOWL, SIPHON JET, ADA RIM HEIGHT WITH MANUAL FLUSH VALVE WITH BED PAN WASHER, ANTI-MICROBIAL SURFACE, OPEN-FRONT HEAVY-DUTY SEAT LESS COVER, PROVIDE BED PAN LUGS. AMERICAN STANDARD MODEL#3452001, ZURN Z6011AV-BWN 1.6 FV.
P-103	LAVATORY (ADA) - PUBLIC REST ROOM	1½"	1½"	½"	½"	WALL HUNG 20"x18" VITREOUS CHINA WITH GOOSE NECK HARD-WIRED SENSOR FAUCET, SUPPLIES AND P-TRAP TO BE INSULATED; ADA COMPLIANT. CHROME PLATED BRASS GRID STRAINER, CHROME PLATED CAST BRASS P-TRAP, CHROME PLATED ¼ TURN KEYED ANGLE TYPE STOPS, PROVIDE WITH TRANSFORMER. AMERICAN STANDARD MODEL#0356.439, SLOAN MODEL#SF-2100-4PLG-TEE-CP-0.5GPM-MLM-IR-FCT. PROVIDE WITH TV-1 IN COMPLIANCE WITH ASSE 1070.
P-104	LAVATORY (ADA)- PATIENT / STAFF REST ROOM	1½"	1½"	½"	½"	WALL HUNG 20"x18" VITREOUS CHINA WITH GOOSE NECK MANUAL FAUCET W/ 6" WRIST BLADES, SUPPLIES AND P-TRAP TO BE INSULATED; ADA COMPLIANT. CHROME PLATED BRASS GRID STRAINER, CHROME PLATED CAST BRASS P-TRAP, CHROME PLATED ¼ TURN KEYED ANGLE TYPE STOPS. AMERICAN STANDARD MODEL#0356.439, CHICAGO FAUCETS MODEL#895-319. PROVIDE WITH TV-1 IN COMPLIANCE WITH ASSE 1070.
P-105	SINGLE COMPARTMENT SINK - EXAM ROOM	2"	2"	½"	½"	SINGLE COMPARTMENT, DROP IN, 20 GAUGE, TYPE 304 STAINLESS STEEL, 19"x19"x 5" DEEP BOWL. FAUCET WITH 6" WRIST BLADE HANDLES AND GOOSE NECK SWING SPOUT AND LAMINAR FLOW. STAINLESS STEEL DRAIN WITH BASKET STRAINER. ELKAY MODEL#LRAD191950, CHICAGO FAUCET MODEL#895-3. PROVIDE WITH TV-1 IN COMPLIANCE WITH ASSE 1070.
P-106	SINGLE COMPARTMENT SINK - LAB AREA WITH EYEWASH	2"	2"	½"	½"	SINGLE COMPARTMENT, DROP IN, 20 GAUGE, TYPE 304 STAINLESS STEEL, 22"x19"x 5" DEEP BOWL. FAUCET WITH 6" WRIST BLADE HANDLES AND GOOSE NECK SWING SPOUT AND LAMINAR FLOW. DECK MOUNTED EMERGENCY EYEWASH WITH AUTO FLOW. STAINLESS STEEL DRAIN WITH BASKET STRAINER. ELKAY MODEL#LRAD221950, CHICAGO FAUCET MODEL#895-3, GUARDIAN G1805. PROVIDE WITH TV-1 IN COMPLIANCE WITH ASSE 1070 FOR FAUCET. PROVIDE WITH TV-2 IN COMPLIANCE WITH ASSE 1070 FOR EYEWASH.
P-107	SINGLE COMPARTMENT SINK - STAFF LOUNGE	2"	2"	½"	½"	SINGLE COMPARTMENT, DROP IN, 20 GAUGE, TYPE 304 STAINLESS STEEL, 19"x19"x 5" DEEP BOWL. FAUCET WITH 6" WRIST BLADE HANDLES AND GOOSE NECK SWING SPOUT AND LAMINAR FLOW. STAINLESS STEEL DRAIN WITH BASKET STRAINER. ELKAY MODEL#LRAD191950, CHICAGO FAUCET MODEL#895-3. PROVIDE WITH TV-1 IN COMPLIANCE WITH ASSE 1070.
P-108	CLINICAL SERVICE SINK	4"	2"	½"	1¼"	WALL MOUNTED CLINIC SINK, 1" OFFSET, AND SERVICE SINK FAUCET, BED PAN WASHER W/ FOOT CONTROLS, HOSE WAND ASSEMBLY. ADA COMPLIANT. AMERICAN STANDARD MODEL#9512999, 8345.115 UTILITY FAUCET, SLOAN MODEL # ROYAL 117-6.5-YA-1-OFST, ZURN Z1217, ZURN Z85500-WM-EVB- HKSE- SH2-VC.
P-109	MOP RECEPTOR	3"	2"	½"	½"	FLOOR MOUNTED TERRAZZO MOP BASIN 28"x28" WITH RIM GUARDS, CHROME PLATED CAST BRASS WALL MOUNTED SERVICE SINK FAUCET W/ VACUUM BREAKER, STAINLESS STEEL BACK SPLASH TWO SIDES TO 60" AFF. FIAT MODEL # TSBC1610, AMERICAN MODEL#8345.115 UTILITY FAUCET.
P-110	ICE MAKER BOX	-	-	-	½"	GUY GRAY MODEL# MIBIHAAB WITH WATER HAMMER ARRESTOR, IN-LINE FILTER AND BACKFLOW PREVENTER.
P-111	HOSE BIBB	-	-	-	3/4"	HOSE BIBB, LOCKABLE COVER, FROST PROOF, ZURN 1305.
P-112	ELECTRIC WATER COOLER (ADA)	1½"	1½"	-	½"	WALL HUNG DUAL UNIT WITH BOTTLE FILL, STAINLESS STEEL, LOW SIDE MOUNTED AT HANDICAPPED HEIGHT (FOR BUBBLER). 8.0 GPH, 115V/1ø, 5 AMPS, 370 WATTS, ELKAY MODEL#ERPBM28K
P-113	ROOF HYDRANT	-	-	-	3/4"	ROOF HYDRANT, LOCKABLE LIFT HANDLE, FROST PROOF, ZURN 1388XL.

NOTE:

1. ALL WALL MOUNTED FIXTURES SHAL BE PROVIDED WITH FLOOR MOUNTED, CONCEALED ARM WALL CARRIER.
2. ALL EXPOSED P-TRAPS SHALL BE PROVIDED W/ LAN SHIELDS.
3. PROVIDE BACKFLOW PREVENTER AT CONNECTION TO OWNER FURNISHED EQUIPMENT PER IPC.
4. PROVIDE OFFSET GRID DRAINS AT BARRIER-FREE LOCATIONS.
5. PROVIDE HYDRAULIC TRAP PRIMERS FOR FLOOR DRAINS IN REST ROOMS, RISER ROOM, MED GAS ROOM AND MED VAC ROOM.

THERMOSTATIC MIXING VALVE SCHEDULE

TAG	FLOW RATE (GPM)	AVG. TEMPERATURE (DEG. F.)	INLET SIZE	OUTLET SIZE	REMARKS
TV-1	0.5-2.5	110	3/8"	3/8"	FOR LAVATORIES, SINKS - BASIS OF DESIGN WATTS SERIES LFUSG-B, ASSE 1070 COMPLIANT
TV-2	13	85	3/4"	3/4"	FOR EYEWASH - BASIS OF DESIGN GARDIAN G6020, ASSE 1070 COMPLIANT

DRAIN & CLEANOUT SCHEDULE

MARK	TYPE	DESCRIPTION	BASIS OF DESIGN	NOTES
FD-1	FLOOR DRAIN	SQUARE NICKEL BRONZE ADJUSTABLE 6" STRAINER WITH CAST IRON BODY & TRAP PRIME CONNECTION	J.R.SMITH MODEL 2005Y-P- U	NOTE 1
RD-1	ROOF DRAIN	COMBINATION ROOF DRAIN AND OVERFLOW	ZURN - Z100C FROET	BY PIPE SIZE
DS-1	DOWN SPOUT	DOWN SPOUT NOZZLE NO HUP CON. - NICKEL BODY	ZURN - Z199	BY PIPE SIZE
FCO	FLOOR	CAST IRON ADJUSTABLE FLOOR CLEANOUT WITH ROUND NICKEL BRONZE TOP	ZURN - Z1400	BY PIPE SIZE
WCO	WALL	CAST IRON WALL CLEANOUT W/ CAST BRASS THREADED PLUG PROVIDE WITH STAINLESS STEEL WALL PLATE	ZURN - Z1446	BY PIPE SIZE
GCO	WALL	GRADE CLEANOUT W/ ABS THREADED PLUG. PROVIDE WITH C.I. HEAVY DUTY HOUSING	ZURN - Z1440/Z1474	BY PIPE SIZE

NOTES: 1. PROVIDE WITH TRAP PRIMER VALVE EQUAL TO PPP MODEL NO. P1-500 AND VANDAL PROOF SCREWS.

MEDICAL GAS MASTER ALARM PANEL SCHEDULE

SYMBOL	OXYGEN		MEDICAL AIR		VACUUM	LINE PRESS. ALARM W/ DIGITAL GAUGES READOUT	MANUFACTURER
	RESERVE IN USE OR LOW	HIGH/LOW LINE PRESS.	RESERVE IN USE OR LOW	HIGH/LOW LINE PRESS.	HIGH/LOW LINE PRESS.		
MAP-1 - 2 SEE PLAN FOR LOCATIONS	●	●	●	●	●	●	BEACON MEDAES

NOTE:
1. BASIS OF DESIGN FOR MEDICAL GAS ALARM PANEL IS BEACON MEDAES.
2. MAP-1 TO MONITOR GAS MANIFOLDS AND MEDICAL VACUUM EQUIPMENT, PANEL LOCATED AT NURSE STATION AND RECEP 1105.

MEDICAL GAS MANIFOLD SCHEDULE

DESCRIPTION	MEDICAL GAS	REMARKS
MEDICAL GAS MANIFOLD ASSEMBLIES:	CARBON DIOXIDE	
MGAM-1	BEACONMEDEAS CATALOG NO. - MNE-HH2X2-MA2-AS	MOUNTING HEIGHT AT 5'-6" TO BOTTOM OF BOX. PROVIDE WITH 2 TYPE H BOTTLES ON PRIMARY AND 2 TYPE H BOTTLES ON BACKUP.
MGOM-1	BEACONMEDEAS CATALOG NO. - MNE-HH3X3-MO2-AS	MOUNTING HEIGHT AT 5'-6" TO BOTTOM OF BOX. PROVIDE WITH 3 TYPE H BOTTLES ON PRIMARY AND 3 TYPE H BOTTLES ON BACKUP.

NOTES:
1. CHAIN TANKS TO WALL.

MEDICAL GAS EQUIPMENT

SYMBOL	MANUFACTURER MODEL NO.	LOCATION
MEDICAL GAS ZONE VALVE BOX (ZVB-1, 2, 3) TRIPLE VALVE BOX 1¼"x3/4"x3/4".	SEE PLAN FOR VALVE SIZES AND QUANTITIES, BEACON MEDAES.	MOUNTING HEIGHT AT 5'-6" TO TOP OF BOX. PROVIDE VALVES WITH GAUGES. SEE PLANS.
MEDICAL GAS OR VACUUM OUTLETS: (MGO-1) - TRUAMA ROOM - HEADWALL (MGO-2) - IMAGING ROOMS - WALL OUTLETS (MGO-3) - EXAM ROOMS - HEADWALL (MGO-4) - SECURE EXAM ROOM - HEADWALL	HEADWALL PROVIDED BY OTHERS. WALL OUTLET - DISS OUTLETS HEADWALL PROVIDED BY OTHERS. LOCKABLE HEADWALL PROVIDED BY OTHERS. FINAL CONNECTIONS BY PLUMBING CONTRACTOR.	CONTRACTOR SHALL COORDINATE CONNECTIONS TO HEADWALLS WITH HEADWALL MANUFACTURER PROVIDED. (MGO-1) - OUTLET COUNT - BY OTHERS (MGO-2) - OUTLET COUNT - (1) O2, (1) MA, (1) MV, (1) SL (MGO-3) - OUTLET COUNT - BY OTHERS (MGO-4) - OUTLET COUNT - BY OTHERS
VACUUM SLIDE ASSEMBLY	FURNISHED WITH NEW HEADWALLS.	MOUNT AT SAME LEVEL AS GAS OUTLETS.

NOTE:
1. BASIS OF DESIGN IS BEACON MEDAES. ALL OUTLETS TO BE DISS TYPE.
2. AREA ZONE ALARM LOCATED AT NURSE STATION.

e4h ENVIRONMENTS FOR HEALTH ARCHITECTURE
501 Elm St, Ste 500, Dallas, TX 75202
888.781.8441 817.226.1917 e4harchitecture.com

© 2024 E4H - Environments For Health, LLC

CMC CONWAY MEDICAL CENTER with Novant Health

PROGRAM MANAGER
MEADOWS AND OHLY
1450 MATTHEWS TOWNSHIP PARKWAY
SUITE 210
540.589.5318

ARCHITECT
E4H ARCHITECTURE
817.226.1917

MEP ENGINEER
HARRELL DESIGN GROUP, PC
10720 SIKES PLACE, SUITE 100
CHARLOTTE, NC 28277
704.814.1320

STRUCTURAL ENGINEER
HART GAUGLER & ASSOCIATES
8350 N. CENTRAL EXPRESSWAY
SUITE 600
469.923.9225

CIVIL ENGINEER
DEVELOPMENT RESOURCE GROUP, LLC
4703 OLEANDER DRIVE
MYRTLE BEACH, SC 29577
843.839.3350

MEDICAL EQUIPMENT PLANNER
MAZZETTI+GBA
615.376.3108

CMC CONWAY MEDICAL CENTER
CMC Socastee FSED
6016 HIGHWAY 707
MYRTLE BEACH, SC

PROJECT NUMBER: 3024096.00 HDG PROJECT NUMBER: 24019

Δ	DATE	DESCRIPTION
1		

SOUTH CAROLINA HARRELL DESIGN GROUP, PC No. C02713 CERTIFICATE OF AUTHORIZATION

NOT FOR CONSTRUCTION

ARCH NAME ARCH ##

ORIG SUBMISSION: 05.30.2025

CURRENT:

SHEET TITLE AND NUMBER:

P0.01

GENERAL NOTES, LEGENDS, & SCHEDULES

THE LINE SHOWN ABOVE IS EXACTLY ONE HORIZONTAL INCH ON ORIGINAL ARCHITECT'S DRAWINGS

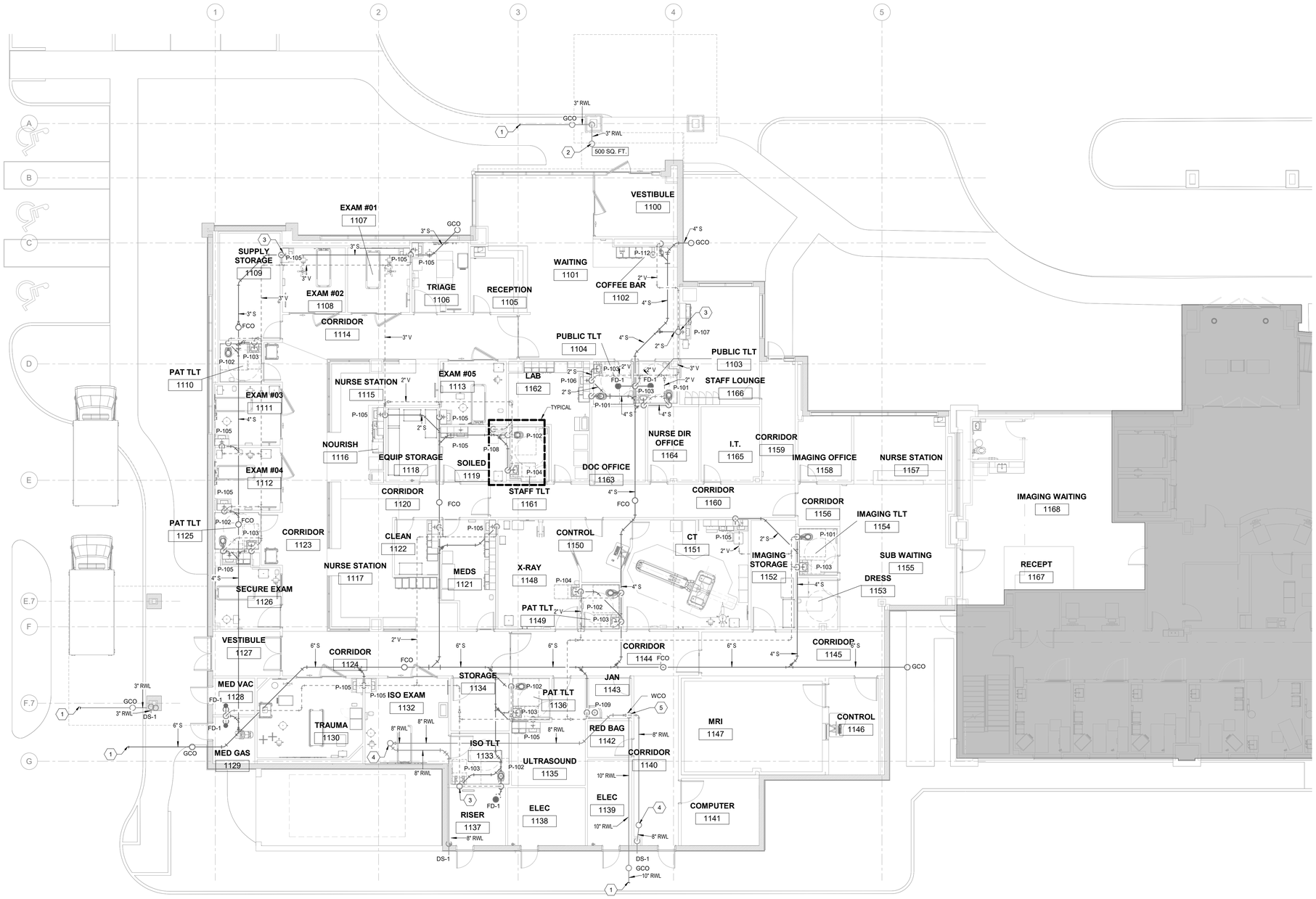

1 **WASTE AND VENT PIPING - FLOOR PLAN**

1/8" = 1'-0"

GENERAL NOTES

1. REFER TO SHEET PL001 FOR LEGEND, ABBREVIATIONS, SCHEDULES AND GENERAL NOTES.

SHEET KEYNOTES

1. SEE SHEET C8.0 FOR MORE INFORMATION.
2. 3" RWL TO ROOF GUTTER CONNECTION.
3. UP TO 3" VTR.
4. 8" RAIN WATER LEADER DOWN FROM ROOF ABOVE.
5. 10" RAIN WATER LEADER DOWN TO SUB-SURFACE PIPING.

WALL RATING LEGEND

- SMOKE PARTITION
- 1 HR FIRE BARRIER
- 1 HR FIRE / SMOKE BARRIER
- 2 HR FIRE BARRIER
- 2 HR FIRE / SMOKE BARRIER
- 3 HR FIRE BARRIER
- 3 HR FIRE / SMOKE BARRIER
- 4 HR FIRE BARRIER
- 4 HR FIRE / SMOKE BARRIER
- FIRE RATED DOOR

ENVIRONMENTS FOR HEALTH ARCHITECTURE
e4h
888.781.8441 817.226.1917 501 Elm St., Ste 500, Dallas, TX 75202 e4harchitecture.com

© 2024 E4H - Environments For Health, LLC

CMC CONWAY MEDICAL CENTER with Novant Health

PROGRAM MANAGER
MEADOWS AND OHLY
1450 MATTHEWS TOWNSHIP PARKWAY
SUITE 210
540.389.5318

ARCHITECT
E4H ARCHITECTURE
817.226.1917

MEP ENGINEER
HARRELL DESIGN GROUP, PC
10720 SIKES PLACE, SUITE 100
CHARLOTTE, NC 28277
704.814.1320

STRUCTURAL ENGINEER
HART GAUGLER & ASSOCIATES
830N. CENTRAL EXPRESSWAY
SUITE 600
469.623.5025

CIVIL ENGINEER
DEVELOPMENT RESOURCE GROUP, LLC
4703 OLEANDER DRIVE
MYRTLE BEACH, SC 29577
843.839.3350

MEDICAL EQUIPMENT PLANNER
MAZZETTI+GBA
615.376.3108

CMC CONWAY MEDICAL CENTER
CMC Socastee FSED
6016 HIGHWAY 707
MYRTLE BEACH, SC

PROJECT NUMBER: 3024096.00 HDG PROJECT NUMBER: 24019

Δ	DATE	DESCRIPTION

SOUTH CAROLINA HARRELL DESIGN GROUP, PC No. C02713 CERTIFICATE OF AUTHORITY NO.

NOT FOR CONSTRUCTION

ARCH NAME ARCH ##

ORIG SUBMISSION: 05.30.2025
CURRENT:

SHEET TITLE AND NUMBER:

P1.01

PLUMBING PLAN - SANITARY

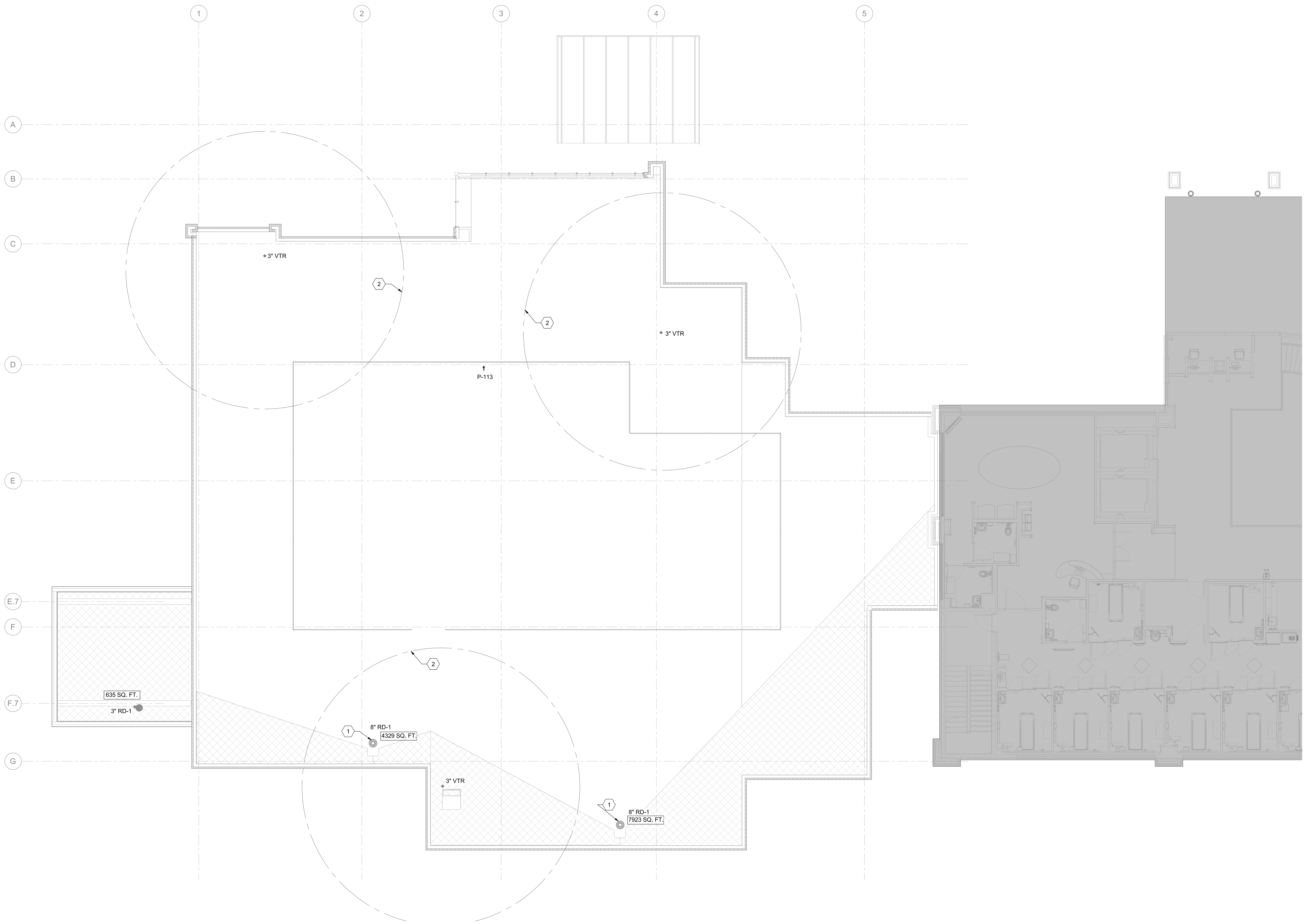

1 WASTE AND VENT PIPING - ROOF PLAN

1/8" = 1'-0"

GENERAL NOTES

1. REFER TO SHEET PL001 FOR LEGEND, ABBREVIATIONS, SCHEDULES AND GENERAL NOTES.

SHEET KEYNOTES

1. COORDINATE WITH ARCHITECTURE FOR THE LOCATION OF THE ROOF DRAIN ASSEMBLIES.
2. NO VENTILATION AIR INTAKES SHALL BE LOCATED WITHIN 25'-0" RADIUS OF PLUMBING VENT.

WALL RATING LEGEND

- SMOKE PARTITION
- 1 HR FIRE BARRIER
- 1 HR FIRE / SMOKE BARRIER
- 2 HR FIRE BARRIER
- 2 HR FIRE / SMOKE BARRIER
- 3 HR FIRE BARRIER
- 3 HR FIRE / SMOKE BARRIER
- 4 HR FIRE BARRIER
- 4 HR FIRE / SMOKE BARRIER
- FIRE RATED DOOR

ENVIRONMENTS FOR HEALTH ARCHITECTURE
888.781.8441 817.226.1917 501 Elm St, Ste 500, Dallas, TX 75202
e4harchitecture.com

© 2024 E4H - Environments For Health, LLC

CMC CONWAY MEDICAL CENTER with Novant Health

PROGRAM MANAGER
MEADOWS AND OHLY
1450 MATTHEWS TOWNSHIP PARKWAY
SUITE 210
540.589.5318

ARCHITECT
E4H ARCHITECTURE
817.226.1917

MEP ENGINEER
HARRELL DESIGN GROUP, PC
10720 SIKES PLACE, SUITE 100
CHARLOTTE, NC 28277
704.814.1320

STRUCTURAL ENGINEER
HART GAUGLER & ASSOCIATES
8350 N. CENTRAL EXPRESSWAY
SUITE 600
469.923.9225

CIVIL ENGINEER
DEVELOPMENT RESOURCE GROUP, LLC
4703 OLEANDER DRIVE
MYRTLE BEACH, SC 29577
843.839.3350

MEDICAL EQUIPMENT PLANNER
MAZZETTI+GBA
615.376.3108

CMC CONWAY MEDICAL CENTER
CMC Socastee FSED
6016 HIGHWAY 707
MYRTLE BEACH, SC

PROJECT NUMBER: 3024096.00 **HDG PROJECT NUMBER:** 24019

Δ	DATE	DESCRIPTION

SOUTH CAROLINA — HARRELL DESIGN GROUP, PC No. C02713 — CERTIFICATE OF AUTHORIZATION

NOT FOR CONSTRUCTION

ARCH NAME ARCH ##

ORIG SUBMISSION: 05.30.2025
CURRENT:

SHEET TITLE AND NUMBER:

P1.02

ROOF PLAN - SANITARY

THE LINE SHOWN ABOVE IS EXACTLY ONE HORIZONTAL INCH ON ORIGINAL ARCHITECT'S DRAWINGS

1 **DOMESTIC SUPPLY - FLOOR PLAN**
1/8" = 1'-0"

GENERAL NOTES

1. REFER TO SHEET PL001 FOR LEGEND, ABBREVIATIONS, SCHEDULES AND GENERAL NOTES.
2. SHUT-OFF VALVE SHALL BE PROVIDED FOR EACH ROOM OR AREA WITH PLUMBING FIXTURES. VALVE SHALL BE PLACED WITHIN COORIDOR OR ADJACENT AREA.
3.

SHEET KEYNOTES

1. PRIMARY AND SECONDARY DOMESTIC COLD WATER SUPPLY. SEE SHEET C8.0 FOR MORE INFORMATION.
2. 3/4" DCW UP TO P-113.
3. SET CIRCUIT SETTER TO 4 GPM.

WALL RATING LEGEND

- SMOKE PARTITION
- 1 HR FIRE BARRIER
- 1 HR FIRE / SMOKE BARRIER
- 2 HR FIRE BARRIER
- 2 HR FIRE / SMOKE BARRIER
- 3 HR FIRE BARRIER
- 3 HR FIRE / SMOKE BARRIER
- 4 HR FIRE BARRIER
- 4 HR FIRE / SMOKE BARRIER
- FIRE RATED DOOR

ENVIRONMENTS FOR HEALTH ARCHITECTURE
e4h
888.781.8441 817.226.1917 501 Elm St., Ste 500, Dallas, TX 75202 e4harchitecture.com

© 2024 E4H - Environments For Health, LLC

CMC CONWAY MEDICAL CENTER with Novant Health

PROGRAM MANAGER
MEADOWS AND OHLY
1450 MATTHEWS TOWNSHIP PARKWAY
SUITE 210
540.389.5318

ARCHITECT
E4H ARCHITECTURE
817.226.1917

MEP ENGINEER
HARRELL DESIGN GROUP, PC
10720 SIKES PLACE, SUITE 100
CHARLOTTE, NC 28277
704.814.1320

STRUCTURAL ENGINEER
HART GAUGLER & ASSOCIATES
830N. CENTRAL EXPRESSWAY
SUITE 600
469.523.5525

CIVIL ENGINEER
DEVELOPMENT RESOURCE GROUP, LLC
4703 OLEANDER DRIVE
MYRTLE BEACH, SC 29577
843.839.3350

MEDICAL EQUIPMENT PLANNER
MAZZETTI+GBA
615.376.3108

CMC CONWAY MEDICAL CENTER
CMC Socastee FSED
6016 HIGHWAY 707
MYRTLE BEACH, SC

PROJECT NUMBER: 3024096.00 HDG PROJECT NUMBER: 24019

Δ	DATE	DESCRIPTION

SOUTH CAROLINA HARRELL DESIGN GROUP, PC No. C02713 CERTIFICATE OF AUTHORIZATION

NOT FOR CONSTRUCTION

ARCH NAME ARCH ##

ORIG SUBMISSION: 05.30.2025
CURRENT:

SHEET TITLE AND NUMBER:

P1.03

PLUMBING PLAN - DOMESTIC SUPPLY

THE LINE SHOWN ABOVE IS EXACTLY ONE HORIZONTAL INCH ON ORIGINAL ARCHITECT'S DRAWINGS

1 **MEDICAL GAS SUPPLY - FLOOR PLAN**
1/8" = 1'-0"

GENERAL NOTES

1. REFER TO SHEET PL001 FOR LEGEND, ABBREVIATIONS, SCHEDULES AND GENERAL NOTES.
2. MGOM AND MGAM MANIFOLDS SHALL HAVE SEPARATE RELIEF VENTS ROUTED UP THROUGH ROOF AND TERMINATE WITH A GOOSE NECK FITTING 5'-0" ABOVE ROOF DECK.
3. VACUUM PUMP DISCHARGE SHALL BE ROUTED UP THROUGH ROOF AND TERMINATE WITH A GOOSE NECK FITTING 5'-0" ABOVE ROOF DECK.
4. ALL PIPING SHALL BE SEISMICALLY BRACED.

SHEET KEYNOTES

1. MEDICAL AIR RELIEF VENT UP TO ROOF.
2. MEDICAL OXYGEN RELIEF VENT UP TO ROOF.
3. MEDICAL VACUUM PUMP DISCHARGE UP TO ROOF ABOVE.

WALL RATING LEGEND

- SMOKE PARTITION
- 1 HR FIRE BARRIER
- 1 HR FIRE / SMOKE BARRIER
- 2 HR FIRE BARRIER
- 2 HR FIRE / SMOKE BARRIER
- 3 HR FIRE BARRIER
- 3 HR FIRE / SMOKE BARRIER
- 4 HR FIRE BARRIER
- 4 HR FIRE / SMOKE BARRIER
- FIRE RATED DOOR

ENVIRONMENTS FOR HEALTH ARCHITECTURE
888.781.8441 817.226.1917 501 Elm St., Ste 500, Dallas, TX 75202 e4harchitecture.com

© 2024 E4H - Environments For Health, LLC

CMC CONWAY MEDICAL CENTER with Novant Health

PROGRAM MANAGER
MEADOWS AND OHLY
1450 MATTHEWS TOWNSHIP PARKWAY
SUITE 210
540.389.5318

ARCHITECT
E4H ARCHITECTURE
817.226.1917

MEP ENGINEER
HARRELL DESIGN GROUP, PC
10720 SIKES PLACE, SUITE 100
CHARLOTTE, NC 28277
704.814.1320

STRUCTURAL ENGINEER
HART GAUGLER & ASSOCIATES
8300 N. CENTRAL EXPRESSWAY
SUITE 600
469.523.5225

CIVIL ENGINEER
DEVELOPMENT RESOURCE GROUP, LLC
4703 OLEANDER DRIVE
MYRTLE BEACH, SC 29577
843.839.3350

MEDICAL EQUIPMENT PLANNER
MAZZETTI+GBA
615.376.3108

CMC CONWAY MEDICAL CENTER
CMC Socastee FSED

6016 HIGHWAY 707
MYRTLE BEACH, SC

PROJECT NUMBER: 3024096.00 HDG PROJECT NUMBER: 24019

Δ	DATE	DESCRIPTION

SOUTH CAROLINA HARRELL DESIGN GROUP, PC No. C02713 CERTIFICATE OF AUTHORIZATION

NOT FOR CONSTRUCTION

ARCH NAME ARCH ##

ORIG SUBMISSION: 05.30.2025
CURRENT:

SHEET TITLE AND NUMBER:

P1.04

PLUMBING PLAN - MEDICAL GAS SUPPLY

THE LINE SHOWN ABOVE IS EXACTLY ONE HORIZONTAL AT 30 DEGREES

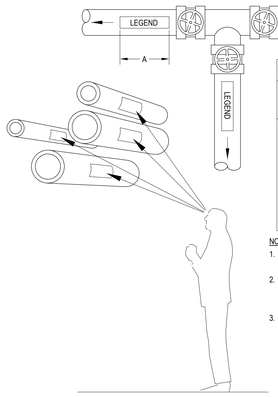

SIZE OF LEGEND LETTERS		
OUTSIDE DIA. OF PIPE OR COVERING (INCH)	LENGTH OF COLOR FIELD (A) (INCH)	LETTER HEIGHT (B) (INCH)
3/4 to 1-1/4	8	1/2
1-1/2 to 2	8	3/4
2-1/2 to 6	12	1-1/4
8 to 10	24	2-1/2
over 10	32	3-1/2

NOTE
1. SEE PAINTING SPECIFICATION FOR FINISH COLOR OF PIPE.
2. LABELS SHALL BE INSTALLED AT A MINIMUM OF EVERY 50' AND AT ANY WALL OR FLOOR PENETRATION.
3. INDICATE FLOW ARROWS AT EACH PIPE DESIGNATIONS SIMILAR TO DIAGRAM PROVIDED.

10 PIPING SYSTEM IDENTIFICATION
NOT TO SCALE

INSULATION SHIELD LENGTH				
PIPE SIZE	INSULATION THICKNESS			GAGE
	1/2"	3/4"	1"	
1/2" TO 4"	12"	12"	12"	18

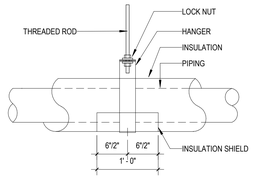

NOTE: HANGER SHIELD IS TYPICAL FOR INSULATED PIPING

9 INSULATION SHIELD DETAIL
NOT TO SCALE

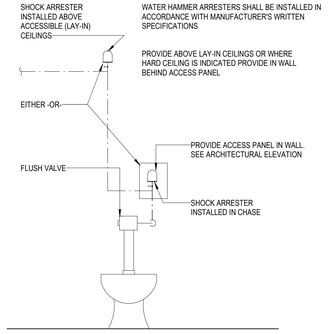

8 WATER HAMMER ARRESTOR
NOT TO SCALE

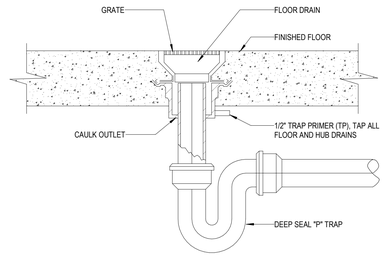

7 TYPICAL FLOOR DRAIN DETAIL
NOT TO SCALE

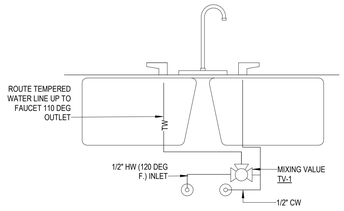

COUNTER MOUNTED SINK

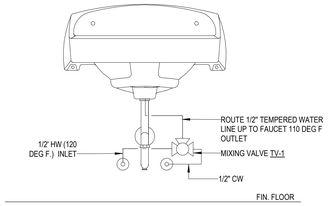

WALL MOUNTED LAVATORY

4 MIXING VALVE FOR SINKS/LAVATORIES
1 1/2" = 1'-0"

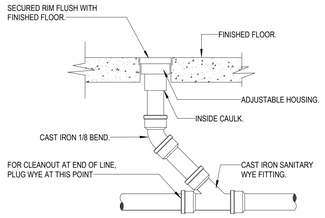

6 FLOOR CLEANOUT DETAIL
NOT TO SCALE

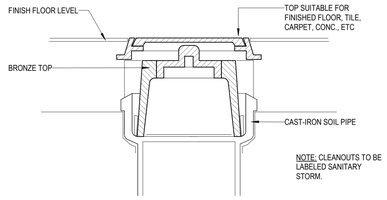

5 CLEAN OUT DETAIL
NOT TO SCALE

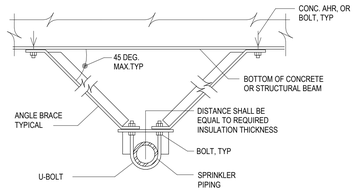

TRANSVERSE BRACE DETAIL

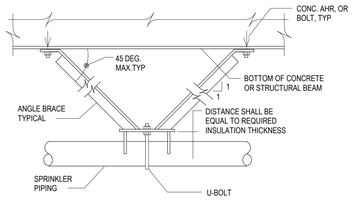

LONGITUDINAL BRACE DETAIL

NOTES:

A. DETAILS SHOWN ARE FOR PIPE BRACING, OTHER EQUIPMENT BRACING SHALL BE SIMILAR.

B. PL SIZES SHALL BE COORDINATED WITH PIPING, AND EQUIPMENT ACTUAL SIZES.

C. BRACE SIZES, SPACINGS, LOCATIONS, AND ATTACHMENTS SHALL BE AS SPECIFIED. BRACES SHALL BE FULLY COORDINATED WITH STRUCTURAL FRAMING AND WITH ALL OTHER BUILDING MATERIALS AND SERVICES.

D. TRANSVERSE AND LONGITUDINAL BRACES MAY BE COMBINED WHERE REQUIRED TO RESIST MOTIONS IN BOTH DIRECTIONS AT THE SAME TIME.

E. PIPING CLAMPS MAY BE UTILIZED IN LIEU OF WELDING AT BLACK STEEL OR OTHER PIPING MATERIALS.

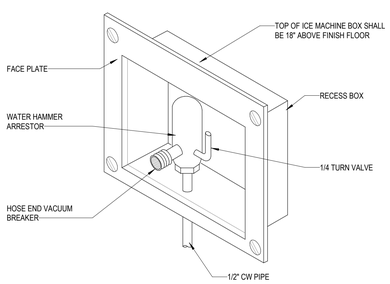

3 ICE MAKER VALVE BOX DETAIL
NOT TO SCALE

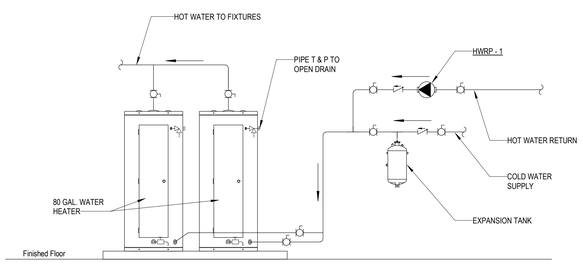

2 DUAL ELECTRIC WATER HEATER PIPING DIAGRAM
NOT TO SCALE

1 SEISMIC BRACING DETAIL
NOT TO SCALE

ENVIRONMENTS FOR HEALTH ARCHITECTURE
e4h
888.781.8441 817.226.1917 501 Elm St., Ste 500, Dallas, TX 75202 e4harchitecture.com

© 2024 E4H - Environments For Health, LLC

CMC CONWAY MEDICAL CENTER with Novant Health

PROGRAM MANAGER
MEADOWS AND OHLY
1450 MATTHEWS TOWNSHIP PARKWAY
SUITE 210
540.389.5318

ARCHITECT
E4H ARCHITECTURE
817.226.1917

MEP ENGINEER
HARRELL DESIGN GROUP, PC
10720 SIKES PLACE, SUITE 100
CHARLOTTE, NC 28277
704.814.1320

STRUCTURAL ENGINEER
HART GAUGLER & ASSOCIATES
8300 N. CENTRAL EXPRESSWAY
SUITE 600
469.523.5525

CIVIL ENGINEER
DEVELOPMENT RESOURCE GROUP, LLC
4703 OLEANDER DRIVE
MYRTLE BEACH, SC 29577
843.839.3350

MEDICAL EQUIPMENT PLANNER
MAZZETTI+GBA
615.376.3108

CMC CONWAY MEDICAL CENTER
CMC Socastee FSED
6016 HIGHWAY 707
MYRTLE BEACH, SC

PROJECT NUMBER: 3024096.00 **HDG PROJECT NUMBER:** 24019

Δ	DATE	DESCRIPTION
1		

SOUTH CAROLINA HARRELL DESIGN GROUP, PC No. C02713 CERTIFICATE OF AUTHORIZATION

NOT FOR CONSTRUCTION

ARCH NAME ARCH ##

ORIG SUBMISSION: 05.30.2025
CURRENT:

SHEET TITLE AND NUMBER:

P5.01

PLUMBING DETAILS

THE LINE SHOWN ABOVE IS EXACTLY ONE INCH LONG AT 30 SCALE ORIGINAL PLOT SIZE

STANDARD ABBREVIATIONS

A		
A	A	AMPS
A	A/E	ARCHITECT/ENGINEER
A	ACH	AIR CHANGES PER HOUR
A	ACS	AIR CONDITIONING SYSTEM
A	AD	ACCESS DOOR
A	AF	AFTER FILTER
A	AFF	ABOVE FINISHED FLOOR
A	AFG	ABOVE FINISHED GRADE
A	AFMD	AIR FLOW MEASURING DEVICE
A	AHU	AIR HANDLING UNIT
A	AL	ACOUSTIC LINING
A	ALD	AUTOMATIC LOUVER DAMPER
A	ANSI	AMERICAN NATIONAL STANDARDS INSTITUTE
A	AP	ACCESS PANEL
A	APD	AIR PRESSURE DROP
A	ARCH	ARCHITECT
A	ARI	AIR CONDITIONING AND REFRIGERATIONS
A	AS	AIR SEPARATOR
A	ASME	AMERICAN SOCIETY OF MECHANICAL ENGINEERS
B		
B	B	BOILER
B	BDD	BACKDRAFT DAMPER
B	BHP	BRAKE HORSEPOWER
B	BLDG	BUILDING
B	BRD	BAROMETRIC RELIEF DAMPER
B	BTUH	BRITISH THERMAL UNIT PER HOUR
C		
C	C	CENTIGRADE (CELSIUS)
C	C	CONVERTER
C	CC	COOLING COIL
C	CCD	COOLING COIL CONDENSATE DRAIN
C	CD	CEILING DIFFUSER
C	CFM	CUBIC FEET PER MINUTE
C	CFS	CUBIC FEET PER SECOND
C	CH	CHILLER
C	CHR	CHILLED WATER RETURN
C	CHS	CHILLED WATER SUPPLY
C	COD	CABLE OPERATED DAMPER
C	CT	COOLING TOWER
C	CV	CONSTANT VOLUME
C	CVR	CONSTANT VOLUME RETURN
C	CVS	CONSTANT VOLUME SUPPLY
D		
D	DA	DENTAL AIR
D	DB	DRY BULB
D	dB	DECIBELS
D	DC	DIRECT CURRENT
D	DDC	DIRECT DIGITAL CONTROLS
D	DEG	DEGREE
D	DEMO	DEMOLITION
D	DF	DIFFUSER
D	DIA	DIAMETER
D	DIAG	DIAGONAL DIAGRAM OR DIAGRAM DIAGONAL
D	DIM	DIMENSION
D	DIST	DISTANCE
D	DIV	DIVIDE OR DIVISION
D	DN	SET OR TURN DOWN
D	DP	DEWPOINT
D	DPS	DIFFERENTIAL PRESSURE SENSOR
D	DWDI	DOUBLE WIDTH DOUBLE INLET
D	DWG	DRAWING
E		
E	EA	EXHAUST AIR
E	EAT	ENTERING AIR TEMPERATURE
E	EF	EXHAUST FAN
E	EG	EXHAUST GRILLE
E	EL	ELEVATION
E	ELEC	ELECTRIC, ELECTRICAL
E	ELEVS	ELEVATIONS
E	EMR	ELEVATOR MACHINE ROOM
E	ENGR	ENGINEER
E	ENT	ENTERING
E	EQ	EQUAL
E	EQUIP	EQUIPMENT
E	EQUIV	EQUIVALENT
E	ERD	EXISTING ROOF DRAIN
E	ESMT	EASEMENT
E	ESP	EXTERNAL STATIC PRESSURE
E	ET	EXPANSION TANK
E	ETC	AND SO FORTH OR ET CETERA
E	EWT	ENTERING WATER TEMPERATURE
E	EX	EXISTING
E	EXH	EXHAUST
E	EXIST	EXISTING
F		
F	F	FAHRENHEIT OR FEMALE
F	FA	FREE AREA
F	FC	FLEXIBLE CONNECTION
F	FD	FLOOR DRAIN OR FIRE DAMPER
F	FM	FLOW METER
F	FP	FIRE PROTECTION OR FIREPROOF
F	FPB	FAN-POWERED BOX
F	FPM	FEET PER MINUTE
F	FPS	FEET PER SECOND
F	FR	FIRE RATING, FIRE RESISTANT, OR FRAME
F	FREQ	FREQUENCY
F	FS	FLOW SWITCH
F	FSD	COMBINATION FIRE SMOKE DAMPER
F	FSTAT	FREEZESTAT
F	FT	FEET OR FOOT
F	FTST	FLOAT & THERMOSTATIC STEAM TRAP
G		
G	GA	GAUGE
G	GAL	GALLON
G	GALV	GALVANIC OR GALVANIZED
G	GC	GENERAL CONTRACTOR
G	GS	GALVANIZED STEEL
G	GYP BD	GYPSUM BOARD
H		
H	HAC	HOUSEKEEPING AID CLOSET
H	HC	HEATING COIL
H	HD	HEAD
H	HEPA	HIGH EFFICIENCY PARTICULATE AIR (FILTER)
H	HOA	HAND/OFF/AUTOMATIC
H	HORIZ	HORIZONTAL
H	HP	HORSEPOWER
H	HWP	HOT WATER PUMP
H	HWR	HOT WATER RETURN
H	HWS	HOT WATER SUPPLY
H	HX	HEAT EXCHANGER
H	HZ	HERTZ
I		
I	I/O	INPUT/OUTPUT
I	IBST	INVERT BUCKET STEAM TRAP
I	ID	INSIDE DIAMETER
I	IN	INCHES
I	IN WG	INCHES WATER GAUGE
I	IN-LB	INCH-POUND
K		
K	kg	KILOGRAM
K	kPa	KILOPASCAL
K	KPL	KICKPLATE
K	kW	KILOWATT
K	kWh	KILOWATT HOUR
K	KX	KITCHEN EXHAUST
L		
L	LAT	LEAVING AIR TEMPERATURE
L	LBS	POUND
L	LBS/HR	POUNDS PER HOUR
L	LF	LINEAR FOOT (FEET)
L	LWT	LEAVING WATER TEMPERATURE
M		
M	M	METER OR MOTOR
M	MA	MIXED AIR
M	MAINT	MAINTAIN, MAINTENANCE
M	MAN	MANUAL
M	MAT	MIXED AIR TEMPERATURE
M	MAX	MAXIMUM
M	MBH	1000 BTUH
M	MCA	MINIMUM CIRCUIT AMPACITY
M	ME	MECHANICAL ENGINEER
M	MEAS	MEASURE
M	MECH	MECHANICAL
M	MECH RM	MECHANICAL ROOM
M	MER	MECHANICAL EQUIPMENT ROOM
M	MERV	MINIMUM EFFICIENCY REPORTING VALUE
M	MEZZ	MEZZANINE
M	MFG	MANUFACTURING
M	MFR	MANUFACTURER
M	MFR REC	MANUFACTURER'S RECOMMENDATION
M	MH	MANHOLE
M	MIN	MINIMUM
M	MISC	MISCELLANEOUS
M	MM	MILLIMETER
M	MTD	MOUNTED
M	MTG	MOUNTING
M	MVD	MANUAL VOLUME DAMPER
N		
N	NA	NOT APPLICABLE
N	NATL	NATIONAL
N	NC	NOISE CRITERIA
N	NC	NORMALLY CLOSED
N	NE	NORTH EAST
N	NEC	NATIONAL ELECTRICAL CODE
N	NEG	NEGATIVE
N	NEMA	NATIONAL ELECTRICAL MANUFACTURERS ASSOCIATION
N	NFPA	NATIONAL FIRE PROTECTION ASSOCIATION
N	NO	NORMALLY OPEN
N	NOM	NOMINAL
N	NPSH	NET POSITIVE SUCTION HEAD
N	NRCA	NATIONAL ROOFING CONTRACTORS ASSOCIATION
N	NS	NARROW STILE
N	NTS	NOT TO SCALE
N	NW	NORTH WEST
O		
O	OA/OSA	OUTSIDE AIR
O	OAI	OUTSIDE AIR INTAKE
O	OBD	OPPOSED BLADE DAMPER
O	OD	OUTSIDE DIAMETER OR OUTSIDE DIMENSION
O	OV	OXYGEN VACUUM
P		
P	P	PUMP
P	PA	PASCAL
P	PC	PUMPED CONDENSATE
P	PD	PRESSURE DROP
P	PF	PENETRATE
P	PFHX	PLATE AND FRAME HET EXCHANGER
P	PG	PENDANT
P	PLBG	PLUMBING
P	PNEU	PNEUMATIC
P	PRESS	PRESSURE
P	PRV	PRESSURE REGULATING VALVE
P	PSF	POUNDS PER SQUARE FOOT
P	PSI	POUNDS PER SQUARE INCH
P	PSIA	POUNDS PER SQUARE INCH - ABSOLUTE
P	PSIG	POUNDS PER SQUARE INCH - GAUGE
R		
R	RA	RETURN AIR
R	RAT	RETURN AIR TEMPERATURE
R	RD	REFRIGERANT DISCHARGE
R	RET	RETURN
R	RG	RETURN GRILLE
R	RH	RELATIVE HUMIDITY
R	RLA	RUN LOAD AMPERE
R	RP	RADIANT CEILING PANEL
R	RPM	REVOLUTIONS PER MINUTE
S		
S	SA	SUPPLY AIR
S	SAD	SUPPLY AIR DIFFUSER
S	SAG	SUPPLY AIR GRILLE
S	SAR	SUPPLY AIR REGISTER
S	SAT	SUPPLY AIR TEMPERATURE
S	SD	SMOKE DETECTOR
S	SDPR	SMOKE DAMPER
S	SE	SOUTH EAST
S	SENS	SENSIBLE HEAT
S	SF	SQUARE FOOT (FEET)
S	SF	SUPPLY FAN
S	SP	STATIC PRESSURE
S	SP GR	SPECIFIC GRAVITY
S	SPEC	SPECIFICATION
S	SPS	STATIC PRESSURE SENSOR
S	SQ	SQUARE
S	SQ FT	SQUARE FOOT (FEET)
S	SQ IN	SQUARE INCH
S	SS	STAINLESS STEEL
S	STHX	SHELL AND TUBE HEAT EXCHANGER
S	STL	STEEL
S	STRUCT	STRUCTURAL
S	SW	SOUTH WEST
S	SWSI	SINGLE WIDTH SINGLE INLET
S	SYS	SYSTEM
T		
T	TAB	TESTING, ADJUSTING, BALANCE
T	TD	TRANSFER DUCT
T	TEMP	TEMPERATURE OR TEMPORARY
T	TF	TRANSFER FAN
T	TG	TRANSFER GRILLE
T	THERM	THERMAL
T	THK	THICKNESS
T	THRU	THROUGH
T	TP	TRAP
T	TSP	TOTAL STATIC PRESSURE
T	TSTAT	THERMOSTAT
T	TU	TERMINAL UNIT
T	TX	TOILET EXHAUST
T	TYP	TYPICAL
U		
U	U.N.O.	UNLESS NOTED OTHERWISE
U	U.O.N.	UNLESS OTHERWISE NOTED
U	UH	UNIT HEATER
U	UP	SET OR TURN UP
V		
V	V	VALVE
V	VAV	VARIABLE AIR VOLUME
V	VENT	VENTILATION
V	VERT	VERTICAL
V	VFD	VARIABLE FREQUENCY DRIVE
V	VI	VIBRATION ISOLATOR
V	VP	VELOCITY PRESSURE
V	VSD	VARIABLE SPEED DRIVE
W		
W	WB	WET BULB
W	WMS	WIRE MESH SCREEN

DUCTWORK SYMBOLS

STANDARD BRANCH SUPPLY OR RETURN, HIDDEN LINES

45° SUPPLY / 45° RETURN — STANDARD BRANCH SUPPLY OR RETURN, NO SPLITTER (45° TAP)

FC — FLEXIBLE CONNECTION, EQUIPMENT, VIBRATION, OR SEISMIC

VANED ELBOW (PROVIDE ALL SQUARE OR RECTANGULAR ELBOWS WITH VANES EVEN IF SYMBOL IS MISSING)

STANDARD RADIUS ELBOW (LONG RADIUS)

10x8 — NEW DUCT (INSIDE DIMENSIONS: WIDTH x DEPTH)

10x8 — EXISTING DUCT TO REMAIN (INSIDE DIMENSIONS: WIDTH x DEPTH)

10x8 — EXISTING DUCT TO BE DEMOLISHED (INSIDE DIMENSIONS: WIDTH x DEPTH)

SUPPLY TOP REGISTER OR GRILLE (WALL TYPE)

EXHAUST OR RETURN CEILING REGISTER OR GRILLE

EXHAUST OR RETURN BOTTOM REGISTER OR GRILLE (WALL TYPE)

EXHAUST OR RETURN REGISTER OR TOP GRILLE (WALL TYPE)

VANED ELBOW & AIR SPLIT TYPICAL TO TAKE OFF INCLINED RISE, IN DIRECTION OF AIR FLOW

R — INCLINED DROP, IN DIRECTION OF AIR FLOW

D

MANUAL VOLUME/BALANCING DAMPER (MBD)

M — MOTORIZED DAMPER WITH ACCESS DOOR

SD — DUCT MOUNTED SMOKE DETECTOR WITH ACCESS DOOR

ACCESS DEVICE - SEE SPECIFICATIONS

COMBINATION FIRE/SMOKE DAMPER

FIRE DAMPER

FLEXIBLE DUCT CONNECTION (EQUIPMENT)

SUPPLY DUCT TURNING UP

RETURN DUCT TURNING UP

EXHAUST DUCT TURNING UP

SUPPLY DUCT TURNING DOWN

RETURN DUCT TURNING DOWN

EXHAUST DUCT TURNING DOWN

ROUND DUCT TURNING UP

ROUND DUCT TURNING DOWN

SUPPLY DIFFUSER (4-WAY)

SUPPLY DIFFUSER (3-WAY)

SUPPLY DIFFUSER (2-WAY, ADJACENT)

SUPPLY DIFFUSER (2-WAY, OPPOSITE)

SUPPLY DIFFUSER (1-WAY)

RETURN/TRANSFER GRILLE

EXHAUST GRILLE

SP — STATIC PRESSURE TRANSMITTER

ACOUSTICALLY LINED DUCT

FLEXIBLE DUCT

GENERAL PIPING SYMBOLS

DIRECTION OF PIPE PITCH (DOWN)
DIRECTION OF FLOW
ANCHOR
REDUCER OR INCREASER
ECCENTRIC REDUCER
TOP CONNECTION, 45° OR 90°
BOTTOM CONNECTION, 45° OR 90°
SIDE CONNECTION
CAPPED OUTLET
RISE OR DROP IN PIPE
UNION
PIPE UP
PIPE DOWN
INVERTED BUCKET TRAP SET INCLUDING PIPING ACCESSORIES SEE DETAIL
FLOAT & THERMOSTATIC TRAP SET INCLUDING PIPING ACCESSORIES SEE DETAIL
THERMOSTATIC TRAP SET INCLUDING PIPING ACCESSORIES SEE DETAIL
THERMOMETER
PRESSURE GAGE
FLOW ELEMENT
REFRIGERANT SIGHT GLASS
TEST PLUG (PRESSURE/TEMPERATURE)
AUTOMATIC AIR VENT
MANUAL AIR VENT
QUICK-COUPLE HOSE CONNECTOR
P — DIFFERENTIAL PRESSURE SENSOR
PRESSURE REDUCING STATION
EXISTING PIPING
EXISTING PIPING TO BE DEMOLISHED
HWS — HOT WATER HEATING SUPPLY
HWR — HOT WATER HEATING RETURN
RL — REFRIGERANT LIQUID LINE
RS — REFRIGERANT SUCTION LINE
MPS — MEDIUM PRESSURE STEAM
MPR — MEDIUM PRESSURE STEAM CONDENSATE RETURN
LPS — LOW PRESSURE STEAM (15 PSIG AND BELOW)
LPR — LOW PRESSURE STEAM CONDENSATE RETURN
CHS — CHILLED WATER SUPPLY
CHR — CHILLED WATER RETURN
CWS — CONDENSER WATER SUPPLY
CWR — CONDENSER WATER RETURN
PUMPED CONDENSATE
PUMP

CONTRACTOR COORDINATION

THE GENERAL CONTRACTOR SHALL TAKE THE LEAD IN PREPARING COORDINATION DRAWINGS. SUCH DRAWINGS SHALL BE ARRANGED AND DESIGNED THROUGH AND FROM COORDINATION WITH ALL OTHER MAJOR AND MINOR SUBCONTRACTORS. PROVIDE PLAN VIEWS, SECTIONS, AND ELEVATIONS AS REQUIRED TO FULLY COORDINATE ALL NEW WORK. DRAW TO SCALE (AT NOT LESS THAN 3/8"=1'0"). DRAWINGS SHALL SHOW, BUT NOT BE LIMITED TO: ALL WALL RATINGS, DUCTWORK, AIR DISTRIBUTION, MECHANICAL EQUIPMENT, MECHANICAL PIPING, FIRE PROTECTION PIPING, PLUMBING PIPING, CABLE TRAYS, LIGHTING FIXTURES, CEILING GRID, CEILING HEIGHT, MAJOR BEAMS AND JOISTS (WITH ELEVATIONS MARKED), FIRE, SAFETY, AND SECURITY ALARM DEVICES (WHERE CEILING MOUNTED), ELECTRICAL CONDUITS LARGER THAN 2 INCH DIAMETER, ELECTRICAL BUSWAY AND REQUIRED CLEARANCES, AND ANY EQUIPMENT PROVIDED BY OTHERS THAT PROTRUDE INTO THE CEILING CAVITIES OR IMPEDE THE LOCATION OR ACCESS TO ABOVE CEILING PIPING, DUCTWORK, OR OTHER EQUIPMENT. SECTIONS SHALL BE CUT THROUGH AREAS SHOWING MATERIALS AND SYSTEMS OF ALL CONTRACTS. IT IS IMPORTANT TO NOTE THAT FABRICATION CANNOT BEGIN UNTIL COORDINATION DRAWINGS HAVE BEEN APPROVED.

THE CONTRACTOR SHALL OBTAIN A COPY OF THE FINAL SITE LATEST VENDOR DRAWINGS PRIOR TO PROCURING OR INSTALLING ANY EQUIPMENT. ANY REWORK REQUIRED BY THE CONTRACTOR'S FAILURE TO OBTAIN THESE DRAWINGS SHALL BE AT THE CONTRACTOR'S EXPENSE AND SHALL NOT RESULT IN ANY ADDITIONAL TIME TO THE PROJECT. THE CONTRACTOR SHALL MEET THE REPRESENTATIVE OF THE VENDOR PRIOR TO THE START OF WORK. ALL WORK SHALL COMPLY WITH ALL VENDOR REQUIREMENTS. THE CONTRACTOR SHALL BE RESPONSIBLE FOR ALL WORK SHOWN ON THESE DRAWINGS AND ALL WORK SHOWN ON THE VENDOR DRAWINGS. THE PHRASE "SUPPLIED BY CUSTOMER" (OR DERIVATIVES) MEANS "PROVIDED BY CONTRACTOR."

VALVE SYMBOLS

M — MOTORIZED SHUT-OFF VALVE
BALANCING VALVE
SHUT-OFF VALVE - NORMALLY CLOSED
SHUT-OFF VALVE - SEE SPECIFICATIONS
GLOBE VALVE
GATE VALVE WITH 3/4 " HOSE ADAPTER
GATE VALVE
CHECK VALVE
ANGLE GLOBE VALVE
BUTTERFLY VALVE
BALL VALVE
CIRCUIT SETTER
STRAIGHT-THRU MODULATING CONTROL VALVE
STRAIGHT-THRU TWO POSITION CONTROL VALVE
THREE-WAY MODULATING CONTROL VALVE
AUTOMATIC FLOW CONTROL VALVE
SAFETY OR PRESSURE RELIEF VALVE
PRESSURE REDUCING VALVE
MANUAL AIR VENT
TEST PLUG (PRESSURE/TEMPERATURE)
STEAM TRAP (MEDIUM/HIGH PRESSURE)
CIRCUIT SETTER (METERING AND BALANCING)
CONCENTRIC REDUCER
ECCENTRIC REDUCER
PA — PIPE ANCHOR
PIPE GUIDES
FLEXIBLE CONNECTION
WYE STRAINER (WITH BALL VALVE & HOSE CONNECTION)

MECHANICAL SYMBOLS

CONNECT TO EXISTING
POINT OF DISCONNECT
T — THERMOSTAT
T — TEMPERATURE SENSOR (DUCT MOUNTED)
S — SWITCH
H — HUMIDITY SENSOR
S — SMOKE DETECTOR
P — DIFFERENTIAL PRESSURE MONITOR
DIFFERENTIAL PRESSURE SENSOR
DOOR UNDERCUT

GENERAL NOTES

1. COORDINATE ALL WORK WITH OTHER TRADES.
2. CONTRACTOR SHALL BE RESPONSIBLE FOR ALL FEES, PERMITS AND LICENSES FOR THE COMPLETE INSTALLATION OF THEIR WORK.
3. ALL DUCTWORK RUNS SHOWN ARE REPRESENTATIVE ONLY. CONTRACTOR SHALL BE RESPONSIBLE FOR ANY CONDITIONS IN THE FIELD (EXISTING, OR PREDICATED BY LOCATION OF NEW EQUIPMENT) THAT MAKE NECESSARY ALTERNATE ROUTING OF DUCTWORK.
4. ALL PIPING RUNS SHOWN ARE REPRESENTATIVE ONLY. CONTRACTOR SHALL BE RESPONSIBLE FOR ANY CONDITIONS IN THE FIELD THAT MAKE NECESSARY ALTERNATE ROUTING OF PIPING.
5. MECHANICAL CONTRACTOR SHALL COORDINATE WITH ELECTRICAL AND CONTROLS CONTRACTORS TO PROVIDING POWER CONNECTIONS AND DDC CONTROLS FOR ALL EQUIPMENT.
6. ALL DIFFUSERS NOT SHOWN AS A FULL CEILING MODULE (24"X24") SHALL BE A MINIMUM OF 12"X12".
7. CONTRACTOR SHALL BE RESPONSIBLE FOR REPAIRING ANY ARCHITECTURAL WORK (INCLUDING, BUT NOT LIMITED TO: FLOORING, CEILING TILE AND GRID, SMOKE PARTITIONS ABOVE CEILING, GYPSUM WALL BOARD AND PAINTING, PLASTER, ETC.) THAT IS DAMAGED, DISTURBED, OR REMOVED INCIDENTAL TO THIS WORK.
8. ALL PIPING AND DUCTS IN FINISHED ROOMS OR SPACES SHALL BE CONCEALED IN A FURRED CHASE OR ABOVE THE SUSPENDED CEILING.
9. THE FIRST FIGURE OF DUCT SIZE INDICATES DIMENSION OF FACE SHOWN OR INDICATED.
10. ACCESS PANELS ARE REQUIRED FOR ALL VALVES, TRAPS, DAMPERS, CLEANOUTS, CONTROLS, ETC. THAT ARE LOCATED ABOVE HARD CEILINGS OR BEHIND WALLS. ACCESS PANELS SHALL BE FURNISHED AND INSTALLED UNDER THE ARCHITECTURAL SPECIFICATIONS.
11. TOTAL STATIC PRESSURE NOTED IN THE SCHEDULES INCLUDES DUCT SYSTEM, TERMINAL UNITS, FILTERS, COILS, ETC.
12. FOR TYPICAL WATER PIPING CONNECTIONS TO EQUIPMENT SEE STANDARD EQUIPMENT DETAILS.
13. DIFFUSER, REGISTER AND GRILLE SIZES SHOWN ON FLOOR PLANS ARE NECK SIZES.
14. PROVIDE INSULATED SUPPLY DIFFUSERS AND GRILLES.
15. REFER TO ARCHITECTURAL REFLECTED CEILING PLANS FOR EXACT LOCATIONS OF CEILING DIFFUSERS, REGISTERS, AND GRILLES.
16. PROVIDE NEW DDC SYSTEM TO ACCOUNT FOR NEW ROOMS, THERMOSTATS AND VAV TERMINAL UNITS. PRIOR TO CONTROLS PROGRAMMING, MECHANICAL CONTRACTOR SHALL PROVIDE TO CONTROLS VENDOR THE ACTUAL ROOM NUMBERS, AS DETERMINED BY THE ARCHITECT AND OWNER.
17. MECHANICAL CONTRACTOR SHALL ENSURE THAT THE FLEXIBLE DUCTWORK IS FREE OF BENDS THAT WOULD RESTRICT AIRFLOW. PROVIDE HANGERS AND SUPPORTS TO ENSURE BENDS ARE SMOOTH RADIUS.
18. WHERE CONFLICTS WITH OTHER UTILITIES OR CONSTRUCTION OCCUR, CONTRACTOR SHALL PROVIDE DUCT TRANSITIONS (AND CHANGES IN DIMENSIONS) PER SMACNA GUIDELINES AS REQUIRED TO AVOID CONFLICT. DUCT OF DIFFERING SIZE TO THAT SHOWN ON PLANS SHALL HAVE A HYDRAULIC AREA EQUAL TO THE DUCT SIZE LISTED ON PLANS.
19. ALL AIR DISTRIBUTION DEVICES SHALL BE PROVIDED WITH MANUAL VOLUME DAMPERS FOR BALANCING PURPOSES. SEE DETAILS AND SPECIFICATIONS FOR MORE REQUIREMENTS, WHETHER SHOWN ON THE DRAWINGS OR NOT.

ENVIRONMENTS FOR HEALTH ARCHITECTURE
e4h
888.781.8441 817.226.1917 501 Elm St., Ste 500, Dallas, TX 75202 e4harchitecture.com

© 2024 E4H: Environments For Health, LLC

CMC CONWAY MEDICAL CENTER with Novant Health

PROGRAM MANAGER
MEADOWS AND OHLY
1400 MATTHEWS TOWNSHIP PARKWAY
SUITE 210
540.389.5318
Meadows|Ohly

ARCHITECT
E4H ARCHITECTURE
817.226.1917

MEP ENGINEER
HARRELL DESIGN GROUP, PC
10720 SIKES PLACE, SUITE 100
CHARLOTTE, NC 28277
704.814.1320

STRUCTURAL ENGINEER
HART GAUGLER & ASSOCIATES
830N. CENTRAL EXPRESSWAY
SUITE 600
469.623.5025

CIVIL ENGINEER
DEVELOPMENT RESOURCE GROUP, LLC
4703 OLEANDER DRIVE
MYRTLE BEACH, SC 29577
843.839.3350

MEDICAL EQUIPMENT PLANNER
MAZZETTI+GBA
615.376.3108

CMC CONWAY MEDICAL CENTER
CMC Socastee FSED
6016 HIGHWAY 707
MYRTLE BEACH, SC

PROJECT NUMBER: 3024096.00 HDG PROJECT NUMBER: 24109

Δ	DATE	DESCRIPTION
1		

SOUTH CAROLINA HARRELL DESIGN GROUP, PC No. C02713 CERTIFICATE OF AUTHORIZATION

NOT FOR CONSTRUCTION

ARCH NAME ARCH ##

ORIG SUBMISSION: 05.30.2025

CURRENT:

SHEET TITLE AND NUMBER:

M0.01

GENERAL NOTES & LEGENDS

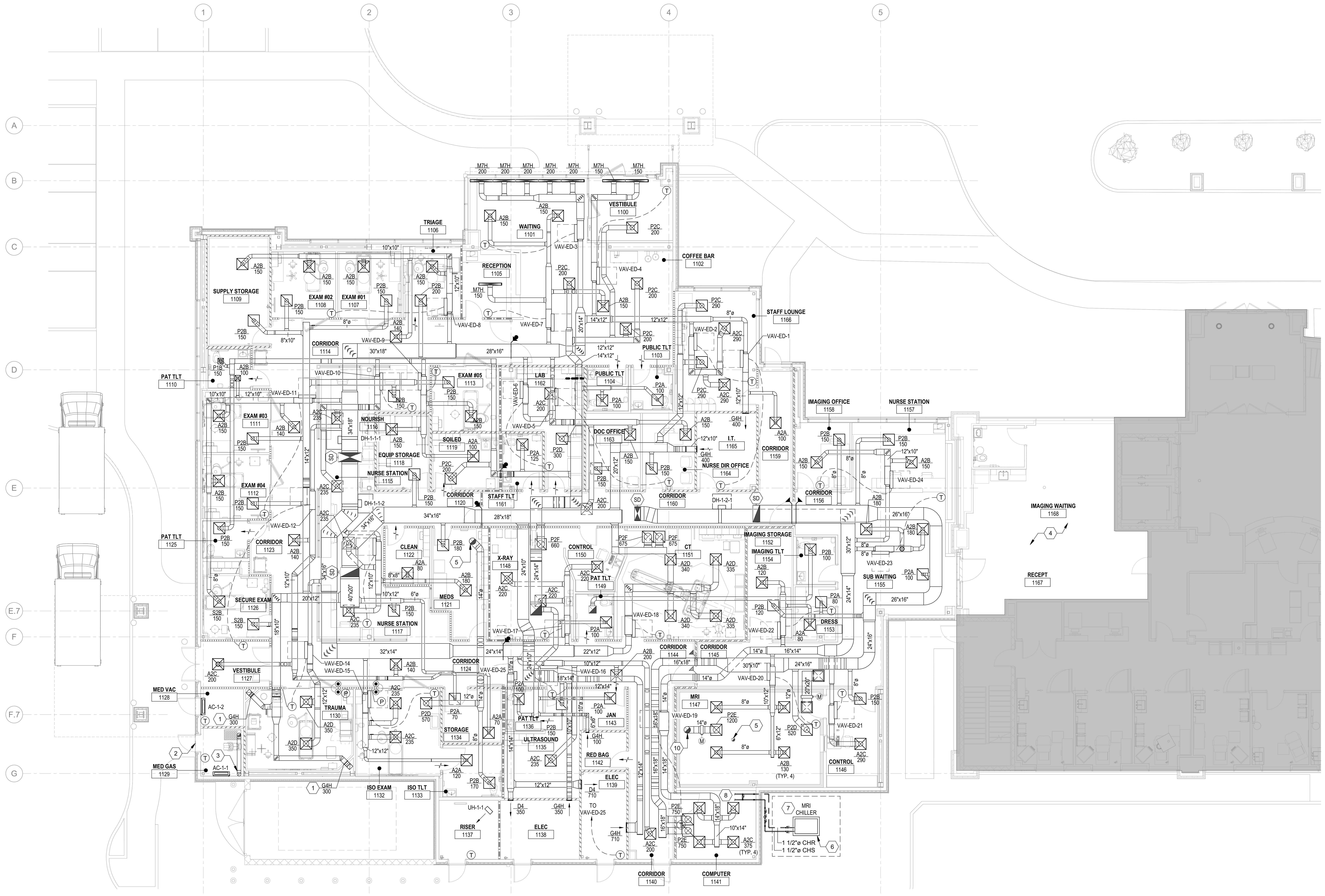

1 MECHANICAL DUCTWORK PLAN - LEVEL 1

1/8" = 1'-0"

GENERAL NOTES

A. EACH TERMINAL BOX SHALL BE PROVIDED WITH A THERMOSTAT MOUNTED AT 54" A.F.F.

B. PROVIDE ALL RUNOUTS TO DIFFUSERS AND GRILLES WITH A MANUAL VOLUME DAMPER. WHERE VOLUME DAMPERS ARE LOCATED ABOVE A HARD CEILING, PROVIDE EITHER AN ACCESS PANEL OR A REMOVE OPERATED VOLUME DAMPER. COORDIANTE CEILING TYPES AND LOCATIONS WITH ARCHITECTURAL.

SHEET KEYNOTES

1. 10"x10" GRILLE MOUNTED 12" A.F.F.
2. PROVIDE 30"x12" INTAKE LOUVER INSTALLED ABOVE DOOR FOR MAKE UP AIR. LOUVER SHALL BE BASED ON GREENHECK EVH-501D OR EQUIVALENT AND HAVE A MINIMUM FREE AREA 0.81 SQUARE FEET.
3. PROVIDE A LOW WALL EXHAUST INTAKE 12" A.F.F.
4. PROVIDE NEW CEILING SUPPLY DIFFUSERS, FLEXIBLE DUCT, AND RETURN GRILLES IN RENOVATED WAITING AREA. EXISTING TERMINAL BOX "VAV-11" AND LOW PRESSURE DUCTWORK TO REMAIN IN PLACE. REBALANCE EXISTING TO REMAIN TERMINAL BOX FOR NEW AIRFLOW.
5. MRI QUENCH VENT UP TO ROOF, REFER TO M1.02 FOR CONTINUATION AND COORDINATE POINT OF CONNECTION TO MRI WITH EQUIPMENT MANUFACTURER'S INSTALLATION INSTRUCTIONS. QUENCH VENT SHALL BE MANUFACTURED OF 304 STAINLESS STEEL.
6. PROVIDE MRI CHILLER WITH 4" THICK EQUIPMENT PAD, PAD SHALL HAVE CHAMFERED EDGES THAT EXTEND 4" FROM THE BASE OF THE EQUIPMENT ON ALL SIDES AND SHALL BE REINFORCED WITH #5 REBAR.
7. COORDINATE EXACT LOCATION OF NEW MRI CHILLER WITH VENDOR. PIPING SHOWN IS DIAGRAMATIC AND EXACT CONNECTION LOCATIONS SHALL BE COORDINATED WITH MANUFACTURER'S INSTALLATION SPECIFICATIONS AND INSTRUCTIONS.
8. CHILLED WATER SUPPLY AND RETURN TO INTEGRATED COOLING CABINET, COORDINATE EXACT CONNECTION LOCATIONS WITH MANUFACTURER'S INSTALLATION SPECIFICATIONS AND INSTRUCTIONS.
9. 14"Ø EXHAUST AIR DUCT UP TO EF-ISO ON ROOF ABOVE, REFER TO SHEET M1.02 FOR CONTINUATION.
10. 14"Ø EXHAUST AIR DUCT UP TO EF-PURGE ON ROOF ABOVE, REFER TO SHEET M1.02 FOR CONTINUATION.

WALL RATING LEGEND

- SMOKE PARTITION
- 1 HR FIRE BARRIER
- 1 HR FIRE / SMOKE BARRIER
- 2 HR FIRE BARRIER
- 2 HR FIRE / SMOKE BARRIER
- 3 HR FIRE BARRIER
- 3 HR FIRE / SMOKE BARRIER
- 4 HR FIRE BARRIER
- 4 HR FIRE / SMOKE BARRIER
- FIRE RATED DOOR

ENVIRONMENTS FOR HEALTH ARCHITECTURE
888.781.8441 817.226.1917 501 Elm St, Ste 500, Dallas, TX 75202
e4harchitecture.com

© 2024 E4H - Environments For Health, LLC

CMC CONWAY MEDICAL CENTER with Novant Health

PROGRAM MANAGER
MEADOWS AND OHLY
1450 MATTHEWS TOWNSHIP PARKWAY
SUITE 210
540.589.5318

ARCHITECT
E4H ARCHITECTURE
817.226.1917

MEP ENGINEER
HARRELL DESIGN GROUP, PC
10720 SIKES PLACE, SUITE 100
CHARLOTTE, NC 28277
704.814.1320

STRUCTURAL ENGINEER
HART GAUGLER & ASSOCIATES
8350 N. CENTRAL EXPRESSWAY
SUITE 600
469.923.9225

CIVIL ENGINEER
DEVELOPMENT RESOURCE GROUP, LLC
4703 OLEANDER DRIVE
MYRTLE BEACH, SC 29577
843.839.3350

MEDICAL EQUIPMENT PLANNER
MAZZETTI+GBA
615.376.3108

CMC CONWAY MEDICAL CENTER
CMC Socastee FSED
6016 HIGHWAY 707
MYRTLE BEACH, SC

PROJECT NUMBER: 3024095.00 HDG PROJECT NUMBER: 24109

Δ	DATE	DESCRIPTION

SOUTH CAROLINA HARRELL DEGIGN GROUP, PC No. C02713 CERTIFICATE OF AUTHORIZATION

NOT FOR CONSTRUCTION

ARCH NAME ARCH ##

ORIG SUBMISSION: 05.30.2025
CURRENT:

SHEET TITLE AND NUMBER:

M1.01

MECHANICAL DUCTWORK PLAN - LEVEL 1

THE LINE SHOWN ABOVE IS EXACTLY ONE INCH ON ALL ORIGINAL ARCHITECTURAL SHEETS

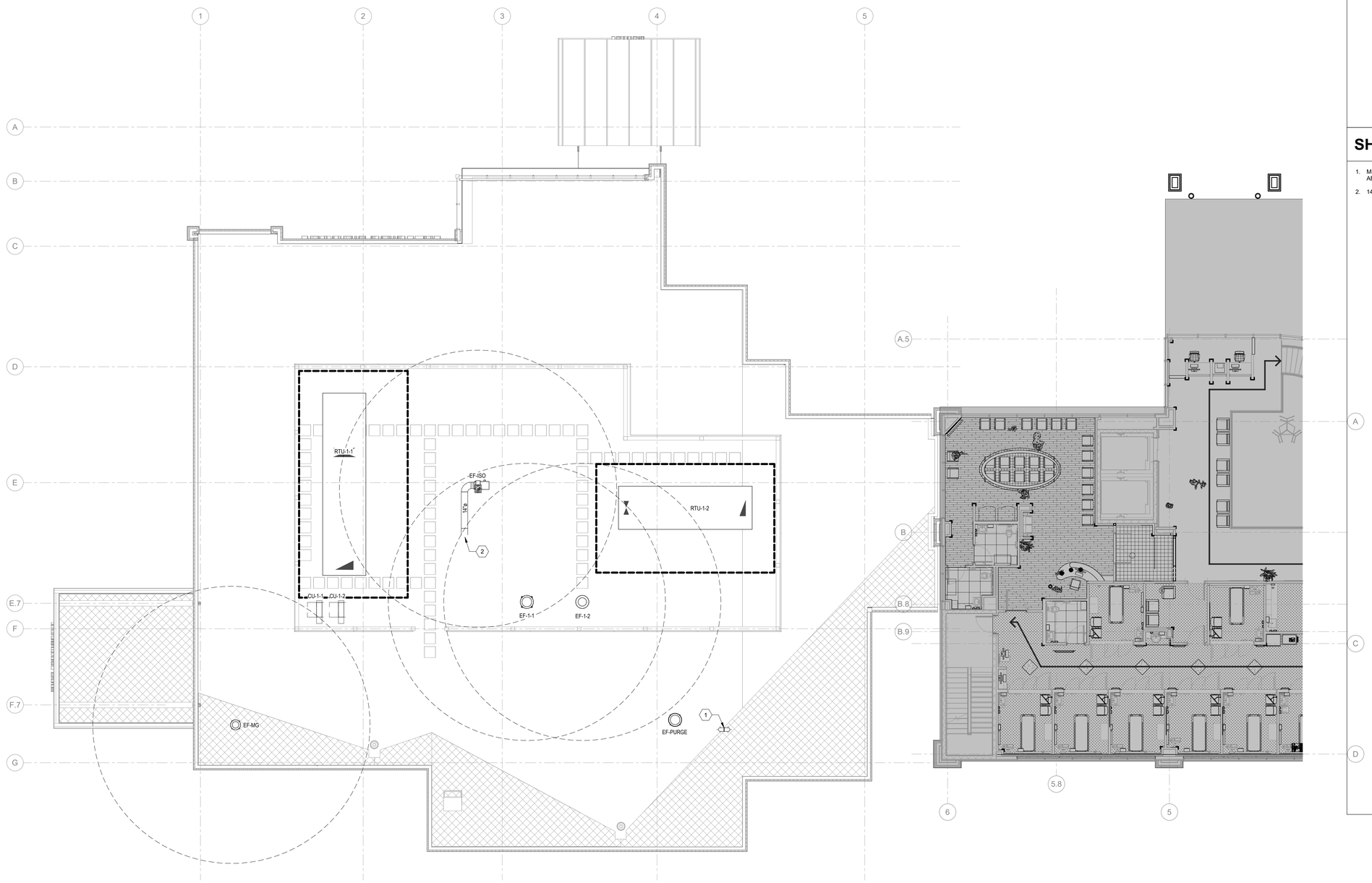

1 **MECHANICAL ROOF PLAN**
1/8" = 1'-0"
0 4' 8' 16'

GENERAL NOTES

A. ROUTE RTU CONDENSATE DRAINS TO NEAREST ROOF DRAIN. PROVIDE PIPE SUPPORT ON DRAIN EVERY 4' AND SLOOP DRAIN AT 1/4" PER FOOT.

B. RTU CONDENSATE DRAINS SHALL BE A MINIMUM OF 1-1/4" IN DIAMETER AND BE "TYPE L" COPPER WITH SOLDERED JOINTS.

SHEET KEYNOTES

1. MRI QUENCH VENT UP FROM BELOW, TERMINATE VENT 40" ABOVE ROOF WITH GOOSENECK AND 1/4" WIRE MESH SCREEN.
2. 14"Ø ISOLATION EXHASUT DUCT UP FROM BELOW.

ENVIRONMENTS FOR HEALTH ARCHITECTURE
e4h
888.781.8441 817.226.1917 501 Elm St., Ste 500, Dallas, TX 75202 e4harchitecture.com

© 2024 E4H - Environments For Health, LLC

CMC CONWAY MEDICAL CENTER with Novant Health

PROGRAM MANAGER
MEADOWS AND OHLY
1450 MATTHEWS TOWNSHIP PARKWAY
SUITE 210
540.389.5318

ARCHITECT
E4H ARCHITECTURE
817.226.1917

MEP ENGINEER
HARRELL DESIGN GROUP, PC
10720 SIKES PLACE, SUITE 100
CHARLOTTE, NC 28277
704.814.1320

STRUCTURAL ENGINEER
HART GAUGLER & ASSOCIATES
830C N. CENTRAL EXPRESSWAY
SUITE 600
469.023.9225

CIVIL ENGINEER
DEVELOPMENT RESOURCE GROUP, LLC
4703 OLEANDER DRIVE
MYRTLE BEACH, SC 29577
843.839.3350

MEDICAL EQUIPMENT PLANNER
MAZZETTI+GBA
615.376.3108

CMC CONWAY MEDICAL CENTER
CMC Socastee FSED
6016 HIGHWAY 707
MYRTLE BEACH, SC

PROJECT NUMBER: 3024096.00 **HDG PROJECT NUMBER:** 24109

Δ	DATE	DESCRIPTION

SOUTH CAROLINA HARRELL DESIGN GROUP, PC No. 1202713 CERTIFICATE OF AUTHORIZATION

NOT FOR CONSTRUCTION

ARCH NAME ARCH ##

ORIG SUBMISSION: 05.30.2025
CURRENT:

SHEET TITLE AND NUMBER:

M1.02

MECHANICAL ROOF PLAN

THE LINE SHOWN ABOVE IS EXACTLY ONE HORIZONTAL INCH ON ORIGINAL ARCHITECT'S DRAWINGS

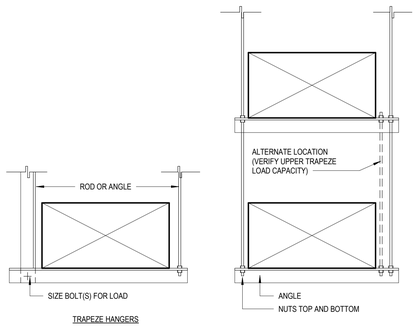

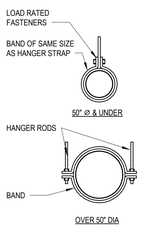

HANGER STRAPS OR RODS FOR ROUND DUCT			
MAX. DUCT ø IN	QUANTITY/SIZE IN	MAX. LOAD LBS	MAX. SPACING IN
26	ONE 1 x 22 GA STRAP	260	144
36	ONE 1 x 18 GA STRAP	420	144
50	ONE 1 x 16 GA STRAP	700	144
60	TWO 3/8 Ø RODS	1320	144
84	TWO 1/2 Ø RODS	2500	144

NOTE:
1. TABULATED DATA FROM SMACNA ALLOWS FOR DUCT REINFORCING AND INSULATION, BUT NO EXTERNAL LOAD.
2. WIRE HANGERS ARE PROHIBITED.

13 DUCT HANGERS
NOT TO SCALE

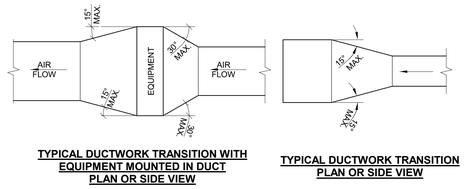

TYPICAL DUCTWORK TRANSITION WITH EQUIPMENT MOUNTED IN DUCT PLAN OR SIDE VIEW

TYPICAL DUCTWORK TRANSITION PLAN OR SIDE VIEW

NOTES:
UNLESS OTHERWISE INDICATED ON PLANS, MAXIMUM ANGLES SHOWN SHALL APPLY.

9 DUCTWORK TRANSITIONS (WITH EQUIPMENT MOUNTED IN DUCTS)
NOT TO SCALE

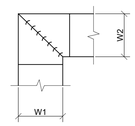

NOTES:
1. ALL VANE ELBOWS SHALL BE CONSTRUCTED AND INSTALLED AS DETAILED BY SMACNA.
2. WHEN W1 DOES NOT EQUAL W2, VANE SHALL BE SINGLE THICKNESS VANE TYPE REGARDLESS OF W DIMENSION.
3. ALL SINGLE THICKNESS VANES SHALL HAVE A 2" [50mm] RADIUS, 1 1/2" [40mm] MAXIMUM SPACE BETWEEN VANES AND A 3/4" [20mm] TRAILING EDGE.
4. WHEN W EQUALS W2 AND W1 IS GREATER THAN 20" [500mm] VANES SHALL BE DOUBLE VANE TYPE.

10 DUCTWORK SQUARE VANE ELBOWS
NOT TO SCALE

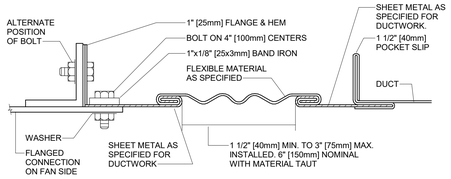

RECTANGULAR FLEXIBLE CONNECTION

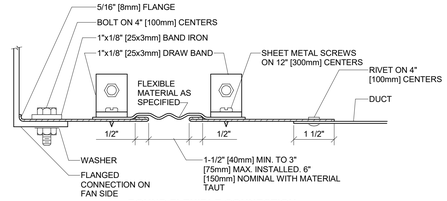

ROUND FLEXIBLE CONNECTION

5 FLEXIBLE DUCT CONNECTIONS
NOT TO SCALE

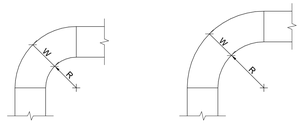

R=W
SHORT RADIUS ELBOW

R=1.5W
STANDARD RADIUS ELBOW

NOTES:
1. THE INTERIOR SURFACE OF ALL RADIUS ELBOWS SHALL BE MADE ROUND.
2. ALL STANDARD RADIUS ELBOWS CAN BE SUBSTITUTED WITH SHORT RADIUS ELBOWS. ALL SHORT RADIUS ELBOWS SHALL HAVE VANES. VANES SHALL BE CONSTRUCTED, SUPPORTED AND FASTENED AS RECOMMENDED BY SMACNA.

6 DUCTWORK RADIUS ELBOWS
NOT TO SCALE

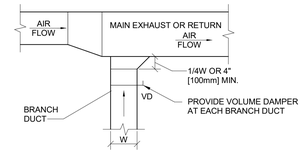

PLAN VIEW

1 EXHAUST OR RETURN BRANCH DUCTWORK
NOT TO SCALE

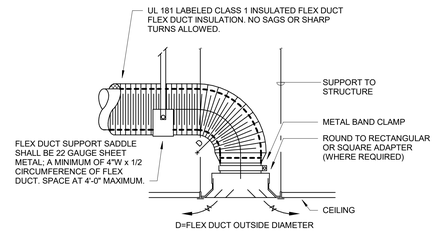

2 PREFERRED DIFFUSER DUCTING
12" = 1'-0"

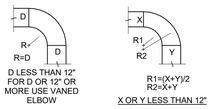

D LESS THAN 12" FOR D OR 12" OR MORE USE VANED ELBOW

R1=(X+Y)/2
R2=X+Y

X OR Y LESS THAN 12"

90° RADIUS ELBOWS

X OR W LESS THAN 12"

90° TEES

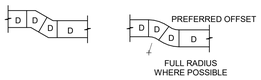

OFFSETS

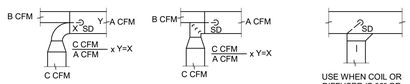

C LESS THEN 12"

C 12" OR MORE

USE WHEN COIL OR DIFFUSER IS 36" OR LESS FROM BRANCH TAKE-OFF

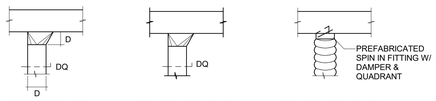

ROUND DUCT TAKE-OFF FROM RECTANGULAR MAIN (SUPPLY AIR)

ROUND DUCT TAKE-OFF FROM RECTANGULAR MAIN (RETURN AIR)

ROUND DUCT TAKE-OFF FROM RECTANGULAR MAIN (SUPPLY & RETURN AIR)

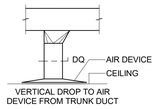

BRANCH TAKE-OFFS

14 LOW PRESSURE DUCT FITTINGS
NOT TO SCALE

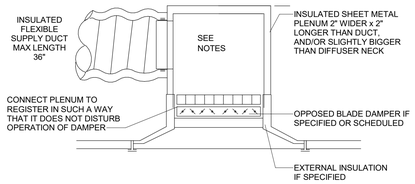

NOTES:
1. INSULATION REQUIRED ON SUPPLY ONLY.
2. INLET PLENUM HEIGHT SHALL BE AS REQUIRED BY INLET DUCT & FIELD CONDITIONS (GENERALLY 2" HIGHER THAN INLET DUCT Ø, BUT HIGHER IF REQUIRED. BY LIGHTS, ETC.)

11 LIMITED CLEARANCE DIFFUSER DUCTING
NOT TO SCALE

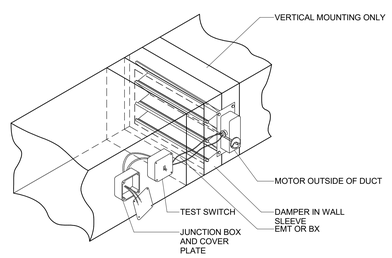

NOTES:
1. ALL MOTORS SHALL BE 115V, 60Hz, FACTORY-MOUNTED, UL APPROVED.
2. ALL ELECTRICAL CONNECTIONS MUST COMPLY WITH THE LOCAL CODE REQUIREMENT.
3. MOTOR SHALL BE FIELD REPLACEABLE WITHOUT DISTURBING PULLEY-CABLE DAMPER SYSTEM.
4. MOTORS SHALL BE WIRED THROUGH EMT OR GREENFIELD TO A STANDARD JUNCTION BOX LOCATED ON THE OUTSIDE OF THE DUCT.
5. FIELD WIRE AND INSTALL AS REQUIRED. PROVIDE TEST SWITCH AND PERFORM OPERATING TEST AFTER INSTALLATION.
6. MOTOR SHALL BE LOCATED TO PROVIDE ACCESS FOR MAINTENANCE.
7. PROVIDE ACCESS DOOR IN DUCTWORK IN ACCESSIBLE LOCATION TO MAINTAIN DAMPER.

12 DYNAMIC COMBINATION FIRE/ SMOKE DAMPER
NOT TO SCALE

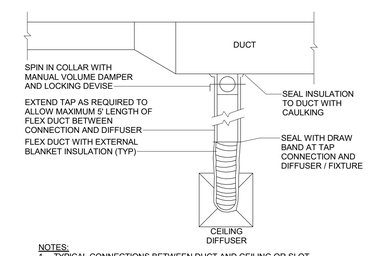

NOTES:
1. TYPICAL CONNECTIONS BETWEEN DUCT AND CEILING OR SLOT DIFFUSERS AND SINGLE OR DOUBLE SIDED SADDLE BOOT LIGHT FIXTURES AS SHOWN ON PLAN OR INDICATED IN SCHEDULE.
2. ONLY ONE 90° TURN ALLOWED IN FLEX DUCT WITH TURN R/D > 1.0; DUCT MUST BE PROPERLY SUPPORTED TO PREVENT KINKING.

7 TYPICAL DIFFUSER RUNOUT DETAIL
NOT TO SCALE

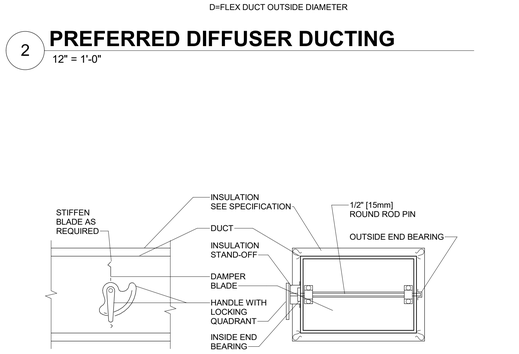

SIDE ELEVATION

SECTION

NOTES:
1. DELETE INSULATION STAND-OFF ON DUCTWORK WITHOUT EXTERIOR INSULATION.
2. DETAIL SHOWS SINGLE BLADE DAMPER. DAMPER INSTALLATION SHALL BE SIMILAR FOR MULTI-BLADE DAMPERS & ROUND DAMPERS.

3 VOLUME DAMPER DETAIL
NOT TO SCALE

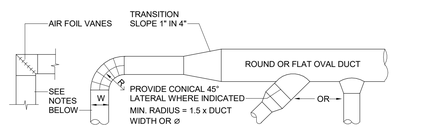

VANED ELBOW

ROUND ELBOW

BRANCH TAKE-OFF: CONICAL TEES ARE REQUIRED

NOTES:
1. NO BALANCING DAMPER IN MED & HIGH PRESSURE DUCTS.
2. PROVIDE RADIUS ELBOW IN ROUND AND RECTANGULAR DUCTS IN ALL LOCATIONS WHERE SPACE ALLOWS.
3. RADIUS ELBOWS SHALL BE 5-PIECE, MINIMUM, OR FORMED ELBOWS, W/O CRIMPING.
4. WHERE SPACE DOES NOT ALLOW FOR RADIUS ELBOWS, PROVIDE SQUARE ELBOWS WITH AIRFOIL TURNING VANES AS DETAILED.

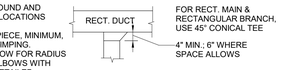

8 MEDIUM AND HIGH PRESSURE DUCT FITTINGS
NOT TO SCALE

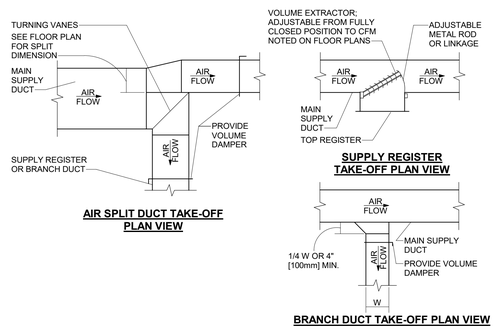

AIR SPLIT DUCT TAKE-OFF PLAN VIEW

SUPPLY REGISTER TAKE-OFF PLAN VIEW

BRANCH DUCT TAKE-OFF PLAN VIEW

4 SUPPLY DUCTWORK TAKE-OFFS
NOT TO SCALE

ENVIRONMENTS FOR HEALTH ARCHITECTURE
e4h
888.781.8441 817.226.1917 501 Elm St., Ste 500, Dallas, TX 75202 e4harchitecture.com

© 2024 E4H: Environments For Health, LLC

CMC CONWAY MEDICAL CENTER with Novant Health

PROGRAM MANAGER
MEADOWS AND OHLY
1400 MATTHEWS TOWNSHIP PARKWAY
SUITE 210
540.389.5318

ARCHITECT
E4H ARCHITECTURE
817.226.1917

MEP ENGINEER
HARRELL DESIGN GROUP, PC
10720 SIKES PLACE, SUITE 100
CHARLOTTE, NC 28277
704.814.1320

STRUCTURAL ENGINEER
HART GAUGLER & ASSOCIATES
8300 N. CENTRAL EXPRESSWAY
SUITE 600
469.023.5025

CIVIL ENGINEER
DEVELOPMENT RESOURCE GROUP, LLC
4703 OLEANDER DRIVE
MYRTLE BEACH, SC 29577
843.839.3350

MEDICAL EQUIPMENT PLANNER
MAZZETTI+GBA
615.376.3108

CMC CONWAY MEDICAL CENTER
CMC Socastee FSED
6016 HIGHWAY 707
MYRTLE BEACH, SC

PROJECT NUMBER: 3024096.00 HDG PROJECT NUMBER: 24109

Δ	DATE	DESCRIPTION

NOT FOR CONSTRUCTION

ARCH NAME ARCH ##

ORIG SUBMISSION: 05.30.2025
CURRENT:

SHEET TITLE AND NUMBER:

M5.01
DETAILS

THE LINE SHOWN ABOVE IS EXACTLY ONE INCH LONG AT THIS SHEETS ORIGINAL PAGE SIZE

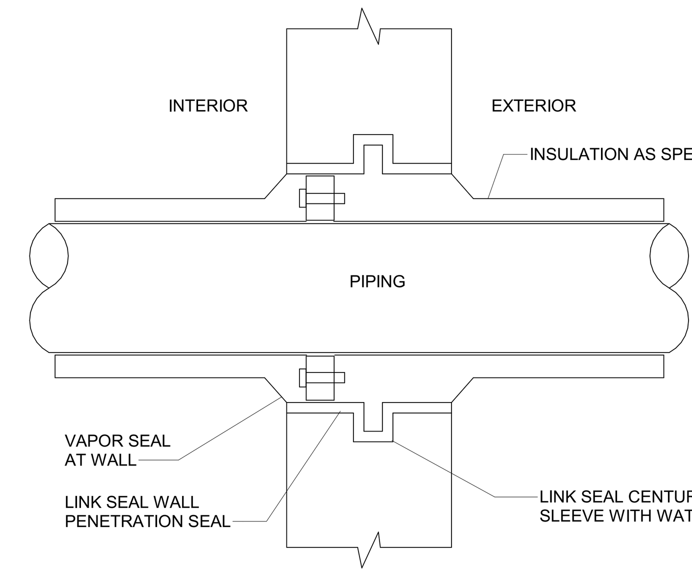

4 PIPE PENETRATION OF EXTERIOR WALLS (LINK SEAL)

NOT TO SCALE

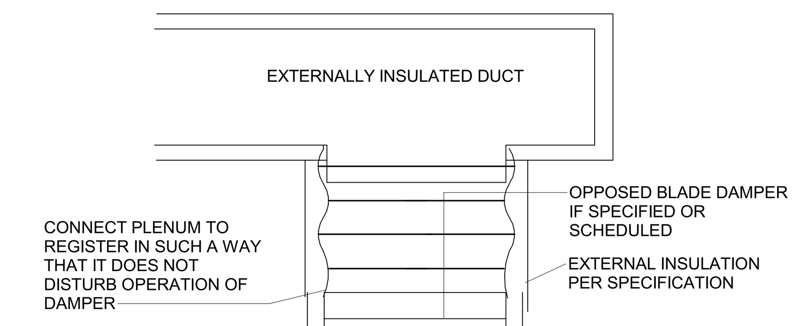

1 DIFFUSER/REGISTER BOTTOM TAP

NOT TO SCALE

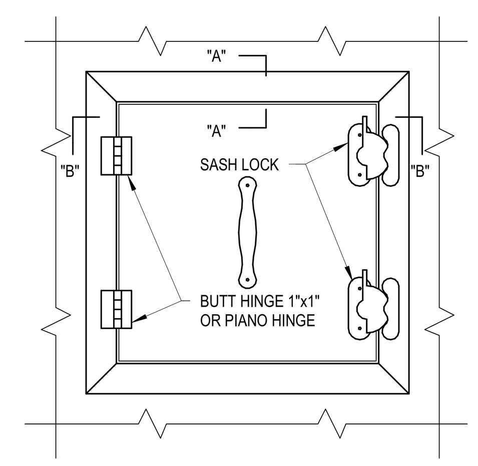

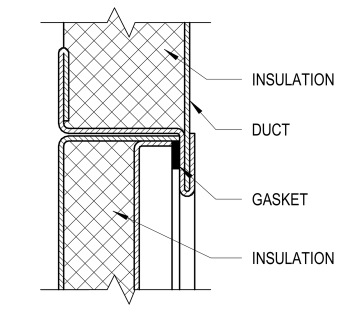

SECTION "A-A"

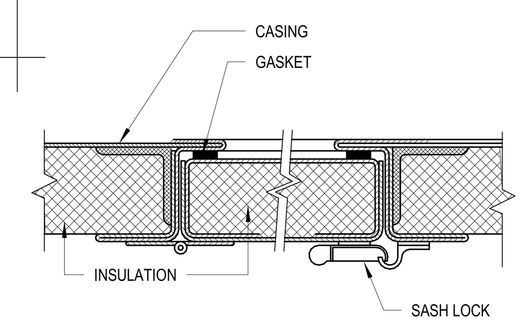

SECTION "B-B"

DOOR SIZE	NO. HINGES	NO. LOCKS
12"x12"	2	1
16"x20"	2	2
24"x24"	3	3

ACCESS PANEL

NOTES:
1. LATCHES SHALL BE OF THE WEDGE TYPE TO CLOSE DOORS TIGHTLY.
2. HINGES ON THE ACCESS DOORS SHALL HAVE NON-CORROSIVE PINS.

5 ACCESS PANEL DETAIL

NOT TO SCALE

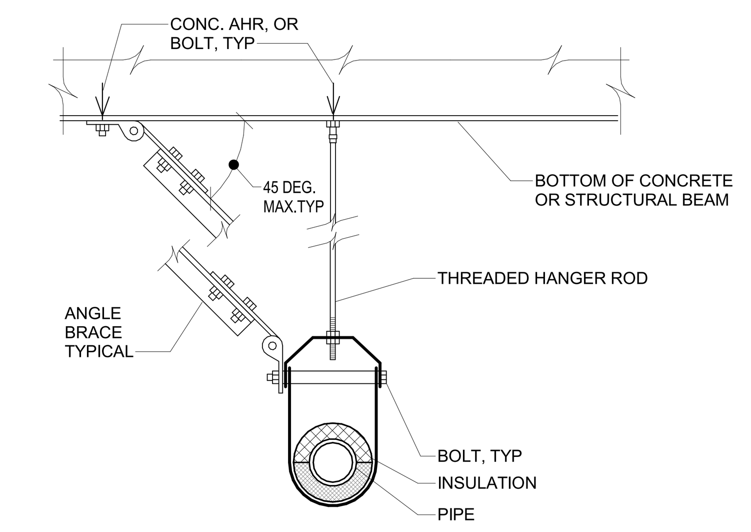

TRANSVERSE BRACE DETAIL

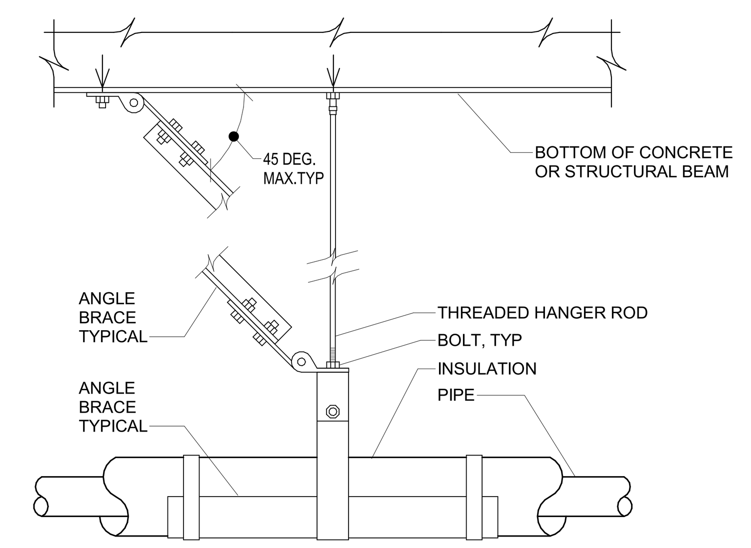

LONGITUDINAL BRACE DETAIL

NOTES:
A. DETAILS SHOWN ARE FOR PIPE BRACING, OTHER EQUIPMENT BRACING SHALL BE SIMILAR.
B. BRACE SIZES, SPACINGS, LOCATIONS, AND ATTACHMENTS SHALL BE AS SPECIFIED. BRACES SHALL BE FULLY COORDINATED WITH STRUCTURAL FRAMING AND WITH ALL OTHER BUILDING MATERIALS AND SERVICES.
C. TRANSVERSE AND LONGITUDINAL BRACES MAY BE COMBINED WHERE REQUIRED TO RESIST MOTIONS IN BOTH DIRECTIONS AT THE SAME TIME.
D. INSTALL ROLLER TYPE HANGERS FOR STEAM PIPING. SEE PIPE HANGERS DETAIL.

2 SEISMIC BRACING DETAIL

NOT TO SCALE

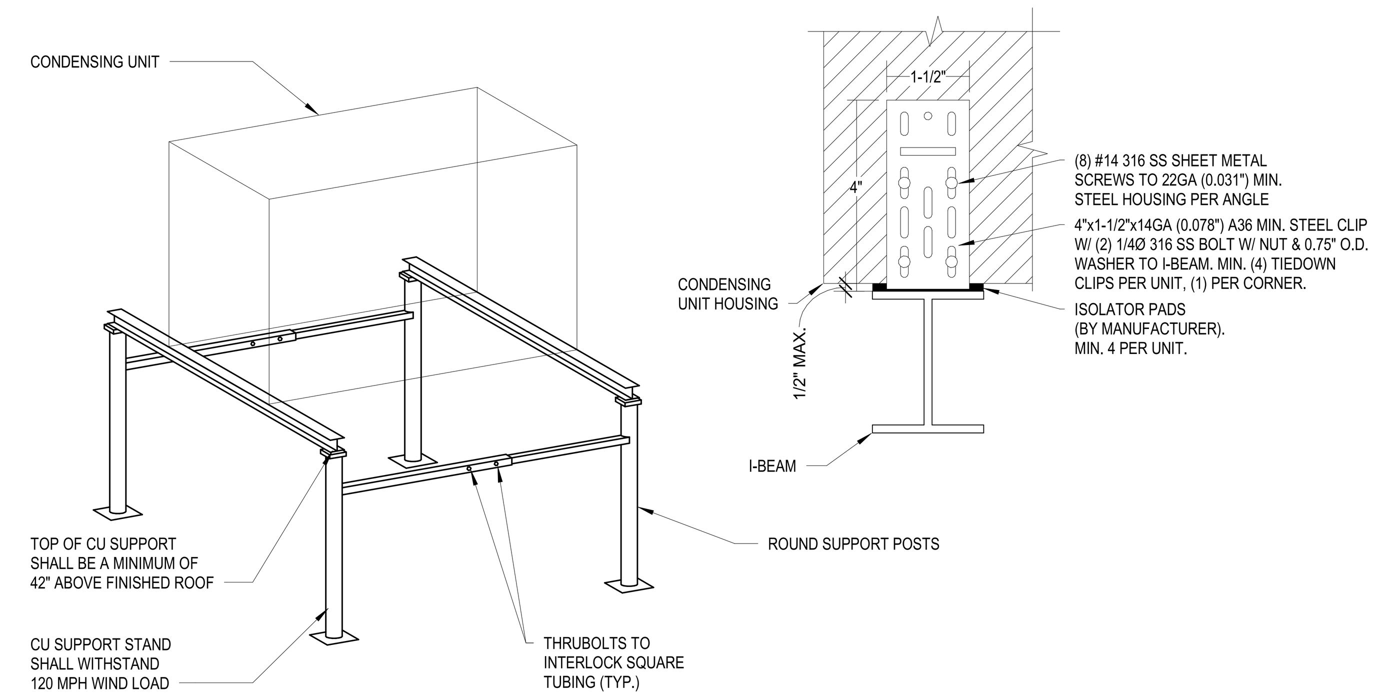

6 CONDENSING UNIT STAND DETAIL

NOT TO SCALE

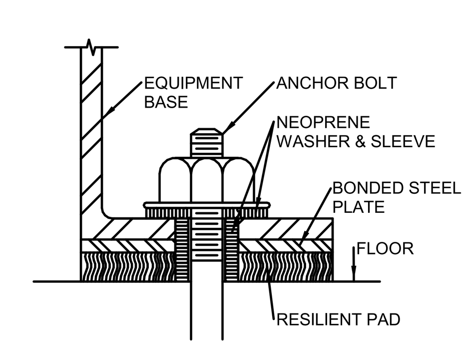

FLOOR MOUNT EQUIPMENT RESTRAINED BY RESILIENT PADS (TYPE DS)

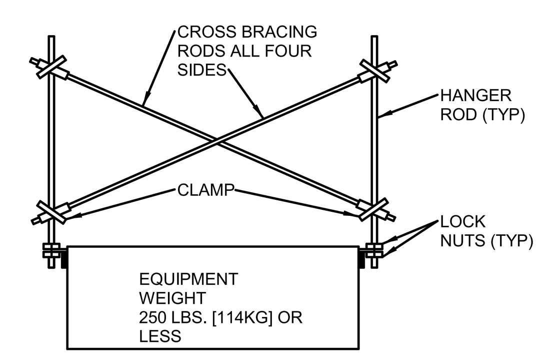

SEISMIC BRACING FOR LIGHT SUSPENDED EQUIPMENT

NOTE:
NOT REQUIRED FOR AIR TERMINAL UNITS.

3 SEISMIC BRACING FOR EQUIPMENT

NOT TO SCALE

e4h ENVIRONMENTS FOR HEALTH ARCHITECTURE
888.781.8441 817.226.1917 501 Elm St, Ste 500, Dallas, TX 75202
e4harchitecture.com

© 2024 E4H - Environments For Health, LLC

CMC CONWAY MEDICAL CENTER with Novant Health

PROGRAM MANAGER
MEADOWS AND OHLY
1450 MATTHEWS TOWNSHIP PARKWAY
SUITE 210
540.589.5318

ARCHITECT
E4H ARCHITECTURE
817.226.1917

MEP ENGINEER
HARRELL DESIGN GROUP, PC
10720 SIKES PLACE, SUITE 100
CHARLOTTE, NC 28277
704.814.1320

STRUCTURAL ENGINEER
HART GAUGLER & ASSOCIATES
8350 N. CENTRAL EXPRESSWAY
SUITE 600
469.923.9225

CIVIL ENGINEER
DEVELOPMENT RESOURCE GROUP, LLC
4703 OLEANDER DRIVE
MYRTLE BEACH, SC 29577
843.839.3350

MEDICAL EQUIPMENT PLANNER
MAZZETTI+GBA
615.376.3108

CMC CONWAY MEDICAL CENTER
CMC Socastee FSED
6016 HIGHWAY 707
MYRTLE BEACH, SC

PROJECT NUMBER: 3024096.00 HDG PROJECT NUMBER: 24109

Δ	DATE	DESCRIPTION
1		

SOUTH CAROLINA HARRELL DESIGN GROUP, PC No. C02713 CERTIFICATE OF AUTHORIZATION

NOT FOR CONSTRUCTION

ARCH NAME ARCH ##

ORIG SUBMISSION: 05.30.2025
CURRENT:

SHEET TITLE AND NUMBER:

M5.02

DETAILS

THE LINE SHOWN ABOVE IS EXACTLY ONE INCH LONG AT 30 SCALE

AIR HANDLING UNIT SCHEDULE

UNIT NO.	SERVICE	CFM	OA CFM	ESP (IN. W.G.)		EVAPORATOR				ELECTRICAL												BASIS OF DESIGN								NOTES
													CONDENSER SECTION				COMPRESSOR SECTION													
				SUPPLY FAN	RETURN FAN	SENSIBLE CAPACITY (MBH)	TOTAL CAPACITY (MBH)	EAT DB/WB (°F)	LAT DB/WB (°F)	V	PH	FREQ	FAN 1 FLA	FAN 2 FLA	FAN 3 FLA	FAN 4 FLA	COMP 1 RLA	COMP 2 RLA	COMP 3 RLA	COMP 4 RLA	MCA	MOP	EER	IEER	LENGTH (IN)	WIDTH (IN)	HEIGHT (IN)	WEIGHT (LBS)	MANUFACTURER	MODEL	
RTU-1-1	EXAM / ADMIN	13,730	3,910	3.0	1.5	340.13	572.74	76.0 / 65.6	50.05 / 50.00	460	3	60	2.1	2.7	2.1	2.7	21.8	24.0	24.0	24.0	149	150	10.5	15.6	394.5	93.5	87.0	8,840.7	TRANE	INTELLIPAK	1-4
RTU-1-2	IMAGING	7,875	1,740	3.5	1.0	201.05	258.72	74.6 / 64.3	50.88 / 50.82	460	3	60	2.1	2.7	-	-	14.5	19.1	19.1	-	76	90	10.1	15.7	289.3	93.5	87.0	6,081.3	TRANE	INTELLIPAK	1-4

NOTES:

1. PROVIDE FACTORY MOUNTED VFD WITH INTEGRAL DISCONNECT IN NEMA 4X ENCLOSURE.
2. PROVIDE MANUFACTURER'S ROOF CURB.
3. ROUTE CONDENSATE TO NEAREST ROOF DRAIN.
4. UNIT SHALL BE EQUIPPED WITH INTERIOR LIGHTING FOR SERVICE. COORDINATE WITH DIVISION 26 FOR CIRCUIT POWER.

HEAT PUMP SPLIT SYSTEM SCHEDULE

INDOOR UNIT									OUTDOOR UNIT													NOTES
UNIT NO.	SERVICE	COOLING (BTU/H)	HEATING (BTU/H @ 47°F)	CFM_{WET} (MIN/MAX)	CFM_{HEAT} (MIN/MAX)	WEIGHT (LBS)	MANUFACTURER	MODEL	UNIT NO.	SEER2	GAS LINE OD (IN)	LIQ. LINE OD (IN)	WEIGHT (LBS)	FAN FLA	COMP RLA	V	PH	MCA	MOCP	MANUFACTURER	MODEL	
AC-1-3	MED GAS 1129	12,000	12,200	134/364	170/406	22	MITSUBISHI	MSZ-HM12NA	CU-1-3	20.0	3/8	1/4	73	0.5	6.2	208	1	9.0	15	MITSUBISHI	MUZ-HM12NA	1-4
AC-1-4	MED VAC 1128	12,000	12,200	134/364	170/406	22	MITSUBISHI	MSZ-HM12NA	CU-1-4	20.0	3/8	1/4	73	0.5	6.2	208	1	9.0	15	MITSUBISHI	MUZ-HM12NA	1-4

NOTES:

1. INDOOR UNIT SHALL BE POWERED FROM THE OUTDOOR UNIT.
2. PROVIDE UNIT WITH CONDENSATE PUMP AND RESERVOIR, MANUFACTURER PART NUMBER X87-721.
3. PROVIDE UNIT WITH WATER-LEVEL SENSING DEVICE IN CONDENSATE DRAIN THAT WILL DE-ENERGIZE EQUIPMENT IN THE EVENT OF CONDENSATE ACCUMULATION, DEVICE SHALL CONFORM TO REQUIREMENTS PER SOUTH CAROLINA MECHANICAL CODE SECTION 307.2.3.4.
4. UNIT SHALL BE PROVIDED WITH FUSED DISCONNECT, DIVISION 26 SHALL PROVIDE AND INSTALL DISCONNECT.

FAN SCHEDULE

UNIT NO.	FAN SERVICE	FAN TYPE	DRIVE TYPE	WHEEL TYPE	CFM	ESP (IN. W.G.)	MOTOR RPM	FAN RPM	TIP SPEED	HP	V	PH	HZ	SELECTION BASED ON		NOTES
														MANUFACTURER	MODEL	
EF-1-1	EXAM / ADMIN	DOWNBLAST	DIRECT	-	3,860	1.5	1,560	1,358	7,602	3	460	3	60	GREENHECK	G-200HP-VG	1-5
EF-1-2	IMAGING	DOWNBLAST	DIRECT	-	1,740	1.0	1,725	1,394	5,584	1	460	3	60	GREENHECK	G-140-VG	1-5
EF-ISO	ISOLATION EXAM	UTILITY SET	DIRECT	-	570	0.5	1,770	1,464	4,284	1/4	460	3	60	GREENHECK	USF-6	1-6
EF-MG	MEDICAL GAS	DOWNBLAST	DIRECT	-	500	0.5	1,725	1,586	4,517	1/10	120	1	60	GREENHECK	G-090-VG	1-5
EF-PURGE	MRI EMERGENCY PURGE	UPBLAST	DIRECT	-	1,200	0.5	1,140	1,140	4,365	1/4	120	1	60	GREENHECK	CUE-140-B	1-5, 7

NOTES:

1. PROVIDE WITH BACKDRAFT DAMPER, MOTOR GUARD, VFD AND DISCONNECT SWITCH. VFD AND DISCONNECT PROVIDED BY MANUFACTURER. DISCONNECT SWITCH SHALL BE INSTALLED BY DIVISION 26.
2. PROVIDE WITH VIBRATION ISOLATORS.
3. PROVIDE WITH THERMAL OVERLOAD PROTECTION. FINAL CONNECTIONS BY DIVISION 26.
4. FAN SHALL BE SEISMIC RATED.
5. FAN SHALL BE HIGH WIND RATED.
6. PROVIDE FAN WITH DUCTED DISCHARGE FOR HIGH PLUME DISCHARGE.
7. PROVIDE FAN WITH MANUAL PUSH START SWITCH AND RELAY LOCATED AT CONTROLLER'S WORKSTATION. PUSH BUTTON SHALL BE MUSHROOM TYPE AND COLORED RED.

UNIT HEATER SCHEDULE

UNIT NO.	SERVICE	TYPE	CAPACITY (kW)	CFM	RPM	HP	ΔT (°F)	WEIGHT (LBS)	V	PH	HZ	AMPS	SELECTION BASED ON		NOTES
													MANUFACTURER	MODEL	
UH-1-1	RISER ROOM	CABINET	10	850	1,725	1/4	38	110	208	3	60	30	INDEECO	ULTRA SAFE EXP	1-3

NOTES:

1. UNIT SHALL BE SUSPENDED FROM WALL IN RISER ROOM. UNIT SHALL BE MOUNTED NOT LESS THAN 12" OFF OF WALL PER MANUFACTURER'S INSTALLATION INSTRUCTION.
2. PROVIDE UNIT WITH MANUFACTURER'S CORROSION RESISTANT WALL MOUNTING KIT.
3. PROVIDE UNIT WITH THERMOSTAT MOUNTED 54" A.F.F. AND ON AN INTERIOR WALL.

DUCT HEATER SCHEDULE

UNIT NO.	SERVICE	TYPE	CAPACITY (kW)	DUCT SIZE (IN x IN)	ΔT (°F)	V	PH	HZ	AMPS	SELECTION BASED ON		NOTES
										MANUFACTURER	MODEL	
DH-1-1-1	RTU-1-1	DUCT MOUNTED	35	34 x 18	15	480	3	60	42.0	GREENHECK	IDHE-O	1-2
DH-1-1-2	RTU-1-1	DUCT MOUNTED	35	34 x 16	15	480	3	60	42.0	GREENHECK	IDHE-O	1-2
DH-1-2-1	RTU-1-2	DUCT MOUNTED	40	30 x 12	15	480	3	60	48.1	GREENHECK	IDHE-O	1-2

NOTES:

1. PROVIDE UNIT WITH MANUFACTURER'S SCR CONTROLLER AND DISCONNECT SWITCH. DISCONNECT SWITCH SHALL BE INSTALLED BY DIVISION 26.
2. UNIT SHALL BE INTEGRATED INTO BUILDING CONTROLS AND STAGED ON/OFF BASED ON THE AHU SUPPLY AIR TEMPERATURE. REFER TO M7.01.

VAV/CAV AIR TERMINAL UNIT SCHEDULE (ELECTRIC)

MARK	INLET SIZE (IN)	FLOW DATA			ELECTRICAL DATA			BASIS OF DESIGN		NOTES
		MAXIMUM AIR FLOW (CFM)	MINIMUM AIR FLOW (CFM)	HEATING AIR FLOW (CFM)	CAPACITY (kW)	VOLTAGE	PHASE	MODEL	MANUFACURER	
VAV-ED-1	8"	500	500	500	5.0	480	3	DESV	TITUS	1
VAV-ED-2	8"	580	580	580	6.0	480	3	DESV	TITUS	1
VAV-ED-3	10"	1270	1270	1270	12.5	480	3	DESV	TITUS	1
VAV-ED-4	8"	200	200	200	2.0	277	1	DESV	TITUS	1
VAV-ED-5	8"	300	300	300	3.0	277	1	DESV	TITUS	1
VAV-ED-6	8"	200	200	200	2.0	277	1	DESV	TITUS	1
VAV-ED-7	8"	550	550	550	5.5	480	3	DESV	TITUS	1
VAV-ED-8	8"	600	600	600	6.0	480	3	DESV	TITUS	1
VAV-ED-9	8"	330	330	330	3.5	277	1	DESV	TITUS	1
VAV-ED-10	8"	350	350	350	3.5	277	1	DESV	TITUS	1
VAV-ED-11	8"	450	450	450	4.5	480	3	DESV	TITUS	1
VAV-ED-12	8"	220	220	220	2.5	277	1	DESV	TITUS	1
VAV-ED-13	8"	360	360	360	3.5	277	1	DESV	TITUS	1
VAV-ED-14	8"	700	700	700	7.0	480	3	DESV	TITUS	1
VAV-ED-15	8"	590	590	590	6.0	480	3	DESV	TITUS	1
VAV-ED-16	8"	635	635	635	6.5	480	3	DESV	TITUS	1
VAV-ED-17	8"	440	440	440	4.5	480	3	DESV	TITUS	1
VAV-ED-18	12"	1350	1350	1350	13.0	480	3	DESV	TITUS	1
VAV-ED-19	14"	1450	1450	1450	14.0	480	3	DESV	TITUS	1
VAV-ED-20	8"	440	440	440	4.5	480	3	DESV	TITUS	1
VAV-ED-21	8"	290	290	290	3.0	277	1	DESV	TITUS	1
VAV-ED-22	8"	200	200	200	2.0	277	1	DESV	TITUS	1
VAV-ED-23	8"	360	360	360	3.5	277	1	DESV	TITUS	1
VAV-ED-24	8"	440	440	440	4.5	480	3	DESV	TITUS	1
VAV-ED-25	10"	1050	1050	0	0.0	120	1	DESV	TITUS	1-2

NOTES:

1. PROVIDE TERMINAL BOX REHEAT COIL WITH SCR CONTROLLER.
2. TERMINAL BOX SHALL BE COOLING ONLY IN LEFT HAND CONFIGURATION.

AIR DISTRIBUTION DEVICE SCHEDULE

DEVICE LETTER	DEVICE TYPE	MANUFACTURER AND MODEL NUMBER	FRAME NUMBER	FRAME SIZE	NECK LETTER	NECK SIZE
A	ARCH. DIFFUSER	NAILOR UNI-RC	1	12x12	A	6"∅
B	BAR GRILLES	NAILOR SERIES 49	2	24x24	B	8"∅
C	CEILING REGISTER	NAILOR 61 DV	3	24x12	C	10"∅
D	SIDEWALL SUPPLY	NAILOR 45 5155H	4	NECK + FRAME	D	12"∅
E	EGGCRATE	NAILOR 61 EC	5	14x10	E	14"∅
F	FILTER GRILLE	NAILOR 61 FP	6	48x24	F	16"∅
G	SIDEWALL GRILLE	NAILOR 6155 H	7	48x4	G	14x6
H	FIRE RATED	NAILOR	8	132x4	H	NECK SIZE
J	CURVED GRILLE	61DVC				
K	PLENUM DIFFUSER	NAILOR				
L	LAMINAR FLOW	NAILOR 92LFD-SS				
M	LINEAR SLOT	NAILOR 5010/5010R				
N	LINEAR SLOT	NAILOR 48LL2				
P	ARCH. RETURN/EXH.	NAILOR 6155H				
Q	PERFORATED FACE	NAILOR 43254360				
R	ROUND	NAILOR				
S	SECURITY GRILLES	NAILOR SG-BM4				
T	SIDEWALL REGISTER	NAILOR 61 DV				

X X X — DEVICE TYPE
X — FRAME SIZE
NECK SIZE
CFM

AIR DISTRIBUTION LEGEND KEY

NOTES:

1. SUPPLY, EXHAUST, AND RETURN DIFFUSERS FOR PATIENT AND SUPPORT SPACES (I.E. EVERYWHERE BUT UTILITY ROOMS AND RESTROOMS) SHALL BE PROVIDED WITH RETAINING CLIP OPTION FOR AFFIXING CEILING GRID TO CENTER OF DEVICE.
2. MAXIMUM AIR VELOCITY THROUGH DIFFUSERS, GRILLES AND REGISTERS SHALL BE 500 FPM, UNLESS INDICATED OTHERWISE.
3. MAXIMUM NC SHALL BE 30.
4. PROVIDE FRAMES SUITABLE FOR TYPE OF INSTALLATION REQUIRED, VERIFY WITH FINAL APPROVED ARCHITECTURAL CEILING PLAN.
5. BASIS OF DESIGN IS NAILOR OR EQUAL.
6. PROVIDE SQUARE TO ROUND TRANSITION WITH APPROPRIATE NECK SIZE, AS REQUIRED.
7. REFER TO ARCHITECTURAL FOR FINISHES.
8. SEE PLANS FOR NECK SIZES OF REGISTERS AND GRILLES, ETC.
9. INSULATE BACK PANEL OF ALL SUPPLY DIFFUSERS. INSULATION TYPE SHALL MATCH INSULATION USED ON SUPPLY DUCTWORK.
10. DEVICES LOCATED IN TOILET(S) SHALL BE CONSTRUCTED OF ALUMINUM.
11. PROVIDE LINEAR SLOT DIFFUSERS WITH 180-DEGREE WIPER BLADE DAMPER FOR AIRFLOW DIRECTIONAL ADJUSTMENT.

ENVIRONMENTS FOR HEALTH ARCHITECTURE
e4h
888.781.8441 817.226.1917 501 Elm St., Ste 500, Dallas, TX 75202 e4harchitecture.com

© 2024 E4H: Environments For Health, LLC

CMC CONWAY MEDICAL CENTER with Novant Health

PROGRAM MANAGER
MEADOWS AND OHLY
1450 MATTHEWS TOWNSHIP PARKWAY
SUITE 210
540.389.5318

ARCHITECT
E4H ARCHITECTURE
817.226.1917

MEP ENGINEER
HARRELL DESIGN GROUP, PC
10720 SIKES PLACE, SUITE 100
CHARLOTTE, NC 28277
704.814.1320

STRUCTURAL ENGINEER
HART GAUGLER & ASSOCIATES
8300 N. CENTRAL EXPRESSWAY
SUITE 600
469.023.5025

CIVIL ENGINEER
DEVELOPMENT RESOURCE GROUP, LLC
4703 OLEANDER DRIVE
MYRTLE BEACH, SC 29577
843.839.3350

MEDICAL EQUIPMENT PLANNER
MAZZETTI+GBA
615.376.3108

CMC CONWAY MEDICAL CENTER
CMC Socastee FSED
6016 HIGHWAY 707
MYRTLE BEACH, SC

PROJECT NUMBER: 30240960.00 HDG PROJECT NUMBER: 24109

Δ	DATE	DESCRIPTION
1		

SOUTH CAROLINA HARRELL DESIGN GROUP, INC. No. 12027T3 CERTIFICATE OF AUTHORIZATION

NOT FOR CONSTRUCTION

ARCH NAME ARCH ##

ORIG SUBMISSION: 05.30.2025
CURRENT:

SHEET TITLE AND NUMBER:

M6.01

SCHEDULES

THE LINE SHOWN ABOVE IS EXACTLY ONE HORIZONTAL INCH ON THESE SHEETS

SEQUENCE OF OPERATIONS:

ROOFTOP AIR HANDLING UNIT (RTU-1-1 AND RTU-1-2) – VAV, SUPPLY FAN, ECONOMIZER, REFRIGERANT COIL, ELECTRIC PREHEAT

GENERAL:
1. ALL ALARM POINTS SHALL WRITE TO BOTH THE BUILDING CONTROLLER AND TO THE CAMPUS BAS LOCATED IN THE EXISTING HOSPITAL.
2. THE BUILDING CONTROLLER SHALL BE VISIBLE AND ACCESSIBLE TO THE BAS.
3. ALARM ALL DIGITAL POINTS THAT DO NOT MATCH COMMAND LINE VALUE.
4. ALARM ALL ANALOGUE POINTS THAT ARE OUT OF AN ADJUSTABLE RANGE (+/-) FROM THE COMMAND LINE VALUE FOR MORE THAN 5 MINUTES (ADJUSTABLE BY POINT)
5. MANUAL RESET DUCT HIGH STATIC SWITCH, MANUAL RESET FREEZE THERMOSTAT, AND THE DUCT SMOKE DETECTORS SHALL BE HARD WIRED IN SERIES TO THE SF AND RF VSD MOTOR CONTROLLERS. AN OPEN CONTACT IN ANY SINGLE DEVICE SHALL STOP THE AHU.

AHU DISABLED:
1. SUPPLY FAN IS OFF.
2. OUTSIDE AIR DAMPER IS CLOSED.
3. RELIEF AIR DAMPER IS CLOSED.
4. AIR COOLED CONDENSING UNIT IS DE-ENERGIZED.
5. ELECTRIC PREHEAT COIL IS DE-ENERGIZED.
6. ALL SEQUENCES ARE DISABLED EXCEPT FOR THE COIL FREEZE PROTECTION SEQUENCE.

AHU START SEQUENCE:
1. RTU SHALL BE STARTED BY THE SCHEDULE PROGRAM IN THE BUILDING CONTROLLER, BY MORNING WARMUP ENABLE, OR BY MANUAL OVERRIDE. SCHEDULE PROGRAM SHALL BE 7 DAY, MINIMUM 6 EVENTS PER DAY. COORDINATE SCHEDULE WITH FACILITY OPERATIONS.
2. WHEN AN RTU ENABLE COMMAND IS RECEIVED, ENABLE THE SUPPLY FAN RUN SEQUENCE.
3. ON PROOF OF RUN OF THE SF ENABLE THE MINIMUM OUTSIDE AIR SEQUENCE AND THE ECONOMIZER SEQUENCE.
4. ENABLE THE HEATING SEQUENCE.
5. ENABLE THE COOLING SEQUENCE.

AHU STOP SEQUENCE:
1. RTU SHALL BE STOPPED BY THE SCHEDULE PROGRAM, MANUAL OVERRIDE, FAILURE ALARM CONDITION, OR SAFETY INTERLOCK.
2. WHEN ANY STOP COMMAND IS RECEIVED DISABLE THE AHU. STOP FANS AND RETURN DAMPERS OT THE OFF POSITION.

SUPPLY FAN SEQUENCE:
1. WHEN AN RTU ENABLE COMMAND IS RECEIVED, START THE SUPPLY FAN AT MINIMUM SPEED (ADJUSTABLE). RAMP THE SPEED UP BY PREPROGRAMMED ACCELERATION TIMING IN THE VSD MOTOR CONTROLLER. THE CONTROLS CONTRACTOR SHALL COORDINATE WITH THE VSD START UP TECHNICIAN TO DETERMINE THE OPTIMAL ACCELERATION RAMP. DO NOT EXCEED 60Hz PER MINUTE ACCELERATION TIME.
2. MONITOR THE DUCT STATIC PRESSURE (DSP) INPUT AND MODULATE THE SUPPLY FAN TO MAINTAIN THE DSP SETPOINT (ADJUSTABLE). TEST AND BALANCE CONTRACTOR SHALL PROVIDE THE INITIAL SETPOINT.
3. MONITOR THE AIR FLOW MEASUREMENT STATION ON THE SUPPLY FAN. CFM IS USED IN OTHER SEQUENCE FLOW CALCULATIONS.
4. IF THE SUPPLY FAN STATUS DOES NOT MATCH COMMAND LINE, INITIATE AN ALARM AT THE BAS IN THE ECC AND DISABLE THE RTU.
5. IF THE DSP VALUE APPROACHES A VALUE THAT IS 90% OF THE DUCT HIGH LIMIT (DHL) SETTING ON THE MANUAL RESET DUCT HIGH LIMIT SWITCH, INITIATE AN ALARM IN THE BAS.
6. WHEN THE SUPPLY FAN IS DISABLED RAMP THE FAN DOWN BY PREPROGRAMMED DECELERATION RAMP IN THE VSD. THE CONTROLS CONTRACTOR SHALL COORDINATE WITH THE VSD START UP TECHNICIAN TO DETERMINE THE OPTIMAL DECELERATION RAMP.

MINIMUM OUTSIDE AIR SEQUENCE:
1. WHEN THE RTU IS ENABLED AND PROOF OF THE SUPPLY FAN RUNNING IS VERIFIED, ENABLE THE MINIMUM OUTSIDE AIR SEQUENCE.
2. OPEN THE OUTSIDE AIR DAMPER AND MONITOR THE AIR FLOW MONITORING STATION. MODULATE THE OUTSIDE AIR DAMPER TO MAINTAIN THE MINIMUM OUTSIDE AIR SETPOINT (ADJUSTABLE).
3. IF THE AIR FLOW CFM DOES NOT MATCH THE COMMAND LINE ±10% INITIATE AND ALARM IN THE BAS.

COOLING SEQUENCE:
1. WHEN THE RTU IS ENABLED AND PROOF OF THE SUPPLY FAN RUNNING IS VERIFIED, ENABLE THE COOLING SEQUENCE.
2. IF THE ECONOMIZER SEQUENCE IS DISABLED THE UNIT SHALL BE THE FIRST STAGE OF COOLING.
3. MODULATE COMPRESSORS TO MAINTAIN THE AHU LEAVING AIR TEMPERATURE (LAT) SETPOINT ADJUSTABLE.
4. IF THE ECONOMIZER IS ENABLED THE EVAPORATOR SHALL BE THE SECOND STAGE OF COOLING.
5. IF THE LEAVING AIR TEMPERATURE (LAT) IS GREATER THAN THE LAT SETPOINT BY 2°F FOR MORE THAN 10 MINUTES, THE ECONOMIZER SEQUENCE IS ENABLED, AND THE OUTSIDE AIR DAMPER IS 100%. ENABLE THE AIR COOLED CONDENSING UNIT SEQUENCE TO MAINTAIN THE LAT SETPOINT. IF THE LAT FALLS BELOW THE LAT SETPOINT BY MORE THAN 2°F FOR MORE THAN 10 MINUTES AND THE ECONOMIZER IS ENABLED, DISABLE THE AIR COOLED CONDENSING UNIT SEQUENCE.
6. IF THE LAT IS GREATER THAN COMMAND LINE BY 5°F FOR MORE THAN 10 MINUTES, INITIATE AN ALARM IN THE BAS.

HEATING/PREHEAT SEQUENCE:
1. WHEN THE RTU IS ENABLED AND PROOF OF THE SUPPLY FAN RUNNING IS VERIFIED, ENABLE THE PREHEAT SEQUENCE.
2. IF THE MIXED AIR TEMPERATURE (MAT) IS BELOW THE MINIMUM MIXED AIR TEMPERATURE SETPOINT (ADJUSTABLE). STAGE THE ELECTRIC PREHEAT COIL TO MAINTAIN THE MINIMUM MIXED AIR TEMPERATURE SETPOINT.
3. RESET THE MINIMUM MIXED AIR TEMPERATURE SETPOINT BASED ON THE AHU LAT SETPOINT. MINIMUM MIXED AIR TEMPERATURE = LAT – 3°F.
4. IF THE MINIMUM MIXED AIR TEMPERATURE IS MORE THAN 5°F BELOW THE MINIMUM MIXED AIR TEMPERATURE SETPOINT FOR MORE THAN 10 MINUTES, INITIATE AN ALARM IN THE BAS.

ECONOMIZER SEQUENCE:
1. WHEN THE RTU IS ENABLED AND PROOF OF THE SUPPLY FAN RUNNING IS VERIFIED, ENABLE THE ECONOMIZER SEQUENCE.
2. MONITOR THE RETURN AIR ENTHALPY, CALCULATED FROM THE RETURN AIR TEMPERATURE AND HUMIDITY. COMPARE THE RETURN AIR ENTHALPY TO THE ENTHALPY OF THE OUTSIDE AIR. IF THE OUTSIDE AIR ENTHALPY IS LESS THAN THE RETURN AIR ENTHALPY BY 3 BTU/LB FOR A PERIOD OF 10 MINUTES, ENABLE THE ECONOMIZER SEQUENCE.
3. MODULATE THE OUTSIDE AIR DAMPER TO MAINTAIN THE MINIMUM MIXED AIR TEMPERATURE. IF THE OUTSIDE AIR DAMPER IS 100% OPEN AND THE MAT IS ABOVE THE MINIMUM MIXED AIR TEMPERATURE THE EVAPORATOR WILL ACT AS THE SECOND STAGE OF COOLING. SEE COOLING SEQUENCE.
4. REVERSE THE SEQUENCE UNTIL THE OUTSIDE AIR DAMPER IS MAINTAINING THE MINIMUM OUTSIDE AIR CFM.
5. IF THE MAT FALLS BELOW 38°F, INITIATE THE FREEZE PROTECTION SEQUENCE.

FREEZE PROTECTION SEQUENCE:
1. IF THE MAT FALLS BELOW 38°F THE FREEZE PROTECTION SEQUENCE SHALL BE ENABLED.
2. INITIATE ALARM IN THE BAS.
3. DISABLE THE AIR COOLED CONDENSING UNIT.
4. STAGE ON THE ELECTRIC PREHEAT COIL.

MORNING WARMUP SEQUENCE:
1. PROVIDE A DYNAMIC MORING WARMUP SEQUENCE.
2. USE HISTORICAL DATA AND OUTSIDE AIR TEMPERATURE TO DETERMINE WHEN THE MORNING WARMUP SEQUENCE WILL START.
3. START THE SUPPLY FAN PER THE START SEQUENCE.
4. THE OUTSIDE AIR DAMPER AND RETURN AIR DAMPER SHALL REMAIN CLOSED.
5. STAGE THE ELECTRIC PREHEAT COIL TO MAINTAIN THE MORNING WARM UP TEMPERATURE SETPOINT.
6. DYNAMICALLY RESET THE MORNING WARM UP TEMPERATURE SETPOINT BY THE OUTSIDE TEMPERATURE AND HISTORICAL DATA TO PROVIDE THE MOST EFFECTIVE TEMPERATURE FOR MORNING WARMUP.
7. WHEN THE SPACES IN THE CONTROL ZONE ARE AT OCCUPIED TEMPERATURES, DISCONTINUE MORNING WARMUP. START THE SYSTEM BY SYSTEM SCHEDULE.

UNOCCUPIED TEMPERATURE CONTROL SEQUENCE:
1. WHEN A MINIMUM OF 25% OF THE CONTROLLED SPACES ARE CALLING FOR HEATING OR WHEN ONE ZONE IS MORE THAN 10°F BELOW THE UNOCCUPIED HEATING SETPOINT, START THE MORNING WARMUP SEQUENCE. SET THE LAT TO 90°F. SHUT THE AHU DOWN WHEN ALL SPACES ARE SATISFIED.

MORNING COOL DOWN SEQUENCE:
1. PROVIDE A DYNAMIC MORNING COOL DOWN SEQUENCE.
2. USE HISTORICAL DATA AND OUTSIDE AIR TEMPERATURE TO DETERMINE WHEN THE MORNING COOL DOWN SEQUENCE WILL START.
3. START THE SUPPLY FAN PER THE START SEQUENCE.
4. ENABLE THE ECONOMIZER SEQUENCE AND MODULATE THE OUTSIDE AND RETURN AIR DAMPERS TO MAINTAIN THE AHU LAT SETPOINT FOR MORNING COOL DOWN. IF THE ECONOMIZER SEQUENCE CAN NOT MAINTAIN THE LAT SETPOINT, USE THE EVAPORATOR AS THE SECOND STAGE OF COOLING.
5. WHEN THE SPACES IN THE CONTROL ZONE ARE AT OCCUPIED TEMPERATURES, DISCONTINUE MORNING COOL DOWN. START THE SYSTEM BY SYSTEM SCHEDULE.

EXHAUST FAN INTERLOCK:
1. EXHAUST FANS INTERLOCKED TO RTU SHALL BE ENERGIZED AT ALL TIMES THAT RTU IS RUNNING, AND SHALL DE-ENERGIZE AT ALL TIMES THAT THE RTU IS NOT RUNNING. REFER TO FAN INTERLOCK SCHEDULE.

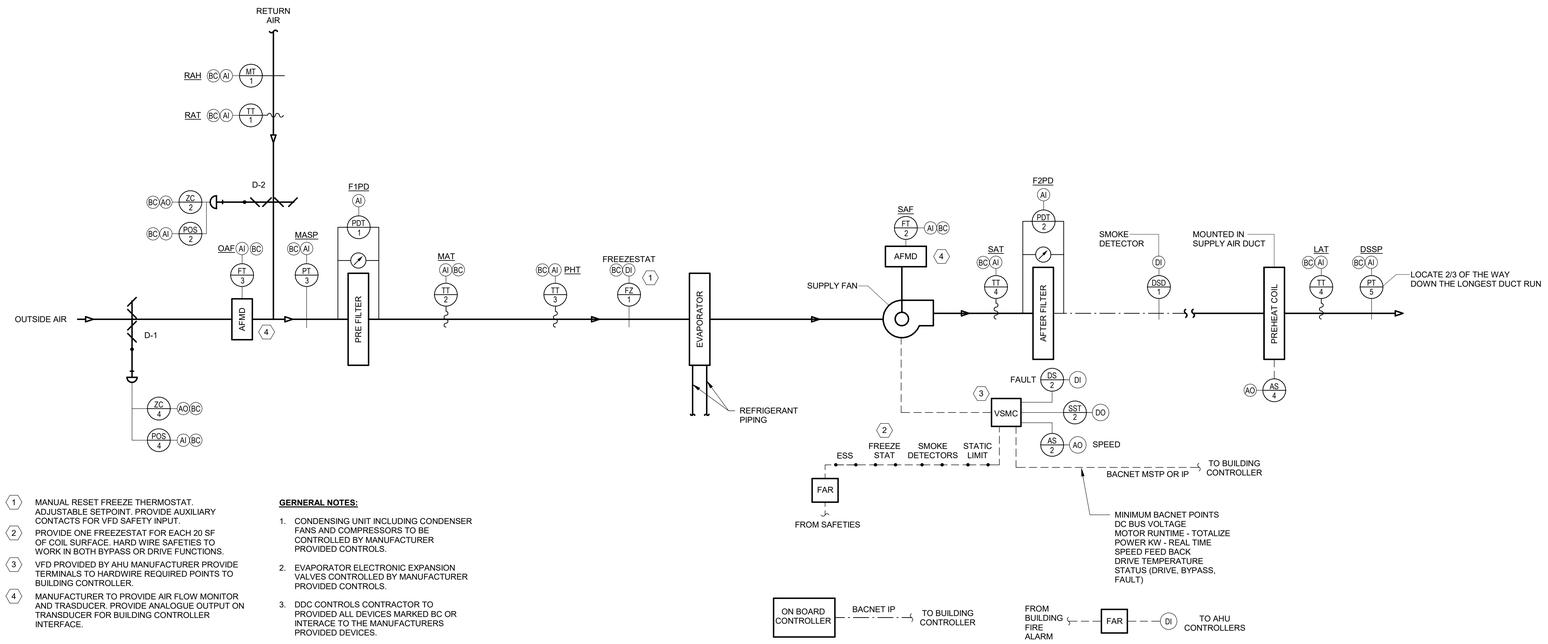

1. MANUAL RESET FREEZE THERMOSTAT. ADJUSTABLE SETPOINT. PROVIDE AUXILIARY CONTACTS FOR VFD SAFETY INPUT.
2. PROVIDE ONE FREEZESTAT FOR EACH 20 SF OF COIL SURFACE. HARD WIRE SAFETIES TO WORK IN BOTH BYPASS OR DRIVE FUNCTIONS.
3. VFD PROVIDED BY AHU MANUFACTURER PROVIDE TERMINALS TO HARDWIRE REQUIRED POINTS TO BUILDING CONTROLLER.
4. MANUFACTURER TO PROVIDE AIR FLOW MONITOR AND TRASDUCER. PROVIDE ANALOGUE OUTPUT ON TRANSDUCER FOR BUILDING CONTROLLER INTERFACE.

GERNERAL NOTES:

1. CONDENSING UNIT INCLUDING CONDENSER FANS AND COMPRESSORS TO BE CONTROLLED BY MANUFACTURER PROVIDED CONTROLS.
2. EVAPORATOR ELECTRONIC EXPANSION VALVES CONTROLLED BY MANUFACTURER PROVIDED CONTROLS.
3. DDC CONTROLS CONTRACTOR TO PROVIDED ALL DEVICES MARKED BC OR INTERACE TO THE MANUFACTURERS PROVIDED DEVICES.

CONTROLS SYMBOLS

AS #	ANALOG SIGNAL INPUT OR OUTPUT (0-10V / 4-20 MA ONLY)
DS #	DIGITAL SIGNAL (PULSE) (SWITCH, RELAY, ETC.)
DSD #	DUCT SMOKE DETECTOR
FT #	FLOW TRANSMITTER
FZ #	FREEZESTAT
IT #	CURRENT TRANSMITTER (STATUS)
MT #	HUMIDITY SENSOR
POS #	POSITION SENSOR
PT #	PRESSURE TRANSMITTER
SST #	START/STOP (ENABLE)
TT #	TEMPERATURE SENSOR
ZC #	DAMPER/VALVE ACTUATOR (0-10V / 4-20 MA ONLY)
HS	HAND SWITCH
ECC	CONNECTION TO ECC/BAS
AFMD	AIRFLOW MEASURING DEVICE
FAR	FIRE ALARM RELAY CONTROLLED BY FIRE SYSTEM N.C.
SD	SMOKE DAMPER
PDT #	PRESSURE DIFFERENTIAL TRANSMITTER

FAN INTERLOCK SCHEDULE

FAN NO.	FAN SERVICE	FAN INTERLOCKED TO UNIT	NOTES
EF-1-1	EXAM / ADMIN	RTU-1-1	NONE
EF-1-2	IMAGING	RTU-1-2	NONE
EF-ISO	ISOLATION EXAM	RTU-1-1	NONE
EF-MG	MEDICAL GAS	NONE	1
EF-PURGE	MRI EMERGENCY PURGE	NONE	2

NOTES:
1. EF-MG SERVES THE MEDICAL GAS ROOM AND HAS NO UNIT INTERLOCK.
2. EF-PURGE SERVES THE MRI SPACE IN THE EVENT OF EMERGENCY PURGE AND HAS NO UNIT INTERLOCK.

1 RTU CONTROL SCHEMATIC AND SEQUENCE OF OPERATION

12" = 1'-0"

DUCTLESS SPLIT SYSTEMS SEQUENCE OF OPERATIONS:

1. WHEN THE UNIT-MOUNTED INDOOR THERMOSTAT CALLS FOR COOLING, THE OUTDOOR AND INDOOR UNITS SHALL BE ENERGIZED. UNITS SHALL DE-ENERGIZED UPON REACHING 5 DEG. F (ADJ.) BELOW THE USER-DEFINED TEMPERATURE SETPOINT.
2. DEFROST CYCLE SHALL OPERATE PER MANUFACTURER'S RECOMMENDATION.
3. UPON RECEIPT OF ANY ALARM, BOTH THE INDOOR AND OUTDOOR UNITS SHALL BE DE-ENERGIZED AND AN ALARM SENT TO THE LOCAL BAS PANEL.

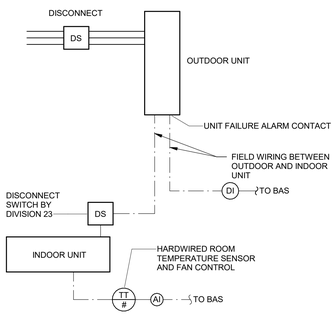

2 DUCTLESS SPLIT SYSTEM CONTROLS

NOT TO SCALE

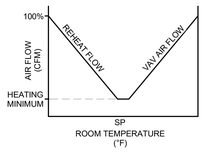

VAV BOX CONTROL SEQUENCE OF OPERATION:

1. DURING OCCUPIED OPERATION, THE TERMINAL BOX CONTROLLER SHALL MODULATE THE VOLUME DAMPER TO MAINTAIN THE SPACE SETPOINT.
2. UPON FALL IN SPACE TEMPERATURE BELOW 68°F, THE VAV DAMPER WILL MODULATE TO ITS MINIMUM POSITION. UPON FURTHER DROP IN SPACE TEMPERATURE, THE ELECTRIC REHEAT WILL STAGE ON TO MAINTAIN THE SPACE SETPOINT ± 1° F.
3. THE REVERSE SHALL OCCUR ON THE RISE IN SPACE TEMPERATURE.

CAV BOX CONTROL SEQUENCE OF OPERATION:

1. DURING OCCUPIED OPERATION, THE TERMINAL BOX CONTROLLER SHALL OPEDN THE VOLUME DAMPER TO 100% TO MAINTAIN THE PRESCRIBED SPACE AIR CHANGE RATE.
2. UPON FALL IN SPACE TEMPERATURE BELOW 68°F, THE ELECTRIC REHEAT WILL STAGE ON TO MAINTAIN THE SPACE SETPOINT ± 1° F.
3. THE REVERSE SHALL OCCUR ON THE RISE IN SPACE TEMPERATURE.

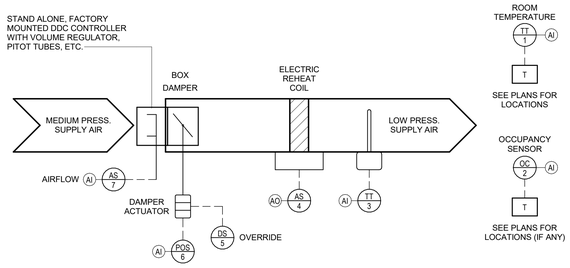

NOTES:

1. PROVIDE ONE LINE VOLTAGE TO 24V TRANSFORMER PER TERMINAL BOX TO POWER CONTROLLER.

3 VAV AND CV AIR TERMINAL UNIT WITH ELECTRIC REHEAT CONTROL DIAGRAM

NOT TO SCALE

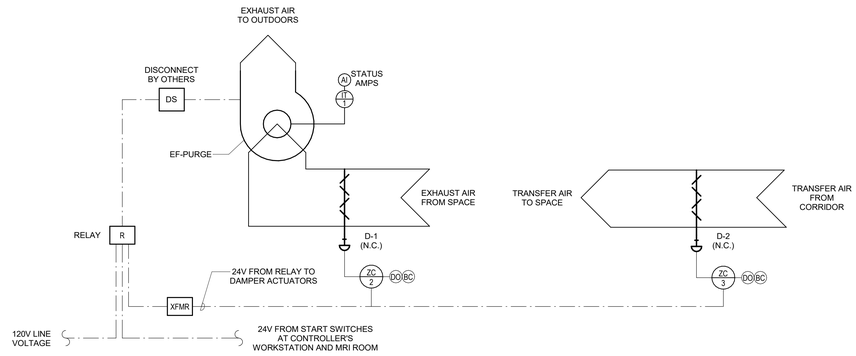

MRI PURGE EXHAUST FAN SEQUENCE OF OPERATION:

1. DAMPERS D-1 AND D-2 SHALL BE NORMALLY CLOSED AT ALL TIMES THAT EXHAUST FAN EF-PURGE IS DE-ENERGIZED.
2. WHEN EF-PURGE IS ENERGIZED VIA THE START SWITCH AT THE CONTROLLER'S WORKSTATION OR MRI ROOM, DAMPERS D-1 AND D-2 SHALL OPEN TO THEIR FULLY OPEN POSITION.
3. EF-PURGE SHALL REMAIN ENERGIZED FOR A PERIOD OF NOT LESS THAN 15 MINUTES DURING THE PURGE SEQUENCE.
4. UPON DE-ENERGIZING OF EF-PURGE, DAMPERS D-1 AND D-2 SHALL RETURN TO THEIR NORMALLY CLOSED POSITIONS.

NOTES:

1. REFER TO ELECTRICAL DRAWINGS FOR SWITCH LOCATIONS.
2. START SWITCHES IN MRI ROOM AND AT CONTROLLER'S WORKSTATION SHALL BE RED, "MUSHROOM" TYPE PUSH BUTTONS AND WIRED IN PARALLEL.

4 MRI PURGE EXHAUST FAN SEQUENCE OF OPERATIONS

NOT TO SCALE

ENVIRONMENTS FOR HEALTH ARCHITECTURE
e4h
888.781.8441 817.226.1917 501 Elm St., Ste 500, Dallas, TX 75202 e4harchitecture.com

© 2024 E4H - Environments For Health, LLC

CMC CONWAY MEDICAL CENTER with Novant Health

PROGRAM MANAGER
MEADOWS AND OHLY
1450 MATTHEWS TOWNSHIP PARKWAY
SUITE 210
540.389.5318
Meadows Ohly

ARCHITECT
E4H ARCHITECTURE
817.226.1917

MEP ENGINEER
HARRELL DESIGN GROUP, PC
10720-SIKES PLACE, SUITE 100
CHARLOTTE, NC 28277
704.814.1320
HARRELL

STRUCTURAL ENGINEER
HART GAUGLER & ASSOCIATES
830N.N. CENTRAL EXPRESSWAY
SUITE 600
469.623.5025

CIVIL ENGINEER
DEVELOPMENT RESOURCE GROUP, LLC
4703 OLEANDER DRIVE
MYRTLE BEACH, SC 29577
843.839.3350
drg

MEDICAL EQUIPMENT PLANNER
MAZZETTI+GBA
615.376.3108
MAZZETTI+GBA

CMC CONWAY MEDICAL CENTER
CMC Socastee FSED
6016 HIGHWAY 707
MYRTLE BEACH, SC

PROJECT NUMBER: 3024096.00 HDG PROJECT NUMBER: 24109

Δ	DATE	DESCRIPTION

SOUTH CAROLINA HARRELL DESIGN GROUP, PC No. C02713 CERTIFICATE OF AUTHORIZATION

NOT FOR CONSTRUCTION

ARCH NAME ARCH ##

ORIG SUBMISSION: 05.30.2025

CURRENT:

SHEET TITLE AND NUMBER:

M7.01

CONTROLS SCHEMATICS

THE LINE SHOWN ABOVE IS EXACTLY ONE INCH LONG AT THIS SHEETS ORIGINAL PAGE SIZE

Symbol	Description
T D	SOLID LINE DENOTES CONDUIT RUN CONCEALED IN WALL, ABOVE CEILINGS, EXPOSED IN UNFINISHED AREAS. RUN PARALLEL OR PERPENDICULAR TO STRUCTURE OR WALL. DASHED LINE DENOTES CONDUIT RUN BELOW GRADE OR BELOW FINISHED FLOOR.
	HOMERUNS SHALL BE MINIMUM 3/4" CONDUIT AND #12 WIRE FOR THE NUMBER OF CIRCUITS INDICATED UNLESS OTHERWISE NOTED OR SCHEDULED. QUANTITY OF ARROWS INDICATES NUMBER OF CIRCUITS. EACH CIRCUIT TO HAVE OWN NEUTRAL. SOME HOMERUNS INDICATE PARTIAL CIRCUITS. REFER TO OTHER HOMERUNS OR CIRCUIT TAGS FOR COMPLETE CIRCUIT.
	SURFACE, RECESSED OR WALL MOUNTED LIGHTING FIXTURE CONNECTED TO NORMAL BRANCH CIRCUIT. UPPER CASE LETTER INDICATES TYPE. SEE LIGHT FIXTURE SCHEDULE FOR EXACT REQUIREMENTS. WHERE A LOWER CASE LETTER IS SHOWN IT INDICATES SWITCH ASSIGNMENT.
	SURFACE, RECESSED OR WALL MOUNTED LIGHTING FIXTURE CONNECTED TO CRITICAL BRANCH CIRCUIT. UPPER CASE LETTER INDICATES TYPE. SEE LIGHT FIXTURE SCHEDULE FOR EXACT REQUIREMENTS. WHERE A LOWER CASE LETTER IS SHOWN IT INDICATES SWITCH ASSIGNMENT.
	SURFACE, RECESSED OR WALL MOUNTED LIGHTING FIXTURE CONNECTED TO LIFE SAFETY BRANCH CIRCUIT. UPPER CASE LETTER INDICATES TYPE. SEE LIGHT FIXTURE SCHEDULE FOR EXACT REQUIREMENTS. WHERE A LOWER CASE LETTER IS SHOWN IT INDICATES SWITCH ASSIGNMENT.
	CEILING MOUNTED EXIT SIGN, SHADED AREA INDICATES FACE WITH DIRECTIONAL ARROWS AS SHOWN. SEE LIGHTING FIXTURE SCHEDULE FOR EXACT REQUIREMENTS. CONNECT UNSWITCHED TO INDICATED BRANCH CIRCUIT.
	WALL MOUNTED EXIT SIGN, SHADED AREA INDICATES FACE WITH DIRECTIONAL ARROWS AS SHOWN. SEE LIGHTING FIXTURE SCHEDULE FOR EXACT REQUIREMENTS. CONNECT UNSWITCHED TO INDICATED BRANCH CIRCUIT.
S	SINGLE-POLE TOGGLE SWITCH IN FLUSH (FINISHED SPACES) OR SURFACE (UNFINISHED SPACES) OUTLET BOX.
S3	THREE-WAY TOGGLE SWITCH IN FLUSH (FINISHED SPACES) OR SURFACE (UNFINISHED SPACES) OUTLET BOX.
SD	DIMMER CONTROL SWITCH MOUNTED IN FLUSH (FINISHED SPACES) OR SURFACE (UNFINISHED SPACES) OUTLET BOX. MATCH DIMMER ACCORDING TO LOAD TYPE.
SD3	3-WAY DIMMER CONTROL SWITCH MOUNTED IN FLUSH (FINISHED SPACES) SURFACE (UNFINISHED SPACES) OUTLET BOX. MATCH DIMMER ACCORDING TO LOAD TYPE.
SOS	SWITCH MOUNTED OCCUPANCY SENSOR DUAL TECHNOLOGY WITH MANUAL SWITCH.
OS	OCCUPANCY SENSOR. CEILING MOUNTED. REFERENCE SPECIFICATION SECTION 26 09 23.
1L1	480Y/277 VOLT PANELBOARD, FLUSH AND SURFACE MOUNTED RESPECTIVELY. DESIGNATION AS INDICATED. SEE PANEL SCHEDULE FOR EXACT REQUIREMENTS. TOP OF PANEL SHALL NOT EXCEED 6'-0" A.F.F.
1L1	208Y/120 OR 120/240 VOLT PANELBOARD, FLUSH AND SURFACE MOUNTED RESPECTIVELY. DESIGNATION AS INDICATED. SEE PANEL SCHEDULE FOR EXACT REQUIREMENTS. TOP OF PANEL SHALL NOT EXCEED 6'-0" A.F.F.
	EQUIPMENT CONNECTION. LABEL INDICATES EQUIPMENT DESIGNATION. SEE EQUIPMENT CONNECTION SCHEDULE FOR CIRCUIT AND CONNECTION REQUIREMENTS.
	125 VOLT, 3 WIRE DUPLEX RECEPTACLE IN FLUSH (FINISHED SPACES) OR SURFACE (UNFINISHED SPACES) OUTLET BOX. MOUNT 18-INCHES ABOVE FINISHED FLOOR UNLESS OTHERWISE INDICATED.
	125 VOLT, 3 WIRE DUPLEX RECEPTACLE IN FLUSH (FINISHED SPACES) OR SURFACE (UNFINISHED SPACES) OUTLET BOX. MOUNT 6-INCHES ABOVE COUNTER TOP UNLESS OTHERWISE INDICATED.
	TWO 125 VOLT, 3 WIRE RECEPTACLES IN FLUSH (FINISHED SPACES) OR SURFACE (UNFINISHED SPACES) 2-GANG OUTLET BOX. MOUNT 18-INCHES ABOVE FINISHED FLOOR UNLESS OTHERWISE INDICATED.
	TWO 125 VOLT, 3 WIRE RECEPTACLES IN FLUSH (FINISHED SPACES) OR SURFACE (UNFINISHED SPACES) 2-GANG OUTLET BOX. MOUNT 6-INCHES ABOVE COUNTER TOP UNLESS OTHERWISE INDICATED.
E E	125 VOLT, 3 WIRE DUPLEX RECEPTACLE CONNECTED TO EMERGENCY BRANCH CIRCUIT. PROVIDE RED RECEPTACLE UNLESS OTHERWISE INDICATED.
GF GF	125 VOLT, 3 WIRE GROUND FAULT CIRCUIT INTERRUPTING TYPE DUPLEX RECEPTACLE. MOUNTING AS INDICATED.
TV	TELEVISION OUTLETS FLUSH MOUNTED. COORDINATE EXACT LOCATION AND MOUNTING HEIGHT WITH ARCHITECTURAL ELEVATION.
	COMBINATION MOTOR CONTROLLER (STARTER) FULL VOLTAGE NON REVERSING UNLESS LABELED OTHERWISE. "VFD" INDICATES VARIABLE FREQUENCY DRIVE (ALSO REFERRED TO AS VARIABLE SPEED MOTOR CONTROLLER).
XX	PLAN KEYNOTE. NOTE NUMBER AS INDICATED.
N# E#	N# - PATIENT ROOM NORMAL CIRCUIT NUMBER. E# - PATIENT ROOM EMERGENCY CIRCUIT NUMBER

STANDARD ABBREVIATIONS

A	
A	AMPERE. AMMETER
AF	AMPERE FRAME
AFF	ABOVE FINISHED FLOOR
AIC	AMPERES INTERRUPTING CAPACITY
AT	AMPERE TRIP
ATS	AUTHORITY HAVING JURISDICTION
ATS	AUTOMATIC TRANSFER SWITCH
C	
C	CONDUIT
CL	CENTER LIINE
CR	CARD READER
CU	COPPER
E	
E	EXISTING
EC	EMPTY CONDUIT
EMER	EMERGENCY
EWC	ELECTRIC WATER COOLER
EWH	ELECTRIC WATER HEATER
G	
G, GND	GROUND
GF	GROUND FAULT INTERRUPTER
H	
HH	HAND HOLE
HP	HORSEPOWER
HZ	HERTZ
I	
IG	ISOLATED GROUND
J	
JB	JUNCTION BOX
K	
KVA	KILOVOLT-AMPERES
KW	KILOWATTS
L	
LC	LIGHTING CONTACTOR
LED	LIGHT EMITTING DIODE
LTG	LIGHTING
P	
PROVIDE	FURNISH, INSTALL AND CONNECT
R	
RECPT	RECEPTACLE
S	
SC	SECURITY CAMERA OUTLET
SN	SOLID NEUTRAL
SW	SWITCH
SWBD	SWITCHBOARD
T	
TV	COMBINATION TV AND RECEPT OUTLET
TYP	TYPICAL
U	
UG	UNDERGROUND
UNO	UNLESS NOTED OTHERWISE
USB	UNIVERSIAL SERIAL BUS
V	
V	VOLT
W	
WAP	WIRELESS ACCESS POINT
WP	WEATHERTIGHT GFI
X	
XFMR	TRANSFORMER

GENERAL NOTES

A. BOTH THE CONTRACTOR AND INSTALLING ELECTRICIAN ARE REMINDED THAT SINCE THE NATIONAL ELECTRICAL CODE IS BY STATUTORY INCLUSION A PART OF THE LAWS OF THE STATE, THEY BEAR A PRIME RESPONSIBILITY TO COMPLY WITH IT EVEN WHEN THE PLANS OR SPECIFICATIONS DENOTE AN APPARENT VIOLATION. THIS SHOULD BE OBSERVED CAREFULLY AND CONTINUOUSLY, PARTICULARLY DURING ESTIMATING FOR PROPOSAL, AND ANY DISCREPANCIES SHOULD BE BROUGHT TO THE ATTENTION OF THE ENGINEER FOR RESOLUTION.

B. THE ELECTRICAL CONTRACTOR SHALL MAINTAIN, ON THE SITE, AN ADEQUATE ADMINISTRATIVE SPACE WHERE ONE COMPLETE SET OF PLANS AND SPECIFICATIONS SHALL BE KEPT FOR THE WORK OF ALL TRADES ON THE PROJECT. THESE PLANS AND SPECIFICATIONS SHALL BE IN ADDITION TO THE SETS USED BY THE INSTALLING ELECTRICIAN IN CARRYING OUT THEIR DAY-TO-DAYWORK ON THE PROJECT. THE PROJECTED LOCATION OF EVERY OUTLET. RACEWAY, OR ITEM OF EQUIPMENT TO BE INSTALLED UNDER THIS CONTRACT SHALL BE CHECKED AGAINST THE PLANS AND SPECIFICATIONS OF ALL THE OTHER TRADES AS WELL AS BY DAILY CONFERENCE WITH WORKMEN AND SUPERVISORS OF ALL OTHER TRADES TO THE EXTENT THAT ANY CONFLICTS OR UNCERTAINTIES ABOUT LOCATIONS ARE RESOLVED BEFORE WORK IS INSTALLED, PARTICULARLY WITH REGARD TO THE INTERACTION OF LIGHTING FIXTURES, AIR HANDLING OPENINGS, ACCESS DOORS, SPRINKLER HEADS, ETC.. CEILING CONSTRUCTION INSTALLATION SHALL BE MADE IN ACCORD WITH REFLECTED CEILING PLANS AND/OR INSTRUCTIONS BY THE ARCHITECT'S REPRESENTATIVES ON THE SITE. MOVING OF ITEMS FROM LOCATIONS SHOWN, REROUTING, OR CHANGES TO ACCOMPLISH ANY WORK AS SHOWN ON PLANS OR SPECIFICATIONS IN ORDER TO ACCOMPLISH THIS COORDINATION SHALL NOT BE CAUSE FOR CLAIM FOR ADDITIONAL COMPENSATION FOR THE WORK. PARTICULAR CARE SHALL BE TAKEN TO LOCATE BOXES SO THEY ARE NOT BACK-TO-BACK IN WALLS AND TO LOCATE OUTLETS OFF COLUMNS (UNLESS VITAL THEY BE THERE) OR OTHER PLACES WHERE THEY CONFLICT WITH STRUCTURAL STEEL OR REINFORCING BARS.

C. CONTRACTOR SHALL ALSO MAINTAIN AT THE SITE A COMPLETE SET OF ALL SHOP DRAWINGS, FIXTURE AND EQUIPMENT CUTS, MANUFACTURER'S WIRING DIAGRAMS AND INSTALLATION DATA. INSTALLING PERSONNEL SHALL STUDY THIS DATA BEFORE AND DURING INSTALLATION AND ROUGH-IN SO AS TO PREPARE FOR THE PROPER FIT AND FUNCTION UPON COMPLETION.

D. COMPLETE AND ADEQUATE HOUSING SHALL BE PROVIDED ON THE SITE FOR ORDERLY AND CAREFUL STORAGE OF ALL MATERIALS AND EQUIPMENT. NOTHING SHALL BE STORED WHERE EXPOSED TO WEATHER EXCEPT CONDUIT, WHICH MAY BE STORED IN RACKS SO IT IS AT LEAST 12 INCHES ABOVE GROUND AND NOT SUBJECT TO MUD BEING SPATTERED ON IT.

E. ATTENTION IS DIRECTED SPECIFICALLY TO SPECIFICATION SECTIONS REQUIRING CONTINUOUS QUALITY CONTROL TESTING.

F. IN GENERAL, MOUNTING HEIGHTS OF OUTLETS, SWITCHES, ETC. ARE NOT NOTED ON THE CONSTRUCTION DOCUMENTS. SCHEDULES AND NOTES SPECIFY "STANDARD" MOUNTING HEIGHTS FOR THESE ITEMS (SEE SPECS). STUDY CAREFULLY ELEVATIONS OF ALL WALLS AND CABINET WORK AS SHOWN ON ARCHITECTURAL DRAWINGS AND FIT OUTLETS TO SPACE AND TO AVOID CONFLICTS. OUTLETS SHALL ALWAYS BE LOCATED ABOVE, AND NOT IN, BACKSPLASHES. COORDINATE OUTLET LOCATIONS WITH OTHER TRADES TO AVOID CONFLICTS. ANY CONFLICT THAT CANNOT BE RESOLVED ON THE JOB SHALL BE BROUGHT TO THE ATTENTION OF THE ARCHITECT OR ENGINEER PRIOR TO ROUGH-IN.

G. ALL 20 AMP BRANCH CIRCUIT WIRE SIZING SHALL BE IN ACCORD WITH THE FOLLOWING TABLE:

VOLTS	DISTANCE	HOME RUN	REMAINDER OF CIRCUIT
120/208	0' - 50'	#12	#12
	50'- 100'	#10	#12
	100' - 150'	# 8	#10
277/480	0' - 125'	#12	#12
	125' - 220'	#10	#12
	220' - 330'	# 8	#10

H. ALL WIRING LUGS THROUGHOUT THE PROJECT, INCLUDING BUT NOT LIMITED TO, BREAKERS, PANELBOARD/SWITCHBOARD LUGS, SAFETY SWITCH LUGS, AND TRANSFORMER LUGS, SHALL BE RATED FOR USE WITH 75 DEGREE CONDUCTORS SIZED IN ACCORDANCE WITH NEC TABLE 310-16.

I. THE CONTRACTOR'S ATTENTION IS DIRECTED TO SECTION 517 OF THE NATIONAL ELECTRICAL CODE. SPECIFICALLY, IT WILL BE REQUIRED THAT ALL CIRCUITS (120V OR 277V) SERVING LIGHTING, OUTLETS, OR EQUIPMENT IN PATIENT CARE AREAS SHALL INCLUDE A GREEN INSULATED COPPER GROUNDING CONDUCTOR (#12 MIN.). THIS INCLUDES PATIENT ROOMS, PATIENT TOILETS, RECREATION AREAS, AND ALL ROOMS USED FOR EXAMINATION OR TREATMENT. GROUNDING SHALL BE TESTED AS REQUIRED BY NEC 517 AND NFPA 99. TEST RESULTS SHALL BE SENT TO THE ENGINEER IN THE FORM OF A LETTER. PANEL BOARDS SHALL BE GROUNDED AS REQUIRED BY 517.

J. CONTRACTOR SHALL TEST ALL "LIFE SAFETY" EQUIPMENT AND SYSTEMS FOR PROPER FUNCTION AND OPERATION. UPON SUCCESSFUL COMPLETION OF TESTS, CONFIRMATION SHALL BE SENT TO THE ENGINEER OF RECORD, BUILDING STANDARDS DEPT, AND THE FIRE MARSHAL IN THE FORM OF A LETTER STATING THE TESTS PERFORMED, THE RESULTS, AND THE DATE TESTS WERE SUCCESSFULLY COMPLETE. "LIFE SAFETY" EQUIPMENT AND SYSTEMS CONSIST OF THOSE AS SPECIFIED IN NFPA 101, NFPA 99, AND THE STATE BUILDING CODE.

K. ALL RECEPTACLES AND INTERIOR SWITCHES ON EMERGENCY POWER CIRCUITS SHALL BE RED IN COLOR, ALL OTHERS SHALL BE IVORY. ALL TRIM PLATES SHALL BE 302 NON- MAGNETIC STAINLESS STEEL. ALL EXTERIOR OR WET LOCATION COVER PLATES SHALL BE LABELED "WET WHILE NOT IN USE." USING ENGRAVED PHENOLIC IDENTIFICATION TAGS HAVING RED LETTERS AND WHITE BACKGROUND, LABEL EACH EMERGENCY RECEPTACLE PLATE WITH THE PANEL AND CIRCUIT NUMBER FROM WHICH SERVED.

L. THIS PROJECT INVOLVES SOME DEMOLITION WORK. THE ELECTRICAL CONTRACTOR SHALL BE RESPONSIBLE FOR PROPER REMOVAL OF WIRING, RACEWAY, OUTLETS, ETC., AS NECESSARY TO ACCOMPLISH THE DEMOLITION WORK. ANY SALVAGEABLE MATERIALS REMOVED DURING DEMOLITION SHALL BE TURNED OVER TO THE OWNER. REFER TO THE ARCHITECTURAL PLANS FOR EXTENT OF DEMOLITION.

M. ELECTRICAL CONTRACTOR SHALL REMOVE AND MAKE SAFE ALL CIRCUITS ABANDONED UNDER THIS PROJECT. REMOVE ALL CONDUCTORS NOT USED BACK TO PANEL. CHANGE PANEL DIRECTORY TO REFLECT NEW SPARES. WHERE EXISTING HOMERUNS AND ASSOCIATED WIRING ARE NOTED TO BE REUSED, EXTRA CARE SHALL BE TAKEN TO INSURE THAT THESE EXISTING RUNS REMAIN AFTER THE DEMOLITION PHASE HAS BEEN COMPLETED.

N. PENETRATIONS OF REQUIRED SMOKE TIGHT PARTITIONS SHALL BE SEALED USING METHODS APPROVED UNDER THE STATE BUILDING CODE. COORDINATION WITH THE OWNER AND ENGINEER SHALL BE MAINTAINED TO INSURE THAT THIS SMOKE STOPPING IS ACCOMPLISHED.

O. WHERE PENETRATIONS ARE MADE THROUGH A REQUIRED FIRE-RESISTIVE WALL, FLOOR, OR PARTITION FOR THE PURPOSE OF RUNNING RACEWAY CARRYING ELECTRICAL, TELEPHONE, TELEVISION, OR LOCAL COMMUNICATION AND/OR SIGNALING CIRCUITS, THE OPENING AROUND THE RACEWAY SHALL BE FIRE STOPPED PER THE STATE BUILDING CODE SECTION 10. COORDINATION WITH THE OWNER AND ENGINEER SHALL BE MAINTAINED TO INSURE THAT THIS FIRE STOPPING IS ACCOMPLISHED. USE ONLY APPROVED ASSEMBLIES SUCH AS THE FOLLOWING:
CONDUIT PENETRATIONS OF 1 & 2 HOUR GYPBOARD WALLS - U.L.#WL1001
CONDUIT PENETRATIONS OF 1 & 2 HOUR CONCRETE OR BLOCK WALLS - U.L.#CAJ1001
CONDUIT PENETRATIONS OF 1 & 2 HOUR CONCRETE FLOORS - U.L.#CAJ1001

P. IN REQUIRED FIRE RATED WALLS AND PARTITIONS, OPENINGS FOR INSTALLATION OF BOXES THAT ARE GREATER THAN 16 SQUARE INCHES SHALL BE PROTECTED AS REQUIRED BY U.L. COORDINATE CLOSELY WITH THE OWNER AND ENGINEER TO INSURE THE INTEGRITY OF THE U.L. RATING IS MAINTAINED. BOXES OF 16 SQUARE INCHES OR LESS SHALL BE INSTALLED IN ACCORDANCE WITH U.L. "FIRE RESISTANCE RATINGS - ANSI/UL263 (BXUV) FOR WALL AND PARTITION ASSEMBLIES.

Q. THE ELECTRICAL CONTRACTOR SHALL PROVIDE A SYSTEM OF LIGHTNING PROTECTION IN COMPLIANCE WITH THE PROJECT SPECIFICATIONS AND WITH THE LATEST APPLICABLE NEC, NFPA 780 "STANDARD FOR THE INSTALLATION OF LIGHTNING PROTECTION SYSTEMS", AND UL 96 "LIGHTNING PROTECTION COMPONENTS" FOR A CLASS 1 BUILDING. THE INSTALLING CONTRACTOR SHALL PROVIDE A UL MASTER LABEL, SUITABLE FOR FASTENING TO THE BUILDING FOR DISPLAY, FOR THE OVERALL SYSTEM PER UL96A. THE GROUND LOOP USED TO EQUALIZE POTENTIALS OF THE DOWNCONDUCTORS OF THE LIGHTNING PROTECTION SYSTEM SHALL BE BONDED TO THE GROUNDING SYSTEM FOR THE BUILDING(S) IN COMPLIANCE WITH NEC. THE OVERALL IMPEDANCE OF THE GROUNDING SYSTEM TO EARTH SHALL BE 10 OHMS.

LIGHTING FIXTURE SCHEDULE

TYPE	BASIS OF DESIGN	CATALOG INFORMATION	LAMP TYPE	MINIMUM LUMENS	COLOR TEMPERATURE	INPUT WATTS	VOLTAGE	MOUNTING	DESCRIPTION	REMARKS
A01	LITHONIA LIGHTING	STAKP SERIES	LED	4000	4000 K	33 W	UNIVERSIAL	RECESSED	2X2 RECESSED LED VOLUMETRIC TROFFER, 80 CRI ,CURVED OPAL LENS WITH TRIM , TO 1% DIMMER	RECESSED IN GRID OR GYPBOARD CEILING
A02	LITHONIA LIGHTING	STAKP SERIES	LED	4000	4000 K	31 W	UNIVERSIAL	RECESSED	2X4 RECESSED LED VOLUMETRIC TROFFER, 80 CRI ,CURVED OPAL LENS WITH TRIM , TO 1% DIMMER	RECESSED IN GRID OR GYPBOARD CEILING
A03	LITHONIA LIGHTING	STAKP SERIES	LED	6000	4000 K	46 W	UNIVERSIAL	RECESSED	2X4 RECESSED LED VOLUMETRIC TROFFER, 80 CRI ,CURVED OPAL LENS WITH TRIM , TO 1% DIMMER	RECESSED IN GRID OR GYPBOARD CEILING
A04	LITHONIA LIGHTING	CPANL SERIES	LED	4000	4000 K	35 W	UNIVERSIAL	RECESSED	2X4 FIELD TUNABLE FIXTURE	RECESSED IN GRID OR GYPBOARD CEILING
A05	LITHONIA LIGHTING	CPANL SERIES	LED	5000	4000 K	43 W	UNIVERSIAL	RECESSED	2X4 FIELD TUNABLE FIXTURE	RECESSED IN GRID OR GYPBOARD CEILING
A06	KENALL LIGHTING	MMA24 SERIES	LED	8000	4000 K	67 W	UNIVERSIAL	RECESSED	2X4 BEHAVIORAL HEATH FIXTURE, 16 GUAGE PAINTED COLD ROLLED STEEL, DIMMABLE BALLAST	RECESSED IN GRID OR GYPBOARD CEILING
A07	LITHONIA LIGHTING	SRTL SERIES	LED	18000	4000 K	128 W	UNIVERSIAL	RECESSED	2X4 CLEAN ROOM TROFFER, 20 GUAGE COLD ROLLED STEEL, DIFFUSED ACRYLIC LENS, WITH SILICON GASKET	RECESSED IN GRID OR GYPBOARD CEILING
B01	FINELITE LIGHTING	HP-4 SERIES	LED	3705	4000 K	37 W	UNIVERSIAL	RECESSED	LED SLOT STRIP FIXTURE, COORDINATE WITH ARCHITECTURAL DRAWINGS FOR EXACT LENGTHS, VERY HIGH OUTPUT	
B02	FINELITE LIGHTING	HP-4 SERIES	LED	1516	4000 K	15 W	UNIVERSIAL	RECESSED	LED SLOT STRIP FIXTURE, COORDINATE WITH ARCHITECTURAL DRAWINGS FOR EXACT LENGTHS, STANDARD OUTPUT	
C01	LITHONIA LIGHTING	CLX SERIES	LED	5000	4000 K	32 W	UNIVERSIAL	SUSPENDED	4' STRIP LIGHT, COLD-ROLLED STEEL, WITH ENDCAPS AND LENS, WITH WIREGUARD, CHAIN MOUNTED	
C02	LITHONIA LIGHTING	CLX SERIES	LED	5000	4000 K	32 W	UNIVERSIAL	SUSPENDED	4' STRIP LIGHT, COLD-ROLLED STEEL, WITH ENDCAPS AND LENS, WITH WIREGUARD, CHAIN MOUNTED, WITH BATTERY BACKUP	
F01	LITHONIA LIGHTING	LDN6 SERIES	LED	2500	4000 K	28 W	UNIVERSIAL	RECESSED	6" RECESSED DIMMABLE DOWNLIGHT: WHITE FINISH FLUSH LENS. CLEAR CLEA\R SEMI-SPECULAR REFLECTOR TRIM, WHITE PAINTABLE FLANGE	
P01	KUZCO LIGHTING	CHAMPAGNE LED MINI PENDANT LIGHT	LED	450	3000 K	8 W	UNIVERSIAL	SURFACE	ARCHITECTURAL MINI LED PENDANT	
S01	US ARCHITECTURAL LIGHTING	RAZAR SERIES	LED	12600	4000 K	105 W	UNIVERSIAL	POLE	LED SINGLE HEAD HEAD POLE LIGHT, 48 LED, MEDIUM THROW, 700Ma DRIVER, GREY FINISH, WITH PHOTOCELL, TYPE 3 DISTRIBUTION	NAFCO VA SERIES 16' GREY ROUND POLE. TO MATCH EXISTING SITE LIGHTING POLES.
S02	US ARCHITECTURAL LIGHTING	RAZAR SERIES	LED	25200	4000 K	210 W	UNIVERSIAL	POLE	LED DUAL HEAD POLE LIGHT, 48 LED, MEDIUM THROW, 700Ma DRIVER, GREY FINISH, WITH PHOTOCELL, TYPE 3 DISTRIBUTION	NAFCO VA SERIES 16' GREY ROUND POLE. TO MATCH EXISTING SITE LIGHTING POLES.
W01	LSI LIGHTING	GREENBRIAR WALL SCONCE	LED	7000	4000 K	72 W	UNIVERSIAL	SURFACE	48 LED WALL SCONCE, NEUTRAL WHITE, MATCH EXISTING BUILDING FINISH	
X01	LITHONIA LIGHTING	LE SERIES	LED	2	4000 K	1 W	UNIVERSIAL	SURFACE	CEILING MOUNTED EXIT SIGN, RED LETTERS, WHITE DIECAST ALUMINUM BODY	
X02	LITHONIA LIGHTING	LE SERIES	LED	2	4000 K	1 W	UNIVERSIAL	SURFACE	WALL MOUNTED IN USE SIGN, RED LETTERS, WHITE DIECAST ALUMINUM BODY	

NOTES:
A. CONTRACTOR SHALL PROVIDE SUITABLE TRIM AND APPURTENANCES TO MOUNT FIXTURES IN TYPE OF CEILING OR WALL AS SPECIFIED IN ARCHITECTURAL FINISH SCHEDULES REGARDLESS OF CATALOG NUMBER GIVEN. CONTRACTOR SHALL VERIFY TYPE OF CEILING OR WALL BY REVIEWING ARCH. FINISH SCHEDULES AND ORDER NECESSARY KIT IF SO NEEDED.
B. FIXTURES SHALL MEET LUMINAIRE DISCONNECT REQUIREMENTS AS SPECIFIED IN NEC 410.130(G)
C. FIXTURES SHALL BE SUPPORTED FROM THE STRUCTURE.
D. ALL LED DRIVERS AND CONTROL DEVICES SHALL BE COMPATIBLE AND ALL LED FIXTURES SHALL COME EQUIPPED FOR DIMMING AND LINE VOLTAGE OPERATION.
E. LIGHT FIXTURE MUST BE EQUIPPED FOR UNIVERSAL VOLTAGE OPERATION (120 OR 277 VOLT) OR VOLTAGE MUST BE MATCHED TO EACH FIXTURE ACCORDING TO CIRCUITING ON PLANS.
F. HATCHED FIXTURES TO HAVE 90-MINUTE FULL BRIGHTNESS BATTERY BACKUP.

CONTRACTOR COORDINATION

THE GENERAL CONTRACTOR SHALL TAKE THE LEAD IN PREPARING COORDINATION DRAWINGS. SUCH DRAWINGS SHALL BE ARRANGED AND DESIGNED THROUGH AND FROM COORDINATION WITH ALL OTHER MAJOR AND MINOR SUBCONTRACTORS. PROVIDE PLAN VIEWS, SECTIONS, AND ELEVATIONS AS REQUIRED TO FULLY COORDINATE ALL NEW WORK. DRAW TO SCALE (AT NOT LESS THAN 3/8"=1'0"). DRAWINGS SHALL SHOW, BUT NOT BE LIMITED TO: ALL WALL RATINGS, DUCTWORK, AIR DISTRIBUTION, MECHANICAL EQUIPMENT, MECHANICAL PIPING, FIRE PROTECTION PIPING, PLUMBING PIPING, CABLE TRAYS, LIGHTING FIXTURES, CEILING GRID, CEILING HEIGHT, MAJOR BEAMS AND JOISTS (WITH ELEVATIONS MARKED), FIRE, SAFETY, AND SECURITY ALARM DEVICES (WHERE CEILING MOUNTED), ELECTRICAL CONDUITS LARGER THAN 2 INCH DIAMETER, ELECTRICAL BUSWAY AND REQUIRED CLEARANCES, AND ANY EQUIPMENT PROVIDED BY OTHERS THAT PROTRUDE INTO THE CEILING CAVITIES OR IMPEDE THE LOCATION OR ACCESS TO ABOVE CEILING PIPING, DUCTWORK, OR OTHER EQUIPMENT. SECTIONS SHALL BE CUT THROUGH AREAS SHOWING MATERIALS AND SYSTEMS OF ALL CONTRACTS. IT IS IMPORTANT TO NOTE THAT FABRICATION CANNOT BEGIN UNTIL COORDINATION DRAWINGS HAVE BEEN APPROVED.

THE CONTRACTOR SHALL OBTAIN A COPY OF THE FINAL SITE LATEST VENDOR DRAWINGS PRIOR TO PROCURING OR INSTALLING ANY EQUIPMENT. ANY REWORK REQUIRED BY THE CONTRACTOR'S FAILURE TO OBTAIN THESE DRAWINGS SHALL BE AT THE CONTRACTOR'S EXPENSE AND SHALL NOT RESULT IN ANY ADDITIONAL TIME TO THE PROJECT. THE CONTRACTOR SHALL MEET THE REPRESENTATIVE OF THE VENDOR PRIOR TO THE START OF WORK. ALL WORK SHALL COMPLY WITH ALL VENDOR REQUIREMENTS. THE CONTRACTOR SHALL BE RESPONSIBLE FOR ALL WORK SHOWN ON THESE DRAWINGS AND ALL WORK SHOWN ON THE VENDOR DRAWINGS. THE PHRASE "SUPPLIED BY CUSTOMER" (OR DERIVATIVES) MEANS "PROVIDED BY CONTRACTOR."

ENVIRONMENTS FOR HEALTH ARCHITECTURE
888.781.8441 817.226.1917 501 Elm St, Ste 500, Dallas, TX 75202
e4harchitecture.com

© 2024 E4H - Environments For Health, LLC

CMC CONWAY MEDICAL CENTER with Novant Health

PROGRAM MANAGER
MEADOWS AND OHLY
1450 MATTHEWS TOWNSHIP PARKWAY
SUITE 210
540.589.5318

ARCHITECT
E4H ARCHITECTURE
817.226.1917

MEP ENGINEER
HARRELL DESIGN GROUP, PC
10720 SIKES PLACE, SUITE 100
CHARLOTTE, NC 28277
704.814.1320

STRUCTURAL ENGINEER
HART GAUGLER & ASSOCIATES
8350 N. CENTRAL EXPRESSWAY
SUITE 600
469.923.9225

CIVIL ENGINEER
DEVELOPMENT RESOURCE GROUP, LLC
4703 OLEANDER DRIVE
MYRTLE BEACH, SC 29577
843.839.3350

MEDICAL EQUIPMENT PLANNER
MAZZETTI+GBA
615.376.3108

CMC CONWAY MEDICAL CENTER
CMC Socastee FSED
6016 HIGHWAY 707
MYRTLE BEACH, SC

PROJECT NUMBER: 3024096.00 HDG PROJECT NUMBER: 24019

Δ	DATE	DESCRIPTION

SOUTH CAROLINA HARRELL DESIGN GROUP, PC No. C02713 CERTIFICATE OF AUTHORIZATION

NOT FOR CONSTRUCTION

ARCH NAME ARCH ##

ORIG SUBMISSION: 05.30.2025
CURRENT:

SHEET TITLE AND NUMBER:

EG0.01

GENERAL NOTES AND SCHEDULES

THE LINE SHOWN ABOVE IS EXACTLY ONE INCH LONG AT FULL SCALE

KEYNOTES

1. PRIMARY CONDUIT PROVIDED BY POWER COMPANY. COORDINATE WITH POWER COMPANY TO INSTALL CONDUIT TO PAD BEFORE POUR.
2. EXISTING UNDERGROUND CONDUIT STUBBED ABOVE GRADE FOR SITE LIGHTING CONTINUATION. EXTEND CIRCUIT TO NEW LIGHTS. LOCATE EXACT LOCATION IN FIELD.

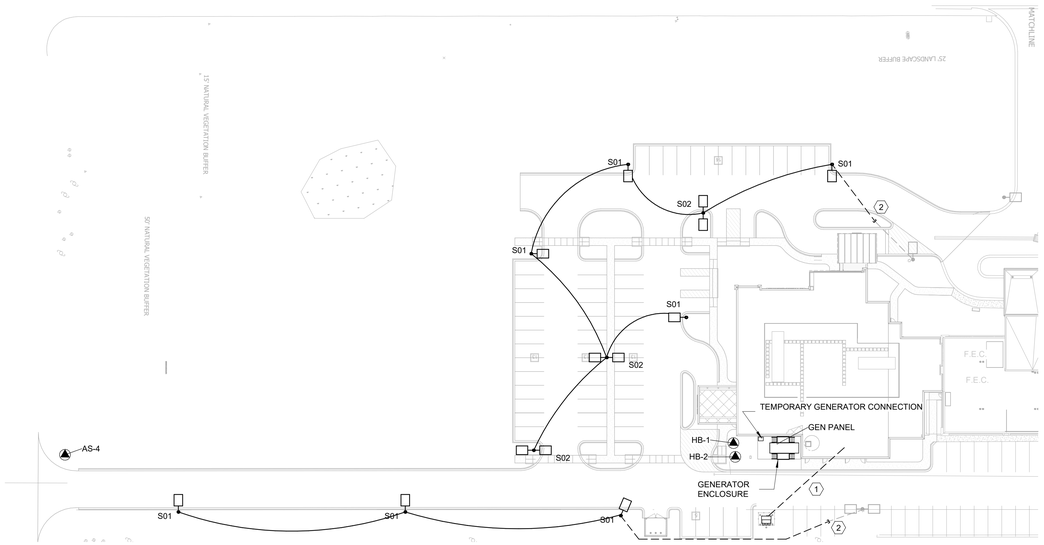

1 **ELECTRICAL SITE PLAN**
1" = 40'-0"

0 20' 40' 80'

ENVIRONMENTS FOR HEALTH ARCHITECTURE
e4h
888.781.8441 817.226.1917 501 Elm St., Ste 500, Dallas, TX 75202 e4harchitecture.com

© 2024 E4H - Environments For Health, LLC

CMC CONWAY MEDICAL CENTER with Novant Health

PROGRAM MANAGER
MEADOWS AND OHLY
1450 MATTHEWS TOWNSHIP PARKWAY
SUITE 210
540.389.5318

ARCHITECT
E4H ARCHITECTURE
817.226.1917

MEP ENGINEER
HARRELL DESIGN GROUP, PC
10720 SIKES PLACE, SUITE 100
CHARLOTTE, NC 28277
704.814.1320

STRUCTURAL ENGINEER
HART GAUGLER & ASSOCIATES
8300 N. CENTRAL EXPRESSWAY
SUITE 600
469.923.9225

CIVIL ENGINEER
DEVELOPMENT RESOURCE GROUP, LLC
4703 OLEANDER DRIVE
MYRTLE BEACH, SC 29577
843.839.3350

MEDICAL EQUIPMENT PLANNER
MAZZETTI+GBA
615.376.3108

CMC CONWAY MEDICAL CENTER
CMC Socastee FSED
6016 HIGHWAY 707
MYRTLE BEACH, SC

PROJECT NUMBER: 3024096.00 **HDG PROJECT NUMBER:** 24019

Δ	DATE	DESCRIPTION

SOUTH CAROLINA
HARRELL DESIGN GROUP, PC
No. 02027-13
CERTIFICATE OF AUTHORIZATION

NOT FOR CONSTRUCTION

ARCH NAME ARCH ##

ORIG SUBMISSION: 05.30.2025
CURRENT:

SHEET TITLE AND NUMBER:

ES1.01

ELECTRICAL SITE PLAN

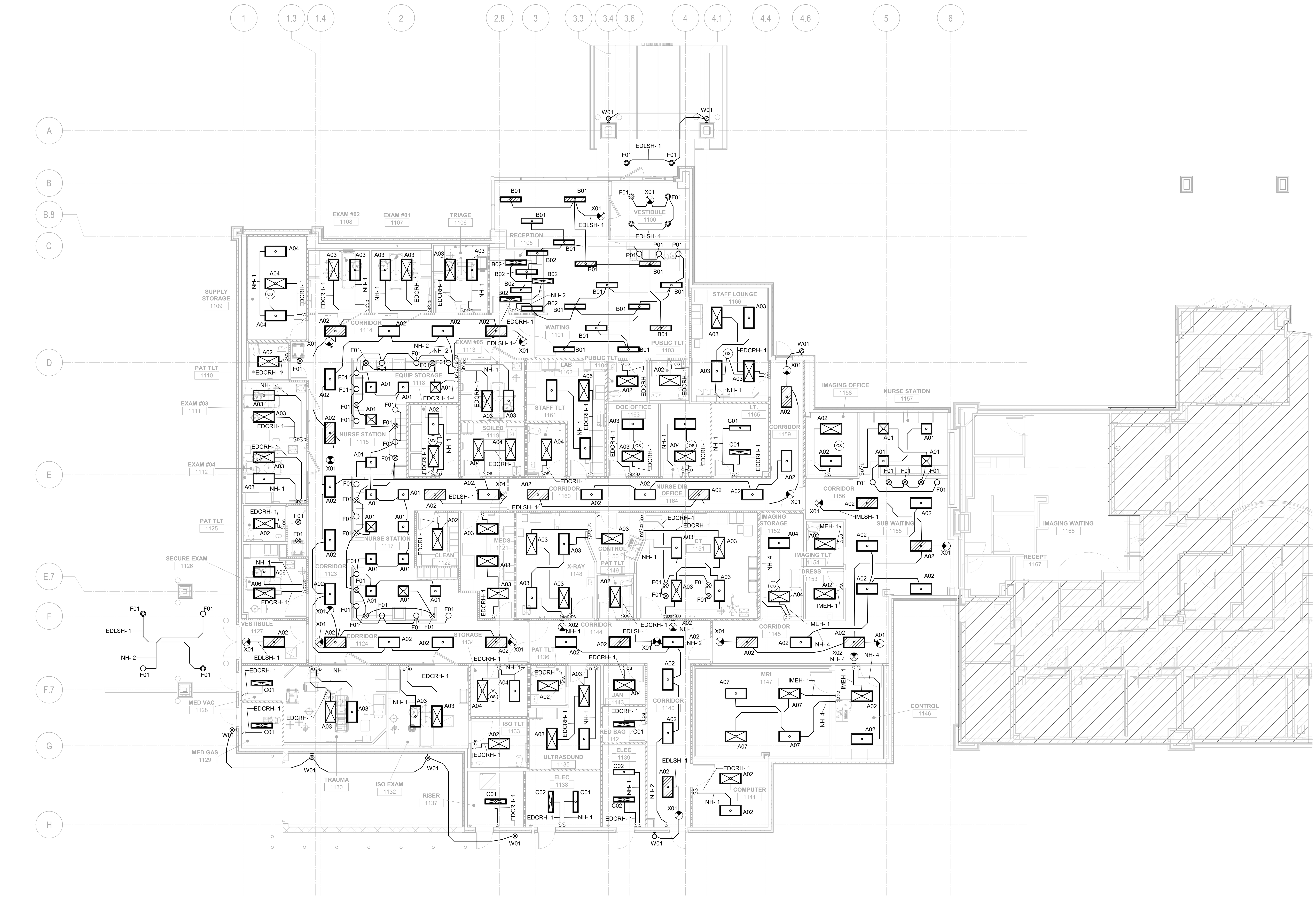

1 FIRST FLOOR PLAN - LIGHTING

1/8" = 1'-0"

0 4' 8' 16'

GENERAL LIGHTING NOTES

A. REFER TO DRAWING EG001 FOR TYPICAL SYMBOLS AND ABBREVIATIONS USED IN THIS DRAWING.

B. REFER TO ARCHITECTURAL REFLECTED CEILING PLAN FOR EXACT LOCATIONS OF ALL CEILING MOUNTED FIXTURES AND DEVICES.

C. CONNECT ALL EMERGENCY EGRESS LIGHTING AND EXIT SIGNS AHEAD OF ANY LOCAL SWITCHING.

D. REVIEW THE CONSTRUCTION DOCUMENTS OF ALL TRADES FOR ADDITIONAL PHASING REQUIREMENTS.

WALL RATING LEGEND

- SMOKE PARTITION
- 1 HR FIRE BARRIER
- 1 HR FIRE / SMOKE BARRIER
- 2 HR FIRE BARRIER
- 2 HR FIRE / SMOKE BARRIER
- 3 HR FIRE BARRIER
- 3 HR FIRE / SMOKE BARRIER
- 4 HR FIRE BARRIER
- 4 HR FIRE / SMOKE BARRIER
- FIRE RATED DOOR

ENVIRONMENTS FOR HEALTH ARCHITECTURE
888.781.8441 817.226.1917 501 Elm St, Ste 500, Dallas, TX 75202
e4harchitecture.com

© 2024 E4H - Environments For Health, LLC

CMC CONWAY MEDICAL CENTER with Novant Health

PROGRAM MANAGER
MEADOWS AND OHLY
1450 MATTHEWS TOWNSHIP PARKWAY
SUITE 210
540.589.5318

ARCHITECT
E4H ARCHITECTURE
817.226.1917

MEP ENGINEER
HARRELL DESIGN GROUP, PC
10720 SIKES PLACE, SUITE 100
CHARLOTTE, NC 28277
704.814.1320

STRUCTURAL ENGINEER
HART GAUGLER & ASSOCIATES
8350 N. CENTRAL EXPRESSWAY
SUITE 600
469.923.9225

CIVIL ENGINEER
DEVELOPMENT RESOURCE GROUP, LLC
4703 OLEANDER DRIVE
MYRTLE BEACH, SC 29577
843.839.3350

MEDICAL EQUIPMENT PLANNER
MAZZETTI+GBA
615.376.3108

CMC CONWAY MEDICAL CENTER
CMC Socastee FSED
6016 HIGHWAY 707
MYRTLE BEACH, SC

PROJECT NUMBER: 3024096.00
HDG PROJECT NUMBER: 24019

Δ	DATE	DESCRIPTION

SOUTH CAROLINA HARRELL DEGIGN GROUP, PC No. C02713 CERTIFICATE OF AUTHORIZATION

NOT FOR CONSTRUCTION

ARCH NAME ARCH ##

ORIG SUBMISSION: 05.30.2025
CURRENT:

SHEET TITLE AND NUMBER:

EL1.01

FIRST FLOOR PLAN - LIGHTING

THE LINE SHOWN ABOVE IS EXACTLY ONE HORIZONTAL INCH ON ORIGINAL ARCHITECT'S DRAWINGS

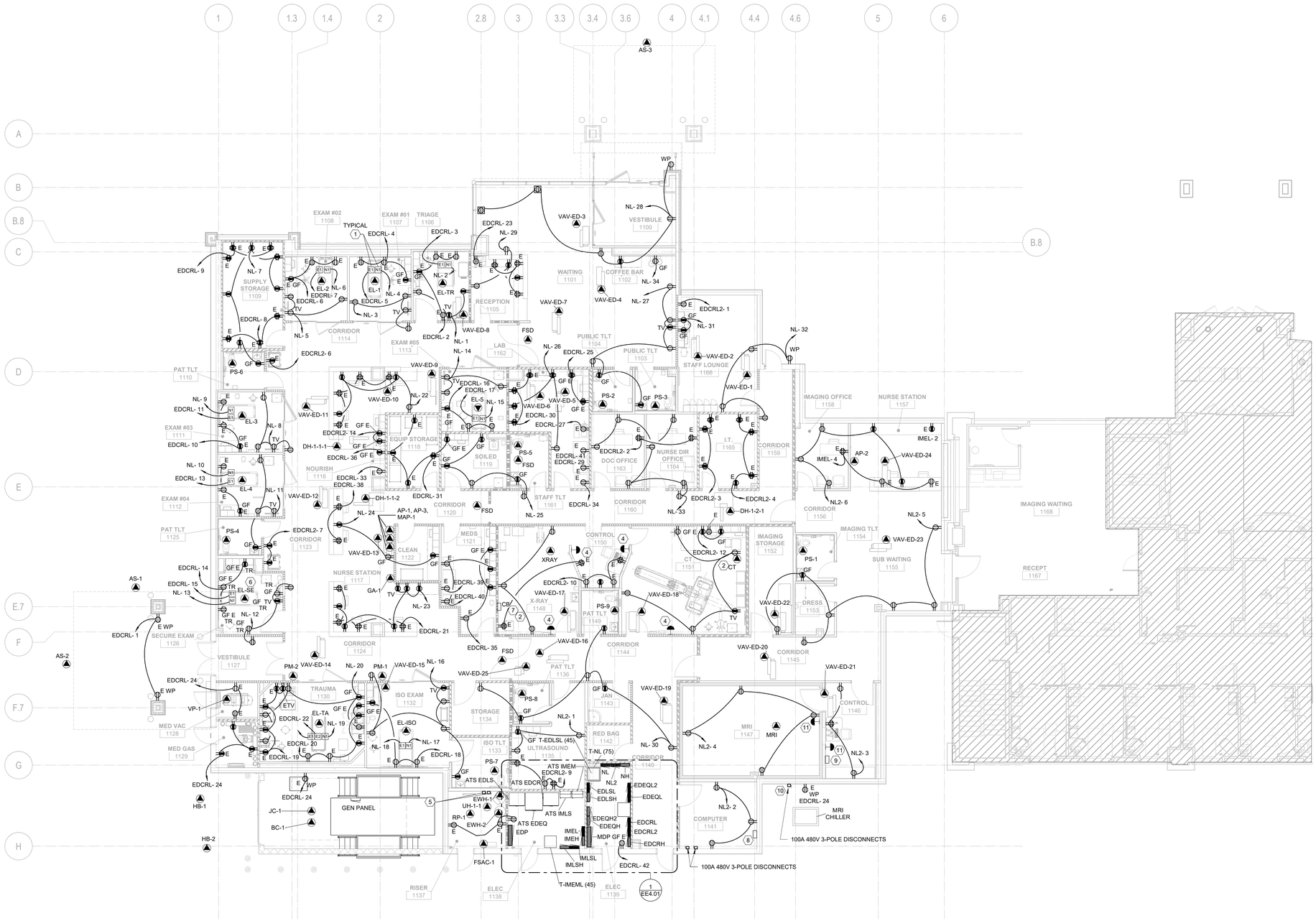

GENERAL POWER NOTES

A. REFER TO DRAWING EG001 FOR TYPICAL SYMBOLS AND ABBREVIATIONS USED IN THIS DRAWING.

B. CONFIRM RECEPTACLE LOCATIONS AND MOUNTING HEIGHTS WITH ARCHITECTURAL INTERIOR ELEVATIONS PRIOR TO ROUGH-IN.

C. ALL RECEPTACLES WITHIN 6'-0" OF SINK SHALL BE OF THE GFCI TYPE.

D. ALL RECEPTACLES IN PATIENT CARE AREAS SHALL BE HOSPITAL GRADE.

E. REVIEW THE CONSTRUCTION DOCUMENTS OF ALL TRADES FOR PHASING REQUIREMENTS.

F. CONNECT NEW LIGHTING PROTECTION DEVICES TO EXISTING PROTECTION SYSTEM

KEYNOTES

1. HEAD WALL RECEPTACLES PART OF HEADWALL ASSEMBLY. SEE ARCHITECTURAL FOR MORE DETAILS
2. 100A, 480V, 3-PHASE FLUSH MOUNTED ENCLOSED CIRCUIT BREAKER WITH SHUNT TRIP. DO NOT ROUGH-IN EQUIPMENT, UNTIL FINAL VENDOR DRAWINGS HAVE BEEN APPROVED
3. 100A, 480V, 3-PHASE ENCLOSED CIRCUIT BREAKER FOR MRI COOLING CABINET AND INTEGRATION SYSTEM.
4. IMAGINING EQUIPMENT EMERGENCY DISCONNECT BUTTON.
5. WATER HEATER DISCONNECTS
6. OUTLETS AND ELECTRICAL FIXTURES IN SECURE ROOM TO BE BEHAVIOR HEALTH RATED, AND TAMPER RESISTANT WITH TAMPER RESISTENT SCREWS
7. FLUSH MOUNTED 480V ENCLOSED CIRCUIT BREAKER WITH SHUNT TRIP. DO NOT ROUGH-IN EQUIPMENT, UNTIL FINAL VENDOR DRAWINGS HAVE BEEN APPROVED.
8. VENDOR SUPLLIED MDP. CONTRACTOR TO INSTALL
9. VENDOR SUPPLIED REMOTE PANEL, CONTRACTOR TO INSTALL
10. NEMA3R NON FUSED DISCONNECT FOR MRI EXTERIOR UNIT.
11. EMERGENCY PURGE FAN BUTTON.

WALL RATING LEGEND

- SMOKE PARTITION
- 1 HR FIRE BARRIER
- 1 HR FIRE / SMOKE BARRIER
- 2 HR FIRE BARRIER
- 2 HR FIRE / SMOKE BARRIER
- 3 HR FIRE BARRIER
- 3 HR FIRE / SMOKE BARRIER
- 4 HR FIRE BARRIER
- 4 HR FIRE / SMOKE BARRIER
- FIRE RATED DOOR

ENVIRONMENTS FOR HEALTH ARCHITECTURE
e4h
888.781.8441 817.226.1917 501 Elm St., Ste 500, Dallas, TX 75202 e4harchitecture.com

© 2024 E4H - Environments For Health, LLC

CMC CONWAY MEDICAL CENTER with Novant Health

PROGRAM MANAGER
MEADOWS AND OHLY
1450 MATTHEWS TOWNSHIP PARKWAY
SUITE 210
540.389.5318

ARCHITECT
E4H ARCHITECTURE
817.226.1917

MEP ENGINEER
HARRELL DESIGN GROUP, PC
10720 SIKES PLACE, SUITE 100
CHARLOTTE, NC 28277
704.814.1320

STRUCTURAL ENGINEER
HART GAUGLER & ASSOCIATES
830N. CENTRAL EXPRESSWAY
SUITE 600
469.023.5025

CIVIL ENGINEER
DEVELOPMENT RESOURCE GROUP, LLC
4703 OLEANDER DRIVE
MYRTLE BEACH, SC 29577
843.839.3350

MEDICAL EQUIPMENT PLANNER
MAZZETTI+GBA
615.376.3108

CMC CONWAY MEDICAL CENTER
CMC Socastee FSED
6016 HIGHWAY 707
MYRTLE BEACH, SC

PROJECT NUMBER: 3024096.00 HDG PROJECT NUMBER: 24019

Δ	DATE	DESCRIPTION

SOUTH CAROLINA HARRELL DESIGN GROUP, PC No. C02713 CERTIFICATE OF AUTHORIZATION

NOT FOR CONSTRUCTION

ARCH NAME ARCH ##

ORIG SUBMISSION: 05.30.2025
CURRENT:

SHEET TITLE AND NUMBER:

EP1.01

FIRST FLOOR PLAN - POWER

1 **FIRST FLOOR PLAN - POWER**
1/8" = 1'-0"

0 4' 8' 16'

THE LINE SHOWN ABOVE IS EXACTLY ONE INCH LONG AT FULL SCALE

GENERAL POWER NOTES

A. REFER TO DRAWING EG001 FOR TYPICAL SYMBOLS AND ABBREVIATIONS USED IN THIS DRAWING.

B. CONFIRM RECEPTACLE LOCATIONS AND MOUNTING HEIGHTS WITH ARCHITECTURAL INTERIOR ELEVATIONS PRIOR TO ROUGH-IN.

C. ALL RECEPTACLES WITHIN 6'-0" OF SINK SHALL BE OF THE GFCI TYPE.

D. ALL RECEPTACLES IN PATIENT CARE AREAS SHALL BE HOSPITAL GRADE.

E. REVIEW THE CONSTRUCTION DOCUMENTS OF ALL TRADES FOR PHASING REQUIREMENTS.

F. CONNECT NEW LIGHTING PROTECTION DEVICES TO EXISTING PROTECTION SYSTEM

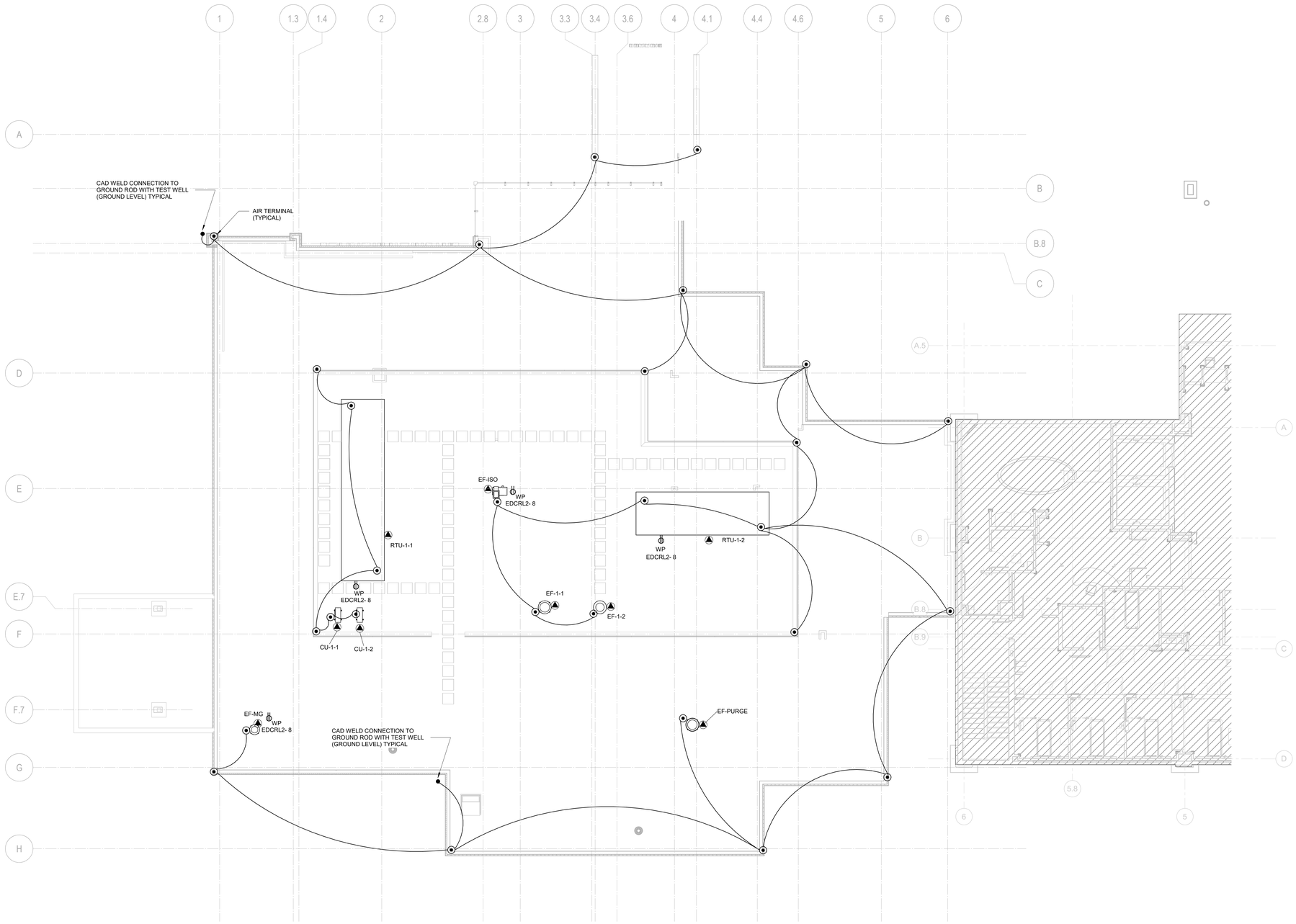

1 **ROOF PLAN - POWER**
1/8" = 1'-0"

0 4' 8' 16'

ENVIRONMENTS FOR HEALTH ARCHITECTURE
e4h
888.781.8441 817.226.1917 501 Elm St, Ste 500, Dallas, TX 75202 e4harchitecture.com

© 2024 E4H - Environments For Health, LLC

CMC CONWAY MEDICAL CENTER with Novant Health

PROGRAM MANAGER
MEADOWS AND OHLY
1450 MATTHEWS TOWNSHIP PARKWAY
SUITE 210
540.389.5318

ARCHITECT
E4H ARCHITECTURE
817.226.1917

MEP ENGINEER
HARRELL DESIGN GROUP, PC
10720 SIKES PLACE, SUITE 100
CHARLOTTE, NC 28277
704.814.1320

STRUCTURAL ENGINEER
HART GAUGLER & ASSOCIATES
830C N. CENTRAL EXPRESSWAY
SUITE 600
469.923.9225

CIVIL ENGINEER
DEVELOPMENT RESOURCE GROUP, LLC
4703 OLEANDER DRIVE
MYRTLE BEACH, SC 29577
843.839.3350

MEDICAL EQUIPMENT PLANNER
MAZZETTI+GBA
615.376.3108

CMC CONWAY MEDICAL CENTER
CMC Socastee FSED
6016 HIGHWAY 707
MYRTLE BEACH, SC

PROJECT NUMBER: 3024096.00 **HDG PROJECT NUMBER:** 24019

Δ	DATE	DESCRIPTION

SOUTH CAROLINA HARRELL DESIGN GROUP, PC No. C02713 CERTIFICATE OF AUTHORIZATION

NOT FOR CONSTRUCTION

ARCH NAME ARCH ##

ORIG SUBMISSION: 05.30.2025
CURRENT:

SHEET TITLE AND NUMBER:

EP1.02

ROOF PLAN - POWER

THE LINE SHOWN ABOVE IS EXACTLY ONE INCH LONG AT THIS SHEETS ORIGINAL PAGE SIZE

KEYNOTES

1. HEAD WALL RECEPTACLES PART OF HEADWALL ASSEMBLY. SEE ARCHITECTURAL FOR MORE DETAILS

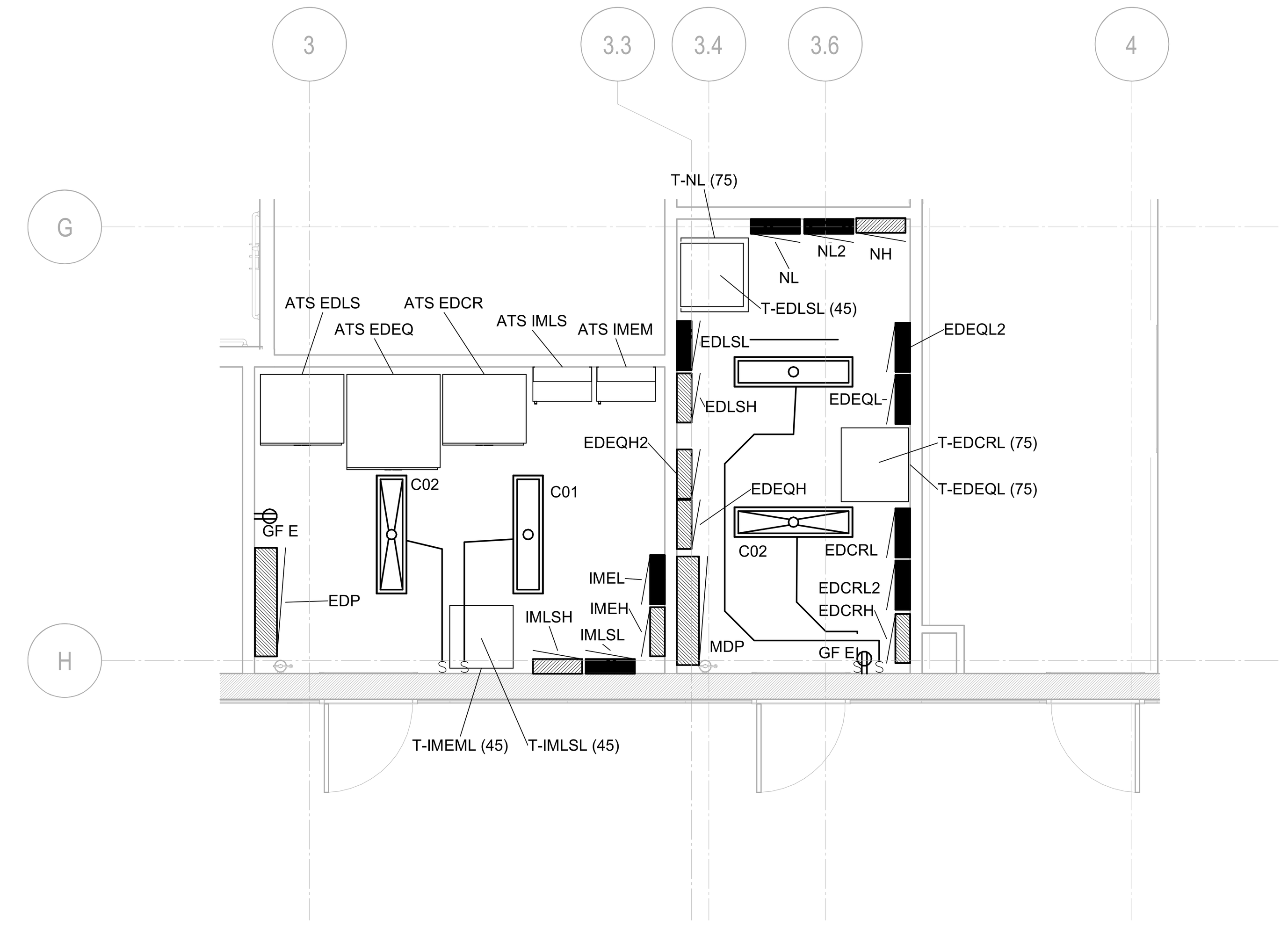

1 **ENLARGED ELECTRICAL ROOMS**
1/4" = 1'-0"
0 2' 4' 8'

ENVIRONMENTS FOR HEALTH **ARCHITECTURE**
888.781.8441 817.226.1917 501 Elm St, Ste 500, Dallas, TX 75202
e4harchitecture.com

© 2024 E4H - Environments For Health, LLC

CMC CONWAY MEDICAL CENTER with Novant Health

PROGRAM MANAGER
MEADOWS AND OHLY
1450 MATTHEWS TOWNSHIP PARKWAY
SUITE 210
540.589.5318

ARCHITECT
E4H ARCHITECTURE
817.226.1917

MEP ENGINEER
HARRELL DESIGN GROUP, PC
10720 SIKES PLACE, SUITE 100
CHARLOTTE, NC 28277
704.814.1320

STRUCTURAL ENGINEER
HART GAUGLER & ASSOCIATES
8350 N. CENTRAL EXPRESSWAY
SUITE 600
469.923.9225

CIVIL ENGINEER
DEVELOPMENT RESOURCE GROUP, LLC
4703 OLEANDER DRIVE
MYRTLE BEACH, SC 29577
843.839.3350

MEDICAL EQUIPMENT PLANNER
MAZZETTI+GBA
615.376.3108

CMC CONWAY MEDICAL CENTER
CMC Socastee FSED
6016 HIGHWAY 707
MYRTLE BEACH, SC

PROJECT NUMBER: 3024096.00 **HDG PROJECT NUMBER:** 24019

Δ	DATE	DESCRIPTION

SOUTH CAROLINA
HARRELL DEGIGN GROUP, PC No. C02713
CERTIFICATE OF AUTHORIZATION

NOT FOR CONSTRUCTION

ARCH NAME ARCH ##

ORIG SUBMISSION: 05.30.2025
CURRENT:

SHEET TITLE AND NUMBER:

EE4.01

ENLARGED ELECTRICAL PLANS

THE LINE SHOWN ABOVE IS EXACTLY ONE HORIZONTAL INCH ON ORIGINAL ARCHITECT'S DRAWINGS

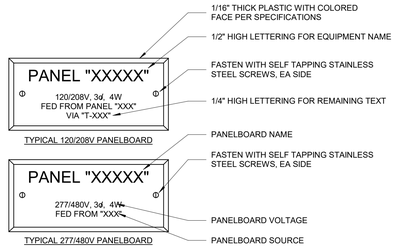

6 PANELBOARD NAMEPLATES

NO SCALE

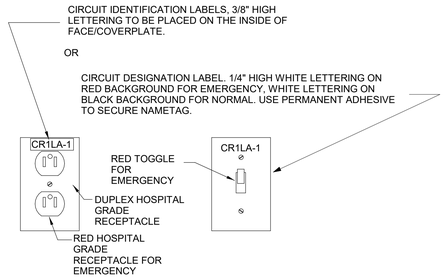

NOTE: ALL RECEPTACLES WHETHER DUPLEX OR QUADRAPLEX OR ANY OTHER NEMA CONFIGURATION SHALL BE LABELED.

ALL LIGHT SWITCHES SHALL BE LABELED

1 TYPICAL RECEPTACLE/SWITCH NAMEPLATE

NO SCALE

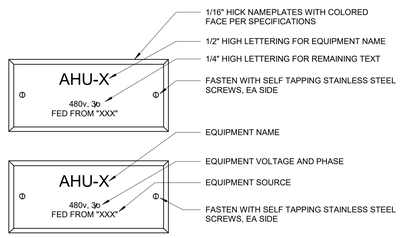

10 EQUIPMENT NAMEPLATES

NO SCALE

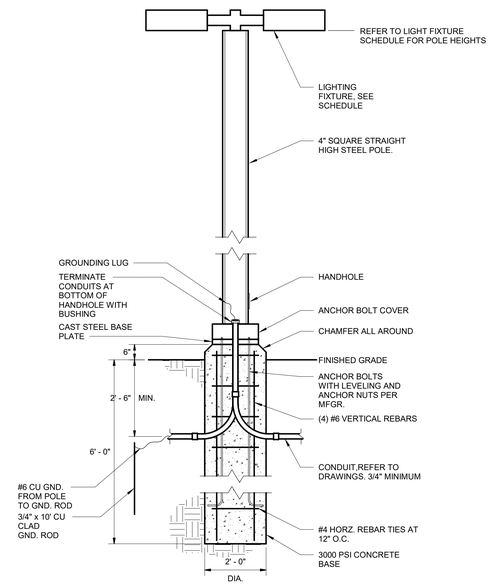

NOTES:

1. THE UNDERGROUND CONDUIT SERVING THE POLE SHALL BE A MINIMUM OF 3/4".

5 ELECTRICAL POLE LIGHT BASE DETAIL

N.T.S.

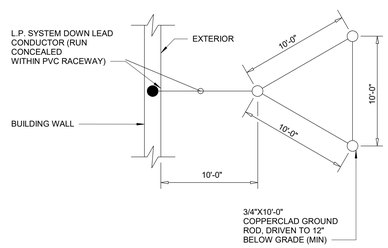

9 GROUNDING TRIAD DIAGRAM

NO SCALE

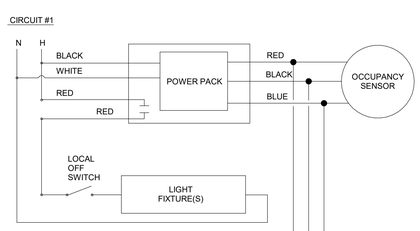

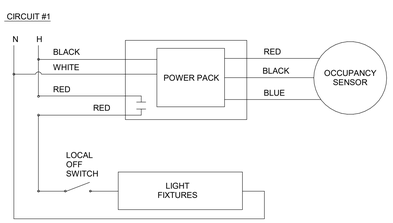

8 OCCUPANCY SENSOR WIRING - SINGLE CIRCUIT

NO SCALE

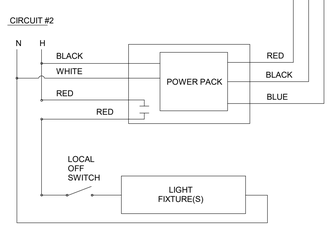

7 OCCUPANCY SENSOR WIRING - TWO CIRCUIT

NO SCALE

NOTES:

1. ALL GROUNDING AND BONDING CONDUCTORS SHALL BE SIZED PER NEC, TABLE 250-122 AND 250-66. SEE ELECTRICAL PANEL SCHEDULES FOR SIZING REQUIREMENTS.
2. SYSTEM GROUND CONDUCTOR SHALL BE CONTINUOUS AND UNBROKEN, AND SHALL BE RUN BETWEEN BONDING POINTS ALONG THE SHORTEST POSSIBLE PATH.
3. THIS DETAIL DIAGRAMS THE PREFERRED METHOD OF ESTABLISHING A SYSTEM GROUND AND BONDING POINTS WITHIN A TYPICAL DISTRIBUTION SYSTEM ALL NEC APPROVED GROUNDING ELECTRODES AVAILABLE ON THE PROJECT SHALL BE BONDED TO THE GROUNDING ELECTRODE SYSTEM.

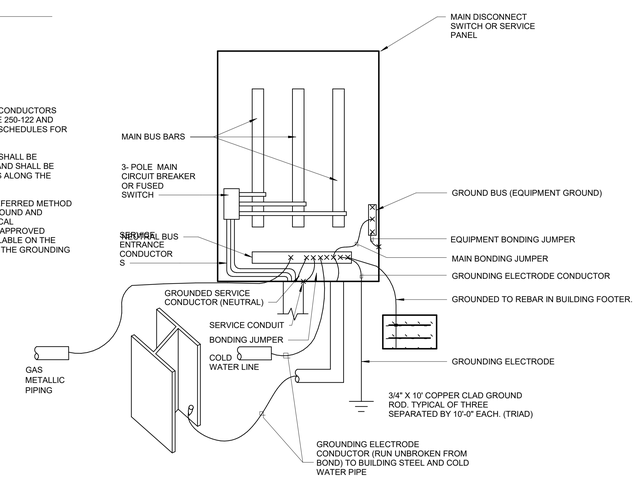

3 SERVICE GROUNDING AND BONDING DETAIL

NO SCALE

ENVIRONMENTS FOR HEALTH ARCHITECTURE
e4h
888.781.8441 817.226.1917 501 Elm St., Ste 500, Dallas, TX 75202 e4harchitecture.com

© 2024 E4H - Environments For Health, LLC

CMC CONWAY MEDICAL CENTER with Novant Health

PROGRAM MANAGER
MEADOWS AND OHLY
1450 MATTHEWS TOWNSHIP PARKWAY
SUITE 210
540.389.5318

ARCHITECT
E4H ARCHITECTURE
817.226.1917

MEP ENGINEER
HARRELL DESIGN GROUP, PC
10720 SIKES PLACE, SUITE 100
CHARLOTTE, NC 28277
704.814.1320

STRUCTURAL ENGINEER
HART GAUGLER & ASSOCIATES
830 N. CENTRAL EXPRESSWAY
SUITE 600
469.623.9225

CIVIL ENGINEER
DEVELOPMENT RESOURCE GROUP, LLC
4703 OLEANDER DRIVE
MYRTLE BEACH, SC 29577
843.839.3350

MEDICAL EQUIPMENT PLANNER
MAZZETTI+GBA
615.376.3108

CMC CONWAY MEDICAL CENTER
CMC Socastee FSED
6016 HIGHWAY 707
MYRTLE BEACH, SC

PROJECT NUMBER: 3024096.00 **HDG PROJECT NUMBER:** 24019

Δ	DATE	DESCRIPTION

SOUTH CAROLINA HARRELL DESIGN GROUP, PC No. C02713 CERTIFICATE OF AUTHORIZATION

NOT FOR CONSTRUCTION

ARCH NAME ARCH ##

ORIG SUBMISSION: 05.30.2025

CURRENT:

SHEET TITLE AND NUMBER:

EE5.01

ELECTRICAL DETAILS

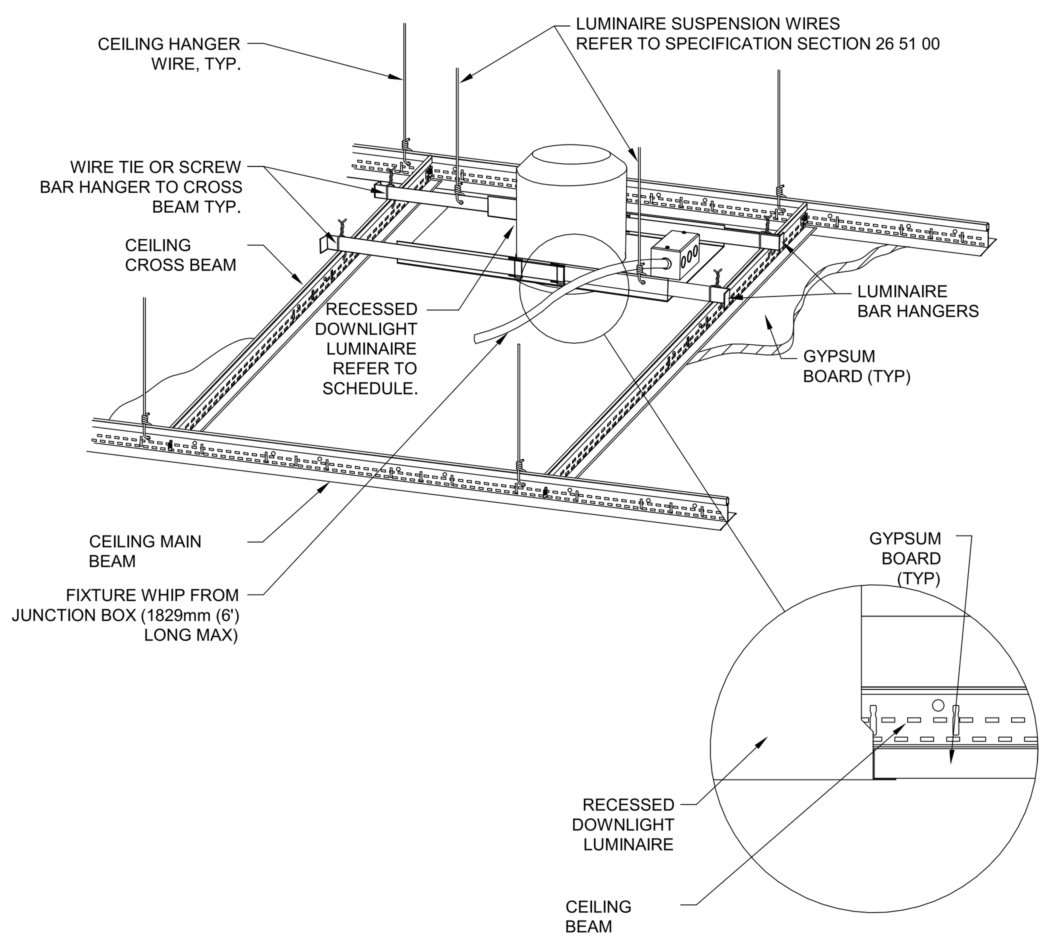

GENERAL NOTE:
1. INSTALL IN ACCORDANCE WITH MANUFACTURER'S MOUNTING INSTRUCTIONS AND USING THE RECOMMENDED MOUNTING HARDWARE.

5 DOWNLIGHT MOUNTING DETAIL - GYPSUM CEILING
NO SCALE

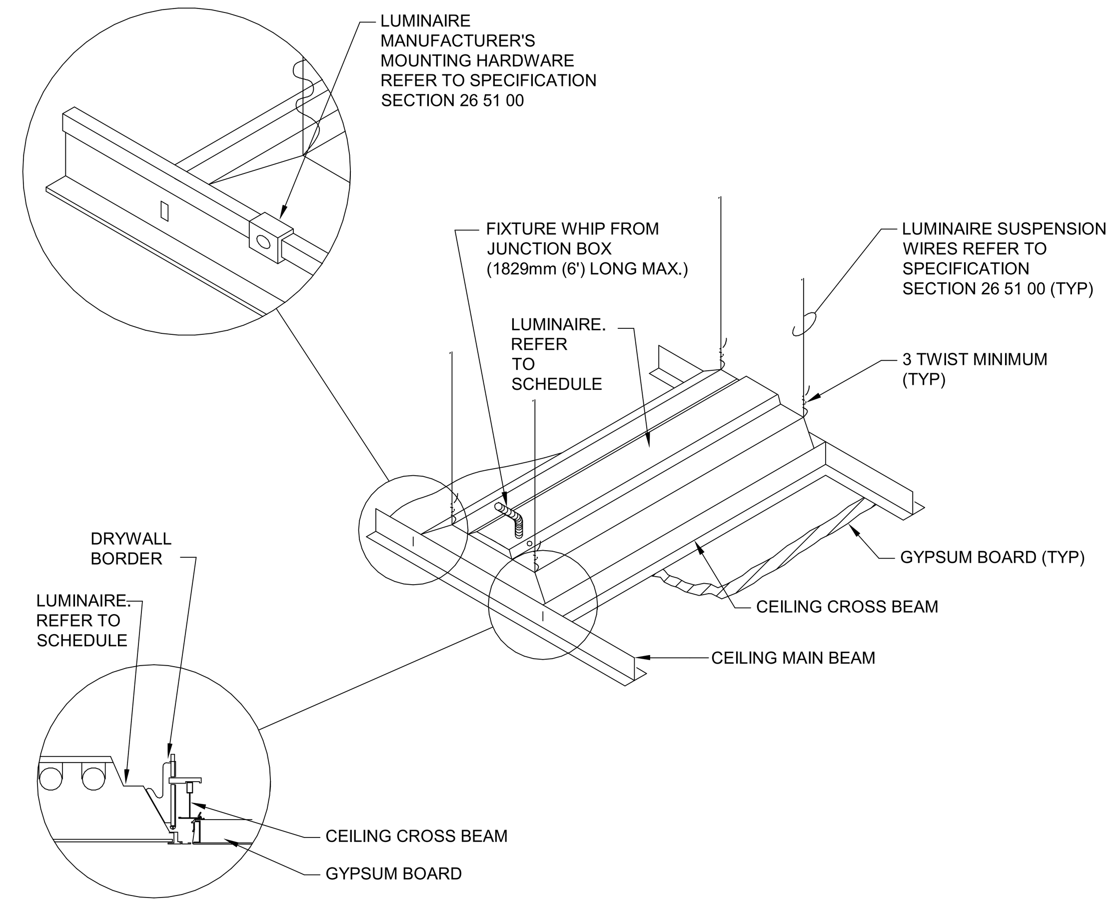

GENERAL NOTE:
1. INSTALL IN ACCORDANCE WITH MANUFACTURER'S MOUNTING INSTRUCTIONS AND USING THE RECOMMENDED MOUNTING HARDWARE.

4 LUMINAIRE MOUNTING - GYPSUM CEILING
NO SCALE

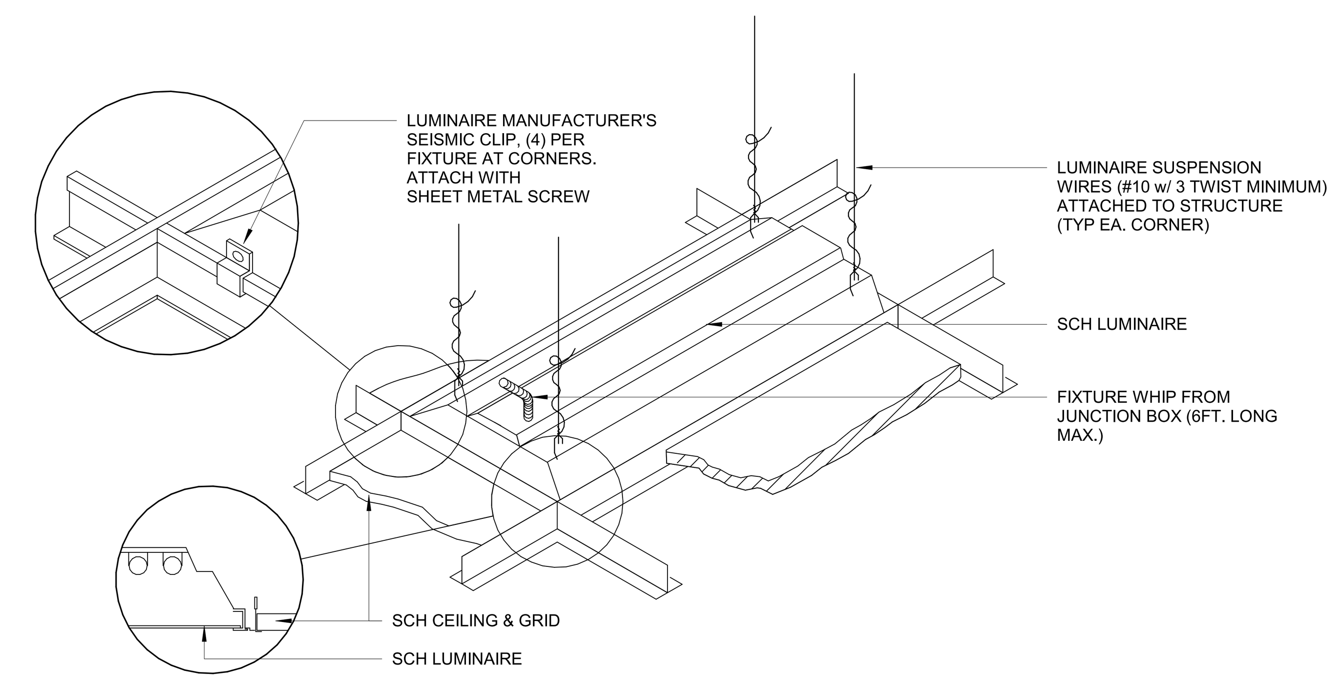

1 LUMINAIRE MOUNTING - LAY-IN CEILING
NO SCALE

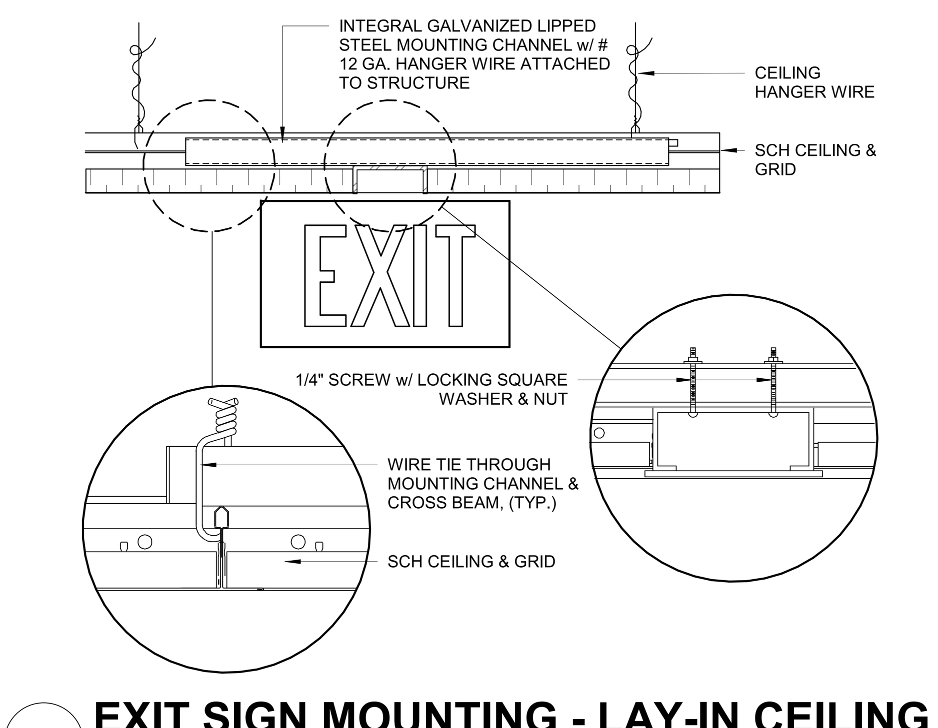

2 EXIT SIGN MOUNTING - LAY-IN CEILING
NO SCALE

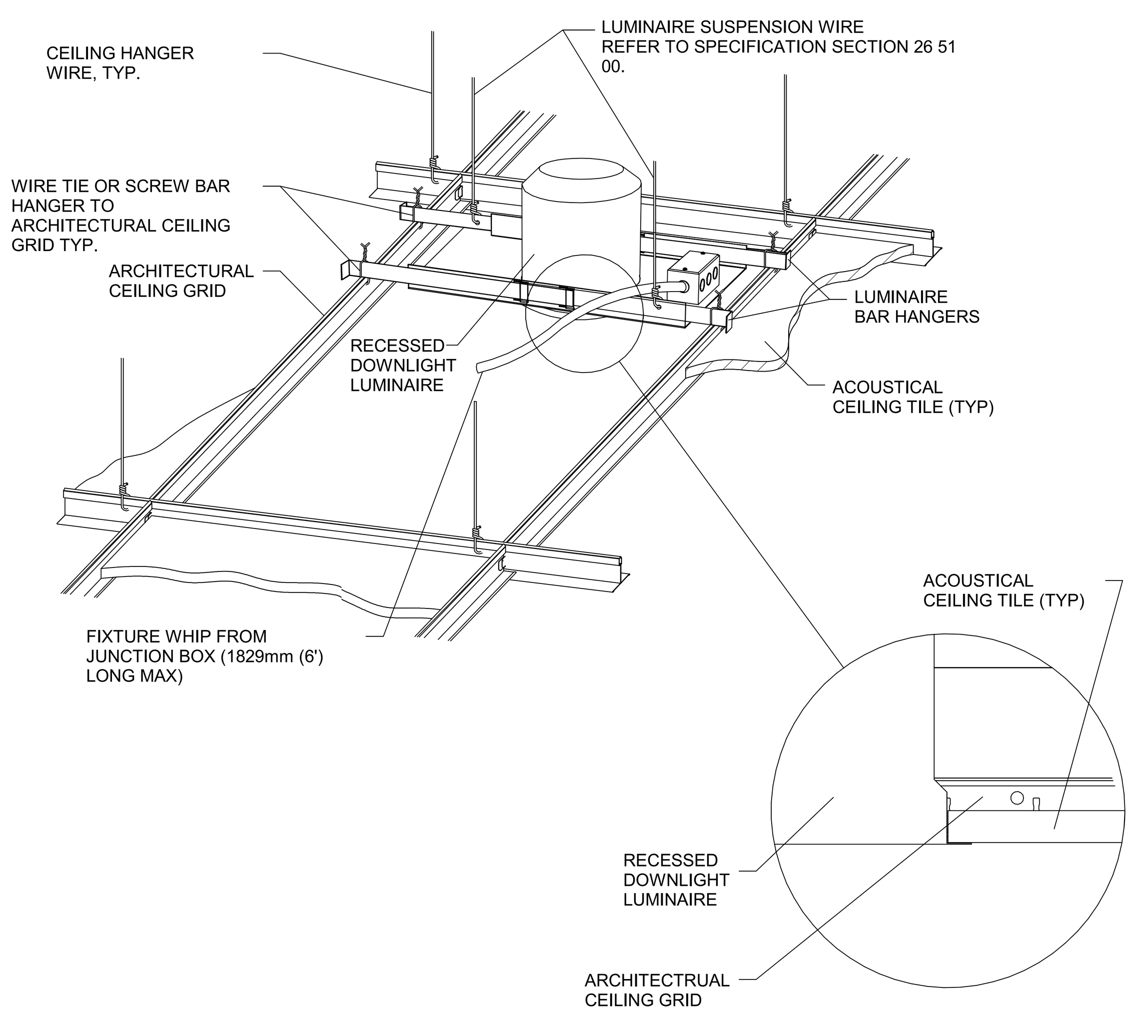

GENERAL NOTE:
1. INSTALL IN ACCORDANCE WITH MANUFACTURER'S MOUNTING INSTRUCTIONS AND USING THE RECOMMENDED MOUNTING HARDWARE.

6 DOWNLIGHT MOUNTING DETAIL - LAY-IN CEILING
NO SCALE

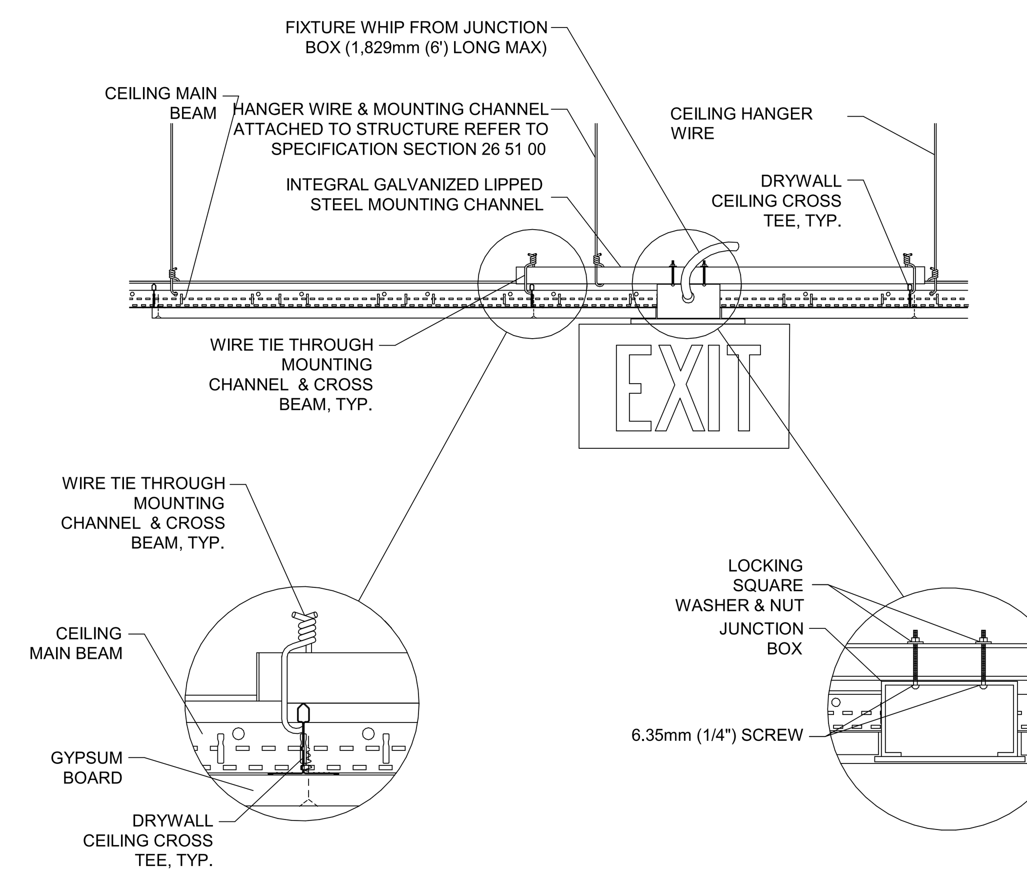

GENERAL NOTE:
1. INSTALL IN ACCORDANCE WITH MANUFACTURER'S MOUNTING INSTRUCTIONS AND USING THE RECOMMENDED MOUNTING HARDWARE.

7 EXIT SIGN MOUNTING - GYPSUM CEILING
NO SCALE

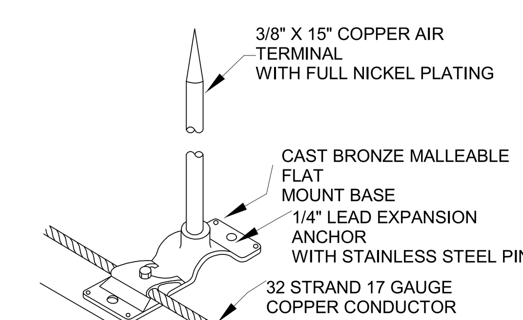

NOTES: 1. ROUTE COPPER CONDUCTOR DOWN FROM CHIMNEY ON MOST INCONSPICUOUS CORNER.
2. ALIGN AIR TERMINAL PLUMB.

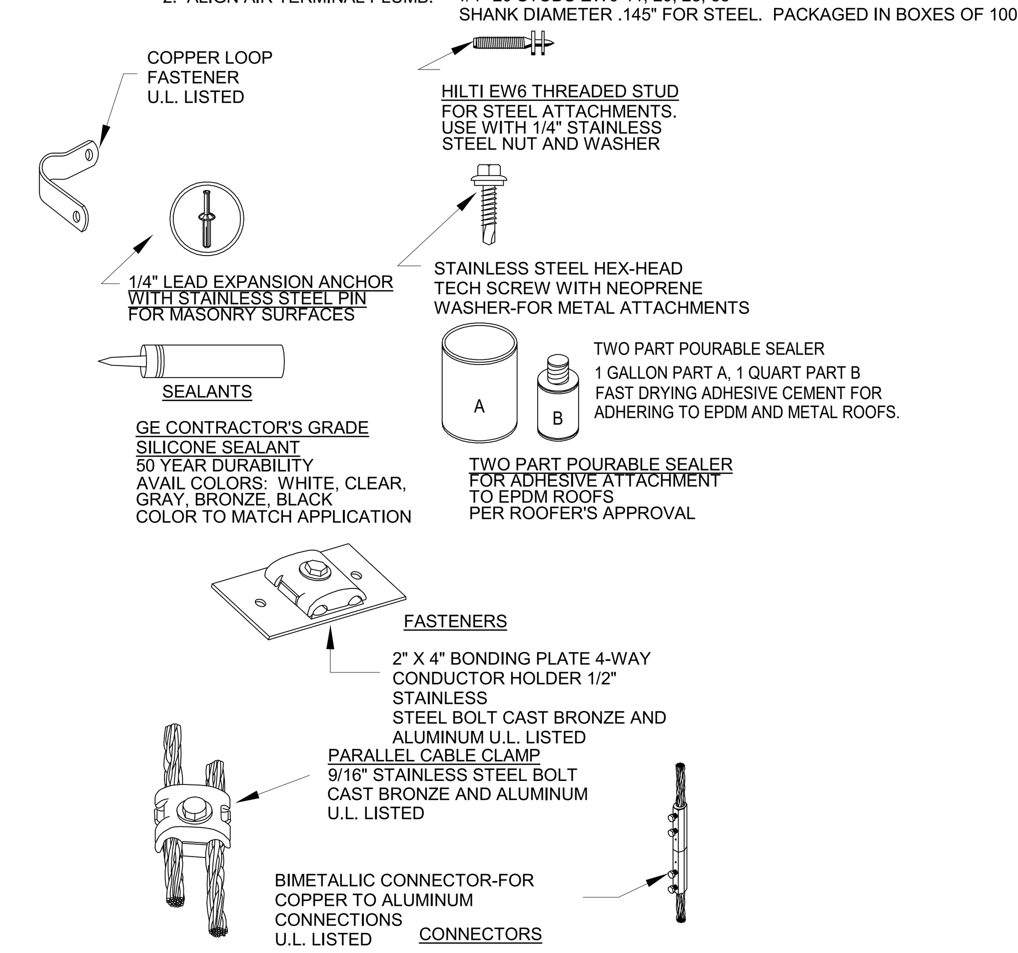

3 LIGHTNING PROTECTION DETAILS
SCALE: NONE

e4h ENVIRONMENTS FOR HEALTH ARCHITECTURE
888.781.84 817.226.1917 501 Elm St. Ste 500, Dallas, TX 75202 e4harchitecture.com
© 2024 E4H - Environments For Health, LLC

CMC CONWAY MEDICAL CENTER with Novant Health

PROGRAM MANAGER
MEADOWS AND OHLY
1450 MATTHEWS TOWNSHIP PARKWAY SUITE 210
ARCHITECT
E4H ARCHITECTURE
817.226.1917
MEP ENGINEER
HARRELL DESIGN GROUP, PC
10720 SIKES PLACE, SUITE 100 CHARLOTTE, NC 28277
704.814.1320
STRUCTURAL ENGINEER
HART GAUGLER & ASSOCIATES
8350 N. CENTRAL EXPRESSWAY SUITE 600
469.923.9225
CIVIL ENGINEER
DEVELOPMENT RESOURCE GROUP, LLC
4703 OLEANDER DRIVE MYRTLE BEACH, SC 29577
843.839.3350
MEDICAL EQUIPMENT PLANNER
MAZZETTI+GBA
615.376.3108

CMC CONWAY MEDICAL CENTER
CMC Socastee FSED
6016 HIGHWAY 707
MYRTLE BEACH, SC

PROJECT NUMBER: 3024095.00 HDG PROJECT NUMBER: 24019

Δ	DATE	DESCRIPTION

SOUTH CAROLINA CERTIFICATE OF AUTHORIZATION HARRELL DESIGN GROUP, PC No. C02713

NOT FOR CONSTRUCTION

ARCH NAME ARCH ##
ORIG SUBMISSION: 05.30.2025
CURRENT:

SHEET TITLE AND NUMBER:
EE5.02
ELECTRICAL DETAILS

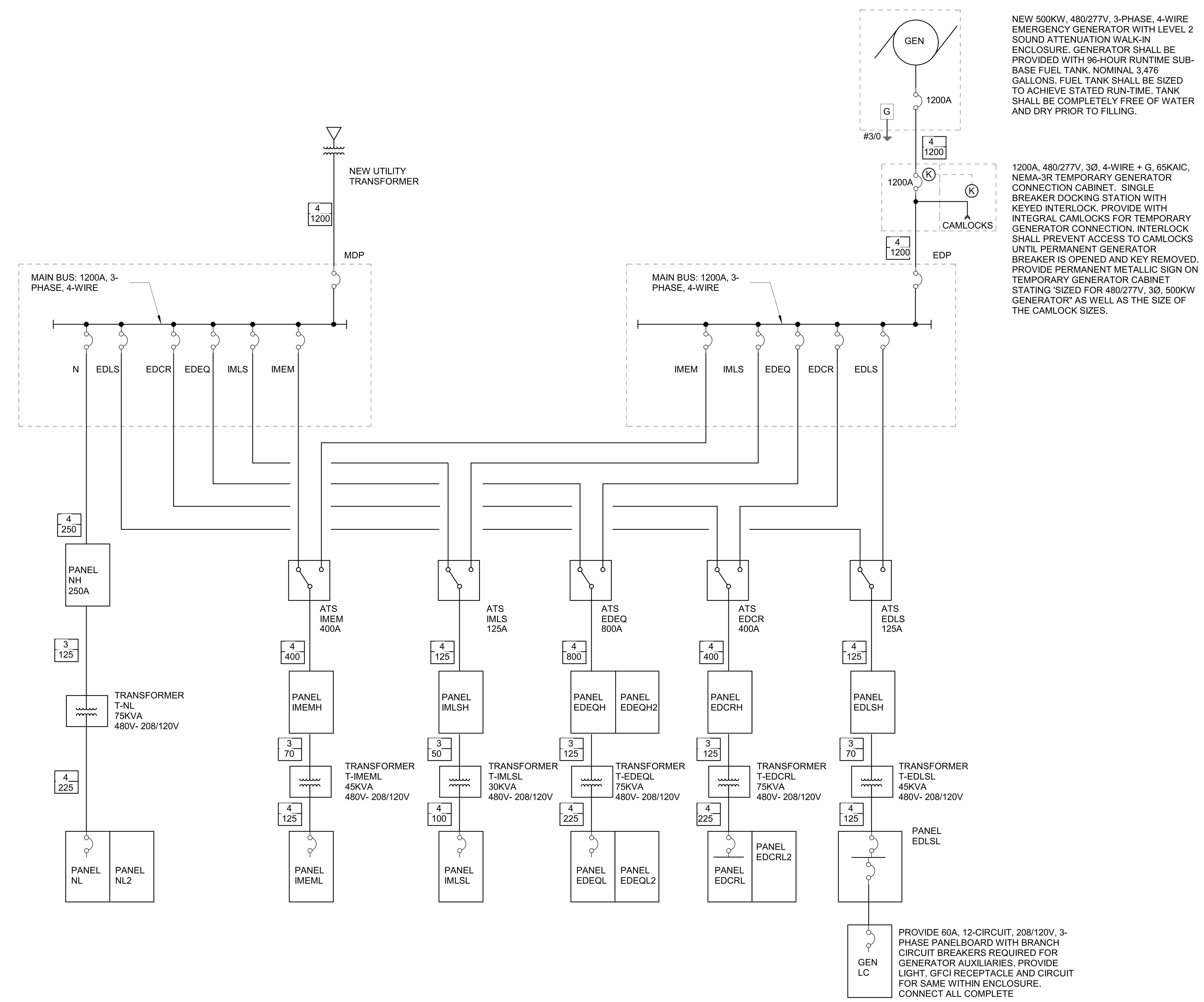

1 ELECTRICAL ONE-LINE DIAGRAM

1/2" = 1'-0"

FEEDER LEGEND

	TOP ROW	BOTTOM ROW
	3 = 3 WIRE 4 = 4 WIRE	FEEDER SIZE

FEEDER SCHEDULE

3 PHASE	2 WIRE	CONDUIT SIZE
20	(2) - #12 & #12G	3/4"
30	(2) - #10 & #10G	3/4"
40	(2) - #8 & #10G	3/4"
50	(2) - #6 & #10G	1"
60	(2) - #6 & #10G	1"
70	(2) - #4 & #8G	1-1/4"
3 PHASE	**3 WIRE**	**CONDUIT SIZE**
20	(3) - #12 & #12G	3/4"
30	(3) - #10 & #10G	3/4"
40	(3) - #8 & #10G	3/4"
50	(3) - #6 & #10G	1"
60	(3) - #6 & #10G	1"
70	(3) - #4 & #8G	1-1/2"
80	(3) - #3 & #8G	1-1/2"
90	(3) - #3 & #8G	1-1/2"
100	(3) - #2 & #8G	1-1/2"
125	(3) - #1 & #8G	1-1/2"
150	(3) - 1/0 & #6G	2"
175	(3) - 2/0 & #6G	2"
200	(3) - 3/0 & #6G	2"
225	(3) - 4/0 & #4G	2-1/2"
250	(3) - 250KCMILS & #4G	2-1/2"
300	(3) - 350KCMILS & #4G	3"
350	(3) - 400KCMILS & #4G	3"
400	(3) - 500KCMILS & #3G	3"
450	2 RUNS (3) - 4/0 & #2G	3"
500	2 RUNS (3) - 250KCMILS & #2G	3"
600	2 RUNS (3) - 350KCMILS & 1G	3"
700	2 RUNS (3) - 500KCMILS & 1/0G	3"
800	2 RUNS (3) - 600KCMILS & 1/0G	4"
1000	3 RUNS (3) - 400KCMILS & 2/0G	4"
1200	3 RUNS (3) - 600KCMILS & 3/0G	4"
3 PHASE	**4 WIRE**	**CONDUIT SIZE**
20	(4) - #12 & #12G	3/4"
30	(4) - #10 & #10G	3/4"
40	(4) - #8 & #10G	3/4"
50	(4) - #6 & #10G	1"
60	(4) - #6 & #10G	1"
70	(4) - #4 & #8G	1-1/2"
80	(4) - #3 & #8G	1-1/2"
90	(4) - #3 & #8G	1-1/2"
100	(4) - #2 & #8G	1-1/2"
125	(4) - #1 & #8G	1-1/2"
150	(4) - 1/0 & #6G	2"
175	(4) - 2/0 & #6G	2"
200	(4) - 3/0 & #6G	2"
225	(4) - 4/0 & #4G	2-1/2"
250	(4) - 250KCMILS & #4G	2-1/2"
300	(4) - 350KCMILS & #4G	3"
350	(4) - 400KCMILS & #4G	3"
400	(4) - 500KCMILS & #3G	3"
450	2 RUNS (4) - 4/0 & #2G	3"
500	2 RUNS (4) - 250KCMILS & #2G	3"
600	2 RUNS (4) - 350KCMILS & #1G	3"
700	2 RUNS (4) - 500KCMILS & 1/0G	3"
800	2 RUNS (4) - 600KCMILS & 1/0G	4"
1000	3 RUNS (4) - 400KCMILS & 2/0G	4"
1200	3 RUNS (4) - 600KCMILS & 3/0G	4"

ENVIRONMENTS FOR HEALTH ARCHITECTURE
501 Elm St, Ste 500, Dallas, TX 75202
e4harchitecture.com
888.781.8441 817.226.1917

© 2024 E4H - Environments For Health, LLC

CMC
CONWAY MEDICAL CENTER
with Novant Health

PROGRAM MANAGER
MEADOWS AND OHLY
1450 MATTHEWS TOWNSHIP PARKWAY
SUITE 210
540.589.5318

ARCHITECT
E4H ARCHITECTURE
817.226.1917

MEP ENGINEER
HARRELL DESIGN GROUP, PC
10720 SIKES PLACE, SUITE 100
CHARLOTTE, NC 28277
704.814.1320

STRUCTURAL ENGINEER
HART GAUGLER & ASSOCIATES
8350 N. CENTRAL EXPRESSWAY
SUITE 600
469.923.9225

CIVIL ENGINEER
DEVELOPMENT RESOURCE GROUP, LLC
4703 OLEANDER DRIVE
MYRTLE BEACH, SC 29577
843.839.3350

MEDICAL EQUIPMENT PLANNER
MAZZETTI+GBA
615.376.3108

CMC CONWAY MEDICAL CENTER
CMC Socastee FSED
6016 HIGHWAY 707
MYRTLE BEACH, SC

PROJECT NUMBER: 3024096.00
HDG PROJECT NUMBER: 24019

△	DATE	DESCRIPTION

SOUTH CAROLINA HARRELL DESIGN GROUP, PC No. C02713 CERTIFICATE OF AUTHORIZATION

NOT FOR CONSTRUCTION

ARCH NAME ARCH ##

ORIG SUBMISSION: 05.30.2025
CURRENT:

SHEET TITLE AND NUMBER:

EE6.01

ELECTRICAL ONE-LINE

THE LINE SHOWN ABOVE IS EXACTLY ONE INCH LONG AT FULL SCALE ON ORIGINAL ARCHITECT'S DRAWINGS

EQUIPMENT CONNECTION SCHEDULE

EQUIP LABEL	LOAD DESCRIPTION	VOLTAGE	Ø	HP	KVA	AMPS	MOCP	EM PWR	STARTER INFORMATION				DISCONNECT INFORMATION			RATING	DISCONNECT INFORMATION		CIRCUIT ID	CIRCUIT BREAKER		WIRE SIZE (H/N/G OR H/G)	CONDUIT SIZE	NOTES	EQUIP LABEL
									FURN	INSTALL	NEMA SIZE	TYPE	FURN	INSTALL	TYPE		POLES	FUSE SIZE		TRIP	POLES				
AP-1, AP-3, MAP-1, MAP-2	MED GAS PANELS	120 V	1	NA	0.24 kVA	2.0 A		YES	NA	NA	NA	NA	NA	NA	NA	NA	1	NA	EDLSL - 1	20 A	1	1-#12, 1-#12, 1-#12	3/4"C	1	AP-1, AP-3, MAP-1, MAP-2
AP-2	MED GAS PANELS	120 V	1	NA	0.24 kVA	2.0 A		YES	NA	NA	NA	NA	NA	NA	NA	NA	1	NA	IMLSL - 1	20 A	1	1-#12, 1-#12, 1-#12	3/4"C	1	AP-2
AS-1	BUILDING SIGNAGE	120 V	1	NA	0.00 kVA	0.0 A		YES	NA	NA	NA	NA	NA	NA	NA	NA	1	NA	EDEQL - 12	20 A	1	1-#12, 1-#12, 1-#12	3/4"C	1	AS-1
AS-2	BUILDING SIGNAGE	120 V	1	NA	0.00 kVA	0.0 A		YES	NA	NA	NA	NA	NA	NA	NA	NA	1	NA	EDEQL - 14	20 A	1	1-#12, 1-#12, 1-#12	3/4"C	1	AS-2
AS-3	BUILDING SIGNAGE	120 V	1	NA	0.00 kVA	0.0 A		YES	NA	NA	NA	NA	NA	NA	NA	NA	1	NA	EDEQL - 16	20 A	1	1-#12, 1-#12, 1-#12	3/4"C	1	AS-3
AS-4	ROAD SIGNAGE	120 V	1	NA	0.00 kVA	0.0 A		YES	NA	NA	NA	NA	NA	NA	NA	NA	1	NA	EDEQL - 18	20 A	1	1-#10, 1-#10, 1-#10	3/4"C	1	AS-4
BC-1	BATTERY CHARGER	120 V	1	NA	0.10 kVA	0.0 A		YES	NA	NA	NA	NA	NA	NA	NA	NA	1	NA	GEN PANEL - 2	20 A	1	1-#12, 1-#12, 1-#12	3/4"C	1	BC-1
CT	CT MDU	480 V	3	NA	66.60 kVA	0.0 A		YES	NA	NA	NA	NA	EQUIP	D26	SEE NOTES	NA	3	NA	EDEQH - 8,10,12	125 A	3	3-#1, 1-#1, 1-#6	3/4"C	1,2	CT
CU-1-1	MINI-SPLIT	208 V	1	NA	1.39 kVA	6.7 A	15 A	YES	NA	NA	NA	NA	D26	D26	NFS	30	3	NA	EDEQL - 7,9	20 A	2	2-#12, 1-#12, 1-#12	3/4"C	1	CU-1-1
CU-1-2	MINI-SPLIT	208 V	1	NA	1.39 kVA	6.7 A	15 A	YES	NA	NA	NA	NA	D26	D26	NFS	30	3	NA	EDEQL - 8,10	15 A	2	2-#12, 1-#12, 1-#12	3/4"C	1	CU-1-2
DH-1-1-1	DUCT HEATER	480 V	1	NA	35.00 kVA	42.0 A		YES	NA	NA	NA	NA	NA	NA	NA	NA	1	NA	EDEQH2 - 33,35,37	60 A	3	3-#4, 1-#10	3/4"C	1	DH-1-1-1
DH-1-1-2	DUCT HEATER	480 V	1	NA	35.00 kVA	42.0 A		YES	NA	NA	NA	NA	NA	NA	NA	NA	3	NA	EDEQH2 - 32,34,36	60 A	3	3-#4, 1-#10	3/4"C	1	DH-1-1-2
DH-1-2-1	DUCT HEATER	480 V	1	NA	40.00 kVA	48.1 A		YES	NA	NA	NA	NA	NA	NA	NA	NA	3	NA	IMEH - 16,18,20	70 A	3	3-#4, 1-#4, 1-#8	3/4"C	1	DH-1-2-1
EF-1-1	EXHAUST FAN	480 V	3	3	3.99 kVA	4.8 A		YES	D23	D26	NA	VSMC	D23	D26	NFS	30	3	NA	EDEQH - 14,16,18	15 A	3	3-#12, 1-#12	3/4"C	1	EF-1-1
EF-1-2	EXHAUST FAN	120 V	1	3/4	1.66 kVA	13.8 A		YES	D23	D26	NA	VSMC	D23	D26	NFS	30	1	NA	EDEQL - 6	25 A	1	1-#10, 1-#10, 1-#10	3/4"C	1	EF-1-2
EF-ISO	EXHAUST FAN	480 V	3	1/4	1.66 kVA	0.1 A		YES	D23	D26	NA	VSMC	D23	D26	NFS	30	3	NA	EDEQH - 19,21,23	20 A	3	3-#12, 1-#12	3/4"C	1	EF-ISO
EF-MG	EXHAUST FAN	120 V	1	1/10	0.80 kVA	0.1 A		YES	D23	D26	NA	VSMC	D23	D26	MTS	20	1	NA	EDEQL2 - 1	15 A	1	1-#12, 1-#12, 1-#12	3/4"C	1	EF-MG
EF-PURGE	EXHAUST FAN	120 V	1	1/4	0.70 kVA	5.8 A		YES	D23	D26	NA	VSMC	D23	D26	NFS	30	1	NA	IMEL - 1	20 A	1	1-#12, 1-#12, 1-#12	3/4"C	1	EF-PURGE
EL-1	EXAM 1 EXAM LIGHT	120 V	1	NA	0.40 kVA	0.0 A		YES	NA	NA	NA	NA	NA	NA	NA	NA	1	NA	EDCRL - 4	20 A	1	1-#12, 1-#12, 1-#12	3/4"C	1	EL-1
EL-2	EXAM 2 EXAM LIGHT	120 V	1	NA	0.40 kVA	0.0 A		YES	NA	NA	NA	NA	NA	NA	NA	NA	1	NA	EDCRL - 6	20 A	1	1-#12, 1-#12, 1-#12	3/4"C	1	EL-2
EL-3	EXAM 3 EXAM LIGHT	120 V	1	NA	0.00 kVA	0.0 A		YES	NA	NA	NA	NA	NA	NA	NA	NA	1	NA	EDCRL - 10	20 A	1	1-#12, 1-#12, 1-#12	3/4"C	1	EL-3
EL-4	EXAM 4 LIGHT	120 V	1	NA	0.00 kVA	0.0 A		YES	NA	NA	NA	NA	NA	NA	NA	NA	1	NA	EDCRL - 12	20 A	1	1-#12, 1-#12, 1-#12	3/4"C	1	EL-4
EL-5	EXAM 5 LIGHT	120 V	1	NA	0.40 kVA	0.0 A		YES	NA	NA	NA	NA	NA	NA	NA	NA	1	NA	EDCRL - 16	20 A	1	1-#12, 1-#12, 1-#12	3/4"C	1	EL-5
EL-ISO, PM-1, PS-7	ISO EXAM LIGHT, ROOM PRESSURE MONITOR, PLUMBING SENSOR	120 V	1	NA	0.00 kVA	0.0 A		YES	NA	NA	NA	NA	NA	NA	NA	NA	1	NA	EDCRL - 18	20 A	1	1-#12, 1-#12, 1-#12	3/4"C	1	EL-ISO, PM-1, PS-7
EL-SE	SECURE EXAM LIGHT	120 V	1	NA	0.00 kVA	0.0 A		YES	NA	NA	NA	NA	NA	NA	NA	NA	1	NA	EDCRL - 14	20 A	1	1-#12, 1-#12, 1-#12	3/4"C	1	EL-SE
EL-TA, PM-2	TRAUMA EXAM LIGHT, ROOM PRESSURE MONITOR	120 V	1	NA	0.00 kVA	0.0 A		YES	NA	NA	NA	NA	NA	NA	NA	NA	1	NA	EDCRL - 19	20 A	1	1-#12, 1-#12, 1-#12	3/4"C	1	EL-TA, PM-2
EL-TR	TRIAGE EXAM LIGHT	120 V	1	NA	0.40 kVA	0.0 A		YES	NA	NA	NA	NA	NA	NA	NA	NA	1	NA	EDCRL - 2	20 A	1	1-#12, 1-#12, 1-#12	3/4"C	1	EL-TR
EWH-1	WATER HEATER	480 V	3	NA	12.00 kVA	14.4 A		YES	NA	NA	NA	NA	D26	D26	NFS	30	3	NA	EDEQH - 2,4,6	20 A	3	3-#12, 1-#12	3/4"C	1	EWH-1
EWH-2	WATER HEATER	480 V	3	NA	12.00 kVA	14.4 A		YES	NA	NA	NA	NA	D26	D26	NFS	30	3	NA	EDEQH - 7,9,11	20 A	3	3-#12, 1-#12	3/4"C	1	EWH-2
FSAC-1	FIRE PROTECTION AIR COMPRESSOR	120 V	1	1/3	0.00 kVA	0.0 A		YES	D21	D26	NA	NA	D26	D26	MTS	15	1	NA	EDLSL - 3	15 A	1	1-#12, 1-#12, 1-#12	3/4"C	1	FSAC-1
FSD	FIRE SMOKE DAMPERS	120 V	1	NA	0.00 kVA	0.0 A		YES	NA	NA	NA	NA	NA	NA	NA	NA	1	NA	EDLSL - 5	20 A	1	1-#12, 1-#12, 1-#12	3/4"C	1	FSD
GA-1	GENERATOR ANNUCIATOR PANEL	120 V	1	NA	0.00 kVA	0.0 A		YES	NA	NA	NA	NA	NA	NA	NA	NA	1	NA	EDLSL - 2	20 A	1	1-#12, 1-#12, 1-#12	3/4"C	1	GA-1
HB-1	HOT BOX	120 V	1	NA	0.00 kVA	0.0 A		YES	NA	NA	NA	NA	NA	NA	NA	NA	1	NA	EDEQL - 17	20 A	1	1-#12, 1-#12, 1-#12	3/4"C	1	HB-1
HB-2	HOT BOX	120 V	1	NA	0.00 kVA	0.0 A		YES	NA	NA	NA	NA	NA	NA	NA	NA	1	NA	EDEQL - 19	20 A	1	1-#12, 1-#12, 1-#12	3/4"C	1	HB-2
JC-1	JACKET HEATER	208 V	1	NA	3.00 kVA	14.4 A		YES	NA	NA	NA	NA	NA	NA	NA	NA	1	NA	GEN PANEL - 1,3	20 A	2	2-#12, 1-#12, 1-#12	3/4"C	1	JC-1
MRI	MRI EQUIPMENT	480 V	3	NA	0.00 kVA	0.0 A		YES	NA	NA	NA	NA	EQUIP	D26	SEE NOTES	NA	1	NA	IMEH - 2,4,6	80 A	3	3-#3, 1-#3, 1-#8	3/4"C	1, 4	MRI
PS-1	PLUMBING SENSOR	120 V	1	NA	0.01 kVA	0.0 A		YES	NA	NA	NA	NA	NA	NA	NA	NA	1	NA	IMEL - 3	20 A	1	1-#12, 1-#12, 1-#12	3/4"C	1	PS-1
PS-2, PS-3	PLUMBING SENSOR	120 V	1	NA	0.00 kVA	0.0 A		YES	NA	NA	NA	NA	NA	NA	NA	NA	1	NA	EDCRL2 - 5	20 A	1	1-#12, 1-#12, 1-#12	3/4"C	1	PS-2, PS-3
PS-4	PLUMBING SENSOR	120 V	1	NA	0.00 kVA	0.0 A		YES	NA	NA	NA	NA	NA	NA	NA	NA	1	NA	EDCRL2 - 7	20 A	1	1-#12, 1-#12, 1-#12	3/4"C	1	PS-4
PS-5	PLUMBING SENSOR	120 V	1	NA	0.00 kVA	0.0 A		YES	NA	NA	NA	NA	NA	NA	NA	NA	1	NA	EDCRL2 - 30	20 A	1	1-#12, 1-#12, 1-#12	3/4"C	1	PS-5
PS-6	PLUMBING SENSOR	120 V	1	NA	0.00 kVA	0.0 A		YES	NA	NA	NA	NA	NA	NA	NA	NA	1	NA	EDCRL2 - 6	20 A	1	1-#12, 1-#12, 1-#12	3/4"C	1	PS-6
PS-8	PLUMBING SENSOR	120 V	1	NA	0.00 kVA	0.0 A		YES	NA	NA	NA	NA	NA	NA	NA	NA	1	NA	EDCRL2 - 9	20 A	1	1-#12, 1-#12, 1-#12	3/4"C	1	PS-8
PS-9	PLUMBING SENSOR	120 V	1	NA	0.00 kVA	0.0 A		YES	NA	NA	NA	NA	NA	NA	NA	NA	1	NA	EDCRL2 - 12	20 A	1	1-#12, 1-#12, 1-#12	3/4"C	1	PS-9
RP-1	RECIRCULATING PUMP	120 V	1	1/2	0.35 kVA	2.9 A		YES	NA	NA	NA	NA	D26	D26	MTS	20	1	NA	EDEQL - 1	20 A	1	1-#12, 1-#12, 1-#12	3/4"C	1	RP-1
RTU-1-1	ROOF TOP UNIT	480 V	3	NA	77.95 kVA	93.8 A	150 A	YES	EQUIP	EQUIP	NA	NA	EQUIP	EQUIP	NA	250	3	NA	EDEQH - 13,15,17	150 A	3	3-#1/0, 1-#6	3/4"C	1	RTU-1-1
RTU-1-2	ROOF TOP UNIT	480 V	3	NA	43.79 kVA	52.7 A	90 A	YES	EQUIP	EQUIP	NA	NA	EQUIP	EQUIP	NA	150	3	NA	NH - 5,7,9	90 A	3	3-#3, 1-#8	3/4"C	1	RTU-1-2
UH-1-1	UNIT HEATER	208 V	3	1/4	10.00 kVA	12.0 A		YES	NA	NA	NA	NA	D26	D26	NFS	30	3	NA	EDEQL - 11,13,15	35 A	3	3-#8, 1-#10	3/4"C	1	UH-1-1
VAV-ED-1	VAV	480 V	3	NA	5.00 kVA	6.0 A		YES	NA	NA	NA	NA	NA	NA	NA	NA	1	NA	EDEQH - 26,28,30	20 A	3	3-#12, 1-#12	3/4"C	1	VAV-ED-1
VAV-ED-2	VAV	480 V	3	NA	6.00 kVA	7.2 A		YES	NA	NA	NA	NA	NA	NA	NA	NA	1	NA	EDEQH - 31,33,35	20 A	3	3-#12, 1-#12	3/4"C	1	VAV-ED-2
VAV-ED-3	VAV	480 V	3	NA	12.50 kVA	15.0 A		YES	NA	NA	NA	NA	NA	NA	NA	NA	1	NA	EDEQH - 32,34,36	20 A	3	3-#12, 1-#12	3/4"C	1	VAV-ED-3
VAV-ED-4	VAV	277 V	1	NA	2.00 kVA	7.2 A		YES	NA	NA	NA	NA	NA	NA	NA	NA	1	NA	EDEQH - 37	20 A	1	1-#12, 1-#12, 1-#12	3/4"C	1	VAV-ED-4
VAV-ED-5	VAV	277 V	1	NA	3.00 kVA	10.8 A		YES	NA	NA	NA	NA	NA	NA	NA	NA	1	NA	EDEQH - 38	20 A	1	1-#12, 1-#12, 1-#12	3/4"C	1	VAV-ED-5
VAV-ED-6	VAV	277 V	1	NA	2.00 kVA	7.2 A		YES	NA	NA	NA	NA	NA	NA	NA	NA	1	NA	EDEQH - 39	20 A	1	1-#12, 1-#12, 1-#12	3/4"C	1	VAV-ED-6
VAV-ED-7	VAV	480 V	3	NA	5.50 kVA	6.6 A		YES	NA	NA	NA	NA	NA	NA	NA	NA	3	NA	EDEQH2 - 19,21,23	20 A	3	3-#12, 1-#12	3/4"C	1	VAV-ED-7
VAV-ED-8	VAV	480 V	3	NA	6.00 kVA	7.2 A		YES	NA	NA	NA	NA	NA	NA	NA	NA	3	NA	EDEQH2 - 22,24,26	20 A	3	3-#12, 1-#12	3/4"C	1	VAV-ED-8
VAV-ED-9	VAV	277 V	1	NA	3.50 kVA	12.6 A		YES	NA	NA	NA	NA	NA	NA	NA	NA	1	NA	EDEQH2 - 30	20 A	1	1-#12, 1-#12, 1-#12	3/4"C	1	VAV-ED-9
VAV-ED-10	VAV	277 V	1	NA	3.50 kVA	12.6 A		YES	NA	NA	NA	NA	NA	NA	NA	NA	1	NA	EDEQH2 - 31	20 A	1	1-#12, 1-#12, 1-#12	3/4"C	1	VAV-ED-10
VAV-ED-11	VAV	480 V	3	NA	4.50 kVA	5.4 A		YES	NA	NA	NA	NA	NA	NA	NA	NA	3	NA	EDEQH2 - 16,18,20	20 A	3	3-#12, 1-#12	3/4"C	1	VAV-ED-11
VAV-ED-12	VAV	277 V	1	NA	2.50 kVA	9.0 A		YES	NA	NA	NA	NA	NA	NA	NA	NA	1	NA	EDEQH2 - 14	20 A	1	1-#12, 1-#12, 1-#12	3/4"C	1	VAV-ED-12
VAV-ED-13	VAV	277 V	1	NA	3.50 kVA	12.6 A		YES	NA	NA	NA	NA	NA	NA	NA	NA	1	NA	EDEQH2 - 28	20 A	1	1-#12, 1-#12, 1-#12	3/4"C	1	VAV-ED-13
VAV-ED-14	VAV	480 V	3	NA	7.00 kVA	8.4 A		YES	NA	NA	NA	NA	NA	NA	NA	NA	3	NA	EDEQH2 - 13,15,17	20 A	3	3-#12, 1-#12	3/4"C	1	VAV-ED-14
VAV-ED-15	VAV	480 V	3	NA	6.00 kVA	7.2 A		YES	NA	NA	NA	NA	NA	NA	NA	NA	3	NA	EDEQH2 - 25,27,29	20 A	3	3-#12, 1-#12	3/4"C	1	VAV-ED-15
VAV-ED-16	VAV	480 V	3	NA	6.50 kVA	7.8 A		YES	NA	NA	NA	NA	NA	NA	NA	NA	3	NA	EDEQH2 - 2,4,6	20 A	3	3-#12, 1-#12	3/4"C	1	VAV-ED-16
VAV-ED-17	VAV	480 V	3	NA	4.50 kVA	5.4 A		YES	NA	NA	NA	NA	NA	NA	NA	NA	3	NA	EDEQH2 - 7,9,11	20 A	3	3-#12, 1-#12	3/4"C	1	VAV-ED-17
VAV-ED-18	VAV	480 V	3	NA	13.00 kVA	15.6 A		YES	NA	NA	NA	NA	NA	NA	NA	NA	3	NA	EDEQH2 - 8,10,12	20 A	3	3-#12, 1-#12	3/4"C	1	VAV-ED-18
VAV-ED-19	VAV	480 V	3	NA	14.00 kVA	16.9 A		YES	NA	NA	NA	NA	NA	NA	NA	NA	3	NA	EDEQH2 - 1,3,5	30 A	3	3-#10, 1-#10	3/4"C	1	VAV-ED-19
VAV-ED-20	VAV	480 V	3	NA	4.50 kVA	5.4 A		YES	NA	NA	NA	NA	NA	NA	NA	NA	3	NA	IMEH - 10,12,14	20 A	3	3-#12, 1-#12, 1-#12	3/4"C	1	VAV-ED-20
VAV-ED-21	VAV	277 V	1	NA	3.00 kVA	10.8 A		YES	NA	NA	NA	NA	NA	NA	NA	NA	1	NA	IMEH - 11	20 A	1	1-#12, 1-#12, 1-#12	3/4"C	1	VAV-ED-21
VAV-ED-22	VAV	277 V	1	NA	2.00 kVA	7.2 A		YES	NA	NA	NA	NA	NA	NA	NA	NA	1	NA	IMEH - 9	20 A	1	1-#12, 1-#12, 1-#12	3/4"C	1	VAV-ED-22
VAV-ED-23	VAV	277 V	1	NA	3.50 kVA	12.6 A		YES	NA	NA	NA	NA	NA	NA	NA	NA	1	NA	IMEH - 8	20 A	1	1-#12, 1-#12, 1-#12	3/4"C	1	VAV-ED-23
VAV-ED-24	VAV	480 V	3	NA	4.50 kVA	5.4 A		YES	NA	NA	NA	NA	NA	NA	NA	NA	3	NA	IMEH - 13,15,17	20 A	3	3-#12, 1-#12, 1-#12	3/4"C	1	VAV-ED-24
VAV-ED-25	VAV	120 V	3	NA	0.11 kVA	0.1 A		YES	NA	NA	NA	NA	NA	NA	NA	NA	1	NA	EDEQL - 2	20 A	1	1-#12, 1-#12, 1-#12	3/4"C	1	VAV-ED-25
VP-1	MED VACUUM	480 V	3	(2) 3	7.98 kVA	9.6 A		YES	EQUIP	EQUIP	NA	NA	D26	D26	NFS	30	3	NA	EDEQH - 1,3,5	20 A	3	3-#12, 1-#12	3/4"C	1	VP-1
XRAY	XRAY EQUIPMENT	480 V	3	NA	30.00 kVA	36.1 A	80 A	YES	NA	NA	NA	NA	D26	D26	ECB	80	3	NA	EDEQH - 20,22,24	80 A	3	3-#3, 1-#3, 1-#8	3/4"C	1,3	XRAY

NOTES:

1. DIVISION 26 TO MAKE FINAL CONNECTIONS.
2. EQUIPMENT PROVIDED MDU DISCONNECT PANEL. PROVIDE DEDICATED 1/0 INSULATED COPPER GROUND WIRE FROM THE POWER SOURCE TO MDP, AND FROM THE MDP AND PDU
3. PROVIDE SHUNT TRIP KIT
4. EQUIPMENT PROVIDED MDU DISCONNECT PANEL.

ABBREVIATIONS

VSMC	VARIABLE SPEED MOTOR CONTROLLER (VFD)
FS	FUSIBLE SWITCH
NFS	NON-FUSIBLE SWITCH
EQUIP	FURNISHED WITH EQUIPMENT
D23	DIVISION 23
D26	DIVISION 26
MTS	MOTOR RATED TOGGLE SWITCH
TS	TOGGLE SWITCH
FVNR	FULL VOLTAGE NON-REVERSING
MOCB	MAGNETIC-ONLY CIRCUIT BREAKER
MC	MAGNETIC CONTACTOR
MF	MANUFACTURER RECOMMENDED FUSE SIZE
N/A	NOT APPLICABLE
MCA	MINIMUM CIRCUIT AMPS
MOCP	MAXIMUM OVERCURRENT PROTECTION
FURN	FURNISHED
INST	INSTALLED
HP	HORSEPOWER
KVA	KILO-VOLT-AMPS
EXIST	EXISTING

ENVIRONMENTS FOR HEALTH ARCHITECTURE
e4h
888.781.8441 817.226.1917 501 Elm St., Ste 500, Dallas, TX 75202 e4harchitecture.com

© 2024 E4H - Environments For Health, LLC

CMC CONWAY MEDICAL CENTER with Novant Health

PROGRAM MANAGER
MEADOWS AND OHLY
1450 MATTHEWS TOWNSHIP PARKWAY
SUITE 210
540.389.5318
Meadows|Ohly

ARCHITECT
E4H ARCHITECTURE
817.226.1917

MEP ENGINEER
HARRELL DESIGN GROUP, PC
10720 SIKES PLACE, SUITE 100
CHARLOTTE, NC 28277
704.814.1320
HARRELL

STRUCTURAL ENGINEER
HART GAUGLER & ASSOCIATES
830N. CENTRAL EXPRESSWAY
SUITE 600
469.923.9225

CIVIL ENGINEER
DEVELOPMENT RESOURCE GROUP, LLC
4703 OLEANDER DRIVE
MYRTLE BEACH, SC 29577
843.839.3050
drg

MEDICAL EQUIPMENT PLANNER
MAZZETTI+GBA
615.376.3108
MAZZETTI+GBA

CMC CONWAY MEDICAL CENTER
CMC Socastee FSED
6016 HIGHWAY 707
MYRTLE BEACH, SC

PROJECT NUMBER: 3024096.00 HDG PROJECT NUMBER: 24019

Δ	DATE	DESCRIPTION

SOUTH CAROLINA HARRELL DESIGN GROUP, PC No. 0202713 CERTIFICATE OF AUTHORIZATION

NOT FOR CONSTRUCTION

ARCH NAME ARCH ##

ORIG SUBMISSION: 05.30.2025

CURRENT:

SHEET TITLE AND NUMBER:

EE7.01

ELECTRICAL CONNECTION SCHEDULE

THE LINE SHOWN ABOVE IS EXACTLY ONE INCH LONG AT THIS SHEETS ORIGINAL PAGE SIZE

EDLSH

SERVED FROM: EDP | AMPERE RATING: 125 A | VOLTAGE (L-L): 480 V | PHASE: 3
LOCATION: ELEC 1139 | MAIN TYPE: MCB | VOLTAGE (L-N): 277 V | WIRE: 4
MOUNTING: SURFACE | LUG OPTIONS: | MIN. KAIC: 22

REMARKS:

#	TRIP	POLE	LOAD DESCRIPTION	CODE	WIRE SIZES (H/N/G OR H/G)	COND SIZE	A	A	B	B	C	C	COND SIZE	WIRE SIZES (H/N/G OR H/G)	CODE	LOAD DESCRIPTION	POLE	TRIP	#
1	20 A	1	EMERGENCY/EGRESS...	L	1-#12, 1-#12, 1-#12	3/4"C	0.9	0.2											2
3										1.6			1 1/4"C	3-#4,1-#8		T-EDLSL (45)	3	70 A	4
5												1.5							6
7																			8
9																			10
11																			12
13																			14
15																			16
17																			18
19																			20
21																			22
23																			24
25																			26
27																			28
29																			30
31																			32
33																			34
35																			36
37																			38
39																			40
41																			42

	A	B	C
TOTAL LOAD :	1.1 kVA	1.6 kVA	1.5 kVA
TOTAL AMPS :	4 A	6 A	6 A

LOAD CATEGORY	CONNECTED LOAD (KVA)	X DEMAND FACTOR	= DEMAND (KVA)
A - HOSPITAL LIGHTING	0.00 kVA	0.00%	0.00 kVA
C - SPACE COOLING	0.00 kVA	0.00%	0.00 kVA
D - OTHER HVAC LOADS	0.00 kVA	0.00%	0.00 kVA
E - EQUIPMENT LOAD	0.00 kVA	0.00%	0.00 kVA
H - SPACE HEATING	0.00 kVA	0.00%	0.00 kVA
L - GENERAL LIGHTING	0.60 kVA	125.00%	0.75 kVA
M - MISC. CONTINUOUS	0.00 kVA	0.00%	0.00 kVA
N - MISC. NONCONTINUOUS	3.34 kVA	65.00%	2.17 kVA
R - RECEPTACLES	0.00 kVA	0.00%	0.00 kVA

PANEL TOTALS	
CONNECTED LOAD (KVA):	4.22 kVA
DEMAND LOAD (KVA):	3.27 kVA
DEMAND AMPS:	5 A
TOTAL:	4 A
+RESERVED FUTURE CAPACITY	1 A
TOTAL UNBALANCED 3 PHASE NEC ART. 220 FEEDER SIZING LOAD:	5 A
MIN NEC ART.220 REQUIRED OVERCURENT PROTECTION:	40 A

EDLSL

SERVED FROM: T-EDLSL (45) | AMPERE RATING: 125 A | VOLTAGE (L-L): 208 V | PHASE: 3
LOCATION: ELEC 1139 | MAIN TYPE: MCB | VOLTAGE (L-N): 120 V | WIRE: 4
MOUNTING: SURFACE | LUG OPTIONS: | MIN. KAIC: 22

REMARKS:

#	TRIP	POLE	LOAD DESCRIPTION	CODE	WIRE SIZES (H/N/G OR H/G)	COND SIZE	A	A	B	B	C	C	COND SIZE	WIRE SIZES (H/N/G OR H/G)	CODE	LOAD DESCRIPTION	POLE	TRIP	#
1	20 A	1	AP-1, AP-3, MAP-1, MAP-2	N	1-#12, 1-#12, 1-#12	3/4"C	0.2	0.0					3/4"C	1-#12, 1-#12, 1-#12	N	GA-1	1	20 A	2
3	15 A	1	FSAC-1	N	1-#12, 1-#12, 1-#12	3/4"C			0.0	1.6									4
5	20 A	1	FSDS		1-#12, 1-#12, 1-#12	3/4"C					0.0	1.5	1 1/4"C	3-#4, 1-#4, 1-#10		GEN PANEL	3	60 A	6
7								0.0											8
9																			10
11																			12
13																			14
15																			16
17																			18
19																			20
21																			22
23																			24
25																			26
27																			28
29																			30
31																			32
33																			34
35																			36
37																			38
39																			40
41																			42

	A	B	C
TOTAL LOAD :	0.2 kVA	1.6 kVA	1.5 kVA
TOTAL AMPS :	2 A	15 A	14 A

LOAD CATEGORY	CONNECTED LOAD (KVA)	X DEMAND FACTOR	= DEMAND (KVA)
A - HOSPITAL LIGHTING	0.00 kVA	0.00%	0.00 kVA
C - SPACE COOLING	0.00 kVA	0.00%	0.00 kVA
D - OTHER HVAC LOADS	0.00 kVA	0.00%	0.00 kVA
E - EQUIPMENT LOAD	0.00 kVA	0.00%	0.00 kVA
H - SPACE HEATING	0.00 kVA	0.00%	0.00 kVA
L - GENERAL LIGHTING	0.00 kVA	0.00%	0.00 kVA
M - MISC. CONTINUOUS	0.00 kVA	0.00%	0.00 kVA
N - MISC. NONCONTINUOUS	3.34 kVA	65.00%	2.17 kVA
R - RECEPTACLES	0.00 kVA	0.00%	0.00 kVA

PANEL TOTALS	
CONNECTED LOAD (KVA):	3.34 kVA
DEMAND LOAD (KVA):	2.17 kVA
DEMAND AMPS:	9 A
TOTAL:	6 A
+RESERVED FUTURE CAPACITY	2 A
TOTAL UNBALANCED 3 PHASE NEC ART. 220 FEEDER SIZING LOAD:	8 A
MIN NEC ART.220 REQUIRED OVERCURENT PROTECTION:	40 A

EDEQH

SERVED FROM: EDP | AMPERE RATING: 800 A | VOLTAGE (L-L): 480 V | PHASE: 3
LOCATION: ELEC 1139 | MAIN TYPE: MCB | VOLTAGE (L-N): 277 V | WIRE: 4
MOUNTING: SURFACE | LUG OPTIONS: | MIN. KAIC: 22

REMARKS:

#	TRIP	POLE	LOAD DESCRIPTION	CODE	WIRE SIZES (H/N/G OR H/G)	COND SIZE	A	A	B	B	C	C	COND SIZE	WIRE SIZES (H/N/G OR H/G)	CODE	LOAD DESCRIPTION	POLE	TRIP	#
1							2.7	4.0											2
3	20 A	3	VP-1	N	3-#12, 1-#12	3/4"C			2.7	4.0			3/4"C	3-#12, 1-#12	N	EWH-1	3	20 A	4
5											2.7	4.0							6
7							4.0	22.2											8
9	20 A	3	EWH-2	N	3-#12, 1-#12	3/4"C			4.0	22.2			2"C	3-#1, 1-#1, 1-#6	N	CT	3	125 A	10
11											4.0	22.2							12
13							26.0	1.3											14
15	150 A	3	RTU-1-1	C	3-#1/0, 1-#6	2"C			26.0	1.3			3/4"C	3-#12, 1-#12	N	EF-1-1	3	15 A	16
17											26.0	1.3							18
19							0.6	10.0											20
21	20 A	3	EF-ISO	D	3-#12, 1-#12	3/4"C			0.6	10.0			1 1/4"C	3-#3, 1-#3, 1-#8	N	XRAY	3	80 A	22
23											0.6	10.0							24
25							6.7	1.7											26
27	125 A	3	T-EDEQL (75)		3-#1,1-#6	2"C			6.2	1.7			3/4"C	3-#12, 1-#12	N	VAV-ED-1	3	20 A	28
29											8.0	1.7							30
31							2.0	4.2											32
33	20 A	3	VAV-ED-2	N	3-#12, 1-#12	3/4"C			2.0	4.2			3/4"C	3-#12, 1-#12	N	VAV-ED-3	3	20 A	34
35											2.0	4.2							36
37	20 A	1	VAV-ED-4	N	1-#12, 1-#12, 1-#12	3/4"C	2.0	3.0					3/4"C	1-#12, 1-#12, 1-#12	N	VAV-ED-5	1	20 A	38
39	20 A	1	VAV-ED-6	N	1-#12, 1-#12, 1-#12	3/4"C			2.0										40
41																			42

	A	B	C
TOTAL LOAD :	141.9 kVA	136.0 kVA	135.7 kVA
TOTAL AMPS :	512 A	491 A	490 A

LOAD CATEGORY	CONNECTED LOAD (KVA)	X DEMAND FACTOR	= DEMAND (KVA)
A - HOSPITAL LIGHTING	0.00 kVA	0.00%	0.00 kVA
C - SPACE COOLING	77.95 kVA	100.00%	77.95 kVA
D - OTHER HVAC LOADS	7.31 kVA	100.00%	7.31 kVA
E - EQUIPMENT LOAD	0.00 kVA	0.00%	0.00 kVA
H - SPACE HEATING	82.78 kVA	125.00%	103.48 kVA
L - GENERAL LIGHTING	0.00 kVA	0.00%	0.00 kVA
M - MISC. CONTINUOUS	30.00 kVA	100.00%	30.00 kVA
N - MISC. NONCONTINUOUS	215.54 kVA	65.00%	140.10 kVA
R - RECEPTACLES	0.00 kVA	0.00%	0.00 kVA

PANEL TOTALS	
CONNECTED LOAD (KVA):	413.58 kVA
DEMAND LOAD (KVA):	358.84 kVA
DEMAND AMPS:	497 A
TOTAL:	432 A
+RESERVED FUTURE CAPACITY	108 A
TOTAL UNBALANCED 3 PHASE NEC ART. 220 FEEDER SIZING LOAD:	540 A
MIN NEC ART.220 REQUIRED OVERCURENT PROTECTION:	800 A

EDEQH2

SERVED FROM: EDEQH | AMPERE RATING: 800 A | VOLTAGE (L-L): 480 V | PHASE: 3
LOCATION: ELEC 1139 | MAIN TYPE: MCB | VOLTAGE (L-N): 277 V | WIRE: 4
MOUNTING: SURFACE | LUG OPTIONS: | MIN. KAIC: 22

REMARKS:

#	TRIP	POLE	LOAD DESCRIPTION	CODE	WIRE SIZES (H/N/G OR H/G)	COND SIZE	A	A	B	B	C	C	COND SIZE	WIRE SIZES (H/N/G OR H/G)	CODE	LOAD DESCRIPTION	POLE	TRIP	#
1							4.7	2.2											2
3	30 A	3	VAV-ED-19	N	3-#10, 1-#10	3/4"C			4.7	2.2			3/4"C	3-#12, 1-#12	N	VAV-ED-16	3	20 A	4
5											4.7	2.2							6
7							1.5	4.3											8
9	20 A	3	VAV-ED-17	N	3-#12, 1-#12	3/4"C			1.5	4.3			3/4"C	3-#12, 1-#12	N	VAV-ED-18	3	20 A	10
11											1.5	4.3							12
13							2.3	2.5					3/4"C	1-#12, 1-#12, 1-#12	N	VAV-ED-12	1	20 A	14
15	20 A	3	VAV-ED-14	N	3-#12, 1-#12	3/4"C			2.3	1.5									16
17											2.3	1.5	3/4"C	3-#12, 1-#12	N	VAV-ED-11	3	20 A	18
19							1.8	1.5											20
21	20 A	3	VAV-ED-7	N	3-#12, 1-#12	3/4"C			1.8	2.0									22
23											1.8	2.0	3/4"C	3-#12, 1-#12	N	VAV-ED-8	3	20 A	24
25							2.0	2.0											26
27	20 A	3	VAV-ED-15	N	3-#12, 1-#12	3/4"C			2.0	3.5			3/4"C	1-#12, 1-#12, 1-#12	N	VAV-ED-13	1	20 A	28
29											2.0	3.5	3/4"C	1-#12, 1-#12, 1-#12	N	VAV-ED-9	1	20 A	30
31	20 A	1	VAV-ED-10	N	1-#12, 1-#12, 1-#12	3/4"C	3.5	11.7											32
33									11.7	11.7			1 1/4"C	3-#4, 1-#10	H	DH-1-1-2	3	60 A	34
35	60 A	3	DH-1-1	H	3-#4, 1-#10	1 1/4"C					11.7	11.7							36
37							11.7												38
39																			40
41																			42

	A	B	C
TOTAL LOAD :	51.7 kVA	49.2 kVA	49.2 kVA
TOTAL AMPS :	187 A	177 A	177 A

LOAD CATEGORY	CONNECTED LOAD (KVA)	X DEMAND FACTOR	= DEMAND (KVA)
A - HOSPITAL LIGHTING	0.00 kVA	0.00%	0.00 kVA
C - SPACE COOLING	0.00 kVA	0.00%	0.00 kVA
D - OTHER HVAC LOADS	0.00 kVA	0.00%	0.00 kVA
E - EQUIPMENT LOAD	0.00 kVA	0.00%	0.00 kVA
H - SPACE HEATING	70.00 kVA	125.00%	87.50 kVA
L - GENERAL LIGHTING	0.00 kVA	0.00%	0.00 kVA
M - MISC. CONTINUOUS	0.00 kVA	0.00%	0.00 kVA
N - MISC. NONCONTINUOUS	80.00 kVA	65.00%	52.00 kVA
R - RECEPTACLES	0.00 kVA	0.00%	0.00 kVA

PANEL TOTALS	
CONNECTED LOAD (KVA):	150.00 kVA
DEMAND LOAD (KVA):	139.50 kVA
DEMAND AMPS:	180 A
TOTAL:	168 A
+RESERVED FUTURE CAPACITY	42 A
TOTAL UNBALANCED 3 PHASE NEC ART. 220 FEEDER SIZING LOAD:	210 A
MIN NEC ART.220 REQUIRED OVERCURENT PROTECTION:	400 A

EDEQL

SERVED FROM: T-EDEQL (75) | AMPERE RATING: 225 A | VOLTAGE (L-L): 208 V | PHASE: 3
LOCATION: ELEC 1139 | MAIN TYPE: MCB | VOLTAGE (L-N): 120 V | WIRE: 4
MOUNTING: SURFACE | LUG OPTIONS: | MIN. KAIC: 22

REMARKS:

#	TRIP	POLE	LOAD DESCRIPTION	CODE	WIRE SIZES (H/N/G OR H/G)	COND SIZE	A	A	B	B	C	C	COND SIZE	WIRE SIZES (H/N/G OR H/G)	CODE	LOAD DESCRIPTION	POLE	TRIP	#
1	20 A	1	RP-1	N	1-#12, 1-#12, 1-#12	3/4"C	0.4	0.1					3/4"C	1-#12, 1-#12, 1-#12		VAV-ED-25	1	20 A	2
3																			4
5												1.7	3/4"C	1-#10, 1-#10, 1-#10	D	EF-1-2	1	25 A	6
7	20 A	2	CU-1-1	H	2-#12, 1-#12, 1-#12	3/4"C	0.7	0.7					3/4"C	2-#12, 1-#12, 1-#12	C	CU-1-2	2	15 A	8
9									0.7	0.7									10
11											3.3	1.5	3/4"C	1-#12, 1-#12, 1-#12	...	AS-1	1	20 A	12
13	35 A	3	UH-1-1	H	3-#8, 1-#10	3/4"C	3.3	1.5					3/4"C	1-#12, 1-#12, 1-#12	M	AS-2	1	20 A	14
15									3.3	1.5			3/4"C	1-#12, 1-#12, 1-#12	M	AS-3	1	20 A	16
17	20 A	1	HB-1	R	1-#12, 1-#12, 1-#12	3/4"C					0.0	1.5	3/4"C	1-#10, 1-#10, 1-#10	M	AS-4	1	20 A	18
19	20 A	1	HB-2	R	1-#12, 1-#12, 1-#12	3/4"C	0.0												20
21																			22
23																			24
25																			26
27																			28
29																			30
31																			32
33																			34
35																			36
37																			38
39																			40
41																			42

	A	B	C
TOTAL LOAD :	6.7 kVA	6.2 kVA	8.0 kVA
TOTAL AMPS :	56 A	52 A	67 A

LOAD CATEGORY	CONNECTED LOAD (KVA)	X DEMAND FACTOR	= DEMAND (KVA)
A - HOSPITAL LIGHTING	0.00 kVA	0.00%	0.00 kVA
C - SPACE COOLING	0.00 kVA	0.00%	0.00 kVA
D - OTHER HVAC LOADS	1.66 kVA	100.00%	1.66 kVA
E - EQUIPMENT LOAD	0.00 kVA	0.00%	0.00 kVA
H - SPACE HEATING	12.78 kVA	125.00%	15.98 kVA
L - GENERAL LIGHTING	0.00 kVA	0.00%	0.00 kVA
M - MISC. CONTINUOUS	6.00 kVA	100.00%	6.00 kVA
N - MISC. NONCONTINUOUS	0.46 kVA	65.00%	0.30 kVA
R - RECEPTACLES	0.00 kVA	0.00%	0.00 kVA

PANEL TOTALS	
CONNECTED LOAD (KVA):	20.90 kVA
DEMAND LOAD (KVA):	23.93 kVA
DEMAND AMPS:	58 A
TOTAL:	66 A
+RESERVED FUTURE CAPACITY	17 A
TOTAL UNBALANCED 3 PHASE NEC ART. 220 FEEDER SIZING LOAD:	83 A
MIN NEC ART.220 REQUIRED OVERCURENT PROTECTION:	125 A

GEN PANEL

SERVED FROM: EDLSL | AMPERE RATING: 60 A | VOLTAGE (L-L): 208 V | PHASE: 3
LOCATION: | MAIN TYPE: MCB | VOLTAGE (L-N): 120 V | WIRE: 4
MOUNTING: SURFACE | LUG OPTIONS: | MIN. KAIC: 22

REMARKS:

#	TRIP	POLE	LOAD DESCRIPTION	CODE	WIRE SIZES (H/N/G OR H/G)	COND SIZE	A	A	B	B	C	C	COND SIZE	WIRE SIZES (H/N/G OR H/G)	CODE	LOAD DESCRIPTION	POLE	TRIP	#
1	20 A	2	JC-1	N	2-#12, 1-#12, 1-#12	3/4"C	1.5	0.1					3/4"C	1-#12, 1-#12, 1-#12	N	BC-1	1	20 A	2
3									1.5										4
5																			6
7																			8
9																			10
11																			12

	A	B	C
TOTAL LOAD :	1.6 kVA	1.5 kVA	0.0 kVA
TOTAL AMPS :	15 A	14 A	0 A

LOAD CATEGORY	CONNECTED LOAD (KVA)	X DEMAND FACTOR	= DEMAND (KVA)
A - HOSPITAL LIGHTING	0.00 kVA	0.00%	0.00 kVA
C - SPACE COOLING	0.00 kVA	0.00%	0.00 kVA
D - OTHER HVAC LOADS	0.00 kVA	0.00%	0.00 kVA
E - EQUIPMENT LOAD	0.00 kVA	0.00%	0.00 kVA
H - SPACE HEATING	0.00 kVA	0.00%	0.00 kVA
L - GENERAL LIGHTING	0.00 kVA	0.00%	0.00 kVA
M - MISC. CONTINUOUS	0.00 kVA	0.00%	0.00 kVA
N - MISC. NONCONTINUOUS	3.10 kVA	65.00%	2.02 kVA
R - RECEPTACLES	0.00 kVA	0.00%	0.00 kVA

PANEL TOTALS	
CONNECTED LOAD (KVA):	3.10 kVA
DEMAND LOAD (KVA):	2.02 kVA
DEMAND AMPS:	9 A
TOTAL:	6 A
+RESERVED FUTURE CAPACITY	1 A
TOTAL UNBALANCED 3 PHASE NEC ART. 220 FEEDER SIZING LOAD:	7 A
MIN NEC ART.220 REQUIRED OVERCURENT PROTECTION:	25 A

EDP

SERVED FROM: | AMPERE RATING: 1200 A | VOLTAGE (L-L): 480 V | PHASE: 3
LOCATION: ELEC 1138 | MAIN TYPE: MCB | VOLTAGE (L-N): 277 V | WIRE: 4
MOUNTING: SURFACE | LUG OPTIONS: | MIN. KAIC: 65

REMARKS:

#	TRIP	POLE	LOAD DESCRIPTION	CODE	WIRE SIZES (H/N/G OR H/G)	COND SIZE	A	A	B	B	C	C	COND SIZE	WIRE SIZES (H/N/G OR H/G)	CODE	LOAD DESCRIPTION	POLE	TRIP	#
1							1.1	14.0											2
3	125 A	3	EDLSH		3-#1, 1-#1, 1-#6	2"C			1.6	10.5			4"C	3-#500, 1-#500, 1-#3		EDCRH	3	400 A	4
5											1.5	9.2							6
7							141.9	0.2											8
9	800 A	3	EDEQH		2 runs of 3-#500, 1-#500, 1-#1/0	3"C EA			136.0	0.0			2"C	3-#1, 1-#1, 1-#6		IMLSH	3	125 A	10
11											135.7	0.0							12
13							20.2												14
15	400 A	3	IMEH		3-#500, 1-#500, 1-#3	4"C			19.2										16
17											19.9								18
19																			20
21																			22
23																			24

	A	B	C
TOTAL LOAD :	177.4 kVA	167.3 kVA	166.3 kVA
TOTAL AMPS :	641 A	604 A	600 A

LOAD CATEGORY	CONNECTED LOAD (KVA)	X DEMAND FACTOR	= DEMAND (KVA)
A - HOSPITAL LIGHTING	0.00 kVA	0.00%	0.00 kVA
C - SPACE COOLING	77.95 kVA	100.00%	77.95 kVA
D - OTHER HVAC LOADS	8.01 kVA	100.00%	8.01 kVA
E - EQUIPMENT LOAD	7.20 kVA	100.00%	7.20 kVA
H - SPACE HEATING	122.78 kVA	125.00%	153.48 kVA
L - GENERAL LIGHTING	3.74 kVA	125.00%	4.68 kVA
M - MISC. CONTINUOUS	30.00 kVA	100.00%	30.00 kVA
N - MISC. NONCONTINUOUS	237.99 kVA	65.00%	154.69 kVA
R - RECEPTACLES	22.68 kVA	72.05%	16.34 kVA

PANEL TOTALS	
CONNECTED LOAD (KVA):	510.97 kVA
DEMAND LOAD (KVA):	453.12 kVA
DEMAND AMPS:	615 A
TOTAL:	545 A
+RESERVED FUTURE CAPACITY	136 A
TOTAL UNBALANCED 3 PHASE NEC ART. 220 FEEDER SIZING LOAD:	681 A
MIN NEC ART.220 REQUIRED OVERCURENT PROTECTION:	1000 A

MDP

SERVED FROM: | AMPERE RATING: 1200 A | VOLTAGE (L-L): 480 V | PHASE: 3
LOCATION: ELEC 1139 | MAIN TYPE: MCB | VOLTAGE (L-N): 277 V | WIRE: 4
MOUNTING: SURFACE | LUG OPTIONS: | MIN. KAIC: 65

REMARKS:

#	TRIP	POLE	LOAD DESCRIPTION	CODE	WIRE SIZES (H/N/G OR H/G)	COND SIZE	A	A	B	B	C	C	COND SIZE	WIRE SIZES (H/N/G OR H/G)	CODE	LOAD DESCRIPTION	POLE	TRIP	#
1							0.0	0.0											2
3	125 A	3	EDLSH	--	SEE RISER DIAGRAM	2"C			0.0	0.0			4"C	SEE RISER DIAGRAM	--	EDCRH	3	400 A	4
5											0.0	0.0							6
7							0.0	0.0											8
9	800 A	3	EDEQH	--	SEE RISER DIAGRAM	3"C EA			0.0	0.0			2"C	SEE RISER DIAGRAM	--	IMLSH	3	125 A	10
11											0.0	0.0							12
13							0.0												14
15	400 A	3	IMEH	--	SEE RISER DIAGRAM	4"C			0.0										16
17											0.0								18
19																			20
21																			22
23																			24

	A	B	C
TOTAL LOAD :	0.0 kVA	0.0 kVA	0.0 kVA
TOTAL AMPS :	0 A	0 A	0 A

LOAD CATEGORY	CONNECTED LOAD (KVA)	X DEMAND FACTOR	= DEMAND (KVA)
A - HOSPITAL LIGHTING	0.00 kVA	0.00%	0.00 kVA
C - SPACE COOLING	0.00 kVA	0.00%	0.00 kVA
D - OTHER HVAC LOADS	0.00 kVA	0.00%	0.00 kVA
E - EQUIPMENT LOAD	0.00 kVA	0.00%	0.00 kVA
H - SPACE HEATING	0.00 kVA	0.00%	0.00 kVA
L - GENERAL LIGHTING	0.00 kVA	0.00%	0.00 kVA
M - MISC. CONTINUOUS	0.00 kVA	0.00%	0.00 kVA
N - MISC. NONCONTINUOUS	0.00 kVA	0.00%	0.00 kVA
R - RECEPTACLES	0.00 kVA	0.00%	0.00 kVA

PANEL TOTALS	
CONNECTED LOAD (KVA):	0.00 kVA
DEMAND LOAD (KVA):	0.00 kVA
DEMAND AMPS:	0 A
TOTAL:	0 A
+RESERVED FUTURE CAPACITY	0 A
TOTAL UNBALANCED 3 PHASE NEC ART. 220 FEEDER SIZING LOAD:	0 A
MIN NEC ART.220 REQUIRED OVERCURENT PROTECTION:	400 A

e4h ENVIRONMENTS FOR HEALTH ARCHITECTURE
888.781.8441 817.226.1917 501 Elm St, Ste 500, Dallas, TX 75202 e4harchitecture.com

© 2024 E4H - Environments For Health, LLC

CMC CONWAY MEDICAL CENTER with Novant Health

PROGRAM MANAGER
MEADOWS AND OHLY
1450 MATTHEWS TOWNSHIP PARKWAY SUITE 210
540.589.5318

ARCHITECT
E4H ARCHITECTURE
817.226.1917

MEP ENGINEER
HARRELL DESIGN GROUP, PC
10720 SIKES PLACE, SUITE 100
CHARLOTTE, NC 28277
704.814.1320

STRUCTURAL ENGINEER
HART GAUGLER & ASSOCIATES
8350 N. CENTRAL EXPRESSWAY SUITE 600
469.923.9225

CIVIL ENGINEER
DEVELOPMENT RESOURCE GROUP, LLC
4703 OLEANDER DRIVE
MYRTLE BEACH, SC 29577
843.839.3350

MEDICAL EQUIPMENT PLANNER
MAZZETTI+GBA
615.376.3108

CMC CONWAY MEDICAL CENTER
CMC Socastee FSED
6016 HIGHWAY 707
MYRTLE BEACH, SC

PROJECT NUMBER: 3024096.00
HDG PROJECT NUMBER: 24019

Δ	DATE	DESCRIPTION

SOUTH CAROLINA HARRELL DESIGN GROUP, PC No. C02713 CERTIFICATE OF AUTHORIZATION

NOT FOR CONSTRUCTION

ARCH NAME ARCH ##

ORIG SUBMISSION: 05.30.2025
CURRENT:

SHEET TITLE AND NUMBER:

EE7.02

PANEL SCHEDULES

THE LINE SHOWN ABOVE IS EXACTLY ONE INCH LONG AT THIS SHEETS ORIGINAL PAGE SIZE

EDCRH

SERVED FROM: EDP **AMPERE RATING:** 400 A **VOLTAGE (L-L):** 480 V **PHASE:** 3
LOCATION: ELEC 1139 **MAIN TYPE:** MCB **VOLTAGE (L-N):** 277 V **WIRE:** 4
MOUNTING: SURFACE **LUG OPTIONS:** **MIN. KAIC:** 22

REMARKS:

#	TRIP	POLE	LOAD DESCRIPTION	CODE	WIRE SIZES (H/N/G OR H/G)	COND SIZE	A		B		C		COND SIZE	WIRE SIZES (H/N/G OR H/G)	CODE	LOAD DESCRIPTION	POLE	TRIP	#
1	20 A	1	EMERGENCY LIGHTS	L	1-#12, 1-#12, 1-#12	3/4"C	3.0	11.0											2
3										10.5			2"C	3-#1,1-#6		T-EDCRL (75)	3	125 A	4
5												9.2							6
7																			8
9																			10
11																			12
13																			14
15																			16
17																			18
19																			20
21																			22
23																			24
25																			26
27																			28
29																			30
31																			32
33																			34
35																			36
37																			38
39																			40
41																			42
						TOTAL LOAD :	14.0 kVA		10.5 kVA		9.2 kVA								
						TOTAL AMPS :	51 A		39 A		33 A								

LOAD CATEGORY	CONNECTED LOAD (KVA)	X DEMAND FACTOR	= DEMAND (KVA)
A - HOSPITAL LIGHTING	0.00 kVA	0.00%	0.00 kVA
C - SPACE COOLING	0.00 kVA	0.00%	0.00 kVA
D - OTHER HVAC LOADS	0.00 kVA	0.00%	0.00 kVA
E - EQUIPMENT LOAD	7.20 kVA	100.00%	7.20 kVA
H - SPACE HEATING	0.00 kVA	0.00%	0.00 kVA
L - GENERAL LIGHTING	2.70 kVA	125.00%	3.38 kVA
M - MISC. CONTINUOUS	0.00 kVA	0.00%	0.00 kVA
N - MISC. NONCONTINUOUS	1.60 kVA	65.00%	1.04 kVA
R - RECEPTACLES	21.96 kVA	72.77%	15.98 kVA

PANEL TOTALS	
CONNECTED LOAD (KVA):	33.74 kVA
DEMAND LOAD (KVA):	27.95 kVA
DEMAND AMPS:	41 A
TOTAL:	34 A
+RESERVED FUTURE CAPACITY	8 A
TOTAL UNBALANCED 3 PHASE NEC ART. 220 FEEDER SIZING LOAD:	42 A
MIN NEC ART.220 REQUIRED OVERCURENT PROTECTION:	150 A

NH

SERVED FROM: **AMPERE RATING:** 250 A **VOLTAGE (L-L):** 480 V **PHASE:** 3
LOCATION: ELEC 1139 **MAIN TYPE:** MCB **VOLTAGE (L-N):** 277 V **WIRE:** 4
MOUNTING: SURFACE **LUG OPTIONS:** **MIN. KAIC:** 35

REMARKS:

#	TRIP	POLE	LOAD DESCRIPTION	CODE	WIRE SIZES (H/N/G OR H/G)	COND SIZE	A		B		C		COND SIZE	WIRE SIZES (H/N/G OR H/G)	CODE	LOAD DESCRIPTION	POLE	TRIP	#
1	20 A	1	OFFICE EXAM LIGHTS	L	1-#12, 1-#12, 1-#12	3/4"C	2.4	1.4					3/4"C	1-#12, 1-#12, 1-#12	L	L - GENERAL LIGHTING	1	20 A	2
3	20 A	1	EXTERIOR LIGHTING	L	1-#12, 1-#12, 1-#12	3/4"C			0.1	0.4			3/4"C	1-#12, 1-#12, 1-#12	L	L - GENERAL LIGHTING	1	20 A	4
5											14.6	9.0							6
7	90 A	3	RTU-1-2	C	3-#3, 1-#8	1 1/4"C	14.6	10.4					2"C	3-#1,1-#6		T-NL (75)	3	125 A	8
9									14.6	10.3									10
11																			12
13																			14
15																			16
17																			18
19																			20
21																			22
23																			24
25																			26
27																			28
29																			30
31																			32
33																			34
35																			36
37																			38
39																			40
41																			42
						TOTAL LOAD :	28.8 kVA		25.4 kVA		23.6 kVA								
						TOTAL AMPS :	105 A		93 A		85 A								

LOAD CATEGORY	CONNECTED LOAD (KVA)	X DEMAND FACTOR	= DEMAND (KVA)
A - HOSPITAL LIGHTING	0.00 kVA	0.00%	0.00 kVA
C - SPACE COOLING	43.79 kVA	100.00%	43.79 kVA
D - OTHER HVAC LOADS	0.00 kVA	0.00%	0.00 kVA
E - EQUIPMENT LOAD	9.90 kVA	100.00%	9.90 kVA
H - SPACE HEATING	0.00 kVA	0.00%	0.00 kVA
L - GENERAL LIGHTING	3.82 kVA	125.00%	4.78 kVA
M - MISC. CONTINUOUS	0.00 kVA	0.00%	0.00 kVA
N - MISC. NONCONTINUOUS	0.00 kVA	0.00%	0.00 kVA
R - RECEPTACLES	19.80 kVA	75.25%	14.90 kVA

PANEL TOTALS	
CONNECTED LOAD (KVA):	77.81 kVA
DEMAND LOAD (KVA):	73.99 kVA
DEMAND AMPS:	94 A
TOTAL:	89 A
+RESERVED FUTURE CAPACITY	22 A
TOTAL UNBALANCED 3 PHASE NEC ART. 220 FEEDER SIZING LOAD:	111 A
MIN NEC ART.220 REQUIRED OVERCURENT PROTECTION:	200 A

EDCRL

SERVED FROM: T-EDCRL (75) **AMPERE RATING:** 225 A **VOLTAGE (L-L):** 208 V **PHASE:** 3
LOCATION: ELEC 1139 **MAIN TYPE:** MCB **VOLTAGE (L-N):** 120 V **WIRE:** 4
MOUNTING: SURFACE **LUG OPTIONS:** **MIN. KAIC:** 22

REMARKS:

#	TRIP	POLE	LOAD DESCRIPTION	CODE	WIRE SIZES (H/N/G OR H/G)	COND SIZE	A		B		C		COND SIZE	WIRE SIZES (H/N/G OR H/G)	CODE	LOAD DESCRIPTION	POLE	TRIP	#
1	20 A	1	EMBULANCE BAY...	R	1-#12, 1-#12, 1-#12	3/4"C	0.4	1.1					3/4"C	1-#12, 1-#12, 1-#12	R	EL-TR, TRIAGE...	1	20 A	2
3	20 A	1	TRIAGE HEADWALL	R	1-#12, 1-#12, 1-#12	3/4"C			0.9	0.9			3/4"C	1-#12, 1-#12, 1-#12	R	EL-1, EXAM 1 EM...	1	20 A	4
5	20 A	1	EXAM 1 HEAD WALL EM...	R	1-#12, 1-#12, 1-#12	3/4"C					0.9	0.9	3/4"C	1-#12, 1-#12, 1-#12	R	EL-2, EXAM 2 EM...	1	20 A	6
7	20 A	1	EXAM 2 HEAD WALL EM...	R	1-#12, 1-#12, 1-#12	3/4"C	0.9	0.5					3/4"C	1-#12, 1-#12, 1-#12	R	R - RECEPTACLES	1	20 A	8
9	20 A	1	R - RECEPTACLES	R	1-#12, 1-#12, 1-#12	3/4"C			0.5	0.5			3/4"C	1-#12, 1-#12, 1-#12	R	EL-3, EXAM 3 RECEPTACLE	1	20 A	10
11	20 A	1	EXAM 3 HEADWALL EM...	R	1-#12, 1-#12, 1-#12	3/4"C					0.9	0.5	3/4"C	1-#12, 1-#12, 1-#12	R	EL-4, EXAM 4 RECEPTCLES	1	20 A	12
13	20 A	1	EXAM 4 HEADWALL EM...	R	1-#12, 1-#12, 1-#12	3/4"C	0.9	0.5					3/4"C	1-#12, 1-#12, 1-#12	R	EL-SE, SECURE EXAM...	1	20 A	14
15	20 A	1	SECURE EXAM HEADWAL...	R	1-#12, 1-#12, 1-#12	3/4"C			0.9	0.9			3/4"C	1-#12, 1-#12, 1-#12	R	EL-5, EXAM 5 EM...	1	20 A	16
17	20 A	1	EXAM 5 HEADWALL EM...	R	1-#12, 1-#12, 1-#12	3/4"C					0.9	0.5	3/4"C	1-#12, 1-#12, 1-#12	R	EL-ISO, PM-1, PS-7,...	1	20 A	18
19	20 A	1	EL-TA, PM-2, TRAUMA...	R	1-#12, 1-#12, 1-#12	3/4"C	0.9	0.9					3/4"C	1-#12, 1-#12, 1-#12	R	TRAUMA RECEPTACLES	1	20 A	20
21	20 A	1	NURSE STATION...	R	1-#12, 1-#12, 1-#12	3/4"C			0.7	0.9			3/4"C	1-#12, 1-#12, 1-#12	R	TRAUMA HEADWALL EM...	1	20 A	22
23	20 A	1	COPIER/PRINTER	R	1-#12, 1-#12, 1-#12	3/4"C					0.2	1.3	3/4"C	1-#12, 1-#12, 1-#12	R	MED VAC/GAS GEN...	1	20 A	24
25	20 A	1	LAB RECEPTACLES	R	1-#12, 1-#12, 1-#12	3/4"C	0.4	0.7					3/4"C	1-#12, 1-#12, 1-#12	R	NURSE STATION...	1	20 A	26
27	20 A	1	REFRIGERATOR TILT	R	1-#12, 1-#12, 1-#12	3/4"C			0.2	0.5			3/4"C	1-#12, 1-#12, 1-#12	R	RECEPTION RECEPTACLES	1	20 A	28
29	20 A	1	LAB FREEZER	R	1-#12, 1-#12, 1-#12	3/4"C					0.2	0.5	3/4"C	1-#12, 1-#12, 1-#12	R	PS-5, LAB RECEPTACLES	1	20 A	30
31	20 A	1	EQUIPMENT STORAGE...	R	1-#12, 1-#12, 1-#12	3/4"C	0.9												32
33	20 A	1	REFRIGERATOR	R	1-#12, 1-#12, 1-#12	3/4"C			0.2	0.2			3/4"C	1-#12, 1-#12, 1-#12	R	LAB REFRIGERATOR	1	20 A	34
35	20 A	1	MEDS RECEPTACLES	R	1-#12, 1-#12, 1-#12	3/4"C					0.5	0.2	3/4"C	1-#12, 1-#12, 1-#12	R	ICE MAKER	1	20 A	36
37								0.4					3/4"C	1-#12, 1-#12, 1-#12	R	NURSE STATION...	1	20 A	38
39	20 A	1	PIXIS	R	1-#12, 1-#12, 1-#12	3/4"C			0.2	0.5			3/4"C	1-#12, 1-#12, 1-#12	R	MEDS RECEPTACLES	1	20 A	40
41	20 A	1	LAB FREEZER	R	1-#12, 1-#12, 1-#12	3/4"C					0.2	0.7	3/4"C	1-#12, 1-#12, 1-#12	R	RISER/ ELECTRICAL ROO...	1	20 A	42
						TOTAL LOAD :	11.0 kVA		10.5 kVA		9.2 kVA								
						TOTAL AMPS :	94 A		89 A		77 A								

LOAD CATEGORY	CONNECTED LOAD (KVA)	X DEMAND FACTOR	= DEMAND (KVA)
A - HOSPITAL LIGHTING	0.00 kVA	0.00%	0.00 kVA
C - SPACE COOLING	0.00 kVA	0.00%	0.00 kVA
D - OTHER HVAC LOADS	0.00 kVA	0.00%	0.00 kVA
E - EQUIPMENT LOAD	7.20 kVA	100.00%	7.20 kVA
H - SPACE HEATING	0.00 kVA	0.00%	0.00 kVA
L - GENERAL LIGHTING	0.00 kVA	0.00%	0.00 kVA
M - MISC. CONTINUOUS	0.00 kVA	0.00%	0.00 kVA
N - MISC. NONCONTINUOUS	1.60 kVA	65.00%	1.04 kVA
R - RECEPTACLES	21.96 kVA	72.77%	15.98 kVA

PANEL TOTALS	
CONNECTED LOAD (KVA):	30.76 kVA
DEMAND LOAD (KVA):	24.22 kVA
DEMAND AMPS:	85 A
TOTAL:	67 A
+RESERVED FUTURE CAPACITY	17 A
TOTAL UNBALANCED 3 PHASE NEC ART. 220 FEEDER SIZING LOAD:	84 A
MIN NEC ART.220 REQUIRED OVERCURENT PROTECTION:	125 A

NL

SERVED FROM: T-NL (75) **AMPERE RATING:** 225 A **VOLTAGE (L-L):** 208 V **PHASE:** 3
LOCATION: ELEC 1139 **MAIN TYPE:** MCB **VOLTAGE (L-N):** 120 V **WIRE:** 4
MOUNTING: SURFACE **LUG OPTIONS:** **MIN. KAIC:** 22

REMARKS:

#	TRIP	POLE	LOAD DESCRIPTION	CODE	WIRE SIZES (H/N/G OR H/G)	COND SIZE	A		B		C		COND SIZE	WIRE SIZES (H/N/G OR H/G)	CODE	LOAD DESCRIPTION	POLE	TRIP	#
1	20 A	1	TRIAGE RECEPTACLES	R	1-#12, 1-#12, 1-#12	3/4"C	0.5	0.9					3/4"C	1-#12, 1-#12, 1-#12	R	TRIAGE HEADWALL	1	20 A	2
3	20 A	1	EXAM 1 RECEPTACLES	R	1-#12, 1-#12, 1-#12	3/4"C			0.7	0.9			3/4"C	1-#12, 1-#12, 1-#12	R	EXAM 1 HEADWALL...	1	20 A	4
5	20 A	1	R - RECEPTACLES	R	1-#12, 1-#12, 1-#12	3/4"C					0.5	0.9	3/4"C	1-#12, 1-#12, 1-#12	E	E - EQUIPMENT LOAD	1	20 A	6
7	20 A	1	R - RECEPTACLES	R	1-#12, 1-#12, 1-#12	3/4"C	1.1	0.7					3/4"C	1-#12, 1-#12, 1-#12	R	EXAM 3 RECEPTACLES	1	20 A	8
9	20 A	1	EXAM 3 HEADWALL...	R	1-#12, 1-#12, 1-#12	3/4"C			0.9	0.9			3/4"C	1-#12, 1-#12, 1-#12	R	EXAM 4 HEADWALL...	1	20 A	10
11	20 A	1	R - RECEPTACLES	R	1-#12, 1-#12, 1-#12	3/4"C					0.7	0.9	3/4"C	1-#12, 1-#12, 1-#12	R	SECURE EXAM...	1	20 A	12
13	20 A	1	SECURE EXAM HEADWAL...	R	1-#12, 1-#12, 1-#12	3/4"C	0.9	0.5					3/4"C	1-#12, 1-#12, 1-#12	R	EXAM 5 RECEPTACLES	1	20 A	14
15	20 A	1	EXAM 5 HEADWALL...	R	1-#12, 1-#12, 1-#12	3/4"C			0.9	1.1			3/4"C	1-#12, 1-#12, 1-#12	R	ISOLATION RECEPTACLES	1	20 A	16
17	20 A	1	ISO EXAM HEADWALL...	R	1-#12, 1-#12, 1-#12	3/4"C					0.9	0.9	3/4"C	1-#12, 1-#12, 1-#12	R	ISO EXAM HEADWALL EM...	1	20 A	18
19	20 A	1	TRAUMA HEADWALL...	R	1-#12, 1-#12, 1-#12	3/4"C	0.9	0.9					3/4"C	1-#12, 1-#12, 1-#12	R	R - RECEPTACLES	1	20 A	20
21	20 A	1	TRAUMA HEADWALL EM...	R	1-#12, 1-#12, 1-#12	3/4"C			0.9	0.7			3/4"C	1-#12, 1-#12, 1-#12	R	NURSE STATION...	1	20 A	22
23	20 A	1	NURSE STATION...	R	1-#12, 1-#12, 1-#12	3/4"C					1.1	0.5	3/4"C	1-#12, 1-#12, 1-#12	R	R - RECEPTACLES	1	20 A	24
25	20 A	1	SOILED/STAFF TIOLET...	R	1-#12, 1-#12, 1-#12	3/4"C	0.9	0.5					3/4"C	1-#12, 1-#12, 1-#12	R	LAB RECEPTACLES	1	20 A	26
27	20 A	1	WAITING RECEPTACLES	R	1-#12, 1-#12, 1-#12	3/4"C			1.3	0.9			3/4"C	1-#12, 1-#12, 1-#12	R	VESTIBULE/WAITING...	1	20 A	28
29	20 A	1	RECEPTION RECEPTACLES	R	1-#12, 1-#12, 1-#12	3/4"C					0.7	1.1	3/4"C	1-#12, 1-#12, 1-#12	R	R - RECEPTACLES	1	20 A	30
31	20 A	1	STAFF...	R	1-#12, 1-#12, 1-#12	3/4"C	0.4	0.7					3/4"C	1-#12, 1-#12, 1-#12	R	STAFF LOUNGE...	1	20 A	32
33	20 A	1	DR/NURSE OFFICE...	R	1-#12, 1-#12, 1-#12	3/4"C			1.1	0.2			3/4"C	1-#12, 1-#12, 1-#12	R	WATER FOUNTAIN	1	20 A	34
35	20 A	1	CT RECEPTACLES	R	1-#12, 1-#12, 1-#12	3/4"C					0.9	1.1	3/4"C	1-#12, 1-#12, 1-#12	R	XRAY RECEPTACLES	1	20 A	36
37																			38
39																			40
41																			42
						TOTAL LOAD :	9.0 kVA		10.4 kVA		10.3 kVA								
						TOTAL AMPS :	75 A		89 A		87 A								

LOAD CATEGORY	CONNECTED LOAD (KVA)	X DEMAND FACTOR	= DEMAND (KVA)
A - HOSPITAL LIGHTING	0.00 kVA	0.00%	0.00 kVA
C - SPACE COOLING	0.00 kVA	0.00%	0.00 kVA
D - OTHER HVAC LOADS	0.00 kVA	0.00%	0.00 kVA
E - EQUIPMENT LOAD	9.90 kVA	100.00%	9.90 kVA
H - SPACE HEATING	0.00 kVA	0.00%	0.00 kVA
L - GENERAL LIGHTING	0.00 kVA	0.00%	0.00 kVA
M - MISC. CONTINUOUS	0.00 kVA	0.00%	0.00 kVA
N - MISC. NONCONTINUOUS	0.00 kVA	0.00%	0.00 kVA
R - RECEPTACLES	19.80 kVA	75.25%	14.90 kVA

PANEL TOTALS	
CONNECTED LOAD (KVA):	29.70 kVA
DEMAND LOAD (KVA):	24.80 kVA
DEMAND AMPS:	82 A
TOTAL:	69 A
+RESERVED FUTURE CAPACITY	17 A
TOTAL UNBALANCED 3 PHASE NEC ART. 220 FEEDER SIZING LOAD:	86 A
MIN NEC ART.220 REQUIRED OVERCURENT PROTECTION:	150 A

EDCRL2

SERVED FROM: EDCRL **AMPERE RATING:** 125 A **VOLTAGE (L-L):** 208 V **PHASE:** 3
LOCATION: ELEC 1139 **MAIN TYPE:** MCB **VOLTAGE (L-N):** 120 V **WIRE:** 4
MOUNTING: SURFACE **LUG OPTIONS:** **MIN. KAIC:** 22

REMARKS:

#	TRIP	POLE	LOAD DESCRIPTION	CODE	WIRE SIZES (H/N/G OR H/G)	COND SIZE	A		B		C		COND SIZE	WIRE SIZES (H/N/G OR H/G)	CODE	LOAD DESCRIPTION	POLE	TRIP	#
1	20 A	1	STAFF REFRIGERATOR	R	1-#12, 1-#12, 1-#12	3/4"C	0.2	0.4					3/4"C	1-#12, 1-#12, 1-#12	R	DOC/NURSE OFFICE...	1	20 A	2
3	20 A	1	IT TECEPTACLES	R	1-#12, 1-#12, 1-#12	3/4"C			0.5	0.7			3/4"C	1-#12, 1-#12, 1-#12	R	IT RECEPTACLES	1	20 A	4
5	20 A	1	PS-2, PS-3	R	1-#12, 1-#12, 1-#12	3/4"C					0.0	0.2	3/4"C	1-#12, 1-#12, 1-#12	R	PS-6, CRASH CART	1	20 A	6
7	20 A	1	PS-4, CRASH CART...	R	1-#12, 1-#12, 1-#12	3/4"C	0.4	0.7					3/4"C	1-#12, 1-#12, 1-#12	R	ROOF TOP RECEPTACLES	1	20 A	8
9	20 A	1	PS-8. ULTRASOUND...	R	1-#12, 1-#12, 1-#12	3/4"C			0.5	0.5			3/4"C	1-#12, 1-#12, 1-#12	R	CONTROL ROOM	1	20 A	10
11	20 A	1	CT UC FRIDGE	R	1-#12, 1-#12, 1-#12	3/4"C					0.2	0.4	3/4"C	1-#12, 1-#12, 1-#12	R	PS-9, CT RECEPTACLES	1	20 A	12
13	20 A	1	XRAY RECEPTACLES	R	1-#12, 1-#12, 1-#12	3/4"C	0.5	0.4					3/4"C	1-#12, 1-#12, 1-#12	R	MICROWAVE	1	20 A	14
15																			16
17																			18
19																			20
21																			22
23																			24
25																			26
27																			28
29																			30
31																			32
33																			34
35																			36
37																			38
39																			40
41																			42
						TOTAL LOAD :	2.5 kVA		2.3 kVA		0.7 kVA								
						TOTAL AMPS :	23 A		22 A		6 A								

LOAD CATEGORY	CONNECTED LOAD (KVA)	X DEMAND FACTOR	= DEMAND (KVA)
A - HOSPITAL LIGHTING	0.00 kVA	0.00%	0.00 kVA
C - SPACE COOLING	0.00 kVA	0.00%	0.00 kVA
D - OTHER HVAC LOADS	0.00 kVA	0.00%	0.00 kVA
E - EQUIPMENT LOAD	0.00 kVA	0.00%	0.00 kVA
H - SPACE HEATING	0.00 kVA	0.00%	0.00 kVA
L - GENERAL LIGHTING	0.00 kVA	0.00%	0.00 kVA
M - MISC. CONTINUOUS	0.00 kVA	0.00%	0.00 kVA
N - MISC. NONCONTINUOUS	0.00 kVA	0.00%	0.00 kVA
R - RECEPTACLES	5.58 kVA	100.00%	5.58 kVA

PANEL TOTALS	
CONNECTED LOAD (KVA):	5.58 kVA
DEMAND LOAD (KVA):	5.58 kVA
DEMAND AMPS:	15 A
TOTAL:	15 A
+RESERVED FUTURE CAPACITY	4 A
TOTAL UNBALANCED 3 PHASE NEC ART. 220 FEEDER SIZING LOAD:	19 A
MIN NEC ART.220 REQUIRED OVERCURENT PROTECTION:	50 A

NL2

SERVED FROM: **AMPERE RATING:** 125 A **VOLTAGE (L-L):** 208 V **PHASE:** 3
LOCATION: ELEC 1139 **MAIN TYPE:** MCB **VOLTAGE (L-N):** 120 V **WIRE:** 4
MOUNTING: SURFACE **LUG OPTIONS:** **MIN. KAIC:** 22

REMARKS:

#	TRIP	POLE	LOAD DESCRIPTION	CODE	WIRE SIZES (H/N/G OR H/G)	COND SIZE	A		B		C		COND SIZE	WIRE SIZES (H/N/G OR H/G)	CODE	LOAD DESCRIPTION	POLE	TRIP	#
1	20 A	1	ULTRASOUND...	R	1-#12, 1-#12, 1-#12	3/4"C	0.5	1.1					3/4"C	1-#12, 1-#12, 1-#12	R	COMPUTER RECEPTACLES	1	20 A	2
3	20 A	1	MRI CONTROL...	R	1-#12, 1-#12, 1-#12	3/4"C			1.1	1.4			3/4"C	1-#12, 1-#12, 1-#12	R	MRI RECEPTACLES	1	20 A	4
5	20 A	1	SUB WAITING...	R	1-#12, 1-#12, 1-#12	3/4"C					1.3	0.9	3/4"C	1-#12, 1-#12, 1-#12	R	IMAGING OFFICE/NURSE...	1	20 A	6
7																			8
9																			10
11																			12
13																			14
15																			16
17																			18
19																			20
21																			22
23																			24
25																			26
27																			28
29																			30
31																			32
33																			34
35																			36
37																			38
39																			40
41																			42
						TOTAL LOAD :	1.6 kVA		2.5 kVA		2.2 kVA								
						TOTAL AMPS :	14 A		22 A		19 A								

LOAD CATEGORY	CONNECTED LOAD (KVA)	X DEMAND FACTOR	= DEMAND (KVA)
A - HOSPITAL LIGHTING	0.00 kVA	0.00%	0.00 kVA
C - SPACE COOLING	0.00 kVA	0.00%	0.00 kVA
D - OTHER HVAC LOADS	0.00 kVA	0.00%	0.00 kVA
E - EQUIPMENT LOAD	0.00 kVA	0.00%	0.00 kVA
H - SPACE HEATING	0.00 kVA	0.00%	0.00 kVA
L - GENERAL LIGHTING	0.00 kVA	0.00%	0.00 kVA
M - MISC. CONTINUOUS	0.00 kVA	0.00%	0.00 kVA
N - MISC. NONCONTINUOUS	0.00 kVA	0.00%	0.00 kVA
R - RECEPTACLES	6.30 kVA	100.00%	6.30 kVA

PANEL TOTALS	
CONNECTED LOAD (KVA):	6.30 kVA
DEMAND LOAD (KVA):	6.30 kVA
DEMAND AMPS:	17 A
TOTAL:	17 A
+RESERVED FUTURE CAPACITY	4 A
TOTAL UNBALANCED 3 PHASE NEC ART. 220 FEEDER SIZING LOAD:	22 A
MIN NEC ART.220 REQUIRED OVERCURENT PROTECTION:	50 A

e4h ENVIRONMENTS FOR HEALTH ARCHITECTURE
501 Elm St, Ste 500, Dallas, TX 75202
888.781.8441 817.226.1917
e4harchitecture.com

© 2024 E4H - Environments For Health, LLC

CMC CONWAY MEDICAL CENTER with Novant Health

PROGRAM MANAGER
MEADOWS AND OHLY
1450 MATTHEWS TOWNSHIP PARKWAY
SUITE 210
540.589.5318

ARCHITECT
E4H ARCHITECTURE
817.226.1917

MEP ENGINEER
HARRELL DESIGN GROUP, PC
10720 SIKES PLACE, SUITE 100
CHARLOTTE, NC 28277
704.814.1320

STRUCTURAL ENGINEER
HART GAUGLER & ASSOCIATES
8350 N. CENTRAL EXPRESSWAY
SUITE 600
469.923.9225

CIVIL ENGINEER
DEVELOPMENT RESOURCE GROUP, LLC
4703 OLEANDER DRIVE
MYRTLE BEACH, SC 29577
843.839.3350

MEDICAL EQUIPMENT PLANNER
MAZZETTI+GBA
615.376.3108

CMC CONWAY MEDICAL CENTER
CMC Socastee FSED
6016 HIGHWAY 707
MYRTLE BEACH, SC

PROJECT NUMBER: 3024096.00 **HDG PROJECT NUMBER:** 24019

Δ	DATE	DESCRIPTION

SOUTH CAROLINA HARRELL DEGIGN GROUP, PC No. C02713 CERTIFICATE OF AUTHORIZATION

NOT FOR CONSTRUCTION

ARCH NAME ARCH ##

ORIG SUBMISSION: 05.30.2025
CURRENT:

SHEET TITLE AND NUMBER:

EE7.03

PANEL SCHEDULES

THE LINE SHOWN ABOVE IS EXACTLY ONE INCH LONG AT THIS SHEETS ORIGINAL PAGE SIZE

IMLSH

SERVED FROM: EDP
LOCATION: ELEC 1138
MOUNTING: SURFACE
AMPERE RATING: 125 A
MAIN TYPE: MCB
LUG OPTIONS:
VOLTAGE (L-L): 480 V
VOLTAGE (L-N): 277 V
PHASE: 3
WIRE: 4
MIN. KAIC: 22

REMARKS:

#	TRIP	POLE	LOAD DESCRIPTION	CODE	WIRE SIZES (H/N/G OR H/G)	COND SIZE	A		B		C		COND SIZE	WIRE SIZES (H/N/G OR H/G)	CODE	LOAD DESCRIPTION	POLE	TRIP	#
1	20 A	1	L - GENERAL LIGHTING	L	1-#12, 1-#12, 1-#12	3/4"C	0.2	0.0											2
3										0.0			1 1/4"C	3-#4,1-#8		T-IMLSL (45)	3	70 A	4
5												0.0							6
7																			8
9																			10
11																			12
13																			14
15																			16
17																			18
19																			20
21																			22
23																			24
25																			26
27																			28
29																			30
31																			32
33																			34
35																			36
37																			38
39																			40
41																			42
						TOTAL LOAD :	0.2 kVA		0.0 kVA		0.0 kVA								
						TOTAL AMPS :	1 A		0 A		0 A								

LOAD CATEGORY	CONNECTED LOAD (KVA)	X DEMAND FACTOR	= DEMAND (KVA)
A - HOSPITAL LIGHTING	0.00 kVA	0.00%	0.00 kVA
C - SPACE COOLING	0.00 kVA	0.00%	0.00 kVA
D - OTHER HVAC LOADS	0.00 kVA	0.00%	0.00 kVA
E - EQUIPMENT LOAD	0.00 kVA	0.00%	0.00 kVA
H - SPACE HEATING	0.00 kVA	0.00%	0.00 kVA
L - GENERAL LIGHTING	0.16 kVA	125.00%	0.20 kVA
M - MISC. CONTINUOUS	0.00 kVA	0.00%	0.00 kVA
N - MISC. NONCONTINUOUS	0.00 kVA	0.00%	0.00 kVA
R - RECEPTACLES	0.00 kVA	0.00%	0.00 kVA

PANEL TOTALS	
CONNECTED LOAD (KVA):	0.16 kVA
DEMAND LOAD (KVA):	0.20 kVA
DEMAND AMPS:	0 A
TOTAL:	0 A
+RESERVED FUTURE CAPACITY	0 A
TOTAL UNBALANCED 3 PHASE NEC ART. 220 FEEDER SIZING LOAD:	0 A
MIN NEC ART.220 REQUIRED OVERCURENT PROTECTION:	35 A

IMEH

SERVED FROM: EDP
LOCATION: ELEC 1138
MOUNTING: SURFACE
AMPERE RATING: 400 A
MAIN TYPE: MCB
LUG OPTIONS:
VOLTAGE (L-L): 480 V
VOLTAGE (L-N): 277 V
PHASE: 3
WIRE: 4
MIN. KAIC: 22

REMARKS:

#	TRIP	POLE	LOAD DESCRIPTION	CODE	WIRE SIZES (H/N/G OR H/G)	COND SIZE	A		B		C		COND SIZE	WIRE SIZES (H/N/G OR H/G)	CODE	LOAD DESCRIPTION	POLE	TRIP	#
1	20 A	1	L - GENERAL LIGHTING	L	1-#12, 1-#12, 1-#12	3/4"C	0.3	0.0											2
3									0.9	0.0			1 1/4"C	3-#3, 1-#3, 1-#8	N	MRI	3	80 A	4
5	70 A	3	T-IMEML (45)		3-#4,1-#8	1 1/4"C					0.6	0.0							6
7							0.0	3.5					3/4"C	1-#12, 1-#12, 1-#12	N	VAV-ED-23	1	20 A	8
9	20 A	1	VAV-ED-22	N	1-#12, 1-#12, 1-#12	3/4"C			2.0	1.5									10
11	20 A	1	VAV-ED-21	N	1-#12, 1-#12, 1-#12	3/4"C					3.0	1.5	3/4"C	3-#12, 1-#12, 1-#12	N	VAV-ED-20	3	20 A	12
13							1.5	1.5											14
15	20 A	3	VAV-ED-24	N	3-#12, 1-#12, 1-#12	3/4"C			1.5	13.3									16
17											1.5	13.3	1 1/4"C	3-#4, 1-#4, 1-#8	H	DH-1-2-1	3	70 A	18
19								13.3											20
21																			22
23																			24
25																			26
27																			28
29																			30
31																			32
33																			34
35																			36
37																			38
39																			40
41																			42
						TOTAL LOAD :	20.2 kVA		19.2 kVA		19.9 kVA								
						TOTAL AMPS :	73 A		69 A		72 A								

LOAD CATEGORY	CONNECTED LOAD (KVA)	X DEMAND FACTOR	= DEMAND (KVA)
A - HOSPITAL LIGHTING	0.00 kVA	0.00%	0.00 kVA
C - SPACE COOLING	0.00 kVA	0.00%	0.00 kVA
D - OTHER HVAC LOADS	0.70 kVA	100.00%	0.70 kVA
E - EQUIPMENT LOAD	0.00 kVA	0.00%	0.00 kVA
H - SPACE HEATING	40.00 kVA	125.00%	50.00 kVA
L - GENERAL LIGHTING	0.28 kVA	125.00%	0.35 kVA
M - MISC. CONTINUOUS	0.00 kVA	0.00%	0.00 kVA
N - MISC. NONCONTINUOUS	17.51 kVA	65.00%	11.38 kVA
R - RECEPTACLES	0.72 kVA	100.00%	0.72 kVA

PANEL TOTALS	
CONNECTED LOAD (KVA):	59.27 kVA
DEMAND LOAD (KVA):	63.23 kVA
DEMAND AMPS:	71 A
TOTAL:	76 A
+RESERVED FUTURE CAPACITY	19 A
TOTAL UNBALANCED 3 PHASE NEC ART. 220 FEEDER SIZING LOAD:	95 A
MIN NEC ART.220 REQUIRED OVERCURENT PROTECTION:	200 A

IMLSL

SERVED FROM:
LOCATION: ELEC 1138
MOUNTING: SURFACE
AMPERE RATING: 100 A
MAIN TYPE: MCB
LUG OPTIONS:
VOLTAGE (L-L): 208 V
VOLTAGE (L-N): 120 V
PHASE: 3
WIRE: 4
MIN. KAIC: 22

REMARKS:

#	TRIP	POLE	LOAD DESCRIPTION	CODE	WIRE SIZES (H/N/G OR H/G)	COND SIZE	A		B		C		COND SIZE	WIRE SIZES (H/N/G OR H/G)	CODE	LOAD DESCRIPTION	POLE	TRIP	#
1	20 A	1	AP-2	N	1-#12, 1-#12, 1-#12	3/4"C	0.2												2
3																			4
5																			6
7																			8
9																			10
11																			12
13																			14
15																			16
17																			18
19																			20
21																			22
23																			24
25																			26
27																			28
29																			30
31																			32
33																			34
35																			36
37																			38
39																			40
41																			42
						TOTAL LOAD :	0.2 kVA		0.0 kVA		0.0 kVA								
						TOTAL AMPS :	2 A		0 A		0 A								

LOAD CATEGORY	CONNECTED LOAD (KVA)	X DEMAND FACTOR	= DEMAND (KVA)
A - HOSPITAL LIGHTING	0.00 kVA	0.00%	0.00 kVA
C - SPACE COOLING	0.00 kVA	0.00%	0.00 kVA
D - OTHER HVAC LOADS	0.00 kVA	0.00%	0.00 kVA
E - EQUIPMENT LOAD	0.00 kVA	0.00%	0.00 kVA
H - SPACE HEATING	0.00 kVA	0.00%	0.00 kVA
L - GENERAL LIGHTING	0.00 kVA	0.00%	0.00 kVA
M - MISC. CONTINUOUS	0.00 kVA	0.00%	0.00 kVA
N - MISC. NONCONTINUOUS	0.24 kVA	65.00%	0.16 kVA
R - RECEPTACLES	0.00 kVA	0.00%	0.00 kVA

PANEL TOTALS	
CONNECTED LOAD (KVA):	0.24 kVA
DEMAND LOAD (KVA):	0.16 kVA
DEMAND AMPS:	1 A
TOTAL:	0 A
+RESERVED FUTURE CAPACITY	0 A
TOTAL UNBALANCED 3 PHASE NEC ART. 220 FEEDER SIZING LOAD:	1 A
MIN NEC ART.220 REQUIRED OVERCURENT PROTECTION:	30 A

IMEL

SERVED FROM: T-IMEML (45)
LOCATION: ELEC 1138
MOUNTING: SURFACE
AMPERE RATING: 125 A
MAIN TYPE: MCB
LUG OPTIONS:
VOLTAGE (L-L): 208 V
VOLTAGE (L-N): 120 V
PHASE: 3
WIRE: 4
MIN. KAIC: 22

REMARKS:

#	TRIP	POLE	LOAD DESCRIPTION	CODE	WIRE SIZES (H/N/G OR H/G)	COND SIZE	A		B		C		COND SIZE	WIRE SIZES (H/N/G OR H/G)	CODE	LOAD DESCRIPTION	POLE	TRIP	#
1	20 A	1	EF-PURGE		1-#12, 1-#12, 1-#12	3/4"C	0.7	0.2					3/4"C	1-#12, 1-#12, 1-#12	R	COPIER/PRINTER	1	20 A	2
3	20 A	1	PS-1	N	1-#12, 1-#12, 1-#12	3/4"C			0.0	0.5			3/4"C	1-#12, 1-#12, 1-#12	R	IMAGING/ NURSE...	1	20 A	4
5																			6
7																			8
9																			10
11																			12
13																			14
15																			16
17																			18
19																			20
21																			22
23																			24
25																			26
27																			28
29																			30
31																			32
33																			34
35																			36
37																			38
39																			40
41																			42
						TOTAL LOAD :	0.9 kVA		0.6 kVA		0.0 kVA								
						TOTAL AMPS :	8 A		5 A		0 A								

LOAD CATEGORY	CONNECTED LOAD (KVA)	X DEMAND FACTOR	= DEMAND (KVA)
A - HOSPITAL LIGHTING	0.00 kVA	0.00%	0.00 kVA
C - SPACE COOLING	0.00 kVA	0.00%	0.00 kVA
D - OTHER HVAC LOADS	0.70 kVA	100.00%	0.70 kVA
E - EQUIPMENT LOAD	0.00 kVA	0.00%	0.00 kVA
H - SPACE HEATING	0.00 kVA	0.00%	0.00 kVA
L - GENERAL LIGHTING	0.00 kVA	0.00%	0.00 kVA
M - MISC. CONTINUOUS	0.00 kVA	0.00%	0.00 kVA
N - MISC. NONCONTINUOUS	0.01 kVA	65.00%	0.01 kVA
R - RECEPTACLES	0.72 kVA	100.00%	0.72 kVA

PANEL TOTALS	
CONNECTED LOAD (KVA):	1.43 kVA
DEMAND LOAD (KVA):	1.43 kVA
DEMAND AMPS:	4 A
TOTAL:	4 A
+RESERVED FUTURE CAPACITY	1 A
TOTAL UNBALANCED 3 PHASE NEC ART. 220 FEEDER SIZING LOAD:	5 A
MIN NEC ART.220 REQUIRED OVERCURENT PROTECTION:	40 A

e4h ENVIRONMENTS FOR HEALTH ARCHITECTURE
501 Elm St, Ste 500, Dallas, TX 75202
e4harchitecture.com
888.781.8441 817.226.1917

© 2024 E4H - Environments For Health, LLC

CMC CONWAY MEDICAL CENTER with Novant Health

PROGRAM MANAGER
MEADOWS AND OHLY
1450 MATTHEWS TOWNSHIP PARKWAY
SUITE 210
540.589.5318

ARCHITECT
E4H ARCHITECTURE
817.226.1917

MEP ENGINEER
HARRELL DESIGN GROUP, PC
10720 SIKES PLACE, SUITE 100
CHARLOTTE, NC 28277
704.814.1320

STRUCTURAL ENGINEER
HART GAUGLER & ASSOCIATES
8350 N. CENTRAL EXPRESSWAY
SUITE 600
469.923.9225

CIVIL ENGINEER
DEVELOPMENT RESOURCE GROUP, LLC
4703 OLEANDER DRIVE
MYRTLE BEACH, SC 29577
843.839.3350

MEDICAL EQUIPMENT PLANNER
MAZZETTI+GBA
615.376.3108

CMC CONWAY MEDICAL CENTER
CMC Socastee FSED
6016 HIGHWAY 707
MYRTLE BEACH, SC

PROJECT NUMBER: 3024096.00
HDG PROJECT NUMBER: 24019

Δ	DATE	DESCRIPTION

SOUTH CAROLINA CERTIFICATE OF AUTHORIZATION
HARRELL DESIGN GROUP, PC
No. C02713

NOT FOR CONSTRUCTION

ARCH NAME ARCH ##

ORIG SUBMISSION: 05.30.2025
CURRENT:

SHEET TITLE AND NUMBER:

EE7.04

PANEL SCHEDULES