DESIGN-BUILD HURRICANE FLORENCE RECOVERY MILCON

PACKAGE 3 TRAINING AND STORAGE FACILITIES

CONSTRUCTION CONTRACT NO: N40085-20-C-0059

P1527 LOGCOM WAREHOUSE

MICHAEL ROAD & FIR ST
MARINE CORPS BASE CAMP LEJEUNE, NC



VICINITY MAP



LOCATION MAP



FINAL DESIGN
SUBMISSION
11-18-21

APPR	DATE	DESCRIPTION	SYM

NAVFAC

REGISTERED ARCHITECT
CERTIFICATE NO.
49179
PAWEL
PASZCZUK
Date Signed 11/11/21
ARIZONA, U.S.A.
Expires 03/31/2024
SEAL

IRQ WM Jordan COMPANY — A JOINT VENTURE —

Michael Baker INTERNATIONAL
100 AIRSIDE DRIVE
MOON TOWNSHIP, PA 15108
A/E INFO

APPROVED

FOR COMMANDER NAVFAC

ACTIVITY
MARINE CORPS BASE
CAMP LEJEUNE

SATISFACTORY TO DATE DD/MM/YY

DES XXX | DRW XXX | CHK XXX

PM / DM TOWLER / ROOT

BRANCH HEAD

DESIGN DIRECTOR R.L.Stephens, Jr.

FIRE PROTECTION DPS

DEPARTMENT OF THE NAVY
NAVAL FACILITIES ENGINEERING SYSTEMS COMMAND
ATLANTIC DESIGN AND CONSTRUCTION
NAVAL FACILITIES ENGINEERING SYSTEMS COMMAND ATLANTIC
NORFOLK, VA
MCB CAMP LEJEUNE
JACKSONVILLE, NC
P1527 LOGCOM CSP WAREHOUSE
COVER SHEET

SCALE: AS NOTED
EPROJECT NO.: 1639600
CONSTR. CONTR. NO. N40085-20-C-0059
NAVFAC DRAWING NO. 14111001
SHEET 1 OF 447

G-001

DRAWFORM REVISION: 25 AUGUST 2020

P1527 FINAL SUBMISSION - 11/18/2021

PLOTTED: 11/15/2021 10:52:55 AM

FILE NAME: BIM 360://HF PACKAGE 3/P1527 LOG COM CSP--1639600-A.rvt

SCHEDULE - SHEET INDEX 1 OF 2

NO.	NAVFAC DRAWING NO.	SHEET INFORMATION NUMBER	NAME
GENERAL			
1	14111001	G-001	COVER SHEET
2	14111002	G-002	DRAWING INDEX - 1 of 2
3	14111003	G-003	DRAWING INDEX - 2 OF 2
4	14111004	G-004	AREA EVALUATION
5	14111005	G-010	SITE CODE COMPLIANCE PLAN
6	14111006	G-100	LIFE SAFETY - CODE ANALYSIS
7	14111007	G-110	LIFE SAFETY - OVERALL - 1ST FLOOR PLAN
8	14111008	G-111	LIFE SAFETY - 1ST FLOOR PLAN - AREA A
9	14111009	G-112	LIFE SAFETY - 1ST FLOOR PLAN - AREA B
10	14111010	G-113	LIFE SAFETY - 1ST FLOOR PLAN - AREA C
11	14111011	G-114	LIFE SAFETY - 1ST FLOOR PLAN - AREA D
12	14111012	G-115	LIFE SAFETY - 1ST FLOOR PLAN - AREA E
13	14111013	G-116	LIFE SAFETY - 1ST FLOOR PLAN - AREA F
14	14111014	G-117	LIFE SAFETY - 1ST FLOOR PLAN - AREA G
15	14111015	G-118	LIFE SAFETY - 1ST FLOOR PLAN - AREA H
CIVIL			
16	14111019	C-001	CIVIL GENERAL NOTES
17	14111020	C-002	CIVIL GENERAL NOTES
18	14111021	C-003	ACCESS AND SAFETY NOTES
19	14111022	C-004	CIVIL LEGEND AND ABBREVIATIONS
20	14111023	V-001	EXISTING STRUCTURE SCHEDULES
21	14111024	VF100	OVERALL EXISTING CONDITIONS PLAN
22	14111025	VF101	EXISTING CONDITIONS
23	14111026	VF102	EXISTING CONDITIONS
24	14111027	VD100	OVERALL DEMOLITION PLAN
25	14111028	B-100	BORING LOCATION PLAN
26	14111029	B-500	BORING LOGS
27	14111030	B-501	BORING LOGS
28	14111031	B-502	BORING LOGS
30	14111033	CS100	OVERALL SITE PLAN
31	14111034	CS101	SITE PLAN
32	14111035	CS102	SITE PLAN
33	14111036	CS501	SITE DETAILS
34	14111037	CS502	SITE DETAILS
35	14111038	CS503	SITE DETAILS
36	14111039	CG100	OVERALL GRADING AND DRAINAGE PLAN
37	14111040	CG101	GRADING AND DRAINAGE PLAN
38	14111041	CG102	GRADING AND DRAINAGE PLAN
39	14111042	CG200	STORM SEWER STRUCTURE TABLES
40	14111043	CG201	STORM SEWER PROFILES
41	14111044	CG501	DRAINAGE DETAILS
42	14111045	CG502	DRAINAGE DETAILS
43	14111046	CG503	DRAINAGE DETAILS
44	14111047	CH100	OVERALL HORIZONTAL CONTROL PLAN
45	14111048	CH101	HORIZONTAL CONTROL PLAN
46	14111049	CH102	HORIZONTAL CONTROL PLAN
47	14111050	CH501	HORIZONTAL CONTROL POINT TABLES
48	14111051	CP100	OVERALL PAVING PLAN
49	14111052	CP101	JOINT LAYOUT PLAN
50	14111053	CP501	PAVEMENT DETAILS
51	14111054	CP502	PAVEMENT DETAILS
52	14111055	CU100	OVERALL UTILITY PLAN
53	14111056	CU101	UTILITY PLAN
54	14111057	CU102	UTILITY PLAN
55	14111058	CU201	UTILITY PROFILES
56	14111059	CU202	UTILITY PROFILES
57	14111060	CU203	UTILITY PROFILES
58	14111061	CU501	UTILITY DETAILS
59	14111062	CU502	UTILITY DETAILS
60	14111063	CE001	EROSION AND SEDIMENT CONTROL NOTES AND SEQUENCE
61	14111064	CE101	EROSION AND SEDIMENT CONTROL PLAN PHASE 1
62	14111065	CE102	EROSION AND SEDIMENT CONTROL PLAN PHASE 2
63	14111066	CE501	EROSION AND SEDIMENT CONTROL DETAILS
64	14111067	CE502	EROSION AND SEDIMENT CONTROL DETAILS
65	14111068	CE503	EROSION AND SEDIMENT CONTROL DETAILS
66	14111069	CE504	EROSION AND SEDIMENT CONTROL DETAILS
67	14111070	CE505	EROSION AND SEDIMENT CONTROL DETAILS
LANDSCAPE			
68	14111074	L-101	LANDSCAPE SITE PLAN
69	14111075	L-404	SITE FURNISHING ENLARGEMENTS
70	14111076	L-501	LANDSCAPE DETAILS
71	14111077	L-502	SITE FURNISHING DETAILS

SCHEDULE - SHEET INDEX 1 OF 2

NO.	NAVFAC DRAWING NO.	SHEET INFORMATION NUMBER	NAME
STRUCTURAL			
72	14111081	S-001	STRUCTURAL NOTES
73	14111082	S-002	STRUCTURAL NOTES
74	14111083	S-003	STRUCTURAL NOTES AND ABBREVIATIONS
75	14111084	S-100	PLAN NOTES, KEYNOTES, LEGENDS AND SCHEDULES
76	14111085	S-101	DIMENSION PLAN - AREA A
77	14111086	S-102	DIMENSION PLAN - AREA B
78	14111087	S-103	DIMENSION PLAN - AREA C
79	14111088	S-104	DIMENSION PLAN - AREA D
80	14111089	S-105	DIMENSION PLAN - AREA E
81	14111090	S-106	DIMENSION PLAN - AREA F
82	14111091	S-107	DIMENSION PLAN - AREA G
83	14111092	S-108	DIMENSION PLAN - AREA H
84	14111093	S-111	FOUNDATION PLAN - AREA A
85	14111094	S-112	FOUNDATION PLAN - AREA B
86	14111095	S-113	FOUNDATION PLAN - AREA C
87	14111096	S-114	FOUNDATION PLAN - AREA D
88	14111097	S-115	FOUNDATION PLAN - AREA E
89	14111098	S-116	FOUNDATION PLAN - AREA F
90	14111099	S-117	FOUNDATION PLAN - AREA G
91	14111100	S-118	FOUNDATION PLAN - AREA H
92	14111101	S-121	ROOF FRAMING PLAN - AREA A
93	14111102	S-122	ROOF FRAMING PLAN - AREA B
94	14111103	S-123	ROOF FRAMING PLAN - AREA C
95	14111104	S-124	ROOF FRAMING PLAN - AREA D
96	14111105	S-125	ROOF FRAMING PLAN - AREA E
97	14111106	S-126	ROOF FRAMING PLAN - AREA F
98	14111107	S-127	ROOF FRAMING PLAN - AREA G
99	14111108	S-128	ROOF FRAMING PLAN - AREA H
100	14111109	S-301	FOUNDATION SECTIONS
101	14111110	S-302	FOUNDATION SECTIONS
102	14111111	S-311	FRAMING SECTIONS
103	14111112	S-312	FRAMING SECTIONS
104	14111113	S-501	TYPICAL DETAILS
105	14111114	S-502	TYPICAL DETAILS
106	14111115	S-511	TYPICAL DETAILS
TILT-UP			
107	14111116	S-600	TILT-UP PANEL PLAN -OVERALL
108	14111117	S-601	TILT-UP PANEL PLAN -AREA A
109	14111118	S-602	TILT-UP PANEL PLAN -AREA B
110	14111119	S-603	TILT-UP PANEL PLAN -AREA C
111	14111120	S-604	TILT-UP PANEL PLAN -AREA D
112	14111121	S-605	TILT-UP PANEL PLAN -AREA E
113	14111122	S-606	TILT-UP PANEL PLAN -AREA F
114	14111123	S-607	TILT-UP PANEL PLAN -AREA G
115	14111124	S-608	TILT-UP PANEL PLAN -AREA H
116	14111125	S-701	TILT-UP PANEL REINFORCEMENT -AREA A
117	14111126	S-702	TILT-UP PANEL REINFORCEMENT -AREA B
118	14111127	S-703	TILT-UP PANEL REINFORCEMENT -AREA C
119	14111128	S-704	TILT-UP PANEL REINFORCEMENT -AREA D
120	14111129	S-705	TILT-UP PANEL REINFORCEMENT -AREA D -CON'T
121	14111130	S-706	TILT-UP PANEL REINFORCEMENT -AREA E
122	14111131	S-707	TILT-UP PANEL REINFORCEMENT -AREA F
123	14111132	S-708	TILT-UP PANEL REINFORCEMENT -AREA G
124	14111133	S-709	TILT-UP PANEL REINFORCEMENT -AREA G -CON'T
125	14111134	S-710	TILT-UP PANEL REINFORCEMENT -AREA H
ARCHITECTURE			
126	14111137	A-001	ARCHITECTURAL GENERAL NOTES, MATERIAL AND ANNOTATION LEGEND
127	14111138	A-002	TYPICAL ABA DETAILS
128	14111139	AS101	ARCHITECTURAL - SITE PLAN
129	14111140	AS102	ARCHITECTURAL - SITE PLAN DETAILS
130	14111141	AS103	EQUIPMENT ENCLOSURE
134	14111142	A-110	OVERALL FLOOR PLAN
131	14111143	A-111	1ST FLOOR PLAN - AREA A
133	14111142	A-112	1ST FLOOR PLAN - AREA B
135	14111144	A-113	1ST FLOOR PLAN - AREA C
136	14111145	A-114	1ST FLOOR PLAN - AREA D
137	14111146	A-115	1ST FLOOR PLAN - AREA E
138	14111147	A-116	1ST FLOOR PLAN - AREA F
139	14111148	A-117	1ST FLOOR PLAN - AREA G
140	14111149	A-118	1ST FLOOR PLAN - AREA H
141	14111150	A-119	JEFS STORAGE WAREHOUSE
142	14111151	A-120	COVERED VEHICLE PULL IN
132	14111141	A-130	ROOF PLAN
144	14111153	AR110	COMPREHENSIVE - REFLECTED CEILING PLAN - 1ST FLOOR

SCHEDULE - SHEET INDEX 1 OF 2

NO.	NAVFAC DRAWING NO.	SHEET INFORMATION NUMBER	NAME
141	14111152	AR111	REFLECTED CEILING PLAN - 1ST FLOOR - AREA A
143	14111154	AR112	REFLECTED CEILING PLAN - 1ST FLOOR - AREA B
144	14111155	AR113	REFLECTED CEILING PLAN - 1ST FLOOR - AREA C
147	14111158	AR114	REFLECTED CEILING PLAN - 1ST FLOOR - AREA D
146	14111157	AR115	REFLECTED CEILING PLAN - 1ST FLOOR - AREA E
145	14111156	AR116	REFLECTED CEILING PLAN - 1ST FLOOR - AREA F
148	14111159	AR117	REFLECTED CEILING PLAN - 1ST FLOOR - AREA G
149	14111160	AR118	REFLECTED CEILING PLAN - 1ST FLOOR - AREA H
160	14111171	A-201	NORTH AND SOUTH EXTERIOR ELEVATIONS
150	14111161	A-202	EAST AND WEST ELEVATIONS
151	14111162	A-301	BUILDING SECTIONS
152	14111163	A-311	WALL SECTIONS
163	14111174	A-312	WALL SECTIONS
167	14111178	A-313	WALL SECTIONS
169	14111180	A-315	ACCESSIBILITY DIAGRAMS
174	14111185	A-316	ACCESSIBILITY DIAGRAMS
161	14111172	A-401	ENLARGED TOILET ROOMS - JEFS
153	14111164	A-402	ENLARGED TOILET ROOMS - LOGCOM
162	14111173	A-403	ENLARGED BREAK ROOMS - LOGCOM & JEFS
154	14111165	A-501	WINDOW DETAILS
164	14111175	A-502	DETAIL SECTION VIEWS
165	14111176	A-503	STAIR PLAN DETAILS
166	14111177	A-504	STAIR & RAMP SECTION DETAILS
155	14111166	A-505	DETAIL PLAN VIEWS
168	14111179	A-506	PALLET RACK DETAILS
170	14111181	A-507	EXTERIOR DETAILS
171	14111182	A-508	ROOF DETAILS
179	14111190	A-509	ROOF DETAILS
172	14111183	A-510	INTERIOR DETAILS
176	14111187	A-511	INTERIOR DETAILS
175	14111186	A-512	INTERIOR DETAILS - CMU
177	14111188	A-513	INTERIOR DETAILS
178	14111189	A-514	INTERIOR DETAILS - PENETRATIONS
173	14111184	A-515	CEILING DETAILS
180	14111191	A-516	EXTERIOR DOOR DETAILS
181	14111192	A-517	EXTERIOR OVERHEAD COILING DOOR DETAILS
182	14111193	A-519	EXTERIOR WINDOW DETAILS
157	14111168	A-601	PARTITION TYPES
156	14111167	A-611	DOOR SCHEDULE, DOOR AND WINDOW ELEVATIONS
159	14111170	A-612	DOOR AND JAMB DETAILS
183	14111194	A-801	AIR BARRIER - FLOOR PLAN
184	14111195	A-802	AIR BARRIER - ROOF PLAN
185	14111196	A-803	AIR BARRIER - BUILDING SECTIONS
186	14111197	A-900	ARCHITECTURAL RENDERINGS
158	14111169	A-901	3D VIEWS
187	14111198	A-902	ARCHITECTURAL RENDERINGS
188	14111199	A-903	ARCHITECTURAL RENDERINGS
INTERIORS			
194	14111208	IN001	INTERIOR FINISH - BASIS OF DESIGN, SCHEDULE AND DETAILED NOTES
195	14111209	IN110	INTERIOR FINISH - OVERALL1ST FLOOR PLAN
196	14111210	IN111	INTERIOR FINISH - 1ST FLOOR PLAN - AREA A
197	14111211	IN112	INTERIOR FINISH - 1ST FLOOR PLAN - AREA B
198	14111212	IN113	INTERIOR FINISH - 1ST FLOOR PLAN - AREA C
199	14111213	IN114	INTERIOR FINISH - 1ST FLOOR PLAN - AREA D
200	14111214	IN115	INTERIOR FINISH - 1ST FLOOR PLAN - AREA E
201	14111215	IN116	INTERIOR FINISH - 1ST FLOOR PLAN - AREA F
202	14111216	IN117	INTERIOR FINISH - 1ST FLOOR PLAN - AREA G
203	14111217	IN118	INTERIOR FINISH - 1ST FLOOR PLAN - AREA H
204	14111218	IN501	INTERIOR FINISH - DETAILS AND BREAK ROOM FINISH ELEVATIONS
205	14111219	IG110	SIGNAGE - OVERALL 1ST FLOOR PLAN
206	14111220	IG111	SIGNAGE - 1ST FLOOR PLAN - AREA A
207	14111221	IG112	SIGNAGE - 1ST FLOOR PLAN - AREA B
208	14111222	IG113	SIGNAGE - 1ST FLOOR PLAN - AREA C
209	14111223	IG114	SIGNAGE - 1ST FLOOR PLAN - AREA D
210	14111224	IG115	SIGNAGE - 1ST FLOOR PLAN - AREA E
211	14111225	IG116	SIGNAGE - 1ST FLOOR PLAN - AREA F
212	14111226	IG117	SIGNAGE - 1ST FLOOR PLAN - AREA G
213	14111227	IG118	SIGNAGE - 1ST FLOOR PLAN - AREA H
214	14111228	IG501	SIGNAGE - BASIS OF DESIGN AND DETAILS
215	14111229	IG502	SIGNAGE - DETAILS
216	14111230	IG503	SIGNAGE - DETAILS
217	14111231	IG601	SIGNAGE - SCHEDULE AND DETAILED NOTES
218	14111232	IF110	INTERIOR FF&E - OVERALL 1ST FLOOR PLAN
219	14111233	IF111	INTERIOR FF&E - 1ST FLOOR PLAN - AREA A
220	14111234	IF112	INTERIOR FF&E - 1ST FLOOR PLAN - AREA B

SCHEDULE - SHEET INDEX 1 OF 2

NO.	NAVFAC DRAWING NO.	SHEET INFORMATION NUMBER	NAME
221	14111235	IF113	INTERIOR FF&E - 1ST FLOOR PLAN - AREA C
222	14111236	IF114	INTERIOR FF&E - 1ST FLOOR PLAN - AREA D
223	14111237	IF115	INTERIOR FF&E - 1ST FLOOR PLAN - AREA E
224	14111238	IF116	INTERIOR FF&E - 1ST FLOOR PLAN - AREA F
225	14111239	IF117	INTERIOR FF&E - 1ST FLOOR PLAN - AREA G
226	14111240	IF118	INTERIOR FF&E - 1ST FLOOR PLAN - AREA H
227	14111241	IF501	INTERIOR FF&E - DESK & ARTWORK DETAILS AND BREAK ROOM EQUIPMENT ELEVATIONS
FIRE PROTECTION			
228	14111245	FA001	FIRE ALARM - GENERAL NOTES, ABBREVIATIONS, & SYMBOLS
229	14111246	FA002	FIRE ALARM - SEQUENCE OF OPERATIONS
230	14111247	FA110	FIRE ALARM - OVERALL - 1ST FLOOR PLAN
231	14111248	FA111	FIRE ALARM - 1ST FLOOR PLAN - AREA A
232	14111249	FA112	FIRE ALARM - 1ST FLOOR PLAN - AREA B
233	14111250	FA113	FIRE ALARM - 1ST FLOOR PLAN - AREA C
234	14111251	FA114	FIRE ALARM - 1ST FLOOR PLAN - AREA D
235	14111252	FA115	FIRE ALARM - 1ST FLOOR PLAN - AREA E
236	14111253	FA116	FIRE ALARM - 1ST FLOOR PLAN - AREA F
237	14111254	FA117	FIRE ALARM - 1ST FLOOR PLAN - AREA G
238	14111255	FA118	FIRE ALARM - 1ST FLOOR PLAN - AREA H
239	14111256	FA501	FIRE ALARM - DETAILS
240	14111257	FA701	FIRE ALARM - RISER DIAGRAM
241	14111258	FX001	FIRE PROTECTION GENERAL NOTES, ABBREVIATIONS, & SYMBOLS
242	14111259	FX110	FIRE PROTECTION - OVERALL - 1ST FLOOR PLAN
243	14111260	FX111	FIRE PROTECTION - 1ST FLOOR PLAN - AREA A
244	14111261	FX112	FIRE PROTECTION - 1ST FLOOR PLAN - AREA B
245	14111262	FX113	FIRE PROTECTION - 1ST FLOOR PLAN - AREA C
246	14111263	FX114	FIRE PROTECTION - 1ST FLOOR PLAN - AREA D
247	14111264	FX115	FIRE PROTECTION - 1ST FLOOR PLAN - AREA E
248	14111265	FX116	FIRE PROTECTION - 1ST FLOOR PLAN - AREA F
249	14111266	FX117	FIRE PROTECTION - 1ST FLOOR PLAN - AREA G
250	14111267	FX118	FIRE PROTECTION - 1ST FLOOR PLAN - AREA H
PLUMBING			
251	14111272	P-001	PLUMBING GENERAL NOTES, ABBREVIATIONS & SYMBOLS
252	14111273	PU110	PLUMBING - UNDERGROUND PLAN - OVERALL
253	14111274	PU111	PLUMBING - UNDERGROUND PLAN - AREA A
254	14111275	PU112	PLUMBING - UNDERGROUND PLAN - AREA B
255	14111276	PU113	PLUMBING - UNDERGROUND PLAN - AREA C
256	14111277	PU114	PLUMBING - UNDERGROUND PLAN - AREA D
257	14111278	PU115	PLUMBING - UNDERGROUND PLAN - AREA E
258	14111279	PU116	PLUMBING - UNDERGROUND PLAN - AREA F
259	14111280	PU117	PLUMBING - UNDERGROUND PLAN - AREA G
260	14111281	PU118	PLUMBING - UNDERGROUND PLAN - AREA H
261	14111282	P-110	PLUMBING - 1ST FLOOR PLAN - OVERALL
261	14111283	P-111	PLUMBING - 1ST FLOOR PLAN - AREA A
262	14111284	P-112	PLUMBING - 1ST FLOOR PLAN - AREA B
263	14111285	P-113	PLUMBING - 1ST FLOOR PLAN - AREA C
264	14111286	P-114	PLUMBING - 1ST FLOOR PLAN - AREA D
265	14111287	P-115	PLUMBING - 1ST FLOOR PLAN - AREA E
266	14111288	P-116	PLUMBING - 1ST FLOOR PLAN - AREA F
267	14111289	P-117	PLUMBING - 1ST FLOOR PLAN - AREA G
268	14111290	P-118	PLUMBING - 1ST FLOOR PLAN - AREA H
269	14111291	P-151	PLUMBING - ROOF PLAN
270	14111292	P-401	PLUMBING - ENLARGED PLANS
271	14111293	P-402	PLUMBING - ENLARGED PLANS
272	14111294	P-501	PLUMBING - DETAILS
273	14111295	P-502	PLUMBING - DETAILS
274	14111296	P-503	PLUMBING - DETAILS
275	14111297	P-601	PLUMBING - SCHEDULES
276	14111298	P-602	PLUMBING - SCHEDULES
277	14111299	P-701	PLUMBING - RISER DIAGRAMS
278	14111300	P-702	PLUMBING - RISER DIAGRAMS
279	14111301	P-703	PLUMBING - RISER DIAGRAMS
280	14111302	P-704	PLUMBING - RISER DIAGRAMS
281	14111303	P-705	PLUMBING - RISER DIAGRAMS
279	14111304	P-706	PLUMBING - RISER DIAGRAMS

APPR | DATE | DESCRIPTION | SYM

NAVFAC

REGISTERED ARCHITECT CERTIFICATE NO. 49179 PAWEL PASZCZUK Date Signed 11/17/21 ARIZONA, U.S.A.
Expires 03/31/2024 SEAL

W.M. Jordan COMPANY – A JOINT VENTURE –

Michael Baker INTERNATIONAL
100 AIRSIDE DRIVE MOON TOWNSHIP, PA 15108 A/E INFO

APPROVED

FOR COMMANDER NAVFAC

ACTIVITY
MARINE CORPS BASE CAMP LEJEUNE

SATISFACTORY TO DATE DD/MM/YY

DES XXX | DRW XXX | CHK XXX

PM / DM TOWLER / ROOT

BRANCH HEAD

DESIGN DIRECTOR R.L.Stephens, Jr.

FIRE PROTECTION DPS

DEPARTMENT OF THE NAVY
NAVAL FACILITIES ENGINEERING SYSTEMS COMMAND
ATLANTIC DESIGN AND CONSTRUCTION
MCB CAMP LEJEUNE

NAVAL FACILITIES ENGINEERING SYSTEMS COMMAND ATLANTIC
NORFOLK, VA
JACKSONVILLE, NC

P1527 LOGCOM CSP WAREHOUSE

DRAWING INDEX - 1 of 2

SCALE: AS NOTED
EPROJECT NO.: 1639600
CONSTR. CONTR. NO. N40085-20-C-0059
NAVFAC DRAWING NO. 14111002
SHEET 2 OF 447

G-002

DRAWFORM REVISION: 25 AUGUST 2020

P1527 FINAL SUBMISSION - 11/18/2021

PLOTTED: 11/15/2021 11:23:10 AM

FILE NAME: BIM 360/IHF PACKAGE 3/P1527 LOG COM CSP-1639600-A.rvt

SCHEDULE - SHEET INDEX 2 OF 2

NO.	NAVFAC DRAWING NO.	SHEET INFORMATION NUMBER	SHEET INFORMATION NAME
MECHANICAL			
285	14111308	M-001	MECHANICAL - SYMBOLS AND ABBREVIATIONS
286	14111309	M-002	MECHANICAL - GENERAL NOTES
287	14111310	MH110	HVAC - OVERALL - 1ST FLOOR PLAN
288	14111311	MH111	HVAC - 1ST FLOOR PLAN - AREA A
289	14111312	MH112	HVAC - 1ST FLOOR PLAN - AREA B
290	14111313	MH113	HVAC- 1ST FLOOR PLAN - AREA C
291	14111314	MH114	HVAC - 1ST FLOOR PLAN - AREA D
292	14111315	MH115	HVAC - 1ST FLOOR PLAN - AREA E
293	14111316	MH116	HVAC - 1ST FLOOR PLAN - AREA F
294	14111317	MH117	HVAC - 1ST FLOOR PLAN - AREA G
295	14111318	MH118	HVAC - 1ST FLOOR PLAN - AREA H
296	14111319	MP110	PIPING - OVERALL - 1ST FLOOR PLAN
297	14111320	MP111	PIPING - 1ST FLOOR PLAN - AREA A
298	14111321	MP112	PIPING - 1ST FLOOR PLAN - AREA B
299	14111322	MP113	PIPING - 1ST FLOOR PLAN - AREA C
300	14111323	MP114	PIPING - 1ST FLOOR PLAN - AREA D
301	14111324	MP115	PIPING - 1ST FLOOR PLAN - AREA E
302	14111325	MP116	PIPING - 1ST FLOOR PLAN - AREA F
303	14111326	MP117	PIPING - 1ST FLOOR PLAN - AREA G
304	14111327	MP118	PIPING - 1ST FLOOR PLAN - AREA H
305	14111328	M-301	MECHANICAL - SECTIONS
306	14111329	M-401	MECHANICAL - ENLARGED PLANS
307	14111330	M-402	MECHANICAL - ENLARGED PLANS
308	14111331	M-501	MECHANICAL - DETAILS
309	14111332	M-502	MECHANICAL - DETAILS
310	14111333	M-503	MECHANICAL - DETAILS
311	14111334	M-504	MECHANICAL - DETAILS
312	14111335	M-505	MECHANICAL - DETAILS
313	14111336	M-506	MECHANICAL - DETAILS
314	14111337	M-507	MECHANICAL - DETAILS
315	14111338	M-601	MECHANICAL - SCHEDULES
316	14111339	M-602	MECHANICAL - SCHEDULES
317	14111340	M-603	MECHANICAL - SCHEDULES
318	14111341	M-604	MECHANICAL - SCHEDULES
319	14111342	M-605	MECHANICAL - SCHEDULES
320	14111343	M-606	MECHANICAL - SCHEDULES
321	14111344	M-701	MECHANICAL - DIAGRAMS
322	14111345	M-702	MECHANICAL - DIAGRAMS
323	14111346	M-703	MECHANICAL - DIAGRAMS
324	14111347	M-704	MECHANICAL - DIAGRAMS
325	14111348	M-801	MECHANICAL - CONTROLS
326	14111349	M-802	MECHANICAL - CONTROLS
327	14111350	M-803	MECHANICAL - CONTROLS
328	14111351	M-804	MECHANICAL - CONTROLS
329	14111352	M-805	MECHANICAL - CONTROLS
330	14111353	M-806	MECHANICAL - CONTROLS
331	14111354	M-807	MECHANICAL - CONTROLS
332	14111355	M-808	MECHANICAL - CONTROLS
333	14111356	M-809	MECHANICAL - CONTROLS
334	14111357	M-810	MECHANICAL - CONTROLS
335	14111358	M-811	MECHANICAL - CONTROLS
336	14111359	M-812	MECHANICAL - CONTROLS
337	14111360	M-813	MECHANICAL - CONTROLS
338	14111361	M-814	MECHANICAL - CONTROLS
339	14111362	M-901	MECHANICAL - ISOMETRIC
340	14111363	M-902	MECHANICAL - ISOMETRIC
ELECTRICAL			
341	14111367	E-001	ELECTRICAL - NOTES, SYMBOLS, AND ABBREVIATIONS
342	14111368	ES101	ELECTRICAL - SITE UTILITY PLAN
343	14111369	ES102	ELECTRICAL - SITE LIGHTING PLAN
344	14111370	ES501	ELECTRICAL - SITE DETAILS
345	14111371	ES502	ELECTRICAL - SITE DETAILS
346	14111372	ES503	ELECTRICAL - SITE DETAILS
347	14111373	ES504	ELECTRICAL - SITE DETAILS
348	14111374	ES505	ELECTRICAL - SITE DETAILS
349	14111375	ES506	ELECTRICAL - SITE DETAILS
350	14111376	EG101	ELECTRICAL - GROUNDING PLAN
351	14111377	EG102	ELECTRICAL - GROUNDING PLAN
352	14111378	EG103	ELECTRICAL - LIGHTNING PROTECTION PLAN
353	14111379	EG104	ELECTRICAL - LIGHTNING PROTECTION PLAN
354	14111380	EG501	ELECTRICAL - GROUNDING DETAILS
355	14111381	EL110	LIGHTING - OVERALL FLOOR PLAN
356	14111382	EL111	LIGHTING - FIRST FLOOR PLAN - AREA A
357	14111382	EL112	LIGHTING - FIRST FLOOR PLAN - AREA B
358	14111383	EL113	LIGHTING - FIRST FLOOR PLAN - AREA C
359	14111385	EL114	LIGHTING - FIRST FLOOR PLAN - AREA D
360	14111386	EL115	LIGHTING - FIRST FLOOR PLAN - AREA E

SCHEDULE - SHEET INDEX 2 OF 2

NO.	NAVFAC DRAWING NO.	SHEET INFORMATION NUMBER	SHEET INFORMATION NAME
361	14111387	EL116	LIGHTING - FIRST FLOOR PLAN - AREA F
362	14111388	EL117	LIGHTING - FIRST FLOOR PLAN - AREA G
363	14111389	EL118	LIGHTING - FIRST FLOOR PLAN - AREA H
364	14111390	EP110	POWER - OVERALL FLOOR PLAN
365	14111391	EP111	POWER - FIRST FLOOR PLAN - AREA A
366	14111392	EP112	POWER - FIRST FLOOR PLAN - AREA B
367	14111393	EP113	POWER - FIRST FLOOR PLAN - AREA C
368	14111394	EP114	POWER - FIRST FLOOR PLAN - AREA D
369	14111395	EP115	POWER - FIRST FLOOR PLAN - AREA E
370	14111396	EP116	POWER - FIRST FLOOR PLAN - AREA F
371	14111397	EP117	POWER - FIRST FLOOR PLAN - AREA G
372	14111398	EP118	POWER - FIRST FLOOR PLAN - AREA H
373	14111399	E-401	ELECTRICAL - ENLARGED PLANS
374	14111400	E-402	ELECTRICAL - ENLARGED PLANS
375	14111401	E-501	ELECTRICAL - DETAILS
376	14111402	E-502	ELECTRICAL - DETAILS
377	14111403	E-503	ELECTRICAL - DETAILS
378	14111404	E-504	ELECTRICAL - LIGHTING CONTROL DIAGRAMS
379	14111405	E-505	ELECTRICAL - LIGHTING CONTROL DIAGRAMS
380	14111406	E-506	ELECTRICAL - LIGHTING CONTROL MATRIX
381	14111407	E-601	ELECTRICAL - LIGHTING FIXTURE SCHEDULE
382	14111408	E-602	ELECTRICAL - SINGLE LINE DIAGRAM
383	14111409	E-603	ELECTRICAL - PANEL SCHEDULES
384	14111410	E-604	ELECTRICAL - PANEL SCHEDULES
385	14111411	E-605	ELECTRICAL - PANEL SCHEDULES
386	14111412	E-606	ELECTRICAL - PANEL SCHEDULES
387	14111413	E-607	ELECTRICAL - PANEL SCHEDULES
388	14111414	E-608	ELECTRICAL - PANEL SCHEDULES
389	14111415	E-609	ELECTRICAL - PANEL SCHEDULES
390	14111416	E-610	ELECTRICAL - PANEL SCHEDULES
TELECOMMUNICATIONS			
391	14111420	T-001	TELECOMMUNICATIONS SYMBOLS, SCHEDULES, & NOTES
392	14111421	TS101	TELECOMMUNICATIONS - SITE PLAN
393	14111422	T-110	TELECOMMUNICATIONS - OVERALL FLOOR PLAN
394	14111423	T-111	TELECOMMUNICATIONS - FIRST FLOOR PLAN - AREA A
395	14111424	T-112	TELECOMMUNICATIONS - FIRST FLOOR PLAN - AREA B
396	14111425	T-113	TELECOMMUNICATIONS - FIRST FLOOR PLAN - AREA C
397	14111426	T-114	TELECOMMUNICATIONS - FIRST FLOOR PLAN - AREA D
398	14111427	T-115	TELECOMMUNICATIONS - FIRST FLOOR PLAN - AREA E
399	14111428	T-116	TELECOMMUNICATIONS - FIRST FLOOR PLAN - AREA F
400	14111429	T-117	TELECOMMUNICATIONS - FIRST FLOOR PLAN - AREA G
401	14111430	T-118	TELECOMMUNICATIONS - FIRST FLOOR PLAN - AREA H
402	14111431	T-401	TELECOMMUNICATIONS - ENLARGED PLANS
403	14111432	T-402	TELECOMMUNICATIONS - ENLARGED PLANS
404	14111433	T-403	TELECOMMUNICATIONS - ENLARGED PLANS
405	14111434	T-501	TELECOMMUNICATIONS - DETAILS
406	14111435	T-502	TELECOMMUNICATIONS - DETAILS
407	14111436	T-503	TELECOMMUNICATIONS - DETAILS
408	14111437	T-504	TELECOMMUNICATIONS - DETAILS
409	14111438	T-505	TELECOMMUNICATIONS - DETAILS
410	14111439	T-506	TELECOMMUNICATIONS - DETAILS
411	14111440	T-601	TELECOMMUNICATIONS - DIAGRAMS
412	14111441	TY111	SECURITY - FIRST FLOOR PLAN - AREA A
413	14111442	TY112	SECURITY - FIRST FLOOR PLAN - AREA B
414	14111443	TY113	SECURITY - FIRST FLOOR PLAN - AREA C
415	14111444	TY114	SECURITY - FIRST FLOOR PLAN - AREA D
416	14111445	TY115	SECURITY - FIRST FLOOR PLAN - AREA E
417	14111446	TY116	SECURITY - FIRST FLOOR PLAN - AREA F
418	14111447	TY117	SECURITY - FIRST FLOOR PLAN - AREA G
419	14111448	TY118	SECURITY - FIRST FLOOR PLAN - AREA H
420	14111449	TY501	SECURITY - DETAILS
AUDIOVISUAL			
1	14111453	TA001	AUDIOVISUAL SYMBOLS AND NOTES
	14111454	TA110	1ST FLOOR PLAN AUDIOVISUAL - OVERALL
	14111455	TA111	1ST FLOOR PLAN AUDIOVISUAL - AREA A
	14111456	TA114	1ST FLOOR PLAN AUDIOVISUAL - AREA D
	14111457	TA116	1ST FLOOR PLAN AUDIOVISUAL - AREA F
	14111458	TA118	1ST FLOOR PLAN AUDIOVISUAL - AREA H
	14111459	TR110	REFLECTED CEILING PLAN AUDIOVISUAL - 1ST FLOOR - OVERALL
	14111460	TR118	REFLECTED CEILING PLAN AUDIOVISUAL - 1ST FLOOR - AREA H
	14111461	TA310	1ST FLOOR PLAN EQUIPMENT - OVERALL
	14111462	TA311	1ST FLOOR PLAN EQUIPMENT - AREA A
	14111463	TA314	1ST FLOOR PLAN EQUIPMENT - AREA D
	14111464	TA316	1ST FLOOR PLAN EQUIPMENT - AREA F
	14111465	TA318	1ST FLOOR PLAN EQUIPMENT - AREA H

SCHEDULE - SHEET INDEX 2 OF 2

NO.	NAVFAC DRAWING NO.	SHEET INFORMATION NUMBER	SHEET INFORMATION NAME
	14111466	TA401	AUDIOVISUAL ELEVATIONS
	14111467	TA402	AUDIOVISUAL ELEVATIONS
	14111468	TA403	AUDIOVISUAL ELEVATIONS
	14111469	TA501	AUDIOVISUAL DETAILS
	14111470	TA502	AUDIOVISUAL DETAILS
	14111471	TA503	AUDIOVIUSAL DETAILS
	14111472	TA601	AUDIOVISUAL RISER
	14111473	TA801	CLASSROOM 200 SYSTEM DRAWINGS
	14111474	TA802	CLASSROOM 200 SYSTEM DRAWINGS
	14111475	TA803	BREAK 202 SYSTEM DRAWINGS
	14111476	TA804	TEST & REPAIR 208 SYSTEM DRAWINGS
	14111477	TA805	SHIPPING/RECIEVING/WATER TESTING 209 SYSTEM DRAWINGS
	14111478	TA806	BREAK 103 SYSTEM DRAWINGS
	14111479	TA807	SHIPPING/RECEIVING 2 DOCKS 104.1 SYSTEM DRAWINGS

SYM	DESCRIPTION	DATE	APPR

NAVFAC

REGISTERED ARCHITECT
CERTIFICATE NO.
49179
PAWEL PASZCZUK
Date Signed 11/17/21
ARIZONA, U.S.A.
Expires 03/31/2024
SEAL

IRQ W.M. Jordan COMPANY
– A JOINT VENTURE –

Michael Baker
INTERNATIONAL
100 AIRSIDE DRIVE
MOON TOWNSHIP, PA 15108
A/E INFO

APPROVED

FOR COMMANDER NAVFAC

ACTIVITY
MARINE CORPS BASE
CAMP LEJEUNE

SATISFACTORY TO DATE DD/MM/YY

DES Designer DRW Author CHK Checker

PM / DM TOWLER / ROOT

BRANCH HEAD

DESIGN DIRECTOR R.L.Stephens, Jr.

FIRE PROTECTION DPS

DEPARTMENT OF THE NAVY
NAVAL FACILITIES ENGINEERING SYSTEMS COMMAND
ATLANTIC DESIGN AND CONSTRUCTION
NAVAL FACILITIES ENGINEERING SYSTEMS COMMAND ATLANTIC
NORFOLK, VA
MCB CAMP LEJEUNE
JACKSONVILLE, NC
P1527 LOGCOM CSP WAREHOUSE
DRAWING INDEX - 2 OF 2

SCALE: AS NOTED
EPROJECT NO.: 1639600
CONSTR. CONTR. NO. N40085-20-C-0059
NAVFAC DRAWING NO. 14111003
SHEET 3 OF 447

G-003

DRAWFORM REVISION: 25 AUGUST 2020

P1527 FINAL SUBMISSION - 11/18/2021

PLOTTED: 11/15/2021 10:53:03 AM

FILE NAME: BIM 360://AIF PACKAGE 3/P1527 LOG COM CSP-1639600-A.rvt

TOTAL CANOPY SPACE (2,800 SF) + TOTAL BUILDING (106,373 SF) = 109,173 SF
TOTAL ALLOWED GSF = 109,253 SF
WE ARE UNDER ALLOWED GSF BY 80 SF
(SEE A-110 FOR OPTIONS TO ADJUST SQUARE FOOTAGE)

CANOPY #1 (EXTENSION TO DOCK CANOPY FOR VEHICLE DRIVE THRU)
699 SF/2 = 350 SF

26' - 6"
15' - 11"
10' - 7"
44' - 0"

CANOPY #2
3693 SF/2 = 1847 SF

BUILDING FOOTPRINT: (FINISHED EDGE OF EXTERIOR WALLS) 106359 SF

AREA OF RACKS = 8,356 SF

AREA OF WAREHOUSE EXCLUDING RACKS = 44,526 SF

447' - 0"

237' - 11"

58' - 0"
9' - 0"

CANOPY #6
516 SF/2 = 258 SF

8' - 0"
12' - 10"

CANOPY #3
102 SF/2 = 51 SF

10' - 2"
6' - 6"
22' - 0"
44' - 0"

CANOPY #4
143 SF/2 = 72 SF

CANOPY #5
443 SF/2 = 222 SF

1 BUILDING AND CANOPIES
SCALE: 1/16" = 1'-0"

SCALE: 3/64" = 1' - 0"

SCALE:	AS NOTED
EPROJECT NO.:	1639600
CONSTR. CONTR. NO.	N40085-20-C-0059
NAVFAC DRAWING NO.	14111004
SHEET	OF 447

G-004

DRAWFORM REVISION: 25 AUGUST 2020

DEPARTMENT OF THE NAVY
NAVAL FACILITIES ENGINEERING SYSTEMS COMMAND
ATLANTIC DESIGN AND CONSTRUCTION
MCB CAMP LEJEUNE
JACKSONVILLE, NC
P1527 LOGCOM CSP WAREHOUSE
AREA EVALUATION

NAVAL FACILITIES ENGINEERING SYSTEMS COMMAND ATLANTIC
NORFOLK, VA

REGISTERED ARCHITECT
CERTIFICATE NO. 49179
PAWEL PASZCZUK
Date signed 11/11/21
ARIZONA, U.S.A.
Expires 03/31/2024
SEAL

Michael Baker INTERNATIONAL
100 AIRSIDE DRIVE
MOON TOWNSHIP, PA 15108
A/E INFO

APPROVED
FOR COMMANDER NAVFAC

ACTIVITY
MARINE CORPS BASE CAMP LEJEUNE

SATISFACTORY TO DATE DD/MM/YY
DES Designer DRW Author CHK Checker
PM / DM TOWLER / ROOT
BRANCH HEAD
DESIGN DIRECTOR R.L.Stephens, Jr.
FIRE PROTECTION DPS

APPR | DATE | SYM | DESCRIPTION

P1527 FINAL SUBMISSION - 11/18/2021

PLOTTED: 11/15/2021 10:53:05 AM
FILE NAME: BIM 360://HF PACKAGE 3/P1527 LOG COM CSP-1639600-A.rvt

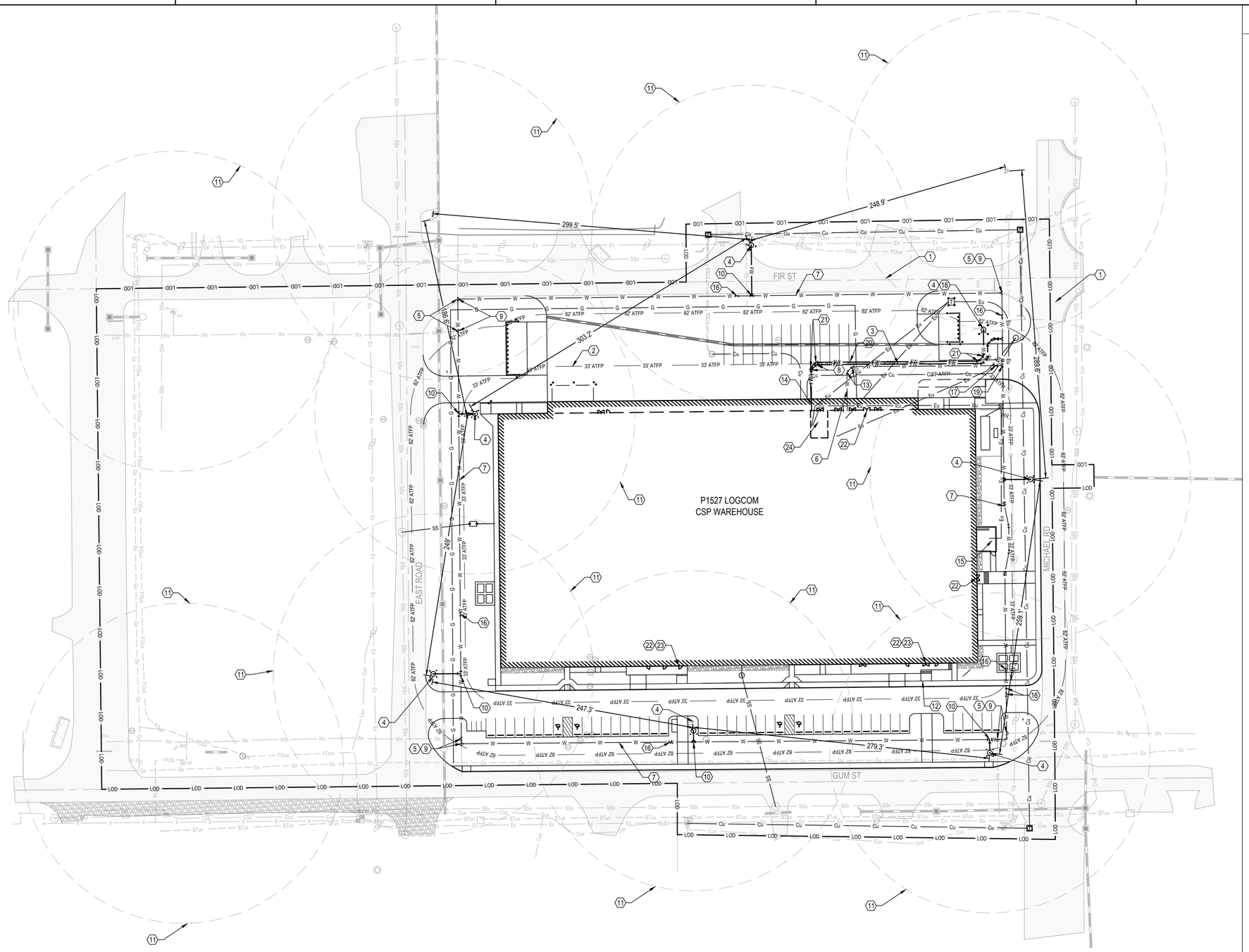

KEYED NOTES

NOT ALL KEYED NOTES MAY APPEAR ON SHEET

1. FIRE DEPARTMENT ACCESS
2. 33' AT/FP UNOBSTRUCTED SPACE SETBACK
3. 8" FIRE PROTECTION WATERLINE
4. FIRE HYDRANT DRY BARREL ASSEMBLY W/ 6" FEED LINE, ISOLATION VALVE AND FOUR BOLLARDS (TYP) (C4/CU501)
5. CONNECT TO EXISTING 8" WATER MAIN
6. 3" DOMESTIC WATERLINE
7. 10" WATERLINE
8. 8" - 45° PIPE ELBOW WITH THRUST BLOCK (A1/CU501)
9. 10" x 8" x 10" TEE WITH CONCRETE ANCHOR (A1/CU501)
10. 10" x 10" x 6" TEE WITH CONCRETE ANCHOR (A1/CU501) AND 6" GATE VALVE
11. 300' SPACING BETWEEN HYDRANTS
12. CHILLED WATER LINE (SEE MECHANICAL PLANS)
13. 3" - 45° PIPE ELBOW WITH THRUST BLOCK (A1/CU501)
14. FIRE WATER SERVICE ENTRANCE
15. CHILLER PAD
16. 10" - 45° PIPE ELBOW WITH THRUST BLOCK (A1/CU501)
17. POST INDICATOR VALVE W/ BOLLARDS (A4/CU501)
18. FIRE DEPARTMENT CONNECTION (B2/CU501)
19. 10"x10"x3" TEE WITH CONCRETE ANCHOR (A1/CU501) AND 3" GATE VALVE
20. 6" FIRE DEPARTMENT CONNECTION LINE
21. 6" - 45° PIPE ELBOW WITH THRUST BLOCK (A1/CU501)
22. EXIT DISCHARGE
23. FIRE DEPARTMENT RESPONSE POINT
24. FIRE PUMP LOCATION

0 25' 50' 100'

SCALE: 1" = 50'

SYM	DESCRIPTION	DATE	APPR

NAVFAC

RQ W.M. Jordan COMPANY - A JOINT VENTURE -

Michael Baker INTERNATIONAL

100 AIRSIDE DRIVE
MOON TOWNSHIP, PA 15108 A/E INFO

APPROVED

FOR COMMANDER NAVFAC

ACTIVITY
MARINE CORPS BASE
CAMP LEJEUNE

SATISFACTORY TO DATE

DES BRF DRW BRF CHK WN

PM

BRANCH MANAGER

CHIEF ENG/ARCH

FIRE PROTECTION

DEPARTMENT OF THE NAVY
NAVAL FACILITIES ENGINEERING SYSTEMS COMMAND
ATLANTIC DESIGN AND CONSTRUCTION
NAVAL FACILITIES ENGINEERING SYSTEMS COMMAND ATLANTIC
NORFOLK, VA
MCB CAMP LEJEUNE
JACKSONVILLE, NC

P1527 LOGCOM CSP WAREHOUSE

SITE CODE COMPLIANCE PLAN

SCALE: AS NOTED
EPROJECT NO.: 1639600
CONSTR. CONTR. NO. N40085-20-C-0059
NAVFAC DRAWING NO. 14111006
SHEET 6 OF 447

G-010

P1527 FINAL SUBMISSION - 11/18/2021

PLOTTED: 11/15/2021 10:41:48 AM

FILE NAME: \\mcorpa1d1.bkr.mbakercorp.com\VOL2_PROJECTS\180780 HF Package 3\05_Deliverables\Drawings\05 C_Civil\Sheet Files\P1527\175970_P1527F - C005.dwg

1. **PROJECT NAME**
P1527 LOGCOM AND JEFS, MARINE CORPS BASE CAMP LEJEUNE, NORTH CAROLINA

2. **PROJECT DESCRIPTION**
THE P1527 FACILITY CONSISTS OF OF A STORAGE WAREHOUSE, ADMINISTRATIVE SPACES AND SUPPORT SPACES INCLUDING MECHANICAL, ELECTRICAL AND TELECOMMUNICATIONS. THE FACILITY IS CLASSIFIED AS A GROUP S-1, STORAGE OCCUPANCY WITH ACCESSORY SPACES INCLUDING OFFICES AND A TRAINING ROOM.

THE FACILITY HAS BEEN ANALYZED FOR LIFE SAFETY AND FIRE PROTECTION REQUIREMENTS USING THE CODES AND STANDARDS LISTED BELOW. THE UNIFIED FACILITIES CRITERIA (UFC) APPLIES TO THE MILITARY DEPARTMENTS, THE DEFENSE AGENCIES, AND THE DOD FIELD ACTIVITIES WHICH PROVIDES TECHNICAL CRITERIA FOR NEW MILITARY CONSTRUCTION. BASED ON UFC 1-200-01 CHAPTER 2 - MODIFICATIONS TO THE INTERNATIONAL BUILDING CODE (IBC) AND UFC 3-600-01, THE IBC WILL BE USED FOR FIRE RESISTANCE REQUIREMENTS, ALLOWABLE FLOOR AREA, BUILDING HEIGHT LIMITATIONS, BUILDING SEPARATION DISTANCE REQUIREMENTS, BUILDING CONSTRUCTION TYPE, AND OCCUPANCY SEPARATION REQUIREMENTS EXCEPT AS MODIFIED BY UFC 3-600-01 AND UFC 4-440-01. NFPA 101 WILL BE USED FOR EGRESS. IF ANY CONFLICTS OCCUR BETWEEN NFPA 101 AND IBC, RELATED TO FIRE RESISTANCE RATING, NFPA 101 WILL TAKE PRECEDENCE AND APPLICABLE CRITERIA CONTAINED IN UFC 3-600-01. OCCUPANCY DEFINITIONS OF NFPA 101 WILL BE USED TO DETERMINE MEANS OF EGRESS REQUIREMENTS.

3. **APPLICABLE CODES AND STANDARDS**
- IBC – 2018 EDITION – INTERNATIONAL BUILDING CODE
- NFPA 10 – 2018 EDITION – STANDARD FOR PORTABLE FIRE EXTINGUISHERS
- NFPA 13 – 2019 EDITION – STANDARD FOR INSTALLATION OF SPRINKLER SYSTEMS
- NFPA 70 – 2020 EDITION – NATIONAL ELECTRICAL CODE
- NFPA 72 – 2019 EDITION – NATIONAL FIRE ALARM AND SIGNALING CODE
- NFPA 90A – 2018 EDITION – STANDARD FOR THE INSTALLATION OF AIR-CONDITIONING & VENTILATING SYSTEMS
- NFPA 101 – 2018 EDITION – LIFE SAFETY CODE
- UFC 1-200-01 – GENERAL BUILDING REQUIREMENTS, 8 OCTOBER 2019
- UFC 3-600-01 – FIRE PROTECTION ENGINEERING FOR FACILITIES, 8 AUGUST 2016 WITH CHANGE 4, 7 FEBRUARY 2020
- UFC 4-021-01 – DESIGN AND O&M: MASS NOTIFICATION SYSTEMS, 9 APRIL 2008 WITH CHANGE 1, JANUARY 2010
- FC 1-300-09N – NAVY AND MARINE CORPS DESIGN PROCEDURES, 1 MAY 2014 WITH CHANGE 4, 14 JUNE 2018
- UFC 4-440-01 - WAREHOUSE AND STORAGE FACILITIES, 1 APRIL 2014 WITH CHANGE 1, 1 APRIL 2019

4. **OCCUPANCY CLASSIFICATION**
IBC: STORAGE S-1 (IBC SECTION 311.12) NFPA 101: CHAPTER 42, STORAGE

5. **CONSTRUCTION TYPE**
IBC 602.2, TABLE 503 TYPE IIB

6. **AREA AND HEIGHT LIMITATIONS (IBC TABLE 504.3, TABLE 504.4, AND TABLE 506.2, AND SECTION 507.4)**
THE FULLY SPRINKLERED BUIDLING IS SURROUNDED AND ADJOINED BY PUBLIC WAYS AND YARDS NOT LESS THAN 60 FEET IN WIDTH AND IS PERMITTED TO BE UNLIMITED IN AREA IN ACCORDANCE WITH SECTION 507.4 OF THE IBC.

ALLOWABLE AREA CALCULATIONS CONSTRUCTION TYPE IIB		
OCCUPANCY	ALLOWABLE AREA FOR SINGLE STORY SPRINKLERED BUILDING (SQ. FT)	ACTUAL FIRST FLOOR TOTAL AREA (SQ. FT)
STORAGE, S-1	Unlimited	106,343

THE AREA SHOWIN ABOVE IS THE BUILDING AREA; FLOOR AREA IS 104,987 SQ.FT.

ACCESSORY OCCUPANCY AREA CALCULATIONS		
ROOM	OCCUPANCY	AREA (SQ. FT.)
JEFS FST OIC 207	B	600
JEFS FSS OPERATIONS 210	B	607
ASSISTANT OIC/NCOIC 211	B	416
ADMIN STORAGE 206	B	324
ELECTRICAL 205	B	222
BREAK 202	B	684
TELECOM 203	B	102
JAN 204	B	59
REF LIBRARY 201	B	1,518
CLASSROOM 200	B	1,477
BREAK 103	B	414
CBRN OFFICE 119	B	274
REG MNGR 101	B	117
MOTHERS ROOM 102	B	75
GOVT OFFICE 100	B	110
NDTE OFFICE 110a	B	111
ESAPI OFFICE 112	B	125
ESAPI ROOM 111	B	230
NDTE/STORAGE 110	B	1,486
	TOTAL	8,951
	PERCENTAGE OF FLOOR AREA	8.4

ALLOWABLE BUILDING HEIGHT: 75 FT., 3 STORIES
ACTUAL BUILDING HEIGHT: 40 FT., 1 STORIES

7. **FIRE RESISTIVE REQUIREMENTS (IBC TABLES 601 AND 602)**

PRIMARY STRUCTURAL FRAME	0 HOUR RATING
EXTERIOR BEARING WALLS*	0 HOUR RATING
INTERIOR BEARING WALLS	0 HOUR RATING
EXTERIOR NON-BEARING WALLS AND PARTITIONS	0 HOUR RATING
INTERIOR NON-BEARING WALLS AND PARTITIONS	0 HOUR RATING
FLOOR CONSTRUCTION AND SECONDARY MEMBERS	0 HOUR RATING
ROOF CONSTRUCTION AND SECONDARY MEMBERS	0 HOUR RATING

*TAKES INTO ACCOUNT THE FIRE SEPARATION DISTANCE REQUIREMENT OF IBC TABLE 602. THE FIRE SEPARATION DISTANCE IS GREATER THAN 30 FEET.

8. **PROTECTION FROM HAZARDS (NFPA 101 AND UFC 3-600-01)**
PROTECTION FROM ANY AREA HAVING A DEGREE OF HAZARD GREATER THAN THAT NORMAL TO THE GENERAL OCCUPANCY OF THE BUILDING, SUCH AS AREAS USED FOR GENERAL STORAGE, BOILER OR FURNACE ROOMS, OR MAINTENANCE SHOPS SHALL BE PROTECTED IN ACCORDANCE WITH NFPA 101 SECTION 8.7. THE HAZMAT ROOM WILL CONTAIN QUANITITES OF HAZARDAROUS MATERIALS BELOW THE MAXIMUM ALLOWED QUANITTIES. THE ROOM WILL BE SEPRATED FROM ADJACENT SAPCES BY A 1 HOUR FIRE BARRIER.

IN ACCORDANCE WITH UFC3-600-01, SECTION 4-44.5.2.2, ALL AREAS ADJACENT TO THE WAREHOUSE SHALL BE SEPARATED BY A MINIMUM OF 1 HOUR FIRE RESISITVE CONSTRUCTION. THESE FIRE RESISITVE WALLS ARE NOT CONSIDERED OCCUPANCY SEPARATIONS.

9. **OPENING PROTECTION AND PENETRATION REQUIREMENTS (NFPA 101 CHAPTER 8)**
JOINTS MADE WITHIN OR AT THE PERIMETER OF FIRE BARRIERS SHALL BE PROTECTED WITH A JOINT SYSTEM THAT IS CAPABLE OF LIMITING THE TRANSFER OF FIRE. JOINTS MADE WITHIN OR BETWEEN FIRE BARRIERS SHALL BE PROTECTED WITH A FIRE-TIGHT JOINT SYSTEM THAT IS CAPABLE OF LIMITING THE TRANSFER OF FIRE. JOINTS MADE WITHIN OR BETWEEN FIRE RESISTANCE-RATED ASSEMBLIES SHALL BE PROTECTED WITH A JOINT SYSTEM TESTED IN ACCORDANCE WITH ASTM E1966 OR ANSI / UL 2079.

NFPA 101 TABLE 8.3.3.2.2

COMPONENTS	WALLS AND PARTITIONS (HOUR)	FIRE DOOR ASSEMBLIES (HOUR)
FIRE BARRIERS	1	3/4

FIREBLOCKING AND DRAFTSTOPPING ARE NOT REQUIRED IN NON-COMBUSTIBLE CONSTRUCTION (IBC 718.2, 718.3, AND 718.4)

10. **PROTECTION OF STRUCTURAL ELEMENTS STRUCTURAL COLUMNS IN WAREHOUSE (UFC 3-600-01, NFPA 13)**
COLUMNS WITHIN THE RACK STORAGE AREA ARE REQUIRED TO BE PROTECTED AS 1 HOUR FIRE RESISTIVE RATED ASSEMBLIES.

11. **MARKING AND IDENTIFICATION OF FIRE BARRIERS (IBC 703.7)**
FIRE BARRIERS SHALL BE EFFECTIVELY AND PERMANENTLY IDENTIFIED WITH SIGNS OF STENCILING. SUCH IDENTIFICATION SHALL:
- BE LOCATED WITHIN 15 FEET OF THE END OF EACH WALL AND AT INTERVALS NOT EXCEEDING 10 FEET MEASURED HORIZONTALLY ALONG THE WALL OR PARTITIONS.
- INCLUDE LETTERING NOT LESS THAN 3 INCHES IN HEIGHT WITH A MINIMUM 3/8 INCH STROKE IN A CONTRASTING COLOR INCORPORATING THE SUGGESTED WORDING "FIRE BARRIER AND/OR SMOKE PARTITION – PROTECT ALL OPENINGS" OR OTHER WORDING.

12. **INTERIOR FINISHES CLASSIFICATION LIMITS**
NFPA 101, TABLE A.10.2.2

INTERIOR FINISH CLASSIFICATION, SPRINKLERED		
OCCUPANCY	CORRIDORS	ROOMS AND ENCLOSED SPACES
ORDINARY HAZARD STORAGE	CLASS A, B, OR C	CLASS A, B, OR C
	CLASS I OR II	N/A
CLASS A INTERIOR WALL AND CEILING FINISH- FLAME SPREAD INDEX 0-25, SMOKE DEVELOPED 0-450 CLASS B INTERIOR WALL AND CEILING FINISH- FLAME SPREAD INDEX 26-75, SMOKE DEVELOPED 0-450 CLASS C INTERIOR WALL AND CEILING FINISH- FLAME SPREAD INDEX 76-200, SMOKE DEVELOPED 0-450 CLASS I INTERIOR FLOOR FINISH- CRITICAL RADIANT FLUX NOT LESS THAN 0.45 W/CM2 CLASS II INTERIOR FLOOR FINISH- CRITICAL RADIANT FLUX NOT MORE THAN 0.22 W/CM^2 BUT LESS THAN 0.45...		

13. **INSULATION REQUIREMENTS (UFC 3-600-01, CHAPTER 8)**
THERMAL AND ACOUSTICAL INSULATION WITH A FLAME SPREAD (FS) RATING NOT HIGHER THAN 75, AND A SMOKE DEVELOPED (SD) RATING NOT HIGHER THAN 150 SHALL BE USED WHEN TESTED IN ACCORDANCE WITH ASTM E84 UNLESS EXCEPTIONS OF SECTION 8-1 ARE MET.

14. **MEANS OF EGRESS (NFPA 101, CHAPTER 7, CHAPTER 42)**
THE MEANS OF EGRESS CONFIGURATION INCLUDING TRAVEL DISTANCES, COMMON PATH, DEAD ENDS, EXITS AND EXIT CAPACITIES IS SHOWN ON SHEETS G110 THRU G118. THE BUILDING IS CONSIDERED A STORAGE OCCUPANCY WITH ACCESSORY USE IN ACCORDANCE WITH THE IBC AND A MIXED USE IN ACCORDANCE WITH NFPA 101 FOR EGRESS LIMITATIONS.

EXITS SHALL MEET NFPA 101 SECTION 7.3.3. ALL DOORS AND CORRIDORS ARE TO BE SIZED AT 0.2 INCHES PER OCCUPANT, NOT LESS THAN 32 INCHES, USING THE EXIT.

15. **OCCUPANT LOAD AND EGRESS CAPACITY CALCULATION**

EGRESS LIMITATIONS - SPRINKLERED FACILITY NFPA 101, TABLE A.7.6			
OCCUPANCY	DEAD END (FT)	COMMON PATH (FT)	TRAVEL DISTANCE (FT)
BUSINESS	50	100	300
STORAGE, ORDINARY HAZARD	100	100	400

OCCUPANT LOAD

USE	OCCUPANT LOAD FACTOR (SQ. FT/PERSON)	AREA (SQ. FT.)	OCCUPANT LOAD
BUSINESS	150	7,751	52
CLASSROOM	20	1,477	74
BREAK	15	1,098	74
TELECOM	300	401	2
STORAGE	500	94,260	189
TOTAL OCCUPANT LOAD			391
EXITS REQUIRED: 2		EXITS PROVIDED: 15	

EXIT CAPACITY (NFPA 101, 7.2.1.2.3)			
EXITS	ACTUAL CLEAR WIDTH (INCHES)	CALCULATED CAPACITY	ACTUAL USE
INDIVIDUAL ROOM EXIT			
IRE-1	36	180	1
IRE-2	68	340	1
IRE-3	68	340	1
IRE-4	68	340	1
IRE-5	68	340	47
IRE-6	36	180	37
IRE-7	36	180	3
IRE-8	68	340	2
IRE-9	36	180	2
IRE-10	36	180	2
EXIT NUMBER			
E-1	68	340	74
E-2	68	340	74
E-3	68	340	58
E-4	68	340	58
E-5	34	170	75

16. **DISCHARGE FROM EXITS (NFPA 101, 7.7)**
BUILDING EXITS SHALL TERMINATE DIRECTLY AT A PUBLIC WAY IN ACCORDANCE WITH NFPA 101, SECTION 7.7.

17. **ILLUMINATION OF MEANS OF EGRESS (NFPA 101, 7.8)**
MEANS OF EGRESS SHALL BE ILLUMINATED IN ACCORDANCE WITH NFPA 101 SECTION 7.8.

18. **EMERGENCY LIGHTING (NFPA 101, 7.9)**
EMERGENCY LIGHTING SHALL BE PROVIDED IN ACCORDANCE WITH SECTION 7.9.

19. **MARKINGS OF MEANS OF EGRESS (NFPA 101, 7.10)**
MEANS OF EGRESS SHALL HAVE SIGNS IN ACCORDANCE WITH SECTION 7.10.

20. **PORTABLE FIRE EXTINGUISHERS (NFPA 10)**
FIRE EXTINGUISHER AND CABINETS SHALL BE LOCATED IN ACCORDANCE WITH NFPA 10. IN FINISHED AREAS, THE FIRE EXTINGUISHER CABINETS SHALL BE FLUSH MOUNT CABINETS. FIRE EXTINGUISHERS ARE PROVIDED IN THE ACCESSORY BUSINESS OCCUPANCY AREA AND AN ADDITIONAL EXTINSUISHER IS PROVIDED IN THE BATTERY CHARGING AREA THE HAZMAT ROOM. A TOTAL OF SIX EXTINGUISHERS ARE PROVIDED.

FIRE EXTINGUISHER SIZE AND PLACEMENT FOR CLASS A HAZARDS NFPA 10 (2018) TABLE 6.2.1.1	
PROVIDED EXTINGUISHER RATING	2A:40B:C
MAXIMUM FLOOR AREA PER UNIT OF A (LIGHT/ORDINARY)	3,000/1,500
MAXIMUM FLOOR AREA PER EXTINGUISHER (LIGHT/ORDINARY)	11,250
MAXIMUM TRAVEL DISTANCE TO EXTINGUISHER	75 FEET

21. **FIRE DEPARTMENT ACCESS (UFC 3-600-01)**
FIRE DEPARTMENT ACCESS SHALL BE PROVIDED IN ACCORDANCE WITH UFC 3-600-01 SECTION 9-1. FIRE DEPARTMENT ACCESS ROADS SHALL BE NO LESS THAN 20 FEET UNOBSTRUCTED AND DESIGNED FOR THE WEIGHT OF APPARATUS.

22. **AUTOMATIC SPRINKLERS AND OTHER EXTINGUISHING EQUIPMENT (UFC 3-600-01 AND NFPA 13)**
THE ENTIRE BUILDING SHALL BE PROTECTED THROUGHOUT WITH A HYDRAULICALLY CALCULATED AUTOMATIC WET-PIPE SPRINKLER SYSTEM. DESIGN DENSITIES SHALL BE IN ACCORDANCE WITH UFC 3-600-01 AND NFPA 13. RACK STORAGE AREAS SHALL BE PROTECTED WITH AN ESFR SYSTEM FOR PROTECTION OF GROUP A PLASTICS WITH A MAXIMUM STORAGE HEIGHT FO 30 FEET AND MAXIMUM CEILING HEIGHT OF 35 FEET IN ACCORDANCE WITH NFPA 13. THE LOADING DOCK AREA SHALL BE PROTECTED WITH A DRY SYSTEM.

23. **FIRE ALARM AND MASS NOTIFICATION SYSTEMS (UFC 3-600-01, UFC 4-021-01, AND NFPA 72)**
FIRE ALARM AND MASS NOTIFICATION WILL BE PROVIDED IN ACCORDANCE WITH UFC 3-600-01, UFC 4-021-01 AND NFPA 72. THE SYSTEM SHALL CONSIST OF MANUAL PULL STATIONS, STROBES, SPEAKERS, SPRINKLER FLOW AND VALVE TAMPER SUPERVISION, AND SMOKE DETECTORS WITHIN THE HVAC SYSTEMS AS REQUIRED BY NFPA 90A.

24. **ACCESSIBILITY REQUIREMENTS**
THE BUILDING SHALL BE ACCESSIBLE AND CONFORM TO *ABA ACCESSIBILITY STANDARD FOR DEPARTMENT OF DEFENSE FACILITIES* AS ADOPTED BY THE DEPUTY SECRETARY OF DEFENSE IN LIEU OF IBC CHAPTER 11 PER UFC 1-200-01.

25. **ANTI-TERRORISM AND FORCE PROTECTION REQUIREMENTS (AT/FP) (UFC 4-010-01 SECTION B-4.3)**
AN EMERGENCY SHUTOFF SWITCH IN THE HVAC CONTROL SYSTEM CAPABLE OF IMMEDIATE SHUT DOWN OF THE AIR DISTRIBUTION SYSTEM THROUGHOUT THE BUILDING.

APPR | DATE | NO | DESCRIPTION | SYM

NAVFAC

COLORADO LICENSED JASON MILLER 55216 PROFESSIONAL ENGINEER
SEAL

IRQ W.M. Jordan COMPANY – A JOINT VENTURE –

Michael Baker INTERNATIONAL
100 AIRSIDE DRIVE MOON TOWNSHIP, PA 15108 A/E INFO

APPROVED
FOR COMMANDER NAVFAC

ACTIVITY
MARINE CORPS BASE CAMP LEJEUNE

SATISFACTORY TO DATE DD/MM/YY
DES JAM DRW ADH CHK ALS
PM / DM TOWLER / ROOT
BRANCH HEAD
DESIGN DIRECTOR R.L.Stephens, Jr.
FIRE PROTECTION DPS

DEPARTMENT OF THE NAVY
NAVAL FACILITIES ENGINEERING SYSTEMS COMMAND ATLANTIC
ATLANTIC DESIGN AND CONSTRUCTION
NAVAL FACILITIES ENGINEERING SYSTEMS COMMAND ATLANTIC NORFOLK, VA
JACKSONVILLE, NC
MCB CAMP LEJEUNE
P1527 LOGCOM CSP WAREHOUSE
LIFE SAFETY - CODE ANALYSIS

SCALE: AS NOTED
EPROJECT NO.: 1639600
CONSTR. CONTR. NO. N40085-20-C-0059
NAVFAC DRAWING NO. 14111005
SHEET 5 OF 447

G-100
DRAWFORM REVISION: 25 AUGUST 2020

P1527 FINAL SUBMISSION - 11/18/2021

PLOTTED: 11/15/2021 7:31:03 AM
FILE NAME: BIM 360://HF PACKAGE 3/P1527 LOG COM CSP-1639600-F.rvt

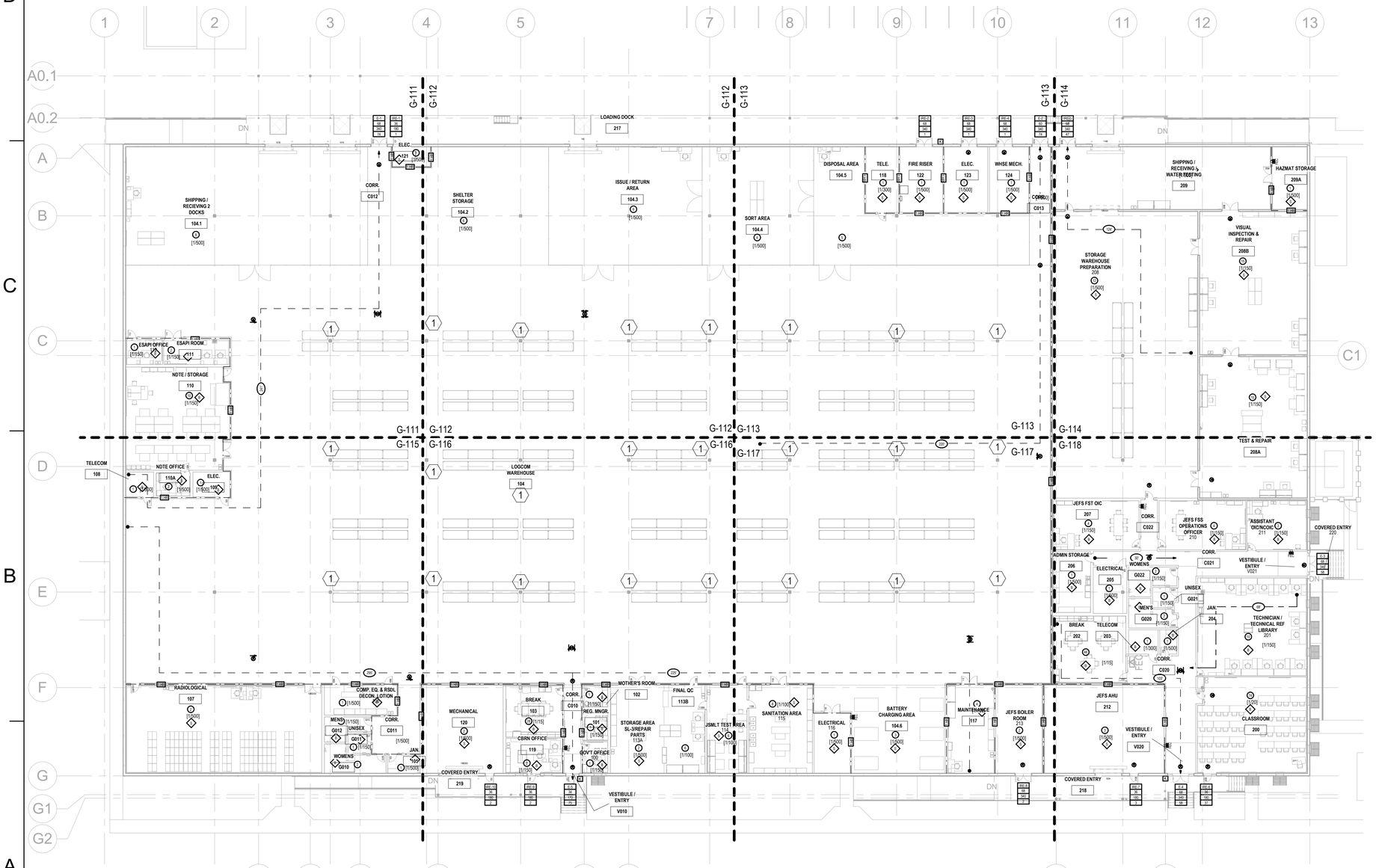

A1 LIFE SAFETY - OVERALL - 1ST FLOOR
SCALE: 3/64" = 1'-0"

GENERAL NOTES

1. SEE SHEET G-100 FOR CODE ANALYSIS.

KEYNOTES

1 STRUCTURAL COLUMNS SHALL BE PROTECTED WITH INTUMESCENT PAINT TO PROVIDE A 1 HOUR FIRE RATING.

LEGEND

DESCRIPTION	SYMBOL
1 HOUR FIRE BARRIER	1 HR
OCCUPANCY LOAD	0
FIRE EXTINGUISHER CABINET	FEC
EXITS AND IRE TAGS	E/IRE-X EXIT COMPONENT X DOOR WIDTH X CALCULATED CAPACITY X ACTUAL USE
EXIT SIGN	
TRAVEL DISTANCE	0'
COMMON PATH OF TRAVEL	0'
DEAD END	0'
OCCUPANT LOAD FACTOR	[X/Y] PERSONS/SQUARE FEET
OCCUPANCY CLASSIFICATION	X
KNOX BOX	K

KEYPLAN

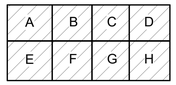

0 16' - 0" 32' - 0" 64' - 0"
SCALE: 3/64" = 1'-0"

N

SYM	DESCRIPTION	DATE	APPR

NAVFAC

COLORADO LICENSED
JASON MILLER
55216
PROFESSIONAL ENGINEER
SEAL

RQ W.M. Jordan COMPANY
~ A JOINT VENTURE ~

Michael Baker INTERNATIONAL
100 AIRSIDE DRIVE
MOON TOWNSHIP, PA 15108
A/E INFO

APPROVED

FOR COMMANDER NAVFAC
ACTIVITY
MARINE CORPS BASE CAMP LEJEUNE

SATISFACTORY TO DATE DD/MM/YY
DES JAM DRW ADH CHK ALS
PM / DM TOWLER / ROOT
BRANCH HEAD
DESIGN DIRECTOR R.L.Stephens, Jr.
FIRE PROTECTION DPS

DEPARTMENT OF THE NAVY
NAVAL FACILITIES ENGINEERING SYSTEMS COMMAND
ATLANTIC DESIGN AND CONSTRUCTION
MCB CAMP LEJEUNE

NAVAL FACILITIES ENGINEERING SYSTEMS COMMAND ATLANTIC
NORFOLK, VA
JACKSONVILLE, NC

P1527 LOGCOM CSP WAREHOUSE

LIFE SAFETY - OVERALL - 1ST FLOOR PLAN

SCALE: AS NOTED
EPROJECT NO.: 1639600
CONSTR. CONTR. NO. N40085-20-C-0059
NAVFAC DRAWING NO. 14111007
SHEET 7 OF 447

G-110

DRAWFORM REVISION: 25 AUGUST 2020

P1527 FINAL SUBMISSION - 11/18/2021

PLOTTED: 11/15/2021 7:31:04 AM

FILE NAME: BIM 360://HF PACKAGE 3/P1527 LOG COM CSP-1639600-F.rvt

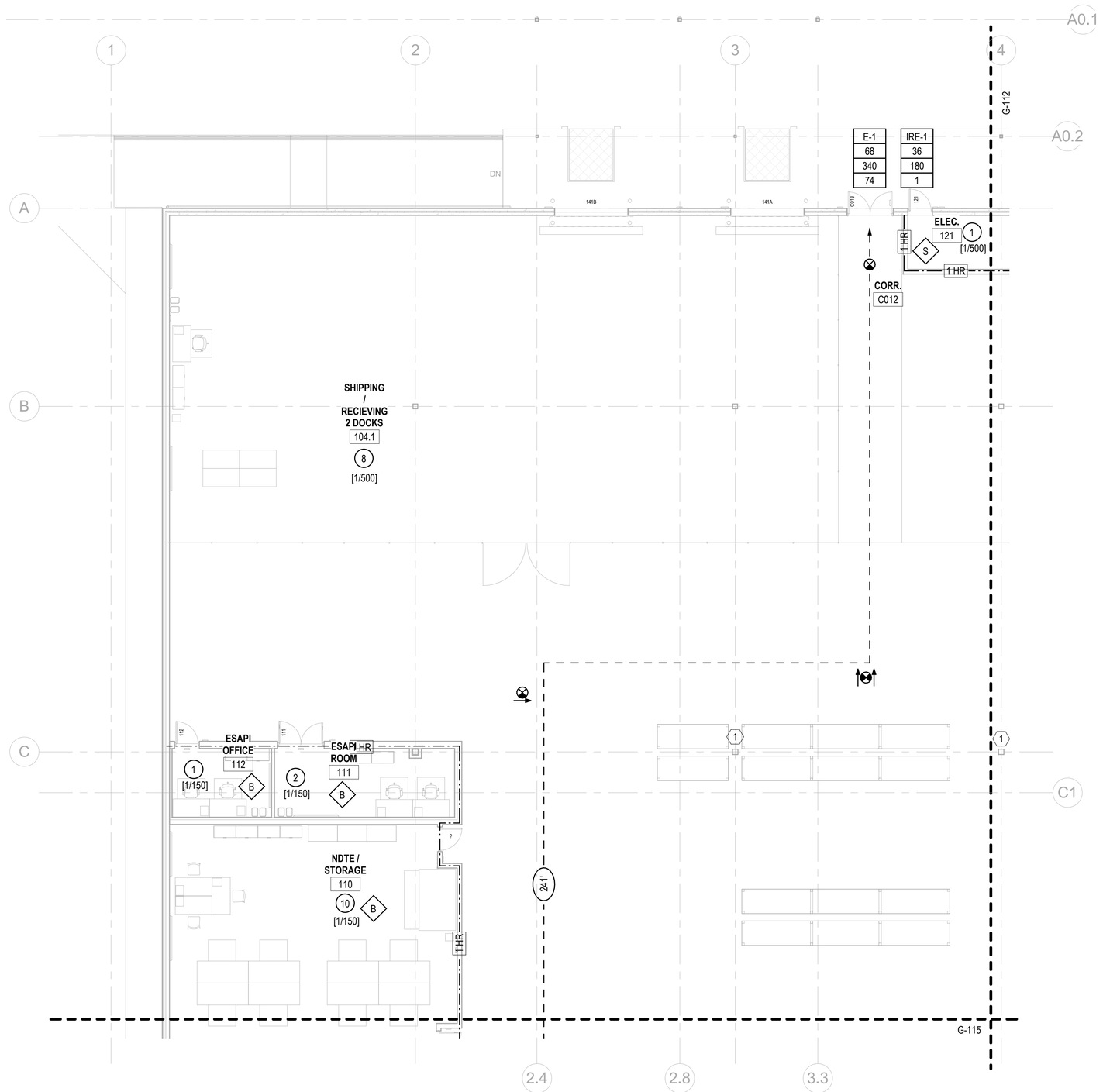

A1 LIFE SAFETY - 1ST FLOOR PLAN - AREA A
SCALE: 1/8" = 1'-0"

GENERAL NOTES

1. SEE SHEET G-100 FOR CODE ANALYSIS.

KEYNOTES

1 STRUCTURAL COLUMNS SHALL BE PROTECTED WITH INTUMESCENT PAINT TO PROVIDE A 1 HOUR FIRE RATING.

LEGEND

DESCRIPTION	SYMBOL
1 HOUR FIRE BARRIER	1 HR
OCCUPANCY LOAD	0
FIRE EXTINGUISHER CABINET	FEC
EXITS AND IRE TAGS	E/IRE-X EXIT COMPONENT X DOOR WIDTH X CALCULATED CAPACITY X ACTUAL USE
EXIT SIGN	
TRAVEL DISTANCE	0'
COMMON PATH OF TRAVEL	0'
DEAD END	0'
OCCUPANT LOAD FACTOR	[X/Y] PERSONS/SQUARE FEET
OCCUPANCY CLASSIFICATION	X
KNOX BOX	K

KEYPLAN

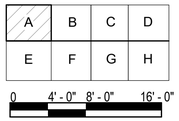

0 4' - 0" 8' - 0" 16' - 0"
SCALE: 1/8" = 1' - 0"

N

APPR	DATE	DESCRIPTION	SYM

NAVFAC

COLORADO LICENSED JASON MILLER 55216 PROFESSIONAL ENGINEER
SEAL

IRQ W.M. Jordan COMPANY – A JOINT VENTURE –

Michael Baker INTERNATIONAL
100 AIRSIDE DRIVE MOON TOWNSHIP, PA 15108 A/E INFO

APPROVED
FOR COMMANDER NAVFAC

ACTIVITY
MARINE CORPS BASE CAMP LEJEUNE

SATISFACTORY TO DATE DD/MM/YY
DES JAM DRW ADH CHK ALS
PM / DM TOWLER / ROOT
BRANCH HEAD DPS
DESIGN DIRECTOR R.L.Stephens, Jr.
FIRE PROTECTION DPS

NAVAL FACILITIES ENGINEERING SYSTEMS COMMAND
NAVAL FACILITIES ENGINEERING SYSTEMS COMMAND ATLANTIC NORFOLK, VA
DEPARTMENT OF THE NAVY
ATLANTIC DESIGN AND CONSTRUCTION
MCB CAMP LEJEUNE
JACKSONVILLE, NC
P1527 LOGCOM CSP WAREHOUSE
LIFE SAFETY - 1ST FLOOR PLAN - AREA A

SCALE: AS NOTED
EPROJECT NO.: 1639600
CONSTR. CONTR. NO. N40085-20-C-0059
NAVFAC DRAWING NO. 14111008
SHEET 8 OF 447

G-111

DRAWFORM REVISION: 25 AUGUST 2020

P1527 FINAL SUBMISSION - 11/18/2021

PLOTTED: 11/15/2021 7:31:06 AM
FILE NAME: BIM 360://HF PACKAGE 3/P1527 LOG COM CSP-1639600-F.rvt

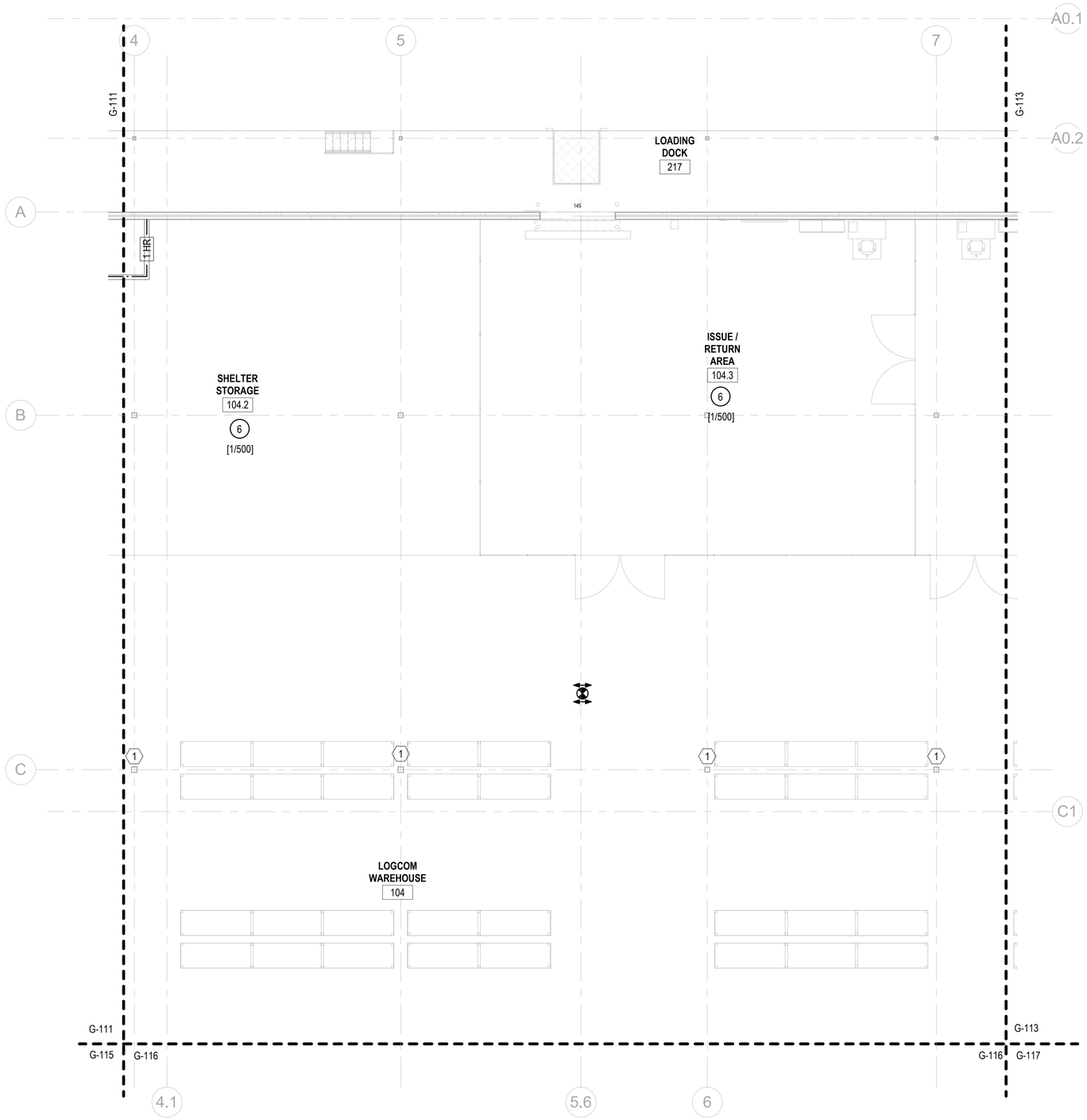

A1 LIFE SAFETY - 1ST FLOOR PLAN - AREA B
SCALE: 1/8" = 1'-0"

GENERAL NOTES

1. SEE SHEET G-100 FOR CODE ANALYSIS.

KEYNOTES

1 STRUCTURAL COLUMNS SHALL BE PROTECTED WITH INTUMESCENT PAINT TO PROVIDE A 1 HOUR FIRE RATING.

LEGEND

DESCRIPTION	SYMBOL
1 HOUR FIRE BARRIER	—·—·— 1 HR —·—·—
OCCUPANCY LOAD	0
FIRE EXTINGUISHER CABINET	FEC
EXITS AND IRE TAGS	E/IRE-X EXIT COMPONENT X DOOR WIDTH X CALCULATED CAPACITY X ACTUAL USE
EXIT SIGN	
TRAVEL DISTANCE	0'
COMMON PATH OF TRAVEL	0'
DEAD END	0'
OCCUPANT LOAD FACTOR	[X/Y] PERSONS/SQUARE FEET
OCCUPANCY CLASSIFICATION	X
KNOX BOX	K

KEYPLAN

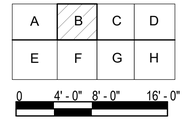

0 4' - 0" 8' - 0" 16' - 0"

SCALE: 1/8" = 1' - 0"

N

SYM	DESCRIPTION	DATE	APPR

NAVFAC

COLORADO LICENSED
JASON MILLER
55216
PROFESSIONAL ENGINEER
SEAL

IRQ W.M. Jordan COMPANY – A JOINT VENTURE –

Michael Baker INTERNATIONAL
100 AIRSIDE DRIVE
MOON TOWNSHIP, PA 15108
A/E INFO

APPROVED

FOR COMMANDER NAVFAC

ACTIVITY
MARINE CORPS BASE
CAMP LEJEUNE

SATISFACTORY TO DATE DD/MM/YY

DES JAM | DRW ADH | CHK ALS

PM / DM TOWLER / ROOT

BRANCH HEAD

DESIGN DIRECTOR R.L.Stephens, Jr.

FIRE PROTECTION DPS

DEPARTMENT OF THE NAVY
NAVAL FACILITIES ENGINEERING SYSTEMS COMMAND
ATLANTIC DESIGN AND CONSTRUCTION
MCB CAMP LEJEUNE

NAVAL FACILITIES ENGINEERING SYSTEMS COMMAND ATLANTIC
NORFOLK, VA

JACKSONVILLE, NC

P1527 LOGCOM CSP WAREHOUSE

LIFE SAFETY - 1ST FLOOR PLAN - AREA B

SCALE: AS NOTED
EPROJECT NO.: 1639600
CONSTR. CONTR. NO. N40085-20-C-0059
NAVFAC DRAWING NO. 14111009
SHEET 9 OF 447

G-112

DRAWFORM REVISION: 25 AUGUST 2020

P1527 FINAL SUBMISSION - 11/18/2021

PLOTTED: 11/15/2021 7:31:08 AM

FILE NAME: BIM 360://HF PACKAGE 3/P1527 LOG COM CSP-1639600-F.rvt

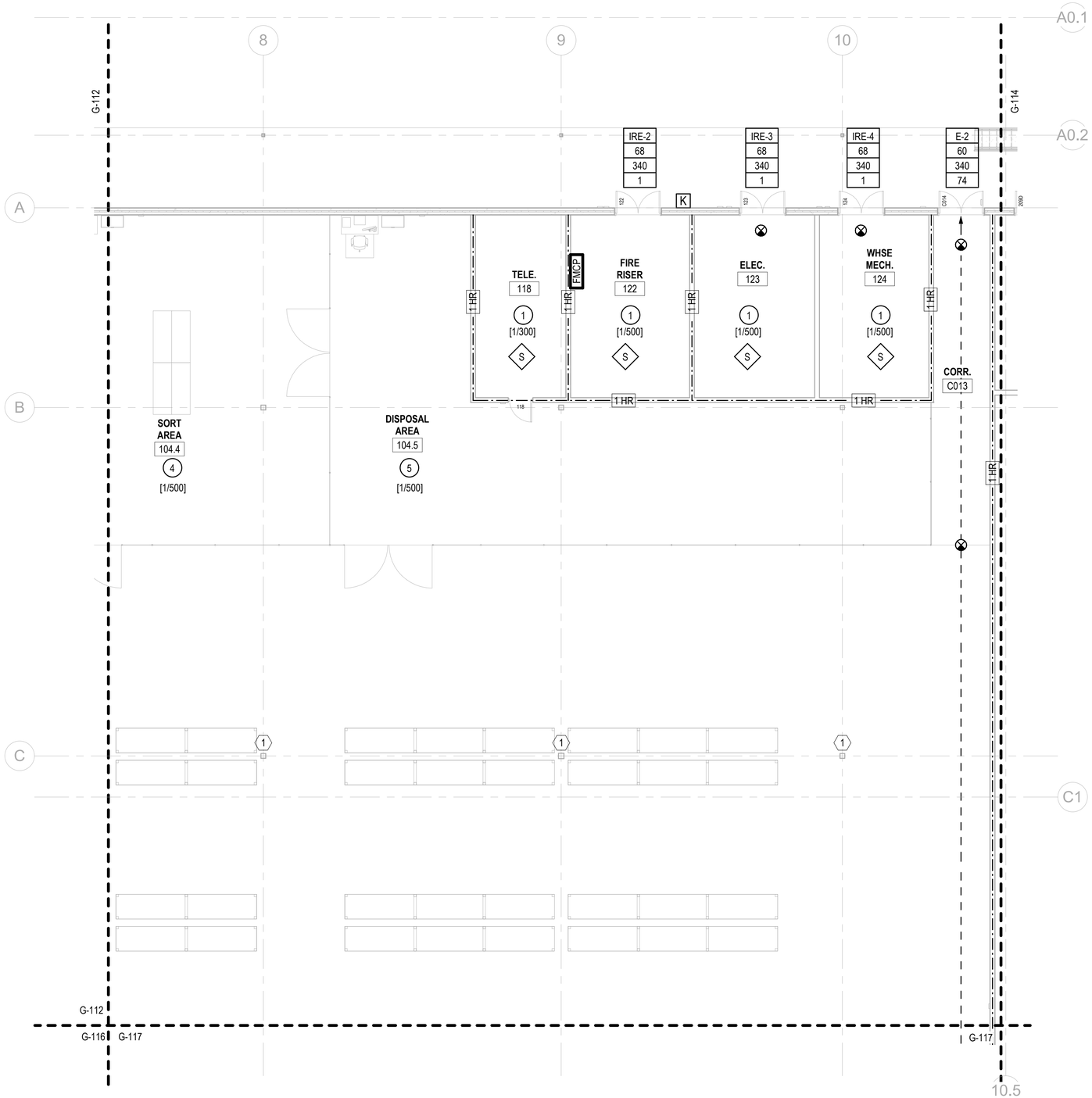

A1 LIFE SAFETY - 1ST FLOOR PLAN - AREA C
SCALE: 1/8" = 1'-0"

GENERAL NOTES

1. SEE SHEET G-100 FOR CODE ANALYSIS.

KEYNOTES

1 STRUCTURAL COLUMNS SHALL BE PROTECTED WITH INTUMESCENT PAINT TO PROVIDE A 1 HOUR FIRE RATING.

LEGEND

DESCRIPTION	SYMBOL
1 HOUR FIRE BARRIER	1 HR
OCCUPANCY LOAD	0
FIRE EXTINGUISHER CABINET	FEC
EXITS AND IRE TAGS	E/IRE-X EXIT COMPONENT; X DOOR WIDTH; X CALCULATED CAPACITY; X ACTUAL USE
EXIT SIGN	
TRAVEL DISTANCE	0'
COMMON PATH OF TRAVEL	0'
DEAD END	0'
OCCUPANT LOAD FACTOR	[X/Y] PERSONS/SQUARE FEET
OCCUPANCY CLASSIFICATION	X
KNOX BOX	K

KEYPLAN

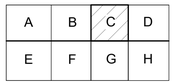

0 4' - 0" 8' - 0" 16' - 0"
SCALE: 1/8" = 1' - 0"

N

NO.	DESCRIPTION	DATE	APPR
5YM			

NAVFAC

COLORADO LICENSED JASON MILLER 55216 PROFESSIONAL ENGINEER
SEAL

IRQ W.M. Jordan COMPANY – A JOINT VENTURE –

Michael Baker INTERNATIONAL
100 AIRSIDE DRIVE MOON TOWNSHIP, PA 15108 A/E INFO

APPROVED
FOR COMMANDER NAVFAC

ACTIVITY
MARINE CORPS BASE CAMP LEJEUNE

SATISFACTORY TO DATE	DD/MM/YY
DES JAM	DRW ADH CHK ALS
PM / DM	TOWLER / ROOT
BRANCH HEAD	
DESIGN DIRECTOR	R.L.Stephens, Jr.
FIRE PROTECTION	DPS

NAVAL FACILITIES ENGINEERING SYSTEMS COMMAND ATLANTIC NORFOLK, VA

DEPARTMENT OF THE NAVY
NAVAL FACILITIES ENGINEERING SYSTEMS COMMAND
ATLANTIC DESIGN AND CONSTRUCTION
MCB CAMP LEJEUNE

JACKSONVILLE, NC
P1527 LOGCOM CSP WAREHOUSE

LIFE SAFETY - 1ST FLOOR PLAN - AREA C

SCALE:	AS NOTED
EPROJECT NO.:	1639600
CONSTR. CONTR. NO.	N40085-20-C-0059
NAVFAC DRAWING NO.	14111010
SHEET	10 OF 447

G-113

DRAWFORM REVISION: 25 AUGUST 2020

P1527 FINAL SUBMISSION - 11/18/2021

PLOTTED: 11/15/2021 7:31:10 AM

FILE NAME: BIM 360://HF PACKAGE 3/P1527 LOG COM CSP-1639600-F.rvt

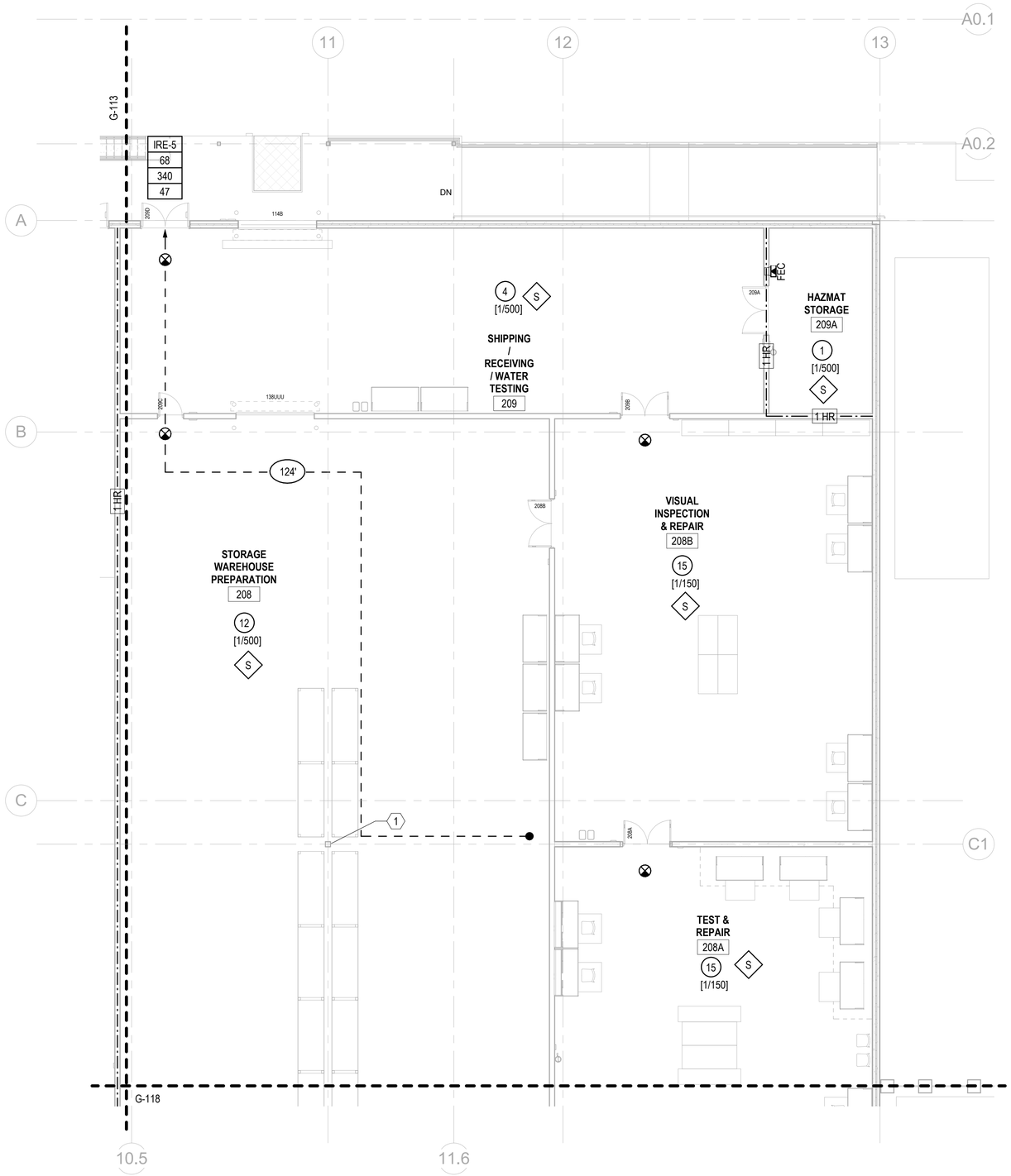

A1 LIFE SAFETY - 1ST FLOOR PLAN - AREA D
SCALE: 1/8" = 1'-0"

GENERAL NOTES

1. SEE SHEET G-100 FOR CODE ANALYSIS.

KEYNOTES

1 STRUCTURAL COLUMNS SHALL BE PROTECTED WITH INTUMESCENT PAINT TO PROVIDE A 1 HOUR FIRE RATING.

LEGEND

DESCRIPTION	SYMBOL
1 HOUR FIRE BARRIER	1 HR
OCCUPANCY LOAD	0
FIRE EXTINGUISHER CABINET	FEC
EXITS AND IRE TAGS	E/IRE-X EXIT COMPONENT X DOOR WIDTH X CALCULATED CAPACITY X ACTUAL USE
EXIT SIGN	
TRAVEL DISTANCE	0'
COMMON PATH OF TRAVEL	0'
DEAD END	0'
OCCUPANT LOAD FACTOR	[X/Y] PERSONS/SQUARE FEET
OCCUPANCY CLASSIFICATION	X
KNOX BOX	K

KEYPLAN

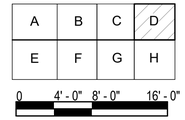

0 4' - 0" 8' - 0" 16' - 0"
SCALE: 1/8" = 1' - 0"

N

APPR	DATE	DESCRIPTION	SYM

NAVFAC

COLORADO LICENSED JASON MILLER 55216 PROFESSIONAL ENGINEER
SEAL

IRQ W.M. Jordan COMPANY – A JOINT VENTURE –

Michael Baker INTERNATIONAL
100 AIRSIDE DRIVE
MOON TOWNSHIP, PA 15108
A/E INFO

APPROVED
FOR COMMANDER NAVFAC

ACTIVITY
MARINE CORPS BASE CAMP LEJEUNE

SATISFACTORY TO DATE DD/MM/YY
DES JAM DRW ADH CHK ALS
PM / DM TOWLER / ROOT
BRANCH HEAD
DESIGN DIRECTOR R.L.Stephens, Jr.
FIRE PROTECTION DPS

DEPARTMENT OF THE NAVY
NAVAL FACILITIES ENGINEERING SYSTEMS COMMAND
ATLANTIC DESIGN AND CONSTRUCTION
MCB CAMP LEJEUNE

NAVAL FACILITIES ENGINEERING SYSTEMS COMMAND ATLANTIC
NORFOLK, VA
JACKSONVILLE, NC

P1527 LOGCOM CSP WAREHOUSE

LIFE SAFETY - 1ST FLOOR PLAN - AREA D

SCALE: AS NOTED
EPROJECT NO.: 1639600
CONSTR. CONTR. NO. N40085-20-C-0059
NAVFAC DRAWING NO. 14111011
SHEET 11 OF 447

G-114

DRAWFORM REVISION: 25 AUGUST 2020

P1527 FINAL SUBMISSION - 11/18/2021

PLOTTED: 11/15/2021 7:31:12 AM

FILE NAME: BIM 360:/HF PACKAGE 3/P1527 LOG COM CSP-1639600-F.rvt

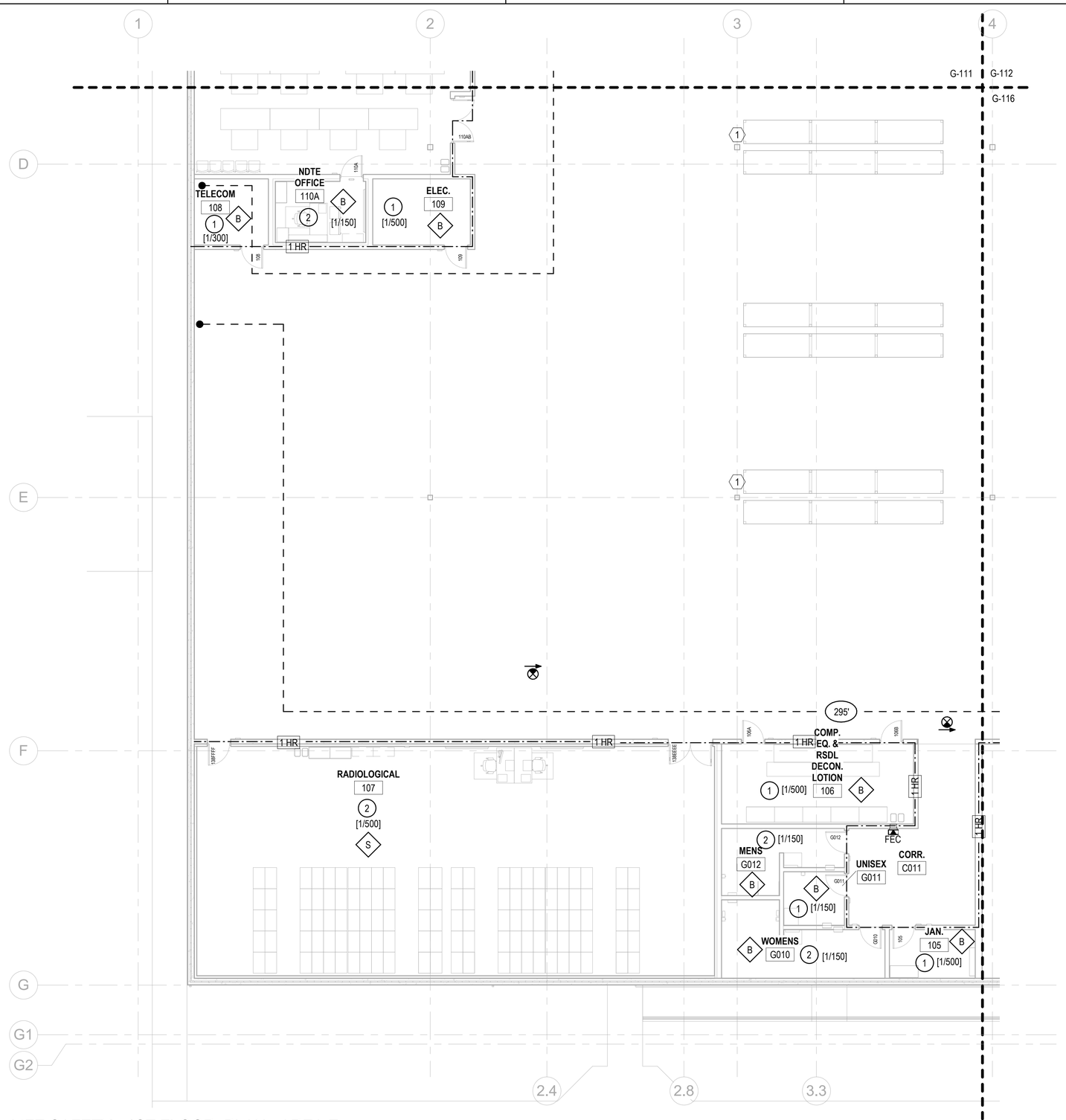

A1 LIFE SAFETY - 1ST FLOOR PLAN - AREA E
SCALE: 1/8" = 1'-0"

GENERAL NOTES

1. SEE SHEET G-100 FOR CODE ANALYSIS.

KEYNOTES

1 STRUCTURAL COLUMNS SHALL BE PROTECTED WITH INTUMESCENT PAINT TO PROVIDE A 1 HOUR FIRE RATING.

LEGEND

DESCRIPTION	SYMBOL
1 HOUR FIRE BARRIER	1 HR
OCCUPANCY LOAD	0
FIRE EXTINGUISHER CABINET	FEC
EXITS AND IRE TAGS	E/IRE-X EXIT COMPONENT X DOOR WIDTH X CALCULATED CAPACITY X ACTUAL USE
EXIT SIGN	
TRAVEL DISTANCE	0'
COMMON PATH OF TRAVEL	0'
DEAD END	0'
OCCUPANT LOAD FACTOR	[X/Y] PERSONS/SQUARE FEET
OCCUPANCY CLASSIFICATION	X
KNOX BOX	K

KEYPLAN

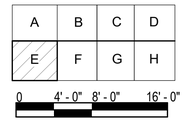

SCALE: 1/8" = 1' - 0"

APPR	DATE	DESCRIPTION	SYM

NAVFAC

COLORADO LICENSED
JASON MILLER
55216
PROFESSIONAL ENGINEER
SEAL

IRQ W.M. Jordan COMPANY – A JOINT VENTURE –

Michael Baker INTERNATIONAL
100 AIRSIDE DRIVE
MOON TOWNSHIP, PA 15108
A/E INFO

APPROVED

FOR COMMANDER NAVFAC

ACTIVITY
MARINE CORPS BASE CAMP LEJEUNE

SATISFACTORY TO DATE DD/MM/YY

DES	DRW	CHK
JAM	ADH	ALS

PM / DM: TOWLER / ROOT

BRANCH HEAD

DESIGN DIRECTOR: R.L.Stephens, Jr.

FIRE PROTECTION: DPS

DEPARTMENT OF THE NAVY
NAVAL FACILITIES ENGINEERING SYSTEMS COMMAND
ATLANTIC DESIGN AND CONSTRUCTION
MCB CAMP LEJEUNE

NAVAL FACILITIES ENGINEERING SYSTEMS COMMAND ATLANTIC
NORFOLK, VA
JACKSONVILLE, NC
P1527 LOGCOM CSP WAREHOUSE

LIFE SAFETY - 1ST FLOOR PLAN - AREA E

SCALE: AS NOTED
EPROJECT NO.: 1639600
CONSTR. CONTR. NO. N40085-20-C-0059
NAVFAC DRAWING NO. 14111012
SHEET 12 OF 447

G-115

DRAWFORM REVISION: 25 AUGUST 2020

P1527 FINAL SUBMISSION - 11/18/2021

PLOTTED: 11/15/2021 7:31:14 AM

FILE NAME: BIM 360://HF PACKAGE 3/P1527 LOG COM CSP-1639600-F.rvt

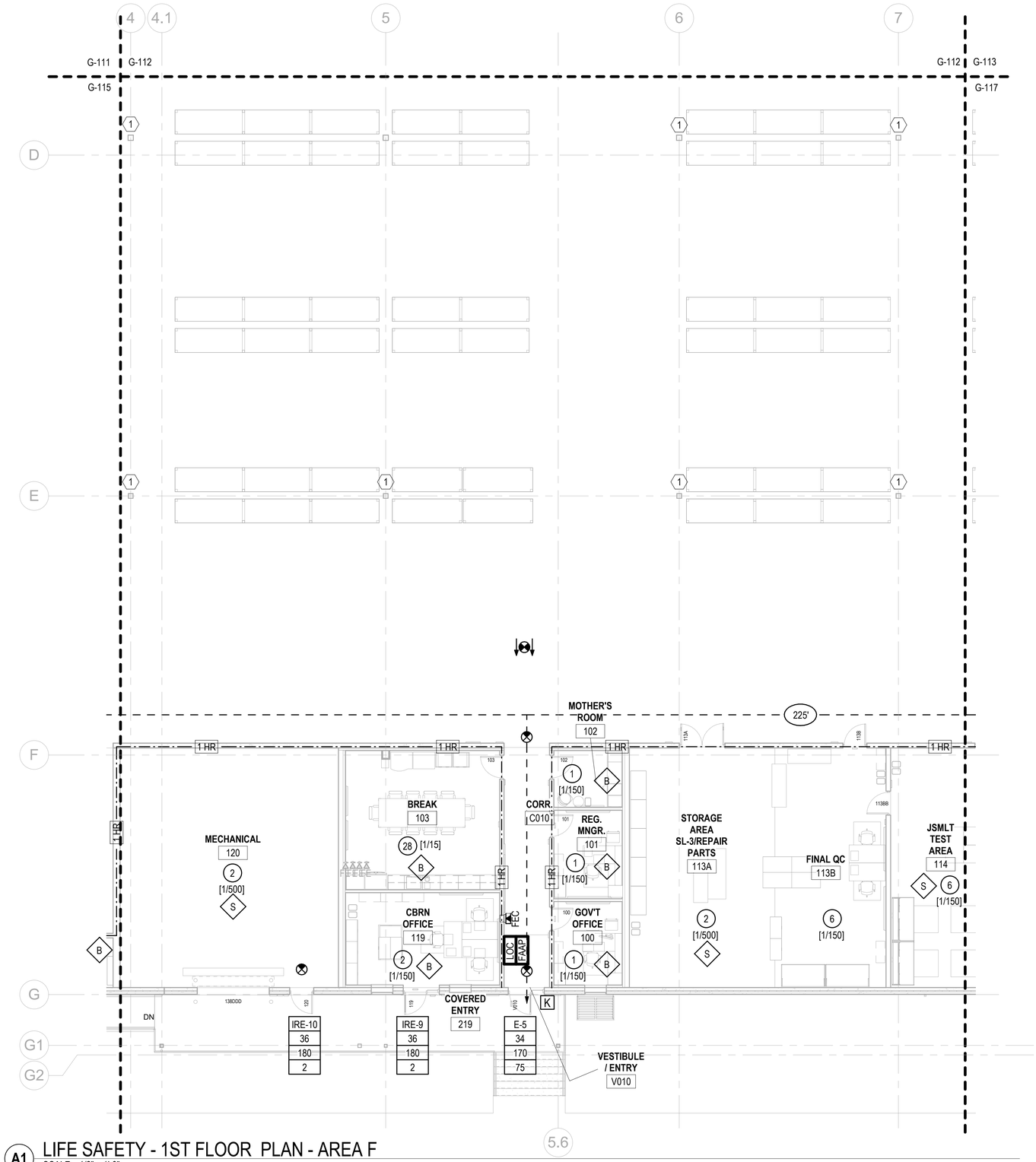

A1 LIFE SAFETY - 1ST FLOOR PLAN - AREA F

SCALE: 1/8" = 1'-0"

GENERAL NOTES

1. SEE SHEET G-100 FOR CODE ANALYSIS.

KEYNOTES

1 STRUCTURAL COLUMNS SHALL BE PROTECTED WITH INTUMESCENT PAINT TO PROVIDE A 1 HOUR FIRE RATING.

LEGEND

DESCRIPTION	SYMBOL
1 HOUR FIRE BARRIER	1 HR
OCCUPANCY LOAD	0
FIRE EXTINGUISHER CABINET	FEC
EXITS AND IRE TAGS	E/IRE-X: EXIT COMPONENT; X: DOOR WIDTH; X: CALCULATED CAPACITY; X: ACTUAL USE
EXIT SIGN	
TRAVEL DISTANCE	0'
COMMON PATH OF TRAVEL	0'
DEAD END	0'
OCCUPANT LOAD FACTOR	[X/Y] PERSONS/SQUARE FEET
OCCUPANCY CLASSIFICATION	X
KNOX BOX	K

KEYPLAN

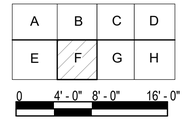

0 4' - 0" 8' - 0" 16' - 0"

SCALE: 1/8" = 1' - 0"

N

NO.	SYM	DESCRIPTION	DATE	APPR

NAVFAC

COLORADO LICENSED JASON MILLER 55216 PROFESSIONAL ENGINEER

SEAL

IRQ W.M. Jordan COMPANY – A JOINT VENTURE –

Michael Baker INTERNATIONAL

100 AIRSIDE DRIVE MOON TOWNSHIP, PA 15108 A/E INFO

APPROVED

FOR COMMANDER NAVFAC

ACTIVITY: MARINE CORPS BASE CAMP LEJEUNE

SATISFACTORY TO DATE DD/MM/YY

DES JAM | DRW ADH | CHK ALS

PM / DM: TOWLER / ROOT

BRANCH HEAD

DESIGN DIRECTOR: R.L.Stephens, Jr.

FIRE PROTECTION: DPS

DEPARTMENT OF THE NAVY
NAVAL FACILITIES ENGINEERING SYSTEMS COMMAND
ATLANTIC DESIGN AND CONSTRUCTION
MCB CAMP LEJEUNE

NAVAL FACILITIES ENGINEERING SYSTEMS COMMAND ATLANTIC
NORFOLK, VA

JACKSONVILLE, NC

P1527 LOGCOM CSP WAREHOUSE

LIFE SAFETY - 1ST FLOOR PLAN - AREA F

SCALE: AS NOTED

EPROJECT NO.: 1639600

CONSTR. CONTR. NO. N40085-20-C-0059

NAVFAC DRAWING NO. 14111013

SHEET 13 OF 447

G-116

DRAWFORM REVISION: 25 AUGUST 2020

P1527 FINAL SUBMISSION - 11/18/2021

PLOTTED: 11/15/2021 7:31:16 AM

FILE NAME: BIM 360:/HF PACKAGE 3/P1527 LOG COM CSP-1639600-F.rvt

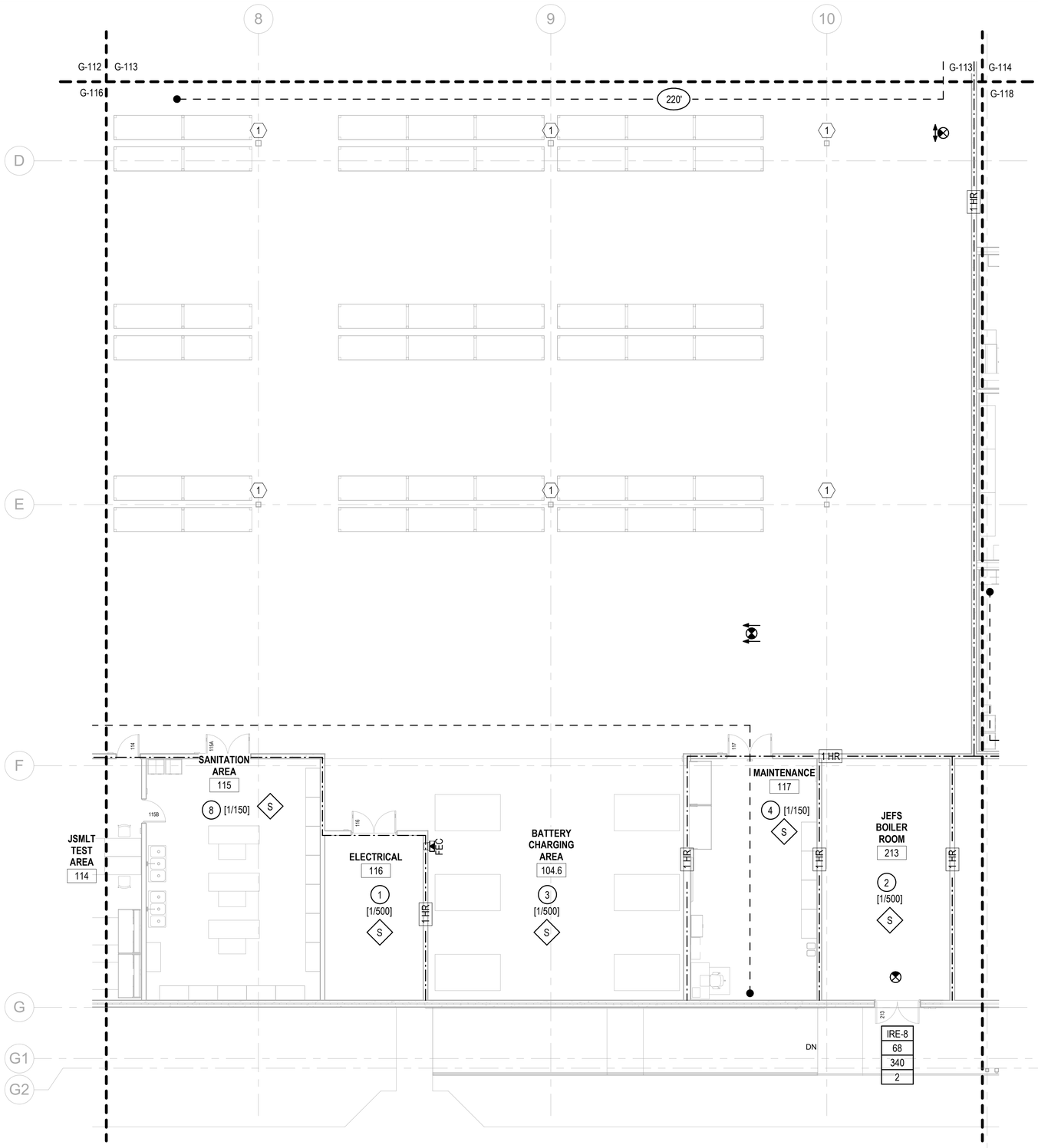

A1 LIFE SAFETY - 1ST FLOOR PLAN - AREA G
SCALE: 1/8" = 1'-0"

GENERAL NOTES

1. SEE SHEET G-100 FOR CODE ANALYSIS.

KEYNOTES

1 STRUCTURAL COLUMNS SHALL BE PROTECTED WITH INTUMESCENT PAINT TO PROVIDE A 1 HOUR FIRE RATING.

LEGEND

DESCRIPTION	SYMBOL
1 HOUR FIRE BARRIER	1 HR
OCCUPANCY LOAD	0
FIRE EXTINGUISHER CABINET	FEC
EXITS AND IRE TAGS	E/IRE-X EXIT COMPONENT X DOOR WIDTH X CALCULATED CAPACITY X ACTUAL USE
EXIT SIGN	
TRAVEL DISTANCE	0'
COMMON PATH OF TRAVEL	0'
DEAD END	0'
OCCUPANT LOAD FACTOR	[X/Y] PERSONS/SQUARE FEET
OCCUPANCY CLASSIFICATION	X
KNOX BOX	K

KEYPLAN

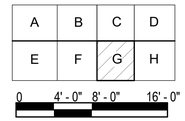

0 4' - 0" 8' - 0" 16' - 0"

SCALE: 1/8" = 1' - 0"

N

NO.	DESCRIPTION	DATE	APPR

NAVFAC

COLORADO LICENSED
JASON MILLER
55216
PROFESSIONAL ENGINEER
SEAL

IRQ W.M. Jordan COMPANY
~A JOINT VENTURE~

Michael Baker INTERNATIONAL
100 AIRSIDE DRIVE
MOON TOWNSHIP, PA 15108
A/E INFO

APPROVED
FOR COMMANDER NAVFAC

ACTIVITY
MARINE CORPS BASE CAMP LEJEUNE

SATISFACTORY TO DATE DD/MM/YY
DES JAM DRW ADH CHK ALS
PM / DM TOWLER / ROOT
BRANCH HEAD
DESIGN DIRECTOR R.L.Stephens, Jr.
FIRE PROTECTION DPS

DEPARTMENT OF THE NAVY
NAVAL FACILITIES ENGINEERING SYSTEMS COMMAND
ATLANTIC DESIGN AND CONSTRUCTION
MCB CAMP LEJEUNE

NAVAL FACILITIES ENGINEERING SYSTEMS COMMAND ATLANTIC
NORFOLK, VA
JACKSONVILLE, NC
P1527 LOGCOM CSP WAREHOUSE

LIFE SAFETY - 1ST FLOOR PLAN - AREA G

SCALE: AS NOTED
EPROJECT NO.: 1639600
CONSTR. CONTR. NO. N40085-20-C-0059
NAVFAC DRAWING NO. 14111014
SHEET 14 OF 447

G-117

DRAWFORM REVISION: 25 AUGUST 2020

P1527 FINAL SUBMISSION - 11/18/2021

PLOTTED: 11/15/2021 7:31:18 AM

FILE NAME: BIM 360://HF PACKAGE 3/P1527 LOG COM CSP-1639600-F.rvt

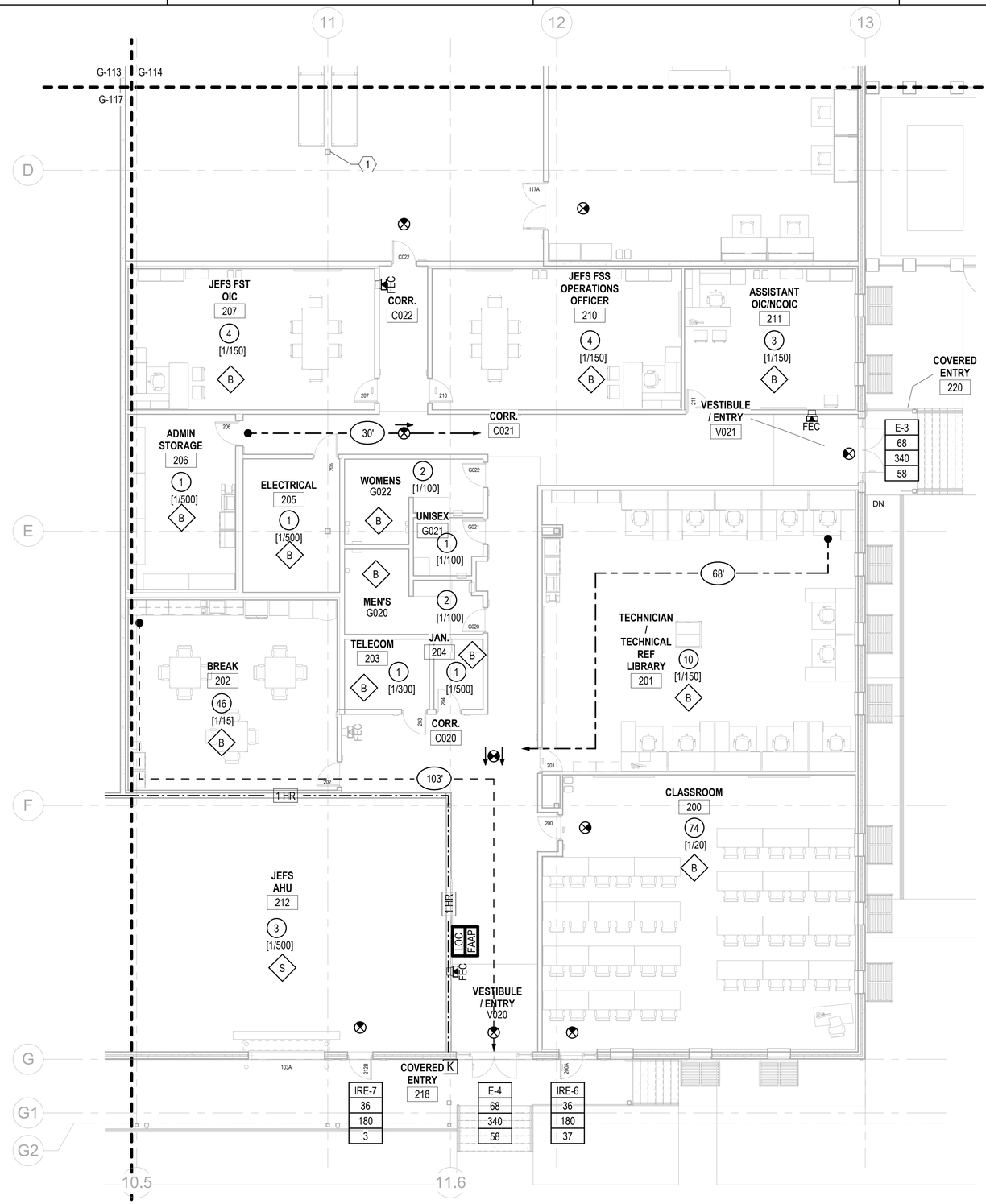

1 LIFE SAFETY - 1ST FLOOR PLAN - AREA H
SCALE: 1/8" = 1'-0"

GENERAL NOTES

1. SEE SHEET G-100 FOR CODE ANALYSIS.

KEYNOTES

1 STRUCTURAL COLUMNS SHALL BE PROTECTED WITH INTUMESCENT PAINT TO PROVIDE A 1 HOUR FIRE RATING.

LEGEND

DESCRIPTION	SYMBOL
1 HOUR FIRE BARRIER	1 HR
OCCUPANCY LOAD	0
FIRE EXTINGUISHER CABINET	FEC
EXITS AND IRE TAGS	E/IRE-X EXIT COMPONENT; X DOOR WIDTH; X CALCULATED CAPACITY; X ACTUAL USE
EXIT SIGN	
TRAVEL DISTANCE	0'
COMMON PATH OF TRAVEL	0'
DEAD END	0'
OCCUPANT LOAD FACTOR	[X/Y] PERSONS/SQUARE FEET
OCCUPANCY CLASSIFICATION	X
KNOX BOX	K

KEYPLAN

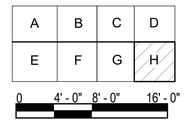

SCALE: 1/8" = 1' - 0"

N

APPR | DATE | SYM | DESCRIPTION

NAVFAC

COLORADO LICENSED
JASON MILLER
55216
PROFESSIONAL ENGINEER
SEAL

IRQ WM Jordan COMPANY – A JOINT VENTURE –

Michael Baker INTERNATIONAL
100 AIRSIDE DRIVE
MOON TOWNSHIP, PA 15108
A/E INFO

APPROVED

FOR COMMANDER NAVFAC

ACTIVITY
MARINE CORPS BASE CAMP LEJEUNE

SATISFACTORY TO DATE DD/MM/YY

DES	DRW	CHK
JAM	ADH	ALS

PM / DM TOWLER / ROOT
BRANCH HEAD
DESIGN DIRECTOR R.L.Stephens, Jr.
FIRE PROTECTION DPS

DEPARTMENT OF THE NAVY
NAVAL FACILITIES ENGINEERING SYSTEMS COMMAND
ATLANTIC DESIGN AND CONSTRUCTION
MCB CAMP LEJEUNE

NAVAL FACILITIES ENGINEERING SYSTEMS COMMAND ATLANTIC
NORFOLK, VA
JACKSONVILLE, NC
P1527 LOGCOM CSP WAREHOUSE

LIFE SAFETY - 1ST FLOOR PLAN - AREA H

SCALE: AS NOTED
EPROJECT NO.: 1639600
CONSTR. CONTR. NO. N40085-20-C-0059
NAVFAC DRAWING NO. 14111015
SHEET 15 OF 447

G-118

DRAWFORM REVISION: 25 AUGUST 2020

P1527 FINAL SUBMISSION - 11/18/2021

PLOTTED: 11/15/2021 7:31:21 AM

FILE NAME: BIM 360://HF PACKAGE 3/P1527 LOG COM CSP-1639600-F.rvt

GENERAL NOTES:

1. ALL DIMENSIONS, ELEVATIONS, AND STATIONS ARE IN FEET UNLESS INDICATED.
2. ALL PIPE SIZES ARE IN INCHES UNLESS INDICATED OTHERWISE.
3. CALLOUTS, COORDINATES, ELEVATIONS, AND DIMENSIONS ARE POINTED TO OR MEASURED TO STRUCTURE CENTER, EDGE OF PAVEMENT, BACK OF CURB, OR OUTSIDE FACE OF FOUNDATION WALL, UNLESS INDICATED OTHERWISE.
4. COORDINATES SHOWN LOCATING SITE FEATURES ARE EXPRESSED IN MODIFIED GROUND COORDINATES. SEE TABLE ON SHEET C-002 FOR SURVEY CONTROL POINTS.
5. ALL WORK IS SUBJECT TO INSPECTION BY AUTHORIZED PERSONNEL OF LOCAL AND GOVERNMENT REGULATORY AGENCIES AND THE CONTRACTING OFFICER'S REPRESENTATIVE (COR).
6. ALL WORK MUST BE CONDUCTED IN ACCORDANCE WITH THE PLANS AND SPECIFICATIONS AND LOCAL AND GOVERNMENT CODES, ORDINANCES, AND REGULATIONS. IN CASE OF CONTRADICTION OR DISCREPANCY BETWEEN REQUIREMENTS, CONTRACTOR MUST INCORPORATE WHICHEVER IS MOST STRINGENT. WHERE A QUESTION REMAINS ON WHICH REQUIREMENT IS MOST STRINGENT, CONTRACTOR MUST SUBMIT ISSUE TO THE COR IN WRITING. THE DECISION OF THE COR MUST BE CONSIDERED FINAL.
7. ALL WORK MUST BE CONDUCTED IN A PROFESSIONAL WORKMANSHIP MANNER USING QUALITY MATERIALS.

RECORD DRAWING NOTES:

1. MAINTAIN UPDATED REDLINE RECORD DRAWINGS AT ALL TIMES THROUGH THE DURATION OF THE PROJECT. CONSTRUCTION RECORD DRAWINGS MUST BE SUBMITTED TO THE COR.
2. DURING CONSTRUCTION OF THE PROJECT, CONTRACTOR IS RESPONSIBLE FOR KEEPING TRACK OF ANY COR-APPROVED FIELD CONSTRUCTION REVISIONS TO THE DESIGN DEPICTED ON APPROVED CONSTRUCTION DRAWINGS. CONTRACTOR MUST USE THESE REVISIONS TO PREPARE RECORD DRAWINGS OF COMPLETED CONSTRUCTION.
3. ALL VARIATIONS IN PROJECT CONDITIONS, LOCATIONS, AND CONFIGURATIONS, AND ANY OTHER CHANGES OR DEVIATIONS FROM THE INFORMATION PRESENTED ON THE ORIGINAL, APPROVED CONSTRUCTION DRAWINGS MUST BE NOTED. THIS INCLUDES BURIED OR CONCEALED CONSTRUCTION AND UTILITY FEATURES THAT WERE REVEALED DURING CONSTRUCTION.
4. THE COR MUST REVIEW COMPLETENESS, ACCURACY, AND FORMAT OF SUBMITTED RECORD DRAWINGS. IF THE RECORD DRAWINGS ARE CONSIDERED UNACCEPTABLE, THEY MUST BE RETURNED TO THE CONTRACTOR FOR CORRECTION AND RESUBMISSION.

EXISTING CONDITION NOTES:

1. ALL STRUCTURES AND UNDERGROUND UTILITIES ARE SHOWN AT APPROXIMATE ELEVATIONS AND LOCATIONS BASED ON FIELD OBSERVATIONS, SURVEY DATA, AND HISTORICAL MAPS AND INFORMATION. EXACT LOCATION AND SIZES OF EXISTING UTILITIES IN THE AREA OF CONSTRUCTION MUST BE VERIFIED IN THE FIELD BY THE CONTRACTOR WITH A REPRESENTATIVE OF THE APPROPRIATE UTILITY COMPANY. UNDERGROUND STRUCTURES AND UTILITIES MAY BE PRESENT WHICH ARE NOT DOCUMENTED OR LOCATED.
2. FIELD-CHECK ALL EXISTING CONDITIONS AND BE THOROUGHLY FAMILIAR WITH THE SITE BEFORE ANY WORK COMMENCES. ANY DISCREPANCIES IN THE DRAWINGS MUST BE IMMEDIATELY REPORTED TO THE COR BEFORE ANY FURTHER WORK COMMENCES.
3. IT IS THE CONTRACTOR'S RESPONSIBILITY TO FIELD-VERIFY EXISTING STRUCTURES, UTILITIES, AND SURVEY INFORMATION, AND TO TAKE NECESSARY PRECAUTIONS DURING DEMOLITION AND CONSTRUCTION. CONTRACTOR MUST VERIFY EXISTENCE AND MARK LOCATIONS OF ALL UTILITIES, INCLUDING SERVICE CONNECTIONS TO UNDERGROUND UTILITIES PRIOR TO BEGINNING WORK. CONTRACTOR MUST CONTACT THE COR AND ALL ASSOCIATED UTILITY COMPANIES AND AGENCIES TO IDENTIFY THE LOCATION OF UTILITIES. THERE IS NO GUARANTEE, EITHER EXPRESSED OR IMPLIED, THAT THE LOCATIONS, SIZE AND TYPE OF MATERIAL OF EXISTING UNDERGROUND UTILITIES INDICATED ARE REPRESENTATIVE OF THOSE TO BE ENCOUNTERED DURING CONSTRUCTION.
4. PRIOR TO CONSTRUCTION, THE CONTRACTOR MUST NOTIFY THE COR OF OPERATIONAL PLANS. IN THE EVENT AN UNEXPECTED UTILITY OR STRUCTURE INTERFERENCE OR CONFLICT IS ENCOUNTERED DURING CONSTRUCTION, THE CONTRACTOR MUST IMMEDIATELY NOTIFY THE COR. ANY UTILITY SERVICES OR STRUCTURES DISTURBED BY THE CONTRACTOR'S OPERATIONS MUST BE RESTORED IMMEDIATELY AT CONTRACTOR'S EXPENSE TO THE SATISFACTION OF THE COR.
5. THE CONTRACTOR IS RESPONSIBLE FOR PROTECTING ITEMS NOT TO BE DAMAGED DURING DEMOLITION AND CONSTRUCTION. THE CONTRACTOR MUST REPAIR OR REPLACE DAMAGED OR DISTURBED ITEMS TO THE SATISFACTION OF THE COR.
6. SPECIAL HANDLING AND CONSIDERATION IS REQUIRED FOR EXCAVATED SOILS THOUGHT TO CONTAIN CONTAMINATED SUBSTANCES. MONITOR EXCAVATED SOILS FOR POTENTIALLY CONTAMINATED SUBSTANCES IN ACCORDANCE WITH THE SPECIFICATIONS AND THE CONTRACTOR'S APPROVED HEALTH & SAFETY PLAN. EXCAVATED SOILS TO REMAIN ON MCB CAMP LEJEUNE MUST BE HANDLED, STOCKPILED, & DISPOSED IN ACCORDANCE WITH SPEC. SECTION 31 23 00.00 20 EXCAVATION AND FILL, AND AS DIRECTED BY THE COR. EXCAVATED SOILS TO BE REMOVED FROM MCB CAMP LEJEUNE MUST BE HANDLED, STOCKPILED, TESTED, AND DISPOSED IN ACCORDANCE WITH SPEC. SECTION 01 57 19. COORDINATE HANDLING OF CONTAMINATED MATERIALS WITH THE COR.
7. THERE ARE NO KNOWN STREAMS OR WETLANDS WITHIN THE PROJECT LIMITS.

SURVEY NOTES:

1. THE SURVEY WAS PERFORMED BY SEPI ENGINEERING & CONSTRUCTION ON JANUARY 11, 2021. SURVEY CONTROL POINTS MUST BE RESET BY THE CONTRACTOR IF DISTURBED DURING CONSTRUCTION.
2. CONTROL POINTS SHOWN HERE ON WERE ESTABLISHED USING A GPS UNIT REFERENCING VRS NETWORK. VERTICAL DATUM USED WAS NAVD 88 AND HORIZONTAL DATUM USED WAS NC GRID NAD 83.
3. CONTRACTOR MUST RETAIN A LICENSED SURVEYOR, IN THE STATE OF NORTH CAROLINA, TO SURVEY PROJECT IMPROVEMENTS. IF BENCHMARKS SHOWN ARE IN AREAS THAT REQUIRE DEMOLITION, OTHER BENCHMARKS MUST BE ESTABLISHED BEFORE DEMOLITION AND CONSTRUCTION WORK BEGINS. CONTRACTOR MUST SUPPLY CERTIFIED, CONTROL POINT DATA TO COR AFTER COMPLETION OF CONSTRUCTION.

GENERAL DEMOLITION NOTES:

1. ALL DEMOLITION, WASTE, DEBRIS, AND UNSATISFACTORY MATERIALS MUST BE DISPOSED OF OFF BASE.
2. LOCATIONS NOTED FOR DEBRIS REMOVAL MAY CONTAIN ANY OF THE FOLLOWING MATERIALS: AGGREGATE, CONCRETE, ASPHALT, MASONRY, FOUNDATIONS, REBAR, FENCE MATERIAL, PIPING, AND MISCELLANEOUS STRUCTURES. LARGE PIECES OF MATERIAL MAY NEED TO BE CRUSHED AND/OR BROKEN UP FURTHER IN ORDER TO BE HAULED AWAY TO THE WASTE DISPOSAL SITE.
3. COORDINATE LIMITS OF SAWCUT AND PAVEMENT REMOVAL WITH PAVEMENT LAYOUT AND JOINTING PLAN.
4. PAVEMENT DESIGNATED FOR SAWCUT MUST BE SAWCUT FULL DEPTH.
5. EXISTING PAVEMENT EDGES MUST BE SAWCUT IN LOCATIONS SHOWN TO PROVIDE CLEAN EDGE FOR CONSTRUCTION OF PAVEMENT.
6. PAVEMENT REMOVAL LIMITS MUST BE TO THE NEAREST EXISTING PAVEMENT JOINT TO THE GREATEST EXTENT POSSIBLE TO PREVENT PARTIAL PANEL REMOVAL. WHERE JOINT IS A CONTROL JOINT OR JOINT IS IN POOR CONDITION, SAWCUT 2 FEET BEYOND JOINT LINE. PAVEMENT REMOVAL MUST INCLUDE REMOVAL OF PAVEMENT AND ANY SUBBASE MATERIAL PRESENT.
7. ANY DAMAGE TO PAVEMENT AREAS DESIGNATED TO REMAIN MUST BE REPAIRED OR REMOVED AND REPLACED AT NO ADDITIONAL COST TO OWNER.
8. THE WEIGHT (IN TONS) OF ALL MATERIALS TAKEN OFF SITE FOR RECYCLING MUST BE REPORTED TO COR.

UTILITY DEMOLITION NOTES:

1. COORDINATE WITH THE COR PRIOR TO REMOVAL OF EXISTING UTILITIES IN SERVICE. RELOCATED UTILITIES MUST BE CONSTRUCTED BEFORE REMOVAL OF EXISTING UTILITIES TO ENSURE UNINTERRUPTED SERVICE TO THE FACILITIES SERVED BY THE UTILITY. ALL RELOCATIONS MUST BE COORDINATED WITH THE COR.
2. UTILITY CAPPING METHODS MUST BE IN ACCORDANCE WITH MANUFACTURER'S RECOMMENDATIONS FOR SPECIFIC PIPE MATERIAL IN SERVICE. ALL CAPPING MUST BE INSPECTED AND APPROVED BY THE COR.
3. ALL STRUCTURES, VALVES, ETC. TO REMAIN MUST BE PROTECTED AND ADJUSTED TO FINISH GRADE.
4. EXISTING UTILITIES TO BE REMOVED MUST BE DISCONNECTED AND REMOVED TO THE POINT OF CONNECTION TO THE PRIMARY SYSTEM, OR TO THE PROJECT LIMITS OF CONSTRUCTION. IF THE UTILITY TO BE REMOVED CONTINUES BEYOND THE PROJECT LIMITS OF CONSTRUCTION, COORDINATE REMOVAL/ABANDONMENT WITH THE COR.
5. UTILITIES TO BE DEMOLISHED/REMOVED MUST NOT BE PERMITTED TO BE ABANDONED IN PLACE.
6. IN AREAS OF UTILITY REMOVAL OF ABANDONED LINES, THE PORTION OF EXISTING ABANDONED LINES APPROVED TO REMAIN MUST BE CAPPED OR PLUGGED AT REMOVAL INTERFACE.
7. CONCRETE END SECTIONS MUST BE NCDOT CLASS B, AIR-ENTRAINED CONCRETE HAVING A MINIMUM COMPRESSIVE STRENGTH OF 2,000 PSI AT 28 DAYS.
8. IF AN OIL/WATER SEPARATOR OR IWTP LINE IS DEMOLISHED, A RCRA WORKPLAN MUST BE IMPLEMENTED WITH PRIOR APPROVAL FROM NCDEQ. THIS PROCESS TAKES APPROXIMATELY 30-45 DAYS.

GENERAL SITE NOTES:

1. BUILDING COORDINATES ARE INDICATED TO OR MEASURED AT THE CENTER OF BUILDING COLUMNS OR OUTSIDE BUILDING FACE AS INDICATED. COORDINATE BEARINGS OF BUILDING GRID LINES WITH STRUCTURAL DRAWINGS.
2. COORDINATE BUILDING ENTRANCES, EGRESSES, WALKWAYS, AND DOORWAY LOCATIONS WITH ARCHITECTURAL AND STRUCTURAL SHEETS. STOOPS AND SIDEWALKS CENTERED ON DOORS.
3. SEE MECHANICAL AND ELECTRICAL SHEETS FOR MISCELLANEOUS SITE EQUIPMENT DETAILS. SEE CIVIL DETAIL SHEETS FOR EQUIPMENT PAD DETAILS.

PAVEMENT JOINTING NOTES:

1. ALL CONCRETE PANELS THAT SUPPORT UTILITY STRUCTURES OR ARE IRREGULAR IN SHAPE MUST BE REINFORCED. SEE DETAIL SHEETS FOR CONCRETE REINFORCEMENT DETAILS.
2. PROVIDE THICKENED EDGE EXPANSION JOINT AROUND UTILITY STRUCTURES. SEE SHEET DETAIL SHEETS.
3. ALL JOINT CHANGES MUST BE APPROVED BY THE ENGINEER OF RECORD AND COR.
4. MANHOLE COVER AND FRAME MUST BE RAISED TO FINISH GRADE BY INSTALLING PRECAST MANHOLE ADJUSTMENT RINGS AND LEVELING MORTAR.
5. GRADE ADJUSTMENT AREA MUST BE BACKFILLED WITH EARLY STRENGTH PCC.

GENERAL GRADING NOTES:

1. PRIOR TO GRADING; AREAS MUST BE CLEARED AND GRUBBED, THEN TOPSOIL REMOVED AND STOCKPILED FOR REUSE. TOPSOIL IS ANTICIPATED TO BE ABOUT 6 TO 10 INCHES IN THICKNESS.
2. ELEVATIONS INDICATED ARE FOR TOP OF FINAL GRADE, PAVEMENT, OR STRUCTURE UNLESS INDICATED OTHERWISE.
3. ELEVATION DENOTED AS "MATCH" ARE INTENDED TO MEET EXISTING GRADE ELEVATIONS. VERIFY ELEVATIONS AT TIE-INS AND MATCH POINTS PRIOR TO BEGINNING CONSTRUCTION.
4. EXTERIOR FINISH GRADES AT BUILDING ENTRANCES AND DOORWAY THRESHOLDS MUST BE MAXIMUM 0.25 INCHES BELOW BUILDING FINISH FLOOR IF A VERTICAL THRESHOLD IS PROVIDED, AND MUST BE MAXIMUM 0.5 INCHES BELOW BUILDING FINISH FLOOR IF A BEVELED THRESHOLD IS PROVIDED, UNLESS INDICATED OTHERWISE.
5. EXTERIOR FINISH GRADES ADJACENT TO BUILDING MUST BE 6.00 INCHES BELOW BUILDING FINISH FLOOR UNLESS INDICATED OTHERWISE.
6. ADEQUATE DRAINAGE MUST BE MAINTAINED AT ALL TIMES DURING CONSTRUCTION. ANY DRAINAGE FEATURE OR STRUCTURE DISTURBED DURING CONSTRUCTION MUST BE RESTORED TO EXISTING CONDITIONS OR BETTER SUBJECT TO THE APPROVAL OF THE COR.
7. SURFACES AROUND FACILITY MUST BE GRADED TO PROVIDE POSITIVE DRAINAGE AWAY FROM BUILDINGS AND PAVEMENTS.
8. REMOVE STANDING WATER FROM THE PROJECT WORK LIMITS AS NECESSARY TO PROTECT SUBGRADE, SUBBASE, AND/OR BASE COURSE OF NEW PAVEMENT, SURROUNDING PAVEMENT-TO-REMAIN, OR OTHER COMPLETED WORKS.
9. SEE EROSION AND SEDIMENT CONTROL PLAN SHEETS AND DETAIL SHEETS FOR RECOMMENDED BEST PRACTICES FOR SEDIMENT AND EROSION CONTROL.
10. TOP ELEVATION OF ALL UTILITY STRUCTURES TO REMAIN MUST BE ADJUSTED ACCORDINGLY TO FINISH GRADE ELEVATION.
11. ALL AREAS DISTURBED BY CONSTRUCTION MUST BE RE-VEGETATED IN ACCORDANCE WITH THE SPECIFICATIONS.

FINAL GRADING AND CLEAN UP NOTES:

1. AFTER COMPLETION OF FINAL GRADING, THE DISTURBED AREAS MUST BE REVEGETATED IN ACCORDANCE WITH THE SPECIFICATIONS. ALL TEMPORARY EROSION AND SEDIMENT CONTROL DEVICES MUST BE REMOVED UPON PROJECT COMPLETION. TRAPPED SEDIMENT AND OTHER DISTURBED SOIL AREAS RESULTING FROM THE DISPOSITION OF TEMPORARY CONTROL MEASURES MUST BE PERMANENTLY STABILIZED TO PREVENT FURTHER EROSION AND SEDIMENTATION.

GENERAL UTILITY NOTES:

1. ALL PIPE SIZES ARE IN INCHES UNLESS INDICATED OTHERWISE.
2. CONTRACTOR IS RESPONSIBLE FOR COORDINATING ALL BUILDING CONNECTIONS WITH BUILDING CONTRACTOR AND THE INFORMATION PROVIDED ON MECHANICAL AND ELECTRICAL DRAWINGS.
3. CONTRACTOR MUST CONTACT THE COR AND ALL ASSOCIATED UTILITY COMPANIES AND AGENCIES TO IDENTIFY THE LOCATION OF UTILITIES PRIOR TO COMMENCEMENT OF WORK.
4. CONTRACTOR MUST COORDINATE ALL REQUIRED UTILITY SHUTDOWNS FOR UTILITY CONNECTIONS WITH THE COR.
5. CONNECTION TO EXISTING WATER, SEWER, AND STORM MAINS MUST BE CONSTRUCTED IN ACCORDANCE WITH ALL REQUIREMENTS OF ASSOCIATED UTILITY COMPANIES AND AGENCIES.
6. CONTRACTOR IS RESPONSIBLE FOR COORDINATING AND PAYING ALL UTILITY CONNECTION FEES AND OBTAINING ALL PERMITS REQUIRED FOR THE UTILITY CONSTRUCTION AND CONNECTIONS. THIS INCLUDES ALL FEES ASSOCIATED WITH CONNECTION CHARGES AND METERS.
7. SEE DETAIL SHEETS FOR TYPICAL PIPE TRENCH DETAIL.
8. THE MINIMUM DEPTH OF COVER FOR UTILITIES MUST BE AS FOLLOWS UNLESS INDICATED OTHERWISE:

a. WATER: 36 INCHES

b. FIRE PROTECTION: 36 INCHES

c. ELECTRICAL AND COMMUNICATION: 36 INCHES

d. ALL OTHER UTILITIES: 36 INCHES

9. ALL UNDERGROUND UTILITIES ARE SUBJECT TO ACCEPTANCE TESTING AND INSPECTION METHODS DETAILED IN THE SPECIFICATIONS, WHICH MAY INCLUDE VIDEO CAMERA INSPECTION.
10. ANY CHANGES TO UTILITY DESIGN MUST BE APPROVED BY ENGINEER AND THE COR.
11. CONTRACTOR MUST PROVIDE A MINIMUM NOTICE OF 17 WORKING DAYS FOR ALL REQUIRED UTILITY SHUT DOWNS FOR UTILITY CONNECTIONS WITH THE COR.

SYM	DESCRIPTION	DATE	APPR

NAVFAC

COMMONWEALTH OF PENNSYLVANIA
REGISTERED PROFESSIONAL
BRANDON ROBB FOMBELLE
ENGINEER No. PE086276

RQ AKM Jordan COMPANY – A JOINT VENTURE –

Michael Baker INTERNATIONAL
100 AIRSIDE DRIVE
MOON TOWNSHIP, PA 15108 A/E INFO

APPROVED

FOR COMMANDER NAVFAC

ACTIVITY
MARINE CORPS BASE CAMP LEJEUNE

SATISFACTORY TO DATE

DES	DRW	CHK
BRF	BRF	WN

PM / DM: TOWLER / ROOT
BRANCH HEAD:
DESIGN DIRECTOR: R.L.Stephens, Jr.
FIRE PROTECTION: DPS

DEPARTMENT OF THE NAVY
NAVAL FACILITIES ENGINEERING SYSTEMS COMMAND
ATLANTIC DESIGN AND CONSTRUCTION

NAVAL FACILITIES ENGINEERING SYSTEMS COMMAND ATLANTIC
NORFOLK, VA

JACKSONVILLE, NC

MCB CAMP LEJEUNE
P1527 LOGCOM CSP WAREHOUSE

CIVIL GENERAL NOTES

SCALE: AS NOTED
EPROJECT NO.: 1639600
CONSTR. CONTR. NO. N40085-20-C-0059
NAVFAC DRAWING NO. 14111019
SHEET 16 OF 447

C-001

P1527 FINAL SUBMISSION - 11/18/2021

PLOTTED: 11/11/2021 8:40:45 PM

FILE NAME: \\mcnpae1d1\VOL2_PROJECTS\180780-HF Package 3\05_Deliverables\Drawings\05 C_Civil\Sheet Files\P1527\175970_P1527F - C001.dwg

WATER UTILITY NOTES:

1. ALL WATERLINE AND ASSOCIATED DEVICES WORK MUST BE COORDINATED WITH THE UTILITY OWNER.
2. THRUST BLOCKS OR JOINT RESTRAINTS ARE REQUIRED AT ALL TEES, BENDS, OR ELBOWS OF PRESSURIZED PIPING IN ACCORDANCE WITH THE DRAWINGS, SPECIFICATIONS, AND MANUFACTURER'S RECOMMENDATIONS. SEE DETAIL SHEETS FOR TYPICAL THRUST BLOCK DETAIL.
3. WATER LINES MUST BE INSTALLED A MINIMUM OF 3.00 FEET BEHIND THE EDGE OF PAVEMENT OR FACE OF CURB UNLESS INDICATED OTHERWISE. SEE SPECIFICATIONS FOR ADDITIONAL CLEARANCE REQUIREMENTS FOR WATER PIPING.
4. FIRE HYDRANTS MUST BE INSTALLED A MINIMUM OF 3.00 FEET AND A MAXIMUM OF 6.00 FEET FROM EDGE OF PAVEMENT OR FACE OF CURB AND A MINIMUM OF 1.00 FEET FROM EDGE OF SIDEWALK UNLESS INDICATED OTHERWISE. A RADIUS OF 3.00 FEET AROUND HYDRANT MUST BE KEPT CLEAR FOR FIRE DEPARTMENT ACCESS. AREA BETWEEN CURB AND HYDRANTS MUST BE KEPT CLEAR OF OBSTRUCTIONS.
5. COORDINATE THE INSTALLATION, TESTING, AND INSPECTION OF ALL DOMESTIC WATER AND FIRE WATER SYSTEMS WITH THE ASSOCIATED UTILITY COMPANIES AND AGENCIES. SEE SPECIFICATIONS FOR ADDITIONAL REQUIREMENTS ON WATER UTILITY TESTING AND INSPECTION.

SANITARY UTILITY NOTES:

1. ALL SANITARY SEWER LINE AND ASSOCIATED DEVICES WORK MUST BE COORDINATED WITH THE UTILITY OWNER.
2. ALL SANITARY SEWER BUILDING CONNECTIONS ARE TO BE MADE USING 6.00 INCH LINES UNLESS INDICATED OTHERWISE.
3. ALL SANITARY LINES ARE TO BE LAID AT A UNIFORM SLOPE FROM THE BUILDING CONNECTIONS TO THE CONNECTING SEWER AND BETWEEN UTILITY STRUCTURES.
4. SEWER LINES MUST BE INSTALLED A MINIMUM OF 10.00 FEET HORIZONTALLY FROM ADJACENT WATER LINES UNLESS INDICATED OTHERWISE. SEE SPECIFICATIONS FOR ADDITIONAL CLEARANCE REQUIREMENTS FOR SANITARY PIPING.
5. SEWER LINES MUST BE INSTALLED BELOW WATER LINES WITH A MINIMUM VERTICAL SEPARATION OF 18 INCHES UNLESS INDICATED OTHERWISE. WHERE SANITARY SEWER WILL BE INSTALLED ABOVE WATER LINES, IT MUST BE ENCASED. SEE DETAILS.
6. IF MANHOLES ARE INDICATED ON SANITARY LINES, A 2.00 INCH DROP IN ELEVATION BETWEEN THE INCOMING AND OUTGOING SEWER MUST BE PROVIDED IN EACH MANHOLE UNLESS INDICATED OTHERWISE. FOR 90°-TYPE MANHOLE ORIENTATIONS, THE MINIMUM DROP ACROSS MANHOLE CHANNELS IS 1.20 INCHES. INVERT FLOW CHANNELS MUST BE CONSTRUCTED TO PROVIDE SMOOTH AND UNIFORM SLOPE WITH GRADUAL TRANSITION SECTIONS.
7. CONTRACTOR MUST BE RESPONSIBLE FOR ANY NECESSARY BYPASSING OR TANKER TRUCKS NEEDED DURING SANITARY SEWER INSTALLATION TO ENSURE CONTINUOUS SERVICE.
8. ALL EXISTING STRUCTURES TO REMAIN THAT ARE BEING ALTERED OR ADJUSTED MUST BE INSPECTED PRIOR TO WORK. STRUCTURES MUST BE REPLACED IF THE STRUCTURE IS IN POOR CONDITION.

UTILITY STRUCTURE NOTES:

1. ALL UTILITY STRUCTURES ARE TO BE HL-93 RATED UNLESS INDICATED OTHERWISE.

a. SUBMIT UTILITY STRUCTURAL DRAWINGS, DESIGN CALCULATIONS, AND WATERPROOFING METHOD, DESIGNED BY A PROFESSIONAL ENGINEER REGISTERED IN THE STATE OF NORTH CAROLINA FOR APPROVAL.

2. IF A MANHOLE IS LOCATED IN PAVEMENT AREAS, RIM ELEVATION MUST BE FLUSH WITH FINAL GRADE. IF A MANHOLE IS LOCATED OUTSIDE OF PAVEMENT AREAS, RIM ELEVATION MUST BE 6.00" ABOVE ADJACENT FINISH GRADE.
3. COVERS AND CASTINGS OF MANHOLES AND STRUCTURES MUST BE STAMPED PER THE APPROPRIATE UTILITY TYPE OR PER THE LOCAL STANDARDS.
4. COVERS AND CASTINGS MUST BE TAMPER-PROOF FOR STRUCTURES LOCATED IN PEDESTRIAN AREAS, EASEMENT AREAS, AND AREAS WITH SPECIAL SECURITY RESTRICTIONS.
5. ANY LIFT LOOPS FOR UTILITY STRUCTURES MUST BE GROUTED FLUSH AFTER INSTALLATION.
6. PIPE MAY EXTEND 2 INCHES MAXIMUM BEYOND INTERIOR MANHOLE WALL.

MANHOLE FRAME ADJUSTMENT NOTES:

1. AREA REQUIRING MANHOLE ADJUSTMENT MUST BE SAWCUT 12.00" MINIMUM AROUND MANHOLE FRAME.
2. MANHOLE COVER AND FRAME MUST BE RAISED TO FINISH GRADE BY INSTALLING PRECAST MANHOLE ADJUSTMENT RINGS AND LEVELING MORTAR.
3. GRADE ADJUSTMENT AREA MUST BE BACKFILLED WITH EARLY STRENGTH PCC.

BEST MANAGEMENT PRACTICES:

1. CONSTRUCTION ACTIVITY POLLUTION PREVENTION IS REQUIRED FOR THIS PROJECT. PREVENTION OF POLLUTION RESULTING FROM CONSTRUCTION ACTIVITIES MUST BE ACCOMPLISHED BY CONTROLLING SOIL EROSION, WATERWAY SEDIMENTATION, AND AIRBORNE DUST GENERATION. ENSURE THAT NO SEDIMENT RESULTING FROM CONSTRUCTION ACTIVITIES INFRINGES ONTO ADJACENT PROPERTIES. COORDINATE EROSION AND SEDIMENT CONTROL WITH OTHER CONSTRUCTION ENTITIES PERFORMING WORK ON ADJACENT PROPERTIES.
2. SOIL EROSION AND SEDIMENT CONTROLS ARE MEASURES USED TO REDUCE THE AMOUNT OF SOIL PARTICLES THAT ARE CARRIED OFF AN AREA AND DEPOSITED INTO A DRAINAGE COLLECTION SYSTEM OR INTO A BODY OF WATER. THE CONTRACTOR MUST BE RESPONSIBLE FOR ENSURING THAT EROSION AND SEDIMENTATION ARE CONTROLLED TO THE EXTENT PRACTICABLE. ALL APPLICABLE SOIL EROSION AND SEDIMENT CONTROL MEASURES MUST BE IMPLEMENTED AND MAINTAINED THROUGHOUT THE DURATION OF CONSTRUCTION ACTIVITIES. PRIOR TO INITIATING CONSTRUCTION IN AN AREA, ALL TEMPORARY EROSION AND SEDIMENT CONTROL PRACTICES MUST BE IN PLACE. UPON PROJECT COMPLETION ALL TEMPORARY SOIL EROSION AND SEDIMENT CONTROL MEASURES MUST BE REMOVED.
3. TEMPORARY EROSION CONTROL MUST BE THE CONTRACTOR'S RESPONSIBILITY, WHO MUST UTILIZE APPROPRIATE BEST MANAGEMENT PRACTICES (BMPS). THOSE BMPS MUST CONSIST OF FILTER SOCK OR OTHER MEANS TO CONTROL EROSION AS NEEDED. PROVIDE AND FOLLOW THE EROSION AND SWPPP PLANS AS NEEDED.
4. PLACE FILTER SOCK AS SHOWN PRIOR TO BEGINNING WORK. THE DEVICES MUST BE PLACED DOWN-SLOPE OF DISTURBED AREAS WHERE SHEET EROSION WOULD OCCUR. FILTER SOCK MUST BE CLEANED AND REPAIRED WHEN SEDIMENT BUILDUP REACHES ONE-THIRD OF FILTER SOCK HEIGHT. AFTER SIGNIFICANT RUNOFF EVENTS, THE CONTRACTOR MUST INSPECT ALL EROSION CONTROL STRUCTURES FOR SILT BUILD-UP THAT INTERFERES WITH THE PERFORMANCE OF THE EROSION CONTROL STRUCTURE AND REPAIR OR REPLACE THOSE STRUCTURES, AS NECESSARY.
5. ALL STORM DRAIN INLETS MUST BE PROTECTED BY APPROPRIATE BMPS DURING CONSTRUCTION, UNTIL ALL SOURCES WITH POTENTIAL FOR DISCHARGE TO THE INLETS HAVE BEEN STABILIZED.
6. ALL EXISTING DRAIN INLETS MUST HAVE INLET PROTECTION INSTALLED IN ACCORDANCE WITH THE EROSION AND SEDIMENT CONTROL DETAILS. EROSION PROTECTION MAY BE REMOVED WHEN VEGETATION IS ESTABLISHED.
7. SEE DETAIL SHEETS FOR ADDITIONAL DETAILS AND NOTES PERTAINING TO EROSION AND SEDIMENT CONTROL.

PETROLEUM PRODUCTS:

1. ALL ON-SITE VEHICLES MUST BE MONITORED FOR PETROLEUM LEAKS AND MUST RECEIVE PROPER PREVENTATIVE MAINTENANCE TO REDUCE THE CHANCE OF LEAKAGE. PETROLEUM PRODUCTS MUST BE STORED IN TIGHTLY-SEALED CONTAINERS THAT ARE CLEARLY LABELED. ALL SPILLS MUST BE CLEANED UP IMMEDIATELY AFTER DISCOVERY. WASTE OIL AND OTHER PETROLEUM PRODUCTS MUST NOT BE DISCHARGED ONTO THE GROUND OR INTO WATER BODIES. PETROLEUM PRODUCTS USED ON-SITE MUST BE APPLIED ACCORDING TO THE MANUFACTURER RECOMMENDATIONS.

UTILITY CONTACT INFORMATION:

SANITARY SEWER:
MCB CAMP LEJEUNE
CONTACT: PUBLIC WORK, UTILITY BRANCH
PRIMARY: 910-451-7190 EXT 223
ALTERNATE: 910-451-7190 EXT 222

WATER:
MCB CAMP LEJEUNE
CONTACT: WATER FOREMAN
PRIMARY: 910-450-9970
ALTERNATE: 910-451-7190 EXT 222

ELECTRIC:
MCB CAMP LEJEUNE
CONTACT: STEVE DAIGLE
(910) 451-9439
OR CONTACT: PUBLIC WORKS DIVISION, DESIGN BRANCH
(910) 451-2213

NATURAL GAS:
DUKE ENERGY/PIEDMONT NATURAL GAS
CONTACT: MICHAEL LILLY
252-808-7292
MICHAEL.LILLY@DUKE-ENERGY.COM

TELECOM:
MCB CAMP LEJEUNE
BASE TELEPHONE G6 POC STEVE DAIGLEAT
910-451-9439

PROJECT INFORMATION	
RIVER BASIN	WHITE OAK
TOTAL DISTURBED AREA	10.5 ACRES
TOTAL COASTAL WETLANDS AREA	0 ACRES
TOTAL SURFACE WATER AREA	0 ACRES
TOTAL PROJECT AREA	10.5 ACRES
PROJECT PERCENT OF IMPERVIOUS AREA	58.88%
BASIN INFORMATION	DRAINAGE AREAS 1-4
RECEIVING STREAM NAME	COGDELS CREEK
STREAM CLASS	SC: NSW
STREAM INDEX NUMBER	19-23

APPR | DATE | SYM | DESCRIPTION

NAVFAC

COMMONWEALTH OF PENNSYLVANIA
REGISTERED PROFESSIONAL
BRANDON ROBB FOMBELLE
ENGINEER No. PE086276

RQ Jordan COMPANY – A JOINT VENTURE –

Michael Baker INTERNATIONAL
100 AIRSIDE DRIVE
MOON TOWNSHIP, PA 15108
A/E INFO

APPROVED
FOR COMMANDER NAVFAC
ACTIVITY
MARINE CORPS BASE CAMP LEJEUNE
SATISFACTORY TO DATE
DES BRF | DRW BRF | CHK WN
PM / DM TOWLER / ROOT
BRANCH HEAD
DESIGN DIRECTOR R.L.Stephens, Jr.
FIRE PROTECTION DPS

DEPARTMENT OF THE NAVY
NAVAL FACILITIES ENGINEERING SYSTEMS COMMAND ATLANTIC
ATLANTIC DESIGN AND CONSTRUCTION
NAVAL FACILITIES ENGINEERING SYSTEMS COMMAND ATLANTIC
NORFOLK, VA.
JACKSONVILLE, NC
MCB CAMP LEJEUNE
P1527 LOGCOM CSP WAREHOUSE
CIVIL GENERAL NOTES

SCALE: AS NOTED
EPROJECT NO.: 1639600
CONSTR. CONTR. NO. N40085-20-C-0059
NAVFAC DRAWING NO. 14111020
SHEET 17 OF 447

C-002

P1527 FINAL SUBMISSION - 11/18/2021

PLOTTED: 11/17/2021 8:40:47 PM
FILE NAME: \\mocrpa1st1\VOL2_PROJECTS\16078\1-HF Package 3\05_Deliverables\Drawings\05 C_Civil\Sheet Files\P1527\175970_P1527F - C001.dwg

ACCESS AND STAGING

1. ACCESS AND HAUL ROUTES FOR ALL CONTRACTOR PERSONNEL, VEHICLES, EQUIPMENT, AND DELIVERIES ARE SUBJECT TO THE APPROVAL OF THE COR. IT MUST BE THE CONTRACTOR'S RESPONSIBILITY TO COORDINATE OFF-SITE HAUL ROUTES WITH THE APPROPRIATE OWNER WHO HAS JURISDICTION OVER THE AFFECTED ROUTE. ACCESS ROUTES AND HAUL ROUTES ARE SUBJECT TO CHANGE AT THE DIRECTION OF THE COR AND MAY CHANGE BASED ON OPERATIONAL REQUIREMENTS OF THE BASE.
2. CONTRACTOR MUST COORDINATE ACTIVITIES AND MAINTAIN ALL ACCESS AND HAUL ROUTES IN A MANNER THAT ALLOWS UNOBSTRUCTED EMERGENCY ACCESS TO ALL PROJECT AREAS AND EXISTING ROADWAYS AT ALL TIMES WITHOUT DELAY TO EMERGENCY AND SECURITY VEHICLE RESPONSE TIME.
3. IF ANY EMERGENCY ROUTES REQUIRE CLOSURE DUE TO CONSTRUCTION ACTIVITIES, CONTRACTOR MUST NOTIFY THE COR, POLICE, LOCAL FIRE AUTHORITY, AND ALL OTHER EMERGENCY SERVICES OF THE CLOSURE.
4. CONTRACTOR MUST MAINTAIN ACCESS AND HAUL ROUTES TO BE FREE FROM DEBRIS CAUSED FROM CONSTRUCTION ACTIVITIES ON A DAILY BASIS.
5. CONTRACTOR MUST RESTRICT ALL OPERATIONS TO AREAS WITHIN THE CONSTRUCTION LIMITS UNLESS COORDINATED OTHERWISE WITH THE COR.
6. THE CONTRACTOR IS RESPONSIBLE FOR TEMPORARY CONSTRUCTION FENCING FOR THE DURATION OF THE PROJECT. CONTRACTOR MUST COORDINATE REQUIRED RELOCATION OF FENCE DURING CONSTRUCTION WITH CONTRACTING OFFICER.
7. CONTRACTOR IS RESPONSIBLE FOR ESTABLISHING A STAGING AND STOCKPILE AREA FOR MATERIALS AND EQUIPMENT. LOCATION OF STAGING MUST BE AS ILLUSTRATED ON THIS DRAWING AND IS SUBJECT TO THE APPROVAL OF THE COR. CONTRACTOR MAY SUBMIT ALTERNATIVES TO THE STAGING AREA LOCATIONS AS SHOWN. CONTRACTOR'S STAGING AREA IS SUBJECT TO CHANGE AT THE DIRECTION OF THE COR AND MAY CHANGE BASED ON OPERATIONAL REQUIREMENTS OF THE BASE.
8. WHEN NOT ENGAGED IN CONSTRUCTION ACTIVITIES, CONTRACTOR'S EQUIPMENT AND VEHICLES MUST BE PARKED IN THE STAGING AREA.
9. PROVIDE AND INSTALL AT THE CONSTRUCTION ENTRANCE A PROFESSIONALLY PAINTED SIGN, MEETING COR APPROVAL, TO DIRECT MATERIAL SUPPLIERS, EMPLOYEES, AND DELIVERIES TO THE CONSTRUCTION SITE. THE SIGN MUST READ "CONSTRUCTION VEHICLES ONLY - NO VENDORS ALLOWED."
10. PROVIDE A MINIMUM NOTICE OF 48 HOURS TO THE COR REGARDING CONSTRUCTION DELIVERIES PRIOR TO THOSE DELIVERIES. DELIVERIES MUST BE SCHEDULED MONDAY-FRIDAY, 8:00 AM TO 3:00 PM.
11. ALL CONTRACTOR VEHICLES AND PERSONNEL ARE SUBJECT TO SEARCH BY SECURITY WHEN ENTERING THE BASE AND MAY EXPERIENCE DELAYS. ALL PERSONNEL MUST HAVE A CURRENT AND VALID PHOTO IDENTIFICATION PER BASE SECURITY REQUIREMENTS, AND ALL VEHICLES MUST HAVE CURRENT AND VALID REGISTRATION AND INSURANCE.
12. ALL CONTRACTOR VEHICLES AND PERSONNEL MUST BE RESPONSIBLE FOR COORDINATING WITH THE COR IN OBTAINING PROPER SECURITY CLEARANCE AND BADGING PRIOR TO ENTERING SECURE AREAS. THE COE MUST PROVIDE COORDINATION WITH THE BASE SECURITY OFFICE.
13. ACCESS POINTS, HAUL ROUTES, STAGING AREA, AND ANY OTHER AREAS DISTURBED BY THE CONTRACTOR MUST BE RESTORED TO THEIR ORIGINAL CONDITION OR BETTER TO THE SATISFACTION OF THE COR.
14. CONTRACTOR TO NOTIFY PWD, DESIGN BRANCH (TALIA.BARRACO@USMC.MIL) AND EMD, COMPLIANCE BRANCH (MICHAEL.C.TAYLOR5@USMC.MIL) 48-HR PRIOR TO LAND DISTURBING ACTIVITIES.

COORDINATION AND COMMUNICATION

1. APPOINT A PRIMARY CONSTRUCTION SUPERINTENDENT, SUBJECT TO THE APPROVAL OF THE COR, WHO MUST BE PRESENT ON THE CONSTRUCTION SITE AT ALL TIMES DURING WORKING HOURS AND ACCESSIBLE AT ALL TIMES WHILE WORK IS IN PROGRESS. THE PRIMARY CONSTRUCTION SUPERINTENDENT MUST BE DESIGNATED THE RESPONSIBLE CONTRACTOR'S REPRESENTATIVE WHO MUST BE AVAILABLE ON A 24-HOUR BASIS. WHEN THE CONTRACTOR'S PRIMARY CONSTRUCTION REPRESENTATIVE IS NOT AVAILABLE ON THE CONSTRUCTION SITE, AN ALTERNATE REPRESENTATIVE MUST BE PROVIDED. CONTRACTOR MUST PROVIDE NAMES AND CONTACT INFORMATION OF REPRESENTATIVES TO THE COR PRIOR TO THE START OF CONSTRUCTION ACTIVITIES.
2. CONTRACTOR MUST BE RESPONSIBLE FOR MAINTAINING CONSTANT COORDINATION BETWEEN ANY SUBCONTRACTORS AND THE COR. ALL CONSTRUCTION ACTIVITIES PLANNED BY THE CONTRACTOR MUST BE REVIEWED AND APPROVED BY THE COR.
3. THE FOLLOWING CONTACT INFORMATION IS PROVIDED FOR CONTRACTOR'S USE IN CASE OF AN EMERGENCY:
   a. EMERGENCY 911
   b. OWNER AS DIRECTED AT PRE-CONSTRUCTION MEETING
   c. OTHER CONTACTS AS DIRECTED AT PRE-CONSTRUCTION MEETING

TRAFFIC CONTROL

1. PRIOR TO CONSTRUCTION, CONTRACTOR MUST CORDON OFF THE CONSTRUCTION WORK AREA AND ASSOCIATED ROADWAYS BY USING BARRICADES/TEMPORARY FENCING AS APPROVED BY THE COR AND BASE AIR OPS.
2. ALL CONSTRUCTION EQUIPMENT AND VEHICLES MUST BE MARKED WITH COMPANY DESIGNS, INSIGNIAS, OR OTHER MARKINGS, WHICH ARE CLEARLY VISIBLE. CONTRACTOR MUST PROVIDE EACH VEHICLE WITH A FLAG ATTACHED TO THE VEHICLE WHICH SHOULD BE AT LEAST 3 FEET SQUARE HAVING INTERNATIONAL ORANGE AND WHITE CHECKERED PATTERN SO THAT THE FLAG IS EASILY VISIBLE.
3. CONSTRUCTION EQUIPMENT MUST HAVE AUTOMATIC SIGNALING DEVICES TO SOUND AN ALARM WHEN MOVING IN REVERSE.
4. ONLY RUBBER-TIRE VEHICLES WILL BE ALLOWED ON EXISTING PAVEMENT-TO-REMAIN.
5. NO PEDESTRIAN TRAFFIC MUST BE ALLOWED INSIDE THE CONSTRUCTION LIMITS.
6. PROVIDE A MINIMUM NOTICE OF 21 WORKING DAYS TO BASE AND THE COR FOR ROAD CLOSURE PRIOR TO THE ROAD REQUIRING CLOSURE.
7. PRIOR TO THE REMOVAL OF BARRICADES AND TRAFFIC CONTROL DEVICES, THE CONTRACTOR MUST REQUEST THE COR TO SCHEDULE AN INSPECTION. NO ROADWAY MUST BE RE-OPENED UNTIL THE COR HAS COMPLETED INSPECTION AND APPROVED THE RE-OPENING OF ACTIVE AREAS.
8. CONTRACTOR MUST ATTEND ANY SPONSOR-MANDATED VEHICLE OPERATOR OR FOREIGN OBJECT DEBRIS/DAMAGE (FOD) CONTROL TRAINING COURSE.
9. ANY DAMAGE TO ROADS AND PAVEMENTS-TO-REMAIN DUE TO CONSTRUCTION EQUIPMENT OR TRAFFIC MUST BE REPAIRED TO RESTORE THE ROADS AND PAVEMENTS TO THEIR ORIGINAL CONDITION TO THE SATISFACTION OF THE COR.

EXCAVATION AND TRENCHES

1. COMPLY WITH THE MOST CURRENT EDITION OF OSHA REGULATIONS AND THE STATE OF NORTH CAROLINA LAWS CONCERNING EXCAVATION.
2. CONTRACTOR MUST BE RESPONSIBLE FOR ENSURING THAT ALL EXCAVATION, TRENCHING, AND SHORING ARE PERFORMED IN A MANNER THAT COMPLIES WITH LOCAL REGULATIONS AND OCCUPATIONAL SAFETY AND HEALTH ADMINISTRATION (OSHA) REGULATIONS FOR CONSTRUCTION.
3. OPEN TRENCHES AND EXCAVATIONS AT THE CONSTRUCTION SITE MUST BE PROMINENTLY MARKED WITH ORANGE BARRICADES WITH FLASHING RED LIGHTS ACCEPTABLE TO THE COR.
4. PROVIDE A MINIMUM NOTICE OF 48 HOURS TO THE COR AND ASSOCIATED UTILITY COMPANIES AND AGENCIES BEFORE PROCEEDING WITH ANY EXCAVATION.
5. CONTRACTOR MUST HAVE A PROCESSED AND APPROVED WORK CLEARANCE REQUEST PRIOR TO ANY EXCAVATION.
6. DEWATERING OF UTILITY TRENCHES AND OTHER EXCAVATIONS MAY BE REQUIRED.
7. OPEN ONLY THOSE TRENCHES FOR WHICH MATERIAL IS ON-HAND AND READY FOR PLACING THEREIN. AS SOON AS POSSIBLE AFTER THE MATERIAL HAS BEEN PLACED AND WORK APPROVED, BACKFILL AND COMPACT TRENCHES AS SPECIFIED.

OTHER SAFETY REQUIREMENTS

1. MAINTAIN SAFETY PRACTICES THAT CONFORM TO OCCUPATIONAL SAFETY AND HEALTH ADMINISTRATION (OSHA) REGULATIONS, AND EM385-1-1 SAFETY AND HEALTH REQUIREMENTS MANUAL, LATEST EDITION..
2. IT IS THE RESPONSIBILITY OF THE CONTRACTOR TO OBTAIN AND PAY FOR ALL APPLICABLE PERMITS, FEES AND LICENSES FOR CONSTRUCTION AND EQUIPMENT.
3. PERFORM ON-SITE INSPECTIONS THROUGHOUT THE PROJECT AND REMEDY ANY SAFETY CONCERNS IMMEDIATELY.
4. THERE MUST BE NO PERMANENT WASTE SITES ON BASE PROPERTY. ANY TEMPORARY WASTE AREA MUST BE APPROVED BY THE COR AND MUST BE KEPT IN AN ORDERLY CONDITION. REMOVAL OF WASTE THAT IS NOT PROPERLY MAINTAINED IS SUBJECT TO THE DIRECTION OF THE COR.
5. COORDINATE THE RELOCATION OF ANY GOVERNMENT-OWNED EQUIPMENT WITH THE COR.
6. CONTRACTOR IS RESPONSIBLE FOR COORDINATING ALL REQUIREMENTS WITH STATE AND LOCAL AUTHORITIES AND SUBMITTING DOCUMENTS FOR PERMITTING FOR EROSION, SEDIMENT CONTROL, AND STORMWATER POLLUTION PREVENTION.
7. EROSION CONTROL DEVICES MUST BE USED FOR THE ACCESS AND HAUL ROUTES, STAGING AREA, AND ANY MATERIAL STOCKPILES WHEN NECESSARY TO CONTROL EROSION AND STORM WATER RUNOFF. SEE DRAWING EROSION AND SEDIMENT CONTROL PLAN AND DETAIL SHEETS FOR REQUIREMENTS.
8. STOCKPILED MATERIAL MUST BE CONSTRAINED IN A MANNER TO PREVENT MOVEMENT RESULTING FROM WIND CONDITIONS.
9. MAKE NECESSARY PROVISIONS TO LIMIT DUST CAUSED BY CONSTRUCTION ACTIVITIES TO A LIMIT ACCEPTABLE TO BASE OPERATIONS. CONTROL BLOWING DUST ON THE PROJECT SITE FROM ANY HAUL ROUTE OR WORK AREA REGARDLESS OF SOURCE.
10. WILDLIFE ATTRACTANTS, SUCH AS TRASH AND FOOD SCRAPS, FROM CONSTRUCTION PERSONNEL AND ACTIVITIES MUST BE REMOVED FROM THE PROJECT LIMITS.
11. GASOLINE, DIESEL FUEL, OIL, AND HAZARDOUS WASTE RESULTING FROM CONTRACTOR'S OPERATIONS OR ACTIVITIES MUST BE PROPERLY DISPOSED OF IN ACCORDANCE WITH THE SPECIFICATIONS AND LOCAL REGULATORY REQUIREMENTS AND PROPERLY REMOVED FROM THE PROJECT PROPERTY. IF HAZARDOUS MATERIALS ARE ENCOUNTERED OR UNCOVERED DURING CONSTRUCTION ACTIVITIES, THE CONTRACTOR MUST IMMEDIATELY NOTIFY THE COR.
12. IF CONSTRUCTION REQUIRES THE DISRUPTION OR DISCONNECTION OF ANY WATER LINES OR FIRE HYDRANTS ON PROJECT PROPERTY OR ADJOINING PROPERTY, PROVIDE A MINIMUM ADVANCE NOTICE OF THREE WORKING DAYS TO THE LOCAL FIRE AUTHORITY AND ALL OTHER EMERGENCY SERVICES.
13. FAILURE TO COMPLY WITH BASE OPERATIONS AND THE COR SAFETY REQUIREMENTS MUST RESULT IN THE SUSPENSION OF CONSTRUCTION ACTIVITIES UNTIL ALL SAFETY CONCERNS ARE ADDRESSED BY THE CONTRACTOR TO THE SATISFACTION OF THE COR.
14. ANY WORKERS AND EQUIPMENT NOT IN COMPLIANCE WITH SAFETY PLAN OR BASE OPERATIONS MUST IMMEDIATELY BE REMOVED FROM THE WORK AREA AND MUST NOT BE PERMITTED TO RETURN THROUGHOUT THE REMAINDER OF THE PROJECT.

APPR	DATE	DESCRIPTION	SYM

NAVFAC

COMMONWEALTH OF PENNSYLVANIA
REGISTERED PROFESSIONAL
BRANDON ROBB FOMBELLE
ENGINEER No. PE086276

RQ Jordan COMPANY – A JOINT VENTURE –

Michael Baker INTERNATIONAL
100 AIRSIDE DRIVE
MOON TOWNSHIP, PA 15108 A/E INFO

APPROVED

FOR COMMANDER NAVFAC

ACTIVITY
MARINE CORPS BASE CAMP LEJEUNE

SATISFACTORY TO DATE

DES	BRF	DRW	BRF	CHK	WN

PM / DM TOWLER / ROOT
BRANCH HEAD
DESIGN DIRECTOR R.L.Stephens, Jr.
FIRE PROTECTION DPS

DEPARTMENT OF THE NAVY
NAVAL FACILITIES ENGINEERING SYSTEMS COMMAND
ATLANTIC DESIGN AND CONSTRUCTION
NAVAL FACILITIES ENGINEERING SYSTEMS COMMAND ATLANTIC
NORFOLK, VA.
MCB CAMP LEJEUNE
JACKSONVILLE, NC
P1527 LOGCOM CSP WAREHOUSE

ACCESS AND SAFETY NOTES

SCALE: AS NOTED
EPROJECT NO.: 1639600
CONSTR. CONTR. NO. N40085-20-C-0059
NAVFAC DRAWING NO. 14111021
SHEET 18 OF 447

C-003

P1527 FINAL SUBMISSION - 11/18/2021

PLOTTED: 11/11/2021 6:40:48 PM

FILE NAME: \\mcnpsd1\VOL2_PROJECTS\180769 HF Package 3\05_Deliverables\Drawings\05 C_Civil\Sheet Files\P1527(175970)_P1527F - C001.dwg

EXISTING LEGEND

SYMBOL	DESCRPTION
26	EXISTING MAJOR CONTOUR
29	EXISTING MINOR CONTOUR
	EXISTING STORM SEWER
	EXISTING STORM SEWER INLET / CATCH BASIN
Gx Gx Gx	EXISTING GAS LINE
GV	EXISTING GAS VALVE
	EXISTING GAS TANK
E E E	EXISTING OVERHEAD ELECTRIC LINE
Eux	EXISTING UNDERGROUND ELECTRIC LINE
	EXISTING LIGHT POLE
	EXISTING UTILITY POLE
Cux	EXISTING UNDERGROUND TELECOM LINE
FOux FOux	EXISTING UNDERGROUND FIBER OPTIC LINE
catv	EXISTING TELECOM JUNCTION BOX
C	EXISTING COMMUNICATION MANHOLE
Wx Wx Wx	EXISTING WATERLINE
WV	EXISTING WATER VALVE
FH	EXISTING HYDRANT
SSx SSx	EXISTING SANITARY SEWER
S	EXISTING SANITARY SEWER MANHOLE
STux STux	EXISTING UNDERGROUND STEAMLINE
	EXISTING UNKNOWN UNDERGROUND UTILITY
MW	EXISTING MONITORING WELL
X X X	EXISTING FENCE
	EXISTING EDGE OF PAVEMENT
	EXISTING BUILDING LINE
	EXISTING CONCRETE SIDEWALK/ PAVEMENT
bol	EXISTING BOLLARD / POST
	EXISTING TREE

LEGEND

SYMBOL	DESCRPTION
25	MAJOR CONTOUR
24	MINOR CONTOUR
	STORM SEWER
	STORM SEWER CATCH BASIN
G	GAS LINE
GV	GAS VALVE
Eu	UNDERGROUND ELECTRICAL LINE
E	OVERHEAD ELECTRICAL LINE
	UTILITY POLE
Cu	UNDERGROUND TELECOM LINE
	4'x4'x4' PRECAST CONCRETE COMMUNICATION VAULT
	2'x3' CONCRETE POLYMER HANDHOLE
W	WATERLINE
	WATERLINE VALVE
FW FW	FIRE WATERLINE
	FIRE WATERLINE VALVE
	FIRE HYDRANT
CHWS	CHILLED WATER SUPPLY
CHWR	CHILLED WATER RETURN
SS	PROPOSED SANITARY SEWER
S	PROPOSED SANITARY MANHOLE
	PROPOSED EDGE OF PAVEMENT
	PROPOSED DETECTABLE WARNING SURFACE
	BUILDING LINE
	SIGN
33' ATFP	33' AT/FP UNOBSTRUCTED SPACE SETBACK
82' ATFP	82' AT/FP UNOBSTRUCTED SPACE SETBACK
LOD	LIMIT OF DISTURBANCE
	CONCRETE SIDEWALK PAVEMENT
	LIGHT DUTY ASPHALT PAVEMENT (PARKING STALLS)
	HEAVY DUTY ASPHALT PAVEMENT (ACCESS DRIVES)
	CONCRETE DOUBLE DUMPSTER PAD
	5' WIDE INORGANIC ROCK COBBLE MULCH STRIP
	EROSION CONTROL BLANKET

E&S LEGEND

SYMBOL	DESCRPTION
SF	SILT FENCE
	ROCK CONSTRUCTION ENTRANCE

PROPOSED LEGEND

ABBREVIATION	DESCRPTION
@	AT
ABC	AGGREGATE BASE COURSE
AC	ACRE
ADA	AMERICANS WITH DISABILITIES ACT
AGGR	AGGREGATE
ARS	AIR RESERVE STATION
ATFP	ANTI-TERRORISM/FORCE PROTECTION
BC	BACK OF CURB
BCE	BASE CIVIL ENGINEERING
B/L	BUILDING LINE
BH	BOREHOLE
BLDG	BUILDING
BM	BENCHMARK
BOT	BOTTOM
BRL	BUILDING RESTRICTION LINE
BS	BOTTOM OF STEPS
CB	CATCH BASIN
C.C.	CENTER-TO-CENTER
C-C	CENTER-TO-CENTER
CMU	CONCRETE MASONRY UNIT
COE	CORPS OF ENGINEERS
CONC	CONCRETE
CONT	CONTINUOUS
CGI	CURB/GUTTER INLET
CO	CLEAN OUT
COM	COMMUNICATION
COR	CONTRACTING OFFICER'S REPRESENTATIVE
CL	CENTERLINE
DEPT	DEPARTMENT
DI	DUCTILE IRON
	DROP INLET
Ø	DIAMETER
DIA	DIAMETER
DOT	DEPARTMENT OF TRANSPORTATION
DS	DOWNSPOUT
E	EASTING
ECP	ENTRY CONTROL POINT
ELEC	ELECTRICAL
EL/ELEV	ELEVATION
EU	ELECTRIC UTILITY
FDC	FIRE DEPARTMENT CONNECTION
FES	FLARED END SECTION
FFE	FINISH FLOOR ELEVATION
FH	FIRE HYDRANT
FL	FLOW LINE
FT	FOOT
FW	FIREWATER
GI	GRATED INLET
HDPE	HIGH DENSITY POLYETHYLENE
HQ	HEADQUARTERS
HW	HEADWALL
MAX	MAXIMUM
MCAS	MARINE CORPS AIR STATION
MH	MANHOLE
MIN	MINIMUM
MUTCD	MANUAL ON UNIFORM TRAFFIC CONTROL DEVICES
MW	MONITORING WELL
N	NORTHING
NC	NORTH CAROLINA
NFPA	NATIONAL FIRE PROTECTION ASSOCIATION
NO	NUMBER
NPW	NON-POTABLE WATER
NTS	NOT TO SCALE
OC	ON CENTER
OD	OUTSIDE DIAMETER
OSHA	OCCUPATIONAL SAFETY & HEALTH ADMINISTRATION
PCC	PORTLAND CEMENT CONCRETE
PE	POLYETHYLENE
PI	POINT OF INTERSECTION
PVC	POLYVINYL CHLORIDE
R	RADIUS
RCP	REINFORCED CONCRETE PIPE
REQ'D	REQUIRED
RFDC	REMOTE FIRE DEPARTMENT CONNECTION
SCH	SCHEDULE
SS	SANITARY SEWER
SDI	STORM DRAIN INLET
SDMH	STORM DRAIN MANHOLE
ST, SD	STORM SEWER, STORM DRAIN, STREET
SWPPP	STORM WATER POLLUTION PREVENTION PLAN
TC	TOP OF CURB
TG	TOP OF GRADE
TP	TOP OF PAVEMENT
TS	TOP OF STEPS
TELE	TELEPHONE
TYP	TYPICAL
USAF	UNITED STATES AIR FORCE
VOL	VOLUME
WM	WATER METER
WV	WATER VALVE
WWF	WELDED WIRE FABRIC

APPR	DATE	SYM	DESCRIPTION

NAVFAC

COMMONWEALTH OF PENNSYLVANIA
REGISTERED PROFESSIONAL
BRANDON ROBB FOMBELLE
ENGINEER No. PE086276

RQ Jordan COMPANY – A JOINT VENTURE –

Michael Baker INTERNATIONAL
100 AIRSIDE DRIVE
MOON TOWNSHIP, PA 15108
A/E INFO

APPROVED
FOR COMMANDER NAVFAC

ACTIVITY
MARINE CORPS BASE CAMP LEJEUNE

SATISFACTORY TO DATE

DES	DRW	CHK
BRF	BRF	WN

PM / DM: TOWLER / ROOT
BRANCH HEAD
DESIGN DIRECTOR: R.L.Stephens, Jr.
FIRE PROTECTION: DPS

DEPARTMENT OF THE NAVY
NAVAL FACILITIES ENGINEERING SYSTEMS COMMAND ATLANTIC
ATLANTIC DESIGN AND CONSTRUCTION
NAVAL FACILITIES ENGINEERING SYSTEMS COMMAND ATLANTIC
NORFOLK, VA.
JACKSONVILLE, NC
MCB CAMP LEJEUNE
P1527 LOGCOM CSP WAREHOUSE

CIVIL LEGEND & ABBREVIATIONS

SCALE: AS NOTED
EPROJECT NO.: 1639600
CONSTR. CONTR. NO. N40085-20-C-0059
NAVFAC DRAWING NO. 14111022
SHEET 19 OF 447

C-004

P1527 FINAL SUBMISSION - 11/18/2021

PLOTTED: 11/11/2021 8:41:13 PM

FILE NAME: \\mocnpa1st1\VOL2_PROJECTS\180793\0 HF Package 3\05_Deliverables\Drawings\05 C_Civil\Sheet Files\P1527\175970_P1527F - C004.dwg

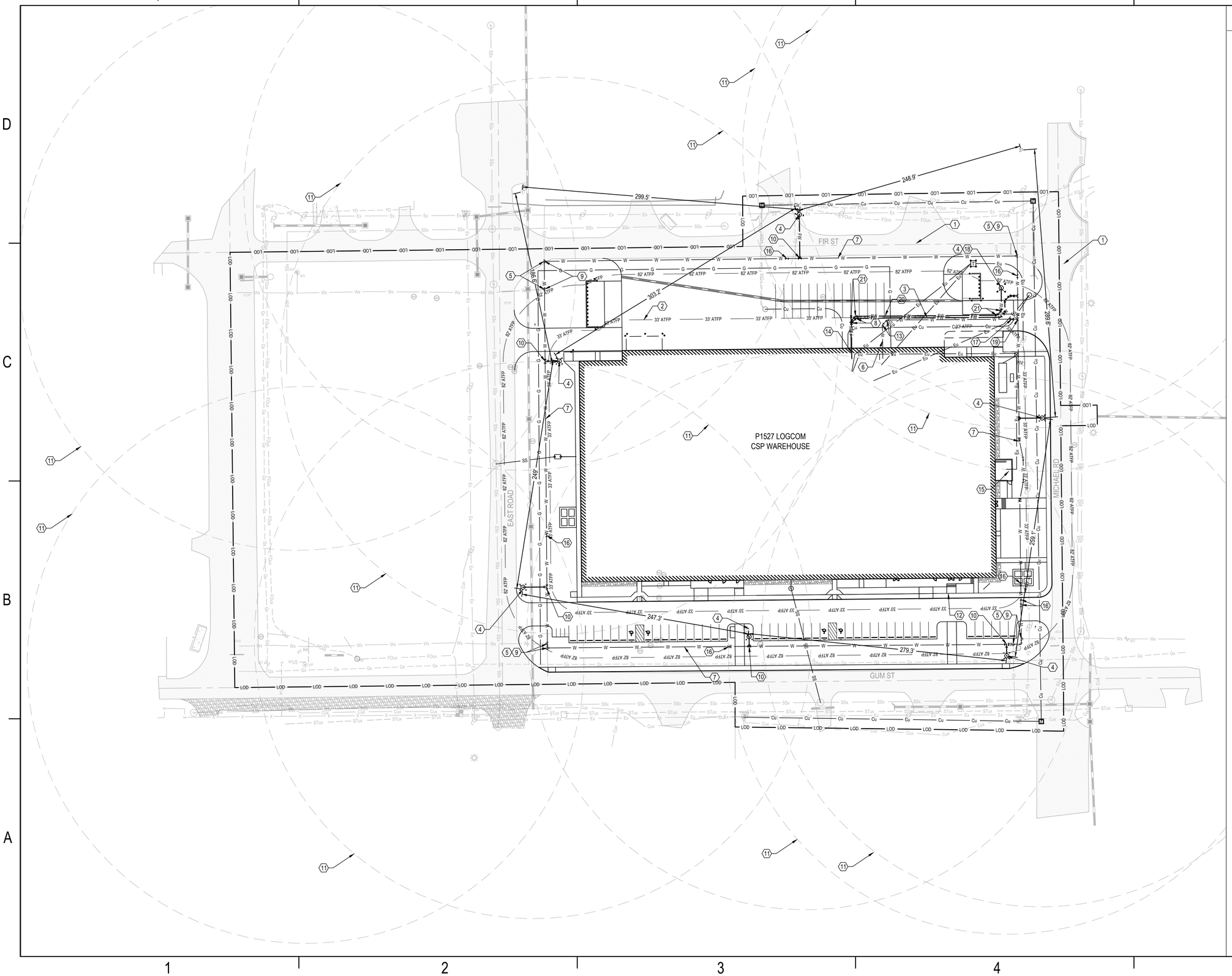

KEYED NOTES

NOT ALL KEYED NOTES MAY APPEAR ON SHEET

1. FIRE DEPARTMENT ACCESS
2. 33' AT/FP UNOBSTRUCTED SPACE SETBACK
3. 8" FIRE PROTECTION WATERLINE
4. FIRE HYDRANT DRY BARREL ASSEMBLY W/ 6" FEED LINE AND FOUR BOLLARDS (TYP) (C4/CU501)
5. CONNECT TO EXISTING 8" WATER MAIN
6. 3" DOMESTIC WATERLINE
7. 10" WATERLINE
8. 8" - 45° PIPE ELBOW WITH THRUST BLOCK (A1/CU501)
9. 10" x 8" x 10" TEE WITH CONCRETE ANCHOR (A1/CU501)
10. 10" x 10" x 6" TEE WITH CONCRETE ANCHOR (A1/CU501) AND 6" GATE VALVE
11. ALL PARTS OF FACILITY EXTERIOR ARE WITHIN 350' OF A HYDRANT
12. CHILLED WATER LINE (SEE MECHANICAL PLANS)
13. 3" - 45° PIPE ELBOW WITH THRUST BLOCK (A1/CU501)
14. FIRE WATER SERVICE ENTRANCE
15. CHILLER PAD
16. 10" - 45° PIPE ELBOW WITH THRUST BLOCK (A1/CU501)
17. POST INDICATOR VALVE (A4/CU501)
18. FIRE DEPARTMENT CONNECTION (B2/CU501)
19. 10"x10"x3" TEE WITH CONCRETE ANCHOR (A1/CU501) AND 3" GATE VALVE
20. 6" FIRE DEPARTMENT CONNECTION LINE
21. 6" - 45° PIPE ELBOW WITH THRUST BLOCK (A1/CU501)

SYM	DESCRIPTION	DATE	APPR

NAVFAC

COMMONWEALTH OF PENNSYLVANIA
REGISTERED PROFESSIONAL
BRANDON ROBB FOMBELLE
ENGINEER No. PE086276

RQ W.M. Jordan COMPANY - A JOINT VENTURE -

Michael Baker INTERNATIONAL
100 AIRSIDE DRIVE
MOON TOWNSHIP, PA 15108
A/E INFO

APPROVED

FOR COMMANDER NAVFAC

ACTIVITY
MARINE CORPS BASE
CAMP LEJEUNE

SATISFACTORY TO DATE

DES BRF	DRW BRF	CHK WN
PM / DM	TOWLER / ROOT	
BRANCH HEAD		
DESIGN DIRECTOR	R.L.Stephens, Jr.	
FIRE PROTECTION	DPS	

DEPARTMENT OF THE NAVY
NAVAL FACILITIES ENGINEERING SYSTEMS COMMAND
ATLANTIC DESIGN AND CONSTRUCTION
NAVAL FACILITIES ENGINEERING SYSTEMS COMMAND ATLANTIC
NORFOLK, VA
MCB CAMP LEJEUNE
JACKSONVILLE, NC

P1527 LOGCOM CSP WAREHOUSE

SITE CODE COMPLIANCE PLAN

SCALE:	AS NOTED
EPROJECT NO.:	1639600
CONSTR. CONTR. NO.	N40085-20-C-0059
NAVFAC DRAWING NO.	
SHEET	OF 447

G-101

P1527 FINAL SUBMISSION - 11/18/2021

PLOTTED: 11/11/2021 8:42:00 PM

FILE NAME: \\moonpa1d1.bkr.mbakercorp.com\VOL2_PROJECTS\180780 HF Package 3\05_Deliverables\Drawings\05 C_Civil\Sheet Files\P1527\175970_P1527F - C005.dwg

EXISTING STORM SEWER STRUCTURE SCHEDULE

001 DRAIN INLET
RIM:24.88'
INV. 12" = 21.15' ; RCP

002 DRAIN INLET
RIM:23.30'
INV. 12" = 21.10' ; RCP

003 DRAIN INLET
RIM:25.03'
INV. 18" = 22.83' ; RCP

004 DRAIN INLET
RIM:23.59'
INV. 18" = 21.32' ; RCP

005 DRAIN INLET
RIM:23.47'
INV. 18" = 21.85' ; RCP

006 DRAIN INLET
RIM:23.44'
INV. 18" = 20.70(W) ; RCP
INV. 18" = 20.77(S) ; RCP

007 DRAIN INLET
RIM:23.76'
INV. 18" = 20.99(E) ; RCP
INV. 18" = 20.95(N,PLUGGED) ; RCP

008 DRAIN INLET
RIM:26.85'
INV. 18" = 24.66'(S) ; RCP
INV. 18" = 24.58'(N) ; RCP

009 DRAIN INLET
RIM:26.74'
INV.18"=25.05(E); RCP
INV. 18" = 25.06(W); RCP

010 DRAIN INLET
RIM:27.65'
INV. 18"=25.49(N); RCP
INV.18"=25.57(E);RCP
INV.18"=25.40(W);RCP

011 DRAIN INLET
RIM:21.66'
INV. 18" = 19.38' ; RCP

012 PIPE END
INV. 18" = 21.20' ; RCP

013 PIPE END
INV. 18" = 21.86' ; RCP

014 PIPE END
INV. 18" = 24.37' ; RCP

015 PIPE END
INV. 12" = 25.17' ; RCP

016 PIPE END
INV. 12" = 25.48' ; RCP

017 PIPE END
INV. 18" = 22.60' ; RCP

018 PIPE END
INV. 18" = 22.80' ; RCP

019 PIPE END
INV. 18" = 23.06' ; RCP

020 PIPE END
INV. 18" = 23.32' ; RCP

021 PIPE END
INV. 18" = 23.09' ; RCP

022 PIPE END
INV. 18" = 22.71' ; RCP

023 PIPE END
INV. 18" = 22.50' ; RCP

024 PIPE END
INV. 18" = 21.97' ; RCP

025 PIPE END
INV. 18" = 21.00' ; RCP

026 PIPE END
INV. 15" = 24.56' ; RCP

027 PIPE END
INV. 15" = 24.97' ; RCP

028 PIPE END
INV. 18" = 24.73' ; RCP

029 PIPE END
INV. 18" = 24.58' ; RCP

030 PIPE END
INV. 18" = 26.22' ; RCP

031 PIPE END
INV. 24" = 10.67' ; RCP

032 PIPE END
INV. 24" = 10.18' ; RCP

033 PIPE END
INV. 18" = 14.53' ; RCP

034 PIPE END
INV. 18" = 14.67' ; RCP

035 CONCRETE HEADWALL
INV. 18" = 22.09' ; RCP

STM 4.01 CONCRETE HEADWALL
RIM 22.14'
INV. 36"
OUT 18.62 SE

STM 4.02
INV.36":12.80'; RCP

STM 5.01
RIM:23.05'
INV.18":20.56'(E)
INV.18":20.52'(W)
INV.18":20.45'(N)

STM 5.02
RIM:23.16'
INV.18":20.82'(E)
INV.18":20.98(S)

STM 5.03
RIM:24.33'
INV.18":22.04'

STM 5.04
RIM:24.86'
INV.18":22.47'

STM 5.05
RIM:25.16'
INV.18":23.03'

STM 5.06
RIM:25.96'
INV.18":23.57'

EXISTING SANITARY SEWER STRUCTURE SCHEDULE

EX. SAN. MH. 2683
RIM = 27.32
INV. = 22.72

EX. SAN. MH.1033
RIM = 25.66
INV. = 19.54

EX. SAN. MH. 2088
RIM = 23.79
INV. = 14.05 (N)
INV. = 13.59 (E)
INV. = 18.07 (S)
INV. = 13.57 (W)

EX. SAN. MH.1276
RIM = 24.07
INV. = 12.50

EX. SAN. MH. 2923
RIM = 25.25
INV. = 12.32

EX. SAN. MH. 2649
RIM = 27.52
INV. = 11.64

EX. SAN. MH. 2656
RIM = 27.58
INV. = 20.08 (N)
INV. = 11.73 (E)
INV. = 11.78 (S)
INV. = 11.71 (W)

EX. SAN. MH. 1488
RIM = 28.31
INV. = 13.03

EX. SAN. MH. 1489
RIM = 27.78
INV. = 13.87

EX. SAN. MH. 6201
RIM = 27.26
INV. = 14.03

EX. SAN. MH. 6200
RIM = 24.43
INV. = 14.05

EX. SAN. MH. 6199
RIM = 24.26
INV. = 13.86

EX. SAN. MH. 2062
RIM = 23.59
INV. = 13.99

APPR	DATE	DESCRIPTION	SYM

NAVFAC

COMMONWEALTH OF PENNSYLVANIA
REGISTERED PROFESSIONAL
BRANDON ROBB FOMBELLE
ENGINEER No. PE086276

RQ AKRM Jordan COMPANY
– A JOINT VENTURE –

Michael Baker INTERNATIONAL
100 AIRSIDE DRIVE
MOON TOWNSHIP, PA 15108 A/E INFO

APPROVED
FOR COMMANDER NAVFAC

ACTIVITY
MARINE CORPS BASE
CAMP LEJEUNE

SATISFACTORY TO DATE

DES	DRW	CHK
BRF	BRF	WN

PM / DM TOWLER / ROOT
BRANCH HEAD
DESIGN DIRECTOR R.L.Stephens, Jr.
FIRE PROTECTION DPS

DEPARTMENT OF THE NAVY
NAVAL FACILITIES ENGINEERING SYSTEMS COMMAND
ATLANTIC DESIGN AND CONSTRUCTION
NAVAL FACILITIES ENGINEERING SYSTEMS COMMAND ATLANTIC
NORFOLK, VA.
MCB CAMP LEJEUNE
JACKSONVILLE, NC
P1527 LOGCOM CSP WAREHOUSE

EXISTING STRUCTURE SCHEDULES

SCALE: AS NOTED
EPROJECT NO.: 1639600
CONSTR. CONTR. NO. N40085-20-C-0059
NAVFAC DRAWING NO. 14111023
SHEET 20 OF 447

V-001

P1527 FINAL SUBMISSION - 11/18/2021

PLOTTED: 11/11/2021 8:42:49 PM
FILE NAME: \\mocrpa1st1.bkr.mbakercorp.com\VOL2_PROJECTS\165780 HF Package 3\05_DeliverablesDrawings\05 C_Civil\Sheet Files\P1527\175970_P1527F - I-V001.dwg

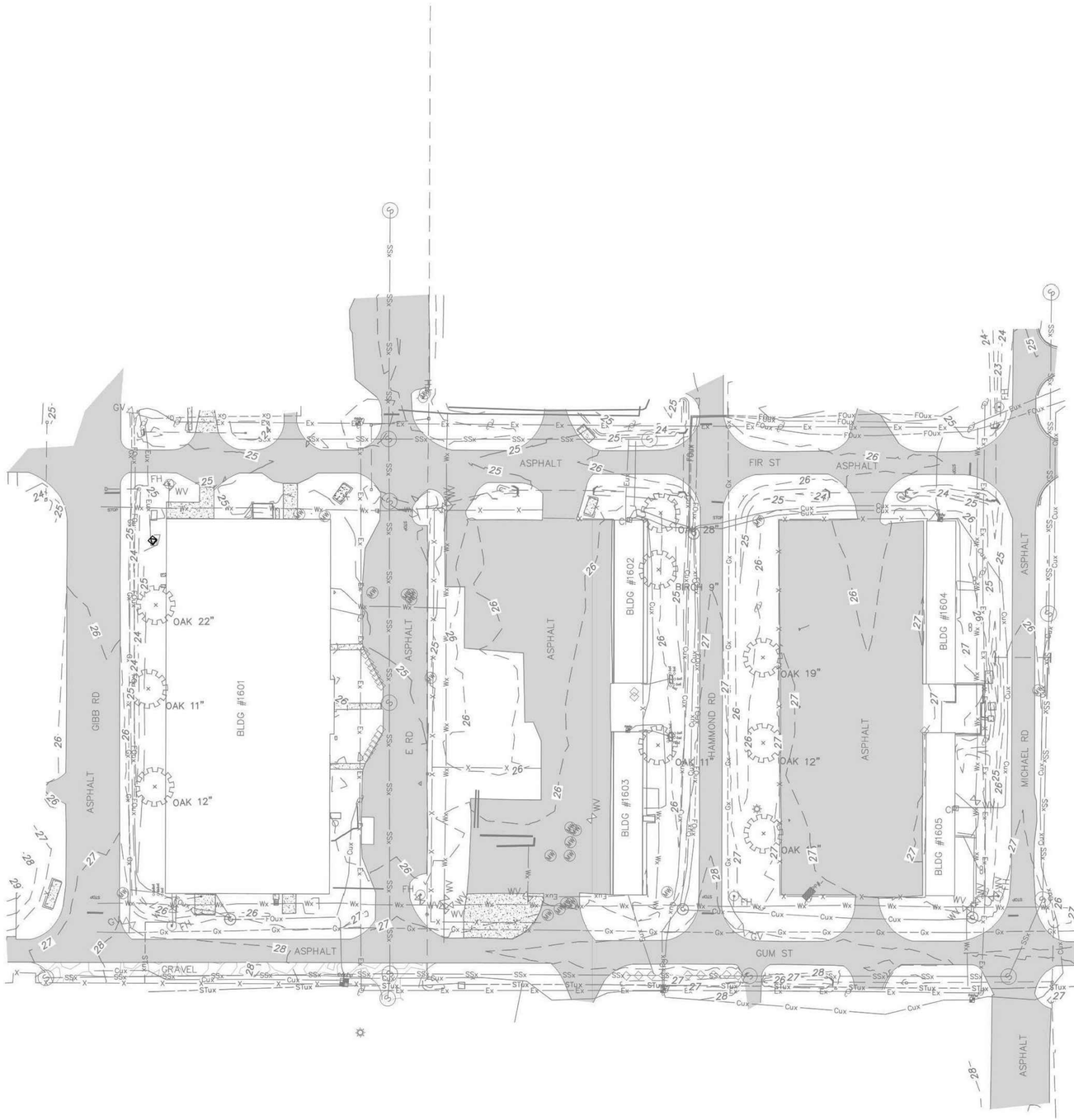

EXISTING CONDITIONS NOTES

1. THIS TOPOGRAPHIC SURVEY IS BASED ON A FIELD SURVEY PERFORMED BY SEPI ENGINEERING & CONSTRUCTION COMPLETED ON FEBRUARY 8, 2021.

2. HORIZONTAL CONTROL (NAD83\2011) AND VERTICAL CONTROL (NAVD88) ESTABLISHED BY GPS OBSERVATIONS AND COMPUTED USING NORTH CAROLINA GEODETIC SOCIETY VIRTUAL REFERENCE STATION SERVICE (VRS) WITH A COMBINED SCALE FACTOR OF 0.99992694. BASE MONUMENT PW-28 WAS USED AS PRIMARY CONTROL. SEE SHEETS VF101 THROUGH VF102 FOR CONTROL COORDINATES.

3. NORTH ARROW IS GRID NORTH AND ALL DISTANCES ARE GROUND DISTANCES UNLESS OTHERWISE NOTED.

4. COORDINATES SHOWN ARE GRID COORDINATES.

5. LOCATIONS OF UTILITIES SHOWN ON THIS SURVEY WERE DETERMINED BY OBSERVED EVIDENCE, LOCATION OF ABOVE GROUND UTILITY APPURTENANCES, AND UTILITY MARKINGS (PAINT, ETC) PROVIDED BY SEPI ENGINEERING & CONSTRUCTION, INC. THESE MARKINGS WERE OBSERVED DURING THE COURSE OF THIS SURVEY, WERE FIELD LOCATED, ARE SHOWN FOR INFORMATIONAL PURPOSES, AND SHOULD BE FIELD VERIFIED IF CRITICAL. UNDERGROUND UTILITIES NOT SHOWN MAY EXIST. STORM SEWER & SANITARY SEWER DATA HAS BEEN COLLECTED FROM THE RIM OF THE MANHOLE WITHOUT ENTERING THE STRUCTURES. PIPE SIZES AND TYPE SHOULD BE CONSIDERED APPROXIMATE AND BE FIELD VERIFIED IF CRITICAL.

6. THE SITE IS LOCATED IN SPECIAL FLOOD HAZARD ZONES, "X", PER FEMA FIRM MAPS #37204384000J, & 37205302000J, WITH EFFECTIVE DATES NOVEMBER 03, 2005.

0 30' 60' 120'
SCALE: 1" =60'

SYM	DESCRIPTION	DATE	APPR

NAVFAC

COMMONWEALTH OF PENNSYLVANIA
REGISTERED PROFESSIONAL
BRANDON ROBB FOMBELLE
ENGINEER No. PE086276

RQ W.M. Jordan COMPANY
- A JOINT VENTURE -

Michael Baker INTERNATIONAL
100 AIRSIDE DRIVE
MOON TOWNSHIP, PA 15108
A/E INFO

APPROVED

FOR COMMANDER NAVFAC

ACTIVITY
MARINE CORPS BASE CAMP LEJEUNE

SATISFACTORY TO DATE

DES BRF	DRW BRF	CHK WN	
PM / DM	TOWLER / ROOT		
BRANCH HEAD			
DESIGN DIRECTOR	R.L.Stephens, Jr.		
FIRE PROTECTION	DPS		

DEPARTMENT OF THE NAVY
NAVAL FACILITIES ENGINEERING SYSTEMS COMMAND
ATLANTIC DESIGN AND CONSTRUCTION
NAVAL FACILITIES ENGINEERING SYSTEMS COMMAND ATLANTIC
NORFOLK, VA
MCB CAMP LEJEUNE
JACKSONVILLE, NC

P1527 LOGCOM CSP WAREHOUSE

OVERALL EXISTING CONDITIONS PLAN

SCALE:	AS NOTED
EPROJECT NO.:	1639600
CONSTR. CONTR. NO.	N40085-20-C-0059
NAVFAC DRAWING NO.	14111024
SHEET	21 OF 447

VF100

P1527 FINAL SUBMISSION - 11/18/2021

FILE NAME: \\mcorp\s1d1.bkr.mbakercorp.com\VOL2_PROJECTS\180780 HF Package 3\05_Deliverables\Drawings\05 C_Civil\Sheet Files\P1527\175970_P1527F - VF100.dwg
PLOTTED: 11/11/2021 8:43:17 PM

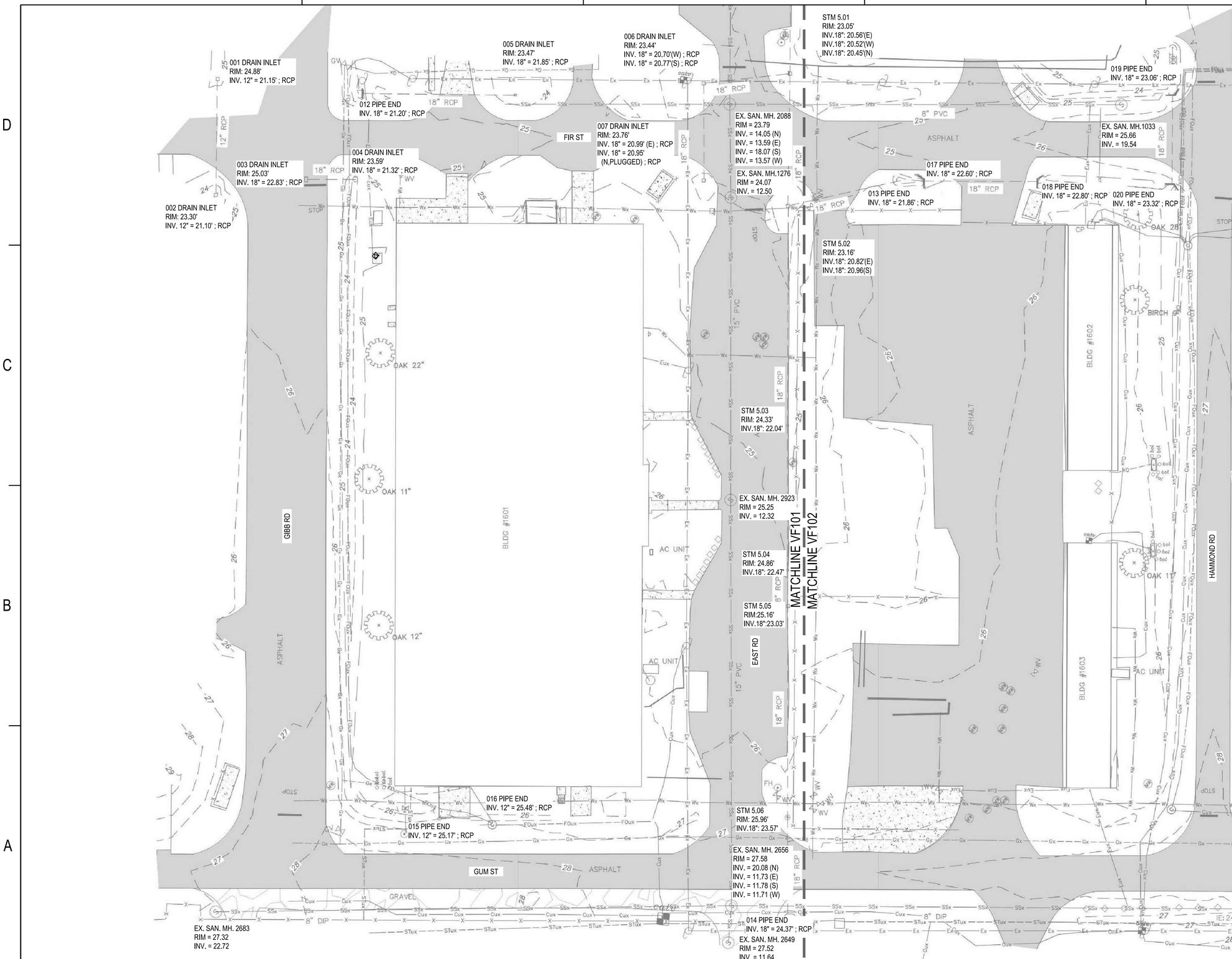

EXISTING CONDITIONS NOTES

1. SEE SHEET VF100 FOR EXISTING CONDITIONS NOTES.

KEY PLAN

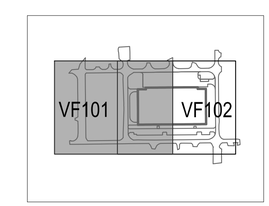

0 15' 30' 60'

SCALE: 1" = 30'

SYM	DESCRIPTION	DATE	APPR

NAVFAC

COMMONWEALTH OF PENNSYLVANIA
REGISTERED PROFESSIONAL
BRANDON ROBB FOMBELLE
ENGINEER No. PE086276

RQ W.M. Jordan COMPANY
- A JOINT VENTURE -

Michael Baker INTERNATIONAL
100 AIRSIDE DRIVE
MOON TOWNSHIP, PA 15108
A/E INFO

APPROVED

FOR COMMANDER NAVFAC

ACTIVITY
MARINE CORPS BASE
CAMP LEJEUNE

SATISFACTORY TO DATE

DES BRF	DRW BRF	CHK WN
PM / DM	TOWLER / ROOT	
BRANCH HEAD		
DESIGN DIRECTOR	R.L.Stephens, Jr.	
FIRE PROTECTION	DPS	

DEPARTMENT OF THE NAVY
NAVAL FACILITIES ENGINEERING SYSTEMS COMMAND
ATLANTIC DESIGN AND CONSTRUCTION
NAVAL FACILITIES ENGINEERING SYSTEMS COMMAND ATLANTIC
NORFOLK, VA
MCB CAMP LEJEUNE
JACKSONVILLE, NC

P1527 LOGCOM CSP WAREHOUSE

EXISTING CONDITIONS

SCALE:	AS NOTED
EPROJECT NO.:	1639600
CONSTR. CONTR. NO.	N40085-20-C-0059
NAVFAC DRAWING NO.	14111025
SHEET	22 OF 447

VF101

P1527 FINAL SUBMISSION - 11/18/2021

FILE NAME: \\mcorpa1d1.bkr.mbakercorp.com\VOL2_PROJECTS\180780 HF Package 3\05_Deliverables\Drawings\05 C_Civil\Sheet Files\P1527\175970_P1527F - VF101.dwg
PLOTTED: 11/11/2021 8:44:06 PM

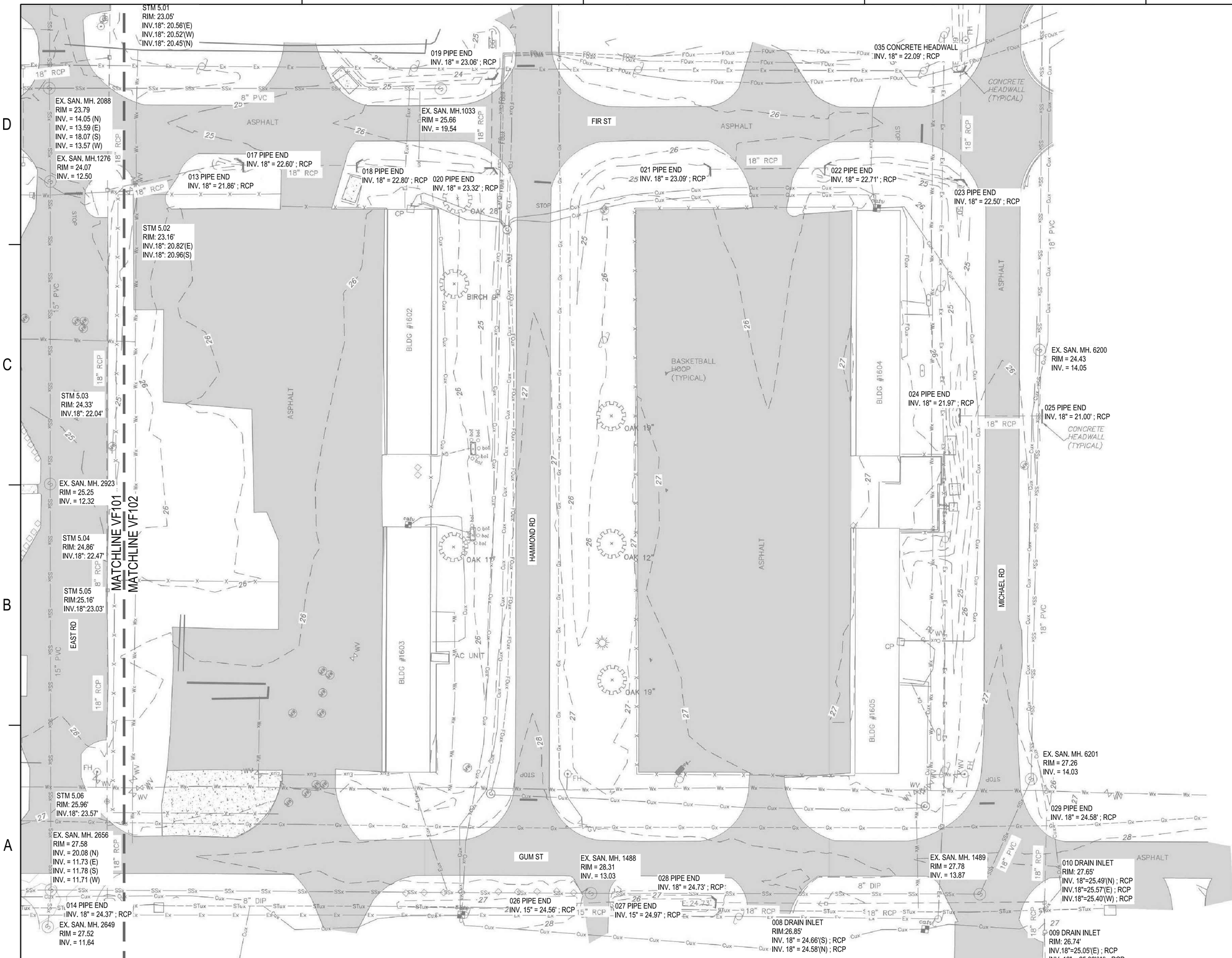

EXISTING CONDITIONS NOTES

1. SEE SHEET VF100 FOR EXISTING CONDITIONS NOTES.

KEY PLAN

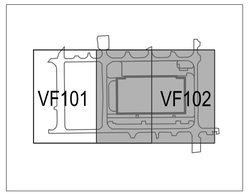

0 15' 30' 60'

SCALE: 1" = 30'

SYM	DESCRIPTION	DATE	APPR

NAVFAC

COMMONWEALTH OF PENNSYLVANIA
REGISTERED PROFESSIONAL
BRANDON ROBB FOMBELLE
ENGINEER No. PE086276

RQ W.M. Jordan COMPANY - A JOINT VENTURE -

Michael Baker INTERNATIONAL
100 AIRSIDE DRIVE
MOON TOWNSHIP, PA 15108
A/E INFO

APPROVED

FOR COMMANDER NAVFAC

ACTIVITY
MARINE CORPS BASE CAMP LEJEUNE

SATISFACTORY TO DATE

DES BRF	DRW BRF	CHK WN
PM / DM	TOWLER / ROOT	
BRANCH HEAD		
DESIGN DIRECTOR	R.L.Stephens, Jr.	
FIRE PROTECTION	DPS	

DEPARTMENT OF THE NAVY
NAVAL FACILITIES ENGINEERING SYSTEMS COMMAND
ATLANTIC DESIGN AND CONSTRUCTION
NAVAL FACILITIES ENGINEERING SYSTEMS COMMAND ATLANTIC
NORFOLK, VA
MCB CAMP LEJEUNE
JACKSONVILLE, NC
P1527 LOGCOM CSP WAREHOUSE

EXISTING CONDITIONS

SCALE: AS NOTED
EPROJECT NO.: 1639600
CONSTR. CONTR. NO. N40085-20-C-0059
NAVFAC DRAWING NO. 14111026
SHEET 23 OF 447

VF102

P1527 FINAL SUBMISSION - 11/18/2021

PLOTTED: 11/11/2021 8:44:16 PM

FILE NAME: \\mcorpa1d1.bkr.mbakercorp.com\VOL2_PROJECTS\180780 HF Package 3\05_Deliverables\Drawings\05 C_Civil\Sheet Files\P1527\175970_P1527F - VF101.dwg

BUILDING 1601 SITE TO BE DEMOLISHED AFTER COMPLETION OF NEW P1527 LOGCOM CSP WAREHOUSE AND TRANSITION OF THE EXISTING TENANTS FROM THE 1601 BUILDING TO P1527

EXISTING GROUNDWATER TREATMENT SYSTEM TO BE REMOVED BY OTHERS

KEYED NOTES

1.1 LIMIT OF DISTURBANCE
2.1 REMOVE EXISTING CURB AND GUTTER
2.2 REMOVE EXISTING FENCE
2.3 REMOVE TREE
2.4 REMOVE BASKETBALL HOOP
2.5 EX. MONITORING WELLS TO REMAIN AND BE ADJUSTED PER ENVIRONMENTAL PLANNING
2.6 SAWCUT
2.7 TREE TO REMAIN
3.1 EXISTING STORM SEWER PIPE/STRUCTURE TO BE REMOVED/ABANDONED IN PLACE
3.2 EX. STORM STRUCTURE TO REMAIN
3.3 EX. STORM PIPE TO REMAIN
3.4 EX. STORM STRUCTURE REMAIN AND BE ADJUSTED TO GRADE
3.5 EX. STORM PIPE AND STRUCTURES TO BE REMOVED AND REPLACED
4.1 REMOVE EXISTING SANITARY SEWER PIPE AND STRUCTURES
4.2 EX. SANITARY SEWER STRUCTURE TO REMAIN
4.3 EX. SANITARY SEWER PIPE TO REMAIN
5.1 REMOVE EXISTING WATERLINE PIPE AND STRUCTURE
5.2 EX. WATERLINE VALVE TO REMAIN
5.3 EX. WATERLINE PIPE TO REMAIN
5.4 HYDRANT TO REMAIN
5.5 HYDRANT TO BE REMOVED
6.1 REMOVE EXISTING ELECTRICAL STRUCTURES AND LINES
6.2 EX. ELECTRICAL STRUCTURE TO REMAIN
6.3 EX. ELECTRICAL LINES TO REMAIN
7.1 REMOVE EXISTING COMMUNICATION STRUCTURES AND LINES
7.2 EX. COMMUNICATION STRUCTURE TO REMAIN
7.3 EX. COMMUNICATION LINES TO REMAIN
8.1 REMOVE EXISTING GAS LINE
8.2 EXISTING GAS STRUCTURE TO REMAIN
8.3 EXISTING GAS LINE TO REMAIN
8.4 REMOVE EXISTING ABOVE GROUND GAS TANK
8.5 REMOVE EXISTING UNKNOWN UTILITY LINE

DEMOLITION LEGEND

NOT ALL PAVEMENT TYPES MAY APPEAR ON SHEET

- BUILDING / STRUCTURE TO BE REMOVED, INCLUDING ALL PILE CAPS ETC. TO 40 INCHES BELOW ADJACENT EXISTING GRADE PER ESRF20
- PAVEMENT REMOVAL AREA
- SIDEWALK / CONCRETE REMOVAL AREA
- REMOVE UTILITY / SITE FEATURE
- REMOVE UTILITY / SITE FEATURE

0 25' 50' 100'

SCALE: 1" = 50'

APPR	DATE	DESCRIPTION	SYM

NAVFAC

COMMONWEALTH OF PENNSYLVANIA
REGISTERED PROFESSIONAL
BRANDON ROBB FOMBELLE
ENGINEER No. PE086276

RQ Jordan COMPANY - A JOINT VENTURE -

Michael Baker INTERNATIONAL
100 AIRSIDE DRIVE
MOON TOWNSHIP, PA 15108 A/E INFO

APPROVED

FOR COMMANDER NAVFAC

ACTIVITY
MARINE CORPS BASE
CAMP LEJEUNE

SATISFACTORY TO DATE

DES	DRW	CHK
BRF	BRF	WN

PM / DM TOWLER / ROOT
BRANCH HEAD
DESIGN DIRECTOR R.L.Stephens, Jr.
FIRE PROTECTION DPS

DEPARTMENT OF THE NAVY
NAVAL FACILITIES ENGINEERING SYSTEMS COMMAND ATLANTIC
ATLANTIC DESIGN AND CONSTRUCTION
MCB CAMP LEJEUNE

NAVAL FACILITIES ENGINEERING SYSTEMS COMMAND ATLANTIC
NORFOLK, VA
JACKSONVILLE, NC
P1527 LOGCOM CSP WAREHOUSE

OVERALL DEMOLITION PLAN

SCALE: AS NOTED
EPROJECT NO.: 1639600
CONSTR. CONTR. NO. N40085-20-C-0059
NAVFAC DRAWING NO. 14111027
SHEET 24 OF 447

VD100

P1527 FINAL SUBMISSION - 11/18/2021

PLOTTED: 11/11/2021 8:44:54 PM

FILE NAME: \\moonsrs1d1\VOL2_PROJECTS\160780-HF Package 3\05_Deliverables\Drawings\05 C_Civil\Sheet Files\P1527\170970_P1527F - VD100.dwg

GENERAL NOTES

1. SEE SHEETS B-500 TO B-502 FOR INDIVIDUAL BORING LOGS

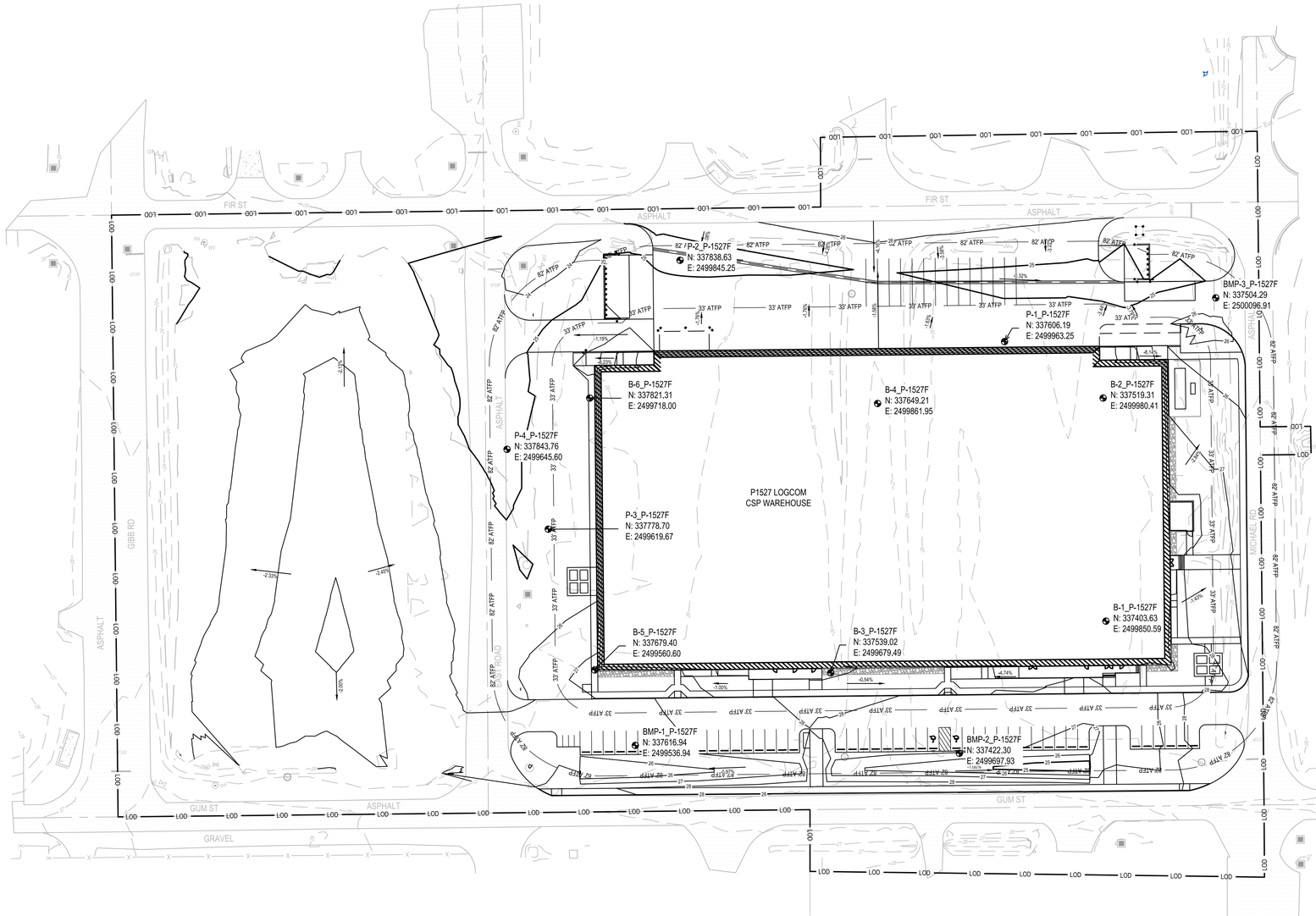

0 25' 50' 100'

SCALE: 1" = 50'

			APPR
		DATE	
		DESCRIPTION	
		SYM	

NAVFAC

COMMONWEALTH OF PENNSYLVANIA
REGISTERED PROFESSIONAL
BRANDON ROBB FOMBELLE
ENGINEER No. PE086276

RQ AWM Jordan COMPANY - A JOINT VENTURE -

Michael Baker INTERNATIONAL
100 AIRSIDE DRIVE
MOON TOWNSHIP, PA 15108
A/E INFO

APPROVED

FOR COMMANDER NAVFAC

ACTIVITY
MARINE CORPS BASE
CAMP LEJEUNE

SATISFACTORY TO DATE

DES	BRF	DRW BRF	CHK WN
PM / DM		TOWLER / ROOT	
BRANCH HEAD			
DESIGN DIRECTOR		R.L.Stephens, Jr.	
FIRE PROTECTION		DPS	

DEPARTMENT OF THE NAVY
NAVAL FACILITIES ENGINEERING SYSTEMS COMMAND
ATLANTIC DESIGN AND CONSTRUCTION

NAVAL FACILITIES ENGINEERING SYSTEMS COMMAND ATLANTIC
NORFOLK, VA.

MCB CAMP LEJEUNE
JACKSONVILLE, NC

P1527 LOGCOM CSP WAREHOUSE

BORING LOCATION PLAN

SCALE:	AS NOTED
EPROJECT NO.:	1639600
CONSTR. CONTR. NO.	N40085-20-C-0059
NAVFAC DRAWING NO.	14111028
SHEET	25 OF 447

B-100

P1527 FINAL SUBMISSION - 11/18/2021

PLOTTED: 11/17/2021 8:45:41 PM

FILE NAME: \\mocorpa1rd1\VOL2_PROJECTS\180780-HF Package 3\05_Deliverables\Drawings\05 C_Civil\Sheet Files\P1527\175970_P1527F - B100.dwg

RECORD OF SUBSURFACE EXPLORATION

GET Solutions, Inc. — Geotechnical · Environmental · Testing

Virginia Beach, 5465 Greenwich Road, Virginia Beach, VA 23462, 757-518-1703 | Williamsburg, 1592-E Penniman Road, Williamsburg, VA 23185, 757-564-6452 | Elizabeth City, 106 Capital Trace Unit E, Elizabeth City, NC 27909, 252-335-9765 | Jacksonville, 415-A Western Blvd, Jacksonville, NC 28546, 910-478-9915

BORING ID B-1_P-1527F

PROJECT NAME: Hurricane Florence Recovery MILCON Package 3_P-1527F
PROJECT NUMBER: EC20-244G
CLIENT: W.M. Jordan Company
SURFACE ELEVATION (MSL) (ft): 27
PROJECT LOCATION: Camp Lejeune, North Carolina
LOGGED BY: J. Meads
BORING COORDINATES: EAST: 2499850.586 NORTH: 337403.628
DATE STARTED: 12/30/2020
DRILLING METHOD(S): Rotary wash "mud"
DATE COMPLETED: 12/30/2020
GROUNDWATER*: INITIAL (ft) ▽: 6.5 AFTER ____ HOURS (ft) ▼: ____ CAVE-IN (ft) ▽: ___
DRILLER: GET Solutions, Inc.
*The initial groundwater readings are not intended to indicate the static groundwater level.

Elevation (ft)	Depth (ft)	STRATA DESCRIPTION	Strata Legend	Sample ID	Sample Type	Sample Recovery (in.)	Blow Counts (N-Values)	%-#200	TEST RESULTS: Plastic Limit X——X Liquid Limit; Water Content - ●; Penetration - ▨ (10 20 30 40 50 60 70)
27	0.0	2.63 Inches Asphalt		1		12	2-6-5-6 (11)		
26	0.7	Light Gray, moist, poorly graded SAND mixed with fine Gravel (AGGREGATE BASE FILL), medium dense		2		24	3-2-2-3 (4)	16	
	2.0	Tan, moist, poorly graded SAND (SP-SM) with Silt, medium dense		3		18	4-2-3-3 (5)		
	4.0	Dark Brown-Black, moist, Silty SAND (SM) with Silt and trace Organics, loose		4		20	2-2-2-2 (4)		
		Organic Content = 3.3%		5		17	2-2-2-2 (4)		
	13.0	Tan-Gray, moist to wet, poorly graded SAND (SP-SM) with Silt to Silty SAND (SM), very loose to loose		6		24	1-2-2-1 (4)		
		Light from 6 Feet		7		21	1-1-2-2 (3)	81	
		Wet from 6.5 Feet		8		17		69	
	19.5	Gray, wet, Sandy Lean CLAY (CL), very soft to soft With Silty Sand (SM) seams from 13 to 15 Feet		9		24	0-0-1-2 (1)	61	
		Gray, wet, Silty SAND (SM) with trace Clay, very loose							
	23.0	Light Gray, wet, Sandy Lean CLAY (CL) with Silty SAND (SM) seams, medium stiff		10		23	5-3-2-2 (5)	59	
	28.0	Gray, wet, poorly graded SAND (SP) to poorly graded SAND (SP-SM) with Silt, loose to dense		11		18	4-3-6-7 (9)		
				12		16	2-2-3-3 (5)		
		With Marine Shell Fragments and Cemented Sand from 38 Feet		13		18	12-15-12-16 (27)		
				14		19	15-16-18-16 (34)		
				15		19	8-7-11-11 (18)		
	53.0	Gray, wet, poorly graded SAND (SP-SM) with Silt to Silty SAND (SM) with Marine Shell Fragments and Cemented Sand, medium dense to dense		16		12	10-10-11-10 (21)		
	60.0	Boring terminated at 60 feet below existing grade.		17		19	15-15-30-27 (45)		

Sample Type(s): SPT - Standard Penetration Test; ST - Shelby Tube
Notes:

PAGE 1 OF 1

RECORD OF SUBSURFACE EXPLORATION

BORING ID B-3_P-1527F

PROJECT NAME: Hurricane Florence Recovery MILCON Package 3_P-1527F
PROJECT NUMBER: EC20-244G
CLIENT: W.M. Jordan Company
SURFACE ELEVATION (MSL) (ft): 27
PROJECT LOCATION: Camp Lejeune, North Carolina
LOGGED BY: J. Meads
BORING COORDINATES: EAST: 2499679.488 NORTH: 337539.017
DATE STARTED: 12/29/2020
DRILLING METHOD(S): Rotary wash "mud"
DATE COMPLETED: 12/29/2020
GROUNDWATER*: INITIAL (ft) ▽: 7 AFTER ____ HOURS (ft) ▼: ____ CAVE-IN (ft) ▽: ___
DRILLER: GET Solutions, Inc.
*The initial groundwater readings are not intended to indicate the static groundwater level.

Elevation (ft)	Depth (ft)	STRATA DESCRIPTION	Strata Legend	Sample ID	Sample Type	Sample Recovery (in.)	Blow Counts (N-Values)	%-#200	TEST RESULTS: Plastic Limit X——X Liquid Limit; Water Content - ●; Penetration - ▨ (10 20 30 40 50 60 70)
27	0.2	3 Inches Topsoil		1		22	5-3-4-3 (7)		
26	0.6	Gray-Tan, moist, poorly graded SAND (SP-SM) with Silt, loose		2		20	2-2-2-2 (4)		
	4.0	Dark Brown, very moist, Silty SAND (SM) with trace Organics, very loose		3		17	2-2-3-2 (5)		
		Dark Gray, very moist to wet, poorly graded SAND (SP-SM) with Silt to Silty SAND (SM), very loose to medium dense		4		24	4-5-9-9 (14)		
		Wet from 7 Feet		5		24	4-2-2-2 (4)		
		Light Tan from 9 Feet		6		24	4-6-3-3 (9)		
		Trace Clay from 10 Feet		7		24	2-1-1-1 (2)	46	
	14.0	Gray, wet, Clayey SAND (SC), very loose		8		24		16	
	15.0	Gray, wet, Silty SAND (SM), very loose						12	
	18.0	Gray, wet, poorly graded SAND (SP-SM) with Silt, loose		9		12	4-3-4-7 (7)		
	23.0	Dark Gray, wet, Clayey SAND (SC), very loose		10		17	2-2-2-3 (4)		
	28.0	Gray, wet, Silty SAND (SM) mixed with Marine Shell Fragments and Cemented Sand, medium dense to dense		11		21	26-23-25-12 (48)		
				12		15	8-8-5-5 (13)		
	38.0	Tan-Gray, wet, poorly graded SAND (SP) to poorly graded SAND (SP-SM) with Silt, very loose to medium dense		13		18	9-8-8-8 (16)		
		Reddish Tan from 43 Feet		14		16	2-1-1-1 (2)		
	48.0	Gray, wet, poorly graded SAND (SP-SM) with Silt to Silty SAND (SM) with Marine Shell Fragments and Cemented Sand, medium dense to very dense		15		19	6-6-8-5 (14)		
				16		20	13-14-9-14 (23)		
				17		22	27-35-24-12 (59)		
	65.0	Boring terminated at 65 feet below existing grade.		18		16	9-15-21-17 (36)		

Sample Type(s): SPT - Standard Penetration Test; ST - Shelby Tube
Notes:

PAGE 1 OF 1

RECORD OF SUBSURFACE EXPLORATION

BORING ID B-5_P-1527F

PROJECT NAME: Hurricane Florence Recovery MILCON Package 3_P-1527F
PROJECT NUMBER: EC20-244G
CLIENT: W.M. Jordan Company
SURFACE ELEVATION (MSL) (ft): 26
PROJECT LOCATION: Camp Lejeune, North Carolina
LOGGED BY: J. Meads
BORING COORDINATES: EAST: 2499560.601 NORTH: 337679.402
DATE STARTED: 12/29/2020
DRILLING METHOD(S): Rotary wash "mud"
DATE COMPLETED: 12/29/2020
GROUNDWATER*: INITIAL (ft) ▽: 8 AFTER ____ HOURS (ft) ▼: ____ CAVE-IN (ft) ▽: ___
DRILLER: GET Solutions, Inc.
*The initial groundwater readings are not intended to indicate the static groundwater level.

Elevation (ft)	Depth (ft)	STRATA DESCRIPTION	Strata Legend	Sample ID	Sample Type	Sample Recovery (in.)	Blow Counts (N-Values)	%-#200	TEST RESULTS: Plastic Limit X——X Liquid Limit; Water Content - ●; Penetration - ▨ (10 20 30 40 50 60 70)
25	0.2	2 Inches Deteriorated Asphalt: Intact Core Unrecoverable		1		13	7-5-5-5 (10)		
	0.7	Light Gray, moist, poorly graded SAND mixed with fine Gravel (AGGREGATE BASE FILL), loose		2		17	5-5-6-7 (11)		
		Tan-Brown, moist to very moist, poorly graded SAND (SP-SM) with Silt to Silty SAND (SM), loose to medium dense		3		22	3-6-3-3 (9)		
	7.5	Gray, very moist, Clayey SAND (SC), very loose		4		24	2-1-1-1 (2)	41	
	10.0	Gray, wet, Silty SAND (SM) with Clay, very loose		5		24	2-3-4-1 (7)		
	13.0	Gray, wet, Sandy Lean CLAY (CL), very soft		6		20	1-0-0-0 (0)	64	
		Dark Gray, wet, Silty SAND (SM) with Clay, very loose		7		22	2-1-2-2 (3)	67	
	18.0							70	
	19.5	Dark Gray, wet, poorly graded SAND (SP-SC) with Clay, very loose		8		12	1-1-1-1 (2)	9	
		Reddish Tan, wet, poorly graded SAND (SP-SM) with Silt to Silty SAND (SM), loose to very dense							
		With Marine Shell fragments and Cemented Sand from 24 Feet		9		16	5-3-6-6 (9)		
		Reddish Tan from 28 Feet		10		22	5-8-8-8 (14)		
		Gray-Tan from 33 Feet		11		17	9-7-9-4 (16)		
				12		18	7-6-7-7 (13)		
				13		20	19-18-18-18 (36)		
				14		19	9-8-8-8 (16)		
		Gray from 53 Feet		15		24	10-7-8-12 (15)		
		Mixed with Marine Shell Fragments from 58 to 58.4 Feet		16		5	50		
	65.0	Practical Refusal Encountered at 58.4 Feet with 50 blows / 5 inches Boring terminated at 65 feet below existing grade.		17		16	12-14-19-22 (33)		

Sample Type(s): SPT - Standard Penetration Test
Notes: Shelby Tube Taken from 10 to 12 Feet at approximately 5 feet East of Boring B-5_P-1527

PAGE 1 OF 1

RECORD OF SUBSURFACE EXPLORATION

BORING ID B-2_P-1527F

PROJECT NAME: Hurricane Florence Recovery MILCON Package 3_P-1527F
PROJECT NUMBER: EC20-244G
CLIENT: W.M. Jordan Company
SURFACE ELEVATION (MSL) (ft): 26
PROJECT LOCATION: Camp Lejeune, North Carolina
LOGGED BY: J. Meads
BORING COORDINATES: EAST: 2499980.412 NORTH: 337519.311
DATE STARTED: 12/30/2020
DRILLING METHOD(S): Rotary wash "mud"
DATE COMPLETED: 12/30/2020
GROUNDWATER*: INITIAL (ft) ▽: 8 AFTER ____ HOURS (ft) ▼: ____ CAVE-IN (ft) ▽: ___
DRILLER: GET Solutions, Inc.
*The initial groundwater readings are not intended to indicate the static groundwater level.

Elevation (ft)	Depth (ft)	STRATA DESCRIPTION	Strata Legend	Sample ID	Sample Type	Sample Recovery (in.)	Blow Counts (N-Values)	%-#200	TEST RESULTS: Plastic Limit X——X Liquid Limit; Water Content - ●; Penetration - ▨ (10 20 30 40 50 60 70)
25	0.2	2 Inches Asphalt; Deteriorated Asphalt: Intact Core Unrecoverable		1		10	2-3-3 (5)		
	0.6	Light Gray, moist, poorly graded SAND mixed with fine Gravel (AGGREGATE BASE FILL), loose		2		17	4-3-4-3 (7)		
	2.0	Dark Gray-Black, moist, poorly graded SAND (SP-SM) with Silt and trace Organics, loose		3		13	2-2-3-3 (5)		
		Dark Gray, moist to wet, poorly graded SAND (SP) to poorly graded SAND (SP-SM) with Silt, loose to medium dense		4		20	4-4-3-4 (8)		
	10.0	Mottled Reddish Tan-Gray from 4 Feet		5		13	5-6-7-8 (13)		
	13.0	Reddish Tan from 6 Feet		6		19	3-3-3-3 (6)		
		Mottled Reddish Tan-Gray and Wet from 8 Feet		7		17	13-12-13-12 (25)		
		Reddish Tan, wet, Silty Clayey SAND (SC-SM), loose							
		Mottled Gray-Tan, wet, poorly graded SAND (SP) to poorly graded SAND (SP-SM) with Silt, medium dense		8		18	5-8-9-7 (17)		
	23.0	With trace Clay from 18 Feet							
		Light Tan, wet, poorly graded SAND (SP-SM) with Silt to Silty SAND (SM), very loose to loose		9		22	2-2-3-4 (5)		
				10		21	1-2-2-2 (4)	9	
	33.0	Mottled Reddish Tan-Tan, wet, poorly graded SAND (SP) to poorly graded SAND (SP-SM) with Silt, very loose to loose		11		9	3-2-1-1 (3)		
		Mottled Reddish Tan-Gray from 38 Feet		12		14	2-1-1-1 (2)		
				13		11	2-2-5-8 (7)		
	48.0	Tan, wet, poorly graded SAND (SP-SM) with Silt to Silty SAND (SM), medium dense to dense		14		16	9-7-6-11 (13)		
		Light Tan and with Marine Shell Fragments and Cemented Sand from 53 Feet		15		23	10-10-9-8 (19)		
		Gray from 58 Feet		16		21	17-17-13-11 (30)		
	65.0	Gray-Tan from 63 Feet Boring terminated at 65 feet below existing grade.		17		24	10-15-21-27 (36)		

Sample Type(s): SPT - Standard Penetration Test
Notes:

PAGE 1 OF 1

RECORD OF SUBSURFACE EXPLORATION

BORING ID B-4_P-1527F

PROJECT NAME: Hurricane Florence Recovery MILCON Package 3_P-1527F
PROJECT NUMBER: EC20-244G
CLIENT: W.M. Jordan Company
SURFACE ELEVATION (MSL) (ft): 27
PROJECT LOCATION: Camp Lejeune, North Carolina
LOGGED BY: J. Meads
BORING COORDINATES: EAST: 2499861.952 NORTH: 337649.206
DATE STARTED: 12/30/2020
DRILLING METHOD(S): Rotary wash "mud"
DATE COMPLETED: 12/30/2020
GROUNDWATER*: INITIAL (ft) ▽: 9 AFTER ____ HOURS (ft) ▼: ____ CAVE-IN (ft) ▽: ___
DRILLER: GET Solutions, Inc.
*The initial groundwater readings are not intended to indicate the static groundwater level.

Elevation (ft)	Depth (ft)	STRATA DESCRIPTION	Strata Legend	Sample ID	Sample Type	Sample Recovery (in.)	Blow Counts (N-Values)	%-#200	TEST RESULTS: Plastic Limit X——X Liquid Limit; Water Content - ●; Penetration - ▨ (10 20 30 40 50 60 70)
25	0.2	2 Inches Topsoil (FILL)		1		22	7-7-4-4 (11)		
	4.0	Reddish Tan-Tan, moist, poorly graded SAND (FILL), loose to medium dense		2		22	4-4-4-3 (8)		
		Reddish Tan-Brown mixed with Tan from 2 Feet		3		12	3-4-4-3 (8)	16	
		Gray, moist to wet, poorly graded SAND (SP-SM) with Silt to Silty SAND (SM), loose to medium dense		4		24	4-4-4-5 (8)		
		Tan from 6 Feet		5		17	4-4-5-6 (9)		
		Light Gray from 8 Feet		6		24	5-6-8-14 (14)		
	13.0	Mottled Reddish Tan-Gray and Wet from 9 Feet		7		17	1-1-1-1 (2)	44	
		Reddish Tan, wet, Clayey SAND (SC), very loose Gray from 13.5 Feet							
	18.0	Gray-Brown, wet, Silty SAND (SM) with trace Clay, loose to medium dense		8		19	13-9-12-17 (21)		
	23.0	Gray, wet, Sandy Lean CLAY (CL), medium stiff		9		22	5-4-3-5 (7)		
	24.0	Gray, wet, Silty SAND (SM) with little Clay, loose							
				10		15	9-3-2-2 (5)		
	33.0	Gray, wet, poorly graded SAND (SP) to poorly graded SAND (SP-SM) with Silt, very loose to loose		11		10	5-6-4-6 (10)		
		Tan and with trace Clay from 38 Feet		12		14	1-2-2-2 (4)		
		Tan-Gray from 43 Feet		13		12	1-1-1-1 (2)		
	50.0	With Marine Shell Fragments and Cemented Sand from 48 Feet Boring terminated at 50 feet below existing grade.		14		21	10-8-13-15 (21)		

Sample Type(s): SPT - Standard Penetration Test
Notes:

PAGE 1 OF 1

RECORD OF SUBSURFACE EXPLORATION

BORING ID B-6_P-1527F

PROJECT NAME: Hurricane Florence Recovery MILCON Package 3_P-1527F
PROJECT NUMBER: EC20-244G
CLIENT: W.M. Jordan Company
SURFACE ELEVATION (MSL) (ft): 26
PROJECT LOCATION: Camp Lejeune, North Carolina
LOGGED BY: J. Meads
BORING COORDINATES: EAST: 2499718.003 NORTH: 337821.308
DATE STARTED: 12/29/2020
DRILLING METHOD(S): Rotary wash "mud"
DATE COMPLETED: 12/29/2020
GROUNDWATER*: INITIAL (ft) ▽: 10 AFTER ____ HOURS (ft) ▼: ____ CAVE-IN (ft) ▽: ___
DRILLER: GET Solutions, Inc.
*The initial groundwater readings are not intended to indicate the static groundwater level.

Elevation (ft)	Depth (ft)	STRATA DESCRIPTION	Strata Legend	Sample ID	Sample Type	Sample Recovery (in.)	Blow Counts (N-Values)	%-#200	TEST RESULTS: Plastic Limit X——X Liquid Limit; Water Content - ●; Penetration - ▨ (10 20 30 40 50 60 70)
25	0.2	2.0 Inches Asphalt		1		14	4-7-4-4 (11)	21	
	0.6	Light Gray, moist, poorly graded SAND mixed with fine Gravel (AGGREGATE BASE FILL), medium dense		2		18	4-3-3-2 (6)		
	2.0	Brown mixed with Light Tan, moist, Silty SAND (FILL), medium dense		3		12	3-2-3-3 (5)		
	6.0	Tan, moist to very moist, poorly graded SAND (SP) to poorly graded SAND (SP-SM) with Silt, very loose to loose		4		10	3-3-3-4 (6)		
		Tan, very moist to wet, poorly graded SAND (SP-SM) with Silt to Silty SAND (SM) with trace Clay, very loose to medium dense		5		16	4-5-6-6 (11)		
		Tan-Gray and Wet from 10 Feet		6		19	2-2-2-6 (4)		
		Brown from 13 Feet		7		17	6-6-6-7 (12)		
		Gray-Tan and with Clay from 18 Feet		8		18	2-4-3-5 (7)		
	23.0	Gray-Tan, wet, poorly graded SAND (SP) to poorly graded SAND (SP-SM) with Silt, very loose to medium dense		9		17	6-4-3-10 (7)		
				10		21	4-2-3-5 (3)		
		Tan from 33 Feet		11		12	7-7-7-8 (14)		
				12		14	2-1-1-2 (2)		
				13		13	1-3-2-2 (5)		
	48.0	Gray, wet, Silty SAND (SM) with Cemented Sand and Clay, medium dense Boring terminated at 50 feet below existing grade.		14		22	6-7-11-10 (18)		

Sample Type(s): SPT - Standard Penetration Test
Notes:

PAGE 1 OF 1

NAVFAC

COMMONWEALTH OF PENNSYLVANIA — REGISTERED PROFESSIONAL — BRANDON ROBB FOMBELLE — ENGINEER No. PE086276

RQ Jordan COMPANY — A JOINT VENTURE

Michael Baker INTERNATIONAL
100 AIRSIDE DRIVE, MOON TOWNSHIP, PA 15108 — A/E INFO

APPROVED

FOR COMMANDER NAVFAC

ACTIVITY: MARINE CORPS BASE CAMP LEJEUNE

SATISFACTORY TO DATE

DES	BRF	DRW	BRF	CHK	WN
PM / DM	TOWLER / ROOT				
BRANCH HEAD					
DESIGN DIRECTOR	R.L.Stephens, Jr.				
FIRE PROTECTION	DPS				

DEPARTMENT OF THE NAVY
NAVAL FACILITIES ENGINEERING SYSTEMS COMMAND
ATLANTIC DESIGN AND CONSTRUCTION
MCB CAMP LEJEUNE

NAVAL FACILITIES ENGINEERING SYSTEMS COMMAND ATLANTIC — NORFOLK, VA
JACKSONVILLE, NC
P1527 LOGCOM CSP WAREHOUSE
BORING LOGS

SCALE:	AS NOTED
EPROJECT NO.:	1639600
CONSTR. CONTR. NO.	N40085-20-C-0059
NAVFAC DRAWING NO.	14111029
SHEET	26 OF 447

B-500

P1527 FINAL SUBMISSION - 11/19/2021

PLOTTED: 11/11/2021 8:46:46 PM

FILE NAME: \\mcorps1st1\VOL2_PROJECTS\18780 HF Package 3\05_Deliverables\Drawings\05 C_Civil\Sheet Files\P1527\175970_P1527F - B500.dwg

RECORD OF SUBSURFACE EXPLORATION

GET Solutions, Inc. — Geotechnical - Environmental - Testing

Virginia Beach, 5465 Greenwich Road, Virginia Beach, VA 23462, 757-518-1703 | Williamsburg, 1592-E Penniman Road, Williamsburg, VA 23185, 757-564-6452 | Elizabeth City, 106 Capital Trace Unit E, Elizabeth City, NC 27909, 252-335-9765 | Jacksonville, 415-A Western Blvd, Jacksonville, NC 28546, 910-478-9915

BORING ID BMP-1_P-1527F

PROJECT NAME: Hurricane Florence Recovery MILCON Package 3_P-1527F
CLIENT: W.M. Jordan Company
PROJECT LOCATION: Camp Lejeune, North Carolina
BORING COORDINATES: EAST: 2499536.936 NORTH: 337616.936
DRILLING METHOD(S): Rotary wash "mud"
GROUNDWATER*: INITIAL (ft) ▽: 5 AFTER ____ HOURS (ft) ▼: 6 CAVE-IN (ft) ⊂: ____
*The initial groundwater readings are not intended to indicate the static groundwater level.
PROJECT NUMBER: EC20-244G
SURFACE ELEVATION (MSL) (ft): 27
LOGGED BY: J. Meads
DATE STARTED: 12/30/2020
DATE COMPLETED: 12/30/2020
DRILLER: GET Solutions, Inc.

Elevation (ft)	Depth (ft)	STRATA DESCRIPTION	Strata Legend	Sample ID	Sample Type	Sample Recovery (in.)	Blow Counts (N-Values)	%-#200	TEST RESULTS: Plastic Limit X——X Liquid Limit; Water Content - ●; Penetration - ▨ (10 20 30 40 50 60 70)
	0.3	3.78 Inches Asphalt							
25	2.0	Light Gray, moist, poorly graded SAND mixed with fine Gravel (AGGREGATE BASE FILL), medium dense		1		24	7-11-10-10 (21)		
		Reddish Tan, moist, Silty SAND (SM) with trace Clay, medium dense		2		12	9-9-8-7 (17)		
5		Mottled Reddish Tan-Gray, moist to wet, poorly graded SAND (SP-SM) with Silt to Silty SAND (SM), loose to medium dense		3		18	6-3-4-2 (7)	10	
20 ▽		Tan-Gray from 4 Feet; Estimated SHWT Elevation = 23 Feet (NAD83)		4		24	3-2-1-2 (3)		
	6.5	Wet from 5 Feet						68	
	8.5	Gray, wet, Sandy Lean CLAY (CL) with Silty SAND (SM) lenses, soft		5		24	4-3-2-1 (5)		
10		Gray, wet, Silty SAND (SM) with Fat CLAY (CH) lenses, very loose to loose		6		24	1-1-1-1 (2)		
15	13.0								
		Gray, wet, Clayey SAND (SC), very loose		7		24	1-1-1-2 (2)	39	
	15.0	Boring terminated at 15 feet below existing grade.							

Sample Type(s): SPT - Standard Penetration Test
Notes:

PAGE 1 OF 1

RECORD OF SUBSURFACE EXPLORATION

GET Solutions, Inc. — Geotechnical - Environmental - Testing

Virginia Beach, 5465 Greenwich Road, Virginia Beach, VA 23462, 757-518-1703 | Williamsburg, 1592-E Penniman Road, Williamsburg, VA 23185, 757-564-6452 | Elizabeth City, 106 Capital Trace Unit E, Elizabeth City, NC 27909, 252-335-9765 | Jacksonville, 415-A Western Blvd, Jacksonville, NC 28546, 910-478-9915

BORING ID BMP-3_P-1527F

PROJECT NAME: Hurricane Florence Recovery MILCON Package 3_P-1527F
CLIENT: W.M. Jordan Company
PROJECT LOCATION: Camp Lejeune, North Carolina
BORING COORDINATES: EAST: 2500096.914 NORTH: 337504.286
DRILLING METHOD(S): Rotary wash "mud"
GROUNDWATER*: INITIAL (ft) ▽: 8 AFTER ____ HOURS (ft) ▼: 6 CAVE-IN (ft) ⊂: ____
*The initial groundwater readings are not intended to indicate the static groundwater level.
PROJECT NUMBER: EC20-244G
SURFACE ELEVATION (MSL) (ft): 25.5
LOGGED BY: J. Meads
DATE STARTED: 12/30/2020
DATE COMPLETED: 12/30/2020
DRILLER: GET Solutions, Inc.

Elevation (ft)	Depth (ft)	STRATA DESCRIPTION	Strata Legend	Sample ID	Sample Type	Sample Recovery (in.)	Blow Counts (N-Values)	%-#200	TEST RESULTS: Plastic Limit X——X Liquid Limit; Water Content - ●; Penetration - ▨ (10 20 30 40 50 60 70)
25	0.4	5 Inches Topsoil (FILL)							
	2.0	Dark Brown, moist, poorly graded SAND with Silt (FILL), loose		1		20	2-5-4-3 (9)		
		Gray-Tan, moist to very moist, poorly graded SAND (SP) to poorly graded SAND (SP-SM) with Silt, very loose to loose		2		18	3-2-3-2 (5)		
5		Mottled Reddish Tan-Gray from 4 Feet; Estimated SHWT Elevation = 21.5 Feet (NAD83)		3		14	1-2-1-2 (3)		
20 ▽	6.0	Mottled Reddish Tan-Gray, very moist, Silty Clayey SAND (SC-SM), very loose		4		16	2-2-2-4 (4)	22	
	8.0	Mottled Reddish Tan-Gray, wet, poorly graded SAND (SP-SM) with Silt, medium dense		5		23	5-6-7-8 (13)		
10	10.0	Gray-Tan, wet, poorly graded SAND (SP-SM) with Silt and Fat CLAY (CH) lenses, medium dense		6		24	2-4-10-16 (14)		
	11.5	Gray, wet, poorly graded SAND (SP-SM) with Silt, medium dense							
15				7		24	9-11-14-17 (25)		
	15.0	Boring terminated at 15 feet below existing grade.							

Sample Type(s): SPT - Standard Penetration Test
Notes:

PAGE 1 OF 1

RECORD OF SUBSURFACE EXPLORATION

GET Solutions, Inc. — Geotechnical - Environmental - Testing

Virginia Beach, 5465 Greenwich Road, Virginia Beach, VA 23462, 757-518-1703 | Williamsburg, 1592-E Penniman Road, Williamsburg, VA 23185, 757-564-6452 | Elizabeth City, 106 Capital Trace Unit E, Elizabeth City, NC 27909, 252-335-9765 | Jacksonville, 415-A Western Blvd, Jacksonville, NC 28546, 910-478-9915

BORING ID P-2_P-1527F

PROJECT NAME: Hurricane Florence Recovery MILCON Package 3_P-1527F
CLIENT: W.M. Jordan Company
PROJECT LOCATION: Camp Lejeune, North Carolina
BORING COORDINATES: EAST: 2499845.253 NORTH: 337838.63
DRILLING METHOD(S): Rotary wash "mud"
GROUNDWATER*: INITIAL (ft) ▽: 9 AFTER ____ HOURS (ft) ▼: ____ CAVE-IN (ft) ⊂: ____
*The initial groundwater readings are not intended to indicate the static groundwater level.
PROJECT NUMBER: EC20-244G
SURFACE ELEVATION (MSL) (ft): 25
LOGGED BY: J. Meads
DATE STARTED: 12/31/2020
DATE COMPLETED: 12/31/2020
DRILLER: GET Solutions, Inc.

Elevation (ft)	Depth (ft)	STRATA DESCRIPTION	Strata Legend	Sample ID	Sample Type	Sample Recovery (in.)	Blow Counts (N-Values)	%-#200	TEST RESULTS: Plastic Limit X——X Liquid Limit; Water Content - ●; Penetration - ▨ (10 20 30 40 50 60 70)
	0.3	3.35 Inches Asphalt							
20	2.0	Light Gray, moist, poorly graded SAND mixed with fine Gravel (AGGREGATE BASE FILL), medium dense		1		12	8-7-5-5 (12)	18	
		Dark Gray-Black, moist, Silty SAND with trace Organics, medium dense		2		16	2-3-3-3 (6)		
5		Mottled Reddish Tan-Gray, moist to wet, poorly graded SAND (SP-SM) with Silt to Silty SAND (SM), loose to medium dense		3		15	3-2-3-2 (5)		
		Reddish Tan from 4 Feet		4		7	3-3-4-5 (7)		
15 ▽		Tan-Gray from 6 Feet							
10		Mottled Reddish Tan-Gray		5		14	9-6-8-8 (14)		
		Wet from 9 Feet							
		Reddish Tan and trace Clay from 10 Feet		6		14	6-6-8-12 (14)		
	12.0	Boring terminated at 12 feet below existing grade.							

Sample Type(s): SPT - Standard Penetration Test
Notes:

PAGE 1 OF 1

RECORD OF SUBSURFACE EXPLORATION

GET Solutions, Inc. — Geotechnical - Environmental - Testing

Virginia Beach, 5465 Greenwich Road, Virginia Beach, VA 23462, 757-518-1703 | Williamsburg, 1592-E Penniman Road, Williamsburg, VA 23185, 757-564-6452 | Elizabeth City, 106 Capital Trace Unit E, Elizabeth City, NC 27909, 252-335-9765 | Jacksonville, 415-A Western Blvd, Jacksonville, NC 28546, 910-478-9915

BORING ID BMP-2_P-1527F

PROJECT NAME: Hurricane Florence Recovery MILCON Package 3_P-1527F
CLIENT: W.M. Jordan Company
PROJECT LOCATION: Camp Lejeune, North Carolina
BORING COORDINATES: EAST: 2499697.929 NORTH: 337422.303
DRILLING METHOD(S): Rotary wash "mud"
GROUNDWATER*: INITIAL (ft) ▽: 7 AFTER ____ HOURS (ft) ▼: 5.5 CAVE-IN (ft) ⊂: ____
*The initial groundwater readings are not intended to indicate the static groundwater level.
PROJECT NUMBER: EC20-244G
SURFACE ELEVATION (MSL) (ft): 27
LOGGED BY: J. Meads
DATE STARTED: 12/30/2020
DATE COMPLETED: 12/30/2020
DRILLER: GET Solutions, Inc.

Elevation (ft)	Depth (ft)	STRATA DESCRIPTION	Strata Legend	Sample ID	Sample Type	Sample Recovery (in.)	Blow Counts (N-Values)	%-#200	TEST RESULTS: Plastic Limit X——X Liquid Limit; Water Content - ●; Penetration - ▨ (10 20 30 40 50 60 70)
	0.3	4 Inches Topsoil							
25	2.0	Dark Gray-Black, moist, poorly graded SAND with Silt and trace Organics, medium dense		1		21	5-8-7-10 (15)		
		Mottled Reddish Tan-Gray, moist to wet, poorly graded SAND (SP-SM) with Silt to Silty SAND (SM), loose to medium dense		2		20	8-6-6-5 (12)	6	
5		Light Gray from 4 Feet; Estimated SHWT Elevation = 23 Feet (NAD83)		3		20	3-3-3-4 (6)		
20 ▽		Trace Clay from 6 Feet		4		23	2-2-3-2 (5)		
	8.0	Wet from 7 Feet							
10		Light Gray, wet, poorly graded SAND (SP) to poorly graded SAND (SP-SM) with Silt, very loose		5		24	1-2-2-3 (4)		
		Trace Clay from 10 Feet		6		24	3-1-1-0 (2)		
15									
	14.5			7		24	1-1-1-2 (2)		
	15.0	Gray, wet, Clayey SAND (SC), very loose							
		Boring terminated at 15 feet below existing grade.							

Sample Type(s): SPT - Standard Penetration Test
Notes:

PAGE 1 OF 1

RECORD OF SUBSURFACE EXPLORATION

GET Solutions, Inc. — Geotechnical - Environmental - Testing

Virginia Beach, 5465 Greenwich Road, Virginia Beach, VA 23462, 757-518-1703 | Williamsburg, 1592-E Penniman Road, Williamsburg, VA 23185, 757-564-6452 | Elizabeth City, 106 Capital Trace Unit E, Elizabeth City, NC 27909, 252-335-9765 | Jacksonville, 415-A Western Blvd, Jacksonville, NC 28546, 910-478-9915

BORING ID P-1_P-1527F

PROJECT NAME: Hurricane Florence Recovery MILCON Package 3_P-1527F
CLIENT: W.M. Jordan Company
PROJECT LOCATION: Camp Lejeune, North Carolina
BORING COORDINATES: EAST: 2499963.247 NORTH: 337606.192
DRILLING METHOD(S): Rotary wash "mud"
GROUNDWATER*: INITIAL (ft) ▽: 7 AFTER ____ HOURS (ft) ▼: ____ CAVE-IN (ft) ⊂: ____
*The initial groundwater readings are not intended to indicate the static groundwater level.
PROJECT NUMBER: EC20-244G
SURFACE ELEVATION (MSL) (ft): 26
LOGGED BY: J. Meads
DATE STARTED: 12/31/2020
DATE COMPLETED: 12/31/2020
DRILLER: GET Solutions, Inc.

Elevation (ft)	Depth (ft)	STRATA DESCRIPTION	Strata Legend	Sample ID	Sample Type	Sample Recovery (in.)	Blow Counts (N-Values)	%-#200	TEST RESULTS: Plastic Limit X——X Liquid Limit; Water Content - ●; Penetration - ▨ (10 20 30 40 50 60 70)
25	0.3	2.56 Inches Asphalt							
	2.0	Gray, moist, poorly graded SAND mixed with fine Gravel (AGGREGATE BASE FILL), medium dense		1		16	5-5-7-8 (12)	20.5	
		Light Tan mixed with Brown, moist, Silty SAND with trace Clay (FILL), medium dense		2		15	4-4-3-3 (7)	30.5	
5	4.0	Dark Brown-Black, moist, Silty SAND with trace Organics, loose		3		16	3-3-3-4 (6)		
20		Organic Content = 2.5%		4		14	2-2-3-3 (5)		
		Tan-Brown, very moist to wet, poorly graded SAND (SP-SM) with Silt to Silty SAND (SM), loose to medium dense		5		20	4-4-6-5 (10)		
10		Gray-Tan from 6 Feet		6		24	8-10-13-14 (23)		
		Wet from 7 Feet							
15		Gray and trace Clay from 8 Feet							
	12.0	Boring terminated at 12 feet below existing grade.							

Sample Type(s): SPT - Standard Penetration Test
Notes:

PAGE 1 OF 1

RECORD OF SUBSURFACE EXPLORATION

GET Solutions, Inc. — Geotechnical - Environmental - Testing

Virginia Beach, 5465 Greenwich Road, Virginia Beach, VA 23462, 757-518-1703 | Williamsburg, 1592-E Penniman Road, Williamsburg, VA 23185, 757-564-6452 | Elizabeth City, 106 Capital Trace Unit E, Elizabeth City, NC 27909, 252-335-9765 | Jacksonville, 415-A Western Blvd, Jacksonville, NC 28546, 910-478-9915

BORING ID P-3_P-1527F

PROJECT NAME: Hurricane Florence Recovery MILCON Package 3_P-1527F
CLIENT: W.M. Jordan Company
PROJECT LOCATION: Camp Lejeune, North Carolina
BORING COORDINATES: EAST: 2499619.669 NORTH: 337778.701
DRILLING METHOD(S): Rotary wash "mud"
GROUNDWATER*: INITIAL (ft) ▽: 10 AFTER ____ HOURS (ft) ▼: ____ CAVE-IN (ft) ⊂: ____
*The initial groundwater readings are not intended to indicate the static groundwater level.
PROJECT NUMBER: EC20-244G
SURFACE ELEVATION (MSL) (ft): 25
LOGGED BY: J. Meads
DATE STARTED: 12/31/2020
DATE COMPLETED: 12/31/2020
DRILLER: GET Solutions, Inc.

Elevation (ft)	Depth (ft)	STRATA DESCRIPTION	Strata Legend	Sample ID	Sample Type	Sample Recovery (in.)	Blow Counts (N-Values)	%-#200	TEST RESULTS: Plastic Limit X——X Liquid Limit; Water Content - ●; Penetration - ▨ (10 20 30 40 50 60 70)
	0.3	4 Inches Topsoil (FILL)							
20	2.0	Mottled Dark Gray-Tan, moist, Silty SAND with trace Organics and trace Gravel (UNCONTROLLED FILL), loose		1		9	2-5-4-4 (9)	14.5	
	4.0	Dark Gray-Brown, moist, poorly graded SAND with Silt and trace Organics, very loose		2		14	3-2-2-2 (4)		
5		Gray, very most, Clayey SAND (SC), loose		3		16	3-3-3-3 (6)	43	
	6.0	Brown-Gray, very moist to wet, poorly graded SAND (SP-SM) with Silt to Silty SAND (SM), loose to medium dense		4		7	2-3-4-3 (7)		
15 ▽									
10		Tan and Wet from 10 Feet		5		14	5-5-9-9 (14)		
	12.0	Boring terminated at 12 feet below existing grade.		6		9	3-4-5-6 (9)		

Sample Type(s): SPT - Standard Penetration Test
Notes:

PAGE 1 OF 1

APPR | DATE | DESCRIPTION | SYM

NAVFAC

COMMONWEALTH OF PENNSYLVANIA — REGISTERED PROFESSIONAL — BRANDON ROBB FOMBELLE — ENGINEER No. PE086276

RQ Jordan COMPANY - A JOINT VENTURE -

Michael Baker INTERNATIONAL
100 AIRSIDE DRIVE, MOON TOWNSHIP, PA 15108 — A/E INFO

APPROVED

FOR COMMANDER NAVFAC

ACTIVITY: MARINE CORPS BASE CAMP LEJEUNE

SATISFACTORY TO DATE

DES	BRF	DRW	BRF	CHK	WN
PM / DM			TOWLER / ROOT		
BRANCH HEAD					
DESIGN DIRECTOR			R.L.Stephens, Jr.		
FIRE PROTECTION			DPS		

DEPARTMENT OF THE NAVY
NAVAL FACILITIES ENGINEERING SYSTEMS COMMAND
ATLANTIC DESIGN AND CONSTRUCTION
MCB CAMP LEJEUNE

NAVAL FACILITIES ENGINEERING SYSTEMS COMMAND ATLANTIC
NORFOLK, VA
JACKSONVILLE, NC
P1527 LOGCOM CSP WAREHOUSE

BORING LOGS

SCALE:	AS NOTED
EPROJECT NO.:	1639600
CONSTR. CONTR. NO.	N40085-20-C-0059
NAVFAC DRAWING NO.	14111030
SHEET	27 OF 447

B-501

P1527 FINAL SUBMISSION - 11/19/2021

PLOTTED: 11/11/2021 8:46:48 PM

FILE NAME: \\mcorps1st1\VOL2_PROJECTS\1597\00 HF Package 3\05_Deliverables\Drawings\05 C_CivilSheet Files\P1527\1757f0_P1527F - B500.dwg

RECORD OF SUBSURFACE EXPLORATION

GET Solutions, Inc.
Civil • Environmental • Testing

Virginia Beach, 5465 Greenwich Road, Virginia Beach, VA 23462, 757-518-1703
Williamsburg, 1592-E Penniman Road, Williamsburg, VA 23185, 757-564-6452
Elizabeth City, 106 Capital Trace Unit E, Elizabeth City, NC 27909, 252-335-9765
Jacksonville, 415-A Western Blvd, Jacksonville, NC 28546, 910-478-9915

BORING ID
P-4_P-1527F

PROJECT NAME: Hurricane Florence Recovery MILCON Package 3_P-1527F
CLIENT: W.M. Jordan Company
PROJECT LOCATION: Camp Lejeune, North Carolina
BORING COORDINATES: EAST: 2499645.601 NORTH: 337843.756
DRILLING METHOD(S): Rotary wash "mud"
GROUNDWATER*: INITIAL (ft) ▽: 8 AFTER ____ HOURS (ft) ▼: ____ CAVE-IN (ft) ▽: ____
The initial groundwater readings are not intended to indicate the static groundwater level.

PROJECT NUMBER: EC20-244G
SURFACE ELEVATION (MSL) (ft): 25
LOGGED BY: J. Meads
DATE STARTED: 12/31/2020
DATE COMPLETED: 12/31/2020
DRILLER: GET Solutions, Inc.

Elevation (ft)	Depth (ft)	STRATA DESCRIPTION	Strata Legend	Sample ID	Sample Type	Sample Recovery (in.)	Blow Counts (N-Value)	%-#200	TEST RESULTS: Plastic Limit X——X Liquid Limit; Water Content - ●; Penetration - ////// (10 20 30 40 50 60 70)
	0.3	3.5 Inches Asphalt							
	0.6	Light Gray, moist, poorly graded SAND (SP-SM) mixed with fine Gravel (AGGREGATE BASE FILL), loose		1		9	3-4-5-5 (9)	19.4	
		Mottled Reddish Tan-Gray, moist to wet, poorly graded SAND (SP-SM) with Silt to Silty SAND (SM), loose		2		7	3-3-4-5 (7)		
20	5	Light Tan from 2 Feet Mottled Reddish Tan-Gray from 4 Feet		3		9	3-4-5-6 (9)		
		Light Tan from 6 Feet		4		9	3-4-5-5 (9)		
		Wet from 7.5 Feet Brown-Tan from 8 Feet		5		8	3-3-3-5 (6)		
15	10	Reddish Tan from 10 Feet		6		9	4-5-4-3 (9)		
	12.0	Boring terminated at 12 feet below existing grade.							

Sample Type(s):
SPT - Standard Penetration Test

Notes:

PAGE 1 OF 1

APPR	DATE	DESCRIPTION	SYM

NAVFAC

COMMONWEALTH OF PENNSYLVANIA
REGISTERED PROFESSIONAL
BRANDON ROBB FOMBELLE
ENGINEER No. PE086276

RQ W.M. Jordan COMPANY – A JOINT VENTURE –

Michael Baker INTERNATIONAL
100 AIRSIDE DRIVE, MOON TOWNSHIP, PA 15108 A/E INFO

APPROVED
FOR COMMANDER NAVFAC

ACTIVITY
MARINE CORPS BASE CAMP LEJEUNE

SATISFACTORY TO DATE

DES	DRW	CHK
BRF	BRF	WN

PM / DM: TOWLER / ROOT
BRANCH HEAD
DESIGN DIRECTOR: R.L.Stephens, Jr.
FIRE PROTECTION: DPS

DEPARTMENT OF THE NAVY
NAVAL FACILITIES ENGINEERING SYSTEMS COMMAND ATLANTIC
ATLANTIC DESIGN AND CONSTRUCTION
NORFOLK, VA

MCB CAMP LEJEUNE
JACKSONVILLE, NC
P1527 LOGCOM CSP WAREHOUSE

BORING LOGS

SCALE: AS NOTED
EPROJECT NO.: 1639600
CONSTR. CONTR. NO. N40085-20-C-0059
NAVFAC DRAWING NO. 14111031
SHEET 28 OF 447

B-502

P1527 FINAL SUBMISSION - 11/19/2021

PLOTTED: 11/11/2021 8:48:48 PM
FILE NAME: \\mcorps1st1\VOL2_PROJECTS\180700 HF Package 3\05_Deliverables\Drawings\05 C_Civil\Sheet Files\P1527\175970_P1527F - B500.dwg

4.6 Surcharge Discussion

The Design Case for the Warehouse structure estimates a variable maximum settlement ranging from approximately 1.7 to 2.5 inches for a finished floor elevation of 30 feet (NAD83), which will fully occur over a relatively short period given the predominant immediate elastic compression. In order to limit post-construction settlements to within RFP performance requirements and decrease settlement durations associated with the proposed structure's loading, successful ground improvements by means of Surcharge are recommended.

Surcharging is a process where a temporary weight is placed on the construction area so that the subsurface soils can settle (consolidate) prior to foundation/structure construction. Surcharge is well suited for clayey or other low permeability soils that require long periods of time to compress, and for larger, deeper deposits of loose granular materials to achieve elastic compression of these soils prior to construction.

The surcharge recommendations were developed to achieve the necessary consolidation and granular compression magnitudes, within the desired construction schedule, that would result in post-construction settlements that are compliant with the project requirements. Prior to the ground improvement activities, the proposed construction area should be cleared by means of removing surficial materials as recommended in Sections 4.2 and 4.3 of this report.

4.6.1 Warehouse Surcharge Recommendations

In order to preload or surcharge the Warehouse area, it will first be necessary to prepare the Subgrade as previously described, and place Select Fill for site grading operations to an elevation approximately 3 to 4 inches above the FFE Base of Slab elevation. This is to account for the anticipated settlement that will occur under the surcharging operations.

We recommend that a minimum of six to eight (6 - 8) Settlement Platforms, as described below, should be used to monitor the progress of settlement due to the surcharge program for the proposed Warehouse. The settlement platforms should be placed directly on the subgrade following the clearing operations and prior to placement of any Select Fill. Following the installation of the settlement platforms, elevations and baseline readings must be obtained prior to the placement of any fill material. This requirement is crucial to the timely evaluation of surcharge completion. The surcharge soil should have a minimum in-place density (moist unit weight) of 120 pounds per cubic foot (pcf). It is expected that the spoils from the clearing operation (with the exception of any highly organic materials) may satisfy this requirement.

Fill placement should consist of soils meeting the Select Fill criteria described in Section 4.4 of this report. To accommodate for the estimated settlement magnitudes from the surcharge program, the Warehouse pad fill should be placed to an elevation approximately 3 to 4 inches above the base level of the design finish floor. Following the building pad fill placement, the surcharge material, meeting the density requirements mentioned in the preceding paragraph, should be placed to an elevation equivalent to 3 feet above the finished floor elevation.

Surcharge material placement should continue to an elevation of approximately 33 feet, which is approximately 3 feet above the finished Warehouse finished floor design elevation of 30 feet. The upper crest of the surcharge soil (edge of the top of the fill) should extend at least 5 feet beyond the design edge of the construction area, then slope at 2H:1V or flatter.

During the Select Fill and surcharge fill placement activities, elevation readings on the settlement plates should be obtained daily. Following the completion of the surcharge fill, the readings should be obtained daily for a period of one week, and once per week for approximately the next 90 days, or until such time as the Geotechnical Engineer determines surcharge quarantine may be considered complete. The settlement platform readings should be obtained to the nearest .001 foot and should be provided to the Geotechnical Engineer for analysis. All settlement plate survey readings should be performed under the direction of a Licensed Surveyor. It is anticipated that settlement from the Surcharge loading will be largely complete within approximately 30 days of achieving the full recommended Surcharge height. The monitoring program can be terminated once the settlement readings exhibit a decreasing trend that approaches zero and upon NAVFAC approval.

In order for the surcharge program to be effective, the subsurface compression from the surcharge load must achieve the settlement necessary to satisfy the long-term performance requirements of the design condition within the proscribed surcharge period. For this project, we have calculated that a 3-foot surcharge height above the Warehouse finished floor elevation (approximate elevation 30 feet) should achieve the desired pre-compression of subgrade materials within approximately 30 days. However, as specified by the project RFP documents the surcharge duration is required to extend over a minimum 90 days. It is our expectation that as settlement plate data provides indication of suitable surcharge performance and limited additional settlement, a request can be made to terminate the prescribed surcharge period.

The Client has indicated a possible preference to use the Surcharge Fill material as pavement fill, once the surcharge operations are complete. Provided the Surcharge Fill consists of suitable Select Fill as described in Section 4.4 of this report, it is anticipated that the Surcharge Fill could be used to establish the design grade elevations required for the proposed pavement areas.

Settlement times are expected to vary with subsurface conditions (i.e. as stated previously, the presence of sand layers within the compressible soils would accelerate consolidation).

4.6.2 Settlement Platform Description

Settlement platforms are surface displacement reference platforms placed on the prepared ground surface at predetermined locations typically prior to Select Fill and surcharge fill placement. Settlement platforms should conform to the requirements of North Carolina Department of Transportation (NCDOT) Drawing 2G-1 included in Appendix XIII and consist of 36-inch square plates to which risers are attached. The risers are extended as the fill is placed. Settlement platforms are monitored by optical survey methods to determine vertical displacements occurring during and after the surcharge soil layer construction. Each of these instruments should be installed, complete with accepted baseline readings, prior to placement of any Select Fill at the site.

4.6.3 Settlement Platform Installation

The settlement platforms should be installed on a 4-inch thick level sand base on the existing ground surface once surficial stripping is completed. The sand base should be tamped to provide a firm, level, and unyielding bearing surface for the base plate. The indicator pipe should be marked by flags to clearly show its location and to warn equipment operators and others of its location. The Contractor should maintain the flags during the entire length of the contract and replace those flags that are missing. At no time should the settlement platform risers extend higher than 5 feet above the fill surface elevation.

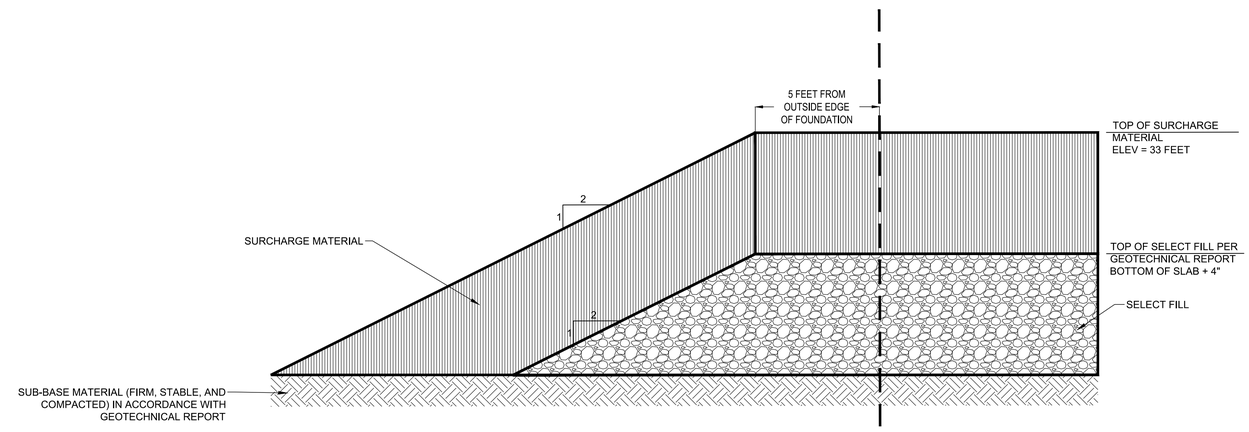

SURCHARGING DETAIL A3
SCALE: N.T.S.

APPR			
DATE			
DESCRIPTION			
SYM			

COMMONWEALTH OF PENNSYLVANIA
REGISTERED PROFESSIONAL
BRANDON ROBB FOMBELLE
ENGINEER No. PE086276

NAVFAC

RQ AWN Jordan COMPANY – A JOINT VENTURE –

Michael Baker INTERNATIONAL
100 AIRSIDE DRIVE, MOON TOWNSHIP, PA 15108 A/E INFO

APPROVED
FOR COMMANDER NAVFAC
ACTIVITY: MARINE CORPS BASE CAMP LEJEUNE
SATISFACTORY TO DATE
DES BRF | DRW BRF | CHK WN
PM / DM: TOWLER / ROOT
BRANCH HEAD
DESIGN DIRECTOR: R.L.Stephens, Jr.
FIRE PROTECTION: DPS

DEPARTMENT OF THE NAVY
NAVAL FACILITIES ENGINEERING SYSTEMS COMMAND
ATLANTIC DESIGN AND CONSTRUCTION
NAVAL FACILITIES ENGINEERING SYSTEMS COMMAND ATLANTIC
NORFOLK, VA.
JACKSONVILLE, NC
MCB CAMP LEJEUNE
P1527 LOGCOM CSP WAREHOUSE
GEOTECHNICAL DETAILS

SCALE: AS NOTED
EPROJECT NO.: 1639600
CONSTR. CONTR. NO. N40085-20-C-0059
NAVFAC DRAWING NO. 14111032
SHEET 29 OF 447

B-503

P1527 FINAL SUBMISSION - 11/18/2021

PLOTTED: 11/17/2021 8:47:32 PM
FILE NAME: \\mocrpa1sd1.jak.mbakercorp.com\VOL2_PROJECTS\180780 HF Package 3\05_DeliverablesDrawings\05 C_Civil\Sheet Files\P1527\175970_P1527F - B503.dwg

GENERAL NOTES

1. SEE SHEETS C-001 THRU C-003 FOR CIVIL GENERAL NOTES.
2. SEE SHEET C-004 FOR CIVIL LEGEND AND ABBREVIATIONS.
3. SEE SHEET CE001 FOR EROSION AND SEDIMENT CONTROL NOTES AND SEQUENCING
4. SEE SHEETS CE504 AND CE505 FOR NCDEQ EROSION AND SEDIMENT CONTROL NOTES
5. UNLESS OTHERWISE INDICATED ON THE PLANS, ALL NON-PAVED AREAS SHALL BE GRASS.

OVERALL PARKING STALL TABLE	
POV	67
ADA	4
MOTORCYCLE	4
TOTAL	75

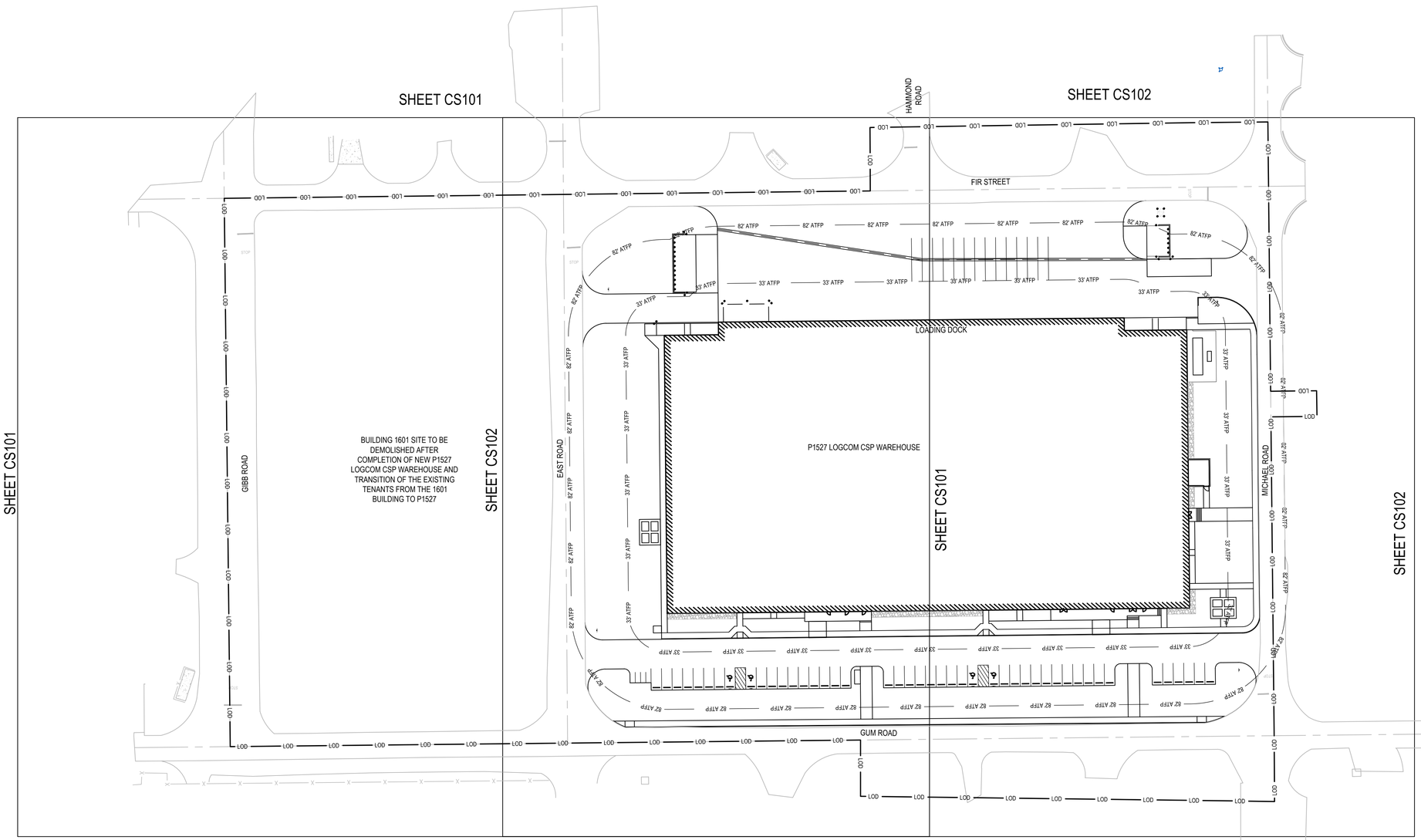

0 25' 50' 100'

SCALE: 1" = 50'

			APPR
			DATE
			DESCRIPTION
			SYM

NAVFAC

COMMONWEALTH OF PENNSYLVANIA
REGISTERED PROFESSIONAL
BRANDON ROBB FOMBELLE
ENGINEER No. PE086276

RQ AWM Jordan COMPANY - A JOINT VENTURE -

Michael Baker INTERNATIONAL
100 AIRSIDE DRIVE
MOON TOWNSHIP, PA 15108
A/E INFO

APPROVED

FOR COMMANDER NAVFAC

ACTIVITY
MARINE CORPS BASE CAMP LEJEUNE

SATISFACTORY TO DATE

DES	DRW	CHK
BRF	BRF	WN

PM / DM: TOWLER / ROOT
BRANCH HEAD:
DESIGN DIRECTOR: R.L.Stephens, Jr.
FIRE PROTECTION: DPS

DEPARTMENT OF THE NAVY
NAVAL FACILITIES ENGINEERING SYSTEMS COMMAND ATLANTIC
ATLANTIC DESIGN AND CONSTRUCTION

NAVAL FACILITIES ENGINEERING SYSTEMS COMMAND ATLANTIC
NORFOLK, VA.

MCB CAMP LEJEUNE
JACKSONVILLE, NC
P1527 LOGCOM CSP WAREHOUSE

OVERALL SITE PLAN

SCALE:	AS NOTED
EPROJECT NO.:	1639600
CONSTR. CONTR. NO.	N40085-20-C-0059
NAVFAC DRAWING NO.	14111033
SHEET	30 OF 447

CS100

P1527 FINAL SUBMISSION - 11/18/2021

PLOTTED: 11/17/2021 8:48:29 PM

FILE NAME: \\mocrpa1d1\VOL2_PROJECTS\180780-HF Package 3\05_Deliverables\Drawings\05 C_Civil\Sheet Files\P1527\175970_P1527F - CS100.dwg

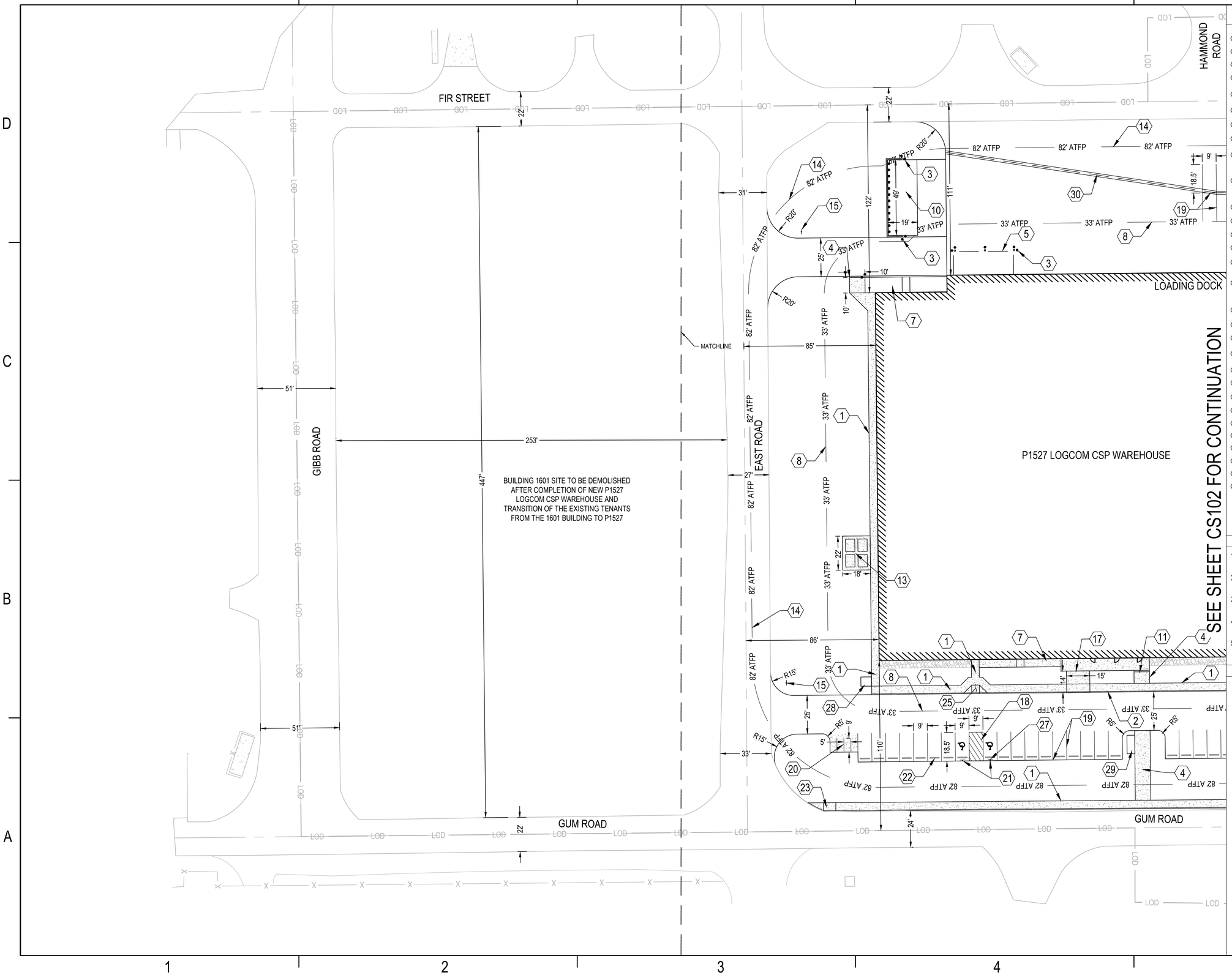

KEYED NOTES

NOT ALL KEYED NOTES MAY APPEAR ON SHEET

1. 5' WIDE SIDEWALK (TYP.) (CP502)
2. CONCRETE CURB (A4/CS502)
3. BOLLARD (TYP.) (A2/CS502)
4. 10' WIDE SIDEWALK (TYP.) (CP502)
5. CANOPY (A4/A509)
6. JEFS TRAILER SPACE (SEE PAVING PLAN)
7. RAMP (A2, A3/A313)
8. 33' AT/FP UNOBSTRUCTED SPACE SETBACK
9. GENERATOR PAD
10. 19'X49' FOUR DUMPSTER PAD ENCLOSURE (2 RECYCLING AND 2 TRASH RECEPTACLES) (C1/AS102)
11. STAIRS (A503, A504)
12. 22'X18' CHILLER ENCLOSURE (A5/AS103)
13. PICNIC AREA LAYOUT (1/L-404)
14. 82' AT/FP UNOBSTRUCTED SPACE SETBACK
15. STOP SIGN (C4/CS502)
16. 19'X26' TWO DUMPSTER PAD ENCLOSURE (1 RECYCLING AND 1 TRASH RECEPTACLE) (A1/AS102)
17. MECHANICAL ROOM LOADING AREA (CP101)
18. ACCESSIBLE PARKING STALL STRIPING (A3/CS503)
19. PARKING STALL STRIPING (A5/CS503)
20. MOTORCYCLE PARKING STALLS (CP101)
21. ADA PARKING SIGN (C1, C2/CS503)
22. WHEEL STOP (TYP.) (A1/CS503)
23. DIRECTIONAL RAMP (B1/CS501)
24. PRECAST TRANSFORMER PAD
25. CURB RAMP (A1,C1/CS501)
26. EMERGENCY CHILLER TRUCK PARKING
27. VAN ACCESSIBLE SIGN (C2/CS503)
28. BIKE RACK LAYOUT (3/L-404)
29. SMOKING AREA (2/L-404)
30. VALLEY GUTTER (A1/CS502)

GENERAL NOTES

1. SEE SHEETS C-001 THRU C-003 FOR CIVIL GENERAL NOTES.
2. SEE SHEET C-004 FOR CIVIL LEGEND AND ABBREVIATIONS.
3. SEE SHEET CE001 FOR EROSION AND SEDIMENT CONTROL NOTES AND SEQUENCING
4. SEE SHEET CE504 AND CE505 FOR NCDEQ EROSION AND SEDIMENT CONTROL NOTES
5. UNLESS OTHERWISE INDICATED ON THE PLANS, ALL NON-PAVED AREAS SHALL BE GRASS.

KEY PLAN

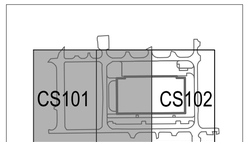

0 15' 30' 60'

SCALE: 1" = 30'

APPR	DATE	DESCRIPTION	SYM

NAVFAC

COMMONWEALTH OF PENNSYLVANIA
REGISTERED PROFESSIONAL
BRANDON ROBB FOMBELLE
ENGINEER No. PE086276

RQ AKM Jordan COMPANY - A JOINT VENTURE -

Michael Baker INTERNATIONAL
100 AIRSIDE DRIVE
MOON TOWNSHIP, PA 15108 A/E INFO

APPROVED

FOR COMMANDER NAVFAC

ACTIVITY
MARINE CORPS BASE
CAMP LEJEUNE

SATISFACTORY TO DATE

DES	BRF	DRW	BRF	CHK	WN
PM / DM			TOWLER / ROOT		
BRANCH HEAD					
DESIGN DIRECTOR			R.L.Stephens, Jr.		
FIRE PROTECTION			DPS		

DEPARTMENT OF THE NAVY
NAVAL FACILITIES ENGINEERING SYSTEMS COMMAND
ATLANTIC DESIGN AND CONSTRUCTION

NAVAL FACILITIES ENGINEERING SYSTEMS COMMAND ATLANTIC
NORFOLK, VA.

JACKSONVILLE, NC

MCB CAMP LEJEUNE
P1527 LOGCOM CSP WAREHOUSE

SITE PLAN

SCALE:	AS NOTED
EPROJECT NO.:	1639600
CONSTR. CONTR. NO.	N40085-20-C-0059
NAVFAC DRAWING NO.	14111034
SHEET	31 OF 447

CS101

P1527 FINAL SUBMISSION - 11/18/2021

PLOTTED: 11/17/2021 9:19:12 PM

FILE NAME: \\nocorpa1d1\IO\2_PROJECTS\18078\0 HF Package 3\06_Deliverables\Drawings\05 C_Civil\Sheet Files\P1527\175970_P1527F - CS101.dwg

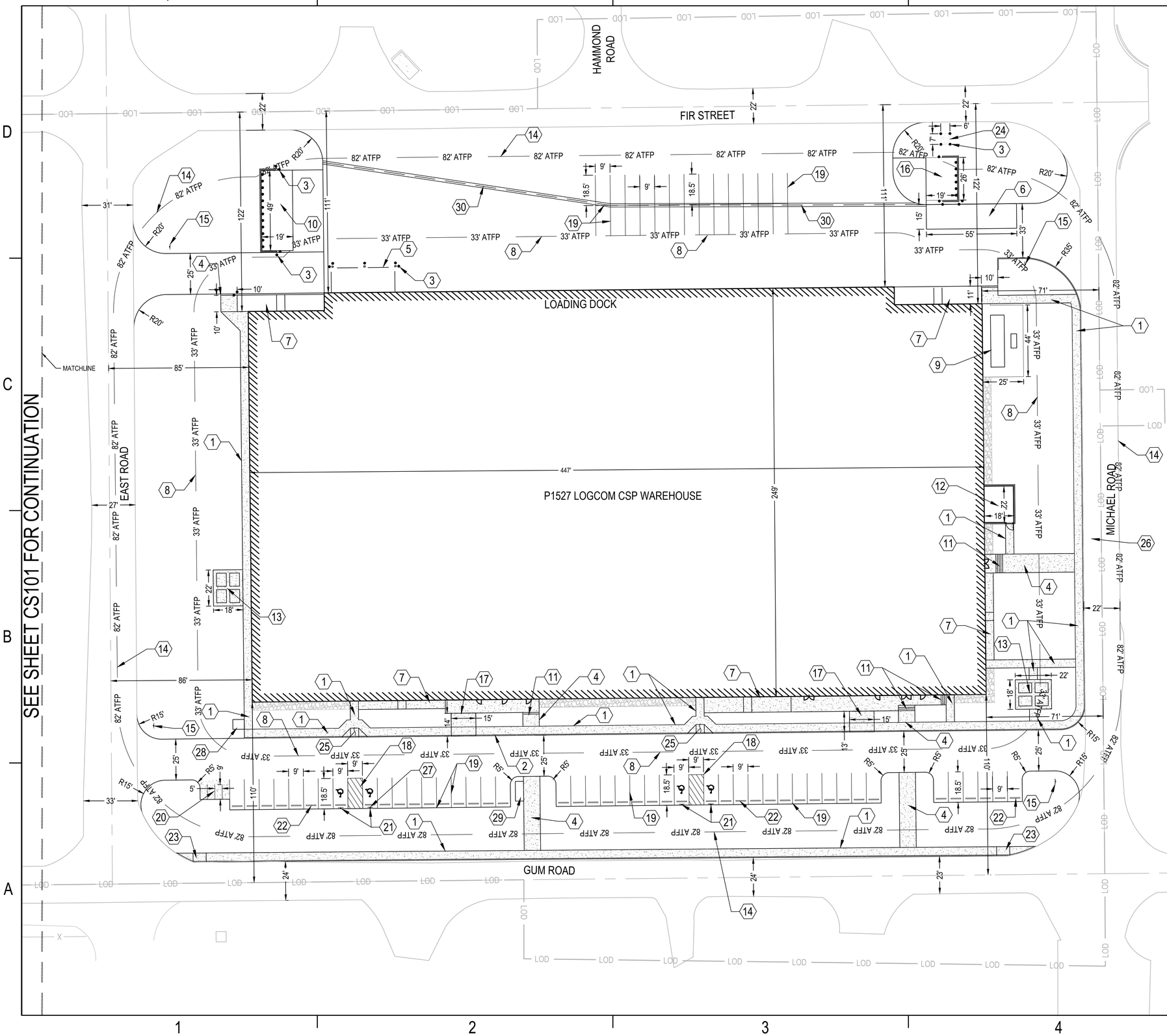

KEYED NOTES

NOT ALL KEYED NOTES MAY APPEAR ON SHEET

1. 5' WIDE SIDEWALK (TYP.) (CP502)
2. CONCRETE CURB (A4/CS502)
3. BOLLARD (TYP.) (A2/CS502)
4. 10' WIDE SIDEWALK (TYP.) (CP502)
5. CANOPY (A4/A509)
6. JEFS TRAILER SPACE (SEE PAVING PLAN)
7. RAMP (A2, A3/A313)
8. 33' AT/FP UNOBSTRUCTED SPACE SETBACK
9. GENERATOR PAD
10. 19'X49' FOUR DUMPSTER PAD ENCLOSURE (2 RECYCLING AND 2 TRASH RECEPTACLES) (C1/AS102)
11. STAIRS (A503, A504)
12. 22'X18' CHILLER ENCLOSURE (A5/AS103)
13. PICNIC AREA LAYOUT (1/L-404)
14. 82' AT/FP UNOBSTRUCTED SPACE SETBACK
15. STOP SIGN (C4/CS502)
16. 19'X26' TWO DUMPSTER PAD ENCLOSURE (1 RECYCLING AND 1 TRASH RECEPTACLE) (A1/AS102)
17. MECHANICAL ROOM LOADING AREA (CP101)
18. ACCESSIBLE PARKING STALL STRIPING (A3/CS503)
19. PARKING STALL STRIPING (A5/CS503)
20. MOTORCYCLE PARKING STALLS (CP101)
21. ADA PARKING SIGN (C1, C2/CS503)
22. WHEEL STOP (TYP.) (A1/CS503)
23. DIRECTIONAL RAMP (B1/CS501)
24. PRECAST TRANSFORMER PAD
25. CURB RAMP (A1,C1/CS501)
26. EMERGENCY CHILLER TRUCK PARKING
27. VAN ACCESSIBLE SIGN (C2/CS503)
28. BIKE RACK LAYOUT (3/L-404)
29. SMOKING AREA (2/L-404)
30. VALLEY GUTTER (A1/CS502)

GENERAL NOTES

1. SEE SHEETS C-001 THRU C-003 FOR CIVIL GENERAL NOTES.
2. SEE SHEET C-004 FOR CIVIL LEGEND AND ABBREVIATIONS.
3. SEE SHEET CE001 FOR EROSION AND SEDIMENT CONTROL NOTES AND SEQUENCING
4. SEE SHEET CE504 AND CE505 FOR NCDEQ EROSION AND SEDIMENT CONTROL NOTES
5. UNLESS OTHERWISE INDICATED ON THE PLANS, ALL NON-PAVED AREAS SHALL BE GRASS.

KEY PLAN

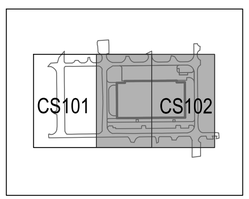

0 15' 30' 60'

SCALE: 1" = 30'

APPR	DATE	DESCRIPTION	SYM

COMMONWEALTH OF PENNSYLVANIA
REGISTERED PROFESSIONAL
BRANDON ROBB FOMBELLE
ENGINEER No. PE086276

RQ AKM Jordan COMPANY - A JOINT VENTURE -

Michael Baker INTERNATIONAL
100 AIRSIDE DRIVE
MOON TOWNSHIP, PA 15108 A/E INFO

APPROVED

FOR COMMANDER NAVFAC

ACTIVITY
MARINE CORPS BASE
CAMP LEJEUNE

SATISFACTORY TO DATE

DES BRF	DRW BRF	CHK WN	
PM / DM	TOWLER / ROOT		
BRANCH HEAD			
DESIGN DIRECTOR	R.L.Stephens, Jr.		
FIRE PROTECTION	DPS		

DEPARTMENT OF THE NAVY
NAVAL FACILITIES ENGINEERING SYSTEMS COMMAND
ATLANTIC DESIGN AND CONSTRUCTION
MCB CAMP LEJEUNE

NAVAL FACILITIES ENGINEERING SYSTEMS COMMAND ATLANTIC
NORFOLK, VA
JACKSONVILLE, NC
P1527 LOGCOM CSP WAREHOUSE

SITE PLAN

SCALE:	AS NOTED
EPROJECT NO.:	1639600
CONSTR. CONTR. NO.	N40085-20-C-0059
NAVFAC DRAWING NO.	14111035
SHEET	32 OF 447

CS102

P1527 FINAL SUBMISSION - 11/18/2021

PLOTTED: 11/11/2021 9:19:14 PM

FILE NAME: \\moonas1d1\VOL2_PROJECTS\160780-HF Package 30\5_Deliverables\Drawings\05 C_Civil\Sheet Files\P1527\175970_P1527F - CS101.dwg

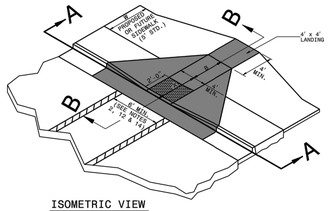

ISOMETRIC VIEW

PAY LIMITS FOR CURB RAMP

NOTES:
1. DETECTABLE WARNING DOMES WILL COVER 2'-0" LENGTH AND FULL WIDTH OF THE RAMP FLOOR AS SHOWN ON THE DETAILS.
2. DETECTABLE WARNING DOMES WILL CONTRAST VISIBILITY WITH ADJOINING SURFACE, EITHER LIGHT-ON-DARK, OR DARK-ON-LIGHT SEQUENCE COVERING THE ENTIRE RAMP.

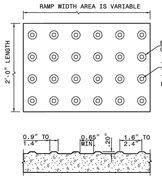

DETECTABLE WARNING DOMES

W	A	W+A+9"	X	B
5'	0.0'	5.8'	5.8'	5.0'*
6'	0.0'	6.8'	6.8'	6.0'**
7'	0.0'	7.8'	7.3'	6.5'**
8'	0.0'	8.8'	7.3'	6.5'**
5'	2.0'	7.8'	7.8'	5.0'
5'	2.5'	8.3'	8.1'	4.8'
5'	3.0'	8.8'	8.3'	4.4'
5'	3.5'	9.3'	8.4'	4.1'
5'	4.0'	9.8'	8.6'	3.8'
5'	4.5'	10.3'	8.7'	3.4'
5'	5.0'	10.8	8.9'	3.1'

B = X-(A+9")
B = DISTANCE FROM FRONT EDGE OF SIDEWALK TO BACK POINT OF 12:1 (8.33%) SLOPE.
* BACK OF SIDEWALK DROP REQUIRED FOR ALL SIDEWALK SLOPES.
** BACK OF SIDEWALK DROP REQUIRED FOR SIDEWALK SLOPES 0.04.

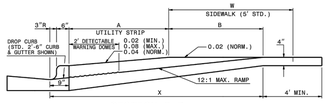

SECTION B-B

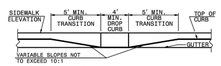

SECTION A-A

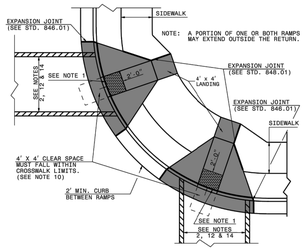

PLAN VIEW
DUAL RAMPS
ANY RADII
(4' MIN. FLOOR WIDTH)

1-18 STATE OF NORTH CAROLINA DEPT. OF TRANSPORTATION DIVISION OF HIGHWAYS RALEIGH, N.C.

ROADWAY STANDARD DRAWING FOR
CURB RAMP
PROPOSED CURB AND GUTTER

SHEET 1 OF 3
848.05

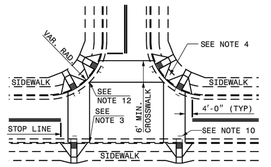

DETAIL SHOWING TYPICAL LOCATION OF CURB RAMPS, PEDESTRIAN CROSSWALKS AND STOP LINES FOR TEE INTERSECTIONS

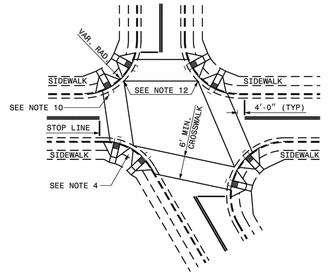

DETAIL SHOWING TYPICAL LOCATION OF CURB RAMPS, PEDESTRIAN CROSSWALKS AND STOP LINES

ROADWAY PLAN SYMBOL
(CR)
FOR PROPOSED CURB RAMP

PROPOSED CURB RAMP W/ LANDING
PROPOSED OR FUTURE SIDEWALK

ALLOWABLE LOCATIONS
DUAL RAMP RADII.....ANY

1-18 STATE OF NORTH CAROLINA DEPT. OF TRANSPORTATION DIVISION OF HIGHWAYS RALEIGH, N.C.

ROADWAY STANDARD DRAWING FOR
CURB RAMP
PROPOSED CURB AND GUTTER

SHEET 2 OF 3
848.05

CURB RAMP
SCALE: N.T.S.

C1

NOTES:
1. CONSTRUCT THE RAMP SURFACE TO BE STABLE, FIRM, AND SLIP RESISTANT. CONSTRUCT THE CURB RAMP TYPE AS SHOWN IN THE PAVEMENT MARKING PLANS OR AS DIRECTED BY THE ENGINEER.
2. LOCATE CURB RAMPS AND PLACE PEDESTRIAN CROSSWALK MARKINGS AS SHOWN IN THE PAVEMENT MARKING PLANS. WHEN FIELD ADJUSTMENTS REQUIRE MOVING CURB RAMPS OR MARKINGS AS SHOWN, CONTACT THE SIGNING AND DELINEATION UNIT OR LOCATE AS DIRECTED BY THE ENGINEER.
3. COORDINATE THE CURB RAMP AND THE PEDESTRIAN CROSSWALK MARKINGS SO A 4'x4' CLEAR SPACE AT THE BASE OF THE CURB RAMP WILL FALL WITHIN THE PEDESTRIAN CROSSWALK LINES.
4. SET BACK DISTANCE FROM INSIDE CROSSWALK MARKING TO NEAREST EDGE OF TRAVEL LANE IS 4' MINIMUM.
5. REFER TO THE PAVEMENT MARKING PLANS FOR STOP BAR LOCATIONS AT SIGNALIZED INTERSECTIONS. IF A PAVEMENT MARKING PLAN IS NOT PROVIDED, CONTACT THE SIGNAL DESIGN SECTION FOR THE STOP BAR LOCATIONS OR LOCATE AS DIRECTED BY THE ENGINEER.
6. TERMINATE PARKING A MINIMUM OF 20' BACK OF A PEDESTRIAN CROSSWALK.
7. CONSTRUCT CURB RAMPS A MINIMUM OF 4' WIDE.
8. CONSTRUCT THE RUNNING SLOPE OF THE RAMP 8.33% MAXIMUM.
9. ALLOWABLE CROSS SLOPE ON SIDEWALKS AND CURB RAMPS WILL BE 2% MAXIMUM.
10. CONSTRUCT THE SIDE FLARE SLOPE A MAXIMUM OF 10% MEASURED ALONG THE CURB LINE.
11. CONSTRUCT THE COUNTER SLOPE OF THE GUTTER OR STREET AT THE BASE OF THE CURB RAMP A MAXIMUM OF 5% AND MAINTAIN A SMOOTH TRANSITION.
12. CONSTRUCT LANDINGS FOR SIDEWALK A MINIMUM OF 4'x4' WITH A MAXIMUM SLOPE OF 2% IN ANY DIRECTION. CONSTRUCT LANDINGS FOR MEDIAN ISLANDS A MINIMUM OF 5'x5' WITH A MAXIMUM SLOPE OF 2% IN ANY DIRECTION.
13. TO USE A MEDIAN ISLAND AS A PEDESTRIAN REFUGE AREA, MEDIAN ISLANDS WILL BE A MINIMUM OF 6' WIDE. CONSTRUCT MEDIAN ISLANDS TO PROVIDE PASSAGE OVER OR THROUGHT THE ISLAND.
14. SMALL CHANNELIZATION ISLANDS THAT CAN NOT PROVIDE A 5'X5' LANDING AT THE TOP OF A RAMPS, WILL BE CUT THROUGH LEVEL WITH THE SURFACE STREET.
15. CURB RAMPS WITH RETURNED CURBS MAY BE USED ONLY WHERE PEDESTRIANS WOULD NOT NORMALLY WALK ACROSS THE RAMP. THE ADJACENT SURFACE IS PLANTING OR OTHER NON-WALKING SURFACE OR THE SIDE APPROACH IS SUBSTANTIALLY OBSTRUCTED.
16. PLACE A ½" EXPANSION JOINT WHERE THE CONCRETE CURB RAMP JOINS THE CURB AS SHOWN IN ROADWAY STANDARD DRAWING 848.01
17. PLACE ALL PEDESTRIAN PUSH BUTTON ACTUATORS AND CROSSING SIGNALS AS SHOWN IN THE PLANS OR AS SHOWN IN THE MUTCD.
18. CURB RAMPS THROUGH MEDIAN ISLANDS, SINGLE RAMPS AT DUAL CROSSWALKS OR LIMITED R/W SITUATIONS, WILL BE HANDLED BY SPECIAL DETAILS. CONTACT THE CONTRACT STANDARDS AND DEVELOPMENT UNIT FOR THE DETAILS OR FOR A SPECIAL DESIGN.

1-18 STATE OF NORTH CAROLINA DEPT. OF TRANSPORTATION DIVISION OF HIGHWAYS RALEIGH, N.C.

ROADWAY STANDARD DRAWING FOR
CURB RAMPS
NOTES

SHEET 3 OF 3
848.05

CURB RAMP (CONT)
SCALE: N.T.S.

A1

PROJECT REFERENCE NO.	SHEET NO.

TYPE 1A

TYPE 1B

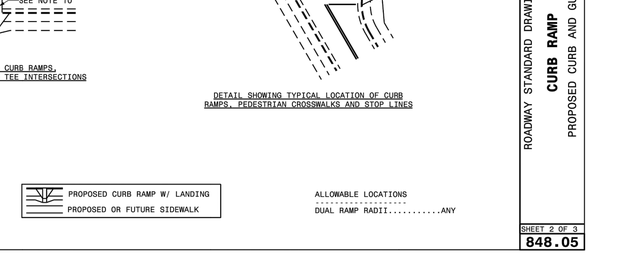

TYPE 1

PAY LIMITS FOR 1 CURB RAMP

1. 8.33% (12:1) *MAX RAMP SLOPE*
2. *CROSS SLOPE: 2.00%*
3. *CURB RAMPS REQUIRE A (4'-0") MINIMUM LANDING WITH A MAXIMUM CROSS SLOPE AND LONGITUDINAL SLOPE OF 2.00% WHERE PEDESTRIANS PERFORM TURNING MANEUVERS. SLOPE TO DRAIN TO CURB.*

REFER TO ROADWAY STANDARD DRAWING NUMBER 848.05 SHEET 3 OF 3 FOR ALL RAMP NOTES

DOCUMENT NOT CONSIDERED FINAL UNLESS ALL SIGNATURES COMPLETED

CONTRACT STANDARDS AND DEVELOPMENT UNIT
Office 919 707-6950 FAX 919 250-4119

CURB RAMPS
Directional Ramps

ORIGINAL BY: J.S. HOMERTON DATE: 7/7/11
MODIFIED BY: DATE:
CHECKED BY: DATE:
FILE SPEC: N:\ds\2012CurbRamp\CurbRampDetails.dgn

DIRECTIONAL RAMP
SCALE: N.T.S.

B1

			APPR
			DATE
			DESCRIPTION
			SYM

NAVFAC

COMMONWEALTH OF PENNSYLVANIA
REGISTERED PROFESSIONAL
BRANDON ROBB FOMBELLE
ENGINEER No. PE086276

RQ Jordan COMPANY - A JOINT VENTURE -

Michael Baker INTERNATIONAL
100 AIRSIDE DRIVE
MOON TOWNSHIP, PA 15108
A/E INFO

APPROVED

FOR COMMANDER NAVFAC

ACTIVITY
MARINE CORPS BASE
CAMP LEJEUNE

SATISFACTORY TO DATE

DES BRF DRW BRF CHK WN
PM / DM TOWLER / ROOT
BRANCH HEAD
DESIGN DIRECTOR R.L.Stephens, Jr.
FIRE PROTECTION DPS

DEPARTMENT OF THE NAVY
NAVAL FACILITIES ENGINEERING SYSTEMS COMMAND
ATLANTIC DESIGN AND CONSTRUCTION
NAVAL FACILITIES ENGINEERING SYSTEMS COMMAND ATLANTIC
NORFOLK, VA
JACKSONVILLE, NC
MCB CAMP LEJEUNE
P1527 LOGCOM CSP WAREHOUSE
SITE DETAILS

SCALE: AS NOTED
EPROJECT NO.: 1639600
CONSTR. CONTR. NO. N40085-20-C-0059
NAVFAC DRAWING NO. 14111036
SHEET 33 OF 447

CS501

P1527 FINAL SUBMISSION - 11/18/2021

PLOTTED: 11/11/2021 9:20:05 PM
FILE NAME: \\mcorps1d1\VOL2_PROJECTS\180758 HF Package 3\05_Deliverables\Drawings\05 C_CivilSheet Files\P1527-1175970_P1527F - CS500.dwg

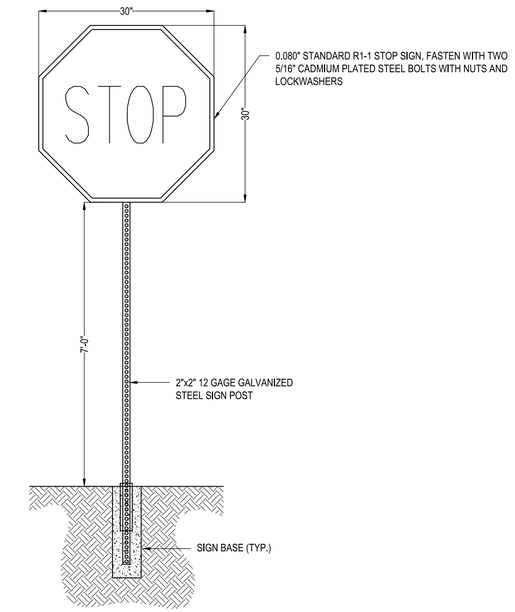

NOTES:

1) ALL SIGNS SHALL BE MUTCD STANDARD UNLESS OTHERWISE NOTED.

STOP SIGN — C4
SCALE: N.T.S.

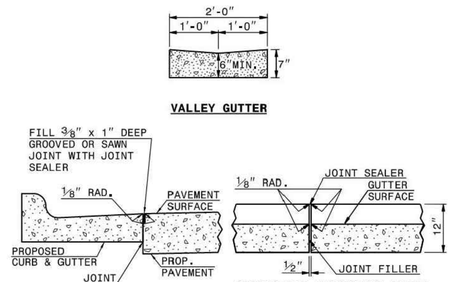

GENERAL NOTES:
- PLACE CONTRACTION JOINTS AT 10' INTERVALS, EXCEPT THAT A 15' SPACING MAY BE USED WHEN A MACHINE IS USED OR WHEN SATISFACTORY SUPPORT FOR THE FACE FORM CAN BE OBTAINED WITHOUT THE USE OF TEMPLATES AT 10' INTERVALS.
- JOINT SPACING MAY BE ALTERED IF REQUIRED BY THE ENGINEER.
- CONTRACTION JOINTS MAY BE INSTALLED WITH THE USE OF TEMPLATES OR FORMED BY OTHER APPROVED METHODS. CONSTRUCT NON-TEMPLATE FORMED JOINTS A MIN. OF 1½" DEEP.
- FILL ALL CONSTRUCTION JOINTS, EXCEPT IN 8"x6" MEDIAN CURB, WITH JOINT FILLER AND SEALER.
- SPACE EXPANSION JOINTS AT 90' INTERVALS AND ADJACENT TO ALL RIGID OBJECTS.

VALLEY GUTTER — A1
SCALE: N.T.S.

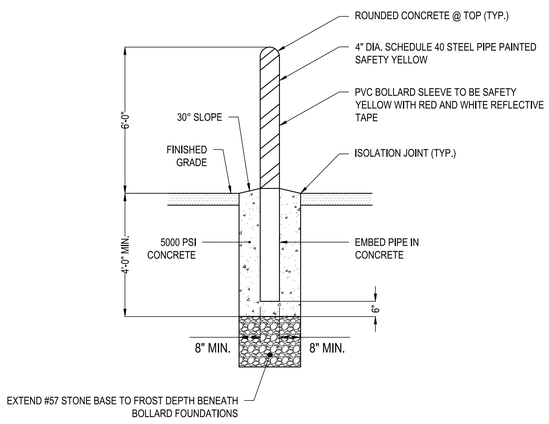

BOLLARD — A2
SCALE: N.T.S.

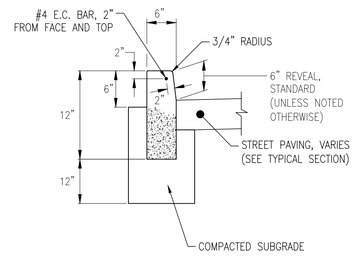

NOTES:

1. CURB CONSTRUCTION JOINTS SHALL COINCIDE WITH TRANSVERSE JOINTS IN PAVEMENT OR BASE. MAXIMUM LENGTH 10'-0".

CONCRETE DEEP CURB (6" REVEAL) — A4
SCALE: N.T.S.

APPR	
DATE	
DESCRIPTION	
SYM	

NAVFAC

COMMONWEALTH OF PENNSYLVANIA — REGISTERED PROFESSIONAL — BRANDON ROBB FOMBELLE — ENGINEER No. PE086276

RQ AMJV Jordan COMPANY — A JOINT VENTURE —

Michael Baker INTERNATIONAL
100 AIRSIDE DRIVE
MOON TOWNSHIP, PA 15108
A/E INFO

APPROVED

FOR COMMANDER NAVFAC

ACTIVITY
MARINE CORPS BASE CAMP LEJEUNE

SATISFACTORY TO DATE

DES	DRW	CHK
BRF	BRF	WN

PM / DM: TOWLER / ROOT
BRANCH HEAD:
DESIGN DIRECTOR: R.L.Stephens, Jr.
FIRE PROTECTION: DPS

DEPARTMENT OF THE NAVY
NAVAL FACILITIES ENGINEERING SYSTEMS COMMAND
ATLANTIC DIVISION AND CONSTRUCTION
NAVAL FACILITIES ENGINEERING SYSTEMS COMMAND ATLANTIC — NORFOLK, VA.
JACKSONVILLE, NC
MCB CAMP LEJEUNE
P1527 LOGCOM CSP WAREHOUSE
SITE DETAILS

SCALE:	AS NOTED
EPROJECT NO.:	1639600
CONSTR. CONTR. NO.	N40085-20-C-0059
NAVFAC DRAWING NO.	14111037
SHEET	34 OF 447

CS502

P1527 FINAL SUBMISSION - 11/18/2021

PLOTTED: 11/17/2021 9:20:08 PM
FILE NAME: \\norcpia1st\VOL2_PROJECTS\16078\1-HF Package 3\06_Deliverables\Drawings\05 C_Civil\Sheet Files\P1527\175970_P1527F - CS500.dwg

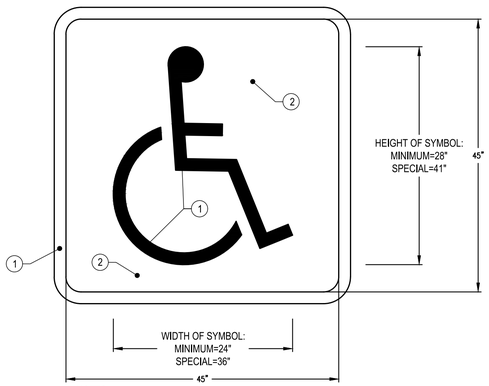

NOTES:
1. STROKE WIDTH:
   MINIMUM=3"
   SPECIAL=4"
   TRAFFIC RATED WHITE
2. TRAFFIC RATED BLUE

PAINTED INTERNATIONAL SYMBOL OF ACCESSIBILITY — C1
SCALE: N.T.S.

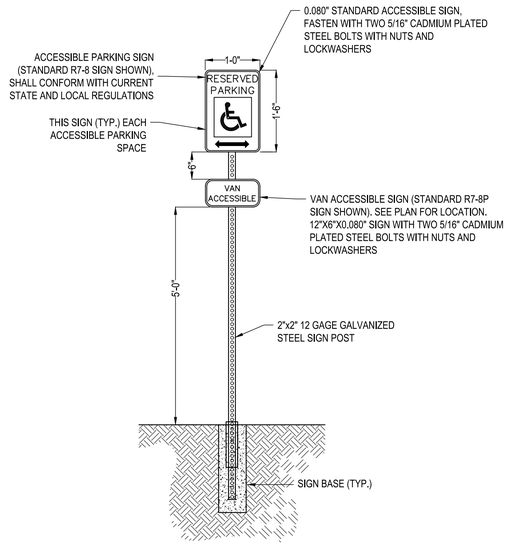

NOTE:
1. ALL SIGNS SHALL BE NCDOT STANDARD UNLESS OTHERWISE NOTED.

ACCESSIBLE PARKING SIGN — C2
SCALE: N.T.S.

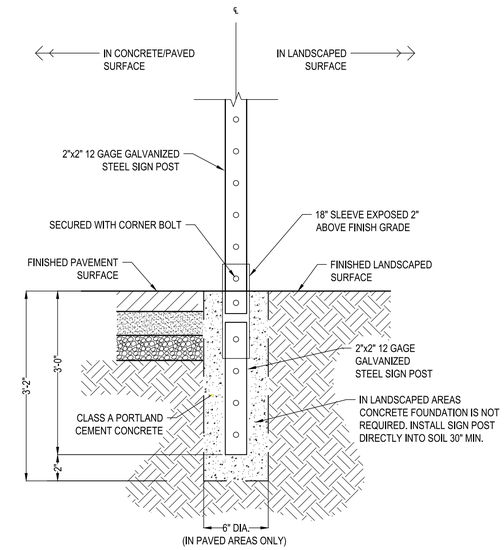

TYPICAL SIGN BASE — C4
SCALE: N.T.S.

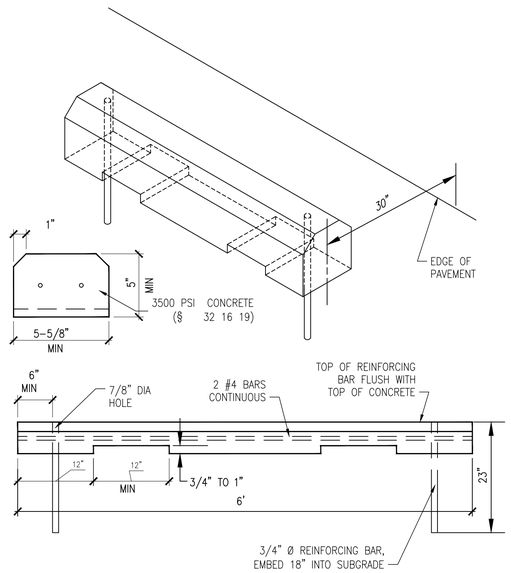

WHEEL STOP PARKING BUMPER — A1
SCALE: N.T.S.

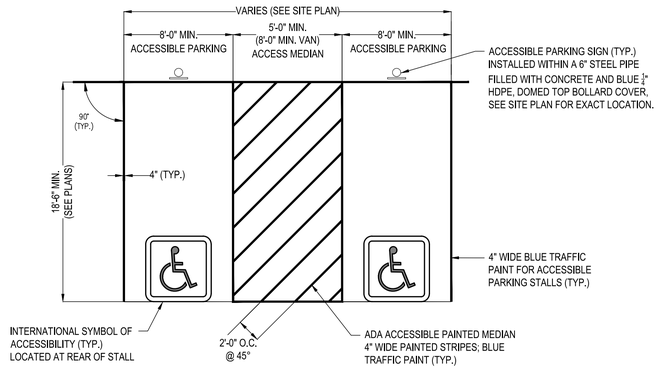

NOTE:
1. PAINT SHALL BE TRAFFIC RATED, BLUE.
2. PAINTED TRAFFIC ISLANDS NOT IN ADA ACCESSIBLE AREAS SHALL BE 4" WIDE; 2'-0" O.C. AT 45° AS ABOVE WITH TRAFFIC RATED PAINT, WHITE, WHERE SHOWN ON PLANS.
3. PARKING SPACES TO BE SIZED/DESIGNED PER THE BETTER MILITARY TRAFFIC ENGINEERING 2016 SDDCTEA PAMPHLET 55-17 PREPARED AND ISSUED BY THE MILITARY SURFACE DEPLOYMENT AND DISTRIBUTION COMMAND TRANSPORTATION ENGINEERING AGENCY.

ACCESSIBLE PARKING STALL — A3
SCALE: N.T.S.

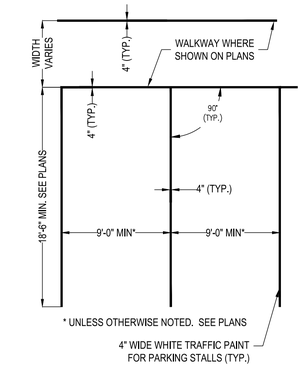

NOTES:
1. TRAFFIC RATED PAINT STRIPES, WHITE.
2. PARKING SPACES TO BE SIZED/DESIGNED PER THE BETTER MILITARY TRAFFIC ENGINEERING 2016 SDDCTEA PAMPHLET 55-17 PREPARED AND ISSUED BY THE MILITARY SURFACE DEPLOYMENT AND DISTRIBUTION COMMAND TRANSPORTATION ENGINEERING AGENCY.

PARKING STALL — A5
SCALE: N.T.S.

APPR	DATE	DESCRIPTION	SYM

NAVFAC

COMMONWEALTH OF PENNSYLVANIA
REGISTERED PROFESSIONAL
BRANDON ROBB FOMBELLE
ENGINEER No. PE086276

RQ AMM Jordan COMPANY – A JOINT VENTURE –

Michael Baker INTERNATIONAL
100 AIRSIDE DRIVE
MOON TOWNSHIP, PA 15108
A/E INFO

APPROVED

FOR COMMANDER NAVFAC

ACTIVITY
MARINE CORPS BASE CAMP LEJEUNE

SATISFACTORY TO DATE

DES	DRW	CHK
BRF	BRF	WN

PM / DM: TOWLER / ROOT
BRANCH HEAD:
DESIGN DIRECTOR: R.L.Stephens, Jr.
FIRE PROTECTION: DPS

DEPARTMENT OF THE NAVY
NAVAL FACILITIES ENGINEERING SYSTEMS COMMAND
ATLANTIC DIVISION AND CONSTRUCTION
NAVAL FACILITIES ENGINEERING SYSTEMS COMMAND ATLANTIC
NORFOLK, VA.
MCB CAMP LEJEUNE
JACKSONVILLE, NC
P1527 LOGCOM CSP WAREHOUSE
SITE DETAILS

SCALE:	AS NOTED
EPROJECT NO.:	1639600
CONSTR. CONTR. NO.	N40085-20-C-0059
NAVFAC DRAWING NO.	14111038
SHEET	35 OF 447

CS503

P1527 FINAL SUBMISSION - 11/18/2021

PLOTTED: 11/17/2021 9:20:08 PM
FILE NAME: \\mocrpa1st1\VOL2_PROJECTS\16078\-HF Package 3\06_Deliverables\Drawings\05 C_Civil\Sheet Files\P1527\175970_P1527F - CS500.dwg

GENERAL NOTES

1. SEE SHEETS C-001 THRU C-003 FOR CIVIL GENERAL NOTES.
2. SEE SHEET C-004 FOR CIVIL LEGEND AND ABBREVIATIONS.
3. SEE SHEET CE001 FOR EROSION AND SEDIMENT CONTROL NOTES AND SEQUENCING
4. SEE SHEET CE504 AND CE505 FOR NCDEQ EROSION AND SEDIMENT CONTROL NOTES
5. UNLESS OTHERWISE INDICATED ON THE PLANS, ALL NON-PAVED AREAS SHALL BE GRASS.
6. SELECT FILL MAY BE REQUIRED FOLLOWING THE COMPLETION OF THE SUBGRADE EVALUATION PROCEDURES. THE EXTENT OF THE UNDERCUT WILL BE DETERMINED IN THE FIELD DURING CONSTRUCTION BASED ON THE OUTCOME OF THE FIELD TESTING PROCEDURES (SUBGRADE EVALUATION AND PROOFROLLING ALONG WITH TEST PIT EXCAVATIONS).

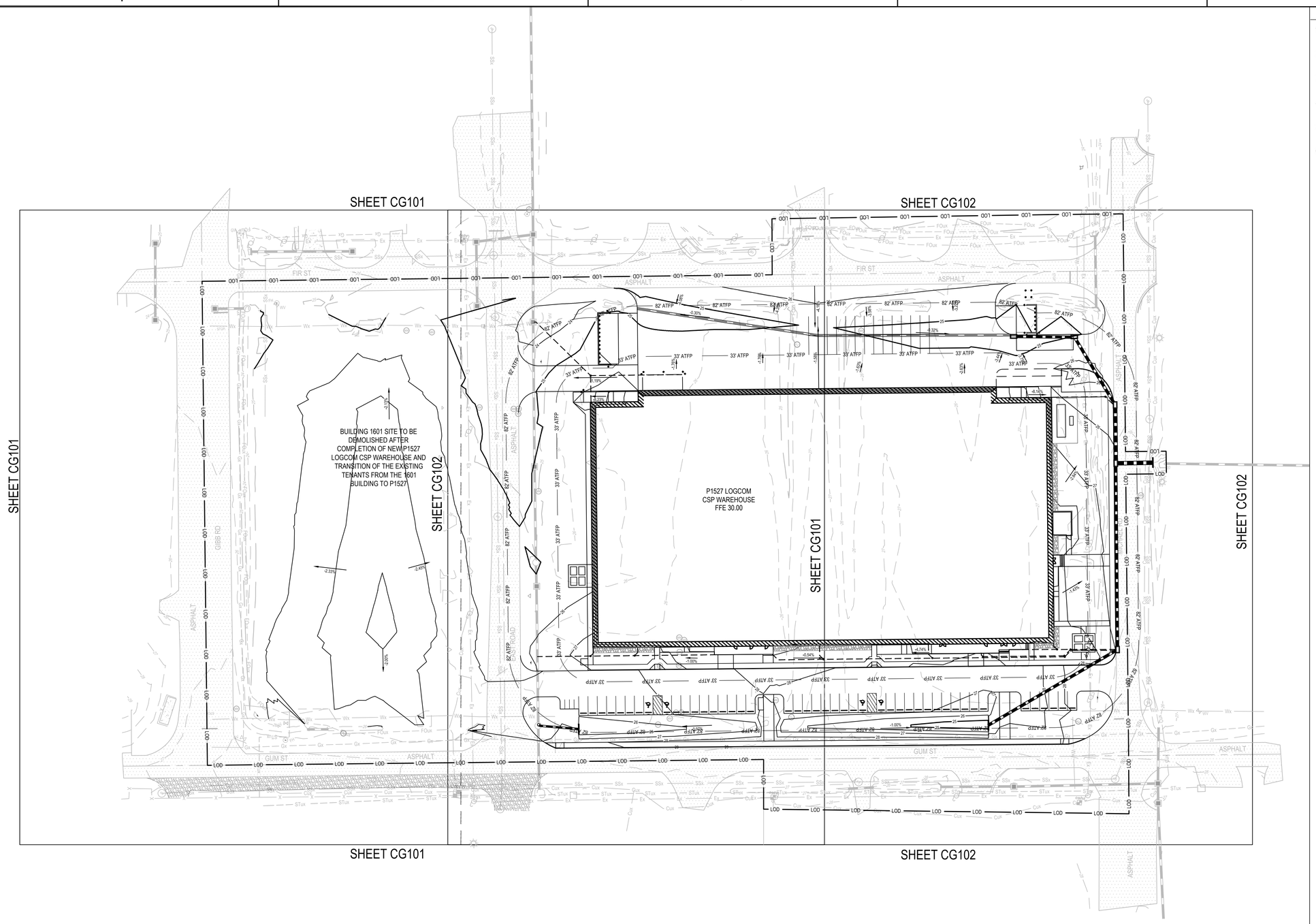

0 25' 50' 100'

SCALE: 1" = 50'

			APPR
			DATE
			DESCRIPTION
			SYM

NAVFAC

COMMONWEALTH OF PENNSYLVANIA
REGISTERED PROFESSIONAL
BRANDON ROBB FOMBELLE
ENGINEER No. PE086276

RQ Jordan COMPANY – A JOINT VENTURE –

Michael Baker INTERNATIONAL
100 AIRSIDE DRIVE
MOON TOWNSHIP, PA 15108 A/E INFO

APPROVED

FOR COMMANDER NAVFAC

ACTIVITY
MARINE CORPS BASE
CAMP LEJEUNE

SATISFACTORY TO DATE

DES	BRF	DRW	BRF	CHK	WN
PM / DM			TOWLER / ROOT		
BRANCH HEAD					
DESIGN DIRECTOR			R.L.Stephens, Jr.		
FIRE PROTECTION			DPS		

DEPARTMENT OF THE NAVY
NAVAL FACILITIES ENGINEERING SYSTEMS COMMAND
ATLANTIC DESIGN AND CONSTRUCTION

NAVAL FACILITIES ENGINEERING SYSTEMS COMMAND ATLANTIC
NORFOLK, VA.

MCB CAMP LEJEUNE
JACKSONVILLE, NC

P1527 LOGCOM CSP WAREHOUSE

OVERALL GRADING AND DRAINAGE PLAN

SCALE:	AS NOTED
EPROJECT NO.:	1639600
CONSTR. CONTR. NO.	N40085-20-C-0059
NAVFAC DRAWING NO.	14111039
SHEET	36 OF 447

CG100

P1527 FINAL SUBMISSION - 11/18/2021

PLOTTED: 11/11/2021 9:20:59 PM

FILE NAME: \\mcnorp1d11\VOL2_PROJECTS\160780 HF Package 3\05_Deliverables\Drawings\05 C_Civil\Sheet Files\P1527\171597G_P1527F - CG100.dwg

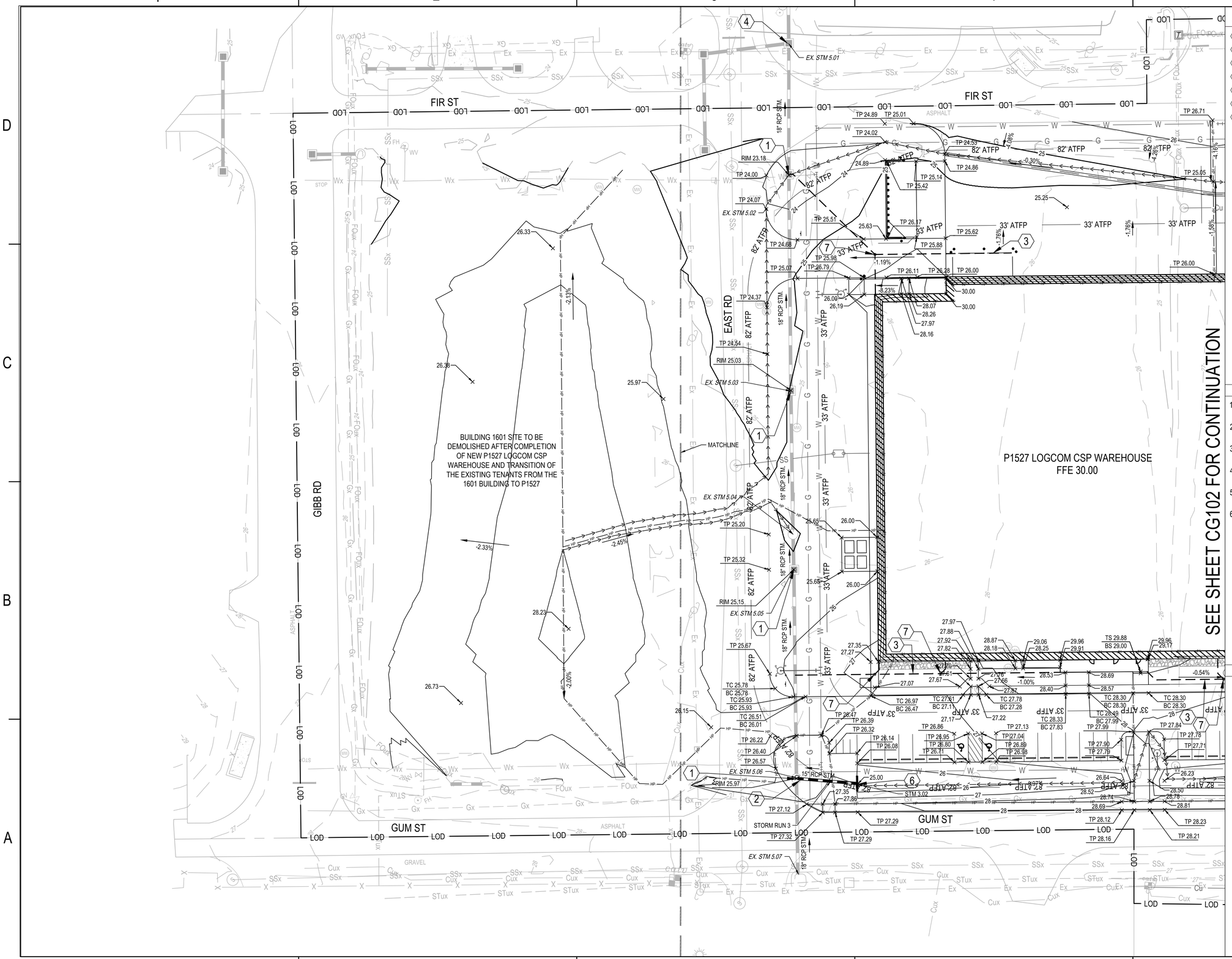

KEYED NOTES

NOT ALL KEYED NOTES MAY APPEAR ON SHEET

1. EXISTING INLET TO REMAIN (ADJUSTED TO GRADE)
2. CONNECT TO EXISTING STORMWATER (C4/CG501)
3. ROOF DRAIN COLLECTOR (C2/CG501)
4. OUTFALL POINT
5. STORMWATER CATCH BASIN (A1/CG501)
6. STORMWATER HEADWALL
7. ROOF DRAIN CLEANOUT

GENERAL NOTES

1. SEE SHEETS C-001 THRU C-003 FOR CIVIL GENERAL NOTES.
2. SEE SHEET C-004 FOR CIVIL LEGEND AND ABBREVIATIONS.
3. SEE SHEET CE001 FOR EROSION AND SEDIMENT CONTROL NOTES AND SEQUENCING
4. SEE SHEET CE504 AND CE505 FOR NCDEQ EROSION AND SEDIMENT CONTROL NOTES
5. UNLESS OTHERWISE INDICATED ON THE PLANS, ALL NON-PAVED AREAS SHALL BE GRASS.
6. SELECT FILL MAY BE REQUIRED FOLLOWING THE COMPLETION OF THE SUBGRADE EVALUATION PROCEDURES. THE EXTENT OF THE UNDERCUT WILL BE DETERMINED IN THE FIELD DURING CONSTRUCTION BASED ON THE OUTCOME OF THE FIELD TESTING PROCEDURES (SUBGRADE EVALUATION AND PROOFROLLING ALONG WITH TEST PIT EXCAVATIONS).

KEY PLAN

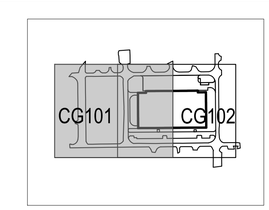

0 15' 30' 60'

SCALE: 1" = 30'

SYM	DESCRIPTION	DATE	APPR

NAVFAC

COMMONWEALTH OF PENNSYLVANIA
REGISTERED PROFESSIONAL
BRANDON ROBB FOMBELLE
ENGINEER No. PE086276

RQ W.M. Jordan COMPANY - A JOINT VENTURE -

Michael Baker INTERNATIONAL
100 AIRSIDE DRIVE
MOON TOWNSHIP, PA 15108
A/E INFO

APPROVED

FOR COMMANDER NAVFAC

ACTIVITY
MARINE CORPS BASE CAMP LEJEUNE

SATISFACTORY TO DATE

DES BRF	DRW BRF	CHK WN
PM / DM	TOWLER / ROOT	
BRANCH HEAD		
DESIGN DIRECTOR	R.L.Stephens, Jr.	
FIRE PROTECTION	DPS	

DEPARTMENT OF THE NAVY
NAVAL FACILITIES ENGINEERING SYSTEMS COMMAND
ATLANTIC DESIGN AND CONSTRUCTION
NAVAL FACILITIES ENGINEERING SYSTEMS COMMAND ATLANTIC
NORFOLK, VA
MCB CAMP LEJEUNE
JACKSONVILLE, NC

P1527 LOGCOM CSP WAREHOUSE

GRADING AND DRAINAGE PLAN

SCALE:	AS NOTED
EPROJECT NO.:	1639600
CONSTR. CONTR. NO.	N40085-20-C-0059
NAVFAC DRAWING NO.	14111040
SHEET	37 OF 447

CG101

P1527 FINAL SUBMISSION - 11/18/2021

PLOTTED: 11/11/2021 9:21:54 PM

FILE NAME: \\mcorpa1d11\VOL2_PROJECTS\180780 HF Package 3\05_Deliverables\Drawings\05 C_Civil\Sheet Files\P1527\175970_P1527F - CG101.dwg

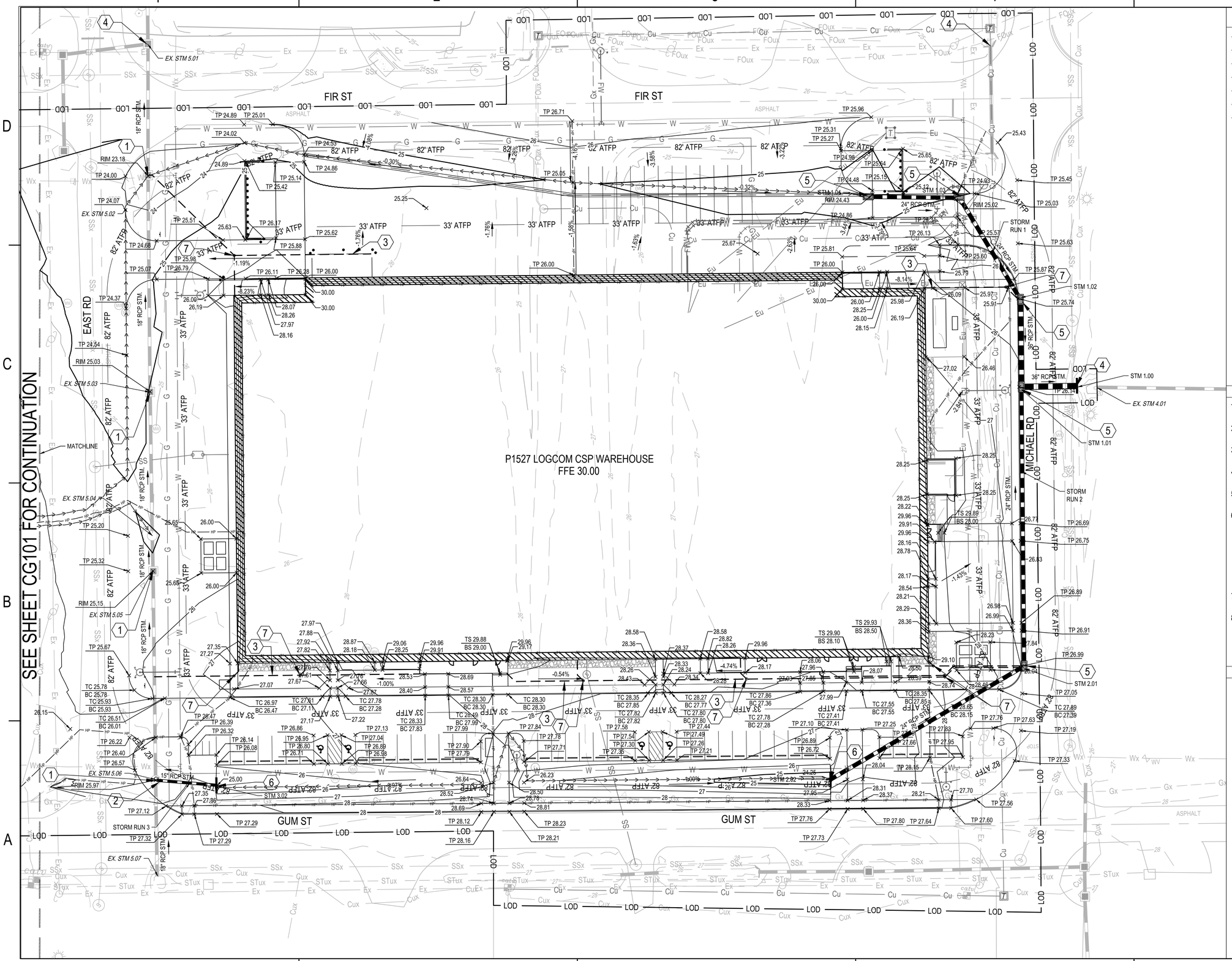

KEYED NOTES

NOT ALL KEYED NOTES MAY APPEAR ON SHEET

1. EXISTING INLET TO REMAIN (ADJUSTED TO GRADE)
2. CONNECT TO EXISTING STORMWATER (C4/CG501)
3. ROOF DRAIN COLLECTOR (C2/CG501)
4. OUTFALL POINT
5. STORMWATER CATCH BASIN (A1/CG501)
6. STORMWATER HEADWALL
7. ROOF DRAIN CLEANOUT

GENERAL NOTES

1. SEE SHEETS C-001 THRU C-003 FOR CIVIL GENERAL NOTES.
2. SEE SHEET C-004 FOR CIVIL LEGEND AND ABBREVIATIONS.
3. SEE SHEET CE001 FOR EROSION AND SEDIMENT CONTROL NOTES AND SEQUENCING
4. SEE SHEET CE504 AND CE505 FOR NCDEQ EROSION AND SEDIMENT CONTROL NOTES
5. UNLESS OTHERWISE INDICATED ON THE PLANS, ALL NON-PAVED AREAS SHALL BE GRASS.
6. SELECT FILL MAY BE REQUIRED FOLLOWING THE COMPLETION OF THE SUBGRADE EVALUATION PROCEDURES. THE EXTENT OF THE UNDERCUT WILL BE DETERMINED IN THE FIELD DURING CONSTRUCTION BASED ON THE OUTCOME OF THE FIELD TESTING PROCEDURES (SUBGRADE EVALUATION AND PROOFROLLING ALONG WITH TEST PIT EXCAVATIONS).
7. SEE SHEET CG200 FOR STORM SEWER STRUCTURAL TABLE.
8. SEE SHEET CG201 FOR STORM SEWER PROFILES.

KEY PLAN

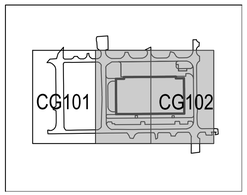

0 15' 30' 60'

SCALE: 1" = 30'

SYM	DESCRIPTION	DATE	APPR

NAVFAC

COMMONWEALTH OF PENNSYLVANIA
REGISTERED PROFESSIONAL
BRANDON ROBB FOMBELLE
ENGINEER No. PE086276

RQ W.M. Jordan COMPANY - A JOINT VENTURE -

Michael Baker INTERNATIONAL
100 AIRSIDE DRIVE
MOON TOWNSHIP, PA 15108
A/E INFO

APPROVED

FOR COMMANDER NAVFAC

ACTIVITY
MARINE CORPS BASE CAMP LEJEUNE

SATISFACTORY TO DATE

DES BRF	DRW BRF	CHK WN
PM / DM	TOWLER / ROOT	
BRANCH HEAD		
DESIGN DIRECTOR	R.L.Stephens, Jr.	
FIRE PROTECTION	DPS	

DEPARTMENT OF THE NAVY
NAVAL FACILITIES ENGINEERING SYSTEMS COMMAND
ATLANTIC DESIGN AND CONSTRUCTION
MCB CAMP LEJEUNE

NAVAL FACILITIES ENGINEERING SYSTEMS COMMAND ATLANTIC
NORFOLK, VA
JACKSONVILLE, NC

P1527 LOGCOM CSP WAREHOUSE

GRADING AND DRAINAGE PLAN

SCALE:	AS NOTED
EPROJECT NO.:	1639600
CONSTR. CONTR. NO.	N40085-20-C-0059
NAVFAC DRAWING NO.	14111041
SHEET	38 OF 447

CG102

P1527 FINAL SUBMISSION - 11/18/2021

PLOTTED: 11/11/2021 9:21:57 PM

FILE NAME: \\moonpa1d1\VOL2_PROJECTS\180780 HF Package 3\05_Deliverables\Drawings\05 C_Civil\Sheet Files\P1527\175970_P1527F - CG101.dwg

STORM STRUCTURES TABLE		
STRUCTURE ID	DATA	LOCATION
EX. STM 4.01 HEADWALL	RIM=22.14 IN V. OUT=36" SE 18.62	N: 337374.78 E: 2500060.85
EX. STM 4.02 HEADWALL	RIM=15.83 IN V. IN=36" NW 12.80	N: 337006.21 E: 2500372.49
EX. STM 5.01 INLET	RIM=23.00 IN V. IN=18" SW 20.45	N: 337983.62 E: 2499825.96
EX. STM 5.02 INLET	RIM=23.25 IN V. IN=18" SW 20.96 IN V. OUT=18" NE 20.96	N: 337928.00 E: 2499761.97
EX. STM 5.03 INLET	RIM=24.30 IN V. IN=18" SW 22.04 IN V. OUT=18" NE 22.04	N: 337835.12 E: 2499657.04
EX. STM 5.04 INLET	RIM=24.86 IN V. IN=18" SW 22.47 IN V. OUT=18" NE 22.47	N: 337773.07 E: 2499587.79
EX. STM 5.05 INLET	RIM=25.24 IN V. IN=18" SW 23.03 IN V. OUT=18" NE 23.03	N: 337757.71 E: 2499570.90
EX. STM 5.06 INLET	RIM=25.97 IN V. IN=15" SE 23.57 IN V. IN=18" SW 23.57 IN V. OUT=18" NE 23.57	N: 337667.76 E: 2499469.93
EX. STM 5.07 HEADWALL	RIM=26.58 IN V. OUT=18" NE 24.37	N: 337626.42 E: 2499423.83
STM 1.00 HEADWALL	RIM=22.90 IN V. IN=36" NW 19.06	N: 337385.26 E: 2500052.91
STM 1.01 INLET	RIM=26.18 IN V. IN=36" NE 19.43 IN V. IN=24" SW 21.00 IN V. OUT=36" SE 19.37	N: 337411.91 E: 2500029.01
STM 1.02 INLET	RIM=25.74 IN V. IN=24" N 20.83 IN V. OUT=36" SW 19.71	N: 337449.43 E: 2500071.27
STM 1.03 INLET	RIM=25.05 IN V. IN=24" NW 21.22 IN V. OUT=24" S 21.22	N: 337522.22 E: 2500095.03
STM 1.04 INLET	RIM=25.44 IN V. OUT=24" SE 21.53	N: 337567.24 E: 2500056.87
STM 2.01 INLET	RIM=27.00 IN V. IN=24" W 22.91 IN V. IN=8" NW 23.63 IN V. IN=8" NW 24.16 IN V. OUT=24" NE 22.83	N: 337292.20 E: 2499893.90
STM 2.02 HEADWALL	RIM=26.19 IN V. OUT=24" E 24.25	N: 337338.71 E: 2499756.30
STM 3.02 HEADWALL	RIM=26.94 IN V. OUT=15" NW 25.00	N: 337635.79 E: 2499493.34

APPR | DATE | DESCRIPTION | SYM

NAVFAC

COMMONWEALTH OF PENNSYLVANIA
REGISTERED PROFESSIONAL
BRANDON ROBB FOMBELLE
ENGINEER No. PE086276

RQ Jordan COMPANY – A JOINT VENTURE –

Michael Baker INTERNATIONAL
100 AIRSIDE DRIVE
MOON TOWNSHIP, PA 15108
A/E INFO

APPROVED

FOR COMMANDER NAVFAC

ACTIVITY
MARINE CORPS BASE
CAMP LEJEUNE

SATISFACTORY TO DATE

DES	DRW	CHK
BRF	BRF	WN

PM / DM: TOWLER / ROOT
BRANCH HEAD:
DESIGN DIRECTOR: R.L.Stephens, Jr.
FIRE PROTECTION: DPS

DEPARTMENT OF THE NAVY
NAVAL FACILITIES ENGINEERING SYSTEMS COMMAND
ATLANTIC DESIGN AND CONSTRUCTION

NAVAL FACILITIES ENGINEERING SYSTEMS COMMAND ATLANTIC
NORFOLK, VA

MCB CAMP LEJEUNE
JACKSONVILLE, NC
P1527 LOGCOM CSP WAREHOUSE

STORM SEWER STRUCTURE TABLES

SCALE: AS NOTED
EPROJECT NO.: 1639600
CONSTR. CONTR. NO.: N40085-20-C-0059
NAVFAC DRAWING NO.: 14111042
SHEET 39 OF 447

CG200

P1527 FINAL SUBMISSION - 11/19/2021

PLOTTED: 11/11/2021 9:23:47 PM

FILE NAME: \\mcorps1st1\VOL2_PROJECTS\180700 HF Package 3\05_Deliverables\Drawings\05 C_Civil\Sheet Files\P1527\175970_P1527F - CG200.dwg

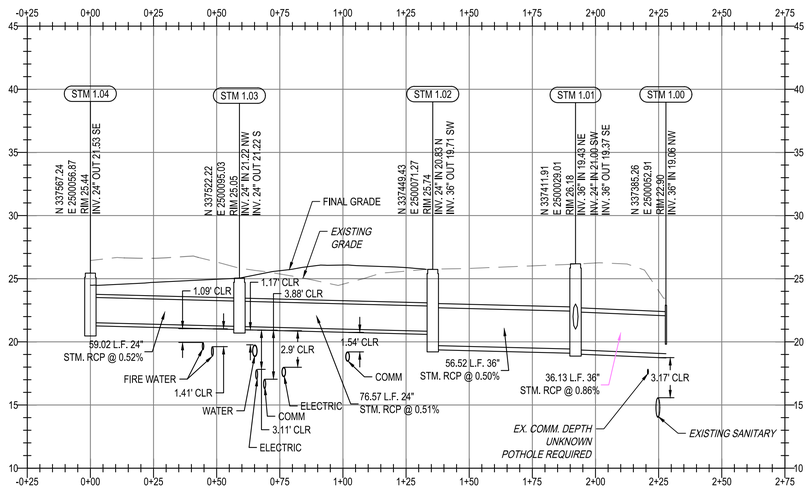

STORM RUN 1 PROFILE
SCALE: 1"=30 H, 1"=6V

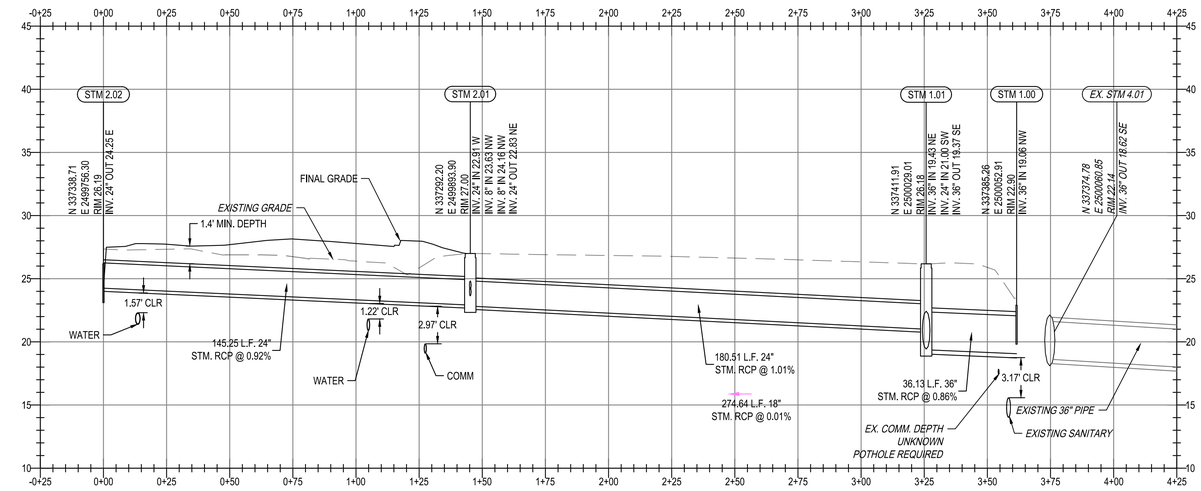

STORM RUN 2 PROFILE
SCALE: 1"=30 H, 1"=6V

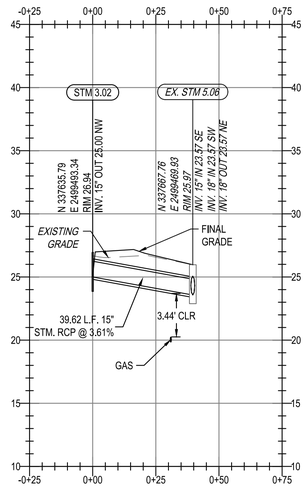

STORM RUN 3 PROFILE
SCALE: 1"=30 H, 1"=6V

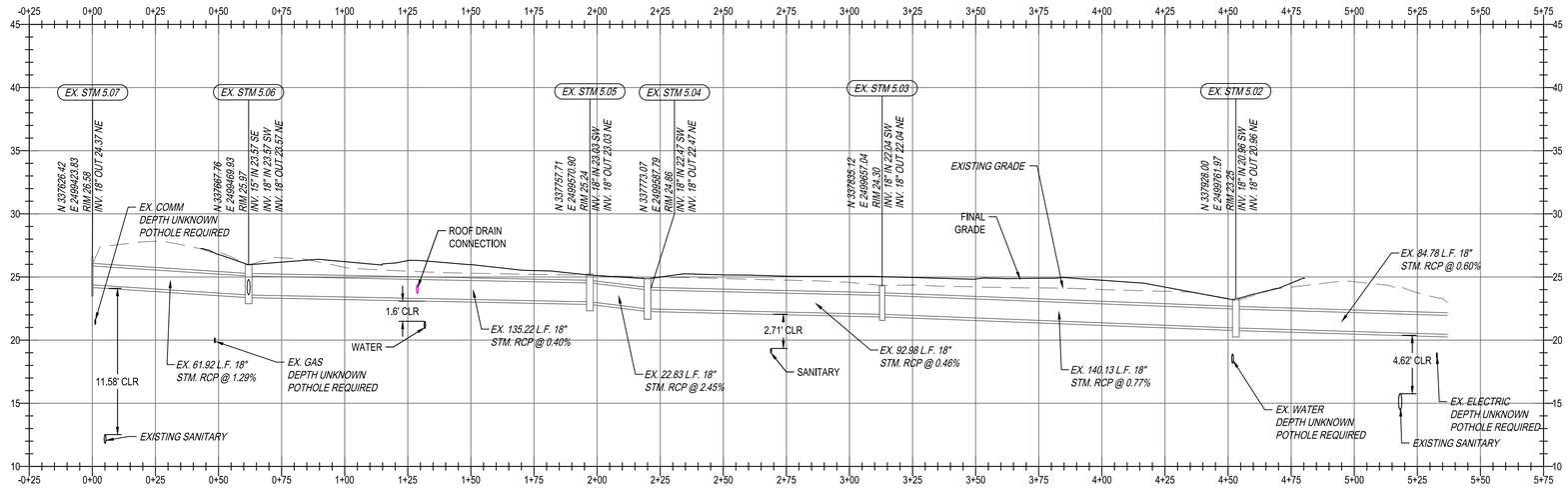

EXISTING STORM -EAST ROAD PROFILE
SCALE: 1"=30 H, 1"=6V

APPR | DATE | DESCRIPTION | SYM

NAVFAC

COMMONWEALTH OF PENNSYLVANIA
REGISTERED PROFESSIONAL
BRANDON ROBB FOMBELLE
ENGINEER No. PE086276

RQ Jordan COMPANY - A JOINT VENTURE -

Michael Baker INTERNATIONAL
100 AIRSIDE DRIVE
MOON TOWNSHIP, PA 15108
A/E INFO

APPROVED

FOR COMMANDER NAVFAC

ACTIVITY
MARINE CORPS BASE
CAMP LEJEUNE

SATISFACTORY TO DATE

DES	DRW	CHK
BRF	BRF	WN

PM / DM: TOWLER / ROOT
BRANCH HEAD:
DESIGN DIRECTOR: R.L.Stephens, Jr.
FIRE PROTECTION: DPS

DEPARTMENT OF THE NAVY
NAVAL FACILITIES ENGINEERING SYSTEMS COMMAND
ATLANTIC DESIGN AND CONSTRUCTION

NAVAL FACILITIES ENGINEERING SYSTEMS COMMAND ATLANTIC
NORFOLK, VA

MCB CAMP LEJEUNE
JACKSONVILLE, NC
P1527 LOGCOM CSP WAREHOUSE

STORM SEWER PROFILES

SCALE:	AS NOTED
EPROJECT NO.:	1639600
CONSTR. CONTR. NO.	N40085-20-C-0059
NAVFAC DRAWING NO.	14111043
SHEET	40 OF 447

CG201

P1527 FINAL SUBMISSION - 11/19/2021

PLOTTED: 11/11/2021 9:23:49 PM
FILE NAME: \\mcorps1\d1\VOL2_PROJECTS\160700 HF Package 3\05_Deliverables\Drawings\05 C_Civil\Sheet Files\P1527\175970_P1527F - CG200.dwg

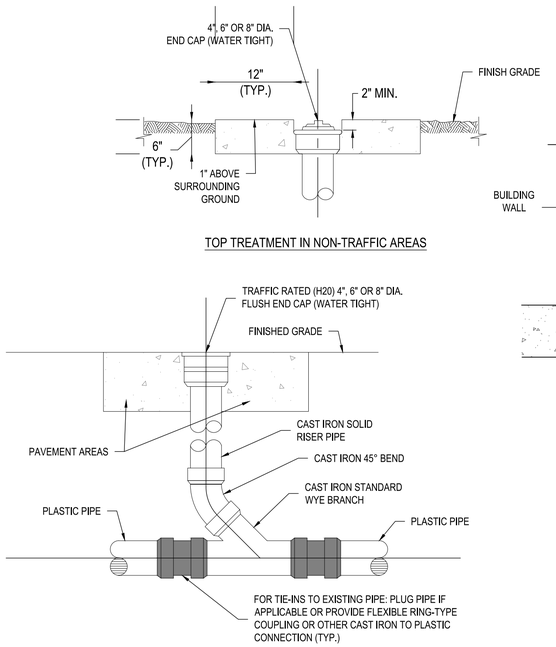

STORM SEWER CLEANOUT TO GRADE

SCALE: N.T.S.

C1

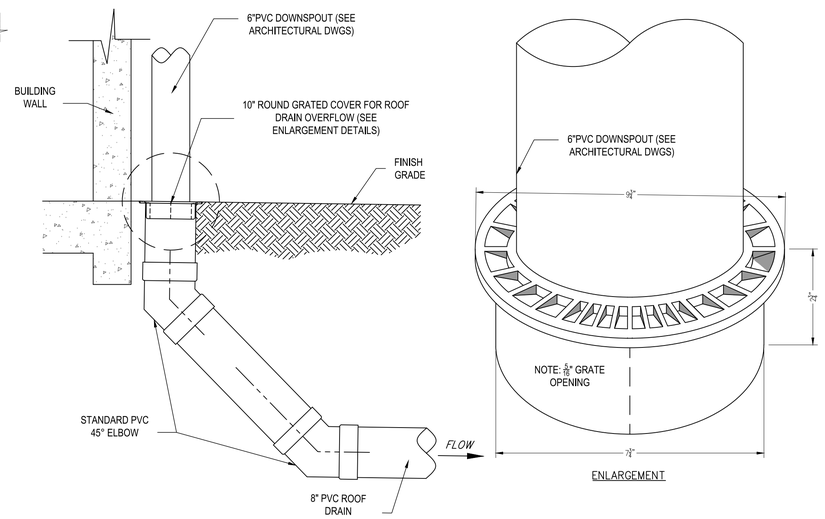

ROOF DRAIN COLLECTOR DETAIL

SCALE: N.T.S.

C2

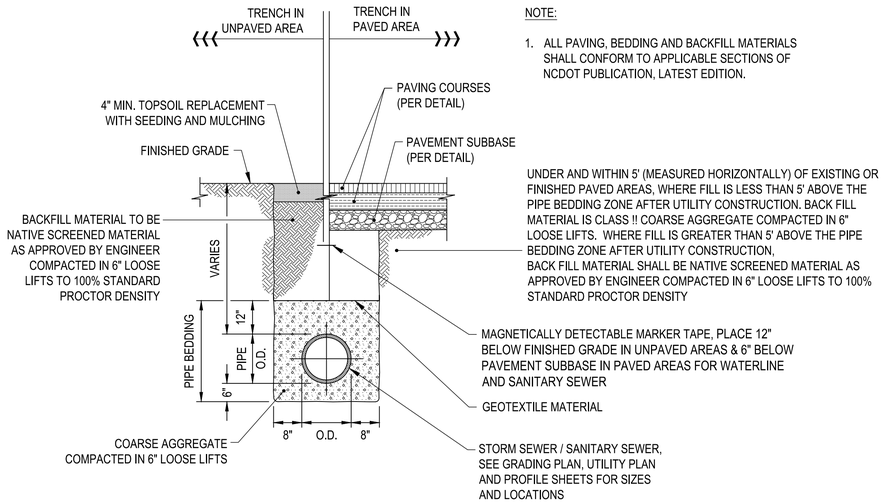

NOTE:

1. ALL PAVING, BEDDING AND BACKFILL MATERIALS SHALL CONFORM TO APPLICABLE SECTIONS OF NCDOT PUBLICATION, LATEST EDITION.

UNDER AND WITHIN 5' (MEASURED HORIZONTALLY) OF EXISTING OR FINISHED PAVED AREAS, WHERE FILL IS LESS THAN 5' ABOVE THE PIPE BEDDING ZONE AFTER UTILITY CONSTRUCTION. BACK FILL MATERIAL IS CLASS !! COARSE AGGREGATE COMPACTED IN 6" LOOSE LIFTS. WHERE FILL IS GREATER THAN 5' ABOVE THE PIPE BEDDING ZONE AFTER UTILITY CONSTRUCTION, BACK FILL MATERIAL SHALL BE NATIVE SCREENED MATERIAL AS APPROVED BY ENGINEER COMPACTED IN 6" LOOSE LIFTS TO 100% STANDARD PROCTOR DENSITY

TYPICAL TRENCH AND BEDDING

SCALE: N.T.S.

C4

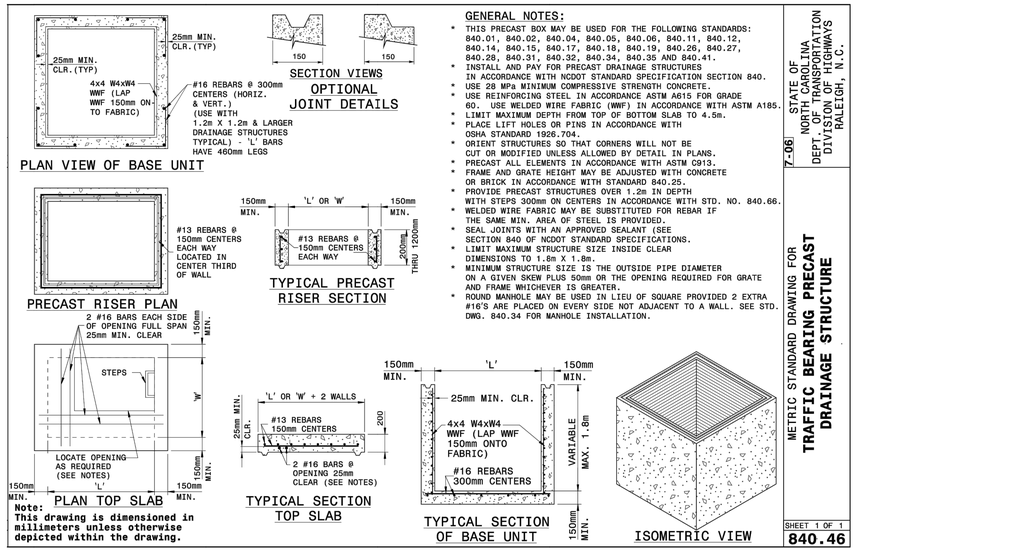

Note:
This drawing is dimensioned in millimeters unless otherwise depicted within the drawing.

GENERAL NOTES:

* THIS PRECAST BOX MAY BE USED FOR THE FOLLOWING STANDARDS: 840.01, 840.02, 840.04, 840.05, 840.06, 840.11, 840.12, 840.14, 840.15, 840.17, 840.18, 840.19, 840.26, 840.27, 840.28, 840.31, 840.32, 840.34, 840.35 AND 840.41.
* INSTALL AND PAY FOR PRECAST DRAINAGE STRUCTURES IN ACCORDANCE WITH NCDOT STANDARD SPECIFICATION SECTION 840.
* USE 28 MPa MINIMUM COMPRESSIVE STRENGTH CONCRETE.
* USE REINFORCING STEEL IN ACCORDANCE ASTM A615 FOR GRADE 60. USE WELDED WIRE FABRIC (WWF) IN ACCORDANCE WITH ASTM A185.
* LIMIT MAXIMUM DEPTH FROM TOP OF BOTTOM SLAB TO 4.5m.
* PLACE LIFT HOLES OR PINS IN ACCORDANCE WITH OSHA STANDARD 1926.704.
* ORIENT STRUCTURES SO THAT CORNERS WILL NOT BE CUT OR MODIFIED UNLESS ALLOWED BY DETAIL IN PLANS.
* PRECAST ALL ELEMENTS IN ACCORDANCE WITH ASTM C913.
* FRAME AND GRATE HEIGHT MAY BE ADJUSTED WITH CONCRETE OR BRICK IN ACCORDANCE WITH STANDARD 840.25.
* PROVIDE PRECAST STRUCTURES OVER 1.2m IN DEPTH WITH STEPS 300mm ON CENTERS IN ACCORDANCE WITH STD. NO. 840.66.
* WELDED WIRE FABRIC MAY BE SUBSTITUTED FOR REBAR IF THE SAME MIN. AREA OF STEEL IS PROVIDED.
* SEAL JOINTS WITH AN APPROVED SEALANT (SEE SECTION 840 OF NCDOT STANDARD SPECIFICATIONS.
* LIMIT MAXIMUM STRUCTURE SIZE INSIDE CLEAR DIMENSIONS TO 1.8m X 1.8m.
* MINIMUM STRUCTURE SIZE IS THE OUTSIDE PIPE DIAMETER ON A GIVEN SKEW PLUS 50mm OR THE OPENING REQUIRED FOR GRATE AND FRAME WHICHEVER IS GREATER.
* ROUND MANHOLE MAY BE USED IN LIEU OF SQUARE PROVIDED 2 EXTRA #16'S ARE PLACED ON EVERY SIDE NOT ADJACENT TO A WALL. SEE STD. DWG. 840.34 FOR MANHOLE INSTALLATION.

STATE OF NORTH CAROLINA
DEPT. OF TRANSPORTATION
DIVISION OF HIGHWAYS
RALEIGH, N.C.

7-06

METRIC STANDARD DRAWING FOR
TRAFFIC BEARING PRECAST DRAINAGE STRUCTURE

SHEET 1 OF 1

840.46

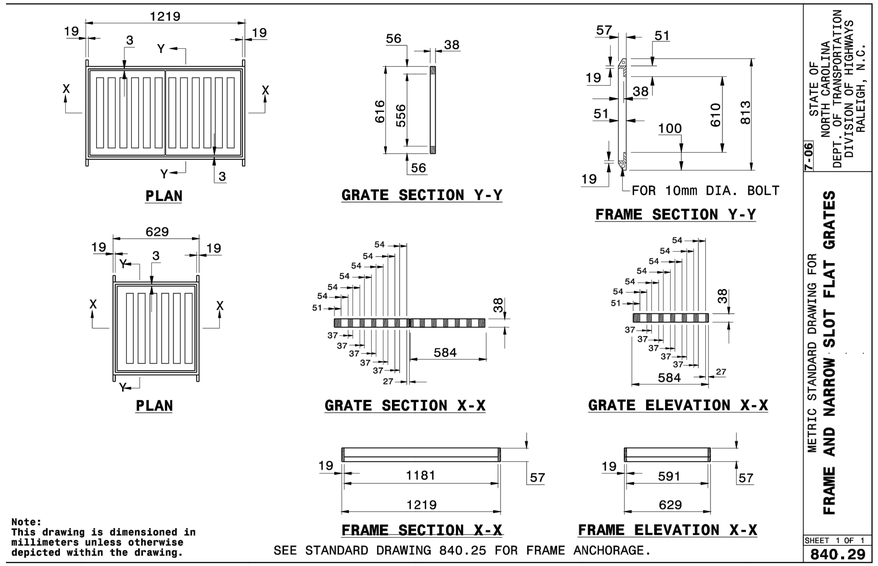

Note:
This drawing is dimensioned in millimeters unless otherwise depicted within the drawing.

SEE STANDARD DRAWING 840.25 FOR FRAME ANCHORAGE.

STATE OF NORTH CAROLINA
DEPT. OF TRANSPORTATION
DIVISION OF HIGHWAYS
RALEIGH, N.C.

7-06

METRIC STANDARD DRAWING FOR
FRAME AND NARROW SLOT FLAT GRATES

SHEET 1 OF 1

840.29

CONCRETE CATCH BASIN

SCALE: N.T.S.

A1

APPR	
DATE	
DESCRIPTION	
SYM	

NAVFAC

COMMONWEALTH OF PENNSYLVANIA
REGISTERED PROFESSIONAL
BRANDON ROBB FOMBELLE
ENGINEER No. PE086276

RQ Jordan COMPANY – A JOINT VENTURE –

Michael Baker INTERNATIONAL
100 AIRSIDE DRIVE
MOON TOWNSHIP, PA 15108
A/E INFO

APPROVED

FOR COMMANDER NAVFAC

ACTIVITY
MARINE CORPS BASE
CAMP LEJEUNE

SATISFACTORY TO DATE

DES	BRF	DRW	BRF	CHK	WN
PM / DM		TOWLER / ROOT			

BRANCH HEAD

DESIGN DIRECTOR R.L.Stephens, Jr.

FIRE PROTECTION DPS

DEPARTMENT OF THE NAVY
NAVAL FACILITIES ENGINEERING SYSTEMS COMMAND
ATLANTIC DESIGN AND CONSTRUCTION
MCB CAMP LEJEUNE

NAVAL FACILITIES ENGINEERING SYSTEMS COMMAND ATLANTIC
NORFOLK, VA
JACKSONVILLE, NC
P1527 LOGCOM CSP WAREHOUSE

DRAINAGE DETAILS

SCALE:	AS NOTED
EPROJECT NO.:	1639600
CONSTR. CONTR. NO.	N40085-20-C-0059
NAVFAC DRAWING NO.	14111044
SHEET	41 OF 447

CG501

P1527 FINAL SUBMISSION - 11/19/2021

PLOTTED: 11/11/2021 9:24:46 PM

FILE NAME: \\mcorps1st\1VOL2_PROJECTS\1807\00 HF Package 3\05_Deliverables\Drawings\05 C_Civil\Sheet Files\P1527\175970_P1527F - CG500.dwg

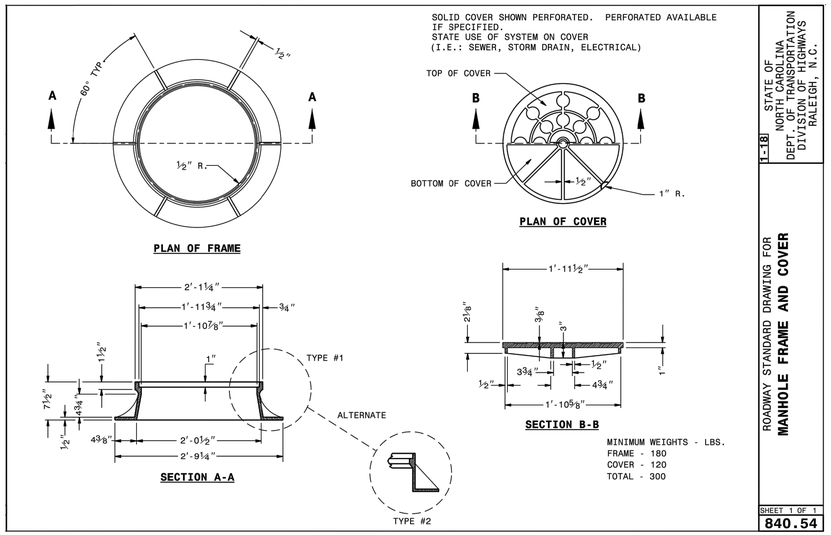

MANHOLE FRAME AND COVER
SCALE: N.T.S.

C1

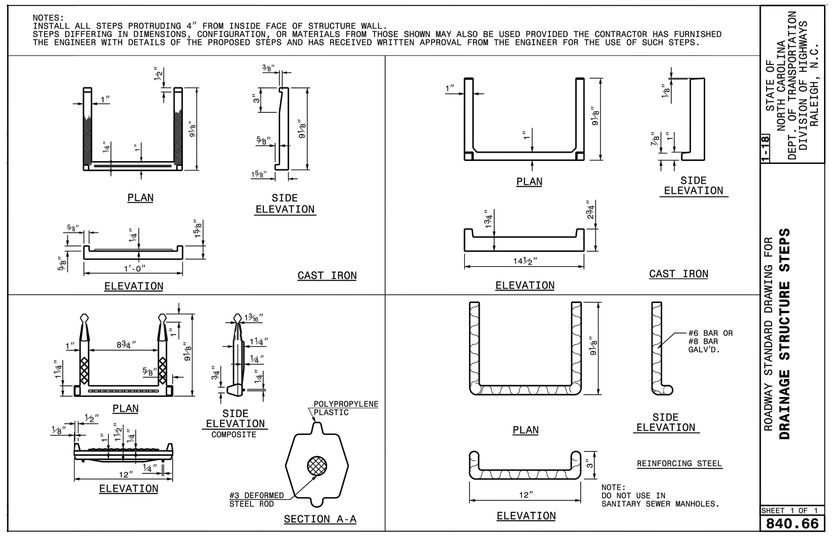

DRAINAGE STRUCTURE STEPS
SCALE: N.T.S.

C3

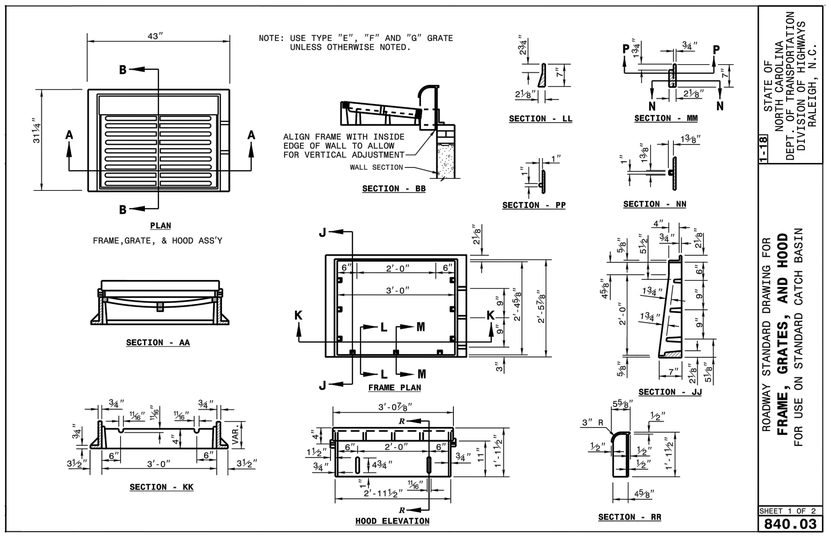

CATCH BASIN FRAME, GRATE, AND HOOD
SCALE: N.T.S.

A1

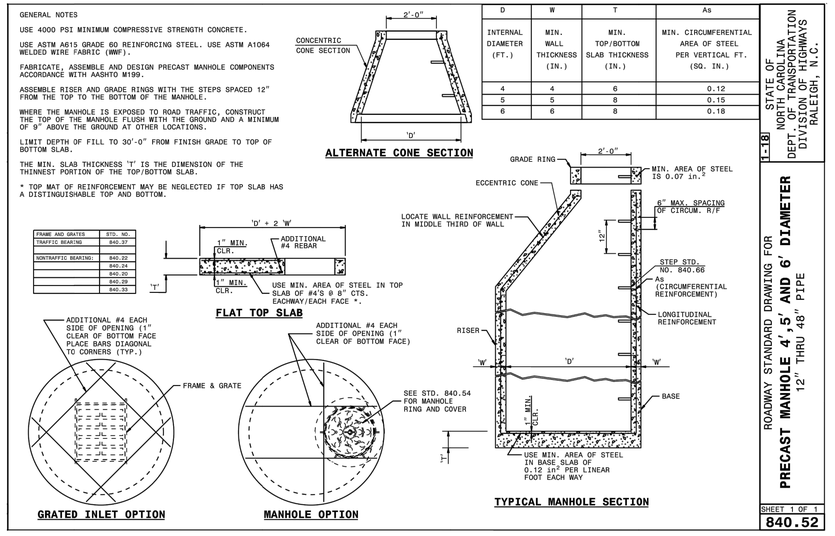

PRECAST MANHOLE
SCALE: N.T.S.

A3

			APPR
			DATE
			DESCRIPTION
			SYM

NAVFAC

COMMONWEALTH OF PENNSYLVANIA
REGISTERED PROFESSIONAL
BRANDON ROBB FOMBELLE
ENGINEER No. PE086276

RQ Jordan COMPANY - A JOINT VENTURE -

Michael Baker INTERNATIONAL
100 AIRSIDE DRIVE
MOON TOWNSHIP, PA 15108
A/E INFO

APPROVED

FOR COMMANDER NAVFAC

ACTIVITY
MARINE CORPS BASE
CAMP LEJEUNE

SATISFACTORY TO DATE

DES BRF | DRW BRF | CHK WN

PM / DM TOWLER / ROOT

BRANCH HEAD

DESIGN DIRECTOR R.L.Stephens, Jr.

FIRE PROTECTION DPS

DEPARTMENT OF THE NAVY
NAVAL FACILITIES ENGINEERING SYSTEMS COMMAND
ATLANTIC DESIGN AND CONSTRUCTION

NAVAL FACILITIES ENGINEERING SYSTEMS COMMAND ATLANTIC
NORFOLK, VA

MCB CAMP LEJEUNE
JACKSONVILLE, NC
P1527 LOGCOM CSP WAREHOUSE

DRAINAGE DETAILS

SCALE: AS NOTED
EPROJECT NO.: 1639600
CONSTR. CONTR. NO. N40085-20-C-0059
NAVFAC DRAWING NO. 14111045
SHEET 42 OF 447

CG502

P1527 FINAL SUBMISSION - 11/19/2021

PLOTTED: 11/11/2021 9:24:48 PM

FILE NAME: \\mcorps1st11\OL2_PROJECTS\180780 HF Package 3\05_Deliverables\Drawings\05 C_Civil\Sheet Files\P1527\175970_P1527F - CG500.dwg

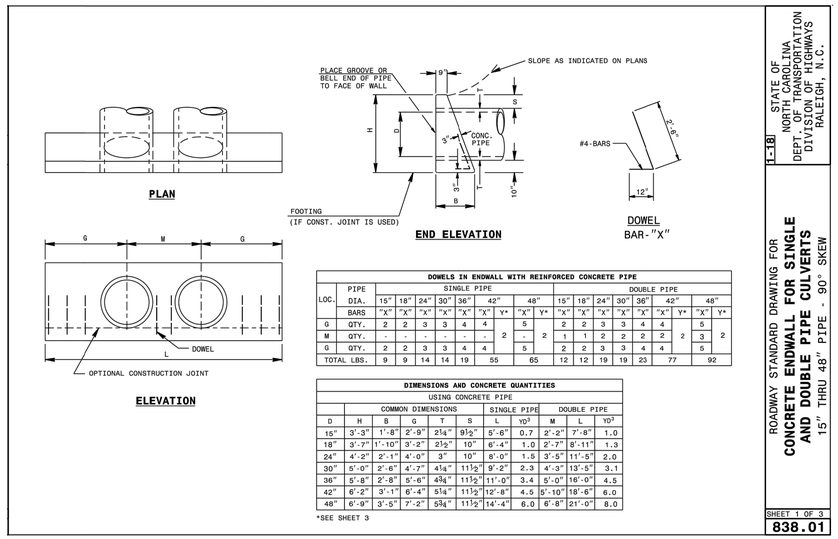

DOWELS IN ENDWALL WITH REINFORCED CONCRETE PIPE

LOC.	PIPE DIA.	SINGLE PIPE								DOUBLE PIPE									
		15"	18"	24"	30"	36"	42"		48"		15"	18"	24"	30"	36"	42"		48"	
	BARS	"X"	"X"	"X"	"X"	"X"	"X"	Y*	"X"	Y*	"X"	"X"	"X"	"X"	"X"	"X"	Y*	"X"	Y*
G	QTY.	2	2	3	3	4	4		5		2	2	3	3	4	4		5	
M	QTY.	-	-	-	-	-	-	2	-	2	1	1	2	2	2	2	2	3	2
G	QTY.	2	2	3	3	4	4		5		2	2	3	3	4	4		5	
TOTAL LBS.		9	9	14	14	19	55		65		12	12	19	19	23	77		92	

DIMENSIONS AND CONCRETE QUANTITIES
USING CONCRETE PIPE

	COMMON DIMENSIONS					SINGLE PIPE	DOUBLE PIPE		
D	H	B	G	T	S	L	YD³	M	L	YD³
15"	3'-3"	1'-8"	2'-9"	2¼"	9½"	5'-6"	0.7	2'-2"	7'-8"	1.0
18"	3'-7"	1'-10"	3'-2"	2½"	10"	6'-4"	1.0	2'-7"	8'-11"	1.3
24"	4'-2"	2'-1"	4'-0"	3"	10"	8'-0"	1.5	3'-3"	11'-5"	2.0
30"	5'-0"	2'-6"	4'-7"	4¼"	11½"	9'-2"	2.3	4'-3"	13'-5"	3.1
36"	5'-8"	2'-8"	5'-6"	4¾"	11½"	11'-0"	3.4	5'-0"	16'-0"	4.5
42"	6'-2"	3'-1"	6'-4"	5¼"	11½"	12'-8"	4.5	5'-10"	18'-6"	6.0
48"	6'-9"	3'-5"	7'-2"	5¾"	11½"	14'-4"	6.0	6'-8"	21'-0"	8.0

*SEE SHEET 3

1-18 STATE OF NORTH CAROLINA DEPT. OF TRANSPORTATION DIVISION OF HIGHWAYS RALEIGH, N.C.

ROADWAY STANDARD DRAWING FOR
CONCRETE ENDWALL FOR SINGLE AND DOUBLE PIPE CULVERTS
15" THRU 48" PIPE - 90° SKEW

SHEET 1 OF 3
838.01

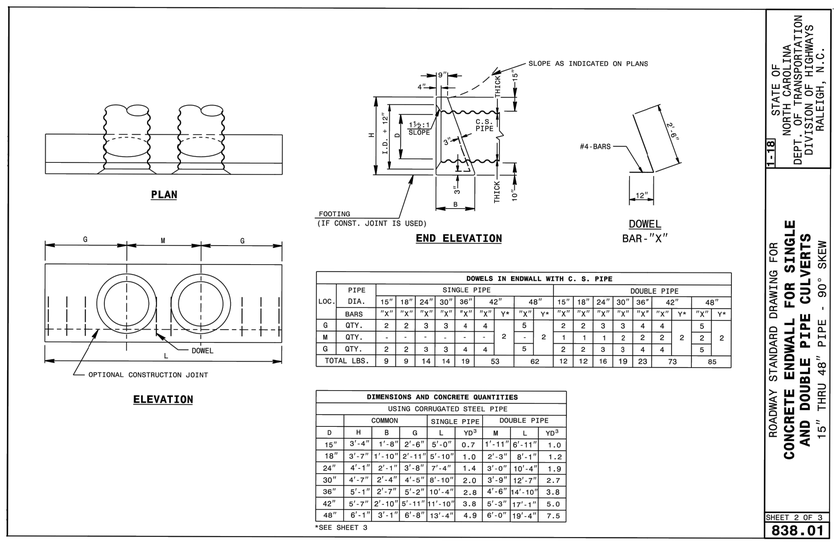

DOWELS IN ENDWALL WITH C. S. PIPE

LOC.	PIPE DIA.	SINGLE PIPE									DOUBLE PIPE									
		15"	18"	24"	30"	36"	42"		48"		15"	18"	24"	30"	36"	42"		48"		
	BARS	"X"	"X"	"X"	"X"	"X"	"X"	Y*	"X"	Y*	"X"	"X"	"X"	"X"	"X"	"X"	Y*	"X"	Y*	
G	QTY.	2	2	3	3	4	4		5		2	2	3	3	4	4		5		
M	QTY.	-	-	-	-	-	-	2	-	2	1	1	1	2	2	2	2	2	2	
G	QTY.	2	2	3	3	4	4		5		2	2	3	3	4	4		5		
TOTAL LBS.		9	9	14	14	19	53		62		12	12	16	19	23	73		85		

DIMENSIONS AND CONCRETE QUANTITIES
USING CORRUGATED STEEL PIPE

	COMMON			SINGLE PIPE		DOUBLE PIPE		
D	H	B	G	L	YD³	M	L	YD³
15"	3'-4"	1'-8"	2'-6"	5'-0"	0.7	1'-11"	6'-11"	1.0
18"	3'-7"	1'-10"	2'-11"	5'-10"	1.0	2'-3"	8'-1"	1.2
24"	4'-1"	2'-1"	3'-8"	7'-4"	1.4	3'-0"	10'-4"	1.9
30"	4'-7"	2'-4"	4'-5"	8'-10"	2.0	3'-9"	12'-7"	2.7
36"	5'-1"	2'-7"	5'-2"	10'-4"	2.8	4'-6"	14'-10"	3.8
42"	5'-7"	2'-10"	5'-11"	11'-10"	3.8	5'-3"	17'-1"	5.0
48"	6'-1"	3'-1"	6'-8"	13'-4"	4.9	6'-0"	19'-4"	7.5

*SEE SHEET 3

1-18 STATE OF NORTH CAROLINA DEPT. OF TRANSPORTATION DIVISION OF HIGHWAYS RALEIGH, N.C.

ROADWAY STANDARD DRAWING FOR
CONCRETE ENDWALL FOR SINGLE AND DOUBLE PIPE CULVERTS
15" THRU 48" PIPE - 90° SKEW

SHEET 2 OF 3
838.01

GENERAL NOTES:

CHAMFER ALL CORNERS 1" OR HAVE A RADIUS OF 1".

PLACE 2 #6 "Y" BARS IN THE TOP OF ALL ENDWALL FOR PIPE CULVERTS 42" AND OVER WITH A MINIMUM OF 3" COVER AND A LENGTH OF 6" LESS THAN ENDWALL LENGTH.

CONSTRUCT BOTTOM SLAB WITH FORMS.

DO NOT INTERPRET WALL THICKNESS (T) SHOWN FOR THE THICKNESS ACCEPTABLE, BUT IS USED IN COMPUTING ENDWALL QUANTITIES.

WHEN THE CONTRACTOR ELECTS TO USE A CONSTRUCTION JOINT AT THE BOTTOM OF THE PIPE, PLACE BAR "X" DOWELS IN THE BASE AS SHOWN ON PLANS. SPACE BARS APPROXIMATELY ON 12" CENTERS UNLESS OTHERWISE DIRECTED BY THE ENGINEER.

WHEN THE CONTRACTOR ELECTS TO USE A CONSTRUCTION JOINT AT THE BOTTOM OF THE PIPE AND POUR THE BASE SEPARATELY LEAVE THE POUR ROUGH.

USE CLASS "B" CONCRETE.

CONCRETE ENDWALL
SCALE: N.T.S.

B1

	APPR	DATE	DESCRIPTION	SYM

NAVFAC

COMMONWEALTH OF PENNSYLVANIA
REGISTERED PROFESSIONAL
BRANDON ROBB FOMBELLE
ENGINEER No. PE086276

RQ AKM Jordan COMPANY – A JOINT VENTURE –

Michael Baker INTERNATIONAL
100 AIRSIDE DRIVE
MOON TOWNSHIP, PA 15108
A/E INFO

APPROVED

FOR COMMANDER NAVFAC

ACTIVITY
MARINE CORPS BASE CAMP LEJEUNE

SATISFACTORY TO DATE

DES	DRW	CHK
BRF	BRF	WN

PM / DM: TOWLER / ROOT
BRANCH HEAD:
DESIGN DIRECTOR: R.L.Stephens, Jr.
FIRE PROTECTION: DPS

DEPARTMENT OF THE NAVY
NAVAL FACILITIES ENGINEERING SYSTEMS COMMAND
ATLANTIC DESIGN AND CONSTRUCTION
NAVAL FACILITIES ENGINEERING SYSTEMS COMMAND ATLANTIC
NORFOLK, VA
MCB CAMP LEJEUNE
JACKSONVILLE, NC
P1527 LOGCOM CSP WAREHOUSE
DRAINAGE DETAILS

SCALE: AS NOTED
EPROJECT NO.: 1639600
CONSTR. CONTR. NO.: N40085-20-C-0059
NAVFAC DRAWING NO.: 14111046
SHEET 43 OF 447

CG503

P1527 FINAL SUBMISSION - 11/19/2021

PLOTTED: 11/11/2021 9:24:49 PM
FILE NAME: \\mcorps1st1\VOL2_PROJECTS\1807\00 HF Package 3\05_Deliverables\Drawings\05 C_Civil\Sheet Files\P1527r17597\0_P1527F - CG503.dwg

GENERAL NOTES

1. SEE SHEET C-001 - C-003 FOR CIVIL GENERAL NOTES.
2. SEE SHEET C-004 FOR CIVIL LEGEND AND ABBREVIATIONS.
3. SEE SHEET CE001 FOR EROSION AND SEDIMENT CONTROL NOTES AND SEQUENCING
4. SEE SHEET CE504 AND CE505 FOR NCDEQ EROSION AND SEDIMENT CONTROL NOTES
5. UNLESS OTHERWISE INDICATED ON THE PLANS, ALL NON-PAVED AREAS SHALL BE GRASS.

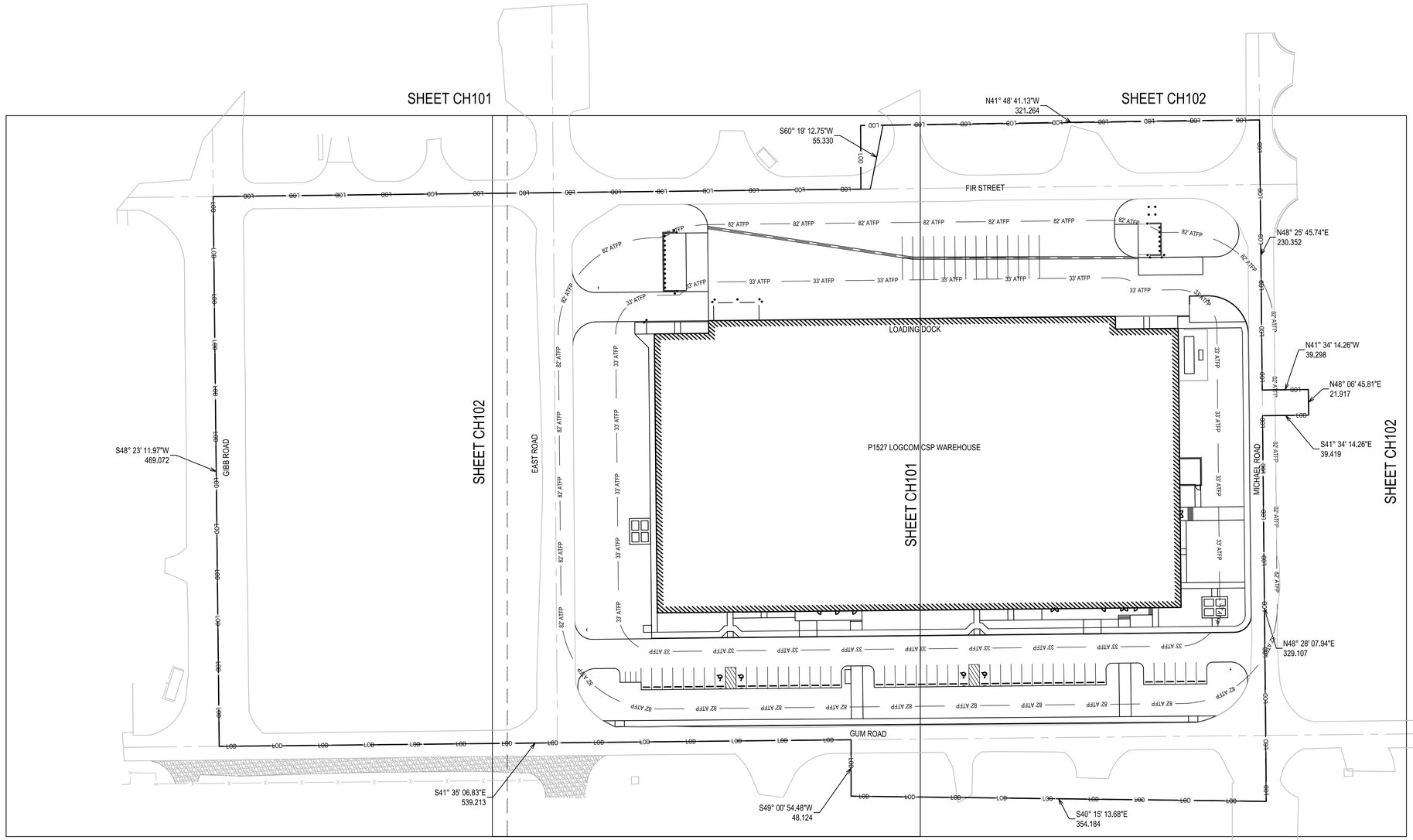

0 25' 50' 100'

SCALE: 1" = 50'

			APPR
			DATE
			DESCRIPTION
			SYM

NAVFAC

COMMONWEALTH OF PENNSYLVANIA
REGISTERED PROFESSIONAL
BRANDON ROBB FOMBELLE
ENGINEER
No. PE086276

RQ AWM Jordan COMPANY
- A JOINT VENTURE -

Michael Baker INTERNATIONAL
100 AIRSIDE DRIVE
MOON TOWNSHIP, PA 15108
A/E INFO

APPROVED

FOR COMMANDER NAVFAC

ACTIVITY
MARINE CORPS BASE
CAMP LEJEUNE

SATISFACTORY TO DATE

DES	BRF	DRW BRF	CHK WN
PM / DM	TOWLER / ROOT		
BRANCH HEAD			
DESIGN DIRECTOR	R.L.Stephens, Jr.		
FIRE PROTECTION	DPS		

DEPARTMENT OF THE NAVY
NAVAL FACILITIES ENGINEERING SYSTEMS COMMAND
ATLANTIC DESIGN AND CONSTRUCTION
MCB CAMP LEJEUNE

NAVAL FACILITIES ENGINEERING SYSTEMS COMMAND ATLANTIC
NORFOLK, VA
JACKSONVILLE, NC
P1527 LOGCOM CSP WAREHOUSE

OVERALL HORIZONTAL CONTROL PLAN

SCALE:	AS NOTED
EPROJECT NO.:	1639600
CONSTR. CONTR. NO.	N40085-20-C-0059
NAVFAC DRAWING NO.	14111047
SHEET	44 OF 447

CH100

P1527 FINAL SUBMISSION - 11/18/2021

PLOTTED: 11/11/2021 9:25:27 PM

FILE NAME: \\mcorps\dfs\VOL2_PROJECTS\160750 HF Package 3\05_Deliverables\Drawings\05 C_Civil\Sheet Files\P1527\175970_P1527F - CH100.dwg

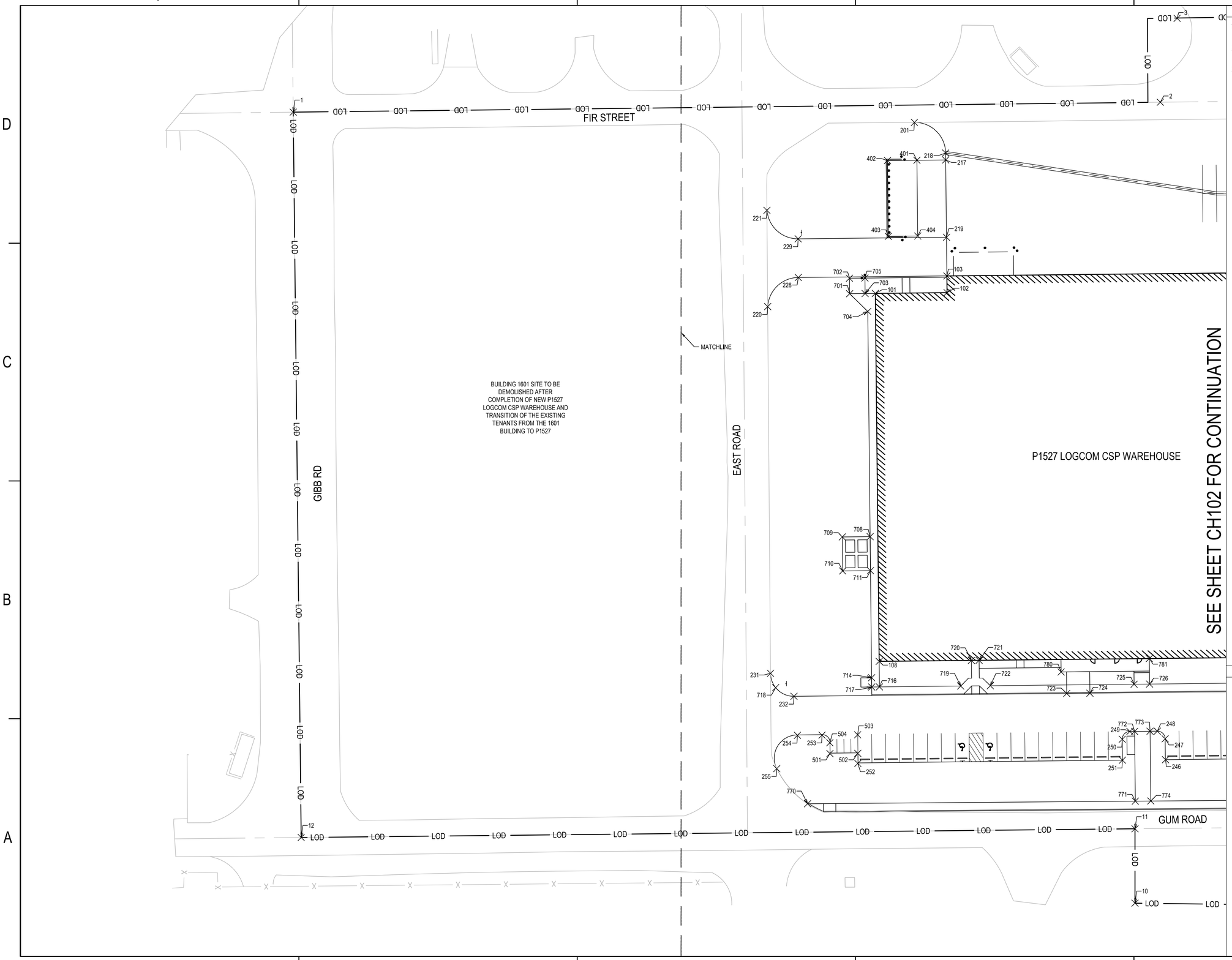

GENERAL NOTES

1. SEE SHEET C-001 - C-003 FOR CIVIL GENERAL NOTES.
2. SEE SHEET C-004 FOR CIVIL LEGEND AND ABBREVIATIONS.
3. SEE SHEET CH501 FOR TABLE OF HORIZONTAL CONTROL POINTS.

KEY PLAN

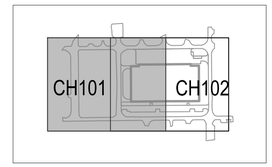

0 15' 30' 60'
SCALE: 1" = 30'

SYM	DESCRIPTION	DATE	APPR

NAVFAC

COMMONWEALTH OF PENNSYLVANIA
REGISTERED PROFESSIONAL
BRANDON ROBB FOMBELLE
ENGINEER No. PE086276

RQ W.M. Jordan COMPANY - A JOINT VENTURE -

Michael Baker INTERNATIONAL
100 AIRSIDE DRIVE
MOON TOWNSHIP, PA 15108
A/E INFO

APPROVED

FOR COMMANDER NAVFAC

ACTIVITY
MARINE CORPS BASE CAMP LEJEUNE

SATISFACTORY TO DATE

DES BRF	DRW BRF	CHK WN
PM / DM	TOWLER / ROOT	
BRANCH HEAD		
DESIGN DIRECTOR	R.L.Stephens, Jr.	
FIRE PROTECTION	DPS	

DEPARTMENT OF THE NAVY
NAVAL FACILITIES ENGINEERING SYSTEMS COMMAND
ATLANTIC DESIGN AND CONSTRUCTION
NAVAL FACILITIES ENGINEERING SYSTEMS COMMAND ATLANTIC
NORFOLK, VA
MCB CAMP LEJEUNE
JACKSONVILLE, NC

P1527 LOGCOM CSP WAREHOUSE

HORIZONTAL CONTROL PLAN

SCALE:	AS NOTED
EPROJECT NO.:	1639600
CONSTR. CONTR. NO.	N40085-20-C-0059
NAVFAC DRAWING NO.	14111048
SHEET	45 OF 447

CH101

P1527 FINAL SUBMISSION - 11/18/2021

PLOTTED: 11/11/2021 9:26:25 PM

FILE NAME: \\mcorpa1d11\VOL2_PROJECTS\180780 HF Package 3\05_Deliverables\Drawings\05 C_Civil\Sheet Files\P1527\175970_P1527F - CH101.dwg

GENERAL NOTES

1. SEE SHEET C-001 - C-003 FOR CIVIL GENERAL NOTES.
2. SEE SHEET C-004 FOR CIVIL LEGEND AND ABBREVIATIONS.
3. SEE SHEET CH501 FOR TABLE OF HORIZONTAL CONTROL POINTS.

FIR STREET

LOADING DOCK

P1527 LOGCOM CSP WAREHOUSE

EAST ROAD

MICHAEL ROAD

GUM ROAD

MATCHLINE

SEE SHEET CH101 FOR CONTINUATION

LOD

KEY PLAN

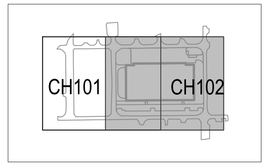

0 15' 30' 60'

SCALE: 1" = 30'

APPR	DATE	DESCRIPTION	SYM

NAVFAC

COMMONWEALTH OF PENNSYLVANIA
REGISTERED PROFESSIONAL
BRANDON ROBB FOMBELLE
ENGINEER No. PE086276

RQ Jordan COMPANY - A JOINT VENTURE -

Michael Baker INTERNATIONAL

100 AIRSIDE DRIVE
MOON TOWNSHIP, PA 15108 A/E INFO

APPROVED

FOR COMMANDER NAVFAC

ACTIVITY
MARINE CORPS BASE
CAMP LEJEUNE

SATISFACTORY TO DATE

DES	BRF	DRW	BRF	CHK	WN

PM / DM TOWLER / ROOT

BRANCH HEAD

DESIGN DIRECTOR R.L.Stephens, Jr.

FIRE PROTECTION DPS

DEPARTMENT OF THE NAVY
NAVAL FACILITIES ENGINEERING SYSTEMS COMMAND
ATLANTIC DESIGN AND CONSTRUCTION

NAVAL FACILITIES ENGINEERING SYSTEMS COMMAND ATLANTIC
NORFOLK, VA

MCB CAMP LEJEUNE
JACKSONVILLE, NC

P1527 LOGCOM CSP WAREHOUSE

HORIZONTAL CONTROL PLAN

SCALE:	AS NOTED
EPROJECT NO.:	1639600
CONSTR. CONTR. NO.	N40085-20-C-0059
NAVFAC DRAWING NO.	14111049
SHEET	46 OF 447

CH102

P1527 FINAL SUBMISSION - 11/18/2021

PLOTTED: 11/11/2021 9:26:27 PM

FILE NAME: \\moonpa1d11\VOL2_PROJECTS\180760-HF Package 3\06_Deliverables\Drawings\05 C_Civil\Sheet Files\P1527\175970_P1527F - CH101.dwg

Point Table			
Point #	Raw Description	Northing	Easting
1	LOD	338196.1501	2499581.2607
2	LOD	337777.1049	2499953.8404
3	LOD	337804.5018	2500001.9117
4	LOD	337565.0500	2500216.0923
5	LOD	337412.2015	2500043.7570
6	LOD	337382.8013	2500069.8328
7	LOD	337368.1683	2500053.5167
8	LOD	337397.6591	2500027.3606
9	LOD	337179.4520	2499780.9921
10	LOD	337449.7618	2499552.1273
11	LOD	337481.3245	2499588.4555
12	LOD	337884.6391	2499230.5619
101	BUILDING	337835.1189	2499739.6399
102	BUILDING	337800.4340	2499770.4465
103	BUILDING	337807.6106	2499778.5339
104	BUILDING	337547.9173	2500008.9808
105	BUILDING	337540.6975	2500000.9872
106	GENERATOR PAD	337500.7944	2500036.3409
107	BUILDING	337342.8432	2499858.3437
108	BUILDING	337677.1815	2499561.6583
201	ASPHALT PAVING	337888.5864	2499839.7119
202	ASPHALT PAVING	337599.4963	2500096.9223
203	ASPHALT PAVING	337601.0248	2500068.8283
204	ASPHALT PAVING	337600.0418	2500067.7205
205	ASPHALT PAVING	337585.0177	2500081.0525
206	ASPHALT PAVING	337566.1268	2500059.6339
207	ASPHALT PAVING	337556.1708	2500048.4144
208	ASPHALT PAVING	337515.0325	2500084.9197
209	ASPHALT PAVING	337524.9885	2500096.1393
210	ASPHALT PAVING	337516.6971	2500103.4969
211	ASPHALT PAVING	337526.9744	2500138.2304
212	ASPHALT PAVING	337452.1849	2500072.3602
213	ASPHALT PAVING	337452.2094	2500072.3386
214	ASPHALT PAVING	337500.3420	2500073.8906
215	ASPHALT PAVING	337511.9864	2500063.5577
216	ASPHALT PAVING	337499.9736	2500051.4880
217	ASPHALT PAVING	337857.3906	2499834.6316
218	ASPHALT PAVING	337860.3812	2499838.0017
219	ASPHALT PAVING	337824.2040	2499797.2331
220	ASPHALT PAVING	337882.0886	2499687.5598
221	ASPHALT PAVING	337923.2595	2499734.2082
228	ASPHALT PAVING	337879.4856	2499714.7535
229	ASPHALT PAVING	337895.9480	2499733.5689
231	ASPHALT PAVING	337725.1725	2499509.7673
232	ASPHALT PAVING	337703.9702	2499508.4735
233	ASPHALT PAVING	337294.8045	2499872.2277
234	ASPHALT PAVING	337293.5848	2499892.6993
235	ASPHALT PAVING	337256.6061	2499843.7337
236	ASPHALT PAVING	337280.8826	2499850.4895
237	ASPHALT PAVING	337291.9331	2499840.6834
238	ASPHALT PAVING	337292.3543	2499833.6248
239	ASPHALT PAVING	337283.3939	2499823.5275
240	ASPHALT PAVING	337323.7874	2499787.6896
241	ASPHALT PAVING	337332.7480	2499797.7871
242	ASPHALT PAVING	337339.8065	2499798.2081

Point Table			
Point #	Raw Description	Northing	Easting
243	ASPHALT PAVING	337356.2322	2499783.6319
244	ASPHALT PAVING	337356.6533	2499776.5734
245	ASPHALT PAVING	337347.6927	2499766.4759
246	ASPHALT PAVING	337495.7120	2499635.1226
247	ASPHALT PAVING	337504.7493	2499645.1520
248	ASPHALT PAVING	337511.8078	2499645.5731
249	ASPHALT PAVING	337525.0959	2499633.7811
250	ASPHALT PAVING	337525.5170	2499626.7226
251	ASPHALT PAVING	337516.5564	2499616.6252
252	ASPHALT PAVING	337644.3348	2499502.7949
253	ASPHALT PAVING	337673.8209	2499501.4456
254	ASPHALT PAVING	337685.7473	2499490.9195
255	ASPHALT PAVING	337681.7100	2499465.8775
401	DUMPSTER PAD	337871.3013	2499822.2875
402	DUMPSTER PAD	337885.5127	2499809.6766
403	DUMPSTER PAD	337852.9898	2499773.0261
404	DUMPSTER PAD	337838.7783	2499785.6371
501	MOTORCYCLE STALLS	337662.1237	2499495.7642
502	MOTORCYCLE STALLS	337648.6282	2499507.6752
503	MOTORCYCLE STALLS	337656.5689	2499516.6722
504	MOTORCYCLE STALLS	337666.7557	2499501.0124
701	SIDEWALK	337847.5422	2499728.6157
702	SIDEWALK	337854.1796	2499736.0954
703	SIDEWALK	337840.0625	2499735.2530
704	SIDEWALK	337831.1533	2499727.6378
705	SIDEWALK	337846.6999	2499742.7327
708	SIDEWALK	337734.4991	2499618.7171
709	SIDEWALK	337747.9626	2499606.7699
710	SIDEWALK	337733.3605	2499590.3146
711	SIDEWALK	337719.8970	2499602.2618
714	SIDEWALK	337673.9422	2499550.4977
716	SIDEWALK	337666.2299	2499549.3168
717	SIDEWALK	337669.9697	2499545.9981
718	SIDEWALK	337716.5824	2499504.9301
719	SIDEWALK	337626.9206	2499584.1991
720	SIDEWALK	337632.5833	2499601.2339
721	SIDEWALK	337628.8435	2499604.5525
722	SIDEWALK	337612.6029	2499596.9043
723	SIDEWALK	337572.0449	2499625.5415
724	SIDEWALK	337560.8254	2499635.4975
725	SIDEWALK	337543.0595	2499658.6158
726	SIDEWALK	337535.5798	2499665.2532
727	SIDEWALK	337463.7772	2499735.6542
728	SIDEWALK	337475.1500	2499740.9372
729	SIDEWALK	337471.4101	2499744.2558
730	SIDEWALK	337469.5119	2499723.8805
731	SIDEWALK	337455.1450	2499736.6295
732	SIDEWALK	337453.4589	2499760.1854
733	SIDEWALK	337449.7190	2499763.5041
734	SIDEWALK	337447.4851	2499753.4535
735	SIDEWALK	337398.9984	2499795.9609
736	SIDEWALK	337381.4948	2499798.7978
737	SIDEWALK	337371.9506	2499810.4545
738	SIDEWALK	337376.6658	2499815.7681
739	SIDEWALK	337371.3779	2499824.8754

Point Table			
Point #	Raw Description	Northing	Easting
740	SIDEWALK	337364.4709	2499817.0918
741	SIDEWALK	337350.1973	2499829.7580
742	SIDEWALK	337361.1111	2499842.0958
743	SIDEWALK	337357.4238	2499845.4749
744	SIDEWALK	337346.4575	2499833.0767
745	SIDEWALK	337298.1232	2499875.9676
746	SIDEWALK	337297.3240	2499889.3800
747	SIDEWALK	337312.5152	2499906.4291
748	SIDEWALK	337353.4517	2499870.2986
749	SIDEWALK	337356.7704	2499874.0384
750	SIDEWALK	337352.9955	2499877.3882
751	SIDEWALK	337315.8331	2499910.1695
752	SIDEWALK	337351.1078	2499949.9218
753	SIDEWALK	337382.1856	2499922.2976
754	SIDEWALK	337389.8880	2499930.6628
755	CHILLER ENCLOSURE	337412.3589	2499936.6818
756	CHILLER ENCLOSURE	337398.3719	2499947.7565
757	SIDEWALK	337386.1482	2499933.9814
758	SIDEWALK	337358.6278	2499958.4025
759	SIDEWALK	337457.2894	2500069.6383
760	SIDEWALK	337460.3729	2500072.1471
761	GENERATOR PAD	337481.5559	2500052.0749
762	SIDEWALK	337507.4632	2500044.8777
763	SIDEWALK	337499.9658	2500051.4949
764	SIDEWALK	337496.8619	2500046.5143
765	SIDEWALK	337460.5099	2500078.7132
766	SIDEWALK	337323.3973	2499863.2214
767	SIDEWALK	337335.3445	2499876.6849
768	SIDEWALK	337318.8892	2499891.2870
769	SIDEWALK	337306.9420	2499877.8236
770	SIDEWALK	337651.7791	2499461.7770
771	SIDEWALK	337492.8808	2499602.0689
772	SIDEWALK	337522.8166	2499635.8038
773	SIDEWALK	337515.3370	2499642.4413
774	SIDEWALK	337485.4011	2499608.7062
775	SIDEWALK	337321.3908	2499753.4780
776	SIDEWALK	337351.7099	2499787.6450
777	SIDEWALK	337344.2303	2499794.2824
778	SIDEWALK	337313.8945	2499760.0966
779	SIDEWALK	337259.0629	2499808.5075
780	SIDEWALK	337583.8930	2499633.6545
781	SIDEWALK	337546.5314	2499677.5946
782	SIDEWALK	337467.5170	2499732.3355
783	SIDEWALK	337357.1407	2499837.5973
784	SIDEWALK	337388.1733	2499917.0306
785	CHILLER ENCLOSURE	337413.6378	2499964.9598
786	CHILLER ENCLOSURE	337426.9610	2499953.1371
787	GENERATOR PAD	337470.0273	2500002.5877
788	GENERATOR PAD	337450.6908	2500019.7165

APPR | DATE | DESCRIPTION | SYM

NAVFAC

COMMONWEALTH OF PENNSYLVANIA
REGISTERED PROFESSIONAL
BRANDON ROBB FOMBELLE
ENGINEER No. PE086276

NWM Jordan COMPANY - A JOINT VENTURE -

Michael Baker INTERNATIONAL
100 AIRSIDE DRIVE
MOON TOWNSHIP, PA 15108
A/E INFO

APPROVED

FOR COMMANDER NAVFAC

ACTIVITY
MARINE CORPS BASE
CAMP LEJEUNE

SATISFACTORY TO DATE

DES	DRW	CHK
BRF	BRF	WN

PM / DM: TOWLER / ROOT
BRANCH HEAD:
DESIGN DIRECTOR: R.L.Stephens, Jr.
FIRE PROTECTION: DPS

DEPARTMENT OF THE NAVY
NAVAL FACILITIES ENGINEERING SYSTEMS COMMAND
ATLANTIC DESIGN AND CONSTRUCTION
MCB CAMP LEJEUNE

NAVAL FACILITIES ENGINEERING SYSTEMS COMMAND ATLANTIC
NORFOLK, VA

JACKSONVILLE, NC
P1527 LOGCOM CSP WAREHOUSE

HORIZONTAL CONTROL POINT TABLES

SCALE: AS NOTED
EPROJECT NO.: 1639600
CONSTR. CONTR. NO. N40085-20-C-0059
NAVFAC DRAWING NO. 14111050
SHEET 47 OF 447

CH501

P1527 FINAL SUBMISSION - 11/19/2021

PLOTTED: 11/11/2021 9:27:12 PM

FILE NAME: \\mcorps1d1.bkr.mbakercorp.com\VOL2_PROJECTS\180780 HF Package 3\05_Deliverables\DrawingsI\05 C_Civil\Sheet Files\P1527\175970_P1527F - CH101.dwg

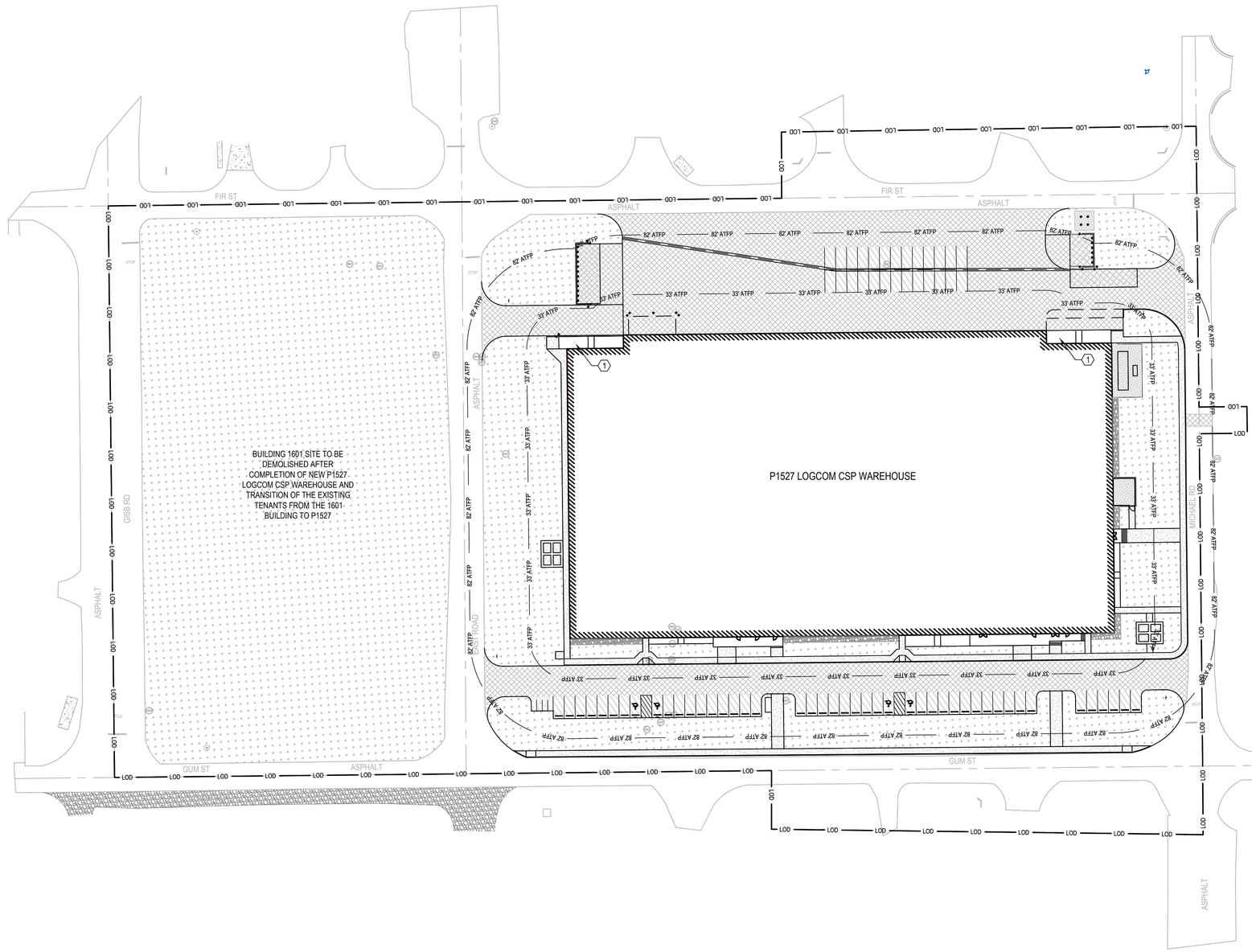

KEYED NOTES

NOT ALL KEYED NOTES MAY APPEAR ON SHEET

1. RAMP (A2, A3/A313)

PAVEMENT LEGEND

- CONCRETE SIDEWALK PAVEMENT (C1/CP502)
- LIGHT DUTY ASPHALT PAVEMENT (PARKING BAYS) (C1/CP501)
- HEAVY DUTY ASPHALT PAVEMENT (ACCESS DRIVES) (A4/CP501)
- CONCRETE DUMPSTER PAD (C4/CP501)
- 5' WIDE ROCK MULCH MOW STRIP (5/L-501)
- TURF SODDING (6/L-501)
- CONCRETE EQUIPMENT PAD (C3/CP502)

0 25' 50' 100'

SCALE: 1" = 50'

APPR	DATE	DESCRIPTION	SYM

NAVFAC

COMMONWEALTH OF PENNSYLVANIA
REGISTERED PROFESSIONAL
BRANDON ROBB FOMBELLE
ENGINEER No. PE086276

RQ Jordan COMPANY - A JOINT VENTURE -

Michael Baker INTERNATIONAL
100 AIRSIDE DRIVE
MOON TOWNSHIP, PA 15108
A/E INFO

APPROVED

FOR COMMANDER NAVFAC

ACTIVITY
MARINE CORPS BASE CAMP LEJEUNE

SATISFACTORY TO DATE

DES	DRW	CHK
BRF	BRF	WN

PM / DM: TOWLER / ROOT
BRANCH HEAD:
DESIGN DIRECTOR: R.L.Stephens, Jr.
FIRE PROTECTION: DPS

DEPARTMENT OF THE NAVY
NAVAL FACILITIES ENGINEERING SYSTEMS COMMAND
ATLANTIC DESIGN AND CONSTRUCTION
MCB CAMP LEJEUNE

NAVAL FACILITIES ENGINEERING SYSTEMS COMMAND ATLANTIC
NORFOLK, VA.

JACKSONVILLE, NC
P1527 LOGCOM CSP WAREHOUSE

OVERALL PAVING PLAN

SCALE: AS NOTED
EPROJECT NO.: 1639600
CONSTR. CONTR. NO.: N40085-20-C-0059
NAVFAC DRAWING NO.: 14111051
SHEET 48 OF 447

CP100

P1527 FINAL SUBMISSION - 11/18/2021

PLOTTED: 11/11/2021 9:27:56 PM

FILE NAME: \\mcorpsa1d1\VOL2_PROJECTS\180780-HF Package 3\05_Deliverables\Drawings\05 C_Civil\Sheet Files\P1527\175970_P1527F - CP100.dwg

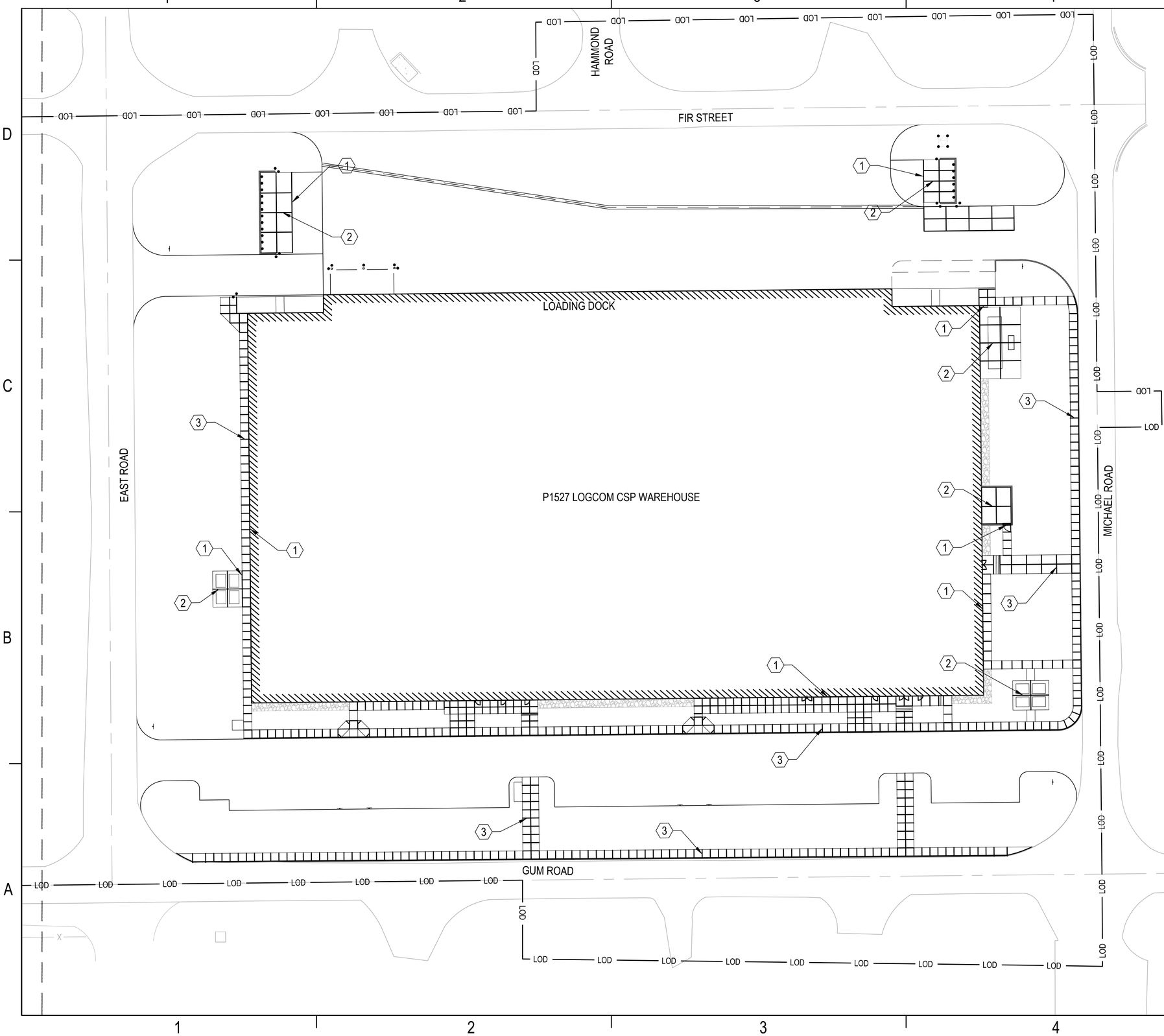

KEYED NOTES

NOT ALL KEYED NOTES MAY APPEAR ON SHEET

1. EXPANSION JOINT (TYP - SEE PAVEMENT DETAILS CP502)
2. SAW JOINT (TYP - SEE PAVEMENT DETAILS CP502)
3. SEE PAVEMENT DETAILS (CP502) FOR SIDEWALK JOINT TYPE AND SPACING

GENERAL NOTES

1. SEE SHEET C-001 - C-003 FOR CIVIL GENERAL NOTES.
2. SEE SHEET C-004 FOR CIVIL LEGEND AND ABBREVIATIONS.
3. SEE SHEET CE001 FOR EROSION AND SEDIMENT CONTROL NOTES AND SEQUENCING
4. SEE SHEET CE504 AND CE505 FOR NCDEQ EROSION AND SEDIMENT CONTROL NOTES
5. UNLESS OTHERWISE INDICATED ON THE PLANS, ALL NON-PAVED AREAS SHALL BE GRASS.

KEY PLAN

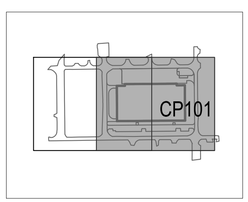

0 15' 30' 60'

SCALE: 1" = 30'

APPR	DATE	DESCRIPTION	SYM

COMMONWEALTH OF PENNSYLVANIA
REGISTERED PROFESSIONAL
BRANDON ROBB FOMBELLE
ENGINEER No. PE086276

RQ AWM Jordan COMPANY - A JOINT VENTURE -

Michael Baker INTERNATIONAL
100 AIRSIDE DRIVE
MOON TOWNSHIP, PA 15108 A/E INFO

APPROVED

FOR COMMANDER NAVFAC

ACTIVITY
MARINE CORPS BASE CAMP LEJEUNE

SATISFACTORY TO DATE

DES	BRF	DRW	BRF	CHK	WN
PM / DM			TOWLER / ROOT		
BRANCH HEAD					
DESIGN DIRECTOR			R.L.Stephens, Jr.		
FIRE PROTECTION			DPS		

DEPARTMENT OF THE NAVY
NAVAL FACILITIES ENGINEERING SYSTEMS COMMAND
ATLANTIC DESIGN AND CONSTRUCTION

NAVAL FACILITIES ENGINEERING SYSTEMS COMMAND ATLANTIC
NORFOLK, VA

MCB CAMP LEJEUNE
P1527 LOGCOM CSP WAREHOUSE
JACKSONVILLE, NC

JOINT LAYOUT PLAN

SCALE:	AS NOTED
EPROJECT NO.:	1639600
CONSTR. CONTR. NO.	N40085-20-C-0059
NAVFAC DRAWING NO.	14111052
SHEET	49 OF 447

CP101

P1527 FINAL SUBMISSION - 11/19/2021

PLOTTED: 11/11/2021 9:28:47 PM

FILE NAME: \\mcorps1d1.bir.mbakercorp.com\VOL2_PROJECTS\180780 HF Package 3\05_Deliverables\Drawings\05 C_Civil\Sheet Files\P1527\175970_P1527F - CP101.dwg

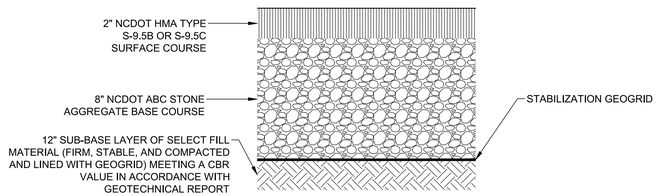

NOTES:

1. AGGREGATE BASE COURSE SHALL EXTEND A MINIMUM OF 2 FEET BEYOND THE EDGE OF ASPHALT SURFACE/INTERMEDIATE COURSE.
2. NCDOT TYPE ABC, COMPACTED TO A DRY DENSITY OF AT LEAST 100% OF THE MODIFIED PROCTOR MAXIMUM DRY DENSITY (ASTM D 1557)
3. THE SUBGRADE SOILS (NATURAL AND/OR SELECT FILL) SHOULD BE COMPACTED TO A DRY DENSITY OF AT LEAST 95% OF THE STANDARD PROCTOR MAXIMUM DRY DENSITY (ASTM D 698).

LIGHT DUTY ASPHALT PAVEMENT - PARKING BAYS — C1

SCALE: N.T.S.

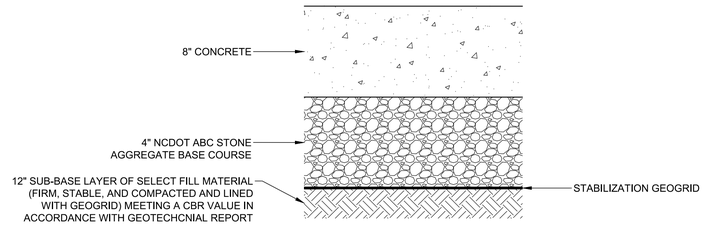

NOTES:

1. CONCRETE SHALL HAVE A MINIMUM COMPRESSIVE STRENGTH OF 5000 PSI AT 28 DAYS.
2. NCDOT ABC STONE COMPACTED TO A DRY DENSITY OF AT LEAST 100% OF THE MODIFIED PROCTOR MAXIMUM DRY DENSITY (ASTM D1557)
3. THE SUBGRADE SOILS (NATURAL AND/OR SELECT FILL) SHOULD BE COMPACTED TO A DRY DENSITY OF AT LEAST 95% OF THE STANDARD PROCTOR MAXIMUM DRY DENSITY (ASTM D 698).

CONCRETE PAVEMENT - DUMPSTER PAD — C4

SCALE: N.T.S.

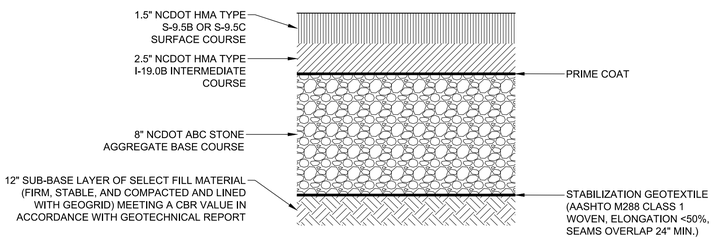

NOTES:

1. AGGREGATE BASE COURSE SHALL EXTEND A MINIMUM OF 2 FEET BEYOND THE EDGE OF ASPHALT SURFACE/INTERMEDIATE COURSE.
2. NCDOT ABC MATERIALS COMPACTED TO A DRY DENSITY OF AT LEAST 100% OF THE MODIFIED PROCTOR MAXIMUM DRY DENSITY (ASTM D 1557)
3. SUBGRADE SOILS COMPACTED TO A DRY DENSITY OF AT LEAST 95% OF THE STANDARD PROCTOR MAXIMUM DRY DENSITY (ASTM D 698) TO A DEPTH OF 12 INCHES BELOW EXISTING GRADES.

HEAVY DUTY ASPHALT PAVEMENT - ACCESS DRIVES — A4

SCALE: N.T.S.

APPR	DATE	DESCRIPTION	SYM

NAVFAC

COMMONWEALTH OF PENNSYLVANIA — REGISTERED PROFESSIONAL — BRANDON ROBB FOMBELLE — ENGINEER No. PE086276

RQ Jordan COMPANY - A JOINT VENTURE -

Michael Baker INTERNATIONAL
100 AIRSIDE DRIVE
MOON TOWNSHIP, PA 15108 — A/E INFO

APPROVED

FOR COMMANDER NAVFAC

ACTIVITY: MARINE CORPS BASE CAMP LEJEUNE

SATISFACTORY TO DATE

DES	DRW	CHK
BRF	BRF	WN

PM / DM: TOWLER / ROOT

BRANCH HEAD

DESIGN DIRECTOR: R.L.Stephens, Jr.

FIRE PROTECTION: DPS

DEPARTMENT OF THE NAVY
NAVAL FACILITIES ENGINEERING SYSTEMS COMMAND
ATLANTIC DESIGN AND CONSTRUCTION

NAVAL FACILITIES ENGINEERING SYSTEMS COMMAND ATLANTIC
NORFOLK, VA

MCB CAMP LEJEUNE
JACKSONVILLE, NC

P1527 LOGCOM CSP WAREHOUSE

PAVEMENT DETAILS

SCALE:	AS NOTED
EPROJECT NO.:	1639600
CONSTR. CONTR. NO.	N40085-20-C-0059
NAVFAC DRAWING NO.	14111053
SHEET	50 OF 447

CP501

P1527 FINAL SUBMISSION - 11/19/2021

PLOTTED: 11/11/2021 9:29:29 PM

FILE NAME: \\mcorps1st1\V2\2_PROJECTS\169700 HF Package 3\05_Deliverables\Drawings\05 C_Civil\Sheet Files\P1527\175970_P1527F - CP500.dwg

NOTES:

CONSTRUCT STANDARD SIDEWALK 5′ WIDE AND 4″ THICK UNLESS OTHERWISE DENOTED ON PLANS.

PLACE A GROOVE JOINT 1″ DEEP WITH ⅛″ RADII IN THE CONCRETE SIDEWALK AT 5′ INTERVALS. ONE ½″ EXPANSION JOINT WILL BE REQUIRED AT 50′ INTERVALS. A ½″ EXPANSION JOINT WILL BE REQUIRED WHERE THE SIDEWALK JOINS ANY RIGID STRUCTURE.

SEE STD. DWG. 848.05 FOR CURB RAMP LOCATION REQUIREMENTS AND CONSTRUCTION GUIDELINES.

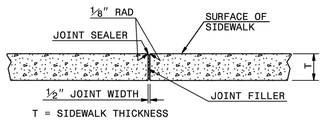

TRANSVERSE EXPANSION JOINT IN SIDEWALK

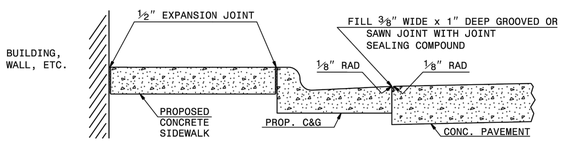

DETAILS SHOWING JOINTS IN CONCRETE SIDEWALK

STATE OF NORTH CAROLINA
DEPT. TRANSPORTATION
DIVISION OF HIGHWAYS
RALEIGH, N.C.

1-18

ROADWAY STANDARD DRAWING FOR
CONCRETE SIDEWALK

SHEET 1 OF 1
848.01

CONCRETE SIDEWALK
SCALE: N.T.S.
C1

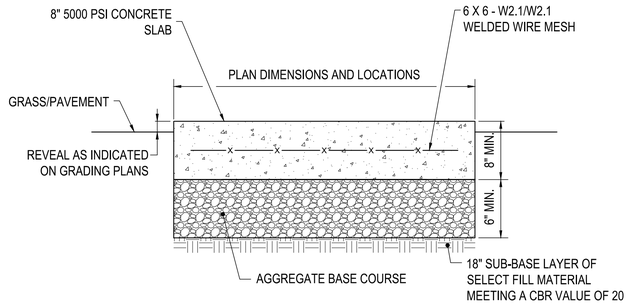

NOTES:
1. COORDINATE SIZE WITH CS-SERIES, ELECTRICAL, AND MECHANICAL SHEETS. COORDINATE LOCATION WITH CS-SERIES SHEETS.
2. PAD DIMENSIONS AND REINFORCEMENT SHALL BE ADJUSTED PER INDIVIDUAL EQUIPMENT MANUFACTURER RECOMMENDATIONS.

CONCRETE EQUIPMENT PAD
SCALE: N.T.S.
C3

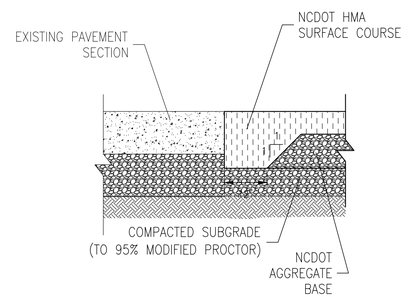

THICKENED ASPHALT PAVEMENT EDGE
SCALE: N.T.S.
D4

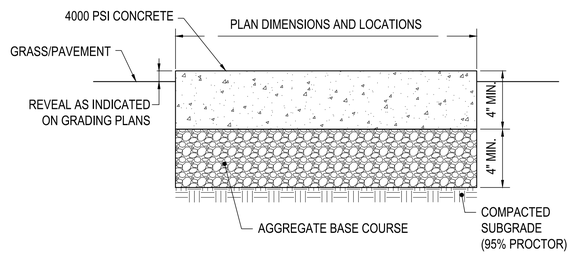

CONCRETE SIDEWALK PAVEMENT SECTION
SCALE: N.T.S.
B4

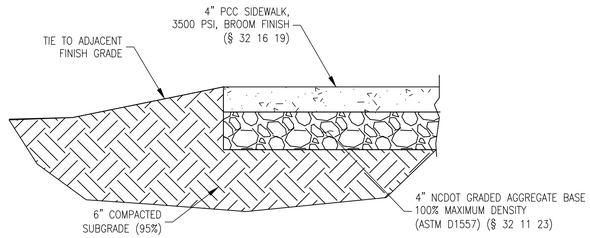

SECTION

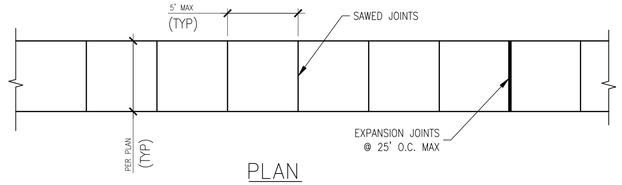

PLAN

NOTE:
1. BROOM FINISH SHALL BE APPLIED NORMAL TO DIRECTION OF TRAFFIC.

TYPICAL SIDEWALK DETAIL
SCALE: N.T.S.
A1

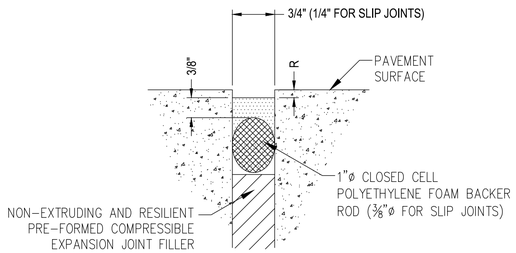

EXPANSION JOINT

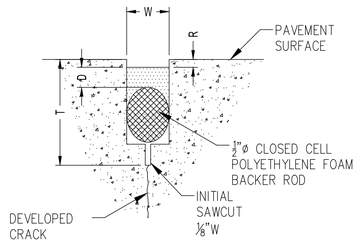

CONTRACTION JOINT

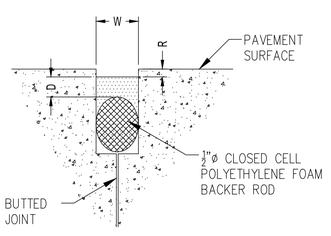

CONSTRUCTION JOINT

DEFINITIONS
W ≡ WIDTH OF SEALANT RESERVOIR = ¾"
D ≡ DEPTH OF SEALANT = ⅜" (OR PER MANUFACTURER'S RECOMMENDATION)
T ≡ DEPTH OF INITIAL SAWCUT = 2.25"
R ≡ DEPTH OF RECESS = ¼" ± 1/16"

JOINT SEALANT DETAIL
SCALE: N.T.S.
A2

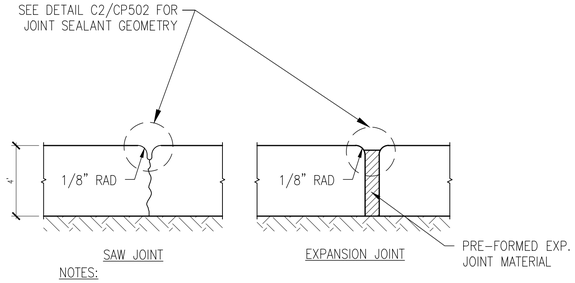

NOTES:
1. SAW JOINTS TO BE LOCATED TO MAINTAIN AN APPROXIMATE SQUARE SLAB.
2. EXPANSION JOINTS TO BE LOCATED WHERE WALK ABUTS CONCRETE CURBS, DRIVES, STRUCTURES AND WHERE WALK CHANGES DIRECTION.

TYPICAL JOINT DETAIL
SCALE: N.T.S.
A4

APPR | DATE | DESCRIPTION | SYM

NAVFAC

COMMONWEALTH OF PENNSYLVANIA
REGISTERED PROFESSIONAL
BRANDON ROBB FOMBELLE
ENGINEER No. PE086276

RQ AKM Jordan COMPANY – A JOINT VENTURE –

Michael Baker INTERNATIONAL
100 AIRSIDE DRIVE
MOON TOWNSHIP, PA 15108 A/E INFO

APPROVED

FOR COMMANDER NAVFAC

ACTIVITY
MARINE CORPS BASE CAMP LEJEUNE

SATISFACTORY TO DATE

DES	BRF	DRW	BRF	CHK	WN
PM / DM	TOWLER / ROOT				
BRANCH HEAD					
DESIGN DIRECTOR	R.L.Stephens, Jr.				
FIRE PROTECTION	DPS				

DEPARTMENT OF THE NAVY
NAVAL FACILITIES ENGINEERING SYSTEMS COMMAND
ATLANTIC DESIGN AND CONSTRUCTION
NAVAL FACILITIES ENGINEERING SYSTEMS COMMAND ATLANTIC
NORFOLK, VA.
MCB CAMP LEJEUNE
JACKSONVILLE, NC
P1527 LOGCOM CSP WAREHOUSE
PAVEMENT DETAILS

SCALE:	AS NOTED
EPROJECT NO.:	1639600
CONSTR. CONTR. NO.	N40085-20-C-0059
NAVFAC DRAWING NO.	14111054
SHEET	51 OF 447

CP502

P1527 FINAL SUBMISSION - 11/18/2021

PLOTTED: 11/11/2021 9:29:30 PM

FILE NAME: \\mooncat1d1\VOL2_PROJECTS\80780 HF Package 3\05_Deliverables\Drawings\05 C_Civil\Sheet Files\P1527\175970_P1527F - CP500.dwg

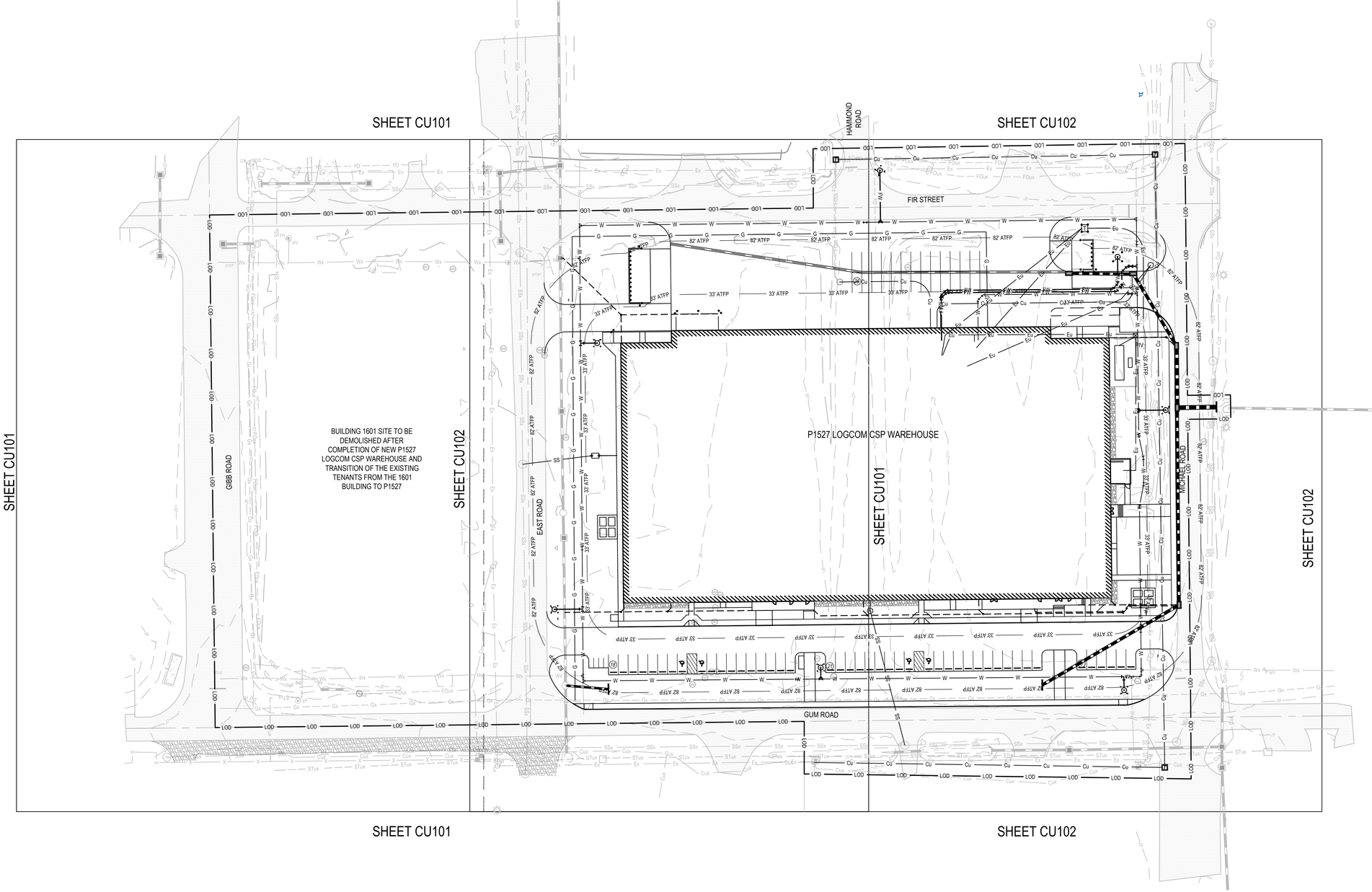

GENERAL NOTES

1. SEE SHEET C-001 - C-003 FOR CIVIL GENERAL NOTES.
2. SEE SHEET C-004 FOR CIVIL LEGEND AND ABBREVIATIONS.
3. SEE SHEET CE001 FOR EROSION AND SEDIMENT CONTROL NOTES AND SEQUENCING
4. SEE SHEET CE504 AND CE505 FOR NCDEQ EROSION AND SEDIMENT CONTROL NOTES
5. UNLESS OTHERWISE INDICATED ON THE PLANS, ALL NON-PAVED AREAS SHALL BE GRASS.

0 25' 50' 100'

SCALE: 1" = 50'

SYM	DESCRIPTION	DATE	APPR

NAVFAC

COMMONWEALTH OF PENNSYLVANIA
REGISTERED PROFESSIONAL
BRANDON ROBB FOMBELLE
ENGINEER No. PE086276

RQ W.M. Jordan COMPANY - A JOINT VENTURE -

Michael Baker INTERNATIONAL
100 AIRSIDE DRIVE
MOON TOWNSHIP, PA 15108
A/E INFO

APPROVED

FOR COMMANDER NAVFAC

ACTIVITY
MARINE CORPS BASE CAMP LEJEUNE

SATISFACTORY TO DATE

DES BRF	DRW BRF	CHK WN
PM / DM	TOWLER / ROOT	
BRANCH HEAD		
DESIGN DIRECTOR	R.L.Stephens, Jr.	
FIRE PROTECTION	DPS	

DEPARTMENT OF THE NAVY
NAVAL FACILITIES ENGINEERING SYSTEMS COMMAND
ATLANTIC DESIGN AND CONSTRUCTION
NAVAL FACILITIES ENGINEERING SYSTEMS COMMAND ATLANTIC
NORFOLK, VA
MCB CAMP LEJEUNE
JACKSONVILLE, NC

P1527 LOGCOM CSP WAREHOUSE

OVERALL UTILITY PLAN

SCALE:	AS NOTED
EPROJECT NO.:	1639600
CONSTR. CONTR. NO.	N40085-20-C-0059
NAVFAC DRAWING NO.	14111055
SHEET	52 OF 447

CU100

P1527 FINAL SUBMISSION - 11/18/2021

PLOTTED: 11/11/2021 9:30:16 PM

FILE NAME: \\mcorpa1d1\VOL2_PROJECTS\180780 HF Package 3\05_Deliverables\Drawings\05 C_Civil\Sheet Files\P1527\175970_P1527F - CU100.dwg

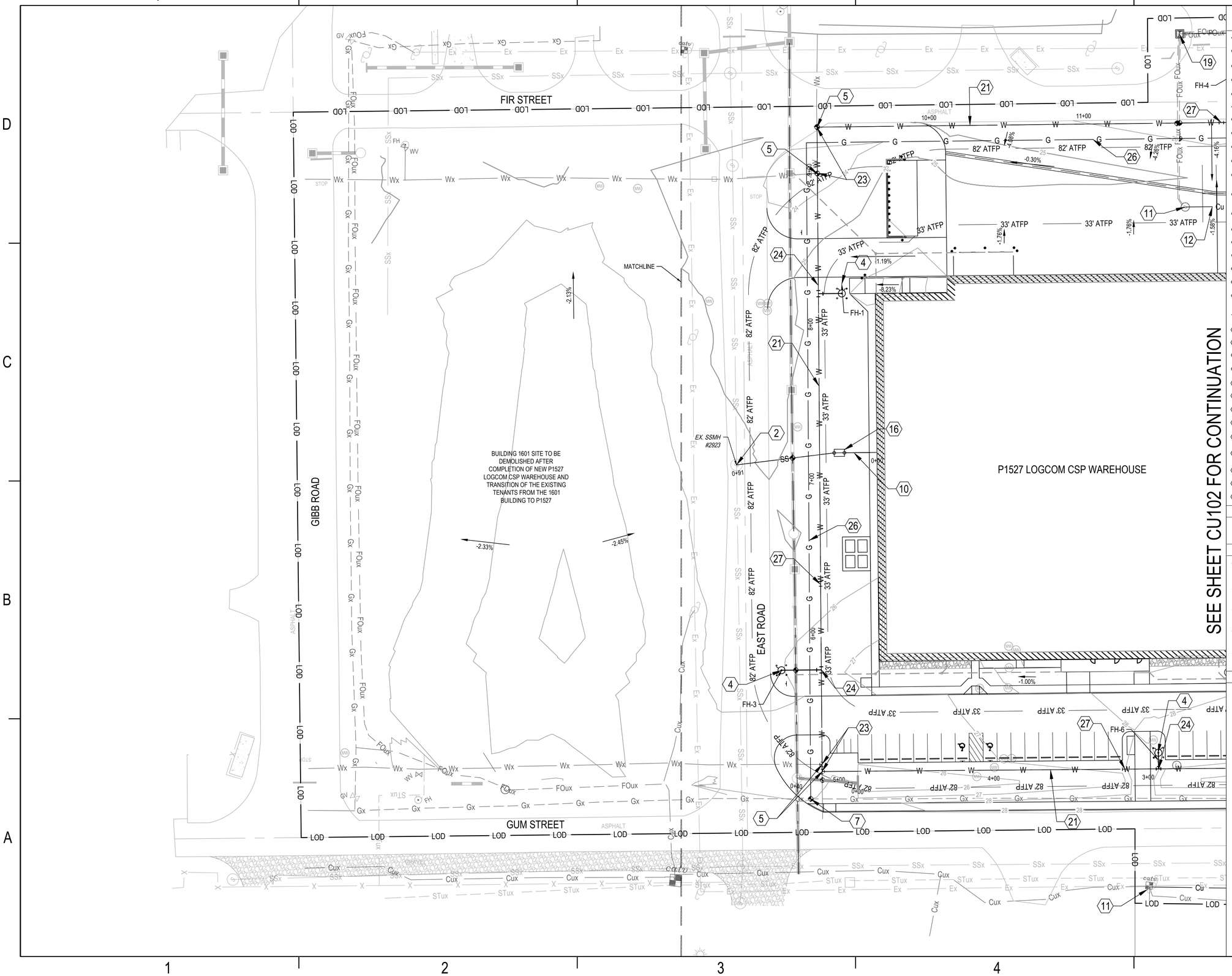

KEYED NOTES

NOT ALL KEYED NOTES MAY APPEAR ON SHEET

1. SANITARY MANHOLE (C1/CU502)
2. CONNECT TO EXISTING SANITARY MANHOLE (A3/CU502)
3. 8" FIRE PROTECTION WATERLINE
4. FIRE HYDRANT DRY BARREL ASSEMBLY W/ 6" FEED LINE AND FOUR BOLLARDS (TYP) (C4/CU501)
5. CONNECT TO EXISTING 8" WATER MAIN
6. 3" DOMESTIC WATERLINE
7. CONNECTION TO EXISTING GASLINE
8. JEFS TRACK POWER PEDISTAL (ELECTRIC AND COMMUNICATION)
9. TRANSFORMER PAD (C4/CU502) AND BOLLARDS
10. ELECTRIC CONDUIT (ES101)
11. TELECOMMUNICATION CONNECTION (SEE ALL TELECOM PLAN NOTES: TS101)
12. TELECOMMUNICATION CONDUIT (SEE ALL TELECOM PLAN NOTES: TS101)
13. TELECOMMUNICATION REROUTE AROUND SITE (SEE ALL TELECOM PLAN NOTES: TS101)
14. GENERATOR PAD (C3/CP502)
15. CHILLER ENCLOSURE (A2/M-505)
16. OIL WATER SEPARATOR (A4/P-501)
17. 4" PVC SANITARY LINE
18. CHILLED WATER LINE (SEE MECHANICAL PLANS)
19. 4'x4'x4' PRECAST CONCRETE COMMUNICATION VAULT (ALL TELECOM PLAN NOTES: TS101)
20. 2'x3' CONCRETE POLYMER HANDHOLE (ALL TELECOM PLAN NOTES: TS101)
21. 10" WATERLINE
22. 8" - 45° PIPE ELBOW WITH THRUST BLOCK (A1/CU501)
23. 10"x 8"x 10" TEE WITH CONCRETE ANCHOR (A1/CU501)
24. 10"x 10"x 6" TEE WITH CONCRETE ANCHOR (A1/CU501) AND 6" GATE VALVE
25. 3" - 45° PIPE ELBOW WITH THRUST BLOCK (A1/CU501)
26. 3" GASLINE
27. 10" - 45° PIPE ELBOW WITH THRUST BLOCK (A1/CU501)
28. POTHOLE
29. FIRE DEPARTMENT CONNECTION (B2/CU501) AND BOLLARDS
30. 10"x10"x3" TEE WITH CONCRETE ANCHOR (A1/CU501) AND 3" GATE VALVE
31. 6" FIRE DEPARTMENT CONNECTION LINE
32. 6" - 45° PIPE ELBOW WITH THRUST BLOCK (A1/CU501)
33. 10" - 11.25° PIPE ELBOW WITH THRUST BLOCK (A1/CU501)

LEGEND

- POTHOLE

GENERAL NOTES

1. SEE SHEET C-001 - C-003 FOR CIVIL GENERAL NOTES.
2. SEE SHEET C-004 FOR CIVIL LEGEND AND ABBREVIATIONS.
3. SEE SHEET CE001 FOR EROSION AND SEDIMENT CONTROL NOTES AND SEQUENCING
4. SEE SHEET CE504 AND CE505 FOR NCDEQ EROSION AND SEDIMENT CONTROL NOTES
5. UNLESS OTHERWISE INDICATED ON THE PLANS, ALL NON-PAVED AREAS SHALL BE GRASS.

KEY PLAN

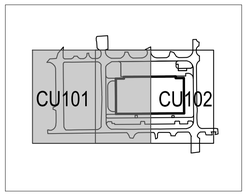

0 15' 30' 60'

SCALE: 1" = 30'

APPR	
DATE	
DESCRIPTION	
SYM	

COMMONWEALTH OF PENNSYLVANIA — REGISTERED PROFESSIONAL — BRANDON ROBB FOMBELLE — ENGINEER No. PE086276

NAVFAC

RQ Jordan COMPANY — A JOINT VENTURE —

Michael Baker INTERNATIONAL
100 AIRSIDE DRIVE
MOON TOWNSHIP, PA 15108
A/E INFO

APPROVED

FOR COMMANDER NAVFAC

ACTIVITY
MARINE CORPS BASE CAMP LEJEUNE

SATISFACTORY TO DATE

DES	DRW	CHK
BRF	BRF	WN

PM / DM: TOWLER / ROOT
BRANCH HEAD:
DESIGN DIRECTOR: R.L.Stephens, Jr.
FIRE PROTECTION: DPS

DEPARTMENT OF THE NAVY
NAVAL FACILITIES ENGINEERING SYSTEMS COMMAND
ATLANTIC DESIGN AND CONSTRUCTION
MCB CAMP LEJEUNE

NAVAL FACILITIES ENGINEERING SYSTEMS COMMAND ATLANTIC
NORFOLK, VA
JACKSONVILLE, NC
P1527 LOGCOM CSP WAREHOUSE

UTILITY PLAN

SCALE:	AS NOTED
EPROJECT NO.:	1639600
CONSTR. CONTR. NO.	N40085-20-C-0059
NAVFAC DRAWING NO.	14111056
SHEET	53 OF 447

CU101

P1527 FINAL SUBMISSION - 11/19/2021

PLOTTED: 11/11/2021 9:32:18 PM

FILE NAME: \\mcorps1d1\IO\2_PROJECTS\160780 HF Package 3\00_Deliverables\Drawings\05 C_Civil\Sheet Files\P1527\1759\70_P1527F - CU101.dwg

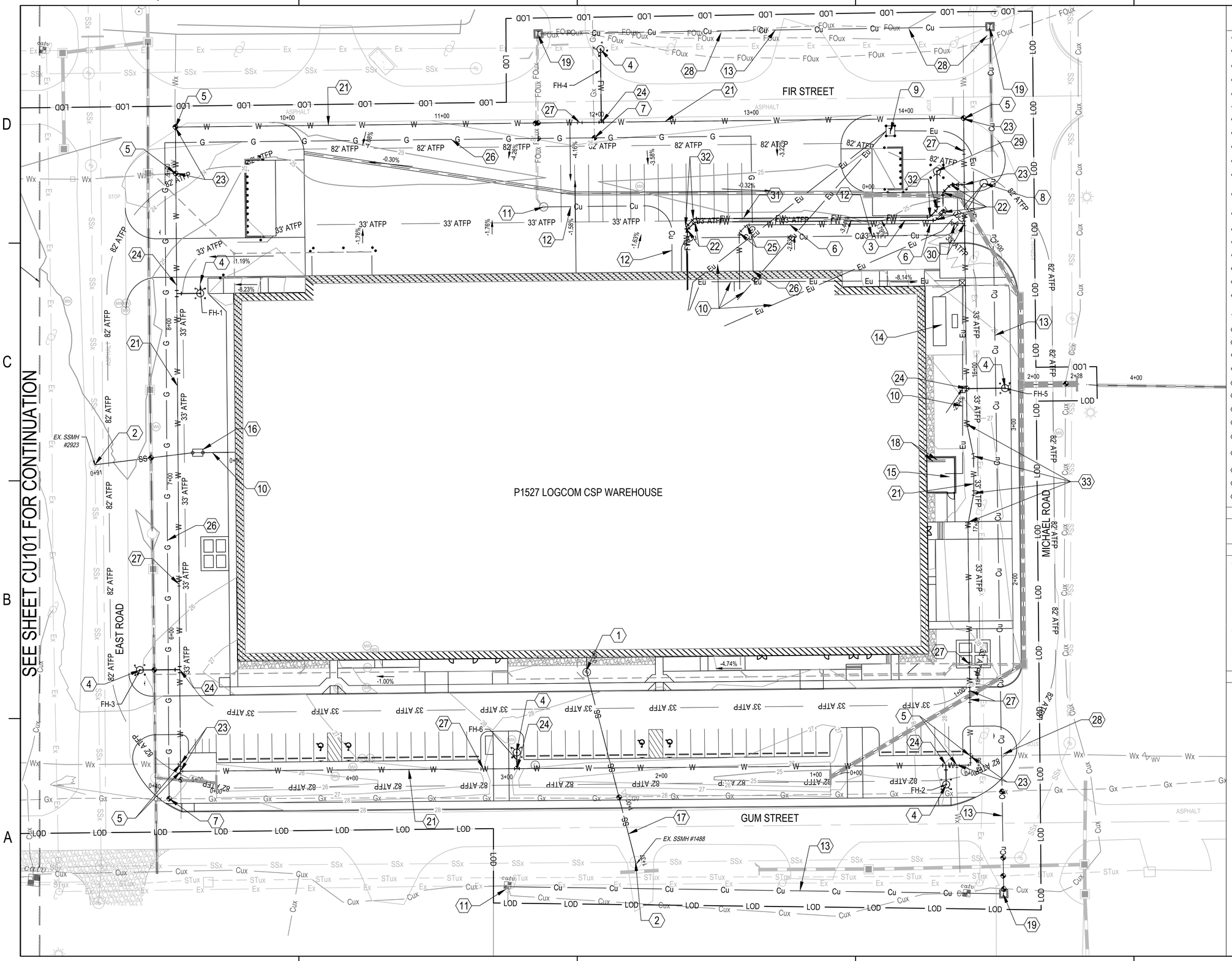

KEYED NOTES

NOT ALL KEYED NOTES MAY APPEAR ON SHEET

1. SANITARY MANHOLE (C1/CU502)
2. CONNECT TO EXISTING SANITARY MANHOLE (A3/CU502)
3. 8" FIRE PROTECTION WATERLINE
4. FIRE HYDRANT DRY BARREL ASSEMBLY W/ 6" FEED LINE AND FOUR BOLLARDS (TYP) (C4/CU501)
5. CONNECT TO EXISTING 8" WATER MAIN
6. 3" DOMESTIC WATERLINE
7. CONNECTION TO EXISTING GASLINE
8. JEFS TRACK POWER PEDISTAL (ELECTRIC AND COMMUNICATION)
9. TRANSFORMER PAD (C4/CU502) AND BOLLARDS
10. ELECTRIC CONDUIT (ES101)
11. TELECOMMUNICATION CONNECTION (SEE ALL TELECOM PLAN NOTES: TS101)
12. TELECOMMUNICATION CONDUIT (SEE ALL TELECOM PLAN NOTES: TS101)
13. TELECOMMUNICATION REROUTE AROUND SITE (SEE ALL TELECOM PLAN NOTES: TS101)
14. GENERATOR PAD (C3/CP502)
15. CHILLER ENCLOSURE (A2/M-505)
16. OIL WATER SEPARATOR (A4/P-501)
17. 4" PVC SANITARY LINE
18. CHILLED WATER LINE (SEE MECHANICAL PLANS)
19. 4'x4'x4' PRECAST CONCRETE COMMUNICATION VAULT (ALL TELECOM PLAN NOTES: TS101)
20. 2'x3' CONCRETE POLYMER HANDHOLE (ALL TELECOM PLAN NOTES: TS101)
21. 10" WATERLINE
22. 8" - 45° PIPE ELBOW WITH THRUST BLOCK (A1/CU501)
23. 10"x 8"x 10" TEE WITH CONCRETE ANCHOR (A1/CU501)
24. 10"x 10"x 6" TEE WITH CONCRETE ANCHOR (A1/CU501) AND 6" GATE VALVE
25. 3" - 45° PIPE ELBOW WITH THRUST BLOCK (A1/CU501)
26. 3" GASLINE
27. 10" - 45° PIPE ELBOW WITH THRUST BLOCK (A1/CU501)
28. POTHOLE
29. FIRE DEPARTMENT CONNECTION (B2/CU501) AND BOLLARDS
30. 10"x10"x3" TEE WITH CONCRETE ANCHOR (A1/CU501) AND 3" GATE VALVE
31. 6" FIRE DEPARTMENT CONNECTION LINE
32. 6" - 45° PIPE ELBOW WITH THRUST BLOCK (A1/CU501)
33. 10" - 11.25° PIPE ELBOW WITH THRUST BLOCK (A1/CU501)

LEGEND

- POTHOLE

GENERAL NOTES

1. SEE SHEET C-001 - C-003 FOR CIVIL GENERAL NOTES.
2. SEE SHEET C-004 FOR CIVIL LEGEND AND ABBREVIATIONS.
3. SEE SHEET CE001 FOR EROSION AND SEDIMENT CONTROL NOTES AND SEQUENCING
4. SEE SHEET CE504 AND CE505 FOR NCDEQ EROSION AND SEDIMENT CONTROL NOTES
5. UNLESS OTHERWISE INDICATED ON THE PLANS, ALL NON-PAVED AREAS SHALL BE GRASS.

KEY PLAN

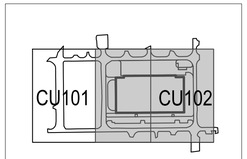

0 15' 30' 60'

SCALE: 1" = 30'

APPR	
DATE	
DESCRIPTION	
SYM	

COMMONWEALTH OF PENNSYLVANIA
REGISTERED PROFESSIONAL
BRANDON ROBB FOMBELLE
ENGINEER No. PE086276

RQ Jordan COMPANY - A JOINT VENTURE -

Michael Baker INTERNATIONAL
100 AIRSIDE DRIVE, MOON TOWNSHIP, PA 15108 — A/E INFO

APPROVED
FOR COMMANDER NAVFAC

ACTIVITY
MARINE CORPS BASE CAMP LEJEUNE

SATISFACTORY TO DATE

DES	BRF	DRW BRF	CHK WN
PM / DM		TOWLER / ROOT	
BRANCH HEAD			
DESIGN DIRECTOR		R.L.Stephens, Jr.	
FIRE PROTECTION		DPS	

DEPARTMENT OF THE NAVY
NAVAL FACILITIES ENGINEERING SYSTEMS COMMAND ATLANTIC
ATLANTIC DESIGN AND CONSTRUCTION
MCB CAMP LEJEUNE
NAVAL FACILITIES ENGINEERING SYSTEMS COMMAND ATLANTIC — NORFOLK, VA
JACKSONVILLE, NC
P1527 LOGCOM CSP WAREHOUSE
UTILITY PLAN

SCALE:	AS NOTED
EPROJECT NO.:	1639600
CONSTR. CONTR. NO.	N40085-20-C-0059
NAVFAC DRAWING NO.	14111057
SHEET	54 OF 447

CU102

P1527 FINAL SUBMISSION - 11/18/2021

PLOTTED: 11/11/2021 9:32:20 PM

FILE NAME: \\mcorps1d1\V0\2_PROJECTS\160780 HF Package 30\5_Deliverables\Drawings\05 C_Civil\Sheet Files\P1527\175970_P1527F - CU101.dwg

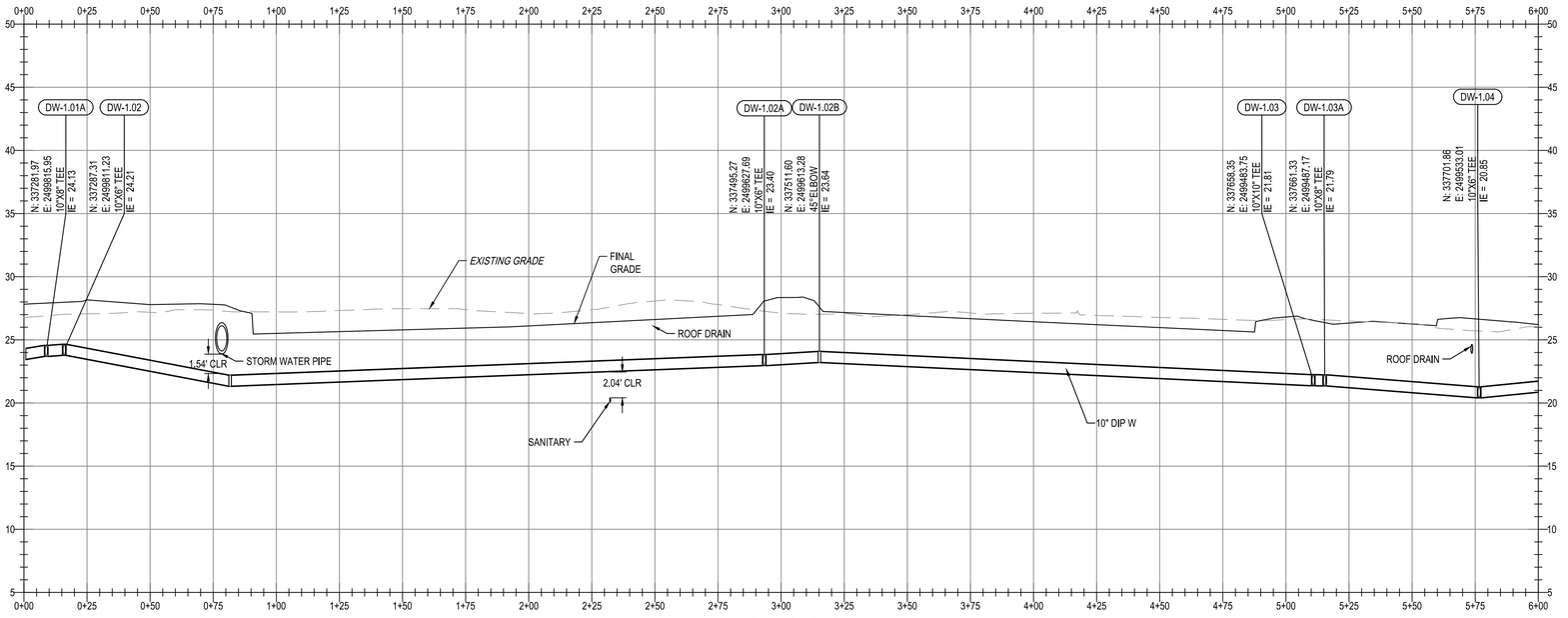

WATER LOOP PROFILE
SCALE: 1"=30 H, 1"=6V

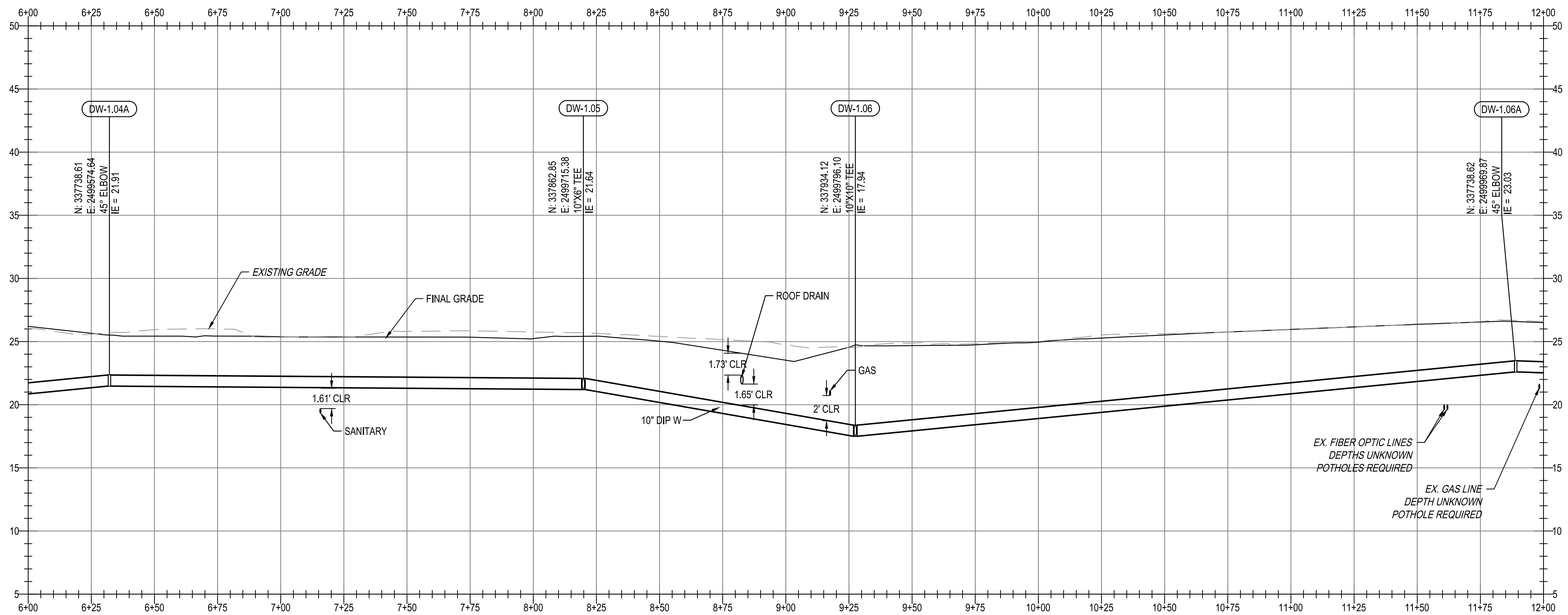

WATER LOOP PROFILE
SCALE: 1"=30 H, 1"=6V

SYM	DESCRIPTION	DATE	APPR

NAVFAC

COMMONWEALTH OF PENNSYLVANIA
REGISTERED PROFESSIONAL
BRANDON ROBB FOMBELLE
ENGINEER
No. PE086276

RQ W.M. Jordan COMPANY
- A JOINT VENTURE -

Michael Baker
INTERNATIONAL
100 AIRSIDE DRIVE
MOON TOWNSHIP, PA 15108
A/E INFO

APPROVED

FOR COMMANDER NAVFAC

ACTIVITY
MARINE CORPS BASE
CAMP LEJEUNE

SATISFACTORY TO DATE

DES BRF	DRW BRF	CHK WN
PM / DM	TOWLER / ROOT	
BRANCH HEAD		
DESIGN DIRECTOR	R.L.Stephens, Jr.	
FIRE PROTECTION	DPS	

DEPARTMENT OF THE NAVY
NAVAL FACILITIES ENGINEERING SYSTEMS COMMAND
ATLANTIC DESIGN AND CONSTRUCTION
NAVAL FACILITIES ENGINEERING SYSTEMS COMMAND ATLANTIC
NORFOLK, VA

MCB CAMP LEJEUNE
JACKSONVILLE, NC
P1527 LOGCOM CSP WAREHOUSE

UTILITY PROFILES

SCALE: AS NOTED
EPROJECT NO.: 1639600
CONSTR. CONTR. NO. N40085-20-C-0059
NAVFAC DRAWING NO. 14111058
SHEET 55 OF 447

CU201

P1527 FINAL SUBMISSION - 11/18/2021

UNCLASSIFIED

PLOTTED: 11/11/2021 9:33:52 PM

FILE NAME: \\mcorpa1d1\VOL2_PROJECTS\180780 HF Package 3\05_Deliverables\Drawings\05 C_Civil\Sheet Files\P1527\175970_P1527F - CU200.dwg

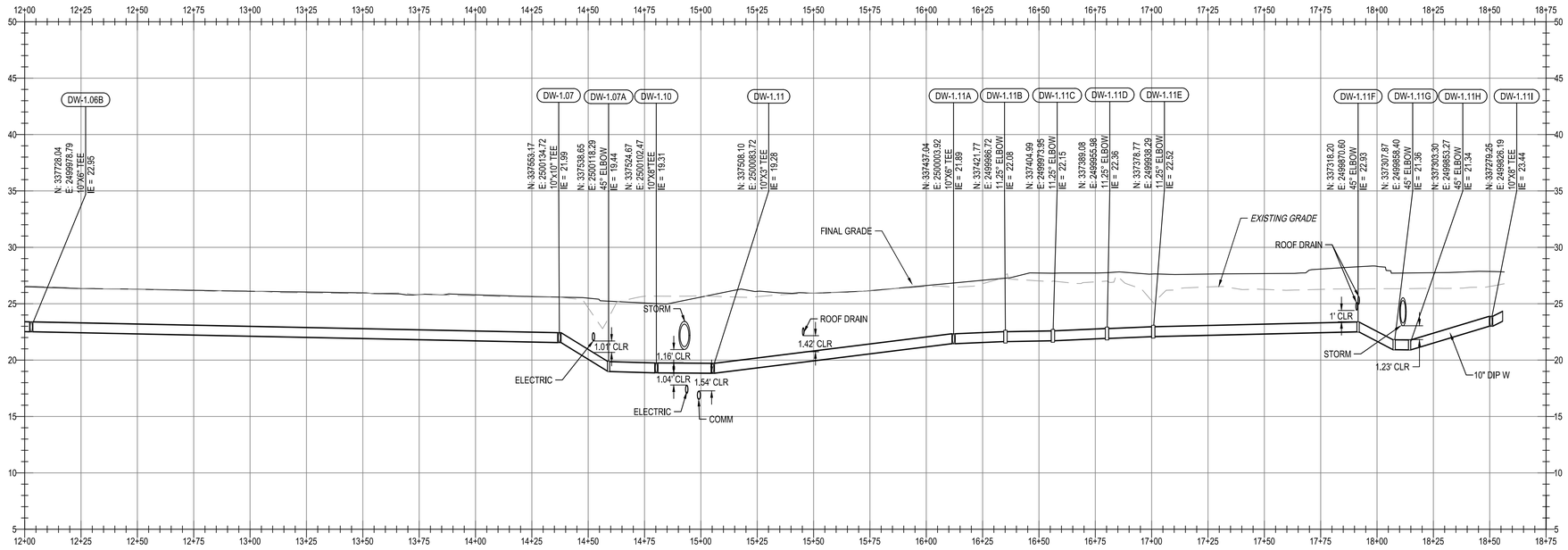

WATER LOOP PROFILE
SCALE: 1"=30 H, 1"=6V

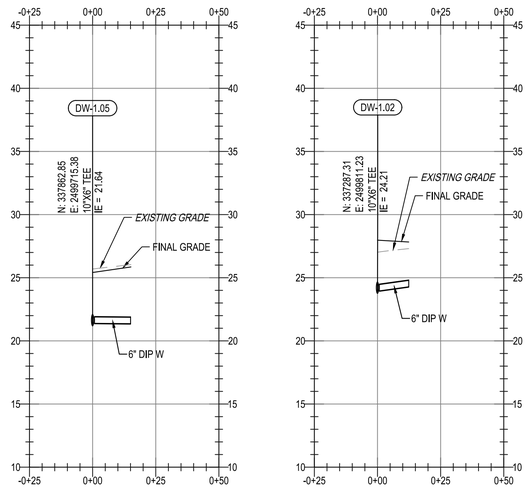

HYDRANT 1 PROFILE
SCALE: 1"=30 H, 1"=6V

HYDRANT 2 PROFILE
SCALE: 1"=30 H, 1"=6V

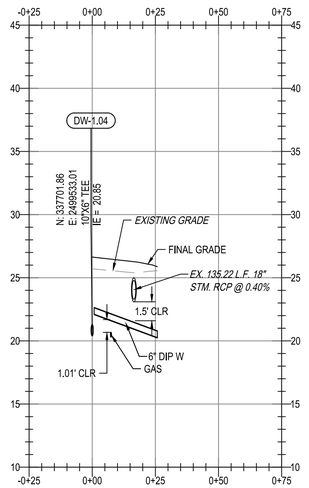

HYDRANT 3 PROFILE
SCALE: 1"=30 H, 1"=6V

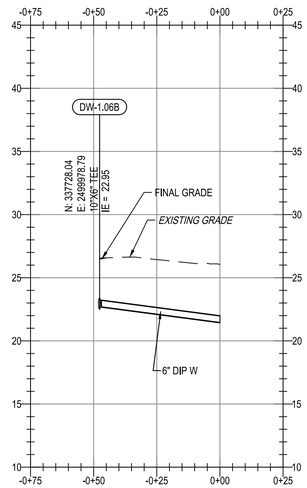

HYDRANT 4 PROFILE
SCALE: 1"=30 H, 1"=6V

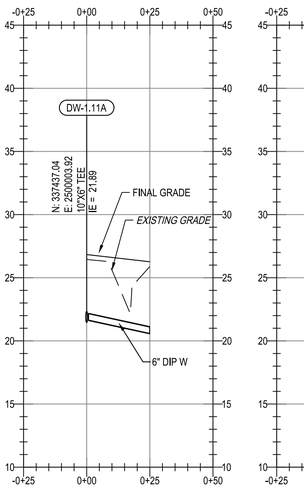

HYDRANT 5 PROFILE
SCALE: 1"=30 H, 1"=6V

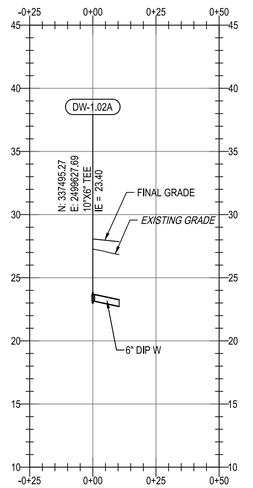

HYDRANT 6 PROFILE
SCALE: 1"=30 H, 1"=6V

APPR	DATE	DESCRIPTION	SYM

NAVFAC

COMMONWEALTH OF PENNSYLVANIA
REGISTERED PROFESSIONAL
BRANDON ROBB FOMBELLE
ENGINEER
No. PE086276

RQ AKM Jordan COMPANY
- A JOINT VENTURE -

Michael Baker INTERNATIONAL
100 AIRSIDE DRIVE
MOON TOWNSHIP, PA 15108
A/E INFO

APPROVED

FOR COMMANDER NAVFAC

ACTIVITY
MARINE CORPS BASE
CAMP LEJEUNE

SATISFACTORY TO DATE

DES	BRF	DRW	BRF	CHK	WN

PM / DM: TOWLER / ROOT
BRANCH HEAD:
DESIGN DIRECTOR: R.L.Stephens, Jr.
FIRE PROTECTION: DPS

DEPARTMENT OF THE NAVY
NAVAL FACILITIES ENGINEERING SYSTEMS COMMAND
ATLANTIC DESIGN AND CONSTRUCTION
MCB CAMP LEJEUNE

NAVAL FACILITIES ENGINEERING SYSTEMS COMMAND ATLANTIC
NORFOLK, VA
JACKSONVILLE, NC
P1527 LOGCOM CSP WAREHOUSE

UTILITY PROFILES

SCALE:	AS NOTED
EPROJECT NO.:	1639600
CONSTR. CONTR. NO.	N40085-20-C-0059
NAVFAC DRAWING NO.	14111059
SHEET	56 OF 447

CU202

P1527 FINAL SUBMISSION - 11/19/2021

PLOTTED: 11/11/2021 9:35:26 PM

FILE NAME: \\mcorpa1st1.bv.mbakercorp.com\VOL2_PROJECTS\180780 HF Package 3\05_DeliverablesDrawings\05 C_Civil\Sheet Files\P1527\175970_P1527F - CU000.dwg

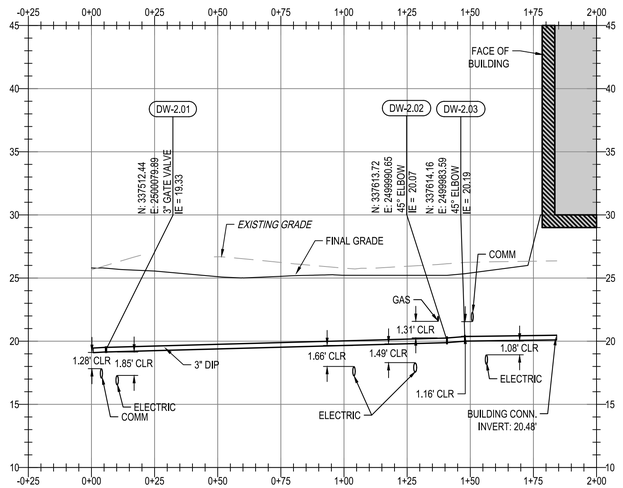

WATER LINE PROFILE
SCALE: 1"=30 H, 1"=6V

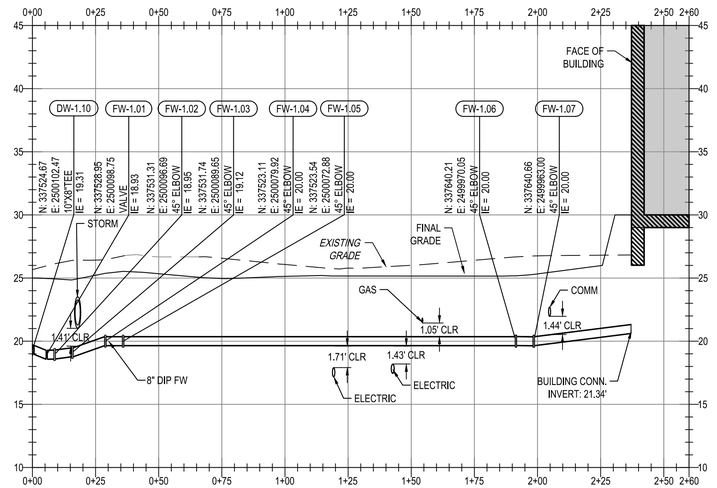

FIREWATER LINE PROFILE
SCALE: 1"=30 H, 1"=6V

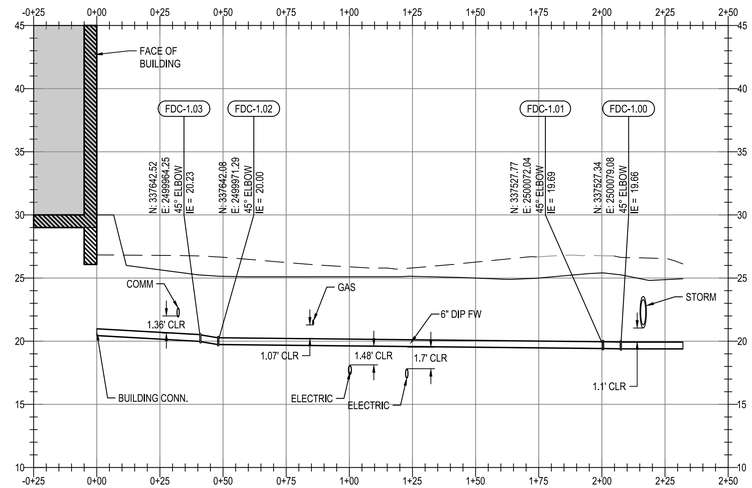

FIRE DEPARTMENT CONNECTION (FDC-FREE STANDING) PROFILE
SCALE: 1"=30 H, 1"=6V

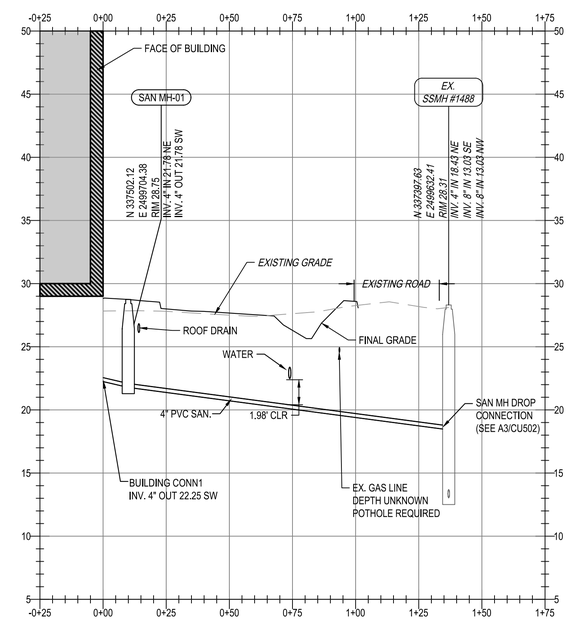

SANITARY RUN TO GUM STREET PROFILE
SCALE: 1"=30 H, 1"=6V

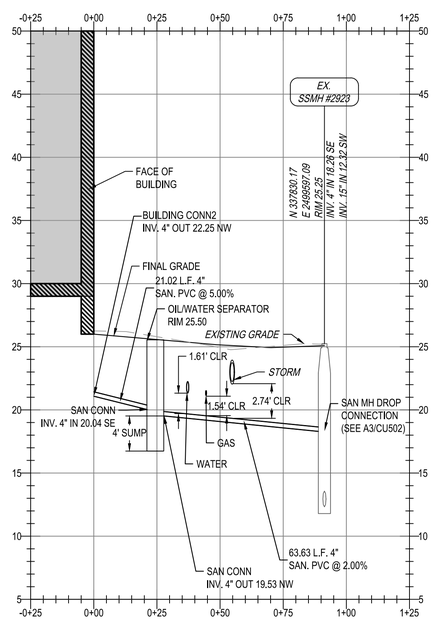

SANITARY RUN TO EAST ROAD PROFILE
SCALE: 1"=30 H, 1"=6V

APPR | DATE | SYM | DESCRIPTION

NAVFAC

COMMONWEALTH OF PENNSYLVANIA
REGISTERED PROFESSIONAL
BRANDON ROBB FOMBELLE
ENGINEER No. PE086276

RQ AKM Jordan COMPANY – A JOINT VENTURE –

Michael Baker INTERNATIONAL
100 AIRSIDE DRIVE
MOON TOWNSHIP, PA 15108
A/E INFO

APPROVED

FOR COMMANDER NAVFAC

ACTIVITY
MARINE CORPS BASE CAMP LEJEUNE

SATISFACTORY TO DATE

DES	BRF	DRW	BRF	CHK	WN
PM / DM	TOWLER / ROOT				
BRANCH HEAD					
DESIGN DIRECTOR	R.L.Stephens, Jr.				
FIRE PROTECTION	DPS				

DEPARTMENT OF THE NAVY
NAVAL FACILITIES ENGINEERING SYSTEMS COMMAND
ATLANTIC DESIGN AND CONSTRUCTION

NAVAL FACILITIES ENGINEERING SYSTEMS COMMAND ATLANTIC
NORFOLK, VA

JACKSONVILLE, NC

MCB CAMP LEJEUNE
P1527 LOGCOM CSP WAREHOUSE

UTILITY PROFILES

SCALE:	AS NOTED
EPROJECT NO.:	1639600
CONSTR. CONTR. NO.	N40085-20-C-0059
NAVFAC DRAWING NO.	14111060
SHEET	57 OF 447

CU203

P1527 FINAL SUBMISSION - 11/19/2021

PLOTTED: 11/11/2021 9:35:29 PM

FILE NAME: \\mcorpa1st1.lnv.mbakercorp.com\VOL2_PROJECTS\160780 HF Package 3\05_DeliverablesDrawings\05 C_Civil\Sheet Files\P1527\175970_P1527F - CU200.dwg

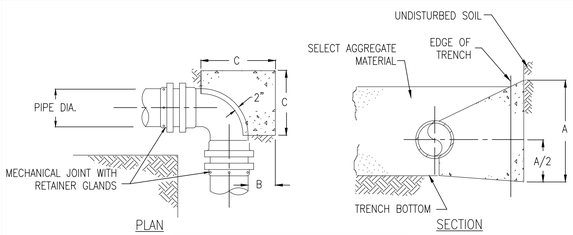

	PIPE DIAMETER			
	3", 4" & 6"	8"	10"	12"
A	2'-6"	3'-0"	3'-6"	4'-0"
B	18"	15"	15"	15"
C	2'-6"	3'-0"	3'-6"	4'-0"
D*	0.30	0.40	0.50	0.60

*D = APPROX. VOLUME OF CONC. IN C.Y.

CONCRETE ANCHORS FOR HORIZONTAL 90° BENDS

N.T.S.

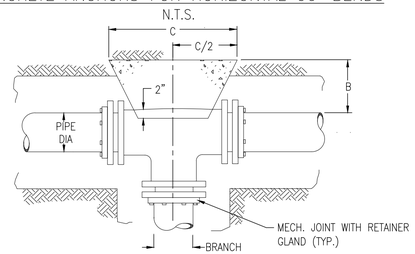

	PIPE DIAMETER			
	3", 4" & 6"	8"	10"	12"
A	2'-6"	3'-0"	3'-6"	4'-0"
B	18"	15"	15"	15"
C	2'-6"	3'-0"	3'-6"	4'-0"
D*	0.30	0.40	0.50	0.60

*D = APPROX. VOLUME OF CONC. IN C.Y.

CONCRETE ANCHORS FOR TEES

N.T.S.

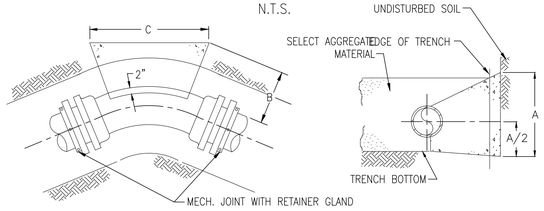

	PIPE DIAMETER			
	3", 4" & 6"	8"	10"	12"
A	2'-0"	3'-0"	3'-0"	3'-0"
B	12"	12"	12"	2'-0"
C	2'-0"	3'-0"	3'-0"	3'-6"
D*	0.10	0.30	0.30	0.60

*D = APPROX. VOLUME OF CONC. IN C.Y.

CONCRETE ANCHORS FOR HORIZONTAL 45° BENDS

N.T.S.

PRESSURE PIPE CONCRETE ANCHORS/THRUST BLOCKS

SCALE: N.T.S.

A1

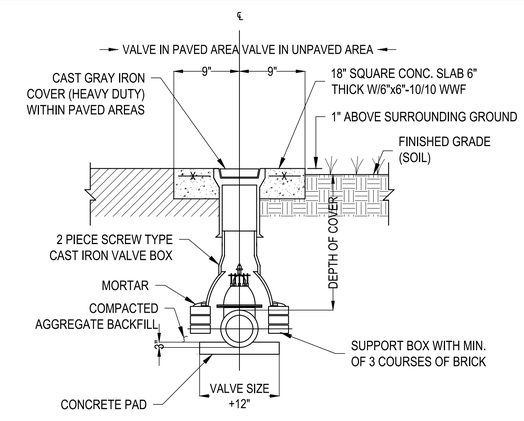

NOTE:
1. "WATER" SHALL BE CAST INTO CENTER OF CAP.

VALVE BOX DETAIL

SCALE: N.T.S.

C2

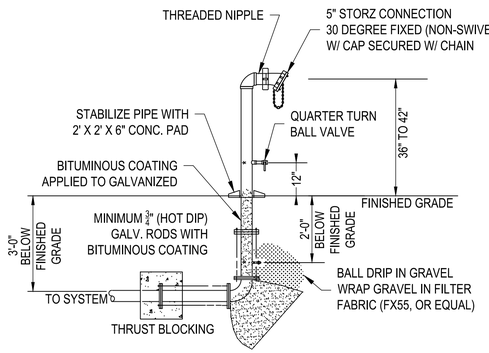

NOTES:
1. ALL EXPOSED PIPING AND FITTINGS TO BE GALVANIZED WITH EXCEPTION OF STORZ CONNECTION

FREESTANDING FIRE DEPARTMENT CONNECTION

SCALE: N.T.S.

B2

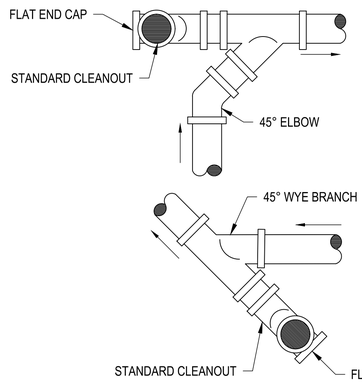

TYPICAL CLEANOUT ARRANGEMENTS AND WYE BRANCH DETAIL

SCALE: N.T.S.

A2

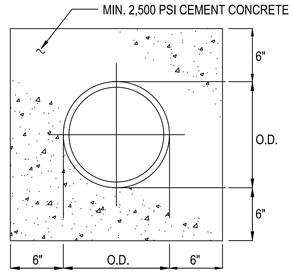

NOTE:
DETAIL APPLIES TO BOTH SANITARY SEWERS AND STORM SEWERS. ENCASEMENT EXTENDS 10' EACH SIDE OF WATERLINE.

WATERLINE CONCRETE ENCASEMENT

SCALE: N.T.S.

A3

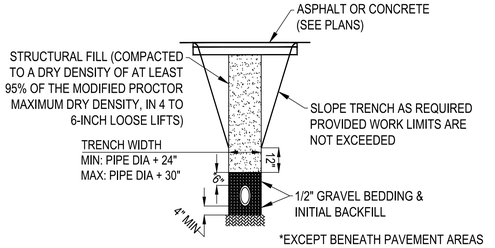

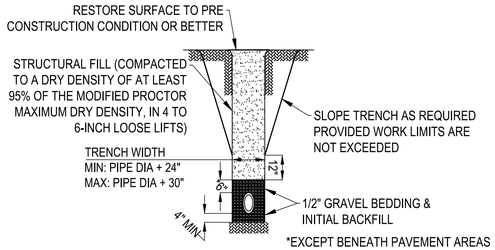

STANDARD UTILITY TRENCH DETAILS

SCALE: N.T.S.

C3

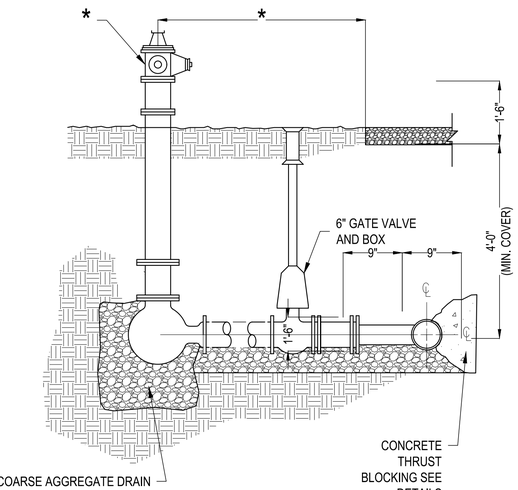

* NOTES:
1. FIRE HYDRANTS COLOR SHALL BE FACTORY PAINTED YELLOW WITH BONNET/CAP COLOR IN ACCORDANCE WITH NFPA 291 & AGRAM 07-07.
2. 3'-0" MIN. FROM EDGE OF ROADWAY OR CURB. 7'-0" MAX.

FIRE HYDRANT ASSEMBLY DETAIL

SCALE: N.T.S.

C4

NO.	DESCRIPTION	DATE	APPR

NAVFAC

COMMONWEALTH OF PENNSYLVANIA
REGISTERED PROFESSIONAL
BRANDON ROBB FOMBELLE
ENGINEER No. PE086276

RQ Jordan COMPANY – A JOINT VENTURE –

Michael Baker INTERNATIONAL
100 AIRSIDE DRIVE, MOON TOWNSHIP, PA 15108 A/E INFO

APPROVED

FOR COMMANDER NAVFAC

ACTIVITY
MARINE CORPS BASE CAMP LEJEUNE

SATISFACTORY TO DATE

DES	DRW	CHK
BRF	BRF	WN

PM / DM: TOWLER / ROOT
BRANCH HEAD:
DESIGN DIRECTOR: R.L.Stephens, Jr.
FIRE PROTECTION: DPS

DEPARTMENT OF THE NAVY
NAVAL FACILITIES ENGINEERING SYSTEMS COMMAND ATLANTIC
ATLANTIC DIVISION, NAVAL FACILITIES ENGINEERING SYSTEMS COMMAND
NORFOLK, VA
MCB CAMP LEJEUNE
JACKSONVILLE, NC
P1527 LOGCOM CSP WAREHOUSE
UTILITY DETAILS

SCALE:	AS NOTED
EPROJECT NO.:	1639600
CONSTR. CONTR. NO.	N40085-20-C-0059
NAVFAC DRAWING NO.	14111061
SHEET	58 OF 447

CU501

P1527 FINAL SUBMISSION - 11/18/2021

PLOTTED: 11/11/2021 9:36:02 PM

FILE NAME: \\mocnpia1st\VOL2_PROJECTS\160780 HF Package 3\05_Deliverables\Drawings\05 C_Civil\Sheet Files\P1527\175970_P1527F - CU500.dwg

GENERAL NOTES:

1. THIS STANDARD DETAIL DESCRIBES THE USE OF HORSESHOE TYPE and CORED MANHOLES WITH A CAST-IN-PLACE BOTTOM.
2. USE HORSESHOE TYPE MANHOLE ONLY WITH THE PERMISSION OF THE ENGINEER.
3. FOR HORSESHOE TYPE MANHOLES, WRAP THE PIPE WITH BUTYL RUBBER GASKET, AND SEAL WITH NONSHRINKING GROUT.

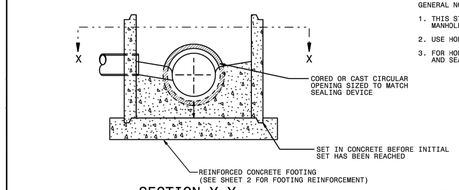

SECTION Y-Y
CORED PIPE TYPE

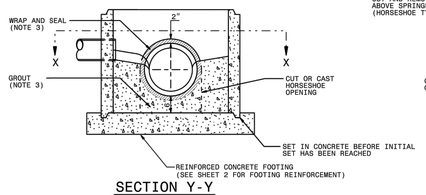

SECTION Y-Y
HORSESHOE TYPE

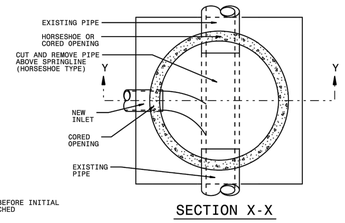

SECTION X-X

STATE OF NORTH CAROLINA
DEPT. OF TRANSPORTATION
DIVISION OF HIGHWAYS
RALEIGH, N.C.

1-18

ROADWAY STANDARD DRAWING FOR
PRECAST CONCRETE SANITARY SEWER MANHOLE WITH CAST-IN-PLACE BOTTOM

SHEET 1 OF 2
1525.06

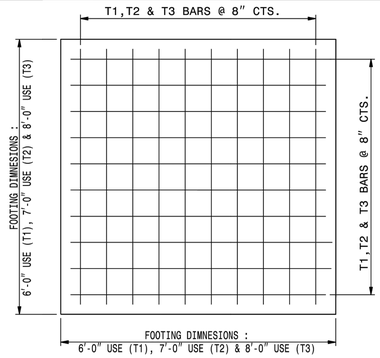

REINFORCED CONCRETE FOOTING
FOR 5' PRECAST MANHOLE OR
4' PRECAST MANHOLE

BILL OF MATERIAL FOR 6'-0" FOOTING				
BAR	SIZE	LENGTH	NO.	WT. lbs.
T1	#5	5'-6"	18	103
CLASS "A" CONC. YD^3 9" THICK				1.00
BILL OF MATERIAL FOR 7'-0" FOOTING				
BAR	SIZE	LENGTH	NO.	WT. lbs.
T2	#5	6'-6"	20	136
CLASS "A" CONC. YD^3 9" THICK				1.36
CLASS "A" CONC. YD^3 12" THICK				1.82
BILL OF MATERIAL FOR 8'-0" FOOTING				
BAR	SIZE	LENGTH	NO.	WT. lbs.
T3	#5	7'-6"	24	188
CLASS "A" CONC. YD^3 12" THICK				2.37

PLACE REINFORCING STEEL SO THAT STEEL IS PLACED A MIN. OF 2" AND A MAX. OF 4" FROM THE TOP OF THE SLAB.

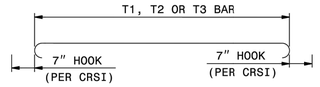

STATE OF NORTH CAROLINA
DEPT. OF TRANSPORTATION
DIVISION OF HIGHWAYS
RALEIGH, N.C.

1-18

ROADWAY STANDARD DRAWING FOR
PRECAST CONCRETE SANITARY SEWER MANHOLE WITH CAST-IN-PLACE BOTTOM

SHEET 2 OF 2
1525.06

SANITARY SEWER MANHOLE

SCALE: N.T.S.

C1

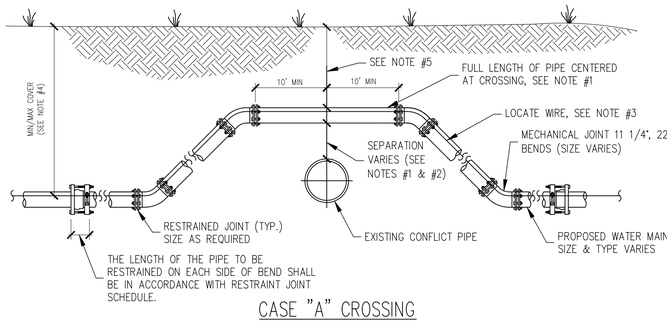

CASE "A" CROSSING

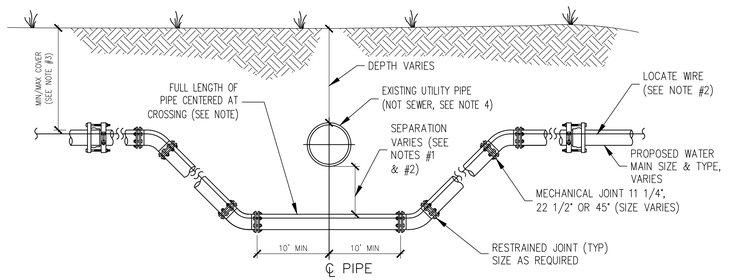

CASE "B" CROSSING

NOTES:

1. THE SOIL BETWEEN THE NEW MAIN AND THE CONFLICT PIPE SHALL BE COMPACTED TO 95% OF THE MAXIMUM DENSITY AS DETERMINED BY THE LABORATORY MODIFIED PROCTOR TEST, ASTM D1557.
2. PROVIDE AT LEAST 18 INCHES ABOVE THE TOP OF SEWER PIPE AND THE BOTTOM OF THE WATER PIPE.
3. LOCATING WIRE REQUIRED.
4. ALL UTILITY INSTALLATION AND CLEARANCES BETWEEN WATER AND SEWER PIPING SHALL ADHERE TO TITLE 15A NORTH CAROLINA ADMINISTRATIVE CODE SECTION 02T PARAGRAPH .0305 REQUIREMENTS.

NOTES:

1. THE SOIL BETWEEN THE NEW MAIN AND THE CONFLICT PIPE SHALL BE COMPACTED TO 95% OF THE MAXIMUM DENSITY AS DETERMINED BY THE LABORATORY MODIFIED PROCTOR TEST, ASTM D1557.
2. LOCATING WIRE REQUIRED.
3. ALL UTILITY INSTALLATION AND CLEARANCES BETWEEN WATER AND SEWER PIPING SHALL ADHERE TO TITLE 15A NORTH CAROLINA ADMINISTRATIVE CODE SECTION 02T PARAGRAPH .0305 REQUIREMENTS.
4. IF CROSSING BENEATH SANITARY SEWER IS NECESSARY, CONCRETE ENCASE THE SEWER PIPE TO THE NEAREST JOINT BUT NOT LESS THAN 10' FOR EITHER SIDE OF CROSSING; ALL SEWER PIPE TO BE DUCTILE IRON WITHIN 20' OF CROSSING.

UTILITY CROSSING

SCALE: N.T.S.

A1

STATE OF NORTH CAROLINA
DEPT. OF TRANSPORTATION
DIVISION OF HIGHWAYS
RALEIGH, N.C.

7-06

ENGLISH STANDARD DRAWING FOR
PRECAST SANITARY SEWER DROP MANHOLE
5' DIAMETER

SHEET 1 OF 1
1525.04

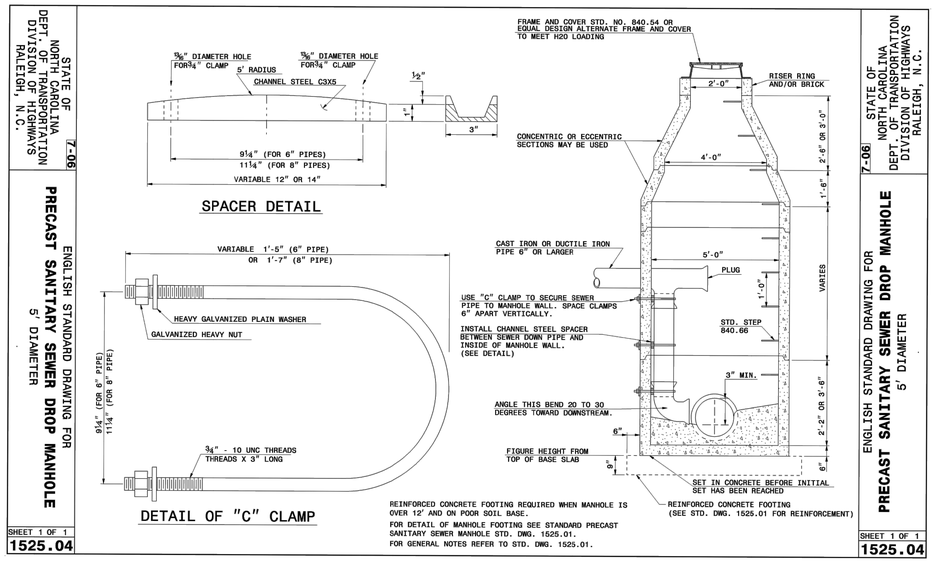

STATE OF NORTH CAROLINA
DEPT. OF TRANSPORTATION
DIVISION OF HIGHWAYS
RALEIGH, N.C.

7-06

ENGLISH STANDARD DRAWING FOR
PRECAST SANITARY SEWER DROP MANHOLE
5' DIAMETER

SHEET 1 OF 1
1525.04

SANITARY MANHOLE DROP CONNECTION

SCALE: N.T.S.

A3

		APPR
		DATE
		DESCRIPTION
		SYM

NAVFAC

COMMONWEALTH OF PENNSYLVANIA
REGISTERED PROFESSIONAL
BRANDON ROBB FOMBELLE
ENGINEER
No. PE086276

RQ Jordan COMPANY - A JOINT VENTURE -

Michael Baker INTERNATIONAL
100 AIRSIDE DRIVE
MOON TOWNSHIP, PA 15108
A/E INFO

APPROVED

FOR COMMANDER NAVFAC

ACTIVITY
MARINE CORPS BASE
CAMP LEJEUNE

SATISFACTORY TO DATE

DES BRF | DRW BRF | CHK WN

PM / DM TOWLER / ROOT

BRANCH HEAD

DESIGN DIRECTOR R.L.Stephens, Jr.

FIRE PROTECTION DPS

DEPARTMENT OF THE NAVY
NAVAL FACILITIES ENGINEERING SYSTEMS COMMAND
ATLANTIC DESIGN AND CONSTRUCTION
MCB CAMP LEJEUNE

NAVAL FACILITIES ENGINEERING SYSTEMS COMMAND ATLANTIC
NORFOLK, VA
JACKSONVILLE, NC
P1527 LOGCOM CSP WAREHOUSE

UTILITY DETAILS

SCALE: AS NOTED
EPROJECT NO.: 1639600
CONSTR. CONTR. NO. N40085-20-C-0059
NAVFAC DRAWING NO. 14111062
SHEET 59 OF 447

CU502

P1527 FINAL SUBMISSION - 11/18/2021

PLOTTED: 11/11/2021 9:36:04 PM

FILE NAME: \\mcorps1d1\VOL2_PROJECTS\50780-HF Package 30\5_Deliverables\Drawings\05 C_Civil\Sheet Files\P1527\175970_P1527F - CU500.dwg

EROSION AND SEDIMENT CONTROL NOTES:

1. CONSTRUCTION MATERIALS THAT POSE A POTENTIAL CONTAMINATION THREAT TO STORM WATER SHALL BE MANAGED TO MINIMIZE EXPOSURE TO STORM WATER. MATERIALS SHALL BE KEPT IN SECURE CONTAINERS AND PROPERLY LABELED. SOLID AND LIQUID WASTE AND OTHER WASTES SHALL BE DISPOSED OF PROPERLY IN ACCORDANCE WITH APPLICABLE FEDERAL, STATE AND LOCAL DISPOSAL REQUIREMENTS. DISPOSAL SHALL BE CONSISTENT WITH APPLICABLE STATE AND/OR LOCAL WASTE DISPOSAL, SANITARY SEWER OR SEPTIC SYSTEM REGULATIONS AND SHALL PROVIDE FOR THE PROPER DISPOSAL OF CONTAMINATED SOILS TO THE EXTENT THESE ARE LOCATED WITHIN THE PERMITTED AREA.

2. HANDLING CONSTRUCTION CHEMICALS. MIXING, PUMPING, TRANSFERRING OR OTHER HANDLING OF CONSTRUCTION CHEMICALS SUCH AS FERTILIZER, LIME, ASPHALT, CONCRETE DRYING COMPOUNDS, AND ALL OTHER POTENTIALLY HAZARDOUS MATERIALS SHALL BE PERFORMED IN AN AREA AWAY FROM ANY WATERCOURSE, DITCH OR STORM DRAIN.

3. THE FOLLOWING GOOD HOUSEKEEPING PRACTICES WILL BE FOLLOWED ON SITE DURING THE CONSTRUCTION PROJECT:
   - 3.1. AN EFFORT WILL BE MADE TO STORE ONLY ENOUGH PRODUCT REQUIRED TO DO THE JOB.
   - 3.2. ALL MATERIALS STORED ON SITE WILL BE STORED IN A NEAT, ORDERLY MANNER IN THEIR APPROPRIATE CONTAINERS AND, IF POSSIBLE, UNDER A ROOF OR OTHER ENCLOSURE.
   - 3.3. PRODUCTS WILL BE KEPT IN THEIR ORIGINAL CONTAINERS WITH THE MANUFACTURER'S LABEL. SUBSTANCES WILL NOT BE MIXED WITH ONE ANOTHER UNLESS RECOMMENDED BY THE MANUFACTURER.
   - 3.4. WHENEVER POSSIBLE, ALL OF A PRODUCT WILL BE USED UP BEFORE DISPOSING OF THE CONTAINER.
   - 3.5. THE MANUFACTURER'S RECOMMENDATIONS FOR PROPER USE AND DISPOSAL WILL BE FOLLOWED.

4. AT NO TIME SHALL CONSTRUCTION VEHICLES BE ALLOWED TO ENTER AREAS OUTSIDE THE LIMIT OF DISTURBANCE BOUNDARIES SHOWN ON THE PLAN MAPS. THESE AREAS MUST BE CLEARLY MARKED AND FENCED OFF BEFORE CLEARING AND GRUBBING OPERATIONS BEGIN.

5. UNTIL THE SITE IS PERMANENTLY STABILIZED, ALL EROSION AND SEDIMENT BMPS SHALL BE MAINTAINED PROPERLY. MAINTENANCE SHALL INCLUDE INSPECTIONS OF ALL EROSION & SEDIMENT BMPS AFTER EACH RUNOFF EVENT AND ON A WEEKLY BASIS. ALL PREVENTATIVE AND REMEDIAL MAINTENANCE WORK, INCLUDING CLEANOUT, REPAIR, RE-PLACEMENT, RE-GRADING, RE-SEEDING, RE-MULCHING, AND RE-NETTING MUST BE PERFORMED IMMEDIATELY. IF THE E&S BMPS FAIL TO PERFORM AS EXPECTED, REPLACEMENT BMPS, OR MODIFICATION OF THOSE INSTALLED WILL BE REQUIRED.

6. IMMEDIATELY UPON DISCOVERING UNFORESEEN CIRCUMSTANCES POSING THE POTENTIAL FOR ACCELERATED EROSION AND/OR SEDIMENT POLLUTION, THE CONTRACTOR SHALL IMPLEMENT APPROPRIATE BEST MANAGEMENT PRACTICES TO ELIMINATE THE POTENTIAL FOR ACCELERATED EROSION AND/OR SEDIMENT POLLUTION.

7. THE CONTRACTOR SHALL KEEP A SUPPLY OF EROSION CONTROL MATERIAL (SILT FENCE, JUTE MESH, RIP RAP, ETC.) ON-SITE FOR MAINTENANCE AND EMERGENCY REPAIRS.

8. ALL REGULATORY AGENCY PERMITS REQUIRED FOR THE SITE SHALL BE OBTAINED PRIOR TO SITE WORK COMMENCING.

9. CONTRACTOR IS RESPONSIBLE FOR VERIFYING ALL UNDERGROUND UTILITIES. CONTRACTOR SHALL USE A THIRD PARTY FOR PRIVATE UTILITY LOCATING AS NECESSARY. SILT FENCE TO BE PLACED OFFSET FROM UTILITY LOCATIONS.

10. PERMANENTLY STABILIZE BY SEEDING PER PLANS. SPOILS TO BE PLACED AROUND EXISTING STRUCTURES AND EQUIPMENT.

11. ANY OFF-SITE BORROW AND WASTE REQUIRED FOR THIS PROJECT MUST COME FROM A SITE WITH AN APPROVED EROSION CONTROL PLAN, A SITE REGULATED UNDER THE MINING ACT OF 1971, OR A LANDFILL REGULATED BY THE DIVISION OF SOLID WASTE MANAGEMENT. TRASH/DEBRIS FROM DEMOLITION ACTIVITIES OR GENERATED BY ANY ACTIVITIES ON SITE MUST BE DISPOSED OF AT A FACILITY REGULATED BY THE DIVISION OF SOLID WASTE MANAGEMENT OR PER DIVISION OF SOLID WASTE MANAGEMENT OR DIVISION OF WATER RESOURCES RULES AND REGULATIONS.

12. ADDITIONAL MEASURES MAY BE REQUIRED. THE CONTRACTOR IS RESPONSIBLE FOR THE CONTROL OF SEDIMENT ON-SITE. IF THE APPROVED EROSION AND SEDIMENTATION CONTROL MEASURES PROVE INSUFFICIENT, THE CONTRACTOR MUST TAKE THOSE ADDITIONAL STEPS NECESSARY TO STOP SEDIMENT FROM LEAVING THE SITE.

13. EROSION AND SEDIMENT CONTROL FOR UTILITY CONSTRUCTION SHALL BE PROVIDED IN ACCORDANCE WITH APPROVED PLANS. UTILITY CONSTRUCTION SHALL ONLY BE FOR AREAS WITHIN THE DELINEATED LIMITS OF WORK. CALL "MISS UTILITY" AT 1-800-632-4949 48 HOURS PRIOR TO THE START OF WORK. WHEN SAME DAY STABILIZATION IS APPROVED.
   - 13.1. EXCAVATED TRENCH MATERIAL SHALL BE PLACED ON THE HIGH SIDE OF THE TRENCH.
   - 13.2. TRENCHES FOR UTILITY INSTALLATION SHALL BE BACKFILLED, COMPACTED, AND STABILIZED AT THE END OF EACH WORKING DAY. NO MORE TRENCH SHALL BE OPENED THAN CAN BE COMPLETED THE SAME DAY.

14. FOLLOWING INITIAL SOIL DISTURBANCE OR RE-DISTURBANCE, PERMANENT OR TEMPORARY STABILIZATION SHALL BE COMPLETED WITHIN:
   - 14.1. THREE (3) CALENDAR DAYS AS TO THE SURFACE OF ALL PERIMETER CONTROLS, DIKES, SWALES, DITCHES, PERIMETER SLOPES, AND ALL SLOPES STEEPER THAN 3 HORIZONTAL TO 1 VERTICAL (3:1); AND
   - 14.2. SEVEN (7) CALENDAR DAYS AS TO ALL OTHER DISTURBED OR GRADED AREAS ON THE PROJECT SITE NOT UNDER ACTIVE GRADING.

PERMANENT/TEMPORARY SEEDING, FERTILIZING, AND MULCHING NOTES:

1. TEMPORARY GROUND COVER TO BE INSTALLED WITHIN SEVEN DAYS OF STOPPING GRADING ACTIVITY AT ANY PHASE OF CONSTRUCTION.
   - 1.1. BASH (BIRD AIRCRAFT STRIKE HAZARD) AREAS: MULCH CRIMPLED IN-PLACE.
   - 1.2. NON-BASH AREAS: BELOW SEEDING
     - 1.2.1. MAY - JULY: GERMAN MILLET
     - 1.2.2. AUGUST - APRIL: RYE GRAIN (NOT ANNUAL RYE GRASS)

2. PERMANENT GROUND COVER TO BE INSTALLED WITHIN SEVEN DAYS OF COMPLETION OF FINAL GRADING.
   - 2.1. BASH AREAS: PREFERRED APPLICATION IS CENTIPEDE SOD. HOWEVER, THE FOLLOWING SEEDING SPECIFICATION MAY BE USED:
     - 2.1.1. JANUARY - MARCH: MIXTURE (40% FESCUE, 40% UNHULLED BERMUDA, 20% CENTIPEDE)
     - 2.1.2. APRIL - AUGUST: MIXTURE (50% HULLED BERMUDA, 30% CENTIPEDE, 20% BAHIA)
     - 2.1.3. SEPTEMBER - DECEMBER: MIXTURE (60% FESCUE, 40% UNHULLED BERMUDA)
   - 2.2. NON-BASH AREAS: BELOW SEEDING, BASH SEEDING MAY ALSO BE USED:
     - 2.2.1. SEPTEMBER - MAY: CENTIPEDE GRASS
     - 2.2.2. JUNE: BERMUDA GRASS
     - 2.2.3. JULY - AUGUST: NO APPLICATION

3. TEMPORARY SEEDING SHALL BE FERTILIZED AS REQUIRED BY AN INDEPENDENT SOIL ANALYSIS. INSPECT SEED WEEKLY AND PROVIDE WATER AS NEEDED FOR GERMINATION. AFTER GERMINATION, WATER AT 1-INCH PER WEEK UNTIL FIRST MOWING.

4. EXAMINE AREAS TO RECEIVE SEED FOR COMPLIANCE WITH REQUIREMENTS AND FOR CONDITIONS AFFECTING PERFORMANCE OF WORK AND ESTABLISHMENT. DO NOT PROCEED WITH INSTALLATION UNTIL UNSATISFACTORY CONDITIONS HAVE BEEN CORRECTED.

5. DISPOSE OF ANY GROWTH, ROCKS, OR OTHER OBSTRUCTIONS WHICH MIGHT INTERFERE WITH SEEDING OR LATER MAINTENANCE OPERATIONS. REMOVE STONES OVER 38MM (1 1/2 INCHES) IN ANY DIMENSION AND STICKS, ROOTS, RUBBISH, AND OTHER EXTRANEOUS MATTER.

6. GRADE SEED AREAS TO A SMOOTH, EVEN SURFACE WITH LOOSE, UNIFORMLY FINE TEXTURE. ROLL AND RAKE, REMOVE RIDGES AND FILL DEPRESSIONS TO MEET FINISH GRADES. DO NOT USE WET SEED OR SEED WHICH IS MOLDY OR OTHERWISE DAMAGED IN TRANSIT OR STORAGE.

7. SOW SEED WITH A BRILLION TYPE SEEDING MACHINE OR WHERE APPLICABLE AND RESTRICTED BY STEEP SLOPES OR OTHER AREAS NOT ACCESSIBLE TO THE SEEDING MACHINE, BROADCAST OR DROP SEED METHODS MAY BE USED. DO NOT BROADCAST OR DROP SEED WHEN WIND VELOCITY EXCEEDS 5 MPH. EVENLY DISTRIBUTE SEED BY SOWING EQUAL QUANTITIES IN 2 DIRECTIONS AT RIGHT ANGLES TO EACH OTHER, AND 3 DIRECTIONS IN HIGH MAINTENANCE AREAS.

8. RAKE, HARROW OR OTHERWISE WORK THE SEED INTO THE SOIL 1/4" TO 1/2" DEEP. KEEP THE AREA WELL- WATERED UNTIL THE SEEDS GERMINATE AND THE SEEDLINGS HAVE GROWN SUFFICIENTLY TO ESTABLISH A LAWN, THEN WATER AS NEEDED.

9. MOW GRASS TO A HEIGHT OF 50MM (2 INCHES) AS SOON AS THERE IS ENOUGH TOP GROWTH TO CUT WITH MOWER. REMOVE NO MORE THAN 40% OF GRASS LEAF GROWTH IN INITIAL OR SUBSEQUENT MOWINGS. DO NOT DELAY MOWING UNTIL GRASS BLADES BEND OVER AND BECOME MATTED.

MAINTENANCE AND INSPECTION NOTES:

1. INSTALL EROSION AND SEDIMENT (E&S) CONTROL DEVICES IN ACCORDANCE WITH THE PLAN DRAWINGS.

2. THE NPDES CONSTRUCTION PERMIT REQUIRES EROSION CONTROL DEVICES AND STORM WATER OUTFALLS BE INSPECTED WEEKLY (EVERY 7 CALENDAR DAYS) AND WITHIN 24 HRS. OF A 0.5 INCH RAIN EVENT. IT WILL BE THE RESPONSIBILITY OF THE CONTRACTOR TO CONDUCT THESE INSPECTIONS AND MAINTAIN RECORDS UNTIL THE AREA HAS STABILIZED EVIDENT BY 95% VEGETATIVE GROWTH FOR AREAS PROVIDED SEEDING. TO FACILITATE RAINFALL MONITORING, A RAIN GAUGE IS REQUIRED TO BE ON SITE. ADDITIONALLY THE CONTRACTOR IS RESPONSIBLE FOR CONDUCTING "SELF-INSPECTIONS INDICATING THE DATE BMPS ARE INSTALLED AND STABILIZATION MEASURES (SEEDING/MULCHING/ OR SOD) ARE INITIATED. THE "SELF- INSPECTIONS" RECORDS WILL BE MAINTAINED ALONG WITH THE NPDES INSPECTION REPORTS. ONCE STABILIZATION HAS BEEN ACCOMPLISHED INSPECTION RECORDS ARE TO BE FORWARDED TO EAD AND ALL TEMPORARY EROSION/SEDIMENTATION CONTROL DEVICES REMOVED. THE CONTRACTOR IS RESPONSIBLE FOR MAINTAINING COMPLIANCE WITH ALL PERMITS AND PLANS, ANY CHANGES WILL BE APPROVED BY THE STATE PRIOR TO EXECUTION. A COPY OF THE EROSION AND SEDIMENTATION CONTROL PLAN, LETTER OF APPROVAL AND NPDES CONSTRUCTION PERMIT WILL BE MAINTAINED BY THE CONTRACTOR AT THE ONSITE OFFICE. IF SOIL IS REMOVED FROM OR BROUGHT ONSITE, THE APPLICABLE EROSION SEDIMENTATION PERMIT NUMBER OR MINE PERMIT NUMBER WILL BE DISCLOSED.

3. REPAIR OR REPLACE INEFFECTIVE E&S MEASURES IMMEDIATELY AFTER IDENTIFICATION OR AS SOON AS WEATHER CONDITIONS ALLOW.

4. IDENTIFY AND INSTALL ADDITIONAL TEMPORARY E&S DEVICES IN AREAS DEEMED IN NEED OF PROTECTION.

5. REMOVE SEDIMENT FROM INLET PROTECTION DEVICES ONCE SEDIMENT HAS REACHED 1/3 THE HEIGHT OF THE STRUCTURE.

6. REMOVE SEDIMENT FROM BEHIND SILT FENCE AS NECESSARY TO PROVIDE ADEQUATE STORAGE VOLUME FOR THE NEXT RAIN AND TO REDUCE PRESSURE ON THE FENCE. TAKE CARE TO AVOID UNDERMINING THE FENCE DURING CLEANOUT.

7. REMOVE SEDIMENT AND RESTORE SEDIMENT TRAPS TO ORIGINAL DIMENSIONS WHEN THE SEDIMENT HAS ACCUMULATED TO ONE-HALF THE DESIGN DEPTH OF THE TRAP. PLACE SEDIMENT IN DESIGNATED DISPOSAL AREA, AND REPLACE GRAVEL FACING THAT IS IMPAIRED BY SEDIMENT. CHECK THE STRUCTURE FOR DAMAGE FROM EROSION OR PIPING. ENSURE SPILLWAY REMAINS A MINIMUM OF 1.5 FEET BELOW THE EMBANKMENT LOW POINT. REPLACE DISPLACED RIPRAP IMMEDIATELY. REMOVE STRUCTURE AND ALL UNSTABLE SEDIMENT AFTER PERMANENT STABILIZATION, AND SMOOTH AREA TO BLEND WITH ADJOINING AREAS.

8. PERFORM DAILY INSPECTIONS AND REMOVAL OF TRACKED MATERIAL FROM THE PROJECT SITE ONTO ADJACENT ROADS.

9. MAINTAIN WRITTEN INSPECTION AND REPAIR OR REPLACEMENT FORMS ON SITE AT ALL TIMES FOR E&S MEASURES.

10. A COPY OF THE EROSION AND SEDIMENT CONTROL PLAN, LETTER OF APPROVAL, AND NPDES CONSTRUCTION PERMIT WILL BE MAINTAINED ON SITE AT ALL TIMES.

11. MAINTAIN THE GRAVEL CONSTRUCTION ENTRANCE IN A CONDITION TO PREVENT MUD OR SEDIMENT FROM LEAVING THE CONSTRUCTION SITE. THIS MAY REQUIRE PERIODIC TOPDRESSING WITH 2-INCH STONE. AFTER EACH RAINFALL, INSPECT ANY STRUCTURE USED TO TRAP SEDIMENT AND CLEAN IT OUT AS NECESSARY. IMMEDIATELY REMOVE ALL OBJECTIONABLE MATERIALS SPILLED, WASHED, OR TRACKED ONTO PUBLIC ROADWAYS.

12. ADDITIONALLY THE CONTRACTOR IS RESPONSIBLE FOR CONDUCTING "SELF INSPECTIONS" INDICATING THE DATE BMPs ARE INSTALLED AND STABILIZATION MEASURES (SEEDING/MULCHING OR SOD) ARE INITIATED. THE "SELF INSPECTION" REPORTS WILL BE MAINTAINED ALONG WITH THE "NPDES" INSPECTION REPORTS. ONCE STABILIZATION HAS BEEN ACCOMPLISHED INSPECTION RECORDS ARE TO BE FORWARDED TO EAD AND ALL TEMPORARY EROSION/SEDIMENTATION CONTROL DEVICES REMOVED.

13. THE CONTRACTOR IS RESPONSIBLE FOR MAINTAINING COMPLIANCE WITH ALL PERMITS AND PLANS, ANY CHANGES WILL BE APPROVED BY THE STATE PRIOR TO EXECUTION. A COPY OF THE EROSOIN AND SEDIMENTATION CONTROL PLAN, LETTER OF APPROVAL, AND NPDES CONSTRUCTION PERMIT WILL BE MAINTAINED BY THE CONTRACTOR AT THE ONSITE OFFICE. IF SOIL IS REMOVED FROM OR BROUGHT ONSITE, THE APPLICABLE SOLID WASTE MANAGEMENT PERMIT NUMBER, EROSION SEDIMENTATION PERMIT NUMBER OR MINE PERMIT NUMBER WILL BE DISCLOSED.

SEQUENCE OF CONSTRUCTION:

1. OBTAIN APPROVAL OF PLAN AND ANY NECESSARY PERMITS, AND HOLD A PRE-CONSTRUCTION CONFERENCE PRIOR TO COMMENCING ANY WORK.
2. CONTRACTOR TO NOTIFY PWD, DESIGN BRANCH (TALIA.BARRACO@USMC.MIL) AND EMD, COMPLIANCE BRANCH (MICHAEL.C.TAYLOR5@USMC.MIL) 48-HR PRIOR TO LAND DISTURBING ACTIVITIES.
3. MARK LIMITS OF DISTURBANCE (10.5 AC) AND SECURE SITE AS REQUIRED, SPECIFIC TO EACH AREA OF THE SITE.
4. STAKE OUT ROADS AND STORM DRAINAGE STRUCTURES FOR PRELIMINARY GRADING.
5. INSTALL ROCK CONSTRUCTION ENTRANCES.
6. CLEAR AND GRUB EXISTING SITE.
7. INSTALL COMPOST SOCK AS SHOWN ON PLAN.
8. CONSTRUCT ANY OTHER SEDIMENT CONTROL PRACTICES SHOWN, PRIOR TO ROUGH GRADING ROADWAYS, SITE AND STOCKPILING TOPSOIL AS NECESSARY.
9. BEGIN CONSTRUCTION OF THE PROPOSED BUILDING.
10. INSTALL STORM SEWER CONVEYANCE PIPE AND STRUCTURES.
11. FINAL GRADE, INSTALL ALL OTHER UTILITIES, INCLUDING BUT NOT LIMITED TO WATER, SEWER, GAS, COMMUNICATIONS, ELECTRICAL POWER AND SITE LIGHTING. VEGETATIVELY STABILIZE AREAS WHERE BUILDING CONSTRUCTION IS NOT IMMINENT.
12. ONCE FINAL GRADE HAS BEEN ESTABLISHED AND NON-PAVED AREAS HAVE BEEN STABILIZED, STORM DRAIN NETWORK CAN BE FLUSHED OF SEDIMENT.
13. UPON COMPLETION OF CONSTRUCTION, THE ROADWAY, PARKING AND CIRCULATION AREAS ARE TO BE PAVED, AND ALL AREAS PERMANENTLY VEGETATIVELY STABILIZED AS INDICATED IN THE LANDSCAPE PLANS. AFTER SITE STABILIZATION, TEMPORARY EROSION AND SEDIMENT CONTROL MEASURES ARE TO BE REMOVED.
14. ONCE THE EXISTING TENANT HAS BEEN RELOCATED FROM EXISTING BUILDING 1601 TO THE NEWLY CONSTRUCTED P1527 LOGCOM CSP WAREHOUSE. ESTABLISH E&S CONTROLS AROUND THE EXISTING 1601 BUILDING PER THE APPROVED PLANS.
15. DEMOLISH THE SITE PER THE INFORMATION SHOWN ON THE DEMOLITION PLAN.
16. ESTABLISH GRADE PER THE GRADING PLAN PROVIDED.
17. STABILIZE THE SITE AS SHOWN ON THE PLANTING PLAN.
18. UPON COMPLETION OF CONSTRUCTION, THE ROADWAY, PARKING AND CIRCULATION AREAS ARE TO BE PAVED, AND ALL AREAS PERMANENTLY VEGETATIVELY STABILIZED AS INDICATED IN THE LANDSCAPE PLANS. AFTER SITE STABILIZATION, TEMPORARY EROSION AND SEDIMENT CONTROL MEASURES ARE TO BE REMOVED.

TEMPORARY STABILIZATION:

AREAS REQUIRING TEMPORARY STABILIZATION	TIMEFRAME TO APPLY EROSION CONTROLS
FOR ALL CONSTRUCTION ACTIVITIES, ANY DISTURBED AREA, INCLUDING SOIL STOCKPILES THAT WILL BE DORMANT FOR MORE THAN FOURTEEN (14) DAYS BUT LESS THAN NINETY (90) DAYS	WITHIN SEVEN (7) DAYS OF THE MOST RECENT DISTURBANCE WITHIN THE AREA
DISTURBED AREA THAT WILL BE IDLE OVER WINTER	PRIOR TO THE ONSET OF WINTER WEATHER/ NOVEMBER 1ST

NOTES:
WHERE VEGETATIVE STABILIZATION TECHNIQUES MAY CAUSE STRUCTURAL INSTABILITY OR ARE OTHERWISE UNOBTAINABLE, ALTERNATIVE STABILIZATION TECHNIQUES MUST BE EMPLOYED.

APPR	DATE	DESCRIPTION	SYM

NAVFAC

COMMONWEALTH OF PENNSYLVANIA
REGISTERED PROFESSIONAL
BRANDON ROBB FOMBELLE
ENGINEER No. PE086276

RQ Jordan COMPANY – A JOINT VENTURE –

Michael Baker INTERNATIONAL
100 AIRSIDE DRIVE
MOON TOWNSHIP, PA 15108 A/E INFO

APPROVED

FOR COMMANDER NAVFAC

ACTIVITY
MARINE CORPS BASE CAMP LEJEUNE

SATISFACTORY TO DATE

DES	DRW	CHK
BRF	BRF	WN

PM / DM: TOWLER / ROOT
BRANCH HEAD:
DESIGN DIRECTOR: R.L.Stephens, Jr.
FIRE PROTECTION: DPS

DEPARTMENT OF THE NAVY
NAVAL FACILITIES ENGINEERING SYSTEMS COMMAND
ATLANTIC DESIGN AND CONSTRUCTION
NAVAL FACILITIES ENGINEERING SYSTEMS COMMAND ATLANTIC
NORFOLK, VA
JACKSONVILLE, NC
MCB CAMP LEJEUNE
P1527 LOGCOM CSP WAREHOUSE

EROSION AND SEDIMENT CONTROL NOTES AND SEQUENCE

SCALE: AS NOTED
EPROJECT NO.: 1639600
CONSTR. CONTR. NO. N40085-20-C-0059
NAVFAC DRAWING NO. 14111063
SHEET 60 OF 447

CE001

P1527 FINAL SUBMISSION - 11/18/2021

PLOTTED: 11/11/2021 9:37:09 PM

FILE NAME: \\mcnpsa1d1\VOL2_PROJECTS\180769-HF Package 3\05_Deliverables\Drawings\05 C_Civil\Sheet Files\P1527\175970_P1527F - CE500.dwg

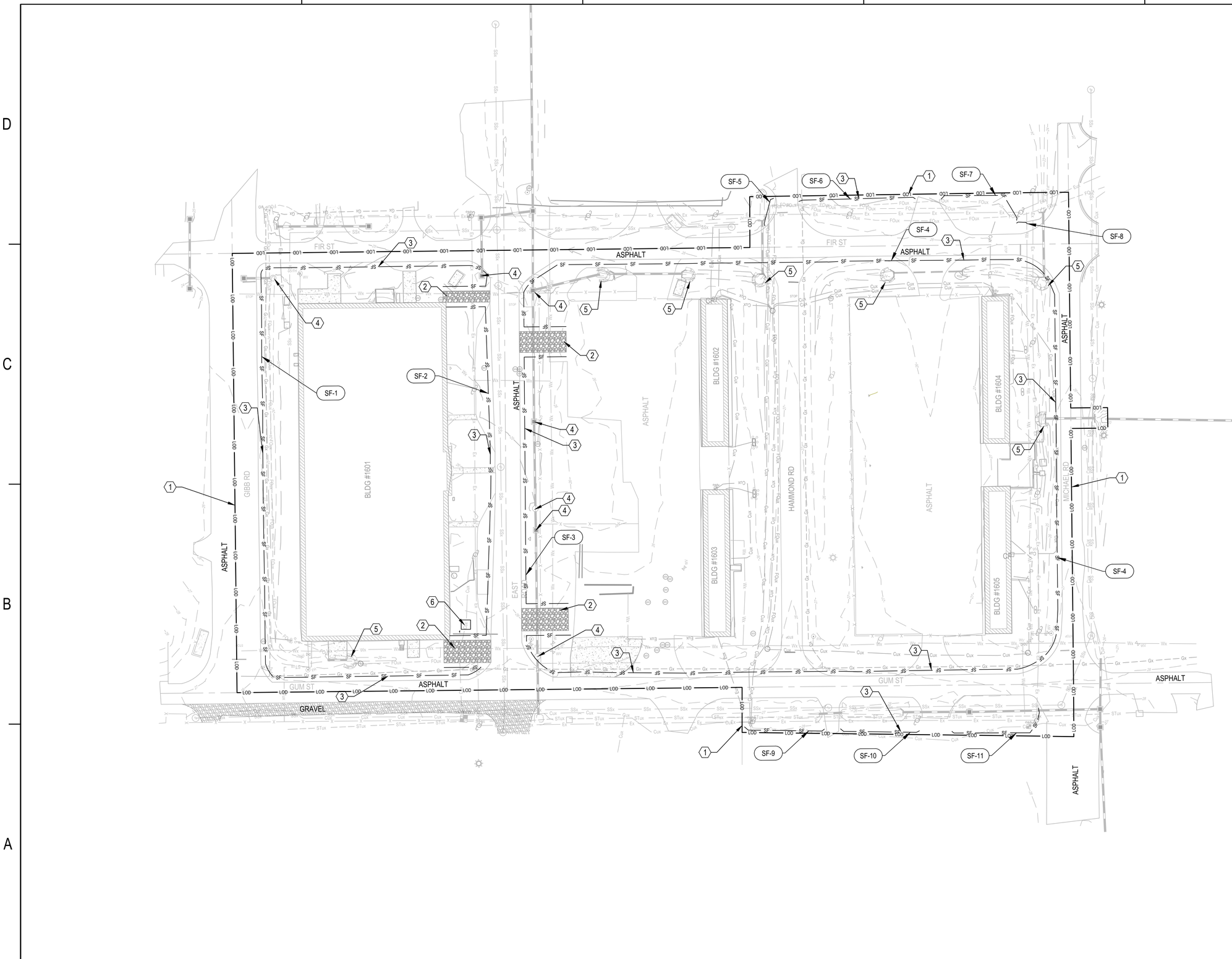

KEYED NOTES

NOT ALL KEYED NOTES MAY APPEAR ON SHEET

1. LIMIT OF DISTURBANCE
2. ROCK CONSTRUCTION ENTRANCE (C1/CE501)
3. SILT FENCE (A1/CE501)
4. EXCAVATED DROP INLET PROTECTION (A4/CE503)
5. ROCK PIPE INLET PROTECTION (A1/CE503)
6. CONCRETE WASHOUT STRUCTURE (CE504)

GENERAL NOTES

1. SEE SHEET C-001 - C-003 FOR CIVIL GENERAL NOTES.
2. SEE SHEET C-004 FOR CIVIL LEGEND AND ABBREVIATIONS.
3. SEE SHEET CE001 FOR EROSION AND SEDIMENT CONTROL NOTES AND SEQUENCING
4. SEE SHEET CE504 AND CE505 FOR NCDEQ EROSION AND SEDIMENT CONTROL NOTES
5. UNLESS OTHERWISE INDICATED ON THE PLANS, ALL NON-PAVED AREAS SHALL BE GRASS.

SYM	DESCRIPTION	DATE	APPR

NAVFAC

COMMONWEALTH OF PENNSYLVANIA
REGISTERED PROFESSIONAL
BRANDON ROBB FOMBELLE
ENGINEER No. PE086276

RQ W.M. Jordan COMPANY - A JOINT VENTURE -

Michael Baker INTERNATIONAL
100 AIRSIDE DRIVE
MOON TOWNSHIP, PA 15108
A/E INFO

APPROVED

FOR COMMANDER NAVFAC

ACTIVITY
MARINE CORPS BASE CAMP LEJEUNE

SATISFACTORY TO DATE

DES BRF	DRW BRF	CHK WN
PM / DM	TOWLER / ROOT	
BRANCH HEAD		
DESIGN DIRECTOR	R.L.Stephens, Jr.	
FIRE PROTECTION	DPS	

DEPARTMENT OF THE NAVY
NAVAL FACILITIES ENGINEERING SYSTEMS COMMAND
ATLANTIC DESIGN AND CONSTRUCTION
NAVAL FACILITIES ENGINEERING SYSTEMS COMMAND ATLANTIC
NORFOLK, VA
MCB CAMP LEJEUNE
JACKSONVILLE, NC

P1527 LOGCOM CSP WAREHOUSE

EROSION AND SEDIMENT CONTROL PLAN PHASE 1

SCALE:	AS NOTED
EPROJECT NO.:	1639600
CONSTR. CONTR. NO.	N40085-20-C-0059
NAVFAC DRAWING NO.	14111064
SHEET	61 OF 447

CE101

P1527 FINAL SUBMISSION - 11/18/2021

PLOTTED: 11/11/2021 9:37:44 PM

FILE NAME: \\mcorpa1d1\VOL2_PROJECTS\180780 HF Package 3\05_Deliverables\Drawings\05 C_Civil\Sheet Files\P1527\175970_P1527F - CE101.dwg

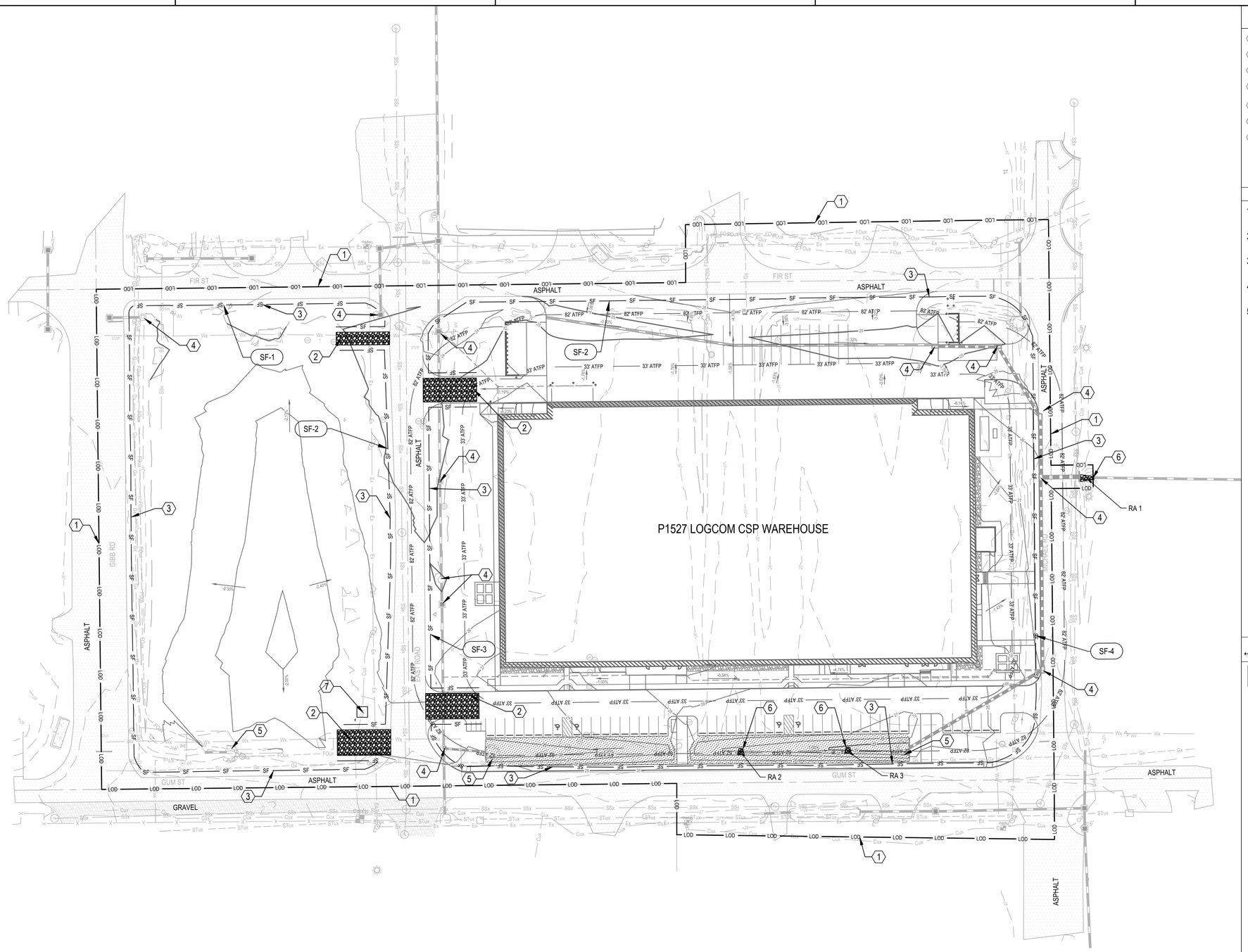

KEYED NOTES

NOT ALL KEYED NOTES MAY APPEAR ON SHEET

1. LIMIT OF DISTURBANCE
2. ROCK CONSTRUCTION ENTRANCE (C1/CE501)
3. SILT FENCE (A1/CE501)
4. EXCAVATED DROP INLET PROTECTION (A4/CE503)
5. ROCK PIPE INLET PROTECTION (A1/CE503)
6. RIPRAP APRON (C1/CE502)
7. CONCRETE WASHOUT STRUCTURE (CE504)

GENERAL NOTES

1. SEE SHEET C-001 - C-003 FOR CIVIL GENERAL NOTES.
2. SEE SHEET C-004 FOR CIVIL LEGEND AND ABBREVIATIONS.
3. SEE SHEET CE001 FOR EROSION AND SEDIMENT CONTROL NOTES AND SEQUENCING
4. SEE SHEET CE504 AND CE505 FOR NCDEQ EROSION AND SEDIMENT CONTROL NOTES
5. UNLESS OTHERWISE INDICATED ON THE PLANS, ALL NON-PAVED AREAS SHALL BE GRASS.

LEGEND

NOT ALL PAVEMENT TYPES MAY APPEAR ON SHEET

EROSION CONTROL BLANKET (A3/CE502)

0 25' 50' 100'

SCALE: 1" = 50'

APPR	DATE	DESCRIPTION	SYM

NAVFAC

COMMONWEALTH OF PENNSYLVANIA
REGISTERED PROFESSIONAL
BRANDON ROBB FOMBELLE
ENGINEER No. PE086276

RQ Jordan COMPANY - A JOINT VENTURE -

Michael Baker INTERNATIONAL
100 AIRSIDE DRIVE
MOON TOWNSHIP, PA 15108
A/E INFO

APPROVED

FOR COMMANDER NAVFAC

ACTIVITY
MARINE CORPS BASE CAMP LEJEUNE

SATISFACTORY TO DATE

DES	DRW	CHK
BRF	BRF	WN

PM / DM: TOWLER / ROOT
BRANCH HEAD:
DESIGN DIRECTOR: R.L.Stephens, Jr.
FIRE PROTECTION: DPS

DEPARTMENT OF THE NAVY
NAVAL FACILITIES ENGINEERING SYSTEMS COMMAND
ATLANTIC DESIGN AND CONSTRUCTION

NAVAL FACILITIES ENGINEERING SYSTEMS COMMAND ATLANTIC
NORFOLK, VA

MCB CAMP LEJEUNE
JACKSONVILLE, NC
P1527 LOGCOM CSP WAREHOUSE

EROSION AND SEDIMENT CONTROL PLAN PHASE 2

SCALE: AS NOTED
EPROJECT NO.: 1639600
CONSTR. CONTR. NO.: N40085-20-C-0059
NAVFAC DRAWING NO.: 14111065
SHEET 62 OF 447

CE102

P1527 FINAL SUBMISSION - 11/18/2021

PLOTTED: 11/11/2021 9:38:35 PM

FILE NAME: \\mcorpa1d1.jax.mtakercorp.com\VOL2_PROJECTS\160780-HF Package 3\05_Deliverables\Drawings\05 C_Civil\Sheet Files\P1527\175970_P1527F - CE102.dwg

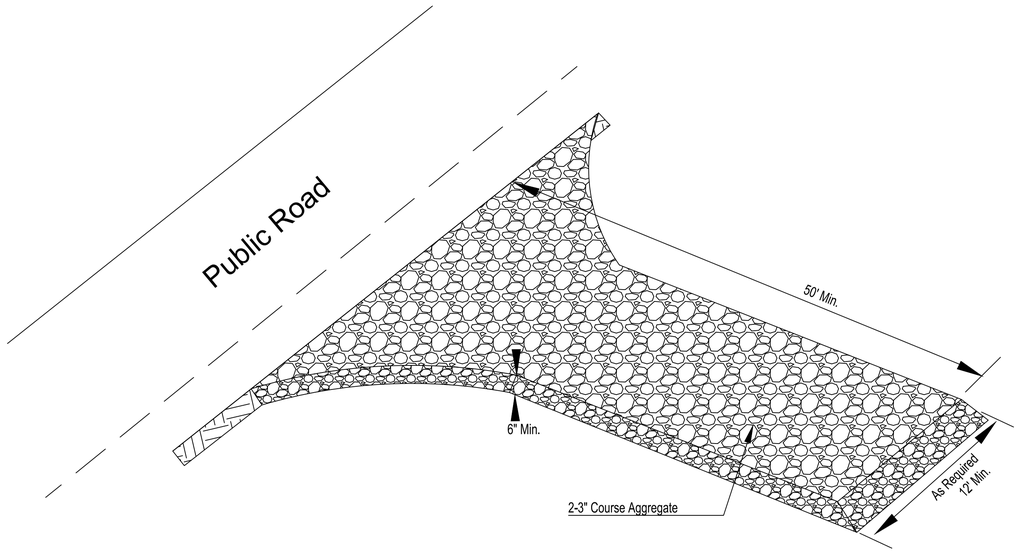

CONSTRUCTION:
1. CLEAR THE ENTRANCE AND EXIT AREA OF ALL VEGETATION, ROOTS, AND OTHER OBJECTIONABLE MATERIAL AND PROPERLY GRADE IT.
2. PLACE THE GRAVEL TO THE SPECIFIC GRADE AND DIMENSIONS SHOWN ON THE PLANS, AND SMOOTH IT.
3. PROVIDE DRAINAGE TO CARRY WATER TO A SEDIMENT TRAP OR OTHER SUITABLE OUTLET.
4. USE GEOTEXTILE FABRICS IN ORDER TO IMPROVE STABILITY OF THE FOUNDATION IN LOCATIONS SUBJECT TO SEEPAGE OR HIGH WATER TABLE.

MAINTENANCE:
1. PER NCG-01 INSPECT AT LEAST ONCE A WEEK AND AFTER EACH 1 INCH OR GREATER RAINFALL; MAKE ANY REQUIRED REPAIRS IMMEDIATELY.
2. MAINTAIN THE GRAVEL PAD IN A CONDITION TO PREVENT MUD OR SEDIMENT FROM LEAVING THE CONSTRUCTION SITE. THIS MAY REQUIRE PERIODIC TOPDRESSING WITH 2 INCH STONE.
3. IMMEDIATELY REMOVE ALL OBJECTIONABLE MATERIALS SPILLED, WASHED OR TRACKED ONTO PUBLIC ROADWAYS.

ROCK CONSTRUCTION ENTRANCE
SCALE: N.T.S.

C1

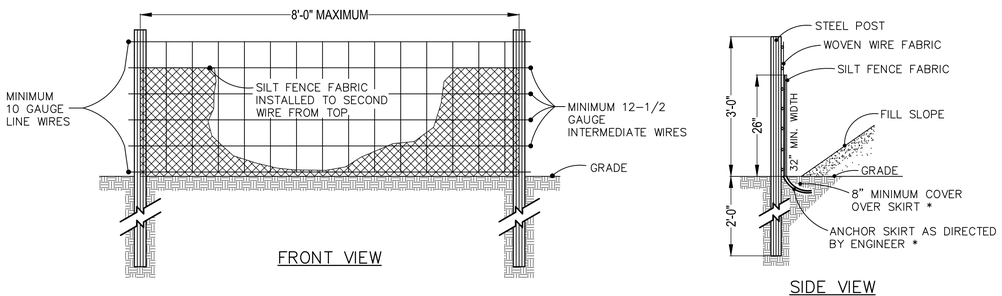

FRONT VIEW

SIDE VIEW

NOTES:

1. USE SILT FENCE ONLY WHEN DRAINAGE AREA DOES NOT EXCEED 1/4 ACRE AND NEVER IN AREAS OF CONCENTRATED FLOW.

2. REMOVE SEDIMENT DEPOSITED AS NEEDED TO PROVIDE STORAGE VOLUME FOR THE NEXT RAIN AND TO REMOVE PRESSURE ON THE SILT FENCE.

FENCE No.	TYPE	SLOPE	SLOPE LENGTH ABOVE BARRIER (FT)
SF-1	12	1%	200
SF-2	12	1%	120
SF-3	18	3%	250
SF-4	18	4%	70
SF-5	12	4%	40
SF-6	12	4%	57
SF-7	12	4%	35
SF-8	12	5%	18
SF-9	12	2%	10
SF-10	12	2%	10
SF-11	12	2%	10

SILT FENCE
SCALE: N.T.S.

A1

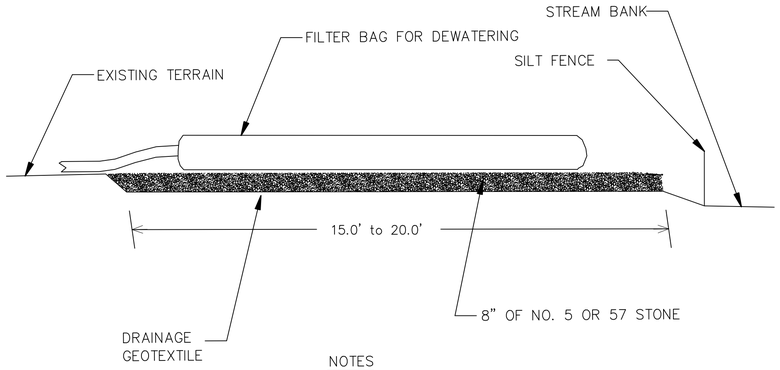

NOTES

PROVIDE STABILIZED OUTLET TO STREAM BANK. WOOD PALLETS MAY BE USED IN LIEU OF STONE AND GEOTEXTILE AS DIRECTED. A SUFFICIENT NUMBER OF PALLETS MUST BE PROVIDED TO ELEVATE THE ENTIRE FILTER BAG FOR DEWATERING ABOVE NATURAL GROUND.

FILTER BAG FOR DEWATERING ACTIVITIES
SCALE: N.T.S.

A4

SYM	DESCRIPTION	DATE	APPR

NAVFAC

COMMONWEALTH OF PENNSYLVANIA
REGISTERED PROFESSIONAL
BRANDON ROBB FOMBELLE
ENGINEER No. PE086276

RQ Jordan COMPANY - A JOINT VENTURE -

Michael Baker INTERNATIONAL
100 AIRSIDE DRIVE
MOON TOWNSHIP, PA 15108 A/E INFO

APPROVED

FOR COMMANDER NAVFAC

ACTIVITY
MARINE CORPS BASE
CAMP LEJEUNE

SATISFACTORY TO DATE

DES BRF | DRW BRF | CHK WN

PM / DM TOWLER / ROOT

BRANCH HEAD

DESIGN DIRECTOR R.L.Stephens, Jr.

FIRE PROTECTION DPS

DEPARTMENT OF THE NAVY
NAVAL FACILITIES ENGINEERING SYSTEMS COMMAND
ATLANTIC DESIGN AND CONSTRUCTION

NAVAL FACILITIES ENGINEERING SYSTEMS COMMAND ATLANTIC
NORFOLK, VA

JACKSONVILLE, NC
P1527 LOGCOM CSP WAREHOUSE
MCB CAMP LEJEUNE

EROSION AND SEDIMENT CONTROL DETAILS

SCALE: AS NOTED
EPROJECT NO.: 1639600
CONSTR. CONTR. NO. N40085-20-C-0059
NAVFAC DRAWING NO. 14111066
SHEET 63 OF 447

CE501

P1527 FINAL SUBMISSION - 11/19/2021

PLOTTED: 11/11/2021 9:39:37 PM

FILE NAME: \\mcorps1st1\V2L2_PROJECTS\180780 HF Package 3\06_Deliverables\Drawings\05 C_Civil\Sheet Files\P1527\175970_P1527F - CE500.dwg

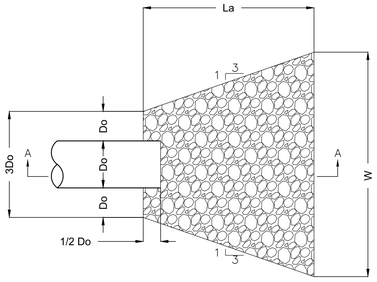

PLAN VIEW (MIN TAILWATER CONDITION)

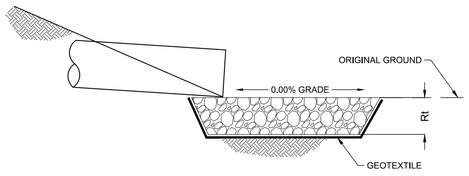

SECTION A-A

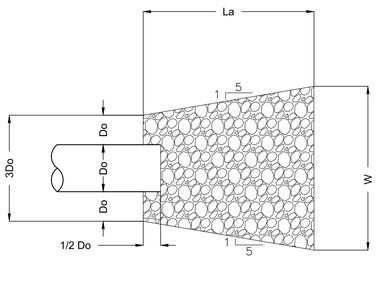

PLAN VIEW (MAX TAILWATER CONDITION)

NOTES:

ALL APRONS SHALL BE CONSTRUCTED TO THE DIMENSIONS SHOWN. TERMINAL WIDTHS SHALL BE ADJUSTED AS NECESSARY TO MATCH RECEIVING CHANNELS.

ALL APRONS SHALL BE INSPECTED AT LEAST WEEKLY AND AFTER EACH RUNOFF EVENT. DISPLACED RIPRAP WITHIN THE APRON SHALL BE REPLACED IMMEDIATELY.

EXTEND RIPRAP ON BACK SIDE OF APRON TO AT LEAST 1/2 DEPTH OF PIPE ON BOTH SIDES TO PREVENT SCOUR AROUND THE PIPE.

RIPRAP APRON	Do (FT)	La (FT)	W (FT)	D50 (FT)
1	3	20	23	0.5

RIPRAP APRON (NO FLARED END SECTION) C1

SCALE: N.T.S.

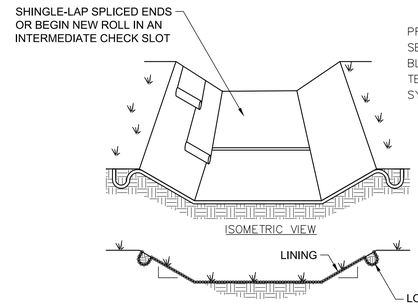

(LOOKING UPSTREAM)
CHANNEL CROSS – SECTION

PREPARE SOIL AND APPLY SEED BEFORE INSTALLING BLANKETS, MATS, OR OTHER TEMPORARY CHANNEL LINER SYSTEM.

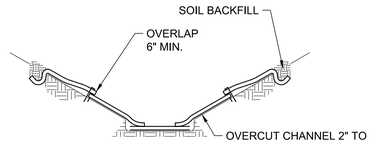

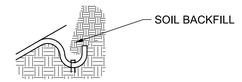

LONGITUDINAL ANCHOR TRENCH

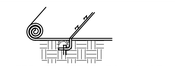

INTERMEDIATE CHECK SLOT

NOTE:

1. SEE MANUFACTURER'S LINING INSTALLATION DETAIL FOR STAPLE PATTERNS, AND VEGETATIVE STABILIZATION SPECIFICATIONS FOR SOIL AMENDMENTS, SEED MIXTURES, AND MULCHING INFORMATION.
2. ANCHOR TRENCHES SHALL BE INSTALLED AT BEGINNING AND END OF CHANNEL IN THE SAME MANNER AS LONGITUDINAL ANCHOR TRENCHES.
3. CHANNEL DIMENSIONS SHALL BE CONSTANTLY MAINTAINED. SEDIMENT DEPOSITS SHALL BE REMOVED WITHIN 24 HOURS OF DISCOVERY.
4. DAMAGED LINING SHALL BE REPAIRED OR REPLACED WITHIN 48 HOURS OF DISCOVERY.

Channel	Stations	Drainage Area (ac)	Required Capacity (cfs)	Channel Slope (%)	Dimensions				Freeboard Provided	Available Capacity (cfs)	Channel Lining Material	Velocity		Shear Stress	
					Depth (ft.)	Bottom Width (ft.)	Top Width (ft.)	Side Slopes (H:V)				Max Design (fps)	Allowable (fps)	Max Design (lbs/sf)	Allowable (lbs/sf)
Channel 1	All	0.79	4.416	1	1.50	2.00	11.00	3:1	0.70	17.3	S75	1.25	5.0	0.50	1.55
Channel 2	All	1.25	1.249	1	1.75	2.00	12.50	3:1	0.58	28.0	S75	1.75	5.0	0.73	1.55

VEGETATED CHANNEL C3

SCALE: N.T.S.

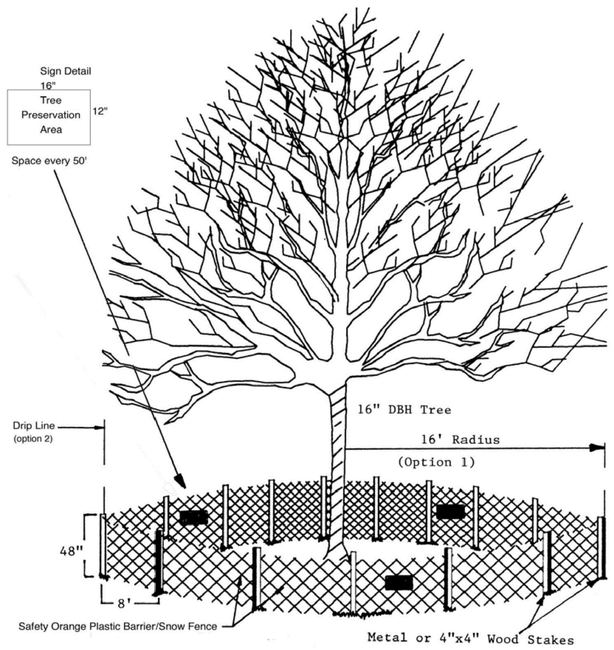

EROSION CONTROL BLANKET INSTALLATION A3

SCALE: N.T.S.

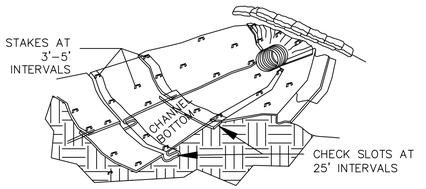

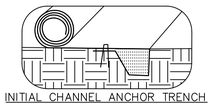

INITIAL CHANNEL ANCHOR TRENCH



TERMINAL SLOPE AND CHANNEL ANCHOR TRENCH

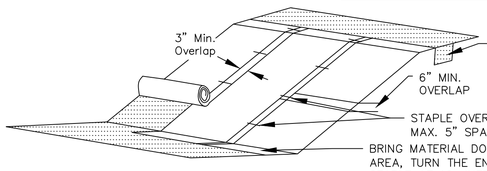

NOTES:

1. LIME, FERTILIZE AND SEED BEFORE INSTALLATION. PLANTING OF SHRUBS, TREES, ETC. SHOULD OCCUR AFTER INSTALLATION.
2. SLOPE SURFACE SHALL BE SMOOTH BEFORE PLACEMENT FOR PROPER SOIL CONTACT.
3. DESIGN VELOCITIES EXCEEDING 2 FEET/SECOND REQUIRE TEMPORARY BLANKETS, MATS OR SIMILAR LINERS TO PROTECT SEED AND SOIL UNTIL VEGETATION BECOMES ESTABLISHED.
4. TERMINAL ANCHOR TRENCHES ARE REQUIRED AT RECP ENDS AND INTERMITTENT CHECK SLOTS MUST BE CONSTRUCTED ACROSS CHANNELS AT 25 FOOT INTERVALS.
5. TERMINAL ANCHOR TRENCHES SHOULD BE A MINIMUM OF 12 INCHES IN DEPTH AND 6 INCHES IN WIDTH. INTERMITTENT CHECK SLOTS SHOULD BE 6 INCHES DEEP AND 6 INCHES WIDE.
6. FOR INSTALLATION ON A SLOPE, PLACE RECP 2–3 FEET OVER THE TOP OF THE SLOPE AND INTO AN EXCAVATED END TRENCH MEASURING APPROXIMATELY 12 INCHES DEEP BY 6 INCHES WIDE. PIN THE RECP AT 1 FOOT INTERVALS ALONG THE BOTTOM OF THE TRENCH, BACKFILL AND COMPACT. UNROLL THE RECP DOWN THE SLOPE MAINTAINING DIRECT CONTACT BETWEEN THE SOIL AND RECP. PIN USING STAPLES OR PINS IN A 3 FEET CENTER–TO–CENTER PATTERN.
7. 11 GAUGE, AT LEAST 6 INCH BY 1 INCH STAPLES OR 12 INCH MINIMUM LENGTH WOODEN STAKES ARE RECOMMENDED FOR ANCHORING.
8. GRASS–LINED CHANNELS WITH DESIGN VELOCITIES EXCEEDING 6 FEET/SECOND SHOULD INCLUDE TURF REINFORCEMENT MATS
9. CHECK SLOTS TO BE CONSTRUCTED PER MANUFACTURERS SPECIFICATIONS.
10. STAKING OR STAPLING LAYOUT PER MANUFACTURERS SPECIFICATION.
11. IF THERE IS A BERM AT THE TOP OF SLOPE, ANCHOR UPSLOPE OF THE BERM.
12. DO NOT STRETCH BLANKETS/MATTING TIGHT, ALLOW THE ROLLS TO CONFORM TO ANY IRREGULARITIES.
13. FOR SLOPES LESS THAN 3H:1V, ROLLS MAY BE PLACED IN HORIZONTAL STRIPS.

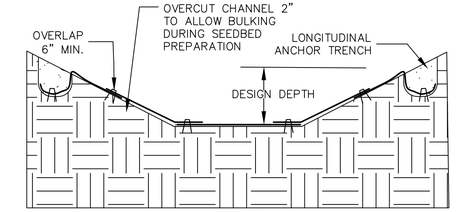

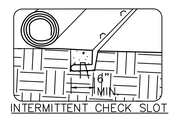

INTERMITTENT CHECK SLOT

TYPICAL INSTALLATION WITH EROSION CONTROL BLANKETS OR TURF REINFORCEMENT MATS

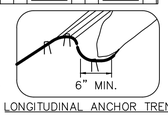

LONGITUDINAL ANCHOR TRENCH

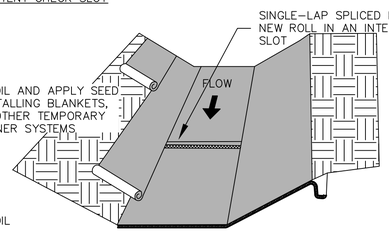

MAINTENANCE:

1. INSPECT ROLLED EROSION CONTROL PRODUCTS AT LEAST WEEKLY AND AFTER EACH RAIN OF 1 INCH OR GREATER; REPAIR IMMEDIATELY.
2. GOOD CONTACT WITH THE GROUND MUST BE MAINTAINED, AND EROSION MUST NOT OCCUR BENEATH THE RECP.
3. ANY AREAS OF THE RECP THAT ARE DAMAGED OR NOT IN CLOSE CONTACT WITH THE GROUND SHALL BE REPAIRED AND STAPLED.
4. IF EROSION OCCURS DUE TO POORLY CONTROLLED DRAINAGE, THE PROBLEM SHALL BE FIXED AND THE ERODED AREA PROTECTED.
5. MONITOR AND REPAIR THE RECP AS NECESSARY UNTIL GROUND COVER IS ESTABLISHED.

EROSION CONTROL BLANKET INSTALLATION A3

SCALE: N.T.S.

APPR | DATE | DESCRIPTION | SYM

NAVFAC

COMMONWEALTH OF PENNSYLVANIA
REGISTERED PROFESSIONAL
BRANDON ROBB FOMBELLE
ENGINEER No. PE086276

RQ Jordan COMPANY – A JOINT VENTURE –

Michael Baker INTERNATIONAL
100 AIRSIDE DRIVE
MOON TOWNSHIP, PA 15108 A/E INFO

APPROVED

FOR COMMANDER NAVFAC

ACTIVITY
MARINE CORPS BASE CAMP LEJEUNE

SATISFACTORY TO DATE

DES	DRW	CHK
BRF	BRF	WN

PM / DM: TOWLER / ROOT
BRANCH HEAD:
DESIGN DIRECTOR: R.L.Stephens, Jr.
FIRE PROTECTION: DPS

DEPARTMENT OF THE NAVY
NAVAL FACILITIES ENGINEERING SYSTEMS COMMAND
ATLANTIC DESIGN AND CONSTRUCTION
NAVAL FACILITIES ENGINEERING SYSTEMS COMMAND ATLANTIC NORFOLK, VA.
MCB CAMP LEJEUNE JACKSONVILLE, NC
P1527 LOGCOM CSP WAREHOUSE

EROSION AND SEDIMENT CONTROL DETAILS

SCALE: AS NOTED
EPROJECT NO.: 1639600
CONSTR. CONTR. NO. N40085-20-C-0059
NAVFAC DRAWING NO. 14111067
SHEET 64 OF 447

CE502

P1527 FINAL SUBMISSION - 11/18/2021

PLOTTED: 11/11/2021 9:39:38 PM

FILE NAME: \\nocrpa1st\1\XO\2_PROJECTS\18780-HF Package 3\06_Deliverables\Drawings\05 C_Civil\Sheet Files\P1527\175970_P1527F - CE500.dwg

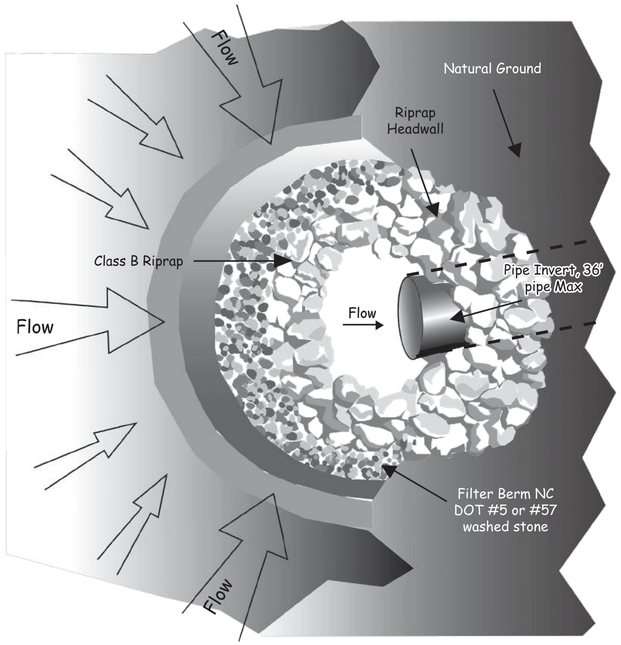

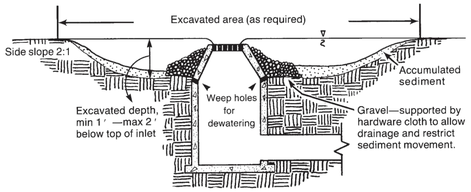

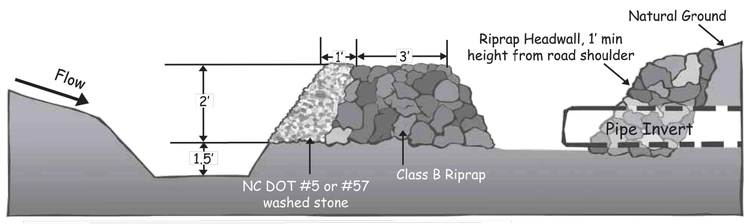

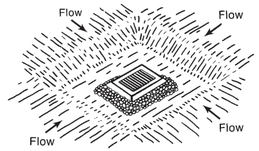

NOTES:
1. LIMIT THE DRAINAGE AREA TO 1 ACRE.
2. KEEP THE MINIMUM DEPTH AT 1 FOOT AND THE MAXIMUM DEPTH OF 2 FEET AS MEASURED FROM THE CREST OF THE INLET STRUCTURE.
3. MAINTAIN SIDE SLOPES AROUND THE EXCAVATION NO STEEPER THAN 2:1
4. KEEP THE MINIMUM VOLUME OF EXCAVATED AREA AROUND THE DROP INLET AT APPROXIMATELY 1800 FT3/ACRE DISTURBED.
5. SHAPE THE BASIN TO FT SITE CONDITIONS, WITH THE LONGEST DIMENSION ORIENTED TOWARD THE LONGEST INFLOW AREA TO PROVIDE MAXIMUM TRAP EFFICIENCY.
6. INSTALL PROVISIONS FOR DRAINING THE TEMPORARY POOL TO IMPROVE TRAPPING EFFICIENCY FOR SMALL STORMS AND TO AVOID PROBLEMS FROM STANDING WATER AFTER HEAVY RAINS.

ROCK PIPE INLET PROTECTION CALCULATIONS									
	Pipe Inlet #1	Pipe Inlet #2	Pipe Inlet #3	Pipe Inlet #4	Pipe Inlet #5	Pipe Inlet #6	Pipe Inlet #7	Pipe Inlet STM 5.06	Pipe Inlet STM 2.02
Drainage Area (acres)	0.19	0.03	0.59	0.85	0.93	0.21	0.71	0.4	0.59
Min Vol. of Excavated Area Around Inlet (CF)	342	54	1062	1530	1674	378	1278	720	1062
Depth of Excavated Area Around Inlet (FT)	1.5	1.5	1.5	1.5	1.5	1.5	1.5	1.5	1.5
Bottom Width of Excavated Area (FT)	12	3	24	29	31	13	27	19	24
Bottom Length of Excavated Area (FT)	12	3	24	29	31	13	27	19	24
Side Slope of Excavated Area (H:V)	2	2	2	2	2	2	2	2	2
Total Ditch Top Width (ft)	18	9	30	35	37	19	33	25	30
Total Ditch Top Length (ft)	18	9	30	35	37	19	33	25	30
Ditch Volume	351	68	1107	1550	1748	398	1364	740	1107
Meets Min Req?	yes	yes	yes	yes	yes	yes	yes	yes	yes

ROCK PIPE INLET PROTECTION (A1)
SCALE: N.T.S.

DROP INLET PROTECTION CALCULATIONS											
	Drop Inlet #1	Drop Inlet #2	Drop Inlet #3	Drop Inlet #4	Drop Inlet #5	Drop Inlet #STM 5.02	Drop Inlet #STM 1.04	Drop Inlet #6	Drop Inlet #7	Drop Inlet #8	Drop Inlet #9
Drainage Area (acres)	1.00	0.15	0.45	0.1	0.41	0.68	0.72	0.05	0.3	0.01	0.003
Min Vol. of Excavated Area Around Inlet (CF)	1800	270	810	180	738	1224	1296	90	540	18	5
Depth of Excavated Area Around Inlet (FT)	2	2	2	2	2	2	2	2	2	2	2
Bottom Width of Excavated Area (FT)	26	7	16	5	15	21	22	2	12	1	1
Bottom Length of Excavated Area (FT)	26	7	16	5	15	21	22	2	12	1	1
Side Slope of Excavated Area (H:V)	2	2	2	2	2	2	2	2	2	2	2
Total Ditch Top Width (ft)	34	15	24	13	23	29	30	10	20	9	9
Ditch Volume	1832	274	832	194	754	1282	1384	104	544	82	82
Meets Min Req?	yes	yes	yes	yes	yes	yes	yes	yes	yes	yes	yes

EXCAVATED DROP INLET PROTECTION (A4)
SCALE: N.T.S.

SYM	DESCRIPTION	DATE	APPR

NAVFAC

COMMONWEALTH OF PENNSYLVANIA
REGISTERED PROFESSIONAL
BRANDON ROBB FOMBELLE
ENGINEER No. PE086276

RQ AWM Jordan COMPANY - A JOINT VENTURE -

Michael Baker INTERNATIONAL
100 AIRSIDE DRIVE
MOON TOWNSHIP, PA 15108 A/E INFO

APPROVED
FOR COMMANDER NAVFAC

ACTIVITY
MARINE CORPS BASE CAMP LEJEUNE

SATISFACTORY TO DATE

DES	DRW	CHK
BRF	BRF	WN

PM / DM: TOWLER / ROOT
BRANCH HEAD:
DESIGN DIRECTOR: R.L.Stephens, Jr.
FIRE PROTECTION: DPS

DEPARTMENT OF THE NAVY
NAVAL FACILITIES ENGINEERING SYSTEMS COMMAND ATLANTIC
ATLANTIC DIVISION AND CONSTRUCTION
NAVAL FACILITIES ENGINEERING SYSTEMS COMMAND ATLANTIC
NORFOLK, VA.
JACKSONVILLE, NC
MCB CAMP LEJEUNE
P1527 LOGCOM CSP WAREHOUSE

EROSION AND SEDIMENT CONTROL DETAILS

SCALE: AS NOTED
EPROJECT NO.: 1639600
CONSTR. CONTR. NO. N40085-20-C-0059
NAVFAC DRAWING NO. 14111068
SHEET 65 OF 447

CE503

P1527 FINAL SUBMISSION - 11/18/2021

PLOTTED: 11/17/2021 9:40:41 PM
FILE NAME: \\mocrpa1st1.bkr.mbakercorp.com\VOL2_PROJECTS\180780 HF Package 3\05_Deliverables\Drawings\05 C_Civil\Sheet Files\P1527\175970_P1527F - CE500.dwg

GROUND STABILIZATION AND MATERIALS HANDLING PRACTICES FOR COMPLIANCE WITH THE NCG01 CONSTRUCTION GENERAL PERMIT

Implementing the details and specifications on this plan sheet will result in the construction activity being considered compliant with the Ground Stabilization and Materials Handling sections of the NCG01 Construction General Permit (Sections E and F, respectively). The permittee shall comply with the Erosion and Sediment Control plan approved by the delegated authority having jurisdiction. All details and specifications shown on this sheet may not apply depending on site conditions and the delegated authority having jurisdiction.

SECTION E: GROUND STABILIZATION

Required Ground Stabilization Timeframes

Site Area Description	Stabilize within this many calendar days after ceasing land disturbance	Timeframe variations
(a) Perimeter dikes, swales, ditches, and perimeter slopes	7	None
(b) High Quality Water (HQW) Zones	7	None
(c) Slopes steeper than 3:1	7	If slopes are 10' or less in length and are not steeper than 2:1, 14 days are allowed
(d) Slopes 3:1 to 4:1	14	-7 days for slopes greater than 50' in length and with slopes steeper than 4:1 -7 days for perimeter dikes, swales, ditches, perimeter slopes and HQW Zones -10 days for Falls Lake Watershed
(e) Areas with slopes flatter than 4:1	14	-7 days for perimeter dikes, swales, ditches, perimeter slopes and HQW Zones -10 days for Falls Lake Watershed unless there is zero slope

Note: After the permanent cessation of construction activities, any areas with temporary ground stabilization shall be converted to permanent ground stabilization as soon as practicable but in no case longer than 90 calendar days after the last land disturbing activity. Temporary ground stabilization shall be maintained in a manner to render the surface stable against accelerated erosion until permanent ground stabilization is achieved.

GROUND STABILIZATION SPECIFICATION

Stabilize the ground sufficiently so that rain will not dislodge the soil. Use one of the techniques in the table below:

Temporary Stabilization	Permanent Stabilization
• Temporary grass seed covered with straw or other mulches and tackifiers • Hydroseeding • Rolled erosion control products with or without temporary grass seed • Appropriately applied straw or other mulch • Plastic sheeting	• Permanent grass seed covered with straw or other mulches and tackifiers • Geotextile fabrics such as permanent soil reinforcement matting • Hydroseeding • Shrubs or other permanent plantings covered with mulch • Uniform and evenly distributed ground cover sufficient to restrain erosion • Structural methods such as concrete, asphalt or retaining walls • Rolled erosion control products with grass seed

POLYACRYLAMIDES (PAMS) AND FLOCCULANTS

1. Select flocculants that are appropriate for the soils being exposed during construction, selecting from the *NC DWR List of Approved PAMS/Flocculants*.
2. Apply flocculants at or before the inlets to Erosion and Sediment Control Measures.
3. Apply flocculants at the concentrations specified in the *NC DWR List of Approved PAMS/Flocculants* and in accordance with the manufacturer's instructions.
4. Provide ponding area for containment of treated Stormwater before discharging offsite.
5. Store flocculants in leak-proof containers that are kept under storm-resistant cover or surrounded by secondary containment structures.

EQUIPMENT AND VEHICLE MAINTENANCE

1. Maintain vehicles and equipment to prevent discharge of fluids.
2. Provide drip pans under any stored equipment.
3. Identify leaks and repair as soon as feasible, or remove leaking equipment from the project.
4. Collect all spent fluids, store in separate containers and properly dispose as hazardous waste (recycle when possible).
5. Remove leaking vehicles and construction equipment from service until the problem has been corrected.
6. Bring used fuels, lubricants, coolants, hydraulic fluids and other petroleum products to a recycling or disposal center that handles these materials.

LITTER, BUILDING MATERIAL AND LAND CLEARING WASTE

1. Never bury or burn waste. Place litter and debris in approved waste containers.
2. Provide a sufficient number and size of waste containers (e.g dumpster, trash receptacle) on site to contain construction and domestic wastes.
3. Locate waste containers at least 50 feet away from storm drain inlets and surface waters unless no other alternatives are reasonably available.
4. Locate waste containers on areas that do not receive substantial amounts of runoff from upland areas and does not drain directly to a storm drain, stream or wetland.
5. Cover waste containers at the end of each workday and before storm events or provide secondary containment. Repair or replace damaged waste containers.
6. Anchor all lightweight items in waste containers during times of high winds.
7. Empty waste containers as needed to prevent overflow. Clean up immediately if containers overflow.
8. Dispose waste off-site at an approved disposal facility.
9. On business days, clean up and dispose of waste in designated waste containers.

PAINT AND OTHER LIQUID WASTE

1. Do not dump paint and other liquid waste into storm drains, streams or wetlands.
2. Locate paint washouts at least 50 feet away from storm drain inlets and surface waters unless no other alternatives are reasonably available.
3. Contain liquid wastes in a controlled area.
4. Containment must be labeled, sized and placed appropriately for the needs of site.
5. Prevent the discharge of soaps, solvents, detergents and other liquid wastes from construction sites.

PORTABLE TOILETS

1. Install portable toilets on level ground, at least 50 feet away from storm drains, streams or wetlands unless there is no alternative reasonably available. If 50 foot offset is not attainable, provide relocation of portable toilet behind silt fence or place on a gravel pad and surround with sand bags.
2. Provide staking or anchoring of portable toilets during periods of high winds or in high foot traffic areas.
3. Monitor portable toilets for leaking and properly dispose of any leaked material. Utilize a licensed sanitary waste hauler to remove leaking portable toilets and replace with properly operating unit.

EARTHEN STOCKPILE MANAGEMENT

1. Show stockpile locations on plans. Locate earthen-material stockpile areas at least 50 feet away from storm drain inlets, sediment basins, perimeter sediment controls and surface waters unless it can be shown no other alternatives are reasonably available.
2. Protect stockpile with silt fence installed along toe of slope with a minimum offset of five feet from the toe of stockpile.
3. Provide stable stone access point when feasible.
4. Stabilize stockpile within the timeframes provided on this sheet and in accordance with the approved plan and any additional requirements. Soil stabilization is defined as vegetative, physical or chemical coverage techniques that will restrain accelerated erosion on disturbed soils for temporary or permanent control needs.

NORTH CAROLINA Environmental Quality

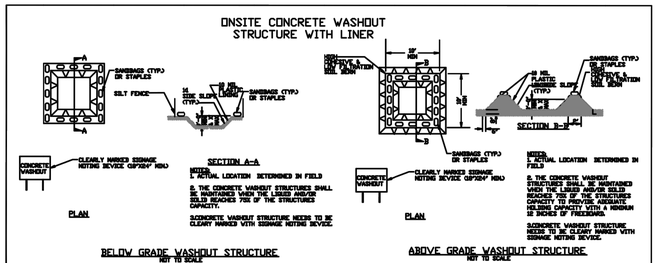

CONCRETE WASHOUTS

1. Do not discharge concrete or cement slurry from the site.
2. Dispose of, or recycle settled, hardened concrete residue in accordance with local and state solid waste regulations and at an approved facility.
3. Manage washout from mortar mixers in accordance with the above item and in addition place the mixer and associated materials on impervious barrier and within lot perimeter silt fence.
4. Install temporary concrete washouts per local requirements, where applicable. If an alternate method or product is to be used, contact your approval authority for review and approval. If local standard details are not available, use one of the two types of temporary concrete washouts provided on this detail.
5. Do not use concrete washouts for dewatering or storing defective curb or sidewalk sections. Stormwater accumulated within the washout may not be pumped into or discharged to the storm drain system or receiving surface waters. Liquid waste must be pumped out and removed from project.
6. Locate washouts at least 50 feet from storm drain inlets and surface waters unless it can be shown that no other alternatives are reasonably available. At a minimum, install protection of storm drain inlet(s) closest to the washout which could receive spills or overflow.
7. Locate washouts in an easily accessible area, on level ground and install a stone entrance pad in front of the washout. Additional controls may be required by the approving authority.
8. Install at least one sign directing concrete trucks to the washout within the project limits. Post signage on the washout itself to identify this location.
9. Remove leavings from the washout when at approximately 75% capacity to limit overflow events. Replace the tarp, sand bags or other temporary structural components when no longer functional. When utilizing alternative or proprietary products, follow manufacturer's instructions.
10. At the completion of the concrete work, remove remaining leavings and dispose of in an approved disposal facility. Fill pit, if applicable, and stabilize any disturbance caused by removal of washout.

HERBICIDES, PESTICIDES AND RODENTICIDES

1. Store and apply herbicides, pesticides and rodenticides in accordance with label restrictions.
2. Store herbicides, pesticides and rodenticides in their original containers with the label, which lists directions for use, ingredients and first aid steps in case of accidental poisoning.
3. Do not store herbicides, pesticides and rodenticides in areas where flooding is possible or where they may spill or leak into wells, stormwater drains, ground water or surface water. If a spill occurs, clean area immediately.
4. Do not stockpile these materials onsite.

HAZARDOUS AND TOXIC WASTE

1. Create designated hazardous waste collection areas on-site.
2. Place hazardous waste containers under cover or in secondary containment.
3. Do not store hazardous chemicals, drums or bagged materials directly on the ground.

NCG01 GROUND STABILIZATION AND MATERIALS HANDLING

EFFECTIVE: 04/01/19

APPR | DATE | DESCRIPTION | SYM

NAVFAC

COMMONWEALTH OF PENNSYLVANIA — REGISTERED PROFESSIONAL — BRANDON ROBB FOMBELLE — ENGINEER No. PE086276

RQ Jordan COMPANY - A JOINT VENTURE -

Michael Baker INTERNATIONAL
100 AIRSIDE DRIVE, MOON TOWNSHIP, PA 15108 — A/E INFO

APPROVED
FOR COMMANDER NAVFAC
ACTIVITY: MARINE CORPS BASE CAMP LEJEUNE
SATISFACTORY TO DATE
DES BRF | DRW BRF | CHK WN
PM / DM: TOWLER / ROOT
BRANCH HEAD:
DESIGN DIRECTOR: R.L.Stephens, Jr.
FIRE PROTECTION: DPS

DEPARTMENT OF THE NAVY
NAVAL FACILITIES ENGINEERING SYSTEMS COMMAND
ATLANTIC DESIGN AND CONSTRUCTION
NAVAL FACILITIES ENGINEERING SYSTEMS COMMAND ATLANTIC — NORFOLK, VA
MCB CAMP LEJEUNE — JACKSONVILLE, NC
P1527 LOGCOM CSP WAREHOUSE
EROSION AND SEDIMENT CONTROL DETAILS

SCALE: AS NOTED
EPROJECT NO.: 1639600
CONSTR. CONTR. NO.: N40085-20-C-0059
NAVFAC DRAWING NO.: 14111069
SHEET 66 OF 447

CE504

P1527 FINAL SUBMISSION - 11/18/2021

PLOTTED: 11/11/2021 9:41:46 PM
FILE NAME: \\moorsa1d1\VOL2_PROJECTS\160780-HF Package 3\05_Deliverables\Drawings\05 C_Civil\Sheet Files\P1527\175970_P1527F - CE500.dwg

PART III
SELF-INSPECTION, RECORDKEEPING AND REPORTING

SECTION A: SELF-INSPECTION

Self-inspections are required during normal business hours in accordance with the table below. When adverse weather or site conditions would cause the safety of the inspection personnel to be in jeopardy, the inspection may be delayed until the next business day on which it is safe to perform the inspection. In addition, when a storm event of equal to or greater than 1.0 inch occurs outside of normal business hours, the self-inspection shall be performed upon the commencement of the next business day. Any time when inspections were delayed shall be noted in the Inspection Record.

Inspect	Frequency (during normal business hours)	Inspection records must include:
(1) Rain gauge maintained in good working order	Daily	Daily rainfall amounts. If no daily rain gauge observations are made during weekend or holiday periods, and no individual-day rainfall information is available, record the cumulative rain measurement for those un-attended days (anc this will determine if a site inspection is needed). Days on which no rainfall occurred shall be recorded as "zero." The permittee may use another rain-monitoring device approved by the Division.
(2) E&SC Measures	At least once per 7 calendar days and within 24 hours of a rain event ≥ 1.0 inch in 24 hours	1. Identification of the measures inspected, 2. Date and time of the inspection, 3. Name of the person performing the inspection, 4. Indication of whether the measures were operating properly, 5. Description of maintenance needs for the measure, 6. Description, evidence, and date of corrective actions taken.
(3) Stormwater discharge outfalls (SDCs)	At least once per 7 calendar days and within 24 hours of a rain event ≥ 1.0 inch in 24 hours	1. Identification of the discharge outfalls inspected, 2. Date and time of the inspection, 3. Name of the person performing the inspection, 4. Evidence of indicators of stormwater pollution such as oil sheen, floating or suspended solids or discoloration, 5. Indication of visible sediment leaving the site, 6. Description, evidence, and date of corrective actions taken.
(4) Perimeter of site	At least once per 7 calendar days and within 24 hours of a rain event ≥ 1.0 inch in 24 hours	If visible sedimentation is found outside site limits, then a record of the following shall be made: 1. Actions taken to clean up or stabilize the sediment that has left the site limits, 2. Description, evidence, and date of corrective actions taken, and 3. An explanation as to the actions taken to control future releases.
(5) Streams or wetlands onsite or offsite (where accessible)	At least once per 7 calendar days and within 24 hours of a rain event ≥ 1.0 inch in 24 hours	If the stream or wetland has increased visible sedimentation or a stream has visible increased turbidity from the construction activity, then a record of the following shall be made: 1. Description, evidence and date of corrective actions taken, and 2. Records of the required reports to the appropriate Division Regional Office per Part III, Section C, Item (2)(a) of this permit.
(6) Ground stabilization measures	After each phase of grading	1. The phase of grading (installation of perimeter E&SC measures, clearing and grubbing, installation of storm drainage facilities, completion of all land-disturbing activity, construction or redevelopment, permanent ground cover). 2. Documentation that the required ground stabilization measures have been provided within the required timeframe or an assurance that they will be provided as soon as possible.

NOTE: The rain inspection resets the required 7 calendar day inspection requirement.

PART III
SELF-INSPECTION, RECORDKEEPING AND REPORTING

SECTION B: RECORDKEEPING

1. E&SC Plan Documentation

The approved E&SC plan as well as any approved deviation shall be kept on the site. The approved E&SC plan must be kept up-to-date throughout the coverage under this permit. The following items pertaining to the E&SC plan shall be kept on site and available for inspection at all times during normal business hours.

Item to Document	Documentation Requirements
(a) Each E&SC measure has been installed and does not significantly deviate from the locations, dimensions and relative elevations shown on the approved E&SC plan.	Initial and date each E&SC measure on a copy of the approved E&SC plan or complete, date and sign an inspection report that lists each E&SC measure shown on the approved E&SC plan. This documentation is required upon the initial installation of the E&SC measures or if the E&SC measures are modified after initial installation.
(b) A phase of grading has been completed.	Initial and date a copy of the approved E&SC plan or complete, date and sign an inspection report to indicate completion of the construction phase.
(c) Ground cover is located and installed in accordance with the approved E&SC plan.	Initial and date a copy of the approved E&SC plan or complete, date and sign an inspection report to indicate compliance with approved ground cover specifications.
(d) The maintenance and repair requirements for all E&SC measures have been performed.	Complete, date and sign an inspection report.
(e) Corrective actions have been taken to E&SC measures.	Initial and date a copy of the approved E&SC plan or complete, date and sign an inspection report to indicate the completion of the corrective action.

2. Additional Documentation to be Kept on Site

In addition to the E&SC plan documents above, the following items shall be kept on the site and available for inspectors at all times during normal business hours, unless the Division provides a site-specific exemption based on unique site conditions that make this requirement not practical:

(a) This General Permit as well as the Certificate of Coverage, after it is received.

(b) Records of inspections made during the previous twelve months. The permittee shall record the required observations on the Inspection Record Form provided by the Division or a similar inspection form that includes all the required elements. Use of electronically-available records in lieu of the required paper copies will be allowed if shown to provide equal access and utility as the hard-copy records.

3. Documentation to be Retained for Three Years

All data used to complete the e-NOI and all inspection records shall be maintained for a period of three years after project completion and made available upon request. [40 CFR 122.41]

PART III
SELF-INSPECTION, RECORDKEEPING AND REPORTING

SECTION C: REPORTING

1. Occurrences that Must be Reported

Permittees shall report the following occurrences:

(a) Visible sediment deposition in a stream or wetland.

(b) Oil spills if:
- They are 25 gallons or more,
- They are less than 25 gallons but cannot be cleaned up within 24 hours,
- They cause sheen on surface waters (regardless of volume), or
- They are within 100 feet of surface waters (regardless of volume).

(c) Releases of hazardous substances in excess of reportable quantities under Section 311 of the Clean Water Act (Ref: 40 CFR 110.3 and 40 CFR 117.3) or Section 102 of CERCLA (Ref: 40 CFR 302.4) or G.S. 143-215.85.

(d) Anticipated bypasses and unanticipated bypasses.

(e) Noncompliance with the conditions of this permit that may endanger health or the environment.

2. Reporting Timeframes and Other Requirements

After a permittee becomes aware of an occurrence that must be reported, he shall contact the appropriate Division regional office within the timeframes and in accordance with the other requirements listed below. Occurrences outside normal business hours may also be reported to the Department's Environmental Emergency Center personnel at (800) 858-0368.

Occurrence	Reporting Timeframes (After Discovery) and Other Requirements
(a) Visible sediment deposition in a stream or wetland	• ***Within 24 hours***, an oral or electronic notification. • ***Within 7 calendar days***, a report that contains a description of the sediment and actions taken to address the cause of the deposition. Division staff may waive the requirement for a written report on a case-by-case basis. • If the stream is named on the NC 303(d) list as impaired for sediment-related causes, the permittee may be required to perform additional monitoring, inspections or apply more stringent practices if staff determine that additional requirements are needed to assure compliance with the federal or state impaired-waters conditions.
(b) Oil spills and release of hazardous substances per Item 1(b)-(c) above	• ***Within 24 hours***, an oral or electronic notification. The notification shall include information about the date, time, nature, volume and location of the spill or release.
(c) Anticipated bypasses [40 CFR 122.41(m)(3)]	• ***A report at least ten days before the date of the bypass, if possible***. The report shall include an evaluation of the anticipated quality and effect of the bypass.
(d) Unanticipated bypasses [40 CFR 122.41(m)(3)]	• ***Within 24 hours***, an oral or electronic notification. • ***Within 7 calendar days,*** a report that includes an evaluation of the quality and effect of the bypass.
(e) Noncompliance with the conditions of this permit that may endanger health or the environment[40 CFR 122.41(l)(7)]	• ***Within 24 hours***, an oral or electronic notification. • ***Within 7 calendar days***, a report that contains a description of the noncompliance, and its causes; the period of noncompliance, including exact dates and times, and if the noncompliance has not been corrected, the anticipated time noncompliance is expected to continue; and steps taken or planned to reduce, eliminate, and prevent reoccurrence of the noncompliance. [40 CFR 122.41(l)(6). • Division staff may waive the requirement for a written report on a case-by-case basis.

PART II, SECTION G, ITEM (4)
DRAW DOWN OF SEDIMENT BASINS FOR MAINTENANCE OR CLOSE OUT

Sediment basins and traps that receive runoff from drainage areas of one acre or more shall use outlet structures that withdraw water from the surface when these devices need to be drawn down for maintenance or close out unless this is infeasible. The circumstances in which it is not feasible to withdraw water from the surface shall be rare (for example, times with extended cold weather). Non-surface withdrawals from sediment basins shall be allowed only when all of the following criteria have been met:

(a) The E&SC plan authority has been provided with documentation of the non-surface withdrawal and the specific time periods or conditions in which it will occur. The non-surface withdrawal shall not commence until the E&SC plan authority has approved these items,
(b) The non-surface withdrawal has been reported as an anticipated bypass in accordance with Part III, Section C, Item (2)(c) and (d) of this permit,
(c) Dewatering discharges are treated with controls to minimize discharges of pollutants from stormwater that is removed from the sediment basin. Examples of appropriate controls include properly sited, designed and maintained dewatering tanks, weir tanks, and filtration systems,
(d) Vegetated, upland areas of the sites or a properly designed stone pad is used to the extent feasible at the outlet of the dewatering treatment devices described in Item (c) above,
(e) Velocity dissipation devices such as check dams, sediment traps, and riprap are provided at the discharge points of all dewatering devices, and
(f) Sediment removed from the dewatering treatment devices described in Item (c) above is disposed of in a manner that does not cause deposition of sediment into waters of the United States.

NORTH CAROLINA Environmental Quality

NCG01 SELF-INSPECTION, RECORDKEEPING AND REPORTING

EFFECTIVE: 04/01/19

PLOTTED: 11/17/2021 9:41:51 PM

FILE NAME: \\nocrpsa1st\\VOL2_PROJECTS\18078\HF Package 3\06_Deliverables\Drawings\05 C_Civil\Sheet Files\P1527\1T597D_P1527F - CE500.dwg

APPR | DATE | DESCRIPTION | SYM

NAVFAC

COMMONWEALTH OF PENNSYLVANIA — REGISTERED PROFESSIONAL — BRANDON ROBB FOMBELLE — ENGINEER No. PE086276

RQ Jordan COMPANY — A JOINT VENTURE

Michael Baker INTERNATIONAL
100 AIRSIDE DRIVE
MOON TOWNSHIP, PA 15108 — A/E INFO

APPROVED

FOR COMMANDER NAVFAC

ACTIVITY: MARINE CORPS BASE CAMP LEJEUNE

SATISFACTORY TO DATE

DES BRF	DRW BRF	CHK WN
PM / DM	TOWLER / ROOT	
BRANCH HEAD		
DESIGN DIRECTOR	R.L.Stephens, Jr.	
FIRE PROTECTION	DPS	

DEPARTMENT OF THE NAVY
NAVAL FACILITIES ENGINEERING SYSTEMS COMMAND
ATLANTIC DESIGN AND CONSTRUCTION

NAVAL FACILITIES ENGINEERING SYSTEMS COMMAND ATLANTIC — NORFOLK, VA.
JACKSONVILLE, NC
MCB CAMP LEJEUNE
P1527 LOGCOM CSP WAREHOUSE

EROSION AND SEDIMENT CONTROL DETAILS

SCALE:	AS NOTED
EPROJECT NO.:	1639600
CONSTR. CONTR. NO.	N40085-20-C-0059
NAVFAC DRAWING NO.	14111070
SHEET	67 OF 447

CE505

P1527 FINAL SUBMISSION - 11/18/2021

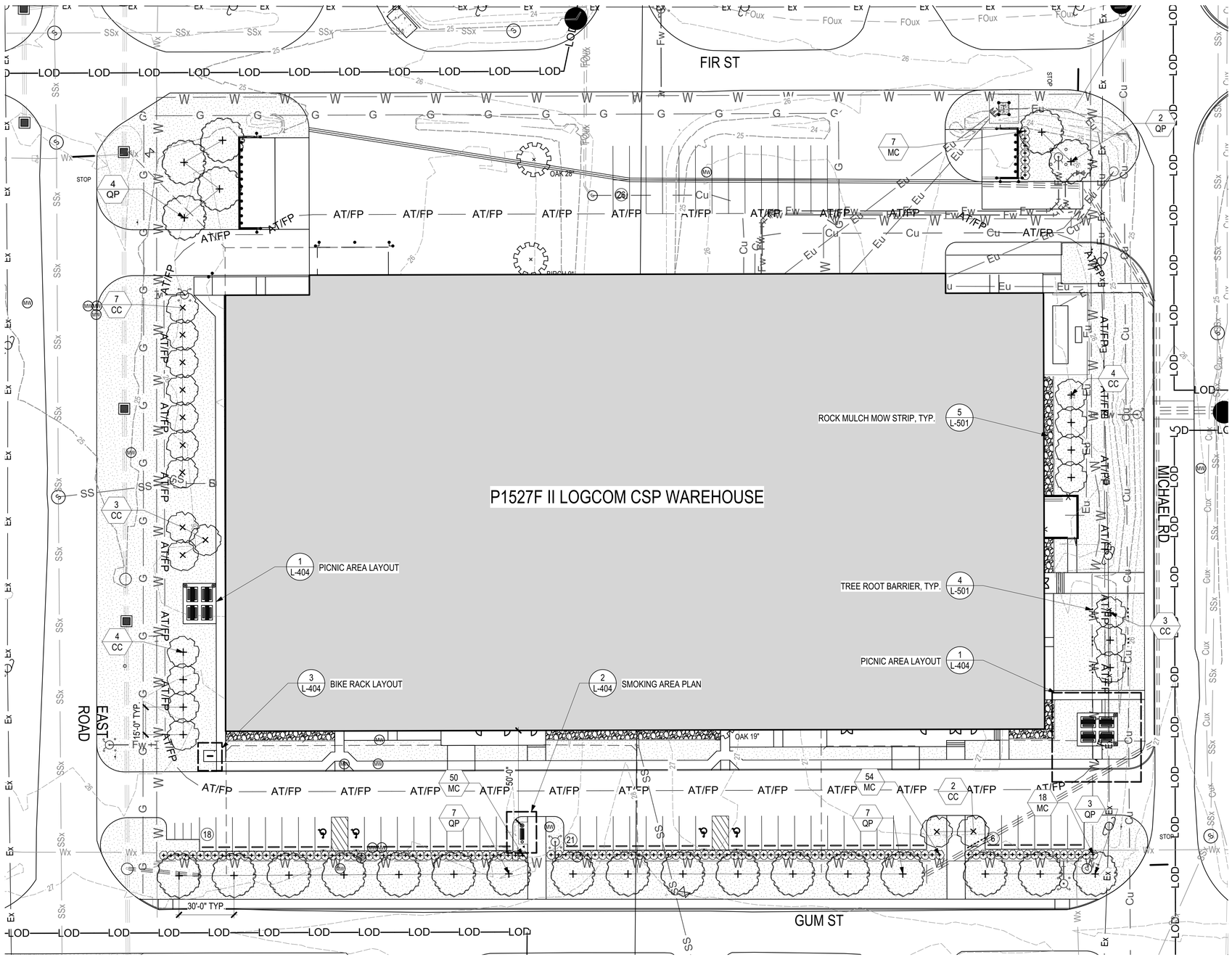

LEGEND

1 L-501	SHADE TREE PLANTING
1 L-501	FLOWERING TREE PLANTING
2 L-501	SHRUB PLANTING
6 L-501	TURF - SODDING
4 L-501	TREE ROOT BARRIER

APPR | DATE | DESCRIPTION | SYM

NAVFAC

COMMONWEALTH OF VIRGINIA
JOHN CRAIG FENNELL
Lic. No. 826
November 18, 2021
LANDSCAPE ARCHITECT
SEAL

RQ W.M. Jordan COMPANY

Michael Baker INTERNATIONAL
100 AIRSIDE DRIVE
MOON TOWNSHIP, PA 15108 A/E INFO

APPROVED

FOR COMMANDER NAVFAC

ACTIVITY
MARINE CORPS BASE
CAMP LEJEUNE

SATISFACTORY TO DATE	DD/MM/YY		
DES ERW	DRW ERW	CHK JCF	
PM/DM	TOWLER/ROOT		
BRANCH HEAD	DER		
DESIGN DIRECTOR	R. L Stephens, Jr.		
FIRE PROTECTION	DPS		

DEPARTMENT OF THE NAVY
NAVAL FACILITIES ENGINEERING SYSTEMS COMMAND
ATLANTIC DESIGN AND CONSTRUCTION
MCB CAMP LEJEUNE

NAVAL FACILITIES ENGINEERING SYSTEMS COMMAND ATLANTIC
NORFOLK, VA
JACKSONVILLE, NC
P1527F II LOGCOM CSP WAREHOUSE

LANDSCAPE SITE PLAN

SCALE:	AS NOTED
EPROJECT NO.:	1590892
CONSTR. CONTR. NO.	N40085-20-C-0059
NAVFAC DRAWING NO.	14111074
SHEET	68 OF 447

L-101

DRAWFORM REVISION 25 AUGUST 2020

P1527 FINAL SUBMISSION - 11/18/2021

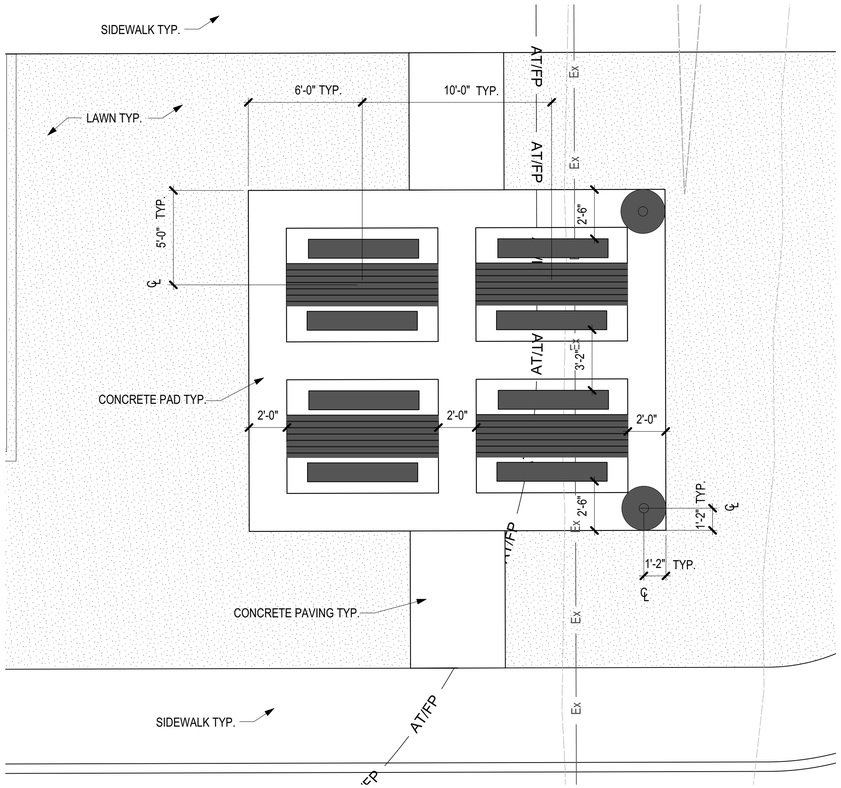

1 PICNIC AREA LAYOUT
Scale: 1/4" = 1'-0"

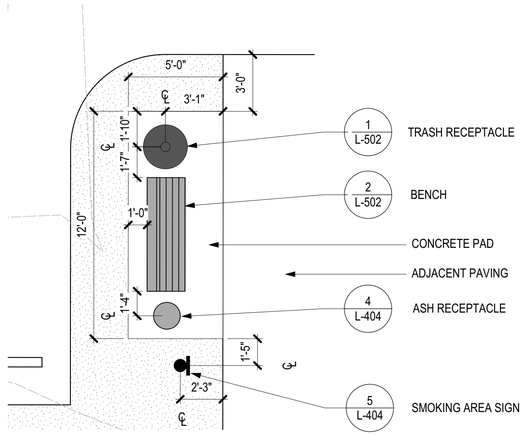

NOTE

1. ANCHOR TRASH RECEPTACLE, ASH RECEPTACLE, AND BENCHES 2" INTO CONCRETE PAD

2 SMOKING AREA PLAN
Scale: 1/4" = 1'-0"

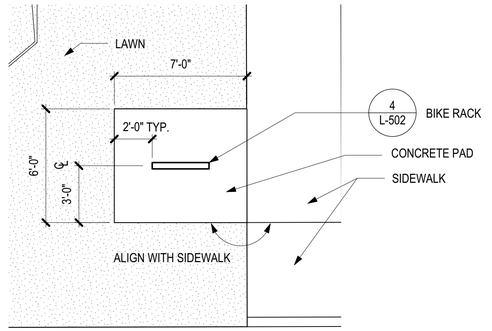

3 BIKE RACK LAYOUT
Scale: 1/4" = 1'-0"

LEGEND

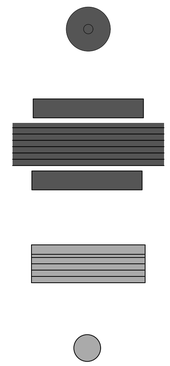

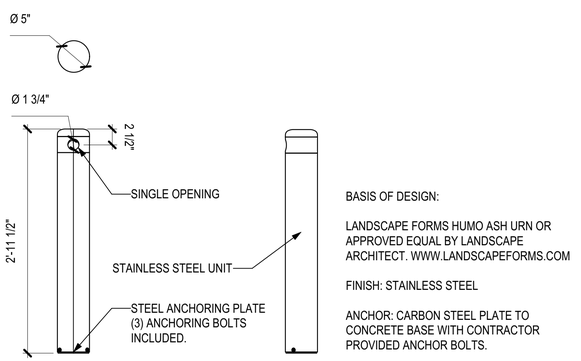

4 ASH RECEPTACLE
Scale: 1" = 1'-0"

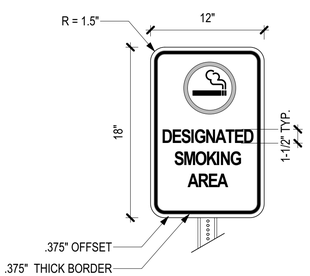

COLORS: LETTERING AND BORDER: BLACK (RETROREFLECTIVE)
SMOKING SYMBOL: BLACK WITH GREEN CIRCLE
BACKGROUND: WHITE (RETROREFLECTIVE)

HARDWARE: 5/16" STEEL HEX HEAD AND 5/16" STEEL WASHERS

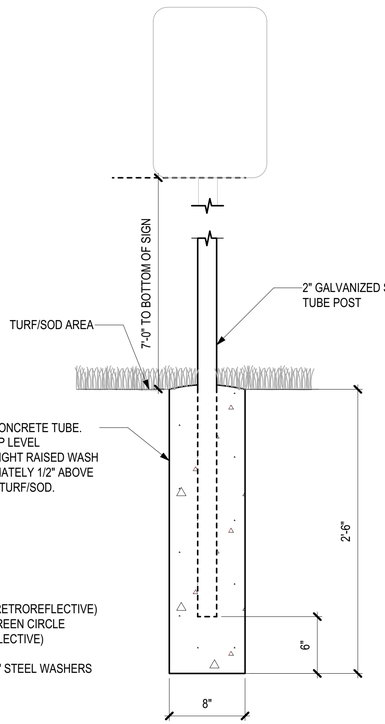

5 SMOKING AREA SIGN
Scale: 1 1/2" = 1'-0"

APPR	DATE	DESCRIPTION	SYM

NAVFAC

COMMONWEALTH OF VIRGINIA
JOHN CRAIG FENNELL
Lic. No. 826
November 18, 2021
LANDSCAPE ARCHITECT
SEAL

RQ W.M. Jordan COMPANY

Michael Baker INTERNATIONAL
100 AIRSIDE DRIVE
MOON TOWNSHIP, PA 15108
A/E INFO

APPROVED

FOR COMMANDER NAVFAC

ACTIVITY
MARINE CORPS BASE
CAMP LEJEUNE

SATISFACTORY TO DATE	DD/MM/YY
DES ERW / DRW ERW / CHK JCF	
PM/DM	TOWLER/ROOT
BRANCH HEAD	DER
DESIGN DIRECTOR	R. L Stephens, Jr.
FIRE PROTECTION	DPS

DEPARTMENT OF THE NAVY
NAVAL FACILITIES ENGINEERING SYSTEMS COMMAND
ATLANTIC DESIGN AND CONSTRUCTION
NAVAL FACILITIES ENGINEERING SYSTEMS COMMAND ATLANTIC
NORFOLK, VA
MCB CAMP LEJEUNE
JACKSONVILLE, NC
P1527F II LOGCOM CSP WAREHOUSE

SITE FURNISHING ENLARGEMENTS

SCALE:	AS NOTED
EPROJECT NO.:	1590892
CONSTR. CONTR. NO.	N40085-20-C-0059
NAVFAC DRAWING NO.	14111075
SHEET	69 OF 447

L-404

DRAWFORM REVISION 25 AUGUST 2020

P1527 FINAL SUBMISSION - 11/18/2021

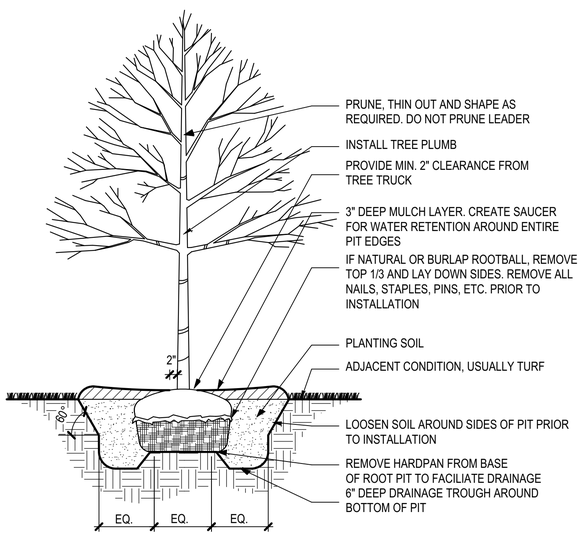

1 DECIDUOUS TREE PLANTING
Scale: 1/2" = 1'-0"

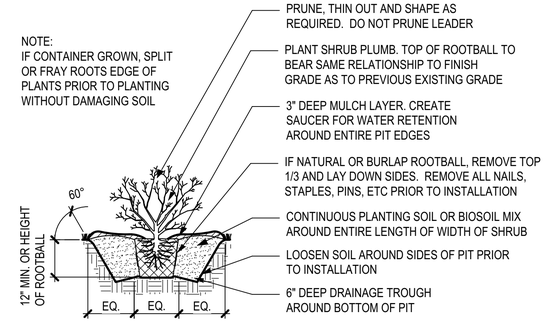

2 SHRUB PLANTING
Scale: 1/2" = 1'-0"

(SEE PLANT LIST -SPACING COLUMN)

SPACING "A"	ROW "B"	NUMBER OF PLANTS PER SQUARE FOOT
6" o.c.	5.20"	4.00
8" o.c.	6.93"	2.60
12" o.c.	10.40"	1.00
18" o.c.	15.60"	0.45
24" o.c.	20.80"	0.25
30" o.c.	25.40"	0.16
36" o.c.	29.70"	0.11
48" o.c.	39.60"	0.0625

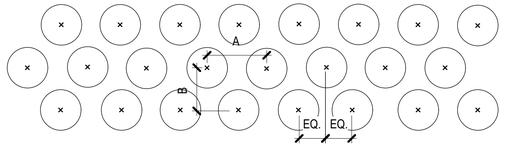

3 SPACING CHART
Scale: 3/4" = 1'-0"

UB 18-2 Specifications
18" DeepRoot® Tree Root Barrier

Specified tree root barrier is a mechanical barrier and root deflector used to prevent tree roots from damaging hardscapes and landscapes. Assembled in 24" (609 mm) long modules to create varying lengths for linear applications, or perimeter surround applications in varying sizes.

A. Materials
1. The contractor shall furnish and install tree root barrier as specified. The tree root barrier shall be either product #UB 18-2 as manufactured by DeepRoot® Green Infrastructure, LLC, 530 Washington Street, San Francisco, CA, www.deeproot.com (800.458.7668).

2. Root barrier shall be recyclable, black, injection molded panels with 0.75" (1.90 mm) wall thickness in modules 24" (609 mm) long and 18" (460 mm) deep.

3. Root barrier shall be manufactured with 75% reprocessed polypropylene with added ultraviolet inhibitors.

4. Root barrier shall be comprised of 24" (609 mm) panels. Each panel shall have no less than four (4) Molded Integral Vertical Root Directing Ribs of a minimum 0.060" (1.52 mm) thickness, protruding 1/2" (12.7 mm) at 90° from interior of the barrier panel, spaced 6" (152.4 mm) apart. (See Details A & D)

5. Root barrier shall have a Double Top Edge consisting of two parallel, integral, horizontal ribs at the top of the panel at 0.060" (1.52 mm) thickness, 3/8" (9.53 mm) wide and 1/4" (6.35 mm) apart with the lower rib attached to the vertical Root Directing Ribs (See Detail A).

6. Root barrier shall have a minimum of nine (9) Anti-Lift Ground Lock Tabs consisting of integral horizontal ridges of minimum 0.060" (1.52 mm) thickness in the shape of a segment of a circle, the 2-1/4" (57.15 mm) chord of the segment joining the panel wall and the segment, protruding 3/8" (9.53 mm) from the panel. The ground locks on each panel shall be about equally spaced between each of the vertical root directing ribs (See Details B & D).

7. Root barrier shall have an integrated Zipper Joining System for assembly by sliding one panel into another (See Detail C).

U.S. Patents: 5,305,549; and 5,528,857. Other Patents Pending.

Properties	Typical Value	ASTM Test Method
Tensile strength @ yield - Wall	2.354 PSI	D638
Tensile strength @ yield - Hinge	2.846 PSI	D638
Yield Elongation - Wall	7.44%	D638
Yield Elongation - Hinge	7.01%	D638
Flexural Modulus	119.625 PSI	D790B
Notched Izod Impact - Wall	3.84 (ft-lbs)	D256A
Rockwell Hardness r. scale - Wall	84.4	D785A

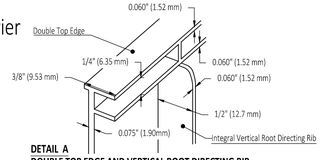

DETAIL A
DOUBLE TOP EDGE AND VERTICAL ROOT DIRECTING RIB

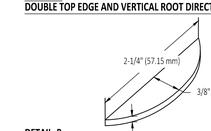

DETAIL B -
ANTI-LIFT GROUND LOCK TAB

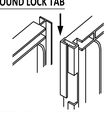

DETAIL C - ZIPPER JOINING SYSTEM

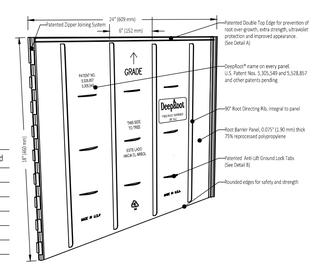

DETAIL D - TREE ROOT BARRIER PANEL

deeproot
© Copyright 2011 DeepRoot. All rights reserved.

4 TREE ROOT BARRIER
Scale: 1 1/2" = 1'-0"

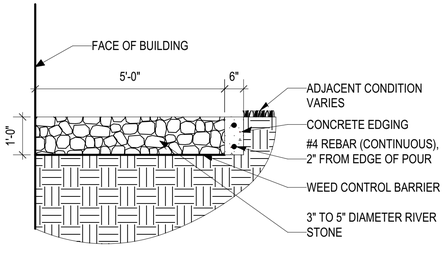

5 ROCK MULCH MOW STRIP
Scale: 1/2" = 1'-0"

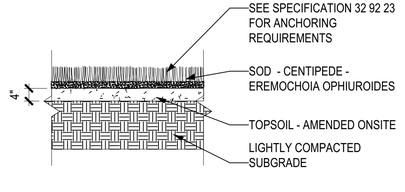

6 TURF SODDING
Scale: 1/2" = 1'-0"

PLANT SCHEDULE						
NOTE: All trees to be single trunk and pruned to 4' to meet AT/FP Unobstructed Space requirements						
Tree Quantity requirement as per RFP - 1 tree per 1000 sf landscape area. Landscape area defined as all disturbed spaces that are not covered by paving or building.						
Total Landscape Area (SF):		**57,504**				
Total Trees Required by RFP:		**58**				
SYMBOL	**QUANTITY**	**BOTANICAL NAME**	**COMMON NAME**	**SIZE**	**SPACING**	**NOTES**
SHADE TREES:						
QP	**23**	*Quercus phellos*	Willow Oak	3" CAL. 14-16 FT. HT.	AS SHOWN	SPECIMEN QUALITY, FULL, B&B
SHADE TREES PROVIDED:		**23**				
EVERGREEN TREES:						
EVERGREEN TREES PROVIDED:		**0**				
ORNAMENTAL TREES:						
CC	**23**	*Cercis canadensis*	Eastern Redbud	2 IN. CAL. 8-10 FT. HT.	AS SHOWN	SPECIMEN QUALITY, FULL, B&B
ORNAMENTAL TREES PROVIDED:		**23**				
TOTAL TREES REQUIRED BY RFP:		**58**				
TOTAL TREES PROVIDED:		**46**				
SHRUBS:						
MC	**129**	*Myrica cerifera*	Wax Myrtle	30-36 IN. HT.	4'-0"	SPECIMEN QUALITY, FULL, B&B
SOD:	**(SF)**					
N/A	**57,504**	*Eremochloa ophiuroides*	Centipede Sod	N/A	N/A	FULL COVERAGE, NO SEAMS SHOWING

APPR	DATE	DESCRIPTION	SYM

NAVFAC

COMMONWEALTH OF VIRGINIA
JOHN CRAIG FENNELL
Lic. No. 826
November 18, 2021
LANDSCAPE ARCHITECT
SEAL

RQ W.M. Jordan COMPANY

Michael Baker
INTERNATIONAL
100 AIRSIDE DRIVE
MOON TOWNSHIP, PA 15108 A/E INFO

APPROVED
FOR COMMANDER NAVFAC
ACTIVITY
MARINE CORPS BASE CAMP LEJEUNE
SATISFACTORY TO DATE DD/MM/YY
DES ERW | DRW ERW | CHK JCF
PM/DM TOWLER/ROOT
BRANCH HEAD DER
DESIGN DIRECTOR R. L Stephens, Jr.
FIRE PROTECTION DPS

DEPARTMENT OF THE NAVY
NAVAL FACILITIES ENGINEERING SYSTEMS COMMAND
ATLANTIC DESIGN AND CONSTRUCTION
MCB CAMP LEJEUNE
NAVAL FACILITIES ENGINEERING SYSTEMS COMMAND ATLANTIC
NORFOLK, VA
JACKSONVILLE, NC
P1527F II LOGCOM CSP WAREHOUSE

LANDSCAPE DETAILS

SCALE: AS NOTED
EPROJECT NO.: 1590892
CONSTR. CONTR. NO. N40085-20-C-0059
NAVFAC DRAWING NO. 14111076
SHEET 70 OF 447

L-501

DRAWFORM REVISION 25 AUGUST 2020

P1527 FINAL SUBMISSION - 11/18/2021

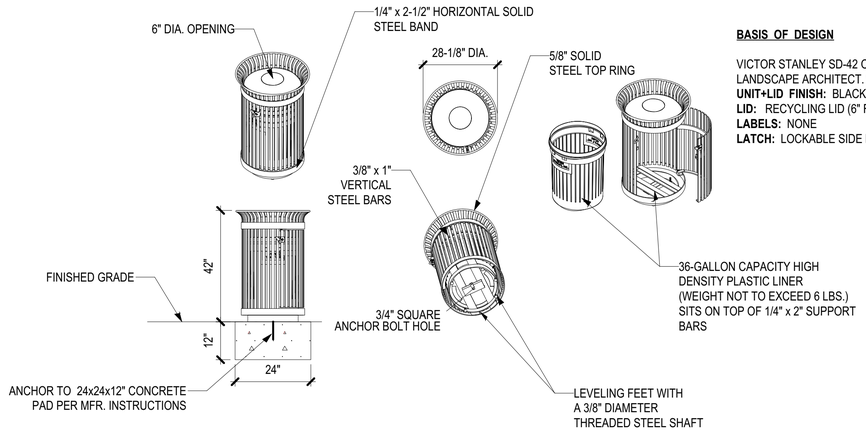

BASIS OF DESIGN

VICTOR STANLEY SD-42 OR APPROVED EQUAL BY LANDSCAPE ARCHITECT. WWW.VICTORSTANLEY.COM
UNIT+LID FINISH: BLACK POWDERCOAT
LID: RECYCLING LID (6" FIXED OPENING)
LABELS: NONE
LATCH: LOCKABLE SIDE LATCH

1 TRASH RECEPTACLE
Scale: 1/2" = 1'-0"

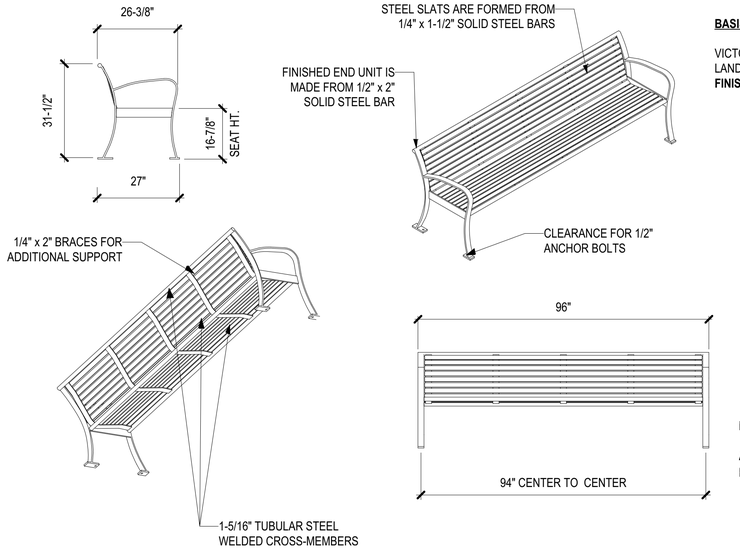

BASIS OF DESIGN

VICTOR STANLEY RB-28 OR APPROVED EQUAL BY LANDSCAPE ARCHITECT. WWW.VICTORSTANLEY.COM
FINISH: BLACK POWDERCOAT

NOTE:

ANCHOR FURNISHINGS TO CONCRETE BASE AS PER MANUFACTURER INSTRUCTIONS.

2 BENCH
Scale: 1/2" = 1'-0"

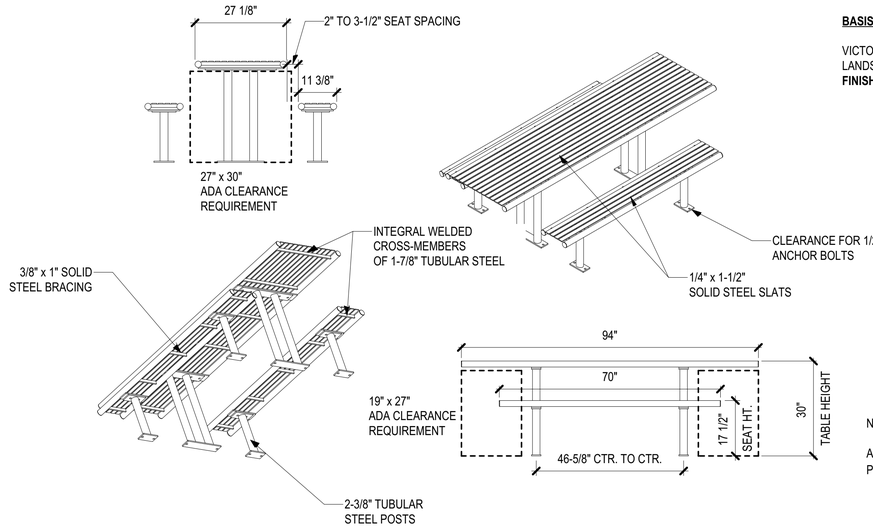

BASIS OF DESIGN

VICTOR STANLEY FBF-56 OR APPROVED EQUAL BY LANDSCAPE ARCHITECT. WWW.VICTORSTANLEY.COM
FINISH: BLACK POWDERCOAT

NOTE:

ANCHOR FURNISHINGS TO CONCRETE BASE AS PER MANUFACTURER INSTRUCTIONS.

3 PICNIC TABLE
Scale: 1/2" = 1'-0"

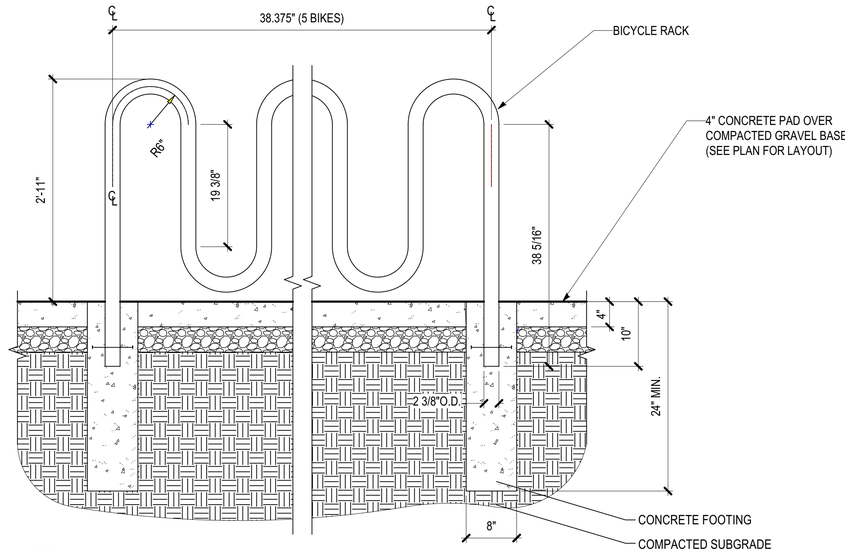

NOTE:

1. SEE PLANS FOR ADJACENT CONDITIONS.
2. BASIS OF DESIGN - "RIBBON RACK" BY BRANDIR INTERNATIONAL. WWW.RIBBONRACK.COM
3. FINISH: GALVANIZED AS RECOMMENDED BY MANUFACTURER.

4 BIKE RACK
Scale: 1" = 1'-0"

APPR	DATE	DESCRIPTION	SYM

NAVFAC

JOHN CRAIG FENNELL
Lic. No. 826
November 18, 2021
LANDSCAPE ARCHITECT
SEAL

W.M. Jordan COMPANY

Michael Baker INTERNATIONAL
100 AIRSIDE DRIVE
MOON TOWNSHIP, PA 15108
A/E INFO

APPROVED

FOR COMMANDER NAVFAC

ACTIVITY
MARINE CORPS BASE CAMP LEJEUNE

SATISFACTORY TO DATE	DD/MM/YY
DES ERW / DRW ERW / CHK JCF	
PM/DM	TOWLER/ROOT
BRANCH HEAD	DER
DESIGN DIRECTOR	R. L Stephens, Jr.
FIRE PROTECTION	DPS

DEPARTMENT OF THE NAVY
NAVAL FACILITIES ENGINEERING SYSTEMS COMMAND ATLANTIC
ATLANTIC DESIGN AND CONSTRUCTION
NORFOLK, VA
MCB CAMP LEJEUNE
JACKSONVILLE, NC
P1527F II LOGCOM CSP WAREHOUSE

SITE FURNISHING DETAILS

SCALE:	AS NOTED
EPROJECT NO.:	1590892
CONSTR. CONTR. NO.	N40085-20-C-0059
NAVFAC DRAWING NO.	14111077
SHEET	71 OF 447

L-502

DRAWFORM REVISION 25 AUGUST 2020

P1527 FINAL SUBMISSION - 11/18/2021

GENERAL NOTES:

1. THE STRUCTURAL DRAWINGS MUST BE USED IN CONJUNCTION WITH THE ARCHITECTURAL, CIVIL, MECHANICAL, PLUMBING, AND ELECTRICAL DRAWINGS AND THE SPECIFICATIONS. THE CONTRACTOR MUST VERIFY THE REQUIREMENTS OF OTHER TRADES FOR ITEMS TO BE PLACED OR SET IN THE STRUCTURAL WORK.

2. THIS STRUCTURE HAS BEEN DESIGNED IN ACCORDANCE WITH THE PROVISIONS OF THE INTERNATIONAL BUILDING CODE, 2018 EDITION, AS ADOPTED BY THE UNIFIED FACILITIES CRITERIA, AND AS FOLLOWS:
   - A. UFC 1-200-01 — DoD BUILDING CODE, WITH CHANGE 1 DATED 10-08-2019
   - B. UFC 3-301-01 — STRUCTURAL ENGINEERING DATED 10-01-2019
   - C. UFC 4-010-01 — DoD MINIMUM ANTITERRORISM STANDARDS FOR BUILDINGS WITH CHANGE 1 DATED 12-12-2018

3. THE WORK UNDER THE FOLLOWING SPECIFICATION SECTIONS IS SUBJECT TO SPECIAL INSPECTIONS AND TESTS AS DESCRIBED IN SECTION 1704 OF THE INTERNATIONAL BUILDING CODE, 2018 EDITION:
   - A. 312000 - EARTHWORK
   - B. 033000 - CAST-IN-PLACE CONCRETE
   - C. 034713 - TILT-UP CONCRETE
   - D. 051200 - STRUCTURAL STEEL
   - E. 052100 - STEEL JOISTS
   - F. 053100 - STEEL DECK
   - G. 054000 - COLD-FORMED METAL FRAMING
   - H. 078100 - APPLIED FIREPROOFING

4. THE CONTRACTOR MUST BE RESPONSIBLE FOR TEMPORARY SHORING AND BRACING REQUIRED TO ERECT AND HOLD THE STRUCTURE IN PROPER ALIGNMENT UNTIL PERMANENT SUPPORTS AND LATERAL BRACING ARE IN PLACE.

5. THE PROJECT SPECIFICATIONS ARE NOT SUPERSEDED BY THE STRUCTURAL NOTES BUT ARE INTENDED TO BE COMPLEMENTARY TO THEM. REFER TO THE SPECIFICATIONS FOR ADDITIONAL REQUIREMENTS IN EACH SECTION.

6. SPECIFIC NOTES AND DETAILS ON THE DRAWINGS MUST TAKE PRECEDENCE OVER STRUCTURAL NOTES AND TYPICAL DETAILS.

7. CONSULTANTS' DRAWINGS, INCLUDING STRUCTURAL DRAWINGS, ARE CONSIDERED SUPPLEMENTARY TO THE ARCHITECTURAL DRAWINGS. ANY OMISSIONS OR CONFLICTS, INCLUDING DIMENSIONS, BETWEEN VARIOUS ELEMENTS OF THE CONSULTANTS' DRAWINGS AND/OR SPECIFICATIONS MUST BE BROUGHT TO THE ATTENTION OF THE ARCHITECT PRIOR TO PROCEEDING WITH THE WORK.

8. THE DOCUMENTS DEFINING THE STRUCTURE ARE INSTRUMENTS OF SERVICE PREPARED BY SPEIGHT, MARSHALL AND FRANCIS, P.C. FOR ONE USE ONLY. THE STRUCTURAL DOCUMENTS MUST NOT BE REPRODUCED, OR COPIED IN WHOLE OR IN PART BY THE CONTRACTOR OR SUBCONTRACTORS FOR PREPARATION OF SHOP DRAWINGS OR OTHER SUBMITTALS WITHOUT WRITTEN PERMISSION FROM THE ARCHITECT.

10. LOADS USED IN THE DESIGN OF THIS STRUCTURE ARE AS FOLLOWS:
    - A. LIVE LOADS:
      1. SLAB-ON-GRADE — 100 PSF
      2. SLAB-ON-GRADE (WAREHOUSE) — 250 PSF
      3. AXLE LOADING (WAREHOUSE) — 20,000 LBS
      4. STORAGE (LIGHT) — 125 PSF
      5. MECHANICAL ROOM — 125 PSF
      6. ROOF — 20 PSF
    - B. SNOW DESIGN DATA:
      1. GROUND SNOW LOAD — 10 PSF

GENERAL NOTES (CONTINUED):

C. WIND DESIGN DATA:

1.	ULTIMATE DESIGN WIND SPEED	144 MPH
2.	NOMINAL DESIGN WIND SPEED	111 MPH
3.	RISK CATEGORY	II
4.	WIND EXPOSURE	C
5.	INTERNAL PRESSURE COEFFICIENT	+/-0.18
6.	ULTIMATE DESIGN MAIN FRAME WIND FORCE (N/S) DIRECTION	520 KIPS
7.	ULITMATE DESIGN MAIN FRAME WIND FORCE (E/W) DIRECTION	320 KIPS

COMPONENTS AND CLADDING DESIGN PRESSURES (PSF)

ROOF ZONE	TRIBUTARY AREA (SQ. FT.)					
	10		50		250	
1	+21	-83	+18	-70	+17	-58
2	+21	-109	+18	-93	+17	-77
3	+21	-149	+18	-116	+17	-84
WALL ZONE	**TRIBUTARY AREA (SQ. FT.)**					
	10		50		250	
4	+48	-52	+43	-47	+38	-42
5	+48	-64	+43	-54	+33	-44

NOTES:
1. PLUS AND MINUS SIGNS SIGNIFY PRESSURES ACTING TOWARD OR AWAY FROM THE SURFACES, RESPECTIVELY.
2. WIDTH OF COEFFICIENT PRESSURE ZONE, a = 17 FEET. SEE ASCE 7 FOR PRESSURE ZONE LOCATIONS.
3. WIND PRESSURE SHOWN ABOVE ARE ULTIMATE VALUES. MULTIPLY BY 0.6 TO OBTAIN EQUIVALENT ASD VALUES.

D. SEISMIC DESIGN DATA:

1.	RISK CATEGORY	II
2.	SEISMIC IMPORTANCE FACTOR	1.00
3.	SS	0.115g
4.	S1	0.055g
5.	SITE CLASS	D
6.	SDS	0.123g
7.	SD1	0.088g
8.	SEISMIC DESIGN CATEGORY	B
9.	DESIGN BASE SHEAR	411 KIPS
10.	SEISMIC RESPONSE COEFFICIENT	0.041
11.	RESPONSE MODIFICATION FACTOR	3
12.	ANALYSIS PROCEDURE	ELF
13.	BASIC SEISMIC-FORCE-RESISTING SYSTEM IS ORDINARY REINFORCED CONCRETE SHEAR WALLS AND PER SECTION 2205.2.1 AND STEEL STRUCTURES ASSIGNED TO SEISMIC DESIGN CATEGORIES A, B, OR C, ARE NOT REQUIRED TO BE DESIGNED AND DETAILED IN ACCORDANCE WITH THE AISC SEISMIC PROVISIONS. INDICATING A 'STEEL SYSTEM NOT SPECIFICALLY DETAILED FOR SEISMIC RESISTANCE.	

FOUNDATION NOTES:

1. FOUNDATIONS HAVE BEEN DESIGNED IN ACCORDANCE WITH THE RECOMMENDATIONS IN THE GEOTECHNICAL EXPLORATION REPORT PREPARED BY GET SOLUTIONS, INC. DATED FEBRUARY 26, 2021.

2. FOUNDATIONS HAVE BEEN DESIGNED FOR A BEARING PRESSURE OF 2,000 PSF.

3. PRIOR TO PLACING FOUNDATION CONCRETE, ALL FOUNDATION EXCAVATIONS MUST BE INSPECTED BY THE GEOTECHNICAL ENGINEER TO EXPLORE THE EXTENT OF LOOSE, SOFT OR OTHERWISE UNSATISFACTORY SOIL MATERIAL AND TO VERIFY DESIGN BEARING PRESSURE. THE GEOTECHNICAL ENGINEER WILL PROVIDE DIRECTION FOR CORRECTIVE ACTION WHERE REQUIRED.

4. NO UNBALANCED BACKFILLING MAY BE DONE AGAINST WALLS UNLESS WALLS ARE SECURELY BRACED AGAINST OVERTURNING, EITHER BY TEMPORARY CONSTRUCTION BRACING OR BY PERMANENT CONSTRUCTION.

5. FROST LINE DEPTH IS 0" BELOW GRADE. BOTTOM OF ALL EXTERIOR FOUNDATIONS MUST BE A MINIMUM OF 12" BELOW EXTERIOR FINISHED GRADE ELEVATION.

CAST-IN-PLACE CONCRETE NOTES:

1. CAST-IN-PLACE CONCRETE HAS BEEN DESIGNED IN ACCORDANCE WITH THE AMERICAN CONCRETE INSTITUTE (ACI) "BUILDING CODE REQUIREMENTS FOR STRUCTURAL CONCRETE (ACI 318-14) AND COMMENTARY (ACI 318R-14)".

2. CONCRETE MUST BE NORMAL WEIGHT AND MUST OBTAIN 28 DAY COMPRESSIVE STRENGTHS AS FOLLOWS:
   - A. TILT-UP CONCRETE PANELS — 4,000 PSI
   - B. SLAB-ON-GRADE — 4,000 PSI
   - C. CONCRETE NOT OTHERWISE NOTED — 3,000 PSI

3. REINFORCING MATERIALS MUST BE AS FOLLOWS:
   - A. REINFORCING BARS - ASTM A615, GRADE 60, DEFORMED
   - B. WELDED WIRE FABRIC - ASTM A1064, WELDED STEEL WIRE FABRIC. SHEET TYPE - ROLLED TYPE NOT ACCEPTABLE.

4. ALL REINFORCING STEEL AND EMBEDDED ITEMS MUST BE ACCURATELY PLACED IN THE POSITIONS SHOWN AND ADEQUATELY TIED AND SUPPORTED BEFORE CONCRETE IS PLACED TO PREVENT DISPLACEMENT BEYOND PERMITTED TOLERANCES.

5. MINIMUM CONCRETE COVER FOR REINFORCING STEEL AS INDICATED ON THE DRAWINGS. SEE SPECIFICATIONS FOR COVER NOT INDICATED.

STRUCTURAL TILT-UP CONCRETE NOTES:

1. TILT-UP CONCRETE WALL PANELS, CONNECTIONS AND DETAILS MUST BE DESIGNED BY A STRUCTURAL ENGINEER LICENSED TO PRACTICE IN THE STATE OF NORTH CAROLINA. DESIGNS MUST BE SEALED AND SIGNED, AND SUBMITTED TO THE ARCHITECT FOR APPROVAL. THE GENERAL CONTRACTOR IS RESPONSIBLE FOR ALL TEMPORARY BRACING, LIFTING AND ERECTION PROCEDURES.

2. ALL TILT-UP WALL PANEL CONCRETE MUST BE NORMAL WEIGHT AND MUST HAVE A MINIMUM 28 DAY COMPRESSIVE STRENGTH OF 4,000 PSI. TILT-UP WALL PANEL CONCRETE PERMANENTLY EXPOSED TO EXTERIOR AIR MUST ALSO INCLUDE 5% AIR ENTRAINMENT.

3. WALL PANEL CONSTRUCTION IS TO CONFORM TO ACI 117-10, "STANDARD TOLERANCE FOR CONCRETE CONSTRUCTION AND MATERIALS".

4. REINFORCING STEEL MUST CONFORM TO ASTM A615 GRADE 60. REINFORCING STEEL DETAILING, FABRICATION AND PLACEMENT MUST CONFORM TO THE LATEST EDITION OF CRSI'S "MANUAL OF STANDARD PRACTICE". MINIMUM CONCRETE COVER MUST BE 3/4" MEASURED FROM FACE OF CONCRETE.

5. SUBMIT SHOP DRAWINGS SHOWING ALL WORK RELATED TO TILT-UP WALL PANELS, INCLUDING TEMPORARY BRACING AND ERECTION PROCEDURES. WITH SHOP DRAWINGS SUBMIT CALCULATIONS AND DESCRIPTION COVERING ERECTION PROCEDURES, ADDITIONAL REINFORCEMENT, LIFTING HARDWARE, AND BRACING. SHOP DRAWINGS MUST BE PREPARED AND SEALED BY A REGISTERED PROFESSIONAL ENGINEER LICENSED IN THE STATE OF NORTH CAROLINA RETAINED BY THE GENERAL CONTRACTOR.

6. GRAVITY AND LATERAL LOADS TO PANELS ARE INDICATED ON THE STRUCTURAL DRAWINGS. ENGINEER OF RECORD HAS DESIGNED ALL FOUNDATION AND DIAPHRAGM CONNECTIONS AS THE LATERAL LOAD LOAD RESISTING SYSTEM. ALL EMBEDMENT PLATES AND OTHER CONNECTIONS REQUIRED FOR OTHER COMPONENTS MUST BE DESIGNED BY THE GENERAL CONTRACTOR. THESE CONNECTIONS MUST BE DESIGNED BY A PROFESSIONAL ENGINEERING REGISTERED IN THE STATE OF NORTH CAROLINA.

7. GENERAL CONTRACTOR MUST CONTINUOUSLY GROUT BASE OF WALL PANELS WITH NON-SHRINK METALLIC GROUT.

8. SHIMS MUST BE PLACED AT ENDS OF PANELS AND INTERMEDIATE AS REQUIRED FOR SUPPORT OF THE PANEL DURING ERECTION.

9. SUBMIT SHOP DRAWINGS SHOWING ALL PANELS EMBED PLATES AND LOCATIONS. GENERAL CONTRACTOR MUST COORDINATE.

10. SEE THE ARCHITECTURAL DRAWINGS AND DETAILS FOR PANEL JOINT AND REVEAL JOINT DETAILS NOT SHOWN ON THE STRUCTURAL DRAWINGS.

11. PANELS ARE TO BE CAST OUTSIDE FACE DOWN. CASTING SLAB MUST BE CURED. SAW CUTS, CRACKS AND JOINTS IN THE CASTING SLAB MUST BE FILLED AND LEVELED WITH A SEALANT SO AS TO MINIMIZE TRANSFER OF THE JOINT LINE TO THE PANEL FACE.

12. TILT-UP CONTRACTOR MUST BE RESPONSIBLE FOR THE COMPATIBILITY OF CURING AGENTS, SEALANTS AND RELEASING AGENTS UTILIZED IN THE WORK. IF PANELS ARE TO BE STACKED, THE TROWEL SURFACE MUST BE CONSIDERED THE CASTING SLAB AND TREATED AS SUCH. BOND BREAKER MUST BE APPLIED IN ACCORDANCE WITH THE MANUFACTURER'S REQUIREMENTS.

13. TILT-UP CONCRETE WALL PANELS MUST BE A MINIMUM OF 7 1/4" THICK UNLESS NOTED OTHERWISE.

14. PANEL JOINTS ARE TO BE CAULKED BOTH SIDES USING A HIGH PERFORMANCE POLYURETHANE SEALANT SYSTEM. SEALANT SYSTEM MUST BE INSTALLED PER MANUFACTURER'S SPECIFICATIONS.

15. CRACKS IN PANELS DUE TO LIFTING ARE TO BE REPAIRED BY THE GENERAL CONTRACTOR. PANELS THAT HAVE YIELDED AND CRACKED DURING LIFTING ARE TO BE REPLACED BY THE GENERAL CONTRACTOR.

16. GENERAL CONTRACTOR IS NOT TO DAMAGE FLOOR SLAB DURING PANEL ERECTION DUE TO CRANE LOADING. CONTRACTOR TO SUPPLY DESIGN ENGINEER WITH MAXIMUM CRANE LOADING ON SLAB FOR FLOOR STRENGTH EVALUATION PRIOR TO PANEL ERECTION. ANY DAMAGE TO THE FLOOR SLAB INCLUDING STRESS CRACK RESULTING FROM LOADS EXCEEDING THOSE PROVIDED TO THE STRUCTURAL ENGINEER ARE TO BE REPAIRED BY THE GENERAL CONTRACTOR. REPLACEMENT OF THE SLAB WILL BE REQUIRED IN AREAS SEVERELY DAMAGED DURING LIFTED.

SPEIGHT·MARSHALL·FRANCIS
STRUCTURAL ENGINEERS
1228 PERIMETER PARKWAY, SUITE 201
VIRGINIA BEACH, VIRGINIA 23454
P: 757.427.1020
7814 CAROUSEL LANE, SUITE 200
RICHMOND, VIRGINIA 23294
P: 804.464.4111
WWW.SMAINC.COM SMA Job No. 20-041-2

APPR	
DATE	
DESCRIPTION	
SYM	

NAVFAC

PRELIMINARY NOT FOR CONSTRUCTION

SEAL

IRQ W.M. Jordan COMPANY – A JOINT VENTURE –

Michael Baker INTERNATIONAL
100 AIRSIDE DRIVE
MOON TOWNSHIP, PA 15108 A/E INFO

APPROVED

FOR COMMANDER NAVFAC

ACTIVITY
MARINE CORPS BASE CAMP LEJEUNE

SATISFACTORY TO DATE DD/MM/YY

DES DPC	DRW NEB	CHK DWS

PM
BRANCH HEAD
DESIGN DIRECTOR
FIRE PROTECTION

DEPARTMENT OF THE NAVY
NAVAL FACILITIES ENGINEERING SYSTEMS COMMAND
ATLANTIC DESIGN AND CONSTRUCTION
NAVAL FACILITIES ENGINEERING SYSTEMS COMMAND ATLANTIC
NORFOLK, VA
JACKSONVILLE, NC
MCB CAMP LEJEUNE
LOGCOM CSP WAREHOUSE

STRUCTURAL NOTES

SCALE: AS NOTED
EPROJECT NO.: 1639600
CONSTR. CONTR. NO. N40085-20-C-0059
NAVFAC DRAWING NO. 14111081
SHEET 72 OF 447

S-001

P1527 FINAL SUBMISSION - 11/8/2021

PLOTTED: 11/12/2021 11:54:37 AM
FILE NAME: BIM 360://HF PACKAGE 3/P1527 LOG COM CSP-1639600-S.rvt

CONCRETE MASONRY NOTES:

1. CONCRETE MASONRY FOR THIS STRUCTURE HAS BEEN DESIGNED IN ACCORDANCE WITH THE AMERICAN CONCRETE INSTITUTE (ACI) "BUILDING CODE."
2. REQUIREMENTS FOR MASONRY STRUCTURES" ACI 530-11 / ASCE 5-11 / TMS 402-11. CONCRETE MASONRY CONSTRUCTION MUST CONFORM TO THE "SPECIFICATIONS FOR MASONRY STRUCTURES" ACI 530.1-13 / ASCE 5-13 / TMS 402-13.
3. CONCRETE MASONRY UNITS MUST CONFORM TO ASTM C 90 TYPE 2 AND BE MADE WITH LIGHTWEIGHT AGGREGATE. THE COMPRESSIVE STRENGTH OF MASONRY, F'm, EXPRESSED AS FORCE PER UNIT OF NET CROSS-SECTIONAL AREA, MUST BE 2,000 PSI AT 28 DAYS.
4. REINFORCING STEEL MUST COMPLY WITH ASTM A 615, GRADE 60. SHOP FABRICATE REINFORCING BARS WHICH ARE SHOWN TO BE BENT OR HOOKED.
5. GROUT MUST COMPLY WITH ASTM C 476 OR IBC TABLE 2103.10, AND MUST BE PROPORTIONED TO OBTAIN A 28 DAY COMPRESSIVE STRENGTH OF 2,500 PSI.
6. MORTAR MUST COMPLY WITH ASTM C 270, TYPE S OR M. AGGREGATE FOR MORTAR MUST COMPLY WITH ASTM C 144. AGGREGATE FAILING TO COMPLY WITH ASTM C 144 GRADATION REQUIREMENTS MAY BE USED PROVIDED THE MORTAR CAN BE PREPARED TO COMPLY WITH THE AGGREGATE RATIO, WATER RETENTION, AND COMPRESSIVE STRENGTH REQUIREMENTS OF THE PROPERTY SPECIFICATIONS OF ASTM C270.
7. PROVIDE VERTICAL REINFORCING BARS OF THE GIVEN SIZE AND SPACING SHOWN. LAP REINFORCING 25" AT ALL SPLICES.
8. PROVIDE REBAR DOWELS OF THE SAME SIZE AND SPACING AS VERTICAL REINFORCING FROM FOUNDATION. DOWELS MUST HAVE STANDARD ACI HOOKS.
9. HORIZONTAL JOINT REINFORCING MUST BE STANDARD 9 GAGE LADDER TYPE IN CMU WALLS AT 16" ON-CENTER. JOINT REINFORCING MUST COMPLY WITH ASTM A951 AND BE HOT-DIPPED GALVANIZED ACCORDING TO ASTM A153, CLASS B.
10. VERTICAL REINFORCING MUST HAVE BAR POSITIONERS AT SPACING NOT TO EXCEED 200 BAR DIAMETERS, AT GROUT LIFT HEIGHTS OR BAR SPLICE LOCATIONS, WHICHEVER IS LESS.

STRUCTURAL STEEL NOTES:

1. STRUCTURAL STEEL HAS BEEN DESIGNED IN ACCORDANCE WITH THE FIFTEENTH EDITION OF THE AMERICAN INSTITUTE OF STEEL CONSTRUCTION (AISC 360-16) "STEEL CONSTRUCTION MANUAL" - ALLOWABLE STRESS DESIGN.
2. STRUCTURAL STEEL MUST COMPLY WITH THE FOLLOWING SPECIFICATIONS:
   - A. STRUCTURAL STEEL W- AND WT-SHAPES - ASTM A992, Fy=50 KSI
   - B. RECTANGULAR AND SQUARE HSS - ASTM A500, GRADE B, Fy=46 KSI
   - C. ANCHOR RODS - ASTM F1554, GRADE 36 (WELDABLE)
   - D. HEADED STUDS - ASTM A 108, GRADES 1015 THROUGH 1020, TYPE B, Fu=65 KSI
   - E. ALL OTHER STRUCTURAL STEEL SHAPES, PLATES AND BARS - ASTM A36, Fy=36 KSI (UNLESS OTHERWISE NOTED)
3. UNLESS OTHERWISE NOTED, ALL BEAM CONNECTIONS MUST BE ACCORDING TO "TYPICAL BOLTED WEB PLATE CONNECTION DETAILS" ON SHEET S-511 USING ASTM A325 BOLTS.
5. HIGH STRENGTH BOLTS MUST BE TIGHTENED TO THE "SNUG TIGHT" CONDITION.
6. WELDING MUST BE IN ACCORDANCE WITH AWS D1.1, "STRUCTURAL WELDING CODE - STEEL". WELD ELECTRODES MUST BE E70XX. CONTINUOUS 3/16" FILLET WELDS ARE REQUIRED UNLESS OTHERWISE NOTED.
7. SEE THE ARCHITECTURAL, CIVIL, MECHANICAL, PLUMBING AND ELECTRICAL DRAWINGS FOR ADDITIONAL STEEL (IF ANY) NOT SHOWN ON THE STRUCTURAL DRAWINGS.
8. UNLESS OTHERWISE NOTED, THE TOP OF ALL STEEL COLUMNS MUST HAVE A STEEL CAP PLATE. UNLESS OTHERWISE DETAILED OR NOTED, MINIMUM CAP PLATE DIMENSIONS MUST MATCH COLUMN WIDTH AND DEPTH AND MINIMUM THICKNESS OF CAP PLATE MUST EQUAL COLUMN WEB THICKNESS (1/2" MIN).
9. STRUCTURAL STEEL NOTED TO BE GALVANIZED MUST CONFORM TO ASTM A123 OR ASTM A153. GALVANIZE STRUCTURAL STEEL AFTER FABRICATION WHERE PRACTICAL. REPAIR DAMAGED GALVANIZED COATING USING ASTM A780 ZINC-RICH PAINT.

STEEL JOIST AND JOIST GIRDER NOTES:

1. STEEL JOISTS MUST CONFORM TO THE LATEST EDITION OF THE STEEL JOIST INSTITUTE (SJI) STANDARD SPECIFICATIONS.
2. PREPARE AND SUBMIT FOR REVIEW SHOP DRAWINGS SHOWING THE LAYOUT OF JOIST AND JOIST GIRDER MEMBERS, SPECIAL CONNECTIONS, JOINING AND ACCESSORIES. INCLUDE MARK, NUMBER, TYPE, LOCATION AND SPACING OF JOISTS AND BRIDGING.
3. THE JOIST MANUFACTURER MUST BE RESPONSIBLE FOR CONTINUOUS JOIST BRIDGING LINES SATISFYING THE REQUIREMENTS OF THE SJI SPECIFICATION FOR THE TOP AND BOTTOM CHORDS OF ALL STEEL JOISTS, AS WELL AS ANY ADDITIONAL BRIDGING/BRACING SHOWN OR REQUIRED FOR JOISTS SUBJECTED TO NET UPLIFT OR OTHER SPECIAL LOADS. ALL REQUIRED JOIST BRIDGING MUST BE CLEARLY INDICATED ON THE SHOP DRAWINGS. CROSS-BRIDGING IS REQUIRED AT CHANGES OF JOIST DEPTHS AND ENDS OF ALL BRIDGING LINES, UNLESS SUCH ENDS ARE PROPERLY ANCHORED INTO INTERSECTING INTERIOR OR END WALLS. ALL BRIDGING AND BRIDGING ANCHORS MUST BE COMPLETELY INSTALLED BEFORE PLACING OF ANY CONSTRUCTION LOADS ON THE JOISTS.
4. ROOF JOISTS MUST BE DESIGNED FOR A NET UPLIFT LOAD OF 25 PSF. ONE-THIRD STRESS INCREASE NOT PERMITTED FOR LOAD COMBINATIONS INVOLVING WIND PER IBC SECTION 1605.3.1.1.
5. WHERE JOIST SPAN EQUALS 40 FEET OR GREATER JOIST MUST BE ERECTION BOLTED TO STEEL BEAMS OR JOIST GIRDERS, UNLESS PANELIZED JOIST ERECTION IS EMPLOYED. GENERAL CONTRACTOR MUST COORDINATE BOLT HOLE LOCATIONS REQUIRED IN STRUCTURAL STEEL MEMBERS.
6. CONCENTRATED LOADS NOT LOCATED AT JOIST PANEL POINTS MUST BE REINFORCED PER 'TYPICAL DETAIL AT CONCENTRATED LOADS ON JOISTS'.
7. UNLESS OTHERWISE NOTED, JOIST SEAT DEPTHS MUST BE AS FOLLOWS:
   - A. 3 1/2" OR 4 1/2" AT 'K' SERIES JOISTS - SEE PLAN
   - B. 7 1/2" AT JOIST GIRDERS
8. STRUCTURAL STEEL NOTED TO BE GALVANIZED MUST CONFORM TO ASTM A123 OR ASTM A153. GALVANIZE STRUCTURAL STEEL AFTER FABRICATION WHERE PRACTICAL. REPAIR DAMAGED GALVANIZED COATING USING ASTM A780 ZINC-RICH PAINT.

STEEL DECK NOTES:

1. STEEL DECK MUST CONFORM TO THE LATEST EDITION OF THE AMERICAN IRON AND STEEL INSTITUTE (AISI), "SPECIFICATION FOR THE DESIGN OF COLD-FORMED STEEL STRUCTURAL MEMBERS" AND THE STEEL DECK INSTITUTE (SDI), "DESIGN MANUAL FOR COMPOSITE DECKS, FORM DECKS, AND ROOF DECKS."
2. STEEL DECK UNITS MUST COMPLY WITH THE FOLLOWING:
   - A. 1-1/2" ROOF DECK MUST BE 20 GAGE GALV. TYPE B RIB DECK SPANNING PERPENDICULAR TO SUPPORTS UNLESS OTHERWISE NOTED. ATTACH DECK TO STRUCTURAL STEEL SUPPORTS WITH 5/8" DIAMETER PUDDLE WELDS AT EVERY RIB, INCLUDING RIBS WHERE SIDELAPS OCCUR. FASTEN ADJACENT DECK UNITS WITH #10 SELF-TAPPING HEX HEAD SCREWS AT 1/9 POINTS BETWEEN SUPPORTS ALONG SIDELAPS AND FASTEN EDGEMOST DECK PANEL TO STEEL FRAMING WITH 5/8" DIAMETER PUDDLE WELDS AT SAME SPACING AS SIDELAP FASTENERS.

     AT CONTRACTOR'S OPTION IT IS ACCEPTABLE TO ATTACH DECK TO STRUCTURAL STEEL SUPPORTS WITH HILTI X-HSN 24 FASTENERS AT EVERY RIB, INCLUDING RIBS WHERE SIDELAPS OCCUR. FASTEN ADJACENT DECK UNITS WITH HILTI S-SLC-01/02 M HWH SIDELAP CONNECTORS AT 6" ON CENTER BETWEEN SUPPORTS ALONG SIDELAPS AND FASTEN EDGE MOST DECK PANEL TO STEEL FRAMING WITH HILTI X-HSN 24 FASTENERS AT SAME SPACING AS SIDELAP FASTENERS.
3. WELDING MUST BE IN ACCORDANCE WITH AWS D1.3 "STRUCTURAL WELDING CODE - SHEET STEEL". FIELD WELDS MUST BE WIRE BRUSHED AND PRIMED PAINTED IN ACCORDANCE WITH THE SPECIFICATIONS.
4. DECK OPENINGS MEASURING GREATER THAN 12" ON ANY SIDE MUST HAVE SUPPORTS ON ALL SIDES OF OPENING. SUPPORTS MUST SPAN BETWEEN ADJACENT BEAMS OR JOISTS ON TWO SIDES. UNLESS OTHERWISE NOTED OR DETAILED ON THE DRAWINGS, USE 5x5x5/16" ANGLES FOR SPANS EXCEEDING 6'-0" AND 3x3x1/4" ANGLES FOR SPANS LESS THAN 6'-0". COORDINATE OPENING SIZES, LOCATIONS AND DETAILS WITH ARCHITECTURAL, MECHANICAL, PLUMBING AND ELECTRICAL DRAWINGS.
5. PERMANENT SUSPENDED LOADS SUCH AS SUSPENDED CEILINGS, LIGHT FIXTURES, DUCTS, OR OTHER UTILITIES MUST NOT BE SUPPORTED BY STEEL ROOF DECK.
6. PREPARE AND SUBMIT SHOP DRAWINGS FOR REVIEW SHOWING THE LAYOUT AND TYPES OF DECK UNITS, ANCHORAGE DETAILS AND CONDITIONS REQUIRING CLOSURE STRIPS, SUPPLEMENTARY FRAMING AND OTHER ACCESSORIES.
7. TOUCH-UP ALL SCARRED, ABRADED AND RUST AREAS IN STEEL DECK WITH ZINC RICH PAINT IN ACCORDANCE WITH THE SPECIFICATIONS.

COLD-FORMED METAL FRAMING NOTES:

1. COLD-FORMED METAL FRAMING MUST BE DESIGNED IN ACCORDANCE WITH THE AMERICAN IRON AND STEEL INSTITUTE (AISI) "COLD-FORMED STEEL DESIGN MANUAL". THE CONTRACTOR MUST SUBMIT SHOP DRAWINGS PREPARED BY A PROFESSIONAL ENGINEER REGISTERED IN THE STATE OF NORTH CAROLINA FOR THE DESIGN OF COLD-FORMED METAL FRAMING, INCLUDING DESIGN LOADINGS AND REACTIONS APPLIED TO THE SUPPORTING STRUCTURE.
2. COLD-FORMED METAL FRAMING (SIZES/GAGES) AND CONNECTIONS INDICATED ON DRAWINGS FOR THE NON LOAD-BEARING WALLS, CLADDING STUDS AND SOFFIT FRAMING ON DRAWINGS ARE FOR PRICING PURPOSES ONLY. COLD-FORMED ENGINEER MUST DESIGN AND DETAIL MEMBERS AND THEIR CONNECTIONS.
3. COLD-FORMED METAL FRAMING MEMBERS MUST BE FORMED OF CORROSION-RESISTANT STEEL CONFORMING TO ASTM A653 WITH A MINIMUM YIELD STRENGTH OF 33 KSI FOR TRACKS AND RUNNERS AND 33 KSI (50 KSI FOR 54 MILS 16 GAGE AND HEAVIER) FOR ALL OTHER MEMBERS.
4. WELDING MUST BE IN ACCORDANCE WITH AWS D1.3, "STRUCTURAL WELDING CODE - SHEET STEEL".
5. COLD-FORMED METAL FRAMING MEMBER SIZES AND GAGES INDICATED ARE IN ACCORDANCE WITH THE STEEL STUD MANUFACTURERS ASSOCIATION (SSMA) NOMENCLATURE.
6. COLD-FORMED METAL FRAMING MEMBERS MUST BE DESIGNED FOR THE LOADS GIVEN IN THE GENERAL NOTES. THE DESIGN LOADS ARE UNFACTORED SERVICE LOADS; ALL APPLICABLE FACTORS MUST BE APPLIED.
7. MAXIMUM LATERAL DEFLECTION OF COLD-FORMED FRAMING MEMBERS MUST BE DETERMINED BY THE FOLLOWING TABLE:

STUD USE	L/y RATIO (LIMIT)
BACKING UP MASONRY	L/600 (0.4 IN)
BACKING UP METAL PANEL	L/360 (MANUF. RECOMMENDATION)

8. COLD-FORMED METAL FRAMING MEMBERS MUST BE DESIGNED FOR ALL FRAMING CONDITIONS FOUND IN THE STRUCTURE, INCLUDING WALLS, CORNERS, HEADERS, AND JAMBS. SOME CONDITIONS MAY REQUIRE MODIFICATION OF COLD-FORMED FRAMING MEMBERS (SUCH AS NOTCHING OR REVISING SIZES) OR MULTIPLE STUDS TO SUPPORT INCREASED LOADS. IT IS THE RESPONSIBILITY OF THE CONTRACTOR TO COORDINATE ALL CONDITIONS AND DETAILS.
9. CROSS BRIDGING OR FULL-DEPTH BLOCKING IS REQUIRED AT AT WALL STUDS NOT RECEIVING SHEATHING ON BOTH FACES. UNLESS OTHERWISE INDICATED, CROSS BRIDGING MUST BE SIMPSON TB (OR EQUIVALENT); MAXIMUM BRIDGING/BLOCKING SPACING MUST BE 8'-0" o/c OR AT 1/3 POINTS OF MEMBER SPAN, WHICHEVER IS LESS. COORDINATE EXTENTS OF WALL SHEATHING WITH THE ARCHITECTURAL DRAWINGS.
10. COLD-FORMED METAL FRAMING CONNECTIONS TO THE STRUCTURE MUST BE DESIGNED FOR ALL FRAMING CONDITIONS. CONNECTIONS ARE SCHEMATICALLY SHOWN ON THE STRUCTURAL DRAWINGS. IT IS THE RESPONSIBILITY OF THE CONTRACTOR TO COORDINATE ALL CONNECTION CONDITIONS AND LOCATIONS.

SPEIGHT·MARSHALL·FRANCIS
STRUCTURAL ENGINEERS
1228 PERIMETER PARKWAY, SUITE 201
VIRGINIA BEACH, VIRGINIA 23454
P: 757.427.1020
7814 CAROUSEL LANE, SUITE 205
RICHMOND, VIRGINIA 23294
P: 804.464.4111
WWW.SMAFRF.COM SWAM certified - DBE/MBE

APPR	DATE	DESCRIPTION	SYM

NAVFAC

PRELIMINARY NOT FOR CONSTRUCTION

SEAL

W.M. Jordan COMPANY – A JOINT VENTURE –

Michael Baker INTERNATIONAL
100 AIRSIDE DRIVE
MOON TOWNSHIP, PA 15108 A/E INFO

APPROVED

FOR COMMANDER NAVFAC

ACTIVITY
MARINE CORPS BASE CAMP LEJEUNE

SATISFACTORY TO DATE DD/MM/YY

DES DPC	DRW NEB	CHK DWS

PM
BRANCH HEAD
DESIGN DIRECTOR
FIRE PROTECTION

DEPARTMENT OF THE NAVY
NAVAL FACILITIES ENGINEERING SYSTEMS COMMAND
ATLANTIC DESIGN AND CONSTRUCTION
NAVAL FACILITIES ENGINEERING SYSTEMS COMMAND ATLANTIC
NORFOLK, VA
MCB CAMP LEJEUNE
JACKSONVILLE, NC
LOGCOM CSP WAREHOUSE
STRUCTURAL NOTES

SCALE: AS NOTED
EPROJECT NO.: 1639600
CONSTR. CONTR. NO. N40085-20-C-0059
NAVFAC DRAWING NO. 14111082
SHEET 73 OF 447

S-002

P1527 FINAL SUBMISSION - 11/8/2021

PLOTTED: 11/12/2021 11:54:38 AM
FILE NAME: BIM 360://HF PACKAGE 3/P1527 LOG COM CSP-1639600-S.rvt

SPECIAL INSPECTIONS:

1. SPECIAL INSPECTIONS MUST BE COMPLETED FOR THE FOLLOWING ELEMENTS ACCORDING TO IBC SECTIONS 1704.

2. EARTHWORK MUST BE SPECIAL INSPECTED AS FOLLOWS:
   - A. PRIOR TO PLACEMENT OF PREPARED FILL, QUALITY ASSURANCE AGENT MUST DETERMINE THE SITE HAS BEEN PREPARED ACCORDING TO THE GEOTECHNICAL REPORT
   - B. QUALITY ASSURANCE AGENT MUST DETERMINE FILL MATERIAL AND LIFT THICKNESSES COMPLY WITH GEOTECHNICAL REPORT.

3. CONCRETE AND ELEMENTS EMBEDDED IN CONCRETE MUST BE SPECIAL INSPECTED PRIOR TO AND DURING PLACEMENT OF CONCRETE. SPECIAL INSPECTIONS MUST INCLUDE THE FOLLOWING:
   - A. PERIODIC INSPECTION:
     1. REINFORCING STEEL SIZE AND PLACEMENT
     2. VERIFY USE OF APPROVED MIX DESIGN
     3. AFTER PLACEMENT TO ENSURE ADEQUATE CURING AND WEATHER PROTECTION PROCEDURES
     4. SURFACE PREPARATION AND DETAILS AT COLD JOINTS, INCLUDING PLACEMENT OF KEYWAYS
   - B. CONTINUOUS INSPECTION:
     1. BOLTS TO BE INSTALLED IN CONCRETE PRIOR TO AND DURING PLACEMENT OF CONCRETE
     2. DURING PLACEMENT OF CONCRETE

4. STRUCTURAL STEEL FABRICATION AND ERECTION MUST BE SPECIAL INSPECTED AS FOLLOWS:
   - A. PERIODIC INSPECTION:
     1. HIGH-STRENGTH BOLTS, NUTS AND WASHERS ACCORDING TO AISC 360-16
     2. SINGLE-PASS FILLET WELDS LESS THAN OR EQUAL TO 5/16"
     3. FLOOR AND ROOF DECK WELDS
     4. STEEL FRAME JOINT DETAILS FOR COMPLIANCE WITH CONSTRUCTION DOCUMENTS INCLUDING MEMBER LOCATIONS, CONNECTION DETAILS AND ANY OTHER BRACING AND STIFFENING DETAILS
     5. HEADED STUD WELDING, QUANTITY AND LOCATIONS

5. SEE THE FULL SCHEDULE OF SPECIAL INSPECTIONS IN SPECIFICATION SECTION 014535 FOR ITEMS WHICH REQUIRE INSPECTION NOT LISTED ABOVE.

6. COLD-FORMED METAL FRAMING MUST BE SPECIAL INSPECTED AS FOLLOWS:
   - A. PERIODIC INSPECTION:
     1. SIZE, GRADE AND LAYOUT OF FRAMING MEMBERS
     2. WELDING OPERATIONS
     3. CONNECTION DETAILS SUCH AS SCREWING, BOLTING, ANCHORING, BRACING AND HOLD DOWNS

7. SPRAYED FIRE RESISTANT MATERIALS (SFRM) MUST BE SPECIAL INSPECTED AS FOLLOWS:
   - A. OBSERVE AT ALL STEEL COLUMN LOCATIONS:
     1. CONDITION OF SUBSTRATE
     2. MATERIAL THICKNESS
     3. MATERIAL DENSITY
     4. BOND STRENGTH

STRUCTURAL TESTING:

1. THE FOLLOWING MATERIALS MUST BE TESTED ACCORDING TO IBC SECTIONS 1705 ANY ITEMS FOUND TO BE DEFICIENT MUST BE CORRECTED AND RE-TESTED AT NO ADDITIONAL COST TO THE OWNER.

2. EARTHWORK: THE IN-PLACE DRY DENSITY OF COMPACTED FILL MUST BE TESTED FOR COMPLIANCE WITH THE GEOTECHNICAL REPORT. SEE THE GEOTECHNICAL REPORT AND SPECIFICATIONS FOR THE FREQUENCY OF TESTING.

3. CONCRETE STRENGTH VERIFICATION AND TESTING: ALL CONCRETE MUST BE TESTED TO VERIFY STRENGTH, SLUMP, UNIT WEIGHT, AIR CONTENT AND TEMPERATURE. SEE THE SPECIFICATIONS FOR TESTING CRITERIA, FREQUENCY AND ACCEPTABILITY CRITERIA.

CAST-IN-PLACE CONCRETE REINFORCING BAR LAP SPLICE SCHEDULE

BAR SIZE Fy = 60 KSI	TENSION BARS												COMPRESSION BARS
	f'c = 3,000 PSI				f'c = 3,500 PSI				f'c = 4,000 PSI				f'c = ALL
	REGULAR		TOP		REGULAR		TOP		REGULAR		TOP		
	CLASS		CLASS		CLASS		CLASS		CLASS		CLASS		
	A	B	A	B	A	B	A	B	A	B	A	B	
#3	17"	22"	22"	28"	16"	21"	21"	26"	15"	19"	19"	25"	12"
#4	22"	29"	29"	38"	21"	27"	27"	36"	19"	25"	25"	33"	15"
#5	28"	36"	36"	47"	26"	34"	34"	44"	24"	31"	31"	41"	19"
#6	33"	43"	43"	56"	31"	40"	40"	52"	29"	37"	37"	49"	23"
#7	48"	63"	63"	81"	45"	59"	59"	75"	42"	54"	54"	71"	27"
#8	55"	72"	72"	93"	51"	67"	67"	87"	48"	62"	62"	81"	30"
#9	62"	81"	81"	105"	58"	75"	75"	98"	54"	70"	70"	91"	34"
#10	70"	91"	91"	118"	65"	85"	85"	110"	61"	79"	79"	102"	39"
#11	78"	101"	101"	131"	73"	94"	94"	122"	67"	87"	87"	114"	43"

NOTES (THESE NOTES MUST BE USED FOR ALL SPLICES UNLESS NOTED OTHERWISE ON DRAWINGS):

1. TOP BARS ARE HORIZONTAL BARS, SPLICED SO THAT 12" OR MORE OF FRESH CONCRETE IS CAST IN THE MEMBER BELOW THE REINFORCING BAR.

2. CLASS A SPLICES MAY BE USED ONLY WHEN 50% OR LESS OF THE BARS ARE SPLICED WITHIN THE LAP SPLICE LENGTH.

3. CLASS B SPLICES SHALL BE USED FOR ALL SPLICES IN SLABS, BEAMS, JOISTS, WALLS, MOMENT RESISTING COLUMNS, AND JAMB COLUMNS, UNLESS THEY MEET THE REQUIREMENTS OF NOTE #2 ABOVE.

4. TIES AND STIRRUPS SHALL NOT BE SPLICED UNLESS APPROVED BY THE ENGINEER OF RECORD. ROUND COLUMN TIES MAY BE SPLICED USING CLASS A LAPS.

6. THE BAR LAP SPLICE LENGTHS SHALL BE MULTIPLIED BY 1.5 WHEN EITHER OF THE FOLLOWING IS TRUE:
   - A. CLEAR SPACING OF BARS BEING DEVELOPED IS LESS THAN ONE BAR DIAMETER, CLEAR COVER IS LESS THAN ONE BAR DIAMETER AND STIRRUPS OR TIES ALONG THE LENGTH OF THE SPLICE ARE LESS THAN THE CODE MINIMUM.
   - B. CLEAR SPACING OF BARS BEING DEVELOPED IS LESS THAN 2 BAR DIAMETERS AND CLEAR COVER IS LESS THAN ONE BAR DIAMETER.

STRUCTURAL ABBREVIATION LIST:

w/	WITH	J.B.E.	JOIST BEARING ELEVATION
±	PLUS/MINUS	JT.	JOINT
CL	CENTERLINE		
o/c	ON CENTER	K	KIPS
		K.S.F.	KIPS PER SQUARE FOOT
A.B.	ANCHOR BOLT	K.S.I.	KIPS PER SQUARE INCH
AESS	ARCHITECTURALLY EXPOSED STRUCTURAL STEEL	LG.	LONG
ACI	AMERICAN CONCRETE INSTITUTE	LLH	LONG LEG HORIZONTAL
AISC	AMERICAN INSTITUTE OF STEEL CONSTRUCTION	LLO	LONG LEG OUTSTANDING
		LLV	LONG LEG VERTICAL
A.R.	ANCHOR ROD	LSH	LONG SIDE HORIZONTAL
ASTM	AMERICAN SOCIETY FOR TESTING AND MATERIALS	LSV	LONG SIDE VERTICAL
ADJ.	ADJACENT	M.O.S.	MIDDLE OF SLAB
ARCH.	ARCHITECT or ARCHITECTURAL	M.O.W.	MIDDLE OF WALL
		MANUF.	MANUFACTURER or MANUFACTURER'S
B.	BOTTOM		
B.E.J.	BUILDING EXPANSION JOINT	MAS.	MASONRY
B.D.	BAR DIAMETER	MATL.	MATERIAL
BLDG.	BUILDING	MAX.	MAXIMUM
BM.	BEAM	MECH.	MECHANICAL
BRCG.	BRACING	MIN.	MINIMUM
BRDG.	BRIDGING	MTL.	METAL
BRG.	BEARING		
BTWN.	BETWEEN	N.T.S.	NOT TO SCALE
C.G.	CENTER OF GRAVITY	OPP.	OPPOSITE
C.I.P.	CAST IN PLACE		
C.J.P.	COMPLETE JOINT PENETRATION	P/T	POST-TENSIONED
CANT.	CANTILEVER	PAF	POWDER ACTUATED FASTENER
CLR.	CLEAR	P.C.	PRECAST
CMU	CONCRETE MASONRY UNIT	P.E.B.	PRE-ENGINEERED BUILDING
COL.	COLUMN	P.S.	PRE-STRESSED
CONC.	CONCRETE	PSF	POUNDS PER SQUARE FOOT
CONN.	CONNECT or CONNECTION	PSI	POUNDS PER SQUARE INCH
CONT.	CONTINUOUS	P.T.	PRESSURE TREATED
COORD.	COORDINATE	Pc	PIECE
		PLUMB.	PLUMBING
D.	DEEP or DEPTH	PROJ.	PROJECTION
DBL.	DOUBLE		
DET.	DETAIL	R.	RADIUS
DIA.	DIAMETER	REF.	REFERENCE
DIAG.	DIAGONAL	REINF.	REINFORCED or REINFORCING
DWG.	DRAWING	REQD.	REQUIRED
DWL.	DOWEL	REV.	REVISION
E.F.	EACH FACE	SLO	SHORT LEG OUTSTANDING
E.O.	EDGE OF	S.D.I.	STEEL DECK INSTITUTE
E.W.	EACH WAY	S.E.J.	SEISMIC EXPANSION JOINT
EA.	EACH	S.J.I.	STEEL JOIST INSTITUTE
EL.	ELEVATION	S.O.G.	SLAB ON GRADE
ELEC.	ELECTRICAL	S.F.	STEPPED FOOTING
ELEV.	ELEVATOR or ELEVATION	SCHED.	SCHEDULE
EMB.	EMBED or EMBEDMENT	SECT.	SECTION
ENG.	ENGINEER	SHT.	SHEET
EQ.	EQUAL	SIM.	SIMILAR
EQUIV.	EQUIVALENT	S.I.R.D.A.	SLOPED INTEGRAL ROOF DECK ASSEMBLY
EXIST.	EXISTING		
EXP.	EXPANSION	SL.	SLOPE
		SPA.	SPACE
F.L.	FULL LENGTH	STD.	STANDARD
F.O.	FACE OF	STIFF.	STIFFENER
F.R.	FIRST RISER	STIR.	STIRRUP
FIN.	FINISH or FINISHED	STL.	STEEL
FLR.	FLOOR	STRUCT.	STRUCTURAL
FTG.	FOOTING		
		T.	TOP
G.C.	GENERAL CONTRACTOR	T.O.S.	TOP OF STEEL
ga	GAGE	TEMP.	TEMPERATURE
GALV.	GALVANIZED	TYP.	TYPICAL
GD.	GRADE		
		U.O.N.	UNLESS OTHERWISE NOTED
H.C.	HOLLOW CORE		
HK.	HOOK	VERT.	VERTICAL
HORIZ.	HORIZONTAL		
		W.	WIDE or WIDTH
ICF	INSULATED CONCRETE FORM	W.P.	WORKING POINT
		W.W.F.	WELDED WIRE FABRIC

SPEIGHT·MARSHALL·FRANCIS
STRUCTURAL ENGINEERS
1228 PERIMETER PARKWAY, SUITE 201
VIRGINIA BEACH, VIRGINIA 23454
P: 757.427.1026
7814 CARONDELET AVE, SUITE 205
RICHMOND, VIRGINIA 23294
P: 804.464.4111
WWW.SMANDF.COM

APPR | DATE | DESCRIPTION | SYM

NAVFAC

PRELIMINARY NOT FOR CONSTRUCTION

SEAL

WNM Jordan COMPANY – A JOINT VENTURE –

Michael Baker INTERNATIONAL
100 AIRSIDE DRIVE
MOON TOWNSHIP, PA 15108 A/E INFO

APPROVED

FOR COMMANDER NAVFAC

ACTIVITY
MARINE CORPS BASE CAMP LEJEUNE

SATISFACTORY TO DATE DD/MM/YY

DES DPC | DRW NEB | CHK DWS

PM

BRANCH HEAD

DESIGN DIRECTOR

FIRE PROTECTION

DEPARTMENT OF THE NAVY
NAVAL FACILITIES ENGINEERING SYSTEMS COMMAND
ATLANTIC DESIGN AND CONSTRUCTION
MCB CAMP LEJEUNE

NAVAL FACILITIES ENGINEERING SYSTEMS COMMAND ATLANTIC
NORFOLK, VA
JACKSONVILLE, NC

LOGCOM CSP WAREHOUSE

STRUCTURAL NOTES AND ABBREVIATIONS

SCALE: AS NOTED
EPROJECT NO.: 1639600
CONSTR. CONTR. NO. N40085-20-C-0059
NAVFAC DRAWING NO. 14111083
SHEET 74 OF 447

S-003

P1527 FINAL SUBMISSION - 11/8/2021

PLOTTED: 11/12/2021 11:54:38 AM

FILE NAME: BIM 360/IHF PACKAGE 3/P1527 LOG COM CSP-1639600-S.rvt

GENERAL DIMENSION PLAN NOTES :

1. FOR THE STRUCTURAL NOTES AND ABBREVIATIONS SEE SHEETS S-001, S-002 AND S-003.
2. FOR DIMENSIONS NOT SHOWN SEE THE ARCHITECTURAL DRAWINGS.

DIMENSION PLAN LEGEND :

- (X) = COLUMN GRID MARK
- ± = APPROXIMATE DIMENSION OR ELEVATION (FIELD VERIFY)
- = WORKING POINT

GENERAL FOUNDATION PLAN NOTES :

1. SEE THE CIVIL DRAWINGS FOR ACTUAL FINISHED FLOOR ELEVATION. TOP OF SLAB EQUALS FINISHED FLOOR ELEVATION AND MUST SERVE AS REFERENCE ELEVATION 0'-0".
2. FOR THE STRUCTURAL NOTES AND ABBREVIATIONS SEE SHEETS S-001, S-002 AND S-003.
3. SEE THE DIMENSION PLAN ON SHEETS S-101 THROUGH S-108 AND THE ARCHITECTURAL DRAWINGS FOR DIMENSIONS NOT SHOWN.
4. TOP OF ALL WALL FOOTINGS MUST BE 1'-0" BELOW REFERENCE ELEVATION 0'-0" UNLESS OTHERWISE NOTED.

FOUNDATION KEY PLAN NOTES :

1. SEE THE CIVIL DRAWINGS FOR ACTUAL FINISHED FLOOR ELEVATION. TOP OF SLAB EQUALS FINISHED FLOOR ELEVATION AND MUST SERVE AS THE REFERENCE ELEVATION 0'-0".
2. FIRST FLOOR MUST BE 4" THICK CONCRETE SLAB-ON-GRADE, REINFORCED WITH W.W.F. 6x6-W2.1xW2.1 SET 1" CLEAR FROM TOP OF SLAB OVER 4" DEPTH OF POROUS FILL.
3. FIRST FLOOR MUST BE A 5" THICK CONCRETE SLAB-ON-GRADE, REINFORCED WITH W.W.F. 6x6-W2.1xW2.1 SET 1 1/2" CLEAR FROM TOP OF SLAB, OVER 20 MIL. CLASS A VAPOR RETARDER MINIMUM (SEE THE SPECIFICATIONS FOR ADDITIONAL INFORMATION), OVER 4" DEPTH OF POROUS FILL.
4. FIRST FLOOR MUST BE A 8" THICK UNREINFORCED CONCRETE SLAB-ON-GRADE, OVER 20 MIL. CLASS A VAPOR RETARDER MINIMUM (SEE THE SPECIFICATIONS FOR ADDITIONAL INFORMATION), OVER 4" DEPTH OF POROUS FILL.
5. WALL FOOTING - SEE SCHEDULE ON THIS SHEET.
6. COLUMN FOOTING - SEE SCHEDULE ON THIS SHEET.
7. TRENCH DRAIN - SEE THE ARCHITECTURAL AND PLUMBING DRAWINGS FOR EXACT LOCATION AND EXTENT.
8. 2 - #4 x 3'-0" SPACED AT 2'-0" ON CENTER MIDDLE OF SLAB RE-ENTRANT CORNERS WHERE NO SLAB JOINT OCCURS.
9. FIRST FLOOR MUST BE 8" THICK CONCRETE SLAB-ON-GRADE, REINFORCED WITH #4 AT 12" ON-CENTER, OVER 4" DEPTH OF POROUS FILL.

FOUNDATION PLAN LEGEND :

- KCJ = SLAB-ON-GRADE DOWELED CONSTRUCTION JOINT - SEE TYPICAL DETAIL ON SHEET S-501
- CJ = SLAB-ON-GRADE CONTROL JOINT - SEE TYPICAL DETAIL ON SHEET S-501
- = SLAB-ON-GRADE JOINT (CONTROL JOINT UNLESS OTHERWISE REQUIRED)
- = CHANGE IN SLAB ELEVATION - SEE THE ARCHITECTURAL DRAWINGS FOR EXACT SIZE AND LOCATION
- WFX.X = WALL FOOTING MARK - SEE SCHEDULE ON THIS SHEET
- CFX.X = COLUMN FOOTING MARK - SEE SCHEDULE ON THIS SHEET
- SF = STEPPED FOOTING - SEE TYPICAL DETAIL ON SHEET S-501
- (X) = COLUMN GRID MARK
- COLUMN SIZE / CBP-X = COLUMN AND COLUMN BASE PLATE MARK - SEE COLUMN BASE PLATE DETAILS ON SHEET S-501
- (#) = KEY PLAN NOTE
- (-X'-X") = TOP OF FOOTING ELEVATION - MEASURED FROM REFERENCE ELEVATION 0'-0"

GENERAL FRAMING PLAN NOTES :

1. SEE THE DIMENSION PLANS ON SHEET S-101 THROUGH S-108, AND THE ARCHITECTURAL DRAWINGS FOR DIMENSIONS NOT SHOWN.
2. FOR THE STRUCTURAL NOTES AND ABBREVIATIONS SEE SHEETS S-001, S-002, AND S-003.
3. ROOF JOISTS AND OTHER ROOF DECK SUPPORTS MUST BE EQUALLY SPACED BETWEEN GIVEN LOCATIONS WITH A MAXIMUM SPACING OF 5'-0"o/c , UNLESS OTHERWISE NOTED.
4. FOR JOIST BEARING ELEVATIONS NOT SHOWN ON PLAN INTERPOLATE LINERALLY BETWEEN GIVEN ELEVATIONS.

FRAMING PLAN LEGEND :

- [+XX'-XX"] = JOIST BEARING ELEVATION (J.B.E) - MEASURED FROM REFERENCE ELEVATION 0'-0"
- (+XX'-XX") = TOP OF STEEL (T.O.S.) ELEVATION - MEASURED FROM REFERENCE ELEVATION 0'-0" (HI = HIGH; LO = LOW; SL = SLOPE)
- = BEAM TO COLUMN MOMENT CONNECTION - SEE TYPICAL DETAILS ON SHEET S-511
- (X) = COLUMN GRID MARK
- MF = MOMENT FRAME
- = ROOF RIDGE, HIP OR VALLEY LINE - SEE THE ARCHITECTURAL DRAWINGS
- = CHANGE IN ROOF ELEVATION - SEE THE ARCHITECTURAL DRAWINGS

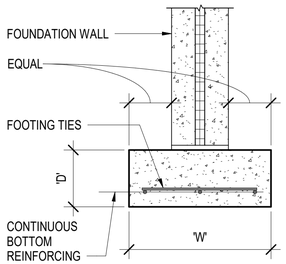

WALL FOOTING DIAGRAM

WALL FOOTING SCHEDULE

MARK	DIMENSIONS WIDTH	DIMENSIONS DEPTH	REINFORCING LONGITUDINAL QUANTITY	REINFORCING LONGITUDINAL SIZE	REINFORCING TRANSVERSE SIZE	REINFORCING TRANSVERSE SPACING	COMMENTS
WF2.0	2' - 0"	1' - 0"	3	4	4	4' - 0"	
WF2.5	2' - 6"	1' - 0"	4	4	4	4' - 0"	

COLUMN FOOTING SCHEDULE

MARK	SIZE (SQUARE U.O.N.)	DEPTH	REINFORCING (BOTTOM U.O.N.)
CF3.0	3' - 0"	1' - 0"	3 - #5 EACH WAY
CF3.0A	3' - 0"	1' - 0"	3 - #5 EACH WAY TOP AND BOTTOM
CF3.5	3' - 6"	1' - 0"	4 - #5 EACH WAY
CF4.0	4' - 0"	1' - 0"	4 - #5 EACH WAY
CF4.5	4' - 6"	1' - 0"	4 - #5 EACH WAY
CF5.0	5' - 0"	1' - 0"	5 - #5 EACH WAY
CF5.5	5' - 6"	1' - 0"	5 - #5 EACH WAY

APPR | DATE | DESCRIPTION | SYM

NAVFAC

PRELIMINARY NOT FOR CONSTRUCTION

SEAL

IRQ W.M. Jordan COMPANY – A JOINT VENTURE –

Michael Baker INTERNATIONAL

100 AIRSIDE DRIVE
MOON TOWNSHIP, PA 15108 A/E INFO

APPROVED

FOR COMMANDER NAVFAC

ACTIVITY
MARINE CORPS BASE CAMP LEJEUNE

SATISFACTORY TO DATE DD/MM/YY

DES DPC | DRW NEB | CHK DWS

PM

BRANCH HEAD

DESIGN DIRECTOR

FIRE PROTECTION

DEPARTMENT OF THE NAVY
NAVAL FACILITIES ENGINEERING SYSTEMS COMMAND
ATLANTIC DESIGN AND CONSTRUCTION
MCB CAMP LEJEUNE

NAVAL FACILITIES ENGINEERING SYSTEMS COMMAND ATLANTIC
NORFOLK, VA
JACKSONVILLE, NC
LOGCOM CSP WAREHOUSE

PLAN NOTES, KEYNOTES, LEGENDS AND SCHEDULES

SCALE: AS NOTED
EPROJECT NO.: 1639600
CONSTR. CONTR. NO. N40085-20-C-0059
NAVFAC DRAWING NO. 14111084
SHEET 75 OF 447

S-100

P1527 FINAL SUBMISSION - 11/8/2021

PLOTTED: 11/12/2021 11:54:49 AM

FILE NAME: BIM 360://HF PACKAGE 3/P1527 LOG COM CSP-1639600-S.rvt

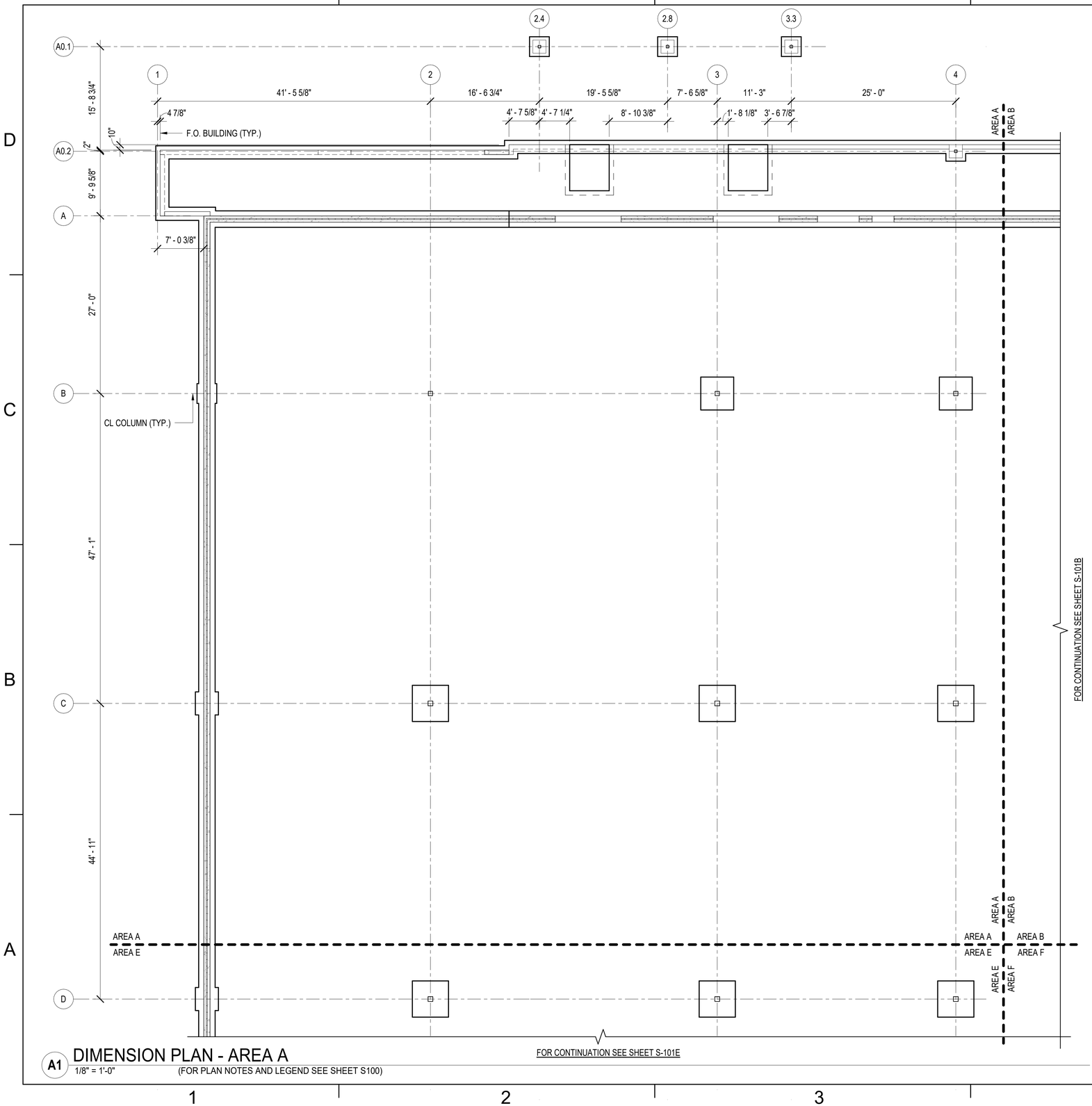

A1 DIMENSION PLAN - AREA A

1/8" = 1'-0" (FOR PLAN NOTES AND LEGEND SEE SHEET S100)

GENERAL DIMENSION PLAN NOTES :

1. FOR THE GENERAL NOTES AND LEGEND SEE SHEET S-100.

KEYPLAN

A	B	C	D
E	F	G	H

SPEIGHT·MARSHALL·FRANCIS
STRUCTURAL ENGINEERS
1226 PERIMETER PARKWAY, SUITE 201
VIRGINIA BEACH, VIRGINIA 23454
P: 757.427.1505
7814 CARNEGIE LANE, SUITE 205
RICHMOND, VIRGINIA 23294
P: 804.464.4111
WWW.SMANDF.COM

N

APPR | DATE | DESCRIPTION | SYM

NAVFAC

PRELIMINARY NOT FOR CONSTRUCTION

SEAL

IRQ W.M. Jordan COMPANY – A JOINT VENTURE –
Michael Baker INTERNATIONAL
100 AIRSIDE DRIVE
MOON TOWNSHIP, PA 15108
A/E INFO

APPROVED

FOR COMMANDER NAVFAC

ACTIVITY
MARINE CORPS BASE CAMP LEJEUNE

SATISFACTORY TO DATE DD/MM/YY

DES	DRW	CHK
DPC	NEB	DWS

PM

BRANCH HEAD

DESIGN DIRECTOR

FIRE PROTECTION

DEPARTMENT OF THE NAVY
NAVAL FACILITIES ENGINEERING SYSTEMS COMMAND
ATLANTIC DESIGN AND CONSTRUCTION

NAVAL FACILITIES ENGINEERING SYSTEMS COMMAND ATLANTIC
NORFOLK, VA

MCB CAMP LEJEUNE
JACKSONVILLE, NC

LOGCOM CSP WAREHOUSE

DIMENSION PLAN - AREA A

SCALE: AS NOTED
EPROJECT NO.: 1639600
CONSTR. CONTR. NO. N40085-20-C-0059
NAVFAC DRAWING NO. 14111085
SHEET 76 OF 447

S-101

P1527 FINAL SUBMISSION - 11/8/2021

PLOTTED: 11/12/2021 11:54:41 AM

FILE NAME: BIM 360://HF PACKAGE 3/P1527 LOG COM CSP-1639600-S.rvt

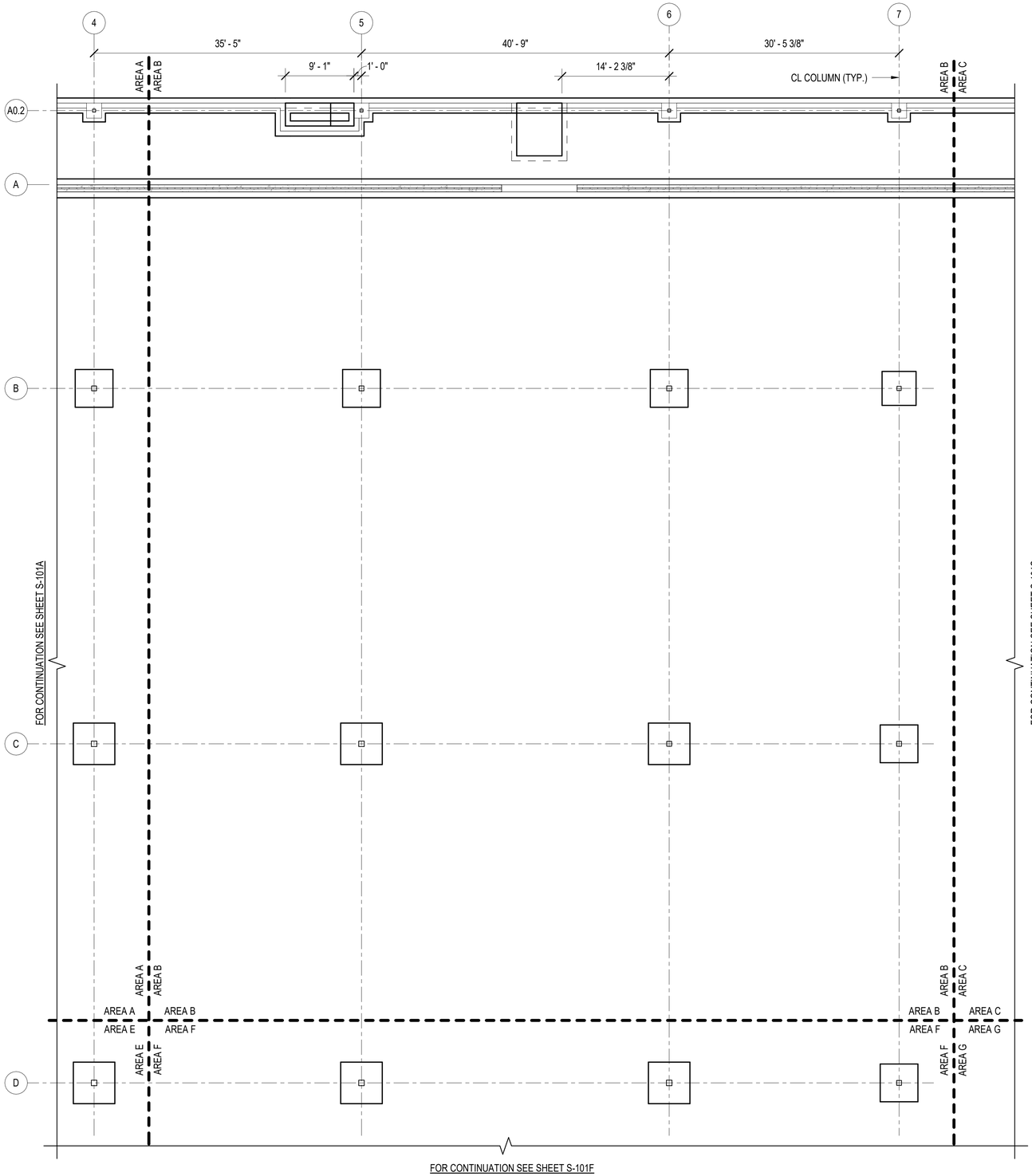

A1 DIMENSION PLAN - AREA B

1/8" = 1'-0"

(FOR PLAN NOTES AND LEGEND SEE SHEET S100)

GENERAL DIMENSION PLAN NOTES :

1. FOR THE GENERAL NOTES AND LEGEND SEE SHEET S-100.

KEYPLAN

A	B	C	D
E	F	G	H

SPEIGHT·MARSHALL·FRANCIS
STRUCTURAL ENGINEERS
1226 PERIMETER PARKWAY, SUITE 201
VIRGINIA BEACH, VIRGINIA 23454
P: 757.427.1505
7814 CARNEGIE LANE, SUITE 205
RICHMOND, VIRGINIA 23294
P: 804.464.4111
WWW.SMANDF.COM

APPR	DATE	DESCRIPTION	SYM

NAVFAC

PRELIMINARY NOT FOR CONSTRUCTION

SEAL

IRQ W.M. Jordan COMPANY – A JOINT VENTURE –

Michael Baker INTERNATIONAL

100 AIRSIDE DRIVE
MOON TOWNSHIP, PA 15108 A/E INFO

APPROVED

FOR COMMANDER NAVFAC

ACTIVITY
MARINE CORPS BASE
CAMP LEJEUNE

SATISFACTORY TO DATE DD/MM/YY

DES	DRW	CHK
DPC	NEB	DWS

PM

BRANCH HEAD

DESIGN DIRECTOR

FIRE PROTECTION

DEPARTMENT OF THE NAVY
NAVAL FACILITIES ENGINEERING SYSTEMS COMMAND
ATLANTIC DESIGN AND CONSTRUCTION

NAVAL FACILITIES ENGINEERING SYSTEMS COMMAND ATLANTIC
NORFOLK, VA

MCB CAMP LEJEUNE
JACKSONVILLE, NC

LOGCOM CSP WAREHOUSE

DIMENSION PLAN - AREA B

SCALE: AS NOTED
EPROJECT NO.: 1639600
CONSTR. CONTR. NO. N40085-20-C-0059
NAVFAC DRAWING NO. 14111086
SHEET 77 OF 447

S-102

P1527 FINAL SUBMISSION - 11/8/2021

PLOTTED: 11/12/2021 11:54:41 AM

FILE NAME: BIM 360://HF PACKAGE 3/P1527 LOG COM CSP-1639600-S.rvt

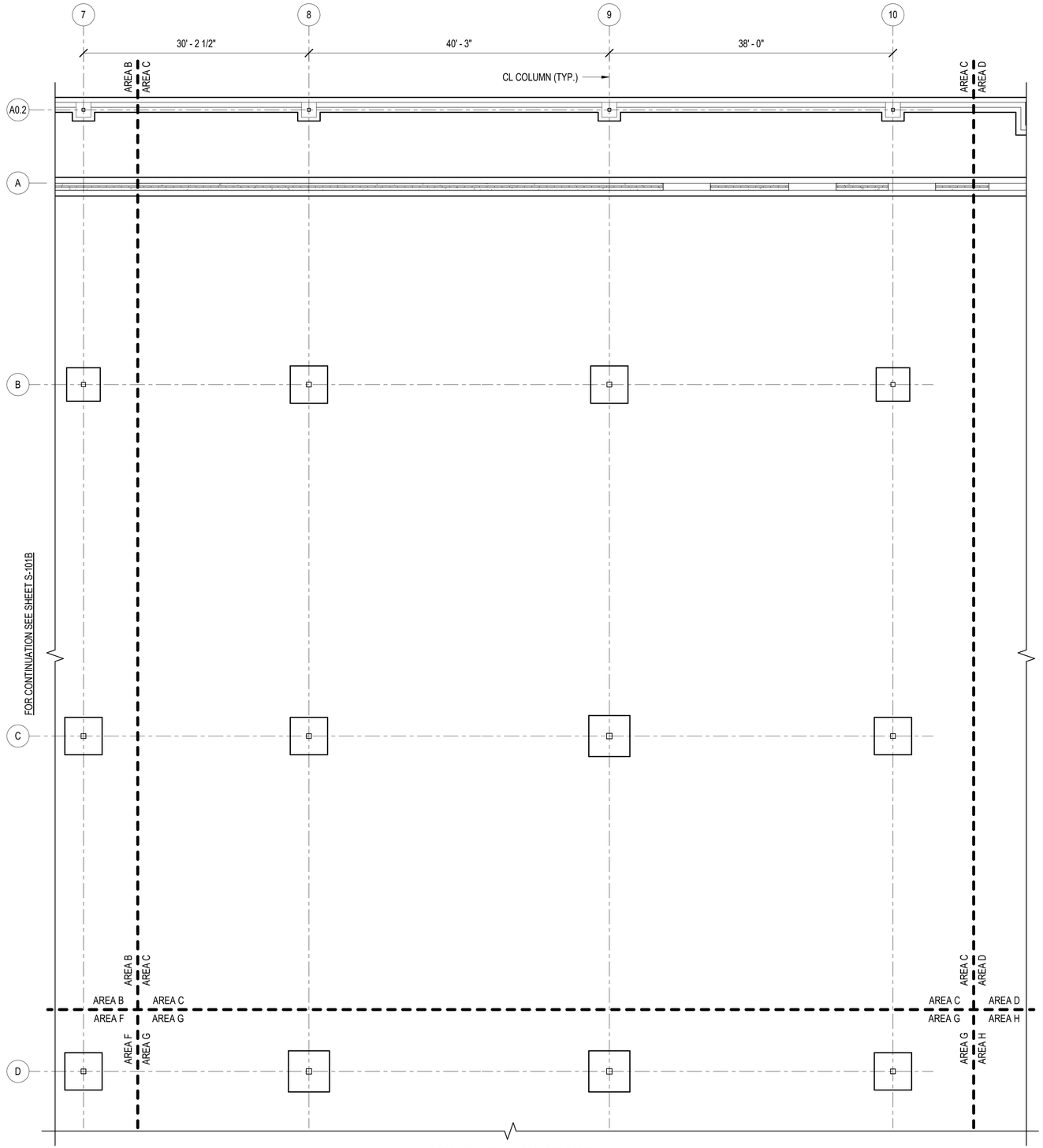

A1 DIMENSION PLAN - AREA C

1/8" = 1'-0" (FOR PLAN NOTES AND LEGEND SEE SHEET S100)

GENERAL DIMENSION PLAN NOTES :

1. FOR THE GENERAL NOTES AND LEGEND SEE SHEET S-100.

KEYPLAN

A	B	C	D
E	F	G	H

SPEIGHT·MARSHALL·FRANCIS
STRUCTURAL ENGINEERS
122-R PERIMETER PARKWAY, SUITE 250
VIRGINIA BEACH, VIRGINIA 23454
P: 757.427.1020
7814 CARONDELET LANE, SUITE 200
RICHMOND, VIRGINIA 23294
P: 804.464.4111
WWW.SMANDF.COM

APPR | DATE | DESCRIPTION | S/M

NAVFAC

PRELIMINARY NOT FOR CONSTRUCTION

SEAL

IRQ Jordan COMPANY – A JOINT VENTURE –

Michael Baker INTERNATIONAL
100 AIRSIDE DRIVE
MOON TOWNSHIP, PA 15108 A/E INFO

APPROVED

FOR COMMANDER NAVFAC

ACTIVITY
MARINE CORPS BASE CAMP LEJEUNE

SATISFACTORY TO DATE DD/MM/YY

DES DPC | DRW NEB | CHK DWS

PM

BRANCH HEAD

DESIGN DIRECTOR

FIRE PROTECTION

DEPARTMENT OF THE NAVY
NAVAL FACILITIES ENGINEERING SYSTEMS COMMAND ATLANTIC
ATLANTIC DESIGN AND CONSTRUCTION
NAVAL FACILITIES ENGINEERING SYSTEMS COMMAND
NORFOLK, VA
MCB CAMP LEJEUNE
JACKSONVILLE, NC
LOGCOM CSP WAREHOUSE

DIMENSION PLAN - AREA C

SCALE: AS NOTED
EPROJECT NO.: 1639600
CONSTR. CONTR. NO. N40085-20-C-0059
NAVFAC DRAWING NO. 14111087
SHEET 78 OF 447

S-103

P1527 FINAL SUBMISSION - 11/8/2021

FILE NAME: BIM 360://HF PACKAGE 3/P1527 LOG COM CSP-1639600-S.rvt
PLOTTED: 11/12/2021 11:54:42 AM

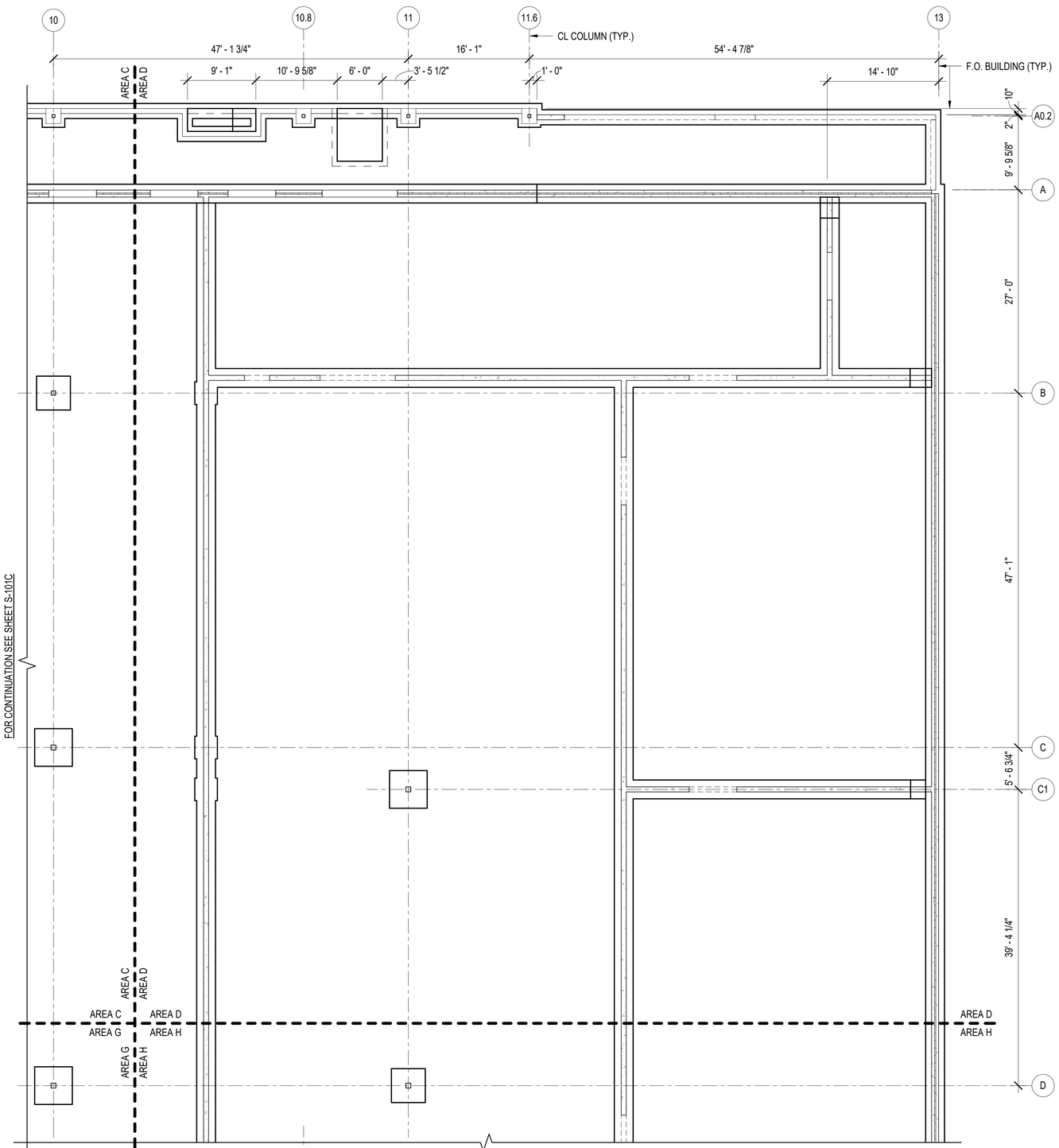

A1 DIMENSION PLAN - AREA D
1/8" = 1'-0" (FOR PLAN NOTES AND LEGEND SEE SHEET S100)

GENERAL DIMENSION PLAN NOTES :

1. FOR THE GENERAL NOTES AND LEGEND SEE SHEET S-100.

KEYPLAN

A	B	C	D
E	F	G	H

SPEIGHT·MARSHALL·FRANCIS
STRUCTURAL ENGINEERS
1228 PERIMETER PARKWAY, SUITE 201
VIRGINIA BEACH, VIRGINIA 23454
P: 757.427.1020
7814 CARDIGEL LANE SUITE 200
RICHMOND, VIRGINIA 23294
P: 804.464.4111
WWW.SMANDF.COM
SMAF Job No: 20-241-A

SYM	DESCRIPTION	DATE	APPR

NAVFAC

PRELIMINARY
NOT FOR CONSTRUCTION
SEAL

RQ W.M. Jordan COMPANY
- A JOINT VENTURE -

Michael Baker
INTERNATIONAL
100 AIRSIDE DRIVE
MOON TOWNSHIP, PA 15108
A/E INFO

APPROVED

FOR COMMANDER NAVFAC

ACTIVITY
MARINE CORPS BASE
CAMP LEJEUNE

SATISFACTORY TO DATE DD/MM/YY

DES DPC | DRW NEB | CHK DWS

PM

BRANCH HEAD

DESIGN DIRECTOR

FIRE PROTECTION

DEPARTMENT OF THE NAVY
NAVAL FACILITIES ENGINEERING SYSTEMS COMMAND
NAVAL FACILITIES ENGINEERING SYSTEMS COMMAND ATLANTIC
ATLANTIC DESIGN AND CONSTRUCTION
NORFOLK, VA

MCB CAMP LEJEUNE
JACKSONVILLE, NC
LOGCOM CSP WAREHOUSE

DIMENSION PLAN - AREA D

SCALE: AS NOTED
EPROJECT NO.: 1639600
CONSTR. CONTR. NO. N40085-20-C-0059
NAVFAC DRAWING NO. 14111088
SHEET 79 OF 447

S-104

P1527 FINAL SUBMISSION - 11/8/2021

FILE NAME: BIM 360://HF PACKAGE 3/P1527 LOG COM CSP-1639600-S.rvt
PLOTTED: 11/12/2021 11:54:43 AM

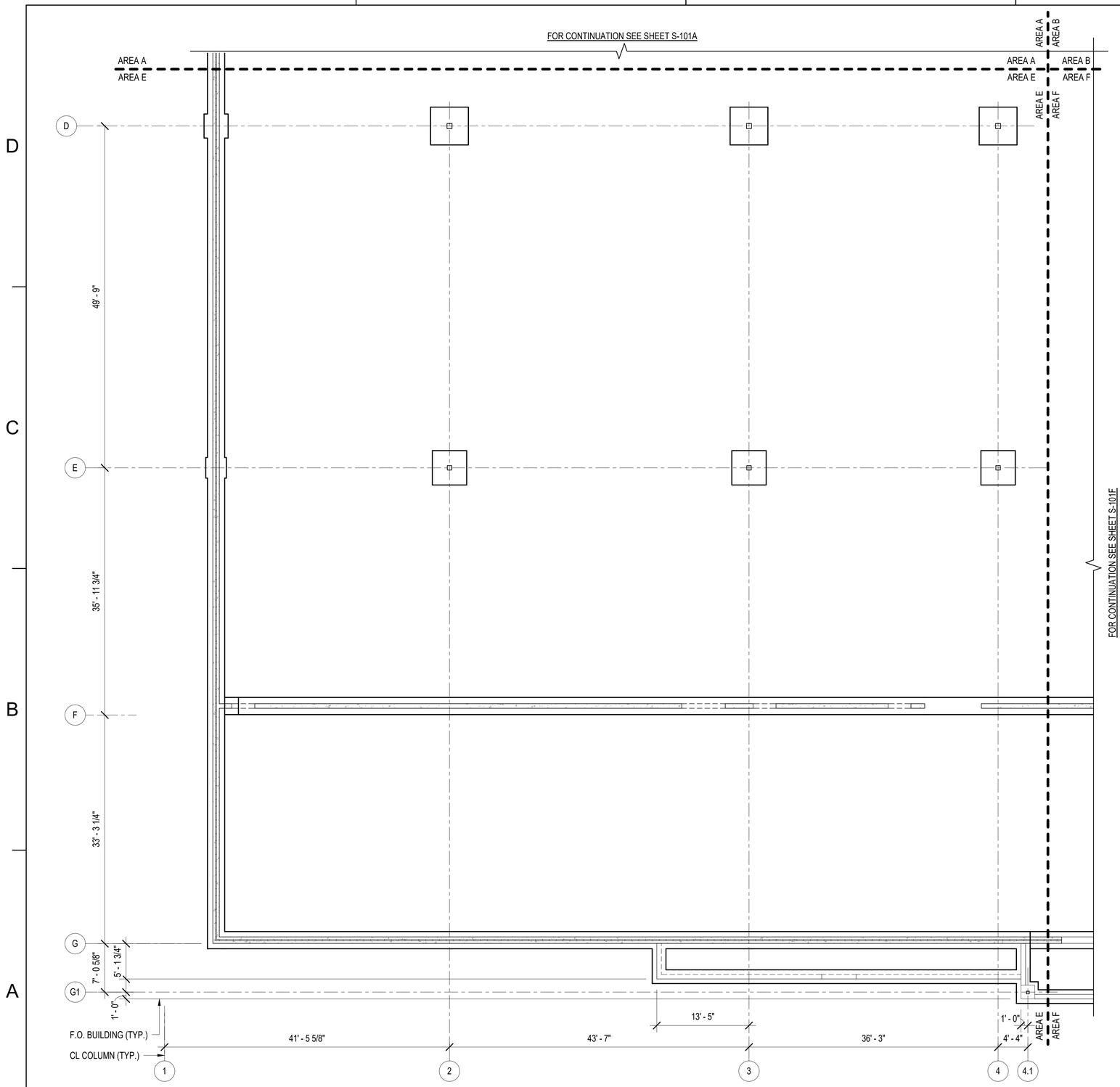

A1 DIMENSION PLAN - AREA E
1/8" = 1'-0" (FOR PLAN NOTES AND LEGEND SEE SHEET S100)

GENERAL DIMENSION PLAN NOTES :

1. FOR THE GENERAL NOTES AND LEGEND SEE SHEET S-100.

KEYPLAN

A	B	C	D
E	F	G	H

SPEIGHT·MARSHALL·FRANCIS
STRUCTURAL ENGINEERS
1228 PERIMETER PARKWAY, SUITE 201
VIRGINIA BEACH, VIRGINIA 23454
P: 757.427.1020
7814 CAROUSEL LANE SUITE 200
RICHMOND, VIRGINIA 23294
P: 804.464.4111
WWW.SMANDF.COM SMAF Job No: 20.241-A

N

SYM	DESCRIPTION	DATE	APPR

NAVFAC

PRELIMINARY
NOT FOR CONSTRUCTION
SEAL

RQ W.M. Jordan COMPANY
- A JOINT VENTURE -

Michael Baker
INTERNATIONAL
100 AIRSIDE DRIVE
MOON TOWNSHIP, PA 15108
A/E INFO

APPROVED

FOR COMMANDER NAVFAC

ACTIVITY
MARINE CORPS BASE
CAMP LEJEUNE

SATISFACTORY TO DATE DD/MM/YY

DES DPC | DRW NEB | CHK DWS

PM

BRANCH HEAD

DESIGN DIRECTOR

FIRE PROTECTION

DEPARTMENT OF THE NAVY
NAVAL FACILITIES ENGINEERING SYSTEMS COMMAND
NAVAL FACILITIES ENGINEERING SYSTEMS COMMAND ATLANTIC
ATLANTIC DESIGN AND CONSTRUCTION
NORFOLK, VA

MCB CAMP LEJEUNE
JACKSONVILLE, NC
LOGCOM CSP WAREHOUSE

DIMENSION PLAN - AREA E

SCALE: AS NOTED
EPROJECT NO.: 1639600
CONSTR. CONTR. NO. N40085-20-C-0059
NAVFAC DRAWING NO. 14111089
SHEET 80 OF 447

S-105

P1527 FINAL SUBMISSION - 11/8/2021

PLOTTED: 11/12/2021 11:54:44 AM

FILE NAME: BIM 360://HF PACKAGE 3/P1527 LOG COM CSP-1639600-S.rvt

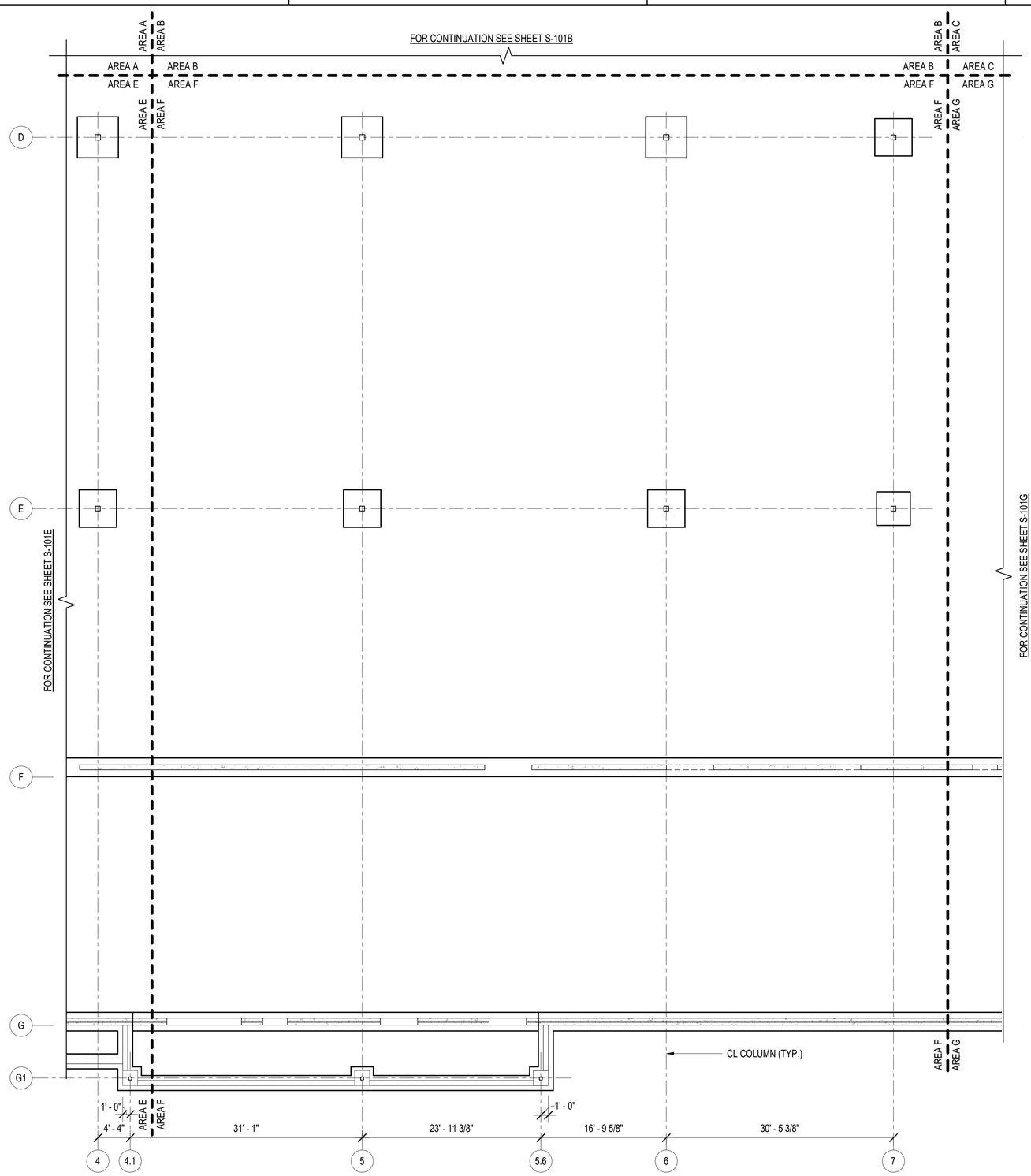

A1 DIMENSION PLAN - AREA F
1/8" = 1'-0" (FOR PLAN NOTES AND LEGEND SEE SHEET S100)

GENERAL DIMENSION PLAN NOTES :

1. FOR THE GENERAL NOTES AND LEGEND SEE SHEET S-100.

KEYPLAN

A	B	C	D
E	F	G	H

SPEIGHT·MARSHALL·FRANCIS
STRUCTURAL ENGINEERS
1228 PERIMETER PARKWAY, SUITE 201
VIRGINIA BEACH, VIRGINIA 23454
P: 757.427.1020
7814 CAROUSEL LANE SUITE 200
RICHMOND, VIRGINIA 23294
P: 804.464.4111
SMF Job No: 20241-A
WWW.SMANDF.COM

SYM	DESCRIPTION	DATE	APPR

NAVFAC

PRELIMINARY
NOT FOR CONSTRUCTION
SEAL

RQ W.M. Jordan COMPANY
- A JOINT VENTURE -

Michael Baker
INTERNATIONAL
100 AIRSIDE DRIVE
MOON TOWNSHIP, PA 15108
A/E INFO

APPROVED

FOR COMMANDER NAVFAC

ACTIVITY
MARINE CORPS BASE
CAMP LEJEUNE

SATISFACTORY TO DATE DD/MM/YY

DES DPC | DRW NEB | CHK DWS

PM

BRANCH HEAD

DESIGN DIRECTOR

FIRE PROTECTION

DEPARTMENT OF THE NAVY
NAVAL FACILITIES ENGINEERING SYSTEMS COMMAND
NAVAL FACILITIES ENGINEERING SYSTEMS COMMAND ATLANTIC
ATLANTIC DESIGN AND CONSTRUCTION
NORFOLK, VA

MCB CAMP LEJEUNE
JACKSONVILLE, NC
LOGCOM CSP WAREHOUSE

DIMENSION PLAN - AREA F

SCALE: AS NOTED
EPROJECT NO.: 1639600
CONSTR. CONTR. NO. N40085-20-C-0059
NAVFAC DRAWING NO. 14111090
SHEET 81 OF 447

S-106

P1527 FINAL SUBMISSION - 11/8/2021

PLOTTED: 11/12/2021 11:54:45 AM

FILE NAME: BIM 360://HF PACKAGE 3/P1527 LOG COM CSP-1639600-S.rvt

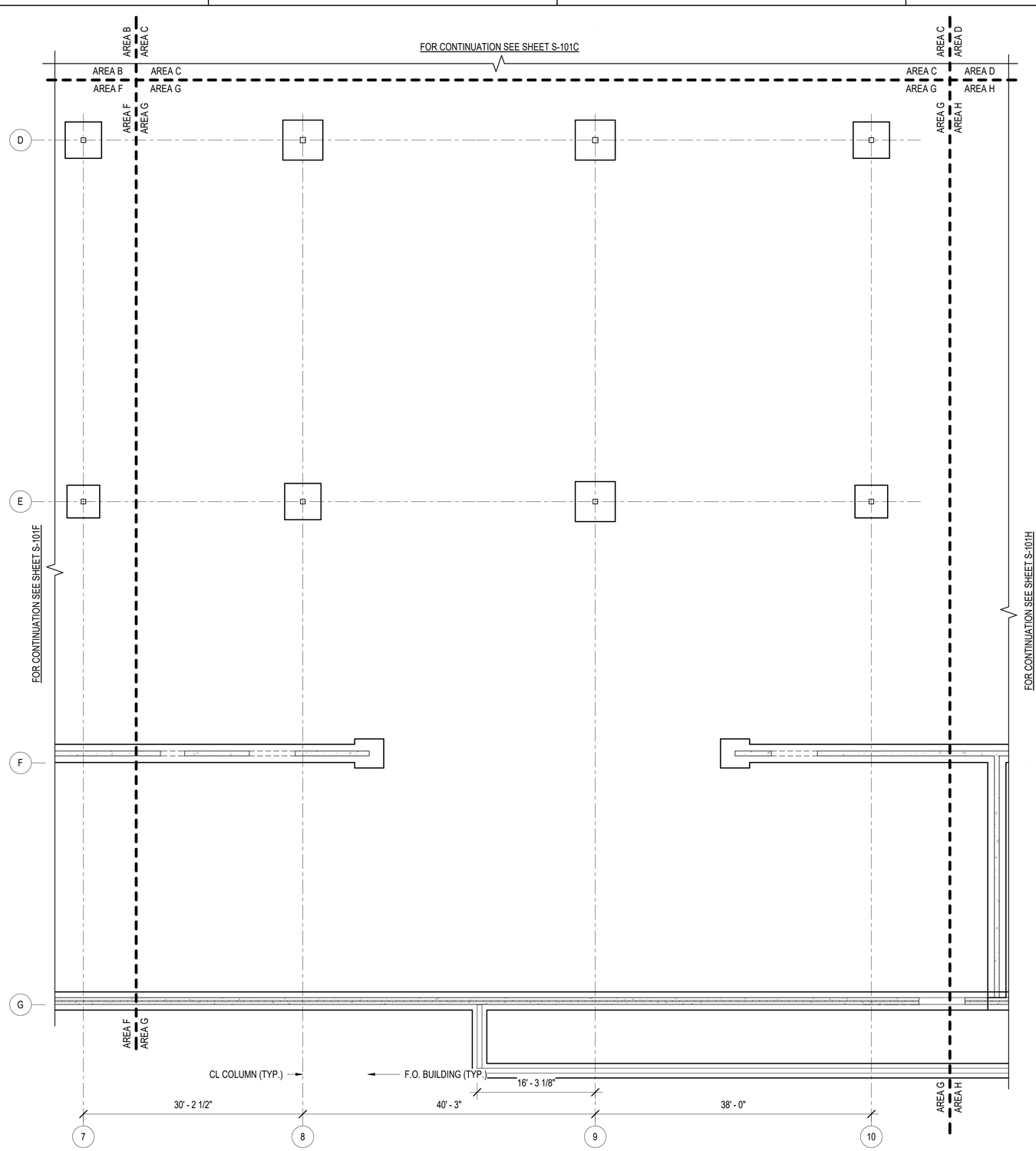

A1 DIMENSION PLAN - AREA G
1/8" = 1'-0" (FOR PLAN NOTES AND LEGEND SEE SHEET S100)

GENERAL DIMENSION PLAN NOTES :

1. FOR THE GENERAL NOTES AND LEGEND SEE SHEET S-100.

KEYPLAN

A	B	C	D
E	F	G	H

SPEIGHT·MARSHALL·FRANCIS
STRUCTURAL ENGINEERS
1228 PERIMETER PARKWAY, SUITE 201
VIRGINIA BEACH, VIRGINIA 23454
P: 757.427.1020
7814 CAROUSEL LANE SUITE 200
RICHMOND, VIRGINIA 23294
P: 804.464.4111
SMAF Job No: 20-241-A
WWW.SMANDF.COM

SYM | DESCRIPTION | DATE | APPR

NAVFAC

PRELIMINARY
NOT FOR CONSTRUCTION

SEAL

RQ W.M. Jordan COMPANY
- A JOINT VENTURE -

Michael Baker
INTERNATIONAL
100 AIRSIDE DRIVE
MOON TOWNSHIP, PA 15108
A/E INFO

APPROVED

FOR COMMANDER NAVFAC

ACTIVITY
MARINE CORPS BASE
CAMP LEJEUNE

SATISFACTORY TO DATE DD/MM/YY

DES Designer FRW Author CHK Checker

PM

BRANCH HEAD

DESIGN DIRECTOR

FIRE PROTECTION

DEPARTMENT OF THE NAVY
NAVAL FACILITIES ENGINEERING SYSTEMS COMMAND
NAVAL FACILITIES ENGINEERING SYSTEMS COMMAND ATLANTIC
ATLANTIC DESIGN AND CONSTRUCTION
NORFOLK, VA

MCB CAMP LEJEUNE
JACKSONVILLE, NC
LOGCOM CSP WAREHOUSE

DIMENSION PLAN - AREA G

SCALE: AS NOTED
EPROJECT NO.: 1639600
CONSTR. CONTR. NO. N40085-20-C-0059
NAVFAC DRAWING NO. 14111091
SHEET 82 OF 447

S-107

P1527 FINAL SUBMISSION - 11/8/2021

PLOTTED: 11/12/2021 11:54:46 AM

FILE NAME: BIM 360://HF PACKAGE 3/P1527 LOG COM CSP-1639600-S.rvt

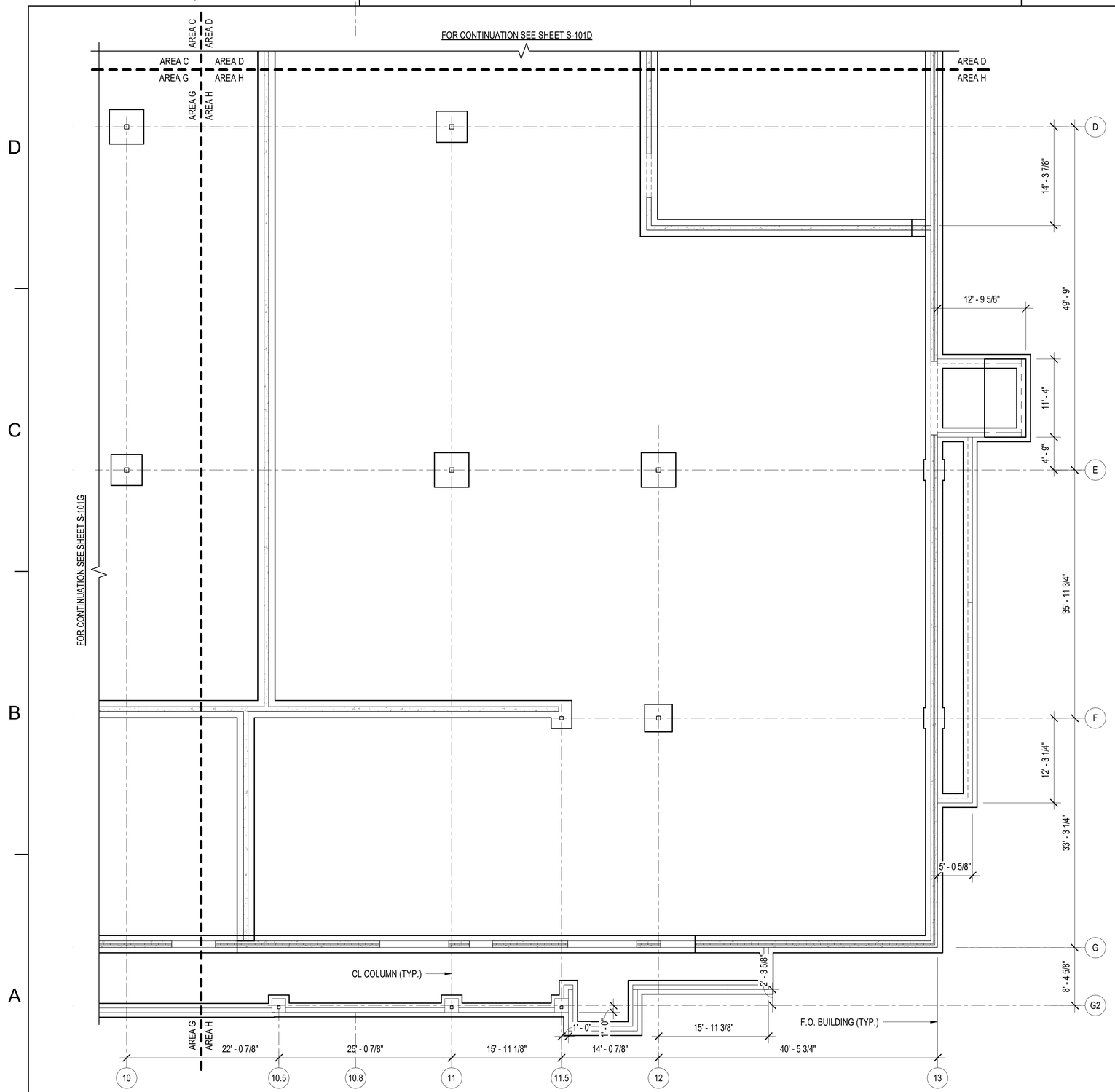

A1 DIMENSION PLAN - AREA H
1/8" = 1'-0"
(FOR PLAN NOTES AND LEGEND SEE SHEET S100)

GENERAL DIMENSION PLAN NOTES :

1. FOR THE GENERAL NOTES AND LEGEND SEE SHEET S-100.

KEYPLAN

A	B	C	D
E	F	G	H

SPEIGHT·MARSHALL·FRANCIS
STRUCTURAL ENGINEERS
1228 PERIMETER PARKWAY, SUITE 201
VIRGINIA BEACH, VIRGINIA 23454
P: 757.427.1020
7814 CAROUSEL LANE SUITE 200
RICHMOND, VIRGINIA 23294
P: 804.464.4111
WWW.SMANDF.COM
SMAF Job No: 20241-A

N

SYM	DESCRIPTION	DATE	APPR

NAVFAC

PRELIMINARY
NOT FOR CONSTRUCTION

SEAL

RQ W.M. Jordan COMPANY
- A JOINT VENTURE -

Michael Baker
INTERNATIONAL
100 AIRSIDE DRIVE
MOON TOWNSHIP, PA 15108
A/E INFO

APPROVED

FOR COMMANDER NAVFAC

ACTIVITY
MARINE CORPS BASE
CAMP LEJEUNE

SATISFACTORY TO DATE DD/MM/YY

DES Designer FRW Author CHK Checker

PM

BRANCH HEAD

DESIGN DIRECTOR

FIRE PROTECTION

DEPARTMENT OF THE NAVY
NAVAL FACILITIES ENGINEERING SYSTEMS COMMAND
NAVAL FACILITIES ENGINEERING SYSTEMS COMMAND ATLANTIC
ATLANTIC DESIGN AND CONSTRUCTION
NORFOLK, VA

MCB CAMP LEJEUNE
JACKSONVILLE, NC
LOGCOM CSP WAREHOUSE

DIMENSION PLAN - AREA H

SCALE: AS NOTED
EPROJECT NO.: 1639600
CONSTR. CONTR. NO. N40085-20-C-0059
NAVFAC DRAWING NO. 14111092
SHEET 83 OF 447

S-108

P1527 FINAL SUBMISSION - 11/8/2021

PLOTTED: 11/12/2021 11:54:47 AM

FILE NAME: BIM 360://HF PACKAGE 3/P1527 LOG COM CSP-1639600-S.rvt

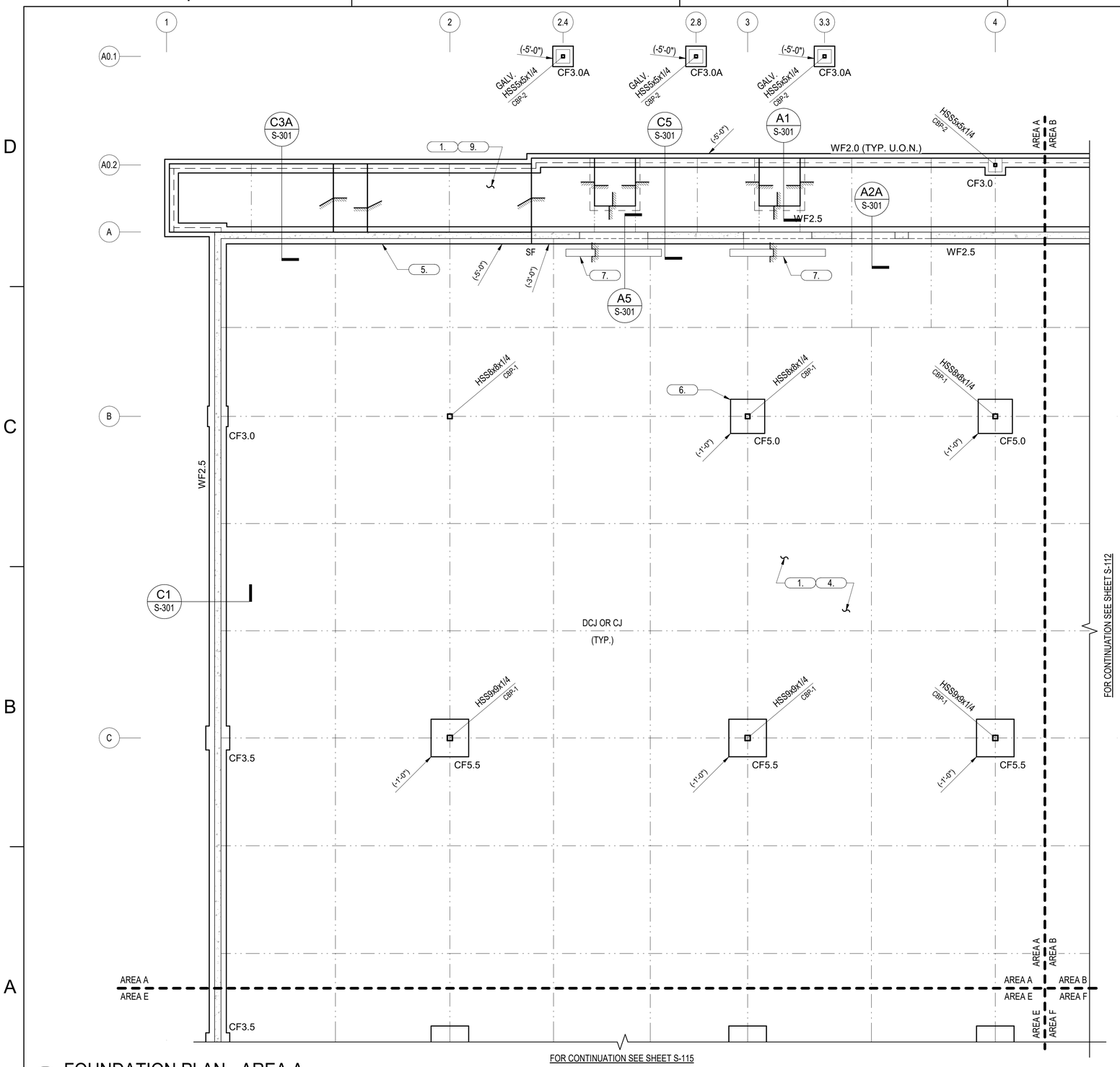

A1 FOUNDATION PLAN - AREA A
1/8" = 1'-0" (FOR PLAN NOTES AND LEGEND SEE SHEET S-100)

GENERAL FOUNDATION PLAN NOTES :

1. FOR THE GENERAL NOTES AND LEGEND SEE SHEET S-100.

FOUNDATION KEY PLAN NOTES :

1. FOR PLAN NOTES SEE SHEET S-100.

KEYPLAN

A	B	C	D
E	F	G	H

N

SPEIGHT·MARSHALL·FRANCIS
STRUCTURAL ENGINEERS
1228 PERIMETER PARKWAY, SUITE 201
VIRGINIA BEACH, VIRGINIA 23454
P: 757.427.1020
7814 CAROUSEL LANE, SUITE 200
RICHMOND, VIRGINIA 23294
P: 804.464.4111
WWW.SMANDF.COM

SYM	DESCRIPTION	DATE	APPR

NAVFAC

PRELIMINARY NOT FOR CONSTRUCTION

SEAL

RQ W.M. Jordan COMPANY – A JOINT VENTURE –

Michael Baker INTERNATIONAL
100 AIRSIDE DRIVE
MOON TOWNSHIP, PA 15108
A/E INFO

APPROVED

FOR COMMANDER NAVFAC

ACTIVITY
MARINE CORPS BASE CAMP LEJEUNE

SATISFACTORY TO DATE DD/MM/YY

DES DPC | DRW NEB | CHK DWS

PM

BRANCH HEAD

DESIGN DIRECTOR

FIRE PROTECTION

DEPARTMENT OF THE NAVY
NAVAL FACILITIES ENGINEERING SYSTEMS COMMAND
NAVAL FACILITIES ENGINEERING SYSTEMS COMMAND ATLANTIC
ATLANTIC DESIGN AND CONSTRUCTION
NORFOLK, VA

MCB CAMP LEJEUNE
JACKSONVILLE, NC
LOGCOM CSP WAREHOUSE

FOUNDATION PLAN - AREA A

SCALE: AS NOTED
EPROJECT NO.: 1639600
CONSTR. CONTR. NO. N40085-20-C-0059
NAVFAC DRAWING NO. 14111093
SHEET 84 OF 447

S-111

P1527 FINAL SUBMISSION - 11/8/2021

PLOTTED: 11/12/2021 11:54:49 AM

FILE NAME: BIM 360://HF PACKAGE 3/P1527 LOG COM CSP-1639600-S.rvt

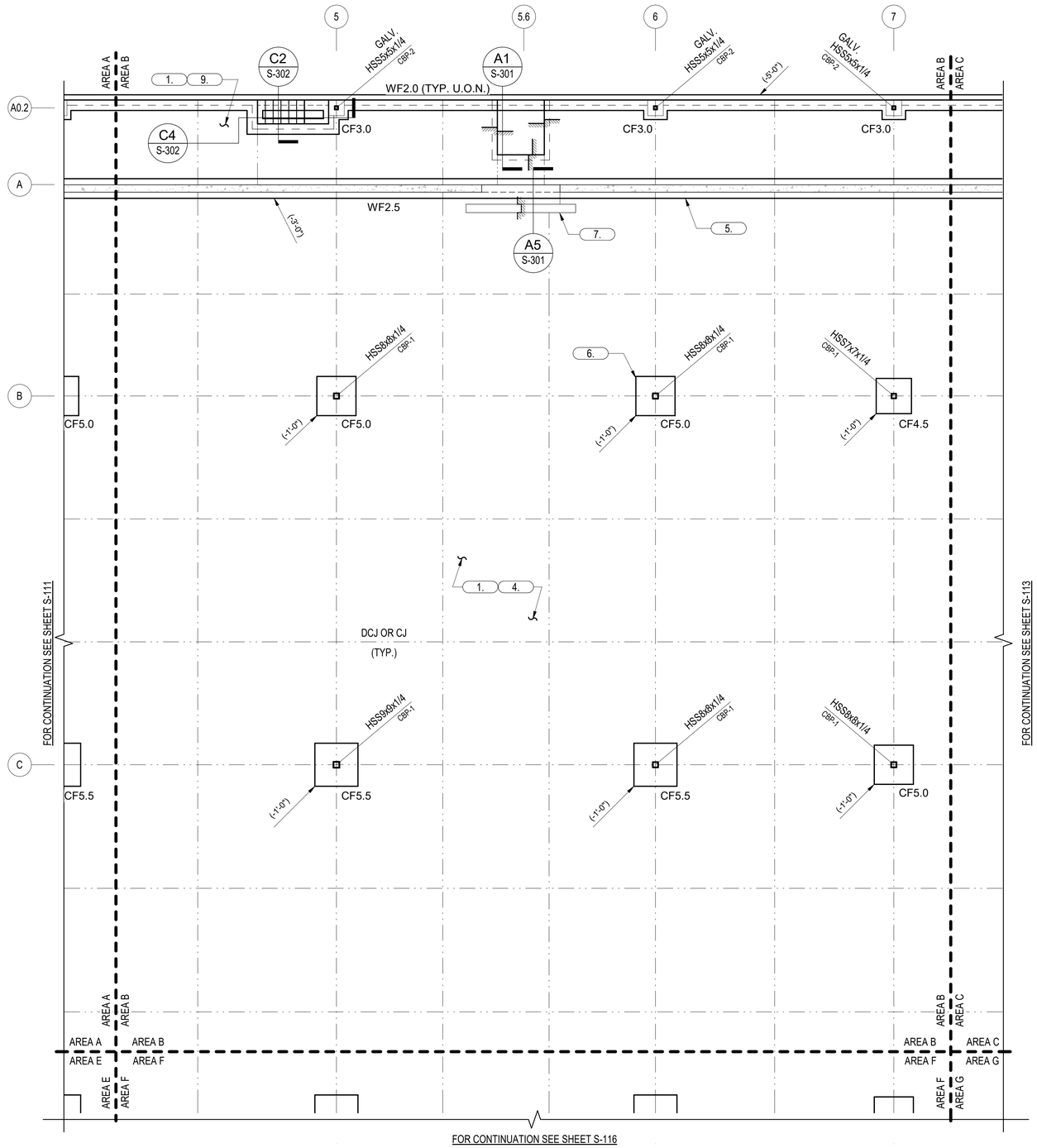

A1 FOUNDATION PLAN - AREA B

1/8" = 1'-0" (FOR PLAN NOTES AND LEGEND SEE SHEET S-100)

GENERAL FOUNDATION PLAN NOTES :

1. FOR THE GENERAL NOTES AND LEGEND SEE SHEET S-100.

FOUNDATION KEY PLAN NOTES :

1. FOR PLAN NOTES SEE SHEET S-100.

KEYPLAN

A	B	C	D
E	F	G	H

SPEIGHT·MARSHALL·FRANCIS
STRUCTURAL ENGINEERS
1228 PERIMETER PARKWAY, SUITE 250
VIRGINIA BEACH, VIRGINIA 23454
P: 757.427.1026
7814 CARONDELET LANE, SUITE 200
RICHMOND, VIRGINIA 23294
P: 804.464.4111
WWW.SMANET.COM

APPR | DATE | DESCRIPTION | SYM

NAVFAC

PRELIMINARY
NOT FOR CONSTRUCTION

SEAL

IRQ W.M. Jordan COMPANY — A JOINT VENTURE —

Michael Baker INTERNATIONAL
100 AIRSIDE DRIVE
MOON TOWNSHIP, PA 15108
A/E INFO

APPROVED
FOR COMMANDER NAVFAC
ACTIVITY
MARINE CORPS BASE
CAMP LEJEUNE
SATISFACTORY TO DATE DD/MM/YY
DES DPC | DRW NEB | CHK DWS
PM
BRANCH HEAD
DESIGN DIRECTOR
FIRE PROTECTION

DEPARTMENT OF THE NAVY
NAVAL FACILITIES ENGINEERING SYSTEMS COMMAND
ATLANTIC DESIGN AND CONSTRUCTION
MCB CAMP LEJEUNE

NAVAL FACILITIES ENGINEERING SYSTEMS COMMAND ATLANTIC
NORFOLK, VA
JACKSONVILLE, NC
LOGCOM CSP WAREHOUSE

FOUNDATION PLAN - AREA B

SCALE: AS NOTED
EPROJECT NO.: 1639600
CONSTR. CONTR. NO. N40085-20-C-0059
NAVFAC DRAWING NO. 14111094
SHEET 85 OF 447

S-112

P1527 FINAL SUBMISSION - 11/8/2021

PLOTTED: 11/12/2021 11:54:52 AM
FILE NAME: BIM 360/IHF PACKAGE 3/P1527 LOG COM CSP-1639600-S.rvt

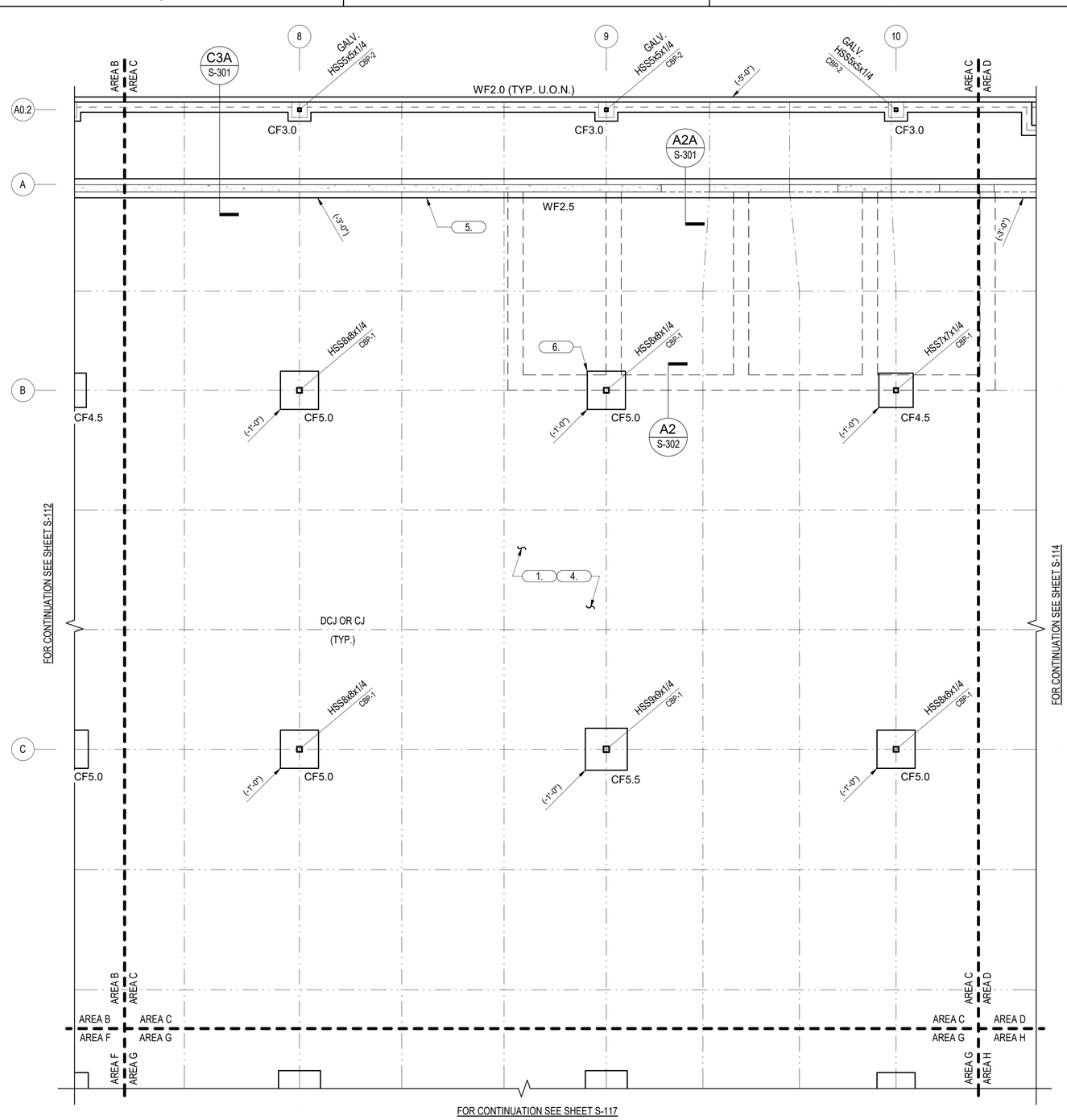

A1 FOUNDATION PLAN - AREA C

1/8" = 1'-0" (FOR PLAN NOTES AND LEGEND SEE SHEET S-100)

GENERAL FOUNDATION PLAN NOTES :

1. FOR THE GENERAL NOTES AND LEGEND SEE SHEET S-100.

FOUNDATION KEY PLAN NOTES :

1. FOR PLAN NOTES SEE SHEET S-100.

KEYPLAN

A	B	C	D
E	F	G	H

SPEIGHT·MARSHALL·FRANCIS
STRUCTURAL ENGINEERS
1228 PERIMETER PARKWAY, SUITE 200
VIRGINIA BEACH, VIRGINIA 23454
P: 757.427.1020
7814 CARONDELET, LANE, SUITE 200
RICHMOND, VIRGINIA 23294
P: 804.464.4111
WWW.SMANDF.COM

NO.	DESCRIPTION	DATE	APPR

NAVFAC

PRELIMINARY
NOT FOR CONSTRUCTION

SEAL

W.M. Jordan COMPANY
~A JOINT VENTURE~

Michael Baker
INTERNATIONAL
100 AIRSIDE DRIVE
MOON TOWNSHIP, PA 15108
A/E INFO

APPROVED

FOR COMMANDER NAVFAC

ACTIVITY
MARINE CORPS BASE
CAMP LEJEUNE

SATISFACTORY TO DATE DD/MM/YY

DES	DRW	CHK
DPC	NEB	DWS

PM
BRANCH HEAD
DESIGN DIRECTOR
FIRE PROTECTION

DEPARTMENT OF THE NAVY
NAVAL FACILITIES ENGINEERING SYSTEMS COMMAND
ATLANTIC DESIGN AND CONSTRUCTION
MCB CAMP LEJEUNE

NAVAL FACILITIES ENGINEERING SYSTEMS COMMAND ATLANTIC
NORFOLK, VA
JACKSONVILLE, NC
LOGCOM CSP WAREHOUSE

FOUNDATION PLAN - AREA C

SCALE: AS NOTED
EPROJECT NO.: 1639600
CONSTR. CONTR. NO. N40085-20-C-0059
NAVFAC DRAWING NO. 14111095
SHEET 86 OF 447

S-113

P1527 FINAL SUBMISSION - 11/8/2021

PLOTTED: 11/12/2021 11:54:54 AM
FILE NAME: BIM 360://HF PACKAGE 3/P1527 LOG COM CSP-1639600-S.rvt

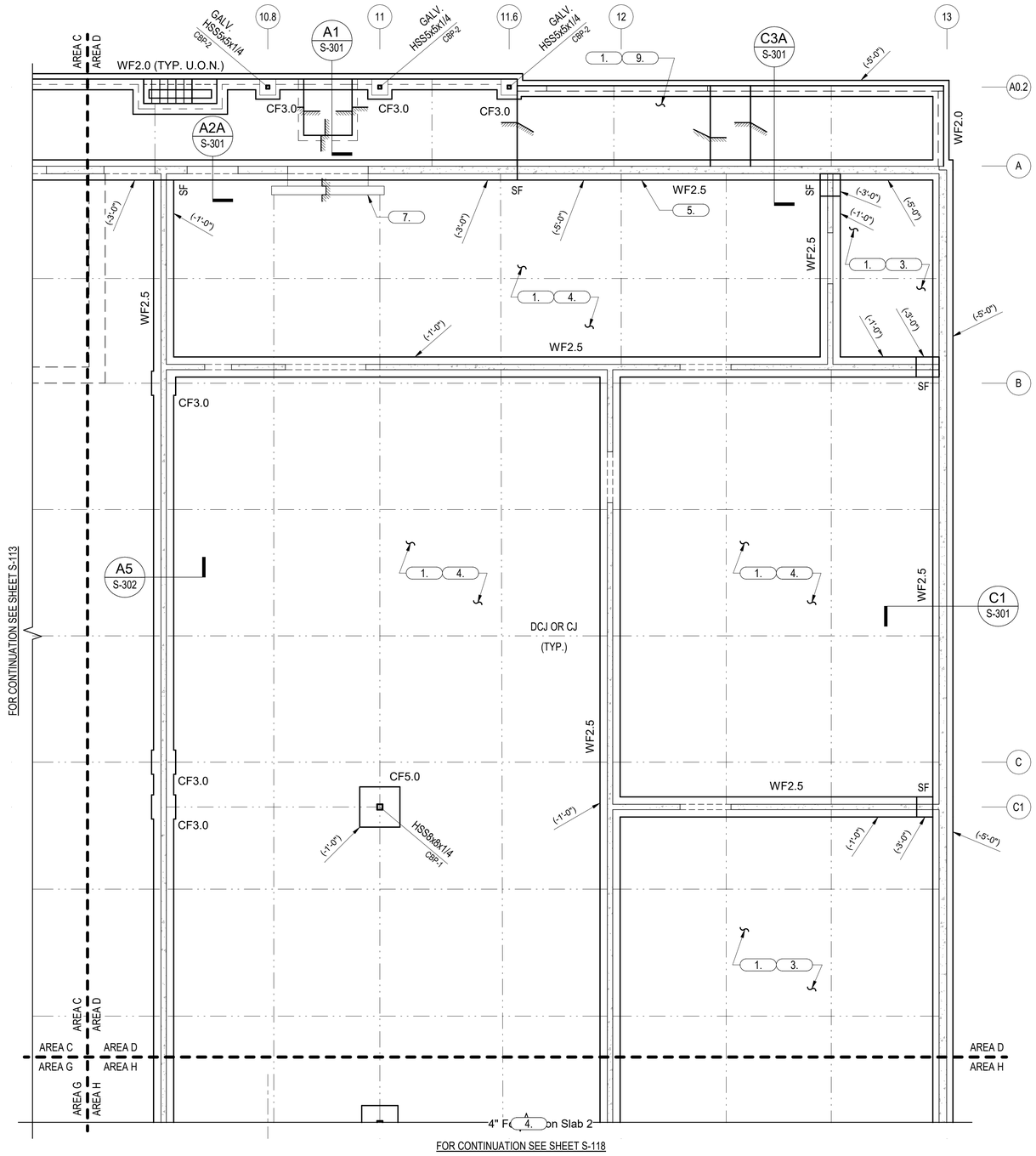

A1 FOUNDATION PLAN - AREA D
1/8" = 1'-0" (FOR PLAN NOTES AND LEGEND SEE SHEET S-100)

GENERAL FOUNDATION PLAN NOTES :

1. FOR THE GENERAL NOTES AND LEGEND SEE SHEET S-100.

FOUNDATION KEY PLAN NOTES :

1. FOR PLAN NOTES SEE SHEET S-100.

KEYPLAN

A	B	C	D
E	F	G	H

SPEIGHT·MARSHALL·FRANCIS
STRUCTURAL ENGINEERS
1328 PERIMETER PARKWAY, SUITE 201
VIRGINIA BEACH, VIRGINIA 23454
P: 757.427.1500
7814 CARMICHEL LANE, SUITE 205
RICHMOND, VIRGINIA 23294
P: 804.464.4111
WWW.SMANDF.COM

APPR | DATE | DESCRIPTION | SYM

NAVFAC

PRELIMINARY NOT FOR CONSTRUCTION

SEAL

IRQ W.M. Jordan COMPANY – A JOINT VENTURE –

Michael Baker INTERNATIONAL
100 AIRSIDE DRIVE
MOON TOWNSHIP, PA 15108 A/E INFO

APPROVED
FOR COMMANDER NAVFAC

ACTIVITY
MARINE CORPS BASE CAMP LEJEUNE

SATISFACTORY TO DATE DD/MM/YY
DES DPC | DRW NEB | CHK DWS
PM
BRANCH HEAD
DESIGN DIRECTOR
FIRE PROTECTION

DEPARTMENT OF THE NAVY
NAVAL FACILITIES ENGINEERING SYSTEMS COMMAND
ATLANTIC DESIGN AND CONSTRUCTION
NAVAL FACILITIES ENGINEERING SYSTEMS COMMAND ATLANTIC
NORFOLK, VA
MCB CAMP LEJEUNE
JACKSONVILLE, NC
LOGCOM CSP WAREHOUSE
FOUNDATION PLAN - AREA D

SCALE: AS NOTED
EPROJECT NO.: 1639600
CONSTR. CONTR. NO. N40085-20-C-0059
NAVFAC DRAWING NO. 14111096
SHEET 87 OF 447

S-114

P1527 FINAL SUBMISSION - 11/8/2021

PLOTTED: 11/12/2021 11:54:57 AM
FILE NAME: BIM 360://HF PACKAGE 3/P1527 LOG COM CSP-1639600-S.rvt

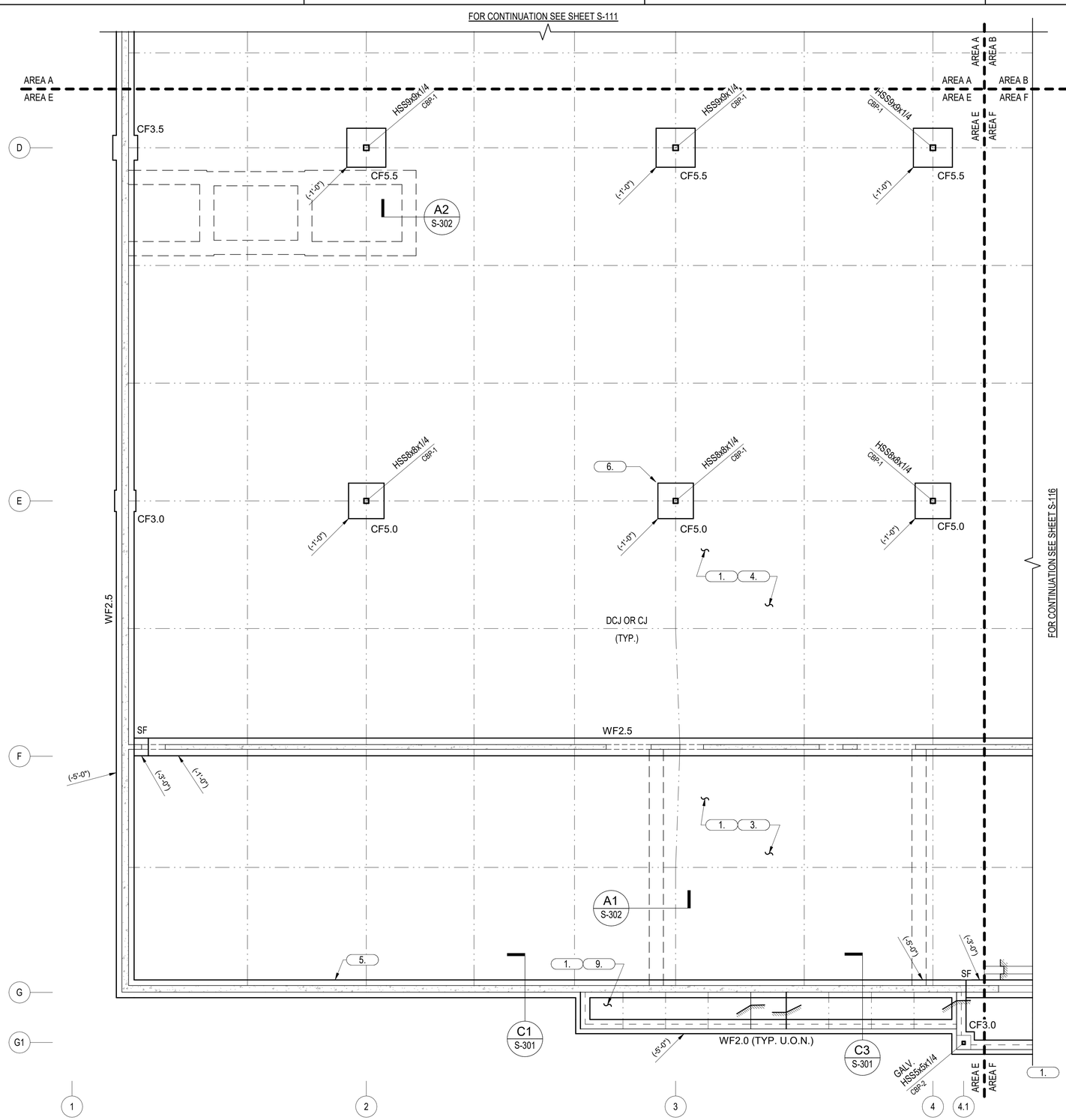

A1 FOUNDATION PLAN - AREA E

1/8" = 1'-0"

(FOR PLAN NOTES AND LEGEND SEE SHEET S-100)

GENERAL FOUNDATION PLAN NOTES :

1. FOR THE GENERAL NOTES AND LEGEND SEE SHEET S-100.

FOUNDATION KEY PLAN NOTES :

1. FOR PLAN NOTES SEE SHEET S-100.

KEYPLAN

A	B	C	D
E	F	G	H

SPEIGHT·MARSHALL·FRANCIS
STRUCTURAL ENGINEERS
1228 PERIMETER PARKWAY, SUITE 2A
VIRGINIA BEACH, VIRGINIA 23454
P: 757.427.1026
7814 CARONDELET LANE, SUITE 205
RICHMOND, VIRGINIA 23294
P: 804.464.4111
WWW.SMFNET.COM

APPR	DATE	DESCRIPTION	SYM

NAVFAC

PRELIMINARY
NOT FOR CONSTRUCTION
SEAL

IRQ W.M. Jordan COMPANY
~A JOINT VENTURE~

Michael Baker
INTERNATIONAL
100 AIRSIDE DRIVE
MOON TOWNSHIP, PA 15108
A/E INFO

APPROVED
FOR COMMANDER NAVFAC

ACTIVITY
MARINE CORPS BASE
CAMP LEJEUNE

SATISFACTORY TO DATE DD/MM/YY

DES	DPC	DRW	NEB	CHK	DWS

PM
BRANCH HEAD
DESIGN DIRECTOR
FIRE PROTECTION

DEPARTMENT OF THE NAVY
NAVAL FACILITIES ENGINEERING SYSTEMS COMMAND
ATLANTIC DESIGN AND CONSTRUCTION
MCB CAMP LEJEUNE

NAVAL FACILITIES ENGINEERING SYSTEMS COMMAND ATLANTIC
NORFOLK, VA
JACKSONVILLE, NC
LOGCOM CSP WAREHOUSE

FOUNDATION PLAN - AREA E

SCALE: AS NOTED
EPROJECT NO.: 1639600
CONSTR. CONTR. NO. N40085-20-C-0059
NAVFAC DRAWING NO. 14111097
SHEET 88 OF 447

S-115

P1527 FINAL SUBMISSION - 11/8/2021

N

FILE NAME: BIM 360/IHF PACKAGE 3/P1527 LOG COM CSP-1639600-S.rvt
PLOTTED: 11/12/2021 11:54:59 AM

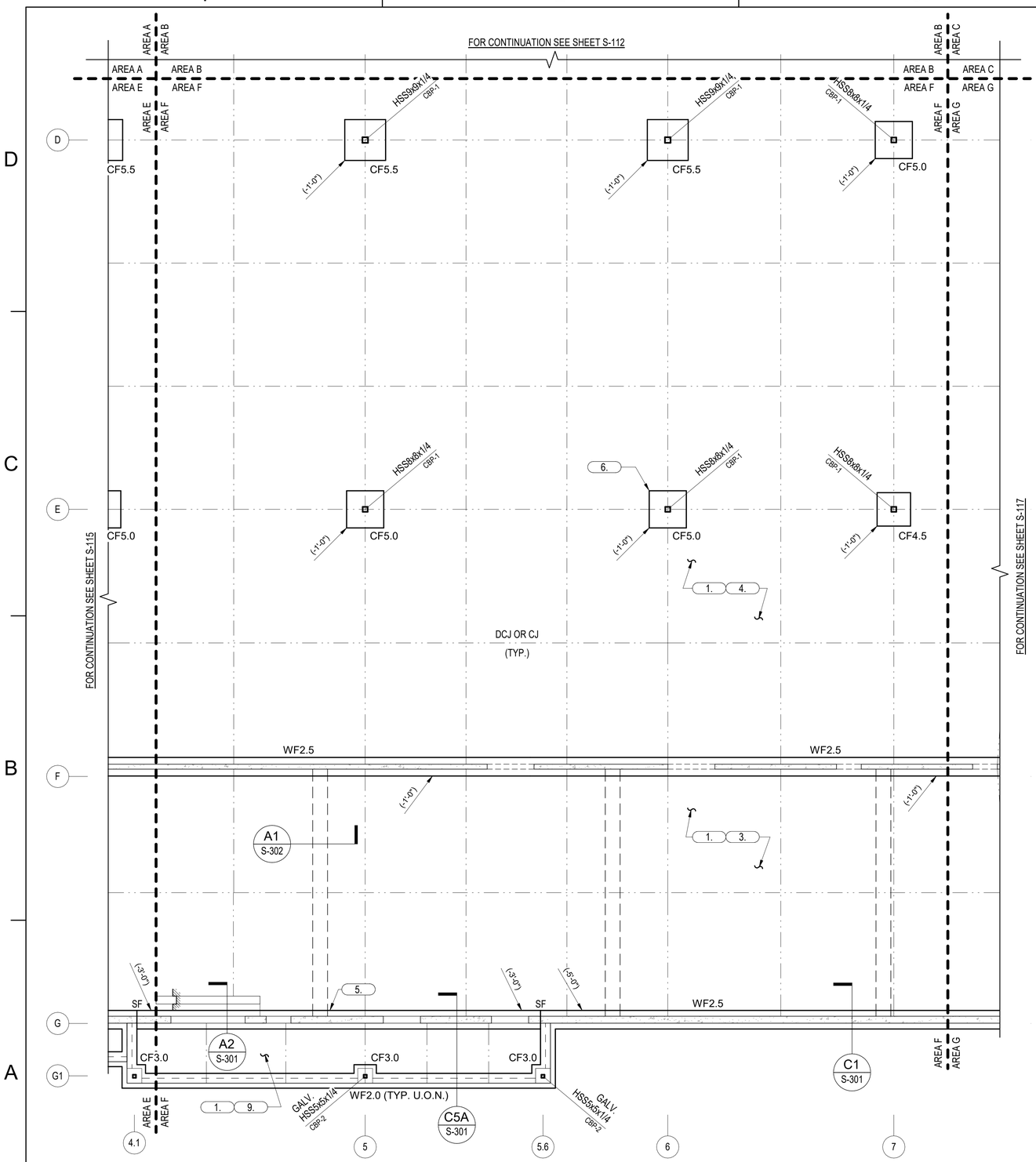

A1 FOUNDATION PLAN - AREA F
1/8" = 1'-0"
(FOR PLAN NOTES AND LEGEND SEE SHEET S-100)

GENERAL FOUNDATION PLAN NOTES :

1. FOR THE GENERAL NOTES AND LEGEND SEE SHEET S-100.

FOUNDATION KEY PLAN NOTES :

1. FOR PLAN NOTES SEE SHEET S-100.

KEYPLAN

A	B	C	D
E	F	G	H

SPEIGHT·MARSHALL·FRANCIS
STRUCTURAL ENGINEERS
1228 PERIMETER PARKWAY, SUITE 201
VIRGINIA BEACH, VIRGINIA 23454
P: 757.427.1020
7814 CARDUSEL LANE SUITE 200
RICHMOND, VIRGINIA 23294
P: 804.464.4111
WWW.SMANDF.COM
SMF Job No: 20241-A

SYM	DESCRIPTION	DATE	APPR

NAVFAC

PRELIMINARY
NOT FOR CONSTRUCTION
SEAL

RQ W.M. Jordan COMPANY
- A JOINT VENTURE -

Michael Baker
INTERNATIONAL
100 AIRSIDE DRIVE
MOON TOWNSHIP, PA 15108
A/E INFO

APPROVED

FOR COMMANDER NAVFAC

ACTIVITY
MARINE CORPS BASE
CAMP LEJEUNE

SATISFACTORY TO DATE DD/MM/YY

DES DPC | DRW NEB | CHK DWS

PM

BRANCH HEAD

DESIGN DIRECTOR

FIRE PROTECTION

DEPARTMENT OF THE NAVY
NAVAL FACILITIES ENGINEERING SYSTEMS COMMAND
NAVAL FACILITIES ENGINEERING SYSTEMS COMMAND ATLANTIC
ATLANTIC DESIGN AND CONSTRUCTION
NORFOLK, VA

MCB CAMP LEJEUNE
JACKSONVILLE, NC

LOGCOM CSP WAREHOUSE

FOUNDATION PLAN - AREA F

SCALE: AS NOTED
EPROJECT NO.: 1639600
CONSTR. CONTR. NO. N40085-20-C-0059
NAVFAC DRAWING NO. 14111098
SHEET 89 OF 447

S-116

P1527 FINAL SUBMISSION - 11/8/2021

PLOTTED: 11/12/2021 11:55:02 AM

FILE NAME: BIM 360://HF PACKAGE 3/P1527 LOG COM CSP-1639600-S.rvt

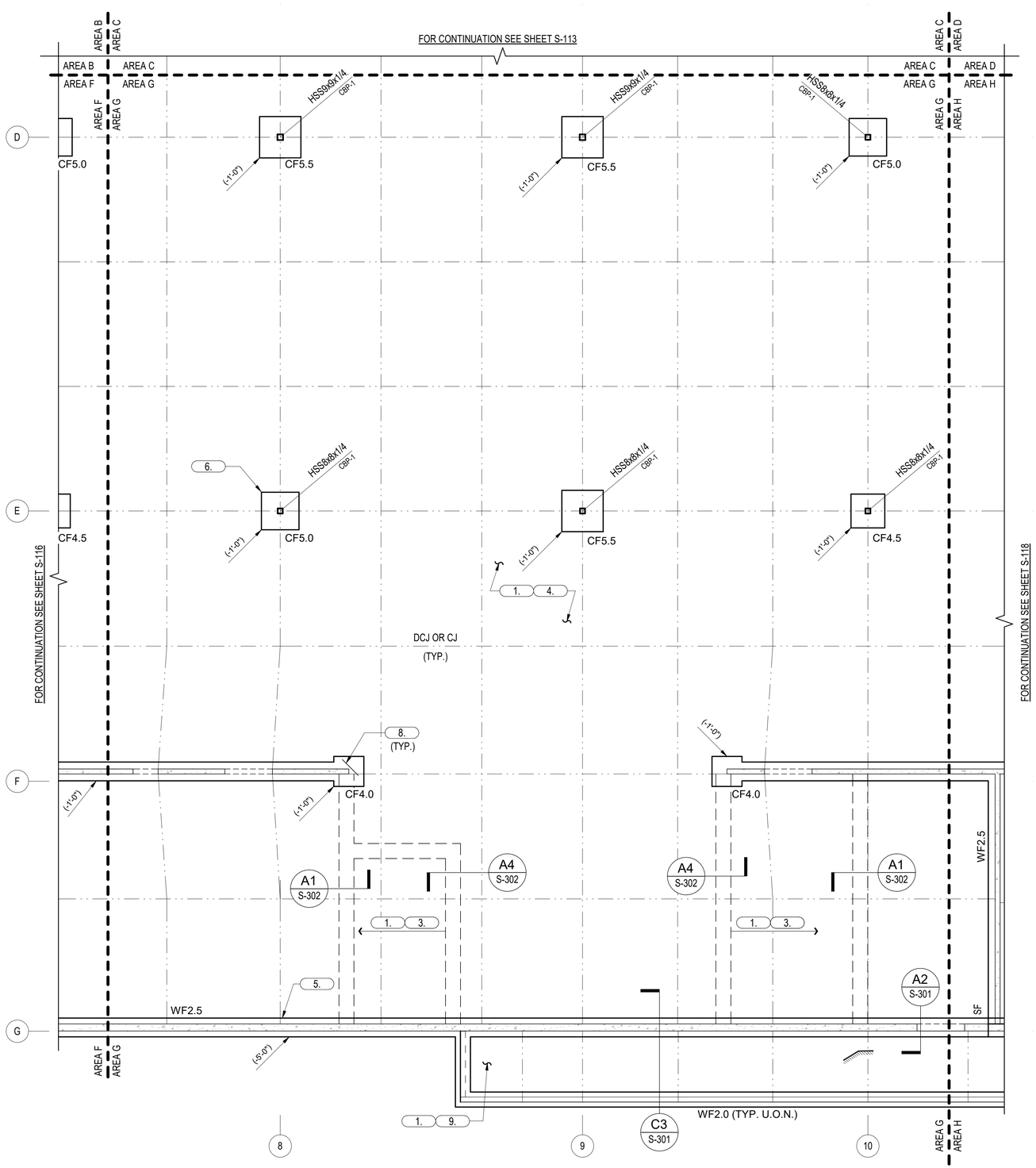

A1 FOUNDATION PLAN - AREA G
1/8" = 1'-0" (FOR PLAN NOTES AND LEGEND SEE SHEET S-100)

GENERAL FOUNDATION PLAN NOTES :

1. FOR THE GENERAL NOTES AND LEGEND SEE SHEET S-100.

FOUNDATION KEY PLAN NOTES :

1. FOR PLAN NOTES SEE SHEET S-100.

KEYPLAN

A	B	C	D
E	F	G	H

SPEIGHT·MARSHALL·FRANCIS
STRUCTURAL ENGINEERS
1328 PERIMETER PARKWAY, SUITE 201
VIRGINIA BEACH, VIRGINIA 23454
P: 757.427.1920
7814 CARONDELET LANE, SUITE 205
RICHMOND, VIRGINIA 23294
P: 804.464.4111
WWW.SMANDF.COM

NO.	DESCRIPTION	DATE	APPR

NAVFAC

PRELIMINARY
NOT FOR CONSTRUCTION
SEAL

IRQ W.M. Jordan COMPANY
~A JOINT VENTURE~

Michael Baker
INTERNATIONAL
100 AIRSIDE DRIVE
MOON TOWNSHIP, PA 15108
A/E INFO

APPROVED
FOR COMMANDER NAVFAC
ACTIVITY
MARINE CORPS BASE
CAMP LEJEUNE
SATISFACTORY TO DATE DD/MM/YY
DES Designer DRW Author CHK Checker
PM
BRANCH HEAD
DESIGN DIRECTOR
FIRE PROTECTION

DEPARTMENT OF THE NAVY
NAVAL FACILITIES ENGINEERING SYSTEMS COMMAND
ATLANTIC DESIGN AND CONSTRUCTION
NAVAL FACILITIES ENGINEERING SYSTEMS COMMAND ATLANTIC
NORFOLK, VA
MCB CAMP LEJEUNE
JACKSONVILLE, NC
LOGCOM CSP WAREHOUSE
FOUNDATION PLAN - AREA G

SCALE: AS NOTED
EPROJECT NO.: 1639600
CONSTR. CONTR. NO. N40085-20-C-0059
NAVFAC DRAWING NO. 14111099
SHEET 90 OF 447
S-117

P1527 FINAL SUBMISSION - 11/8/2021

PLOTTED: 11/12/2021 11:55:04 AM
FILE NAME: BIM 360://HF PACKAGE 3/P1527 LOG COM CSP-1639600-S.rvt

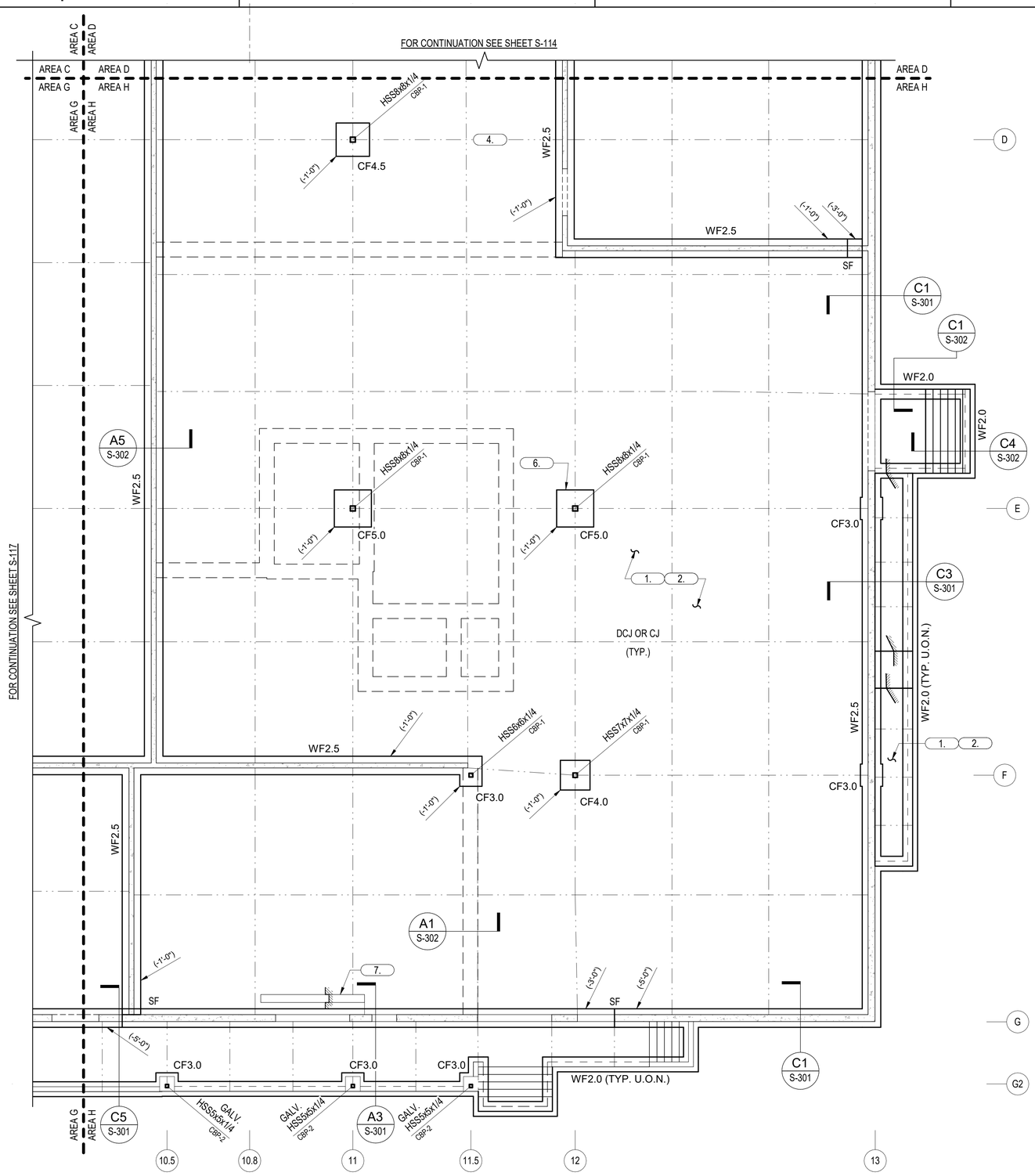

A1 FOUNDATION PLAN - AREA H
1/8" = 1'-0"
(FOR PLAN NOTES AND LEGEND SEE SHEET S-100)

GENERAL FOUNDATION PLAN NOTES :

1. FOR THE GENERAL NOTES AND LEGEND SEE SHEET S-100.

FOUNDATION KEY PLAN NOTES :

1. FOR PLAN NOTES SEE SHEET S-100.

KEYPLAN

A	B	C	D
E	F	G	H

SPEIGHT·MARSHALL·FRANCIS
STRUCTURAL ENGINEERS
1228 PERIMETER PARKWAY, SUITE 201
VIRGINIA BEACH, VIRGINIA 23454
P: 757.427.1020
7814 CAROUSEL LANE SUITE 200
RICHMOND, VIRGINIA 23294
P: 804.464.4111
SMF Job No: 20-241-A
WWW.SMANDF.COM

SYM	DESCRIPTION	DATE	APPR

NAVFAC

PRELIMINARY
NOT FOR CONSTRUCTION

SEAL

RQ W.M. Jordan COMPANY
- A JOINT VENTURE -

Michael Baker
INTERNATIONAL
100 AIRSIDE DRIVE
MOON TOWNSHIP, PA 15108
A/E INFO

APPROVED

FOR COMMANDER NAVFAC

ACTIVITY
MARINE CORPS BASE
CAMP LEJEUNE

SATISFACTORY TO DATE DD/MM/YY

DES Designer PRW Author CHK Checker

PM

BRANCH HEAD

DESIGN DIRECTOR

FIRE PROTECTION

DEPARTMENT OF THE NAVY
NAVAL FACILITIES ENGINEERING SYSTEMS COMMAND
NAVAL FACILITIES ENGINEERING SYSTEMS COMMAND ATLANTIC
ATLANTIC DESIGN AND CONSTRUCTION
NORFOLK, VA

MCB CAMP LEJEUNE
JACKSONVILLE, NC
LOGCOM CSP WAREHOUSE

FOUNDATION PLAN - AREA H

SCALE: AS NOTED
EPROJECT NO.: 1639600
CONSTR. CONTR. NO. N40085-20-C-0059
NAVFAC DRAWING NO. 14111100
SHEET 91 OF 447

S-118

P1527 FINAL SUBMISSION - 11/8/2021

PLOTTED: 11/12/2021 11:55:06 AM

FILE NAME: BIM 360://HF PACKAGE 3/P1527 LOG COM CSP-1639600-S.rvt

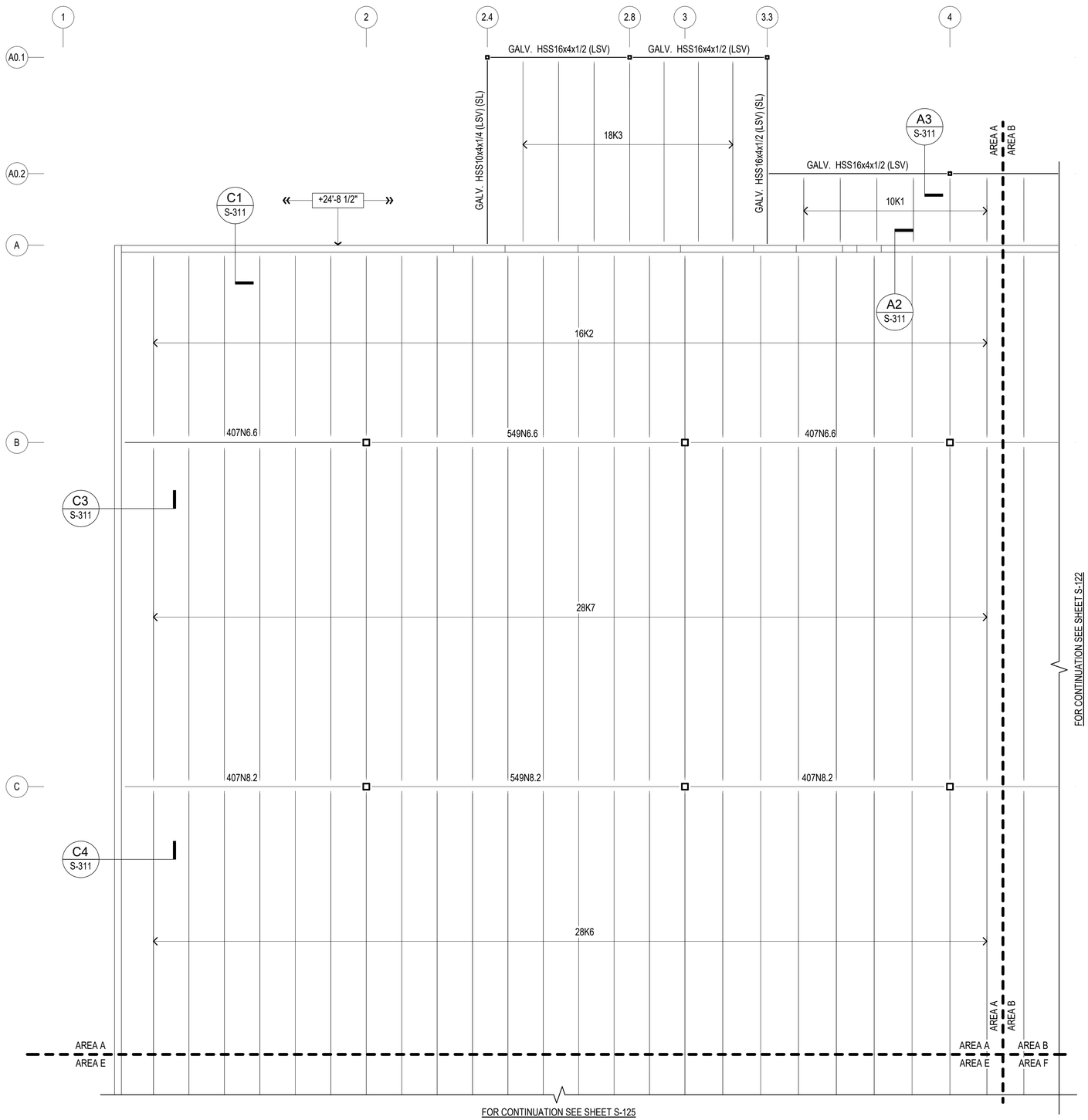

A1 ROOF FRAMING PLAN - AREA A
1/8" = 1'-0" (FOR PLAN NOTES AND LEGEND SEE SHEET S-100)

GENERAL FRAMING PLAN NOTES :

1. FOR THE GENERAL NOTES AND LEGEND SEE SHEET S-100.

FRAMING KEY PLAN NOTES :

1. FOR PLAN NOTES SEE SHEET S-100.

KEYPLAN

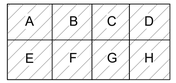

SPEIGHT·MARSHALL·FRANCIS
STRUCTURAL ENGINEERS
1228 PERIMETER PARKWAY, SUITE 201
VIRGINIA BEACH, VIRGINIA 23454
P: 757.427.1020
7814 CAROUSEL LANE SUITE 200
RICHMOND, VIRGINIA 23294
P: 804.464.4111
WWW.SMANDF.COM
SMAF Job No: 20.241-A

N

SYM	DESCRIPTION	DATE	APPR

NAVFAC

PRELIMINARY
NOT FOR CONSTRUCTION
SEAL

RQ W.M. Jordan COMPANY
- A JOINT VENTURE -

Michael Baker
INTERNATIONAL
100 AIRSIDE DRIVE
MOON TOWNSHIP, PA 15108
A/E INFO

APPROVED

FOR COMMANDER NAVFAC

ACTIVITY
MARINE CORPS BASE
CAMP LEJEUNE

SATISFACTORY TO DATE DD/MM/YY

DES DPC | DRW NEB | CHK DWS

PM

BRANCH HEAD

DESIGN DIRECTOR JTW

FIRE PROTECTION

DEPARTMENT OF THE NAVY
NAVAL FACILITIES ENGINEERING SYSTEMS COMMAND
NAVAL FACILITIES ENGINEERING SYSTEMS COMMAND ATLANTIC
ATLANTIC DESIGN AND CONSTRUCTION
NORFOLK, VA

MCB CAMP LEJEUNE
JACKSONVILLE, NC
LOGCOM CSP WAREHOUSE

ROOF FRAMING PLAN - AREA A

SCALE: AS NOTED
EPROJECT NO.: 1639600
CONSTR. CONTR. NO. N40085-20-C-0059
NAVFAC DRAWING NO. 14111101
SHEET 92 OF 447

S-121

P1527 FINAL SUBMISSION - 11/8/2021

PLOTTED: 11/12/2021 11:55:07 AM

FILE NAME: BIM 360://HF PACKAGE 3/P1527 LOG COM CSP-1639600-S.rvt

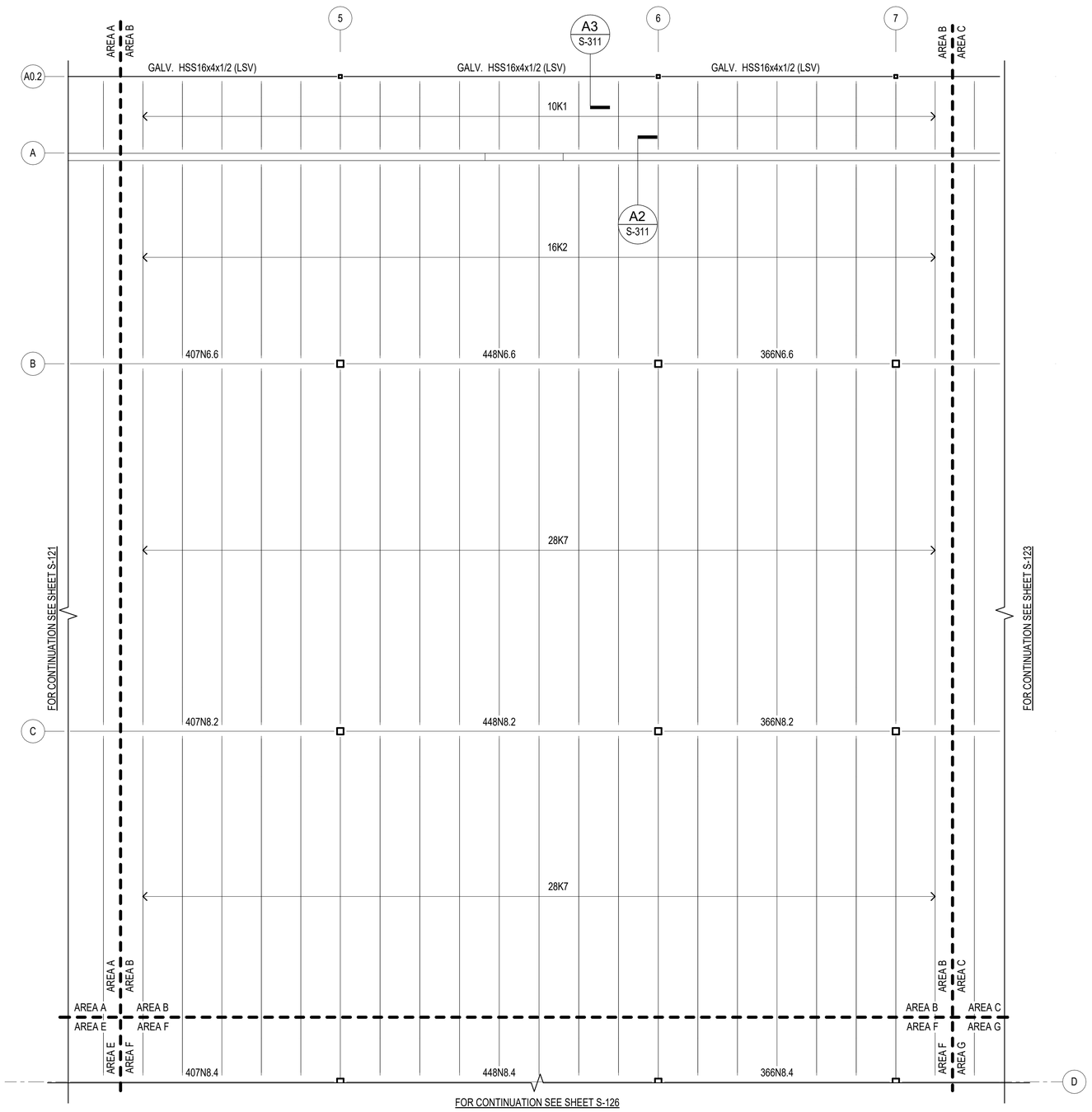

A1 ROOF FRAMING PLAN - AREA B

1/8" = 1'-0" (FOR PLAN NOTES AND LEGEND SEE SHEET S-100)

GENERAL FRAMING PLAN NOTES :

1. FOR THE GENERAL NOTES AND LEGEND SEE SHEET S-100.

FRAMING KEY PLAN NOTES :

1. FOR PLAN NOTES SEE SHEET S-100.

KEYPLAN

A	B	C	D
E	F	G	H

N

SPEIGHT-MARSHALL-FRANCIS
STRUCTURAL ENGINEERS
1228 PERIMETER PARKWAY, SUITE 201
VIRGINIA BEACH, VIRGINIA 23454
P: 757.427.1622
7814 CARONDELET LANE, SUITE 205
RICHMOND, VIRGINIA 23294
P: 804.464.4111
WWW.SMANDF.COM

APPR | DATE | DESCRIPTION | STM

NAVFAC

PRELIMINARY
NOT FOR CONSTRUCTION
SEAL

IRQ Joint Venture — W.M. Jordan Company

Michael Baker INTERNATIONAL
100 AIRSIDE DRIVE
MOON TOWNSHIP, PA 15108
A/E INFO

APPROVED
FOR COMMANDER NAVFAC

ACTIVITY
MARINE CORPS BASE
CAMP LEJEUNE

SATISFACTORY TO DATE DD/MM/YY

DES	DPC	DRW	NEB	CHK	DWS

PM
BRANCH HEAD
DESIGN DIRECTOR
FIRE PROTECTION

DEPARTMENT OF THE NAVY
NAVAL FACILITIES ENGINEERING SYSTEMS COMMAND
ATLANTIC DESIGN AND CONSTRUCTION
MCB CAMP LEJEUNE

NAVAL FACILITIES ENGINEERING SYSTEMS COMMAND ATLANTIC
NORFOLK, VA
JACKSONVILLE, NC
LOGCOM CSP WAREHOUSE

ROOF FRAMING PLAN - AREA B

SCALE:	AS NOTED
EPROJECT NO.:	1639600
CONSTR. CONTR. NO.	N40085-20-C-0059
NAVFAC DRAWING NO.	14111102
SHEET	93 OF 447

S-122

P1527 FINAL SUBMISSION - 11/8/2021

PLOTTED: 11/12/2021 11:55:08 AM

FILE NAME: BIM 360/JHF PACKAGE 3/P1527 LOG COM CSP-1639600-S.rvt

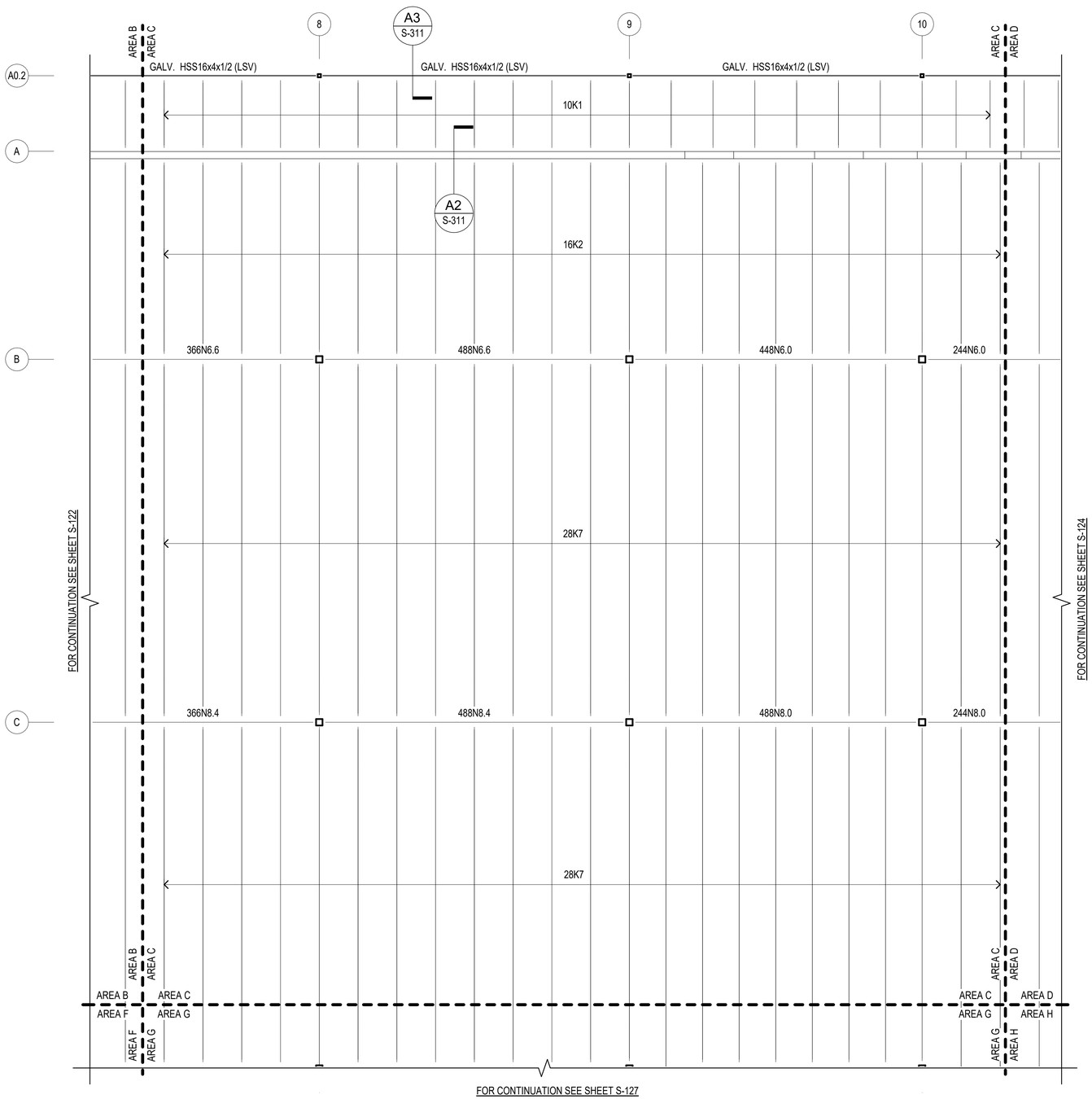

A1 ROOF FRAMING PLAN - AREA C
1/8" = 1'-0" (FOR PLAN NOTES AND LEGEND SEE SHEET S-100)

GENERAL FRAMING PLAN NOTES :

1. FOR THE GENERAL NOTES AND LEGEND SEE SHEET S-100.

FRAMING KEY PLAN NOTES :

1. FOR PLAN NOTES SEE SHEET S-100.

KEYPLAN

A	B	C	D
E	F	G	H

SPEIGHT·MARSHALL·FRANCIS
STRUCTURAL ENGINEERS
1228 PERIMETER PARKWAY, SUITE 201
VIRGINIA BEACH, VIRGINIA 23454
P: 757.427.1020
7814 CARDUSEL LANE SUITE 200
RICHMOND, VIRGINIA 23294
P: 804.464.4111
WWW.SMANDF.COM
SMAF Job No: 20241-A

SYM	DESCRIPTION	DATE	APPR

NAVFAC

PRELIMINARY
NOT FOR CONSTRUCTION
SEAL

RQ W.M. Jordan COMPANY
- A JOINT VENTURE -

Michael Baker
INTERNATIONAL
100 AIRSIDE DRIVE
MOON TOWNSHIP, PA 15108
A/E INFO

APPROVED

FOR COMMANDER NAVFAC

ACTIVITY
MARINE CORPS BASE
CAMP LEJEUNE

SATISFACTORY TO DATE DD/MM/YY

DES DPC | DRW NEB | CHK DWS

PM

BRANCH HEAD

DESIGN DIRECTOR

FIRE PROTECTION

DEPARTMENT OF THE NAVY
NAVAL FACILITIES ENGINEERING SYSTEMS COMMAND
NAVAL FACILITIES ENGINEERING SYSTEMS COMMAND ATLANTIC
ATLANTIC DESIGN AND CONSTRUCTION
NORFOLK, VA

MCB CAMP LEJEUNE
JACKSONVILLE, NC
LOGCOM CSP WAREHOUSE

ROOF FRAMING PLAN - AREA C

SCALE: AS NOTED
EPROJECT NO.: 1639600
CONSTR. CONTR. NO. N40085-20-C-0059
NAVFAC DRAWING NO. 14111103
SHEET 94 OF 447

S-123

P1527 FINAL SUBMISSION - 11/8/2021

PLOTTED: 11/12/2021 11:55:10 AM

FILE NAME: BIM 360://HF PACKAGE 3/P1527 LOG COM CSP-1639600-S.rvt

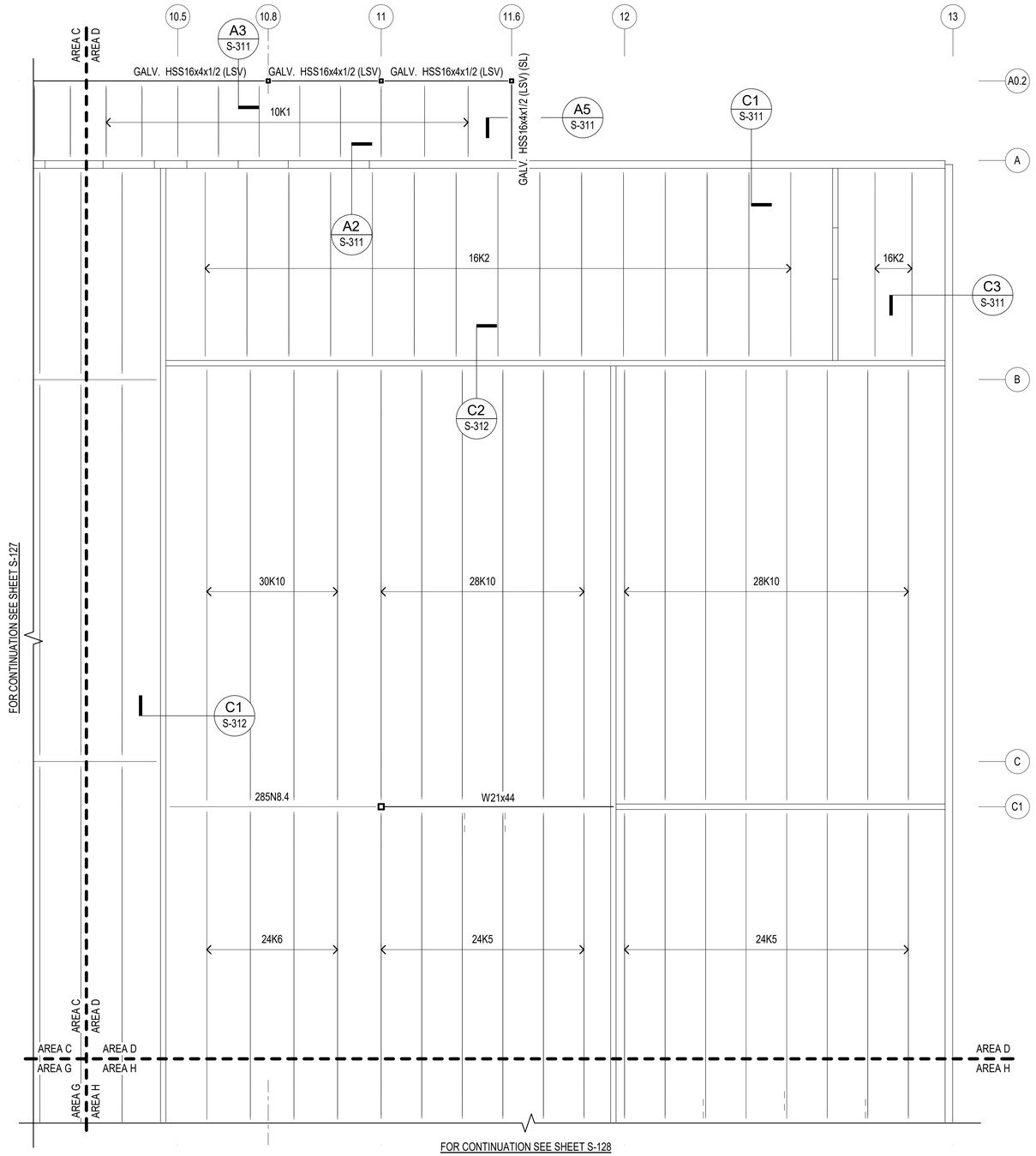

A1 ROOF FRAMING PLAN - AREA D
1/8" = 1'-0" (FOR PLAN NOTES AND LEGEND SEE SHEET S-100)

GENERAL FRAMING PLAN NOTES :

1. FOR THE GENERAL NOTES AND LEGEND SEE SHEET S-100.

FRAMING KEY PLAN NOTES :

1. FOR PLAN NOTES SEE SHEET S-100.

KEYPLAN

A	B	C	D
E	F	G	H

SPEIGHT·MARSHALL·FRANCIS
STRUCTURAL ENGINEERS
1228 PERIMETER PARKWAY, SUITE 201
VIRGINIA BEACH, VIRGINIA 23454
P: 757.427.1020
7814 CAROUSEL LANE SUITE 200
RICHMOND, VIRGINIA 23294
P: 804.464.4111
WWW.SMANDF.COM
SMAF Job No: 20241-A

SYM	DESCRIPTION	DATE	APPR

NAVFAC

PRELIMINARY
NOT FOR CONSTRUCTION
SEAL

RQ W.M. Jordan COMPANY
- A JOINT VENTURE -

Michael Baker
INTERNATIONAL
100 AIRSIDE DRIVE
MOON TOWNSHIP, PA 15108
A/E INFO

APPROVED

FOR COMMANDER NAVFAC

ACTIVITY
MARINE CORPS BASE
CAMP LEJEUNE

SATISFACTORY TO DATE DD/MM/YY

DES DPC | DRW NEB | CHK DWS

PM

BRANCH HEAD

DESIGN DIRECTOR

FIRE PROTECTION

DEPARTMENT OF THE NAVY
NAVAL FACILITIES ENGINEERING SYSTEMS COMMAND
NAVAL FACILITIES ENGINEERING SYSTEMS COMMAND ATLANTIC
ATLANTIC DESIGN AND CONSTRUCTION
NORFOLK, VA

MCB CAMP LEJEUNE
JACKSONVILLE, NC
LOGCOM CSP WAREHOUSE

ROOF FRAMING PLAN - AREA D

SCALE: AS NOTED
EPROJECT NO.: 1639600
CONSTR. CONTR. NO. N40085-20-C-0059
NAVFAC DRAWING NO. 14111104
SHEET 95 OF 447

S-124

P1527 FINAL SUBMISSION - 11/8/2021

PLOTTED: 11/12/2021 11:55:11 AM

FILE NAME: BIM 360://HF PACKAGE 3/P1527 LOG COM CSP-1639600-S.rvt

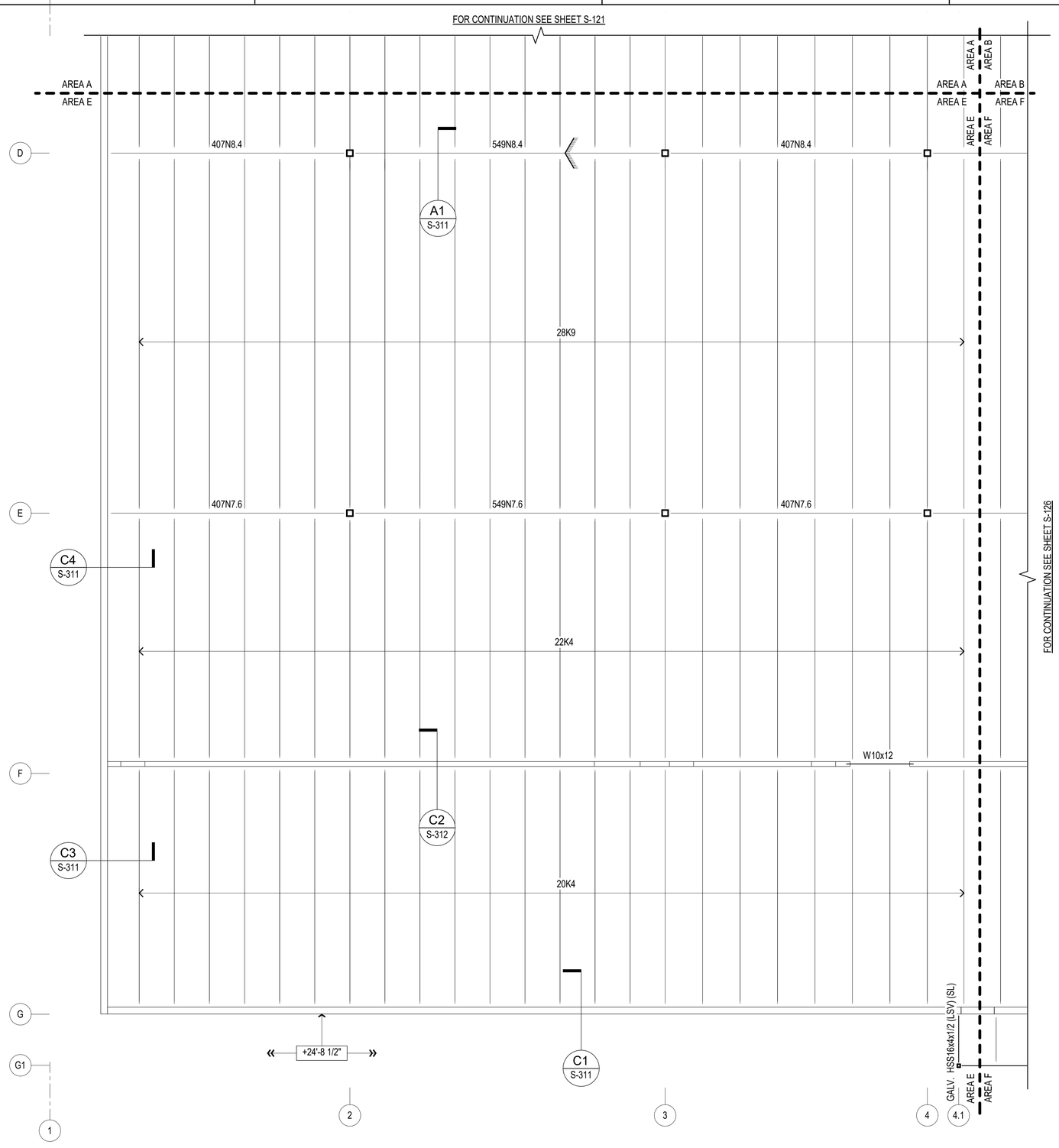

A1 ROOF FRAMING PLAN - AREA E
1/8" = 1'-0" (FOR PLAN NOTES AND LEGEND SEE SHEET S-100)

GENERAL FRAMING PLAN NOTES :

1. FOR THE GENERAL NOTES AND LEGEND SEE SHEET S-100.

FRAMING KEY PLAN NOTES :

1. FOR PLAN NOTES SEE SHEET S-100.

KEYPLAN

A	B	C	D
E	F	G	H

SPEIGHT·MARSHALL·FRANCIS
STRUCTURAL ENGINEERS
1228 PERIMETER PARKWAY, SUITE 201
VIRGINIA BEACH, VIRGINIA 23454
P: 757.427.1020
7814 CARDUSEL LANE SUITE 200
RICHMOND, VIRGINIA 23294
P: 804.464.4111
WWW.SMANDF.COM
SMAF Job No: 20-241-A

SYM	DESCRIPTION	DATE	APPR

NAVFAC

PRELIMINARY
NOT FOR CONSTRUCTION
SEAL

RQ W.M. Jordan COMPANY
- A JOINT VENTURE -

Michael Baker
INTERNATIONAL
100 AIRSIDE DRIVE
MOON TOWNSHIP, PA 15108
A/E INFO

APPROVED

FOR COMMANDER NAVFAC

ACTIVITY
MARINE CORPS BASE
CAMP LEJEUNE

SATISFACTORY TO DATE DD/MM/YY

DES DPC | DRW NEB | CHK DWS

PM

BRANCH HEAD

DESIGN DIRECTOR

FIRE PROTECTION

DEPARTMENT OF THE NAVY
NAVAL FACILITIES ENGINEERING SYSTEMS COMMAND
NAVAL FACILITIES ENGINEERING SYSTEMS COMMAND ATLANTIC
ATLANTIC DESIGN AND CONSTRUCTION
NORFOLK, VA
MCB CAMP LEJEUNE
JACKSONVILLE, NC

LOGCOM CSP WAREHOUSE

ROOF FRAMING PLAN - AREA E

SCALE: AS NOTED
EPROJECT NO.: 1639600
CONSTR. CONTR. NO. N40085-20-C-0059
NAVFAC DRAWING NO. 14111105
SHEET 96 OF 447

S-125

P1527 FINAL SUBMISSION - 11/8/2021

PLOTTED: 11/12/2021 11:55:12 AM

FILE NAME: BIM 360://HF PACKAGE 3/P1527 LOG COM CSP-1639600-S.rvt

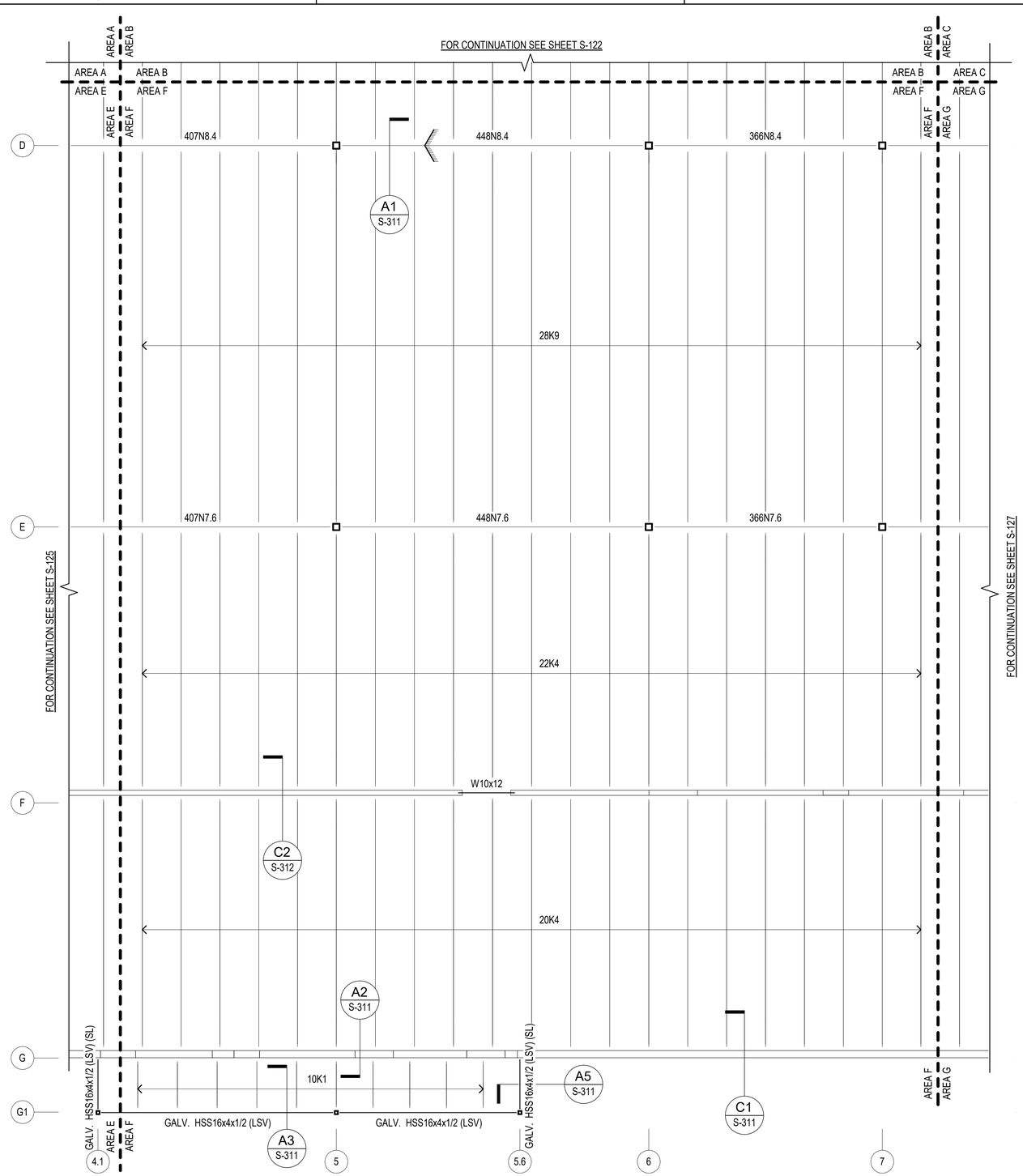

A1 ROOF FRAMING PLAN - AREA F
1/8" = 1'-0" (FOR PLAN NOTES AND LEGEND SEE SHEET S-100)

GENERAL FRAMING PLAN NOTES :

1. FOR THE GENERAL NOTES AND LEGEND SEE SHEET S-100.

FRAMING KEY PLAN NOTES :

1. FOR PLAN NOTES SEE SHEET S-100.

KEYPLAN

A	B	C	D
E	F	G	H

SPEIGHT·MARSHALL·FRANCIS
STRUCTURAL ENGINEERS
1228 PERIMETER PARKWAY, SUITE 201
VIRGINIA BEACH, VIRGINIA 23454
P: 757.427.1020
7814 CARDWELL LANE SUITE 200
RICHMOND, VIRGINIA 23294
P: 804.464.4111
WWW.SMANDF.COM
SMAF Job No: 20241-A

N

SYM	DESCRIPTION	DATE	APPR

NAVFAC

PRELIMINARY
NOT FOR CONSTRUCTION
SEAL

RQ W.M. Jordan COMPANY
- A JOINT VENTURE -

Michael Baker
INTERNATIONAL
100 AIRSIDE DRIVE
MOON TOWNSHIP, PA 15108
A/E INFO

APPROVED

FOR COMMANDER NAVFAC

ACTIVITY
MARINE CORPS BASE
CAMP LEJEUNE

SATISFACTORY TO DATE DD/MM/YY

DES DPC | DRW NEB | CHK DWS

PM

BRANCH HEAD

DESIGN DIRECTOR

FIRE PROTECTION

DEPARTMENT OF THE NAVY
NAVAL FACILITIES ENGINEERING SYSTEMS COMMAND
NAVAL FACILITIES ENGINEERING SYSTEMS COMMAND ATLANTIC
ATLANTIC DESIGN AND CONSTRUCTION
NORFOLK, VA

MCB CAMP LEJEUNE
JACKSONVILLE, NC
LOGCOM CSP WAREHOUSE

ROOF FRAMING PLAN - AREA F

SCALE: AS NOTED
EPROJECT NO.: 1639600
CONSTR. CONTR. NO. N40085-20-C-0059
NAVFAC DRAWING NO. 14111106
SHEET 97 OF 447

S-126

P1527 FINAL SUBMISSION - 11/8/2021

PLOTTED: 11/12/2021 11:55:13 AM

FILE NAME: BIM 360://HF PACKAGE 3/P1527 LOG COM CSP-1639600-S.rvt

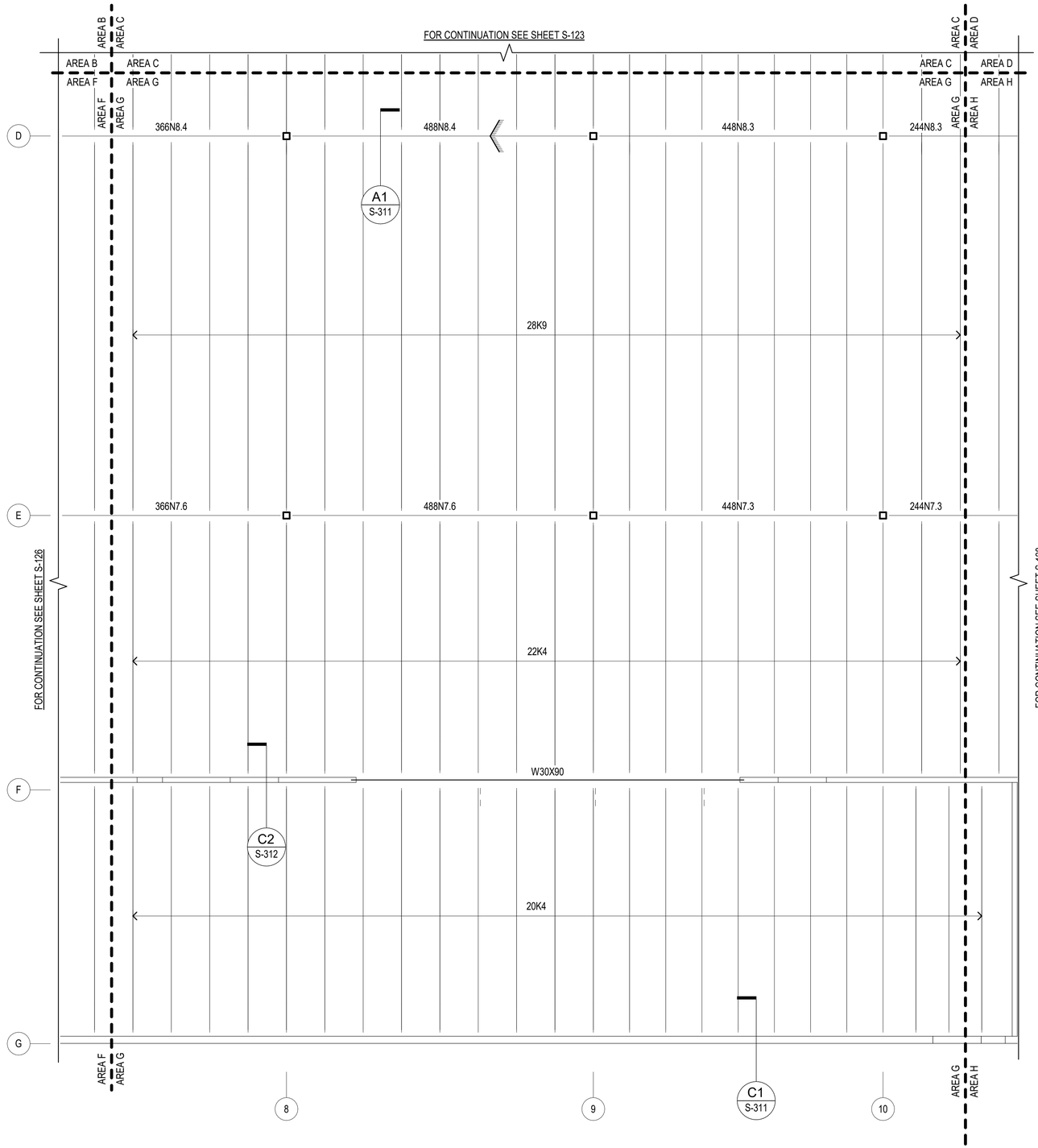

A1 ROOF FRAMING PLAN - AREA G

1/8" = 1'-0" (FOR PLAN NOTES AND LEGEND SEE SHEET S-100)

GENERAL FRAMING PLAN NOTES :

1. FOR THE GENERAL NOTES AND LEGEND SEE SHEET S-100.

FRAMING KEY PLAN NOTES :

1. FOR PLAN NOTES SEE SHEET S-100.

KEYPLAN

A	B	C	D
E	F	G	H

SPEIGHT·MARSHALL·FRANCIS
STRUCTURAL ENGINEERS
1328 PERIMETER PARKWAY, SUITE 201
VIRGINIA BEACH, VIRGINIA 23454
P: 757.427.1920
7814 CARONDELET LANE, SUITE 205
RICHMOND, VIRGINIA 23294
P: 804.464.4111
WWW.SMANDF.COM

NO.	DESCRIPTION	DATE	APPR

NAVFAC

PRELIMINARY NOT FOR CONSTRUCTION

SEAL

IRQ W.M. Jordan COMPANY – A JOINT VENTURE –

Michael Baker INTERNATIONAL

100 AIRSIDE DRIVE
MOON TOWNSHIP, PA 15108 A/E INFO

APPROVED

FOR COMMANDER NAVFAC

ACTIVITY
MARINE CORPS BASE
CAMP LEJEUNE

SATISFACTORY TO DATE DD/MM/YY

DES DPC | DRW NEB | CHK DWS

PM

BRANCH HEAD

DESIGN DIRECTOR

FIRE PROTECTION

DEPARTMENT OF THE NAVY
NAVAL FACILITIES ENGINEERING SYSTEMS COMMAND
ATLANTIC DESIGN AND CONSTRUCTION

NAVAL FACILITIES ENGINEERING SYSTEMS COMMAND ATLANTIC
NORFOLK, VA

MCB CAMP LEJEUNE
JACKSONVILLE, NC

LOGCOM CSP WAREHOUSE

ROOF FRAMING PLAN - AREA G

SCALE: AS NOTED
EPROJECT NO.: 1639600
CONSTR. CONTR. NO. N40085-20-C-0059
NAVFAC DRAWING NO. 14111107
SHEET 98 OF 447

S-127

P1527 FINAL SUBMISSION - 11/8/2021

PLOTTED: 11/12/2021 11:55:14 AM

FILE NAME: BIM 360://HF PACKAGE 3/P1527 LOG COM CSP-1639600-S.rvt

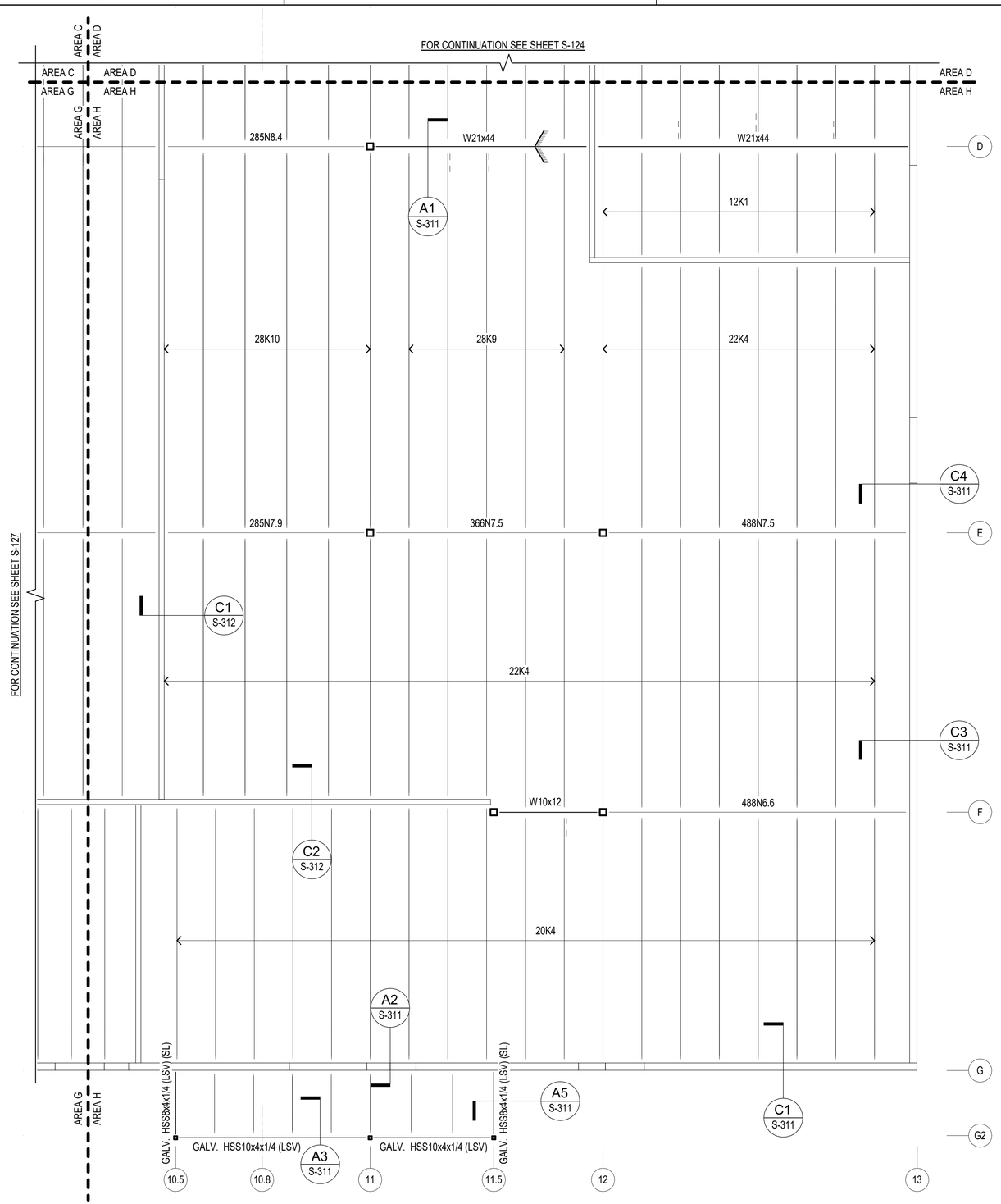

A1 ROOF FRAMING PLAN - AREA H
1/8" = 1'-0"
(FOR PLAN NOTES AND LEGEND SEE SHEET S-100)

GENERAL FRAMING PLAN NOTES :

1. FOR THE GENERAL NOTES AND LEGEND SEE SHEET S-100.

FRAMING KEY PLAN NOTES :

1. FOR PLAN NOTES SEE SHEET S-100.

KEYPLAN

A	B	C	D
E	F	G	H

SPEIGHT·MARSHALL·FRANCIS
STRUCTURAL ENGINEERS
1328 PERIMETER PARKWAY, SUITE 210
VIRGINIA BEACH, VIRGINIA 23454
P: 757.427.1500
7814 CARONDELET LANE, SUITE 205
RICHMOND, VIRGINIA 23294
P: 804.464.4111
WWW.SMANDF.COM

APPR	DATE	DESCRIPTION	S/M

NAVFAC

PRELIMINARY NOT FOR CONSTRUCTION
SEAL

IRQ W.M. Jordan COMPANY – A JOINT VENTURE –

Michael Baker INTERNATIONAL
100 AIRSIDE DRIVE
MOON TOWNSHIP, PA 15108
A/E INFO

APPROVED
FOR COMMANDER NAVFAC

ACTIVITY
MARINE CORPS BASE
CAMP LEJEUNE

SATISFACTORY TO DATE DD/MM/YY
DES DPC | DRW NEB | CHK DWS
PM
BRANCH HEAD
DESIGN DIRECTOR
FIRE PROTECTION

DEPARTMENT OF THE NAVY
NAVAL FACILITIES ENGINEERING SYSTEMS COMMAND
ATLANTIC DESIGN AND CONSTRUCTION
NAVAL FACILITIES ENGINEERING SYSTEMS COMMAND ATLANTIC
NORFOLK, VA
MCB CAMP LEJEUNE
JACKSONVILLE, NC
LOGCOM CSP WAREHOUSE
ROOF FRAMING PLAN - AREA H

SCALE: AS NOTED
EPROJECT NO.: 1639600
CONSTR. CONTR. NO. N40085-20-C-0059
NAVFAC DRAWING NO. 14111108
SHEET 99 OF 447

S-128

P1527 FINAL SUBMISSION - 11/8/2021

N

PLOTTED: 11/12/2021 11:55:15 AM
FILE NAME: BIM 360://HF PACKAGE 3/P1527 LOG COM CSP-1639600-S.rvt

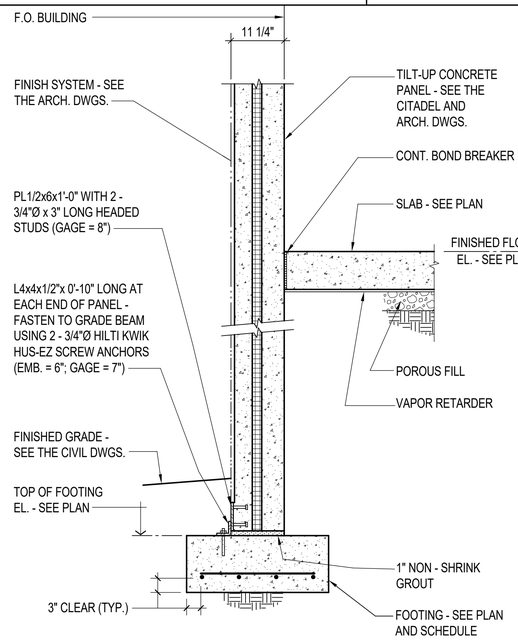

C1

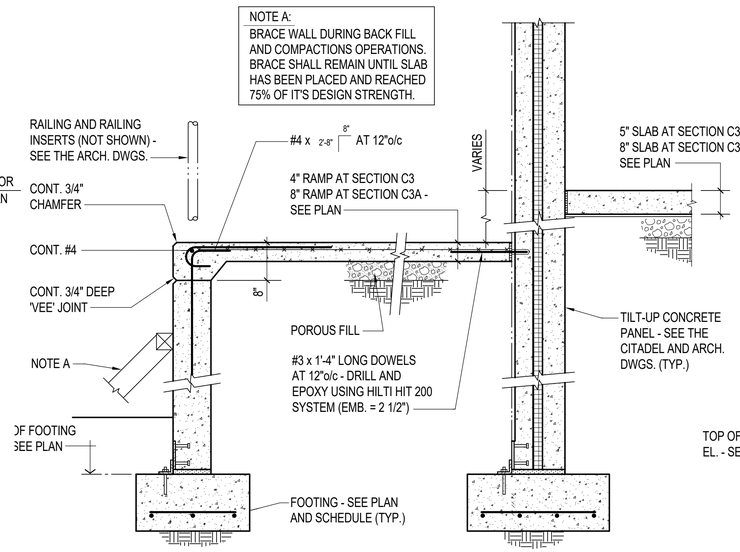

FOR DETAILS NOT NOTED SEE SECTION C1/S-301

C3 C3A

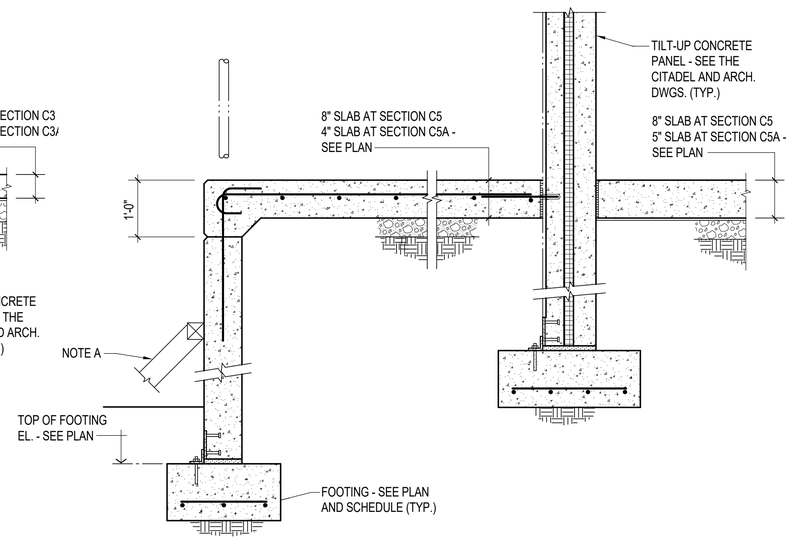

FOR DETAILS NOT NOTED SEE SECTION C3/S-301

C5 C5A

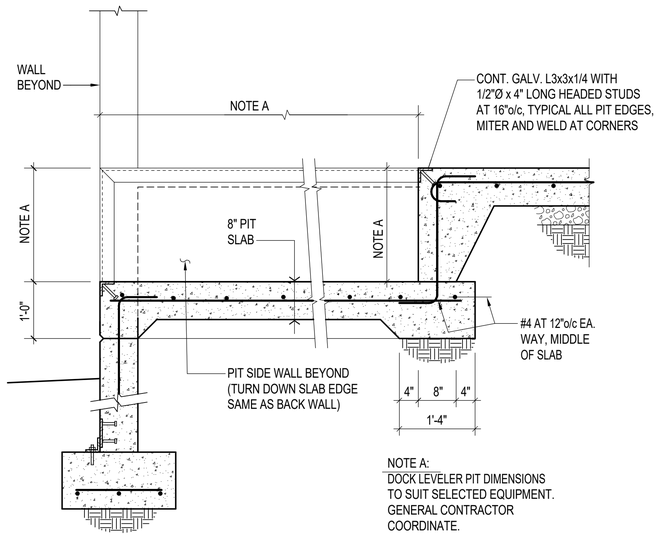

FOR DETAILS NOT NOTED SEE SECTION C3/S-301

A1

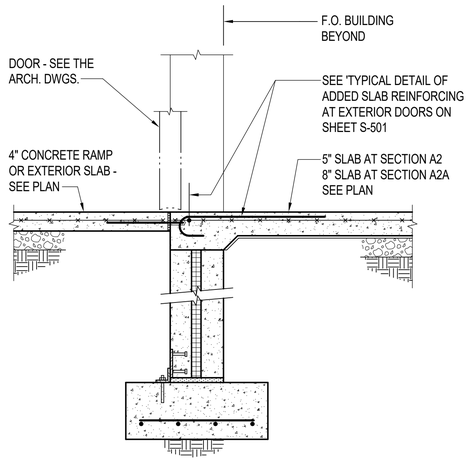

FOR DETAILS NOT NOTED SEE SECTION A1/S-301

A2 A2A

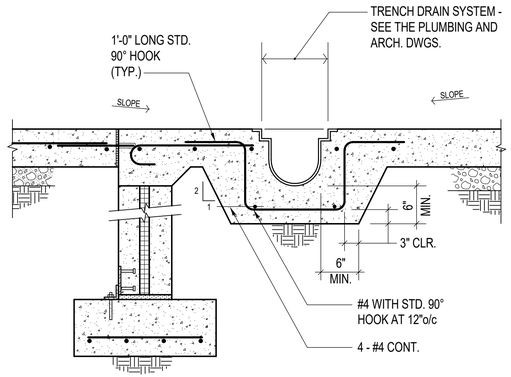

FOR DETAILS NOT NOTED SEE SECTION C3/S-301

A5

SPEIGHT·MARSHALL·FRANCIS
STRUCTURAL ENGINEERS
1226 PERIMETER PARKWAY, SUITE 200
VIRGINIA BEACH, VIRGINIA 23454
P: 757.427.1020
7814 CARONDELET AVE, SUITE 205
RICHMOND, VIRGINIA 23294
P: 804.464.4111
WWW.SMAINC.COM

APPR	DATE	DESCRIPTION	SYM

NAVFAC

PRELIMINARY NOT FOR CONSTRUCTION

SEAL

W.M. Jordan COMPANY – A JOINT VENTURE –

Michael Baker INTERNATIONAL

100 AIRSIDE DRIVE
MOON TOWNSHIP, PA 15108 A/E INFO

APPROVED

FOR COMMANDER NAVFAC

ACTIVITY
MARINE CORPS BASE CAMP LEJEUNE

SATISFACTORY TO DATE DD/MM/YY

DES DPC	DRW NEB	CHK DWS

PM

BRANCH HEAD

DESIGN DIRECTOR

FIRE PROTECTION

DEPARTMENT OF THE NAVY
NAVAL FACILITIES ENGINEERING SYSTEMS COMMAND
ATLANTIC DESIGN AND CONSTRUCTION
MCB CAMP LEJEUNE

NAVAL FACILITIES ENGINEERING SYSTEMS COMMAND ATLANTIC
NORFOLK, VA
JACKSONVILLE, NC
LOGCOM CSP WAREHOUSE

FOUNDATION SECTIONS

SCALE:	AS NOTED
EPROJECT NO.:	1639600
CONSTR. CONTR. NO.	N40085-20-C-0059
NAVFAC DRAWING NO.	14111109
SHEET	100 OF 447

S-301

P1527 FINAL SUBMISSION - 11/8/2021

PLOTTED: 11/12/2021 11:55:16 AM

FILE NAME: BIM 360://HF PACKAGE 3/P1527 LOG COM CSP-1639600-S.rvt

NOTE A:
BRACE WALL DURING BACK FILL AND COMPACTIONS OPERATIONS. BRACE SHALL REMAIN UNTIL SLAB HAS BEEN PLACED AND REACHED 75% OF IT'S DESIGN STRENGTH.

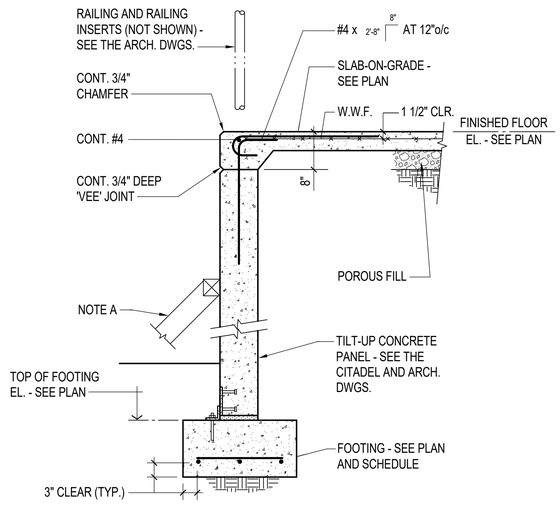

FOR DETAILS NOT NOTED SEE SECTION C1/S-301

C1

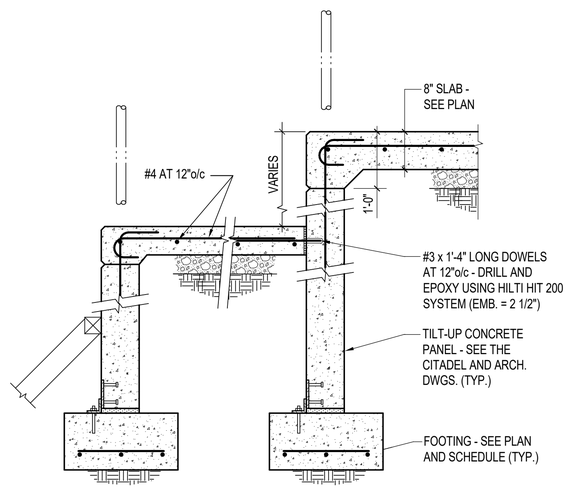

FOR DETAILS NOT NOTED SEE SECTION C1/S-301

C2

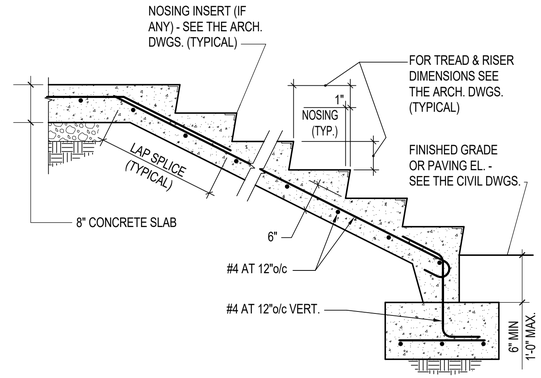

FOR DETAILS NOT NOTED SEE SECTION C1/S-302

C4

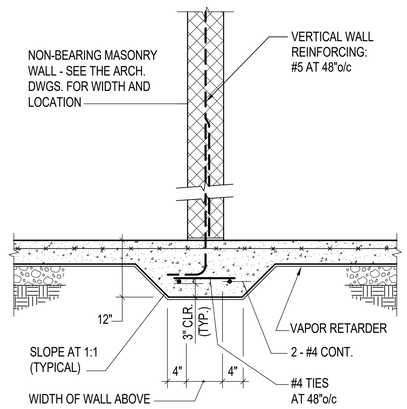

FOR DETAILS NOT NOTED SEE SECTION C1/S-302

A1

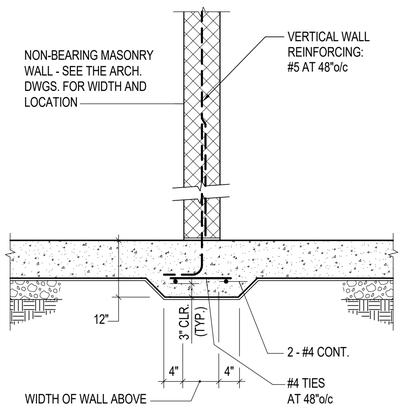

FOR DETAILS NOT NOTED SEE SECTION A1/S-302

A2

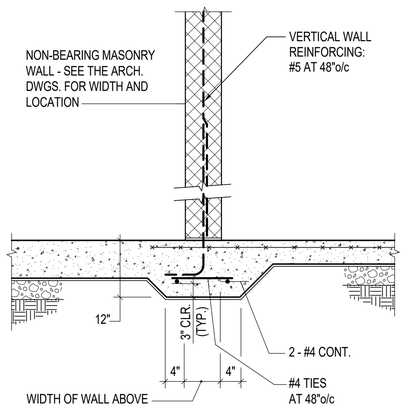

FOR DETAILS NOT NOTED SEE SECTION A1/S-302

A4

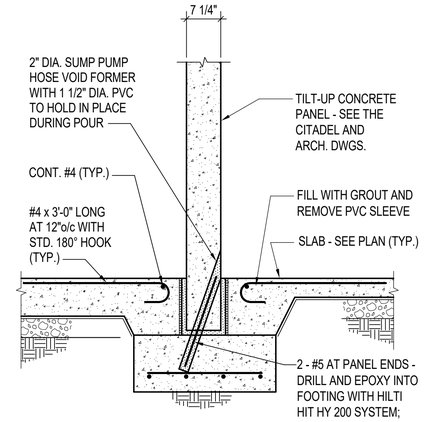

FOR DETAILS NOT NOTED SEE SECTION C1/S-302

A5

APPR	
DATE	
DESCRIPTION	
SYM	

NAVFAC

PRELIMINARY NOT FOR CONSTRUCTION

SEAL

RQ W.M. Jordan COMPANY – A JOINT VENTURE –

Michael Baker INTERNATIONAL

100 AIRSIDE DRIVE
MOON TOWNSHIP, PA 15108
A/E INFO

APPROVED

FOR COMMANDER NAVFAC

ACTIVITY
MARINE CORPS BASE CAMP LEJEUNE

SATISFACTORY TO DATE DD/MM/YY

DES DPC | DRW NEB | CHK DWS

PM

BRANCH HEAD

DESIGN DIRECTOR

FIRE PROTECTION

DEPARTMENT OF THE NAVY
NAVAL FACILITIES ENGINEERING SYSTEMS COMMAND
ATLANTIC DESIGN AND CONSTRUCTION
MCB CAMP LEJEUNE

NAVAL FACILITIES ENGINEERING SYSTEMS COMMAND ATLANTIC
NORFOLK, VA
JACKSONVILLE, NC
LOGCOM CSP WAREHOUSE

FOUNDATION SECTIONS

SCALE: AS NOTED
EPROJECT NO.: 1639600
CONSTR. CONTR. NO. N40085-20-C-0059
NAVFAC DRAWING NO. 14111110
SHEET 101 OF 447

S-302

P1527 FINAL SUBMISSION - 11/8/2021

PLOTTED: 11/12/2021 11:55:17 AM

FILE NAME: BIM 360://HF PACKAGE 3/P1527 LOG COM CSP-1639600-S.rvt

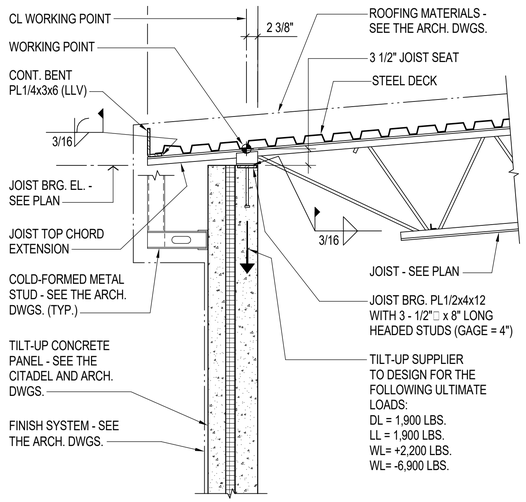

'AT JOISTS'

C1

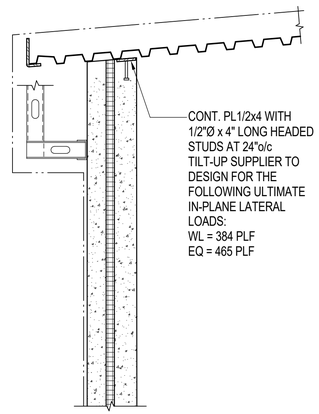

'BETWEEN JOISTS'

FOR DETAILS NOT NOTED SEE 'AT JOIST'

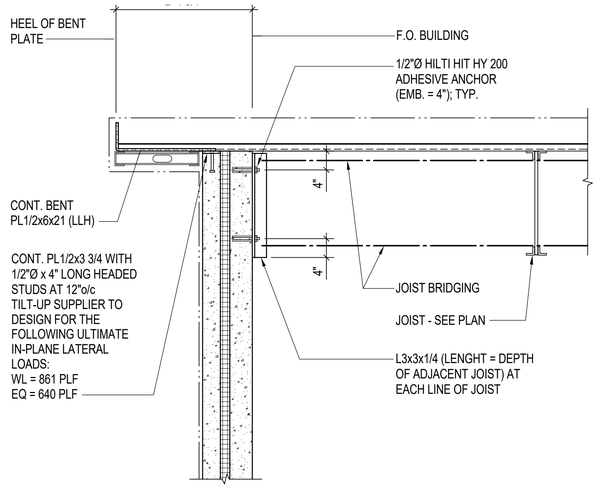

C3

FOR DETAILS NOT NOTED SEE SECTION C1/S-311

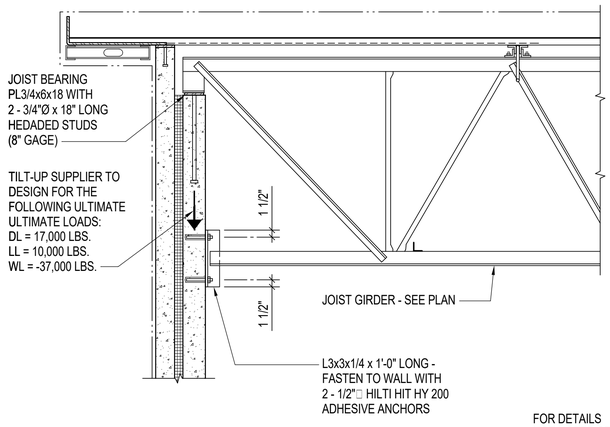

C4

FOR DETAILS NOT NOTED SEE SECTION C3/S-311

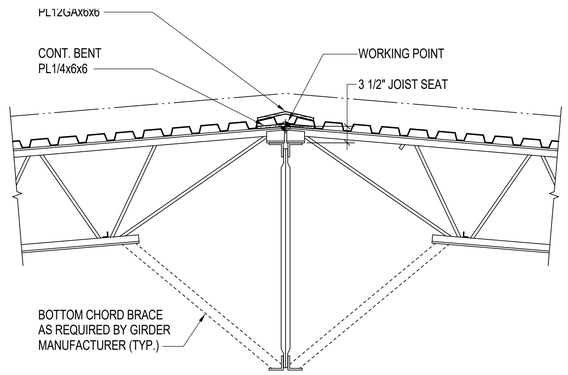

A1

FOR DETAILS NOT NOTED SEE SECTION C4/S-311

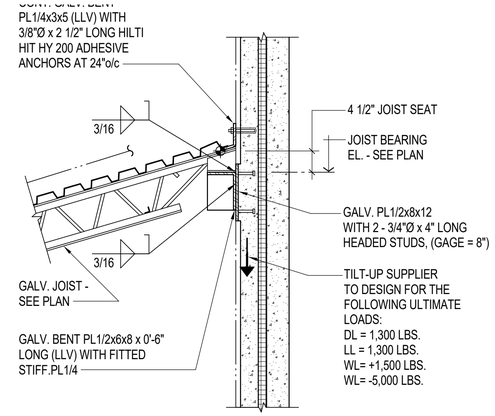

A2

FOR DETAILS NOT NOTED SEE SECTION C1/S-311

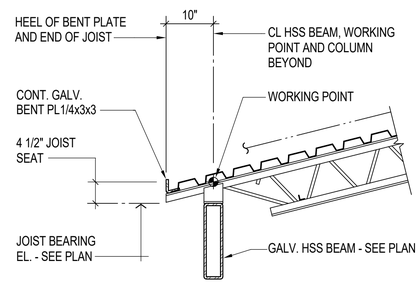

A3

FOR DETAILS NOT NOTED SEE SECTION A2/S-311

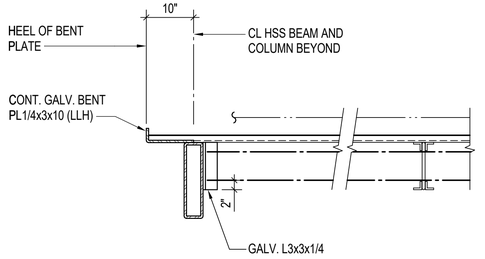

A5

FOR DETAILS NOT NOTED SEE SECTION A3/S-311

PLOTTED: 11/12/2021 11:55:18 AM

FILE NAME: BIM 360://HF PACKAGE 3/P1527 LOG COM CSP-1639600-S.rvt

SPEIGHT·MARSHALL·FRANCIS
STRUCTURAL ENGINEERS
1228 PERIMETER Parkway, SUITE 201
VIRGINIA BEACH, VIRGINIA 23454
P: 757.427.1020
7814 CARONDOLET LANE, SUITE 205
RICHMOND, VIRGINIA 23294
P: 804.464.4111
WWW.SMANDF.COM

APPR | DATE | DESCRIPTION | SYM

NAVFAC

PRELIMINARY NOT FOR CONSTRUCTION

SEAL

JRQ W.M. Jordan COMPANY – A JOINT VENTURE –

Michael Baker INTERNATIONAL
100 AIRSIDE DRIVE
MOON TOWNSHIP, PA 15108
A/E INFO

APPROVED

FOR COMMANDER NAVFAC

ACTIVITY
MARINE CORPS BASE CAMP LEJEUNE

SATISFACTORY TO DATE DD/MM/YY

DES Designer DRW Author CHK Checker

PM

BRANCH HEAD

DESIGN DIRECTOR

FIRE PROTECTION

DEPARTMENT OF THE NAVY
NAVAL FACILITIES ENGINEERING SYSTEMS COMMAND
ATLANTIC DESIGN AND CONSTRUCTION
NAVAL FACILITIES ENGINEERING SYSTEMS COMMAND ATLANTIC
NORFOLK, VA
MCB CAMP LEJEUNE
JACKSONVILLE, NC
LOGCOM CSP WAREHOUSE
FRAMING SECTIONS

SCALE: AS NOTED
EPROJECT NO.: 1639600
CONSTR. CONTR. NO. N40085-20-C-0059
NAVFAC DRAWING NO. 14111111
SHEET 102 OF 447

S-311

P1527 FINAL SUBMISSION - 11/8/2021

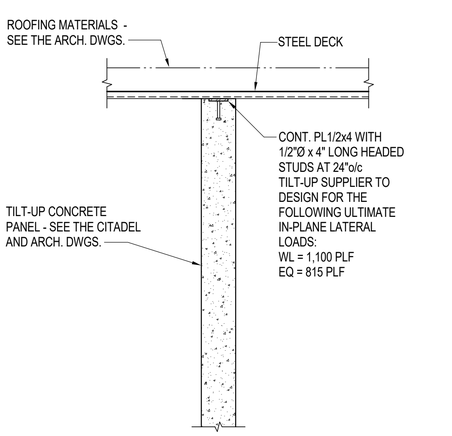

C1

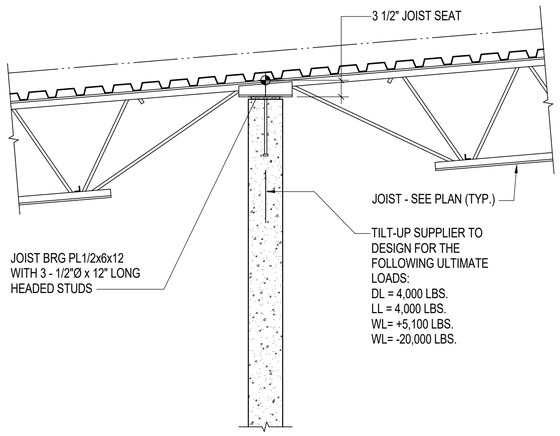

'AT JOISTS'

C2

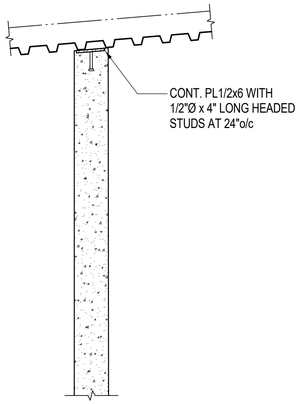

'BETWEEN JOISTS'

FOR DETAILS
NOT NOTED SE
SECTION C1/S-

NO.	DESCRIPTION	DATE	APPR

NAVFAC

PRELIMINARY
NOT FOR CONSTRUCTION

SEAL

IRQ Wm. Jordan COMPANY – A JOINT VENTURE –

Michael Baker
INTERNATIONAL

100 AIRSIDE DRIVE
MOON TOWNSHIP, PA 15108 A/E INFO

APPROVED

FOR COMMANDER NAVFAC

ACTIVITY
MARINE CORPS BASE
CAMP LEJEUNE

SATISFACTORY TO DATE DD/MM/YY

DES Designer DRW Author CHK Checker

PM

BRANCH HEAD

DESIGN DIRECTOR

FIRE PROTECTION

DEPARTMENT OF THE NAVY
NAVAL FACILITIES ENGINEERING SYSTEMS COMMAND
ATLANTIC DESIGN AND CONSTRUCTION
MCB CAMP LEJEUNE

NAVAL FACILITIES ENGINEERING SYSTEMS COMMAND ATLANTIC
NORFOLK, VA

JACKSONVILLE, NC

LOGCOM CSP WAREHOUSE

FRAMING SECTIONS

SCALE: AS NOTED

EPROJECT NO.: 1639600

CONSTR. CONTR. NO.
N40085-20-C-0059

NAVFAC DRAWING NO.
14111112

SHEET 103 OF 447

S-312

SPEIGHT·MARSHALL·FRANCIS
STRUCTURAL ENGINEERS
1228 PERIMETER Parkway, SUITE 201
VIRGINIA BEACH, VIRGINIA 23454
P: 757.427.1020
7814 CARONDOLET, LANE, SUITE 200
RICHMOND, VIRGINIA 23294
P: 804.464.4111
WWW.SMANDF.COM

P1527 FINAL SUBMISSION - 11/8/2021

FILE NAME: BIM 360://HF PACKAGE 3/P1527 LOG COM CSP-1639600-S.rvt PLOTTED: 11/12/2021 11:55:19 AM

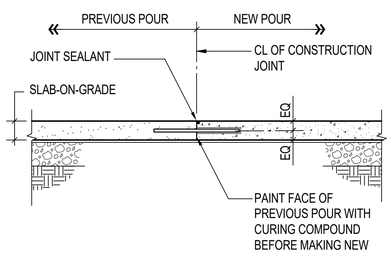

DOWEL CONSTRUCTION JOINT (DCJ)

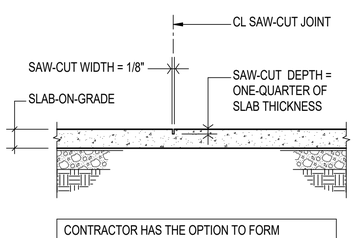

CONTROL JOINT (CJ)

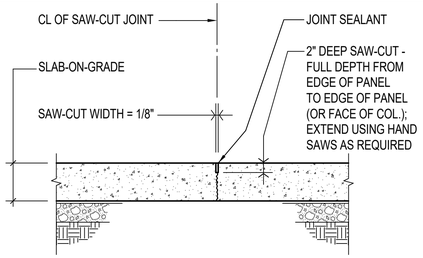

CONTROL JOINT (CJ)

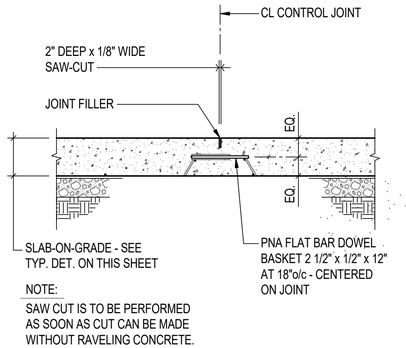

DOWEL CONSTRUCTION JOINT (DCJ)

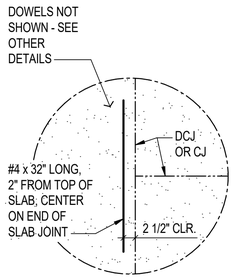

PLAN AT DISCONTINUOUS SLAB JOINT

C1 TYPICAL 4" AND 5" SLAB-ON-GRADE DETAILS

NOT TO SCALE SOG_fiber-jts (use only with fiber reinforced slabs)

C3 TYPICAL 8" SLAB-ON-GRADE DETAILS

NOT TO SCALE

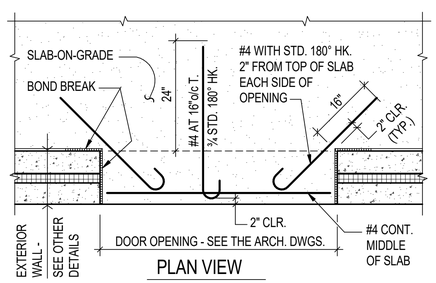

TYPICAL DETAIL OF ADDED SLAB REINFORCING AT EXTERIOR DOORS

B1 TYPICAL DETAIL OF ADDED SLAB REINFORCING AT EXTERIOR DOORS

NOT TO SCALE

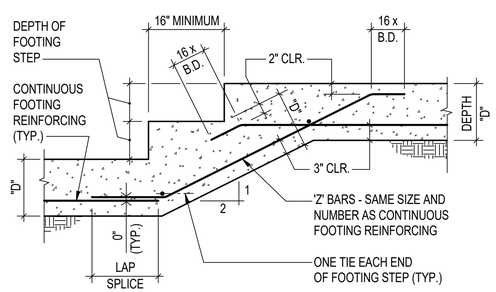

B2 TYPICAL STEPPED FOOTING DETAIL

NOT TO SCALE FTGSTP1L

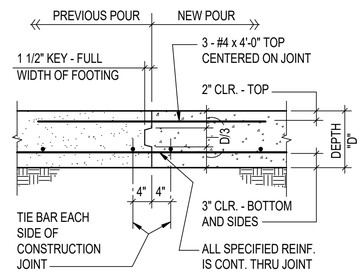

TYPICAL CONCRETE FOOTING CONSTRUCTION JOINT DETAIL

B3 TYPICAL CONCRETE FOOTING CONSTRUCTION JOINT DETAIL

NOT TO SCALE

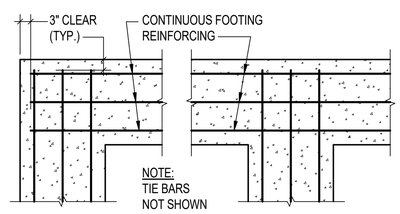

TYPICAL DETAIL AT FOOTING CORNERS AND INTERSECTIONS

B4 TYPICAL DETAIL AT FOOTING CORNERS AND INTERSECTIONS

NOT TO SCALE

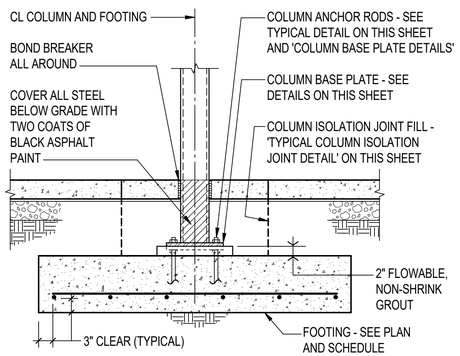

TYPICAL COLUMN AND FOOTING DETAIL

A1 TYPICAL COLUMN AND FOOTING DETAIL

NOT TO SCALE col_bas4

PLATE WASHER TABLE	
ANCHOR ROD DIAMETER	DIMENSIONS
3/4"	1/4" x 2" SQ.

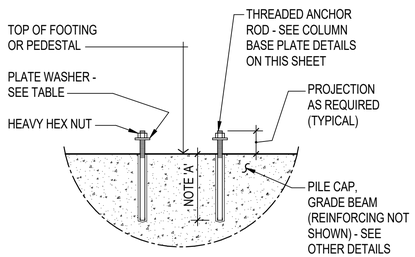

COLUMN ANCHOR ROD DETAILS NOTE:

A. EMBEDMENT - SEE COLUMN BASE PLATE DETAILS

TYPICAL COLUMN ANCHOR ROD DETAIL

A2 TYPICAL COLUMN ANCHOR ROD DETAIL

NOT TO SCALE

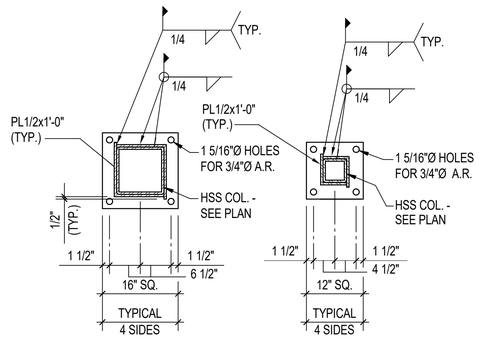

TYPE CBP-1

PL1x16x16 WITH 4 - 3/4" DIA. HILTI HIT HY 200 ADHESIVE ANCHORS (EMB.= 9)

TYPE CBP-2

PL1x12x12 WITH 4 - 3/4" DIA. HILTI HIT HY 200 ADHESIVE ANCHORS (EMB.= 9)

COLUMN BASE PLATE DETAIL

A3 COLUMN BASE PLATE DETAIL

NOT TO SCALE

SPEIGHT·MARSHALL·FRANCIS
STRUCTURAL ENGINEERS
1224 PERIMETER PARKWAY, SUITE 251
VIRGINIA BEACH, VIRGINIA 23454
P: 757.427.1705
7814 CARONDELET, LANE SUITE 200
RICHMOND, VIRGINIA 23294
P: 804.464.4111
WWW.SMANPC.COM

APPR | DATE | DESCRIPTION | STM

NAVFAC

PRELIMINARY NOT FOR CONSTRUCTION

SEAL

IRQ W.M. Jordan COMPANY – A JOINT VENTURE –

Michael Baker INTERNATIONAL
100 AIRSIDE DRIVE
MOON TOWNSHIP, PA 15108
A/E INFO

APPROVED

FOR COMMANDER NAVFAC

ACTIVITY
MARINE CORPS BASE CAMP LEJEUNE

SATISFACTORY TO DATE DD/MM/YY

DES DPC | DRW NEB | CHK DWS

PM

BRANCH HEAD

DESIGN DIRECTOR

FIRE PROTECTION

DEPARTMENT OF THE NAVY
NAVAL FACILITIES ENGINEERING SYSTEMS COMMAND ATLANTIC
ATLANTIC DESIGN AND CONSTRUCTION
NAVAL FACILITIES ENGINEERING SYSTEMS COMMAND
NORFOLK, VA
JACKSONVILLE, NC
MCB CAMP LEJEUNE
LOGCOM CSP WAREHOUSE
TYPICAL DETAILS

SCALE: AS NOTED
EPROJECT NO.: 1639600
CONSTR. CONTR. NO. N40085-20-C-0059
NAVFAC DRAWING NO. 14111113
SHEET 104 OF 447

S-501

P1527 FINAL SUBMISSION - 11/8/2021

PLOTTED: 11/12/2021 11:55:20 AM

FILE NAME: BIM-360/JHF PACKAGE 3/P1527 LOG COM CSP-1639600-S.rvt

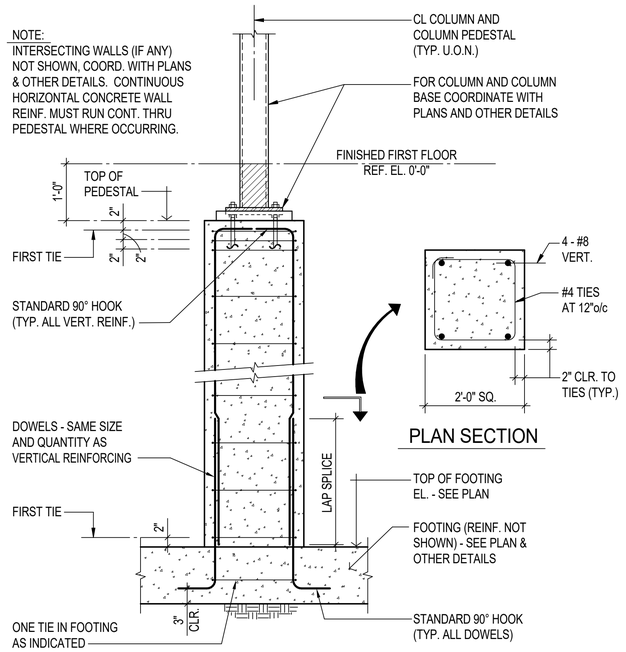

C1 TYPICAL COLUMN PEDESTAL DETAIL

NOT TO SCALE COLPEDF1

BOND BEAM LINTEL SCHEDULE				
CLEAR SPAN	DEPTH "D"	REINFORCING		
		6" WIDE	8" AND 10" WIDE	12" WIDE
0 TO 3'-4"	8"	1 - #4 BOTTOM	2 - #4 BOTTOM	2 - #5 BOTTOM
3'-5" TO 5'-4"	8"	1 - #5 BOTTOM	2 - #5 BOTTOM	2 - #5 BOTTOM
5'-5" TO 6'-8"	16"	1 - #5 BOTTOM	2 - #5 BOTTOM	2 - #5 BOTTOM
6'-9" TO 8'-0"	16"	1 - #5 TOP AND BOTT.	2 - #5 TOP AND BOTT.	2 - #5 TOP AND BOTT.

BOND BEAM LINTEL SCHEDULE NOTES:

1. PROVIDE 24" BEARING EACH END OF LINTEL.
2. FOR EXACT SIZE AND LOCATION OF ALL WALL OPENINGS COORDINATE WITH THE ARCHITECTURAL, MECHANICAL, PLUMBING AND ELECTRICAL DRAWINGS.
3. SEE THE ARCHITECTURAL DRAWINGS FOR WIDTH OF WALL AND REQUIRED WIDTH OF LINTEL, IF DIFFERENT FROM WIDTH OF WALL.
4. BOND BEAM LINTEL SCHEDULE APPLIES ONLY TO LINTELS NOT OTHERWISE SHOWN ON THE DRAWINGS.

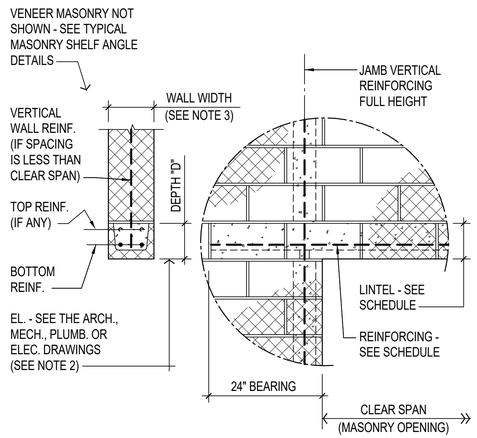

C2 TYPICAL BOND BEAM LINTEL DETAILS

NOT TO SCALE CMU_BBL2 - use for NAVY jobs, 24" bearing

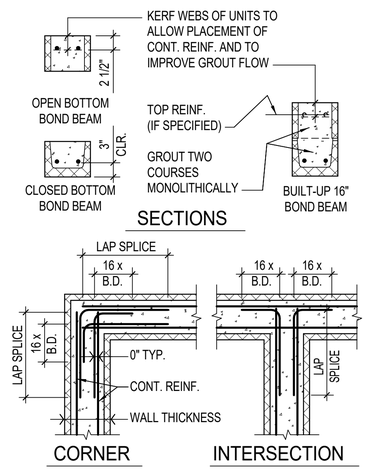

C5 TYPICAL BOND BEAM REINFORCING DETAILS

NOT TO SCALE CMUBBTP1

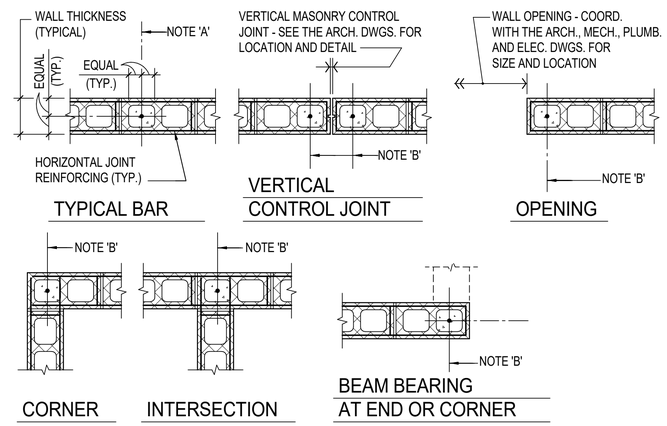

CONCRETE MASONRY VERTICAL WALL REINFORCING DETAIL NOTES:

A. VERTICAL WALL REINFORCING BAR AS SPECIFIED. SEE OTHER DETAILS AND SECTIONS FOR SIZE AND SPACING.

B. VERTICAL WALL REINFORCING BAR AS SPECIFIED (#4 BAR WHERE NOT OTHERWISE SPECIFIED).

A1 TYPICAL CONCRETE MASONRY VERTICAL WALL REINFORCING DETAILS

NOT TO SCALE CMUVWRL1

NO.	DESCRIPTION	DATE	APPR
1	95%	11/8/2021	

NAVFAC

PRELIMINARY NOT FOR CONSTRUCTION

SEAL

WNJ Jordan COMPANY – A JOINT VENTURE –

Michael Baker INTERNATIONAL

100 AIRSIDE DRIVE MOON TOWNSHIP, PA 15108 A/E INFO

APPROVED

FOR COMMANDER NAVFAC

ACTIVITY: MARINE CORPS BASE CAMP LEJEUNE

SATISFACTORY TO DATE DD/MM/YY

DES Designer DRW Author CHK Checker

PM

BRANCH HEAD

DESIGN DIRECTOR

FIRE PROTECTION

DEPARTMENT OF THE NAVY
NAVAL FACILITIES ENGINEERING SYSTEMS COMMAND
ATLANTIC DESIGN AND CONSTRUCTION
MCB CAMP LEJEUNE

NAVAL FACILITIES ENGINEERING SYSTEMS COMMAND ATLANTIC NORFOLK, VA
JACKSONVILLE, NC

LOGCOM CSP WAREHOUSE

TYPICAL DETAILS

SCALE: AS NOTED

EPROJECT NO.: 1639600

CONSTR. CONTR. NO. N40085-20-C-0059

NAVFAC DRAWING NO. 14111114

SHEET 105 OF 447

S-502

P1527 FINAL SUBMISSION - 11/8/2021

PLOTTED: 11/12/2021 11:55:22 AM

FILE NAME: BIM 360://HF PACKAGE 3/P1527 LOG COM CSP-1639600-S.rvt

NOTE: OFFSET JOISTS TO PROVIDE MINIMUM REQUIRED BEARING WHEREVER POSSIBLE. BUTT JOISTS END TO END OVER BEAM CL AND PROVIDE SPECIAL JOIST END PER S.J.I. REQUIREMENTS WHERE JOISTS MUST BE ALIGNED.

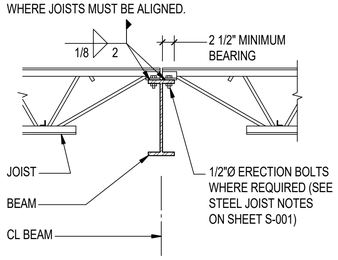

C1 TYPICAL JOIST TO BEAM CONNECTION DETAIL

NOT TO SCALE

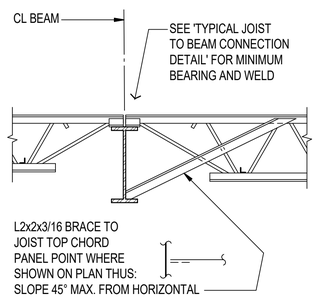

C2 TYPICAL BEAM BOTTOM FLANGE BRACE DETAIL

NOT TO SCALE

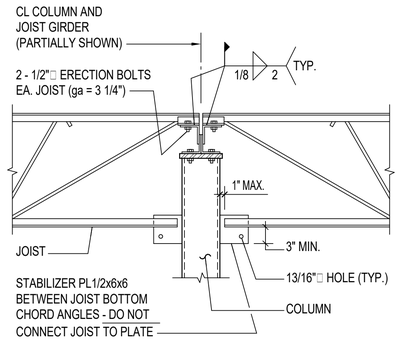

C3 TYPICAL 'K' SERIES JOIST TO JOIST GIRDER AND COLUMN CONNECTION DETAIL

NOT TO SCALE JSTRCOL6

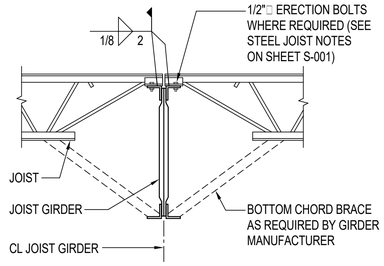

C4 TYPICAL JOIST TO JOIST GIRDER CONNECTION DETAIL

NOT TO SCALE JST_JG1

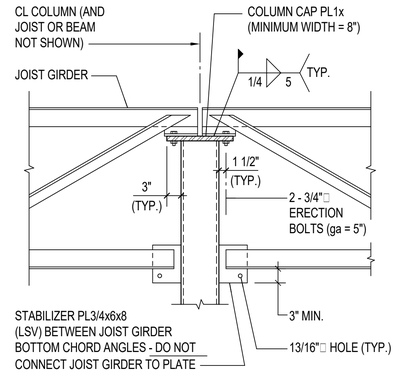

C5 TYPICAL JOIST GIRDER TO COLUMN CONNECTION DETAIL

NOT TO SCALE JGRDCOL3

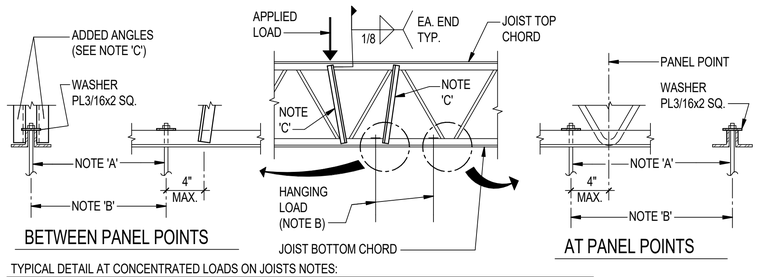

TYPICAL DETAIL AT CONCENTRATED LOADS ON JOISTS NOTES:

HANGER RODS - SEE THE ARCHITECTURAL, MECHANICAL, PLUMBING AND ELECTRICAL DRAWINGS.

POSITION HANGER RODS ON JOIST CENTERLINE BETWEEN BOTTOM CHORD ANGLES.

"C" CLAMP CONNECTIONS ARE NOT ALLOWED.

WHERE CONCENTRATED LOADS ARE APPLIED TO TOP CHORDS OR HUNG FROM BOTTOM CHORDS BETWEEN PANEL POINTS REINFORCE JOIST WITH DOUBLE ANGLES AS INDICATED.

AT "K" SERIES PROVIDE DBL. L1x1x1/8; AT "DLH" SERIES PROVIDE DBL. L2 1/2x2 1/2x1/4.

B1 TYPICAL DETAIL AT CONCENTRATED LOADS ON JOISTS

NOT TO SCALE NOTE: THIS DETAIL IS FOR ALL LOADS WHICH EXCEED 50 POUNDS

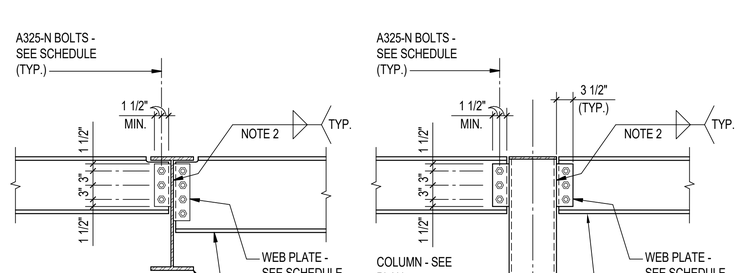

B2 TYPICAL BOLTED WEB PLATE CONNECTION DETAILS

NOT TO SCALE

WEB PLATE CONNECTION SCHEDULE

MAXIMUM BEAM SIZE IN EACH BEAM DEPTH GROUP	WEB PLATE THICKNESS	A325-N BOLTS	
		QUANTITY	SIZE
W10	3/8"	2	3/4"□
W21	3/8"	6	3/4"□
W30	1/2"	8	3/4"□

WEB PLATE CONNECTION NOTES:

1. BOLT EDGE DISTANCE MUST BE 1 1/2" MIN. AT ALL EDGES. BOLT SPACING MUST BE 3" MIN.
2. FILLET WELDS MUST BE 3/4 OF THE PLATE THICKNESS (1/4" MIN.) EACH SIDE.
3. THICKNESS EQUALS FLANGE THICKNESS OF BEAM FRAMING INTO COLUMN WEB (3/8" MIN.).

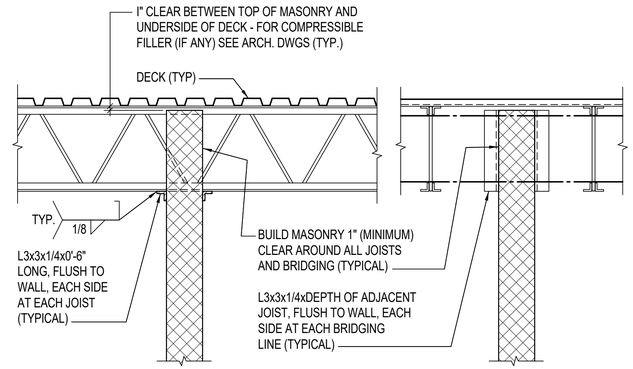

A1 TYPICAL NON-BEARING MASONRY PARTITION DETAILS

NOT TO SCALE JSTPRTN1

SPEIGHT·MARSHALL·FRANCIS
STRUCTURAL ENGINEERS
1228 PUDMETER PARKWAY, SUITE 201
VIRGINIA BEACH, VIRGINIA 23454
P: 757.427.1000
814 CAROLINE LANE, SUITE 205
RICHMOND, VIRGINIA 23294
P: 804.464.4111
WWW.SMANDF.COM

APPR	DATE	DESCRIPTION	STM

NAVFAC

PRELIMINARY NOT FOR CONSTRUCTION

SEAL

WNJ Jordan COMPANY – A JOINT VENTURE –

Michael Baker INTERNATIONAL

100 AIRSIDE DRIVE
MOON TOWNSHIP, PA 15108 A/E INFO

APPROVED

FOR COMMANDER NAVFAC

ACTIVITY
MARINE CORPS BASE CAMP LEJEUNE

SATISFACTORY TO DATE DD/MM/YY

DES DPC | DRW NEB | CHK DWS

PM

BRANCH HEAD

DESIGN DIRECTOR

FIRE PROTECTION

DEPARTMENT OF THE NAVY
NAVAL FACILITIES ENGINEERING SYSTEMS COMMAND
ATLANTIC DESIGN AND CONSTRUCTION
NAVAL FACILITIES ENGINEERING SYSTEMS COMMAND ATLANTIC
NORFOLK, VA
MCB CAMP LEJEUNE
JACKSONVILLE, NC
LOGCOM CSP WAREHOUSE
TYPICAL DETAILS

SCALE: AS NOTED
EPROJECT NO.: 1639600
CONSTR. CONTR. NO. N40085-20-C-0059
NAVFAC DRAWING NO. 14111115
SHEET 106 OF 447

S-511

P1527 FINAL SUBMISSION - 11/8/2021

PLOTTED: 11/12/2021 11:55:23 AM

FILE NAME: BIM 360://HF PACKAGE 3/P1527 LOG COM CSP-1639600-S.rvt

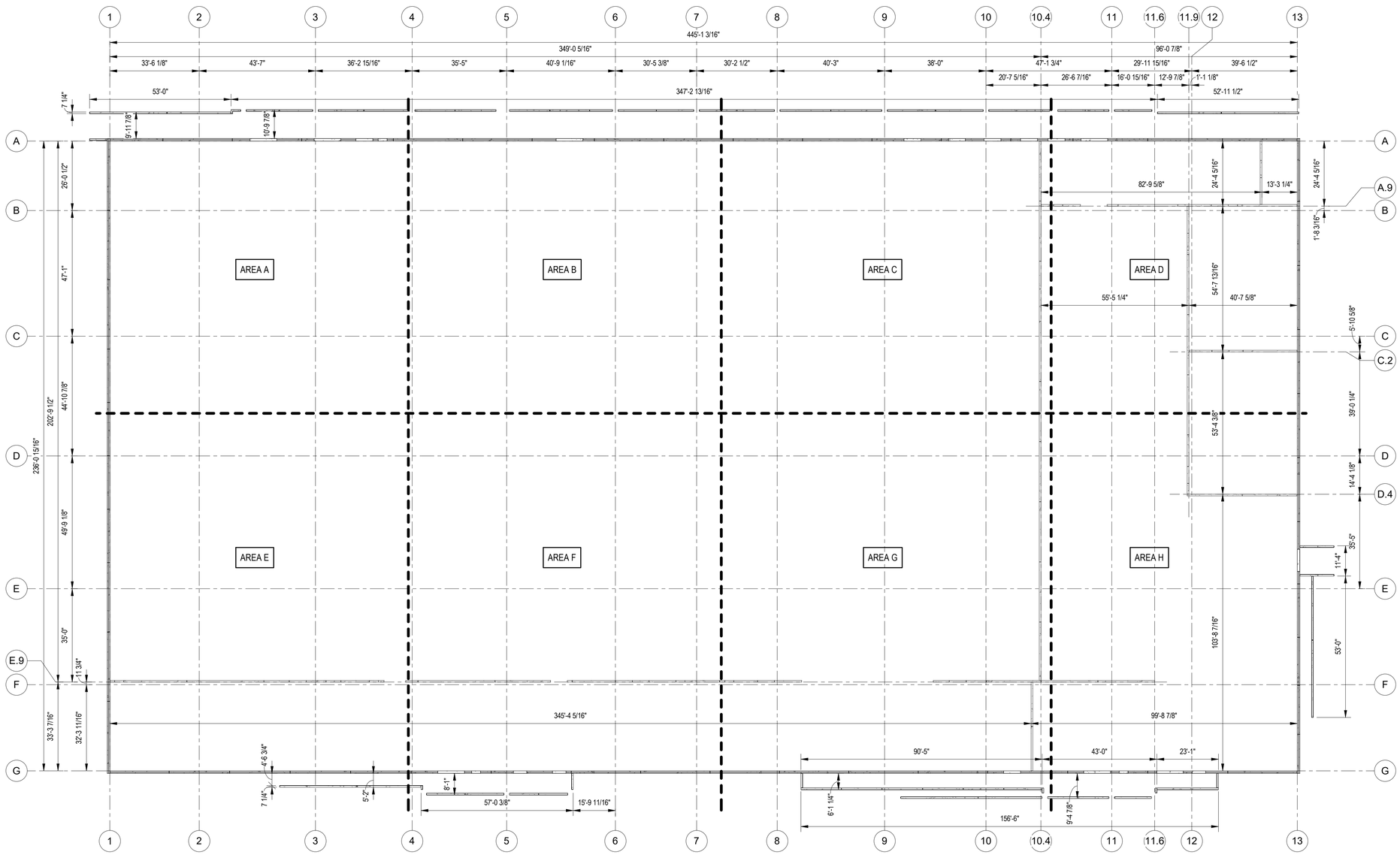

B1 TILT-UP PANEL PLAN - OVERALL
3/64" = 1'-0"

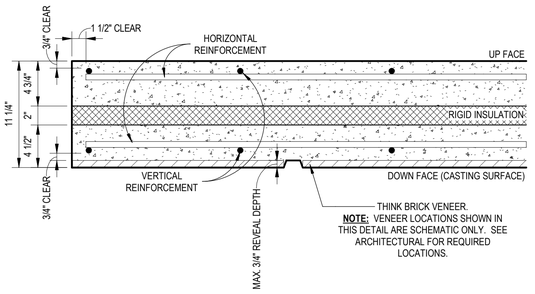

A1 TILT-UP PANEL REINFORCEMENT - INSULATED COMPOSITE PANEL
1 1/2" = 1'-0"

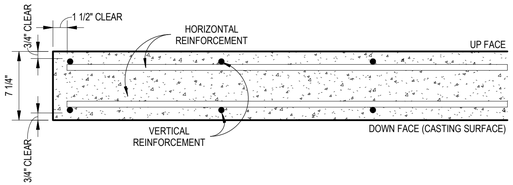

A2 TILT-UP PANEL REINFORCEMENT LOCATION - 7 1/4" SOLID PANELS
1 1/2" = 1'-0"

KEYPLAN

A	B	C	D
E	F	G	H

CITADEL CONTRACTORS INC
3405 APEX PEAKWAY
APEX, N.C. 27502
TEL. 1-919-362-5122
FAX 1-919-362-6910

This drawing and the design shown are the property of Citadel Contractors, Inc. The reproduction, copying or other use of this drawings without their written consent is prohibited and any infringement will be subject to legal action.

N

APPR | DATE | SYM | DESCRIPTION

NAVFAC

NORTH CAROLINA PROFESSIONAL SEAL 036852 ENGINEER CHRISTOPHER E. JACKSON
SEAL

RQ W.M. Jordan COMPANY — A JOINT VENTURE —

Michael Baker INTERNATIONAL
100 AIRSIDE DRIVE
MOON TOWNSHIP, PA 15108
A/E INFO

APPROVED
FOR COMMANDER NAVFAC

ACTIVITY
MARINE CORPS BASE
CAMP LEJEUNE

SATISFACTORY TO DATE

DES	CEJ	DRW MTF	CHK CEJ
PM / DM		TOWLER / ROOT	
BRANCH HEAD			
DESIGN DIRECTOR		R.L.Stephens, Jr.	
FIRE PROTECTION		DPS	

DEPARTMENT OF THE NAVY
NAVAL FACILITIES ENGINEERING SYSTEMS COMMAND
ATLANTIC DESIGN AND CONSTRUCTION
MCB CAMP LEJEUNE

NAVAL FACILITIES ENGINEERING SYSTEMS COMMAND ATLANTIC
NORFOLK, VA
JACKSONVILLE, NC
P1527 LOGCOM CSP WAREHOUSE

TILT-UP PANEL PLAN - OVERALL

SCALE:	AS NOTED
EPROJECT NO.:	1639600
CONSTR. CONTR. NO.	N40085-20-C-0059
NAVFAC DRAWING NO.	14111116
SHEET	107 OF 447

S-600

P1527 FINAL SUBMISSION- 11/18/2021

PLOTTED: 11/9/2021 4:02:38 PM
FILE NAME: BIM 360/IHF PACKAGE 3/P1527 LOG COM CSP-1639600 Tilt-Up.rvt

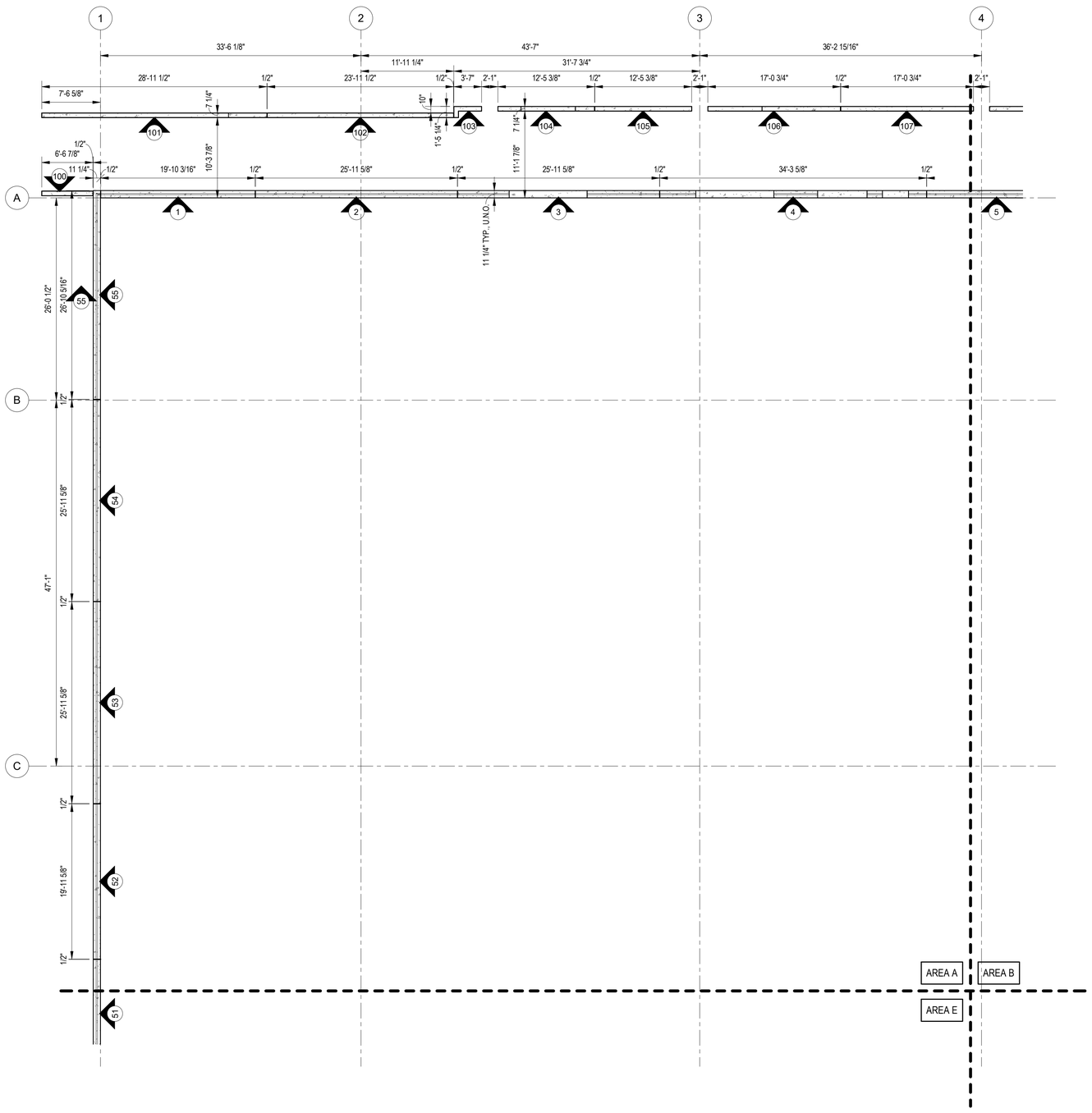

A1 TILT-UP PANEL PLAN - AREA A
1/8" = 1'-0"

GENERAL NOTES:

1. FOR THE STRUCTURAL NOTES AND ABBREVIATIONS SEE SHEETS S-001, S-002 AND S-003
2. FOR DIMENSIONS NOT SHOWN SEE THE ARCHITECTURAL DRAWINGS
3. THE TILT-UP PANEL DRAWINGS MUST BE USED IN CONJUNCTION WITH THE ARCHITECTURAL, STRUCTURAL, C/VIL, MECHANICAL, ELECTRICAL, AND PLUMBING DRAWINGS. GENERAL CONTRACTOR SHALL BE RESPOSIBLE FOR COORDINATION OF TILT-UP PANELS WITH OTHER TRADES.

TILT-UP PANEL DESIGN NOTES:

1. TILT-UP PANELS SHALL BE REINFORCED PER TYPICAL REINFORCEMENT LISTED BELOW, U.O.N. ON ELEVATIONS
   - A. TYPICAL REINFORCING FOR 11 1/4" INSULATED TILT-UP PANELS SHALL BE AS FOLLOWS:
     - a. #5 VERTICAL BARS @ 12" o.c. EACH FACE
     - b. #4 HORIZONTAL BARS @ 12" o.c. EACH FACE
   - B. TYPICAL REINFORCING FOR 7 1/4" SOLID TILT-UP INTERIOR PANELS SHALL BE AS FOLLOWS:
     - a. #5 VERTICAL BARS @ 16" o.c. EACH FACE
     - b. #4 HORIZONTAL BARS @ 16" o.c. EACH FACE
   - C. TYPICAL REINFORCING FOR 7 1/4" SOLID TILT-UP EXTERIOR DOCK PANELS SHALL BE AS FOLLOWS:
     - a. #5 VERTICAL BARS @ 12" o.c. CENTERED
       - HOOK VERTICAL BARS OUT OF TOP OF PANEL INTO EXTERIOR SLAB ON GRADE PER S-301 DETAILS
     - b. #5 HORIZONTAL BARS @ 12" o.c. CENTERED
2. TILT-UP PANEL CONCRETE SHALL HAVE NORMAL WEIGHT AGGREGATES WITH A NOMINAL MAXIMUM AGGREGATE SIZE OF 3/4" AND A MAXIMUM WATER/CEMENT RATIO OF 0.50.
3. MIN. CONCRETE COVER FOR TILT-UP PANEL REINFORCEMENT SHALL BE 3/4", U.O.N.
4. SEE S-001 FOR ADDITIONAL TILT-UP CONCRETE NOTES
5. PROVIDE #4 x 4'-0" DIAGONAL BARS AT ALL RE-ENTRANT CORNER LOCATIONS & ALL CORNERS OF OPENINGS
6. WHERE CALLED FOR, CLOSED TIES MAY BE MADE FROM A SINGLE, CLOSED LOOP REINFORCING BAR OR FROM INDIVIDUAL STIRRUPS AND CROSS TIES
7. SEE S-600 FOR BAR PLACEMENT DIAGRAMS
8. INSULATED TILT-UP PANELS SHALL BE INSULATED USING THERMOMASS SYSTEM SC INSULATION SYSTEM w/ THERMOMASS CC SERIES FIBER-COMPOSITE CONNECTORS. CC SERIES CONNECTORS SHALL BE PLACED AT 12" o.c. VERTICALLY & 16" o.c HORIZONTALLY, U.O.N. THERMOMASS X SERIES FIBER-COMPOSITE CONNECTORS SHALL ONLY BE REQUIRED WHERE SHOWN ON ELEVATIONS
9. MILL TEST REPORTS FOR REINFORCEMENT AND DOCUMENTATION OF CONCRETE MIXTURE CHARACTERISTICS SHALL BE SUBMITTED FOR REVIEW
10. THE FOLLOWING ASTM STANDARDS MUST BE CONFORMED TO AS APPLICABLE:

A.	PORTLAND CEMENT, TYPE I OR III:	ASTM C150
B.	REINFORCING STEEL, GRADE 60:	ASTM 615
C.	NORMAL WEIGHT AGGREGATES:	ASTM C33
D.	FLY ASH:	ASTM C618
E.	MIXING WATER:	ASTM C1602
F.	ADMIXTURES:	
a.	WATER REDUCTION:	ASTM C494
b.	SETTING TIME MODIF.:	ASTM C494
c.	AIR ENTRAINMENT:	ASTM C260
G.	CONCRETE BATCH/MIX/DELIV.:	ASTM C94 or C685

KEYPLAN

A	B	C	D
E	F	G	H

CITADEL CONTRACTORS INC.
3405 APEX PEAKWAY
APEX, N.C. 27502
TEL. 1-919-362-5122
FAX 1-919-362-6910

This drawing and the design shown are the property of Citadel Contractors, Inc. The reproduction, copying or other use of this drawings without their written consent is prohibited and any infringement will be subject to legal action.

N

APPR	DATE	DESCRIPTION	SYM

NAVFAC

SEAL
NORTH CAROLINA PROFESSIONAL SEAL 036852 ENGINEER CHRISTOPHER E. JACKSON

W.M. Jordan COMPANY – A JOINT VENTURE –

Michael Baker INTERNATIONAL
100 AIRSIDE DRIVE
MOON TOWNSHIP, PA 15108 A/E INFO

APPROVED

FOR COMMANDER NAVFAC

ACTIVITY
MARINE CORPS BASE CAMP LEJEUNE

SATISFACTORY TO DATE

DES	CEJ	DRW	MTF	CHK	CEJ

PM / DM TOWLER / ROOT

BRANCH HEAD

DESIGN DIRECTOR R.L.Stephens, Jr.

FIRE PROTECTION DPS

DEPARTMENT OF THE NAVY
NAVAL FACILITIES ENGINEERING SYSTEMS COMMAND
ATLANTIC DESIGN AND CONSTRUCTION
MCB CAMP LEJEUNE

NAVAL FACILITIES ENGINEERING SYSTEMS COMMAND ATLANTIC
NORFOLK, VA
JACKSONVILLE, NC
P1527 LOGCOM CSP WAREHOUSE

TILT-UP PANEL PLAN - AREA A

SCALE: AS NOTED
EPROJECT NO.: 1639600
CONSTR. CONTR. NO. N40085-20-C-0059
NAVFAC DRAWING NO. 14111117
SHEET 108 OF 447

S-601

P1527 FINAL SUBMISSION- 11/18/2021

PLOTTED: 11/9/2021 4:02:39 PM
FILE NAME: BIM 360://HF PACKAGE 3/P1527 LOG COM CSP-1639600 Tilt-Up.rvt

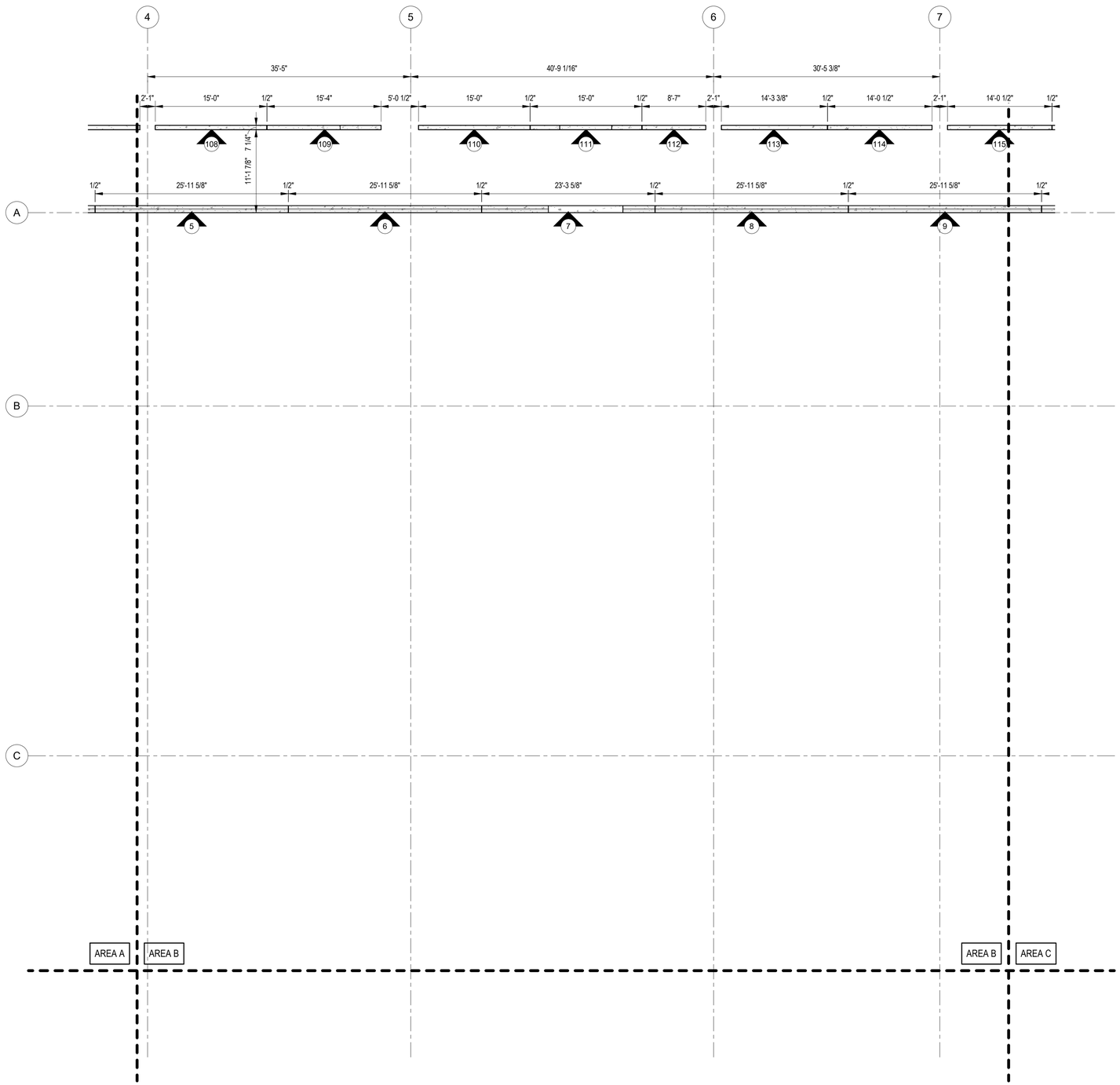

A1 TILT-UP PANEL PLAN - AREA B
1/8" = 1'-0"

GENERAL NOTES:

1. FOR THE STRUCTURAL NOTES AND ABBREVIATIONS SEE SHEETS S-001, S-002 AND S-003
2. FOR DIMENSIONS NOT SHOWN SEE THE ARCHITECTURAL DRAWINGS
3. THE TILT-UP PANEL DRAWINGS MUST BE USED IN CONJUNCTION WITH THE ARCHITECTURAL, STRUCTURAL, CIVIL, MECHANICAL, ELECTRICAL, AND PLUMBING DRAWINGS. GENERAL CONTRACTOR SHALL BE RESPOSIBLE FOR COORDINATION OF TILT-UP PANELS WITH OTHER TRADES.

TILT-UP PANEL DESIGN NOTES:

1. TILT-UP PANELS SHALL BE REINFORCED PER TYPICAL REINFORCEMENT LISTED BELOW, U.O.N. ON ELEVATIONS
   - A. TYPICAL REINFORCING FOR 11 1/4" INSULATED TILT-UP PANELS SHALL BE AS FOLLOWS:
     - a. #5 VERTICAL BARS @ 12" o.c. EACH FACE
     - b. #4 HORIZONTAL BARS @ 12" o.c. EACH FACE
   - B. TYPICAL REINFORCING FOR 7 1/4" SOLID TILT-UP INTERIOR PANELS SHALL BE AS FOLLOWS:
     - a. #5 VERTICAL BARS @ 16" o.c. EACH FACE
     - b. #4 HORIZONTAL BARS @ 16" o.c. EACH FACE
   - C. TYPICAL REINFORCING FOR 7 1/4" SOLID TILT-UP EXTERIOR DOCK PANELS SHALL BE AS FOLLOWS:
     - a. #5 VERTICAL BARS @ 12" o.c. CENTERED
       - HOOK VERTICAL BARS OUT OF TOP OF PANEL INTO EXTERIOR SLAB ON GRADE PER S-301 DETAILS
     - b. #5 HORIZONTAL BARS @ 12" o.c. CENTERED
2. TILT-UP PANEL CONCRETE SHALL HAVE NORMAL WEIGHT AGGREGATES WITH A NOMINAL MAXIMUM AGGREGATE SIZE OF 3/4" AND A MAXIMUM WATER/CEMENT RATIO OF 0.50.
3. MIN. CONCRETE COVER FOR TILT-UP PANEL REINFORCEMENT SHALL BE 3/4", U.O.N.
4. SEE S-001 FOR ADDITIONAL TILT-UP CONCRETE NOTES
5. PROVIDE #4 x 4'-0" DIAGONAL BARS AT ALL RE-ENTRANT CORNER LOCATIONS & ALL CORNERS OF OPENINGS
6. WHERE CALLED FOR, CLOSED TIES MAY BE MADE FROM A SINGLE, CLOSED LOOP REINFORCING BAR OR FROM INDIVIDUAL STIRRUPS AND CROSS TIES
7. SEE S-600 FOR BAR PLACEMENT DIAGRAMS
8. INSULATED TILT-UP PANELS SHALL BE INSULATED USING THERMOMASS SYSTEM SC INSULATION SYSTEM w/ THERMOMASS CC SERIES FIBER-COMPOSITE CONNECTORS. CC SERIES CONNECTORS SHALL BE PLACED AT 12" o.c. VERTICALLY & 16" o.c HORIZONTALLY, U.O.N. THERMOMASS X SERIES FIBER-COMPOSITE CONNECTORS SHALL ONLY BE REQUIRED WHERE SHOWN ON ELEVATIONS
9. MILL TEST REPORTS FOR REINFORCEMENT AND DOCUMENTATION OF CONCRETE MIXTURE CHARACTERISTICS SHALL BE SUBMITTED FOR REVIEW
10. THE FOLLOWING ASTM STANDARDS MUST BE CONFORMED TO AS APPLICABLE:

A.	PORTLAND CEMENT, TYPE I OR III:	ASTM C150
B.	REINFORCING STEEL, GRADE 60:	ASTM 615
C.	NORMAL WEIGHT AGGREGATES:	ASTM C33
D.	FLY ASH:	ASTM C618
E.	MIXING WATER:	ASTM C1602
F.	ADMIXTURES:	
a.	WATER REDUCTION:	ASTM C494
b.	SETTING TIME MODIF.:	ASTM C494
c.	AIR ENTRAINMENT:	ASTM C260
G.	CONCRETE BATCH/MIX/DELIV.:	ASTM C94 or C685

KEYPLAN

A	B	C	D
E	F	G	H

CITADEL CONTRACTORS INC
3405 APEX PEAKWAY
APEX, N.C. 27502
TEL. 1-919-362-5122
FAX 1-919-362-6910

This drawing and the design shown are the property of Citadel Contractors, Inc. The reproduction, copying or other use of this drawings without their written consent is prohibited and any infringement will be subject to legal action.

N

NO.	DESCRIPTION	DATE	APPR

NAVFAC

NORTH CAROLINA PROFESSIONAL SEAL 036852 ENGINEER CHRISTOPHER E. JACKSON
SEAL

W.M. Jordan COMPANY
A JOINT VENTURE

Michael Baker INTERNATIONAL
100 AIRSIDE DRIVE
MOON TOWNSHIP, PA 15108
A/E INFO

APPROVED

FOR COMMANDER NAVFAC

ACTIVITY
MARINE CORPS BASE CAMP LEJEUNE

SATISFACTORY TO DATE

DES	CEJ	DRW	MTF	CHK	CEJ

PM / DM: TOWLER / ROOT
BRANCH HEAD:
DESIGN DIRECTOR: R.L.Stephens, Jr.
FIRE PROTECTION: DPS

DEPARTMENT OF THE NAVY
ATLANTIC DIVISION AND CONSTRUCTION
NAVAL FACILITIES ENGINEERING SYSTEMS COMMAND
NAVAL FACILITIES ENGINEERING SYSTEMS COMMAND ATLANTIC
NORFOLK, VA
MCB CAMP LEJEUNE
JACKSONVILLE, NC
P1527 LOGCOM CSP WAREHOUSE
TILT-UP PANEL PLAN - AREA B

SCALE:	AS NOTED
EPROJECT NO.:	1639600
CONSTR. CONTR. NO.	N40085-20-C-0059
NAVFAC DRAWING NO.	14111118
SHEET	109 OF 447

S-602

P1527 FINAL SUBMISSION- 11/18/2021

PLOTTED: 11/9/2021 4:02:39 PM
FILE NAME: BIM 360://HF PACKAGE 3/P1527 LOG COM CSP- 1639600 Tilt-Up.rvt

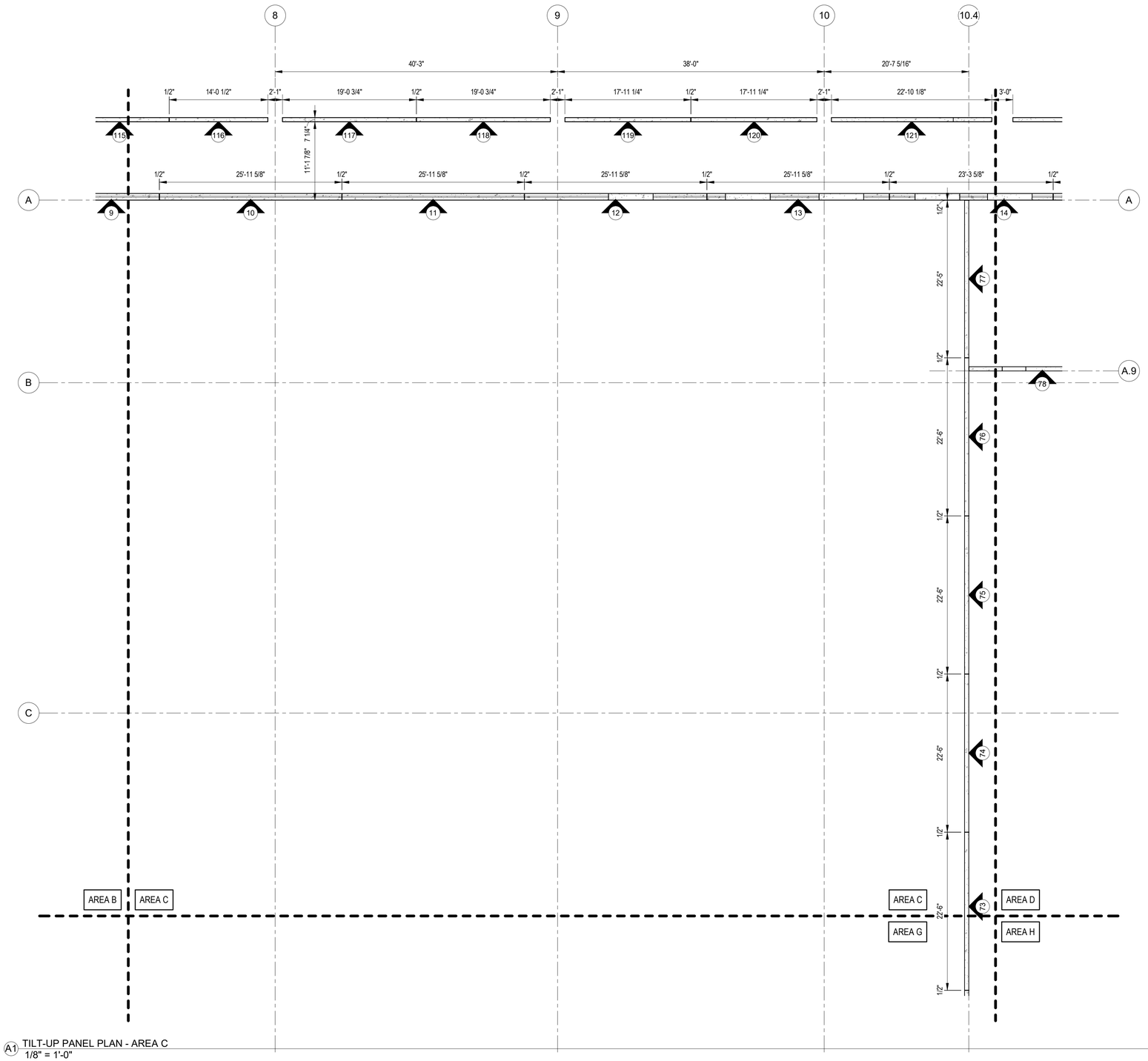

A1 TILT-UP PANEL PLAN - AREA C
1/8" = 1'-0"

GENERAL NOTES:

1. FOR THE STRUCTURAL NOTES AND ABBREVIATIONS SEE SHEETS S-001, S-002 AND S-003
2. FOR DIMENSIONS NOT SHOWN SEE THE ARCHITECTURAL DRAWINGS
3. THE TILT-UP PANEL DRAWINGS MUST BE USED IN CONJUNCTION WITH THE ARCHITECTURAL, STRUCTURAL, CIVIL, MECHANICAL, ELECTRICAL, AND PLUMBING DRAWINGS. GENERAL CONTRACTOR SHALL BE RESPOSIBLE FOR COORDINATION OF TILT-UP PANELS WITH OTHER TRADES.

TILT-UP PANEL DESIGN NOTES:

1. TILT-UP PANELS SHALL BE REINFORCED PER TYPICAL REINFORCEMENT LISTED BELOW, U.O.N. ON ELEVATIONS
   - A. TYPICAL REINFORCING FOR 11 1/4" INSULATED TILT-UP PANELS SHALL BE AS FOLLOWS:
     - a. #5 VERTICAL BARS @ 12" o.c. EACH FACE
     - b. #4 HORIZONTAL BARS @ 12" o.c. EACH FACE
   - B. TYPICAL REINFORCING FOR 7 1/4" SOLID TILT-UP INTERIOR PANELS SHALL BE AS FOLLOWS:
     - a. #5 VERTICAL BARS @ 16" o.c. EACH FACE
     - b. #4 HORIZONTAL BARS @ 16" o.c. EACH FACE
   - C. TYPICAL REINFORCING FOR 7 1/4" SOLID TILT-UP EXTERIOR DOCK PANELS SHALL BE AS FOLLOWS:
     - a. #5 VERTICAL BARS @ 12" o.c. CENTERED
       - HOOK VERTICAL BARS OUT OF TOP OF PANEL INTO EXTERIOR SLAB ON GRADE PER S-301 DETAILS
     - b. #5 HORIZONTAL BARS @ 12" o.c. CENTERED
2. TILT-UP PANEL CONCRETE SHALL HAVE NORMAL WEIGHT AGGREGATES WITH A NOMINAL MAXIMUM AGGREGATE SIZE OF 3/4" AND A MAXIMUM WATER/CEMENT RATIO OF 0.50.
3. MIN. CONCRETE COVER FOR TILT-UP PANEL REINFORCEMENT SHALL BE 3/4", U.O.N.
4. SEE S-001 FOR ADDITIONAL TILT-UP CONCRETE NOTES
5. PROVIDE #4 x 4'-0" DIAGONAL BARS AT ALL RE-ENTRANT CORNER LOCATIONS & ALL CORNERS OF OPENINGS
6. WHERE CALLED FOR, CLOSED TIES MAY BE MADE FROM A SINGLE, CLOSED LOOP REINFORCING BAR OR FROM INDIVIDUAL STIRRUPS AND CROSS TIES
7. SEE S-600 FOR BAR PLACEMENT DIAGRAMS
8. INSULATED TILT-UP PANELS SHALL BE INSULATED USING THERMOMASS SYSTEM SC INSULATION SYSTEM w/ THERMOMASS CC SERIES FIBER-COMPOSITE CONNECTORS. CC SERIES CONNECTORS SHALL BE PLACED AT 12" o.c. VERTICALLY & 16" o.c HORIZONTALLY, U.O.N. THERMOMASS X SERIES FIBER-COMPOSITE CONNECTORS SHALL ONLY BE REQUIRED WHERE SHOWN ON ELEVATIONS
9. MILL TEST REPORTS FOR REINFORCEMENT AND DOCUMENTATION OF CONCRETE MIXTURE CHARACTERISTICS SHALL BE SUBMITTED FOR REVIEW
10. THE FOLLOWING ASTM STANDARDS MUST BE CONFORMED TO AS APPLICABLE:

A.	PORTLAND CEMENT, TYPE I OR III:	ASTM C150
B.	REINFORCING STEEL, GRADE 60:	ASTM 615
C.	NORMAL WEIGHT AGGREGATES:	ASTM C33
D.	FLY ASH:	ASTM C618
E.	MIXING WATER:	ASTM C1602
F.	ADMIXTURES:	
a.	WATER REDUCTION:	ASTM C494
b.	SETTING TIME MODIF.:	ASTM C494
c.	AIR ENTRAINMENT:	ASTM C260
G.	CONCRETE BATCH/MIX/DELIV.:	ASTM C94 or C685

KEYPLAN

A	B	C	D
E	F	G	H

CITADEL CONTRACTORS INC
3405 APEX PEAKWAY
APEX, N.C. 27502
TEL. 1-919-362-5122
FAX 1-919-362-6910

This drawing and the design shown are the property of Citadel Contractors, Inc. The reproduction, copying or other use of this drawings without their written consent is prohibited and any infringement will be subject to legal action.

N

APPR	DATE	DESCRIPTION	SYM

NAVFAC

NORTH CAROLINA PROFESSIONAL SEAL 036852 ENGINEER CHRISTOPHER E. JACKSON
SEAL

RQ W.M. Jordan COMPANY ~A JOINT VENTURE~

Michael Baker INTERNATIONAL
100 AIRSIDE DRIVE
MOON TOWNSHIP, PA 15108
A/E INFO

APPROVED

FOR COMMANDER NAVFAC

ACTIVITY
MARINE CORPS BASE CAMP LEJEUNE

SATISFACTORY TO DATE

DES	CEJ	DRW	MTF	CHK	CEJ

PM / DM: TOWLER / ROOT
BRANCH HEAD:
DESIGN DIRECTOR: R.L.Stephens, Jr.
FIRE PROTECTION: DPS

NAVAL FACILITIES ENGINEERING SYSTEMS COMMAND ATLANTIC
NORFOLK, VA

JACKSONVILLE, NC

P1527 LOGCOM CSP WAREHOUSE

TILT-UP PANEL PLAN - AREA C

DEPARTMENT OF THE NAVY
NAVAL FACILITIES ENGINEERING SYSTEMS COMMAND
ATLANTIC DESIGN AND CONSTRUCTION
MCB CAMP LEJEUNE

SCALE: AS NOTED
EPROJECT NO.: 1639600
CONSTR. CONTR. NO.: N40085-20-C-0059
NAVFAC DRAWING NO.: 14111119
SHEET 110 OF 447

S-603

P1527 FINAL SUBMISSION- 11/18/2021

PLOTTED: 11/9/2021 4:02:40 PM
FILE NAME: BIM 360://HF PACKAGE 3/P1527 LOG COM CSP-1639600 Tilt-Up.rvt

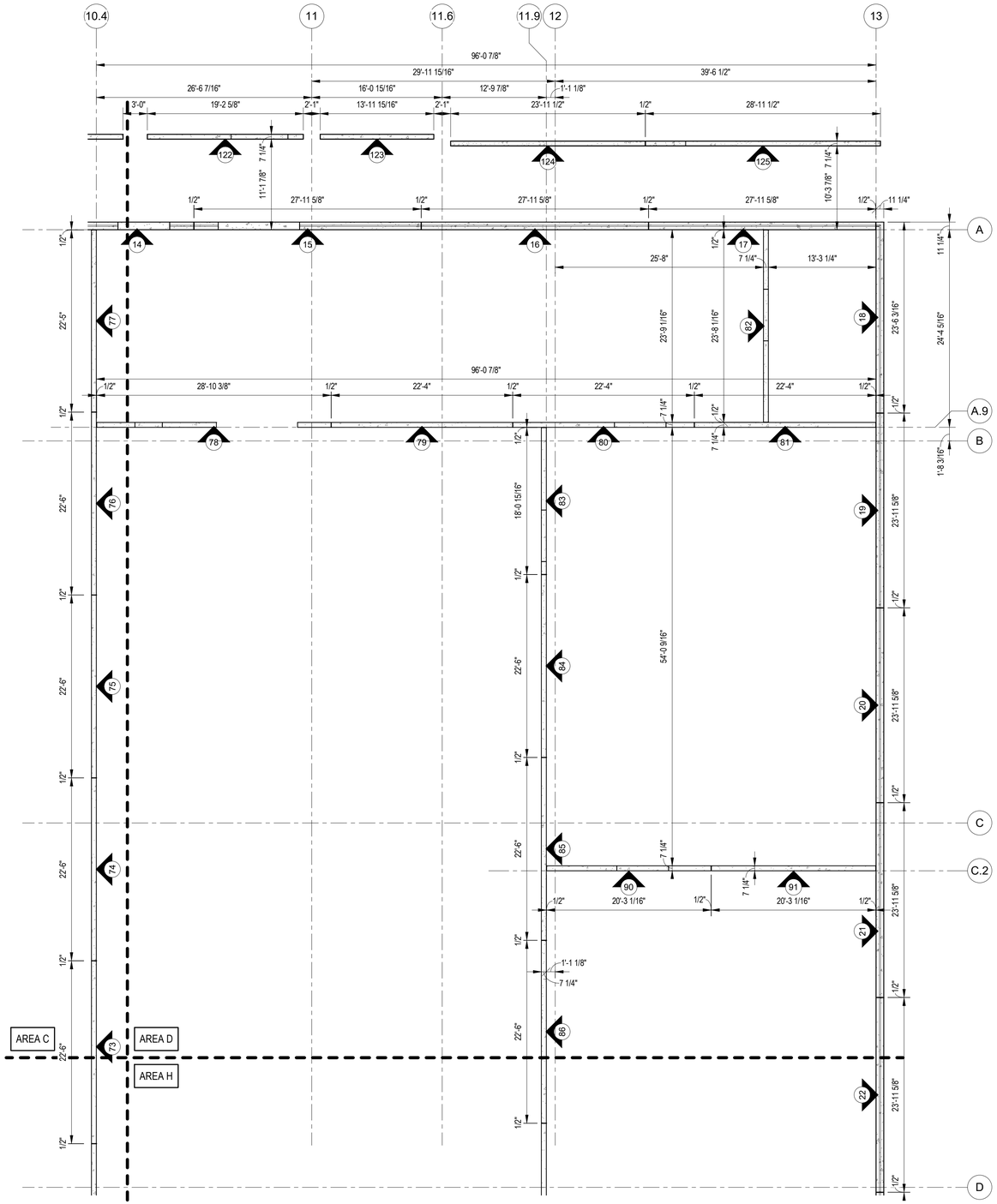

A1 TILT-UP PANEL PLAN - AREA D
1/8" = 1'-0"

GENERAL NOTES:

1. FOR THE STRUCTURAL NOTES AND ABBREVIATIONS SEE SHEETS S-001, S-002 AND S-003
2. FOR DIMENSIONS NOT SHOWN SEE THE ARCHITECTURAL DRAWINGS
3. THE TILT-UP PANEL DRAWINGS MUST BE USED IN CONJUNCTION WITH THE ARCHITECTURAL, STRUCTURAL, CIVIL, MECHANICAL, ELECTRICAL, AND PLUMBING DRAWINGS. GENERAL CONTRACTOR SHALL BE RESPOSIBLE FOR COORDINATION OF TILT-UP PANELS WITH OTHER TRADES.

TILT-UP PANEL DESIGN NOTES:

1. TILT-UP PANELS SHALL BE REINFORCED PER TYPICAL REINFORCEMENT LISTED BELOW, U.O.N. ON ELEVATIONS
   - A. TYPICAL REINFORCING FOR 11 1/4" INSULATED TILT-UP PANELS SHALL BE AS FOLLOWS:
     - a. #5 VERTICAL BARS @ 12" o.c. EACH FACE
     - b. #4 HORIZONTAL BARS @ 12" o.c. EACH FACE
   - B. TYPICAL REINFORCING FOR 7 1/4" SOLID TILT-UP INTERIOR PANELS SHALL BE AS FOLLOWS:
     - a. #5 VERTICAL BARS @ 16" o.c. EACH FACE
     - b. #4 HORIZONTAL BARS @ 16" o.c. EACH FACE
   - C. TYPICAL REINFORCING FOR 7 1/4" SOLID TILT-UP EXTERIOR DOCK PANELS SHALL BE AS FOLLOWS:
     - a. #5 VERTICAL BARS @ 12" o.c. CENTERED
       - HOOK VERTICAL BARS OUT OF TOP OF PANEL INTO EXTERIOR SLAB ON GRADE PER S-301 DETAILS
     - b. #5 HORIZONTAL BARS @ 12" o.c. CENTERED
2. TILT-UP PANEL CONCRETE SHALL HAVE NORMAL WEIGHT AGGREGATES WITH A NOMINAL MAXIMUM AGGREGATE SIZE OF 3/4" AND A MAXIMUM WATER/CEMENT RATIO OF 0.50.
3. MIN. CONCRETE COVER FOR TILT-UP PANEL REINFORCEMENT SHALL BE 3/4", U.O.N.
4. SEE S-001 FOR ADDITIONAL TILT-UP CONCRETE NOTES
5. PROVIDE #4 x 4'-0" DIAGONAL BARS AT ALL RE-ENTRANT CORNER LOCATIONS & ALL CORNERS OF OPENINGS
6. WHERE CALLED FOR, CLOSED TIES MAY BE MADE FROM A SINGLE, CLOSED LOOP REINFORCING BAR OR FROM INDIVIDUAL STIRRUPS AND CROSS TIES
7. SEE S-600 FOR BAR PLACEMENT DIAGRAMS
8. INSULATED TILT-UP PANELS SHALL BE INSULATED USING THERMOMASS SYSTEM SC INSULATION SYSTEM w/ THERMOMASS CC SERIES FIBER-COMPOSITE CONNECTORS. CC SERIES CONNECTORS SHALL BE PLACED AT 12" o.c. VERTICALLY & 16" o.c HORIZONTALLY, U.O.N. THERMOMASS X SERIES FIBER-COMPOSITE CONNECTORS SHALL ONLY BE REQUIRED WHERE SHOWN ON ELEVATIONS
9. MILL TEST REPORTS FOR REINFORCEMENT AND DOCUMENTATION OF CONCRETE MIXTURE CHARACTERISTICS SHALL BE SUBMITTED FOR REVIEW
10. THE FOLLOWING ASTM STANDARDS MUST BE CONFORMED TO AS APPLICABLE:

A.	PORTLAND CEMENT, TYPE I OR III:	ASTM C150
B.	REINFORCING STEEL, GRADE 60:	ASTM 615
C.	NORMAL WEIGHT AGGREGATES:	ASTM C33
D.	FLY ASH:	ASTM C618
E.	MIXING WATER:	ASTM C1602
F.	ADMIXTURES:	
a.	WATER REDUCTION:	ASTM C494
b.	SETTING TIME MODIF.:	ASTM C494
c.	AIR ENTRAINMENT:	ASTM C260
G.	CONCRETE BATCH/MIX/DELIV.:	ASTM C94 or C685

KEYPLAN

A	B	C	D
E	F	G	H

CITADEL CONTRACTORS INC
3405 APEX PEAKWAY
APEX, N.C. 27502
TEL. 1-919-362-5122
FAX 1-919-362-6910

This drawing and the design shown are the property of Citadel Contractors, Inc. The reproduction, copying or other use of this drawings without their written consent is prohibited and any infringement will be subject to legal action.

N

APPR	DATE	DESCRIPTION	SYM

NAVFAC

SEAL
NORTH CAROLINA PROFESSIONAL SEAL 036852 ENGINEER CHRISTOPHER E. JACKSON

RQ W.M. Jordan COMPANY — A JOINT VENTURE —

Michael Baker INTERNATIONAL
100 AIRSIDE DRIVE
MOON TOWNSHIP, PA 15108 A/E INFO

APPROVED

FOR COMMANDER NAVFAC

ACTIVITY
MARINE CORPS BASE CAMP LEJEUNE

SATISFACTORY TO DATE

DES	CEJ	DRW	MTF	CHK	CEJ
PM / DM		TOWLER / ROOT			
BRANCH HEAD					
DESIGN DIRECTOR		R.L.Stephens, Jr.			
FIRE PROTECTION		DPS			

NAVAL FACILITIES ENGINEERING SYSTEMS COMMAND ATLANTIC
NORFOLK, VA

DEPARTMENT OF THE NAVY
NAVAL FACILITIES ENGINEERING SYSTEMS COMMAND
ATLANTIC DESIGN AND CONSTRUCTION
MCB CAMP LEJEUNE

JACKSONVILLE, NC
P1527 LOGCOM CSP WAREHOUSE

TILT-UP PANEL PLAN - AREA D

SCALE:	AS NOTED
EPROJECT NO.:	1639600
CONSTR. CONTR. NO.	N40085-20-C-0059
NAVFAC DRAWING NO.	14111120
SHEET	111 OF 447

S-604

P1527 FINAL SUBMISSION- 11/18/2021

PLOTTED: 11/9/2021 4:02:41 PM

FILE NAME: BIM 360://HF PACKAGE 3/P1527 LOG COM CSP-1639600 Tilt-Up.rvt

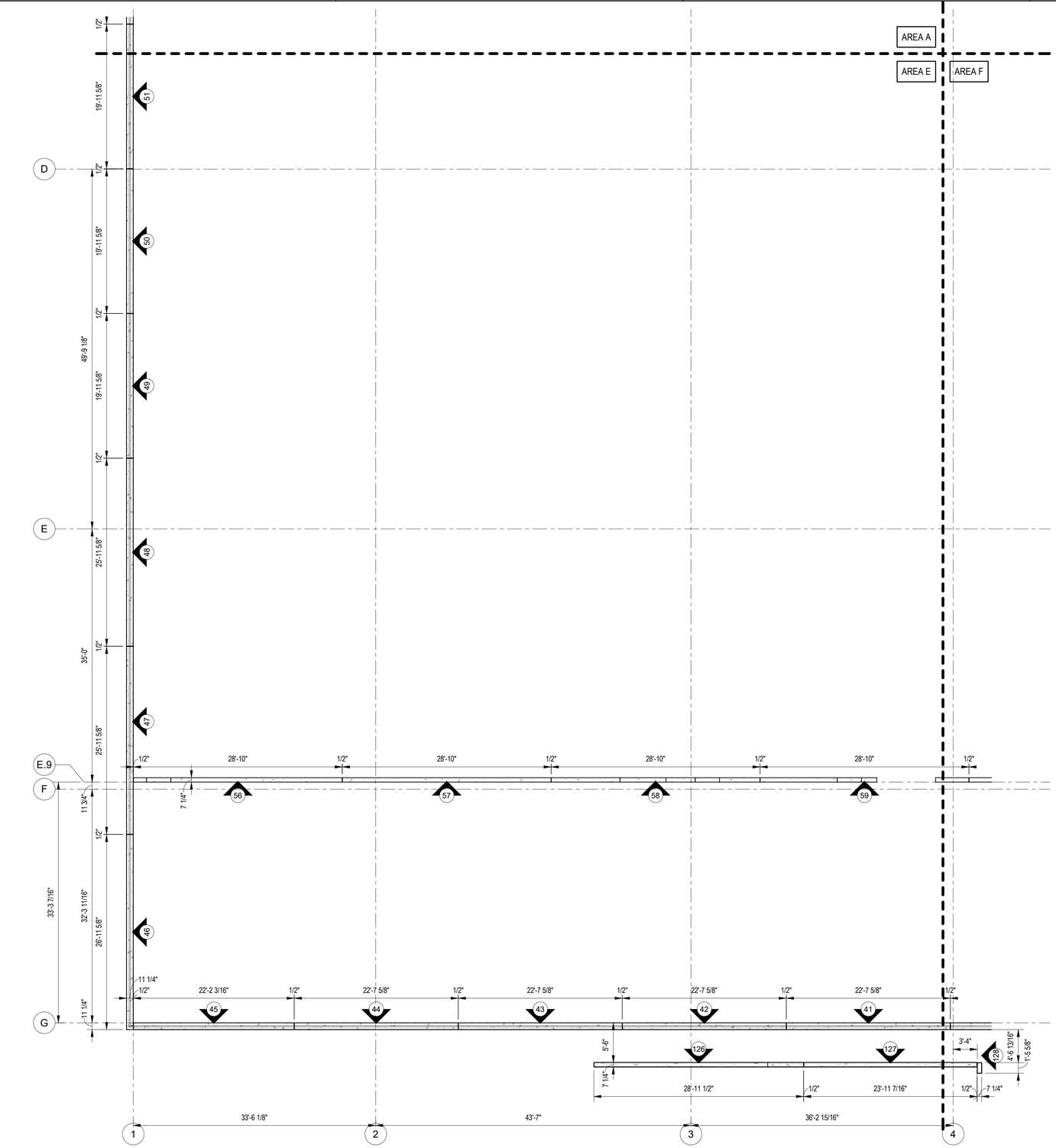

A1 TILT-UP PANEL PLAN - AREA E
1/8" = 1'-0"

GENERAL NOTES:

1. FOR THE STRUCTURAL NOTES AND ABBREVIATIONS SEE SHEETS S-001, S-002 AND S-003
2. FOR DIMENSIONS NOT SHOWN SEE THE ARCHITECTURAL DRAWINGS
3. THE TILT-UP PANEL DRAWINGS MUST BE USED IN CONJUNCTION WITH THE ARCHITECTURAL, STRUCTURAL, CIVIL, MECHANICAL, ELECTRICAL, AND PLUMBING DRAWINGS. GENERAL CONTRACTOR SHALL BE RESPOSIBLE FOR COORDINATION OF TILT-UP PANELS WITH OTHER TRADES.

TILT-UP PANEL DESIGN NOTES:

1. TILT-UP PANELS SHALL BE REINFORCED PER TYPICAL REINFORCEMENT LISTED BELOW, U.O.N. ON ELEVATIONS
   - A. TYPICAL REINFORCING FOR 11 1/4" INSULATED TILT-UP PANELS SHALL BE AS FOLLOWS:
     - a. #5 VERTICAL BARS @ 12" o.c. EACH FACE
     - b. #4 HORIZONTAL BARS @ 12" o.c. EACH FACE
   - B. TYPICAL REINFORCING FOR 7 1/4" SOLID TILT-UP INTERIOR PANELS SHALL BE AS FOLLOWS:
     - a. #5 VERTICAL BARS @ 16" o.c. EACH FACE
     - b. #4 HORIZONTAL BARS @ 16" o.c. EACH FACE
   - C. TYPICAL REINFORCING FOR 7 1/4" SOLID TILT-UP EXTERIOR DOCK PANELS SHALL BE AS FOLLOWS:
     - a. #5 VERTICAL BARS @ 12" o.c. CENTERED
       - HOOK VERTICAL BARS OUT OF TOP OF PANEL INTO EXTERIOR SLAB ON GRADE PER S-301 DETAILS
     - b. #5 HORIZONTAL BARS @ 12" o.c. CENTERED
2. TILT-UP PANEL CONCRETE SHALL HAVE NORMAL WEIGHT AGGREGATES WITH A NOMINAL MAXIMUM AGGREGATE SIZE OF 3/4" AND A MAXIMUM WATER/CEMENT RATIO OF 0.50.
3. MIN. CONCRETE COVER FOR TILT-UP PANEL REINFORCEMENT SHALL BE 3/4", U.O.N.
4. SEE S-001 FOR ADDITIONAL TILT-UP CONCRETE NOTES
5. PROVIDE #4 x 4'-0" DIAGONAL BARS AT ALL RE-ENTRANT CORNER LOCATIONS & ALL CORNERS OF OPENINGS
6. WHERE CALLED FOR, CLOSED TIES MAY BE MADE FROM A SINGLE, CLOSED LOOP REINFORCING BAR OR FROM INDIVIDUAL STIRRUPS AND CROSS TIES
7. SEE S-600 FOR BAR PLACEMENT DIAGRAMS
8. INSULATED TILT-UP PANELS SHALL BE INSULATED USING THERMOMASS SYSTEM SC INSULATION SYSTEM w/ THERMOMASS CC SERIES FIBER-COMPOSITE CONNECTORS. CC SERIES CONNECTORS SHALL BE PLACED AT 12" o.c. VERTICALLY & 16" o.c HORIZONTALLY, U.O.N. THERMOMASS X SERIES FIBER-COMPOSITE CONNECTORS SHALL ONLY BE REQUIRED WHERE SHOWN ON ELEVATIONS
9. MILL TEST REPORTS FOR REINFORCEMENT AND DOCUMENTATION OF CONCRETE MIXTURE CHARACTERISTICS SHALL BE SUBMITTED FOR REVIEW
10. THE FOLLOWING ASTM STANDARDS MUST BE CONFORMED TO AS APPLICABLE:

A.	PORTLAND CEMENT, TYPE I OR III:	ASTM C150
B.	REINFORCING STEEL, GRADE 60:	ASTM 615
C.	NORMAL WEIGHT AGGREGATES:	ASTM C33
D.	FLY ASH:	ASTM C618
E.	MIXING WATER:	ASTM C1602
F.	ADMIXTURES:	
a.	WATER REDUCTION:	ASTM C494
b.	SETTING TIME MODIF.:	ASTM C494
c.	AIR ENTRAINMENT:	ASTM C260
G.	CONCRETE BATCH/MIX/DELIV.:	ASTM C94 or C685

KEYPLAN

A	B	C	D
E	F	G	H

CITADEL CONTRACTORS INC
3405 APEX PEAK WAY
APEX, N.C. 27502
TEL 1-919-362-5122
FAX 1-919-362-6910

This drawing and the design shown are the property of Citadel Contractors, Inc. The reproduction, copying or other use of this drawings without their written consent is prohibited and any infringement will be subject to legal action.

N

APPR	DATE	DESCRIPTION	SYM

NAVFAC

NORTH CAROLINA PROFESSIONAL ENGINEER SEAL 038852 CHRISTOPHER E. JACKSON
SEAL

W.M. Jordan COMPANY — A JOINT VENTURE —

Michael Baker INTERNATIONAL
100 AIRSIDE DRIVE
MOON TOWNSHIP, PA 15108
A/E INFO

APPROVED

FOR COMMANDER NAVFAC

ACTIVITY
MARINE CORPS BASE CAMP LEJEUNE

SATISFACTORY TO DATE

DES	CEJ	DRW	MTF	CHK	CEJ

PM / DM: TOWLER / ROOT
BRANCH HEAD:
DESIGN DIRECTOR: R.L.Stephens, Jr.
FIRE PROTECTION: DPS

DEPARTMENT OF THE NAVY
NAVAL FACILITIES ENGINEERING SYSTEMS COMMAND
ATLANTIC DESIGN AND CONSTRUCTION
MCB CAMP LEJEUNE

NAVAL FACILITIES ENGINEERING SYSTEMS COMMAND ATLANTIC
NORFOLK, VA
JACKSONVILLE, NC

P1527 LOGCOM CSP WAREHOUSE

TILT-UP PANEL PLAN - AREA E

SCALE: AS NOTED
EPROJECT NO.: 1639600
CONSTR. CONTR. NO. N40085-20-C-0059
NAVFAC DRAWING NO. 14111121
SHEET 112 OF 447

S-605

P1527 FINAL SUBMISSION- 11/18/2021

FILE NAME: BIM 360://HF PACKAGE 3/P1527 LOG COM CSP-1639600 TiltUp.rvt
PLOTTED: 11/9/2021 4:02:42 PM

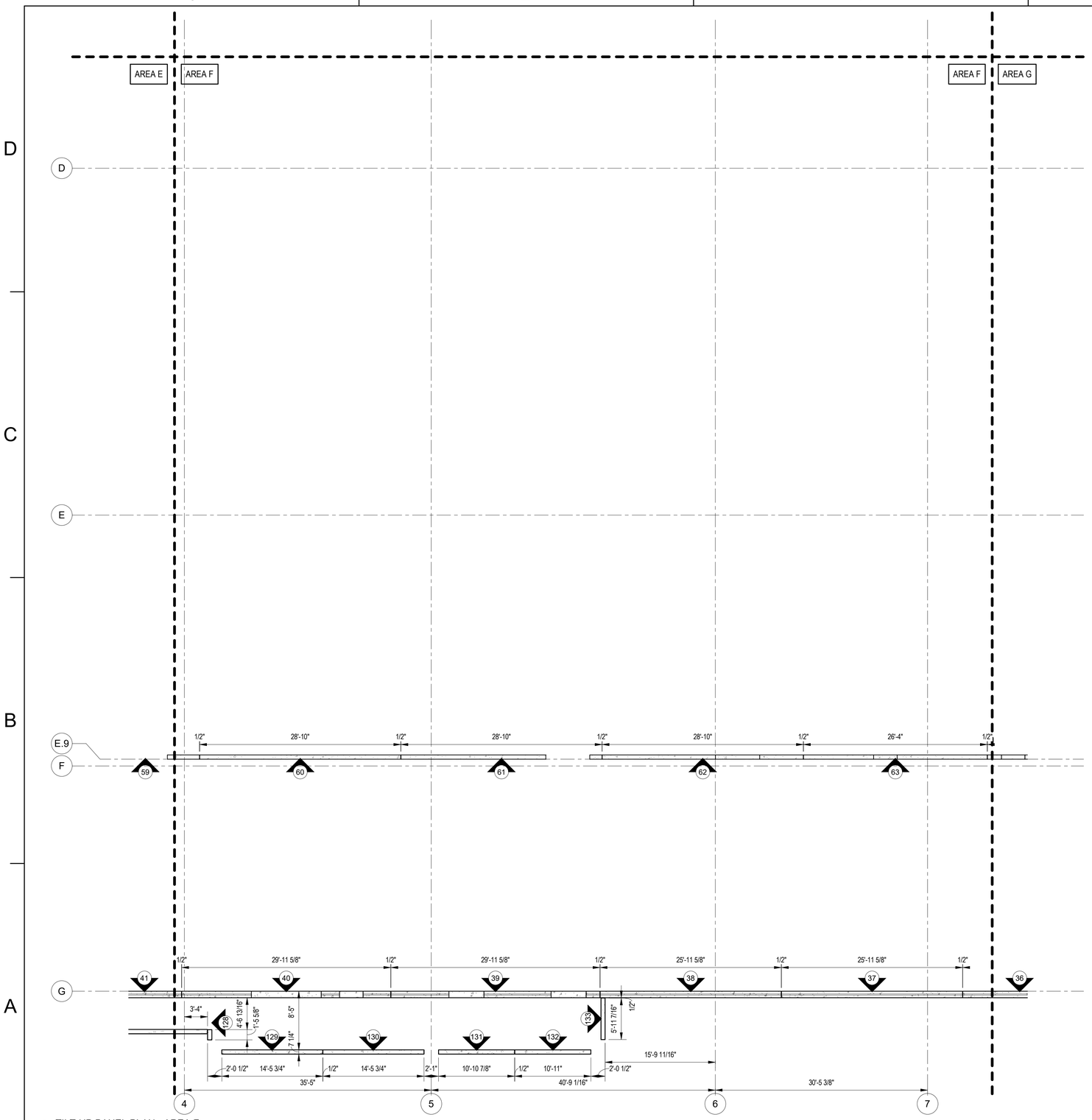

A1 TILT-UP PANEL PLAN - AREA F
1/8" = 1'-0"

GENERAL NOTES:

1. FOR THE STRUCTURAL NOTES AND ABBREVIATIONS SEE SHEETS S-001, S-002 AND S-003
2. FOR DIMENSIONS NOT SHOWN SEE THE ARCHITECTURAL DRAWINGS
3. THE TILT-UP PANEL DRAWINGS MUST BE USED IN CONJUNCTION WITH THE ARCHITECTURAL, STRUCTURAL, CIVIL, MECHANICAL, ELECTRICAL, AND PLUMBING DRAWINGS. GENERAL CONTRACTOR SHALL BE RESPOSIBLE FOR COORDINATION OF TILT-UP PANELS WITH OTHER TRADES.

TILT-UP PANEL DESIGN NOTES:

1. TILT-UP PANELS SHALL BE REINFORCED PER TYPICAL REINFORCEMENT LISTED BELOW, U.O.N. ON ELEVATIONS
   - A. TYPICAL REINFORCING FOR 11 1/4" INSULATED TILT-UP PANELS SHALL BE AS FOLLOWS:
     - a. #5 VERTICAL BARS @ 12" o.c. EACH FACE
     - b. #4 HORIZONTAL BARS @ 12" o.c. EACH FACE
   - B. TYPICAL REINFORCING FOR 7 1/4" SOLID TILT-UP INTERIOR PANELS SHALL BE AS FOLLOWS:
     - a. #5 VERTICAL BARS @ 16" o.c. EACH FACE
     - b. #4 HORIZONTAL BARS @ 16" o.c. EACH FACE
   - C. TYPICAL REINFORCING FOR 7 1/4" SOLID TILT-UP EXTERIOR DOCK PANELS SHALL BE AS FOLLOWS:
     - a. #5 VERTICAL BARS @ 12" o.c. CENTERED
       - HOOK VERTICAL BARS OUT OF TOP OF PANEL INTO EXTERIOR SLAB ON GRADE PER S-301 DETAILS
     - b. #5 HORIZONTAL BARS @ 12" o.c. CENTERED
2. TILT-UP PANEL CONCRETE SHALL HAVE NORMAL WEIGHT AGGREGATES WITH A NOMINAL MAXIMUM AGGREGATE SIZE OF 3/4" AND A MAXIMUM WATER/CEMENT RATIO OF 0.50.
3. MIN. CONCRETE COVER FOR TILT-UP PANEL REINFORCEMENT SHALL BE 3/4", U.O.N.
4. SEE S-001 FOR ADDITIONAL TILT-UP CONCRETE NOTES
5. PROVIDE #4 x 4'-0" DIAGONAL BARS AT ALL RE-ENTRANT CORNER LOCATIONS & ALL CORNERS OF OPENINGS
6. WHERE CALLED FOR, CLOSED TIES MAY BE MADE FROM A SINGLE, CLOSED LOOP REINFORCING BAR OR FROM INDIVIDUAL STIRRUPS AND CROSS TIES
7. SEE S-600 FOR BAR PLACEMENT DIAGRAMS
8. INSULATED TILT-UP PANELS SHALL BE INSULATED USING THERMOMASS SYSTEM SC INSULATION SYSTEM w/ THERMOMASS CC SERIES FIBER-COMPOSITE CONNECTORS. CC SERIES CONNECTORS SHALL BE PLACED AT 12" o.c. VERTICALLY & 16" o.c HORIZONTALLY, U.O.N. THERMOMASS X SERIES FIBER-COMPOSITE CONNECTORS SHALL ONLY BE REQUIRED WHERE SHOWN ON ELEVATIONS
9. MILL TEST REPORTS FOR REINFORCEMENT AND DOCUMENTATION OF CONCRETE MIXTURE CHARACTERISTICS SHALL BE SUBMITTED FOR REVIEW
10. THE FOLLOWING ASTM STANDARDS MUST BE CONFORMED TO AS APPLICABLE:
    - A. PORTLAND CEMENT, TYPE I OR III: ASTM C150
    - B. REINFORCING STEEL, GRADE 60: ASTM 615
    - C. NORMAL WEIGHT AGGREGATES: ASTM C33
    - D. FLY ASH: ASTM C618
    - E. MIXING WATER: ASTM C1602
    - F. ADMIXTURES:
      - a. WATER REDUCTION: ASTM C494
      - b. SETTING TIME MODIF.: ASTM C494
      - c. AIR ENTRAINMENT: ASTM C260
    - G. CONCRETE BATCH/MIX/DELIV.: ASTM C94 or C685

KEYPLAN

A	B	C	D
E	F	G	H

CITADEL CONTRACTORS INC.
3405 APEX PEAKWAY
APEX, N.C. 27502
TEL. 1-919-362-5122
FAX 1-919-362-6910

This drawing and the design shown are the property of Citadel Contractors, Inc. The reproduction, copying or other use of this drawings without their written consent is prohibited and any infringement will be subject to legal action.

N

APPR	DATE	DESCRIPTION	SYM

NAVFAC

NORTH CAROLINA PROFESSIONAL SEAL 036852 ENGINEER CHRISTOPHER E. JACKSON
SEAL

IRQ WJM Jordan COMPANY — A JOINT VENTURE —

Michael Baker INTERNATIONAL
100 AIRSIDE DRIVE
MOON TOWNSHIP, PA 15108 A/E INFO

APPROVED
FOR COMMANDER NAVFAC

ACTIVITY
MARINE CORPS BASE CAMP LEJEUNE

SATISFACTORY TO DATE

DES	CEJ	DRW	MTF	CHK	CEJ

PM / DM TOWLER / ROOT
BRANCH HEAD
DESIGN DIRECTOR R.L.Stephens, Jr.
FIRE PROTECTION DPS

DEPARTMENT OF THE NAVY
NAVAL FACILITIES ENGINEERING SYSTEMS COMMAND ATLANTIC
ATLANTIC DESIGN AND CONSTRUCTION
MCB CAMP LEJEUNE

NAVAL FACILITIES ENGINEERING SYSTEMS COMMAND ATLANTIC
NORFOLK, VA
JACKSONVILLE, NC
P1527 LOGCOM CSP WAREHOUSE

TILT-UP PANEL PLAN - AREA F

SCALE:	AS NOTED
EPROJECT NO.:	1639600
CONSTR. CONTR. NO.	N40085-20-C-0059
NAVFAC DRAWING NO.	14111122
SHEET	113 OF 447

S-606

P1527 FINAL SUBMISSION- 11/18/2021

PLOTTED: 11/9/2021 4:02:42 PM
FILE NAME: BIM 360/IHF PACKAGE 3/P1527 LOG COM CSP-1639600 Tilt-Up.rvt

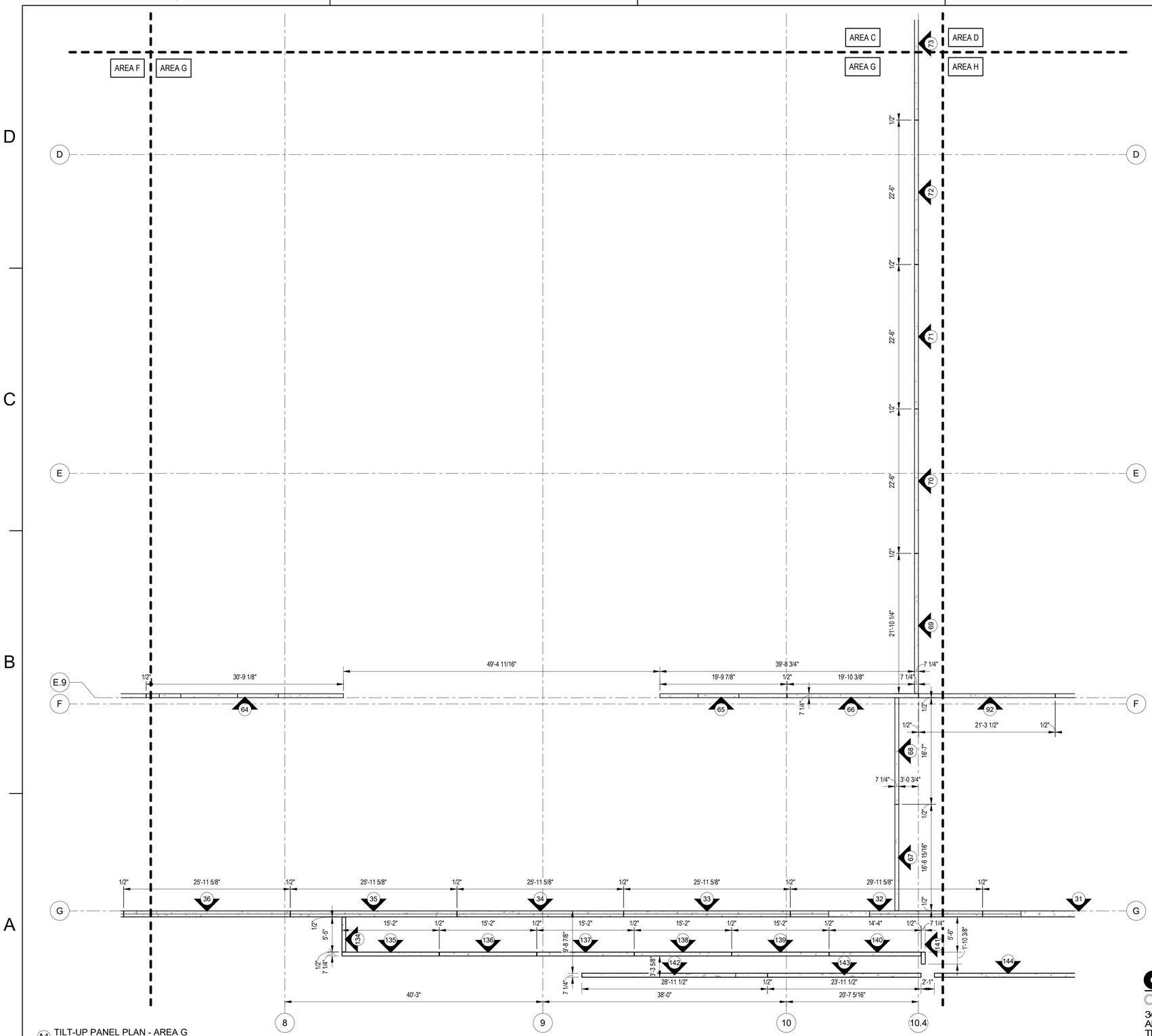

A1 TILT-UP PANEL PLAN - AREA G
1/8" = 1'-0"

GENERAL NOTES:

1. FOR THE STRUCTURAL NOTES AND ABBREVIATIONS SEE SHEETS S-001, S-002 AND S-003
2. FOR DIMENSIONS NOT SHOWN SEE THE ARCHITECTURAL DRAWINGS
3. THE TILT-UP PANEL DRAWINGS MUST BE USED IN CONJUNCTION WITH THE ARCHITECTURAL, STRUCTURAL, CIVIL, MECHANICAL, ELECTRICAL, AND PLUMBING DRAWINGS. GENERAL CONTRACTOR SHALL BE RESPOSIBLE FOR COORDINATION OF TILT-UP PANELS WITH OTHER TRADES.

TILT-UP PANEL DESIGN NOTES:

1. TILT-UP PANELS SHALL BE REINFORCED PER TYPICAL REINFORCEMENT LISTED BELOW, U.O.N. ON ELEVATIONS
   - A. TYPICAL REINFORCING FOR 11 1/4" INSULATED TILT-UP PANELS SHALL BE AS FOLLOWS:
     - a. #5 VERTICAL BARS @ 12" o.c. EACH FACE
     - b. #4 HORIZONTAL BARS @ 12" o.c. EACH FACE
   - B. TYPICAL REINFORCING FOR 7 1/4" SOLID TILT-UP INTERIOR PANELS SHALL BE AS FOLLOWS:
     - a. #5 VERTICAL BARS @ 16" o.c. EACH FACE
     - b. #4 HORIZONTAL BARS @ 16" o.c. EACH FACE
   - C. TYPICAL REINFORCING FOR 7 1/4" SOLID TILT-UP EXTERIOR DOCK PANELS SHALL BE AS FOLLOWS:
     - a. #5 VERTICAL BARS @ 12" o.c. CENTERED
       - HOOK VERTICAL BARS OUT OF TOP OF PANEL INTO EXTERIOR SLAB ON GRADE PER S-301 DETAILS
     - b. #5 HORIZONTAL BARS @ 12" o.c. CENTERED
2. TILT-UP PANEL CONCRETE SHALL HAVE NORMAL WEIGHT AGGREGATES WITH A NOMINAL MAXIMUM AGGREGATE SIZE OF 3/4" AND A MAXIMUM WATER/CEMENT RATIO OF 0.50.
3. MIN. CONCRETE COVER FOR TILT-UP PANEL REINFORCEMENT SHALL BE 3/4", U.O.N.
4. SEE S-001 FOR ADDITIONAL TILT-UP CONCRETE NOTES
5. PROVIDE #4 x 4'-0" DIAGONAL BARS AT ALL RE-ENTRANT CORNER LOCATIONS & ALL CORNERS OF OPENINGS
6. WHERE CALLED FOR, CLOSED TIES MAY BE MADE FROM A SINGLE, CLOSED LOOP REINFORCING BAR OR FROM INDIVIDUAL STIRRUPS AND CROSS TIES
7. SEE S-600 FOR BAR PLACEMENT DIAGRAMS
8. INSULATED TILT-UP PANELS SHALL BE INSULATED USING THERMOMASS SYSTEM SC INSULATION SYSTEM w/ THERMOMASS CC SERIES FIBER-COMPOSITE CONNECTORS. CC SERIES CONNECTORS SHALL BE PLACED AT 12" o.c. VERTICALLY & 16" o.c HORIZONTALLY, U.O.N. THERMOMASS X SERIES FIBER-COMPOSITE CONNECTORS SHALL ONLY BE REQUIRED WHERE SHOWN ON ELEVATIONS
9. MILL TEST REPORTS FOR REINFORCEMENT AND DOCUMENTATION OF CONCRETE MIXTURE CHARACTERISTICS SHALL BE SUBMITTED FOR REVIEW
10. THE FOLLOWING ASTM STANDARDS MUST BE CONFORMED TO AS APPLICABLE:

A.	PORTLAND CEMENT, TYPE I OR III:	ASTM C150
B.	REINFORCING STEEL, GRADE 60:	ASTM 615
C.	NORMAL WEIGHT AGGREGATES:	ASTM C33
D.	FLY ASH:	ASTM C618
E.	MIXING WATER:	ASTM C1602
F.	ADMIXTURES:	
a.	WATER REDUCTION:	ASTM C494
b.	SETTING TIME MODIF.:	ASTM C494
c.	AIR ENTRAINMENT:	ASTM C260
G.	CONCRETE BATCH/MIX/DELIV.:	ASTM C94 or C685

KEYPLAN

A	B	C	D
E	F	G	H

CITADEL CONTRACTORS INC
3405 APEX PEAKWAY
APEX, N.C. 27502
TEL 1-919-362-5122
FAX 1-919-362-6910

This drawing and the design shown are the property of Citadel Contractors, Inc. The reproduction, copying or other use of this drawings without their written consent is prohibited and any infringement will be subject to legal action.

N

APPR	DATE	DESCRIPTION	SYM

NAVFAC

NORTH CAROLINA PROFESSIONAL SEAL 036852 ENGINEER CHRISTOPHER E. JASON
SEAL

IRQ WM Jordan COMPANY ~A JOINT VENTURE~

Michael Baker INTERNATIONAL
100 AIRSIDE DRIVE
MOON TOWNSHIP, PA 15108 A/E INFO

APPROVED

FOR COMMANDER NAVFAC

ACTIVITY
MARINE CORPS BASE CAMP LEJEUNE

SATISFACTORY TO DATE			
DES CEJ	DRW MTF	CHK CEJ	
PM / DM	TOWLER / ROOT		
BRANCH HEAD			
DESIGN DIRECTOR	R.L.Stephens, Jr.		
FIRE PROTECTION	DPS		

DEPARTMENT OF THE NAVY
NAVAL FACILITIES ENGINEERING SYSTEMS COMMAND
ATLANTIC DESIGN AND CONSTRUCTION
MCB CAMP LEJEUNE

NAVAL FACILITIES ENGINEERING SYSTEMS COMMAND ATLANTIC
NORFOLK, VA
JACKSONVILLE, NC
P1527 LOGCOM CSP WAREHOUSE

TILT-UP PANEL PLAN - AREA G

SCALE:	AS NOTED
EPROJECT NO.:	1639600
CONSTR. CONTR. NO.	N40085-20-C-0059
NAVFAC DRAWING NO.	14111123
SHEET	114 OF 447

S-607

P1527 FINAL SUBMISSION- 11/18/2021

PLOTTED: 11/9/2021 4:02:43 PM

FILE NAME: BIM 360://HF PACKAGE 3/P1527 LOG COM CSP-1639600 Tilt-Up.rvt

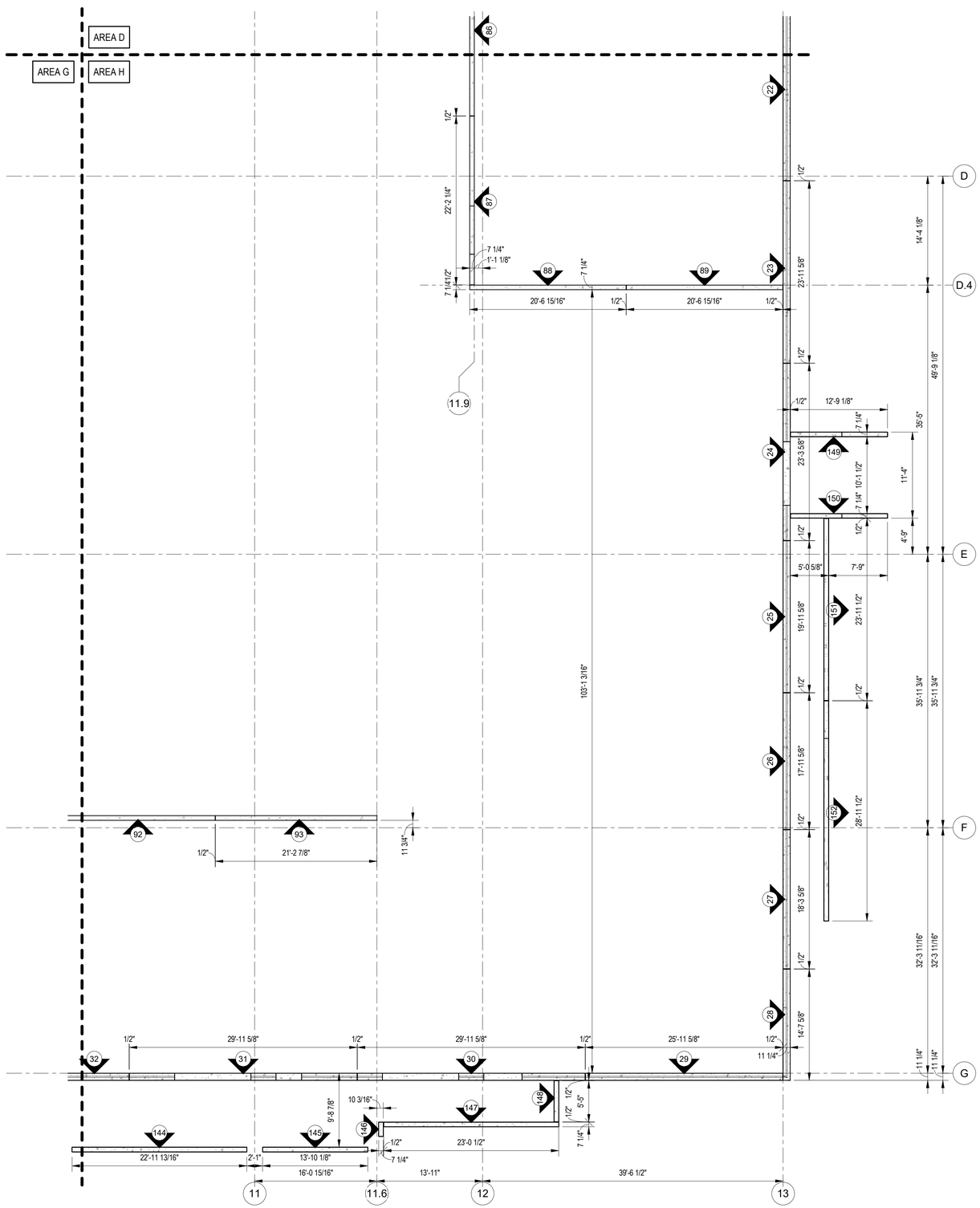

A1 TILT-UP PANEL PLAN - AREA H
1/8" = 1'-0"

GENERAL NOTES:

1. FOR THE STRUCTURAL NOTES AND ABBREVIATIONS SEE SHEETS S-001, S-002 AND S-003
2. FOR DIMENSIONS NOT SHOWN SEE THE ARCHITECTURAL DRAWINGS
3. THE TILT-UP PANEL DRAWINGS MUST BE USED IN CONJUNCTION WITH THE ARCHITECTURAL, STRUCTURAL, CIVIL, MECHANICAL, ELECTRICAL, AND PLUMBING DRAWINGS. GENERAL CONTRACTOR SHALL BE RESPOSIBLE FOR COORDINATION OF TILT-UP PANELS WITH OTHER TRADES.

TILT-UP PANEL DESIGN NOTES:

1. TILT-UP PANELS SHALL BE REINFORCED PER TYPICAL REINFORCEMENT LISTED BELOW, U.O.N. ON ELEVATIONS
   - A. TYPICAL REINFORCING FOR 11 1/4" INSULATED TILT-UP PANELS SHALL BE AS FOLLOWS:
     - a. #5 VERTICAL BARS @ 12" o.c. EACH FACE
     - b. #4 HORIZONTAL BARS @ 12" o.c. EACH FACE
   - B. TYPICAL REINFORCING FOR 7 1/4" SOLID TILT-UP INTERIOR PANELS SHALL BE AS FOLLOWS:
     - a. #5 VERTICAL BARS @ 16" o.c. EACH FACE
     - b. #4 HORIZONTAL BARS @ 16" o.c. EACH FACE
   - C. TYPICAL REINFORCING FOR 7 1/4" SOLID TILT-UP EXTERIOR DOCK PANELS SHALL BE AS FOLLOWS:
     - a. #5 VERTICAL BARS @ 12" o.c. CENTERED
       - HOOK VERTICAL BARS OUT OF TOP OF PANEL INTO EXTERIOR SLAB ON GRADE PER S-301 DETAILS
     - b. #5 HORIZONTAL BARS @ 12" o.c. CENTERED
2. TILT-UP PANEL CONCRETE SHALL HAVE NORMAL WEIGHT AGGREGATES WITH A NOMINAL MAXIMUM AGGREGATE SIZE OF 3/4" AND A MAXIMUM WATER/CEMENT RATIO OF 0.50.
3. MIN. CONCRETE COVER FOR TILT-UP PANEL REINFORCEMENT SHALL BE 3/4", U.O.N.
4. SEE S-001 FOR ADDITIONAL TILT-UP CONCRETE NOTES
5. PROVIDE #4 x 4'-0" DIAGONAL BARS AT ALL RE-ENTRANT CORNER LOCATIONS & ALL CORNERS OF OPENINGS
6. WHERE CALLED FOR, CLOSED TIES MAY BE MADE FROM A SINGLE, CLOSED LOOP REINFORCING BAR OR FROM INDIVIDUAL STIRRUPS AND CROSS TIES
7. SEE S-600 FOR BAR PLACEMENT DIAGRAMS
8. INSULATED TILT-UP PANELS SHALL BE INSULATED USING THERMOMASS SYSTEM SC INSULATION SYSTEM w/ THERMOMASS CC SERIES FIBER-COMPOSITE CONNECTORS. CC SERIES CONNECTORS SHALL BE PLACED AT 12" o.c. VERTICALLY & 16" o.c HORIZONTALLY, U.O.N. THERMOMASS X SERIES FIBER-COMPOSITE CONNECTORS SHALL ONLY BE REQUIRED WHERE SHOWN ON ELEVATIONS
9. MILL TEST REPORTS FOR REINFORCEMENT AND DOCUMENTATION OF CONCRETE MIXTURE CHARACTERISTICS SHALL BE SUBMITTED FOR REVIEW
10. THE FOLLOWING ASTM STANDARDS MUST BE CONFORMED TO AS APPLICABLE:

A.	PORTLAND CEMENT, TYPE I OR III:	ASTM C150
B.	REINFORCING STEEL, GRADE 60:	ASTM 615
C.	NORMAL WEIGHT AGGREGATES:	ASTM C33
D.	FLY ASH:	ASTM C618
E.	MIXING WATER:	ASTM C1602
F.	ADMIXTURES:	
a.	WATER REDUCTION:	ASTM C494
b.	SETTING TIME MODIF.:	ASTM C494
c.	AIR ENTRAINMENT:	ASTM C260
G.	CONCRETE BATCH/MIX/DELIV.:	ASTM C94 or C685

KEYPLAN

A	B	C	D
E	F	G	H

CITADEL CONTRACTORS INC.
3405 APEX PEAK WAY
APEX, N.C. 27502
TEL 1-919-362-5122
FAX 1-919-362-6910

This drawing and the design shown are the property of Citadel Contractors, Inc. The reproduction, copying or other use of this drawings without their written consent is prohibited and any infringement will be subject to legal action.

N

SYM	DESCRIPTION	DATE	APPR

NAVFAC

SEAL
NORTH CAROLINA PROFESSIONAL
SEAL 036852
ENGINEER
CHRISTOPHER E. JACKSON

IRQ WM Jordan COMPANY — A JOINT VENTURE —

Michael Baker INTERNATIONAL
100 AIRSIDE DRIVE
MOON TOWNSHIP, PA 15108 A/E INFO

APPROVED

FOR COMMANDER NAVFAC

ACTIVITY
MARINE CORPS BASE
CAMP LEJEUNE

SATISFACTORY TO DATE

DES	CEJ	DRW	MTF	CHK	CEJ

PM / DM TOWLER / ROOT
BRANCH HEAD
DESIGN DIRECTOR R.L.Stephens, Jr.
FIRE PROTECTION DPS

DEPARTMENT OF THE NAVY
NAVAL FACILITIES ENGINEERING SYSTEMS COMMAND
ATLANTIC DESIGN AND CONSTRUCTION
MCB CAMP LEJEUNE

NAVAL FACILITIES ENGINEERING SYSTEMS COMMAND ATLANTIC
NORFOLK, VA
JACKSONVILLE, NC
P1527 LOGCOM CSP WAREHOUSE

TILT-UP PANEL PLAN - AREA H

SCALE: AS NOTED
EPROJECT NO.: 1639600
CONSTR. CONTR. NO. N40085-20-C-0059
NAVFAC DRAWING NO. 14111124
SHEET 115 OF 447

S-608

P1527 FINAL SUBMISSION- 11/18/2021

PLOTTED: 11/9/2021 4:02:44 PM
FILE NAME: BIM 360://HF PACKAGE 3/P1527 LOG COM CSP-1639600 Tilt-Up.rvt

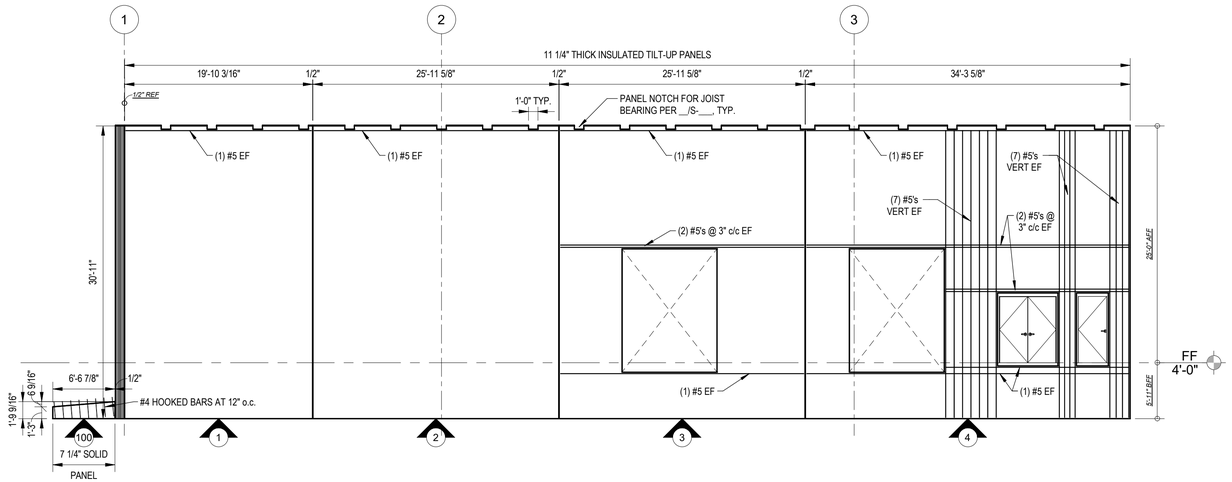

C1 GRIDLINE A PANELS - AREA A
1/8" = 1'-0"

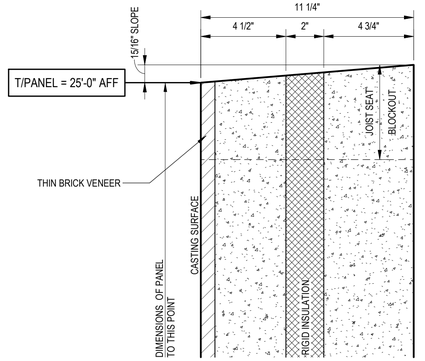

C4 PANEL TOP DETAIL - 11 1/4" INSUL. PANELS
3" = 1'-0"

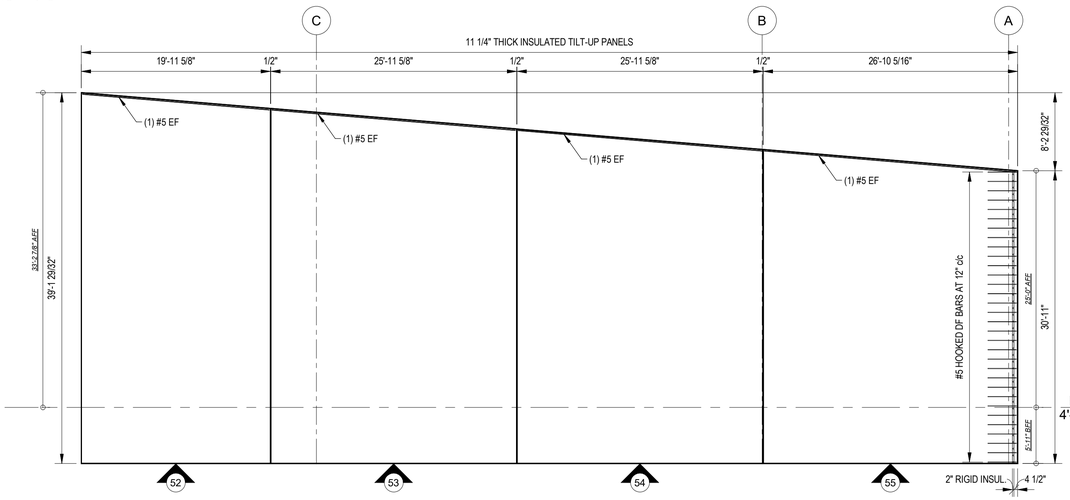

B1 GRIDLINE 1 PANELS - AREA A
1/8" = 1'-0"

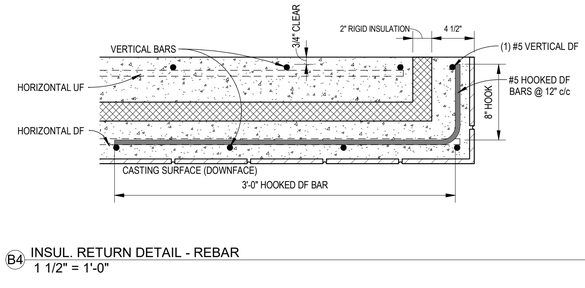

B4 INSUL. RETURN DETAIL - REBAR
1 1/2" = 1'-0"

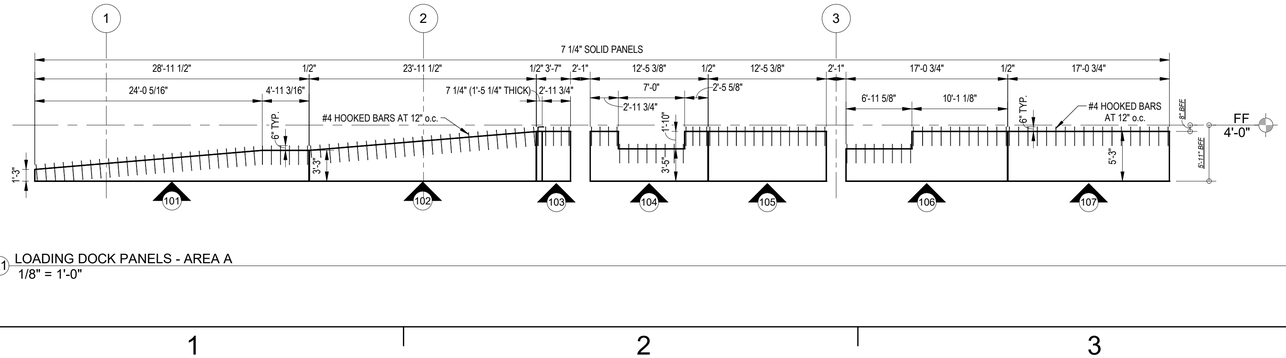

A1 LOADING DOCK PANELS - AREA A
1/8" = 1'-0"

GENERAL NOTES:

1. FOR THE STRUCTURAL NOTES AND ABBREVIATIONS SEE SHEETS S-001, S-002 AND S-003
2. FOR DIMENSIONS NOT SHOWN SEE THE ARCHITECTURAL DRAWINGS
3. THE TILT-UP PANEL DRAWINGS MUST BE USED IN CONJUNCTION WITH THE ARCHITECTURAL, STRUCTURAL, CIVIL, MECHANICAL, ELECTRICAL, AND PLUMBING DRAWINGS. GENERAL CONTRACTOR SHALL BE RESPOSIBLE FOR COORDINATION OF TILT-UP PANELS WITH OTHER TRADES.

TILT-UP PANEL DESIGN NOTES:

1. TILT-UP PANELS SHALL BE REINFORCED PER TYPICAL REINFORCEMENT LISTED BELOW, U.O.N. ON ELEVATIONS
   - A. TYPICAL REINFORCING FOR 11 1/4" INSULATED TILT-UP PANELS SHALL BE AS FOLLOWS:
     - a. #5 VERTICAL BARS @ 12" o.c. EACH FACE
     - b. #4 HORIZONTAL BARS @ 12" o.c. EACH FACE
   - B. TYPICAL REINFORCING FOR 7 1/4" SOLID TILT-UP INTERIOR PANELS SHALL BE AS FOLLOWS:
     - a. #5 VERTICAL BARS @ 16" o.c. EACH FACE
     - b. #4 HORIZONTAL BARS @ 16" o.c. EACH FACE
   - C. TYPICAL REINFORCING FOR 7 1/4" SOLID TILT-UP EXTERIOR DOCK PANELS SHALL BE AS FOLLOWS:
     - a. #5 VERTICAL BARS @ 12" o.c. CENTERED
       - HOOK VERTICAL BARS OUT OF TOP OF PANEL INTO EXTERIOR SLAB ON GRADE PER S-301 DETAILS
     - b. #5 HORIZONTAL BARS @ 12" o.c. CENTERED
2. TILT-UP PANEL CONCRETE SHALL HAVE NORMAL WEIGHT AGGREGATES WITH A NOMINAL MAXIMUM AGGREGATE SIZE OF 3/4" AND A MAXIMUM WATER/CEMENT RATIO OF 0.50.
3. MIN. CONCRETE COVER FOR TILT-UP PANEL REINFORCEMENT SHALL BE 3/4", U.O.N.
4. SEE S-001 FOR ADDITIONAL TILT-UP CONCRETE NOTES
5. PROVIDE #4 x 4'-0" DIAGONAL BARS AT ALL RE-ENTRANT CORNER LOCATIONS & ALL CORNERS OF OPENINGS
6. WHERE CALLED FOR, CLOSED TIES MAY BE MADE FROM A SINGLE, CLOSED LOOP REINFORCING BAR OR FROM INDIVIDUAL STIRRUPS AND CROSS TIES
7. SEE S-600 FOR BAR PLACEMENT DIAGRAMS
8. INSULATED TILT-UP PANELS SHALL BE INSULATED USING THERMOMASS SYSTEM SC INSULATION SYSTEM w/ THERMOMASS CC SERIES FIBER-COMPOSITE CONNECTORS. CC SERIES CONNECTORS SHALL BE PLACED AT 12" o.c. VERTICALLY & 16" o.c HORIZONTALLY, U.O.N. THERMOMASS X SERIES FIBER-COMPOSITE CONNECTORS SHALL ONLY BE REQUIRED WHERE SHOWN ON ELEVATIONS
9. MILL TEST REPORTS FOR REINFORCEMENT AND DOCUMENTATION OF CONCRETE MIXTURE CHARACTERISTICS SHALL BE SUBMITTED FOR REVIEW
10. THE FOLLOWING ASTM STANDARDS MUST BE CONFORMED TO AS APPLICABLE:

A.	PORTLAND CEMENT, TYPE I OR III:	ASTM C150
B.	REINFORCING STEEL, GRADE 60:	ASTM 615
C.	NORMAL WEIGHT AGGREGATES:	ASTM C33
D.	FLY ASH:	ASTM C618
E.	MIXING WATER:	ASTM C1602
F.	ADMIXTURES:	
a.	WATER REDUCTION:	ASTM C494
b.	SETTING TIME MODIF.:	ASTM C494
c.	AIR ENTRAINMENT:	ASTM C260
G.	CONCRETE BATCH/MIX/DELIV.:	ASTM C94 or C685

KEYPLAN

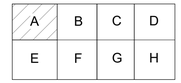

CITADEL CONTRACTORS INC.
3405 APEX PEAKWAY
APEX, N.C. 27502
TEL 1-919-362-5122
FAX 1-919-362-6910

This drawing and the design shown are the property of Citadel Contractors, Inc. The reproduction, copying or other use of this drawings without their written consent is prohibited and any infringement will be subject to legal action.

N

APPR	DATE	DESCRIPTION	SYM

NAVFAC

SEAL
NORTH CAROLINA PROFESSIONAL ENGINEER SEAL 036852 CHRISTOPHER E. JACKSON

W.M. Jordan COMPANY – A JOINT VENTURE –

Michael Baker INTERNATIONAL
100 AIRSIDE DRIVE
MOON TOWNSHIP, PA 15108 A/E INFO

APPROVED
FOR COMMANDER NAVFAC

ACTIVITY
MARINE CORPS BASE CAMP LEJEUNE

SATISFACTORY TO DATE

DES	CEJ	DRW	MTF	CHK	CEJ
PM / DM		TOWLER / ROOT			
BRANCH HEAD					
DESIGN DIRECTOR		R.L.Stephens, Jr.			
FIRE PROTECTION		DPS			

DEPARTMENT OF THE NAVY
NAVAL FACILITIES ENGINEERING SYSTEMS COMMAND
ATLANTIC DESIGN AND CONSTRUCTION
NAVAL FACILITIES ENGINEERING SYSTEMS COMMAND ATLANTIC
NORFOLK, VA
MCB CAMP LEJEUNE
JACKSONVILLE, NC
P1527 LOGCOM CSP WAREHOUSE
TILT-UP PANEL REINFORCEMENT - AREA A

SCALE:	AS NOTED
EPROJECT NO.:	1639600
CONSTR. CONTR. NO.	N40085-20-C-0059
NAVFAC DRAWING NO.	14111125
SHEET	116 OF 447

S-701

P1527 FINAL SUBMISSION- 11/18/2021

PLOTTED: 11/9/2021 4:02:44 PM

FILE NAME: BIM 360://HF PACKAGE 3/P1527 LOG COM CSP-1639600 Tilt-Up.rvt

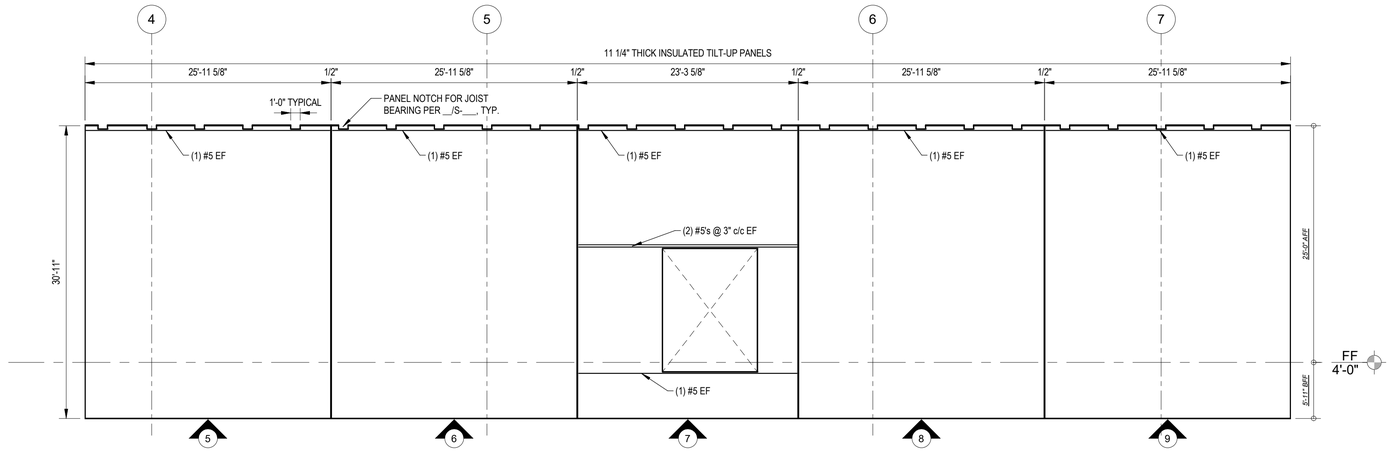

C1 GRIDLINE A PANELS - AREA B
1/8" = 1'-0"

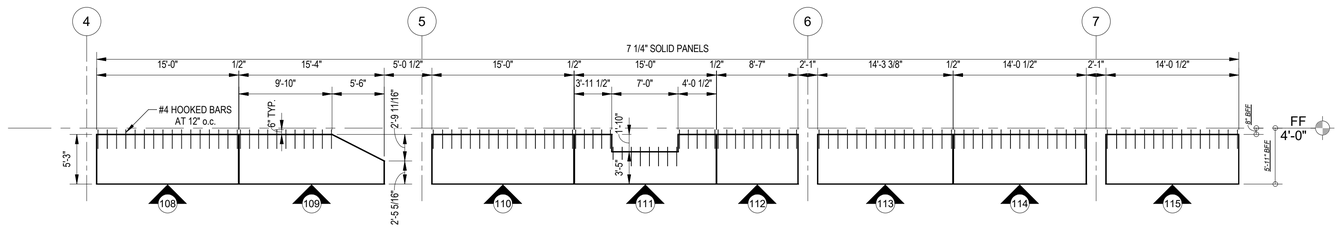

B1 LOADING DOCK PANELS - AREA B
1/8" = 1'-0"

GENERAL NOTES:

1. FOR THE STRUCTURAL NOTES AND ABBREVIATIONS SEE SHEETS S-001, S-002 AND S-003
2. FOR DIMENSIONS NOT SHOWN SEE THE ARCHITECTURAL DRAWINGS
3. THE TILT-UP PANEL DRAWINGS MUST BE USED IN CONJUNCTION WITH THE ARCHITECTURAL, STRUCTURAL, CIVIL, MECHANICAL, ELECTRICAL, AND PLUMBING DRAWINGS. GENERAL CONTRACTOR SHALL BE RESPOSIBLE FOR COORDINATION OF TILT-UP PANELS WITH OTHER TRADES.

TILT-UP PANEL DESIGN NOTES:

1. TILT-UP PANELS SHALL BE REINFORCED PER TYPICAL REINFORCEMENT LISTED BELOW, U.O.N. ON ELEVATIONS
   - A. TYPICAL REINFORCING FOR 11 1/4" INSULATED TILT-UP PANELS SHALL BE AS FOLLOWS:
     - a. #5 VERTICAL BARS @ 12" o.c. EACH FACE
     - b. #4 HORIZONTAL BARS @ 12" o.c. EACH FACE
   - B. TYPICAL REINFORCING FOR 7 1/4" SOLID TILT-UP INTERIOR PANELS SHALL BE AS FOLLOWS:
     - a. #5 VERTICAL BARS @ 16" o.c. EACH FACE
     - b. #4 HORIZONTAL BARS @ 16" o.c. EACH FACE
   - C. TYPICAL REINFORCING FOR 7 1/4" SOLID TILT-UP EXTERIOR DOCK PANELS SHALL BE AS FOLLOWS:
     - a. #5 VERTICAL BARS @ 12" o.c. CENTERED
       - HOOK VERTICAL BARS OUT OF TOP OF PANEL INTO EXTERIOR SLAB ON GRADE PER S-301 DETAILS
     - b. #5 HORIZONTAL BARS @ 12" o.c. CENTERED
2. TILT-UP PANEL CONCRETE SHALL HAVE NORMAL WEIGHT AGGREGATES WITH A NOMINAL MAXIMUM AGGREGATE SIZE OF 3/4" AND A MAXIMUM WATER/CEMENT RATIO OF 0.50.
3. MIN. CONCRETE COVER FOR TILT-UP PANEL REINFORCEMENT SHALL BE 3/4", U.O.N.
4. SEE S-001 FOR ADDITIONAL TILT-UP CONCRETE NOTES
5. PROVIDE #4 x 4'-0" DIAGONAL BARS AT ALL RE-ENTRANT CORNER LOCATIONS & ALL CORNERS OF OPENINGS
6. WHERE CALLED FOR, CLOSED TIES MAY BE MADE FROM A SINGLE, CLOSED LOOP REINFORCING BAR OR FROM INDIVIDUAL STIRRUPS AND CROSS TIES
7. SEE S-600 FOR BAR PLACEMENT DIAGRAMS
8. INSULATED TILT-UP PANELS SHALL BE INSULATED USING THERMOMASS SYSTEM SC INSULATION SYSTEM w/ THERMOMASS CC SERIES FIBER-COMPOSITE CONNECTORS. CC SERIES CONNECTORS SHALL BE PLACED AT 12" o.c. VERTICALLY & 16" o.c HORIZONTALLY, U.O.N. THERMOMASS X SERIES FIBER-COMPOSITE CONNECTORS SHALL ONLY BE REQUIRED WHERE SHOWN ON ELEVATIONS
9. MILL TEST REPORTS FOR REINFORCEMENT AND DOCUMENTATION OF CONCRETE MIXTURE CHARACTERISTICS SHALL BE SUBMITTED FOR REVIEW
10. THE FOLLOWING ASTM STANDARDS MUST BE CONFORMED TO AS APPLICABLE:

A.	PORTLAND CEMENT, TYPE I OR III:	ASTM C150
B.	REINFORCING STEEL, GRADE 60:	ASTM 615
C.	NORMAL WEIGHT AGGREGATES:	ASTM C33
D.	FLY ASH:	ASTM C618
E.	MIXING WATER:	ASTM C1602
F.	ADMIXTURES:	
a.	WATER REDUCTION:	ASTM C494
b.	SETTING TIME MODIF.:	ASTM C494
c.	AIR ENTRAINMENT:	ASTM C260
G.	CONCRETE BATCH/MIX/DELIV.:	ASTM C94 or C685

KEYPLAN

A	B	C	D
E	F	G	H

CITADEL CONTRACTORS INC
3405 APEX PEAKWAY
APEX, N.C. 27502
TEL. 1-919-362-5122
FAX 1-919-362-6910

This drawing and the design shown are the property of Citadel Contractors, Inc. The reproduction, copying or other use of this drawings without their written consent is prohibited and any infringement will be subject to legal action.

N

APPR	DATE	DESCRIPTION	SYM

NAVFAC

SEAL
NORTH CAROLINA PROFESSIONAL SEAL 036852 ENGINEER CHRISTOPHER E. JACKSON

W.M. Jordan COMPANY — A JOINT VENTURE —

IRQ

Michael Baker INTERNATIONAL
100 AIRSIDE DRIVE
MOON TOWNSHIP, PA 15108 A/E INFO

APPROVED
FOR COMMANDER NAVFAC

ACTIVITY
MARINE CORPS BASE CAMP LEJEUNE

SATISFACTORY TO DATE			
DES CEJ	DRW MTF	CHK CEJ	
PM / DM	TOWLER / ROOT		
BRANCH HEAD			
DESIGN DIRECTOR	R.L.Stephens, Jr.		
FIRE PROTECTION	DPS		

DEPARTMENT OF THE NAVY
NAVAL FACILITIES ENGINEERING SYSTEMS COMMAND
ATLANTIC DESIGN AND CONSTRUCTION
MCB CAMP LEJEUNE

NAVAL FACILITIES ENGINEERING SYSTEMS COMMAND ATLANTIC
NORFOLK, VA
JACKSONVILLE, NC

P1527 LOGCOM CSP WAREHOUSE

TILT-UP PANEL REINFORCEMENT - AREA B

SCALE:	AS NOTED
EPROJECT NO.:	1639600
CONSTR. CONTR. NO.	N40085-20-C-0059
NAVFAC DRAWING NO.	14111126
SHEET	117 OF 4447

S-702

P1527 FINAL SUBMISSION- 11/18/2021

PLOTTED: 11/9/2021 4:02:45 PM

FILE NAME: BIM 360://HF PACKAGE 3/P1527 LOG COM CSP-1639600 Tilt-Up.rvt

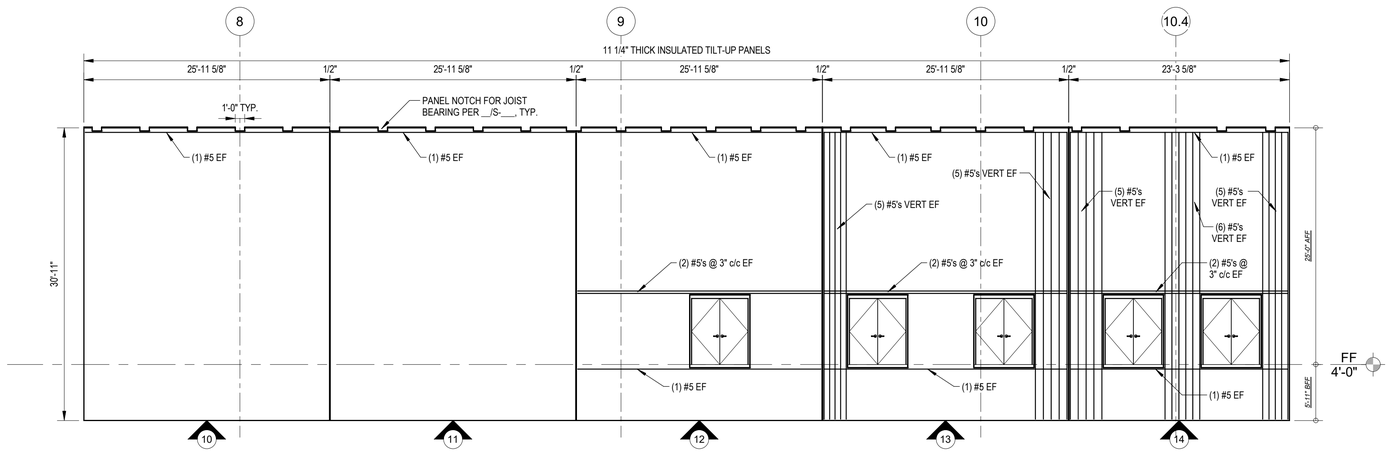

C1 GRIDLINE A PANELS - AREA C
1/8" = 1'-0"

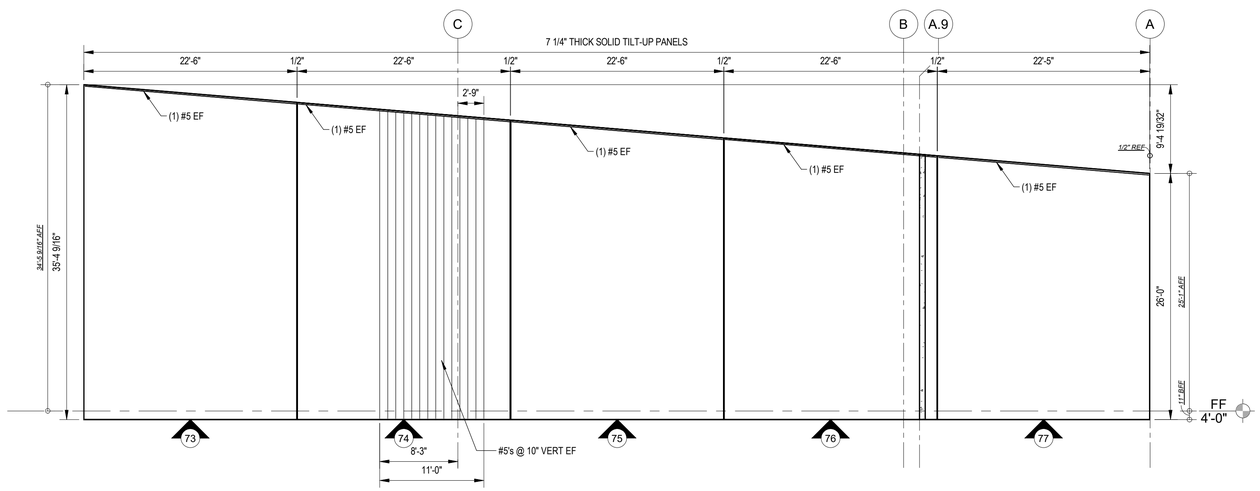

B1 GRIDLINE 10.4 PANELS - AREA C
1/8" = 1'-0"

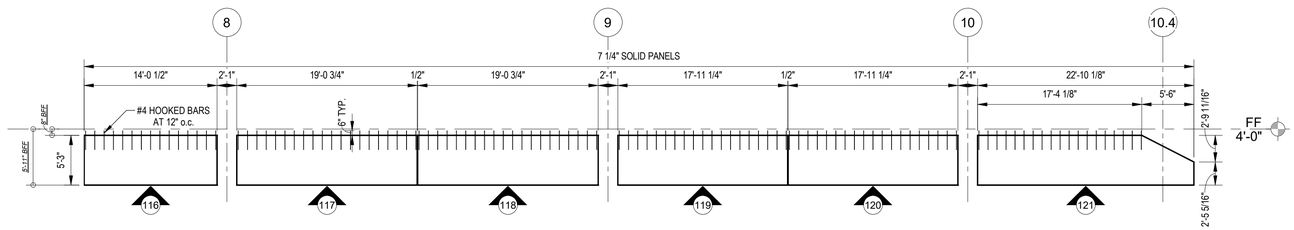

A1 LOADING DOCK PANELS - AREA C
1/8" = 1'-0"

GENERAL NOTES:

1. FOR THE STRUCTURAL NOTES AND ABBREVIATIONS SEE SHEETS S-001, S-002 AND S-003
2. FOR DIMENSIONS NOT SHOWN SEE THE ARCHITECTURAL DRAWINGS
3. THE TILT-UP PANEL DRAWINGS MUST BE USED IN CONJUNCTION WITH THE ARCHITECTURAL, STRUCTURAL, CIVIL, MECHANICAL, ELECTRICAL, AND PLUMBING DRAWINGS. GENERAL CONTRACTOR SHALL BE RESPOSIBLE FOR COORDINATION OF TILT-UP PANELS WITH OTHER TRADES.

TILT-UP PANEL DESIGN NOTES:

1. TILT-UP PANELS SHALL BE REINFORCED PER TYPICAL REINFORCEMENT LISTED BELOW, U.O.N. ON ELEVATIONS
   - A. TYPICAL REINFORCING FOR 11 1/4" INSULATED TILT-UP PANELS SHALL BE AS FOLLOWS:
     - a. #5 VERTICAL BARS @ 12" o.c. EACH FACE
     - b. #4 HORIZONTAL BARS @ 12" o.c. EACH FACE
   - B. TYPICAL REINFORCING FOR 7 1/4" SOLID TILT-UP INTERIOR PANELS SHALL BE AS FOLLOWS:
     - a. #5 VERTICAL BARS @ 16" o.c. EACH FACE
     - b. #4 HORIZONTAL BARS @ 16" o.c. EACH FACE
   - C. TYPICAL REINFORCING FOR 7 1/4" SOLID TILT-UP EXTERIOR DOCK PANELS SHALL BE AS FOLLOWS:
     - a. #5 VERTICAL BARS @ 12" o.c. CENTERED
       - HOOK VERTICAL BARS OUT OF TOP OF PANEL INTO EXTERIOR SLAB ON GRADE PER S-301 DETAILS
     - b. #5 HORIZONTAL BARS @ 12" o.c. CENTERED
2. TILT-UP PANEL CONCRETE SHALL HAVE NORMAL WEIGHT AGGREGATES WITH A NOMINAL MAXIMUM AGGREGATE SIZE OF 3/4" AND A MAXIMUM WATER/CEMENT RATIO OF 0.50.
3. MIN. CONCRETE COVER FOR TILT-UP PANEL REINFORCEMENT SHALL BE 3/4", U.O.N.
4. SEE S-001 FOR ADDITIONAL TILT-UP CONCRETE NOTES
5. PROVIDE #4 x 4'-0" DIAGONAL BARS AT ALL RE-ENTRANT CORNER LOCATIONS & ALL CORNERS OF OPENINGS
6. WHERE CALLED FOR, CLOSED TIES MAY BE MADE FROM A SINGLE, CLOSED LOOP REINFORCING BAR OR FROM INDIVIDUAL STIRRUPS AND CROSS TIES
7. SEE S-600 FOR BAR PLACEMENT DIAGRAMS
8. INSULATED TILT-UP PANELS SHALL BE INSULATED USING THERMOMASS SYSTEM SC INSULATION SYSTEM w/ THERMOMASS CC SERIES FIBER-COMPOSITE CONNECTORS. CC SERIES CONNECTORS SHALL BE PLACED AT 12" o.c. VERTICALLY & 16" o.c HORIZONTALLY, U.O.N. THERMOMASS X SERIES FIBER-COMPOSITE CONNECTORS SHALL ONLY BE REQUIRED WHERE SHOWN ON ELEVATIONS
9. MILL TEST REPORTS FOR REINFORCEMENT AND DOCUMENTATION OF CONCRETE MIXTURE CHARACTERISTICS SHALL BE SUBMITTED FOR REVIEW
10. THE FOLLOWING ASTM STANDARDS MUST BE CONFORMED TO AS APPLICABLE:

A.	PORTLAND CEMENT, TYPE I OR III:	ASTM C150
B.	REINFORCING STEEL, GRADE 60:	ASTM 615
C.	NORMAL WEIGHT AGGREGATES:	ASTM C33
D.	FLY ASH:	ASTM C618
E.	MIXING WATER:	ASTM C1602
F.	ADMIXTURES:	
a.	WATER REDUCTION:	ASTM C494
b.	SETTING TIME MODIF.:	ASTM C494
c.	AIR ENTRAINMENT:	ASTM C260
G.	CONCRETE BATCH/MIX/DELIV.:	ASTM C94 or C685

KEYPLAN

A	B	C	D
E	F	G	H

CITADEL CONTRACTORS INC.
3405 APEX PEAKWAY
APEX, N.C. 27502
TEL 1-919-362-5122
FAX 1-919-362-6910

This drawing and the design shown are the property of Citadel Contractors, Inc. The reproduction, copying or other use of this drawings without their written consent is prohibited and any infringement will be subject to legal action.

N

APPR | DATE | DESCRIPTION | SYM

NAVFAC

NORTH CAROLINA PROFESSIONAL SEAL 036852 ENGINEER CHRISTOPHER E. JACKSON
SEAL

W.M. Jordan COMPANY — A JOINT VENTURE —

Michael Baker INTERNATIONAL
100 AIRSIDE DRIVE
MOON TOWNSHIP, PA 15108 A/E INFO

APPROVED

FOR COMMANDER NAVFAC

ACTIVITY
MARINE CORPS BASE CAMP LEJEUNE

SATISFACTORY TO DATE

DES CEJ	DRW MTF	CHK CEJ
PM / DM	TOWLER / ROOT	
BRANCH HEAD		
DESIGN DIRECTOR	R.L.Stephens, Jr.	
FIRE PROTECTION	DPS	

DEPARTMENT OF THE NAVY
NAVAL FACILITIES ENGINEERING SYSTEMS COMMAND
ATLANTIC DESIGN AND CONSTRUCTION
MCB CAMP LEJEUNE

NAVAL FACILITIES ENGINEERING SYSTEMS COMMAND ATLANTIC
NORFOLK, VA
JACKSONVILLE, NC

P1527 LOGCOM CSP WAREHOUSE

TILT-UP PANEL REINFORCEMENT - AREA C

SCALE: AS NOTED
EPROJECT NO.: 1639600
CONSTR. CONTR. NO. N40085-20-C-0059
NAVFAC DRAWING NO. 14111127
SHEET 118 OF 447

S-703

P1527 FINAL SUBMISSION- 11/18/2021

PLOTTED: 11/9/2021 4:02:46 PM
FILE NAME: BIM 360:/HF PACKAGE 3/P1527 LOG COM CSP-1639600 Tilt-Up.rvt

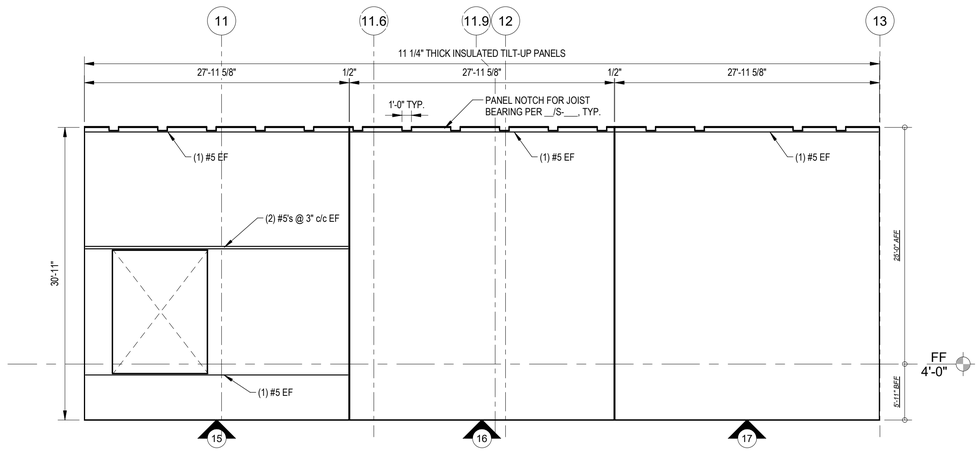

C1 GRIDLINE A PANELS - AREA D
1/8" = 1'-0"

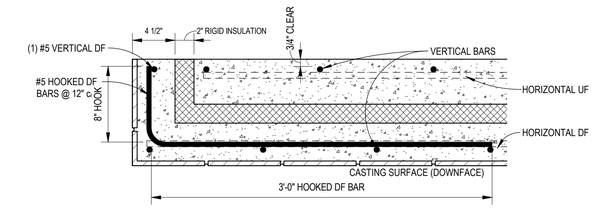

C3 INSUL. RETURN DETAIL - REBAR
1 1/2" = 1'-0"

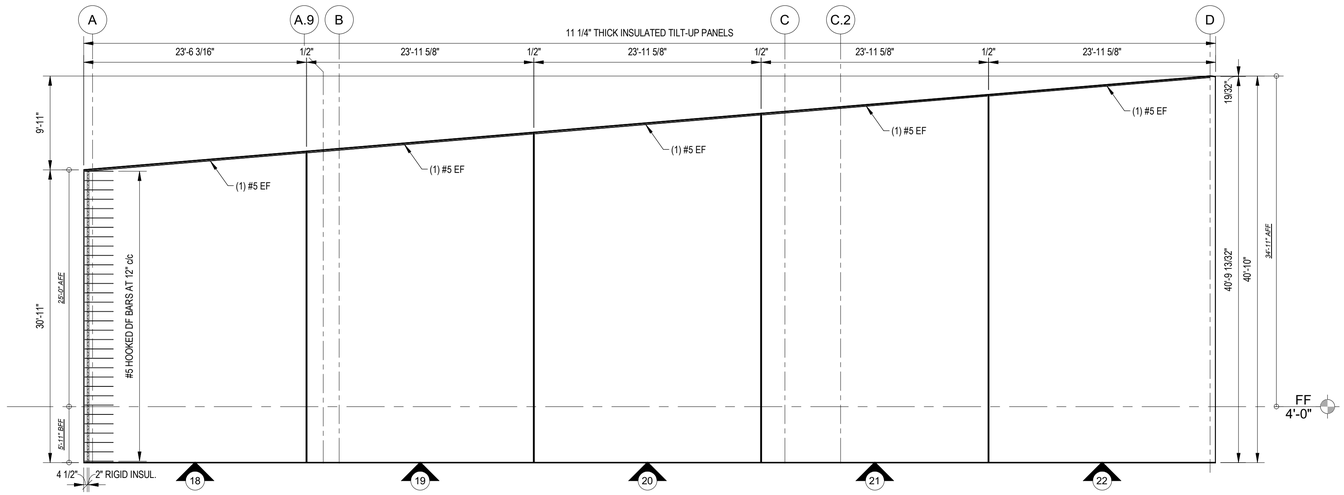

B1 GRIDLINE 13 PANELS - AREA D
1/8" = 1'-0"

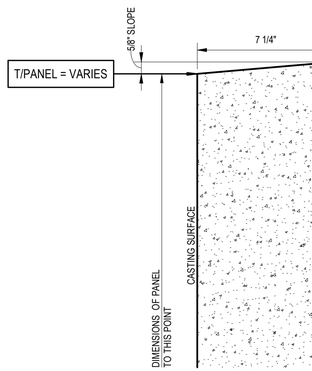

B4 PANEL TOP DETAIL - 7 1/4" SOLID PANELS
3" = 1'-0"

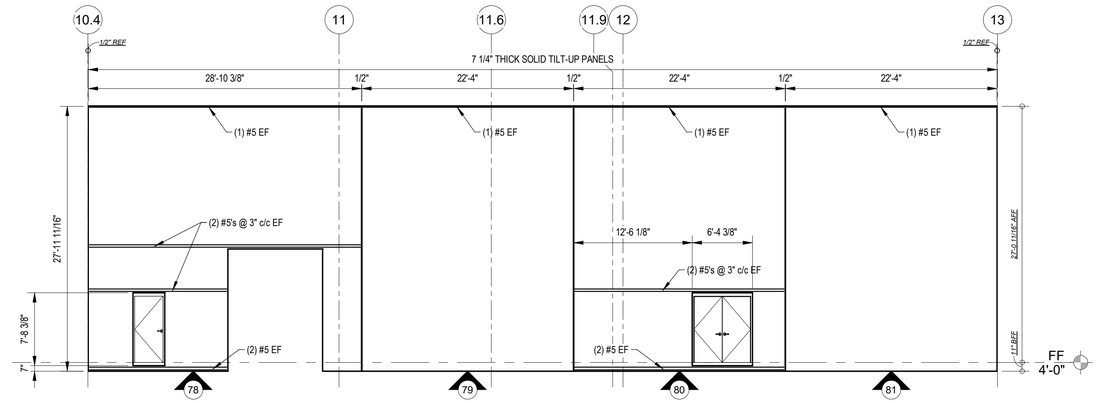

A1 GRIDLINE A.9 PANELS - AREA D
1/8" = 1'-0"

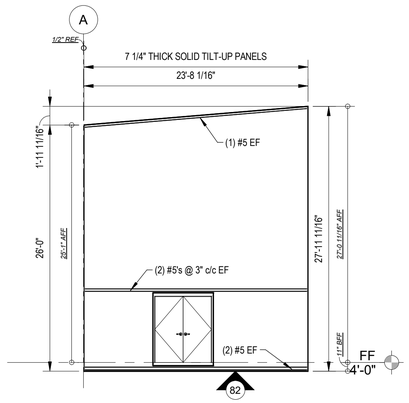

A3 PANEL 82 - AREA D
1/8" = 1'-0"

GENERAL NOTES:

1. FOR THE STRUCTURAL NOTES AND ABBREVIATIONS SEE SHEETS S-001, S-002 AND S-003
2. FOR DIMENSIONS NOT SHOWN SEE THE ARCHITECTURAL DRAWINGS
3. THE TILT-UP PANEL DRAWINGS MUST BE USED IN CONJUNCTION WITH THE ARCHITECTURAL, STRUCTURAL, CIVIL, MECHANICAL, ELECTRICAL, AND PLUMBING DRAWINGS. GENERAL CONTRACTOR SHALL BE RESPOSIBLE FOR COORDINATION OF TILT-UP PANELS WITH OTHER TRADES.

TILT-UP PANEL DESIGN NOTES:

1. TILT-UP PANELS SHALL BE REINFORCED PER TYPICAL REINFORCEMENT LISTED BELOW, U.O.N. ON ELEVATIONS
   - A. TYPICAL REINFORCING FOR 11 1/4" INSULATED TILT-UP PANELS SHALL BE AS FOLLOWS:
     - a. #5 VERTICAL BARS @ 12" o.c. EACH FACE
     - b. #4 HORIZONTAL BARS @ 12" o.c. EACH FACE
   - B. TYPICAL REINFORCING FOR 7 1/4" SOLID TILT-UP INTERIOR PANELS SHALL BE AS FOLLOWS:
     - a. #5 VERTICAL BARS @ 16" o.c. EACH FACE
     - b. #4 HORIZONTAL BARS @ 16" o.c. EACH FACE
   - C. TYPICAL REINFORCING FOR 7 1/4" SOLID TILT-UP EXTERIOR DOCK PANELS SHALL BE AS FOLLOWS:
     - a. #5 VERTICAL BARS @ 12" o.c. CENTERED
       - HOOK VERTICAL BARS OUT OF TOP OF PANEL INTO EXTERIOR SLAB ON GRADE PER S-301 DETAILS
     - b. #5 HORIZONTAL BARS @ 12" o.c. CENTERED
2. TILT-UP PANEL CONCRETE SHALL HAVE NORMAL WEIGHT AGGREGATES WITH A NOMINAL MAXIMUM AGGREGATE SIZE OF 3/4" AND A MAXIMUM WATER/CEMENT RATIO OF 0.50.
3. MIN. CONCRETE COVER FOR TILT-UP PANEL REINFORCEMENT SHALL BE 3/4", U.O.N.
4. SEE S-001 FOR ADDITIONAL TILT-UP CONCRETE NOTES
5. PROVIDE #4 x 4'-0" DIAGONAL BARS AT ALL RE-ENTRANT CORNER LOCATIONS & ALL CORNERS OF OPENINGS
6. WHERE CALLED FOR, CLOSED TIES MAY BE MADE FROM A SINGLE, CLOSED LOOP REINFORCING BAR OR FROM INDIVIDUAL STIRRUPS AND CROSS TIES
7. SEE S-600 FOR BAR PLACEMENT DIAGRAMS
8. INSULATED TILT-UP PANELS SHALL BE INSULATED USING THERMOMASS SYSTEM SC INSULATION SYSTEM w/ THERMOMASS CC SERIES FIBER-COMPOSITE CONNECTORS. CC SERIES CONNECTORS SHALL BE PLACED AT 12" o.c. VERTICALLY & 16" o.c HORIZONTALLY, U.O.N. THERMOMASS X SERIES FIBER-COMPOSITE CONNECTORS SHALL ONLY BE REQUIRED WHERE SHOWN ON ELEVATIONS
9. MILL TEST REPORTS FOR REINFORCEMENT AND DOCUMENTATION OF CONCRETE MIXTURE CHARACTERISTICS SHALL BE SUBMITTED FOR REVIEW
10. THE FOLLOWING ASTM STANDARDS MUST BE CONFORMED TO AS APPLICABLE:

A.	PORTLAND CEMENT, TYPE I OR III:	ASTM C150
B.	REINFORCING STEEL, GRADE 60:	ASTM 615
C.	NORMAL WEIGHT AGGREGATES:	ASTM C33
D.	FLY ASH:	ASTM C618
E.	MIXING WATER:	ASTM C1602
F.	ADMIXTURES:	
a.	WATER REDUCTION:	ASTM C494
b.	SETTING TIME MODIF.:	ASTM C494
c.	AIR ENTRAINMENT:	ASTM C260
G.	CONCRETE BATCH/MIX/DELIV.:	ASTM C94 or C685

KEYPLAN

A	B	C	D
E	F	G	H

CITADEL CONTRACTORS INC
3405 APEX PEAKWAY
APEX, N.C. 27502
TEL 1-919-362-5122
FAX 1-919-362-6910

This drawing and the design shown are the property of Citadel Contractors, Inc. The reproduction, copying or other use of this drawings without their written consent is prohibited and any infringement will be subject to legal action.

N

APPR	DATE	DESCRIPTION	SYM

NAVFAC

SEAL
NORTH CAROLINA PROFESSIONAL SEAL 036852 ENGINEER CHRISTOPHER E. JACKSON

W.M. Jordan COMPANY
~A JOINT VENTURE~

Michael Baker INTERNATIONAL
100 AIRSIDE DRIVE
MOON TOWNSHIP, PA 15108 A/E INFO

APPROVED

FOR COMMANDER NAVFAC

ACTIVITY
MARINE CORPS BASE CAMP LEJEUNE

SATISFACTORY TO DATE

DES CEJ	DRW MTF	CHK CEJ
PM / DM	TOWLER / ROOT	
BRANCH HEAD		
DESIGN DIRECTOR	R.L.Stephens, Jr.	
FIRE PROTECTION	DPS	

DEPARTMENT OF THE NAVY
NAVAL FACILITIES ENGINEERING SYSTEMS COMMAND
ATLANTIC DESIGN AND CONSTRUCTION

NAVAL FACILITIES ENGINEERING SYSTEMS COMMAND ATLANTIC
NORFOLK, VA

MCB CAMP LEJEUNE
JACKSONVILLE, NC

P1527 LOGCOM CSP WAREHOUSE

TILT-UP PANEL REINFORCEMENT - AREA D

SCALE:	AS NOTED
EPROJECT NO.:	1639600
CONSTR. CONTR. NO.	N40085-20-C-0059
NAVFAC DRAWING NO.	14111128
SHEET	119 OF 447

S-704

P1527 FINAL SUBMISSION- 11/18/2021

PLOTTED: 11/9/2021 4:02:47 PM

FILE NAME: BIM 360://HF PACKAGE 3/P1527 LOG COM CSP-1639600 Tilt-Up.rvt

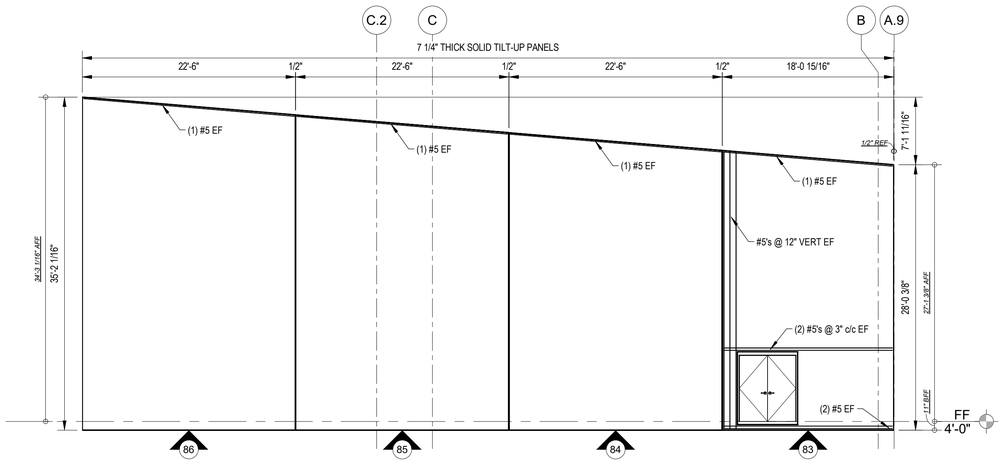

C1 GRIDLINE 11.9 PANELS - AREA D
1/8" = 1'-0"

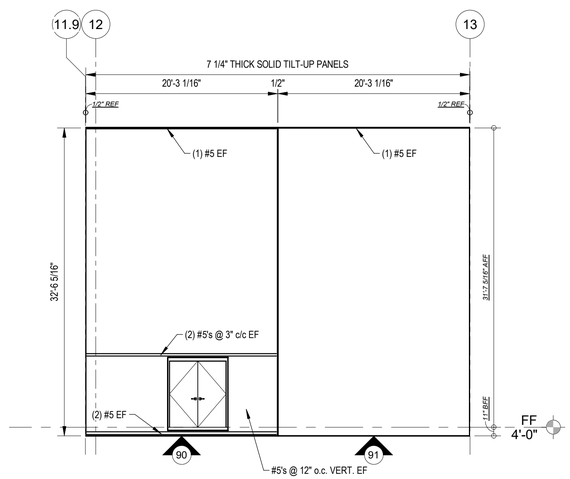

B1 GRIDLINE C.2 PANELS - AREA D
1/8" = 1'-0"

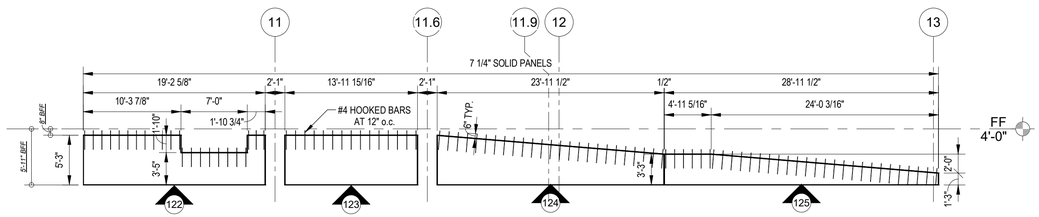

A1 LOADING DOCK PANELS - AREA D
1/8" = 1'-0"

GENERAL NOTES:

1. FOR THE STRUCTURAL NOTES AND ABBREVIATIONS SEE SHEETS S-001, S-002 AND S-003
2. FOR DIMENSIONS NOT SHOWN SEE THE ARCHITECTURAL DRAWINGS
3. THE TILT-UP PANEL DRAWINGS MUST BE USED IN CONJUNCTION WITH THE ARCHITECTURAL, STRUCTURAL, CIVIL, MECHANICAL, ELECTRICAL, AND PLUMBING DRAWINGS. GENERAL CONTRACTOR SHALL BE RESPOSIBLE FOR COORDINATION OF TILT-UP PANELS WITH OTHER TRADES.

TILT-UP PANEL DESIGN NOTES:

1. TILT-UP PANELS SHALL BE REINFORCED PER TYPICAL REINFORCEMENT LISTED BELOW, U.O.N. ON ELEVATIONS
   - A. TYPICAL REINFORCING FOR 11 1/4" INSULATED TILT-UP PANELS SHALL BE AS FOLLOWS:
     - a. #5 VERTICAL BARS @ 12" o.c. EACH FACE
     - b. #4 HORIZONTAL BARS @ 12" o.c. EACH FACE
   - B. TYPICAL REINFORCING FOR 7 1/4" SOLID TILT-UP INTERIOR PANELS SHALL BE AS FOLLOWS:
     - a. #5 VERTICAL BARS @ 16" o.c. EACH FACE
     - b. #4 HORIZONTAL BARS @ 16" o.c. EACH FACE
   - C. TYPICAL REINFORCING FOR 7 1/4" SOLID TILT-UP EXTERIOR DOCK PANELS SHALL BE AS FOLLOWS:
     - a. #5 VERTICAL BARS @ 12" o.c. CENTERED
       - HOOK VERTICAL BARS OUT OF TOP OF PANEL INTO EXTERIOR SLAB ON GRADE PER S-301 DETAILS
     - b. #5 HORIZONTAL BARS @ 12" o.c. CENTERED
2. TILT-UP PANEL CONCRETE SHALL HAVE NORMAL WEIGHT AGGREGATES WITH A NOMINAL MAXIMUM AGGREGATE SIZE OF 3/4" AND A MAXIMUM WATER/CEMENT RATIO OF 0.50.
3. MIN. CONCRETE COVER FOR TILT-UP PANEL REINFORCEMENT SHALL BE 3/4", U.O.N.
4. SEE S-001 FOR ADDITIONAL TILT-UP CONCRETE NOTES
5. PROVIDE #4 x 4'-0" DIAGONAL BARS AT ALL RE-ENTRANT CORNER LOCATIONS & ALL CORNERS OF OPENINGS
6. WHERE CALLED FOR, CLOSED TIES MAY BE MADE FROM A SINGLE, CLOSED LOOP REINFORCING BAR OR FROM INDIVIDUAL STIRRUPS AND CROSS TIES
7. SEE S-600 FOR BAR PLACEMENT DIAGRAMS
8. INSULATED TILT-UP PANELS SHALL BE INSULATED USING THERMOMASS SYSTEM SC INSULATION SYSTEM w/ THERMOMASS CC SERIES FIBER-COMPOSITE CONNECTORS. CC SERIES CONNECTORS SHALL BE PLACED AT 12" o.c. VERTICALLY & 16" o.c HORIZONTALLY, U.O.N. THERMOMASS X SERIES FIBER-COMPOSITE CONNECTORS SHALL ONLY BE REQUIRED WHERE SHOWN ON ELEVATIONS
9. MILL TEST REPORTS FOR REINFORCEMENT AND DOCUMENTATION OF CONCRETE MIXTURE CHARACTERISTICS SHALL BE SUBMITTED FOR REVIEW
10. THE FOLLOWING ASTM STANDARDS MUST BE CONFORMED TO AS APPLICABLE:

A.	PORTLAND CEMENT, TYPE I OR III:	ASTM C150
B.	REINFORCING STEEL, GRADE 60:	ASTM 615
C.	NORMAL WEIGHT AGGREGATES:	ASTM C33
D.	FLY ASH:	ASTM C618
E.	MIXING WATER:	ASTM C1602
F.	ADMIXTURES:	
a.	WATER REDUCTION:	ASTM C494
b.	SETTING TIME MODIF.:	ASTM C494
c.	AIR ENTRAINMENT:	ASTM C260
G.	CONCRETE BATCH/MIX/DELIV.:	ASTM C94 or C685

KEYPLAN

A	B	C	D
E	F	G	H

CITADEL CONTRACTORS INC
3405 APEX PEAKWAY
APEX, N.C. 27502
TEL 1-919-362-5122
FAX 1-919-362-6910

This drawing and the design shown are the property of Citadel Contractors, Inc. The reproduction, copying or other use of this drawings without their written consent is prohibited and any infringement will be subject to legal action.

N

APPR | DATE | SYM | DESCRIPTION

NAVFAC

NORTH CAROLINA PROFESSIONAL SEAL 036852 ENGINEER CHRISTOPHER E. JACKSON
SEAL

WNM Jordan COMPANY — A JOINT VENTURE —

Michael Baker INTERNATIONAL
100 AIRSIDE DRIVE
MOON TOWNSHIP, PA 15108 A/E INFO

APPROVED

FOR COMMANDER NAVFAC

ACTIVITY
MARINE CORPS BASE CAMP LEJEUNE

SATISFACTORY TO DATE

DES	CEJ	DRW	MTF	CHK	CEJ
PM / DM		TOWLER / ROOT			
BRANCH HEAD					
DESIGN DIRECTOR		R.L.Stephens, Jr.			
FIRE PROTECTION		DPS			

DEPARTMENT OF THE NAVY
NAVAL FACILITIES ENGINEERING SYSTEMS COMMAND
ATLANTIC DESIGN AND CONSTRUCTION
MCB CAMP LEJEUNE

NAVAL FACILITIES ENGINEERING SYSTEMS COMMAND ATLANTIC
NORFOLK, VA
JACKSONVILLE, NC

P1527 LOGCOM CSP WAREHOUSE

TILT-UP PANEL REINFORCEMENT - AREA D - CON'T

SCALE:	AS NOTED
EPROJECT NO.:	1639600
CONSTR. CONTR. NO.	N40085-20-C-0059
NAVFAC DRAWING NO.	14111129
SHEET	120 OF 447

S-705

P1527 FINAL SUBMISSION- 11/18/2021

PLOTTED: 11/9/2021 4:02:48 PM
FILE NAME: BIM 360/IHF PACKAGE 3/P1527 LOG COM CSP-1639600 Tilt-Up.rvt

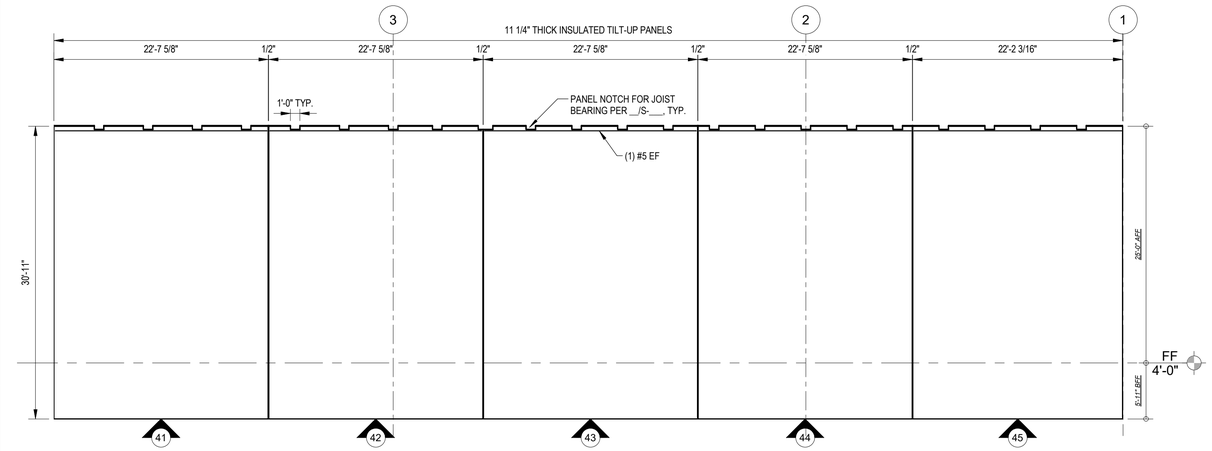

C1 GRIDLINE G PANELS - AREA E
1/8" = 1'-0"

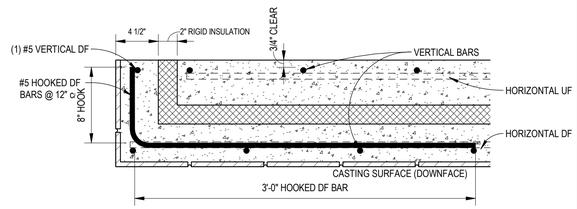

C3 INSUL. RETURN DETAIL - REBAR
1 1/2" = 1'-0"

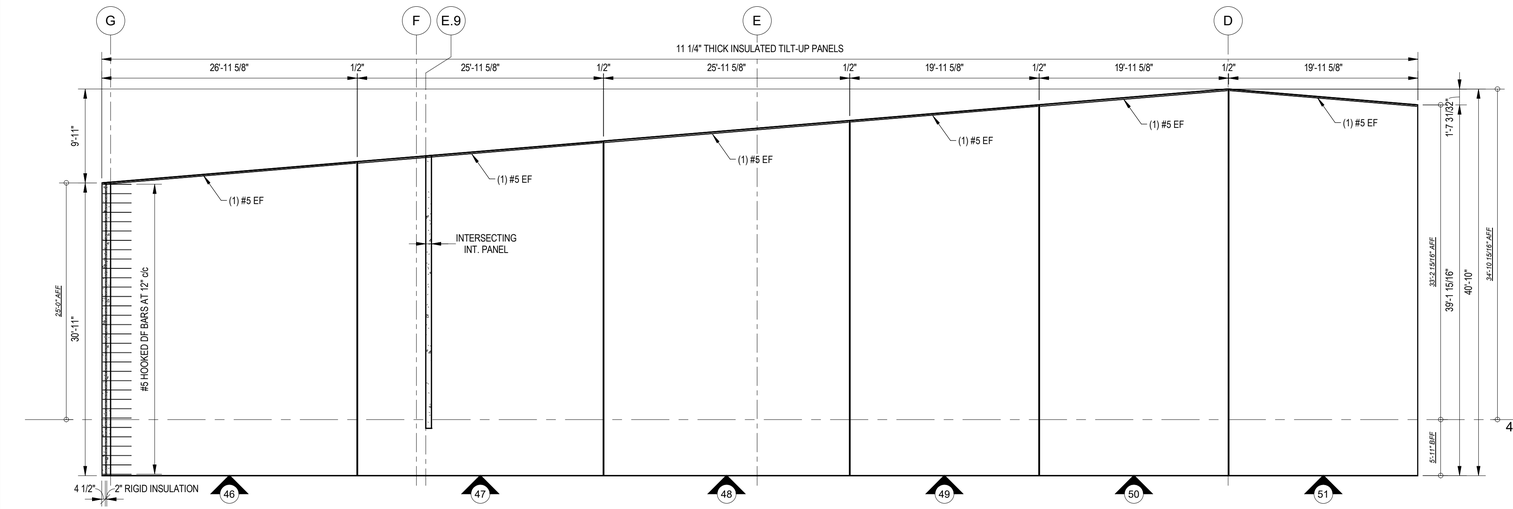

B1 GRIDLINE 1 PANELS - AREA E
1/8" = 1'-0"

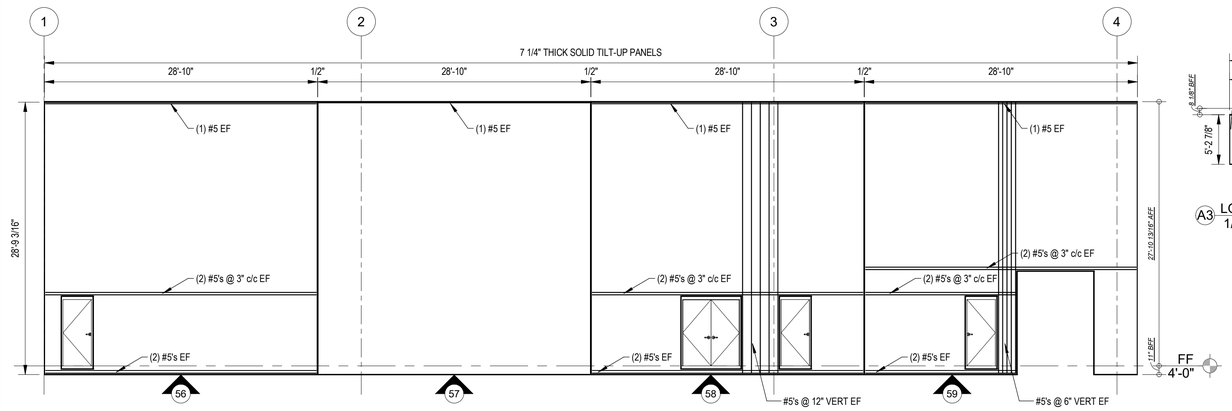

A1 GRIDLINE E.9 PANELS - AREA E
1/8" = 1'-0"

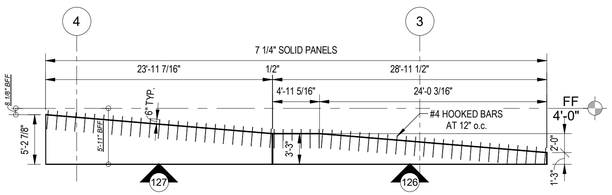

A3 LOADING DOCK PANELS - AREA E
1/8" = 1'-0"

GENERAL NOTES:

1. FOR THE STRUCTURAL NOTES AND ABBREVIATIONS SEE SHEETS S-001, S-002 AND S-003
2. FOR DIMENSIONS NOT SHOWN SEE THE ARCHITECTURAL DRAWINGS
3. THE TILT-UP PANEL DRAWINGS MUST BE USED IN CONJUNCTION WITH THE ARCHITECTURAL, STRUCTURAL, C/VIL, MECHANICAL, ELECTRICAL, AND PLUMBING DRAWINGS. GENERAL CONTRACTOR SHALL BE RESPOSIBLE FOR COORDINATION OF TILT-UP PANELS WITH OTHER TRADES.

TILT-UP PANEL DESIGN NOTES:

1. TILT-UP PANELS SHALL BE REINFORCED PER TYPICAL REINFORCEMENT LISTED BELOW, U.O.N. ON ELEVATIONS
   - A. TYPICAL REINFORCING FOR 11 1/4" INSULATED TILT-UP PANELS SHALL BE AS FOLLOWS:
     - a. #5 VERTICAL BARS @ 12" o.c. EACH FACE
     - b. #4 HORIZONTAL BARS @ 12" o.c. EACH FACE
   - B. TYPICAL REINFORCING FOR 7 1/4" SOLID TILT-UP INTERIOR PANELS SHALL BE AS FOLLOWS:
     - a. #5 VERTICAL BARS @ 16" o.c. EACH FACE
     - b. #4 HORIZONTAL BARS @ 16" o.c. EACH FACE
   - C. TYPICAL REINFORCING FOR 7 1/4" SOLID TILT-UP EXTERIOR DOCK PANELS SHALL BE AS FOLLOWS:
     - a. #5 VERTICAL BARS @ 12" o.c. CENTERED
       - HOOK VERTICAL BARS OUT OF TOP OF PANEL INTO EXTERIOR SLAB ON GRADE PER S-301 DETAILS
     - b. #5 HORIZONTAL BARS @ 12" o.c. CENTERED
2. TILT-UP PANEL CONCRETE SHALL HAVE NORMAL WEIGHT AGGREGATES WITH A NOMINAL MAXIMUM AGGREGATE SIZE OF 3/4" AND A MAXIMUM WATER/CEMENT RATIO OF 0.50.
3. MIN. CONCRETE COVER FOR TILT-UP PANEL REINFORCEMENT SHALL BE 3/4", U.O.N.
4. SEE S-001 FOR ADDITIONAL TILT-UP CONCRETE NOTES
5. PROVIDE #4 x 4'-0" DIAGONAL BARS AT ALL RE-ENTRANT CORNER LOCATIONS & ALL CORNERS OF OPENINGS
6. WHERE CALLED FOR, CLOSED TIES MAY BE MADE FROM A SINGLE, CLOSED LOOP REINFORCING BAR OR FROM INDIVIDUAL STIRRUPS AND CROSS TIES
7. SEE S-600 FOR BAR PLACEMENT DIAGRAMS
8. INSULATED TILT-UP PANELS SHALL BE INSULATED USING THERMOMASS SYSTEM SC INSULATION SYSTEM w/ THERMOMASS CC SERIES FIBER-COMPOSITE CONNECTORS. CC SERIES CONNECTORS SHALL BE PLACED AT 12" o.c. VERTICALLY & 16" o.c HORIZONTALLY, U.O.N. THERMOMASS X SERIES FIBER-COMPOSITE CONNECTORS SHALL ONLY BE REQUIRED WHERE SHOWN ON ELEVATIONS
9. MILL TEST REPORTS FOR REINFORCEMENT AND DOCUMENTATION OF CONCRETE MIXTURE CHARACTERISTICS SHALL BE SUBMITTED FOR REVIEW
10. THE FOLLOWING ASTM STANDARDS MUST BE CONFORMED TO AS APPLICABLE:

A.	PORTLAND CEMENT, TYPE I OR III:	ASTM C150
B.	REINFORCING STEEL, GRADE 60:	ASTM 615
C.	NORMAL WEIGHT AGGREGATES:	ASTM C33
D.	FLY ASH:	ASTM C618
E.	MIXING WATER:	ASTM C1602
F.	ADMIXTURES:	
a.	WATER REDUCTION:	ASTM C494
b.	SETTING TIME MODIF.:	ASTM C494
c.	AIR ENTRAINMENT:	ASTM C260
G.	CONCRETE BATCH/MIX/DELIV.:	ASTM C94 or C685

KEYPLAN

A	B	C	D
E	F	G	H

CITADEL CONTRACTORS INC
3405 APEX PEAKWAY
APEX, N.C. 27502
TEL 1-919-362-5122
FAX 1-919-362-6910

This drawing and the design shown are the property of Citadel Contractors, Inc. The reproduction, copying or other use of this drawings without their written consent is prohibited and any infringement will be subject to legal action.

N

APPR	DATE	DESCRIPTION	SYM

NAVFAC

NORTH CAROLINA PROFESSIONAL SEAL 038852 ENGINEER CHRISTOPHER E. JACKSON
SEAL

RQ W.M. Jordan COMPANY — A JOINT VENTURE —

Michael Baker INTERNATIONAL
100 AIRSIDE DRIVE
MOON TOWNSHIP, PA 15108
A/E INFO

APPROVED

FOR COMMANDER NAVFAC

ACTIVITY
MARINE CORPS BASE CAMP LEJEUNE

SATISFACTORY TO DATE

DES	DRW	CHK
CEJ	MTF	CEJ

PM / DM: TOWLER / ROOT
BRANCH HEAD:
DESIGN DIRECTOR: R.L.Stephens, Jr.
FIRE PROTECTION: DPS

DEPARTMENT OF THE NAVY
NAVAL FACILITIES ENGINEERING SYSTEMS COMMAND
ATLANTIC DESIGN AND CONSTRUCTION
MCB CAMP LEJEUNE

NAVAL FACILITIES ENGINEERING SYSTEMS COMMAND ATLANTIC
NORFOLK, VA
JACKSONVILLE, NC
P1527 LOGCOM CSP WAREHOUSE

TILT-UP PANEL REINFORCEMENT - AREA E

SCALE:	AS NOTED
EPROJECT NO.:	1639600
CONSTR. CONTR. NO.	N40085-20-C-0059
NAVFAC DRAWING NO.	14111130
SHEET	121 OF 447

S-706

P1527 FINAL SUBMISSION- 11/18/2021

PLOTTED: 11/9/2021 4:02:49 PM
FILE NAME: BIM 360://HF PACKAGE 3/P1527 LOG COM CSP-1639600 Tilt-Up.rvt

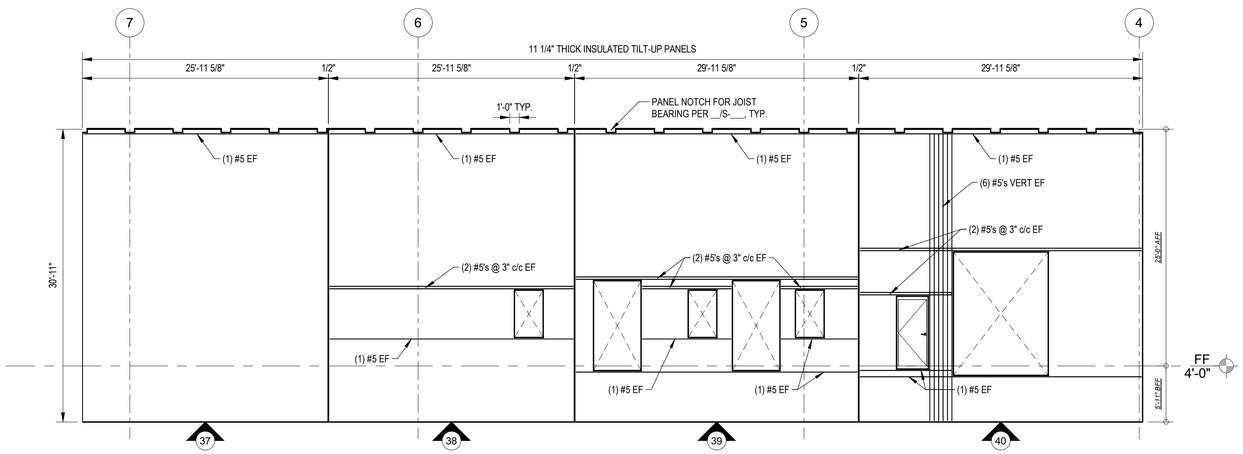

C1 GRIDLINE G PANELS - AREA F
1/8" = 1'-0"

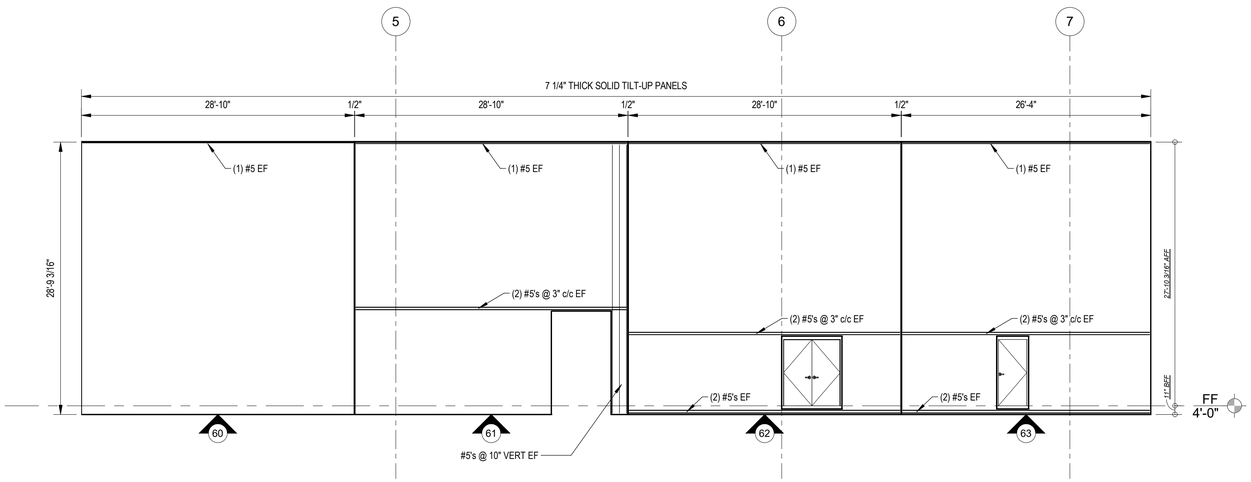

B1 GRIDLINE E.9 PANELS - AREA F
1/8" = 1'-0"

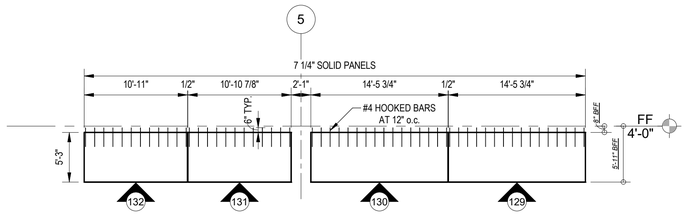

A1 LOADING DOCK PANELS - AREA F
1/8" = 1'-0"

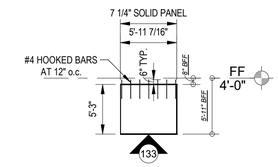

A3 LOADING DOCK PANEL 133 - AREA F
1/8" = 1'-0"

GENERAL NOTES:

1. FOR THE STRUCTURAL NOTES AND ABBREVIATIONS SEE SHEETS S-001, S-002 AND S-003
2. FOR DIMENSIONS NOT SHOWN SEE THE ARCHITECTURAL DRAWINGS
3. THE TILT-UP PANEL DRAWINGS MUST BE USED IN CONJUNCTION WITH THE ARCHITECTURAL, STRUCTURAL, CIVIL, MECHANICAL, ELECTRICAL, AND PLUMBING DRAWINGS. GENERAL CONTRACTOR SHALL BE RESPOSIBLE FOR COORDINATION OF TILT-UP PANELS WITH OTHER TRADES.

TILT-UP PANEL DESIGN NOTES:

1. TILT-UP PANELS SHALL BE REINFORCED PER TYPICAL REINFORCEMENT LISTED BELOW, U.O.N. ON ELEVATIONS
   - A. TYPICAL REINFORCING FOR 11 1/4" INSULATED TILT-UP PANELS SHALL BE AS FOLLOWS:
     - a. #5 VERTICAL BARS @ 12" o.c. EACH FACE
     - b. #4 HORIZONTAL BARS @ 12" o.c. EACH FACE
   - B. TYPICAL REINFORCING FOR 7 1/4" SOLID TILT-UP INTERIOR PANELS SHALL BE AS FOLLOWS:
     - a. #5 VERTICAL BARS @ 16" o.c. EACH FACE
     - b. #4 HORIZONTAL BARS @ 16" o.c. EACH FACE
   - C. TYPICAL REINFORCING FOR 7 1/4" SOLID TILT-UP EXTERIOR DOCK PANELS SHALL BE AS FOLLOWS:
     - a. #5 VERTICAL BARS @ 12" o.c. CENTERED
       - HOOK VERTICAL BARS OUT OF TOP OF PANEL INTO EXTERIOR SLAB ON GRADE PER S-301 DETAILS
     - b. #5 HORIZONTAL BARS @ 12" o.c. CENTERED
2. TILT-UP PANEL CONCRETE SHALL HAVE NORMAL WEIGHT AGGREGATES WITH A NOMINAL MAXIMUM AGGREGATE SIZE OF 3/4" AND A MAXIMUM WATER/CEMENT RATIO OF 0.50.
3. MIN. CONCRETE COVER FOR TILT-UP PANEL REINFORCEMENT SHALL BE 3/4", U.O.N.
4. SEE S-001 FOR ADDITIONAL TILT-UP CONCRETE NOTES
5. PROVIDE #4 x 4'-0" DIAGONAL BARS AT ALL RE-ENTRANT CORNER LOCATIONS & ALL CORNERS OF OPENINGS
6. WHERE CALLED FOR, CLOSED TIES MAY BE MADE FROM A SINGLE, CLOSED LOOP REINFORCING BAR OR FROM INDIVIDUAL STIRRUPS AND CROSS TIES
7. SEE S-600 FOR BAR PLACEMENT DIAGRAMS
8. INSULATED TILT-UP PANELS SHALL BE INSULATED USING THERMOMASS SYSTEM SC INSULATION SYSTEM w/ THERMOMASS CC SERIES FIBER-COMPOSITE CONNECTORS. CC SERIES CONNECTORS SHALL BE PLACED AT 12" o.c. VERTICALLY & 16" o.c HORIZONTALLY, U.O.N. THERMOMASS X SERIES FIBER-COMPOSITE CONNECTORS SHALL ONLY BE REQUIRED WHERE SHOWN ON ELEVATIONS
9. MILL TEST REPORTS FOR REINFORCEMENT AND DOCUMENTATION OF CONCRETE MIXTURE CHARACTERISTICS SHALL BE SUBMITTED FOR REVIEW
10. THE FOLLOWING ASTM STANDARDS MUST BE CONFORMED TO AS APPLICABLE:

A.	PORTLAND CEMENT, TYPE I OR III:	ASTM C150
B.	REINFORCING STEEL, GRADE 60:	ASTM 615
C.	NORMAL WEIGHT AGGREGATES:	ASTM C33
D.	FLY ASH:	ASTM C618
E.	MIXING WATER:	ASTM C1602
F.	ADMIXTURES:	
a.	WATER REDUCTION:	ASTM C494
b.	SETTING TIME MODIF.:	ASTM C494
c.	AIR ENTRAINMENT:	ASTM C260
G.	CONCRETE BATCH/MIX/DELIV.:	ASTM C94 or C685

KEYPLAN

A	B	C	D
E	F	G	H

CITADEL CONTRACTORS INC
3405 APEX PEAKWAY
APEX, N.C. 27502
TEL 1-919-362-5122
FAX 1-919-362-6910

This drawing and the design shown are the property of Citadel Contractors, Inc. The reproduction, copying or other use of this drawings without their written consent is prohibited and any infringement will be subject to legal action.

N

APPR	DATE	DESCRIPTION	SYM

NAVFAC

SEAL
NORTH CAROLINA PROFESSIONAL ENGINEER SEAL 036852 CHRISTOPHER E. JACKSON

IRQ WM Jordan COMPANY ~A JOINT VENTURE~

Michael Baker INTERNATIONAL
100 AIRSIDE DRIVE
MOON TOWNSHIP, PA 15108 A/E INFO

APPROVED
FOR COMMANDER NAVFAC

ACTIVITY
MARINE CORPS BASE CAMP LEJEUNE

SATISFACTORY TO DATE
DES CEJ | DRW MTF | CHK CEJ
PM / DM TOWLER / ROOT
BRANCH HEAD
DESIGN DIRECTOR R.L.Stephens, Jr.
FIRE PROTECTION DPS

DEPARTMENT OF THE NAVY
NAVAL FACILITIES ENGINEERING SYSTEMS COMMAND
ATLANTIC DESIGN AND CONSTRUCTION
MCB CAMP LEJEUNE

NAVAL FACILITIES ENGINEERING SYSTEMS COMMAND ATLANTIC
NORFOLK, VA
JACKSONVILLE, NC
P1527 LOGCOM CSP WAREHOUSE

TILT-UP PANEL REINFORCEMENT - AREA F

SCALE: AS NOTED
EPROJECT NO.: 1639600
CONSTR. CONTR. NO. N40085-20-C-0059
NAVFAC DRAWING NO. 14111131
SHEET 122 OF 447

S-707

P1527 FINAL SUBMISSION- 11/18/2021

PLOTTED: 11/9/2021 4:02:50 PM
FILE NAME: BIM 360://HF PACKAGE 3/P1527 LOG COM CSP-1639600 Tilt-Up.rvt

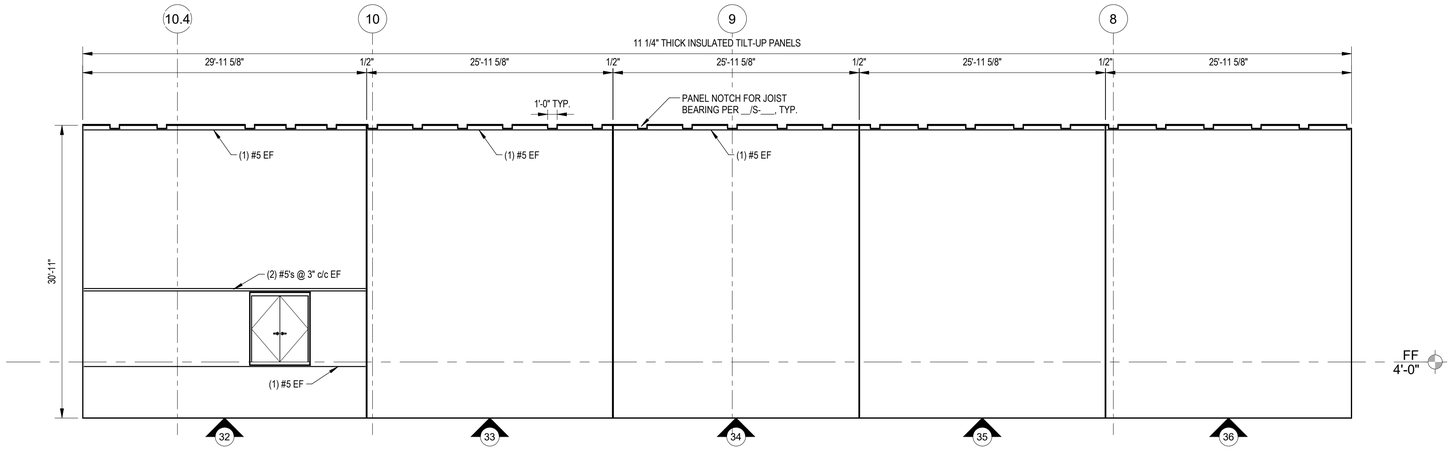

C1 GRIDLINE G PANELS - AREA G
1/8" = 1'-0"

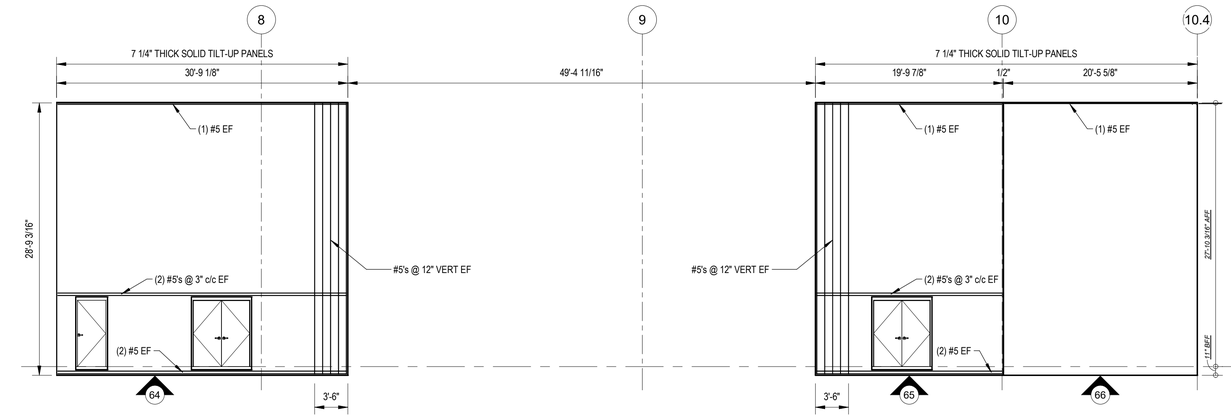

B1 GRIDLINE E.9 PANELS - AREA G
1/8" = 1'-0"

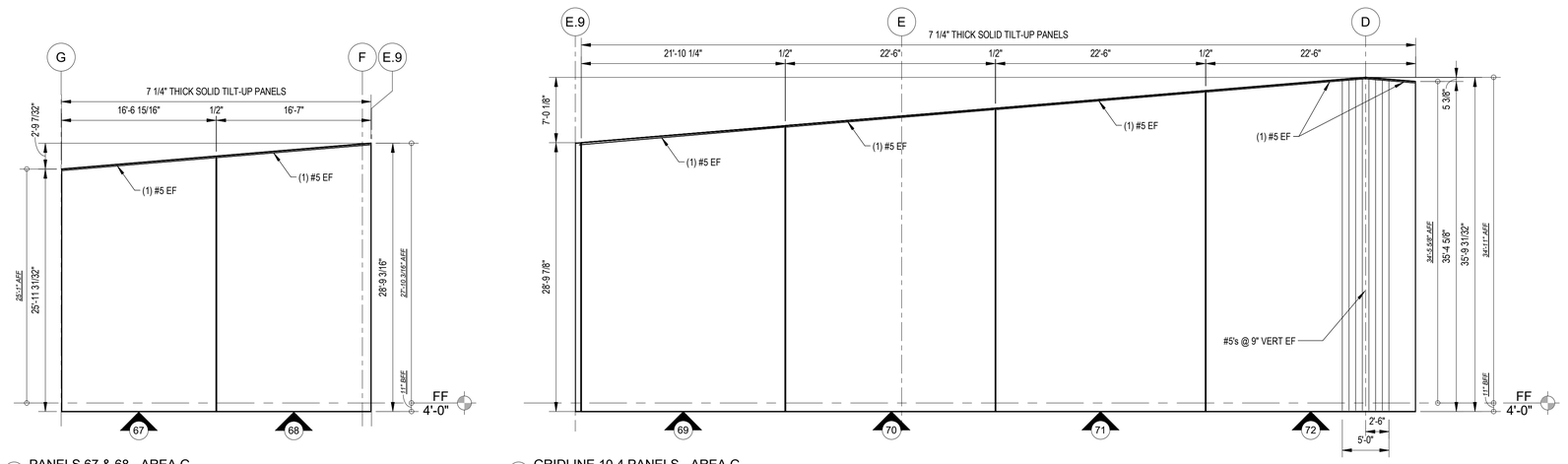

A1 PANELS 67 & 68 - AREA G
1/8" = 1'-0"

A2 GRIDLINE 10.4 PANELS - AREA G
1/8" = 1'-0"

GENERAL NOTES:

1. FOR THE STRUCTURAL NOTES AND ABBREVIATIONS SEE SHEETS S-001, S-002 AND S-003
2. FOR DIMENSIONS NOT SHOWN SEE THE ARCHITECTURAL DRAWINGS
3. THE TILT-UP PANEL DRAWINGS MUST BE USED IN CONJUNCTION WITH THE ARCHITECTURAL, STRUCTURAL, CIVIL, MECHANICAL, ELECTRICAL, AND PLUMBING DRAWINGS. GENERAL CONTRACTOR SHALL BE RESPOSIBLE FOR COORDINATION OF TILT-UP PANELS WITH OTHER TRADES.

TILT-UP PANEL DESIGN NOTES:

1. TILT-UP PANELS SHALL BE REINFORCED PER TYPICAL REINFORCEMENT LISTED BELOW, U.O.N. ON ELEVATIONS
   - A. TYPICAL REINFORCING FOR 11 1/4" INSULATED TILT-UP PANELS SHALL BE AS FOLLOWS:
     - a. #5 VERTICAL BARS @ 12" o.c. EACH FACE
     - b. #4 HORIZONTAL BARS @ 12" o.c. EACH FACE
   - B. TYPICAL REINFORCING FOR 7 1/4" SOLID TILT-UP INTERIOR PANELS SHALL BE AS FOLLOWS:
     - a. #5 VERTICAL BARS @ 16" o.c. EACH FACE
     - b. #4 HORIZONTAL BARS @ 16" o.c. EACH FACE
   - C. TYPICAL REINFORCING FOR 7 1/4" SOLID TILT-UP EXTERIOR DOCK PANELS SHALL BE AS FOLLOWS:
     - a. #5 VERTICAL BARS @ 12" o.c. CENTERED
       - HOOK VERTICAL BARS OUT OF TOP OF PANEL INTO EXTERIOR SLAB ON GRADE PER S-301 DETAILS
     - b. #5 HORIZONTAL BARS @ 12" o.c. CENTERED
2. TILT-UP PANEL CONCRETE SHALL HAVE NORMAL WEIGHT AGGREGATES WITH A NOMINAL MAXIMUM AGGREGATE SIZE OF 3/4" AND A MAXIMUM WATER/CEMENT RATIO OF 0.50.
3. MIN. CONCRETE COVER FOR TILT-UP PANEL REINFORCEMENT SHALL BE 3/4", U.O.N.
4. SEE S-001 FOR ADDITIONAL TILT-UP CONCRETE NOTES
5. PROVIDE #4 x 4'-0" DIAGONAL BARS AT ALL RE-ENTRANT CORNER LOCATIONS & ALL CORNERS OF OPENINGS
6. WHERE CALLED FOR, CLOSED TIES MAY BE MADE FROM A SINGLE, CLOSED LOOP REINFORCING BAR OR FROM INDIVIDUAL STIRRUPS AND CROSS TIES
7. SEE S-600 FOR BAR PLACEMENT DIAGRAMS
8. INSULATED TILT-UP PANELS SHALL BE INSULATED USING THERMOMASS SYSTEM SC INSULATION SYSTEM w/ THERMOMASS CC SERIES FIBER-COMPOSITE CONNECTORS. CC SERIES CONNECTORS SHALL BE PLACED AT 12" o.c. VERTICALLY & 16" o.c HORIZONTALLY, U.O.N. THERMOMASS X SERIES FIBER-COMPOSITE CONNECTORS SHALL ONLY BE REQUIRED WHERE SHOWN ON ELEVATIONS
9. MILL TEST REPORTS FOR REINFORCEMENT AND DOCUMENTATION OF CONCRETE MIXTURE CHARACTERISTICS SHALL BE SUBMITTED FOR REVIEW
10. THE FOLLOWING ASTM STANDARDS MUST BE CONFORMED TO AS APPLICABLE:

A.	PORTLAND CEMENT, TYPE I OR III:	ASTM C150
B.	REINFORCING STEEL, GRADE 60:	ASTM 615
C.	NORMAL WEIGHT AGGREGATES:	ASTM C33
D.	FLY ASH:	ASTM C618
E.	MIXING WATER:	ASTM C1602
F.	ADMIXTURES:	
a.	WATER REDUCTION:	ASTM C494
b.	SETTING TIME MODIF.:	ASTM C494
c.	AIR ENTRAINMENT:	ASTM C260
G.	CONCRETE BATCH/MIX/DELIV.:	ASTM C94 or C685

KEYPLAN

A	B	C	D
E	F	G	H

CITADEL CONTRACTORS INC.
3405 APEX PEAKWAY
APEX, N.C. 27502
TEL 1-919-362-5122
FAX 1-919-362-6910

This drawing and the design shown are the property of Citadel Contractors, Inc. The reproduction, copying or other use of this drawings without their written consent is prohibited and any infringement will be subject to legal action.

N

APPR | DATE | DESCRIPTION | SYM

NAVFAC

NORTH CAROLINA PROFESSIONAL SEAL 036852 ENGINEER CHRISTOPHER E. JACKSON
SEAL

W.M. Jordan COMPANY – A JOINT VENTURE –

Michael Baker INTERNATIONAL
100 AIRSIDE DRIVE
MOON TOWNSHIP, PA 15108 A/E INFO

APPROVED

FOR COMMANDER NAVFAC

ACTIVITY
MARINE CORPS BASE CAMP LEJEUNE

SATISFACTORY TO DATE

DES	CEJ	DRW	MTF	CHK	CEJ

PM / DM TOWLER / ROOT

BRANCH HEAD

DESIGN DIRECTOR R.L.Stephens, Jr.

FIRE PROTECTION DPS

DEPARTMENT OF THE NAVY
NAVAL FACILITIES ENGINEERING SYSTEMS COMMAND
ATLANTIC DESIGN AND CONSTRUCTION
MCB CAMP LEJEUNE

NAVAL FACILITIES ENGINEERING SYSTEMS COMMAND ATLANTIC
NORFOLK, VA
JACKSONVILLE, NC
P1527 LOGCOM CSP WAREHOUSE

TILT-UP PANEL REINFORCEMENT - AREA G

SCALE: AS NOTED
EPROJECT NO.: 1639600
CONSTR. CONTR. NO. N40085-20-C-0059
NAVFAC DRAWING NO. 14111132
SHEET 123 OF 447

S-708

P1527 FINAL SUBMISSION- 11/18/2021

PLOTTED: 11/8/2021 4:02:51 PM
FILE NAME: BIM 360:/HF PACKAGE 3/P1527 LOG COM CSP-1639600 Tilt-Up.rvt

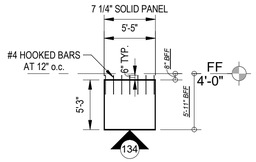

D1 LOADING DOCK PANEL 134 - AREA G
1/8" = 1'-0"

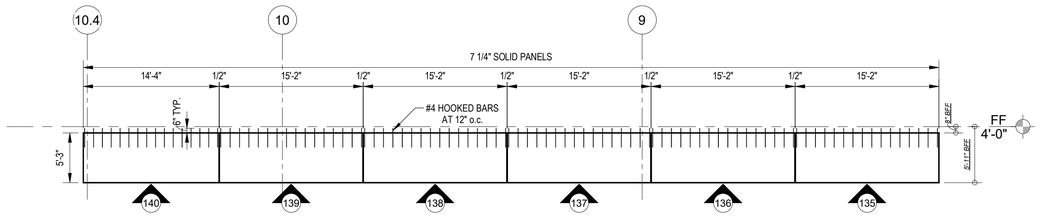

D2 LOADING DOCK PANELS - AREA G
1/8" = 1'-0"

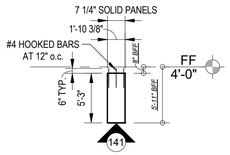

C1 LOADING DOCK PANEL 141 - AREA G
1/8" = 1'-0"

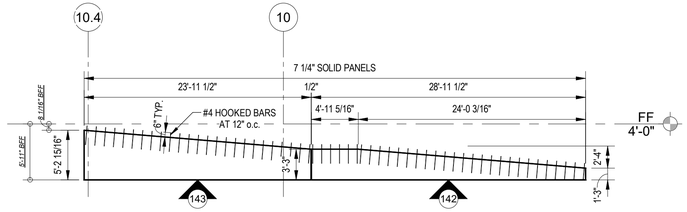

C2 LOADING DOCK PANELS 142 & 143- AREA G
1/8" = 1'-0"

GENERAL NOTES:

1. FOR THE STRUCTURAL NOTES AND ABBREVIATIONS SEE SHEETS S-001, S-002 AND S-003
2. FOR DIMENSIONS NOT SHOWN SEE THE ARCHITECTURAL DRAWINGS
3. THE TILT-UP PANEL DRAWINGS MUST BE USED IN CONJUNCTION WITH THE ARCHITECTURAL, STRUCTURAL, CIVIL, MECHANICAL, ELECTRICAL, AND PLUMBING DRAWINGS. GENERAL CONTRACTOR SHALL BE RESPOSIBLE FOR COORDINATION OF TILT-UP PANELS WITH OTHER TRADES.

TILT-UP PANEL DESIGN NOTES:

1. TILT-UP PANELS SHALL BE REINFORCED PER TYPICAL REINFORCEMENT LISTED BELOW, U.O.N. ON ELEVATIONS
   - A. TYPICAL REINFORCING FOR 11 1/4" INSULATED TILT-UP PANELS SHALL BE AS FOLLOWS:
     - a. #5 VERTICAL BARS @ 12" o.c. EACH FACE
     - b. #4 HORIZONTAL BARS @ 12" o.c. EACH FACE
   - B. TYPICAL REINFORCING FOR 7 1/4" SOLID TILT-UP INTERIOR PANELS SHALL BE AS FOLLOWS:
     - a. #5 VERTICAL BARS @ 16" o.c. EACH FACE
     - b. #4 HORIZONTAL BARS @ 16" o.c. EACH FACE
   - C. TYPICAL REINFORCING FOR 7 1/4" SOLID TILT-UP EXTERIOR DOCK PANELS SHALL BE AS FOLLOWS:
     - a. #5 VERTICAL BARS @ 12" o.c. CENTERED
       - HOOK VERTICAL BARS OUT OF TOP OF PANEL INTO EXTERIOR SLAB ON GRADE PER S-301 DETAILS
     - b. #5 HORIZONTAL BARS @ 12" o.c. CENTERED
2. TILT-UP PANEL CONCRETE SHALL HAVE NORMAL WEIGHT AGGREGATES WITH A NOMINAL MAXIMUM AGGREGATE SIZE OF 3/4" AND A MAXIMUM WATER/CEMENT RATIO OF 0.50.
3. MIN. CONCRETE COVER FOR TILT-UP PANEL REINFORCEMENT SHALL BE 3/4", U.O.N.
4. SEE S-001 FOR ADDITIONAL TILT-UP CONCRETE NOTES
5. PROVIDE #4 x 4'-0" DIAGONAL BARS AT ALL RE-ENTRANT CORNER LOCATIONS & ALL CORNERS OF OPENINGS
6. WHERE CALLED FOR, CLOSED TIES MAY BE MADE FROM A SINGLE, CLOSED LOOP REINFORCING BAR OR FROM INDIVIDUAL STIRRUPS AND CROSS TIES
7. SEE S-600 FOR BAR PLACEMENT DIAGRAMS
8. INSULATED TILT-UP PANELS SHALL BE INSULATED USING THERMOMASS SYSTEM SC INSULATION SYSTEM w/ THERMOMASS CC SERIES FIBER-COMPOSITE CONNECTORS. CC SERIES CONNECTORS SHALL BE PLACED AT 12" o.c. VERTICALLY & 16" o.c HORIZONTALLY, U.O.N. THERMOMASS X SERIES FIBER-COMPOSITE CONNECTORS SHALL ONLY BE REQUIRED WHERE SHOWN ON ELEVATIONS
9. MILL TEST REPORTS FOR REINFORCEMENT AND DOCUMENTATION OF CONCRETE MIXTURE CHARACTERISTICS SHALL BE SUBMITTED FOR REVIEW
10. THE FOLLOWING ASTM STANDARDS MUST BE CONFORMED TO AS APPLICABLE:

A.	PORTLAND CEMENT, TYPE I OR III:	ASTM C150
B.	REINFORCING STEEL, GRADE 60:	ASTM 615
C.	NORMAL WEIGHT AGGREGATES:	ASTM C33
D.	FLY ASH:	ASTM C618
E.	MIXING WATER:	ASTM C1602
F.	ADMIXTURES:	
a.	WATER REDUCTION:	ASTM C494
b.	SETTING TIME MODIF.:	ASTM C494
c.	AIR ENTRAINMENT:	ASTM C260
G.	CONCRETE BATCH/MIX/DELIV.:	ASTM C94 or C685

KEYPLAN

A	B	C	D
E	F	G	H

CITADEL CONTRACTORS INC
3405 APEX PEAKWAY
APEX, N.C. 27502
TEL. 1-919-362-5122
FAX 1-919-362-6910

This drawing and the design shown are the property of Citadel Contractors, Inc. The reproduction, copying or other use of this drawings without their written consent is prohibited and any infringement will be subject to legal action.

N

APPR	DATE	DESCRIPTION	SYM

NAVFAC

SEAL
NORTH CAROLINA PROFESSIONAL ENGINEER SEAL 036852 CHRISTOPHER E. JACKSON

WNM Jordan COMPANY – A JOINT VENTURE –

Michael Baker INTERNATIONAL
100 AIRSIDE DRIVE
MOON TOWNSHIP, PA 15108 A/E INFO

APPROVED

FOR COMMANDER NAVFAC

ACTIVITY
MARINE CORPS BASE CAMP LEJEUNE

SATISFACTORY TO DATE

DES	CEJ	DRW	MTF	CHK	CEJ

PM / DM TOWLER / ROOT
BRANCH HEAD
DESIGN DIRECTOR R.L.Stephens, Jr.
FIRE PROTECTION DPS

DEPARTMENT OF THE NAVY
NAVAL FACILITIES ENGINEERING SYSTEMS COMMAND
ATLANTIC DESIGN AND CONSTRUCTION
MCB CAMP LEJEUNE

NAVAL FACILITIES ENGINEERING SYSTEMS COMMAND ATLANTIC
NORFOLK, VA
JACKSONVILLE, NC
P1527 LOGCOM CSP WAREHOUSE

TILT-UP PANEL REINFORCEMENT - AREA G - CON'T

SCALE:	AS NOTED
EPROJECT NO.:	1639600
CONSTR. CONTR. NO.	N40085-20-C-0059
NAVFAC DRAWING NO.	14111133
SHEET	124 OF 447

S-709

P1527 FINAL SUBMISSION- 11/18/2021

FILE NAME: BIM 360://HF PACKAGE 3/P1527 LOG COM CSP-1639600 Tilt-Up.rvt PLOTTED: 11/9/2021 4:02:51 PM

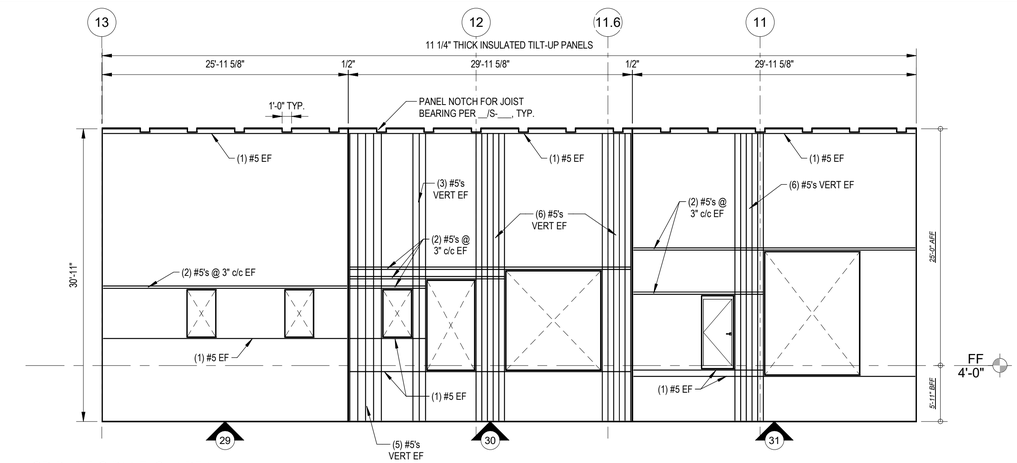

C1 GRIDLINE G PANELS - AREA H
1/8" = 1'-0"

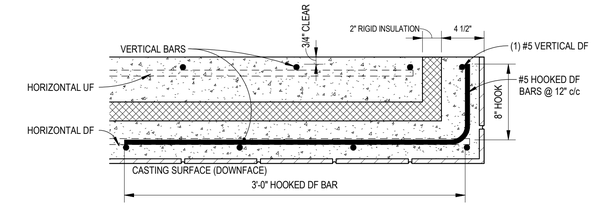

D3 INSUL. RETURN DETAIL - REBAR
1 1/2" = 1'-0"

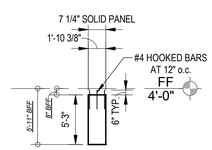

C3 LOADING DOCK PANEL 146 - AREA H
1/8" = 1'-0"

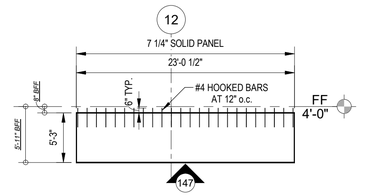

C4 LOADING DOCK PANEL 147 - AREA H
1/8" = 1'-0"

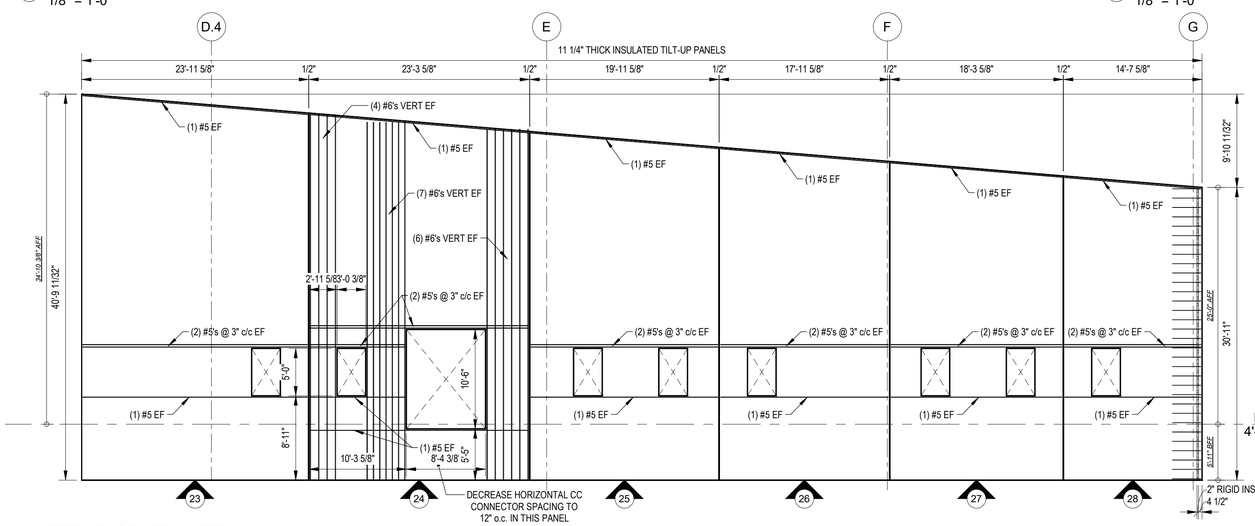

B1 GRIDLINE 13 PANELS - AREA H
1/8" = 1'-0"

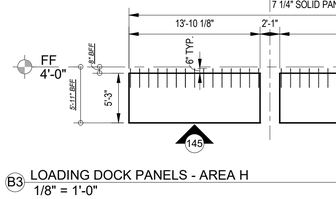

B3 LOADING DOCK PANELS - AREA H
1/8" = 1'-0"

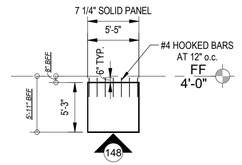

B4 LOADING DOCK PANEL 148 - AREA H
1/8" = 1'-0"

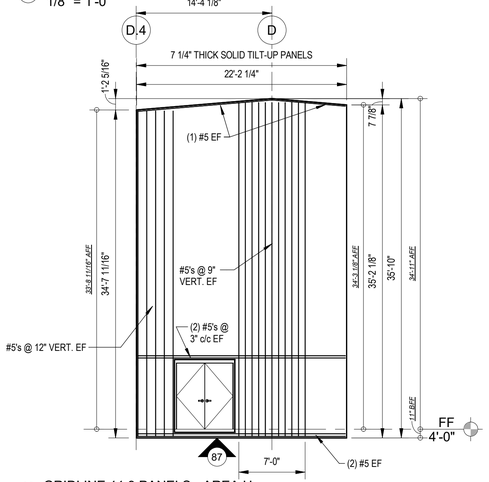

A1 GRIDLINE 11.9 PANELS - AREA H
1/8" = 1'-0"

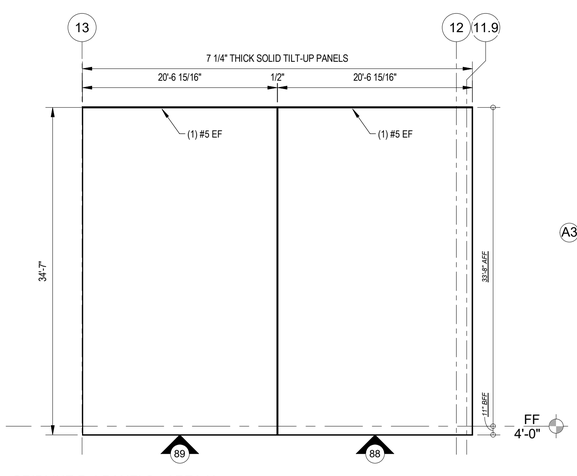

A2 GRIDLINE D.4 PANELS - AREA H
1/8" = 1'-0"

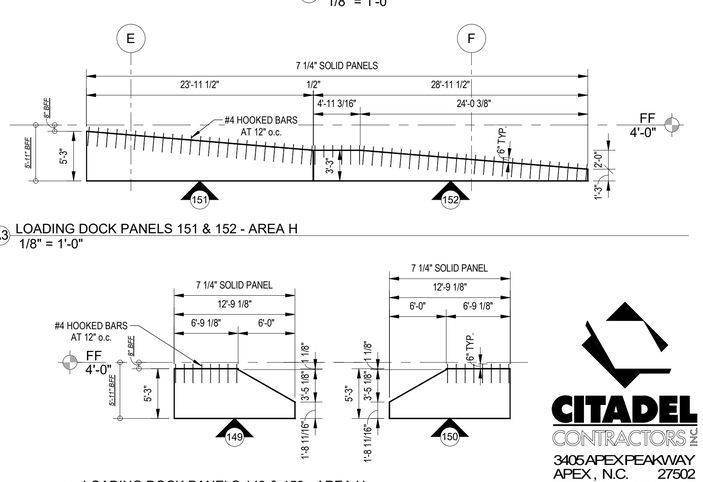

A3 LOADING DOCK PANELS 151 & 152 - AREA H
1/8" = 1'-0"

A4 LOADING DOCK PANELS 149 & 150 - AREA H
1/8" = 1'-0"

GENERAL NOTES:

1. FOR THE STRUCTURAL NOTES AND ABBREVIATIONS SEE SHEETS S-001, S-002 AND S-003
2. FOR DIMENSIONS NOT SHOWN SEE THE ARCHITECTURAL DRAWINGS
3. THE TILT-UP PANEL DRAWINGS MUST BE USED IN CONJUNCTION WITH THE ARCHITECTURAL, STRUCTURAL, CIVIL, MECHANICAL, ELECTRICAL, AND PLUMBING DRAWINGS. GENERAL CONTRACTOR SHALL BE RESPOSIBLE FOR COORDINATION OF TILT-UP PANELS WITH OTHER TRADES.

TILT-UP PANEL DESIGN NOTES:

1. TILT-UP PANELS SHALL BE REINFORCED PER TYPICAL REINFORCEMENT LISTED BELOW, U.O.N. ON ELEVATIONS
   - A. TYPICAL REINFORCING FOR 11 1/4" INSULATED TILT-UP PANELS SHALL BE AS FOLLOWS:
     - a. #5 VERTICAL BARS @ 12" o.c. EACH FACE
     - b. #4 HORIZONTAL BARS @ 12" o.c. EACH FACE
   - B. TYPICAL REINFORCING FOR 7 1/4" SOLID TILT-UP INTERIOR PANELS SHALL BE AS FOLLOWS:
     - a. #5 VERTICAL BARS @ 16" o.c. EACH FACE
     - b. #4 HORIZONTAL BARS @ 16" o.c. EACH FACE
   - C. TYPICAL REINFORCING FOR 7 1/4" SOLID TILT-UP EXTERIOR DOCK PANELS SHALL BE AS FOLLOWS:
     - a. #5 VERTICAL BARS @ 12" o.c. CENTERED
       - HOOK VERTICAL BARS OUT OF TOP OF PANEL INTO EXTERIOR SLAB ON GRADE PER S-301 DETAILS
     - b. #5 HORIZONTAL BARS @ 12" o.c. CENTERED
2. TILT-UP PANEL CONCRETE SHALL HAVE NORMAL WEIGHT AGGREGATES WITH A NOMINAL MAXIMUM AGGREGATE SIZE OF 3/4" AND A MAXIMUM WATER/CEMENT RATIO OF 0.50.
3. MIN. CONCRETE COVER FOR TILT-UP PANEL REINFORCEMENT SHALL BE 3/4", U.O.N.
4. SEE S-001 FOR ADDITIONAL TILT-UP CONCRETE NOTES
5. PROVIDE #4 x 4'-0" DIAGONAL BARS AT ALL RE-ENTRANT CORNER LOCATIONS & ALL CORNERS OF OPENINGS
6. WHERE CALLED FOR, CLOSED TIES MAY BE MADE FROM A SINGLE, CLOSED LOOP REINFORCING BAR OR FROM INDIVIDUAL STIRRUPS AND CROSS TIES
7. SEE S-600 FOR BAR PLACEMENT DIAGRAMS
8. INSULATED TILT-UP PANELS SHALL BE INSULATED USING THERMOMASS SYSTEM SC INSULATION SYSTEM w/ THERMOMASS CC SERIES FIBER-COMPOSITE CONNECTORS. CC SERIES CONNECTORS SHALL BE PLACED AT 12" o.c. VERTICALLY & 16" o.c HORIZONTALLY, U.O.N. THERMOMASS X SERIES FIBER-COMPOSITE CONNECTORS SHALL ONLY BE REQUIRED WHERE SHOWN ON ELEVATIONS
9. MILL TEST REPORTS FOR REINFORCEMENT AND DOCUMENTATION OF CONCRETE MIXTURE CHARACTERISTICS SHALL BE SUBMITTED FOR REVIEW
10. THE FOLLOWING ASTM STANDARDS MUST BE CONFORMED TO AS APPLICABLE:

A.	PORTLAND CEMENT, TYPE I OR III:	ASTM C150
B.	REINFORCING STEEL, GRADE 60:	ASTM 615
C.	NORMAL WEIGHT AGGREGATES:	ASTM C33
D.	FLY ASH:	ASTM C618
E.	MIXING WATER:	ASTM C1602
F.	ADMIXTURES:	
a.	WATER REDUCTION:	ASTM C494
b.	SETTING TIME MODIF.:	ASTM C494
c.	AIR ENTRAINMENT:	ASTM C260
G.	CONCRETE BATCH/MIX/DELIV.:	ASTM C94 or C685

KEYPLAN

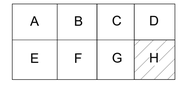

CITADEL CONTRACTORS INC
3405 APEX PEAKWAY
APEX, N.C. 27502
TEL 1-919-362-5122
FAX 1-919-362-6910

This drawing and the design shown are the property of Citadel Contractors, Inc. The reproduction, copying or other use of this drawings without their written consent is prohibited and any infringement will be subject to legal action.

N

APPR	DATE	SYM	DESCRIPTION

NAVFAC

SEAL
036852
CHRISTOPHER E. JACKSON
ENGINEER
NORTH CAROLINA PROFESSIONAL

RQ W.M. Jordan COMPANY — A JOINT VENTURE —

Michael Baker INTERNATIONAL
100 AIRSIDE DRIVE
MOON TOWNSHIP, PA 15108
A/E INFO

APPROVED

FOR COMMANDER NAVFAC

ACTIVITY
MARINE CORPS BASE CAMP LEJEUNE

SATISFACTORY TO DATE

DES	CEJ	DRW	MTF	CHK	CEJ

PM / DM: TOWLER / ROOT
BRANCH HEAD:
DESIGN DIRECTOR: R.L.Stephens, Jr.
FIRE PROTECTION: DPS

DEPARTMENT OF THE NAVY
NAVAL FACILITIES ENGINEERING SYSTEMS COMMAND ATLANTIC
ATLANTIC DESIGN AND CONSTRUCTION
MCB CAMP LEJEUNE

NAVAL FACILITIES ENGINEERING SYSTEMS COMMAND
NORFOLK, VA
JACKSONVILLE, NC
P1527 LOGCOM CSP WAREHOUSE

TILT-UP PANEL REINFORCEMENT - AREA H

SCALE:	AS NOTED
EPROJECT NO.:	1639600
CONSTR. CONTR. NO.	N40085-20-C-0059
NAVFAC DRAWING NO.	14111134
SHEET	125 OF 447

S-710

P1527 FINAL SUBMISSION- 11/18/2021

PLOTTED: 11/9/2021 4:02:53 PM

FILE NAME: BIM 360://HF PACKAGE 3/P1527 LOG COM CSP-1639600 TiltUp.rvt

ABB	DESCRIPTION
_____ A _____	
&	AND
<	ANGLE
@	AT
A/	ABOVE
ACP	ACOUSTIC CEILING PANEL
ADJ	ADJACENT, ADJUSTABLE
AED	AUTOMATED EXTERNAL DEFIBRILLATOR
AFF	ABOVE FINISHED FLOOR
AP	ACCESS PANEL
APPROX	APPROXIMATE(LY)
ARCH	ARCHITECT OR ARCHITECTURAL
ASTM	AMERICAN SOCIETY FOR TESTING MATERIAL
ATTEN	ATTENUATE, ATTENUATION
AVG	AVERAGE
_____ B _____	
B/	BOTTOM OF
B/C	BOTTOM OF CURB
BC	BASE CABINET
BD	BOARD
BIT	BITUMINOUS
BLDG	BUILDING
BSMT	BASEMENT
_____ C _____	
[	CHANNEL
C/	CENTER OF
CAB	CABINET
CC	CENTER TO CENTER
CG	CORNER GUARD
CJ	CORNER JOINT
CL	CENTER LINE
CLG	CEILING
CLG HT	CEILING HEIGHT
CLO	CLOSET
CLR	CLEAR
CMU	CONCRETE MASONRY UNIT
CO	CLEAN OUT
COL	COLUMN
CONC	CONCRETE
CONT	CONTINUOUS
CORR	CORRIDOR
CP	COPIER
CT	CERAMIC TILE
CY	CUBIC YARD
_____ D _____	
DF	DRINKING FOUNTAIN
DIA	DIAMETER
DIM	DIMENSION
DN	DOWN
DW	DISHWASHER
DWG	DRAWING
_____ E _____	
E	EAST
EA	EACH
EB	EDGE BANDING
EIFS	EXTERIOR INSULATION FINISH SYSTEM
EJ	EXPANSION JOINT
ELEC	ELECTRICAL
ELEV	ELEVATOR
EMER	EMERGENCY
ENCL	ENCLOSE(URE)
EP	ELECTRICAL PANEL
EQ	EQUAL
EQUIP	EQUIPMENT
EWC	ELECTRIC WATER COOLER
EXIST	EXISTING
EXP BLT	EXPANSION BOLT
EXT	EXTERIOR
_____ F _____	
<	FABRIC
F/F	FACE TO FACE
FAX	FACSIMILE
FE	FIRE EXTINGUISHER
FEC	FIRE EXTINGUISHER CABINET
FHC	FIRE HOSE CABINET
FL	FLOOR
FL CO	FLOOR CLEANOUT
FP	FIRE PROTECTION
FPRF	FIREPROOF(ING)

ABB	DESCRIPTION
FR	FIRE RATED OR FRAME
FT	FOOT/FEET
_____ G _____	
GA	GAUGE
GL	GLASS OR GLAZING
GRD	GROUND
GWB	GYPSUM WALL BOARD
_____ H _____	
HB	HOSE BIBB
HC	HANDICAP(PED)
HDW	HARDWARE
HM	HOLLOW METAL
HOR	HORIZONTAL
HP	HIGH POINT
HTR	HEATER
_____ I _____	
ID	INSIDE DIAMETER
IN	INCH(ES)
INT	INTERIOR
_____ J _____	
JB	JAMB
JST	JOIST
JT	JOINT
_____ L _____	
LAM	LAMINATE
LAN	LOCAL AREA NETWORK CONNECTION
LAV	LAVATORY
LB	POUND
LF	LINEAL FOOT
LP	LOW POINT
LTL	LINTEL
_____ M _____	
m	METERS
MAS	MASONRY
MAX	MAXIMUM
MDF	MEDIUM DENSITY FIBERBOARD
MECH	MECHANICAL
MEZZ	MEZZANINE
MFR	MANUFACTURE
MH	MANHOLE
MICRO	MICROWAVE
MIN	MINIMUM
MISC	MISCELLANEOUS
mm	MILLIMETERS
MO	MASONRY OPENING
MTD	MOUNTED EL
MTL	METAL
_____ N _____	
N	NORTH
NFPA	NATIONAL FIRE PROTECTION ASSOCIATION
NIC	NOT IN CONTRACT
NOM	NOMINAL
NTS	NOT TO SCALE
_____ O _____	
OC	ON CENTER
OD	OUTSIDE DIAMETER
OFF	OFFICE
OPNG	OPENING
OPP	OPPOSITE
_____ P _____	
PART	PARTITION
PL	PLATE
PLAM	PLASTIC LAMINATE
PLAS	PLASTER
PLYWD	PLYWOOD
PNL	PANEL
POS	POINT OF SALE
PR	PAIR
PRCST	PRECAST
PREFAB	PREFABRICATED
PROP	PROPERTY
PSI	POUNDS PER SQUARE INCH
PSIG	POUNDS PER SQUARE INCH GAUGE
PT	POINT
PTD	PAINTED
_____ Q _____	
QTY	QUANTITY
_____ R _____	
R	RISER OR RADIUS
RCP	REFLECTED CEILING PLAN

ABB	DESCRIPTION
RD	ROOF DRAIN
REF	REFER / REFERENCE
REG	REGISTER
REINF	REINFORCING
REQ'D	REQUIRED
RFG	REFRIGERATOR
RG	RANGE
RM	ROOM
RO	ROUGH OPENING
RTS	RUBBER TRANSITION STRIP
RWC	RAIN WATER CONDUCTOR
_____ S _____	
S	SOUTH
SAN	SANITARY
SCHD	SCHEDULE
SEC	SECTION
SF	SQUARE FOOT
SIM	SIMILAR
SPKLR	SPRINKLER
SQ	SQUARE
SQ FT	SQUARE FOOT
SS	STAINLESS STEEL
STD	STANDARD
STL	STEEL
STN	STAINED
STOR	STORAGE
SUSP	SUSPEND, SUSPENDED, OR SUSPENSION
SYS	SYSTEM
_____ T _____	
"T"	TEE (BAR OR W)
T	TREAD
T/	TOP OF
T/C	TOP OF CURB
TB	TACKBOARD
TC	TERRA COTTA
TEL	TELEPHONE
TEMP	TEMPERED OR TEMPERATURE
TERM	TERMINATE / TERMINAL
THRESH	THRESHOLD
TLT	TOILET
TV	TELEVISION
TYP	TYPICAL
_____ U _____	
UH	UNIT HEATER
UL	UNDERWRITER'S LABORATORY
UMCT	UNGLAZED MOSAIC CERAMIC TILE
UNO	UNLESS NOTED OTHERWISE
_____ V _____	
VEST	VESTIBULE
VIF	VERIFY IN FIELD
_____ W _____	
W	WEST
W/	WITH
W/O	WITHOUT
WC	WATER CLOSET
WIN	WINDOW
WP	WATERPROOF(ING)
WSCT	WAINSCOT
WT	WEIGHT
WWF	WELDED WIRE REINFORCEMENT

SYMBOLS

- # VIEW TITLE / SCALE: — VIEW CALLOUT
- # / # # / # # — ELEVATIONS (INTERIOR / EXTERIOR)
- # / # — BUILDING SECTION
- # / # — WALL SECTION
- # / # — INTERIOR SECTION
- # / # — DETAIL SECTION
- # / # — CALLOUT PLAN, SECTION OR DETAIL
- # — COLUMN GRID LABEL - NEW
- # — COLUMN GRID LABEL - EXISTING
- # — REVISION
- ROOM NAME / ### — ROOM TAG
- #X#.# — PARTITION TYPE
- # — DOOR TAG - SEE SCHEDULE
- ##.## — KEYNOTE
- # — WINDOW TYPE
- # — TOILET ROOM ACCESSORIES
- ELEVATION MARK
- DENOTES ABOVE, BELOW, OR BEHIND
- ACCESSIBLE TOILET STALL
- RECYCLING COLLECTION AREA
- PLAN NORTH / N — NORTH ARROW
- ℄ — CENTER LINE
- FLOOR TRANSITION
- SLOPE — ROOF SLOPE ARROW
- LEVEL LINE
- SPOT ELEVATION

SECTIONS/ SECTIONAL DETAILS

- CONCRETE BLOCK
- CAST-IN-PLACE-CONCRETE
- STRUCTURAL/MISCELLANEOUS STEEL
- EARTH
- GRAVEL/ENGINEERED FILL
- STONE, OR NATURAL BUILDING STONE
- PLASTER OR GYPSUM BOARD, OR EXTERIOR SHEATHING
- BATT INSULATION
- ROOF, TAPERED, CAVITY OR RIGID INSULATION
- FINISHED WOOD TRIM
- PLYWOOD
- CAVITY DRAINAGE MATERIAL

PLANS/ PLAN FIRE RATED GRAPHICS

- SMOKE
- 1/2 HOUR
- 1 HOUR
- 2 HOUR
- 3 HOUR
- 4 HOUR

PLANS / PLAN DETAIL GRAPHICS

- BRICK WALLS
- CONCRETE BLOCK WALLS
- CAST-IN-PLACE-CONCRETE WALLS
- STUD WALLS
- CONCRETE SLABS AND/OR CONCRETE SIDEWALKS

DOOR DESIGNATIONS

- EXISTING DOOR AND/OR FRAME TO REMAIN - SEE DOOR SCHEDULE FOR ANY ADDITIONAL WORK
- NEW DOOR AND/OR FRAME TO BE PROVIDED - SEE DOOR SCHEDULE
- EXISTING DOOR AND/OR FRAME TO BE REMOVED - SEE DEMO PLAN/NOTES

NOTES - GENERAL

1. ALL DIMENSIONS ARE IN FEET / INCHES UNLESS NOTED OTHERWISE
2. THESE GENERAL NOTES ARE NOT INTENDED TO REPLACE SPECIFICATIONS - REFER TO SPECIFICATIONS FOR REQUIREMENTS IN ADDITION TO GENERAL NOTES
3. THE TERMS RENOVATE AND REHABILITATE ARE USED INTERCHANGEABLY IN THESE DOCUMENTS.
4. ROOM AREAS AND PERIMETERS ARE APPROXIMATE AND FOR REFERENCE ONLY. VERIFY QUANTITIES AND DIMENSIONS IN FIELD.
5. NO DEVIATIONS FROM THESE CONTRACT DOCUMENTS WILL BE MADE WITHOUT THE PRIOR WRITTEN APPROVAL OF THE ARCHITECT
6. DO NOT SCALE DIMENSIONS FROM DRAWINGS - THE CONTRACTOR MUST REQUEST NECESSARY DIMENSIONS NOT SHOWN ON THE DRAWINGS FROM THE ARCHITECT
7. ALL DIMENSIONS ARE TO FACE OF STRUCTURAL ELEMENT OR CENTER OF DOORS, WINDOWS AND OPENINGS UNLESS NOTED OTHERWISE - ALL NON-DIMENSIONED DOOR LOCATIONS SHALL BE OFFSET 4" FROM THE ADJACENT WALL TO THE HINGE SIDE OF THE DOOR OPENING.
8. DETAILS SHOWN ON DRAWINGS ARE TYPICAL FOR ALL SIMILAR CONDITIONS.
9. DRAWING NOTES AND SPECIFICATIONS ARE INSTRUCTIONS TO THE CONTRACTOR AND APPLY TO ALL THE WORK UNLESS MORE SPECIFIC INFORMATION IS SHOWN ELSEWHERE ON THE DRAWINGS OR WRITTEN IN THE SPECIFICATIONS - IN THE EVENT OF CONFLICTING INSTRUCTIONS, THE ARCHITECT SHALL DETERMINE WHAT CONTROLS
10. VERIFY ALL DIMENSIONS IN THE FIELD AND COORDINATE DIMENSIONS SHOWN ON THE CONTRACT DRAWINGS WITH FABRICATION AND FIELD CONDITIONS AND REPORT ANY INCONSISTENCIES TO THE ARCHITECT BEFORE PROCEEDING WITH WORK
11. PRINCIPAL OPENINGS IN THE STRUCTURE ARE SHOWN ON THESE DRAWINGS - THE GENERAL CONTRACTOR MUST EXAMINE THE ARCHITECTURAL, MECHANICAL, ELECTRICAL, AND PLUMBING DRAWINGS FOR REQUIRED OPENINGS GENERAL CONTRACTOR SHALL VERIFY SIZE AND LOCATION OF ALL OPENINGS WITH ALL SUB-CONTRACTORS PRIOR TO CONSTRUCTION
12. STRUCTURAL DRAWINGS AND SPECIFICATIONS REPRESENT THE FINISHED STRUCTURE, AND, EXCEPT WHERE SPECIFICALLY SHOWN, DO NOT INDICATE THE METHOD OR MEANS OF CONSTRUCTION - THE CONTRACTOR MUST SUPERVISE CONSTRUCTION MEANS, METHODS, PROCEDURES, TECHNIQUES, SEQUENCE, AND APPLICABLE SAFETY REGULATIONS MUST BE FOLLOWED
13. CONTRACTOR IS RESPONSIBLE FOR SCHEDULING AND COORDINATING THE WORK OF THE SUB-CONTRACTORS - THE CONTRACTOR IS RESPONSIBLE TO COORDINATE WITH THE BUILDING OWNER, TENANT OR HIS REPRESENTATIVES THE DELIVERY AND INSTALLATION OF ITEMS BEING PROVIDED AND INSTALLED BY OTHERS
14. MECHANICAL, PLUMBING AND ELECTRICAL WORK RELATED TO DEMOLITION AND NEW INSTALLATION OF COMPONENTS MUST COMPLY WITH ALL APPLICABLE CODES
15. ALL MATERIALS, FABRICATION AND INSTALLATION MUST COMPLY WITH THE APPLICABLE REQUIREMENTS AND SPECIFICATIONS FOR EACH DIVISION OF WORK
16. CONSTRUCTION MUST COMPLY WITH APPLICABLE CODES AND ORDINANCES, LAWS AND SAFETY ORDERS AS DIRECTED BY LOCAL JURISDICTION
17. CONTRACTOR IS RESPONSIBLE FOR THE TIMELY ORDERING OF MATERIALS INCLUDED IN THESE CONTRACT DOCUMENTS - SOME ITEMS IN THESE DOCUMENTS MAY REQUIRE LONG LEAD TIMES OR SPECIAL COORDINATION SUBSTITUTIONS WILL NOT BE ALLOWED FOR MATERIAL NOT ORDERED IN A TIMELY FASHION
18. CONTRACTOR MUST CHECK AND VERIFY ALL DIMENSIONS AND GRADE CONDITIONS, (BOTH NEW AND EXISTING) REPORTING ANY DISCREPANCIES TO THE ARCHITECT PRIOR TO ORDERING MATERIALS OR PROCEEDING WITH ANY PHASE OF THE WORK
19. CONTRACTOR MUST CHECK AND VERIFY ALL DIMENSIONS PRIOR TO COMMENCING CONSTRUCTION - ALL DISCREPANCIES MUST BE NOTED AND SENT TO THE ARCHITECT WITH ADEQUATE TIME TO REVIEW PRIOR TO STARTING THAT PORTION OF THE WORK IN ORDER TO AVOID PROJECT DELAYS
20. CONTRACTOR MUST CLEAN, PATCH AND REPAIR ALL SURFACES DAMAGED BY DEMOLITION, ALTERATION OR INSTALLATION OF THE WORK
21. CONTRACTOR MUST PREPARE ALL WALLS AND PARTITIONS AS REQUIRED BY THE FINISH MANUFACTURER TO RECEIVE THE FINISHES SPECIFIED
22. CONTRACTOR MUST PROTECT ALL MONUMENTS, IRON PINS, AND PROPERTY CORNERS DURING CONSTRUCTION
23. CONTRACTOR MUST REFER TO ARCHITECTURAL PLANS FOR BUILDING DIMENSIONS, BUILDING UTILITY ENTRANCE LOCATIONS AND EXACT LOCATIONS AND DIMENSIONS OF EXITS, CANOPIES, RAMPS, DOWNSPOUTS, GRAVEL AREAS ADJACENT TO BUILDING WALLS, UTILITY ENTRANCE LOCATIONS AND BOLLARDS IN BUILDING WALKWAYS
24. CONTRACTOR MUST VISIT THE SITE AND VERIFY ALL EXISTING CONDITIONS PRIOR TO COMMENCING CONSTRUCTION - ALL DISCREPANCIES MUST BE NOTED AND SENT TO THE ARCHITECT WITH ADEQUATE TIME TO REVIEW PRIOR TO STARTING THAT PORTION OF THE WORK IN ORDER TO AVOID PROJECT DELAYS
25. CONTRACTOR TO PROVIDE PORTABLE FIRE EXTINGUISHERS IN ACCORDANCE WITH LOCAL JURISDICTION AND NFPA 10. MAXIMUM TRAVEL DISTANCE TO NEAREST FIRE EXTINGUISHER FROM ANY POINT IN THE BUILDING MUST NOT EXCEED 50 FEET. EXISTING FIRE EXTINGUISHERS MUST BE TESTED AND RE-USED IF FULLY OPERATIONAL. FIRE EXTINGUISHERS MUST BE SIZED FOR NO LESS THAN ORDINARY HAZARD.
26. ALL REQUESTS FROM INFORMATION PROMPTED BY THE BUILDING OFFICIALS MUST INCLUDE A COPY OF THE BUILDING OFFICIALS COMMENTS AND THE BUILDING INSPECTORS FIELD REPORT TO ENSURE AN ACCURATE AND TIMELY RESPONSE
27. CONTRACTOR AND SUBCONTRACTOR SHALL MUST BE LICENSED TO PERFORM THEIR REQUESTED DUTIES AS REQUIRED IN ACCORDANCE WITH LOCAL STANDARDS
28. CONTRACTOR MUST COMPARE STRUCTURAL SECTIONS WITH ARCHITECTURAL SECTIONS AND REPORT ANY DISCREPANCY TO THE ARCHITECT PRIOR TO FABRICATION OR INSTALLATION OF STRUCTURAL MEMBERS

APPR	DATE	DESCRIPTION	SYM

NAVFAC

REGISTERED ARCHITECT — CERTIFICATE NO. 49179 — PAWEL PASZCZUK — Date signed 11/17/21 — ARIZONA, U.S.A. — Expires 03/31/2024 — SEAL

IRQ Wm. Jordan Company — A JOINT VENTURE

Michael Baker INTERNATIONAL
100 AIRSIDE DRIVE, MOON TOWNSHIP, PA 15108 — A/E INFO

APPROVED

FOR COMMANDER NAVFAC

ACTIVITY: MARINE CORPS BASE CAMP LEJEUNE

SATISFACTORY TO DATE DD/MM/YY

DES XXX	DRW XXX	CHK XXX
PM / DM	TOWLER / ROOT	
BRANCH HEAD		
DESIGN DIRECTOR	R.L.Stephens, Jr.	
FIRE PROTECTION	DPS	

NAVAL FACILITIES ENGINEERING SYSTEMS COMMAND — NORFOLK, VA

DEPARTMENT OF THE NAVY
NAVAL FACILITIES ENGINEERING SYSTEMS COMMAND ATLANTIC
ATLANTIC DESIGN AND CONSTRUCTION
MCB CAMP LEJEUNE

JACKSONVILLE, NC

P1527 LOGCOM CSP WAREHOUSE

ARCHITECTURAL GENERAL NOTES, MATERIAL AND ANNOTATION LEGEND

SCALE:	AS NOTED
EPROJECT NO.:	1639600
CONSTR. CONTR. NO.	N40085-20-C-0059
NAVFAC DRAWING NO.	14111137
SHEET	126 OF 447

A-001

DRAWFORM REVISION: 25 AUGUST 2020

P1527 FINAL SUBMISSION - 11/18/2021

PLOTTED: 11/15/2021 3:37:32 AM

FILE NAME: BIM 360://HF PACKAGE 3/P1527 LOG COM CSP-1639600-A.rvt

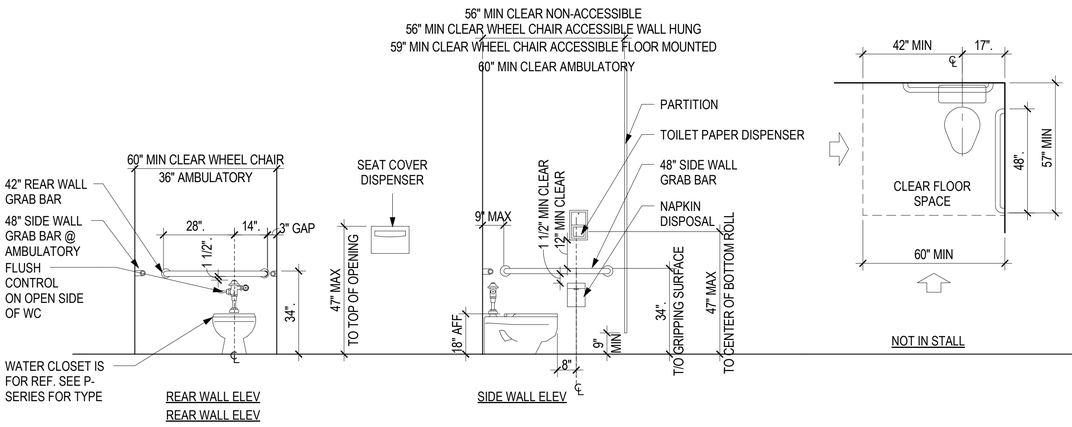

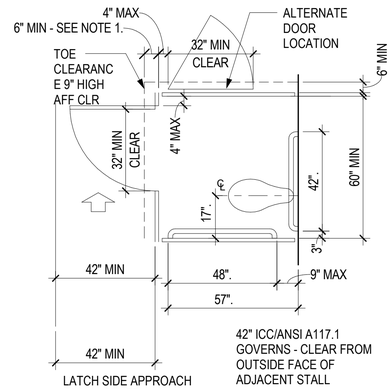

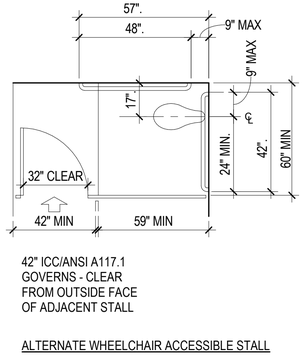

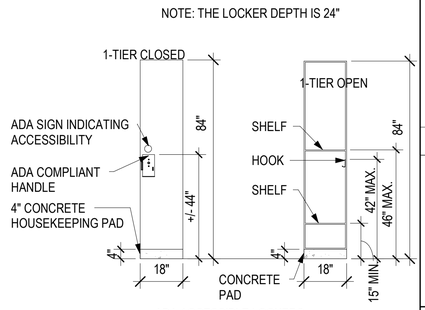

1. TOE CLEARANCE AT THE FRONT OF THE PARTITION IS NOT REQUIRED IN A COMPARTMENT GREATER THAN 62" DEEP WITH A WALL-HUNG WATER CLOSET OR 65" DEEP WITH A FLOOR-MOUNTED WATER CLOSET. TOE CLEARANCE AT THE SIDE IS NOT REQUIRED IN A COMPARTMENT GREATER THAN 66" WIDE.
2. WHERE 6 OR MORE STALLS ARE PROVIDED, IN ADDITION TO STANDARD STALL, PROVIDE AT LEAST 1 AMBULATORY STALL 36" WIDE WITH A DOOR THAT SWINGS OUT AND THE DEPTH OF THE STALL AS REQUIRED TO ACCOMMODATE LENGTH OF GRAB BAR. STALL SHALL BE IN ACCORDANCE TO APPLICABLE PLUMBING CODE.

TOILET STALLS

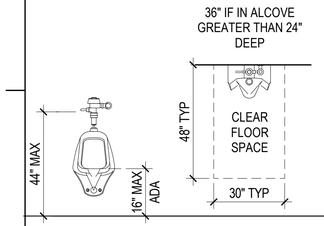

URINAL

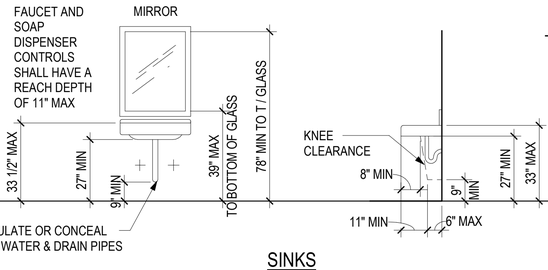

SINKS

TOILET ROOMS WITH STALLS

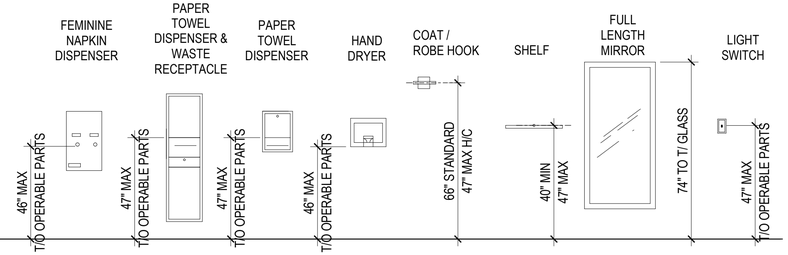

TOILET FIXTURES & ACCESSORIES

LOCKERS

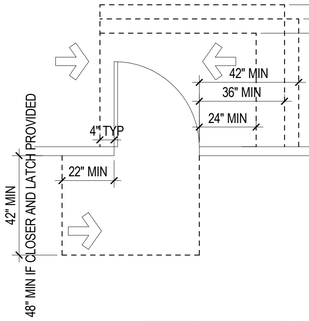

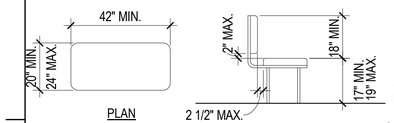

ADA BENCH

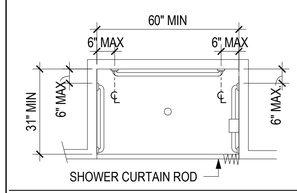

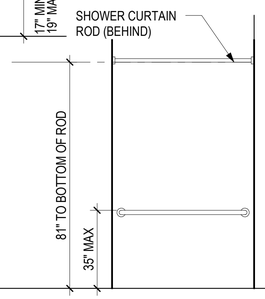

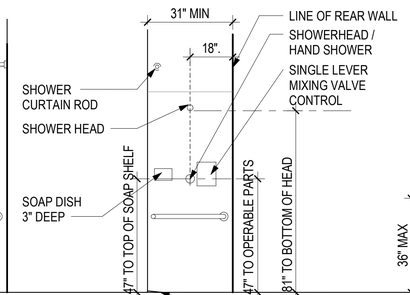

ROLL-IN SHOWER STALLS

ACCESSIBLE SHOWER CLEARANCES

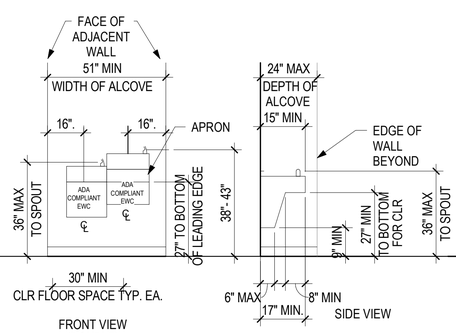

DRINKING FOUNTAINS

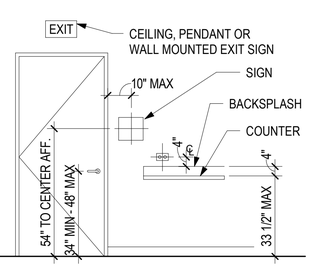

SIGNS & COUNTERS

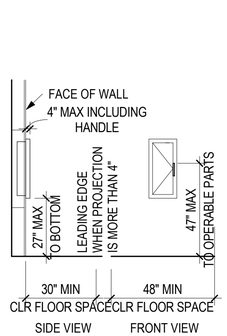

FIRE EXTINGUISHER

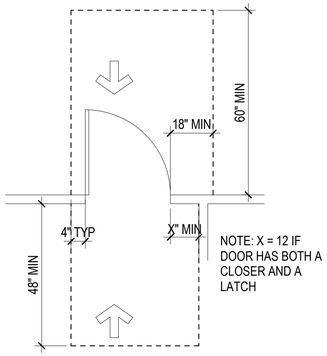

DOOR CLEARANCES

REGISTERED ARCHITECT
CERTIFICATE NO.
49179
PAWEL
PASZCZUK
Date Signed 11/11/21
ARIZONA, U.S.A.
Expires 03/31/2024
SEAL

RQ W.M. Jordan COMPANY
~A JOINT VENTURE~
Michael Baker INTERNATIONAL
100 AIRSIDE DRIVE
MOON TOWNSHIP, PA 15108
A/E INFO

APPROVED

FOR COMMANDER NAVFAC

ACTIVITY
MARINE CORPS BASE
CAMP LEJEUNE

SATISFACTORY TO DATE	DD/MM/YY
DES XXX	DRW XXX CHK XXX
PM / DM	TOWLER / ROOT
BRANCH HEAD	
DESIGN DIRECTOR	R.L.Stephens, Jr.
FIRE PROTECTION	DPS

DEPARTMENT OF THE NAVY
NAVAL FACILITIES ENGINEERING SYSTEMS COMMAND
ATLANTIC DESIGN AND CONSTRUCTION
NAVAL FACILITIES ENGINEERING SYSTEMS COMMAND ATLANTIC
NORFOLK, VA
MCB CAMP LEJEUNE
JACKSONVILLE, NC
P1527 LOGCOM CSP WAREHOUSE
TYPICAL ABA DETAILS

SCALE:	AS NOTED
EPROJECT NO.:	1639600
CONSTR. CONTR. NO.	N40085-20-C-0059
NAVFAC DRAWING NO.	14111138
SHEET	127 OF 447

A-002

DRAWFORM REVISION: 25 AUGUST 2020

P1527 FINAL SUBMISSION - 11/18/2021

PLOTTED: 11/15/2021 3:37:33 AM

FILE NAME: BIM 360:/HF PACKAGE 3/P1527 LOG COM CSP-1639600-A.rvt

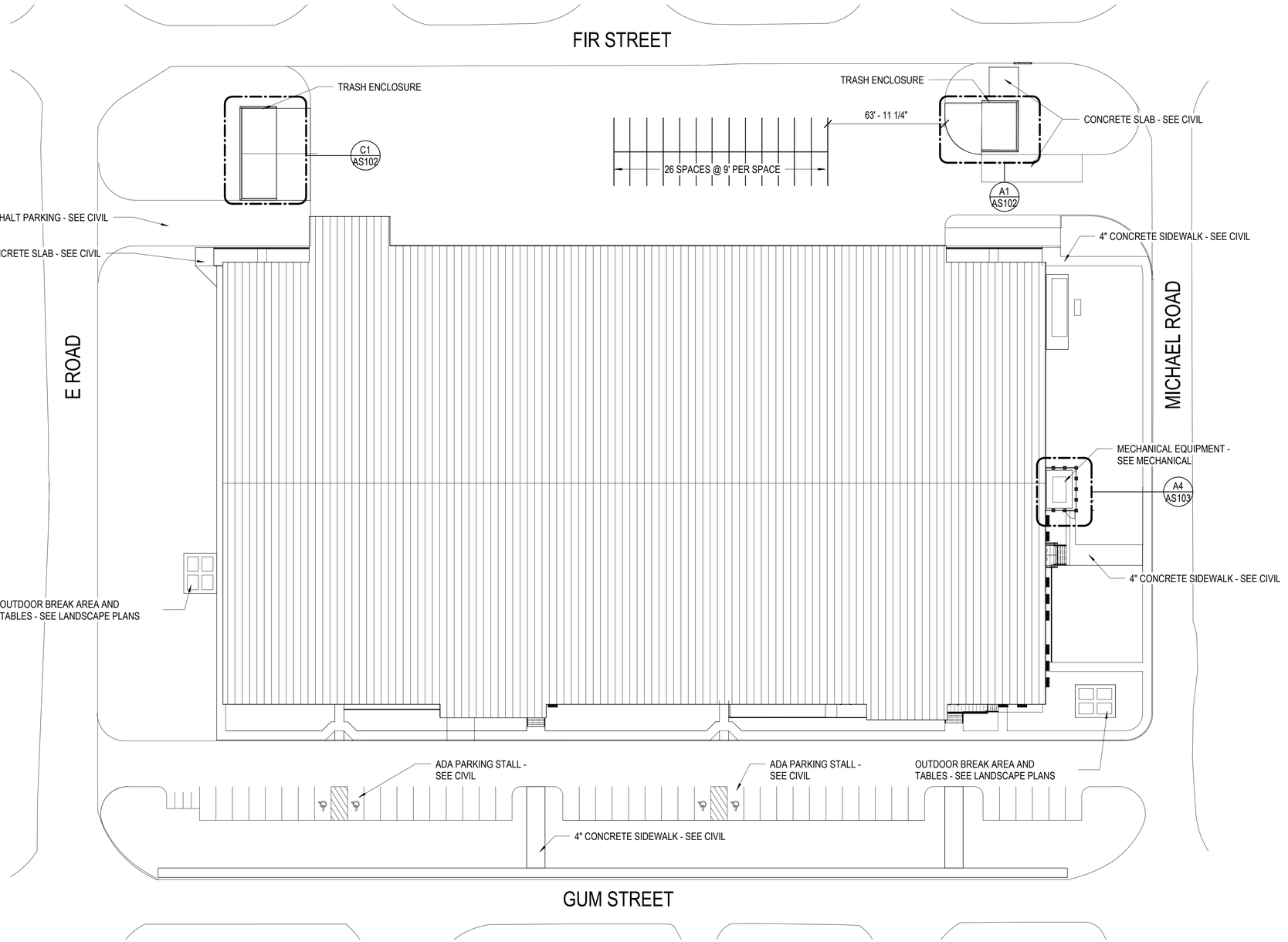

A1 SITE PLAN
SCALE: 1/32" = 1'-0"

NOTES - SITE PLANS

1. THE CONTRACTOR SHALL CONFINE OPERATIONS AT THE SITE TO AREAS PERMITTED BY LAW, ORDINANCES, PERMITS AND CONTRACT DOCUMENTS - CONTRACTOR SHALL NOT UNREASONABLY ENCUMBER THE SITE WITH MATERIALS AND EQUIPMENT
2. THE CONTRACTOR SHALL PERFORM WORK UNDER PROVISION OF THE GENERAL CONDITIONS AND BASIC REQUIREMENTS AND ALL APPLICABLE REQUIREMENTS SPECIFIED
3. THE CONTRACTOR SHALL TAKE CARE NOT TO DAMAGE OR DISRUPT EXISTING UTILITIES WHILE EXCAVATING, GRADING, DRILLING OR DIGGING DURING CONSTRUCTION
4. THE CONTRACTOR SHALL VERIFY ALL DIMENSIONS PRIOR TO THE COMMENCING OF WORK - ALL ERRORS OR OMISSIONS SHALL BE NOTED AND SENT TO THE ARCHITECT WITH THE ADEQUATE TIME TO REVIEW PRIOR TO STARTING THAT PORTION OF WORK
5. THE CONTRACTOR SHALL VISIT THE SITE AND VERIFY ALL CONDITIONS PRIOR COMMENCING WORK - ANY DISCREPANCY SHALL BE REPORTED TO THE BUILDING OWNER
6. THE INTERNATIONAL SYMBOL OF ACCESSIBILITY SHALL BE THE STANDARD USED TO IDENTIFY FACILITIES THAT ARE ACCESSIBLE TO AND USEABLE BY THE PHYSICALLY HANDICAPPED
7. THE CONTRACTOR SHALL REVIEW AND INCLUDE ALL OFFSITE IMPROVEMENTS AS INDICATED ON CIVIL DRAWINGS. GENERAL CONTRACTOR IS RESPONSIBLE TO PROVIDE AND COORDINATE ALL OFFSITE WORK AS SHOWN REQUIRED ON THE APPROVED CIVIL DRAWING.

APPR	DATE	DESCRIPTION	SYM

NAVFAC

REGISTERED ARCHITECT
CERTIFICATE NO.
49179
PAWEL
PASZCZUK
Date Signed 11/17/21
ARIZONA, U.S.A.
Expires 03/31/2024
SEAL

IRQ WM Jordan COMPANY – A JOINT VENTURE –

Michael Baker INTERNATIONAL
100 AIRSIDE DRIVE
MOON TOWNSHIP, PA 15108
A/E INFO

APPROVED
FOR COMMANDER NAVFAC

ACTIVITY
MARINE CORPS BASE
CAMP LEJEUNE

SATISFACTORY TO DATE DD/MM/YY
DES XXX DRW XXX CHK XXX
PM / DM TOWLER / ROOT
BRANCH HEAD
DESIGN DIRECTOR R.L.Stephens, Jr.
FIRE PROTECTION DPS

DEPARTMENT OF THE NAVY
NAVAL FACILITIES ENGINEERING SYSTEMS COMMAND
ATLANTIC DESIGN AND CONSTRUCTION
MCB CAMP LEJEUNE
NAVAL FACILITIES ENGINEERING SYSTEMS COMMAND ATLANTIC
NORFOLK, VA
JACKSONVILLE, NC
P1527 LOGCOM CSP WAREHOUSE
ARCHITECTURAL - SITE PLAN

SCALE: AS NOTED
EPROJECT NO.: 1639600
CONSTR. CONTR. NO. N40085-20-C-0059
NAVFAC DRAWING NO. 14111139
SHEET 128 OF 447

AS101

DRAWFORM REVISION: 25 AUGUST 2020

0 16' - 0" 32' - 0" 64' - 0"
SCALE: 1/32" = 1' - 0"

N

P1527 FINAL SUBMISSION - 11/18/2021

PLOTTED: 11/15/2021 3:40:19 AM
FILE NAME: BIM 360://HF PACKAGE 3/P1527 LOG COM CSP-1639600-A.rvt

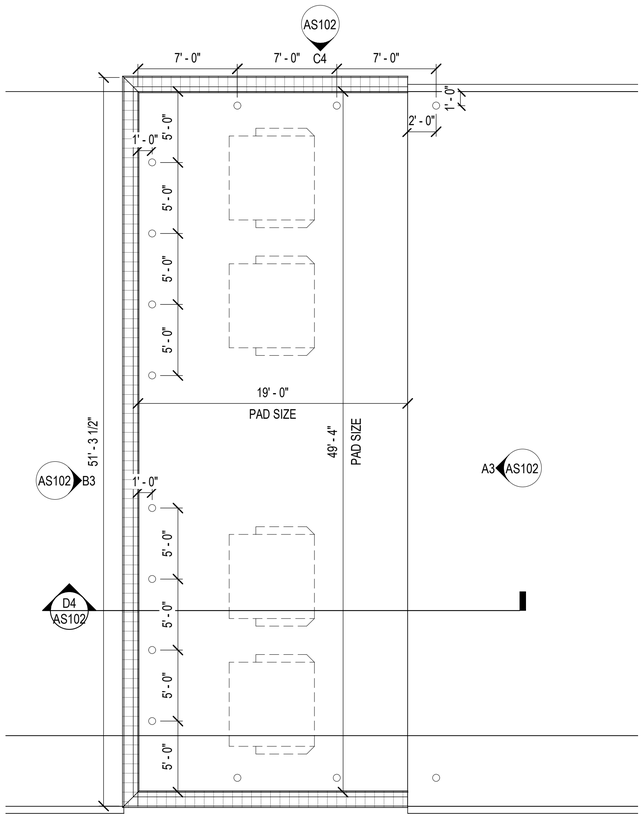

C1 DUMPSTER ENCLOSURE - WEST
SCALE: 3/16" = 1'-0"

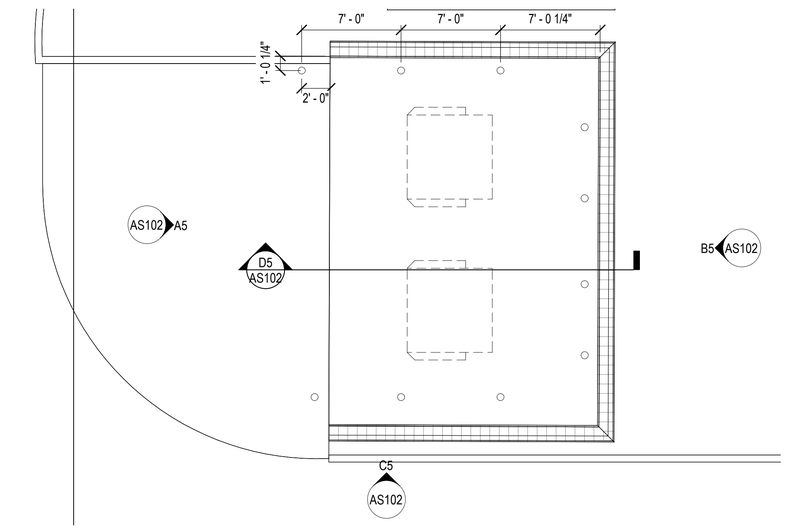

A1 DUMPSTER ENCLOSURE EAST - SITE PLAN
SCALE: 3/16" = 1'-0"

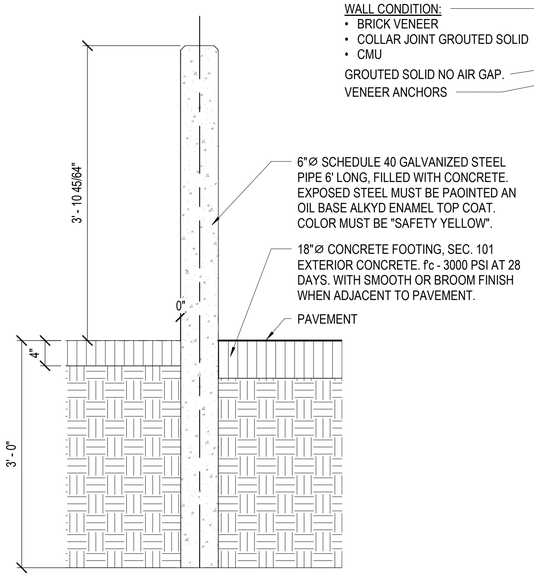

C2 BOLLARD SECTION DETAIL
SCALE: 1" = 1'-0"

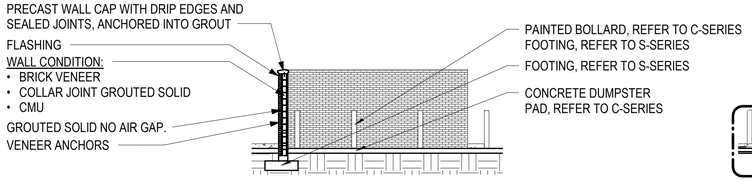

D4 DUMPSTER ENCLOSURE WEST - SECTION
SCALE: 1/8" = 1'-0"

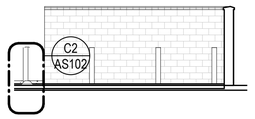

D5 DUMPSTER ENCLOSURE EAST- SECTION
SCALE: 1/8" = 1'-0"

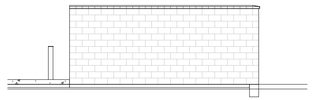

C4 DUMPSTER ENCLOSURE WEST - NORTH ELEVATION
SCALE: 1/8" = 1'-0"

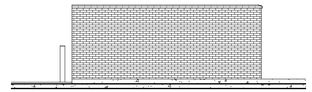

C5 DUMPSTER ENCLOSURE EAST- SOUTHELEVATION
SCALE: 1/8" = 1'-0"

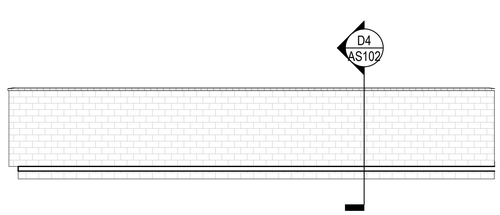

B3 DUMPSTER ENCLOSURE WEST - WEST ELEVATION
SCALE: 1/8" = 1'-0"

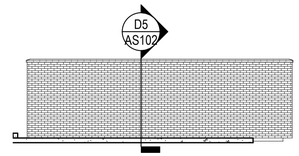

B5 DUMPSTER ENCLOSURE EAST- EAST ELEVATION
SCALE: 1/8" = 1'-0"

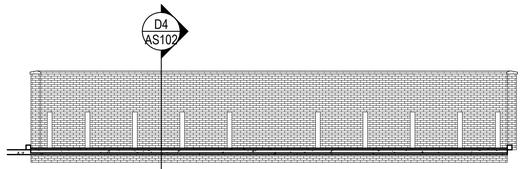

A3 DUMPSTER ENCLOSURE WEST - EAST ELEVATION
SCALE: 1/8" = 1'-0"

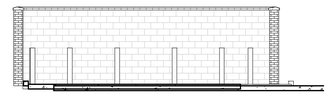

A5 DUMPSTER ENCLOSURE EAST- WEST ELEVATION
SCALE: 1/8" = 1'-0"

APPR	
DATE	
DESCRIPTION	
SYM	

NAVFAC

PRELIMINARY FOR REFERENCE ONLY

SEAL

RQ Jordan COMPANY – A JOINT VENTURE –

Michael Baker INTERNATIONAL

100 AIRSIDE DRIVE
MOON TOWNSHIP, PA 15108 A/E INFO

APPROVED

FOR COMMANDER NAVFAC

ACTIVITY
MARINE CORPS BASE CAMP LEJEUNE

SATISFACTORY TO DATE

DES Designer DRW Author CHK Checker

PM

BRANCH MANAGER

CHIEF ENG/ARCH

FIRE PROTECTION

DEPARTMENT OF THE NAVY
NAVAL FACILITIES ENGINEERING COMMAND
ROIOC FLORENCE CAMP LEJEUNE

NAVAL FACILITIES ENGINEERING COMMAND ~ MID-ATLANTIC
JACKSONVILLE, NC

MCB CAMP LEJEUNE
JACKSONVILLE, NC
P1527 LOGCOM CSP WAREHOUSE

ARCHITECTURAL - SITE PLAN DETAILS

SCALE: AS NOTED

EPROJECT NO.: 1590892

CONSTR. CONTR. NO.
N40085-20-C-0059

NAVFAC DRAWING NO.

SHEET OF

AS102

DP2 SUBMISSION - P1338 BUILDING - PRE-FINAL SUBMISSION

PLOTTED: 11/15/2021 3:40:22 AM

FILE NAME: BIM 360://AFF PACKAGE 3/P1527 LOG COM CSP-1639600-A.rvt

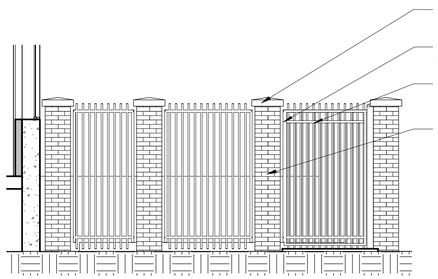

D1 EQUIPMENT ENCLOSURE SOUTH ELEVATION
SCALE: 1/4" = 1'-0"

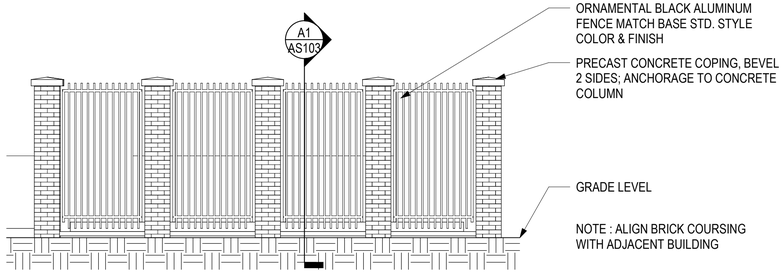

C1 EQUIPMENT ENCLOSURE EAST ELEVATION
SCALE: 1/4" = 1'-0"

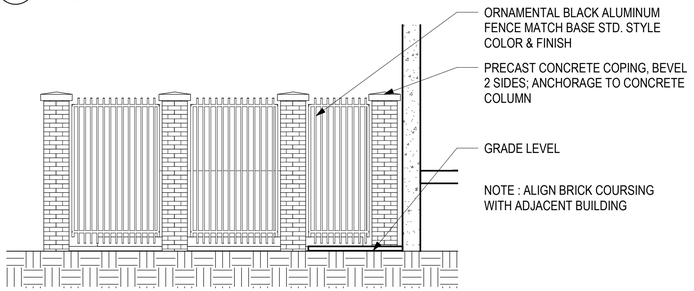

B1 EQUIPMENT ENCLOSURE NORTH ELEVATION
SCALE: 1/4" = 1'-0"

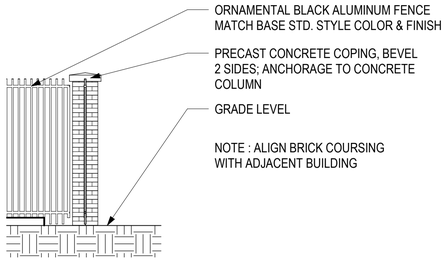

A1 EQUIPMENT ENCLOSURE WALL SECTION
SCALE: 1/4" = 1'-0"

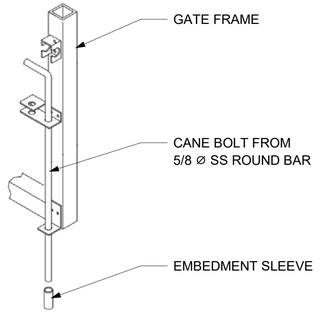

C3 CANE BOLT
SCALE: 1" = 1'-0"

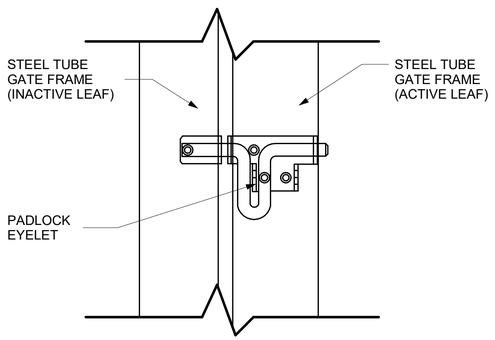

B3 TYPICAL GATE LOCK
SCALE: 1" = 1'-0"

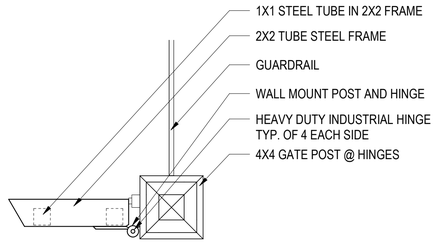

A3 TYPICAL HINGE DETAIL
SCALE: 1/2" = 1'-0"

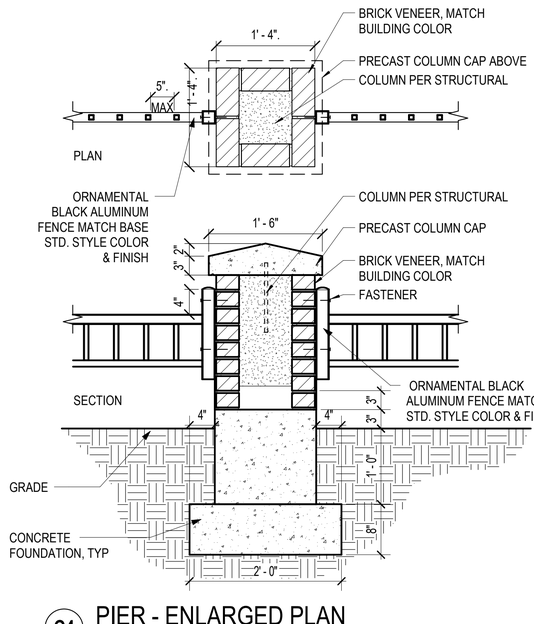

C4 PIER - ENLARGED PLAN
SCALE: 1" = 1'-0"

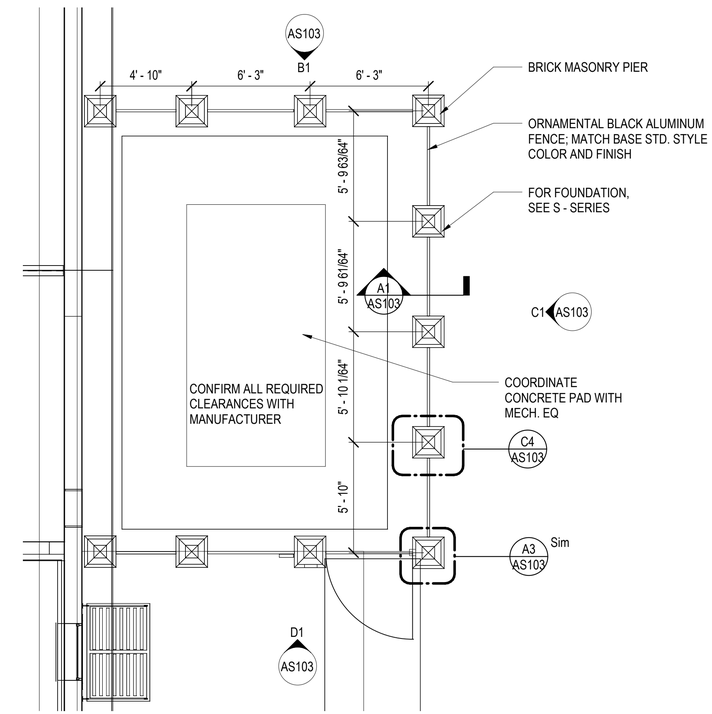

A4 EQUIPMENT ENCLOSURE
SCALE: 1/4" = 1'-0"

APPR	
DATE	
DESCRIPTION	
SYM	

NAVFAC

PRELIMINARY FOR REFERENCE ONLY

SEAL

RQ W.M. Jordan COMPANY ~ A JOINT VENTURE ~

Michael Baker INTERNATIONAL
100 AIRSIDE DRIVE
MOON TOWNSHIP, PA 15108
A/E INFO

APPROVED

FOR COMMANDER NAVFAC

ACTIVITY
MARINE CORPS BASE CAMP LEJEUNE

SATISFACTORY TO DATE

DES Designer DRW Author CHK Checker

PM

BRANCH MANAGER

CHIEF ENG/ARCH

FIRE PROTECTION

NAVAL FACILITIES ENGINEERING COMMAND ~ MID-ATLANTIC
JACKSONVILLE, NC

DEPARTMENT OF THE NAVY
NAVAL FACILITIES ENGINEERING COMMAND
ROICC FLORENCE CAMP LEJEUNE
MCB CAMP LEJEUNE

JACKSONVILLE, NC
P1527 LOGCOM CSP WAREHOUSE

EQUIPMENT ENCLOSURE

SCALE: AS NOTED
EPROJECT NO.: 1590892
CONSTR. CONTR. NO.
N40085-20-C-0059
NAVFAC DRAWING NO.
SHEET OF

AS103

DP2 SUBMISSION – P1338 BUILDING - PRE-FINAL SUBMISSION

PLOTTED: 11/15/2021 3:40:25 AM

FILE NAME: BIM 360:/HF PACKAGE 3P1527 LOG COM CSP-1639600-A.rvt

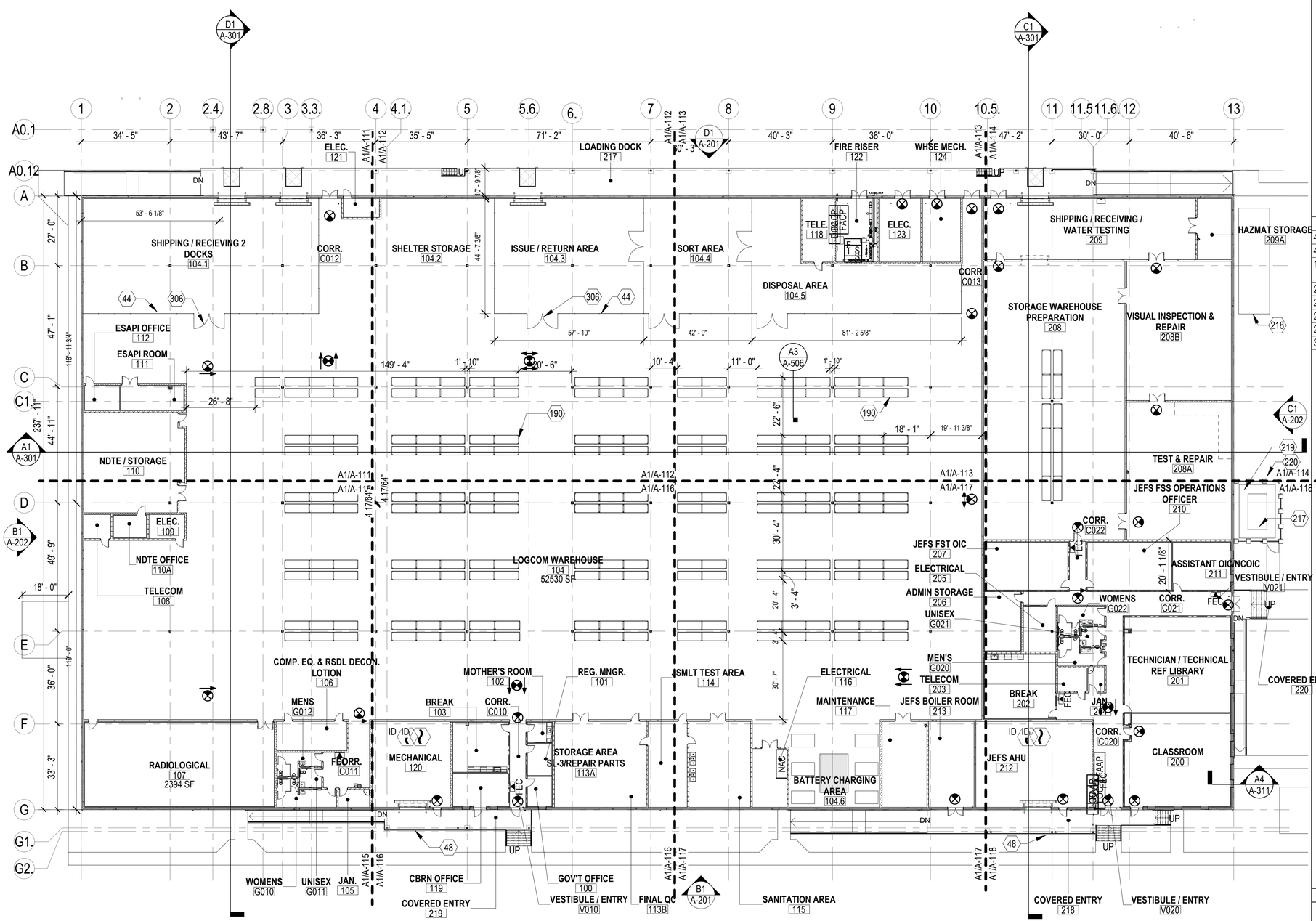

OVERALL - 1ST FLOOR PLAN

SCALE: 3/64" = 1'-0"

NOTES - FLOOR PLANS

1. REFER TO SHEET A-001 FOR ARCHITECTURAL GENERAL NOTES, & ANNOTATION LEGEND
2. REFER TO A-600 SERIES FOR PARTITION TYPES
3. REFER TO ENLARGED PLANS AND INTERIOR ELEVATIONS FOR ADDITIONAL INFORMATION
4. REFER TO MECHANICAL, ELECTRICAL, AND TELECOMM SHEETS FOR EQUIPMENT LOCATIONS AND REQUIREMENTS.
5. ALL DIMENSIONS SHOWN ARE TO FACE OF STRUCTURE (LEFT TO RIGHT, BOTTOM TO TOP)- TYPICAL UNLESS NOTED OTHERWISE
6. ALL DOORS MUST BE INSTALLED 4" FROM HINGE SIDE OF WALL - TYPICAL UNLESS NOTED OR DIMENSIONED OTHERWISE
7. DIMENSIONS MARKED AS "CLEAR" DICTATES THE CLEAR DIMENSION FROM FINISH TO FINISH
8. WHERE FIRE RATED PARTITIONS INTERSECT WITH LESSER RATED PARTITIONS OR NON-RATED PARTITIONS, THE HIGHER RATED PARTITION IS TO CONTINUE THROUGH THE INTERSECTION TO MAINTAIN THE HIGHER RATING
9. FIRE EXTINGUISHERS MUST BE PROVIDED AND LOCATED IN ACCORDANCE WITH NFPA 10. THE MAXIMUM TRAVEL DISTANCE TO THE NEAREST FIRE EXTINGUISHER FROM ANY POINT IN THE BUILDING MUST NOT EXCEED 75 FEET.

KEYNOTES

44	10' CHAIN LINK ENCLOSURE (TYP).
48	REMOVABLE RAILING FOR DOCK ACCESS
190	DOUBLE DEEP RACKS, OVERALL CAPACITY OF 1,536 PALLET POSITIONS WITH 14' WIDE MIN. DRIVE AISLES BETWEEN RACK FACES
217	LED STRIP LIGHTS
218	GENERATOR PAD
219	
220	
306	12' DOUBLE GATE

KEYPLAN

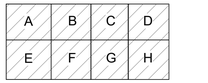

0 16' - 0" 32' - 0" 64' - 0"

SCALE: 3/64" = 1' - 0"

N

APPR | DATE | DESCRIPTION | SYM

NAVFAC

REGISTERED ARCHITECT CERTIFICATE NO. 49179 PAWEL PASZCZUK Date Signed 11/11/21 ARIZONA, U.S.A.
Expires 03/31/2024 SEAL

IRQ W.M. Jordan COMPANY – A JOINT VENTURE –

Michael Baker INTERNATIONAL
100 AIRSIDE DRIVE MOON TOWNSHIP, PA 15108 A/E INFO

APPROVED

FOR COMMANDER NAVFAC

ACTIVITY: MARINE CORPS BASE CAMP LEJEUNE

SATISFACTORY TO DATE DD/MM/YY

DES Designer DRW Author CHK Checker

PM / DM TOWLER / ROOT

BRANCH HEAD

DESIGN DIRECTOR R.L.Stephens, Jr.

FIRE PROTECTION DPS

DEPARTMENT OF THE NAVY
NAVAL FACILITIES ENGINEERING SYSTEMS COMMAND
ATLANTIC DESIGN AND CONSTRUCTION
MCB CAMP LEJEUNE

NAVAL FACILITIES ENGINEERING SYSTEMS COMMAND ATLANTIC NORFOLK, VA
JACKSONVILLE, NC
P1527 LOGCOM CSP WAREHOUSE
OVERALL FLOOR PLAN

SCALE: AS NOTED
EPROJECT NO.: 1639600
CONSTR. CONTR. NO. N40085-20-C-0059
NAVFAC DRAWING NO. 14111143
SHEET 132 OF 447

A-110

DRAWFORM REVISION: 25 AUGUST 2020

P1527 FINAL SUBMISSION - 11/18/2021

PLOTTED: 11/15/2021 3:37:36 AM

FILE NAME: BIM 360:/HF PACKAGE 3/P1527 LOG COM CSP-1639600-A.rvt

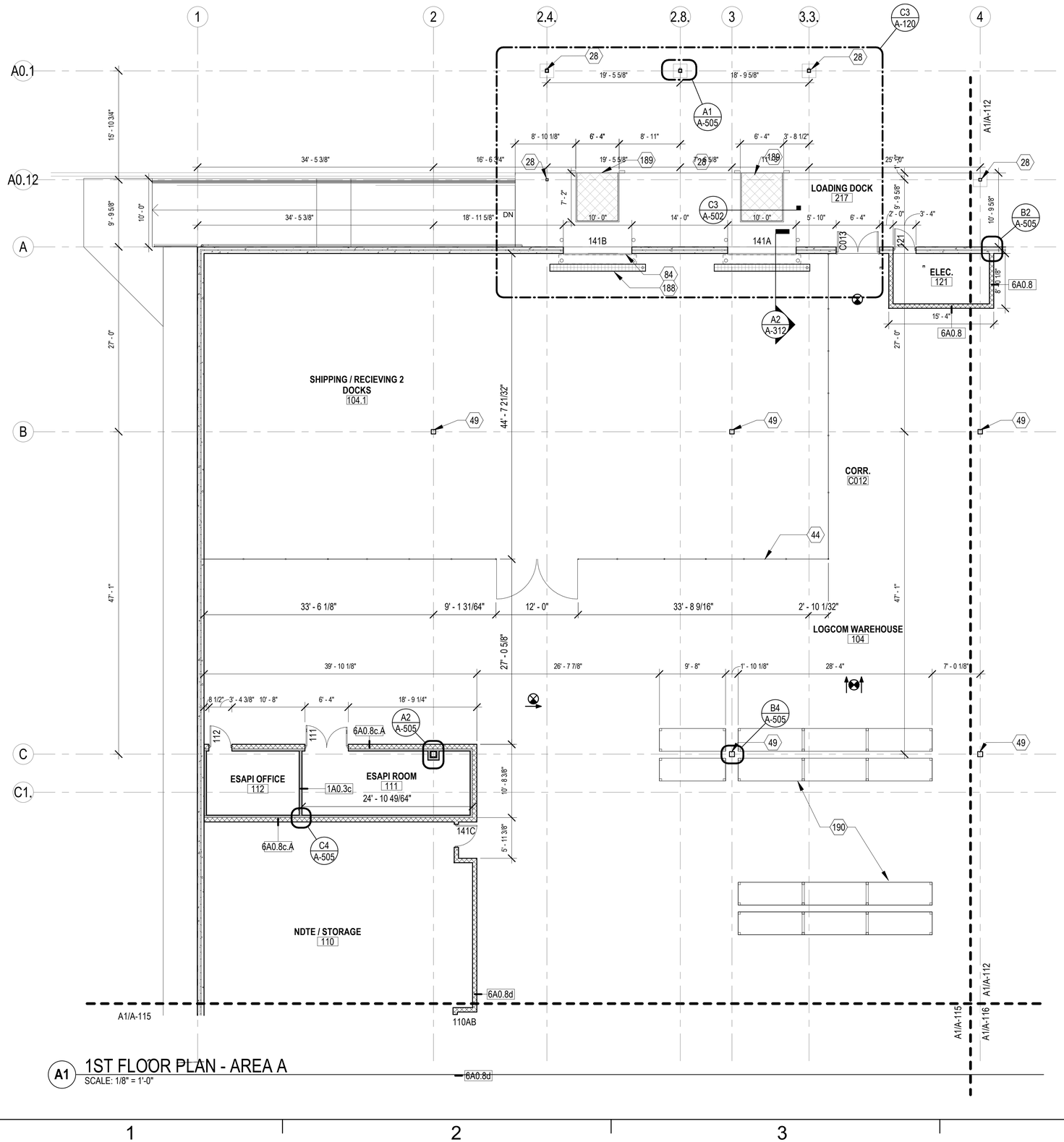

NOTES - FLOOR PLANS

1. REFER TO SHEET A-001 FOR ARCHITECTURAL GENERAL NOTES, & ANNOTATION LEGEND
2. REFER TO A-600 SERIES FOR PARTITION TYPES
3. REFER TO ENLARGED PLANS AND INTERIOR ELEVATIONS FOR ADDITIONAL INFORMATION
4. REFER TO MECHANICAL, ELECTRICAL, AND TELECOMM SHEETS FOR EQUIPMENT LOCATIONS AND REQUIREMENTS.
5. ALL DIMENSIONS SHOWN ARE TO FACE OF STRUCTURE (LEFT TO RIGHT, BOTTOM TO TOP)- TYPICAL UNLESS NOTED OTHERWISE
6. ALL DOORS MUST BE INSTALLED 4" FROM HINGE SIDE OF WALL - TYPICAL UNLESS NOTED OR DIMENSIONED OTHERWISE
7. DIMENSIONS MARKED AS "CLEAR" DICTATES THE CLEAR DIMENSION FROM FINISH TO FINISH
8. WHERE FIRE RATED PARTITIONS INTERSECT WITH LESSER RATED PARTITIONS OR NON-RATED PARTITIONS, THE HIGHER RATED PARTITION IS TO CONTINUE THROUGH THE INTERSECTION TO MAINTAIN THE HIGHER RATING
9. FIRE EXTINGUISHERS MUST BE PROVIDED AND LOCATED IN ACCORDANCE WITH NFPA 10. THE MAXIMUM TRAVEL DISTANCE TO THE NEAREST FIRE EXTINGUISHER FROM ANY POINT IN THE BUILDING MUST NOT EXCEED 75 FEET.

KEYNOTES

28	STRUCTURAL STEEL OR COLUMN, SEE S-SERIES
44	10' CHAIN LINK ENCLOSURE (TYP).
49	COLUMN WITH INTUMESCENT PAINT- 1 HOUR RATED
84	OVERHEAD COILING DOORS - SEE DOOR SCHEDULE
188	10' TALL AT 12" WIDE FLOOR GRATE OVER FLOOR DRAIN
189	DOCK LEVELER 6' WIDE X 7' LONG
190	DOUBLE DEEP RACKS, OVERALL CAPACITY OF 1,536 PALLET POSITIONS WITH 14' WIDE MIN. DRIVE AISLES BETWEEN RACK FACES

KEYPLAN

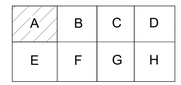

0 4' - 0" 8' - 0" 16' - 0"

SCALE: 1/8" = 1' - 0"

N

A1 1ST FLOOR PLAN - AREA A
SCALE: 1/8" = 1'-0"

APPR | DATE | DESCRIPTION | SYM

NAVFAC

REGISTERED ARCHITECT
CERTIFICATE NO.
49179
PAWEL PASZCZUK
Date Signed 11/11/21
ARIZONA, U.S.A.
Expires 03/31/2024
SEAL

IRQ W.M. Jordan COMPANY – A JOINT VENTURE –

Michael Baker INTERNATIONAL
100 AIRSIDE DRIVE
MOON TOWNSHIP, PA 15108
A/E INFO

APPROVED

FOR COMMANDER NAVFAC

ACTIVITY
MARINE CORPS BASE
CAMP LEJEUNE

SATISFACTORY TO DATE DD/MM/YY

DES XXX | DRW XXX | CHK XXX

PM / DM TOWLER / ROOT

BRANCH HEAD

DESIGN DIRECTOR R.L.Stephens, Jr.

FIRE PROTECTION DPS

DEPARTMENT OF THE NAVY
NAVAL FACILITIES ENGINEERING SYSTEMS COMMAND
ATLANTIC DESIGN AND CONSTRUCTION
MCB CAMP LEJEUNE

NAVAL FACILITIES ENGINEERING SYSTEMS COMMAND ATLANTIC
NORFOLK, VA

JACKSONVILLE, NC
P1527 LOGCOM CSP WAREHOUSE

1ST FLOOR PLAN - AREA A

SCALE: AS NOTED
EPROJECT NO.: 1639600
CONSTR. CONTR. NO. N40085-20-C-0059
NAVFAC DRAWING NO. 14111140
SHEET 129 OF 447

A-111

DRAWFORM REVISION: 25 AUGUST 2020

P1527 FINAL SUBMISSION - 11/18/2021

PLOTTED: 11/15/2021 3:37:38 AM

FILE NAME: BIM 360://AIF PACKAGE 3/P1527 LOG COM CSP-1639600-A.rvt

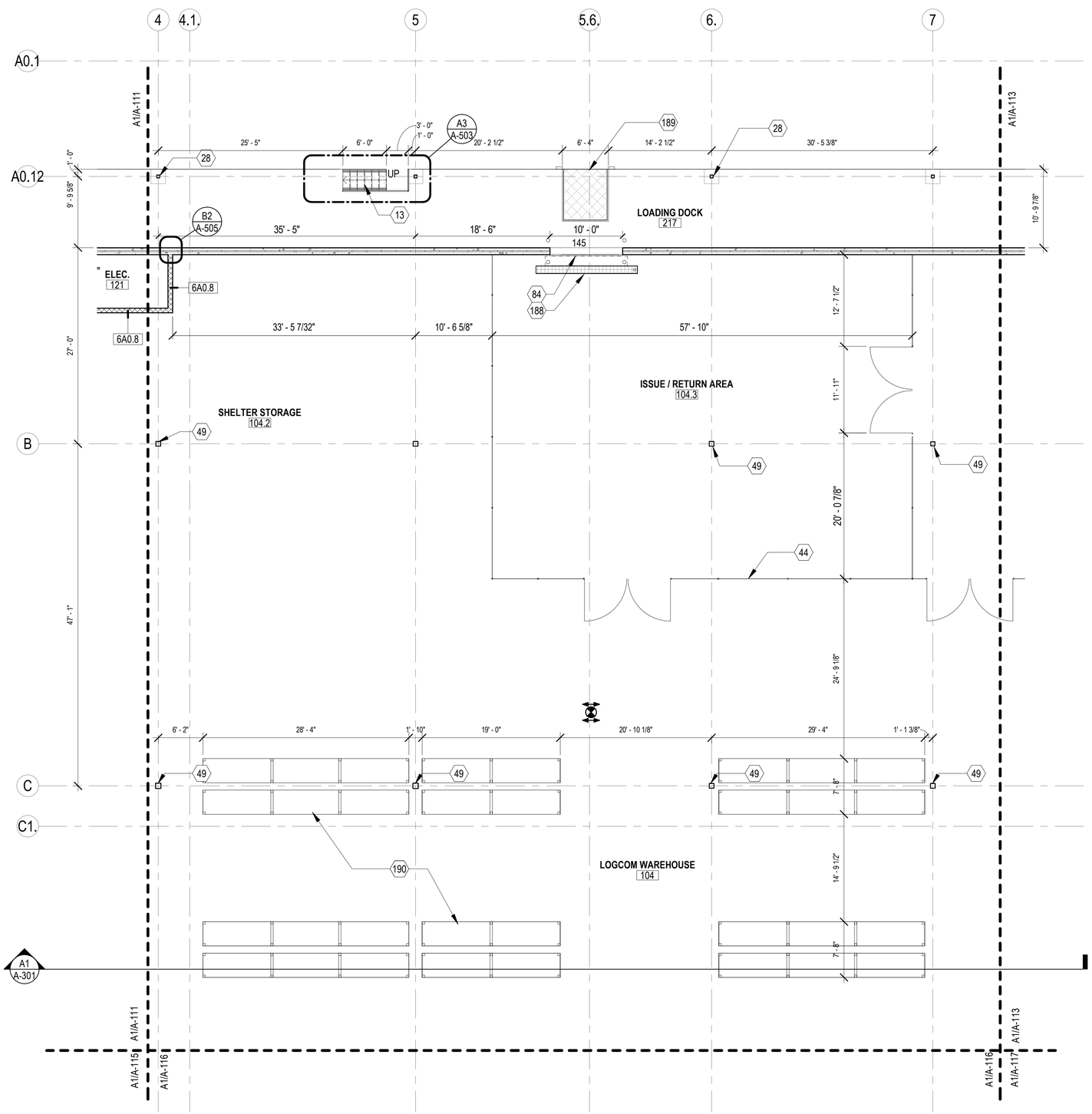

NOTES - FLOOR PLANS

1. REFER TO SHEET A-001 FOR ARCHITECTURAL GENERAL NOTES, & ANNOTATION LEGEND
2. REFER TO A-600 SERIES FOR PARTITION TYPES
3. REFER TO ENLARGED PLANS AND INTERIOR ELEVATIONS FOR ADDITIONAL INFORMATION
4. REFER TO MECHANICAL, ELECTRICAL, AND TELECOMM SHEETS FOR EQUIPMENT LOCATIONS AND REQUIREMENTS.
5. ALL DIMENSIONS SHOWN ARE TO FACE OF STRUCTURE (LEFT TO RIGHT, BOTTOM TO TOP)- TYPICAL UNLESS NOTED OTHERWISE
6. ALL DOORS MUST BE INSTALLED 4" FROM HINGE SIDE OF WALL - TYPICAL UNLESS NOTED OR DIMENSIONED OTHERWISE
7. DIMENSIONS MARKED AS "CLEAR" DICTATES THE CLEAR DIMENSION FROM FINISH TO FINISH
8. WHERE FIRE RATED PARTITIONS INTERSECT WITH LESSER RATED PARTITIONS OR NON-RATED PARTITIONS, THE HIGHER RATED PARTITION IS TO CONTINUE THROUGH THE INTERSECTION TO MAINTAIN THE HIGHER RATING
9. FIRE EXTINGUISHERS MUST BE PROVIDED AND LOCATED IN ACCORDANCE WITH NFPA 10. THE MAXIMUM TRAVEL DISTANCE TO THE NEAREST FIRE EXTINGUISHER FROM ANY POINT IN THE BUILDING MUST NOT EXCEED 75 FEET.

KEYNOTES

13	CONCRETE STAIR TO FIRST FLOOR
28	STRUCTURAL STEEL OR COLUMN, SEE S-SERIES
44	10' CHAIN LINK ENCLOSURE (TYP).
49	COLUMN WITH INTUMESCENT PAINT- 1 HOUR RATED
84	OVERHEAD COILING DOORS - SEE DOOR SCHEDULE
188	10' TALL AT 12" WIDE FLOOR GRATE OVER FLOOR DRAIN
189	DOCK LEVELER 6' WIDE X 7' LONG
190	DOUBLE DEEP RACKS, OVERALL CAPACITY OF 1,536 PALLET POSITIONS WITH 14' WIDE MIN. DRIVE AISLES BETWEEN RACK FACES

KEYPLAN

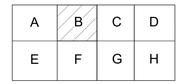

0 4' - 0" 8' - 0" 16' - 0"

SCALE: 1/8" = 1' - 0"

N

A1 1ST FLOOR PLAN - AREA B

SCALE: 1/8" = 1'-0"

APPR	DATE	DESCRIPTION	SYM

NAVFAC

REGISTERED ARCHITECT CERTIFICATE NO. 49179 PAWEL PASZCZUK Date Signed 11/11/21 ARIZONA, U.S.A.

Expires 03/31/2024 SEAL

IRQ W.M. Jordan COMPANY – A JOINT VENTURE –

Michael Baker INTERNATIONAL

100 AIRSIDE DRIVE MOON TOWNSHIP, PA 15108 A/E INFO

APPROVED

FOR COMMANDER NAVFAC

ACTIVITY
MARINE CORPS BASE CAMP LEJEUNE

SATISFACTORY TO DATE DD/MM/YY

DES XXX DRW XXX CHK XXX

PM / DM TOWLER / ROOT

BRANCH HEAD

DESIGN DIRECTOR R.L.Stephens, Jr.

FIRE PROTECTION DPS

NAVAL FACILITIES ENGINEERING SYSTEMS COMMAND ATLANTIC
NORFOLK, VA

DEPARTMENT OF THE NAVY
NAVAL FACILITIES ENGINEERING SYSTEMS COMMAND
ATLANTIC DESIGN AND CONSTRUCTION

MCB CAMP LEJEUNE

JACKSONVILLE, NC

P1527 LOGCOM CSP WAREHOUSE

1ST FLOOR PLAN - AREA B

SCALE: AS NOTED

EPROJECT NO.: 1639600

CONSTR. CONTR. NO. N40085-20-C-0059

NAVFAC DRAWING NO. 14111142

SHEET 131 OF 447

A-112

DRAWFORM REVISION: 25 AUGUST 2020

P1527 FINAL SUBMISSION - 11/18/2021

PLOTTED: 11/15/2021 3:37:40 AM

FILE NAME: BIM 360://HF PACKAGE 3/P1527 LOG COM CSP-1639600-A.rvt

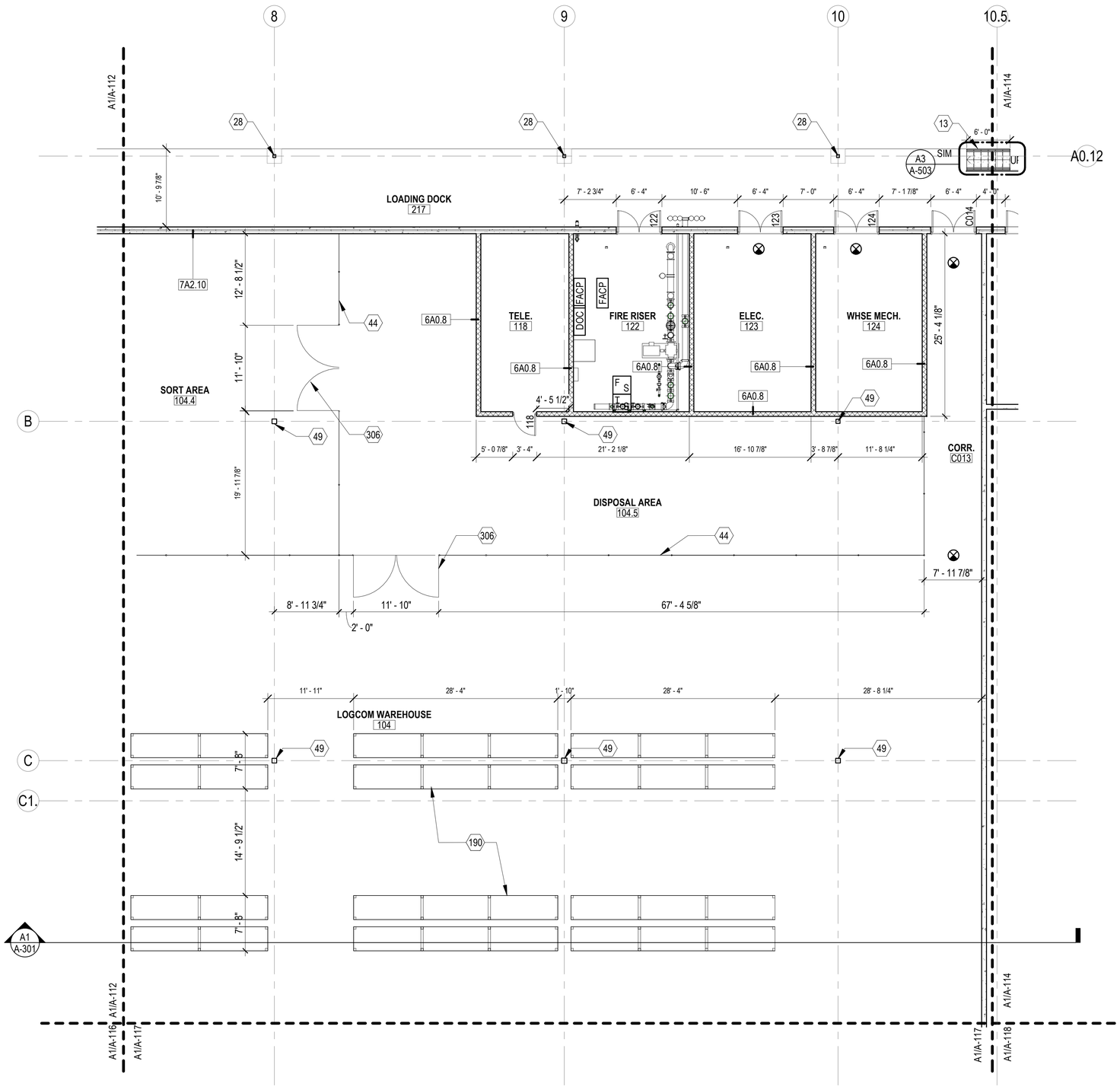

A1 1ST FLOOR PLAN - AREA C
SCALE: 1/8" = 1'-0"

NOTES - FLOOR PLANS

1. REFER TO SHEET A-001 FOR ARCHITECTURAL GENERAL NOTES, & ANNOTATION LEGEND
2. REFER TO A-600 SERIES FOR PARTITION TYPES
3. REFER TO ENLARGED PLANS AND INTERIOR ELEVATIONS FOR ADDITIONAL INFORMATION
4. REFER TO MECHANICAL, ELECTRICAL, AND TELECOMM SHEETS FOR EQUIPMENT LOCATIONS AND REQUIREMENTS.
5. ALL DIMENSIONS SHOWN ARE TO FACE OF STRUCTURE (LEFT TO RIGHT, BOTTOM TO TOP)- TYPICAL UNLESS NOTED OTHERWISE
6. ALL DOORS MUST BE INSTALLED 4" FROM HINGE SIDE OF WALL - TYPICAL UNLESS NOTED OR DIMENSIONED OTHERWISE
7. DIMENSIONS MARKED AS "CLEAR" DICTATES THE CLEAR DIMENSION FROM FINISH TO FINISH
8. WHERE FIRE RATED PARTITIONS INTERSECT WITH LESSER RATED PARTITIONS OR NON-RATED PARTITIONS, THE HIGHER RATED PARTITION IS TO CONTINUE THROUGH THE INTERSECTION TO MAINTAIN THE HIGHER RATING
9. FIRE EXTINGUISHERS MUST BE PROVIDED AND LOCATED IN ACCORDANCE WITH NFPA 10. THE MAXIMUM TRAVEL DISTANCE TO THE NEAREST FIRE EXTINGUISHER FROM ANY POINT IN THE BUILDING MUST NOT EXCEED 75 FEET.

KEYNOTES

13	CONCRETE STAIR TO FIRST FLOOR
28	STRUCTURAL STEEL OR COLUMN, SEE S-SERIES
44	10' CHAIN LINK ENCLOSURE (TYP).
49	COLUMN WITH INTUMESCENT PAINT- 1 HOUR RATED
190	DOUBLE DEEP RACKS, OVERALL CAPACITY OF 1,536 PALLET POSITIONS WITH 14' WIDE MIN. DRIVE AISLES BETWEEN RACK FACES
306	12' DOUBLE GATE

KEYPLAN

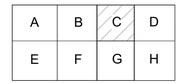

0 4' - 0" 8' - 0" 16' - 0"
SCALE: 1/8" = 1' - 0"

N

APPR	
DATE	
DESCRIPTION	
SYM	

NAVFAC

REGISTERED ARCHITECT CERTIFICATE NO. 49179 PAWEL PASZCZUK Date Signed 11/11/21 ARIZONA, U.S.A.
Expires 03/31/2024 SEAL

IRQ WM Jordan COMPANY – A JOINT VENTURE –

Michael Baker INTERNATIONAL
100 AIRSIDE DRIVE MOON TOWNSHIP, PA 15108 A/E INFO

APPROVED
FOR COMMANDER NAVFAC

ACTIVITY
MARINE CORPS BASE CAMP LEJEUNE

SATISFACTORY TO DATE DD/MM/YY
DES Designer DRW Author CHK Checker
PM / DM TOWLER / ROOT
BRANCH HEAD
DESIGN DIRECTOR R.L.Stephens, Jr.
FIRE PROTECTION DPS

NAVAL FACILITIES ENGINEERING SYSTEMS COMMAND
DEPARTMENT OF THE NAVY
NAVAL FACILITIES ENGINEERING SYSTEMS COMMAND ATLANTIC
ATLANTIC DESIGN AND CONSTRUCTION
NORFOLK, VA
MCB CAMP LEJEUNE
JACKSONVILLE, NC
P1527 LOGCOM CSP WAREHOUSE
1ST FLOOR PLAN - AREA C

SCALE: AS NOTED
EPROJECT NO.: 1639600
CONSTR. CONTR. NO. N40085-20-C-0059
NAVFAC DRAWING NO. 14111144
SHEET 133 OF 447

A-113
DRAWFORM REVISION: 25 AUGUST 2020

P1527 FINAL SUBMISSION - 11/18/2021

PLOTTED: 11/15/2021 3:37:42 AM
FILE NAME: BIM 360://AIF PACKAGE 3/P1527 LOG COM CSP-1639600-A.rvt

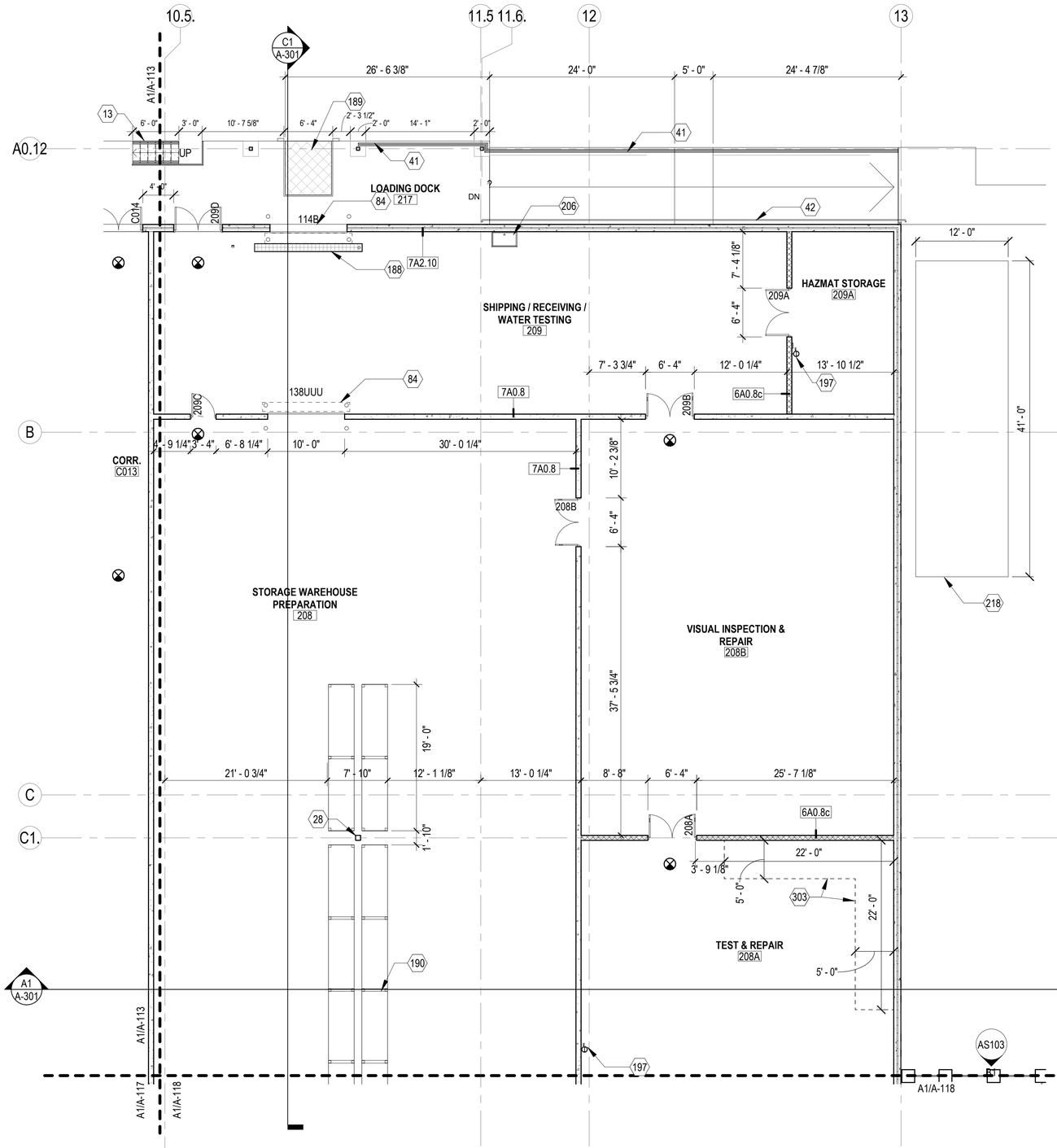

A1 1ST FLOOR PLAN - AREA D

SCALE: 1/8" = 1'-0"

NOTES - FLOOR PLANS

1. REFER TO SHEET A-001 FOR ARCHITECTURAL GENERAL NOTES, & ANNOTATION LEGEND
2. REFER TO A-600 SERIES FOR PARTITION TYPES
3. REFER TO ENLARGED PLANS AND INTERIOR ELEVATIONS FOR ADDITIONAL INFORMATION
4. REFER TO MECHANICAL, ELECTRICAL, AND TELECOMM SHEETS FOR EQUIPMENT LOCATIONS AND REQUIREMENTS.
5. ALL DIMENSIONS SHOWN ARE TO FACE OF STRUCTURE (LEFT TO RIGHT, BOTTOM TO TOP)- TYPICAL UNLESS NOTED OTHERWISE
6. ALL DOORS MUST BE INSTALLED 4" FROM HINGE SIDE OF WALL - TYPICAL UNLESS NOTED OR DIMENSIONED OTHERWISE
7. DIMENSIONS MARKED AS "CLEAR" DICTATES THE CLEAR DIMENSION FROM FINISH TO FINISH
8. WHERE FIRE RATED PARTITIONS INTERSECT WITH LESSER RATED PARTITIONS OR NON-RATED PARTITIONS, THE HIGHER RATED PARTITION IS TO CONTINUE THROUGH THE INTERSECTION TO MAINTAIN THE HIGHER RATING
9. FIRE EXTINGUISHERS MUST BE PROVIDED AND LOCATED IN ACCORDANCE WITH NFPA 10. THE MAXIMUM TRAVEL DISTANCE TO THE NEAREST FIRE EXTINGUISHER FROM ANY POINT IN THE BUILDING MUST NOT EXCEED 75 FEET.

KEYNOTES

13	CONCRETE STAIR TO FIRST FLOOR
28	STRUCTURAL STEEL OR COLUMN, SEE S-SERIES
41	42" H. GUARDRAIL WITH 36" H. HANDRAIL
42	36" H. WALL MOUNTED HANDRAIL
84	OVERHEAD COILING DOORS - SEE DOOR SCHEDULE
188	10' TALL AT 12" WIDE FLOOR GRATE OVER FLOOR DRAIN
189	DOCK LEVELER 6' WIDE X 7' LONG
190	DOUBLE DEEP RACKS, OVERALL CAPACITY OF 1,536 PALLET POSITIONS WITH 14' WIDE MIN. DRIVE AISLES BETWEEN RACK FACES
197	EMERGENCY EYE WASH STATION
206	SINGLE COMPARTMENT SINK
218	GENERATOR PAD
303	3 5/8" METAL STUD W/ GYPSUM AND FRP FINISH BOTH SIDES - FUME HOOD EXHAUST ENCLOSURE INSTALLED TO 7' ABOVE FINISHED FLOOR

KEYPLAN

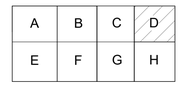

0 4' - 0" 8' - 0" 16' - 0"

SCALE: 1/8" = 1' - 0"

N

APPR | DATE | DESCRIPTION | SYM

NAVFAC

REGISTERED ARCHITECT CERTIFICATE NO. 49179 PAWEL PASZCZUK Date Signed 11/11/21 ARIZONA, U.S.A.

Expires 03/31/2024 SEAL

IRQ WM Jordan COMPANY – A JOINT VENTURE –

Michael Baker INTERNATIONAL

100 AIRSIDE DRIVE MOON TOWNSHIP, PA 15108 A/E INFO

APPROVED

FOR COMMANDER NAVFAC

ACTIVITY: MARINE CORPS BASE CAMP LEJEUNE

SATISFACTORY TO DATE DD/MM/YY

DES Designer DRW Author CHK Checker

PM / DM TOWLER / ROOT

BRANCH HEAD

DESIGN DIRECTOR R.L.Stephens, Jr.

FIRE PROTECTION DPS

DEPARTMENT OF THE NAVY
NAVAL FACILITIES ENGINEERING SYSTEMS COMMAND
ATLANTIC DESIGN AND CONSTRUCTION

NAVAL FACILITIES ENGINEERING SYSTEMS COMMAND ATLANTIC NORFOLK, VA

MCB CAMP LEJEUNE

JACKSONVILLE, NC

P1527 LOGCOM CSP WAREHOUSE

1ST FLOOR PLAN - AREA D

SCALE: AS NOTED

EPROJECT NO.: 1639600

CONSTR. CONTR. NO. N40085-20-C-0059

NAVFAC DRAWING NO. 14111145

SHEET 134 OF 447

A-114

DRAWFORM REVISION: 25 AUGUST 2020

P1527 FINAL SUBMISSION - 11/18/2021

PLOTTED: 11/15/2021 3:37:44 AM

FILE NAME: BIM 360://HF PACKAGE 3/P1527 LOG COM CSP-1639600-A.rvt

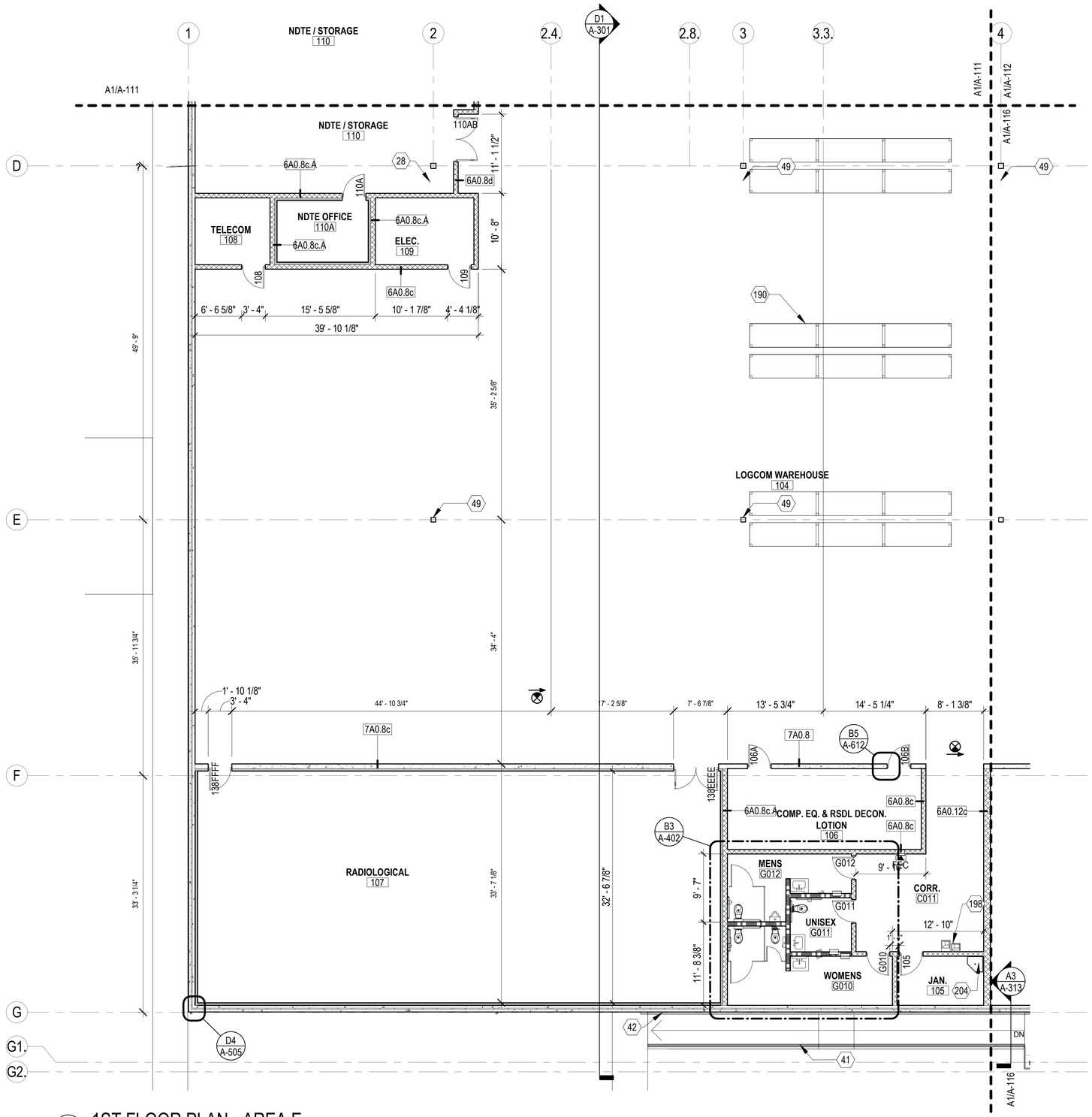

A1 1ST FLOOR PLAN - AREA E
SCALE: 1/8" = 1'-0"

NOTES - FLOOR PLANS

1. REFER TO SHEET A-001 FOR ARCHITECTURAL GENERAL NOTES, & ANNOTATION LEGEND
2. REFER TO A-600 SERIES FOR PARTITION TYPES
3. REFER TO ENLARGED PLANS AND INTERIOR ELEVATIONS FOR ADDITIONAL INFORMATION
4. REFER TO MECHANICAL, ELECTRICAL, AND TELECOMM SHEETS FOR EQUIPMENT LOCATIONS AND REQUIREMENTS.
5. ALL DIMENSIONS SHOWN ARE TO FACE OF STRUCTURE (LEFT TO RIGHT, BOTTOM TO TOP)- TYPICAL UNLESS NOTED OTHERWISE
6. ALL DOORS MUST BE INSTALLED 4" FROM HINGE SIDE OF WALL - TYPICAL UNLESS NOTED OR DIMENSIONED OTHERWISE
7. DIMENSIONS MARKED AS "CLEAR" DICTATES THE CLEAR DIMENSION FROM FINISH TO FINISH
8. WHERE FIRE RATED PARTITIONS INTERSECT WITH LESSER RATED PARTITIONS OR NON-RATED PARTITIONS, THE HIGHER RATED PARTITION IS TO CONTINUE THROUGH THE INTERSECTION TO MAINTAIN THE HIGHER RATING
9. FIRE EXTINGUISHERS MUST BE PROVIDED AND LOCATED IN ACCORDANCE WITH NFPA 10. THE MAXIMUM TRAVEL DISTANCE TO THE NEAREST FIRE EXTINGUISHER FROM ANY POINT IN THE BUILDING MUST NOT EXCEED 75 FEET.

KEYNOTES

28	STRUCTURAL STEEL OR COLUMN, SEE S-SERIES
41	42" H. GUARDRAIL WITH 36" H. HANDRAIL
42	36" H. WALL MOUNTED HANDRAIL
49	COLUMN WITH INTUMESCENT PAINT- 1 HOUR RATED
190	DOUBLE DEEP RACKS, OVERALL CAPACITY OF 1,536 PALLET POSITIONS WITH 14' WIDE MIN. DRIVE AISLES BETWEEN RACK FACES
198	HIGH LOW DRINKING FOUNTAIN
204	MOP SINK IN JANITOR CLOSET

KEYPLAN

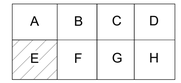

0 4' - 0" 8' - 0" 16' - 0"
SCALE: 1/8" = 1' - 0"

N

APPR	
DATE	
DESCRIPTION	
SYM	

NAVFAC

REGISTERED ARCHITECT
CERTIFICATE NO.
49179
PAWEL
PASZCZUK
Date Signed 11/11/21
ARIZONA, U.S.A.
Expires 03/31/2024
SEAL

IRQ W.M. Jordan COMPANY – A JOINT VENTURE –

Michael Baker INTERNATIONAL
100 AIRSIDE DRIVE
MOON TOWNSHIP, PA 15108
A/E INFO

APPROVED
FOR COMMANDER NAVFAC
ACTIVITY
MARINE CORPS BASE
CAMP LEJEUNE
SATISFACTORY TO DATE DD/MM/YY
DES Designer DRW Author CHK Checker
PM / DM TOWLER / ROOT
BRANCH HEAD
DESIGN DIRECTOR R.L.Stephens, Jr.
FIRE PROTECTION DPS

DEPARTMENT OF THE NAVY
NAVAL FACILITIES ENGINEERING SYSTEMS COMMAND
ATLANTIC DESIGN AND CONSTRUCTION
MCB CAMP LEJEUNE

NAVAL FACILITIES ENGINEERING SYSTEMS COMMAND ATLANTIC
NORFOLK, VA
JACKSONVILLE, NC
P1527 LOGCOM CSP WAREHOUSE
1ST FLOOR PLAN - AREA E

SCALE: AS NOTED
EPROJECT NO.: 1639600
CONSTR. CONTR. NO. N40085-20-C-0059
NAVFAC DRAWING NO. 14111146
SHEET 135 OF 447

A-115
DRAWFORM REVISION: 25 AUGUST 2020

P1527 FINAL SUBMISSION - 11/18/2021

PLOTTED: 11/15/2021 3:37:47 AM
FILE NAME: BIM 360:/HF PACKAGE 3/P1527 LOG COM CSP-1639600-A.rvt

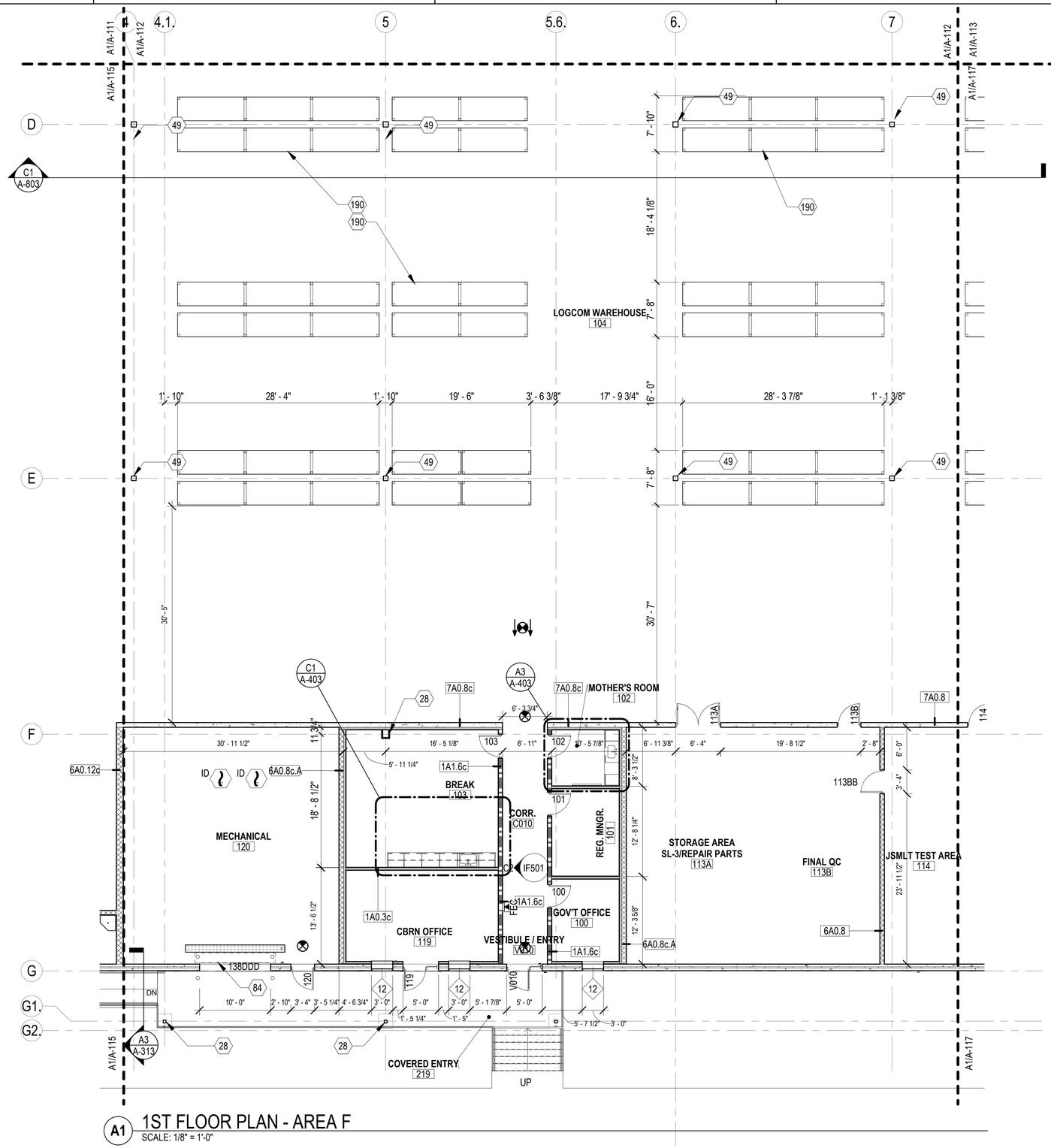

A1 1ST FLOOR PLAN - AREA F

SCALE: 1/8" = 1'-0"

NOTES - FLOOR PLANS

1. REFER TO SHEET A-001 FOR ARCHITECTURAL GENERAL NOTES, & ANNOTATION LEGEND
2. REFER TO A-600 SERIES FOR PARTITION TYPES
3. REFER TO ENLARGED PLANS AND INTERIOR ELEVATIONS FOR ADDITIONAL INFORMATION
4. REFER TO MECHANICAL, ELECTRICAL, AND TELECOMM SHEETS FOR EQUIPMENT LOCATIONS AND REQUIREMENTS.
5. ALL DIMENSIONS SHOWN ARE TO FACE OF STRUCTURE (LEFT TO RIGHT, BOTTOM TO TOP)- TYPICAL UNLESS NOTED OTHERWISE
6. ALL DOORS MUST BE INSTALLED 4" FROM HINGE SIDE OF WALL - TYPICAL UNLESS NOTED OR DIMENSIONED OTHERWISE
7. DIMENSIONS MARKED AS "CLEAR" DICTATES THE CLEAR DIMENSION FROM FINISH TO FINISH
8. WHERE FIRE RATED PARTITIONS INTERSECT WITH LESSER RATED PARTITIONS OR NON-RATED PARTITIONS, THE HIGHER RATED PARTITION IS TO CONTINUE THROUGH THE INTERSECTION TO MAINTAIN THE HIGHER RATING
9. FIRE EXTINGUISHERS MUST BE PROVIDED AND LOCATED IN ACCORDANCE WITH NFPA 10. THE MAXIMUM TRAVEL DISTANCE TO THE NEAREST FIRE EXTINGUISHER FROM ANY POINT IN THE BUILDING MUST NOT EXCEED 75 FEET.

KEYNOTES

28	STRUCTURAL STEEL OR COLUMN, SEE S-SERIES
49	COLUMN WITH INTUMESCENT PAINT- 1 HOUR RATED
84	OVERHEAD COILING DOORS - SEE DOOR SCHEDULE
190	DOUBLE DEEP RACKS, OVERALL CAPACITY OF 1,536 PALLET POSITIONS WITH 14' WIDE MIN. DRIVE AISLES BETWEEN RACK FACES

KEYPLAN

A	B	C	D
E	F	G	H

0 4' - 0" 8' - 0" 16' - 0"

SCALE: 1/8" = 1' - 0"

N

APPR	DATE	DESCRIPTION

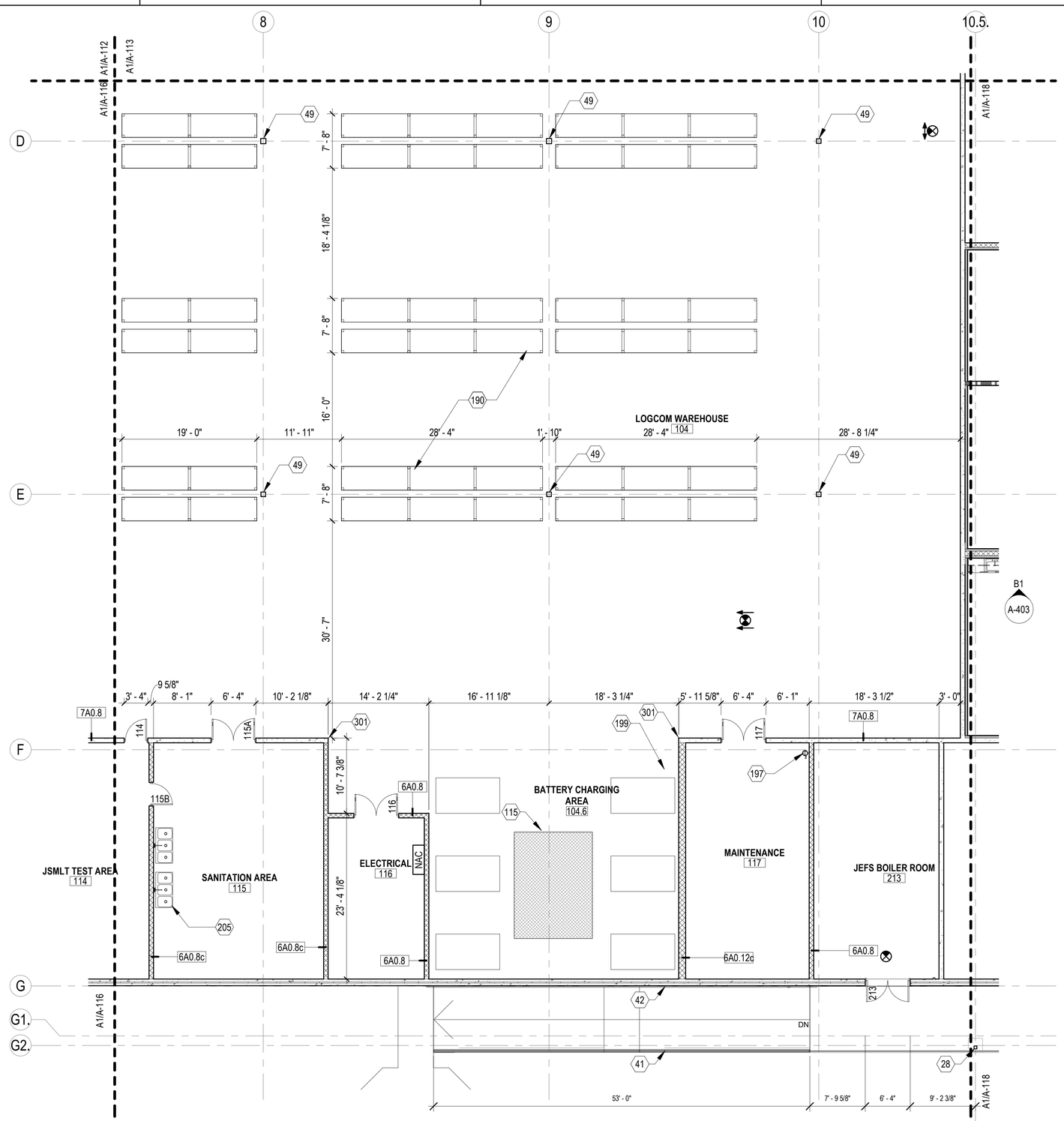

A1 1ST FLOOR PLAN - AREA G
SCALE: 1/8" = 1'-0"

NOTES - FLOOR PLANS

1. REFER TO SHEET A-001 FOR ARCHITECTURAL GENERAL NOTES, & ANNOTATION LEGEND
2. REFER TO A-600 SERIES FOR PARTITION TYPES
3. REFER TO ENLARGED PLANS AND INTERIOR ELEVATIONS FOR ADDITIONAL INFORMATION
4. REFER TO MECHANICAL, ELECTRICAL, AND TELECOMM SHEETS FOR EQUIPMENT LOCATIONS AND REQUIREMENTS.
5. ALL DIMENSIONS SHOWN ARE TO FACE OF STRUCTURE (LEFT TO RIGHT, BOTTOM TO TOP)- TYPICAL UNLESS NOTED OTHERWISE
6. ALL DOORS MUST BE INSTALLED 4" FROM HINGE SIDE OF WALL - TYPICAL UNLESS NOTED OR DIMENSIONED OTHERWISE
7. DIMENSIONS MARKED AS "CLEAR" DICTATES THE CLEAR DIMENSION FROM FINISH TO FINISH
8. WHERE FIRE RATED PARTITIONS INTERSECT WITH LESSER RATED PARTITIONS OR NON-RATED PARTITIONS, THE HIGHER RATED PARTITION IS TO CONTINUE THROUGH THE INTERSECTION TO MAINTAIN THE HIGHER RATING
9. FIRE EXTINGUISHERS MUST BE PROVIDED AND LOCATED IN ACCORDANCE WITH NFPA 10. THE MAXIMUM TRAVEL DISTANCE TO THE NEAREST FIRE EXTINGUISHER FROM ANY POINT IN THE BUILDING MUST NOT EXCEED 75 FEET.

KEYNOTES

28	STRUCTURAL STEEL OR COLUMN, SEE S-SERIES
41	42" H. GUARDRAIL WITH 36" H. HANDRAIL
42	36" H. WALL MOUNTED HANDRAIL
49	COLUMN WITH INTUMESCENT PAINT- 1 HOUR RATED
115	RUBBER FLOORING FOR FORKLIFT AREA
190	DOUBLE DEEP RACKS, OVERALL CAPACITY OF 1,536 PALLET POSITIONS WITH 14' WIDE MIN. DRIVE AISLES BETWEEN RACK FACES
197	EMERGENCY EYE WASH STATION
199	FORKLIFT CHARGING STATION 6 TYP.
205	2 - 3'x6' 3 COMPARTMENT SINKS
301	PROVIDE CG1 AT OUTSIDE CORNERS OF THIS ROOM / CORRIDOR (INCLUDING DOOR WHERE APPLICABLE)

KEYPLAN

A	B	C	D
E	F	G	H

0 4' - 0" 8' - 0" 16' - 0"
SCALE: 1/8" = 1' - 0"

N

APPR	DATE	DESCRIPTION	SYM

NAVFAC

REGISTERED ARCHITECT
CERTIFICATE NO.
49179
PAWEL
PASZCZUK
Date Signed 11/11/21
ARIZONA, U.S.A.
Expires 03/31/2024
SEAL

IRQ W.M. Jordan COMPANY – A JOINT VENTURE –

Michael Baker INTERNATIONAL
100 AIRSIDE DRIVE
MOON TOWNSHIP, PA 15108
A/E INFO

APPROVED
FOR COMMANDER NAVFAC

ACTIVITY
MARINE CORPS BASE CAMP LEJEUNE

SATISFACTORY TO DATE DD/MM/YY
DES Designer DFT DRW Author CHK Checker
PM / DM TOWLER / ROOT
BRANCH HEAD
DESIGN DIRECTOR R.L.Stephens, Jr.
FIRE PROTECTION DPS

DEPARTMENT OF THE NAVY
NAVAL FACILITIES ENGINEERING SYSTEMS COMMAND ATLANTIC
ATLANTIC DESIGN AND CONSTRUCTION
MCB CAMP LEJEUNE

NAVAL FACILITIES ENGINEERING SYSTEMS COMMAND
NORFOLK, VA
JACKSONVILLE, NC
P1527 LOGCOM CSP WAREHOUSE

1ST FLOOR PLAN - AREA G

SCALE: AS NOTED
EPROJECT NO.: 1639600
CONSTR. CONTR. NO. N40085-20-C-0059
NAVFAC DRAWING NO. 14111148
SHEET 137 OF 447

A-117

DRAWFORM REVISION: 25 AUGUST 2020

P1527 FINAL SUBMISSION - 11/18/2021

PLOTTED: 11/15/2021 3:37:51 AM
FILE NAME: BIM 360://HF PACKAGE 3/P1527 LOG COM CSP-1639600-A.rvt

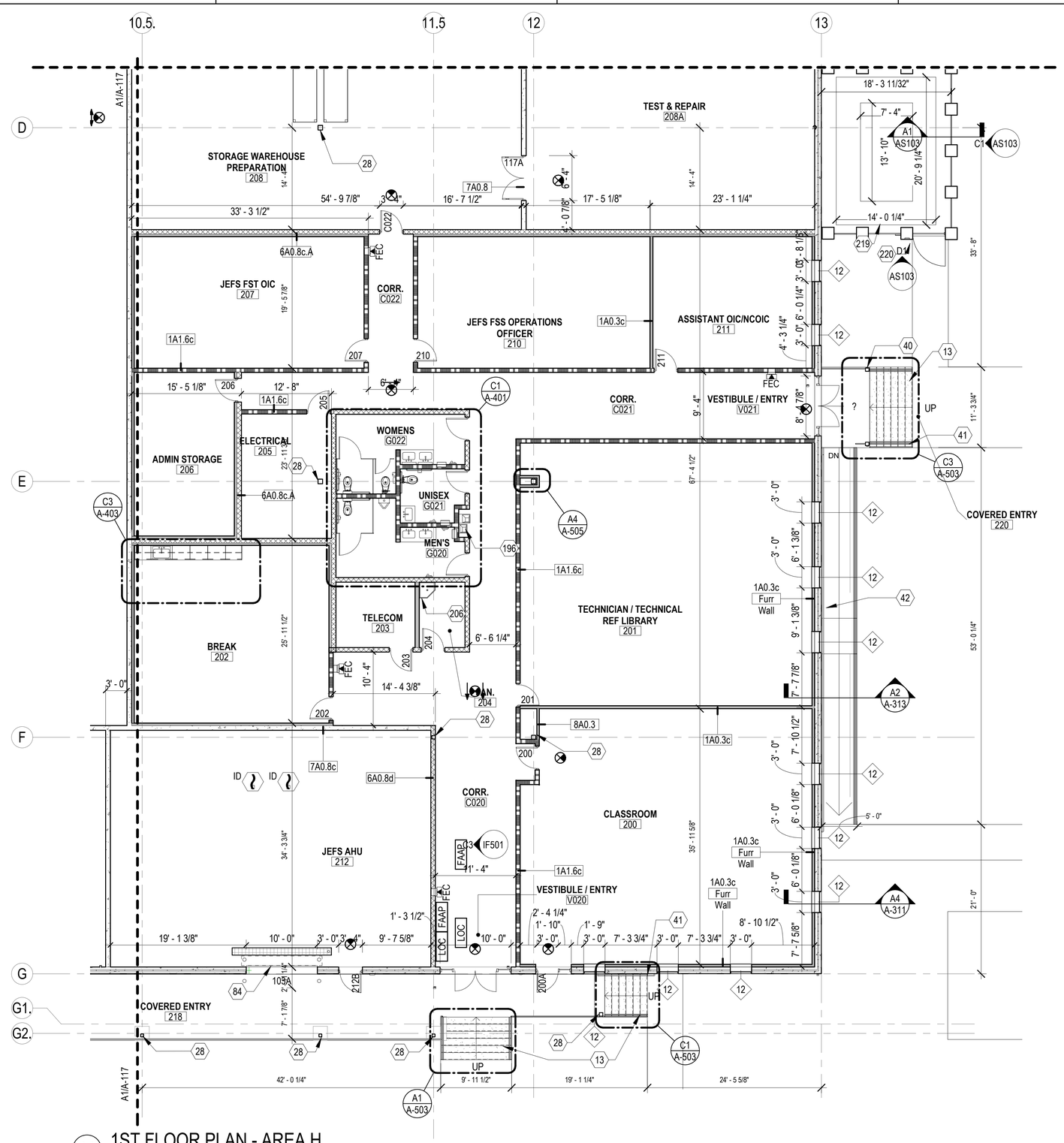

A1 1ST FLOOR PLAN - AREA H
SCALE: 1/8" = 1'-0"

NOTES - FLOOR PLANS

1. REFER TO SHEET A-001 FOR ARCHITECTURAL GENERAL NOTES, & ANNOTATION LEGEND
2. REFER TO A-600 SERIES FOR PARTITION TYPES
3. REFER TO ENLARGED PLANS AND INTERIOR ELEVATIONS FOR ADDITIONAL INFORMATION
4. REFER TO MECHANICAL, ELECTRICAL, AND TELECOMM SHEETS FOR EQUIPMENT LOCATIONS AND REQUIREMENTS.
5. ALL DIMENSIONS SHOWN ARE TO FACE OF STRUCTURE (LEFT TO RIGHT, BOTTOM TO TOP)- TYPICAL UNLESS NOTED OTHERWISE
6. ALL DOORS MUST BE INSTALLED 4" FROM HINGE SIDE OF WALL - TYPICAL UNLESS NOTED OR DIMENSIONED OTHERWISE
7. DIMENSIONS MARKED AS "CLEAR" DICTATES THE CLEAR DIMENSION FROM FINISH TO FINISH
8. WHERE FIRE RATED PARTITIONS INTERSECT WITH LESSER RATED PARTITIONS OR NON-RATED PARTITIONS, THE HIGHER RATED PARTITION IS TO CONTINUE THROUGH THE INTERSECTION TO MAINTAIN THE HIGHER RATING
9. FIRE EXTINGUISHERS MUST BE PROVIDED AND LOCATED IN ACCORDANCE WITH NFPA 10. THE MAXIMUM TRAVEL DISTANCE TO THE NEAREST FIRE EXTINGUISHER FROM ANY POINT IN THE BUILDING MUST NOT EXCEED 75 FEET.

KEYNOTES

13	CONCRETE STAIR TO FIRST FLOOR
28	STRUCTURAL STEEL OR COLUMN, SEE S-SERIES
40	42" H. GUARDRAIL
41	42" H. GUARDRAIL WITH 36" H. HANDRAIL
42	36" H. WALL MOUNTED HANDRAIL
84	OVERHEAD COILING DOORS - SEE DOOR SCHEDULE
196	APPLIANCES AT KITCHEN AS SHOWN.
206	SINGLE COMPARTMENT SINK
219	
220	

KEYPLAN

A	B	C	D
E	F	G	H

0 4' - 0" 8' - 0" 16' - 0"
SCALE: 1/8" = 1' - 0"

N

APPR	DATE	DESCRIPTION	SYM

NAVFAC

REGISTERED ARCHITECT
CERTIFICATE NO.
49179
PAWEL PASZCZUK
Date signed 11/11/21
ARIZONA, U.S.A.
Expires 03/31/2024
SEAL

IRQ Jordan COMPANY – A JOINT VENTURE –

Michael Baker INTERNATIONAL
100 AIRSIDE DRIVE
MOON TOWNSHIP, PA 15108
A/E INFO

APPROVED

FOR COMMANDER NAVFAC

ACTIVITY
MARINE CORPS BASE
CAMP LEJEUNE

SATISFACTORY TO DATE DD/MM/YY

DES Designer DRW Author CHK Checker
PM / DM TOWLER / ROOT
BRANCH HEAD
DESIGN DIRECTOR R.L.Stephens, Jr.
FIRE PROTECTION DPS

DEPARTMENT OF THE NAVY
NAVAL FACILITIES ENGINEERING SYSTEMS COMMAND
ATLANTIC DESIGN AND CONSTRUCTION
NAVAL FACILITIES ENGINEERING SYSTEMS COMMAND ATLANTIC
NORFOLK, VA
MCB CAMP LEJEUNE
JACKSONVILLE, NC
P1527 LOGCOM CSP WAREHOUSE
1ST FLOOR PLAN - AREA H

SCALE: AS NOTED
EPROJECT NO.: 1639600
CONSTR. CONTR. NO. N40085-20-C-0059
NAVFAC DRAWING NO. 14111149
SHEET 138 OF 447

A-118

DRAWFORM REVISION: 25 AUGUST 2020

P1527 FINAL SUBMISSION - 11/18/2021

PLOTTED: 11/15/2021 3:37:54 AM
FILE NAME: BIM 360://HF PACKAGE 3/P1527 LOG COM CSP-1639600-A.rvt

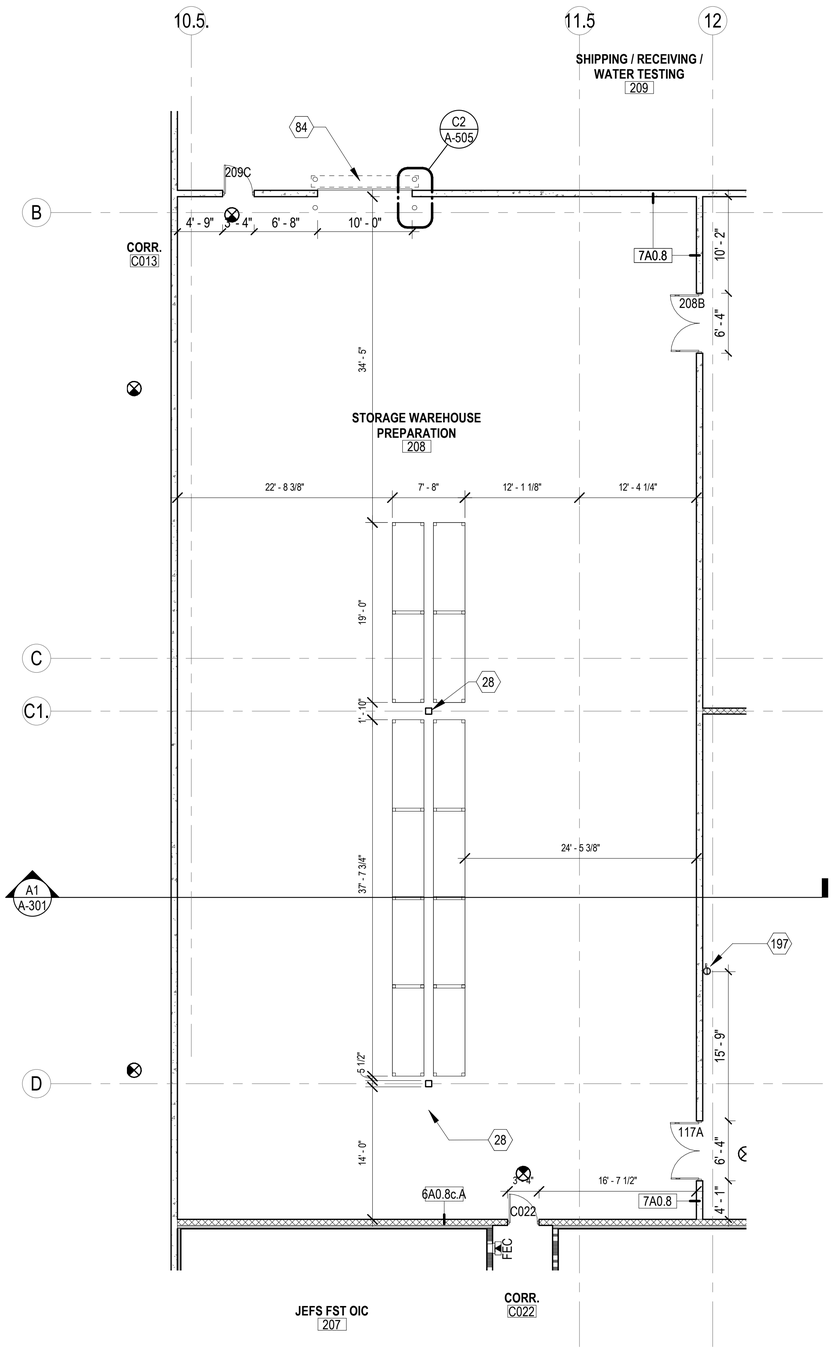

A1 JEFS STORAGE WAREHOUSE
SCALE: 1/8" = 1'-0"

NOTES - FLOOR PLANS

1. REFER TO SHEET A-001 FOR ARCHITECTURAL GENERAL NOTES, & ANNOTATION LEGEND
2. REFER TO A-600 SERIES FOR PARTITION TYPES
3. REFER TO ENLARGED PLANS AND INTERIOR ELEVATIONS FOR ADDITIONAL INFORMATION
4. REFER TO MECHANICAL, ELECTRICAL, AND TELECOMM SHEETS FOR EQUIPMENT LOCATIONS AND REQUIREMENTS.
5. ALL DIMENSIONS SHOWN ARE TO FACE OF STRUCTURE (LEFT TO RIGHT, BOTTOM TO TOP)- TYPICAL UNLESS NOTED OTHERWISE
6. ALL DOORS MUST BE INSTALLED 4" FROM HINGE SIDE OF WALL - TYPICAL UNLESS NOTED OR DIMENSIONED OTHERWISE
7. DIMENSIONS MARKED AS "CLEAR" DICTATES THE CLEAR DIMENSION FROM FINISH TO FINISH
8. WHERE FIRE RATED PARTITIONS INTERSECT WITH LESSER RATED PARTITIONS OR NON-RATED PARTITIONS, THE HIGHER RATED PARTITION IS TO CONTINUE THROUGH THE INTERSECTION TO MAINTAIN THE HIGHER RATING
9. FIRE EXTINGUISHERS MUST BE PROVIDED AND LOCATED IN ACCORDANCE WITH NFPA 10. THE MAXIMUM TRAVEL DISTANCE TO THE NEAREST FIRE EXTINGUISHER FROM ANY POINT IN THE BUILDING MUST NOT EXCEED 75 FEET.

KEYNOTES

28	STRUCTURAL STEEL OR COLUMN, SEE S-SERIES
84	OVERHEAD COILING DOORS - SEE DOOR SCHEDULE
197	EMERGENCY EYE WASH STATION

KEYPLAN

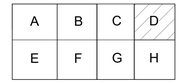

0 4' - 0" 8' - 0" 16' - 0"
SCALE: 1/8" = 1' - 0"

N

APPR	
DATE	
DESCRIPTION	
SYM	

NAVFAC

REGISTERED ARCHITECT
CERTIFICATE NO.
49179
PAWEL
PASZCZUK
Date Signed 11/11/21
ARIZONA, U.S.A.
Expires 03/31/2024
SEAL

IRQ WM Jordan COMPANY – A JOINT VENTURE –

Michael Baker INTERNATIONAL
100 AIRSIDE DRIVE
MOON TOWNSHIP, PA 15108
A/E INFO

APPROVED
FOR COMMANDER NAVFAC
ACTIVITY
MARINE CORPS BASE
CAMP LEJEUNE
SATISFACTORY TO DATE DD/MM/YY
DES Designer DRW Author CHK Checker
PM / DM TOWLER / ROOT
BRANCH HEAD
DESIGN DIRECTOR R.L.Stephens, Jr.
FIRE PROTECTION DPS

DEPARTMENT OF THE NAVY
NAVAL FACILITIES ENGINEERING SYSTEMS COMMAND
ATLANTIC DESIGN AND CONSTRUCTION
MCB CAMP LEJEUNE

NAVAL FACILITIES ENGINEERING SYSTEMS COMMAND ATLANTIC
NORFOLK, VA
JACKSONVILLE, NC
P1527 LOGCOM CSP WAREHOUSE
JEFS STORAGE WAREHOUSE

SCALE: AS NOTED
EPROJECT NO.: 1639600
CONSTR. CONTR. NO. N40085-20-C-0059
NAVFAC DRAWING NO. 14111150
SHEET 139 OF 447

A-119

DRAWFORM REVISION: 25 AUGUST 2020

P1527 FINAL SUBMISSION - 11/18/2021

PLOTTED: 11/15/2021 3:37:54 AM

FILE NAME: BIM 360:/HF PACKAGE 3/P1527 LOG COM CSP-1639600-A.rvt

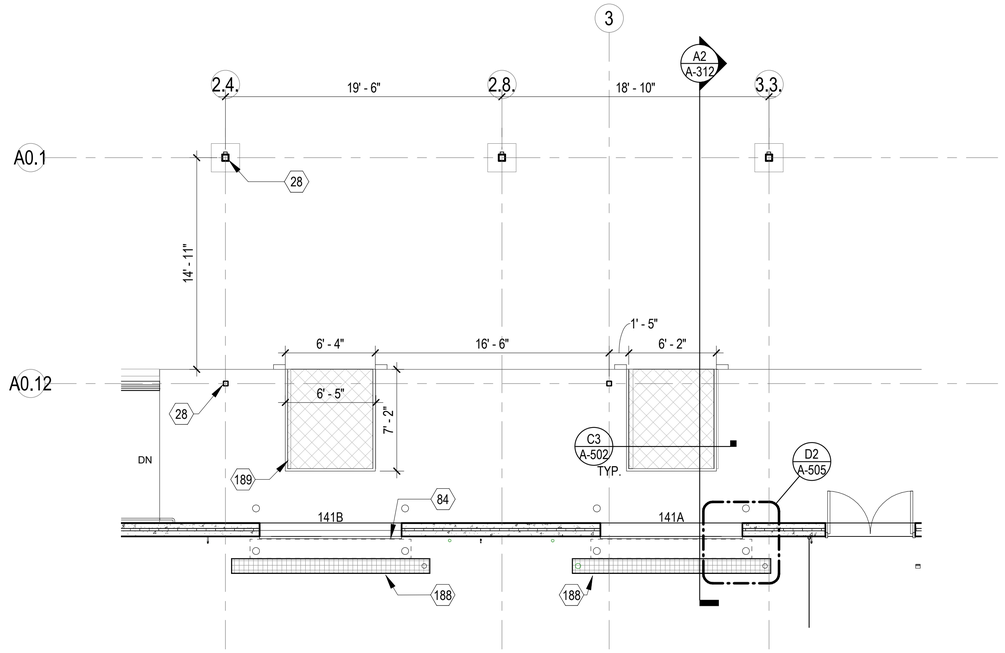

C3 COVERED VEHICLE PULL IN - FLOOR PLAN
SCALE: 3/16" = 1'-0"

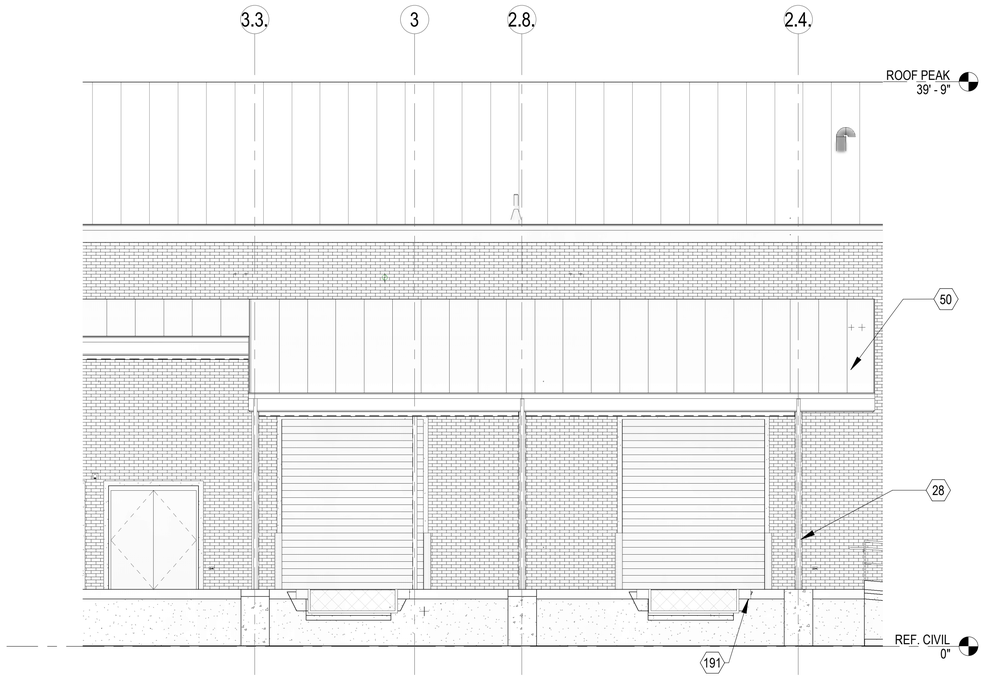

A3 COVERED VEHICLE PULL IN - ELEVATION
SCALE: 3/16" = 1'-0"

KEYNOTES	
28	STRUCTURAL STEEL OR COLUMN, SEE S-SERIES
50	STRUCTURAL METAL ROOF DECK
84	OVERHEAD COILING DOORS - SEE DOOR SCHEDULE
188	10' TALL AT 12" WIDE FLOOR GRATE OVER FLOOR DRAIN
189	DOCK LEVELER 6' WIDE X 7' LONG
191	DOCK LEVELER W/ BUMPERS

0 4' - 0" 8' - 0" 16' - 0"
SCALE: 3/16" = 1' - 0"

APPR | DATE | NO. | DESCRIPTION

NAVFAC

REGISTERED ARCHITECT
CERTIFICATE NO.
49179
PAWEL
PASZCZUK
Date Signed 11/17/21
ARIZONA, U.S.A.
Expires 03/31/2024
SEAL

IRQ WM Jordan COMPANY – A JOINT VENTURE –

Michael Baker INTERNATIONAL
100 AIRSIDE DRIVE
MOON TOWNSHIP, PA 15108
A/E INFO

APPROVED
FOR COMMANDER NAVFAC
ACTIVITY
MARINE CORPS BASE
CAMP LEJEUNE
SATISFACTORY TO DATE DD/MM/YY
DES Designer DRW Author CHK Checker
PM / DM TOWLER / ROOT
BRANCH HEAD
DESIGN DIRECTOR R.L.Stephens, Jr.
FIRE PROTECTION DPS

DEPARTMENT OF THE NAVY
NAVAL FACILITIES ENGINEERING SYSTEMS COMMAND
ATLANTIC DESIGN AND CONSTRUCTION
MCB CAMP LEJEUNE

NAVAL FACILITIES ENGINEERING SYSTEMS COMMAND ATLANTIC
NORFOLK, VA
JACKSONVILLE, NC
P1527 LOGCOM CSP WAREHOUSE

COVERED VEHICLE PULL IN

SCALE: AS NOTED
EPROJECT NO.: 1639600
CONSTR. CONTR. NO.
N40085-20-C-0059
NAVFAC DRAWING NO.
14111151
SHEET 140 OF 447

A-120

DRAWFORM REVISION: 25 AUGUST 2020

P1527 FINAL SUBMISSION - 11/18/2021

PLOTTED: 11/15/2021 3:37:59 AM
FILE NAME: BIM 360://HF PACKAGE 3/P1527 LOG COM CSP-1639600-A.rvt

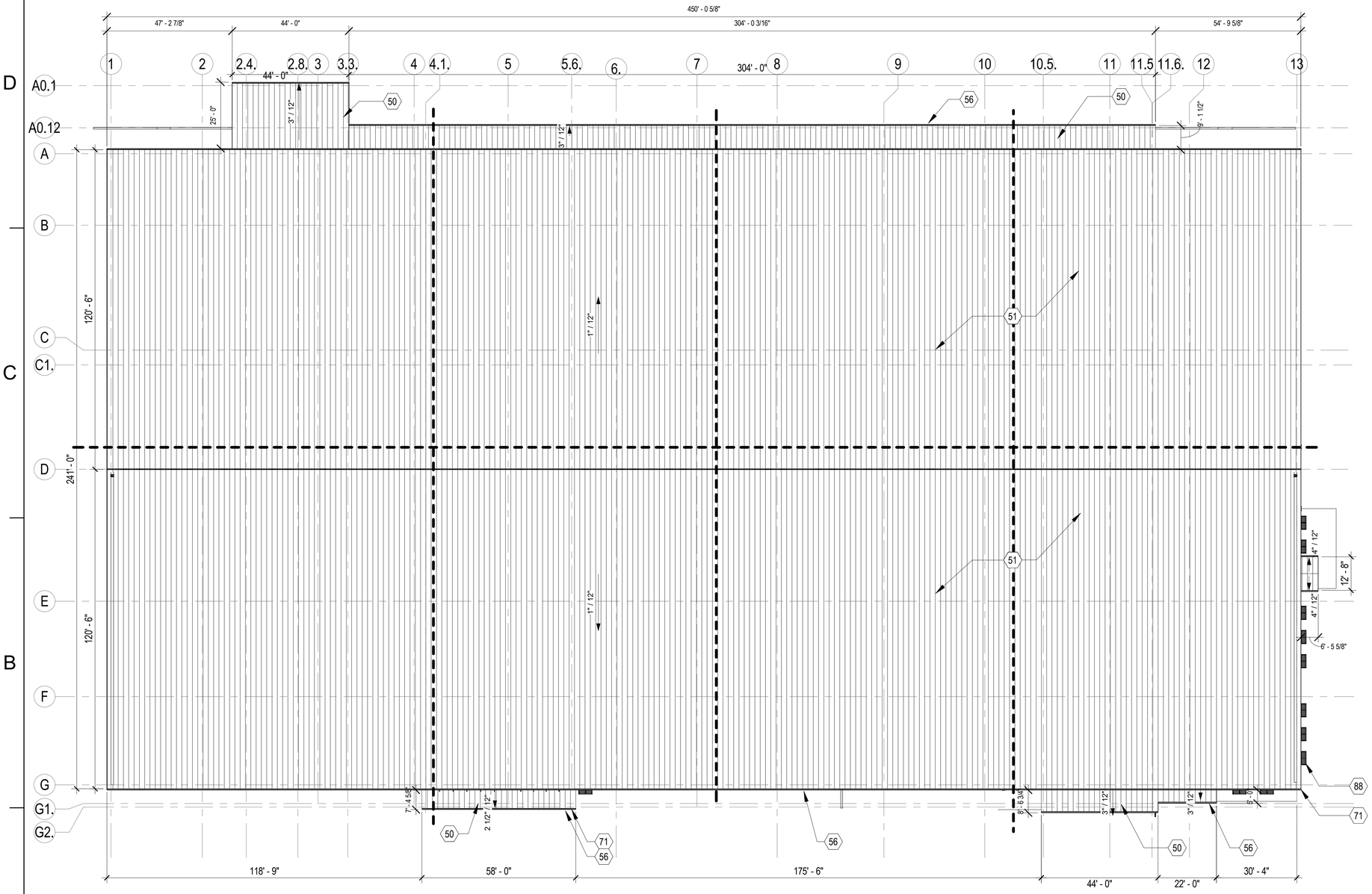

A1 ROOF PLAN
SCALE: 3/64" = 1'-0"

NOTES - ROOF PLANS

1 REFER TO MECHANICAL, PLUMBING AND ELECTRICAL DRAWINGS FOR ADDITIONAL ROOF ELEMENT INFORMATION
2 CONTRACTOR MUST COORDINATE EXACT LOCATION OF ROOF DRAINING TO MAKE SURE NOT TO INTERFERE WITH ANY STRUCTURAL MEMBERS - LEADERS MUST BE LOCATED TO CLEAR AND SLOPE AS REQUIRED BY APPLICABLE CODES
3 CONTRACTOR TO VERIFY AND COORDINATE EXACT LOCATIONS OF PENETRATIONS SO AS NOT TO INTERFERE WITH MAJOR STRUCTURAL MEMBERS

KEYNOTES

50	STRUCTURAL METAL ROOF DECK
51	STANDING SEAM METAL ROOF OVER 6" RIGID INSULATION ON 3" STRUCTURAL METAL ROOF DECK
56	PRE-FINISHED DECORATIVE 6" DIA. GUTTER SYSTEM, SLOPE TO DOWNSPOUT
71	PREFINISHED METAL DOWNSPOUT - 6"X4" MIN SIZE, ATTACH TO BUILDING STRUCTURE - DRAIN TO STORM SEWER
88	ALUMINUM WINDOW SUNSHADE - SEE DETAIL A4/A-501

KEYPLAN

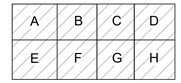

0 16' - 0" 32' - 0" 64' - 0"
SCALE: 3/64" = 1' - 0"

N

APPR | DATE | DESCRIPTION | SYM

NAVFAC

REGISTERED ARCHITECT
CERTIFICATE NO.
49179
PAWEL
PASZCZUK
Date Signed 11/11/21
ARIZONA, U.S.A.
Expires 03/31/2024
SEAL

IRQ W.M. Jordan COMPANY – A JOINT VENTURE –

Michael Baker INTERNATIONAL
100 AIRSIDE DRIVE
MOON TOWNSHIP, PA 15108
A/E INFO

APPROVED

FOR COMMANDER NAVFAC

ACTIVITY
MARINE CORPS BASE
CAMP LEJEUNE

SATISFACTORY TO DATE DD/MM/YY

DES	DRW	CHK
XXX	XXX	XXX

PM / DM TOWLER / ROOT
BRANCH HEAD
DESIGN DIRECTOR R.L.Stephens, Jr.
FIRE PROTECTION DPS

DEPARTMENT OF THE NAVY
NAVAL FACILITIES ENGINEERING SYSTEMS COMMAND
ATLANTIC DESIGN AND CONSTRUCTION
MCB CAMP LEJEUNE

NAVAL FACILITIES ENGINEERING SYSTEMS COMMAND ATLANTIC
NORFOLK, VA
JACKSONVILLE, NC
P1527 LOGCOM CSP WAREHOUSE

ROOF PLAN

SCALE: AS NOTED
EPROJECT NO.: 1639600
CONSTR. CONTR. NO. N40085-20-C-0059
NAVFAC DRAWING NO. 14111141
SHEET 130 OF 447

A-130

DRAWFORM REVISION: 25 AUGUST 2020

P1527 FINAL SUBMISSION - 11/18/2021

PLOTTED: 11/15/2021 3:38:01 AM
FILE NAME: BIM 360://HF PACKAGE 3/P1527 LOG COM CSP-1639600-A.rvt

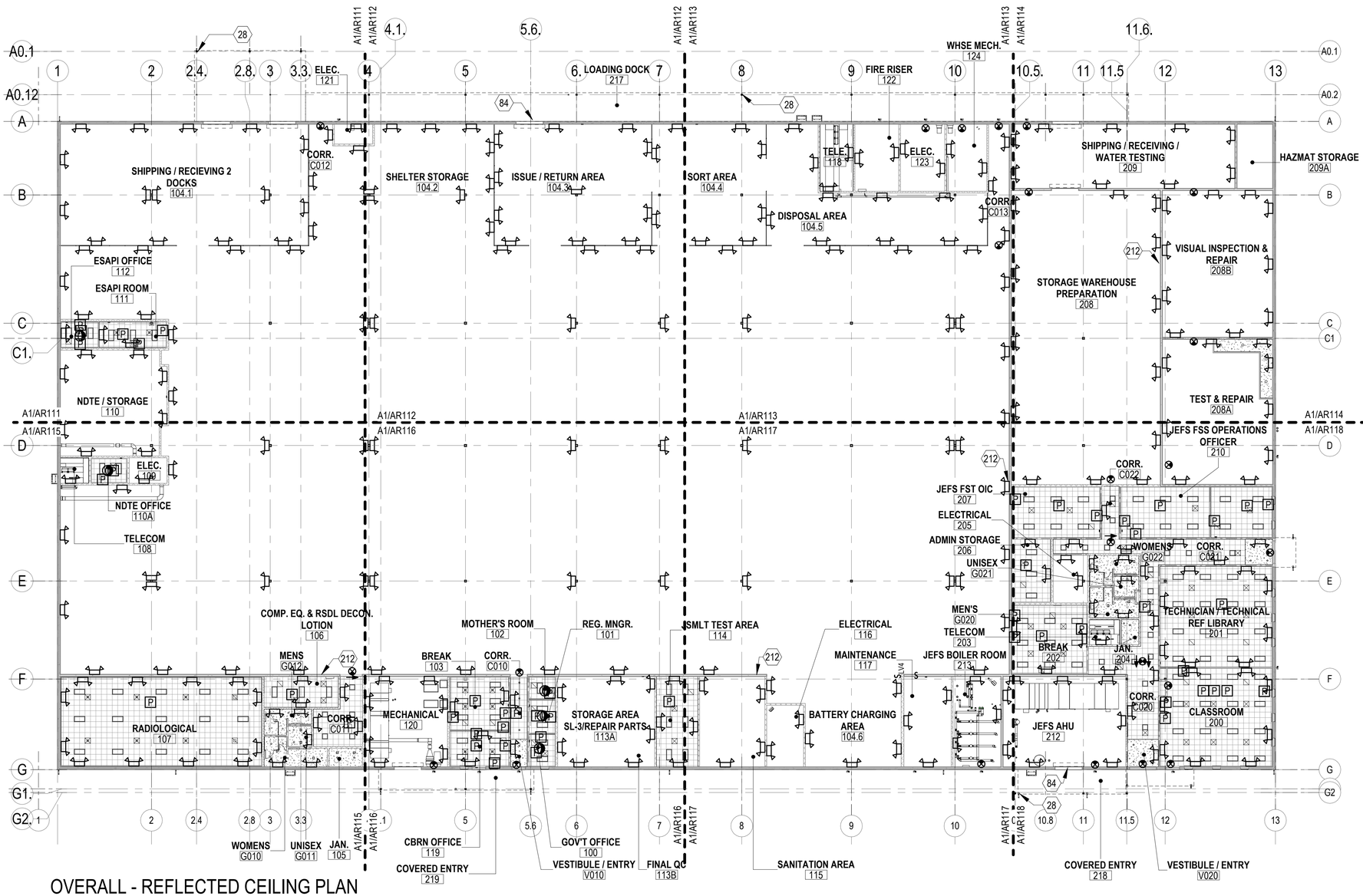

OVERALL - REFLECTED CEILING PLAN

SCALE: 3/64" = 1'-0"

NOTES - RCP

1. ALL ELEVATIONS ARE ABOVE FINISHED FLOOR.
2. REFER TO ELECTRICAL DRAWINGS FOR POWER AND LIGHTING INFORMATION
3. REFER TO MECHANICAL DRAWINGS FOR VENTILATION AND HEATING VENTILATION AND AIR CONDITIONING INFORMATION
4. ALL CEILING GRIDS TO BE CENTERED IN ROOMS - TYPICAL UNLESS NOTED OR DIMENSIONED OTHERWISE
5. LIGHT FIXTURES IN PLASTER CEILINGS MUST BE CENTERED IN ROOMS - TYPICAL UNLESS NOTED OTHERWISE
6. ALL EXPOSED DUCTWORK, PIPES, CONDUIT AND STRUCTURE MUST BE CLEAN AND FREE OF ANY MANUFACTURER OR CONSTRUCTION DEFECTS
7. THE SUSPENDED CEILING SYSTEM, MECHANICAL DUCTWORK AND LIGHTING FIXTURES MUST BE POSITIVELY ATTACHED TO THE STRUCTURE ABOVE

KEYNOTES

28	STRUCTURAL STEEL OR COLUMN, SEE S-SERIES
84	OVERHEAD COILING DOORS - SEE DOOR SCHEDULE
212	TILT UP CONCRETE WALL TO ROOF DECK - SEE S SERIES

RCP LEGEND

NOTE: NOT ALL ELEMENTS ARE SHOWN ON COMPREHENSIVE REFLECTED CEILING PLAN. SEE ENLARGED CEILING PLANS FOR COMPLETE INFORMATION

- 2' x 2' SECOND LOOK ACOUSTICAL CEILING PANEL
- PAINTED GYPSUM WALLBOARD CEILING
- MECHANICAL DIFFUSER SEE M-SERIES
- LIGHTING FIXTURES SEE E-SERIES
- ILLUMINATED EXIT SIGN SEE E-SERIES
- SPRINKLER HEAD SEE F-SERIES
- AUDIO/VISUAL FIXTURES SEE T-SERIES
- EMERGENCY LIGHT UNIT
- P — POWER PACK
- OCCUPANCY SENSOR CORRIDOR
- OCCUPANCY SENSOR ROOM
- AFS — AIR FLOW MEASUREMENT SYSTEM

KEYPLAN

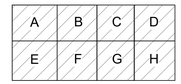

0 16' - 0" 32' - 0" 64' - 0"

SCALE: 3/64" = 1' - 0"

N

			APPR
			DATE
			DESCRIPTION
			SYM

NAVFAC

REGISTERED ARCHITECT CERTIFICATE NO. 49179 PAWEL PASZCZUK Date Signed 11/11/21 ARIZONA, U.S.A.

Expires 03/31/2024 SEAL

RQ W.M. Jordan COMPANY – A JOINT VENTURE –

Michael Baker INTERNATIONAL

100 AIRSIDE DRIVE MOON TOWNSHIP, PA 15108 A/E INFO

APPROVED

FOR COMMANDER NAVFAC

ACTIVITY: MARINE CORPS BASE CAMP LEJEUNE

SATISFACTORY TO DATE DD/MM/YY

DES XXX DRW XXX CHK XXX

PM / DM TOWLER / ROOT

BRANCH HEAD

DESIGN DIRECTOR R.L.Stephens, Jr.

FIRE PROTECTION DPS

NAVAL FACILITIES ENGINEERING SYSTEMS COMMAND ATLANTIC NORFOLK, VA

JACKSONVILLE, NC

P1527 LOGCOM CSP WAREHOUSE

COMPREHENSIVE - REFLECTED CEILING PLAN - 1ST FLOOR

DEPARTMENT OF THE NAVY NAVAL FACILITIES ENGINEERING SYSTEMS COMMAND ATLANTIC DESIGN AND CONSTRUCTION MCB CAMP LEJEUNE

SCALE: AS NOTED

EPROJECT NO.: 1639600

CONSTR. CONTR. NO. N40085-20-C-0059

NAVFAC DRAWING NO. 14111153

SHEET 142 OF 447

AR110

DRAWFORM REVISION: 25 AUGUST 2020

P1527 FINAL SUBMISSION - 11/18/2021

PLOTTED: 11/15/2021 3:39:58 AM

FILE NAME: BIM 360/.IHF PACKAGE 3/P1527 LOG COM CSP-1639600-A.rvt

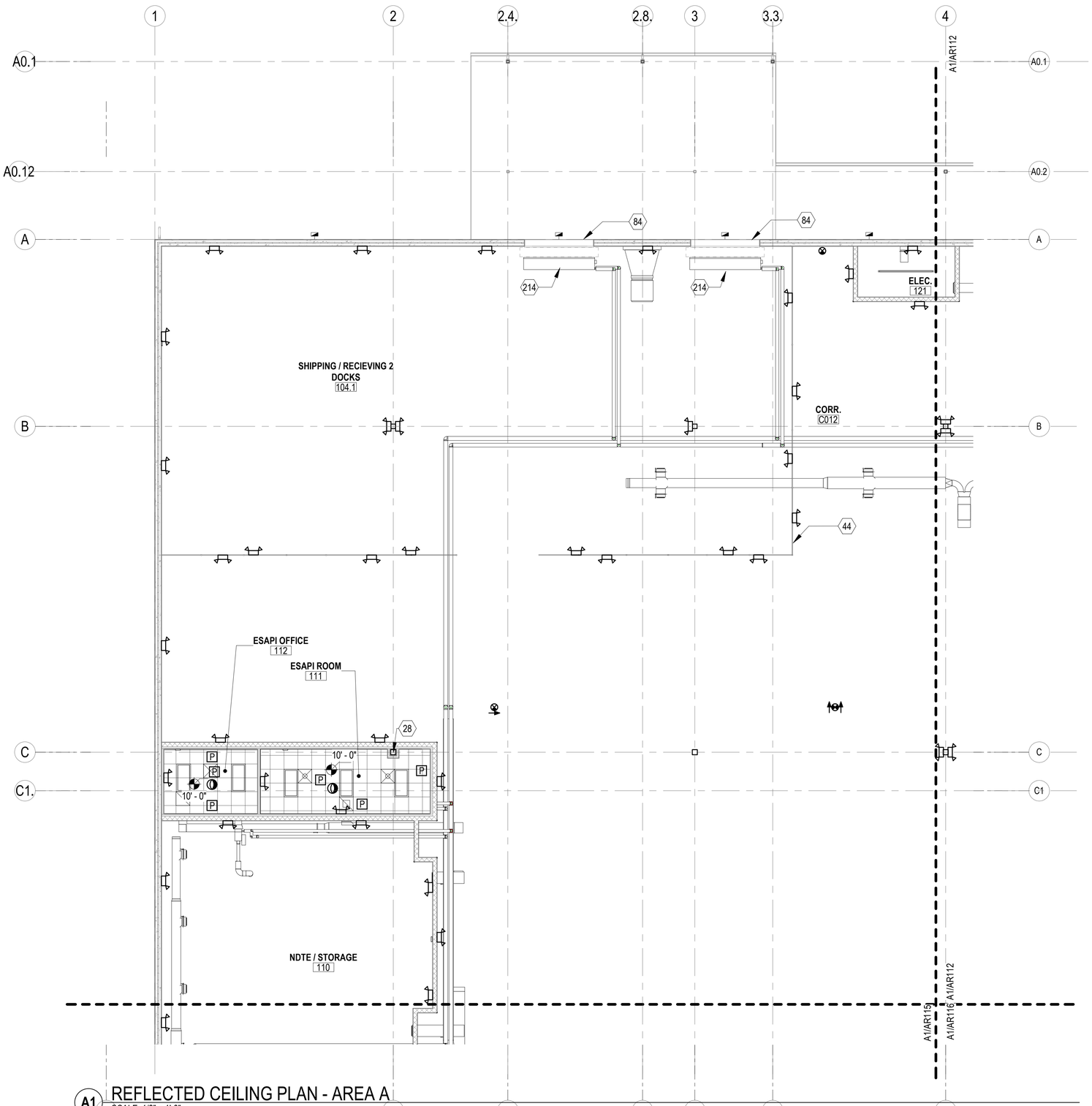

A1 REFLECTED CEILING PLAN - AREA A
1 SCALE: 1/8" = 1'-0"

NOTES - RCP

1. ALL ELEVATIONS ARE ABOVE FINISHED FLOOR.
2. REFER TO ELECTRICAL DRAWINGS FOR POWER AND LIGHTING INFORMATION
3. REFER TO MECHANICAL DRAWINGS FOR VENTILATION AND HEATING VENTILATION AND AIR CONDITIONING INFORMATION
4. ALL CEILING GRIDS TO BE CENTERED IN ROOMS - TYPICAL UNLESS NOTED OR DIMENSIONED OTHERWISE
5. LIGHT FIXTURES IN PLASTER CEILINGS MUST BE CENTERED IN ROOMS - TYPICAL UNLESS NOTED OTHERWISE
6. ALL EXPOSED DUCTWORK, PIPES, CONDUIT AND STRUCTURE MUST BE CLEAN AND FREE OF ANY MANUFACTURER OR CONSTRUCTION DEFECTS
7. THE SUSPENDED CEILING SYSTEM, MECHANICAL DUCTWORK AND LIGHTING FIXTURES MUST BE POSITIVELY ATTACHED TO THE STRUCTURE ABOVE

KEYNOTES

28	STRUCTURAL STEEL OR COLUMN, SEE S-SERIES
44	10' CHAIN LINK ENCLOSURE (TYP).
84	OVERHEAD COILING DOORS - SEE DOOR SCHEDULE
214	AIR CURTAIN - POWERED AIRE

RCP LEGEND

NOTE: NOT ALL ELEMENTS ARE SHOWN ON COMPREHENSIVE REFLECTED CEILING PLAN. SEE ENLARGED CEILING PLANS FOR COMPLETE INFORMATION

- 2' x 2' SECOND LOOK ACOUSTICAL CEILING PANEL
- PAINTED GYPSUM WALLBOARD CEILING
- MECHANICAL DIFFUSER SEE M-SERIES
- LIGHTING FIXTURES SEE E-SERIES
- ILLUMINATED EXIT SIGN SEE E-SERIES
- SPRINKLER HEAD SEE F-SERIES
- AUDIO/VISUAL FIXTURES SEE T-SERIES
- EMERGENCY LIGHT UNIT
- P — POWER PACK
- OCCUPANCY SENSOR CORRIDOR
- OCCUPANCY SENSOR ROOM
- AFS — AIR FLOW MEASUREMENT SYSTEM

KEYPLAN

A	B	C	D
E	F	G	H

0 4' - 0" 8' - 0" 16' - 0"
SCALE: 1/8" = 1' - 0"

N

APPR	DATE	DESCRIPTION	SYM

REGISTERED ARCHITECT
CERTIFICATE NO.
49179
PAWEL
PASZCZUK
Date Signed 11/11/21
ARIZONA, U.S.A.
Expires 03/31/2024
SEAL

RQ W.M. Jordan COMPANY – A JOINT VENTURE –

Michael Baker INTERNATIONAL
100 AIRSIDE DRIVE
MOON TOWNSHIP, PA 15108
A/E INFO

APPROVED

FOR COMMANDER NAVFAC

ACTIVITY
MARINE CORPS BASE
CAMP LEJEUNE

SATISFACTORY TO DATE DD/MM/YY

DES XXX	DRW XXX	CHK XXX

PM / DM TOWLER / ROOT
BRANCH HEAD
DESIGN DIRECTOR R.L.Stephens, Jr.
FIRE PROTECTION DPS

DEPARTMENT OF THE NAVY
NAVAL FACILITIES ENGINEERING SYSTEMS COMMAND
ATLANTIC DESIGN AND CONSTRUCTION
MCB CAMP LEJEUNE

NAVAL FACILITIES ENGINEERING SYSTEMS COMMAND ATLANTIC
NORFOLK, VA
JACKSONVILLE, NC
P1527 LOGCOM CSP WAREHOUSE

REFLECTED CEILING PLAN - 1ST FLOOR - AREA A

SCALE: AS NOTED
EPROJECT NO.: 1639600
CONSTR. CONTR. NO. N40085-20-C-0059
NAVFAC DRAWING NO. 14111152
SHEET 141 OF 447

AR111

DRAWFORM REVISION: 25 AUGUST 2020

P1527 FINAL SUBMISSION - 11/18/2021

PLOTTED: 11/15/2021 3:39:59 AM

FILE NAME: BIM 360://AIF PACKAGE 3/P1527 LOG COM CSP-1639600-A.rvt

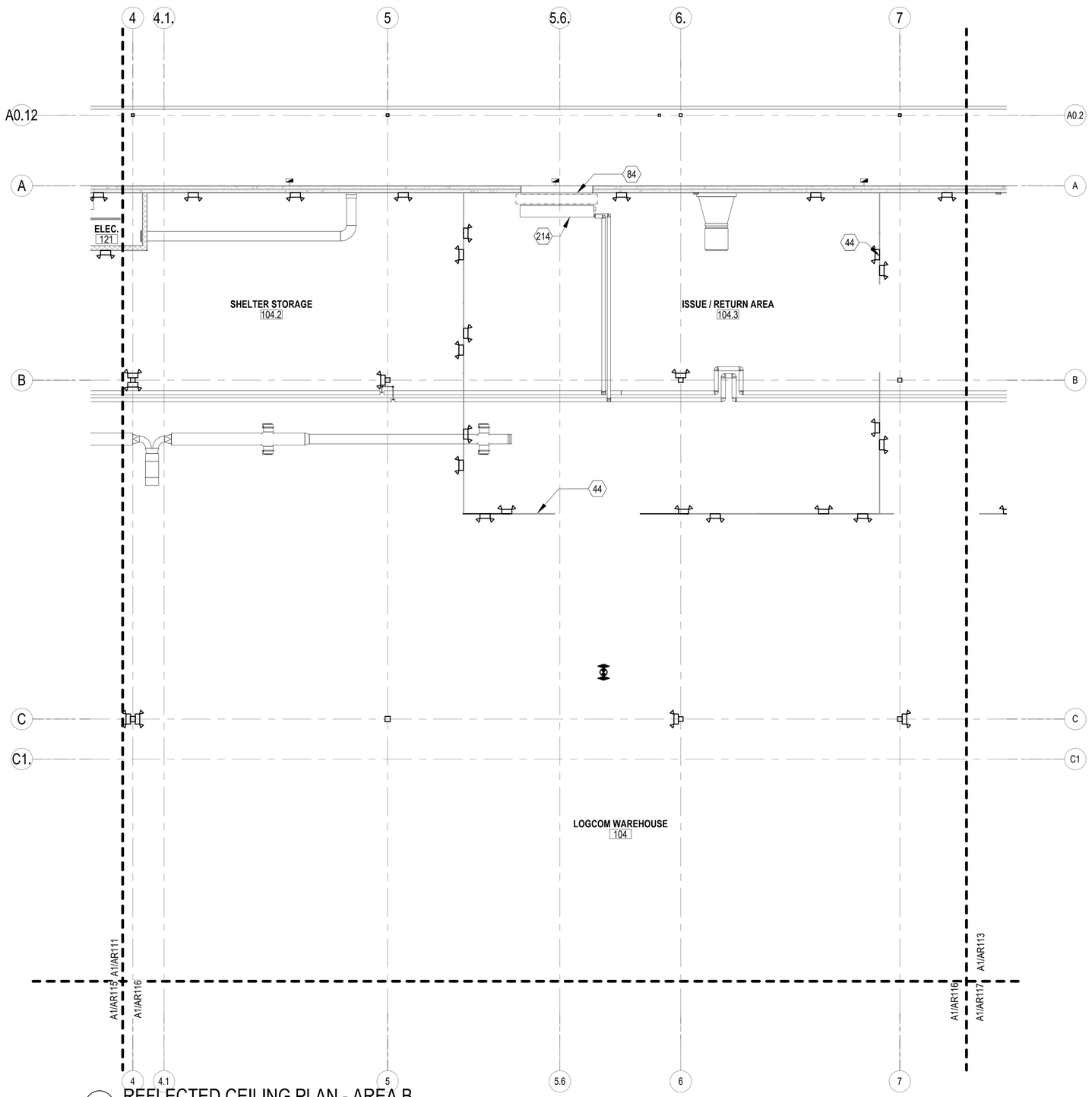

A1 REFLECTED CEILING PLAN - AREA B
SCALE: 1/8" = 1'-0"

NOTES - RCP

1. ALL ELEVATIONS ARE ABOVE FINISHED FLOOR.
2. REFER TO ELECTRICAL DRAWINGS FOR POWER AND LIGHTING INFORMATION
3. REFER TO MECHANICAL DRAWINGS FOR VENTILATION AND HEATING VENTILATION AND AIR CONDITIONING INFORMATION
4. ALL CEILING GRIDS TO BE CENTERED IN ROOMS - TYPICAL UNLESS NOTED OR DIMENSIONED OTHERWISE
5. LIGHT FIXTURES IN PLASTER CEILINGS MUST BE CENTERED IN ROOMS - TYPICAL UNLESS NOTED OTHERWISE
6. ALL EXPOSED DUCTWORK, PIPES, CONDUIT AND STRUCTURE MUST BE CLEAN AND FREE OF ANY MANUFACTURER OR CONSTRUCTION DEFECTS
7. THE SUSPENDED CEILING SYSTEM, MECHANICAL DUCTWORK AND LIGHTING FIXTURES MUST BE POSITIVELY ATTACHED TO THE STRUCTURE ABOVE

KEYNOTES

44	10' CHAIN LINK ENCLOSURE (TYP).
84	OVERHEAD COILING DOORS - SEE DOOR SCHEDULE
214	AIR CURTAIN - POWERED AIRE

RCP LEGEND

NOTE: NOT ALL ELEMENTS ARE SHOWN ON COMPREHENSIVE REFLECTED CEILING PLAN. SEE ENLARGED CEILING PLANS FOR COMPLETE INFORMATION

- 2' x 2' SECOND LOOK ACOUSTICAL CEILING PANEL
- PAINTED GYPSUM WALLBOARD CEILING
- MECHANICAL DIFFUSER SEE M-SERIES
- LIGHTING FIXTURES SEE E-SERIES
- ILLUMINATED EXIT SIGN SEE E-SERIES
- SPRINKLER HEAD SEE F-SERIES
- AUDIO/VISUAL FIXTURES SEE T-SERIES
- EMERGENCY LIGHT UNIT
- P POWER PACK
- OCCUPANCY SENSOR CORRIDOR
- OCCUPANCY SENSOR ROOM
- AFS AIR FLOW MEASUREMENT SYSTEM

KEYPLAN

A	B	C	D
E	F	G	H

0 4' - 0" 8' - 0" 16' - 0"
SCALE: 1/8" = 1' - 0"

N

APPR	DATE	DESCRIPTION	SYM

NAVFAC

REGISTERED ARCHITECT
CERTIFICATE NO.
49179
PAWEL
PASZCZUK
Date Signed 11/11/21
ARIZONA, U.S.A.
Expires 03/31/2024
SEAL

IRQ WM Jordan COMPANY – A JOINT VENTURE –

Michael Baker INTERNATIONAL
100 AIRSIDE DRIVE
MOON TOWNSHIP, PA 15108
A/E INFO

APPROVED
FOR COMMANDER NAVFAC
ACTIVITY
MARINE CORPS BASE CAMP LEJEUNE
SATISFACTORY TO DATE DD/MM/YY
DES XXX DRW XXX CHK XXX
PM / DM TOWLER / ROOT
BRANCH HEAD
DESIGN DIRECTOR R.L.Stephens, Jr.
FIRE PROTECTION DPS

DEPARTMENT OF THE NAVY
NAVAL FACILITIES ENGINEERING SYSTEMS COMMAND
ATLANTIC DESIGN AND CONSTRUCTION
MCB CAMP LEJEUNE
NAVAL FACILITIES ENGINEERING SYSTEMS COMMAND ATLANTIC
NORFOLK, VA
JACKSONVILLE, NC
P1527 LOGCOM CSP WAREHOUSE
REFLECTED CEILING PLAN - 1ST FLOOR - AREA B

SCALE: AS NOTED
EPROJECT NO.: 1639600
CONSTR. CONTR. NO. N40085-20-C-0059
NAVFAC DRAWING NO. 14111154
SHEET 143 OF 447

AR112

DRAWFORM REVISION: 25 AUGUST 2020

P1527 FINAL SUBMISSION - 11/18/2021

PLOTTED: 11/15/2021 3:40:00 AM
FILE NAME: BIM 360://HF PACKAGE 3/P1527 LOG COM CSP-1639600-A.rvt

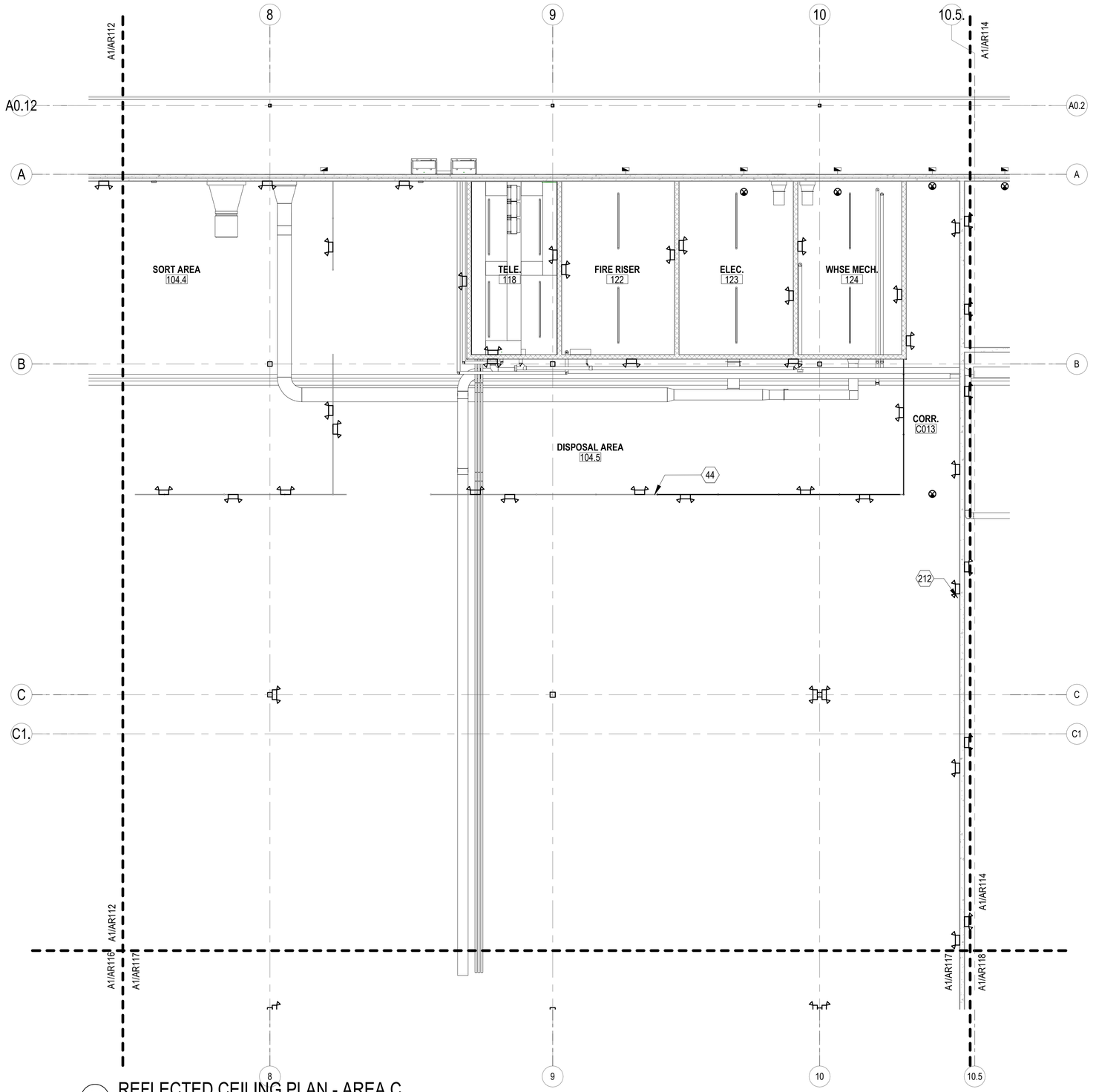

A1 REFLECTED CEILING PLAN - AREA C
SCALE: 1/8" = 1'-0"

NOTES - RCP

1 ALL ELEVATIONS ARE ABOVE FINISHED FLOOR.
2 REFER TO ELECTRICAL DRAWINGS FOR POWER AND LIGHTING INFORMATION
3 REFER TO MECHANICAL DRAWINGS FOR VENTILATION AND HEATING VENTILATION AND AIR CONDITIONING INFORMATION
4 ALL CEILING GRIDS TO BE CENTERED IN ROOMS - TYPICAL UNLESS NOTED OR DIMENSIONED OTHERWISE
5 LIGHT FIXTURES IN PLASTER CEILINGS MUST BE CENTERED IN ROOMS - TYPICAL UNLESS NOTED OTHERWISE
6 ALL EXPOSED DUCTWORK, PIPES, CONDUIT AND STRUCTURE MUST BE CLEAN AND FREE OF ANY MANUFACTURER OR CONSTRUCTION DEFECTS
7 THE SUSPENDED CEILING SYSTEM, MECHANICAL DUCTWORK AND LIGHTING FIXTURES MUST BE POSITIVELY ATTACHED TO THE STRUCTURE ABOVE

KEYNOTES

44 10' CHAIN LINK ENCLOSURE (TYP).
212 TILT UP CONCRETE WALL TO ROOF DECK - SEE S SERIES

RCP LEGEND

NOTE: NOT ALL ELEMENTS ARE SHOWN ON COMPREHENSIVE REFLECTED CEILING PLAN. SEE ENLARGED CEILING PLANS FOR COMPLETE INFORMATION

- 2' x 2' SECOND LOOK ACOUSTICAL CEILING PANEL
- PAINTED GYPSUM WALLBOARD CEILING
- MECHANICAL DIFFUSER SEE M-SERIES
- LIGHTING FIXTURES SEE E-SERIES
- ILLUMINATED EXIT SIGN SEE E-SERIES
- SPRINKLER HEAD SEE F-SERIES
- AUDIO/VISUAL FIXTURES SEE T-SERIES
- EMERGENCY LIGHT UNIT
- P POWER PACK
- OCCUPANCY SENSOR CORRIDOR
- OCCUPANCY SENSOR ROOM
- AFS AIR FLOW MEASUREMENT SYSTEM

KEYPLAN

A	B	C	D
E	F	G	H

0 4' - 0" 8' - 0" 16' - 0"
SCALE: 1/8" = 1' - 0"

N

APPR	DATE	DESCRIPTION	SYM

REGISTERED ARCHITECT CERTIFICATE NO. 49179 PAWEL PASZCZUK Date Signed 11/11/21 ARIZONA, U.S.A.
Expires 03/31/2024 SEAL

RQ W.M. Jordan COMPANY – A JOINT VENTURE –

Michael Baker INTERNATIONAL
100 AIRSIDE DRIVE MOON TOWNSHIP, PA 15108 A/E INFO

APPROVED
FOR COMMANDER NAVFAC

ACTIVITY
MARINE CORPS BASE CAMP LEJEUNE

SATISFACTORY TO DATE DD/MM/YY
DES Designer DRW Author CHK Checker
PM / DM TOWLER / ROOT
BRANCH HEAD
DESIGN DIRECTOR R.L.Stephens, Jr.
FIRE PROTECTION DPS

DEPARTMENT OF THE NAVY
NAVAL FACILITIES ENGINEERING SYSTEMS COMMAND
ATLANTIC DESIGN AND CONSTRUCTION
MCB CAMP LEJEUNE

NAVAL FACILITIES ENGINEERING SYSTEMS COMMAND ATLANTIC
NORFOLK, VA
JACKSONVILLE, NC
P1527 LOGCOM CSP WAREHOUSE

REFLECTED CEILING PLAN - 1ST FLOOR - AREA C

SCALE: AS NOTED
EPROJECT NO.: 1639600
CONSTR. CONTR. NO. N40085-20-C-0059
NAVFAC DRAWING NO. 14111155
SHEET 144 OF 447

AR113

DRAWFORM REVISION: 25 AUGUST 2020

P1527 FINAL SUBMISSION - 11/18/2021

PLOTTED: 11/15/2021 3:40:03 AM
FILE NAME: BIM 360://HF PACKAGE 3/P1527 LOG COM CSP-1639600-A.rvt

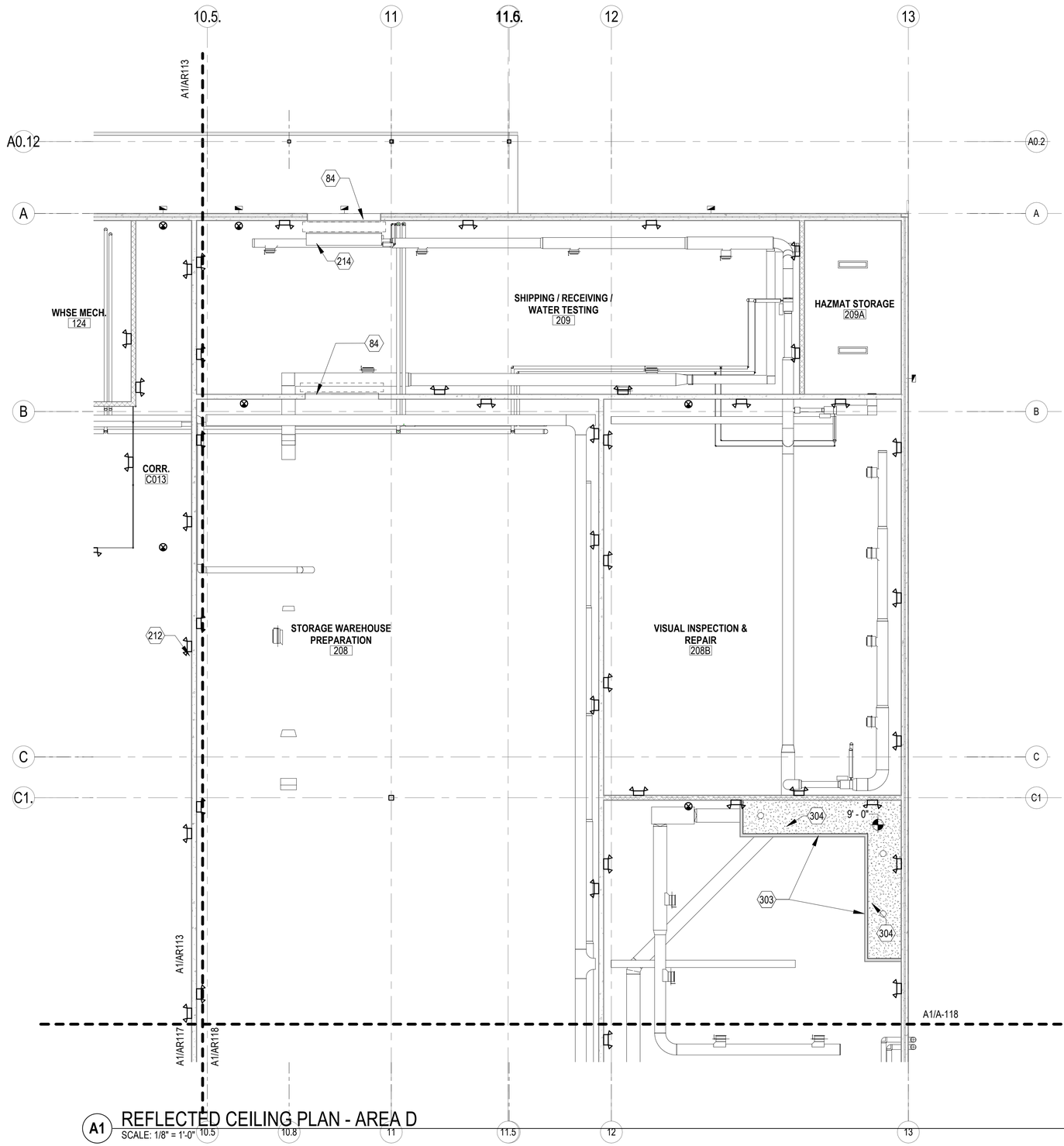

A1 REFLECTED CEILING PLAN - AREA D
SCALE: 1/8" = 1'-0"

NOTES - RCP

1. ALL ELEVATIONS ARE ABOVE FINISHED FLOOR.
2. REFER TO ELECTRICAL DRAWINGS FOR POWER AND LIGHTING INFORMATION
3. REFER TO MECHANICAL DRAWINGS FOR VENTILATION AND HEATING VENTILATION AND AIR CONDITIONING INFORMATION
4. ALL CEILING GRIDS TO BE CENTERED IN ROOMS - TYPICAL UNLESS NOTED OR DIMENSIONED OTHERWISE
5. LIGHT FIXTURES IN PLASTER CEILINGS MUST BE CENTERED IN ROOMS - TYPICAL UNLESS NOTED OTHERWISE
6. ALL EXPOSED DUCTWORK, PIPES, CONDUIT AND STRUCTURE MUST BE CLEAN AND FREE OF ANY MANUFACTURER OR CONSTRUCTION DEFECTS
7. THE SUSPENDED CEILING SYSTEM, MECHANICAL DUCTWORK AND LIGHTING FIXTURES MUST BE POSITIVELY ATTACHED TO THE STRUCTURE ABOVE

KEYNOTES

84	OVERHEAD COILING DOORS - SEE DOOR SCHEDULE
212	TILT UP CONCRETE WALL TO ROOF DECK - SEE S SERIES
214	AIR CURTAIN - POWERED AIRE
303	3 5/8" METAL STUD W/ GYPSUM AND FRP FINISH BOTH SIDES - FUME HOOD EXHAUST ENCLOSURE INSTALLED TO 7' ABOVE FINISHED FLOOR
304	FRP FINISH OVER GYPSUM BOARD CEILING

RCP LEGEND

NOTE: NOT ALL ELEMENTS ARE SHOWN ON COMPREHENSIVE REFLECTED CEILING PLAN. SEE ENLARGED CEILING PLANS FOR COMPLETE INFORMATION

- 2' x 2' SECOND LOOK ACOUSTICAL CEILING PANEL
- PAINTED GYPSUM WALLBOARD CEILING
- MECHANICAL DIFFUSER SEE M-SERIES
- LIGHTING FIXTURES SEE E-SERIES
- ILLUMINATED EXIT SIGN SEE E-SERIES
- SPRINKLER HEAD SEE F-SERIES
- AUDIO/VISUAL FIXTURES SEE T-SERIES
- EMERGENCY LIGHT UNIT
- P — POWER PACK
- OCCUPANCY SENSOR CORRIDOR
- OCCUPANCY SENSOR ROOM
- AFS — AIR FLOW MEASUREMENT SYSTEM

KEYPLAN

A	B	C	D
E	F	G	H

0 4' - 0" 8' - 0" 16' - 0"
SCALE: 1/8" = 1' - 0"

N

		APPR
		DATE
		DESCRIPTION
		SYM

NAVFAC

REGISTERED ARCHITECT
CERTIFICATE NO.
49179
PAWEL
PASZCZUK
Date Signed 11/11/21
ARIZONA, U.S.A.
Expires 03/31/2024
SEAL

RQ W.M. Jordan COMPANY – A JOINT VENTURE –

Michael Baker INTERNATIONAL
100 AIRSIDE DRIVE
MOON TOWNSHIP, PA 15108
A/E INFO

APPROVED

FOR COMMANDER NAVFAC

ACTIVITY
MARINE CORPS BASE
CAMP LEJEUNE

SATISFACTORY TO DATE DD/MM/YY

DES Designer DRW Author CHK Checker
PM / DM TOWLER / ROOT
BRANCH HEAD
DESIGN DIRECTOR R.L.Stephens, Jr.
FIRE PROTECTION DPS

DEPARTMENT OF THE NAVY
NAVAL FACILITIES ENGINEERING SYSTEMS COMMAND
ATLANTIC DESIGN AND CONSTRUCTION
MCB CAMP LEJEUNE

NAVAL FACILITIES ENGINEERING SYSTEMS COMMAND ATLANTIC
NORFOLK, VA
JACKSONVILLE, NC

P1527 LOGCOM CSP WAREHOUSE

REFLECTED CEILING PLAN - 1ST FLOOR - AREA D

SCALE: AS NOTED
EPROJECT NO.: 1639600
CONSTR. CONTR. NO.
N40085-20-C-0059
NAVFAC DRAWING NO.
14111158
SHEET 147 OF 447

AR114

DRAWFORM REVISION: 25 AUGUST 2020

P1527 FINAL SUBMISSION - 11/18/2021

PLOTTED: 11/15/2021 3:40:04 AM

FILE NAME: BIM 360/IHF PACKAGE 3/P1527 LOG COM CSP-1639600-A.rvt

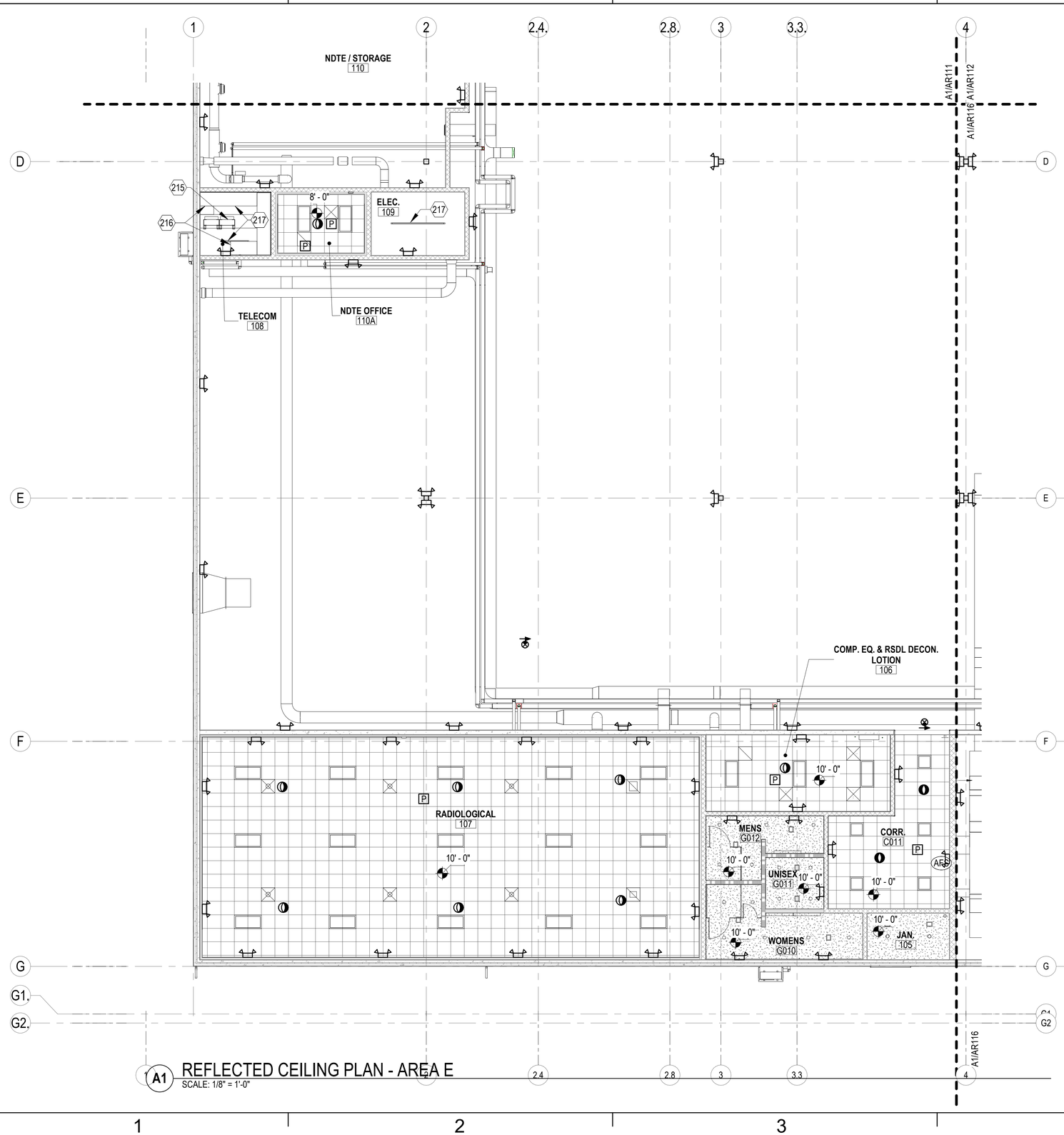

A1 REFLECTED CEILING PLAN - AREA E
SCALE: 1/8" = 1'-0"

NOTES - RCP

1. ALL ELEVATIONS ARE ABOVE FINISHED FLOOR.
2. REFER TO ELECTRICAL DRAWINGS FOR POWER AND LIGHTING INFORMATION
3. REFER TO MECHANICAL DRAWINGS FOR VENTILATION AND HEATING VENTILATION AND AIR CONDITIONING INFORMATION
4. ALL CEILING GRIDS TO BE CENTERED IN ROOMS - TYPICAL UNLESS NOTED OR DIMENSIONED OTHERWISE
5. LIGHT FIXTURES IN PLASTER CEILINGS MUST BE CENTERED IN ROOMS - TYPICAL UNLESS NOTED OTHERWISE
6. ALL EXPOSED DUCTWORK, PIPES, CONDUIT AND STRUCTURE MUST BE CLEAN AND FREE OF ANY MANUFACTURER OR CONSTRUCTION DEFECTS
7. THE SUSPENDED CEILING SYSTEM, MECHANICAL DUCTWORK AND LIGHTING FIXTURES MUST BE POSITIVELY ATTACHED TO THE STRUCTURE ABOVE

KEYNOTES

215	TELECOM EQUIPMENT
216	CABLE TRAYS WITH FITTINGS
217	LED STRIP LIGHTS

RCP LEGEND

NOTE: NOT ALL ELEMENTS ARE SHOWN ON COMPREHENSIVE REFLECTED CEILING PLAN. SEE ENLARGED CEILING PLANS FOR COMPLETE INFORMATION

- 2' x 2' SECOND LOOK ACOUSTICAL CEILING PANEL
- PAINTED GYPSUM WALLBOARD CEILING
- MECHANICAL DIFFUSER SEE M-SERIES
- LIGHTING FIXTURES SEE E-SERIES
- ILLUMINATED EXIT SIGN SEE E-SERIES
- SPRINKLER HEAD SEE F-SERIES
- AUDIO/VISUAL FIXTURES SEE T-SERIES
- EMERGENCY LIGHT UNIT
- P — POWER PACK
- OCCUPANCY SENSOR CORRIDOR
- OCCUPANCY SENSOR ROOM
- AFS — AIR FLOW MEASUREMENT SYSTEM

KEYPLAN

A	B	C	D
E	F	G	H

0 4' - 0" 8' - 0" 16' - 0"
SCALE: 1/8" = 1' - 0"

N

		DATE	APPR

NAVFAC

REGISTERED ARCHITECT
CERTIFICATE NO.
49179
PAWEL
PASZCZUK
Date Signed 11/11/21
ARIZONA, U.S.A.
Expires 03/31/2024
SEAL

IRQ W.M. Jordan COMPANY – A JOINT VENTURE –

Michael Baker INTERNATIONAL
100 AIRSIDE DRIVE
MOON TOWNSHIP, PA 15108
A/E INFO

APPROVED

FOR COMMANDER NAVFAC

ACTIVITY
MARINE CORPS BASE
CAMP LEJEUNE

SATISFACTORY TO DATE DD/MM/YY

DES Designer DRW Author CHK Checker

PM / DM TOWLER / ROOT

BRANCH HEAD

DESIGN DIRECTOR R.L.Stephens, Jr.

FIRE PROTECTION DPS

DEPARTMENT OF THE NAVY
NAVAL FACILITIES ENGINEERING SYSTEMS COMMAND
ATLANTIC DESIGN AND CONSTRUCTION

NAVAL FACILITIES ENGINEERING SYSTEMS COMMAND ATLANTIC
NORFOLK, VA

MCB CAMP LEJEUNE
JACKSONVILLE, NC
P1527 LOGCOM CSP WAREHOUSE

REFLECTED CEILING PLAN - 1ST FLOOR - AREA E

SCALE: AS NOTED
EPROJECT NO.: 1639600
CONSTR. CONTR. NO. N40085-20-C-0059
NAVFAC DRAWING NO. 14111157
SHEET 146 OF 447

AR115

DRAWFORM REVISION: 25 AUGUST 2020

P1527 FINAL SUBMISSION - 11/18/2021

PLOTTED: 11/15/2021 3:40:07 AM

FILE NAME: BIM 360://AFF PACKAGE 3/P1527 LOG COM CSP-1639600-A.rvt

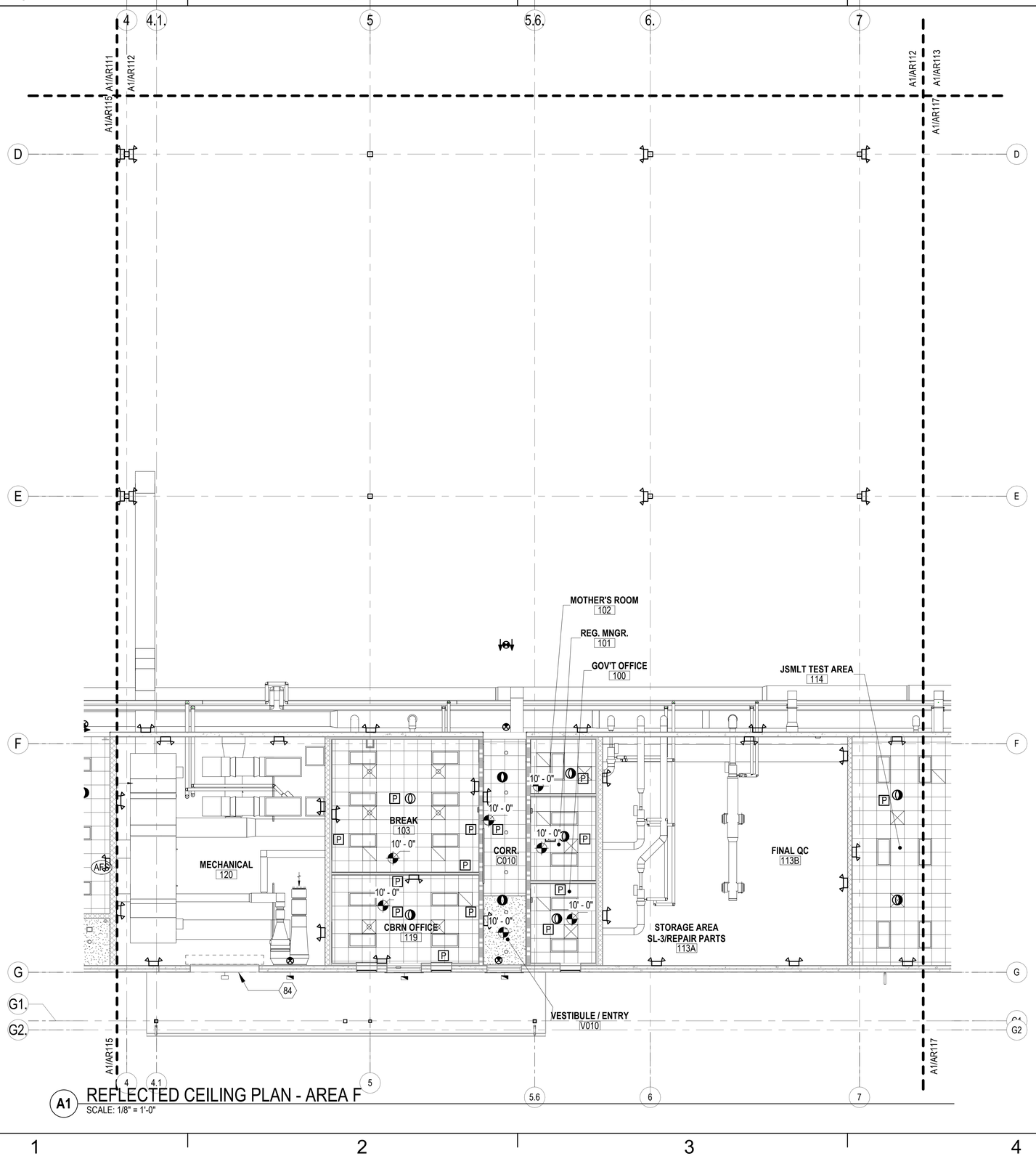

A1 REFLECTED CEILING PLAN - AREA F
SCALE: 1/8" = 1'-0"

NOTES - RCP

1. ALL ELEVATIONS ARE ABOVE FINISHED FLOOR.
2. REFER TO ELECTRICAL DRAWINGS FOR POWER AND LIGHTING INFORMATION
3. REFER TO MECHANICAL DRAWINGS FOR VENTILATION AND HEATING VENTILATION AND AIR CONDITIONING INFORMATION
4. ALL CEILING GRIDS TO BE CENTERED IN ROOMS - TYPICAL UNLESS NOTED OR DIMENSIONED OTHERWISE
5. LIGHT FIXTURES IN PLASTER CEILINGS MUST BE CENTERED IN ROOMS - TYPICAL UNLESS NOTED OTHERWISE
6. ALL EXPOSED DUCTWORK, PIPES, CONDUIT AND STRUCTURE MUST BE CLEAN AND FREE OF ANY MANUFACTURER OR CONSTRUCTION DEFECTS
7. THE SUSPENDED CEILING SYSTEM, MECHANICAL DUCTWORK AND LIGHTING FIXTURES MUST BE POSITIVELY ATTACHED TO THE STRUCTURE ABOVE

KEYNOTES

84 OVERHEAD COILING DOORS - SEE DOOR SCHEDULE

RCP LEGEND

NOTE: NOT ALL ELEMENTS ARE SHOWN ON COMPREHENSIVE REFLECTED CEILING PLAN. SEE ENLARGED CEILING PLANS FOR COMPLETE INFORMATION

- 2' x 2' SECOND LOOK ACOUSTICAL CEILING PANEL
- PAINTED GYPSUM WALLBOARD CEILING
- MECHANICAL DIFFUSER SEE M-SERIES
- LIGHTING FIXTURES SEE E-SERIES
- ILLUMINATED EXIT SIGN SEE E-SERIES
- SPRINKLER HEAD SEE F-SERIES
- AUDIO/VISUAL FIXTURES SEE T-SERIES
- EMERGENCY LIGHT UNIT
- P POWER PACK
- OCCUPANCY SENSOR CORRIDOR
- OCCUPANCY SENSOR ROOM
- AFS AIR FLOW MEASUREMENT SYSTEM

KEYPLAN

A	B	C	D
E	F	G	H

0 4' - 0" 8' - 0" 16' - 0"
SCALE: 1/8" = 1' - 0"

N

	APPR	DATE	DESCRIPTION	SYM

NAVFAC

REGISTERED ARCHITECT
CERTIFICATE NO.
49179
PAWEL
PASZCZUK
Date Signed 11/11/21
ARIZONA, U.S.A.
Expires 03/31/2024
SEAL

IRQ W.M. Jordan COMPANY – A JOINT VENTURE –

Michael Baker INTERNATIONAL
100 AIRSIDE DRIVE
MOON TOWNSHIP, PA 15108
A/E INFO

APPROVED
FOR COMMANDER NAVFAC

ACTIVITY
MARINE CORPS BASE
CAMP LEJEUNE

SATISFACTORY TO DATE DD/MM/YY
DES Designer DRW Author CHK Checker
PM / DM TOWLER / ROOT
BRANCH HEAD
DESIGN DIRECTOR R.L.Stephens, Jr.
FIRE PROTECTION DPS

DEPARTMENT OF THE NAVY
NAVAL FACILITIES ENGINEERING SYSTEMS COMMAND
ATLANTIC DESIGN AND CONSTRUCTION
NAVAL FACILITIES ENGINEERING SYSTEMS COMMAND ATLANTIC
NORFOLK, VA
MCB CAMP LEJEUNE
JACKSONVILLE, NC
P1527 LOGCOM CSP WAREHOUSE
REFLECTED CEILING PLAN - 1ST FLOOR - AREA F

SCALE: AS NOTED
EPROJECT NO.: 1639600
CONSTR. CONTR. NO. N40085-20-C-0059
NAVFAC DRAWING NO. 14111156
SHEET 145 OF 447

AR116

DRAWFORM REVISION: 25 AUGUST 2020

P1527 FINAL SUBMISSION - 11/18/2021

PLOTTED: 11/15/2021 3:40:11 AM
FILE NAME: BIM 360://HF PACKAGE 3/P1527 LOG COM CSP-1639600-A.rvt

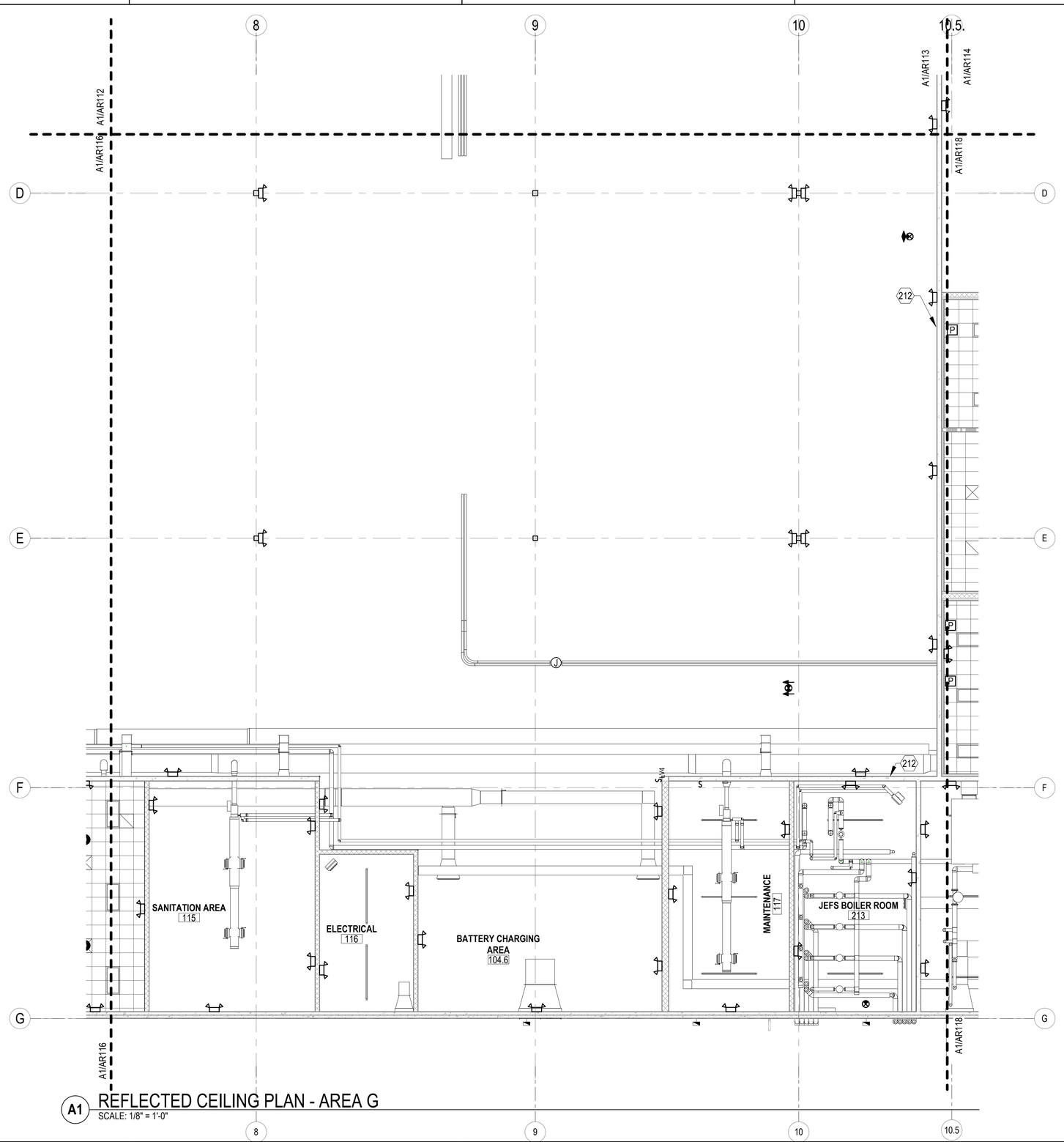

A1 REFLECTED CEILING PLAN - AREA G
SCALE: 1/8" = 1'-0"

NOTES - RCP

1. ALL ELEVATIONS ARE ABOVE FINISHED FLOOR.
2. REFER TO ELECTRICAL DRAWINGS FOR POWER AND LIGHTING INFORMATION
3. REFER TO MECHANICAL DRAWINGS FOR VENTILATION AND HEATING VENTILATION AND AIR CONDITIONING INFORMATION
4. ALL CEILING GRIDS TO BE CENTERED IN ROOMS - TYPICAL UNLESS NOTED OR DIMENSIONED OTHERWISE
5. LIGHT FIXTURES IN PLASTER CEILINGS MUST BE CENTERED IN ROOMS - TYPICAL UNLESS NOTED OTHERWISE
6. ALL EXPOSED DUCTWORK, PIPES, CONDUIT AND STRUCTURE MUST BE CLEAN AND FREE OF ANY MANUFACTURER OR CONSTRUCTION DEFECTS
7. THE SUSPENDED CEILING SYSTEM, MECHANICAL DUCTWORK AND LIGHTING FIXTURES MUST BE POSITIVELY ATTACHED TO THE STRUCTURE ABOVE

KEYNOTES

212 TILT UP CONCRETE WALL TO ROOF DECK - SEE S SERIES

RCP LEGEND

NOTE: NOT ALL ELEMENTS ARE SHOWN ON COMPREHENSIVE REFLECTED CEILING PLAN. SEE ENLARGED CEILING PLANS FOR COMPLETE INFORMATION

- 2' x 2' SECOND LOOK ACOUSTICAL CEILING PANEL
- PAINTED GYPSUM WALLBOARD CEILING
- MECHANICAL DIFFUSER SEE M-SERIES
- LIGHTING FIXTURES SEE E-SERIES
- ILLUMINATED EXIT SIGN SEE E-SERIES
- SPRINKLER HEAD SEE F-SERIES
- AUDIO/VISUAL FIXTURES SEE T-SERIES
- EMERGENCY LIGHT UNIT
- P POWER PACK
- OCCUPANCY SENSOR CORRIDOR
- OCCUPANCY SENSOR ROOM
- AFS AIR FLOW MEASUREMENT SYSTEM

KEYPLAN

A	B	C	D
E	F	G	H

0 4' - 0" 8' - 0" 16' - 0"
SCALE: 1/8" = 1' - 0"

N

APPR | DATE | DESCRIPTION | SYM

NAVFAC

REGISTERED ARCHITECT
CERTIFICATE NO.
49179
PAWEL
PASZCZUK
Date signed 11/11/21
ARIZONA, U.S.A.
Expires 03/31/2024
SEAL

IRQ WM Jordan COMPANY – A JOINT VENTURE –

Michael Baker INTERNATIONAL
100 AIRSIDE DRIVE
MOON TOWNSHIP, PA 15108
A/E INFO

APPROVED
FOR COMMANDER NAVFAC

ACTIVITY
MARINE CORPS BASE CAMP LEJEUNE

SATISFACTORY TO DATE DD/MM/YY
DES Designer DRW Author CHK Checker
PM / DM TOWLER / ROOT
BRANCH HEAD
DESIGN DIRECTOR R.L.Stephens, Jr.
FIRE PROTECTION DPS

DEPARTMENT OF THE NAVY
NAVAL FACILITIES ENGINEERING SYSTEMS COMMAND
ATLANTIC DESIGN AND CONSTRUCTION
MCB CAMP LEJEUNE

NAVAL FACILITIES ENGINEERING SYSTEMS COMMAND ATLANTIC
NORFOLK, VA
JACKSONVILLE, NC
P1527 LOGCOM CSP WAREHOUSE

REFLECTED CEILING PLAN - 1ST FLOOR - AREA G

SCALE: AS NOTED
EPROJECT NO.: 1639600
CONSTR. CONTR. NO. N40085-20-C-0059
NAVFAC DRAWING NO. 14111159
SHEET 148 OF 447

AR117

DRAWFORM REVISION: 25 AUGUST 2020

P1527 FINAL SUBMISSION - 11/18/2021

PLOTTED: 11/15/2021 3:40:14 AM

FILE NAME: BIM 360://HF PACKAGE 3/P1527 LOG COM CSP-1639600-A.rvt

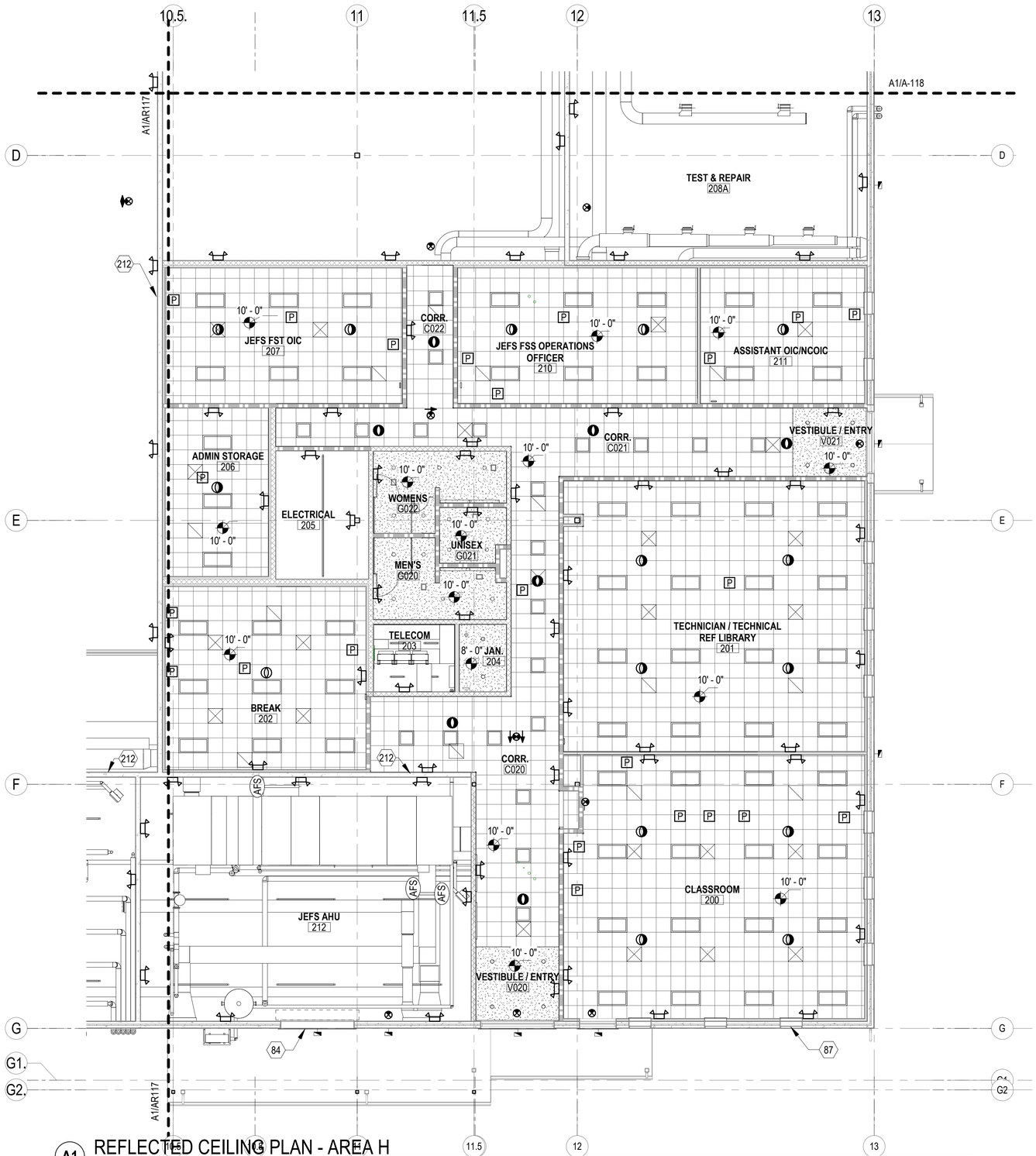

A1 REFLECTED CEILING PLAN - AREA H

SCALE: 1/8" = 1'-0"

NOTES - RCP

1. ALL ELEVATIONS ARE ABOVE FINISHED FLOOR.
2. REFER TO ELECTRICAL DRAWINGS FOR POWER AND LIGHTING INFORMATION
3. REFER TO MECHANICAL DRAWINGS FOR VENTILATION AND HEATING VENTILATION AND AIR CONDITIONING INFORMATION
4. ALL CEILING GRIDS TO BE CENTERED IN ROOMS - TYPICAL UNLESS NOTED OR DIMENSIONED OTHERWISE
5. LIGHT FIXTURES IN PLASTER CEILINGS MUST BE CENTERED IN ROOMS - TYPICAL UNLESS NOTED OTHERWISE
6. ALL EXPOSED DUCTWORK, PIPES, CONDUIT AND STRUCTURE MUST BE CLEAN AND FREE OF ANY MANUFACTURER OR CONSTRUCTION DEFECTS
7. THE SUSPENDED CEILING SYSTEM, MECHANICAL DUCTWORK AND LIGHTING FIXTURES MUST BE POSITIVELY ATTACHED TO THE STRUCTURE ABOVE

KEYNOTES

84	OVERHEAD COILING DOORS - SEE DOOR SCHEDULE
87	FIXED ALUMINUM WINDOW, TYP. - SEE WINDOW TYPES
212	TILT UP CONCRETE WALL TO ROOF DECK - SEE S SERIES

RCP LEGEND

NOTE: NOT ALL ELEMENTS ARE SHOWN ON COMPREHENSIVE REFLECTED CEILING PLAN. SEE ENLARGED CEILING PLANS FOR COMPLETE INFORMATION

- 2' x 2' SECOND LOOK ACOUSTICAL CEILING PANEL
- PAINTED GYPSUM WALLBOARD CEILING
- MECHANICAL DIFFUSER SEE M-SERIES
- LIGHTING FIXTURES SEE E-SERIES
- ILLUMINATED EXIT SIGN SEE E-SERIES
- SPRINKLER HEAD SEE F-SERIES
- AUDIO/VISUAL FIXTURES SEE T-SERIES
- EMERGENCY LIGHT UNIT
- P POWER PACK
- OCCUPANCY SENSOR CORRIDOR
- OCCUPANCY SENSOR ROOM
- AFS AIR FLOW MEASUREMENT SYSTEM

KEYPLAN

A	B	C	D
E	F	G	H

0 4' - 0" 8' - 0" 16' - 0"

SCALE: 1/8" = 1' - 0"

N

APPR	DATE	DESCRIPTION	SYM

NAVFAC

REGISTERED ARCHITECT CERTIFICATE NO. 49179 PAWEL PASZCZUK Date Signed 11/11/21 ARIZONA, U.S.A. Expires 03/31/2024 SEAL

RQ W.M. Jordan COMPANY – A JOINT VENTURE –

Michael Baker INTERNATIONAL

100 AIRSIDE DRIVE MOON TOWNSHIP, PA 15108 A/E INFO

APPROVED

FOR COMMANDER NAVFAC

ACTIVITY: MARINE CORPS BASE CAMP LEJEUNE

SATISFACTORY TO DATE: DD/MM/YY

DES: Designer DRW: Author CHK: Checker

PM / DM: TOWLER / ROOT

BRANCH HEAD:

DESIGN DIRECTOR: R.L.Stephens, Jr.

FIRE PROTECTION: DPS

DEPARTMENT OF THE NAVY
NAVAL FACILITIES ENGINEERING SYSTEMS COMMAND
ATLANTIC DESIGN AND CONSTRUCTION
NAVAL FACILITIES ENGINEERING SYSTEMS COMMAND ATLANTIC NORFOLK, VA
MCB CAMP LEJEUNE
JACKSONVILLE, NC
P1527 LOGCOM CSP WAREHOUSE

REFLECTED CEILING PLAN - 1ST FLOOR - AREA H

SCALE: AS NOTED

EPROJECT NO.: 1639600

CONSTR. CONTR. NO.: N40085-20-C-0059

NAVFAC DRAWING NO.: 14111160

SHEET 149 OF 447

AR118

DRAWFORM REVISION: 25 AUGUST 2020

P1527 FINAL SUBMISSION - 11/18/2021

PLOTTED: 11/15/2021 3:40:16 AM

FILE NAME: BIM 360://HF PACKAGE 3/P1527 LOG COM CSP-1639600-A.rvt

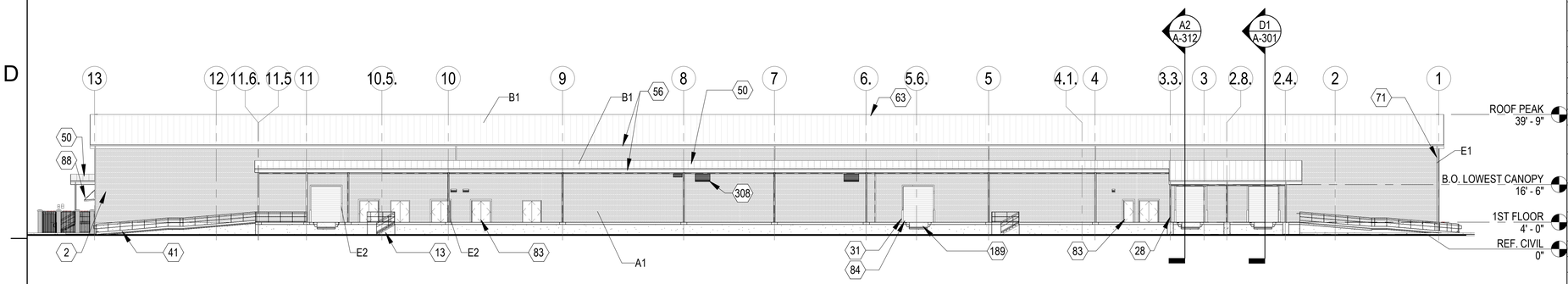

D1 NORTH ELEVATION
SCALE: 3/64" = 1'-0"

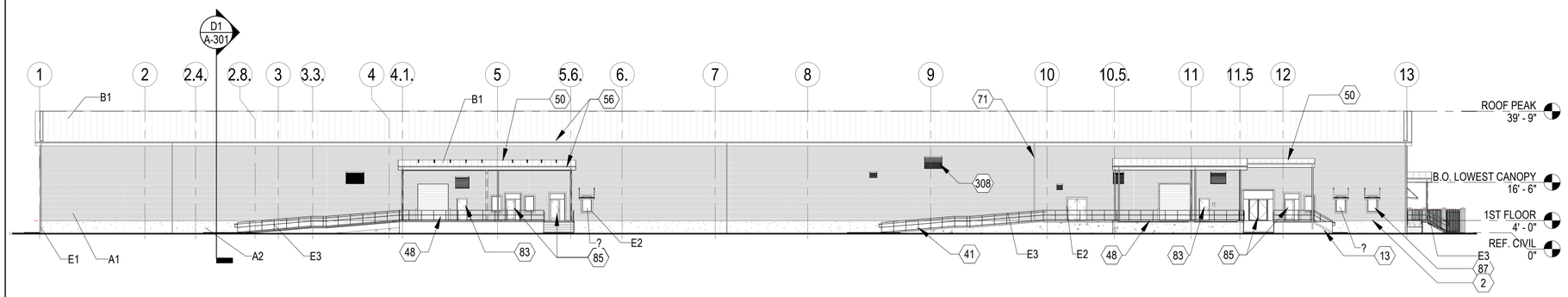

B1 SOUTH ELEVATION
SCALE: 3/64" = 1'-0"

NOTES - EXTERIOR ELEVATIONS

1	REFER TO SHEET A-611 FOR DOOR SCHEDULE AND ELEVATIONS.
2	REFER TO SHEET A-501 FOR WINDOW ELEVATIONS.
3	REFER TO MATERIAL SCHEDULE ON SHEET A-201 AND A-202 FOR EXTERIOR FINISHES.

KEYNOTES

2	INSULATED TILT-UP CONCRETE WALL WITH CAST-IN BRICK VENEER INCLUDING 4' - PAINTED LOWER TILT UP WALL
13	CONCRETE STAIR TO FIRST FLOOR
28	STRUCTURAL STEEL OR COLUMN, SEE S-SERIES
31	6-INCH STEEL BOLLARDS
41	42" H. GUARDRAIL WITH 36" H. HANDRAIL
48	REMOVABLE RAILING FOR DOCK ACCESS
50	STRUCTURAL METAL ROOF DECK
56	PRE-FINISHED DECORATIVE 6" DIA. GUTTER SYSTEM, SLOPE TO DOWNSPOUT
63	STANDING SEAM METAL ROOF (COLOR: SANDSTONE), OVER 6" RIGID INSULATION
70	PREFINISHED GEORGIAN STYLE PROFILED ROOF GUTTER (COLOR: SANDSTONE) - 6"X6" MIN SIZE
71	PREFINISHED METAL DOWNSPOUT - 6"X4" MIN SIZE, ATTACH TO BUILDING STRUCTURE - DRAIN TO STORM SEWER
83	INSULATED HOLLOW METAL DOOR AND FRAME - SEE DOOR SCHEDULE
84	OVERHEAD COILING DOORS - SEE DOOR SCHEDULE
85	ALUMINUM STOREFRONT DOORS AND FRAMES
87	FIXED ALUMINUM WINDOW, TYP. - SEE WINDOW TYPES
88	ALUMINUM WINDOW SUNSHADE - SEE DETAIL A4/A-501
189	DOCK LEVELER 6' WIDE X 7' LONG
308	ALUMINUM MECHANICAL LOUVERS

SCHEDULE - EXTERIOR MATERIAL & COLOR BASIS OF DESIGN

FINISH	DESCRIPTION	COLOR	MANUFACTURER	COMMENTS
A1	BRICK VENEER	THIN BRICK #10 RED	SUMMITVILLE	TILT UP SANDWICH WALL FIELD
A2	TILT UP - TYPICAL	CREAM	SHERWIN WILLIAMS	GRADE BEAM
B1	STANDING SEAM METAL ROOF	SANDSTONE	METAL ROOFING SYSTEMS, INC.	ROOF
E1	PREFINISHED ALUMINUM	SANDSTONE	TBD	GUTTERS/DOWNSPOUTS
E2	PREFINISHED ALUMINUM	BONE WHITE	KAWNEER/VARIES	WINDOW/DOOR TRIM
E3	PAINTED GLAV. STEEL	SANDSTONE	VARIES	HANDRAILS
E4	PREFINISHED METAL	SANSTONE	VARIES	UTILITIES/EQUIPMENT
W1	WINDOW GLAZING	SOLARBAN 70 on OPTIGRAY	VITRO ARCHITECTURAL GLASS	INSULATED/LAMINATE GLASS

APPR	DATE	DESCRIPTION	SYM

NAVFAC

REGISTERED ARCHITECT
CERTIFICATE NO.
49179
PAWEL
PASZCZUK
Date Signed 11/11/21
ARIZONA, U.S.A.
Expires 03/31/2024
SEAL

RQ W.M. Jordan COMPANY – A JOINT VENTURE –

Michael Baker INTERNATIONAL
100 AIRSIDE DRIVE
MOON TOWNSHIP, PA 15108
A/E INFO

APPROVED
FOR COMMANDER NAVFAC

ACTIVITY
MARINE CORPS BASE
CAMP LEJEUNE

SATISFACTORY TO DATE DD/MM/YY
DES Designer DRW Author CHK Checker
PM / DM TOWLER / ROOT
BRANCH HEAD
DESIGN DIRECTOR R.L.Stephens, Jr.
FIRE PROTECTION DPS

DEPARTMENT OF THE NAVY
NAVAL FACILITIES ENGINEERING SYSTEMS COMMAND
ATLANTIC DESIGN AND CONSTRUCTION
MCB CAMP LEJEUNE
NAVAL FACILITIES ENGINEERING SYSTEMS COMMAND ATLANTIC
NORFOLK, VA
JACKSONVILLE, NC
P1527 LOGCOM CSP WAREHOUSE
NORTH AND SOUTH EXTERIOR ELEVATIONS

SCALE: AS NOTED
EPROJECT NO.: 1639600
CONSTR. CONTR. NO. N40085-20-C-0059
NAVFAC DRAWING NO. 14111171
SHEET 160 OF 447

A-201
DRAWFORM REVISION: 25 AUGUST 2020

P1527 FINAL SUBMISSION - 11/18/2021

PLOTTED: 11/15/2021 3:38:18 AM
FILE NAME: BIM 360/IHF PACKAGE 3/P1527 LOG COM CSP-1639600-A.rvt

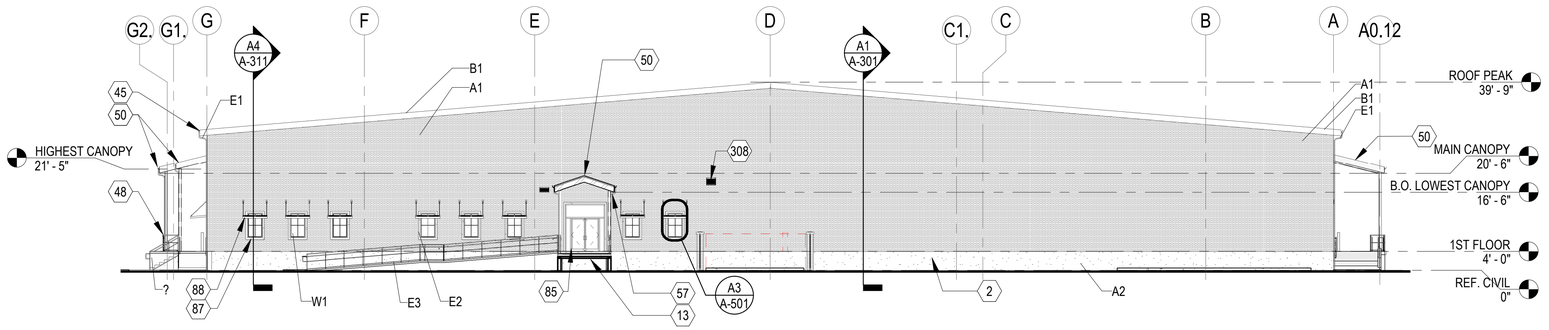

C1 EAST ELEVATION
SCALE: 1/16" = 1'-0"

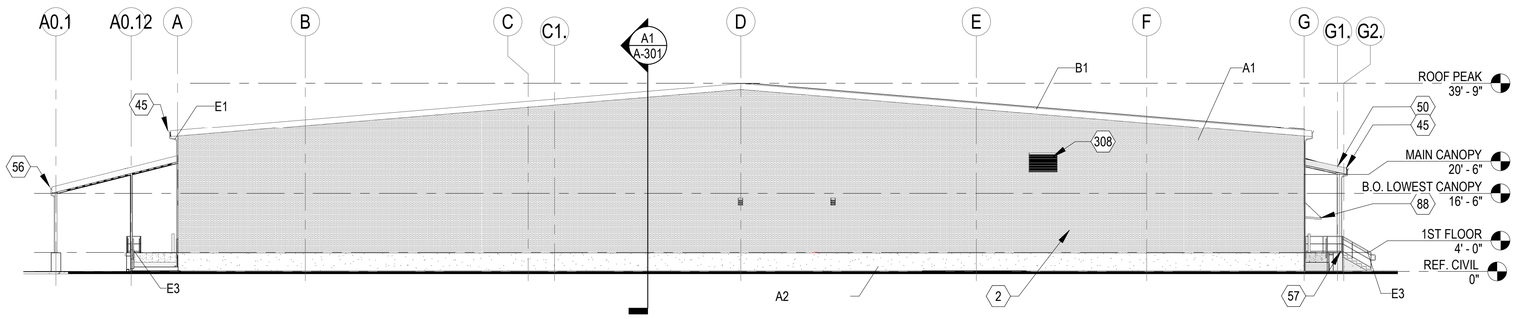

B1 WEST ELEVATION
SCALE: 1/16" = 1'-0"

NOTES - EXTERIOR ELEVATIONS

1	REFER TO SHEET A-611 FOR DOOR SCHEDULE AND ELEVATIONS.
2	REFER TO SHEET A-501 FOR WINDOW ELEVATIONS.
3	REFER TO MATERIAL SCHEDULE ON SHEET A-201 AND A-202 FOR EXTERIOR FINISHES.

KEYNOTES

2	INSULATED TILT-UP CONCRETE WALL WITH CAST-IN BRICK VENEER INCLUDING 4' - PAINTED LOWER TILT UP WALL
13	CONCRETE STAIR TO FIRST FLOOR
45	PREFINISHED METAL FASCIA
48	REMOVABLE RAILING FOR DOCK ACCESS
50	STRUCTURAL METAL ROOF DECK
56	PRE-FINISHED DECORATIVE 6" DIA. GUTTER SYSTEM, SLOPE TO DOWNSPOUT
57	PRE-FINISHED 5" DIA. DOWNSPOUTS TO MATCH ROOF SYSTEM
85	ALUMINUM STOREFRONT DOORS AND FRAMES
87	FIXED ALUMINUM WINDOW, TYP. - SEE WINDOW TYPES
88	ALUMINUM WINDOW SUNSHADE - SEE DETAIL A4/A-501
308	ALUMINUM MECHANICAL LOUVERS

SCHEDULE - EXTERIOR MATERIAL & COLOR BASIS OF DESIGN

FINISH	DESCRIPTION	COLOR	MANUFACTURER	COMMENTS
A1	BRICK VENEER	THIN BRICK #10 RED	SUMMITVILLE	TILT UP SANDWICH WALL FIELD
A2	TILT UP - TYPICAL	CREAM	SHERWIN WILLIAMS	GRADE BEAM
B1	STANDING SEAM METAL ROOF	SANDSTONE	METAL ROOFING SYSTEMS, INC.	ROOF
E1	PREFINISHED ALUMINUM	SANDSTONE	TBD	GUTTERS/DOWNSPOUTS
E2	PREFINISHED ALUMINUM	BONE WHITE	KAWNEER/VARIES	WINDOW/DOOR TRIM
E3	PAINTED GLAV. STEEL	SANDSTONE	VARIES	HANDRAILS
E4	PREFINISHED METAL	SANSTONE	VARIES	UTILITIES/EQUIPMENT
W1	WINDOW GLAZING	SOLARBAN 70 on OPTIGRAY	VITRO ARCHITECTURAL GLASS	INSULATED/LAMINATE GLASS

0 8' - 0" 16' - 0" 32' - 0"
SCALE: 1/16" = 1' - 0"

APPR	DATE	DESCRIPTION	SYM

NAVFAC

REGISTERED ARCHITECT
CERTIFICATE NO.
49179
PAWEL
PASZCZUK
Date Signed 11/11/21
ARIZONA, U.S.A.
Expires 03/31/2024
SEAL

IRQ W.M. Jordan COMPANY – A JOINT VENTURE –

Michael Baker INTERNATIONAL
100 AIRSIDE DRIVE
MOON TOWNSHIP, PA 15108
A/E INFO

APPROVED

FOR COMMANDER NAVFAC

ACTIVITY
MARINE CORPS BASE
CAMP LEJEUNE

SATISFACTORY TO DATE DD/MM/YY

DES XXX	DRW XXX	CHK XXX

PM / DM TOWLER / ROOT
BRANCH HEAD
DESIGN DIRECTOR R.L.Stephens, Jr.
FIRE PROTECTION DPS

DEPARTMENT OF THE NAVY
NAVAL FACILITIES ENGINEERING SYSTEMS COMMAND
ATLANTIC DESIGN AND CONSTRUCTION
MCB CAMP LEJEUNE

NAVAL FACILITIES ENGINEERING SYSTEMS COMMAND ATLANTIC
NORFOLK, VA
JACKSONVILLE, NC
P1527 LOGCOM CSP WAREHOUSE

EAST AND WEST ELEVATIONS

SCALE: AS NOTED
EPROJECT NO.: 1639600
CONSTR. CONTR. NO.
N40085-20-C-0059
NAVFAC DRAWING NO.
14111161
SHEET 150 OF 447

A-202

DRAWFORM REVISION: 25 AUGUST 2020

P1527 FINAL SUBMISSION - 11/18/2021

PLOTTED: 11/15/2021 3:38:29 AM

FILE NAME: BIM 360://HF PACKAGE 3/P1527 LOG COM CSP-1639600-A.rvt

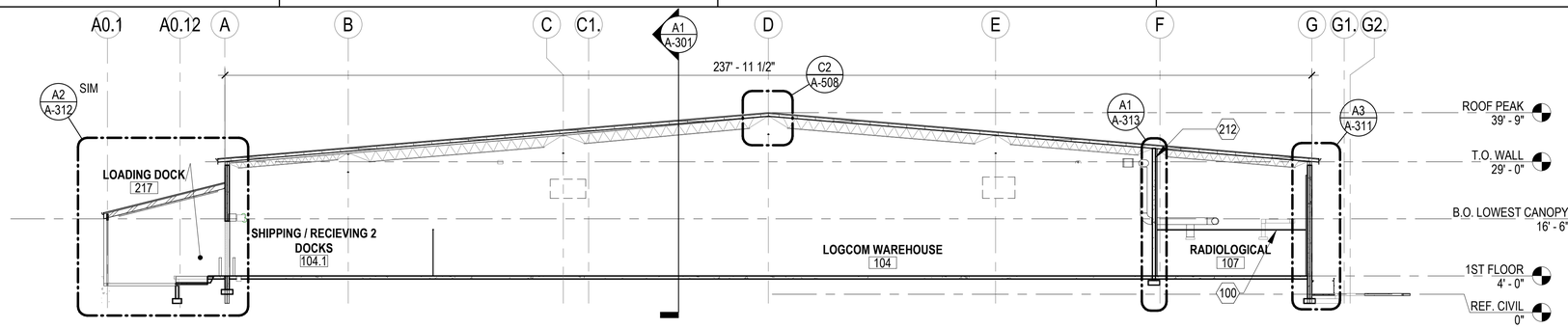

D1 LOGCOM WAREHOUSE NORTH TO SOUTH
SCALE: 1/16" = 1'-0"

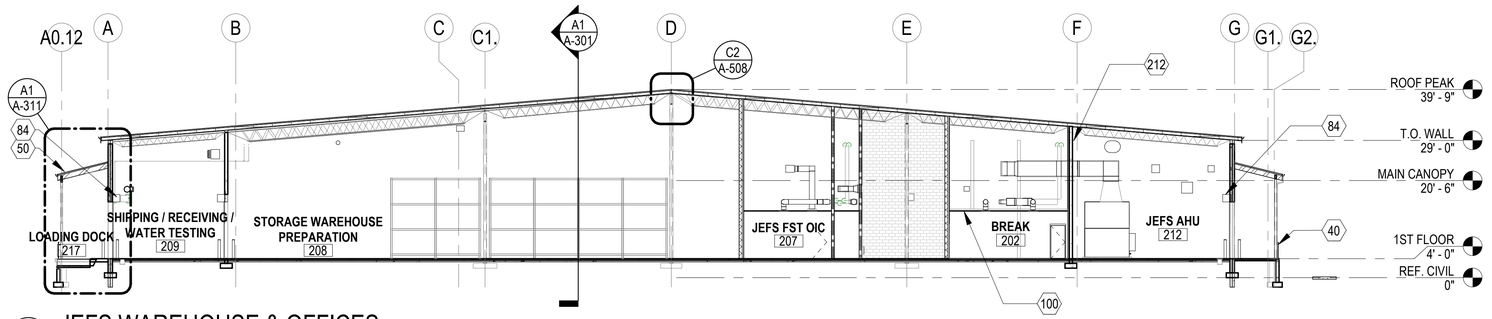

C1 JEFS WAREHOUSE & OFFICES
SCALE: 1/16" = 1'-0"

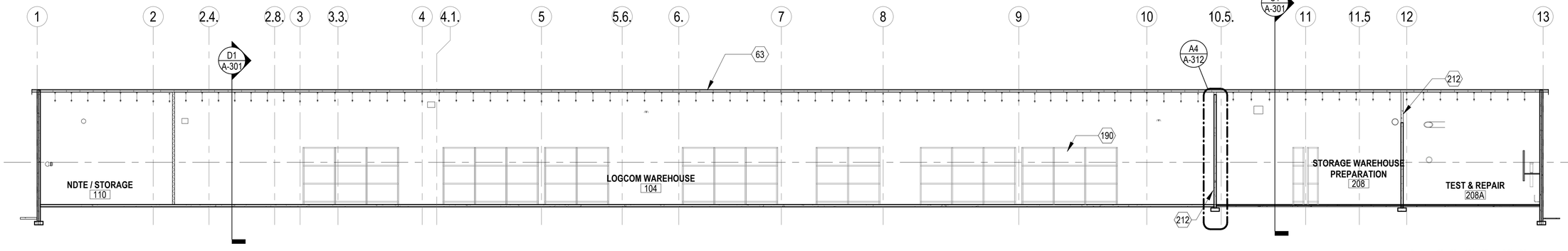

A1 LOGCOM WAREHOUSE EAST TO WEST
SCALE: 1/16" = 1'-0"

0 8' - 0" 16' - 0" 32' - 0"
SCALE: 1/16" = 1' - 0"

KEYNOTES

07.01	
40	42" H. GUARDRAIL
50	STRUCTURAL METAL ROOF DECK
63	STANDING SEAM METAL ROOF (COLOR: SANDSTONE), OVER 6" RIGID INSULATION
84	OVERHEAD COILING DOORS - SEE DOOR SCHEDULE
100	SUSPENDED CEILING, SEE RCP DRAWINGS.
190	DOUBLE DEEP RACKS, OVERALL CAPACITY OF 1,536 PALLET POSITIONS WITH 14' WIDE MIN. DRIVE AISLES BETWEEN RACK FACES
212	TILT UP CONCRETE WALL TO ROOF DECK - SEE S SERIES

NOTES - BUILDING SECTIONS

APPR	DATE	DESCRIPTION	SYM

NAVFAC

REGISTERED ARCHITECT CERTIFICATE NO. 49179 PAWEL PASZCZUK Date Signed 11/11/21 ARIZONA, U.S.A.
Expires 03/31/2024
SEAL

IRQ WM Jordan COMPANY – A JOINT VENTURE –

Michael Baker INTERNATIONAL
100 AIRSIDE DRIVE
MOON TOWNSHIP, PA 15108
A/E INFO

APPROVED

FOR COMMANDER NAVFAC

ACTIVITY
MARINE CORPS BASE CAMP LEJEUNE

SATISFACTORY TO DATE DD/MM/YY

DES XXX | DRW XXX | CHK XXX

PM / DM TOWLER / ROOT

BRANCH HEAD

DESIGN DIRECTOR R.L.Stephens, Jr.

FIRE PROTECTION DPS

DEPARTMENT OF THE NAVY
NAVAL FACILITIES ENGINEERING SYSTEMS COMMAND
ATLANTIC DIVISION AND CONSTRUCTION
NAVAL FACILITIES ENGINEERING SYSTEMS COMMAND ATLANTIC
NORFOLK, VA
MCB CAMP LEJEUNE
JACKSONVILLE, NC
P1527 LOGCOM CSP WAREHOUSE
BUILDING SECTIONS

SCALE: AS NOTED
EPROJECT NO.: 1639600
CONSTR. CONTR. NO. N40085-20-C-0059
NAVFAC DRAWING NO. 14111162
SHEET 151 OF 447

A-301

DRAWFORM REVISION: 25 AUGUST 2020

P1527 FINAL SUBMISSION - 11/18/2021

PLOTTED: 11/15/2021 3:38:31 AM
FILE NAME: BIM 360://AIF PACKAGE 3/P1527 LOG COM CSP-1639600-A.rvt

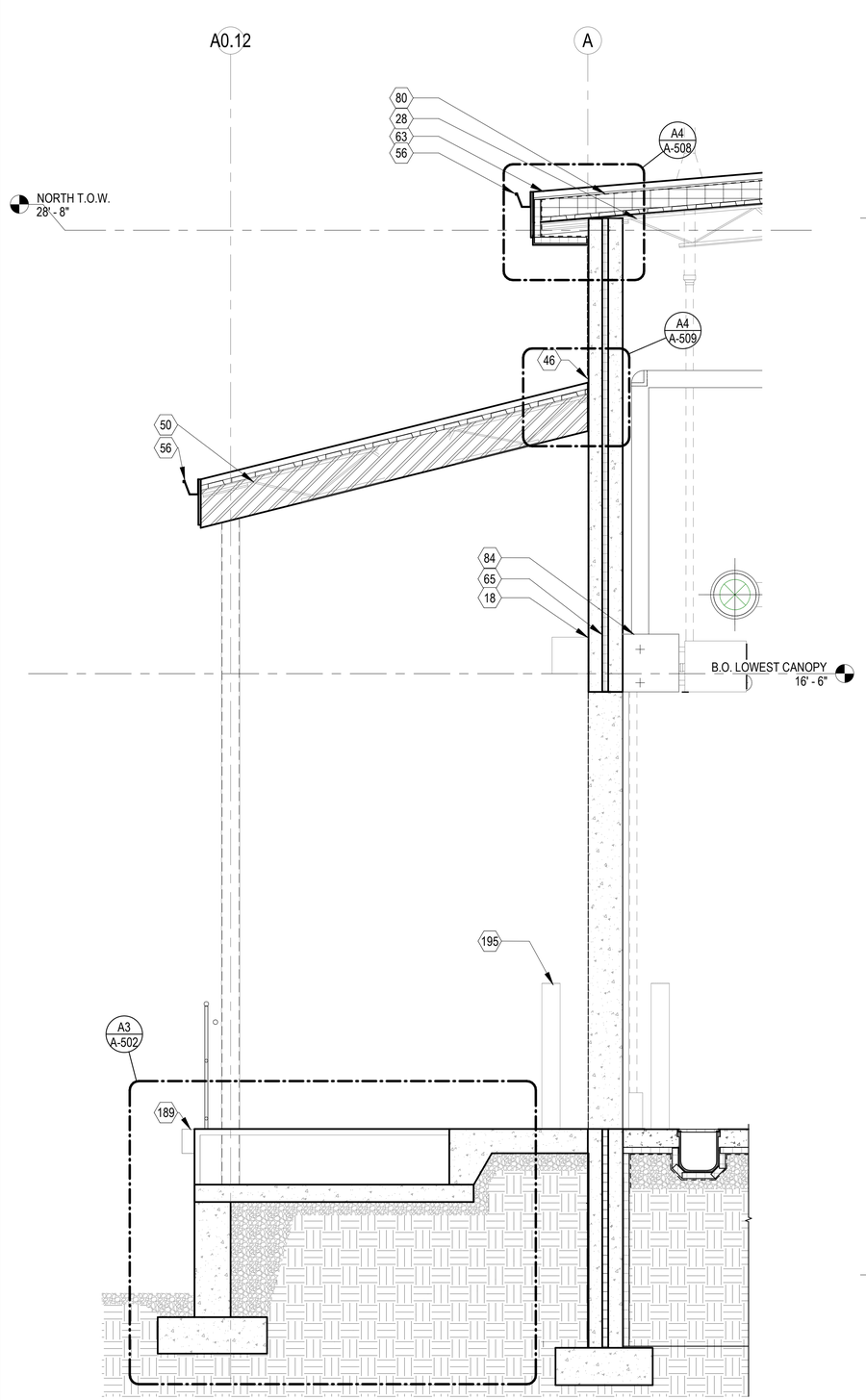

A1 LOADING DOCK
SCALE: 1/2" = 1'-0"

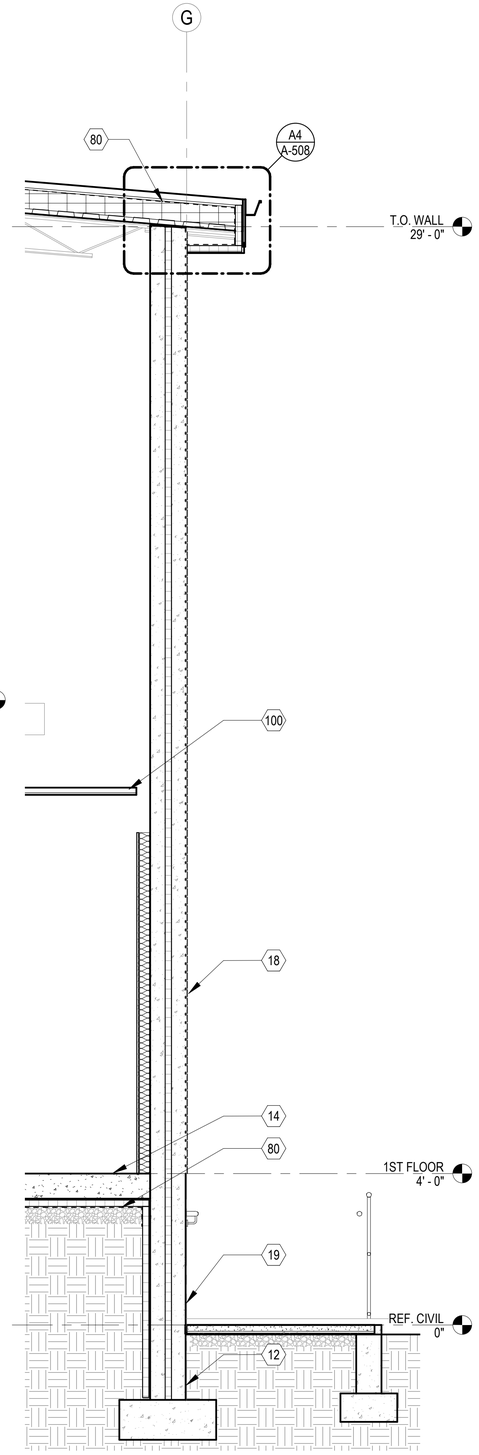

A3 LOGCOM WAREHOUSE EXTERIOR WALL
SCALE: 1/2" = 1'-0"

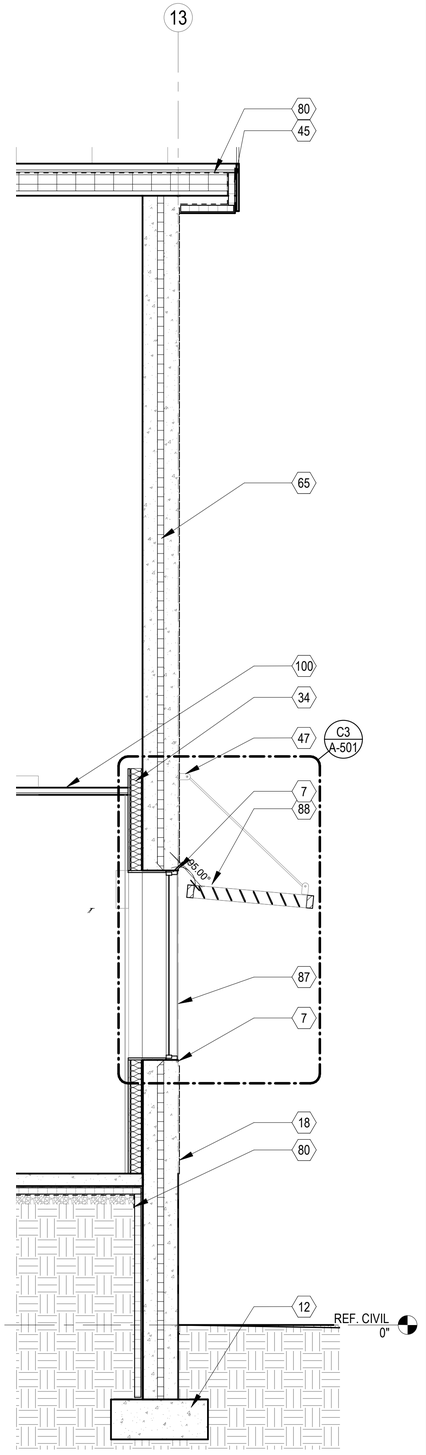

A4 WINDOW IN EXTERIOR WALL
SCALE: 1/2" = 1'-0"

KEYNOTES

03.24	
7	PREFINISHED ALUMINUM WINDOW AND DOOR TRIM
12	FOUNDATION. REFER TO STRUCTURAL
14	INTERIOR CONCRETE SLAB ON GRADE SEE S-SERIES
18	BRICK VENEER - FIELD
19	PAINTED LOWER TILT UP WALL
28	STRUCTURAL STEEL OR COLUMN, SEE S-SERIES
34	METAL STUD, SEE PARTITION TYPES
45	PREFINISHED METAL FASCIA
46	METAL FLASHING AT WALL TO ROOF TRANSITION
47	DECORATIVE METAL CONNECTION TO IMBEDDED ANCHOR TO SUPPORT WINDOW SHADES
50	STRUCTURAL METAL ROOF DECK
56	PRE-FINISHED DECORATIVE 6" DIA. GUTTER SYSTEM, SLOPE TO DOWNSPOUT
63	STANDING SEAM METAL ROOF (COLOR: SANDSTONE), OVER 6" RIGID INSULATION
65	2" CONTINUOUS RIGID INSULATION - R-13
80	GAS VAPOR BARRIER
84	OVERHEAD COILING DOORS - SEE DOOR SCHEDULE
87	FIXED ALUMINUM WINDOW, TYP. - SEE WINDOW TYPES
88	ALUMINUM WINDOW SUNSHADE - SEE DETAIL A4/A-501
100	SUSPENDED CEILING, SEE RCP DRAWINGS.
189	DOCK LEVELER 6' WIDE X 7' LONG
195	6" BOLLARDS PAINTED SAFETY YELLOW, OFFSET 12" FROM WALL FINISH

0 1' - 0" 2' - 0" 4' - 0"
SCALE: 1/2" = 1' - 0"

APPR | DATE | DESCRIPTION | SYM

NAVFAC

REGISTERED ARCHITECT
CERTIFICATE NO.
49179
PAWEL
PASZCZUK
Date signed 11/11/21
ARIZONA, U.S.A.
Expires 03/31/2024
SEAL

IRQ W.M. Jordan COMPANY – A JOINT VENTURE –

Michael Baker INTERNATIONAL
100 AIRSIDE DRIVE
MOON TOWNSHIP, PA 15108
A/E INFO

APPROVED
FOR COMMANDER NAVFAC

ACTIVITY
MARINE CORPS BASE
CAMP LEJEUNE

SATISFACTORY TO DATE DD/MM/YY
DES XXX | DRW XXX | CHK XXX
PM / DM TOWLER / ROOT
BRANCH HEAD
DESIGN DIRECTOR R.L.Stephens, Jr.
FIRE PROTECTION DPS

DEPARTMENT OF THE NAVY
NAVAL FACILITIES ENGINEERING SYSTEMS COMMAND
ATLANTIC DESIGN AND CONSTRUCTION
MCB CAMP LEJEUNE

NAVAL FACILITIES ENGINEERING SYSTEMS COMMAND ATLANTIC
NORFOLK, VA
JACKSONVILLE, NC
P1527 LOGCOM CSP WAREHOUSE

WALL SECTIONS

SCALE: AS NOTED
EPROJECT NO.: 1639600
CONSTR. CONTR. NO. N40085-20-C-0059
NAVFAC DRAWING NO. 14111163
SHEET 152 OF 447

A-311

DRAWFORM REVISION: 25 AUGUST 2020

P1527 FINAL SUBMISSION - 11/18/2021

PLOTTED: 11/15/2021 3:38:34 AM

FILE NAME: BIM 360://HF PACKAGE 3/P1527 LOG COM CSP-1639600-A.rvt

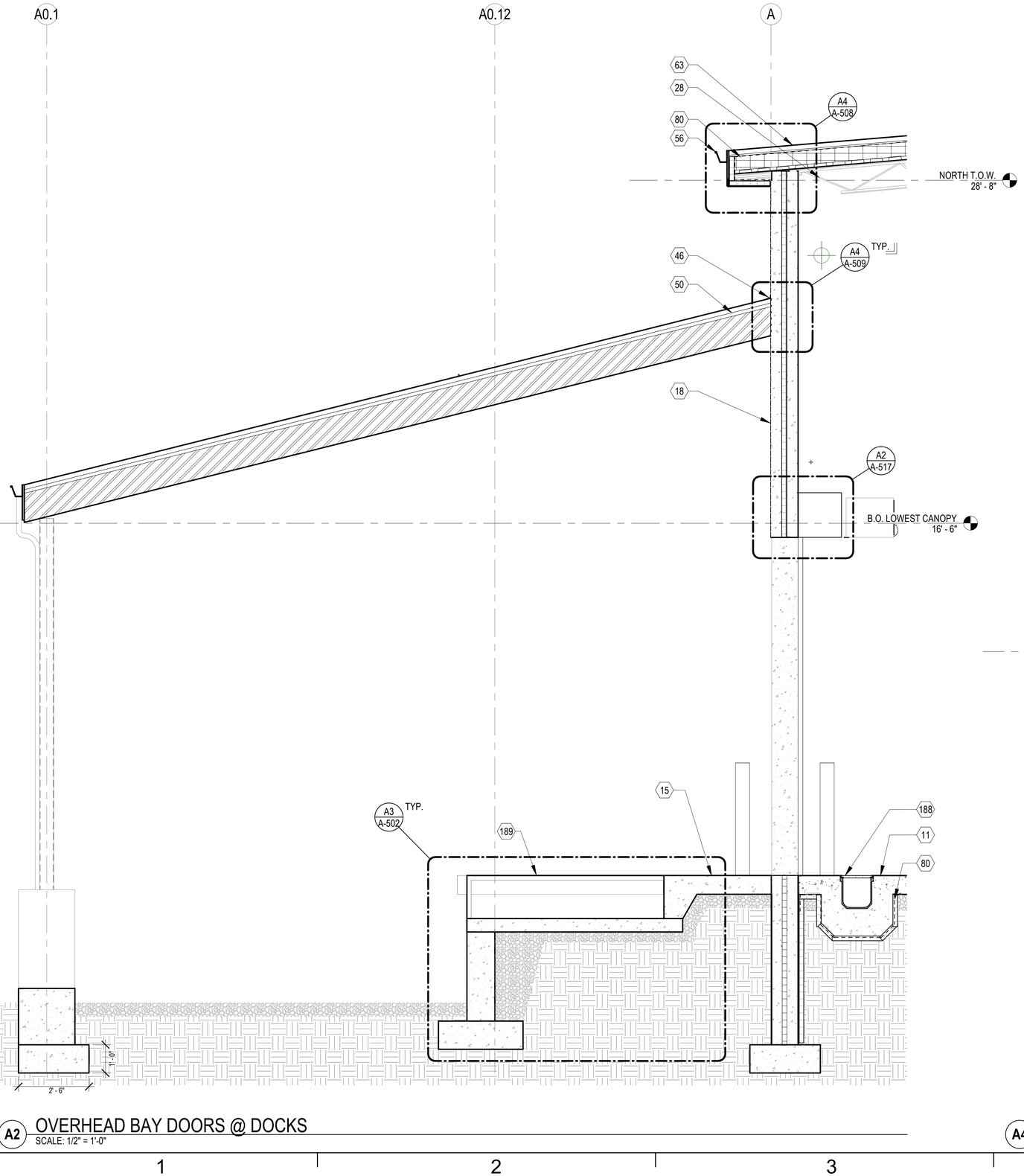

A2 OVERHEAD BAY DOORS @ DOCKS
SCALE: 1/2" = 1'-0"

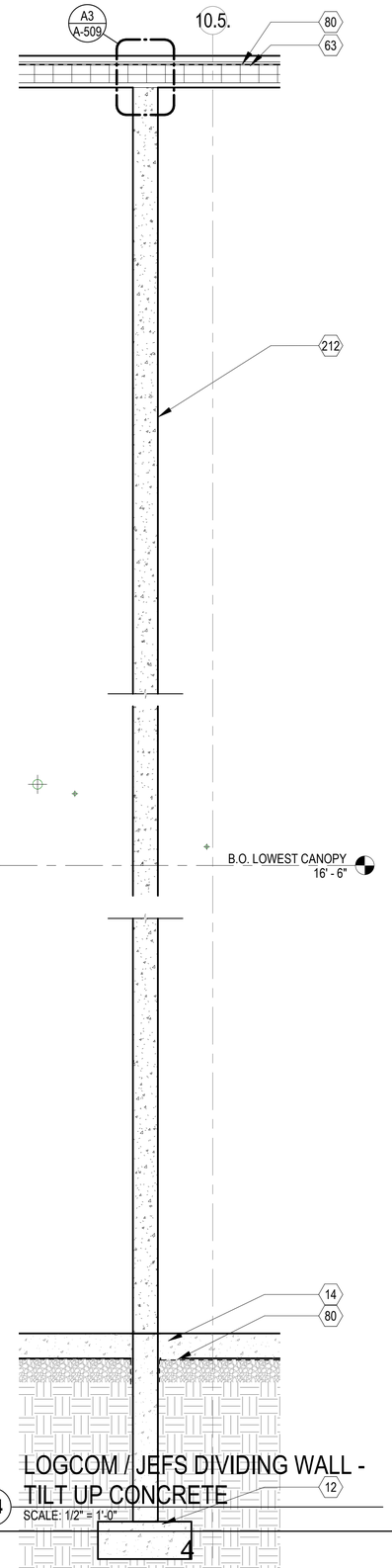

A4 LOGCOM / JEFS DIVIDING WALL - TILT UP CONCRETE
SCALE: 1/2" = 1'-0"

KEYNOTES

03.24	
11	SLOPE SLAB TO TRENCH DRAINS AT O.H. DOORS - SEE STRUCTURAL
12	FOUNDATION. REFER TO STRUCTURAL
14	INTERIOR CONCRETE SLAB ON GRADE SEE S-SERIES
15	EXTERIOR CONCRETE SLAB ON GRADE SEE S-SERIES
18	BRICK VENEER - FIELD
28	STRUCTURAL STEEL OR COLUMN, SEE S-SERIES
46	METAL FLASHING AT WALL TO ROOF TRANSITION
50	STRUCTURAL METAL ROOF DECK
56	PRE-FINISHED DECORATIVE 6" DIA. GUTTER SYSTEM, SLOPE TO DOWNSPOUT
63	STANDING SEAM METAL ROOF (COLOR: SANDSTONE), OVER 6" RIGID INSULATION
80	GAS VAPOR BARRIER
188	10' TALL AT 12" WIDE FLOOR GRATE OVER FLOOR DRAIN
189	DOCK LEVELER 6' WIDE X 7' LONG
212	TILT UP CONCRETE WALL TO ROOF DECK - SEE S SERIES

0 1' - 0" 2' - 0" 4' - 0"
SCALE: 1/2" = 1' - 0"

SYM	DESCRIPTION	DATE	APPR

NAVFAC

REGISTERED ARCHITECT
CERTIFICATE NO.
49179
PAWEL
PASZCZUK
Date Signed 11/11/21
ARIZONA, U.S.A.
Expires 03/31/2024
SEAL

IRQ Joint Venture: W.M. Jordan Company

Michael Baker INTERNATIONAL
100 AIRSIDE DRIVE
MOON TOWNSHIP, PA 15108
A/E INFO

APPROVED
FOR COMMANDER NAVFAC

ACTIVITY
MARINE CORPS BASE
CAMP LEJEUNE

SATISFACTORY TO DATE DD/MM/YY
DES Designer DRW Author CHK Checker
PM / DM TOWLER / ROOT
BRANCH HEAD
DESIGN DIRECTOR R.L.Stephens, Jr.
FIRE PROTECTION DPS

DEPARTMENT OF THE NAVY
NAVAL FACILITIES ENGINEERING SYSTEMS COMMAND
ATLANTIC DESIGN AND CONSTRUCTION
MCB CAMP LEJEUNE

NAVAL FACILITIES ENGINEERING SYSTEMS COMMAND ATLANTIC
NORFOLK, VA
JACKSONVILLE, NC
P1527 LOGCOM CSP WAREHOUSE

WALL SECTIONS

SCALE: AS NOTED
EPROJECT NO.: 1639600
CONSTR. CONTR. NO. N40085-20-C-0059
NAVFAC DRAWING NO. 14111174
SHEET 163 OF 447

A-312
DRAWFORM REVISION: 25 AUGUST 2020

P1527 FINAL SUBMISSION - 11/18/2021

PLOTTED: 11/15/2021 3:38:36 AM
FILE NAME: BIM 360:/HF PACKAGE 3/P1527 LOG COM CSP-1639600-A.rvt

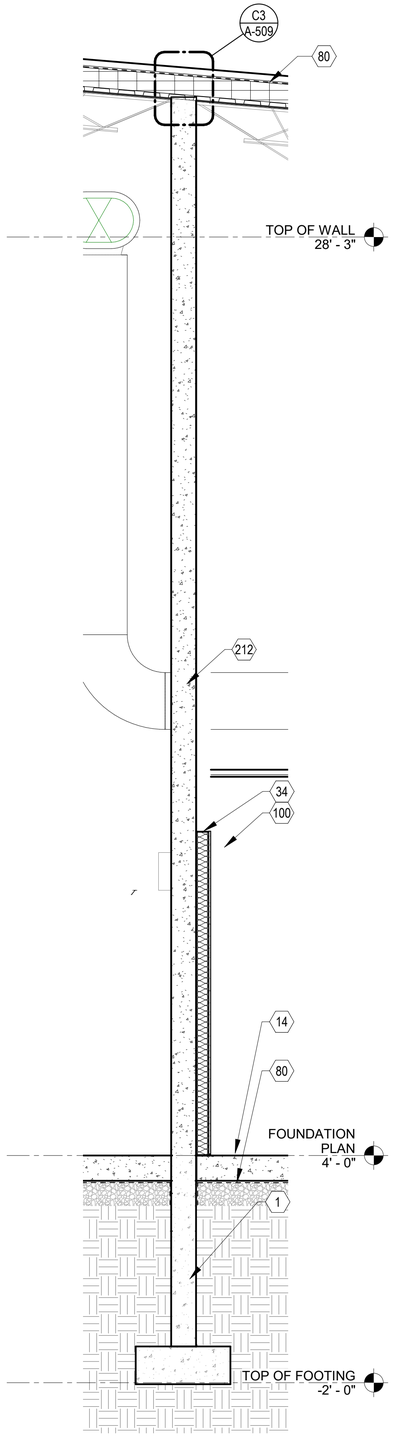

A1 TILT UP CONCRETE DET.
SCALE: 1/2" = 1'-0"

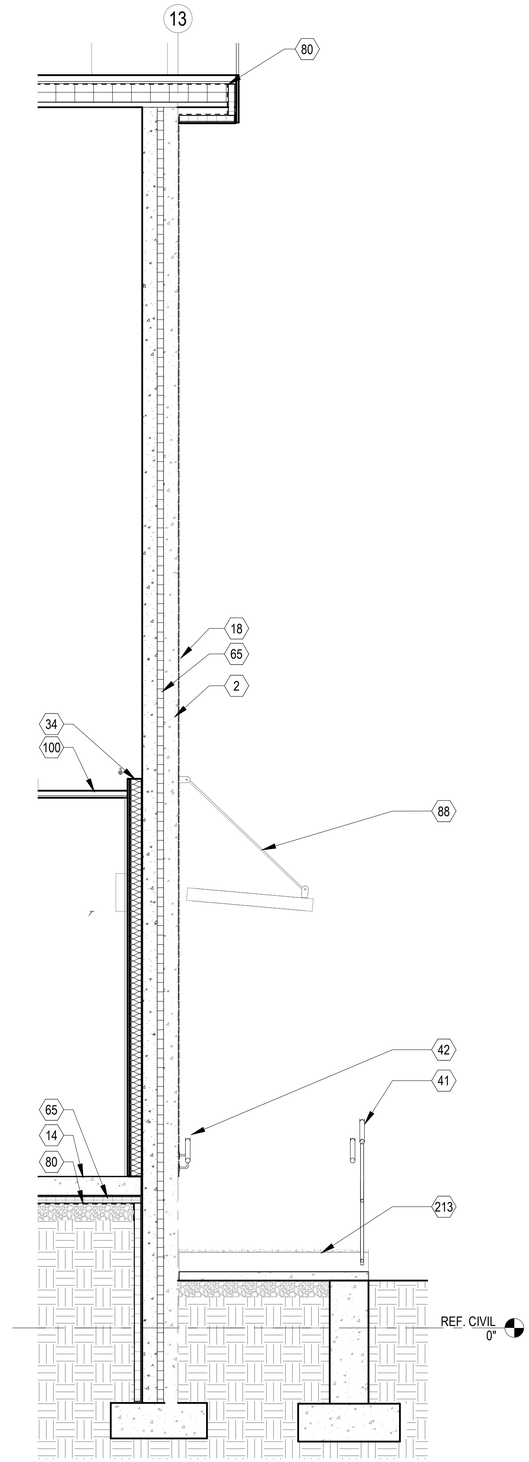

A2 RAMP TO EAST ENTRY
SCALE: 1/2" = 1'-0"

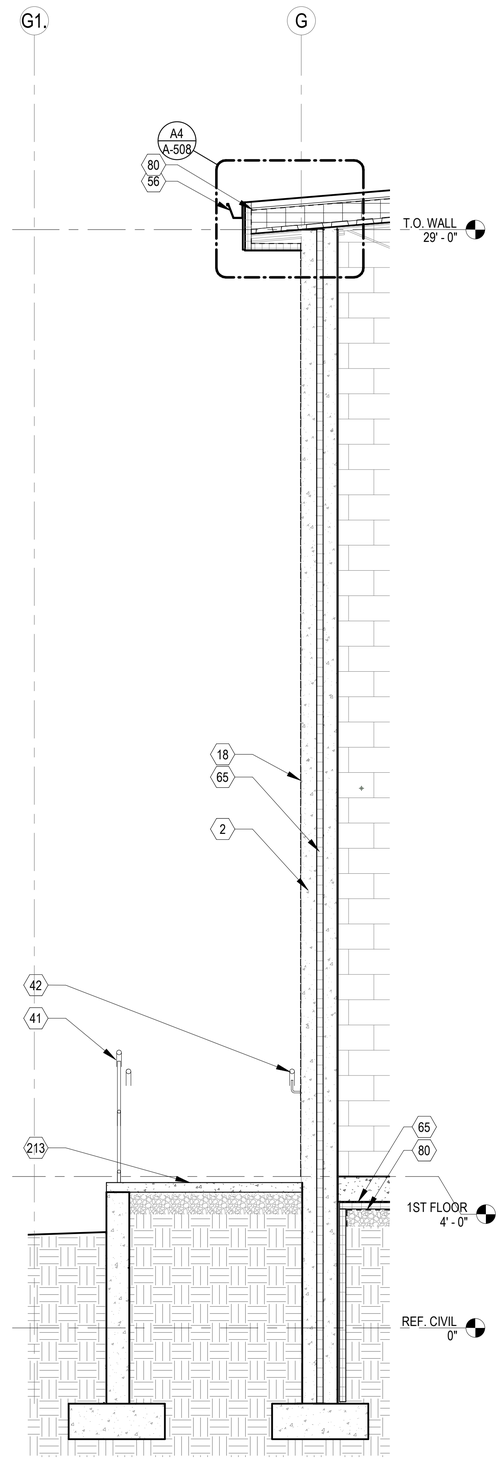

A3 RAMP TO SOUTH ENTRY
SCALE: 1/2" = 1'-0"

KEYNOTES

1	CONCRETE FOUNDATION - SEE S-SERIES
2	INSULATED TILT-UP CONCRETE WALL WITH CAST-IN BRICK VENEER INCLUDING 4' - PAINTED LOWER TILT UP WALL
14	INTERIOR CONCRETE SLAB ON GRADE SEE S-SERIES
18	BRICK VENEER - FIELD
34	METAL STUD, SEE PARTITION TYPES
41	42" H. GUARDRAIL WITH 36" H. HANDRAIL
42	36" H. WALL MOUNTED HANDRAIL
56	PRE-FINISHED DECORATIVE 6" DIA. GUTTER SYSTEM, SLOPE TO DOWNSPOUT
65	2" CONTINUOUS RIGID INSULATION - R-13
80	GAS VAPOR BARRIER
88	ALUMINUM WINDOW SUNSHADE - SEE DETAIL A4/A-501
100	SUSPENDED CEILING, SEE RCP DRAWINGS.
212	TILT UP CONCRETE WALL TO ROOF DECK - SEE S SERIES
213	CONCRETE RAMP TO FIRST FLOOR

0 1' - 0" 2' - 0" 4' - 0"
SCALE: 1/2" = 1' - 0"

APPR | DATE | DESCRIPTION | SYM

NAVFAC

REGISTERED ARCHITECT
CERTIFICATE NO.
49179
PAWEL
PASZCZUK
Date Signed 11/11/21
ARIZONA, U.S.A.
Expires 03/31/2024
SEAL

W.M. Jordan COMPANY
~A JOINT VENTURE~

Michael Baker
INTERNATIONAL
100 AIRSIDE DRIVE
MOON TOWNSHIP, PA 15108
A/E INFO

APPROVED

FOR COMMANDER NAVFAC

ACTIVITY
MARINE CORPS BASE
CAMP LEJEUNE

SATISFACTORY TO DATE DD/MM/YY

DES Designer DRW Author CHK Checker

PM / DM TOWLER / ROOT

BRANCH HEAD

DESIGN DIRECTOR R.L.Stephens, Jr.

FIRE PROTECTION DPS

DEPARTMENT OF THE NAVY
NAVAL FACILITIES ENGINEERING SYSTEMS COMMAND
ATLANTIC DESIGN AND CONSTRUCTION
MCB CAMP LEJEUNE

NAVAL FACILITIES ENGINEERING SYSTEMS COMMAND ATLANTIC
NORFOLK, VA

JACKSONVILLE, NC
P1527 LOGCOM CSP WAREHOUSE

WALL SECTIONS

SCALE: AS NOTED
EPROJECT NO.: 1639600
CONSTR. CONTR. NO. N40085-20-C-0059
NAVFAC DRAWING NO. 14111178
SHEET 167 OF 447

A-313

DRAWFORM REVISION: 25 AUGUST 2020

P1527 FINAL SUBMISSION - 11/18/2021

PLOTTED: 11/15/2021 3:38:39 AM

FILE NAME: BIM 360://HF PACKAGE 3/P1527 LOG COM CSP-1639600-A.rvt

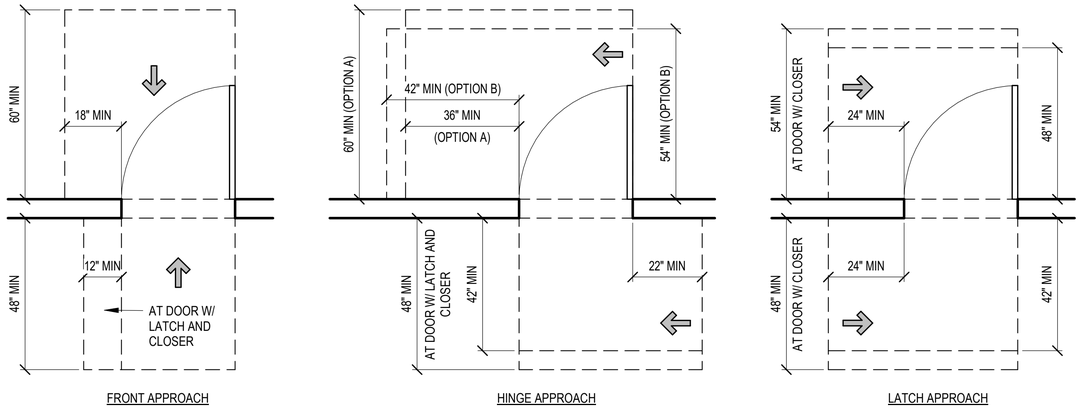

C1 ACCESSIBLE DOOR CLEARANCES

SCALE: 1/2" = 1'-0"

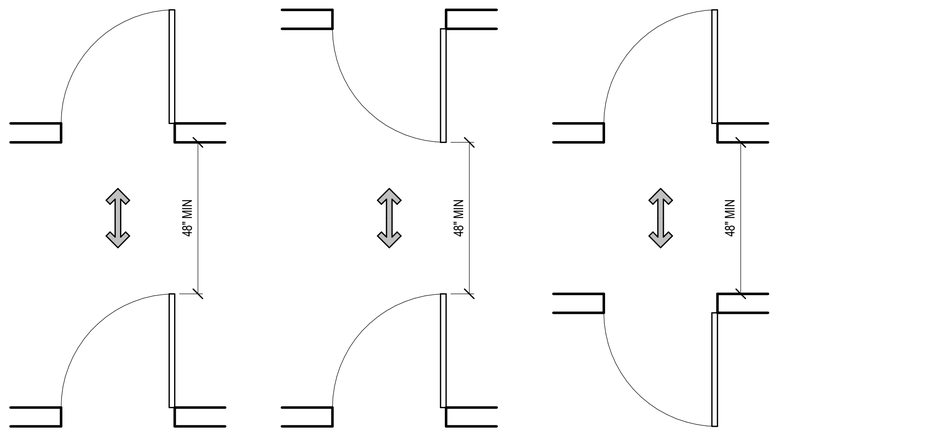

C3 ACCESSIBLE DOORS IN SERIES

SCALE: 1/2" = 1'-0"

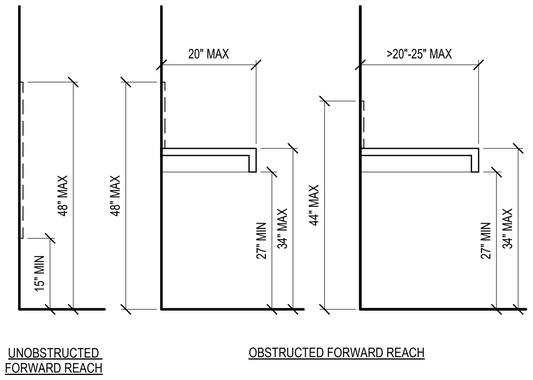

B1 ACCESSIBLE FORWARD REACH

SCALE: 3/4" = 1'-0"

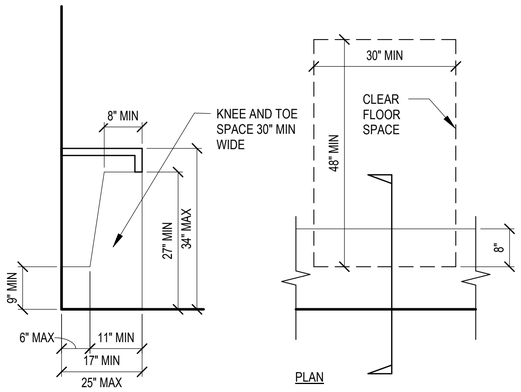

B2 ACC KNEE & TOE CLEARANCE

SCALE: 3/4" = 1'-0"

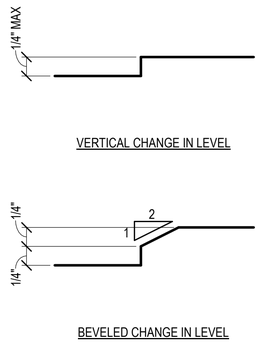

B3 ACCESSIBLE CHANGE IN LEVEL

SCALE: 12" = 1'-0"

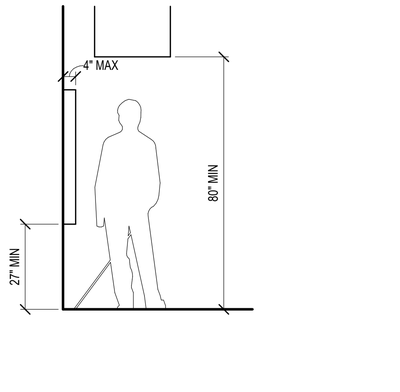

B4 PROTRUDING OBJECTS

SCALE: 1/2" = 1'-0"

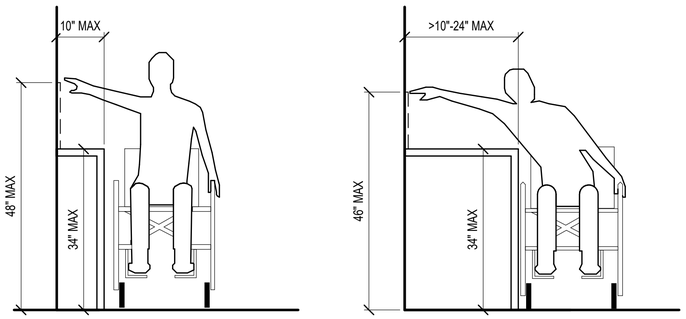

A1 ACCESSIBLE OBSTRUCTED SIDE REACH

SCALE: 3/4" = 1'-0"

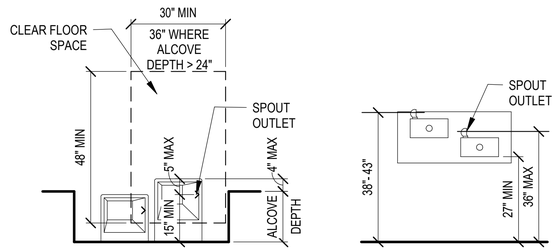

A3 ACCESSIBLE DRINKING FOUNTAIN

SCALE: 1/2" = 1'-0"

PLOTTED: 11/15/2021 3:38:40 AM
FILE NAME: BIM 360:/HF PACKAGE 3/P1527 LOG COM CSP-1639600-A.rvt

NAVFAC
REGISTERED ARCHITECT CERTIFICATE NO. 49179 PAWEL PASZCZUK Date Signed 11/11/21 ARIZONA, U.S.A.
Expires 03/31/2024 SEAL
RQ W.M. Jordan COMPANY – A JOINT VENTURE –
Michael Baker INTERNATIONAL
100 AIRSIDE DRIVE
MOON TOWNSHIP, PA 15108 A/E INFO

APPROVED

FOR COMMANDER NAVFAC

ACTIVITY
MARINE CORPS BASE CAMP LEJEUNE

SATISFACTORY TO DATE DD/MM/YY

DES SH | DRW RQ | CHK SS

PM / DM TOWLER / ROOT

BRANCH HEAD

DESIGN DIRECTOR R.L.Stephens, Jr.

FIRE PROTECTION DPS

DEPARTMENT OF THE NAVY
NAVAL FACILITIES ENGINEERING SYSTEMS COMMAND
ATLANTIC DESIGN AND CONSTRUCTION
NAVAL FACILITIES ENGINEERING SYSTEMS COMMAND ATLANTIC NORFOLK, VA
MCB CAMP LEJEUNE JACKSONVILLE, NC
P1527 LOGCOM CSP WAREHOUSE

ACCESSIBILITY DIAGRAMS

SCALE AS NOTED
EPROJECT NO.: 1639600
CONSTR. CONTR. NO. N40085-20-C-0059
NAVFAC DRAWING NO. 14111180
SHEET 169 OF 447

A-315

DRAWFORM REVISION: 25 AUGUST 2020

P1527 FINAL SUBMISSION - 11/18/2021

UNCLASSIFIED

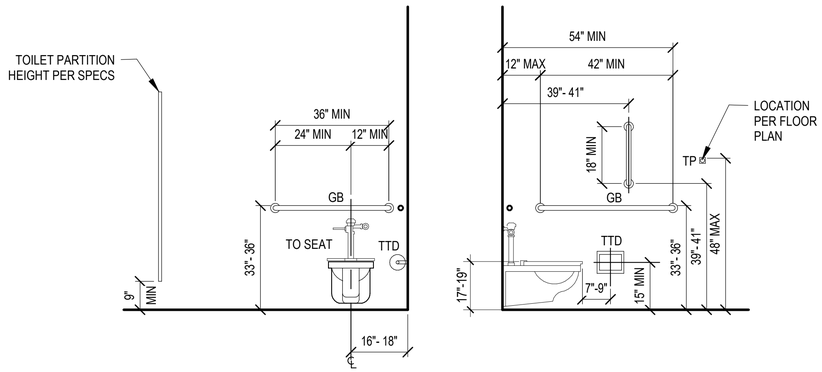

C1 ACCESSIBLE TOILET & ACCESSORIES

SCALE: 1/2" = 1'-0"

0 1' 2' 4'

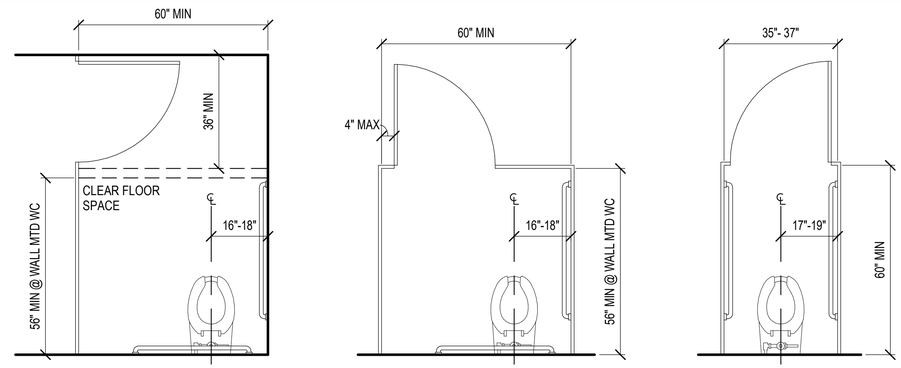

C3 ACCESSIBLE TOILET COMPARTMENT

SCALE: 1/2" = 1'-0"

0 1' 2' 4'

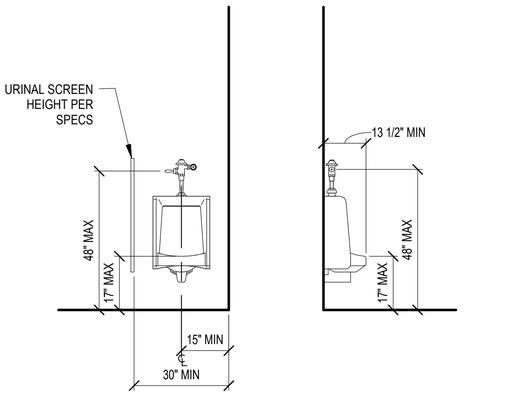

A1 ACCESSIBLE URINAL

SCALE: 1/2" = 1'-0"

0 1' 2' 4'

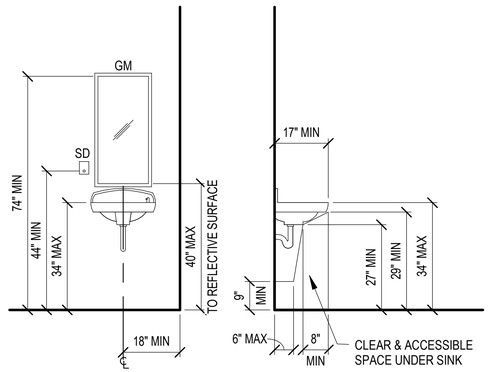

A2 ACC LAVATORY & ACCESSORIES

SCALE: 1/2" = 1'-0"

0 1' 2' 4'

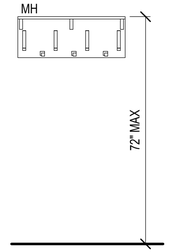

A3 STANDARD MOUNTING HEIGHTS

SCALE: 1/2" = 1'-0"

0 1' 2' 4'

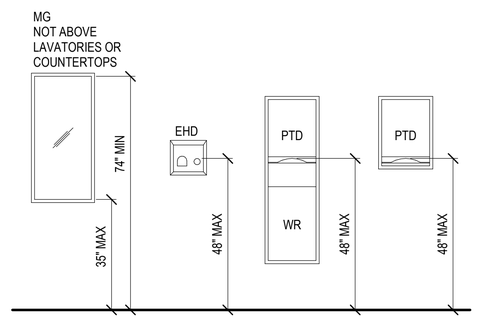

A4 ACC MOUNTING HEIGHTS

SCALE: 1/2" = 1'-0"

0 1' 2' 4'

APPR	DATE	DESCRIPTION	SYM

NAVFAC

REGISTERED ARCHITECT
CERTIFICATE NO.
49179
PAWEL
PASZCZUK
Date Signed 11/11/21
ARIZONA, U.S.A.
Expires 03/31/2024
SEAL

RQ W.M. Jordan COMPANY – A JOINT VENTURE –

Michael Baker INTERNATIONAL
100 AIRSIDE DRIVE
MOON TOWNSHIP, PA 15108
A/E INFO

APPROVED

FOR COMMANDER NAVFAC

ACTIVITY
MARINE CORPS BASE
CAMP LEJEUNE

SATISFACTORY TO DATE DD/MM/YY

DES	DRW	CHK
SH	RQ	SS

PM / DM: TOWLER / ROOT
BRANCH HEAD:
DESIGN DIRECTOR: R.L.Stephens, Jr.
FIRE PROTECTION: DPS

DEPARTMENT OF THE NAVY
NAVAL FACILITIES ENGINEERING SYSTEMS COMMAND
ATLANTIC DESIGN AND CONSTRUCTION
MCB CAMP LEJEUNE

NAVAL FACILITIES ENGINEERING SYSTEMS COMMAND ATLANTIC
NORFOLK, VA
JACKSONVILLE, NC
P1527 LOGCOM CSP WAREHOUSE

ACCESSIBILITY DIAGRAMS

SCALE: AS NOTED
EPROJECT NO.: 1639600
CONSTR. CONTR. NO.: N40085-20-C-0059
NAVFAC DRAWING NO.: 14111185
SHEET 174 OF 447

A-316

DRAWFORM REVISION: 25 AUGUST 2020

P1527 FINAL SUBMISSION - 11/18/2021

PLOTTED: 11/15/2021 3:38:40 AM

FILE NAME: BIM 360/IHF PACKAGE 3/P1527 LOG COM CSP-1639600-A.rvt

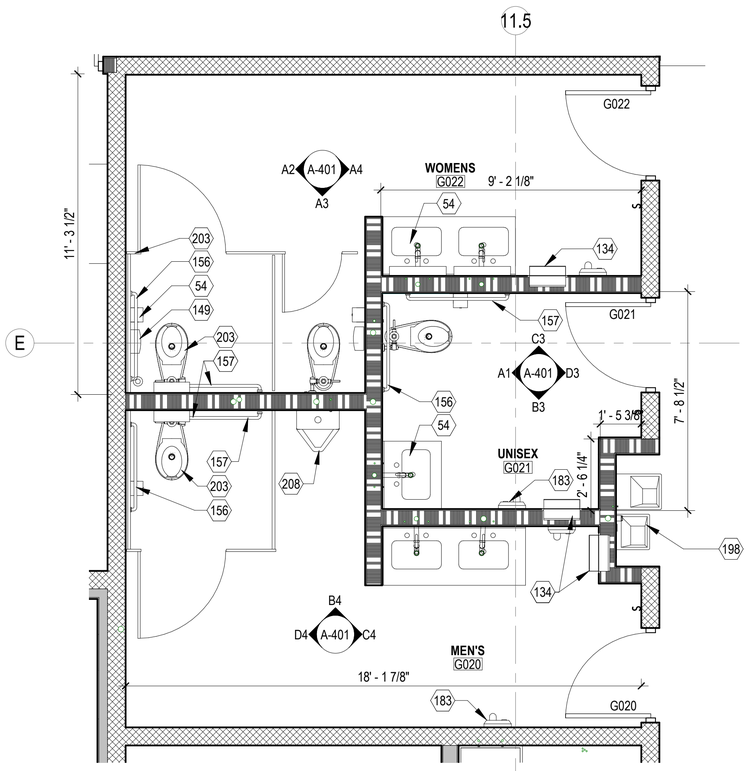

C1 ENLARGED TOILET ROOMS - JEFS
SCALE: 3/8" = 1'-0"

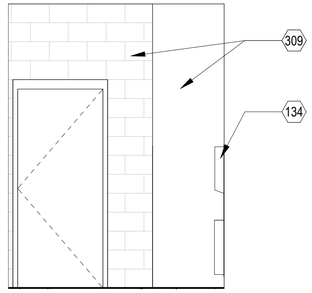

D3 UNISEX GO21 EAST ELEV.
SCALE: 3/8" = 1'-0"

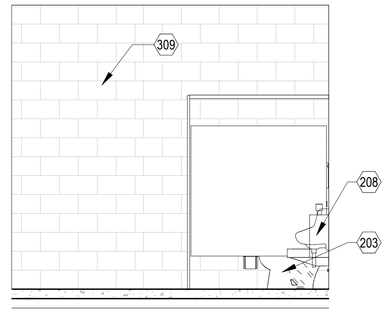

D4 MENS GO20 WEST ELEV.
SCALE: 3/8" = 1'-0"

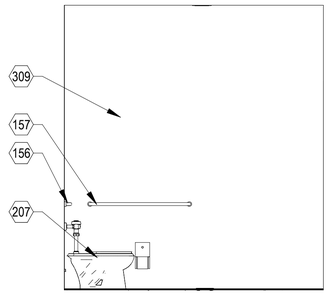

C3 UNISEX GO21 NORTH ELEV.
SCALE: 3/8" = 1'-0"

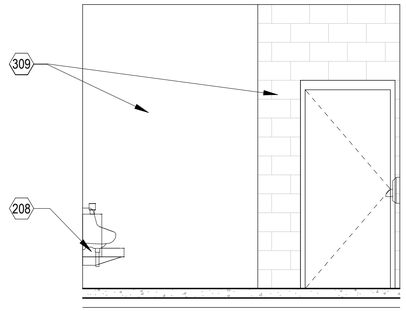

C4 MENS GO20 EAST ELEV.
SCALE: 3/8" = 1'-0"

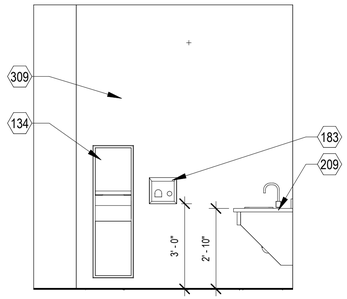

B3 UNISEX GO21 SOUTH ELEV.
SCALE: 3/8" = 1'-0"

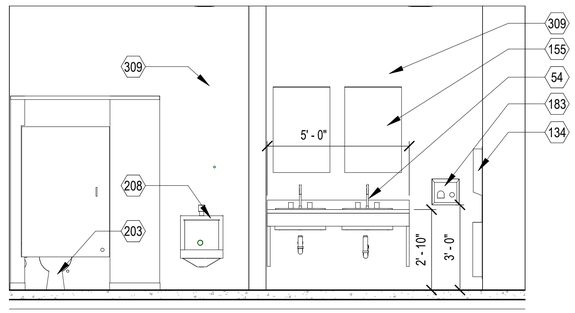

B4 MENS GO20 NORTH ELEV.
SCALE: 3/8" = 1'-0"

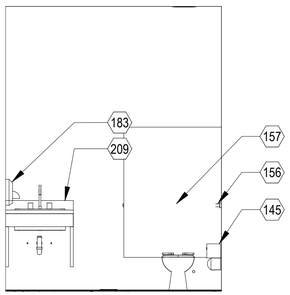

A1 UNISEX GO21 WEST ELEV.
SCALE: 3/8" = 1'-0"

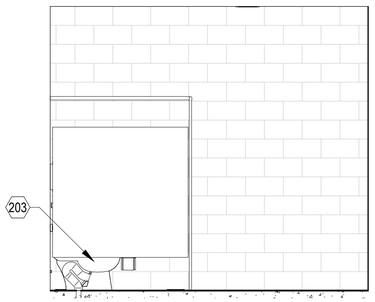

A2 WOMENS GO22 WEST ELEV.
SCALE: 3/8" = 1'-0"

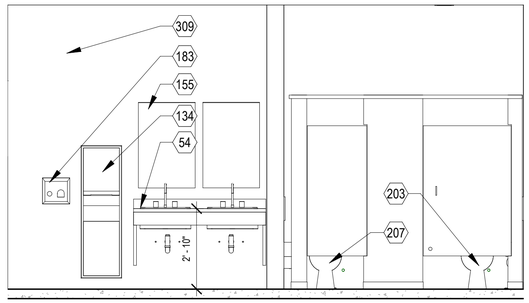

A3 WOMENS GO22 SOUTH ELEV.
SCALE: 3/8" = 1'-0"

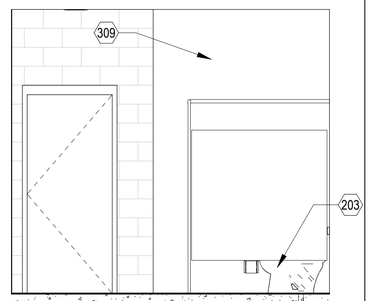

A4 WOMENS GO22 EAST ELEV.
SCALE: 3/8" = 1'-0"

0 2' - 0" 4' - 0" 8' - 0"
SCALE: 3/8" = 1' - 0"

NOTES - ENLARGED FLOOR PLANS

1. REFER TO SHEET A-001 FOR ARCHITECTURAL GENERAL NOTES, & ANNOTATION LEGEND
2. REFER TO A-600 SERIES FOR PARTITION TYPES
3. REFER TO ENLARGED PLANS AND INTERIOR ELEVATIONS FOR ADDITIONAL INFORMATION
4. REFER TO MECHANICAL, ELECTRICAL, AND TELECOMM SHEETS FOR EQUIPMENT LOCATIONS AND REQUIREMENTS.
5. ALL DIMENSIONS SHOWN ARE TO FACE OF STRUCTURE (LEFT TO RIGHT, BOTTOM TO TOP)- TYPICAL UNLESS NOTED OTHERWISE
6. ALL DOORS MUST BE INSTALLED 4" FROM HINGE SIDE OF WALL - TYPICAL UNLESS NOTED OR DIMENSIONED OTHERWISE
7. DIMENSIONS MARKED AS "CLEAR" DICTATES THE CLEAR DIMENSION FROM FINISH TO FINISH
8. WHERE FIRE RATED PARTITIONS INTERSECT WITH LESSER RATED PARTITIONS OR NON-RATED PARTITIONS, THE HIGHER RATED PARTITION IS TO CONTINUE THROUGH THE INTERSECTION TO MAINTAIN THE HIGHER RATING
9. FIRE EXTINGUISHERS MUST BE PROVIDED AND LOCATED IN ACCORDANCE WITH NFPA 10. THE MAXIMUM TRAVEL DISTANCE TO THE NEAREST FIRE EXTINGUISHER FROM ANY POINT IN THE BUILDING MUST NOT EXCEED 75 FEET.

KEYNOTES

54	SOLID SURFACE COUNTERTOP WITH INTEGRAL SINK AND CABINET ABOVE (SEE ELEVATIONS)
134	SEMI-RECESSED PAPER-TOWEL DISPENSER/WASTE RECEPTACLE
145	SURFACE MOUNTED TOILET PAPER DISPENSER - SINGLE ROLL
149	SURFACE MOUNTED SANITARY NAPKIN DISPOSAL
155	36" X 24" MIRROR
156	36" S.S. GRAB BAR AT TOILET REAR WALL
157	42" S.S. GRAB BAR AT TOILET SIDE WALL
183	ELECTRIC HAND DRYER
198	HIGH LOW DRINKING FOUNTAIN
203	FLOOR MOUNTED ACCESSIBLE TOILET
207	FLOOR MOUNTED TOILET
208	WALL MOUNTED URINAL
209	ACCESIBLE LAVATORY WITH KNEE CLEARANCE
309	FULL HEIGHT PORCELAIN WALL TILE WALL FINISH - TYPICAL IN ALL RESTROOMS. REF. INTERIOR DRAWINGS FOR PATTERN

APPR | DATE | SYM | DESCRIPTION

NAVFAC

REGISTERED ARCHITECT CERTIFICATE NO. 49179 PAWEL PASZCZUK Date Signed 11/11/21 ARIZONA, U.S.A. Expires 03/31/2024 SEAL

IRQ WM Jordan COMPANY – A JOINT VENTURE –

Michael Baker INTERNATIONAL
100 AIRSIDE DRIVE
MOON TOWNSHIP, PA 15108 A/E INFO

APPROVED

FOR COMMANDER NAVFAC

ACTIVITY
MARINE CORPS BASE CAMP LEJEUNE

SATISFACTORY TO DATE DD/MM/YY

DES Designer DRW Author CHK Checker
PM / DM TOWLER / ROOT
BRANCH HEAD
DESIGN DIRECTOR R.L.Stephens, Jr.
FIRE PROTECTION DPS

DEPARTMENT OF THE NAVY
NAVAL FACILITIES ENGINEERING SYSTEMS COMMAND
ATLANTIC DESIGN AND CONSTRUCTION
MCB CAMP LEJEUNE

NAVAL FACILITIES ENGINEERING SYSTEMS COMMAND ATLANTIC
NORFOLK, VA
JACKSONVILLE, NC
P1527 LOGCOM CSP WAREHOUSE

ENLARGED TOILET ROOMS - JEFS

SCALE: AS NOTED
EPROJECT NO.: 1639600
CONSTR. CONTR. NO. N40085-20-C-0059
NAVFAC DRAWING NO. 14111172
SHEET 161 OF 447

A-401

DRAWFORM REVISION: 25 AUGUST 2020

P1527 FINAL SUBMISSION - 11/18/2021

PLOTTED: 11/15/2021 3:38:44 AM
FILE NAME: BIM 360/IHF PACKAGE 3/P1527 LOG COM CSP-1639600-A.rvt

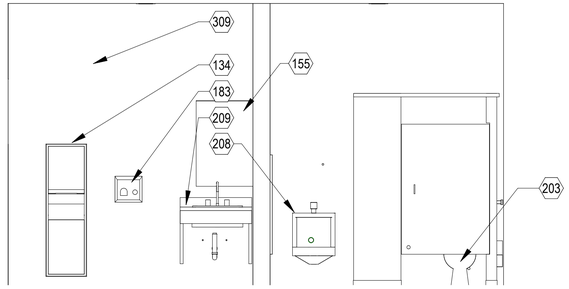

D1 MENS GO12 SOUTH ELEV.
SCALE: 3/8" = 1'-0"

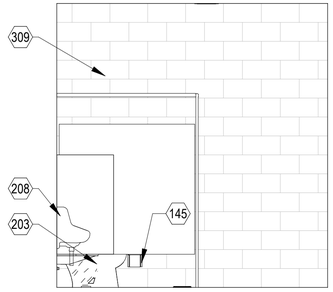

D2 MENS GO12 WEST ELEV.
SCALE: 3/8" = 1'-0"

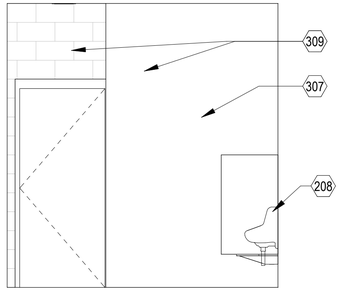

D3 MENS GO12 EAST ELEV.
SCALE: 3/8" = 1'-0"

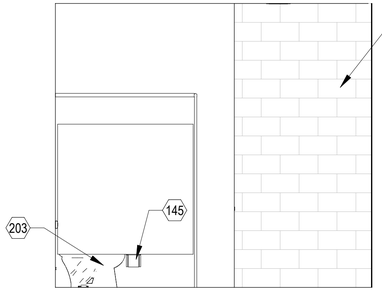

D4 WOMENS GO10 EAST ELEV.
SCALE: 3/8" = 1'-0"

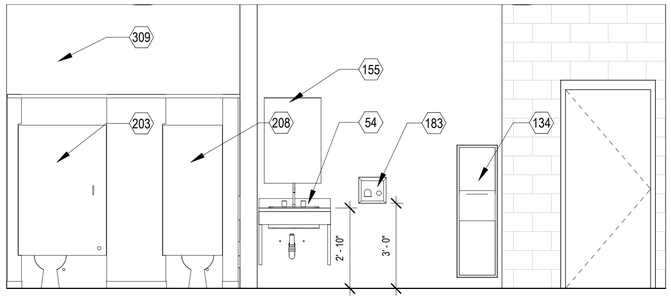

C1 WOMENS GO10 NORTH ELEV.
SCALE: 3/8" = 1'-0"

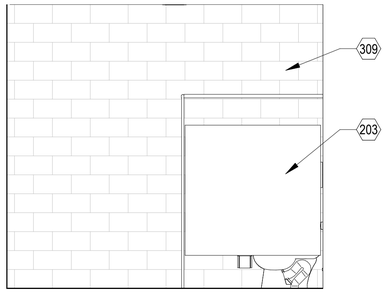

C2 WOMENS GO10 WEST ELEV.
SCALE: 3/8" = 1'-0"

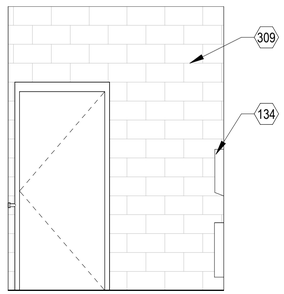

B1 UNISEX GO11 EAST ELEV.
SCALE: 3/8" = 1'-0"

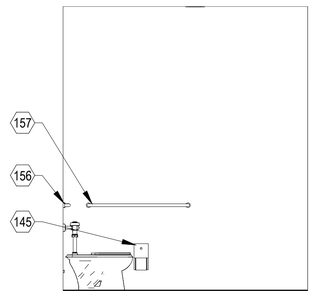

B2 UNISEX GO11 NORTH ELEV.
SCALE: 3/8" = 1'-0"

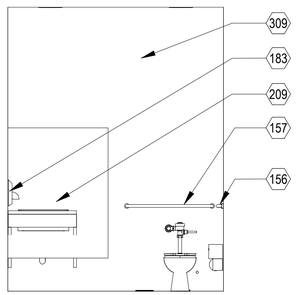

A1 UNISEX GO11 WEST ELEV.
SCALE: 3/8" = 1'-0"

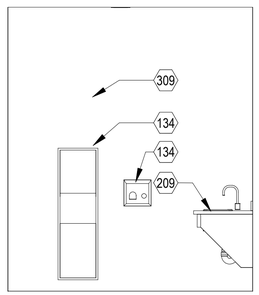

A2 UNISEX GO11 SOUTH ELEV.
SCALE: 3/8" = 1'-0"

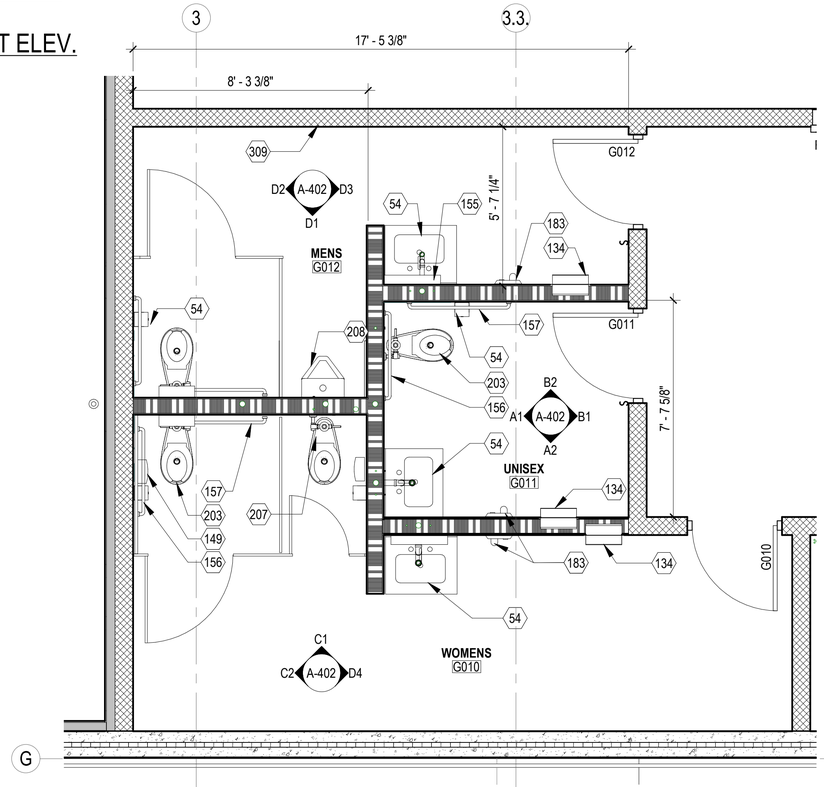

B3 ENLARGED TOILET ROOMS - LOGCOM
SCALE: 3/8" = 1'-0"

NOTES - ENLARGED FLOOR PLANS

1. REFER TO SHEET A-001 FOR ARCHITECTURAL GENERAL NOTES, & ANNOTATION LEGEND
2. REFER TO A-600 SERIES FOR PARTITION TYPES
3. REFER TO ENLARGED PLANS AND INTERIOR ELEVATIONS FOR ADDITIONAL INFORMATION
4. REFER TO MECHANICAL, ELECTRICAL, AND TELECOMM SHEETS FOR EQUIPMENT LOCATIONS AND REQUIREMENTS.
5. ALL DIMENSIONS SHOWN ARE TO FACE OF STRUCTURE (LEFT TO RIGHT, BOTTOM TO TOP)- TYPICAL UNLESS NOTED OTHERWISE
6. ALL DOORS MUST BE INSTALLED 4" FROM HINGE SIDE OF WALL - TYPICAL UNLESS NOTED OR DIMENSIONED OTHERWISE
7. DIMENSIONS MARKED AS "CLEAR" DICTATES THE CLEAR DIMENSION FROM FINISH TO FINISH
8. WHERE FIRE RATED PARTITIONS INTERSECT WITH LESSER RATED PARTITIONS OR NON-RATED PARTITIONS, THE HIGHER RATED PARTITION IS TO CONTINUE THROUGH THE INTERSECTION TO MAINTAIN THE HIGHER RATING
9. FIRE EXTINGUISHERS MUST BE PROVIDED AND LOCATED IN ACCORDANCE WITH NFPA 10. THE MAXIMUM TRAVEL DISTANCE TO THE NEAREST FIRE EXTINGUISHER FROM ANY POINT IN THE BUILDING MUST NOT EXCEED 75 FEET.

KEYNOTES

54	SOLID SURFACE COUNTERTOP WITH INTEGRAL SINK AND CABINET ABOVE (SEE ELEVATIONS)
134	SEMI-RECESSED PAPER-TOWEL DISPENSER/WASTE RECEPTACLE
145	SURFACE MOUNTED TOILET PAPER DISPENSER - SINGLE ROLL
149	SURFACE MOUNTED SANITARY NAPKIN DISPOSAL
155	36" X 24" MIRROR
156	36" S.S. GRAB BAR AT TOILET REAR WALL
157	42" S.S. GRAB BAR AT TOILET SIDE WALL
183	ELECTRIC HAND DRYER
203	FLOOR MOUNTED ACCESSIBLE TOILET
207	FLOOR MOUNTED TOILET
208	WALL MOUNTED URINAL
209	ACCESIBLE LAVATORY WITH KNEE CLEARANCE
307	6" METAL STUD W/ GYPSUM BOARD FINISH BOTH SIDES
309	FULL HEIGHT PORCELAIN WALL TILE WALL FINISH - TYPICAL IN ALL RESTROOMS. REF. INTERIOR DRAWINGS FOR PATTERN

0 2' - 0" 4' - 0" 8' - 0"
SCALE: 3/8" = 1' - 0"

SYM	DESCRIPTION	DATE	APPR

NAVFAC

REGISTERED ARCHITECT
CERTIFICATE NO.
49179
PAWEL
PASZCZUK
Date Signed 11/11/21
ARIZONA, U.S.A.
Expires 03/31/2024
SEAL

IRQ WM Jordan COMPANY
~ A JOINT VENTURE ~

Michael Baker
INTERNATIONAL
100 AIRSIDE DRIVE
MOON TOWNSHIP, PA 15108
A/E INFO

APPROVED

FOR COMMANDER NAVFAC

ACTIVITY
MARINE CORPS BASE
CAMP LEJEUNE

SATISFACTORY TO DATE DD/MM/YY

DES XXX	DRW XXX	CHK XXX

PM / DM TOWLER / ROOT
BRANCH HEAD
DESIGN DIRECTOR R.L.Stephens, Jr.
FIRE PROTECTION DPS

NAVAL FACILITIES ENGINEERING SYSTEMS COMMAND
NORFOLK, VA

DEPARTMENT OF THE NAVY
NAVAL FACILITIES ENGINEERING SYSTEMS COMMAND ATLANTIC
ATLANTIC DESIGN AND CONSTRUCTION
MCB CAMP LEJEUNE

JACKSONVILLE, NC
P1527 LOGCOM CSP WAREHOUSE

ENLARGED TOILET ROOMS - LOGCOM

SCALE:	AS NOTED
EPROJECT NO.:	1639600
CONSTR. CONTR. NO.	N40085-20-C-0059
NAVFAC DRAWING NO.	14111164
SHEET	153 OF 447

A-402

DRAWFORM REVISION: 25 AUGUST 2020

P1527 FINAL SUBMISSION - 11/18/2021

PLOTTED: 11/15/2021 3:38:47 AM

FILE NAME: BIM 360://AF PACKAGE 3/P1527 LOG COM CSP-1639600-A.rvt

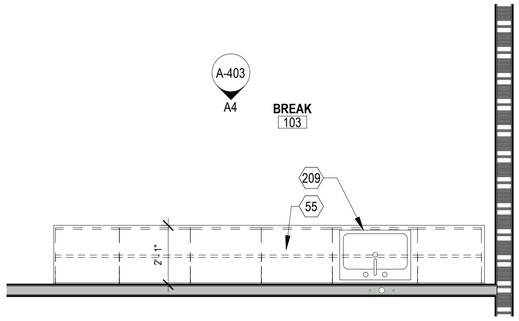

C1 ENLARGED BREAK ROOM FLOOR PLAN - LOGCOM
SCALE: 3/8" = 1'-0"

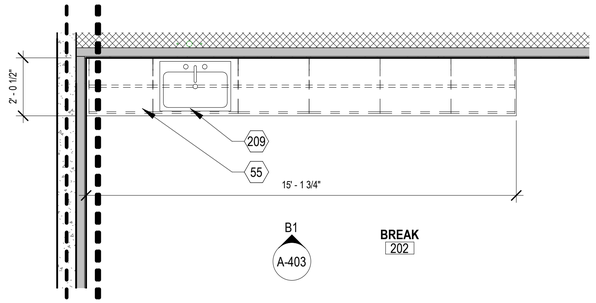

C3 ENLARGED BREAK ROOM FLOOR PLAN - JEFS
SCALE: 3/8" = 1'-0"

NOTES - ENLARGED FLOOR PLANS

1. REFER TO SHEET A-001 FOR ARCHITECTURAL GENERAL NOTES, & ANNOTATION LEGEND
2. REFER TO A-600 SERIES FOR PARTITION TYPES
3. REFER TO ENLARGED PLANS AND INTERIOR ELEVATIONS FOR ADDITIONAL INFORMATION
4. REFER TO MECHANICAL, ELECTRICAL, AND TELECOMM SHEETS FOR EQUIPMENT LOCATIONS AND REQUIREMENTS.
5. ALL DIMENSIONS SHOWN ARE TO FACE OF STRUCTURE (LEFT TO RIGHT, BOTTOM TO TOP)- TYPICAL UNLESS NOTED OTHERWISE
6. ALL DOORS MUST BE INSTALLED 4" FROM HINGE SIDE OF WALL - TYPICAL UNLESS NOTED OR DIMENSIONED OTHERWISE
7. DIMENSIONS MARKED AS "CLEAR" DICTATES THE CLEAR DIMENSION FROM FINISH TO FINISH
8. WHERE FIRE RATED PARTITIONS INTERSECT WITH LESSER RATED PARTITIONS OR NON-RATED PARTITIONS, THE HIGHER RATED PARTITION IS TO CONTINUE THROUGH THE INTERSECTION TO MAINTAIN THE HIGHER RATING
9. FIRE EXTINGUISHERS MUST BE PROVIDED AND LOCATED IN ACCORDANCE WITH NFPA 10. THE MAXIMUM TRAVEL DISTANCE TO THE NEAREST FIRE EXTINGUISHER FROM ANY POINT IN THE BUILDING MUST NOT EXCEED 75 FEET.

KEYNOTES

52	PLASTIC LAMINATE BASE CABINET WITH SOLID SURFACE COUNTERTOP AND CABINET ABOVE (SEE ELEVATIONS)
54	SOLID SURFACE COUNTERTOP WITH INTEGRAL SINK AND CABINET ABOVE (SEE ELEVATIONS)
55	SOLID SURFACE COUNTERTOP
153	36" X FULL WIDTH MIRROR
209	ACCESIBLE LAVATORY WITH KNEE CLEARANCE

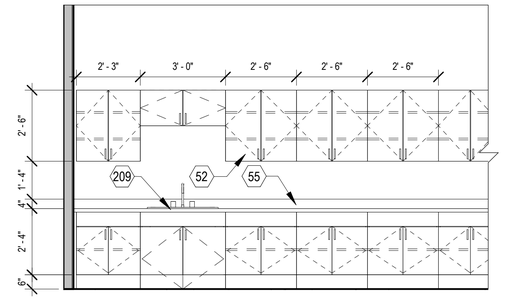

B1 JEFS BREAK ROOM - ELEVATION
SCALE: 3/8" = 1'-0"

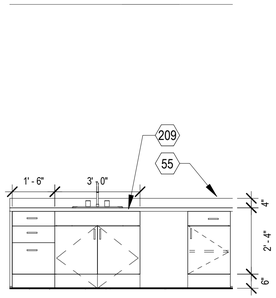

A1 ROOM 102 - EAST ELEV.
SCALE: 3/8" = 1'-0"

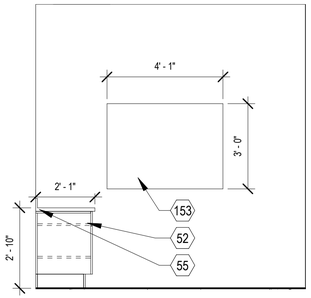

A2 ROOM. 102 - SOUTH ELEV.
SCALE: 3/8" = 1'-0"

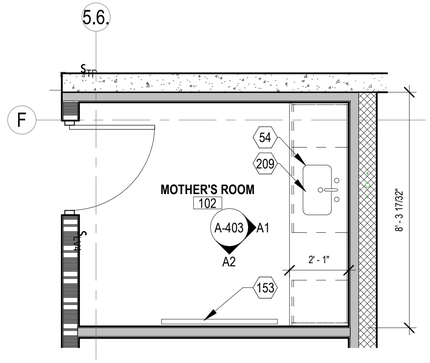

A3 MOTHER'S ROOM 102
SCALE: 3/8" = 1'-0"

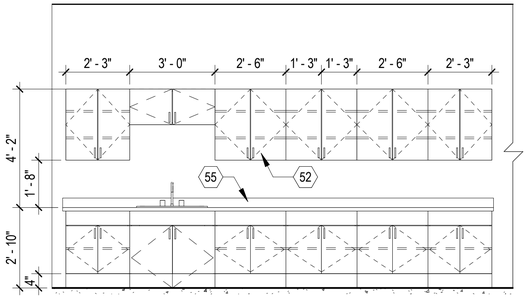

A4 BREAK ROOM LOGCOM - SOUTH ELEV.
SCALE: 3/8" = 1'-0"

0 2' - 0" 4' - 0" 8' - 0"
SCALE: 3/8" = 1' - 0"

N

		APPR
		DATE
		DESCRIPTION
		SYM

NAVFAC

REGISTERED ARCHITECT
CERTIFICATE NO.
49179
PAWEL
PASZCZUK
Date Signed 11/11/21
ARIZONA, U.S.A.
Expires 03/31/2024
SEAL

IRQ WM Jordan COMPANY – A JOINT VENTURE –

Michael Baker INTERNATIONAL
100 AIRSIDE DRIVE
MOON TOWNSHIP, PA 15108
A/E INFO

APPROVED

FOR COMMANDER NAVFAC

ACTIVITY
MARINE CORPS BASE
CAMP LEJEUNE

SATISFACTORY TO DATE DD/MM/YY

DES Designer DRW Author CHK Checker
PM / DM TOWLER / ROOT
BRANCH HEAD
DESIGN DIRECTOR R.L.Stephens, Jr.
FIRE PROTECTION DPS

DEPARTMENT OF THE NAVY
NAVAL FACILITIES ENGINEERING SYSTEMS COMMAND
ATLANTIC DESIGN AND CONSTRUCTION
MCB CAMP LEJEUNE

NAVAL FACILITIES ENGINEERING SYSTEMS COMMAND ATLANTIC
NORFOLK, VA
JACKSONVILLE, NC
P1527 LOGCOM CSP WAREHOUSE

ENLARGED BREAK ROOMS - LOGCOM & JEFS

SCALE: AS NOTED
EPROJECT NO.: 1639600
CONSTR. CONTR. NO.
N40085-20-C-0059
NAVFAC DRAWING NO.
14111173
SHEET 162 OF 447

A-403

DRAWFORM REVISION: 25 AUGUST 2020

P1527 FINAL SUBMISSION - 11/18/2021

PLOTTED: 11/15/2021 3:38:55 AM
FILE NAME: BIM 360://HF PACKAGE 3/P1527 LOG COM CSP-1639600-A.rvt

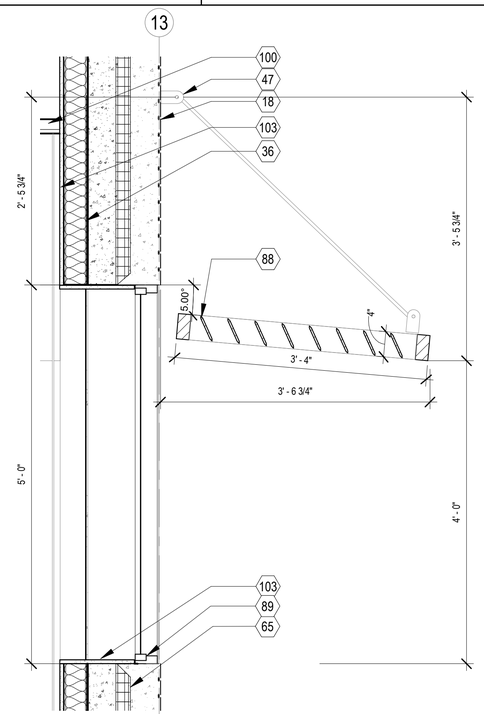

C3 TYP. WINDOW SECTION
SCALE: 1" = 1'-0"

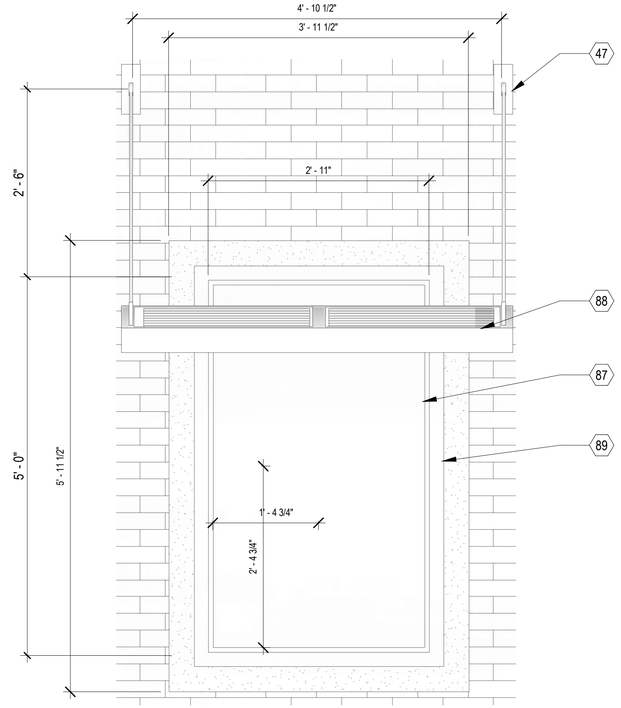

A3 TYP. WINDOW ELEVATION
SCALE: 1" = 1'-0"

KEYNOTES

18	BRICK VENEER - FIELD
36	3 5/8" METAL STUD AT 16" O.C.
47	DECORATIVE METAL CONNECTION TO IMBEDDED ANCHOR TO SUPPORT WINDOW SHADES
65	2" CONTINUOUS RIGID INSULATION - R-13
87	FIXED ALUMINUM WINDOW, TYP. - SEE WINDOW TYPES
88	ALUMINUM WINDOW SUNSHADE - SEE DETAIL A4/A-501
89	HOLLOW METAL WINDOW FRAMES
100	SUSPENDED CEILING, SEE RCP DRAWINGS.
103	5/8" GYPSUM BOARD

0 6" 1' - 0" 2' - 0"
SCALE: 1" = 1' - 0"

SYM	DESCRIPTION	DATE	APPR

NAVFAC

REGISTERED ARCHITECT
CERTIFICATE NO.
49179
PAWEL
PASZCZUK
Date Signed 11/17/21
ARIZONA, U.S.A.
Expires 03/31/2024
SEAL

IRQ JV W.M. Jordan COMPANY
– A JOINT VENTURE –

Michael Baker
INTERNATIONAL
100 AIRSIDE DRIVE
MOON TOWNSHIP, PA 15108
A/E INFO

APPROVED

FOR COMMANDER NAVFAC

ACTIVITY
MARINE CORPS BASE
CAMP LEJEUNE

SATISFACTORY TO DATE DD/MM/YY

DES	DRW	CHK
XXX	XXX	XXX

PM / DM TOWLER / ROOT
BRANCH HEAD
DESIGN DIRECTOR R.L.Stephens, Jr.
FIRE PROTECTION DPS

DEPARTMENT OF THE NAVY
NAVAL FACILITIES ENGINEERING SYSTEMS COMMAND
ATLANTIC DESIGN AND CONSTRUCTION
MCB CAMP LEJEUNE

NAVAL FACILITIES ENGINEERING SYSTEMS COMMAND ATLANTIC
NORFOLK, VA
JACKSONVILLE, NC
P1527 LOGCOM CSP WAREHOUSE

WINDOW DETAILS

SCALE: AS NOTED
EPROJECT NO.: 1639600
CONSTR. CONTR. NO. N40085-20-C-0059
NAVFAC DRAWING NO. 14111165
SHEET 154 OF 447

A-501

DRAWFORM REVISION: 25 AUGUST 2020

P1527 FINAL SUBMISSION - 11/18/2021

PLOTTED: 11/15/2021 3:38:59 AM
FILE NAME: BIM 360:/HF PACKAGE 3/P1527 LOG COM CSP-1639600-A.rvt

KEYNOTES

8	CONCRETE PAD - SEE CIVIL DRAWINGS
12	FOUNDATION. REFER TO STRUCTURAL
17	CONCRETE SLAB ON GRADE SLOPED TO TRENCH DRAINS AT OVERHEAD DOORS SEE S-SERIES
189	DOCK LEVELER 6' WIDE X 7' LONG
190	DOUBLE DEEP RACKS, OVERALL CAPACITY OF 1,536 PALLET POSITIONS WITH 14' WIDE MIN. DRIVE AISLES BETWEEN RACK FACES
211	GRAVEL OVER GRADE SEE S SERIES

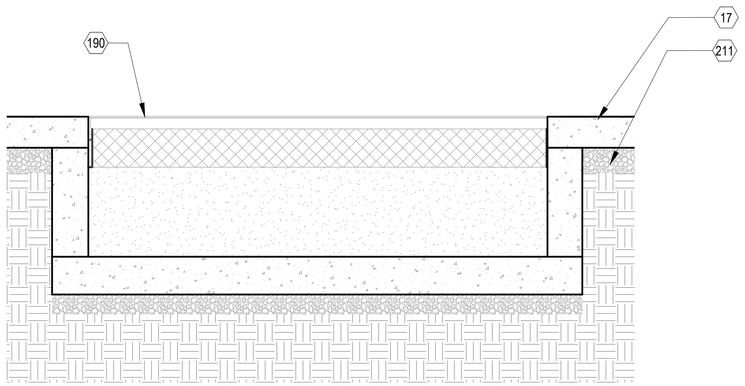

C3 TYP. DOCK LEVELER SECTION
SCALE: 1" = 1'-0"

A0.12

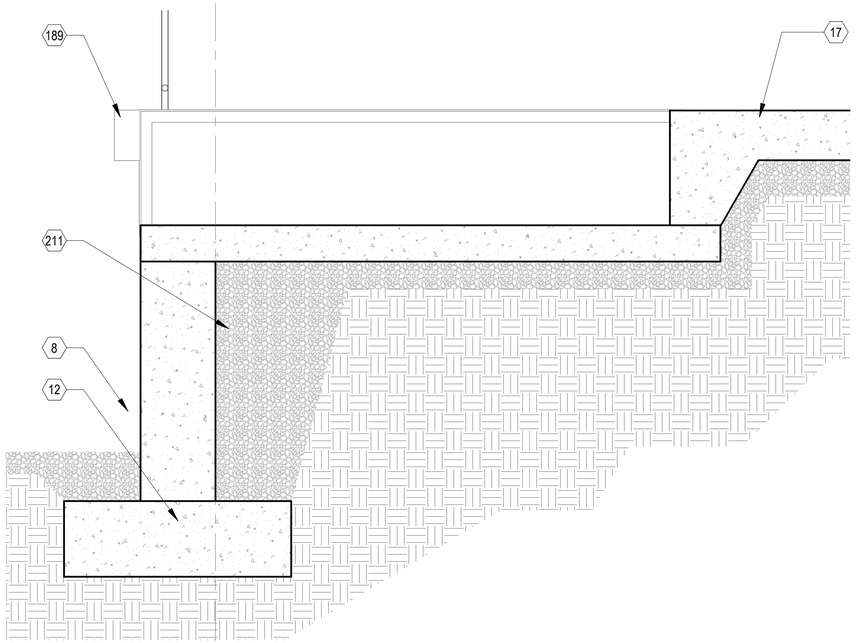

A3 DOCK RETAINING WALL DET. @ DOCK LEVELER
SCALE: 1" = 1'-0"

0 6" 1' - 0" 2' - 0"
SCALE: 1 1/2" = 1' - 0"

0 1' - 0" 2' - 0" 4' - 0"
SCALE: 1/2" = 1' - 0"

APPR	DATE	DESCRIPTION	SYM

NAVFAC

REGISTERED ARCHITECT
CERTIFICATE NO.
49179
PAWEL
PASZCZUK
Date Signed 11/11/21
ARIZONA, U.S.A.
Expires 03/31/2024
SEAL

IRQ WM Jordan COMPANY – A JOINT VENTURE –

Michael Baker
INTERNATIONAL
100 AIRSIDE DRIVE
MOON TOWNSHIP, PA 15108
A/E INFO

APPROVED

FOR COMMANDER NAVFAC

ACTIVITY
MARINE CORPS BASE
CAMP LEJEUNE

SATISFACTORY TO DATE DD/MM/YY

DES Designer DRW Author CHK Checker

PM / DM TOWLER / ROOT

BRANCH HEAD

DESIGN DIRECTOR R.L.Stephens, Jr.

FIRE PROTECTION DPS

DEPARTMENT OF THE NAVY
NAVAL FACILITIES ENGINEERING SYSTEMS COMMAND
ATLANTIC DESIGN AND CONSTRUCTION
MCB CAMP LEJEUNE
NAVAL FACILITIES ENGINEERING SYSTEMS COMMAND ATLANTIC
NORFOLK, VA
JACKSONVILLE, NC
P1527 LOGCOM CSP WAREHOUSE

DETAIL SECTION VIEWS

SCALE: AS NOTED
EPROJECT NO.: 1639600
CONSTR. CONTR. NO. N40085-20-C-0059
NAVFAC DRAWING NO. 14111175
SHEET 164 OF 447

A-502

DRAWFORM REVISION: 25 AUGUST 2020

P1527 FINAL SUBMISSION - 11/18/2021

PLOTTED: 11/15/2021 3:39:00 AM

FILE NAME: BIM 360:/HF PACKAGE 3/P1527 LOG COM CSP-1639600-A.rvt

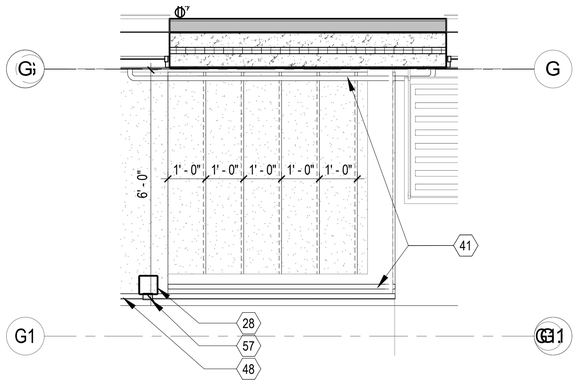

C1 STAIR #2 @ SOUTH ENTRY
SCALE: 1/2" = 1'-0"

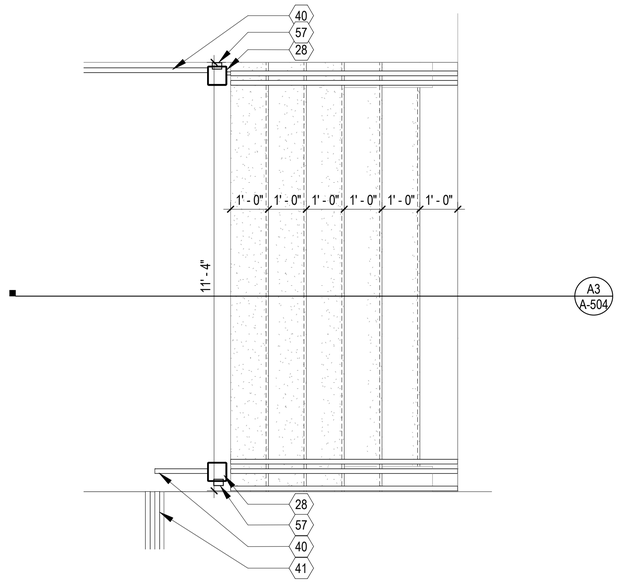

C3 CONCRETE STAIR @ EAST ENTRY
SCALE: 1/2" = 1'-0"

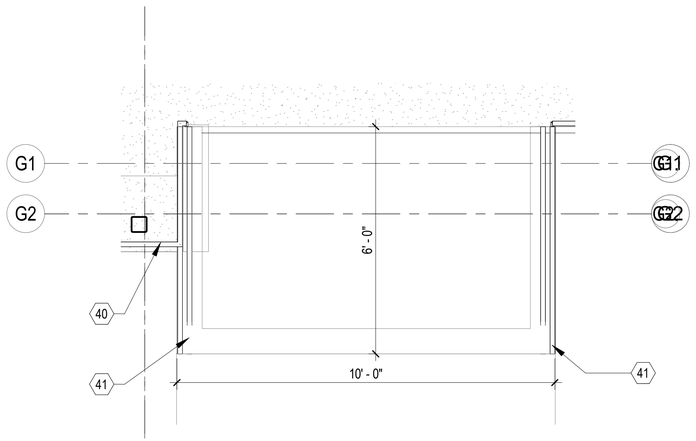

A1 STAIR #1 @ SOUTH ENTRY
SCALE: 1/2" = 1'-0"

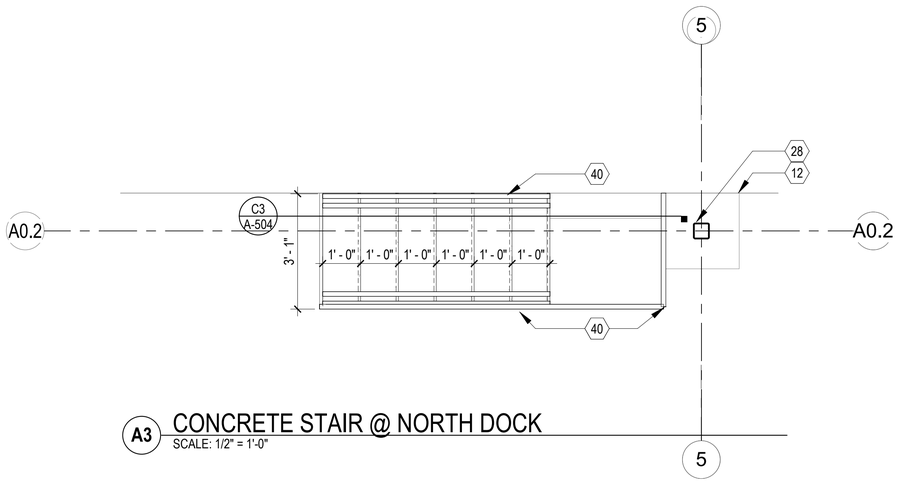

A3 CONCRETE STAIR @ NORTH DOCK
SCALE: 1/2" = 1'-0"

KEYNOTES

12	FOUNDATION. REFER TO STRUCTURAL
28	STRUCTURAL STEEL OR COLUMN, SEE S-SERIES
40	42" H. GUARDRAIL
41	42" H. GUARDRAIL WITH 36" H. HANDRAIL
48	REMOVABLE RAILING FOR DOCK ACCESS
57	PRE-FINISHED 5" DIA. DOWNSPOUTS TO MATCH ROOF SYSTEM

APPR | DATE | DESCRIPTION | SYM

NAVFAC

REGISTERED ARCHITECT
CERTIFICATE NO.
49179
PAWEL
PASZCZUK
Date Signed 11/11/21
ARIZONA, U.S.A.
Expires 03/31/2024
SEAL

IRQ W.M. Jordan COMPANY – A JOINT VENTURE –

Michael Baker INTERNATIONAL
100 AIRSIDE DRIVE
MOON TOWNSHIP, PA 15108
A/E INFO

APPROVED

FOR COMMANDER NAVFAC

ACTIVITY
MARINE CORPS BASE
CAMP LEJEUNE

SATISFACTORY TO DATE DD/MM/YY

DES Designer DRW Author CHK Checker
PM / DM TOWLER / ROOT
BRANCH HEAD
DESIGN DIRECTOR R.L.Stephens, Jr.
FIRE PROTECTION DPS

DEPARTMENT OF THE NAVY
NAVAL FACILITIES ENGINEERING SYSTEMS COMMAND
ATLANTIC DESIGN AND CONSTRUCTION
MCB CAMP LEJEUNE

NAVAL FACILITIES ENGINEERING SYSTEMS COMMAND ATLANTIC
NORFOLK, VA
JACKSONVILLE, NC
P1527 LOGCOM CSP WAREHOUSE

STAIR PLAN DETAILS

SCALE: AS NOTED
EPROJECT NO.: 1639600
CONSTR. CONTR. NO. N40085-20-C-0059
NAVFAC DRAWING NO. 14111176
SHEET 165 OF 447

A-503

DRAWFORM REVISION: 25 AUGUST 2020

0 1' - 0" 2' - 0" 4' - 0"
SCALE: 1/2" = 1' - 0"

N

P1527 FINAL SUBMISSION - 11/18/2021

PLOTTED: 11/15/2021 3:39:01 AM

FILE NAME: BIM 360/IHF PACKAGE 3/P1527 LOG COM CSP-1639600-A.rvt

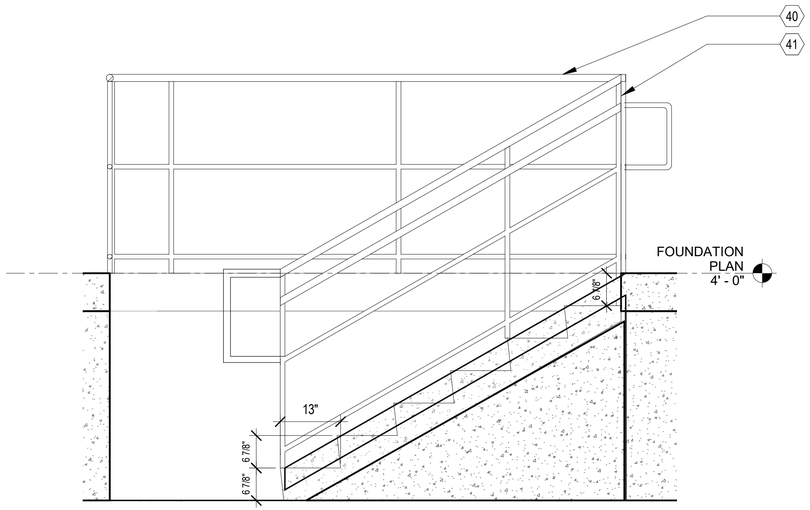

C3 STAIRS @ NORTH DOCK
SCALE: 3/4" = 1'-0"

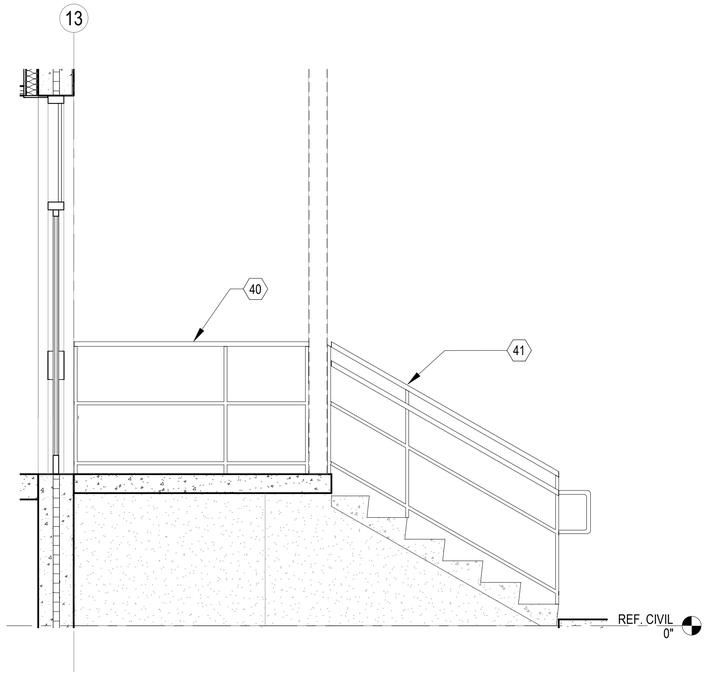

A3 EAST ELEV @ EAST ENTRY
SCALE: 1/2" = 1'-0"

KEYNOTES

40	42" H. GUARDRAIL
41	42" H. GUARDRAIL WITH 36" H. HANDRAIL

APPR	DATE	DESCRIPTION	SYM

NAVFAC

REGISTERED ARCHITECT
CERTIFICATE NO.
49179
PAWEL
PASZCZUK
Date Signed 11/11/21
ARIZONA, U.S.A.
Expires 03/31/2024
SEAL

IRQ WM Jordan COMPANY – A JOINT VENTURE –

Michael Baker INTERNATIONAL
100 AIRSIDE DRIVE
MOON TOWNSHIP, PA 15108
A/E INFO

APPROVED
FOR COMMANDER NAVFAC

ACTIVITY
MARINE CORPS BASE
CAMP LEJEUNE

SATISFACTORY TO DATE DD/MM/YY

DES Designer	DRW Author
CHK Checker	
PM / DM	TOWLER / ROOT
BRANCH HEAD	
DESIGN DIRECTOR	R.L.Stephens, Jr.
FIRE PROTECTION	DPS

DEPARTMENT OF THE NAVY
NAVAL FACILITIES ENGINEERING SYSTEMS COMMAND
ATLANTIC DESIGN AND CONSTRUCTION
MCB CAMP LEJEUNE

NAVAL FACILITIES ENGINEERING SYSTEMS COMMAND ATLANTIC
NORFOLK, VA
JACKSONVILLE, NC
P1527 LOGCOM CSP WAREHOUSE

STAIR & RAMP SECTION DETAILS

SCALE:	AS NOTED
EPROJECT NO.:	1639600
CONSTR. CONTR. NO.	N40085-20-C-0059
NAVFAC DRAWING NO.	14111177
SHEET	166 OF 447

A-504

DRAWFORM REVISION: 25 AUGUST 2020

P1527 FINAL SUBMISSION - 11/18/2021

PLOTTED: 11/15/2021 3:39:02 AM

FILE NAME: BIM 360://HF PACKAGE 3/P1527 LOG COM CSP-1639600-A.rvt

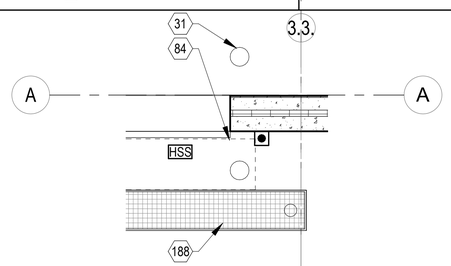

D2 EXTERIOR ROLL UP DOOR WITH TRENCH DRAIN
SCALE: 1/2" = 1'-0"

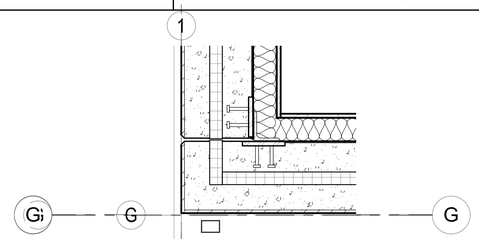

D4 EXTERIOR WALL CONNECTION
SCALE: 1" = 1'-0"

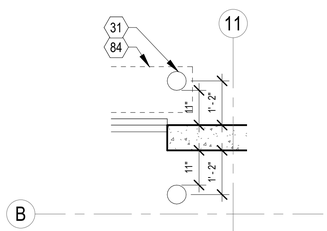

C2 TYP. ROLL UP DOOR FLOOR PLAN DETAIL
SCALE: 1/2" = 1'-0"

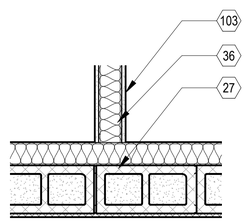

C4 INTERIOR WALL CONNECTION
SCALE: 1" = 1'-0"

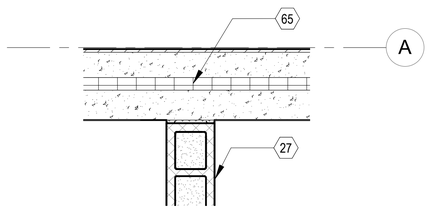

B2 CMU WALL @ EXTERIOR WALL
SCALE: 1" = 1'-0"

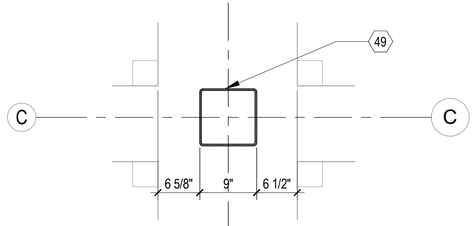

B4 TYP. FIRE RATED COLUMN FOR WAREHOUSE
SCALE: 1" = 1'-0"

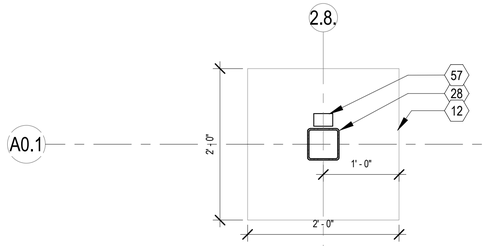

A1 COLUMN AT VEHICLE PULL IN
SCALE: 1" = 1'-0"

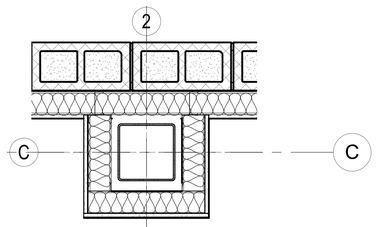

A2 STRUCTURAL COLUMN IN WALL
SCALE: 1" = 1'-0"

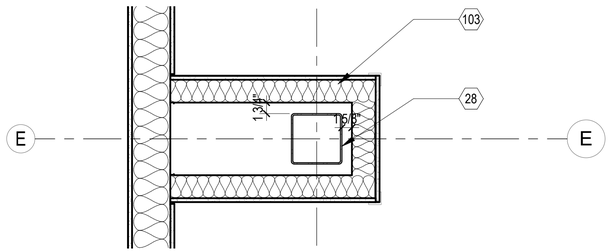

A4 TYP. COLUMN WRAP PLAN
SCALE: 1" = 1'-0"

SCALE: 1/2" = 1' - 0"

SCALE: 1" = 1' - 0"

KEYNOTES

03.07	
12	FOUNDATION. REFER TO STRUCTURAL
27	CMU SOLID CORE WALL TO ROOF DECK
28	STRUCTURAL STEEL OR COLUMN, SEE S-SERIES
31	6-INCH STEEL BOLLARDS
36	3 5/8" METAL STUD AT 16" O.C.
49	COLUMN WITH INTUMESCENT PAINT- 1 HOUR RATED
57	PRE-FINISHED 5" DIA. DOWNSPOUTS TO MATCH ROOF SYSTEM
65	2" CONTINUOUS RIGID INSULATION - R-13
84	OVERHEAD COILING DOORS - SEE DOOR SCHEDULE
103	5/8" GYPSUM BOARD
188	10' TALL AT 12" WIDE FLOOR GRATE OVER FLOOR DRAIN

SYM	DESCRIPTION	DATE	APPR

NAVFAC

REGISTERED ARCHITECT
CERTIFICATE NO.
49179
PAWEL
PASZCZUK
Date Signed 11/11/21
ARIZONA, U.S.A.
Expires 03/31/2024
SEAL

IRQ W.M. Jordan COMPANY – A JOINT VENTURE –

Michael Baker
INTERNATIONAL
100 AIRSIDE DRIVE
MOON TOWNSHIP, PA 15108
A/E INFO

APPROVED

FOR COMMANDER NAVFAC

ACTIVITY
MARINE CORPS BASE
CAMP LEJEUNE

SATISFACTORY TO DATE DD/MM/YY

DES XXX | DRW XXX | CHK XXX

PM / DM TOWLER / ROOT

BRANCH HEAD

DESIGN DIRECTOR R.L.Stephens, Jr.

FIRE PROTECTION DPS

DEPARTMENT OF THE NAVY
NAVAL FACILITIES ENGINEERING SYSTEMS COMMAND
ATLANTIC DESIGN AND CONSTRUCTION

NAVAL FACILITIES ENGINEERING SYSTEMS COMMAND ATLANTIC
NORFOLK, VA

MCB CAMP LEJEUNE
JACKSONVILLE, NC
P1527 LOGCOM CSP WAREHOUSE

DETAIL PLAN VIEWS

SCALE: AS NOTED
EPROJECT NO.: 1639600
CONSTR. CONTR. NO. N40085-20-C-0059
NAVFAC DRAWING NO. 14111166
SHEET 155 OF 447

A-505

DRAWFORM REVISION: 25 AUGUST 2020

P1527 FINAL SUBMISSION - 11/18/2021

PLOTTED: 11/15/2021 3:39:02 AM

FILE NAME: BIM 360://AIF PACKAGE 3/P1527 LOG COM CSP-1639600-A.rvt

KEYNOTES

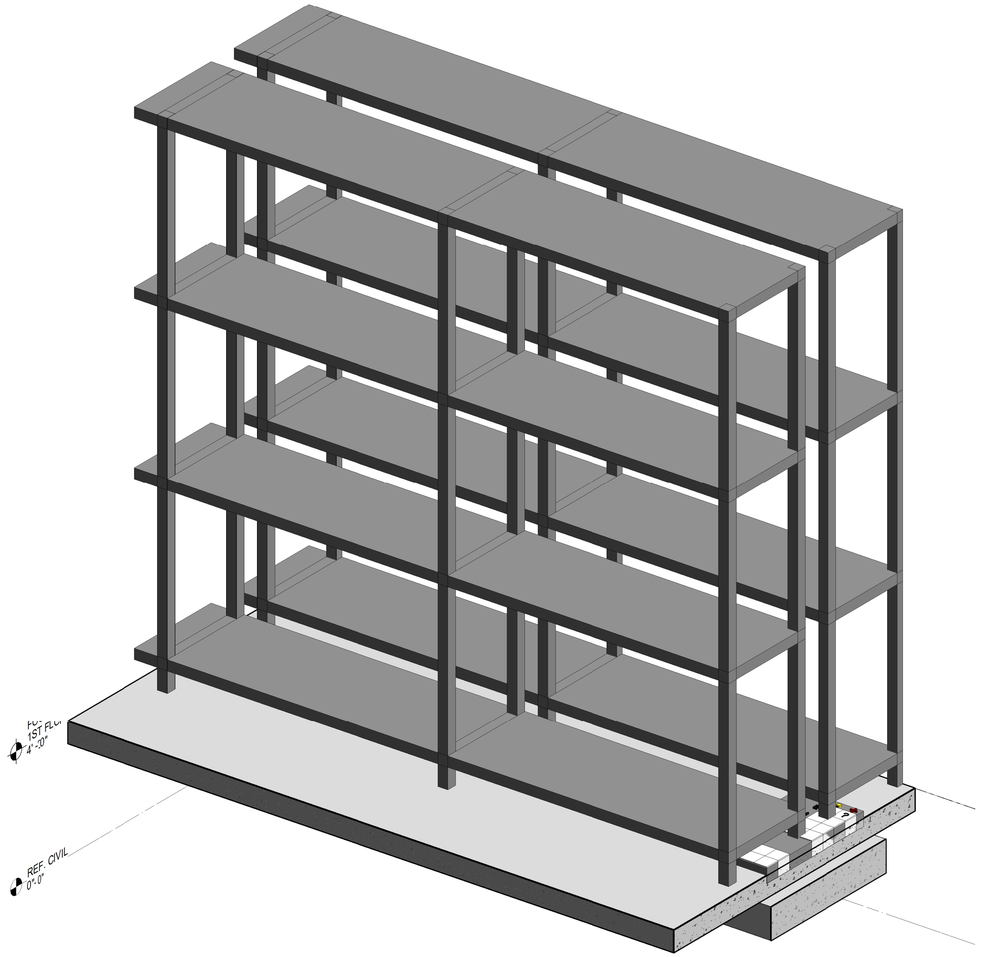

A1 PALLET RACK - 3D VIEW
SCALE:

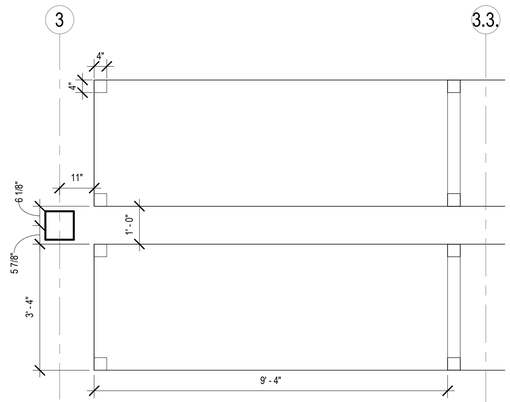

C3 PALLET RACK PLAN VIEW
SCALE: 1/2" = 1'-0"

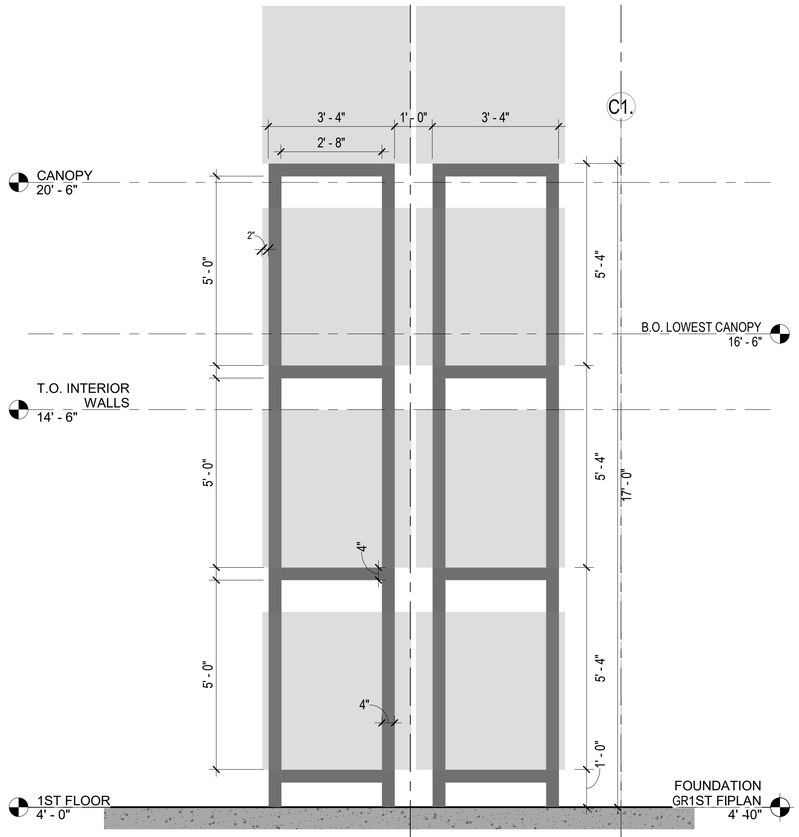

A3 PALLET RACK DETAIL SECTION
SCALE: 1/2" = 1'-0"

0 1' - 0" 2' - 0" 4' - 0"
SCALE: 1/2" = 1' - 0"

APPR	DATE	DESCRIPTION	SYM

NAVFAC

REGISTERED ARCHITECT
CERTIFICATE NO.
49179
PAWEL
PASZCZUK
Date Signed 11/11/21
ARIZONA, U.S.A.
Expires 03/31/2024
SEAL

RQ WM Jordan COMPANY
– A JOINT VENTURE –

Michael Baker
INTERNATIONAL
100 AIRSIDE DRIVE
MOON TOWNSHIP, PA 15108
A/E INFO

APPROVED
FOR COMMANDER NAVFAC
ACTIVITY
MARINE CORPS BASE
CAMP LEJEUNE
SATISFACTORY TO DATE DD/MM/YY
DES Designer DRW Author CHK Checker
PM / DM TOWLER / ROOT
BRANCH HEAD
DESIGN DIRECTOR R.L.Stephens, Jr.
FIRE PROTECTION DPS

DEPARTMENT OF THE NAVY
NAVAL FACILITIES ENGINEERING SYSTEMS COMMAND
ATLANTIC DESIGN AND CONSTRUCTION
NAVAL FACILITIES ENGINEERING SYSTEMS COMMAND ATLANTIC
NORFOLK, VA
MCB CAMP LEJEUNE
JACKSONVILLE, NC
P1527 LOGCOM CSP WAREHOUSE
PALLET RACK DETAILS

SCALE:	AS NOTED
EPROJECT NO.:	1639600
CONSTR. CONTR. NO.	N40085-20-C-0059
NAVFAC DRAWING NO.	14111179
SHEET	168 OF 447

A-506
DRAWFORM REVISION: 25 AUGUST 2020

P1527 FINAL SUBMISSION - 11/18/2021

PLOTTED: 11/15/2021 3:39:08 AM
FILE NAME: BIM 360://NF PACKAGE 3/P1527 LOG COM CSP-1639600-A.rvt

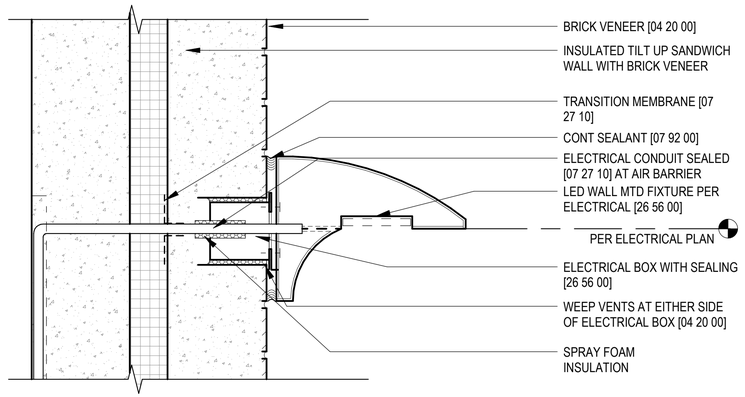

C4 WALL LUMINAIRE
SCALE: 3" = 1'-0"

0 3" 6" 1'

NOTE: BUILDING NUMBERS TO BE CONFIRMED ONCE ISSUED

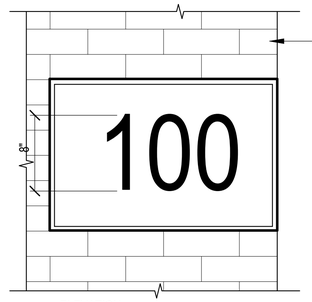

ELEVATION

NOTE: BUILDING SIGNAGE TO FOLLOW BEAP REQUIREMENTS

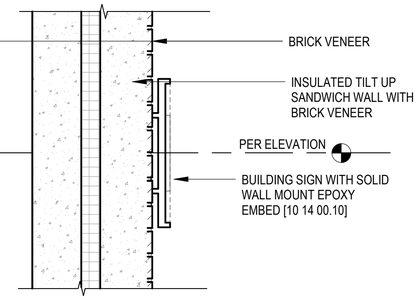

SECTION

B4 BUILDING SIGNAGE
SCALE: 1 1/2" = 1'-0"

0 6" 1' 2'

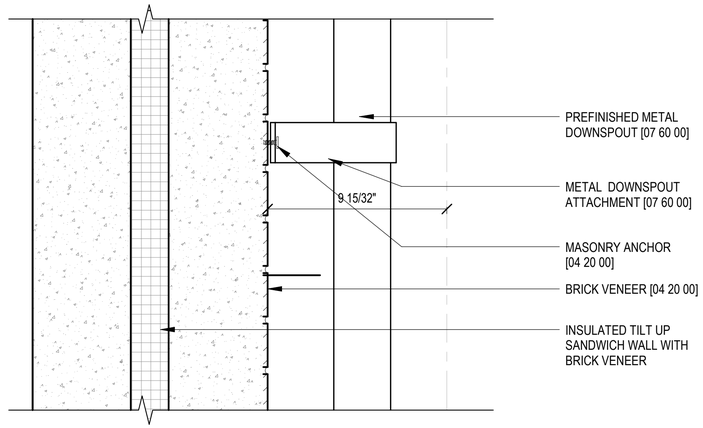

A2 DOWNSPOUT ATTACHMENT
SCALE: 3" = 1'-0"

0 3" 6" 1'

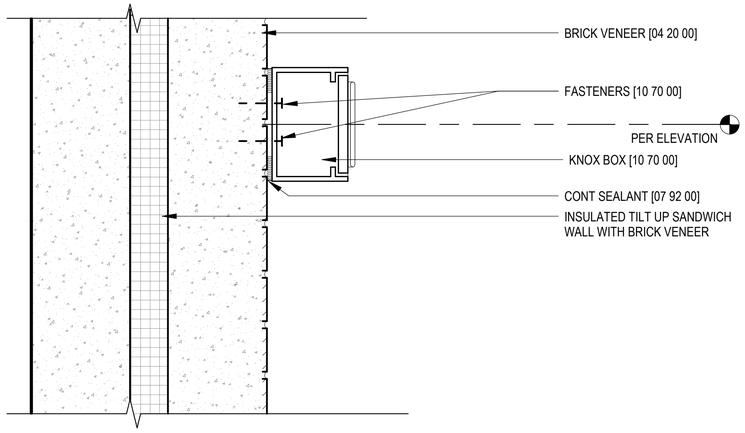

A4 KNOX BOX ATTACHMENT
SCALE: 3" = 1'-0"

0 3" 6" 1'

APPR	DATE	DESCRIPTION	SYM

NAVFAC

REGISTERED ARCHITECT
CERTIFICATE NO.
49179
PAWEL
PASZCZUK
Date Signed 11/11/21
ARIZONA, U.S.A.
Expires 03/31/2024
SEAL

RQ W.M. Jordan COMPANY – A JOINT VENTURE –

Michael Baker INTERNATIONAL
100 AIRSIDE DRIVE
MOON TOWNSHIP, PA 15108
A/E INFO

APPROVED
FOR COMMANDER NAVFAC

ACTIVITY
MARINE CORPS BASE
CAMP LEJEUNE

SATISFACTORY TO DATE DD/MM/YY
DES SH DRW RQ CHK SS
PM / DM TOWLER / ROOT
BRANCH HEAD
DESIGN DIRECTOR R.L.Stephens, Jr.
FIRE PROTECTION DPS

DEPARTMENT OF THE NAVY
NAVAL FACILITIES ENGINEERING SYSTEMS COMMAND
ATLANTIC DESIGN AND CONSTRUCTION
MCB CAMP LEJEUNE

NAVAL FACILITIES ENGINEERING SYSTEMS COMMAND ATLANTIC
NORFOLK, VA
JACKSONVILLE, NC
P1527 LOGCOM CSP WAREHOUSE

EXTERIOR DETAILS

SCALE: AS NOTED
EPROJECT NO.: 1639600
CONSTR. CONTR. NO. N40085-20-C-0059
NAVFAC DRAWING NO. 14111181
SHEET 170 OF 447

A-507

DRAWFORM REVISION: 25 AUGUST 2020

P1527 FINAL SUBMISSION - 11/18/2021

PLOTTED: 11/15/2021 3:39:08 AM

FILE NAME: BIM 360:/HF PACKAGE 3/P1527 LOG COM CSP-1639600-A.rvt

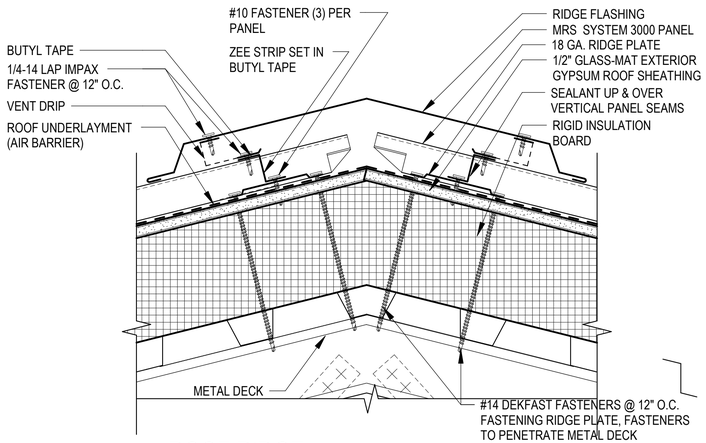

C2 ROOF RIDGE
SCALE: 3" = 1'-0"

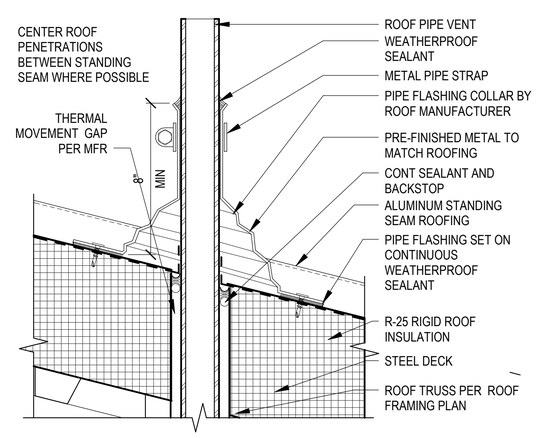

C3 PIPE VENT TYPICAL
SCALE: 3" = 1'-0"

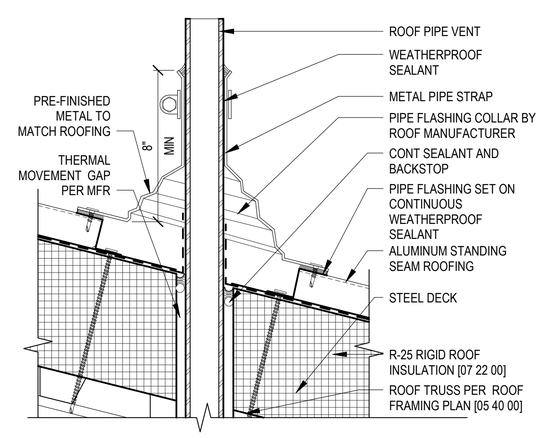

C4 PIPE VENT
SCALE: 3" = 1'-0"

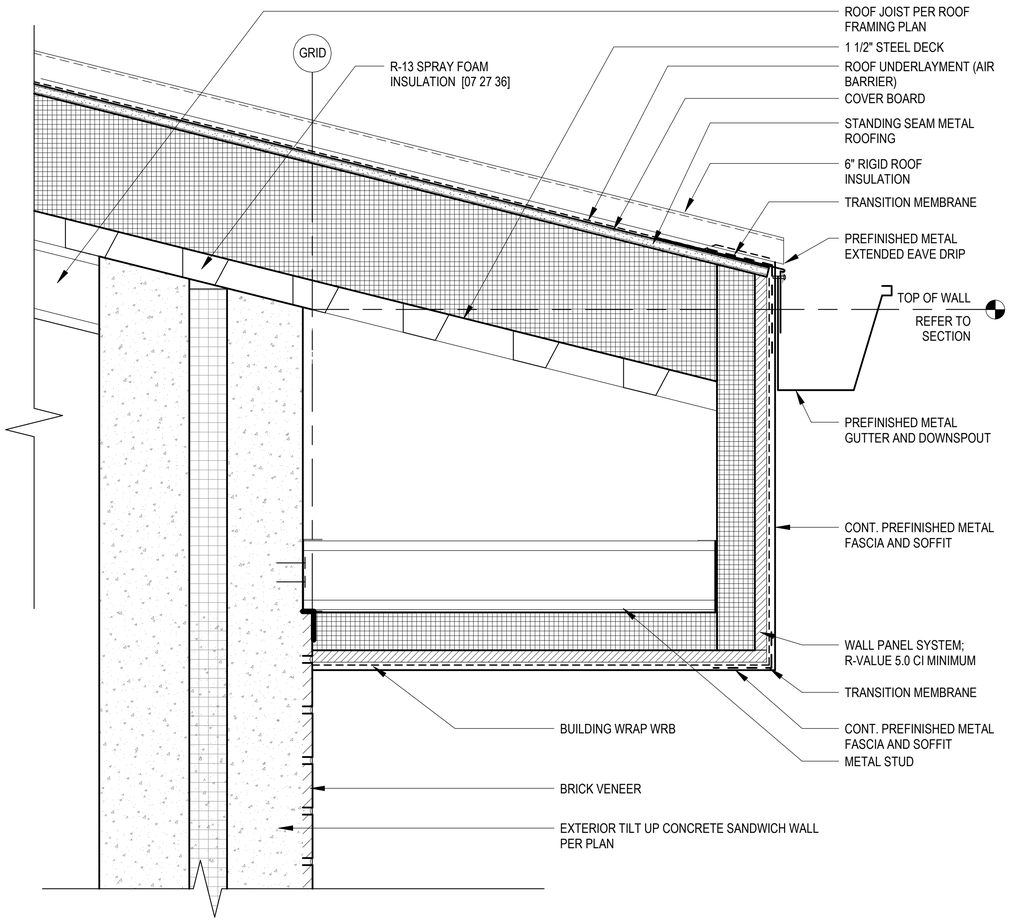

A2 ENLARGED ROOF EAVE
SCALE: 3" = 1'-0"

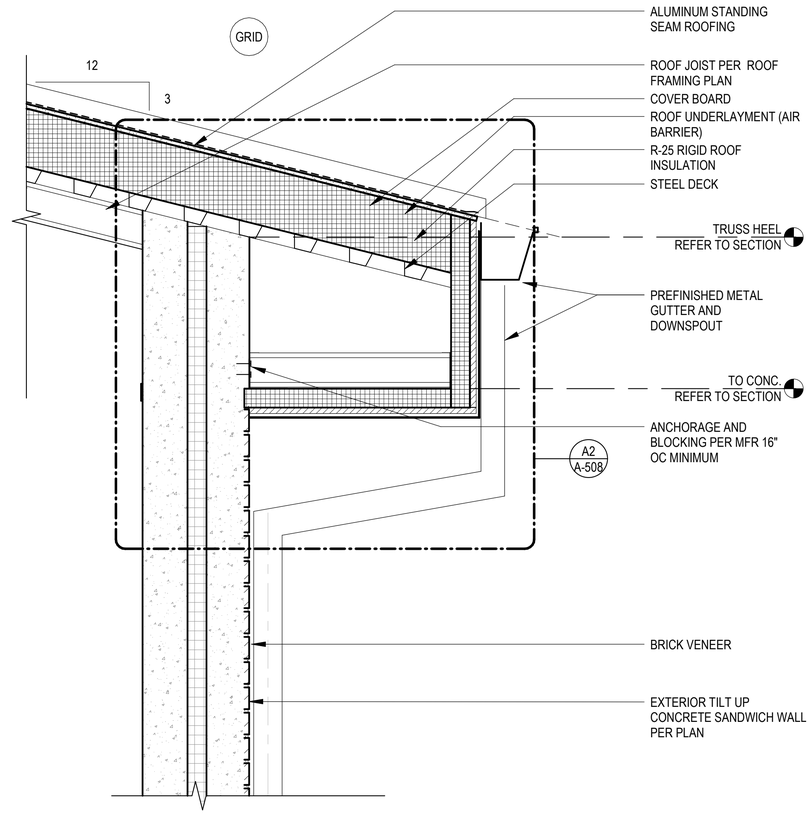

A4 ROOF EAVE
SCALE: 1 1/2" = 1'-0"

APPR	DATE	DESCRIPTION	SYM

NAVFAC

REGISTERED ARCHITECT
CERTIFICATE NO.
49179
PAWEL PASZCZUK
Date Signed 11/11/21
ARIZONA, U.S.A.
Expires 03/31/2024
SEAL

RQ W.M. Jordan COMPANY
~A JOINT VENTURE~

Michael Baker
INTERNATIONAL
100 AIRSIDE DRIVE
MOON TOWNSHIP, PA 15108
A/E INFO

APPROVED
FOR COMMANDER NAVFAC
ACTIVITY
MARINE CORPS BASE CAMP LEJEUNE
SATISFACTORY TO DATE DD/MM/YY
DES SH | DRW RQ | CHK SS
PM / DM TOWLER / ROOT
BRANCH HEAD
DESIGN DIRECTOR R.L.Stephens, Jr.
FIRE PROTECTION DPS

DEPARTMENT OF THE NAVY
NAVAL FACILITIES ENGINEERING SYSTEMS COMMAND
ATLANTIC DESIGN AND CONSTRUCTION
MCB CAMP LEJEUNE
NAVAL FACILITIES ENGINEERING SYSTEMS COMMAND ATLANTIC
NORFOLK, VA
JACKSONVILLE, NC
P1527 LOGCOM CSP WAREHOUSE
ROOF DETAILS

SCALE: AS NOTED
EPROJECT NO.: 1639600
CONSTR. CONTR. NO. N40085-20-C-0059
NAVFAC DRAWING NO. 14111182
SHEET 171 OF 447

A-508

DRAWFORM REVISION: 25 AUGUST 2020

P1527 FINAL SUBMISSION - 11/18/2021

PLOTTED: 11/15/2021 3:39:10 AM
FILE NAME: BIM 360://HF PACKAGE 3/P1527 LOG COM CSP-1639600-A.rvt

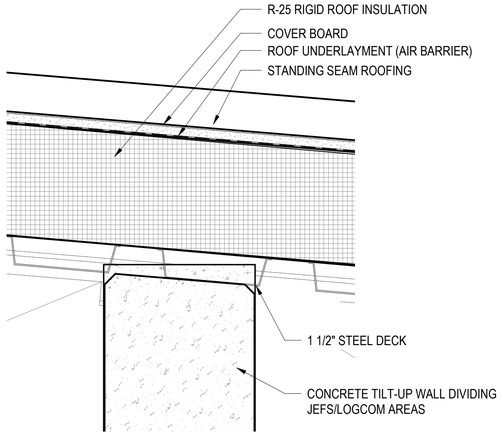

C3 TILT UP CONCRETE @ ROOF DECK
SCALE: 3" = 1'-0"

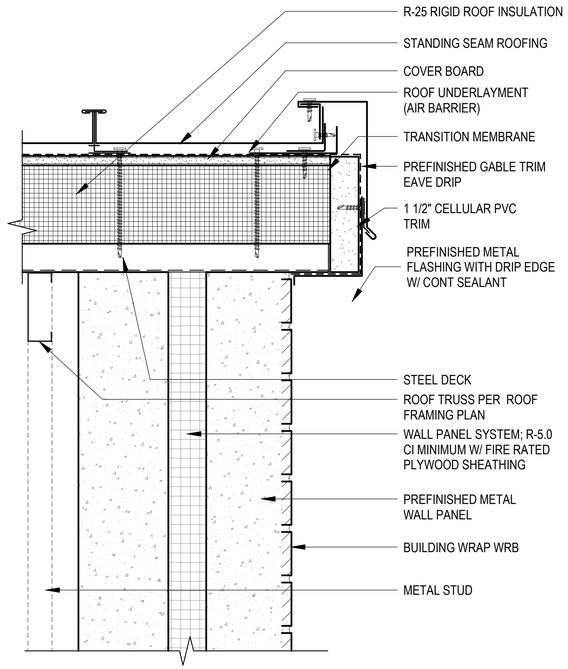

C4 ROOF GABLE FASCIA
SCALE: 3" = 1'-0"

0 3" 6" 1'

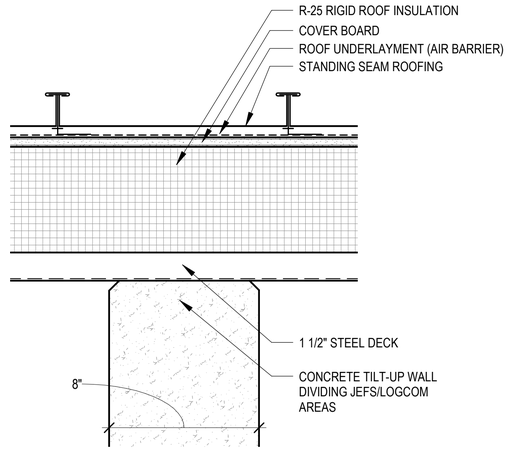

A3 LOGCOM / JEFS DIVIDING WALL
SCALE: 3" = 1'-0"

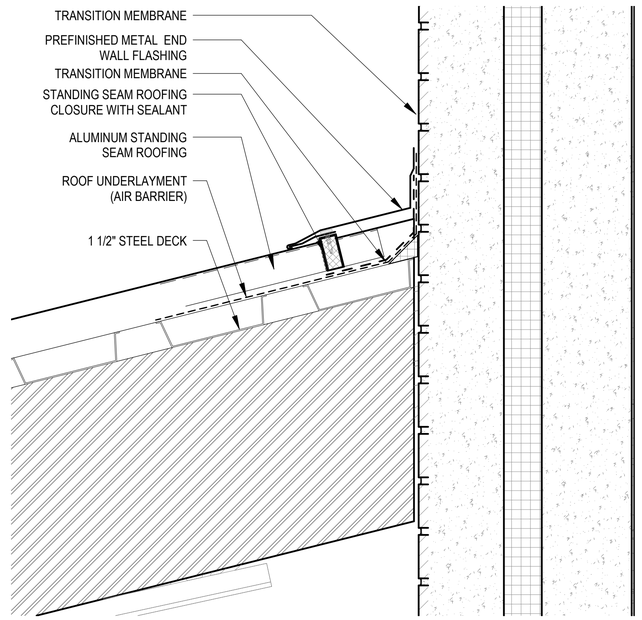

A4 CANOPY @ EXT. WALL DET.
SCALE: 3" = 1'-0"

APPR	DATE	DESCRIPTION	SYM

NAVFAC

REGISTERED ARCHITECT
CERTIFICATE NO.
49179
PAWEL PASZCZUK
Date Signed 11/11/21
ARIZONA, U.S.A.
Expires 03/31/2024
SEAL

RQ W.M. Jordan COMPANY
~A JOINT VENTURE~

Michael Baker INTERNATIONAL
100 AIRSIDE DRIVE
MOON TOWNSHIP, PA 15108
A/E INFO

APPROVED

FOR COMMANDER NAVFAC

ACTIVITY
MARINE CORPS BASE CAMP LEJEUNE

SATISFACTORY TO DATE DD/MM/YY

DES	DRW	CHK
SH	RQ	SS

PM / DM TOWLER / ROOT
BRANCH HEAD
DESIGN DIRECTOR R.L.Stephens, Jr.
FIRE PROTECTION DPS

DEPARTMENT OF THE NAVY
NAVAL FACILITIES ENGINEERING SYSTEMS COMMAND
ATLANTIC DESIGN AND CONSTRUCTION
MCB CAMP LEJEUNE

NAVAL FACILITIES ENGINEERING SYSTEMS COMMAND ATLANTIC
NORFOLK, VA
JACKSONVILLE, NC
P1527 LOGCOM CSP WAREHOUSE

ROOF DETAILS

SCALE: AS NOTED
EPROJECT NO.: 1639600
CONSTR. CONTR. NO. N40085-20-C-0059
NAVFAC DRAWING NO. 14111190
SHEET 179 OF 447

A-509

DRAWFORM REVISION: 25 AUGUST 2020

P1527 FINAL SUBMISSION - 11/18/2021

PLOTTED: 11/15/2021 3:39:13 AM

FILE NAME: BIM 360/IHF PACKAGE 3/P1527 LOG COM CSP-1639600-A.rvt

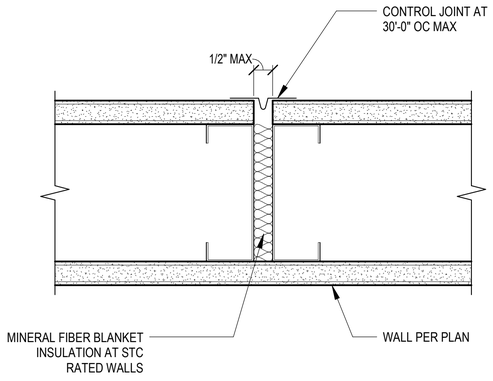

B1 CONTROL JOINT
SCALE: 6" = 1'-0"

0 1 1/2" 3" 6"

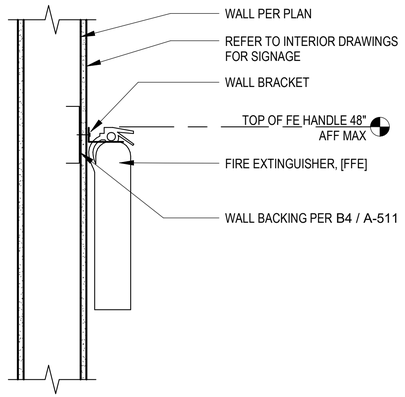

C2 WALL MOUNTED FE
SCALE: 1 1/2" = 1'-0"

0 6" 1' 2'

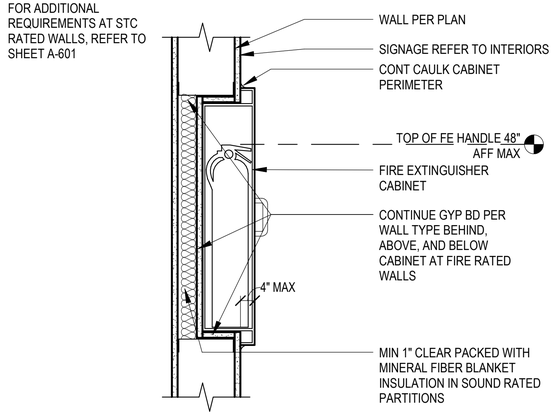

B2 SEMI RECESSED FEC
SCALE: 1 1/2" = 1'-0"

0 6" 1' 2'

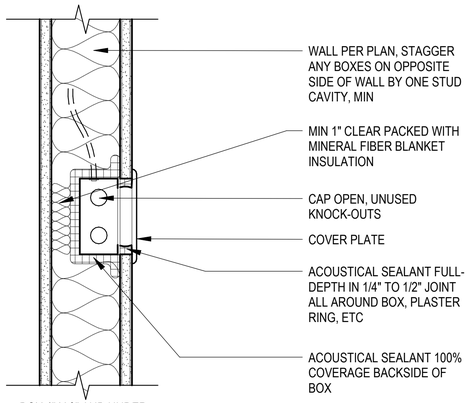

A2 RECESSED BOXES IN SOUND PARTITION
SCALE: 3" = 1'-0"

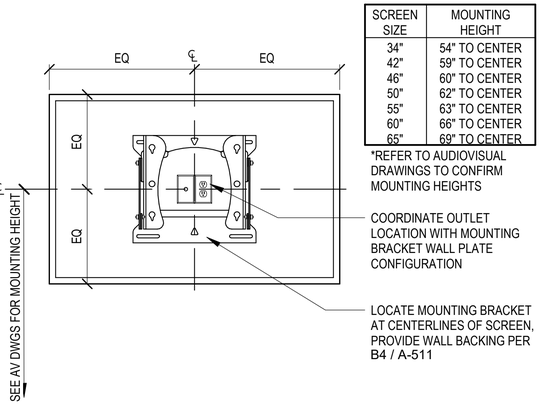

SCREEN SIZE	MOUNTING HEIGHT
34"	54" TO CENTER
42"	59" TO CENTER
46"	60" TO CENTER
50"	62" TO CENTER
55"	63" TO CENTER
60"	66" TO CENTER
65"	69" TO CENTER

*REFER TO AUDIOVISUAL DRAWINGS TO CONFIRM MOUNTING HEIGHTS

COORDINATE OUTLET LOCATION WITH MOUNTING BRACKET WALL PLATE CONFIGURATION

LOCATE MOUNTING BRACKET AT CENTERLINES OF SCREEN, PROVIDE WALL BACKING PER B4 / A-511

C3 TV WALL MOUNT BRACKET
SCALE: 1" = 1'-0"

0 1/2" 1" 2"

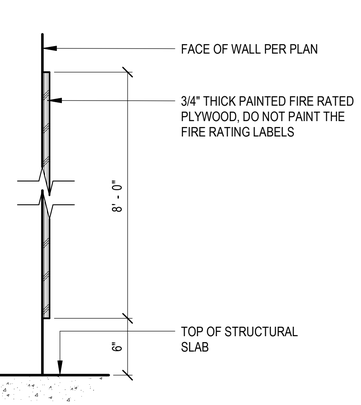

B3 TELECOMM BACKBOARD
SCALE: 1 1/2" = 1'-0"

0 6" 1' 2'

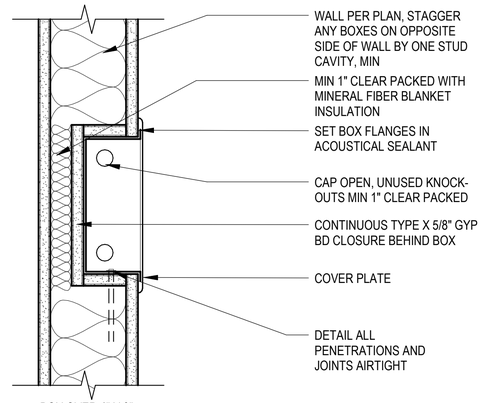

0 3" 6" 1'

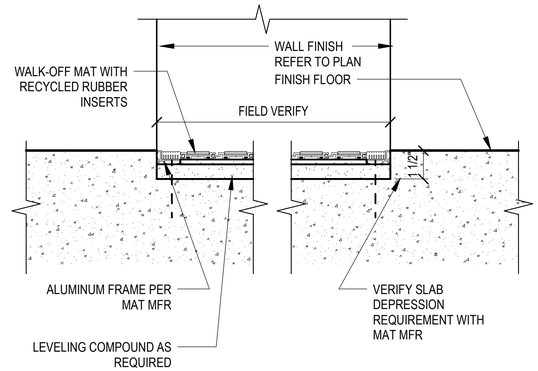

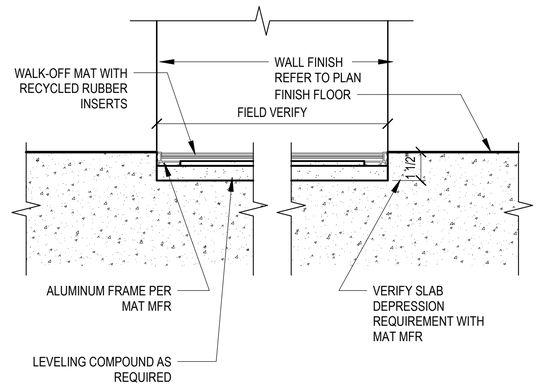

NOTE: CENTER WALK-OFF MAT WITH CENTERLINE OF DOOR(S)

B4 RECESSED FLOOR MAT
SCALE: 3" = 1'-0"

0 3" 6" 1'

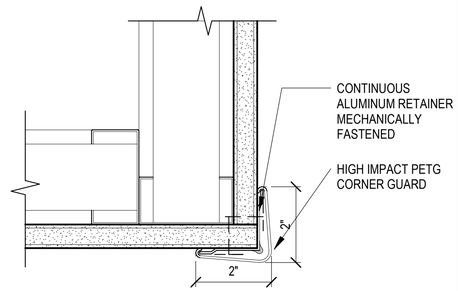

A5 IMPACT CORNER WITH COVER
SCALE: 6" = 1'-0"

0 1 1/2" 3" 6"

APPR	DATE	SYM	DESCRIPTION

NAVFAC

REGISTERED ARCHITECT CERTIFICATE NO. 49179 PAWEL PASZCZUK Date Signed 11/11/21 ARIZONA, U.S.A. Expires 03/31/2024 SEAL

RQ W.M. Jordan COMPANY – A JOINT VENTURE –

Michael Baker INTERNATIONAL
100 AIRSIDE DRIVE MOON TOWNSHIP, PA 15108 A/E INFO

APPROVED
FOR COMMANDER NAVFAC

ACTIVITY
MARINE CORPS BASE CAMP LEJEUNE

SATISFACTORY TO DATE DD/MM/YY
DES SH DRW RQ CHK SS
PM / DM TOWLER / ROOT
BRANCH HEAD
DESIGN DIRECTOR R.L.Stephens, Jr.
FIRE PROTECTION DPS

DEPARTMENT OF THE NAVY
NAVAL FACILITIES ENGINEERING SYSTEMS COMMAND
ATLANTIC DESIGN AND CONSTRUCTION
NAVAL FACILITIES ENGINEERING SYSTEMS COMMAND ATLANTIC NORFOLK, VA
MCB CAMP LEJEUNE JACKSONVILLE, NC
P1527 LOGCOM CSP WAREHOUSE

INTERIOR DETAILS

SCALE: AS NOTED
EPROJECT NO.: 1639600
CONSTR. CONTR. NO. N40085-20-C-0059
NAVFAC DRAWING NO. 14111183
SHEET 172 OF 447

A-510

DRAWFORM REVISION: 25 AUGUST 2020

P1527 FINAL SUBMISSION - 11/18/2021

PLOTTED: 11/15/2021 3:39:14 AM

FILE NAME: BIM 360://HF PACKAGE 3/P1527 LOG COM CSP-1639600-A.rvt

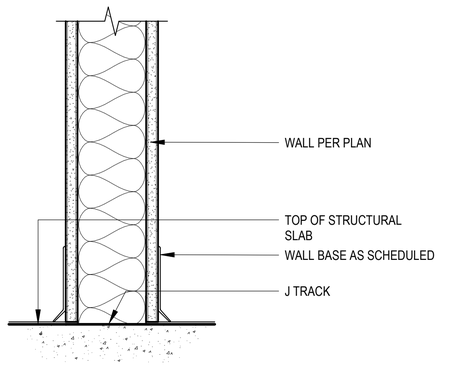

C2 WALL AT FLOOR
SCALE: 3" = 1'-0"

0 3" 6" 1'

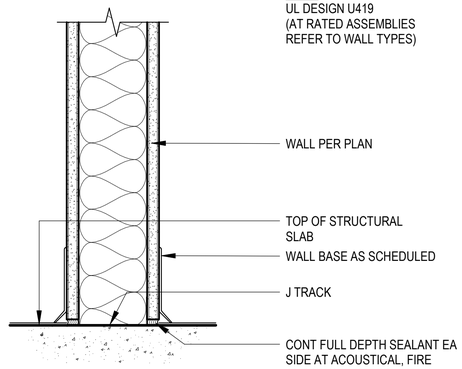

C3 RATED WALL AT FLOOR
SCALE: 3" = 1'-0"

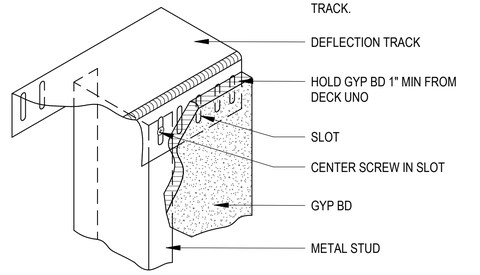

C4 DEFLECTION TRACK
SCALE: 3" = 1'-0"

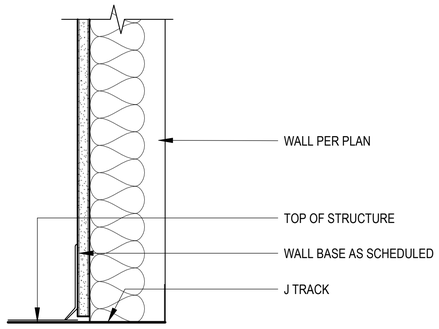

B1 CHASE WALL AT FLOOR
SCALE: 3" = 1'-0"

0 3" 6" 1'

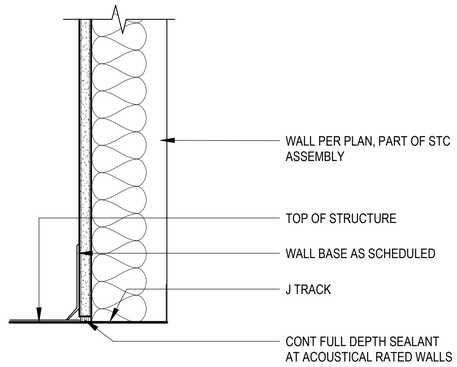

B2 RATED CHASE WALL AT FLOOR
SCALE: 3" = 1'-0"

0 3" 6" 1'

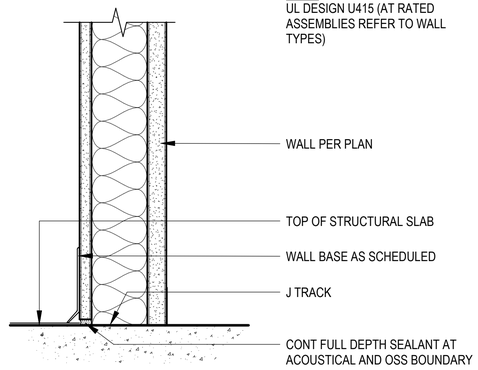

B3 RATED SHAFT WALL AT FLOOR
SCALE: 3" = 1'-0"

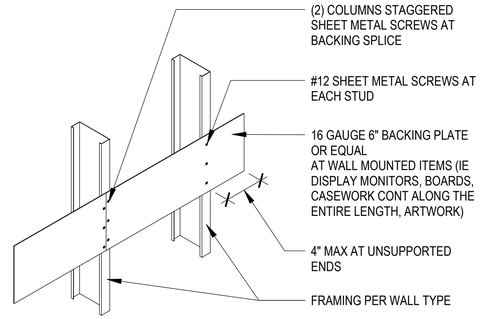

B4 WALL BACKING
SCALE: 1 1/2" = 1'-0"

0 6" 1' 2'

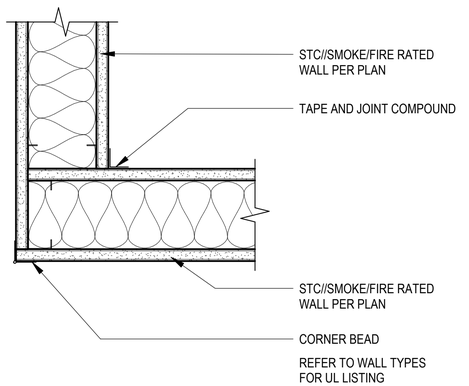

A1 CORNER FR/STC
SCALE: 3" = 1'-0"

0 3" 6" 1'

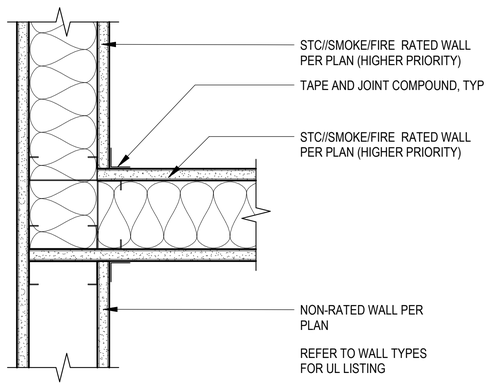

A2 CORNER INTERSECTION FR/STC
SCALE: 3" = 1'-0"

0 3" 6" 1'

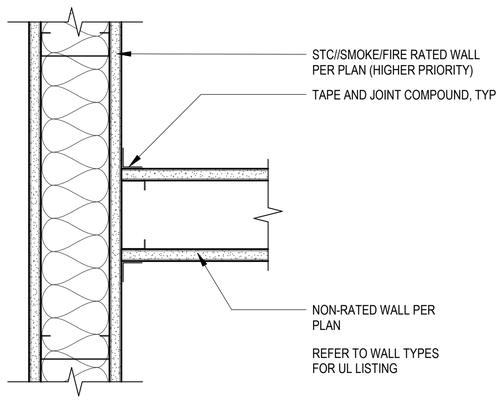

A3 INTERSECTION FR/STC
SCALE: 3" = 1'-0"

0 3" 6" 1'

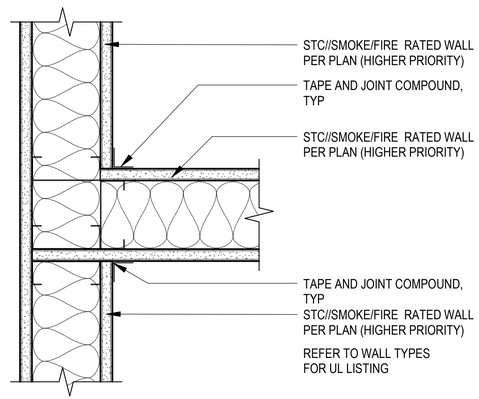

A4 INTERSECTION FR/STC
SCALE: 3" = 1'-0"

0 3" 6" 1'

APPR | DATE | DESCRIPTION | SYM

NAVFAC

REGISTERED ARCHITECT CERTIFICATE NO. 49179 PAWEL PASZCZUK Date Signed 11/11/21 ARIZONA, U.S.A.
Expires 03/31/2024 SEAL

RQ W.M. Jordan COMPANY – A JOINT VENTURE –

Michael Baker INTERNATIONAL
100 AIRSIDE DRIVE MOON TOWNSHIP, PA 15108 A/E INFO

APPROVED

FOR COMMANDER NAVFAC

ACTIVITY
MARINE CORPS BASE CAMP LEJEUNE

SATISFACTORY TO DATE DD/MM/YY

DES SH	DRW RQ	CHK SS

PM / DM TOWLER / ROOT
BRANCH HEAD
DESIGN DIRECTOR R.L.Stephens, Jr.
FIRE PROTECTION DPS

DEPARTMENT OF THE NAVY
NAVAL FACILITIES ENGINEERING SYSTEMS COMMAND
ATLANTIC DESIGN AND CONSTRUCTION
NAVAL FACILITIES ENGINEERING SYSTEMS COMMAND ATLANTIC
NORFOLK, VA
MCB CAMP LEJEUNE
JACKSONVILLE, NC
P1527 LOGCOM CSP WAREHOUSE
INTERIOR DETAILS

SCALE: AS NOTED
EPROJECT NO.: 1639600
CONSTR. CONTR. NO. N40085-20-C-0059
NAVFAC DRAWING NO. 14111187
SHEET 176 OF 447

A-511

DRAWFORM REVISION: 25 AUGUST 2020

P1527 FINAL SUBMISSION - 11/18/2021

PLOTTED: 11/15/2021 3:39:15 AM

FILE NAME: BIM 360://HF PACKAGE 3/P1527 LOG COM CSP--1639600-A.rvt

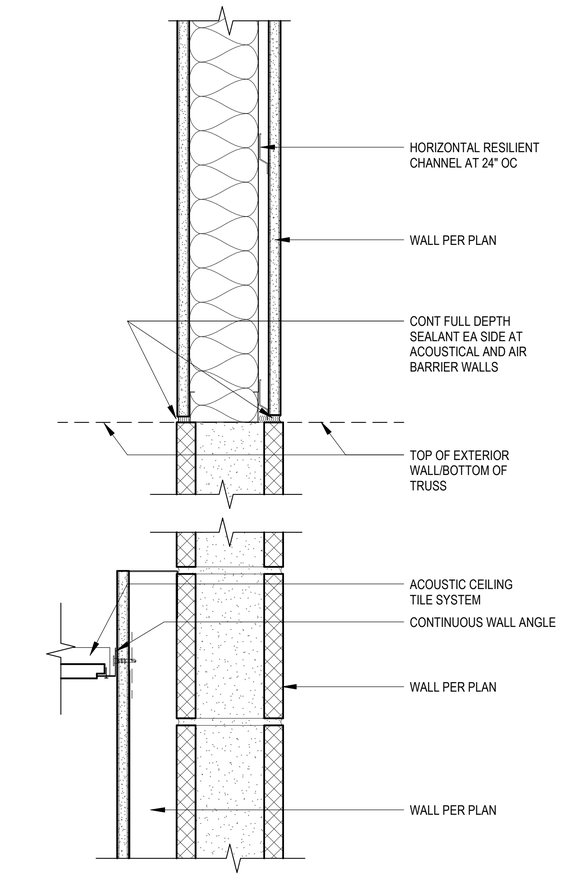

A2 INTERIOR WALL HEAD
SCALE: 3" = 1'-0"

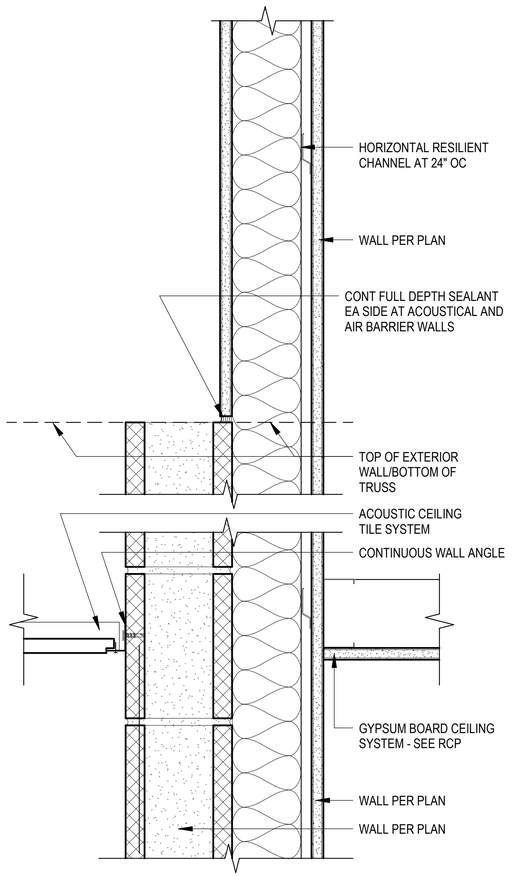

A3 INTERIOR WALL HEAD
SCALE: 3" = 1'-0"

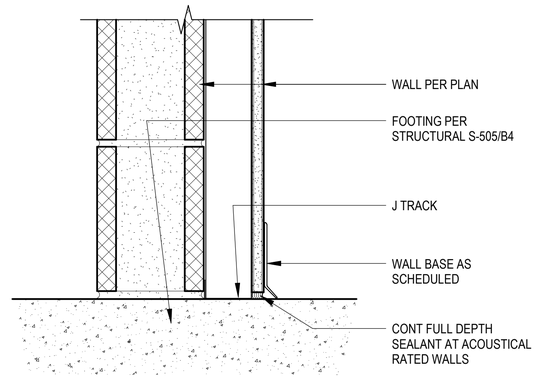

B4 INTERIOR CMU WALL BASE
SCALE: 3" = 1'-0"

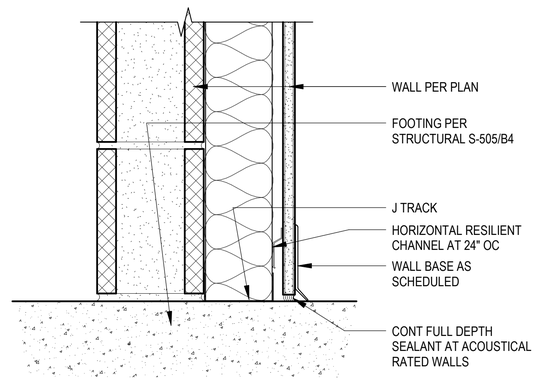

A4 INTERIOR CMU WALL BASE
SCALE: 3" = 1'-0"

0 3" 6" 1'

APPR	DATE	DESCRIPTION	SYM

NAVFAC

REGISTERED ARCHITECT
CERTIFICATE NO.
49179
PAWEL
PASZCZUK
Date Signed 11/11/21
ARIZONA, U.S.A.
Expires 03/31/2024
SEAL

RQ W.M. Jordan COMPANY
~A JOINT VENTURE~

Michael Baker
INTERNATIONAL
100 AIRSIDE DRIVE
MOON TOWNSHIP, PA 15108
A/E INFO

APPROVED
FOR COMMANDER NAVFAC

ACTIVITY
MARINE CORPS BASE
CAMP LEJEUNE

SATISFACTORY TO DATE DD/MM/YY
DES SH DRW RQ CHK SS
PM / DM TOWLER / ROOT
BRANCH HEAD
DESIGN DIRECTOR R.L.Stephens, Jr.
FIRE PROTECTION DPS

NAVAL FACILITIES ENGINEERING SYSTEMS COMMAND
NORFOLK, VA
DEPARTMENT OF THE NAVY
NAVAL FACILITIES ENGINEERING SYSTEMS COMMAND ATLANTIC
ATLANTIC DESIGN AND CONSTRUCTION
MCB CAMP LEJEUNE
JACKSONVILLE, NC
P1527 LOGCOM CSP WAREHOUSE
INTERIOR DETAILS - CMU

SCALE: AS NOTED
EPROJECT NO.: 1639600
CONSTR. CONTR. NO.
N40085-20-C-0059
NAVFAC DRAWING NO.
14111186
SHEET 175 OF 447

A-512

DRAWFORM REVISION: 25 AUGUST 2020

P1527 FINAL SUBMISSION - 11/18/2021

PLOTTED: 11/15/2021 3:39:16 AM
FILE NAME: BIM 360://HF PACKAGE 3/P1527 LOG COM CSP-1639600-A.rvt

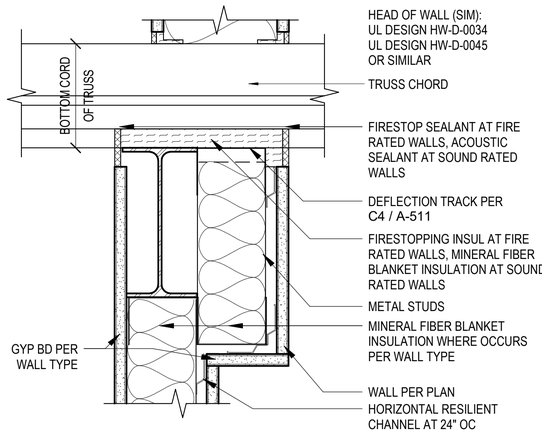

C2 HEAD AT BEAM 1HR / STC

SCALE: 3" = 1'-0"

0 3" 6" 1'

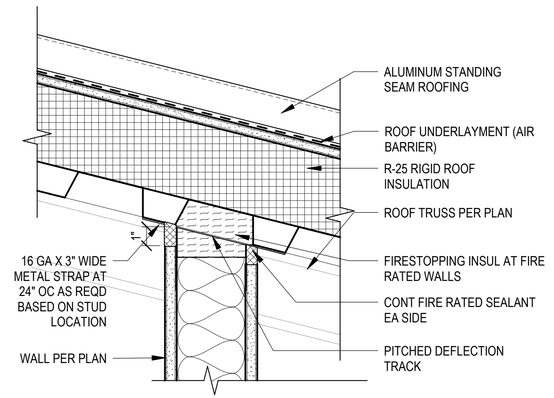

C3 HEAD PAR TO MTL DECK 1HR

SCALE: 3" = 1'-0"

0 3" 6" 1'

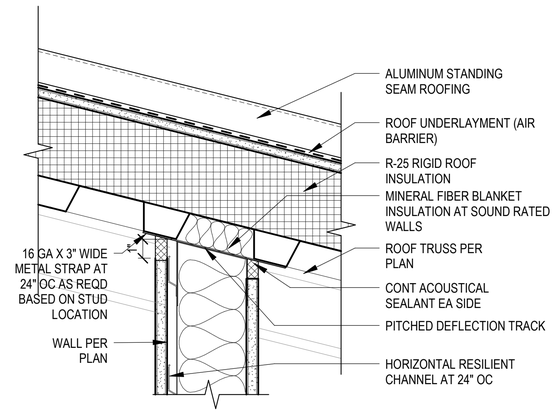

C4 HEAD PAR TO MTL DECK STC

SCALE: 3" = 1'-0"

0 3" 6" 1'

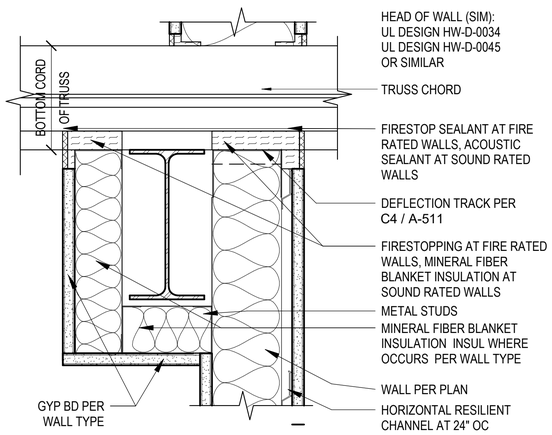

B2 HEAD AT BEAM 1HR / STC

SCALE: 3" = 1'-0"

0 3" 6" 1'

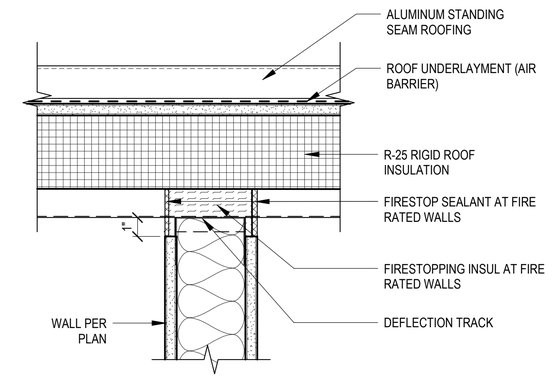

B3 HEAD PER TO MTL DECK 1HR

SCALE: 3" = 1'-0"

0 3" 6" 1'

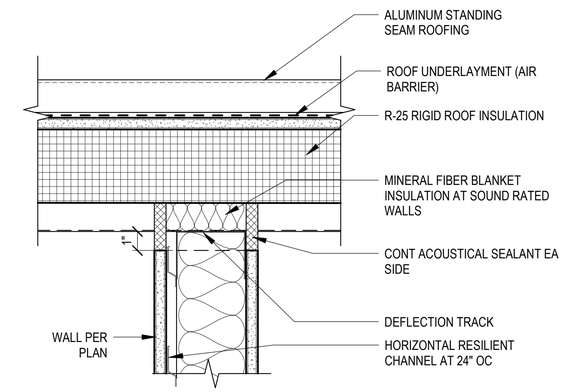

B4 HEAD PER TO MTL DECK STC

SCALE: 3" = 1'-0"

0 3" 6" 1'

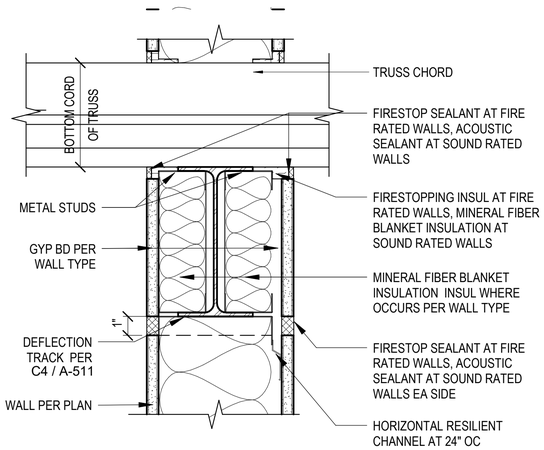

A1 BEAM AT TRUSS CHORD 1 HR/STC

SCALE: 3" = 1'-0"

0 3" 6" 1'

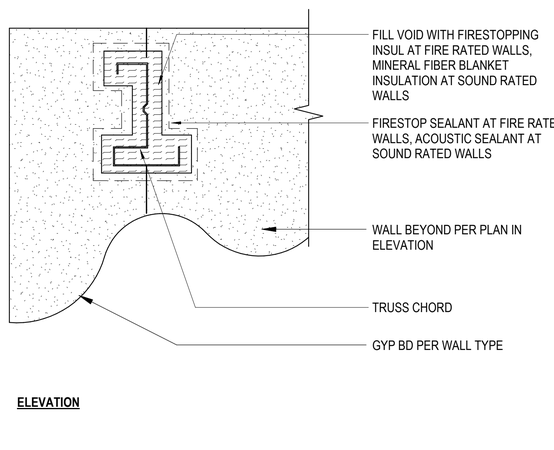

A2 TRUSS CHORD AT 1 HR/STC WALL

SCALE: 3" = 1'-0"

0 3" 6" 1'

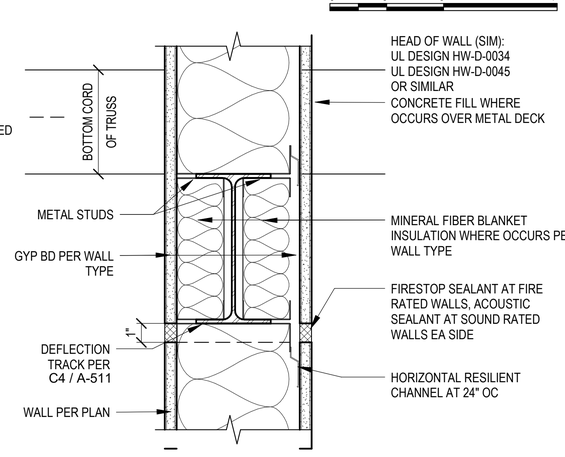

A3 HEAD AT BEAM 1HR / STC

SCALE: 3" = 1'-0"

0 3" 6" 1'

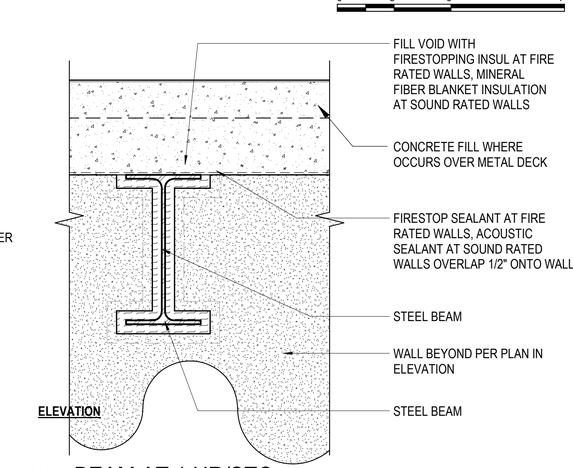

A4 BEAM AT 1 HR/STC

SCALE: 3" = 1'-0"

0 3" 6" 1'

APPR | DATE | SYM | DESCRIPTION

NAVFAC

REGISTERED ARCHITECT
CERTIFICATE NO.
49179
PAWEL
PASZCZUK
Date Signed 11/17/21
ARIZONA, U.S.A.
Expires 03/31/2024
SEAL

RQ W.M. Jordan COMPANY
~A JOINT VENTURE~

Michael Baker
INTERNATIONAL
100 AIRSIDE DRIVE
MOON TOWNSHIP, PA 15108
A/E INFO

APPROVED

FOR COMMANDER NAVFAC

ACTIVITY
MARINE CORPS BASE
CAMP LEJEUNE

SATISFACTORY TO DATE DD/MM/YY

DES SH	DRW RQ	CHK SS
PM / DM	TOWLER / ROOT	
BRANCH HEAD		
DESIGN DIRECTOR	R.L.Stephens, Jr.	
FIRE PROTECTION	DPS	

NAVAL FACILITIES ENGINEERING SYSTEMS COMMAND
NORFOLK, VA
DEPARTMENT OF THE NAVY
NAVAL FACILITIES ENGINEERING SYSTEMS COMMAND ATLANTIC
ATLANTIC DESIGN AND CONSTRUCTION
MCB CAMP LEJEUNE
JACKSONVILLE, NC
P1527 LOGCOM CSP WAREHOUSE
INTERIOR DETAILS

SCALE:	AS NOTED
EPROJECT NO.:	1639600
CONSTR. CONTR. NO.	N40085-20-C-0059
NAVFAC DRAWING NO.	14111188
SHEET	177 OF 447

A-513

DRAWFORM REVISION: 25 AUGUST 2020

P1527 FINAL SUBMISSION - 11/18/2021

PLOTTED: 11/15/2021 3:39:17 AM

FILE NAME: BIM 360:/HF PACKAGE 3/P1527 LOG COM CSP-1639600-A.rvt

METAL PIPE THRU SECURE ICF WALL ASSEMBLY

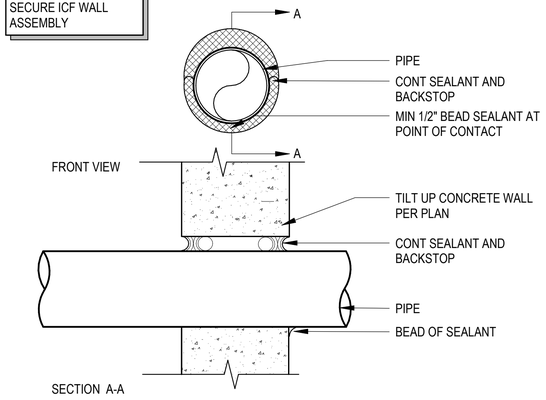

METAL PIPE THRU STC RATED ICF WALL ASSEMBLY

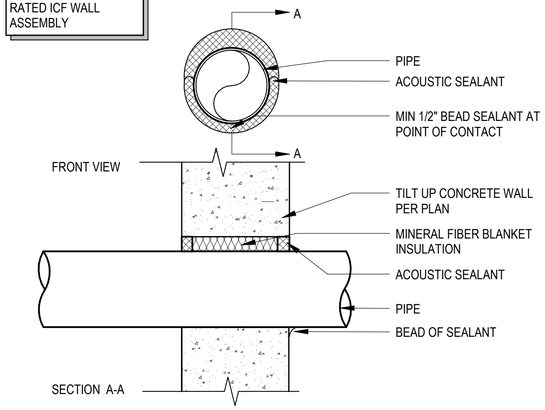

INSULATED SHEET METAL DUCT THRU GYPSUM WALL ASSEMBLY

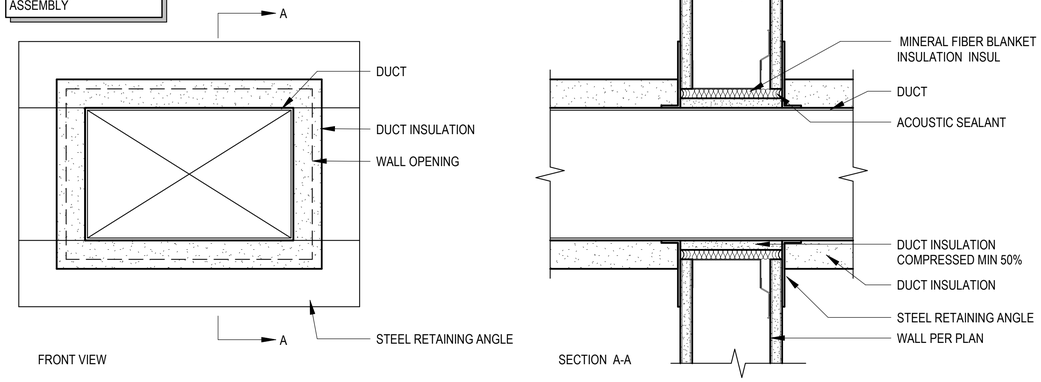

C1 TILT UP CONCRETE THRU PENETRATION

SCALE: 3" = 1'-0"

INSULATED METAL PIPE THRU SECURE ICF WALL ASSEMBLY

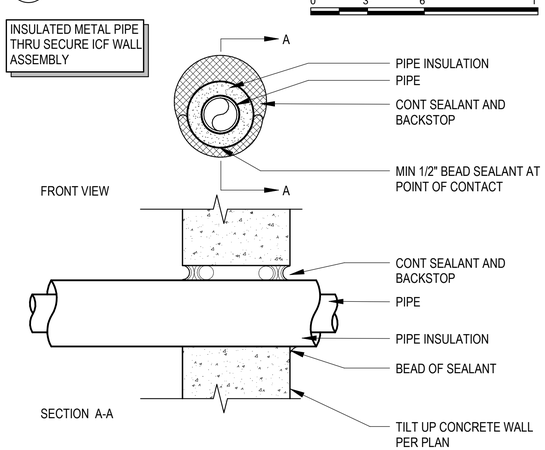

C2 TILT UP CONCRETE STC RATED THRU PENETRATION

SCALE: 3" = 1'-0"

INSULATED METAL PIPE THRU STC RATED ICF WALL ASSEMBLY

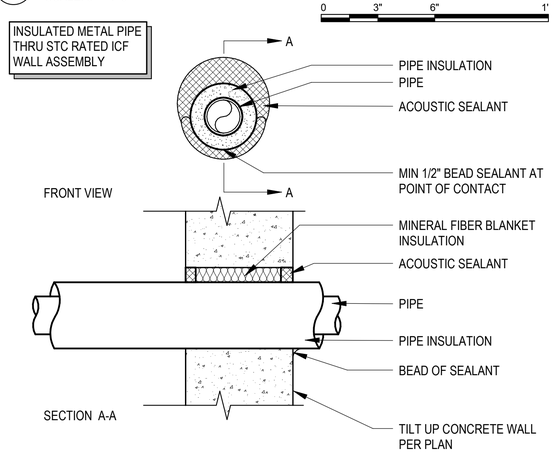

C3 STC THRU PENETRATION

SCALE: 3" = 1'-0"

SHEET METAL DUCT THRU GYPSUM WALL ASSEMBLY

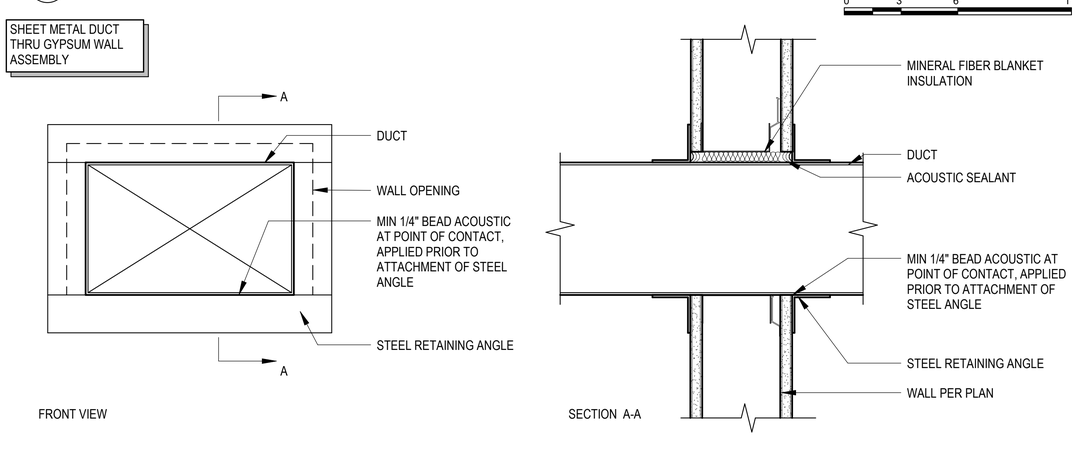

B1 TILT UP CONCRETE THRU PENETRATION

SCALE: 3" = 1'-0"

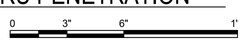

B2 TILT UP CONCRETE STC RATED THRU PENETRATION

SCALE: 3" = 1'-0"

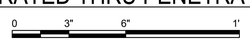

B3 STC THRU PENETRATION

SCALE: 3" = 1'-0"

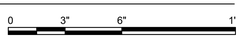

CABLE TRAY THRU GYPSUM WALL ASSEMBLY

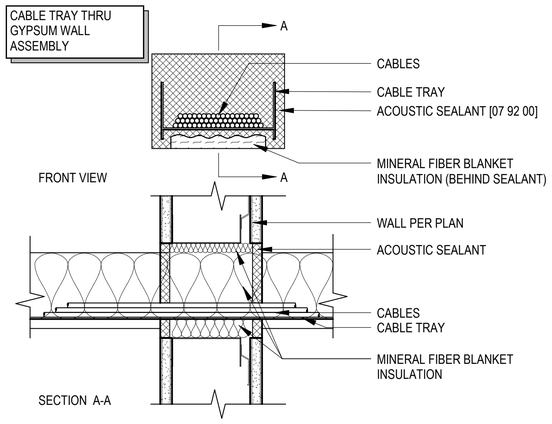

A1 STC THRU PENETRATION

SCALE: 3" = 1'-0"

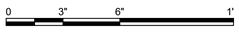

INSULATED METAL PIPE THRU GYPSUM WALL ASSEMBLY

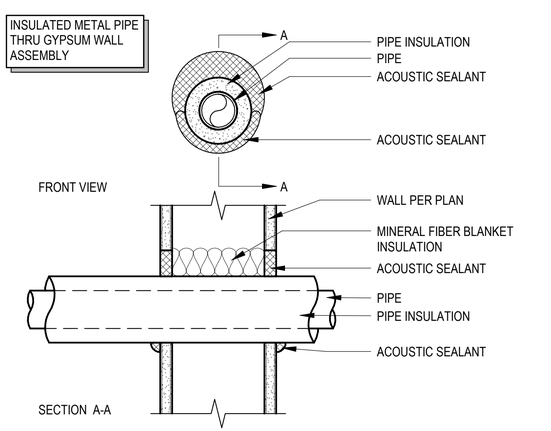

A2 STC THRU PENETRATION

SCALE: 3" = 1'-0"



INSULATED METAL PIPE THRU GYPSUM WALL ASSEMBLY

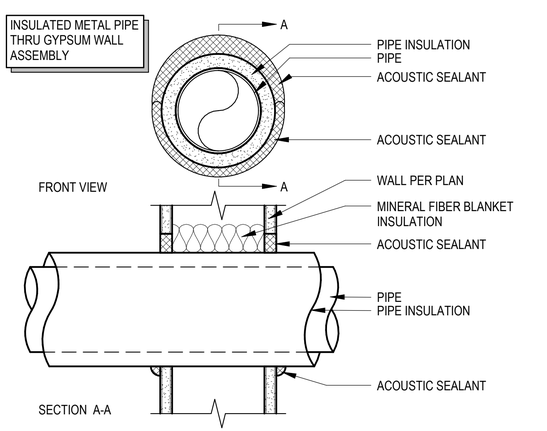

A3 STC THRU PENETRATION

SCALE: 3" = 1'-0"

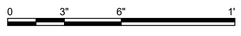

METAL PIPE THRU GYPSUM WALL ASSEMBLY

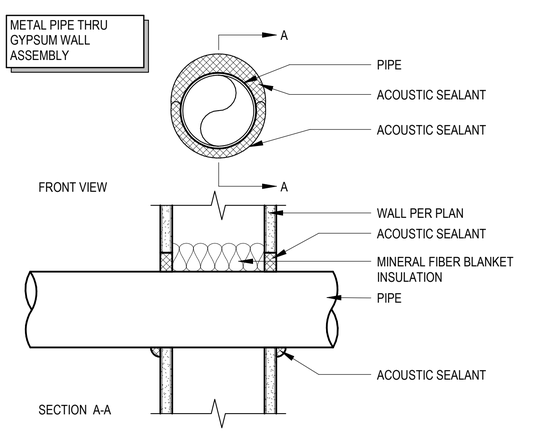

A4 STC THRU PENETRATION

SCALE: 3" = 1'-0"



APPR	DATE	DESCRIPTION	SYM

NAVFAC

REGISTERED ARCHITECT CERTIFICATE NO. 49179 PAWEL PASZCZUK Date Signed 11/17/21 ARIZONA, U.S.A.
Expires 03/31/2024 SEAL

RQ W.M. Jordan COMPANY – A JOINT VENTURE –

Michael Baker INTERNATIONAL
100 AIRSIDE DRIVE MOON TOWNSHIP, PA 15108 A/E INFO

APPROVED
FOR COMMANDER NAVFAC
ACTIVITY: MARINE CORPS BASE CAMP LEJEUNE
SATISFACTORY TO DATE DD/MM/YY
DES SH | DRW RQ | CHK SS
PM / DM TOWLER / ROOT
BRANCH HEAD
DESIGN DIRECTOR R.L.Stephens, Jr.
FIRE PROTECTION DPS

DEPARTMENT OF THE NAVY
NAVAL FACILITIES ENGINEERING SYSTEMS COMMAND
ATLANTIC DESIGN AND CONSTRUCTION
NAVAL FACILITIES ENGINEERING SYSTEMS COMMAND ATLANTIC
NORFOLK, VA
JACKSONVILLE, NC
MCB CAMP LEJEUNE
P1527 LOGCOM CSP WAREHOUSE

INTERIOR DETAILS - PENETRATIONS

SCALE: AS NOTED
EPROJECT NO.: 1639600
CONSTR. CONTR. NO. N40085-20-C-0059
NAVFAC DRAWING NO. 14111189
SHEET 178 OF 447

A-514

DRAWFORM REVISION: 25 AUGUST 2020

P1527 FINAL SUBMISSION - 11/18/2021

PLOTTED: 11/15/2021 3:39:18 AM

FILE NAME: BIM 360/.IHF PACKAGE 3/P1527 LOG COM CSP-1639600-A.rvt

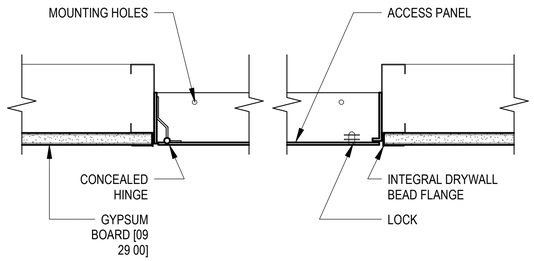

C2 CEILING ACCESS PANEL
SCALE: 3" = 1'-0"

0 3" 6" 1'

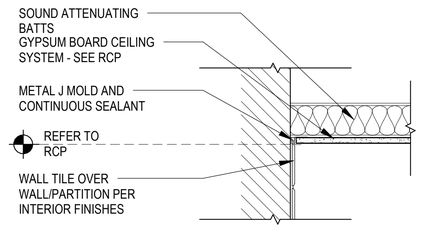

C3 GYPSUM BOARD @ TILED WALL
SCALE:NTS

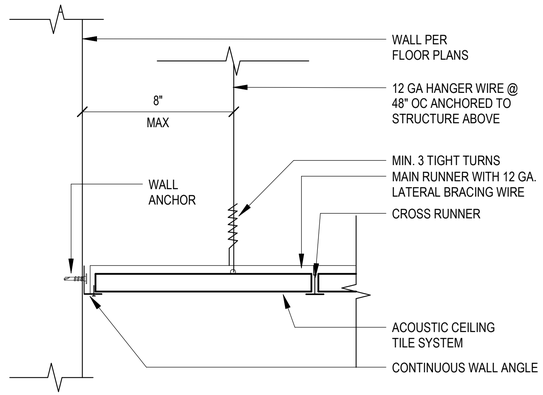

C4 SUSPENDED ACT CEILING
SCALE: 3" = 1'-0"

0 3" 6" 1'

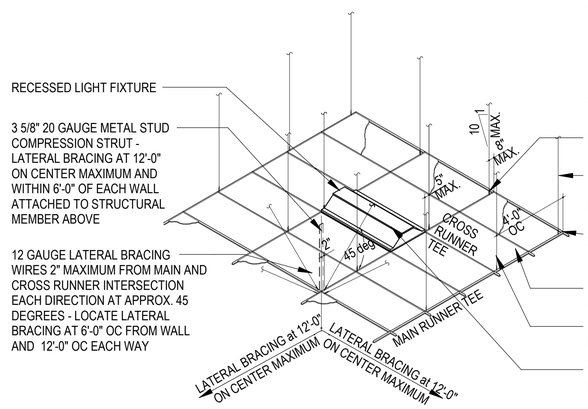

NOTES:
1. GRID CEILING INSTALLATION APPLIES TO 2'x2' CONFIGURATION.
2. FIXTURES 56 LBS. OR MORE SHALL BE INDEPENDENTLY SUPPORTED FROM THE STRUCTURE ABOVE.

- POP RIVET ALL TEES TO WALL ANGLE TYP.
- 12 GAUGE HANGER AT PERIMETER SUPPORTING MAIN RUNNERS AND CROSS RUNNERS 8" MAXIMUM FROM WALL - TYP.
- 2" WIDE WALL ANGLE TRIM (HORIZONTAL LEG) TYPICAL AT PERIMETER IN GRIDS LARGER THAN 144 SQ. FT.
- ACOUSTICAL TILE PANEL - REFER TO FINISH SCHEDULE
- 12 GAUGE HANGERS AT 48" ON CENTER EACH WAY - TYPICAL
- WITH HEAVY DUTY GRID SYSTEM; LIGHT FIXTURES AND OTHER EQUIPMENT WEIGHING LESS THAN 56 LBS. TO BE SUPPORTED BY GRID SYSTEM AND TWO 12 GA. HANGERS AT OPPOSITE CORNERS (WIRES MAY BE SLACK)

B1 ACT HANGING DETAIL - TYPICAL
SCALE:NTS

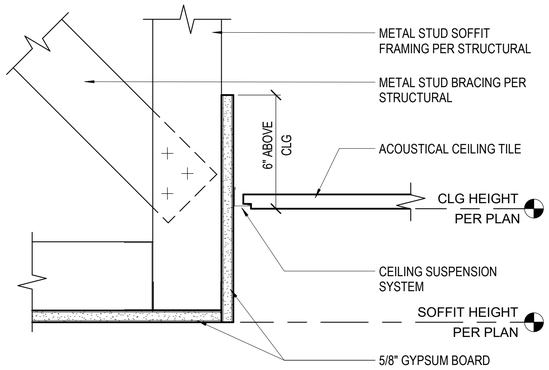

B3 GYP BD @ ACT CEILING
SCALE: 3" = 1'-0"

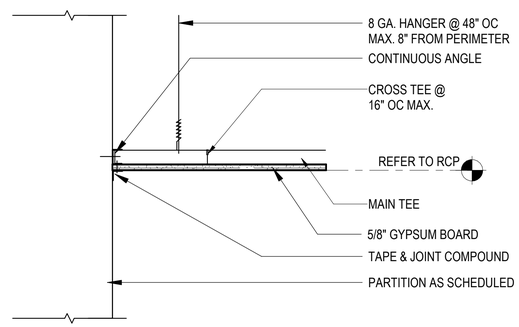

B4 GYPSUM BOARD @ WALL
SCALE:NTS

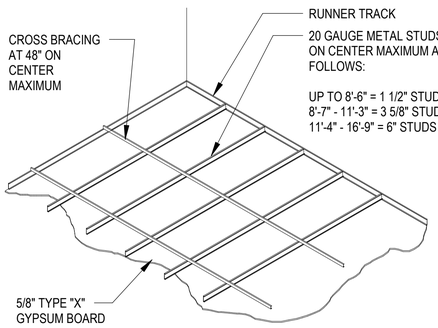

NOTES:
1. SEE DETAIL FOR CONTROL JOINT
2. FOR GYPSUM BOARD CEILING BRACING SEE DETAIL

FRAMED GYPSUM BOARD

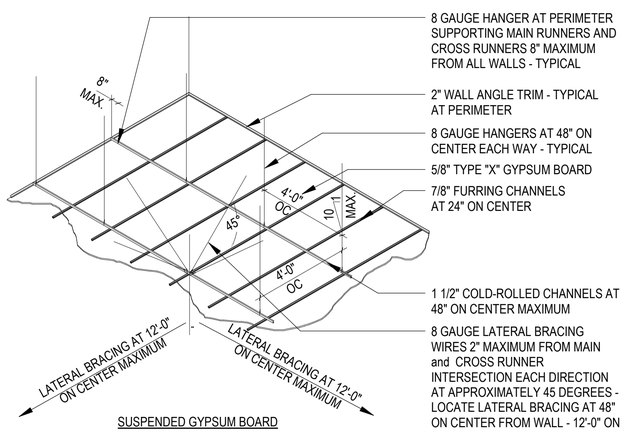

SUSPENDED GYPSUM BOARD

A2 GYPSUM BOARD HANGING DETAIL - TYPICAL
SCALE:NTS

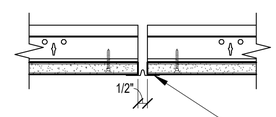

A4 CEILING CONTROL JOINT
SCALE: 3" = 1'-0"

0 3" 6" 1'

NO.	DESCRIPTION	DATE	APPR
5YM			

NAVFAC

REGISTERED ARCHITECT CERTIFICATE NO. 49179 PAWEL PASZCZUK Date Signed 11/11/21 ARIZONA, U.S.A.
Expires 03/31/2024 SEAL

RQ W.M. Jordan COMPANY – A JOINT VENTURE –

Michael Baker INTERNATIONAL
100 AIRSIDE DRIVE MOON TOWNSHIP, PA 15108 A/E INFO

APPROVED
FOR COMMANDER NAVFAC
ACTIVITY
MARINE CORPS BASE CAMP LEJEUNE
SATISFACTORY TO DATE DD/MM/YY
DES SH DRW RQ CHK SS
PM / DM TOWLER / ROOT
BRANCH HEAD
DESIGN DIRECTOR R.L.Stephens, Jr.
FIRE PROTECTION DPS

DEPARTMENT OF THE NAVY
NAVAL FACILITIES ENGINEERING SYSTEMS COMMAND
ATLANTIC DESIGN AND CONSTRUCTION
NAVAL FACILITIES ENGINEERING SYSTEMS COMMAND ATLANTIC
NORFOLK, VA
MCB CAMP LEJEUNE
JACKSONVILLE, NC
P1527 LOGCOM CSP WAREHOUSE
CEILING DETAILS

SCALE: AS NOTED
EPROJECT NO.: 1639600
CONSTR. CONTR. NO. N40085-20-C-0059
NAVFAC DRAWING NO. 14111184
SHEET 173 OF 447

A-515
DRAWFORM REVISION: 25 AUGUST 2020

P1527 FINAL SUBMISSION - 11/18/2021

PLOTTED: 11/15/2021 3:39:20 AM
FILE NAME: BIM 360:/HF PACKAGE 3/P1527 LOG COM CSP-1639600-A.rvt

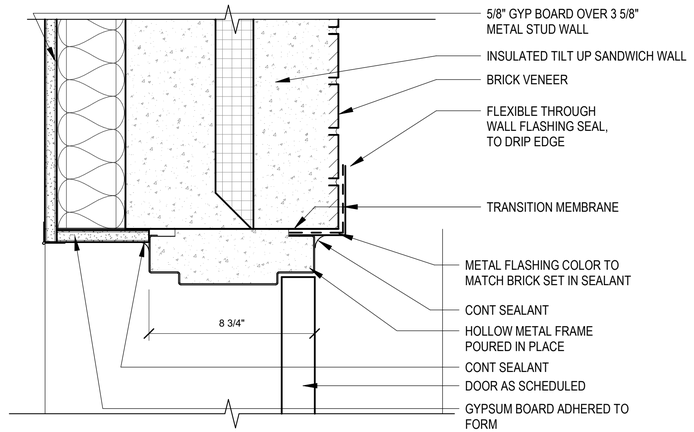

C3 EXTERIOR DOOR HEADER @ STUD WALL
SCALE: 3" = 1'-0"
0 3" 6" 1'

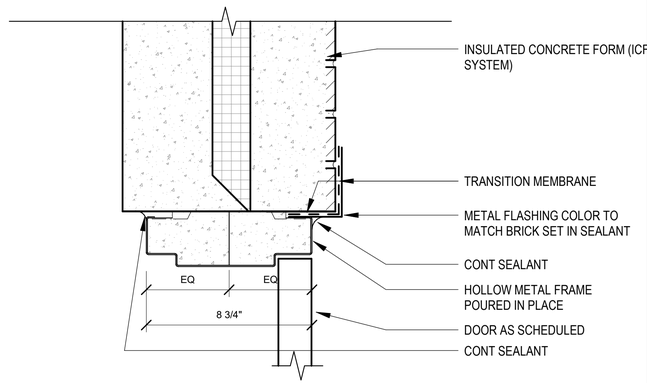

C4 EXTERIOR DOOR HEADER
SCALE: 3" = 1'-0"
0 3" 6" 1'

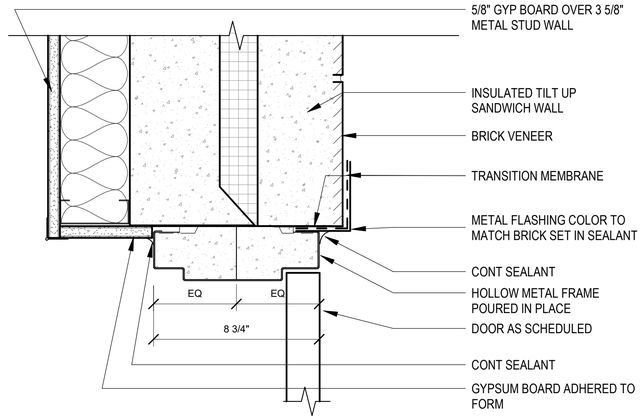

B3 EXTERIOR DOOR JAMB @ STUD WALL
SCALE: 3" = 1'-0"
0 3" 6" 1'

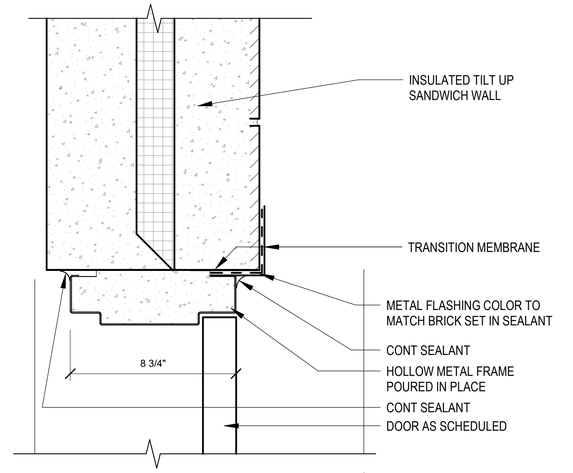

B4 EXTERIOR DOOR JAMB
SCALE: 3" = 1'-0"
0 3" 6" 1'

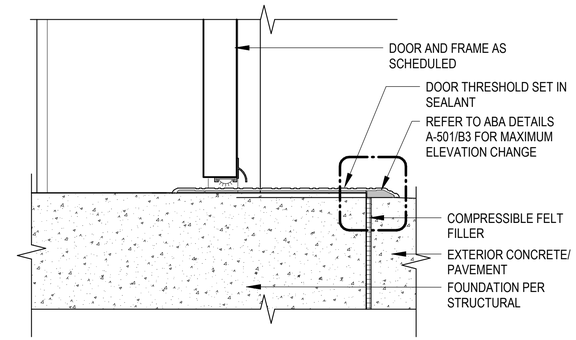

A4 EXT DOOR THRESHOLD
SCALE: 3" = 1'-0"
0 3" 6" 1'

APPR	DATE	DESCRIPTION	SYM

NAVFAC

REGISTERED ARCHITECT CERTIFICATE NO. 49179 PAWEL PASZCZUK Date Signed 11/17/21 ARIZONA, U.S.A.
Expires 03/31/2024 SEAL

RQ W.M. Jordan COMPANY – A JOINT VENTURE –

Michael Baker INTERNATIONAL
100 AIRSIDE DRIVE MOON TOWNSHIP, PA 15108 A/E INFO

APPROVED
FOR COMMANDER NAVFAC
ACTIVITY: MARINE CORPS BASE CAMP LEJEUNE
SATISFACTORY TO DATE: DD/MM/YY
DES: SH DRW: RQ CHK: SS
PM / DM: TOWLER / ROOT
BRANCH HEAD:
DESIGN DIRECTOR: R.L.Stephens, Jr.
FIRE PROTECTION: DPS

DEPARTMENT OF THE NAVY
NAVAL FACILITIES ENGINEERING SYSTEMS COMMAND
ATLANTIC DESIGN AND CONSTRUCTION
MCB CAMP LEJEUNE
NAVAL FACILITIES ENGINEERING SYSTEMS COMMAND ATLANTIC NORFOLK, VA
JACKSONVILLE, NC
P1527 LOGCOM CSP WAREHOUSE
EXTERIOR DOOR DETAILS

SCALE: AS NOTED
EPROJECT NO.: 1639600
CONSTR. CONTR. NO. N40085-20-C-0059
NAVFAC DRAWING NO. 14111191
SHEET 180 OF 447

A-516

DRAWFORM REVISION: 25 AUGUST 2020

P1527 FINAL SUBMISSION - 11/18/2021

PLOTTED: 11/15/2021 3:39:20 AM
FILE NAME: BIM 360://HF PACKAGE 3/P1527 LOG COM CSP-1639600-A.rvt

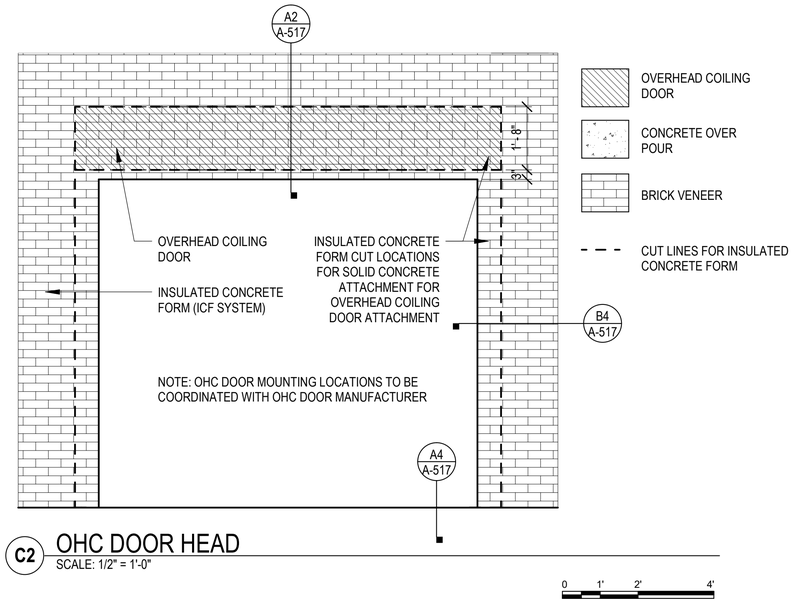

C2 OHC DOOR HEAD
SCALE: 1/2" = 1'-0"

0 1' 2' 4'

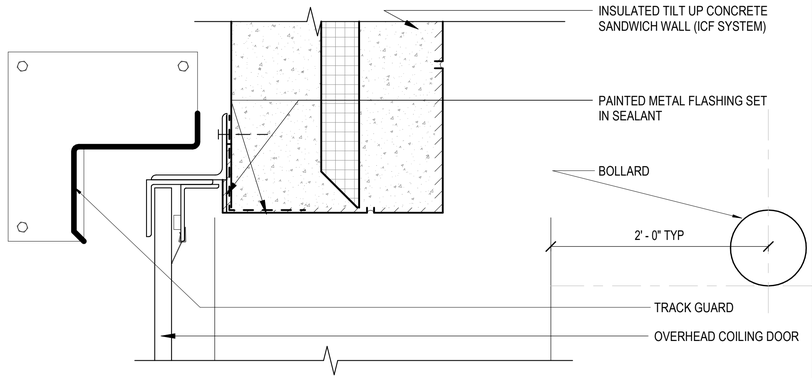

C4 OHC DOOR JAMB PROTECTION
SCALE: 3" = 1'-0"

0 3" 6" 1'

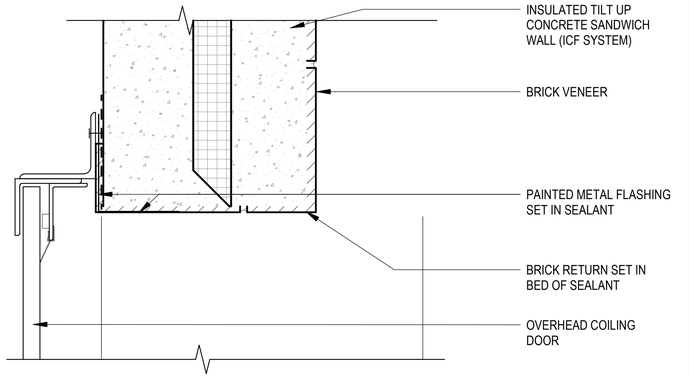

B4 OHC DOOR JAMB
SCALE: 3" = 1'-0"

0 3" 6" 1'

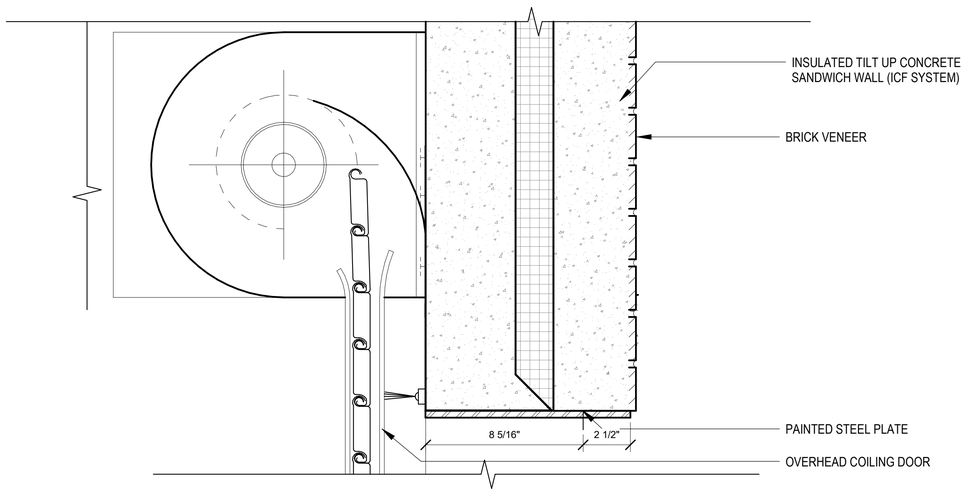

A2 OHC DOOR HEAD
SCALE: 3" = 1'-0"

0 3" 6" 1'

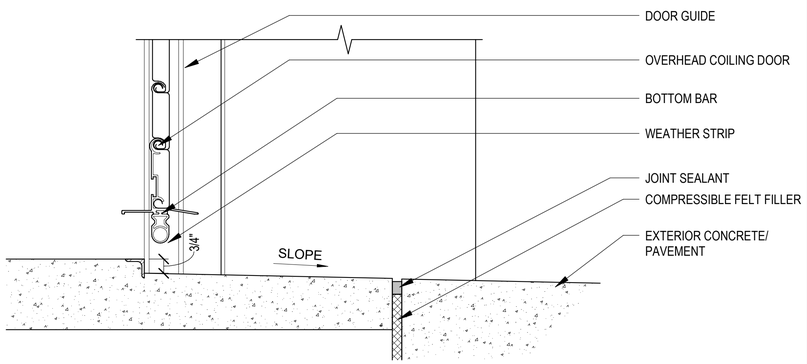

A4 OHC DOOR THRESHOLD
SCALE: 3" = 1'-0"

0 3" 6" 1'

APPR | DATE | DESCRIPTION | SYM

NAVFAC

REGISTERED ARCHITECT
CERTIFICATE NO.
49179
PAWEL PASZCZUK
Date Signed 11/11/21
ARIZONA, U.S.A.
Expires 03/31/2024
SEAL

RQ W.M. Jordan COMPANY – A JOINT VENTURE –

Michael Baker INTERNATIONAL
100 AIRSIDE DRIVE
MOON TOWNSHIP, PA 15108
A/E INFO

APPROVED
FOR COMMANDER NAVFAC

ACTIVITY
MARINE CORPS BASE CAMP LEJEUNE

SATISFACTORY TO DATE	DD/MM/YY
DES SH	DRW RQ CHK SS
PM / DM	TOWLER / ROOT
BRANCH HEAD	
DESIGN DIRECTOR	R.L.Stephens, Jr.
FIRE PROTECTION	DPS

NAVAL FACILITIES ENGINEERING SYSTEMS COMMAND ATLANTIC
NORFOLK, VA
DEPARTMENT OF THE NAVY
NAVAL FACILITIES ENGINEERING SYSTEMS COMMAND
ATLANTIC DESIGN AND CONSTRUCTION
MCB CAMP LEJEUNE
JACKSONVILLE, NC
P1527 LOGCOM CSP WAREHOUSE

EXTERIOR OVERHEAD COILING DOOR DETAILS

SCALE:	AS NOTED
EPROJECT NO.:	1639600
CONSTR. CONTR. NO.	N40085-20-C-0059
NAVFAC DRAWING NO.	14111192
SHEET	181 OF 447

A-517
DRAWFORM REVISION: 25 AUGUST 2020

P1527 FINAL SUBMISSION - 11/18/2021

PLOTTED: 11/15/2021 3:39:21 AM
FILE NAME: BIM 360/IHF PACKAGE 3/P1527 LOG COM CSP-1639600-A.rvt

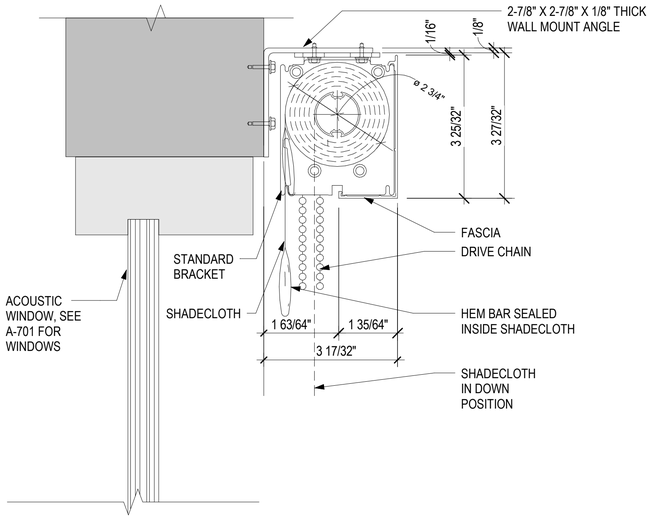

B1 FINISH DETAIL - SINGLE ROLLER SHADE WS2
SCALE: 6" = 1'-0"

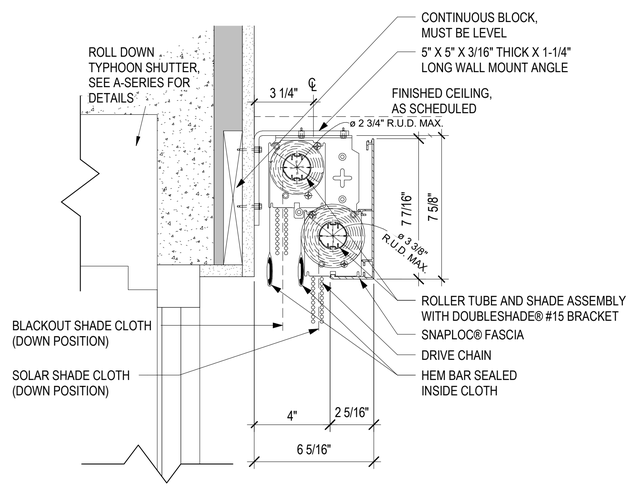

A1 FINISH DETAIL - DOUBLE ROLLER SHADE
SCALE: 3" = 1'-0"

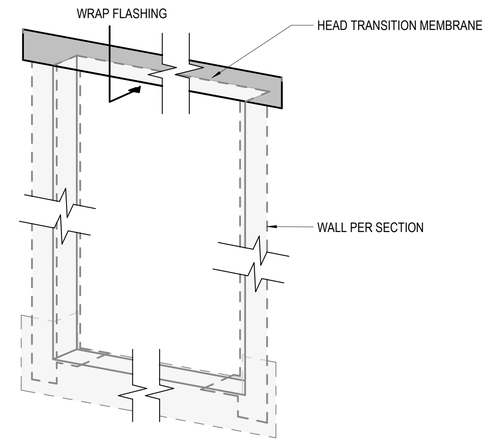

C3 TRANSITION MEMBRANE AT HEAD
SCALE: 1 1/2" = 1'-0"

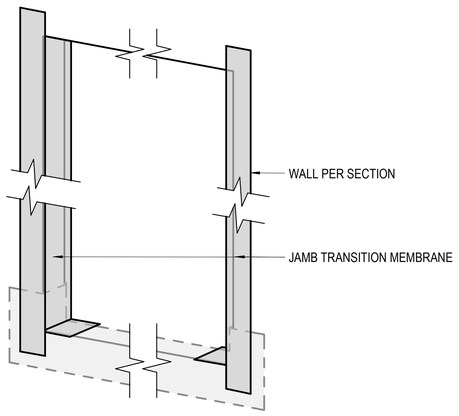

B3 TRANSITION MEMBRANE AT JAMB
SCALE: 1 1/2" = 1'-0"

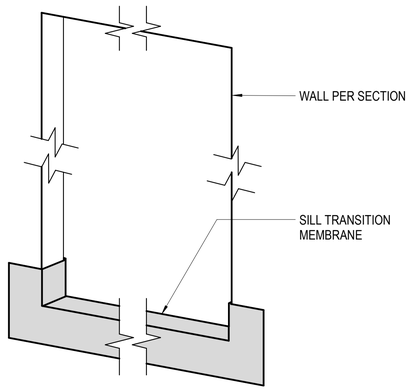

A3 TRANSITION MEMBRANE AT SILL
SCALE: 1 1/2" = 1'-0"

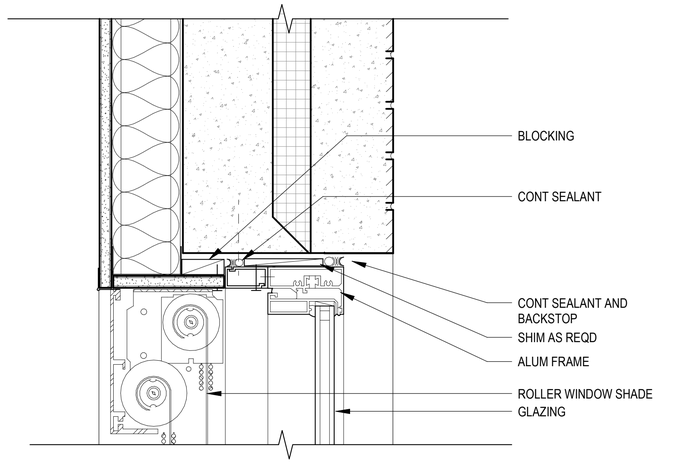

C4 EXTERIOR WINDOW HEAD
SCALE: 3" = 1'-0"

0 3" 6" 1'

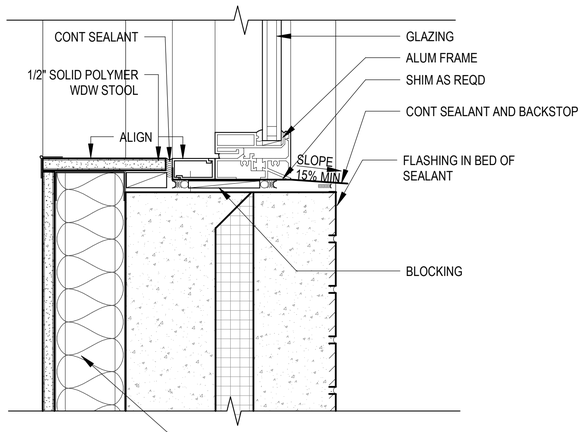

A4 EXTERIOR WINDOW SILL
SCALE: 3" = 1'-0"

0 3" 6" 1'

APPR | DATE | DESCRIPTION | SYM

NAVFAC

REGISTERED ARCHITECT
CERTIFICATE NO.
49179
PAWEL
PASZCZUK
Date signed 11/1/21
ARIZONA, U.S.A.
Expires 03/31/2024
SEAL

RQ W.M. Jordan COMPANY
~A JOINT VENTURE~

Michael Baker
INTERNATIONAL
100 AIRSIDE DRIVE
MOON TOWNSHIP, PA 15108
A/E INFO

APPROVED
FOR COMMANDER NAVFAC

ACTIVITY
MARINE CORPS BASE
CAMP LEJEUNE

SATISFACTORY TO DATE DD/MM/YY
DES SH | DRW RQ | CHK SS
PM / DM TOWLER / ROOT
BRANCH HEAD
DESIGN DIRECTOR R.L.Stephens, Jr.
FIRE PROTECTION DPS

DEPARTMENT OF THE NAVY
NAVAL FACILITIES ENGINEERING SYSTEMS COMMAND
ATLANTIC DESIGN AND CONSTRUCTION
NAVAL FACILITIES ENGINEERING SYSTEMS COMMAND ATLANTIC
NORFOLK, VA
MCB CAMP LEJEUNE
JACKSONVILLE, NC
P1527 LOGCOM CSP WAREHOUSE
EXTERIOR WINDOW DETAILS

SCALE: AS NOTED
EPROJECT NO.: 1639600
CONSTR. CONTR. NO. N40085-20-C-0059
NAVFAC DRAWING NO. 14111193
SHEET 182 OF 447

A-519

DRAWFORM REVISION: 25 AUGUST 2020

P1527 FINAL SUBMISSION - 11/18/2021

PLOTTED: 11/15/2021 3:39:22 AM
FILE NAME: BIM 360://ARF PACKAGE 3/P1527 LOG COM CSP-1639600-A.rvt

NOTES - PARTITION

1. ALL PARTITIONS IN RESTROOMS TO RECEIVE MOISTURE RESISTANT GYPSUM BOARD IN PLACE OF GYPSUM WALL BOARD.
2. ALL PARTITIONS AT SHOWER ENCLOSURES TO RECEIVE 5/8" CEMENT BOARD IN PLACE OF GYPSUM WALL BOARD.
3. WHERE WALLS ARE TO RECEIVE TILE OR STONE CLADDING, 5/8" CEMENT BOARD IS TO BE USED IN PLACE OF GYPSUM WALL BOARD.
4. ALL PERIMETER WALLS AROUND RESTROOMS THAT ARE NOT ALREADY REQUIRED TO RECEIVE AND STC RATING WILL RECEIVE SOUND ATTENUATING BATT INSULATION AND ACOUSTICAL SEALANT AT THE TOP AND BOTTOM OF THE WALL. THE SOUND ATTENUATING BATT INSULATION WILL BE CONTINUOUS THEN ENTIRE HEIGHT OF THE WALL.
5. FILL VOIDS AROUND WALL PENETRATIONS WITH FIRE STOPPING TO AVOID REDUCTION OF FIRE RATING.
6. ALL FIRE RATED PARTITIONS TO RECEIVE TYPE "X" GYPSUM BOARD.

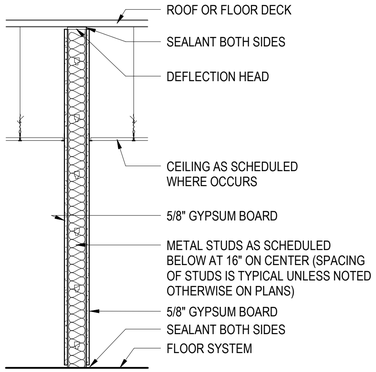

PARTITION TYPE 1A0

TYPE	FIRE RATED	CORE WIDTH	OVERALL WIDTH	STC RATED	UL LISTING	STC TEST
1A0.3	NON-RATED	3 5/8"	4 7/8"	NON-RATED	N/A	N/A
1A0.3c	NON-RATED	3 5/8"	4 7/8"	45	N/A	NGC 2391
1A0.3c Furr Wall	NON-RATED	3 5/8"	4 1/4"	45	N/A	N/A
1A0.6	NON-RATED	6"	7 1/4"	NON-RATED	N/A	N/A
1A0.6c	NON-RATED	6"	7 1/4"	45	N/A	NGC 2391

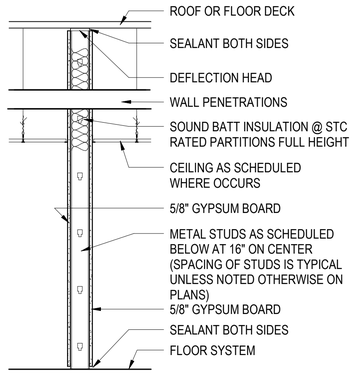

PARTITION TYPE 1A1

TYPE	FIRE RATED	CORE WIDTH	OVERALL WIDTH	STC RATED	UL LISTING	STC TEST
1A1.6c	1 HOUR	6"	7 1/4"	45	U465	NGC 2386

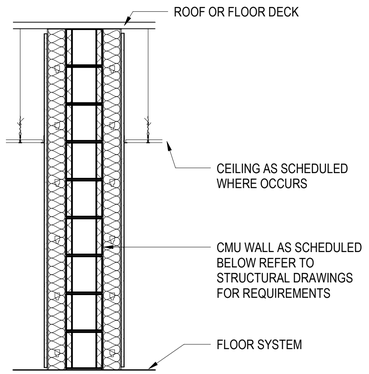

PARTITION TYPE 6A0

TYPE	FIRE RATED	CORE WIDTH	OVERALL WIDTH	STC RATED	UL LISTING	STC TEST
6A0.8	NON-RATED	8"	7 5/8"	NON-RATED	N/A	N/A
6A0.8c	NON-RATED	8"	7 5/8"	45	N/A	N/A
6A0.8c .C	NON-RATED	8"	1' - 4 1/8"	45	N/A	N/A
6A0.8c.A	NON-RATED	8"	11 7/8"	45	N/A	N/A
6A0.8d	NON-RATED	8"	7 5/8"	50	N/A	N/A
6A0.12c	NON-RATED	8"	11 5/8"	45	N/A	N/A

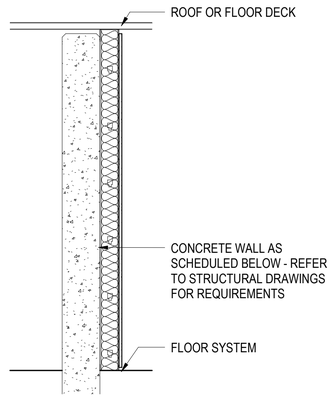

PARTITION TYPE 7A0

TYPE	FIRE RATING	CORE WIDTH	OVERALL WIDTH	STC RATING	UL LISTING
	NON-RATED	12"	2' - 0"		N/A
7A0.6	NON-RATED	6"	6"		N/A
7A0.8	NON-RATED	8"	8"		N/A
7A0.8c	NON-RATED	8"	1' - 0 1/4"	45	N/A

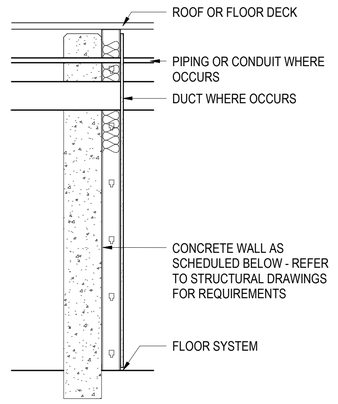

PARTITION TYPE 7A2

TYPE	FIRE RATING	CORE WIDTH	OVERALL WIDTH	UL LISTING
7A2.8	2 HOUR	8"	11 1/4"	U926
7A2.10	2 HOUR	12"	11 1/4"	U926

LEGEND - PARTITION TYPES



CORE TYPE
1 METAL STUD WALL
2 METAL STUD SHAFT WALL
3 METAL STUD (1 SIDED GYP BD)
4 WOOD STUD WALL
5 WOOD STUD (1 SIDED GYP BD)
6 CMU
7 CONCRETE
8 FURRING

CORE HEIGHT
A FULL HEIGHT (TO UNDERSIDE OF STRUCTURE)
B 6" ABOVE HIGHEST ADJACENT CEILING
C TO CEILING
D (D-Z) USER DEFINED (SPECIAL CONDITIONS)

RATING
0 NON-RATED
1 1 HOUR
2 2 HOUR
3 3 HOUR
4 4 HOUR
H 1/2 HOUR
S SMOKE RATED

CORE WIDTH
.1 METAL STUD (1 5/8")
.2 METAL STUD (2 1/2")
.3 METAL STUD (3 5/8")
.4 METAL STUD (4") WOOD STUD (3 1/2") CMU/CONCRETE (3 5/8")
.6 METAL STUD (6") WOOD STUD (5 1/2") CMU/CONCRETE (5 5/8")
.8 METAL STUD (8") WOOD STUD (7 1/4") CMU/CONCRETE (7 5/8")
.10 METAL STUD (10") WOOD STUD (9 1/4") CMU/CONCRETE (9 5/8")
.12 WOOD STUD (11 1/4") CMU/CONCRETE (11 5/8")

STC CLASSIFICATION
.a STC 35
.b STC 40
.c STC 45
.d STC 50
.e STC 55

NO	DESCRIPTION	DATE	APPR

NAVFAC

REGISTERED ARCHITECT
CERTIFICATE NO.
49179
PAWEL
PASZCZUK
Date Signed 11/11/21
ARIZONA, U.S.A.
Expires 03/31/2024
SEAL

IRQ W.M. Jordan COMPANY – A JOINT VENTURE –

Michael Baker INTERNATIONAL
100 AIRSIDE DRIVE
MOON TOWNSHIP, PA 15108
A/E INFO

APPROVED

FOR COMMANDER NAVFAC

ACTIVITY
MARINE CORPS BASE CAMP LEJEUNE

SATISFACTORY TO DATE DD/MM/YY

DES XXX DRW XXX CHK XXX

PM / DM TOWLER / ROOT

BRANCH HEAD

DESIGN DIRECTOR R.L.Stephens, Jr.

FIRE PROTECTION DPS

DEPARTMENT OF THE NAVY
NAVAL FACILITIES ENGINEERING SYSTEMS COMMAND
ATLANTIC DESIGN AND CONSTRUCTION
NAVAL FACILITIES ENGINEERING SYSTEMS COMMAND ATLANTIC
NORFOLK, VA
MCB CAMP LEJEUNE
JACKSONVILLE, NC
P1527 LOGCOM CSP WAREHOUSE
PARTITION TYPES

SCALE: AS NOTED
EPROJECT NO.: 1639600
CONSTR. CONTR. NO. N40085-20-C-0059
NAVFAC DRAWING NO. 14111168
SHEET 157 OF 447

A-601

DRAWFORM REVISION: 25 AUGUST 2020

P1527 FINAL SUBMISSION - 11/18/2021

PLOTTED: 11/15/2021 3:39:25 AM

FILE NAME: BIM 360://HF PACKAGE 3/P1527 LOG COM CSP-1639600-A.rvt

SCHEDULE - DOOR - ALL

DOOR NUMBER	TYPE	SIZE			DOOR LEAF		FRAME		DETAILS		RATING		COMMENTS
		WIDTH	HEIGHT	THICKNESS	TYPE	DOOR FINISH	TYPE	FRAME FINISH	HEAD	JAMB	FIRE	STC	
	D	5' - 9 1/2"	6' - 11 3/4"		(none)		(none)						NEED EXTERIOR DOOR STOREFRONT DETAILS
100	A	3' - 0"	7' - 0"	1 3/4"	WDSC		HM		A3/A612	A4/A612	60 MIN		
101	A	3' - 0"	7' - 0"	1 3/4"	WDSC		HM		A3/A612	A4/A612	60 MIN		
102	A	3' - 0"	7' - 0"	1 3/4"	WDSC		HM		A3/A612	A4/A612	60 MIN		
103	A	3' - 0"	7' - 0"	1 3/4"	WDSC		HM		A3/A612	A4/A612	60 MIN		
103A	E	10' - 0"	12' - 0"	2"	(none)		(none)		A2/A517	B4/A517			
105	A	3' - 0"	7' - 0"	1 3/4"	WDSC		HM		D4/A612	D5/A612			
106A	A	3' - 0"	7' - 0"	1 3/4"	WDSC		HM		B5/A612	B5/A612		45	
106B	A	3' - 0"	7' - 0"	1 3/4"	WDSC		HM		B5/A612	B5/A612		45	
108	A	3' - 0"	7' - 0"	1 3/4"	WDSC		HM		D4/A612	D5/A612			
109	A	3' - 0"	7' - 0"	1 3/4"	HM		HM		D4/A612	D5/A612			
110A	A	3' - 0"	7' - 0"	1 3/4"	WDSC		HM		B3/A612	B4/A612			
110AB	C	6' - 0"	7' - 0"	1 3/4"	WDSC		HM		D4/A612	D5/A612			
111	C	6' - 0"	7' - 0"	1 3/4"	WDSC		HM		B3/A612	B4/A612		45	
112	A	3' - 0 3/8"	7' - 0"	1 3/4"	WDSC		HM		B3/A612	B4/A612		45	
113A	C	6' - 0"	7' - 0"	1 3/4"	HM		HM		B5/A612	B5/A612		45	
113B	A	3' - 0"	7' - 0"	1 3/4"	HM		HM		B5/A612	B5/A612		45	
113BB	A	3' - 0"	7' - 0"	1 3/4"	WDSC		HM		D4/A612	D5/A612			
114	A	3' - 0"	7' - 0"	1 3/4"	HM		HM		B5/A612	B5/A612		45	
114B	E	10' - 0"	12' - 0"	2"	(none)		(none)		A2/A517	B4/A517			
115A	C	6' - 0"	7' - 0"	1 3/4"	HM		HM		B5/A612	B5/A612		45	
115B	A	3' - 0"	7' - 0"	1 3/4"	WDSC		HM		D4/A612	D5/A612		45	
116	C	6' - 0"	7' - 0"	1 3/4"	HM		HM		D4/A612	D5/A612			
117	C	6' - 0"	7' - 0"	1 3/4"	WDSC		HM		B5/A612	B5/A612			
117A	C	6' - 0"	7' - 0"	1 3/4"	WDSC		HM		B5/A612	B5/A612		45	
118	A	3' - 0"	7' - 0"	1 3/4"	WDSC		HM		D4/A612	D5/A612			
119	D	3' - 0"	7' - 0"	2"	HMI		HM						NEED TO DRAFT EXTERIOR DOOR DETAILS (STORE FRON) AND HAS 3 5/8" INTERIOR FUR WALL
120	A	3' - 0"	7' - 0"	1 3/4"	HMI		HM		C4/A516	B4/A516			
121	A	3' - 0"	7' - 0"	1 3/4"	HMI		HM		C4/A516	B4/A516			
122	B	6' - 0"	7' - 0"	1 3/4"	HMI		HM		C4/A516	B4/A516			
123	B	6' - 0"	7' - 0"	1 3/4"	HMI		HM		C4/A516	B4/A516			
124	B	6' - 0"	7' - 0"	1 3/4"	HMI		HM		C4/A516	B4/A516			
138DDD	E	10' - 0"	12' - 0"	2"	(none)		(none)		A2/A517	B4/A517			
138EEEE	C	6' - 0"	7' - 0"	1 3/4"	WDSC		HM		C4/A612	C5/A612		45	
138FFFF	A	3' - 0"	7' - 0"	1 3/4"	WDSC		HM		C4/A612	C5/A612			
138UUU	E	10' - 0"	12' - 0"	2"	(none)		(none)						NEED OH COILING DOOR DETAIL FOR AN INTERIOR CONC WALL
141A	E	10' - 0"	12' - 0"	2"	(none)		(none)		A2/A517	B4/A517			
141B	E	10' - 0"	12' - 0"	2"	(none)		(none)		A2/A517	B4/A517			
141C	A	3' - 0 3/8"	7' - 0"	1 3/4"	(none)		(none)						
145	E	10' - 0"	12' - 0"	2"	(none)		(none)		A2/A517	B4/A517			
200	A	3' - 0"	7' - 0"	1 3/4"	WDSC		HM		A3/A612	A4/A612	60 MIN	45	
200A	D	3' - 0"	7' - 0"	2"	HMI		HM					45	NEED DETAIL FOR EXTERIOR DOORS THAT ALSO INCLUDE FUR WALLS
201	A	3' - 0"	7' - 0"	1 3/4"	WDSC		HM		A3/A612	A4/A612	60 MIN	45	
202	A	3' - 0"	7' - 0"	1 3/4"	WDSC		HM		A3/A612	A4/A612	60 MIN		
203	A	3' - 0"	7' - 0"	1 3/4"	WDSC		HM		D4/A612	D5/A612			
204	A	3' - 0"	7' - 0"	1 3/4"	WDSC		HM		D4/A612	D5/A612			
205	A	3' - 0"	7' - 0"	1 3/4"	HM		HM		A3/A612	A4/A612	60 MIN		
206	A	3' - 0"	7' - 0"	1 3/4"	WDSC		HM		B3/A612	B4/A612			
207	A	3' - 0"	7' - 0"	1 3/4"	WDSC		HM		A3/A612	A4/A612	60 MIN		
208A	C	6' - 0"	7' - 0"	1 3/4"	HM		HM		D4/A612	D5/A612			
208B	C	6' - 0"	7' - 0"	1 3/4"	HM		HM		B5/A612	B5/A612		45	
209A	B	6' - 0"	7' - 0"	1 3/4"	HM		HM		D4/A612	D5/A612		45	
209B	C	6' - 0"	7' - 0"	1 3/4"	HM		HM		B5/A612	B5/A612			
209C	A	3' - 0"	7' - 0"	1 3/4"	HM		HM		B5/A612	B5/A612			
209D	B	6' - 0"	7' - 0"	1 3/4"	HMI		HM		C4/A516	B4/A516			
210	A	3' - 0"	7' - 0"	1 3/4"	WDSC		HM		A3/A612	A4/A612	60 MIN		
211	A	3' - 0"	7' - 0"	1 3/4"	WDSC		HM		A3/A612	A4/A612	60 MIN		
212B	A	3' - 0"	7' - 0"	1 3/4"	HMI		HM		C4/A516	B4/A516			
213	B	6' - 0"	7' - 0"	1 3/4"	HMI		HM		C4/A516	B4/A516			
C013	B	6' - 0"	7' - 0"	1 3/4"	HMI		HM						DOUBLE STOREFRONT
C014	B	6' - 0"	7' - 0"	1 3/4"	HMI		HM		C4/A516	B4/A516			
C022	A	3' - 0"	7' - 0"	1 3/4"	HM		HM		D4/A612	D5/A612			
G010	A	3' - 0"	7' - 0"	1 3/4"	WDSC		HM		D4/A612	D5/A612			
G011	A	3' - 0"	7' - 0"	1 3/4"	WDSC		HM		D4/A612	D5/A612			
G012	A	3' - 0"	7' - 0"	1 3/4"	WDSC		HM		D4/A612	D5/A612			
G020	A	3' - 0"	7' - 0"	1 3/4"	WDSC		HM		D4/A612	D5/A612			
G021	A	3' - 0"	7' - 0"	1 3/4"	WDSC		HM		D4/A612	D5/A612			
G022	A	3' - 0"	7' - 0"	1 3/4"	WDSC		HM		D4/A612	D5/A612			
V010	D	3' - 0"	7' - 0"	2"	HMI		HM						SAME AS 119 EXCEPT THAT IT HAS NO FUR WALL ON INTERIOR

SCHEDULE - WINDOW

1ST FLOOR		
12	Window-Fixed: 36" x 60"	14

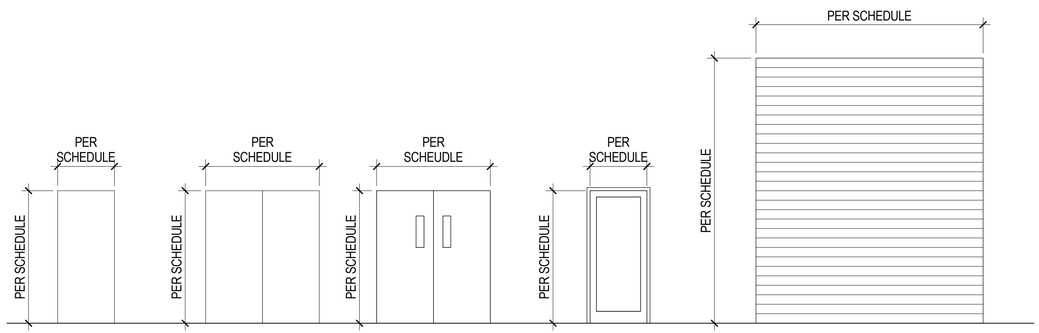

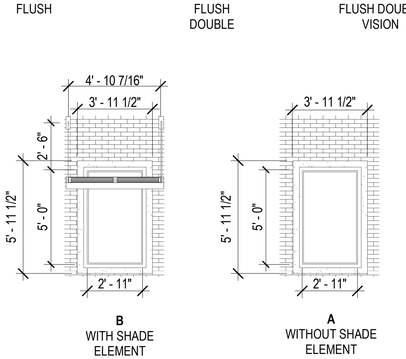

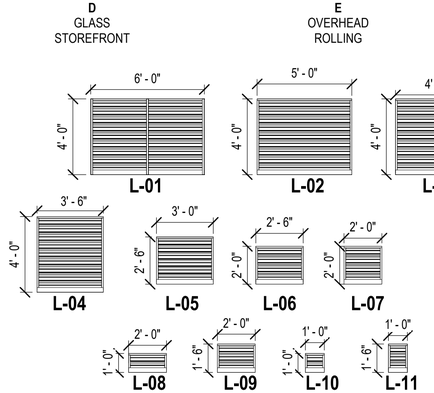

WINDOWS AND LOUVER TYPES

SCALE: 1/4" = 1'-0"

LEGEND - DOOR FRAME

TYPE	DESCRIPTION
-	NONE
AC	ACCESS
AL	ALUMINUM
CS	CUSTOM STEEL
HM	HOLLOW METAL
HMG	HOLLOW METAL (GALVANIZED)
MSS	METAL SCREEN AND STORM
PAM	PRE-ASSEMBLED METAL
SS	STANDARD STEEL
WD	WOOD

LEGEND - DOOR LEAF

TYPE	DESCRIPTION
AC	ACCESS
AE	AUTOMATIC ENTRANCE
AFE	ALUMINUM-FRAMED ENTRANCE
AGE	ALL-GLASS ENTRANCE
CL	CHAIN LINK
CS	CUSTOM STEEL
CSI	CUSTOM STEEL (INSULATED)
FD	FOLDING
HM	HOLLOW METAL
HMI	HOLLOW METAL (INSULATED)
MSS	METAL SCREEN AND STORM
OC	OVERHEAD COILING
OCI	OVERHEAD COILING (INSULATED)
OSA	OVERHEAD SECTIONAL ALUMINUM
OSAI	OVERHEAD SECTIONAL ALUMINUM (INSULATED)
OSS	OVERHEAD SECTIONAL STEEL
OSSI	OVERHEAD SECTIONAL STEEL (INSULATED)
OSW	OVERHEAD SECTIONAL WOOD
PAM	PRE-ASSEMBLED METAL
PAMI	PRE-ASSEMBLED METAL (INSULATED)
RE	REVOLVING ENTRANCE
SAF	SLIDING ALUMINUM-FRAMED GLASS
SPF	SLIDING PLASTIC-FRAMED GLASS
SRW	STILE AND RAIL WOOD
SS	STANDARD STEEL
SWF	SLIDING WOOD-FRAMED GLASS
WC	WOOD CLOSET
WDHC	WOOD FLUSH (HOLLOW CORE)
WDSC	WOOD FLUSH (SOLID CORE)

APPR | DATE | SYM | DESCRIPTION

NAVFAC

REGISTERED ARCHITECT CERTIFICATE NO. 49179 PAWEL PASZCZUK Date Signed 11/11/21 ARIZONA, U.S.A.
Expires 03/31/2024 SEAL

IRQ WM Jordan COMPANY – A JOINT VENTURE –

Michael Baker INTERNATIONAL
100 AIRSIDE DRIVE MOON TOWNSHIP, PA 15108 A/E INFO

APPROVED
FOR COMMANDER NAVFAC
ACTIVITY
MARINE CORPS BASE CAMP LEJEUNE
SATISFACTORY TO DATE DD/MM/YY
DES XXX DRW XXX CHK XXX
PM / DM TOWLER / ROOT
BRANCH HEAD
DESIGN DIRECTOR R.L.Stephens, Jr.
FIRE PROTECTION DPS

DEPARTMENT OF THE NAVY
NAVAL FACILITIES ENGINEERING SYSTEMS COMMAND ATLANTIC
ATLANTIC DESIGN AND CONSTRUCTION
NAVAL FACILITIES ENGINEERING SYSTEMS COMMAND NORFOLK, VA
MCB CAMP LEJEUNE
JACKSONVILLE, NC
P1527 LOGCOM CSP WAREHOUSE

DOOR SCHEDULE, DOOR AND WINDOW ELEVATIONS

SCALE: AS NOTED
EPROJECT NO.: 1639600
CONSTR. CONTR. NO. N40085-20-C-0059
NAVFAC DRAWING NO. 14111167
SHEET 156 OF 447

A-611

DRAWFORM REVISION: 25 AUGUST 2020

P1527 FINAL SUBMISSION - 11/18/2021

PLOTTED: 11/15/2021 3:39:30 AM
FILE NAME: BIM 360://HF PACKAGE 3/P1527 LOG COM CSP-1639600-A.rvt

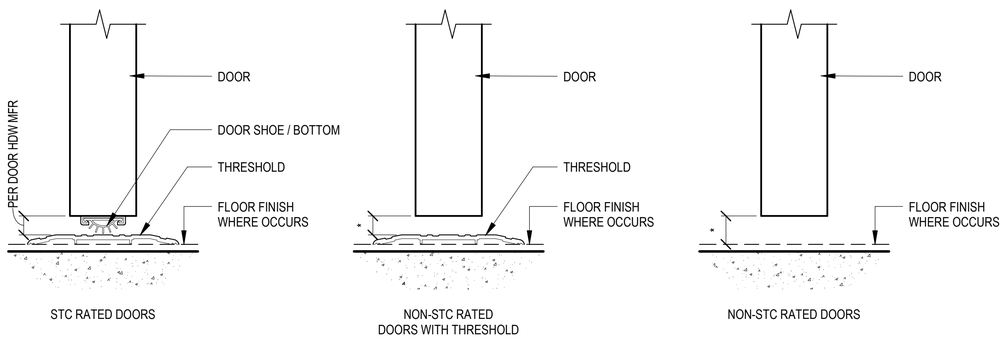

C1 INTERIOR DOOR THRESHOLD
SCALE: 6" = 1'-0"

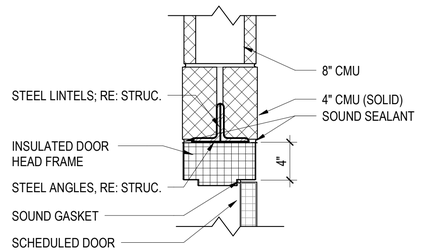

D4 CMU WALL HEAD DETAIL
SCALE: 1 1/2" = 1'-0"

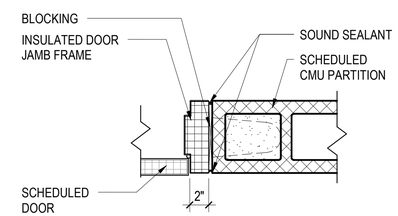

D5 CMU WALL JAMB DETAIL
SCALE: 1 1/2" = 1'-0"

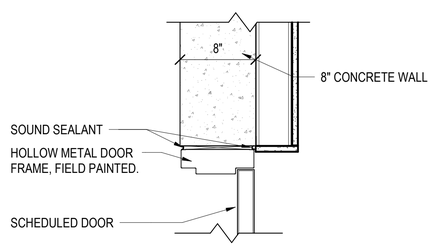

C4 CONCRETE AND METAL STUD FURR WALL HEAD DETAIL
SCALE: 1 1/2" = 1'-0"

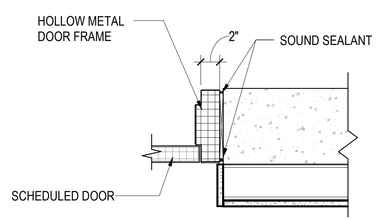

C5 CONCRETE & METAL STUD FURR WALL JAMB DETAIL
SCALE: 1 1/2" = 1'-0"

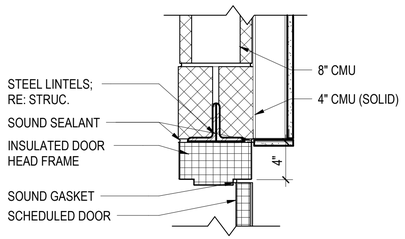

B3 CMU WITH METAL STUD FURR WALL HEAD DETAIL
SCALE: 1 1/2" = 1'-0"

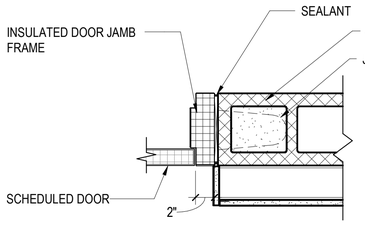

B4 CMU WITH METAL STUD FURR WALL JAMB DETAIL
SCALE: 1 1/2" = 1'-0"

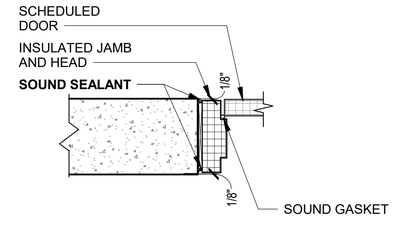

B5 INTERIOR CONCRETE WALL STC 45 DOOR JAMB DETAIL (HEAD SIMILAR)
SCALE: 1 1/2" = 1'-0"

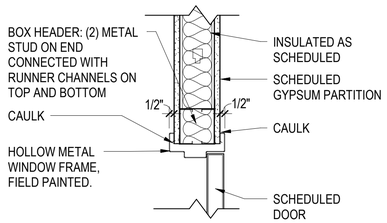

A3 METAL STUD WALL HEAD DETAIL
SCALE: 1 1/2" = 1'-0"

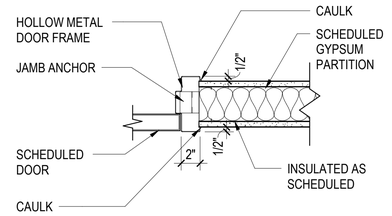

A4 METAL STUD WALL JAMB DETAIL
SCALE: 1 1/2" = 1'-0"

0 1 1/2" 3" 6"

0 6" 1' 2'

NO.	DESCRIPTION	DATE	APPR

NAVFAC

REGISTERED ARCHITECT CERTIFICATE NO. 49179 PAWEL PASZCZUK Date Signed 11/11/21 ARIZONA, U.S.A. Expires 03/31/2024 SEAL

IRQ Wm. Jordan COMPANY – A JOINT VENTURE –

Michael Baker INTERNATIONAL
100 AIRSIDE DRIVE
MOON TOWNSHIP, PA 15108 A/E INFO

APPROVED

FOR COMMANDER NAVFAC

ACTIVITY
MARINE CORPS BASE CAMP LEJEUNE

SATISFACTORY TO DATE	DD/MM/YY
DES XXX	DRW XXX CHK XXX
PM / DM	TOWLER / ROOT
BRANCH HEAD	
DESIGN DIRECTOR	R.L.Stephens, Jr.
FIRE PROTECTION	DPS

DEPARTMENT OF THE NAVY
NAVAL FACILITIES ENGINEERING SYSTEMS COMMAND
ATLANTIC DESIGN AND CONSTRUCTION
NAVAL FACILITIES ENGINEERING SYSTEMS COMMAND ATLANTIC NORFOLK, VA
MCB CAMP LEJEUNE
JACKSONVILLE, NC
P1527 LOGCOM CSP WAREHOUSE

DOOR AND JAMB DETAILS

SCALE:	AS NOTED
EPROJECT NO.:	1639600
CONSTR. CONTR. NO.	N40085-20-C-0059
NAVFAC DRAWING NO.	14111170
SHEET	159 OF 447

A-612

DRAWFORM REVISION: 25 AUGUST 2020

P1527 FINAL SUBMISSION - 11/18/2021

PLOTTED: 11/15/2021 3:39:31 AM

FILE NAME: BIM 360://AIF PACKAGE 3/P1527 LOG COM CSP-1639600-A.rvt

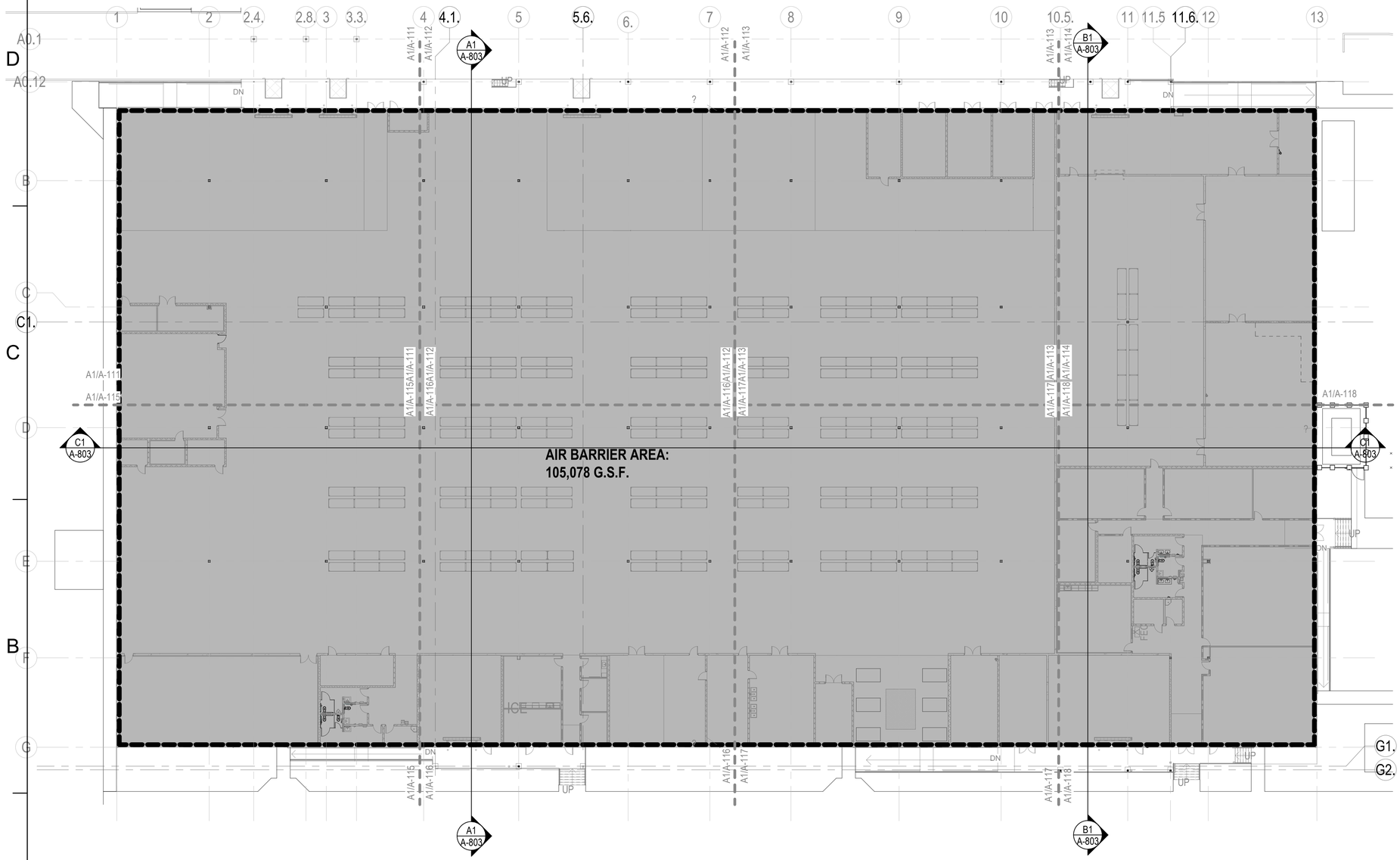

AIR BARRIER - FLOOR PLAN

SCALE: 3/64" = 1'-0"

KEYPLAN

A	B	C	D
E	F	G	H

N

APPR	DATE	DESCRIPTION	SYM

NAVFAC

REGISTERED ARCHITECT
CERTIFICATE NO.
49179
PAWEL
PASZCZUK
Date Signed 11/1/21
ARIZONA, U.S.A.
Expires 03/31/2024
SEAL

IRQ Jordan COMPANY – A JOINT VENTURE –

Michael Baker INTERNATIONAL
100 AIRSIDE DRIVE
MOON TOWNSHIP, PA 15108
A/E INFO

APPROVED

FOR COMMANDER NAVFAC

ACTIVITY
MARINE CORPS BASE
CAMP LEJEUNE

SATISFACTORY TO DATE DD/MM/YY

DES Designer DRW Author CHK Checker

PM / DM TOWLER / ROOT

BRANCH HEAD

DESIGN DIRECTOR R.L.Stephens, Jr.

FIRE PROTECTION DPS

DEPARTMENT OF THE NAVY
NAVAL FACILITIES ENGINEERING SYSTEMS COMMAND
ATLANTIC DESIGN AND CONSTRUCTION
NAVAL FACILITIES ENGINEERING SYSTEMS COMMAND ATLANTIC
NORFOLK, VA
MCB CAMP LEJEUNE
JACKSONVILLE, NC
P1527 LOGCOM CSP WAREHOUSE
AIR BARRIER - FLOOR PLAN

SCALE:	AS NOTED
EPROJECT NO.:	1639600
CONSTR. CONTR. NO.	N40085-20-C-0059
NAVFAC DRAWING NO.	14111194
SHEET	183 OF 447

A-801

DRAWFORM REVISION: 25 AUGUST 2020

P1527 FINAL SUBMISSION - 11/18/2021

PLOTTED: 11/15/2021 3:39:33 AM

FILE NAME: BIM 360://HF PACKAGE 3/P1527 LOG COM CSP-1639600-A.rvt

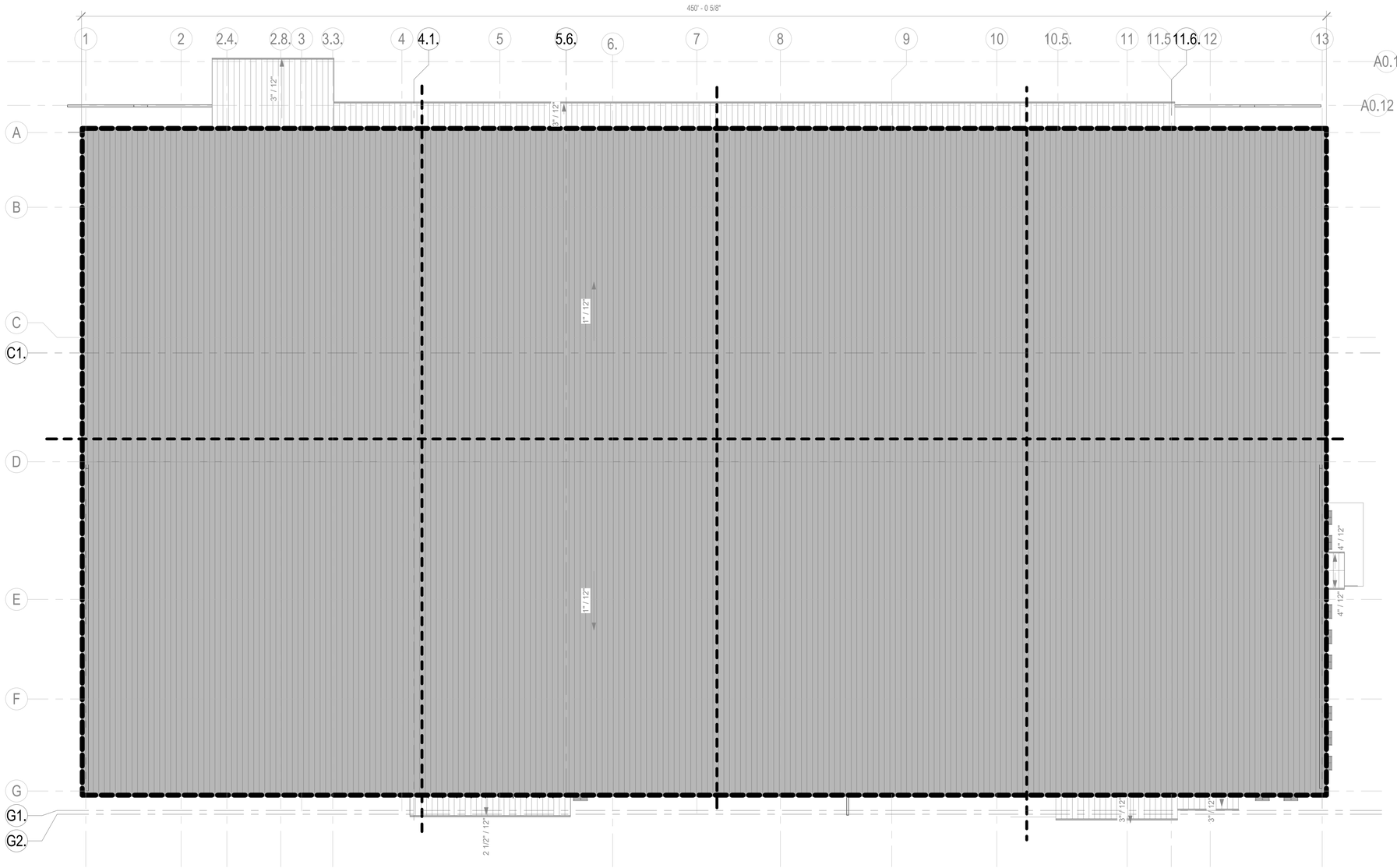

AIR BARRIER - ROOF PLAN

SCALE: 3/64" = 1'-0"

KEYPLAN

A	B	C	D
E	F	G	H

N

APPR	DATE	DESCRIPTION	SYM

NAVFAC

REGISTERED ARCHITECT
CERTIFICATE NO.
49179
PAWEL
PASZCZUK
Date Signed 11/11/21
ARIZONA, U.S.A.
Expires 03/31/2024
SEAL

IRQ WM Jordan COMPANY
– A JOINT VENTURE –

Michael Baker
INTERNATIONAL
100 AIRSIDE DRIVE
MOON TOWNSHIP, PA 15108
A/E INFO

APPROVED
FOR COMMANDER NAVFAC

ACTIVITY
MARINE CORPS BASE
CAMP LEJEUNE

SATISFACTORY TO DATE DD/MM/YY
DES Designer DRW Author CHK Checker
PM / DM TOWLER / ROOT
BRANCH HEAD
DESIGN DIRECTOR R.L.Stephens, Jr.
FIRE PROTECTION DPS

DEPARTMENT OF THE NAVY
NAVAL FACILITIES ENGINEERING SYSTEMS COMMAND
ATLANTIC DESIGN AND CONSTRUCTION
NAVAL FACILITIES ENGINEERING SYSTEMS COMMAND ATLANTIC
NORFOLK, VA
MCB CAMP LEJEUNE
JACKSONVILLE, NC
P1527 LOGCOM CSP WAREHOUSE
AIR BARRIER - ROOF PLAN

SCALE: AS NOTED
EPROJECT NO.: 1639600
CONSTR. CONTR. NO. N40085-20-C-0059
NAVFAC DRAWING NO. 14111195
SHEET 184 OF 447

A-802

DRAWFORM REVISION: 25 AUGUST 2020

P1527 FINAL SUBMISSION - 11/18/2021

PLOTTED: 11/15/2021 3:39:36 AM

FILE NAME: BIM 360://HF PACKAGE 3/P1527 LOG COM CSP-1639600-A.rvt

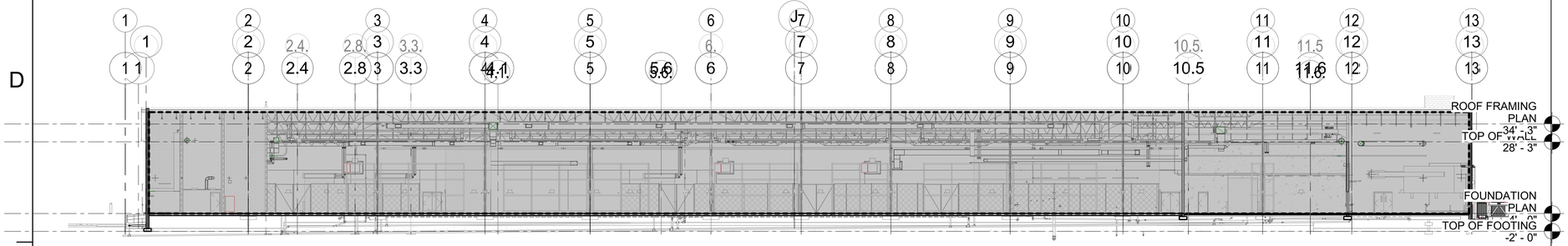

C1 AIR BARRIER - BUILDING SECTION EAST/WEST
SCALE: 3/64" = 1'-0"

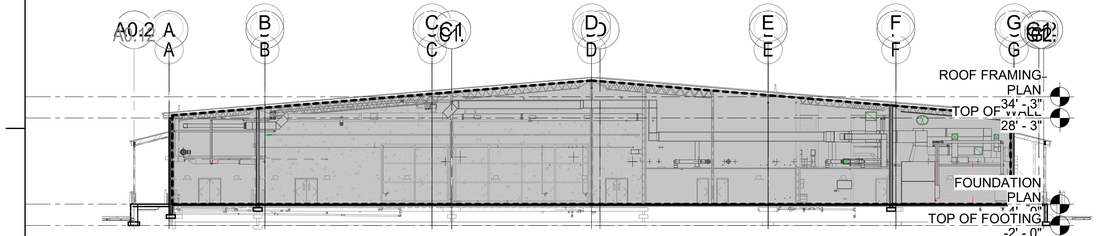

B1 AIR BARRIER BUILDING SECTION NORTH/SOUTH 1
SCALE: 3/64" = 1'-0"

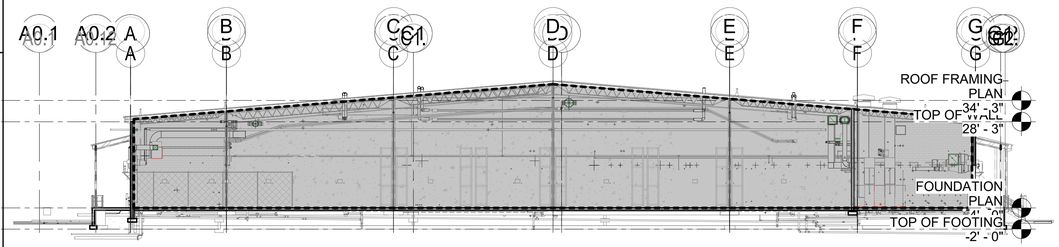

A1 AIR BARRIER BUILDING SECTION NORTH/SOUTH 2
SCALE: 3/64" = 1'-0"

SYM	DESCRIPTION	DATE	APPR

NAVFAC

REGISTERED ARCHITECT
CERTIFICATE NO.
49179
PAWEL PASZCZUK
Date Signed 11/11/21
ARIZONA, U.S.A.
Expires 03/31/2024
SEAL

RQ W.M. Jordan COMPANY
- A JOINT VENTURE -

Michael Baker
INTERNATIONAL
100 AIRSIDE DRIVE
MOON TOWNSHIP, PA 15108
A/E INFO

APPROVED

FOR COMMANDER NAVFAC

ACTIVITY
MARINE CORPS BASE
CAMP LEJEUNE

SATISFACTORY TO DATE DD/MM/YY
DES Designer FRW Author CHK Checker
PM / DM TOWLER / ROOT
BRANCH HEAD
DESIGN DIRECTOR R.L.Stephens, Jr.
FIRE PROTECTION DPS

DEPARTMENT OF THE NAVY
NAVAL FACILITIES ENGINEERING SYSTEMS COMMAND
NAVAL FACILITIES ENGINEERING SYSTEMS COMMAND ATLANTIC
ATLANTIC DESIGN AND CONSTRUCTION
NORFOLK, VA
MCB CAMP LEJEUNE
JACKSONVILLE, NC
P1527 LOGCOM CSP WAREHOUSE

AIR BARRIER - BUILDING SECTIONS

SCALE: AS NOTED
EPROJECT NO.: 1639600
CONSTR. CONTR. NO. N40085-20-C-0059
NAVFAC DRAWING NO. 14111196
SHEET 185 OF 447

A-803

DRAWFORM REVISION: 25 AUGUST 2020

P1527 FINAL SUBMISSION - 11/18/2021

PLOTTED: 11/15/2021 3:39:52 AM

FILE NAME: BIM 360://HF PACKAGE 3/P1527 LOG COM CSP-1639600-A.rvt

UNCLASSIFIED



STM	DESCRIPTION	DATE	APPR

NAVFAC

REGISTERED ARCHITECT
CERTIFICATE NO.
49179
PAWEL
PASZCZUK
Date Signed 11/11/21
ARIZONA, U.S.A.
Expires 03/31/2024
SEAL

IRQ W.M. Jordan COMPANY – A JOINT VENTURE –

Michael Baker INTERNATIONAL
100 AIRSIDE DRIVE
MOON TOWNSHIP, PA 15108
A/E INFO

APPROVED

FOR COMMANDER NAVFAC

ACTIVITY
MARINE CORPS BASE
CAMP LEJEUNE

SATISFACTORY TO DATE DD/MM/YY

DES Designer DRW Author CHK Checker

PM / DM TOWLER / ROOT

BRANCH HEAD

DESIGN DIRECTOR R.L.Stephens, Jr.

FIRE PROTECTION DPS

DEPARTMENT OF THE NAVY
NAVAL FACILITIES ENGINEERING SYSTEMS COMMAND
ATLANTIC DESIGN AND CONSTRUCTION

NAVAL FACILITIES ENGINEERING SYSTEMS COMMAND ATLANTIC
NORFOLK, VA

MCB CAMP LEJEUNE

JACKSONVILLE, NC

P1527 LOGCOM CSP WAREHOUSE

ARCHITECTURAL RENDERINGS

SCALE: AS NOTED

EPROJECT NO.: 1639600

CONSTR. CONTR. NO.
N40085-20-C-0059

NAVFAC DRAWING NO.
14111197

SHEET 186 OF 447

A-900

DRAWFORM REVISION: 25 AUGUST 2020

P1527 FINAL SUBMISSION - 11/18/2021

PLOTTED: 11/15/2021 3:39:52 AM

FILE NAME: BIM 360://HF PACKAGE 3/P1527 LOG COM CSP-1639600-A.rvt

UNCLASSIFIED



APPR	DATE	DESCRIPTION	SYM

NAVFAC

REGISTERED ARCHITECT
CERTIFICATE NO.
49179
PAWEL
PASZCZUK
Date Signed 11/17/21
ARIZONA, U.S.A.
Expires 03/31/2024
SEAL

IRQ W.M. Jordan COMPANY
~A JOINT VENTURE~

Michael Baker
INTERNATIONAL
100 AIRSIDE DRIVE
MOON TOWNSHIP, PA 15108
A/E INFO

APPROVED

FOR COMMANDER NAVFAC

ACTIVITY
MARINE CORPS BASE
CAMP LEJEUNE

SATISFACTORY TO DATE DD/MM/YY

DES Designer DRW Author CHK Checker

PM / DM TOWLER / ROOT

BRANCH HEAD

DESIGN DIRECTOR R.L.Stephens, Jr.

FIRE PROTECTION DPS

DEPARTMENT OF THE NAVY
NAVAL FACILITIES ENGINEERING SYSTEMS COMMAND
ATLANTIC DESIGN AND CONSTRUCTION

NAVAL FACILITIES ENGINEERING SYSTEMS COMMAND ATLANTIC
NORFOLK, VA

MCB CAMP LEJEUNE
JACKSONVILLE, NC

P1527 LOGCOM CSP WAREHOUSE

ARCHITECTURAL RENDERINGS

SCALE: AS NOTED

EPROJECT NO.: 1639600

CONSTR. CONTR. NO.
N40085-20-C-0059

NAVFAC DRAWING NO.
14111198

SHEET 187 OF 447

A-902

DRAWFORM REVISION: 25 AUGUST 2020

P1527 FINAL SUBMISSION - 11/18/2021

PLOTTED: 11/15/2021 3:39:53 AM

FILE NAME: BIM 360://AIF PACKAGE 3/P1527 LOG COM CSP-1639600-A.rvt

UNCLASSIFIED



SYM	DESCRIPTION	DATE	APPR

NAVFAC

REGISTERED ARCHITECT
CERTIFICATE NO.
49179
PAWEL
PASZCZUK
Date Signed 11/11/21
ARIZONA, U.S.A.
Expires 03/31/2024
SEAL

RQ W.M. Jordan COMPANY
- A JOINT VENTURE -

Michael Baker
INTERNATIONAL
100 AIRSIDE DRIVE
MOON TOWNSHIP, PA 15108
A/E INFO

APPROVED

FOR COMMANDER NAVFAC

ACTIVITY
MARINE CORPS BASE
CAMP LEJEUNE

SATISFACTORY TO DATE DD/MM/YY

DES Designer FRW Author CHK Checker

PM / DM TOWLER / ROOT

BRANCH HEAD

DESIGN DIRECTOR R.L.Stephens, Jr.

FIRE PROTECTION DPS

DEPARTMENT OF THE NAVY
NAVAL FACILITIES ENGINEERING SYSTEMS COMMAND
NAVAL FACILITIES ENGINEERING SYSTEMS COMMAND ATLANTIC
ATLANTIC DESIGN AND CONSTRUCTION
NORFOLK, VA

MCB CAMP LEJEUNE
JACKSONVILLE, NC

P1527 LOGCOM CSP WAREHOUSE

ARCHITECTURAL RENDERINGS

SCALE: AS NOTED
EPROJECT NO.: 1639600
CONSTR. CONTR. NO. N40085-20-C-0059
NAVFAC DRAWING NO. 14111199
SHEET 188 OF 447

A-903

DRAWFORM REVISION: 25 AUGUST 2020

P1527 FINAL SUBMISSION - 11/18/2021

UNCLASSIFIED

PLOTTED: 11/15/2021 3:39:54 AM

FILE NAME: BIM 360://HF PACKAGE 3/P1527 LOG COM CSP-1639600-A.rvt

UNCLASSIFIED

SCHEDULE - INTERIOR MATERIAL & COLOR BASIS OF DESIGN

FINISH	DESCRIPTION	MANUFACTURER	STYLE	COLOR	SIZE	COMMENTS
ACP1	ACOUSTICAL CEILING PANEL	ARMSTRONG	OPTIMA, SQUARE EDGE	WHITE	24" X 24", 9/16" GRID	
CG1	CORNER GUARD	CONSTRUCTION SPECIALTIES	VINYL COVER W/ ALUMINUM RETAINER	265 FOG	FULL HEIGHT, 3" LEGS	10'-0"H IN AREAS WITH OPEN CEILINGS
G1	GROUT	LATICRETE	SPECTRALOCK EPOXY	78 STERLING SILVER	-	USED IN CONJUNCTION WITH PT1
G2	GROUT	LATICRETE	SPECTRALOCK EPOXY	60 DUSTY GREY	-	USED IN CONJUNCTION WITH PT2, PT3
LVT1	LUXURY VINYL TILE	MANNINGTON	CITY BLOCK	ANT206 PROCESS	18" X 18"	
N/A	PAINT - DOOR AND TRIM	SHERWIN WILLIAMS	SEMI-GLOSS FINISH	SW7068 GRIZZLE GRAY	-	HM DOOR/FRAME AND STAIR HANDRAIL
N/A	SIGNAGE	2/90	SLIDE	TOP INSERT: COLOR: 704 BLACK / COPY: 708 SOFT WHITE; BOTTOM INSERT: COLOR: 708 SOFT WHITE / COPY: 704 BLACK, END CAP: ANODIZED – 101 SATIN NATURAL	-	SEE IG-SERIES FOR SIGNAGE PLANS, DETAILS AND SCHEDULES
N/A	WOOD DOOR FINISH	MASONITE	PONDEROSA PINE	MATCH WILSONART 7944K CAFELE	-	WDMA 1.5.1-A CUSTOM 'A'
P1	PAINT - CEILING	SHERWIN WILLIAMS	FLAT FINISH	SW7757 HIGH REFLECTIVE WHITE	-	
P2	PAINT - CEILING	SHERWIN WILLIAMS	EPOXY SEMI-GLOSS FINISH	SW7757 HIGH REFLECTIVE WHITE	-	
P3	PAINT - FIELD	SHERWIN WILLIAMS	EGGSHELL FINISH	SW7647 CRUSHED ICE	-	
P4	PAINT - FIELD	SHERWIN WILLIAMS	EPOXY MOISTURE RESISTANT SEMI-GLOSS FINISH	SW7647 CRUSHED ICE	-	
P5	PAINT - ACCENT	SHERWIN WILLIAMS	EGGSHELL FINISH	SW7650 ELLIE GRAY	-	
PL1	PLASTIC LAMINATE - CASEWORK AND VANITY APRON	WILSONART	FINE VELVET FINISH	4943-38 CLASSIC LINEN	-	
PT1	PORCELAIN TILE - FLOOR	DALTILE	CHORD	CH25 FORTE GREY	12" X 24"	
PT2	PORCELAIN TILE - WALL	DALTILE	MUSEO	MU30 EXHIBITION WHITE	12" X 24"	SEE IN501 - TYPICAL WALL TILE ELEVATION
PT3	PORCELAIN TILE - WALL ACCENT	DALTILE	MUSEO - MOSAIC	MU30 EXHIBITION WHITE	2" X 2", 6"H +/-	SEE IN501 - TYPICAL WALL TILE ELEVATION
RB1	RESILIENT BASE	TARKETT	BASEWORKS, CONTINUOUS ROLL - COVE	20 CHARCOAL	6"H	
SC1	SEALED CONCRETE	SHERWIN WILLIAMS OR EQUAL	WATER BASED EPOXY COATING	TINT TO MATCH SHERWIN WILLIAMS SW7650 ELLIE GRAY		MINIMUM 3 COATS
SS1	SOLID SURFACE - COUNTERS	CORIAN	EASED EDGE	ASH AGGREGATE	-	
SS2	SOLID SURFACE - WINDOW STOOLS AND INTEGRAL SINKS	CORIAN	EASED EDGE (WHERE APPLICABLE), SINK: 8254	GLACIER WHITE	1/2"TH STOOL	EXTERIOR WINDOWS
SS3	SOLID SURFACE - BACKSPLASH AND SIDESPLASHES	CORIAN	N/A	ASH AGGREGATE	1/2" TH. / 6"H UNLESS NOTED OTHERWISE	SEE IN501 - BREAK ROOM ELEVATIONS
TP1	TOILET PARTITIONS	SCRANTON PRODUCTS	ECLIPSE FLOOR MOUNTED, OVERHEAD BRACED, SOLID PLASTIC HDPE	CONCRETE	72"H	RESTROOMS, SEE ARCHITECTURAL SERIES
WM1	WALK-OFF MAT SYSTEM	JL INDUSTRIES	JL-800 SERIES, RECESSED - CARPET INSERT	41 ASH	-	SEE A-SERIES FOR SIZE AND LOCATION, RUBBER EDGE INSERT TO MATCH CARPET INSERT COLOR
WP1	WALL PROTECTION	WALLGUARD	STAINLESS STEEL	BRUSHED STAINLESS	3'-0"H	BEHIND JANITOR CLOSET MOP SINK WALLS; PROVIDE MATCHING STAINLESS STEEL TRIM AS REQUIRED
WP2	WALL PROTECTION	MARLITE	STANDARD FRP	P-151 LIGHT GREY	-	FULL HEIGHT TO BULKHEAD, SEE PLAN FOR START/STOP LOCATIONS
WT1	WINDOW TREATMENT - ROLLER	MECHO SHADES	SINGLE, MANUAL ROLLER, 3% OPEN, 1600 SOHO	1601 WHITE	-	EXTERIOR WINDOWS

SCHEDULE - INTERIOR FINISH

ROOM			FLOORS	WALLS	CEILINGS		
NUMBER	NAME	BASE FINISH	FINISH	FINISH	FINISH	CASEWORK	COMMENTS
100	GOV'T OFFICE	RB1	LVT1	P3, P5	ACP1		
101	REG. MNGR.	RB1	LVT1	P3, P5	ACP1		
102	MOTHER'S ROOM	RB1	LVT1	P3	ACP1	PL1, SS1, SS2, SS3	
103	BREAK	RB1	LVT1	P3	ACP1	PL1, SS1, SS2, SS3	
104	LOGCOM WAREHOUSE	N/A	SC1	P3	P1		
104.1	SHIPPING / RECIEVING 2 DOCKS	N/A	SC1	P3	P1		
104.2	SHELTER STORAGE	N/A	SC1	P3	P1		
104.3	ISSUE / RETURN AREA	N/A	SC1	P3	P1		
104.4	SORT AREA	N/A	SC1	P3	P1		
104.5	DISPOSAL AREA	N/A	SC1	P3	P1		
104.6	BATTERY CHARGING AREA	N/A	SC1	P3	P1		
105	JAN.	RB1	SC1	P4, WP1	P2		
106	COMP. EQ. & RSDL DECON. LOTION	N/A	SC1	P3	ACP1		
107	RADIOLOGICAL	RB1	SC1	P3	ACP1		
108	TELECOM	N/A	SC1	P3	P1		
109	ELEC.	N/A	SC1	P3	P1		
110	NDTE / STORAGE	RB1	SC1	P3	P1		
110A	NDTE OFFICE	RB1	LVT1	P3, P5	ACP1		
111	ESAPI ROOM	RB1	LVT1	P3	ACP1		
112	ESAPI OFFICE	RB1	LVT1	P3	ACP1		
113A	STORAGE AREA SL-3/REPAIR PARTS	N/A	SC1	P3	P1		
113B	FINAL QC	N/A	SC1	P3	P1		
114	JSMLT TEST AREA	N/A	SC1	P3	ACP1		
115	SANITATION AREA	N/A	SC1	P3	P1		
116	ELECTRICAL	N/A	SC1	P3	P1		
117	MAINTENANCE	N/A	SC1	P3	P1		
118	TELE.	N/A	SC1	P3	P1		
119	CBRN OFFICE	RB1	LVT1	P3	ACP1		
120	MECHANICAL	N/A	SC1	P3	P1		
121	ELEC.	N/A	SC1	P3	P1		
122	FIRE RISER	N/A	SC1	P3	P1		
123	ELEC.	N/A	SC1	P3	P1		
124	WHSE MECH.	N/A	SC1	P3	P1		
200	CLASSROOM	RB1	LVT1	P3, P5	ACP1		
201	TECHNICIAN / TECHNICAL REF LIBRARY	RB1	LVT1	P3	ACP1		
202	BREAK	RB1	LVT1	P3	ACP1	PL1, SS1, SS2, SS3	

SCHEDULE - INTERIOR FINISH

ROOM			FLOORS	WALLS	CEILINGS		
NUMBER	NAME	BASE FINISH	FINISH	FINISH	FINISH	CASEWORK	COMMENTS
203	TELECOM	N/A	SC1	P3	P1		
204	JAN.	RB1	SC1	P4, WP1	P2		
205	ELECTRICAL	N/A	SC1	P3	P1		
206	ADMIN STORAGE	RB1	SC1	P3	ACP1		
207	JEFS FST OIC	RB1	LVT1	P3, P5	ACP1		
208	STORAGE WAREHOUSE PREPARATION	N/A	SC1	P3	P1		
208A	TEST & REPAIR	N/A	SC1	P3, PT2	P1, P2		P2 ON BULKHEAD ONLY
208B	VISUAL INSPECTION & REPAIR	N/A	SC1	P3	P1		
209	SHIPPING / RECEIVING / WATER TESTING	N/A	SC1	P3	P1		
209A	HAZMAT STORAGE	N/A	SC1	P3	P1		
210	JEFS FSS OPERATIONS OFFICER	RB1	LVT1	P3, P5	ACP1		
211	ASSISTANT OIC/NCOIC	RB1	LVT1	P3, P5	ACP1		
212	JEFS AHU	N/A	SC1	P3	P1		
213	JEFS BOILER ROOM	N/A	SC1	P3	P1		
217	LOADING DOCK	N/A	SC1	P3	N/A		
218	COVERED ENTRY	N/A	N/A	N/A	N/A		
219	COVERED ENTRY	N/A	N/A	N/A	N/A		
220	COVERED ENTRY	N/A	N/A	N/A	N/A		
C010	CORR.	N/A	SC1	P3	ACP1		
C011	CORR.	N/A	SC1	P3	ACP1		
C012	CORR.	N/A	SC1	P3	P1		
C013	CORR.	N/A	SC1	P3	P1		
C020	CORR.	N/A	SC1	P3	ACP1		
C021	CORR.	N/A	SC1	P3	ACP1		
C022	CORR.	N/A	SC1	P3	ACP1		
G010	WOMENS	N/A	PT1	PT2, PT3	P2	PL1, SS1, SS2, SS3	
G011	UNISEX	N/A	PT1	PT2, PT3	P2	PL1, SS1, SS2, SS3	
G012	MENS	N/A	PT1	PT2, PT3	P2	PL1, SS1, SS2, SS3	
G020	MEN'S	N/A	PT1	PT2, PT3	P2	PL1, SS1, SS2, SS3	
G021	UNISEX	N/A	PT1	PT2, PT3	P2	PL1, SS1, SS2, SS3	
G022	WOMENS	N/A	PT1	PT2, PT3	P2	PL1, SS1, SS2, SS3	
V010	VESTIBULE / ENTRY	N/A	SC1, WM1	P3	P1		
V020	VESTIBULE / ENTRY	N/A	SC1, WM1	P3	P1		
V021	VESTIBULE / ENTRY	N/A	SC1, WM1	P3	P1		

NOTES - INTERIOR FINISH

1. FLOORING TRANSITIONS ARE COORDINATED WITH SELECTED PRODUCTS AND INSTALLED PER MANUFACTURER'S RECOMMENDATIONS. PROVIDE BARRIER FREE TRANSITIONS AT FLOOR CHANGES. SEE TRANSITION DETAILS FOR MORE INFORMATION.
2. REFER TO A-SERIES FOR STANDARD MOUNTING HEIGHTS OF BATHROOM ACCESSORIES AND FIXTURING, DIMENSIONS AND CONSTRUCTION INFORMATION.
3. FLOORING EXTENDS BELOW BUILT IN CASEWORK AND UNDER VENDING MACHINES. SEE ARCHITECTURAL DETAIL DRAWINGS FOR INTERIOR CASEWORK AND ADDITIONAL FINISH CONSTRUCTION DETAILS.
4. REFER TO ARCHITECTURAL REFLECTED CEILING PLANS, AR-SERIES FOR CEILING HEIGHTS.
5. METAL TRANSITIONS, END CAPS, ETC ARE BRUSHED NICKEL FINISH UNLESS NOTED OTHERWISE.
6. RESTROOM VANITIES HAVE SOLID SURFACE COUNTERTOPS WITH INTEGRAL SOLID SURFACE SINK, TYPICAL, UNO. SEE PLUMBING DRAWINGS FOR FIXTURES.
7. WALK-OFF ENTRANCE MATS SHOWN ON PLAN ARE VERIFIED WITH ARCHITECTURAL AND STRUCTURAL FOUNDATION AND SLAB DRAWINGS AND FIELD VERIFIED.
8. REFER TO INTERIOR FINISH DRAWINGS FOR ACCENT WALL LOCATIONS / EXTENTS.
9. REFER TO INTERIOR FINISH DRAWINGS FOR CG1 LOCATIONS.
10. APPROPRIATE PAINT FOR SUBSTRATE TO BE USED.
11. PAINT INTERIOR ELECTRICAL PANEL FACE, ACCESS PANELS, METAL GRILLS, DIFFUSERS, PANEL BOXES AND REGISTERS TO MATCH ADJACENT FINISH.
12. EXPOSED CEILINGS ARE PAINTED ENTIRELY; INCLUDING EXPOSED STRUCTURE, DECK, DUCTWORK, CONDUIT, PIPING, ETC. GYPSUM BOARD CEILINGS AND SOFFITS.
13. CAULK BOTTOM OF WALLS THAT DO NOT RECEIVE WALL BASE. CAULK MATCHES FLOOR COLOR.

SYM	DESCRIPTION	DATE	APPR

NAVFAC

REGISTERED ARCHITECT — COMMONWEALTH OF PENNSYLVANIA — MICHAEL P. KUCHERA — No. RA016140 — SEAL

RQ W.M. Jordan COMPANY — A JOINT VENTURE

Michael Baker INTERNATIONAL

100 AIRSIDE DRIVE, MOON TOWNSHIP, PA 15108 — A/E INFO

APPROVED

FOR COMMANDER NAVFAC

ACTIVITY: MARINE CORPS BASE CAMP LEJEUNE

SATISFACTORY TO DATE

DES	SJK	DRW	RDT	CHK	NCW

PM / DM: TOWLER / ROOT

BRANCH HEAD: DER

DESIGN DIRECTOR: R.L.Stephens, Jr.

FIRE PROTECTION: DPS

DEPARTMENT OF THE NAVY
NAVAL FACILITIES ENGINEERING SYSTEMS COMMAND
NAVAL FACILITIES ENGINEERING SYSTEMS COMMAND ATLANTIC — NORFOLK, VA
ATLANTIC DESIGN AND CONSTRUCTION
MCB CAMP LEJEUNE
JACKSONVILLE, NC
P1527 LOGCOM CSP WAREHOUSE

INTERIOR FINISH - BASIS OF DESIGN, SCHEDULE AND DETAILED NOTES

SCALE: AS NOTED

EPROJECT NO.: 1639600

CONSTR. CONTR. NO.: N40085-20-C-0059

NAVFAC DRAWING NO.: 14111208

SHEET 194 OF 447

IN001

DRAWFORM REVISION: 25 AUGUST 2020

P1527 FINAL SUBMISSION - 11/18/2021

PLOTTED: 11/12/2021 6:52:13 AM

FILE NAME: BIM 360://HF PACKAGE 3/P1527 LOG COM CSP-1639600-A.rvt

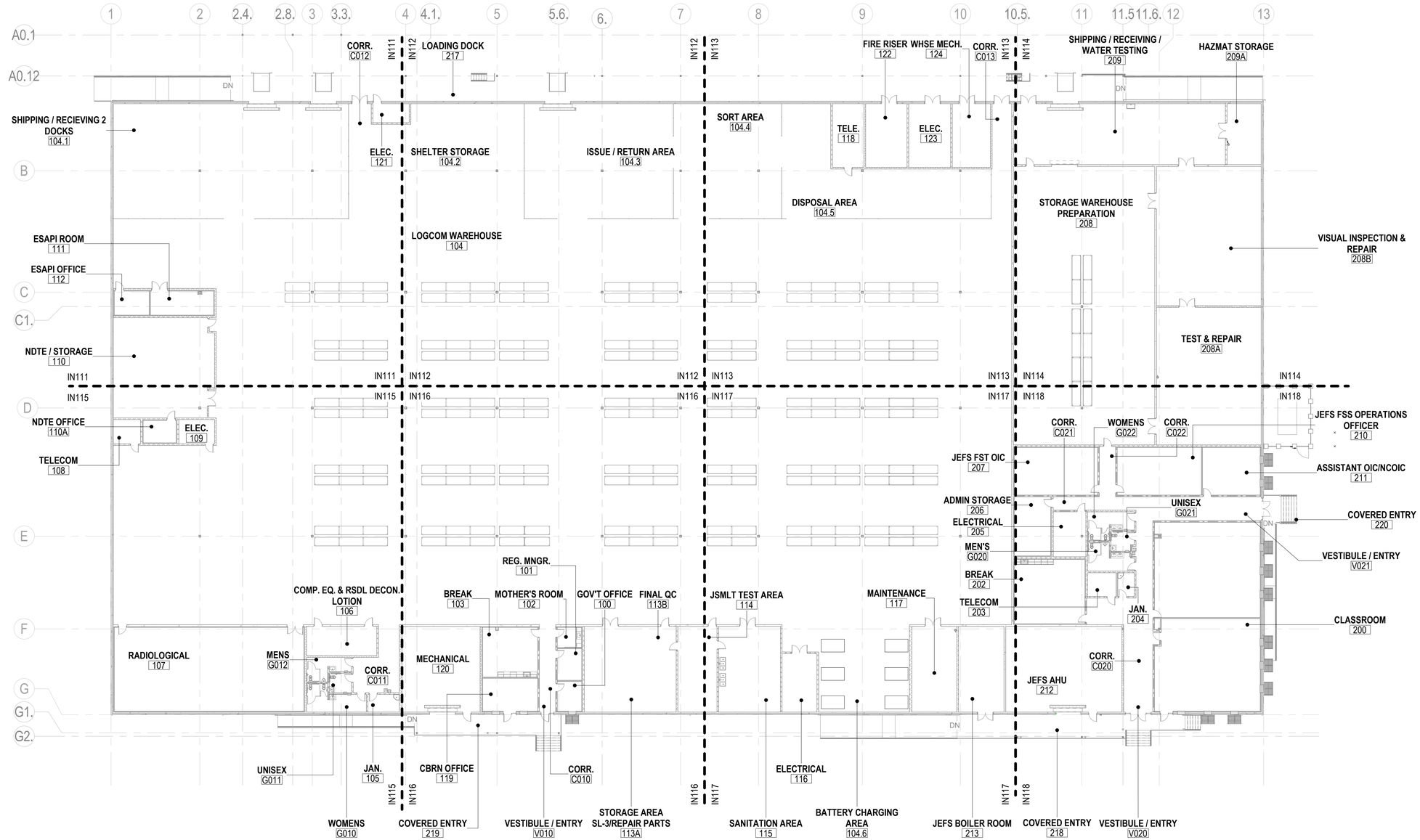

INTERIOR FINISH - OVERALL 1ST FLOOR PLAN

SCALE: 3/64" = 1'-0"

KEYPLAN

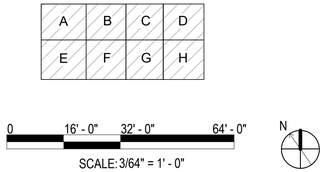

SCALE: 3/64" = 1' - 0"

SYM	DESCRIPTION	DATE	APPR

NAVFAC

REGISTERED ARCHITECT PENNSYLVANIA MICHAEL J. KUCHERA No. RA016140 SEAL

RQ W.M. Jordan COMPANY - A JOINT VENTURE -

Michael Baker INTERNATIONAL
100 AIRSIDE DRIVE
MOON TOWNSHIP, PA 15108
A/E INFO

APPROVED

FOR COMMANDER NAVFAC

ACTIVITY
MARINE CORPS BASE CAMP LEJEUNE

SATISFACTORY TO DATE

DES SJK	DRW RDT	CHK NCW	
PM / DM	TOWLER / ROOT		
BRANCH HEAD	DER		
DESIGN DIRECTOR	R.L.Stephens, Jr.		
FIRE PROTECTION	DPS		

DEPARTMENT OF THE NAVY
NAVAL FACILITIES ENGINEERING SYSTEMS COMMAND
NAVAL FACILITIES ENGINEERING SYSTEMS COMMAND ATLANTIC
ATLANTIC DESIGN AND CONSTRUCTION
NORFOLK, VA

MCB CAMP LEJEUNE
JACKSONVILLE, NC
P1527 LOGCOM CSP WAREHOUSE

INTERIOR FINISH - OVERALL1ST FLOOR PLAN

SCALE:	AS NOTED
EPROJECT NO.:	1639600
CONSTR. CONTR. NO.	N40085-20-C-0059
NAVFAC DRAWING NO.	14111209
SHEET	195 OF 447

IN110

DRAWFORM REVISION: 25 AUGUST 2020

P1527 FINAL SUBMISSION - 11/18/2021

PLOTTED: 11/12/2021 6:52:20 AM

FILE NAME: BIM 360://HF PACKAGE 3/P1527 LOG COM CSP-1639600-A.rvt

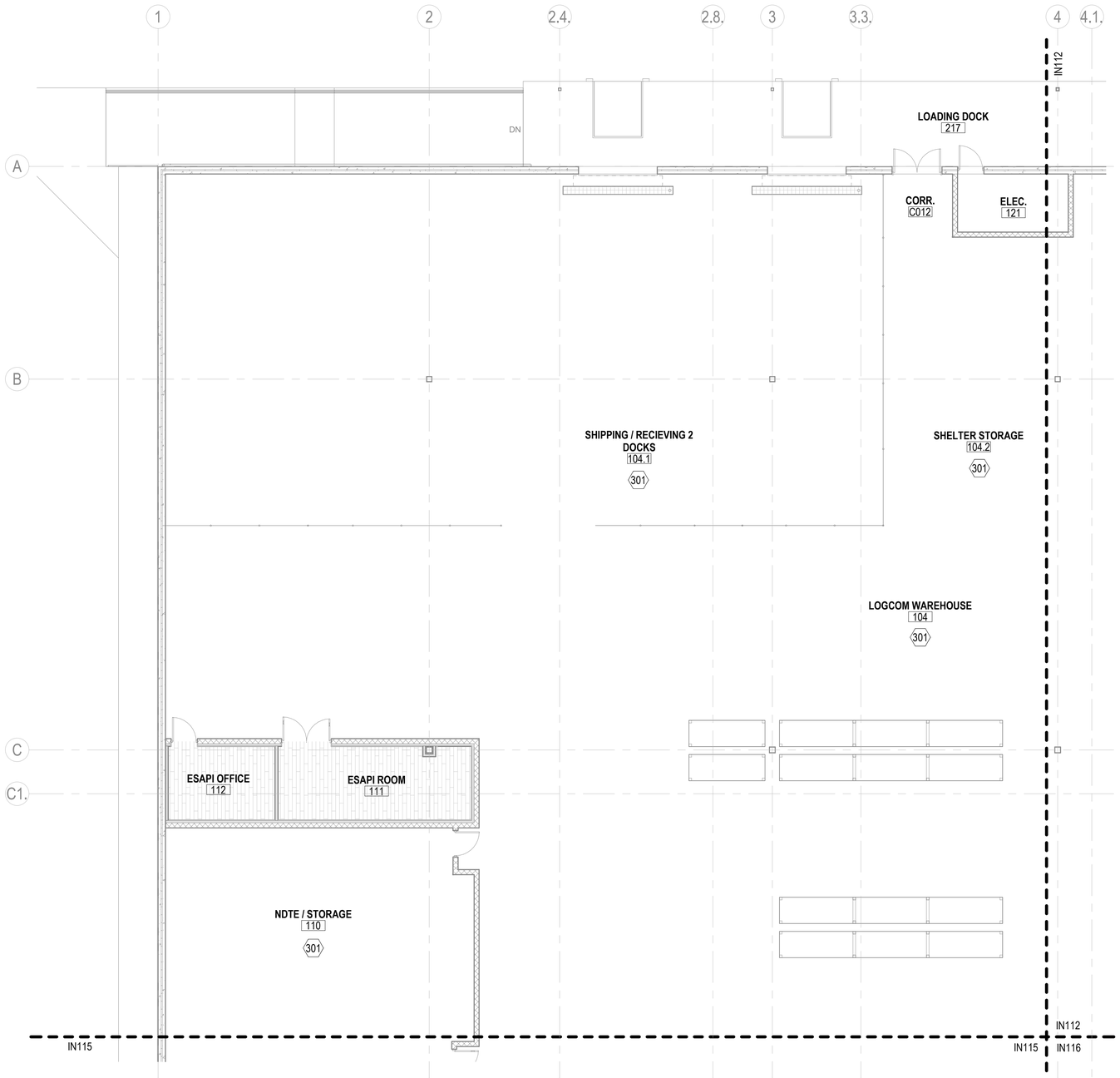

A1 INTERIOR FINISH - 1ST FLOOR PLAN - AREA A
SCALE: 1/8" = 1'-0"

KEYNOTES

301	PROVIDE CG1 AT OUTSIDE CORNERS OF THIS ROOM / CORRIDOR (INCLUDING DOOR WHERE APPLICABLE)

LEGEND - INTERIOR FINISH (TYPE)

ACP	ACOUSTICAL CEILING PANEL
CG	CORNER GUARD
G	GROUT
LVT	LUXURY VINYL TILE
P	PAINT
PL	PLASTIC LAMINATE
PT	PORCELAIN TILE
RB	RESILIENT BASE
SC	SEALED CONCRETE
SS	SOLID SURFACE
TP	TOILET PARTITIONS
WM	WALK-OFF MAT SYSTEM
WP	WALL PROTECTION
WT	WINDOW TREATMENT

LEGEND - INTERIOR FINISH (FLOOR PATTERN)

LVT1 WM1
PT1 SC1

LEGEND - INTERIOR PAINT (TAG)

P# — PAINT TYPE

KEYPLAN

A	B	C	D
E	F	G	H

0 4' - 0" 8' - 0" 16' - 0"
SCALE: 1/8" = 1' - 0"

N

APPR	
DATE	
DESCRIPTION	
SYM	

NAVFAC

REGISTERED ARCHITECT PENNSYLVANIA MICHAEL RUCHERA No. RA016140 SEAL

IRQ WM Jordan COMPANY – A JOINT VENTURE –

Michael Baker INTERNATIONAL
100 AIRSIDE DRIVE
MOON TOWNSHIP, PA 15108 A/E INFO

APPROVED
FOR COMMANDER NAVFAC

ACTIVITY
MARINE CORPS BASE CAMP LEJEUNE

SATISFACTORY TO DATE

DES	SJK	DRW RDT	CHK NCW
PM / DM		TOWLER / ROOT	
BRANCH HEAD		DER	
DESIGN DIRECTOR		R.L.Stephens, Jr.	
FIRE PROTECTION		DPS	

DEPARTMENT OF THE NAVY
NAVAL FACILITIES ENGINEERING SYSTEMS COMMAND
ATLANTIC DESIGN AND CONSTRUCTION

NAVAL FACILITIES ENGINEERING SYSTEMS COMMAND ATLANTIC
NORFOLK, VA

MCB CAMP LEJEUNE
JACKSONVILLE, NC
P1527 LOGCOM CSP WAREHOUSE

INTERIOR FINISH - 1ST FLOOR PLAN - AREA A

SCALE:	AS NOTED
EPROJECT NO.:	1639600
CONSTR. CONTR. NO.	N40085-20-C-0059
NAVFAC DRAWING NO.	14111210
SHEET	196 OF 447

IN111

DRAWFORM REVISION: 25 AUGUST 2020

P1527 FINAL SUBMISSION - 11/18/2021

PLOTTED: 11/12/2021 6:52:24 AM
FILE NAME: BIM 360://HF PACKAGE 3/P1527 LOG COM CSP--1639600-A.rvt

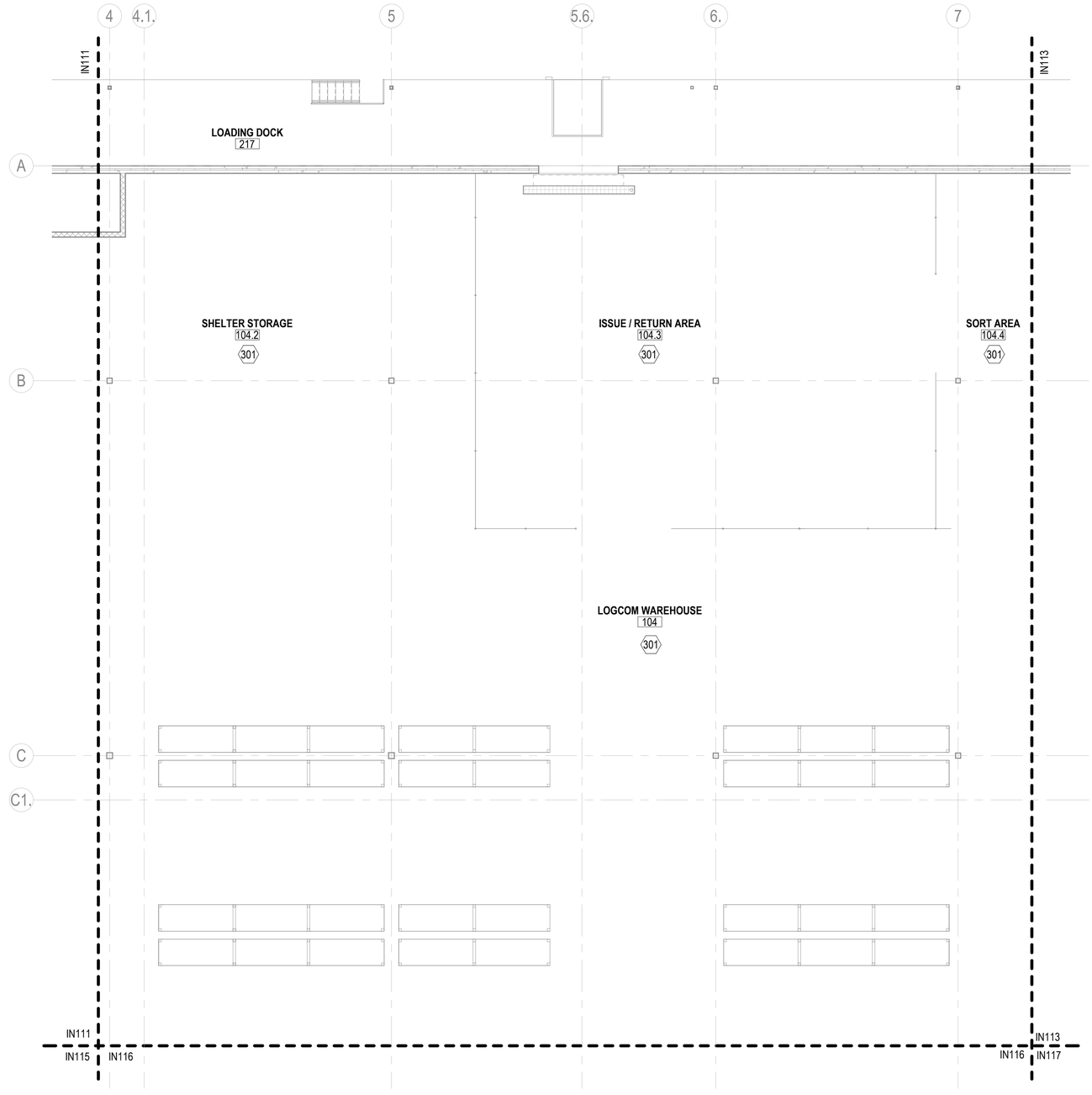

A1 INTERIOR FINISH - 1ST FLOOR PLAN - AREA B
SCALE: 1/8" = 1'-0"

KEYNOTES

301	PROVIDE CG1 AT OUTSIDE CORNERS OF THIS ROOM / CORRIDOR (INCLUDING DOOR WHERE APPLICABLE)

LEGEND - INTERIOR FINISH (TYPE)

ACP	ACOUSTICAL CEILING PANEL
CG	CORNER GUARD
G	GROUT
LVT	LUXURY VINYL TILE
P	PAINT
PL	PLASTIC LAMINATE
PT	PORCELAIN TILE
RB	RESILIENT BASE
SC	SEALED CONCRETE
SS	SOLID SURFACE
TP	TOILET PARTITIONS
WM	WALK-OFF MAT SYSTEM
WP	WALL PROTECTION
WT	WINDOW TREATMENT

LEGEND - INTERIOR FINISH (FLOOR PATTERN)

LVT1 WM1

PT1 SC1

LEGEND - INTERIOR PAINT (TAG)

P# — PAINT TYPE

KEYPLAN

A	B	C	D
E	F	G	H

0 4' - 0" 8' - 0" 16' - 0"

SCALE: 1/8" = 1' - 0"

N

APPR	DATE	DESCRIPTION	SYM

NAVFAC

REGISTERED ARCHITECT COMMONWEALTH OF PENNSYLVANIA MICHAEL P. RUCHERA No. RA010140 SEAL

RQ W.M. Jordan COMPANY – A JOINT VENTURE –

Michael Baker INTERNATIONAL
100 AIRSIDE DRIVE
MOON TOWNSHIP, PA 15108 A/E INFO

APPROVED

FOR COMMANDER NAVFAC

ACTIVITY
MARINE CORPS BASE
CAMP LEJEUNE

SATISFACTORY TO DATE

DES	SJK	DRW RDT CHK	NCW
PM / DM		TOWLER / ROOT	
BRANCH HEAD		DER	
DESIGN DIRECTOR		R.L.Stephens, Jr.	
FIRE PROTECTION		DPS	

DEPARTMENT OF THE NAVY
NAVAL FACILITIES ENGINEERING SYSTEMS COMMAND
ATLANTIC DESIGN AND CONSTRUCTION
MCB CAMP LEJEUNE

NAVAL FACILITIES ENGINEERING SYSTEMS COMMAND ATLANTIC
NORFOLK, VA
JACKSONVILLE, NC
P1527 LOGCOM CSP WAREHOUSE

INTERIOR FINISH - 1ST FLOOR PLAN - AREA B

SCALE:	AS NOTED
EPROJECT NO.:	1639600
CONSTR. CONTR. NO.	N40085-20-C-0059
NAVFAC DRAWING NO.	14111211
SHEET	197 OF 447

IN112

DRAWFORM REVISION: 25 AUGUST 2020

P1527 FINAL SUBMISSION - 11/18/2021

PLOTTED: 11/12/2021 6:52:28 AM

FILE NAME: BIM 360://HF PACKAGE 3/P1527 LOG COM CSP-1639600-A.rvt

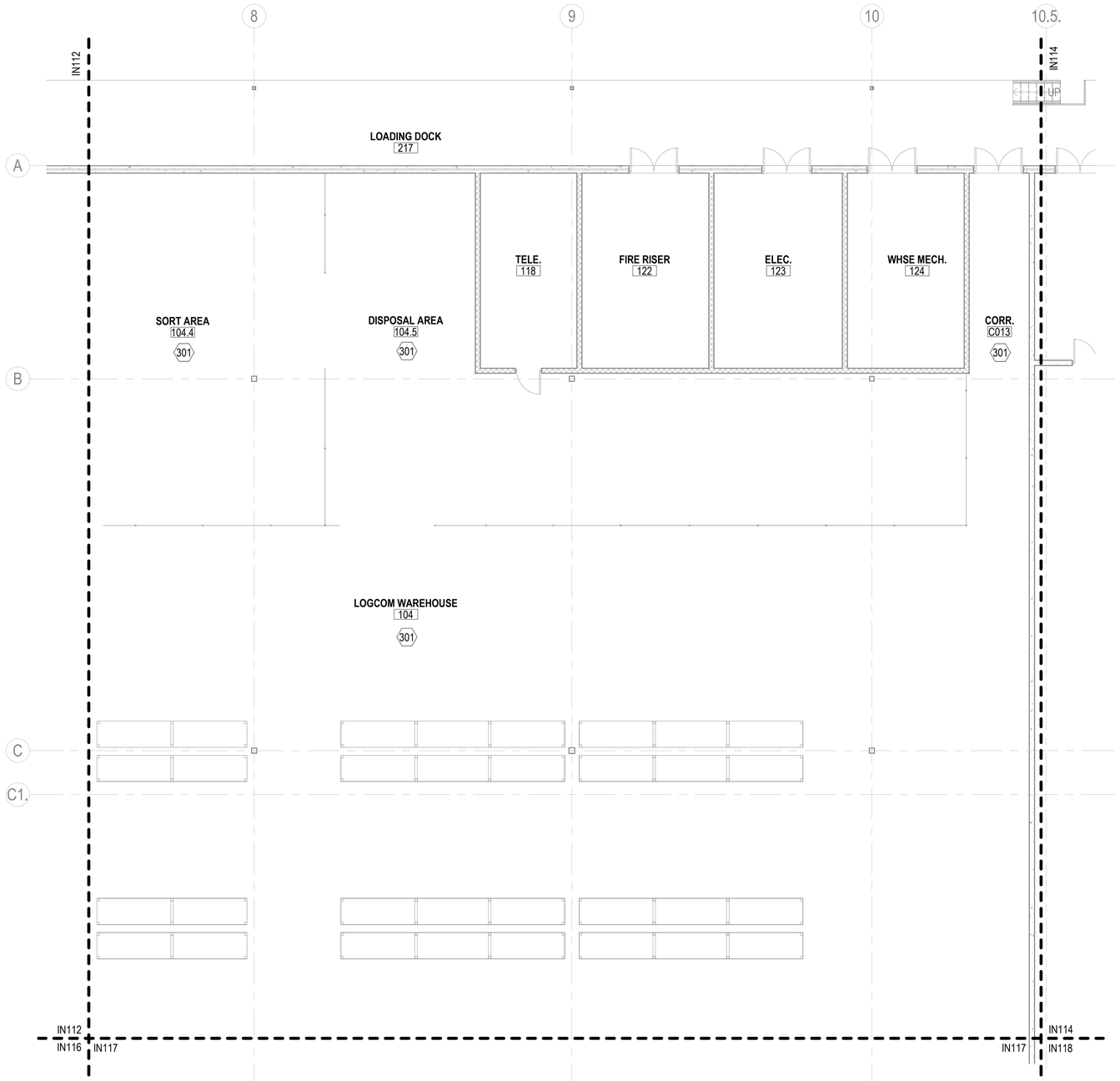

A1 INTERIOR FINISH - 1ST FLOOR PLAN - AREA C
SCALE: 1/8" = 1'-0"

KEYNOTES

301	PROVIDE CG1 AT OUTSIDE CORNERS OF THIS ROOM / CORRIDOR (INCLUDING DOOR WHERE APPLICABLE)

LEGEND - INTERIOR FINISH (TYPE)

ACP	ACOUSTICAL CEILING PANEL
CG	CORNER GUARD
G	GROUT
LVT	LUXURY VINYL TILE
P	PAINT
PL	PLASTIC LAMINATE
PT	PORCELAIN TILE
RB	RESILIENT BASE
SC	SEALED CONCRETE
SS	SOLID SURFACE
TP	TOILET PARTITIONS
WM	WALK-OFF MAT SYSTEM
WP	WALL PROTECTION
WT	WINDOW TREATMENT

LEGEND - INTERIOR FINISH (FLOOR PATTERN)

LVT1 WM1 PT1 SC1

LEGEND - INTERIOR PAINT (TAG)

P# — PAINT TYPE

KEYPLAN

A	B	C	D
E	F	G	H

0 4' - 0" 8' - 0" 16' - 0"
SCALE: 1/8" = 1' - 0"

N

SYM	DESCRIPTION	DATE	APPR

NAVFAC

REGISTERED ARCHITECT COMMONWEALTH OF PENNSYLVANIA MICHAEL C. RUCHERA No. RA016140
SEAL

RQ W.M. Jordan COMPANY – A JOINT VENTURE –

Michael Baker INTERNATIONAL
100 AIRSIDE DRIVE
MOON TOWNSHIP, PA 15108
A/E INFO

APPROVED
FOR COMMANDER NAVFAC

ACTIVITY
MARINE CORPS BASE
CAMP LEJEUNE

SATISFACTORY TO DATE

DES	SJK	DRW RDT CHK	NCW
PM / DM		TOWLER / ROOT	
BRANCH HEAD		DER	
DESIGN DIRECTOR		R.L.Stephens, Jr.	
FIRE PROTECTION		DPS	

DEPARTMENT OF THE NAVY
NAVAL FACILITIES ENGINEERING SYSTEMS COMMAND
ATLANTIC DESIGN AND CONSTRUCTION
NAVAL FACILITIES ENGINEERING SYSTEMS COMMAND ATLANTIC
NORFOLK, VA
MCB CAMP LEJEUNE
JACKSONVILLE, NC
P1527 LOGCOM CSP WAREHOUSE
INTERIOR FINISH - 1ST FLOOR PLAN - AREA C

SCALE:	AS NOTED
EPROJECT NO.:	1639600
CONSTR. CONTR. NO.	N40085-20-C-0059
NAVFAC DRAWING NO.	14111212
SHEET	198 OF 447

IN113

DRAWFORM REVISION: 25 AUGUST 2020

P1527 FINAL SUBMISSION - 11/18/2021

PLOTTED: 11/12/2021 6:52:32 AM

FILE NAME: BIM 360://HF PACKAGE 3/P1527 LOG COM CSP-1639600-A.rvt

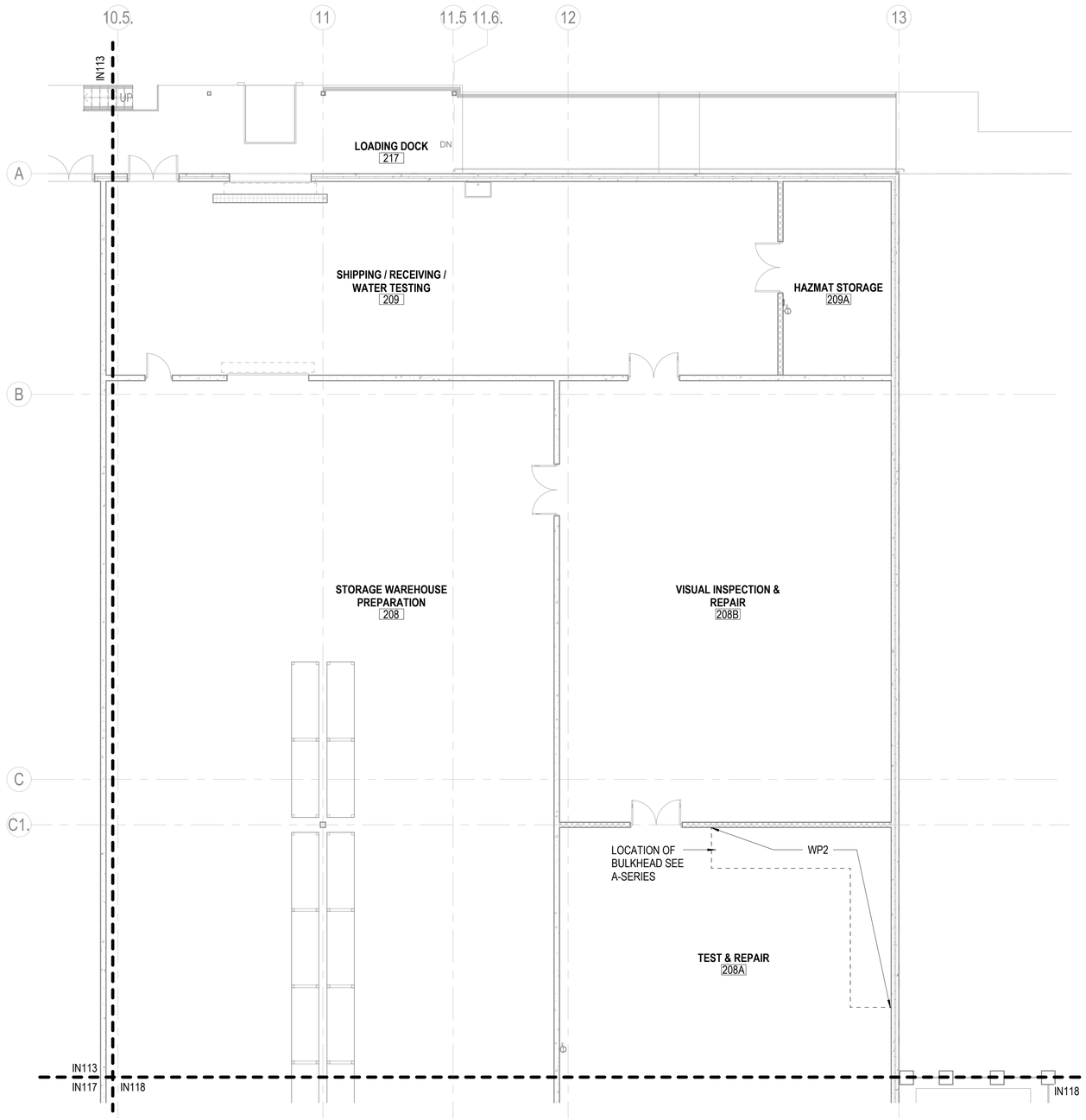

A1 INTERIOR FINISH - 1ST FLOOR PLAN - AREA D
SCALE: 1/8" = 1'-0"

LEGEND - INTERIOR FINISH (TYPE)

ACP	ACOUSTICAL CEILING PANEL
CG	CORNER GUARD
G	GROUT
LVT	LUXURY VINYL TILE
P	PAINT
PL	PLASTIC LAMINATE
PT	PORCELAIN TILE
RB	RESILIENT BASE
SC	SEALED CONCRETE
SS	SOLID SURFACE
TP	TOILET PARTITIONS
WM	WALK-OFF MAT SYSTEM
WP	WALL PROTECTION
WT	WINDOW TREATMENT

LEGEND - INTERIOR FINISH (FLOOR PATTERN)

LVT1 WM1
PT1 SC1

LEGEND - INTERIOR PAINT (TAG)

P# — PAINT TYPE

KEYPLAN

A	B	C	D
E	F	G	H

0 4' - 0" 8' - 0" 16' - 0"
SCALE: 1/8" = 1' - 0"

N

SYM	DESCRIPTION	DATE	APPR

NAVFAC

REGISTERED ARCHITECT
PENNSYLVANIA
MICHAEL J. RUCHERA No. RA016140
SEAL

RQ W.M. Jordan COMPANY
A JOINT VENTURE

Michael Baker
INTERNATIONAL
100 AIRSIDE DRIVE
MOON TOWNSHIP, PA 15108
A/E INFO

APPROVED

FOR COMMANDER NAVFAC

ACTIVITY
MARINE CORPS BASE
CAMP LEJEUNE

SATISFACTORY TO DATE

DES	SJK	DRW RDT	CHK NCW
PM / DM		TOWLER / ROOT	
BRANCH HEAD		DER	
DESIGN DIRECTOR		R.L.Stephens, Jr.	
FIRE PROTECTION		DPS	

DEPARTMENT OF THE NAVY
NAVAL FACILITIES ENGINEERING SYSTEMS COMMAND
ATLANTIC DESIGN AND CONSTRUCTION
MCB CAMP LEJEUNE

NAVAL FACILITIES ENGINEERING SYSTEMS COMMAND ATLANTIC
NORFOLK, VA
JACKSONVILLE, NC
P1527 LOGCOM CSP WAREHOUSE

INTERIOR FINISH - 1ST FLOOR PLAN - AREA D

SCALE:	AS NOTED
EPROJECT NO.:	1639600
CONSTR. CONTR. NO.	N40085-20-C-0059
NAVFAC DRAWING NO.	14111213
SHEET	199 OF 447

IN114

DRAWFORM REVISION: 25 AUGUST 2020

P1527 FINAL SUBMISSION - 11/18/2021

PLOTTED: 11/12/2021 6:52:36 AM
FILE NAME: BIM 360://HF PACKAGE 3/P1527 LOG COM CSP-1639600-A.rvt

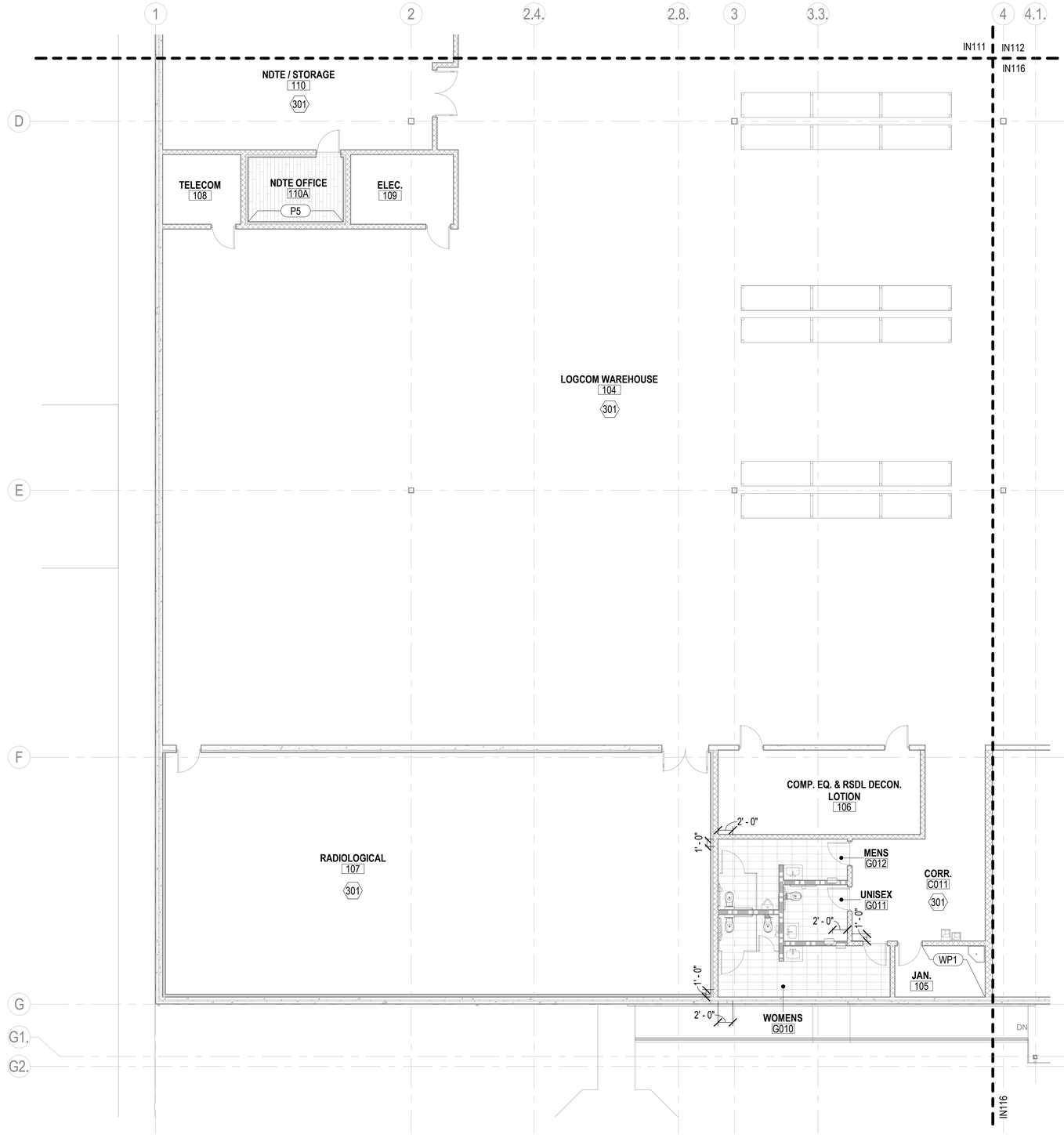

A1 INTERIOR FINISH - 1ST FLOOR PLAN - AREA E
SCALE: 1/8" = 1'-0"

KEYNOTES

301	PROVIDE CG1 AT OUTSIDE CORNERS OF THIS ROOM / CORRIDOR (INCLUDING DOOR WHERE APPLICABLE)

LEGEND - INTERIOR FINISH (TYPE)

ACP	ACOUSTICAL CEILING PANEL
CG	CORNER GUARD
G	GROUT
LVT	LUXURY VINYL TILE
P	PAINT
PL	PLASTIC LAMINATE
PT	PORCELAIN TILE
RB	RESILIENT BASE
SC	SEALED CONCRETE
SS	SOLID SURFACE
TP	TOILET PARTITIONS
WM	WALK-OFF MAT SYSTEM
WP	WALL PROTECTION
WT	WINDOW TREATMENT

LEGEND - INTERIOR FINISH (FLOOR PATTERN)

LVT1 WM1
PT1 SC1

LEGEND - INTERIOR PAINT (TAG)

P# — PAINT TYPE

KEYPLAN

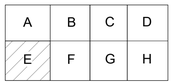

0 4' - 0" 8' - 0" 16' - 0"
SCALE: 1/8" = 1' - 0"

N

APPR | DATE | DESCRIPTION | SYM

NAVFAC

REGISTERED ARCHITECT
COMMONWEALTH OF PENNSYLVANIA
MICHAEL P. RUCHERA No. RA016140
SEAL

WM Jordan COMPANY — A JOINT VENTURE —

Michael Baker INTERNATIONAL
100 AIRSIDE DRIVE
MOON TOWNSHIP, PA 15108
A/E INFO

APPROVED

FOR COMMANDER NAVFAC

ACTIVITY
MARINE CORPS BASE
CAMP LEJEUNE

SATISFACTORY TO DATE

DES	SJK	DRW RDT	CHK NCW
PM / DM		TOWLER / ROOT	
BRANCH HEAD		DER	
DESIGN DIRECTOR		R.L.Stephens, Jr.	
FIRE PROTECTION		DPS	

DEPARTMENT OF THE NAVY
NAVAL FACILITIES ENGINEERING SYSTEMS COMMAND
ATLANTIC DESIGN AND CONSTRUCTION
MCB CAMP LEJEUNE

NAVAL FACILITIES ENGINEERING SYSTEMS COMMAND ATLANTIC
NORFOLK, VA

JACKSONVILLE, NC
P1527 LOGCOM CSP WAREHOUSE

INTERIOR FINISH - 1ST FLOOR PLAN - AREA E

SCALE:	AS NOTED
EPROJECT NO.:	1639600
CONSTR. CONTR. NO.	N40085-20-C-0059
NAVFAC DRAWING NO.	14111214
SHEET	200 OF 447

IN115

DRAWFORM REVISION: 25 AUGUST 2020

P1527 FINAL SUBMISSION - 11/18/2021

PLOTTED: 11/12/2021 6:52:40 AM
FILE NAME: BIM 360://HF PACKAGE 3/P1527 LOG COM CSP-1639600-A.rvt

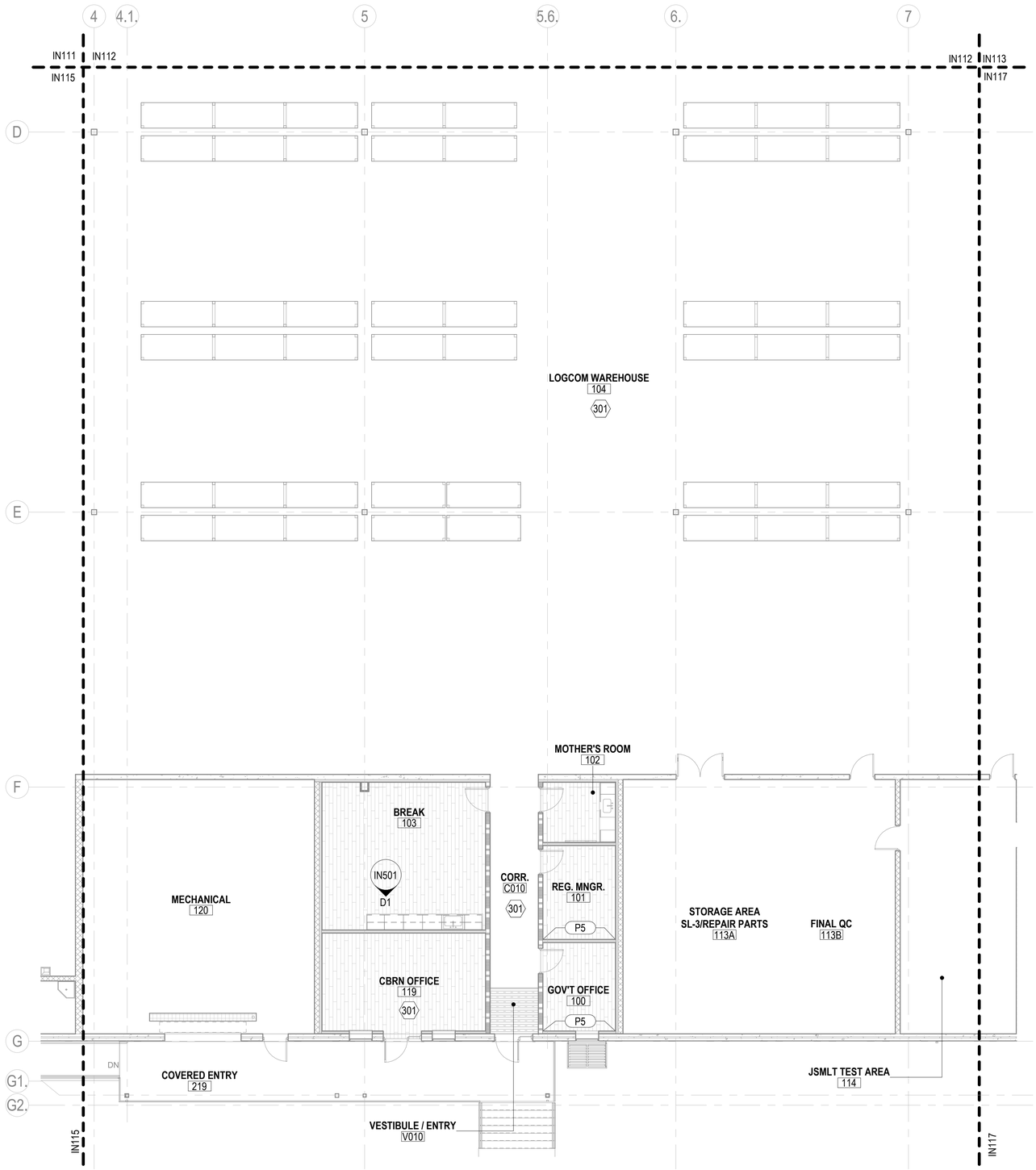

A1 INTERIOR FINISH - 1ST FLOOR PLAN - AREA F

SCALE: 1/8" = 1'-0"

KEYNOTES

301	PROVIDE CG1 AT OUTSIDE CORNERS OF THIS ROOM / CORRIDOR (INCLUDING DOOR WHERE APPLICABLE)

LEGEND - INTERIOR FINISH (TYPE)

ACP	ACOUSTICAL CEILING PANEL
CG	CORNER GUARD
G	GROUT
LVT	LUXURY VINYL TILE
P	PAINT
PL	PLASTIC LAMINATE
PT	PORCELAIN TILE
RB	RESILIENT BASE
SC	SEALED CONCRETE
SS	SOLID SURFACE
TP	TOILET PARTITIONS
WM	WALK-OFF MAT SYSTEM
WP	WALL PROTECTION
WT	WINDOW TREATMENT

LEGEND - INTERIOR FINISH (FLOOR PATTERN)

LVT1 WM1 PT1 SC1

LEGEND - INTERIOR PAINT (TAG)

P# — PAINT TYPE

KEYPLAN

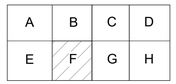

0 4' - 0" 8' - 0" 16' - 0"

SCALE: 1/8" = 1' - 0"

N

APPR	
DATE	
DESCRIPTION	
SYM	

NAVFAC

REGISTERED ARCHITECT PENNSYLVANIA MICHELE RUCHERA No. RA016140 SEAL

W.M. Jordan COMPANY — A JOINT VENTURE —

Michael Baker INTERNATIONAL

100 AIRSIDE DRIVE
MOON TOWNSHIP, PA 15108 A/E INFO

APPROVED

FOR COMMANDER NAVFAC

ACTIVITY
MARINE CORPS BASE
CAMP LEJEUNE

SATISFACTORY TO DATE

DES	SJK	DRW RDT	CHK NCW
PM / DM		TOWLER / ROOT	
BRANCH HEAD		DER	
DESIGN DIRECTOR		R.L.Stephens, Jr.	
FIRE PROTECTION		DPS	

DEPARTMENT OF THE NAVY
NAVAL FACILITIES ENGINEERING SYSTEMS COMMAND
ATLANTIC DESIGN AND CONSTRUCTION
NAVAL FACILITIES ENGINEERING SYSTEMS COMMAND ATLANTIC
NORFOLK, VA
MCB CAMP LEJEUNE
JACKSONVILLE, NC
P1527 LOGCOM CSP WAREHOUSE

INTERIOR FINISH - 1ST FLOOR PLAN - AREA F

SCALE:	AS NOTED
EPROJECT NO.:	1639600
CONSTR. CONTR. NO.	N40085-20-C-0059
NAVFAC DRAWING NO.	14111215
SHEET	201 OF 447

IN116

DRAWFORM REVISION: 25 AUGUST 2020

P1527 FINAL SUBMISSION - 11/18/2021

PLOTTED: 11/12/2021 6:52:44 AM

FILE NAME: BIM 360://HF PACKAGE 3/P1527 LOG COM CSP-1639600-A.rvt

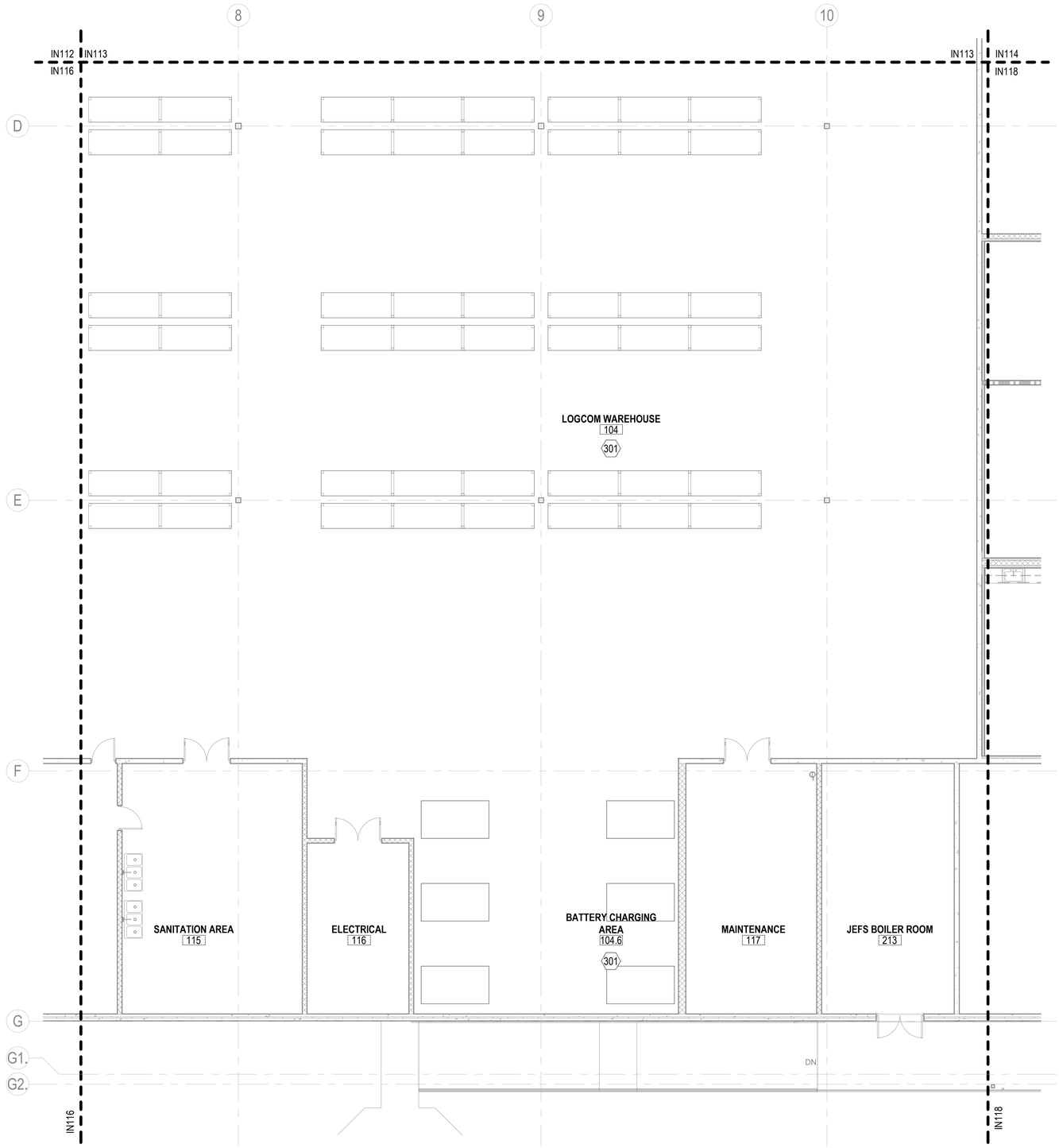

A1 INTERIOR FINISH - 1ST FLOOR PLAN - AREA G
SCALE: 1/8" = 1'-0"

KEYNOTES

301	PROVIDE CG1 AT OUTSIDE CORNERS OF THIS ROOM / CORRIDOR (INCLUDING DOOR WHERE APPLICABLE)

LEGEND - INTERIOR FINISH (TYPE)

ACP	ACOUSTICAL CEILING PANEL
CG	CORNER GUARD
G	GROUT
LVT	LUXURY VINYL TILE
P	PAINT
PL	PLASTIC LAMINATE
PT	PORCELAIN TILE
RB	RESILIENT BASE
SC	SEALED CONCRETE
SS	SOLID SURFACE
TP	TOILET PARTITIONS
WM	WALK-OFF MAT SYSTEM
WP	WALL PROTECTION
WT	WINDOW TREATMENT

LEGEND - INTERIOR FINISH (FLOOR PATTERN)

LVT1 WM1 PT1 SC1

LEGEND - INTERIOR PAINT (TAG)

P# — PAINT TYPE

KEYPLAN



0 4' - 0" 8' - 0" 16' - 0"
SCALE: 1/8" = 1' - 0"

N

APPR | DATE | DESCRIPTION | SYM

NAVFAC

REGISTERED ARCHITECT PENNSYLVANIA MICHAEL RAYMOND KUCHERA No. RA016140 SEAL

RQ W.M. Jordan COMPANY – A JOINT VENTURE –

Michael Baker INTERNATIONAL
100 AIRSIDE DRIVE
MOON TOWNSHIP, PA 15108
A/E INFO

APPROVED

FOR COMMANDER NAVFAC

ACTIVITY
MARINE CORPS BASE
CAMP LEJEUNE

SATISFACTORY TO DATE

DES SJK | DRW RDT | CHK NCW
PM / DM TOWLER / ROOT
BRANCH HEAD DER
DESIGN DIRECTOR R.L.Stephens, Jr.
FIRE PROTECTION DPS

DEPARTMENT OF THE NAVY
NAVAL FACILITIES ENGINEERING SYSTEMS COMMAND
ATLANTIC DESIGN AND CONSTRUCTION
MCB CAMP LEJEUNE

NAVAL FACILITIES ENGINEERING SYSTEMS COMMAND ATLANTIC
NORFOLK, VA

JACKSONVILLE, NC
P1527 LOGCOM CSP WAREHOUSE

INTERIOR FINISH - 1ST FLOOR PLAN - AREA G

SCALE: AS NOTED
EPROJECT NO.: 1639600
CONSTR. CONTR. NO. N40085-20-C-0059
NAVFAC DRAWING NO. 14111216
SHEET 202 OF 447

IN117

DRAWFORM REVISION: 25 AUGUST 2020

P1527 FINAL SUBMISSION - 11/18/2021

PLOTTED: 11/12/2021 6:52:48 AM
FILE NAME: BIM 360://AIF PACKAGE 3/P1527 LOG COM CSP-1639600-A.rvt

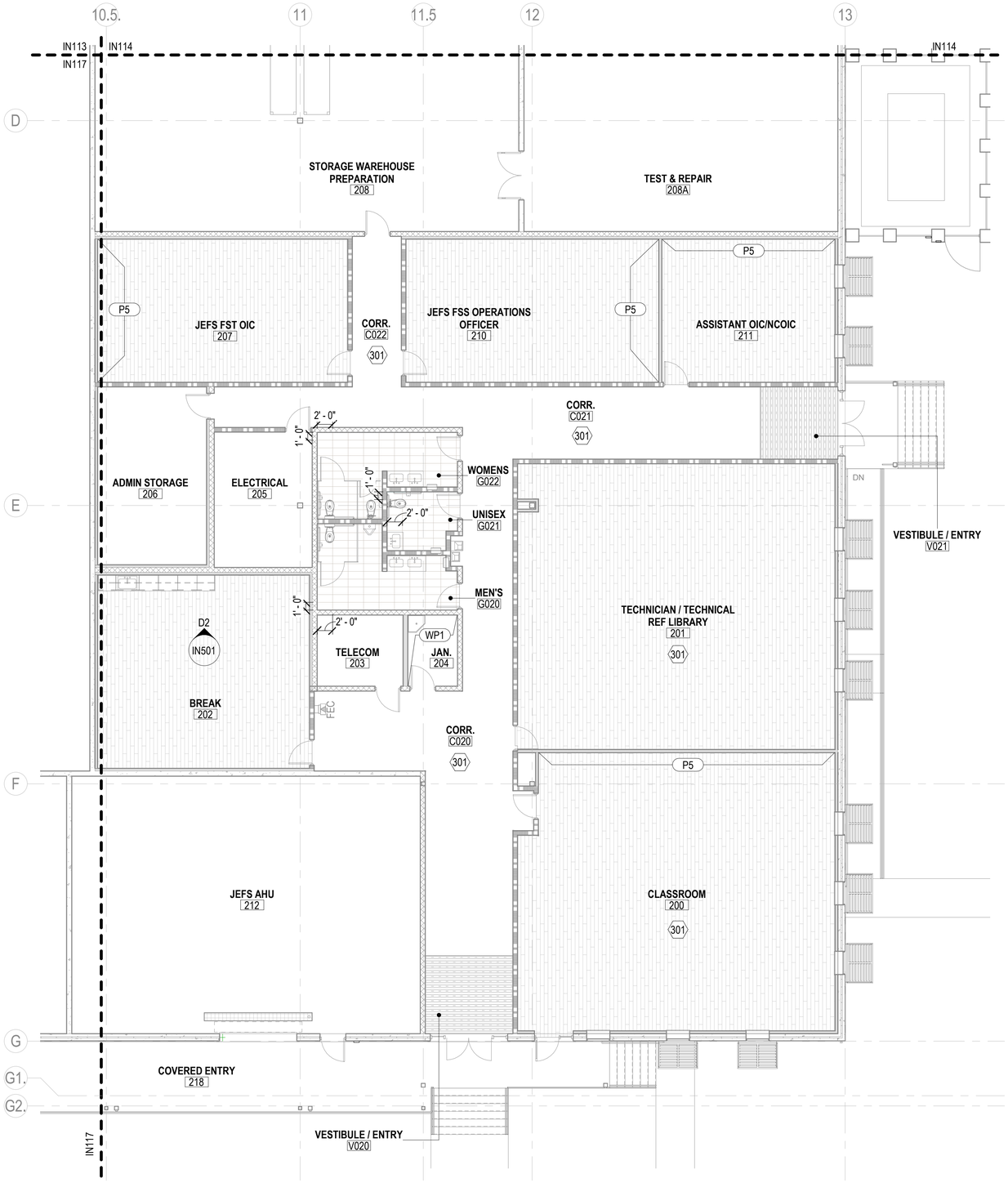

A1 INTERIOR FINISH - 1ST FLOOR PLAN - AREA H
SCALE: 1/8" = 1'-0"

KEYNOTES

301	PROVIDE CG1 AT OUTSIDE CORNERS OF THIS ROOM / CORRIDOR (INCLUDING DOOR WHERE APPLICABLE)

LEGEND - INTERIOR FINISH (TYPE)

ACP	ACOUSTICAL CEILING PANEL
CG	CORNER GUARD
G	GROUT
LVT	LUXURY VINYL TILE
P	PAINT
PL	PLASTIC LAMINATE
PT	PORCELAIN TILE
RB	RESILIENT BASE
SC	SEALED CONCRETE
SS	SOLID SURFACE
TP	TOILET PARTITIONS
WM	WALK-OFF MAT SYSTEM
WP	WALL PROTECTION
WT	WINDOW TREATMENT

LEGEND - INTERIOR FINISH (FLOOR PATTERN)

LVT1 WM1

PT1 SC1

LEGEND - INTERIOR PAINT (TAG)

P# — PAINT TYPE

KEYPLAN

A	B	C	D
E	F	G	H

0 4' - 0" 8' - 0" 16' - 0"

SCALE: 1/8" = 1' - 0"

N

APPR	DATE	DESCRIPTION	SYM

NAVFAC

REGISTERED ARCHITECT PENNSYLVANIA MICHAEL P. RUCHERA No. RA016140 SEAL

RQ W.M. Jordan COMPANY – A JOINT VENTURE –

Michael Baker INTERNATIONAL

100 AIRSIDE DRIVE
MOON TOWNSHIP, PA 15108 A/E INFO

APPROVED

FOR COMMANDER NAVFAC

ACTIVITY
MARINE CORPS BASE CAMP LEJEUNE

SATISFACTORY TO DATE

DES	SJK	DRW RDT CHK	NCW
PM / DM			TOWLER / ROOT
BRANCH HEAD			DER
DESIGN DIRECTOR			R.L.Stephens, Jr.
FIRE PROTECTION			DPS

DEPARTMENT OF THE NAVY
NAVAL FACILITIES ENGINEERING SYSTEMS COMMAND
ATLANTIC DESIGN AND CONSTRUCTION

NAVAL FACILITIES ENGINEERING SYSTEMS COMMAND ATLANTIC
NORFOLK, VA

MCB CAMP LEJEUNE
JACKSONVILLE, NC

P1527 LOGCOM CSP WAREHOUSE

INTERIOR FINISH - 1ST FLOOR PLAN - AREA H

SCALE:	AS NOTED
EPROJECT NO.:	1639600
CONSTR. CONTR. NO.	N40085-20-C-0059
NAVFAC DRAWING NO.	14111217
SHEET	203 OF 447

IN118

DRAWFORM REVISION: 25 AUGUST 2020

P1527 FINAL SUBMISSION - 11/18/2021

PLOTTED: 11/12/2021 6:52:53 AM

FILE NAME: BIM 360://AIF PACKAGE 3/P1527 LOG COM CSP-1639600-A.rvt

LEGEND - INTERIOR FINISH (TYPE)

ACP	ACOUSTICAL CEILING PANEL
CG	CORNER GUARD
G	GROUT
LVT	LUXURY VINYL TILE
P	PAINT
PL	PLASTIC LAMINATE
PT	PORCELAIN TILE
RB	RESILIENT BASE
SC	SEALED CONCRETE
SS	SOLID SURFACE
TP	TOILET PARTITIONS
WM	WALK-OFF MAT SYSTEM
WP	WALL PROTECTION
WT	WINDOW TREATMENT

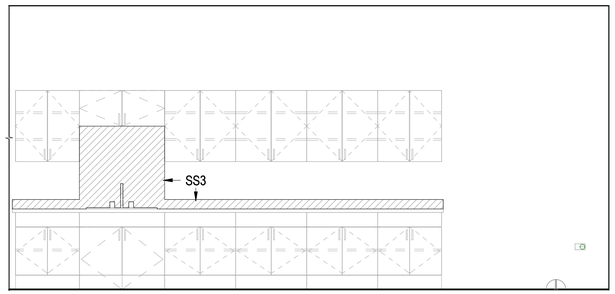

D1 INTERIOR FINISH ELEVATION - BREAK ROOM 103
SCALE: 3/8" = 1'-0"

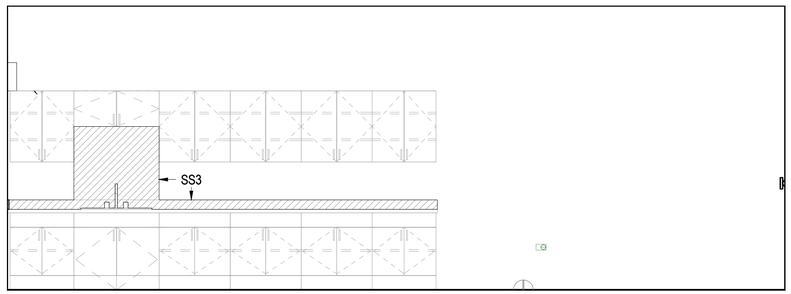

D2 INTERIOR FINISH ELEVATION - BREAK ROOM 202
SCALE: 3/8" = 1'-0"

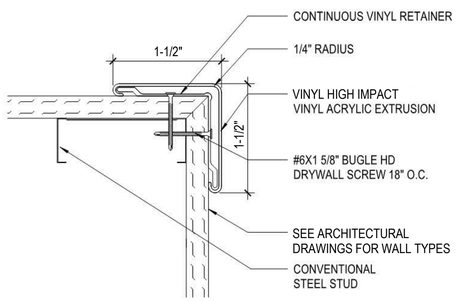

C1 INTERIOR FINISH DETAIL - CORNER GUARD (CG1)
SCALE: NTS

NOTE:
RECESS DEPTH AND INSTALLATION METHOD IS COORDINATED WITH FINAL APPROVED WALK-OFF MANUFACTURER'S INSTALLATION DRAWINGS AND STRUCTURAL SLAB.

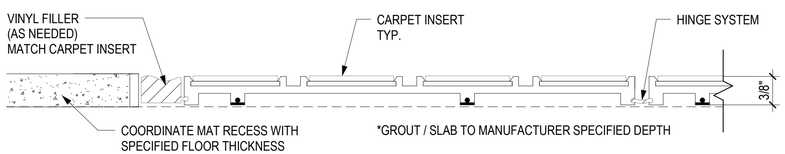

C2 INTERIOR FINISH DETAIL - ENTRANCE FLOOR MAT RECESS
SCALE: NTS

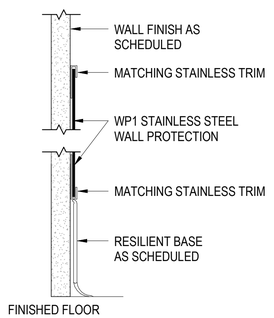

C4 INTERIOR FINISH DETAIL - WAINSCOT AND WALL BASE
SCALE: 6" = 1'-0"

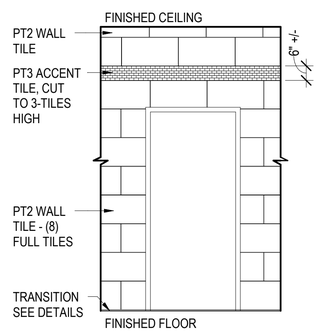

C5 INT. FINISH ELEVATION - TYP. WALL TILE AT WET AREAS
SCALE: 3/8" = 1'-0"

TILE FLOOR TO TILE WALL TRANSITION	INSIDE CORNER TRANSITION - COUNTER TO B/S
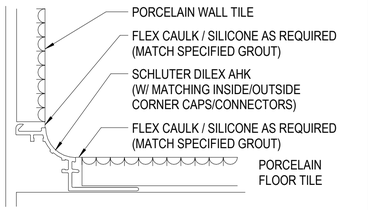	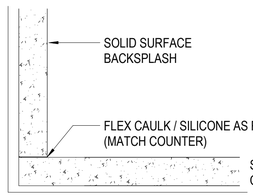
INSIDE CORNER TRANSITION- TILED WALLS	**OUTSIDE CORNER TRANSITION- TILED WALLS**
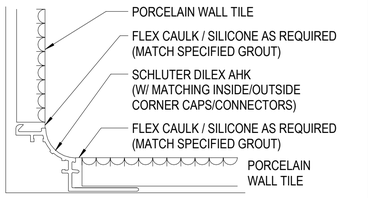	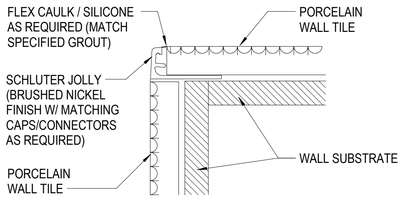

A1 INTERIOR FINISH DETAIL - TYPICAL CORNER TRANSITIONS
SCALE: NTS

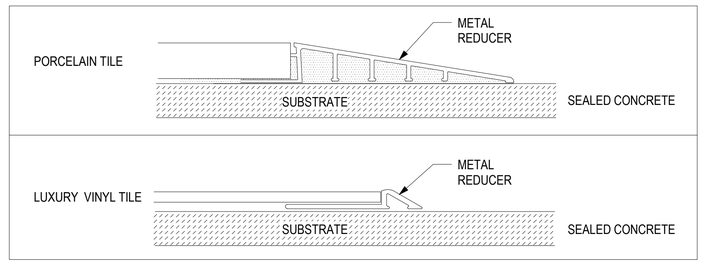

A3 INTERIOR FINISH DETAIL - TYPICAL FLOOR TRANSITIONS
SCALE: NTS

0 1 1/2" 3" 6"
SCALE: 6" = 1' - 0"

0 2' - 0" 4' - 0" 8' - 0"
SCALE: 3/8" = 1' - 0"

APPR | DATE | DESCRIPTION | SYM

NAVFAC

REGISTERED ARCHITECT COMMONWEALTH OF PENNSYLVANIA MICHAEL RAYMOND RUCHERA No. RA016140 SEAL

RQ W.M. Jordan COMPANY – A JOINT VENTURE –

Michael Baker INTERNATIONAL
100 AIRSIDE DRIVE
MOON TOWNSHIP, PA 15108 A/E INFO

APPROVED

FOR COMMANDER NAVFAC

ACTIVITY
MARINE CORPS BASE
CAMP LEJEUNE

SATISFACTORY TO DATE

DES	SJK	DRW RDT	CHK NCW
PM / DM		TOWLER / ROOT	
BRANCH HEAD		DER	
DESIGN DIRECTOR		R.L.Stephens, Jr.	
FIRE PROTECTION		DPS	

DEPARTMENT OF THE NAVY
NAVAL FACILITIES ENGINEERING SYSTEMS COMMAND
ATLANTIC DESIGN AND CONSTRUCTION
NAVAL FACILITIES ENGINEERING SYSTEMS COMMAND ATLANTIC
NORFOLK, VA
MCB CAMP LEJEUNE
JACKSONVILLE, NC
P1527 LOGCOM CSP WAREHOUSE

INTERIOR FINISH - DETAILS AND BREAK ROOM FINISH ELEVATIONS

SCALE:	AS NOTED
EPROJECT NO.:	1639600
CONSTR. CONTR. NO.	N40085-20-C-0059
NAVFAC DRAWING NO.	14111218
SHEET	204 OF 447

IN501

DRAWFORM REVISION: 25 AUGUST 2020

P1527 FINAL SUBMISSION - 11/18/2021

PLOTTED: 11/12/2021 6:52:58 AM

FILE NAME: BIM 360://AIF PACKAGE 3/P1527 LOG COM CSP-1639600-A.rvt

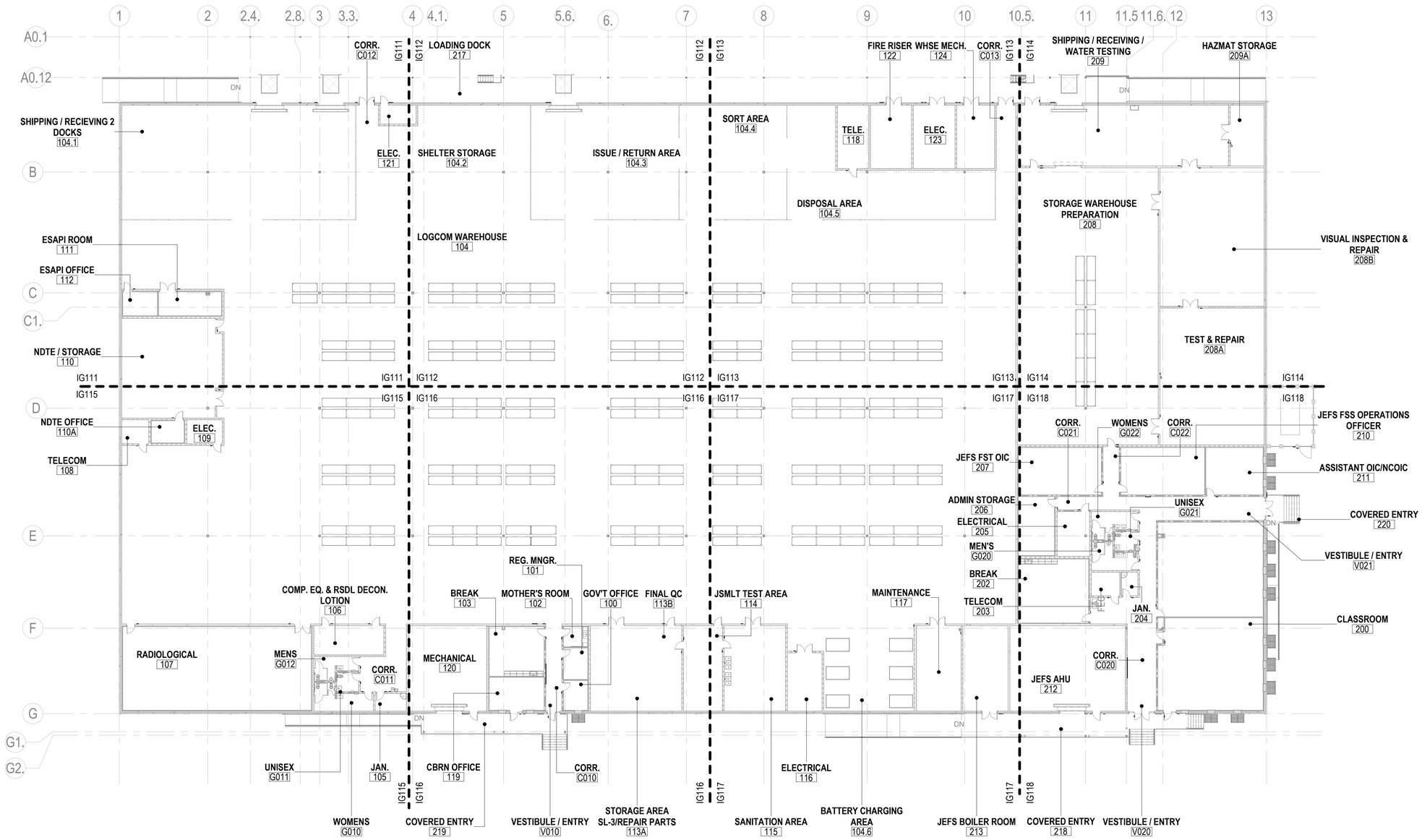

SIGNAGE - OVERALL 1ST FLOOR PLAN

SCALE: 3/64" = 1'-0"

KEYPLAN

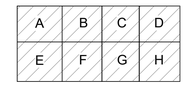

0 16' - 0" 32' - 0" 64' - 0"

SCALE: 3/64" = 1' - 0"

N

APPR | DATE | SYM | DESCRIPTION

NAVFAC

REGISTERED ARCHITECT COMMONWEALTH OF PENNSYLVANIA MICHAEL RUCHERA No. RA016140 SEAL

IRQ WM Jordan COMPANY – A JOINT VENTURE –

Michael Baker INTERNATIONAL

100 AIRSIDE DRIVE MOON TOWNSHIP, PA 15108 A/E INFO

APPROVED

FOR COMMANDER NAVFAC

ACTIVITY: MARINE CORPS BASE CAMP LEJEUNE

SATISFACTORY TO DATE

DES SJK	DRW RDT	CHK NCW
PM / DM	TOWLER / ROOT	
BRANCH HEAD	DER	
DESIGN DIRECTOR	R.L.Stephens, Jr.	
FIRE PROTECTION	DPS	

DEPARTMENT OF THE NAVY
NAVAL FACILITIES ENGINEERING SYSTEMS COMMAND ATLANTIC
ATLANTIC DESIGN AND CONSTRUCTION
NAVAL FACILITIES ENGINEERING SYSTEMS COMMAND ATLANTIC NORFOLK, VA
MCB CAMP LEJEUNE
JACKSONVILLE, NC
P1527 LOGCOM CSP WAREHOUSE
SIGNAGE - OVERALL 1ST FLOOR PLAN

SCALE:	AS NOTED
EPROJECT NO.:	1639600
CONSTR. CONTR. NO.	N40085-20-C-0059
NAVFAC DRAWING NO.	14111219
SHEET	205 OF 447

IG110

DRAWFORM REVISION: 25 AUGUST 2020

P1527 FINAL SUBMISSION - 11/18/2021

PLOTTED: 11/12/2021 7:16:16 AM

FILE NAME: BIM 360://HF PACKAGE 3/P1527 LOG COM CSP-1639600-A.rvt

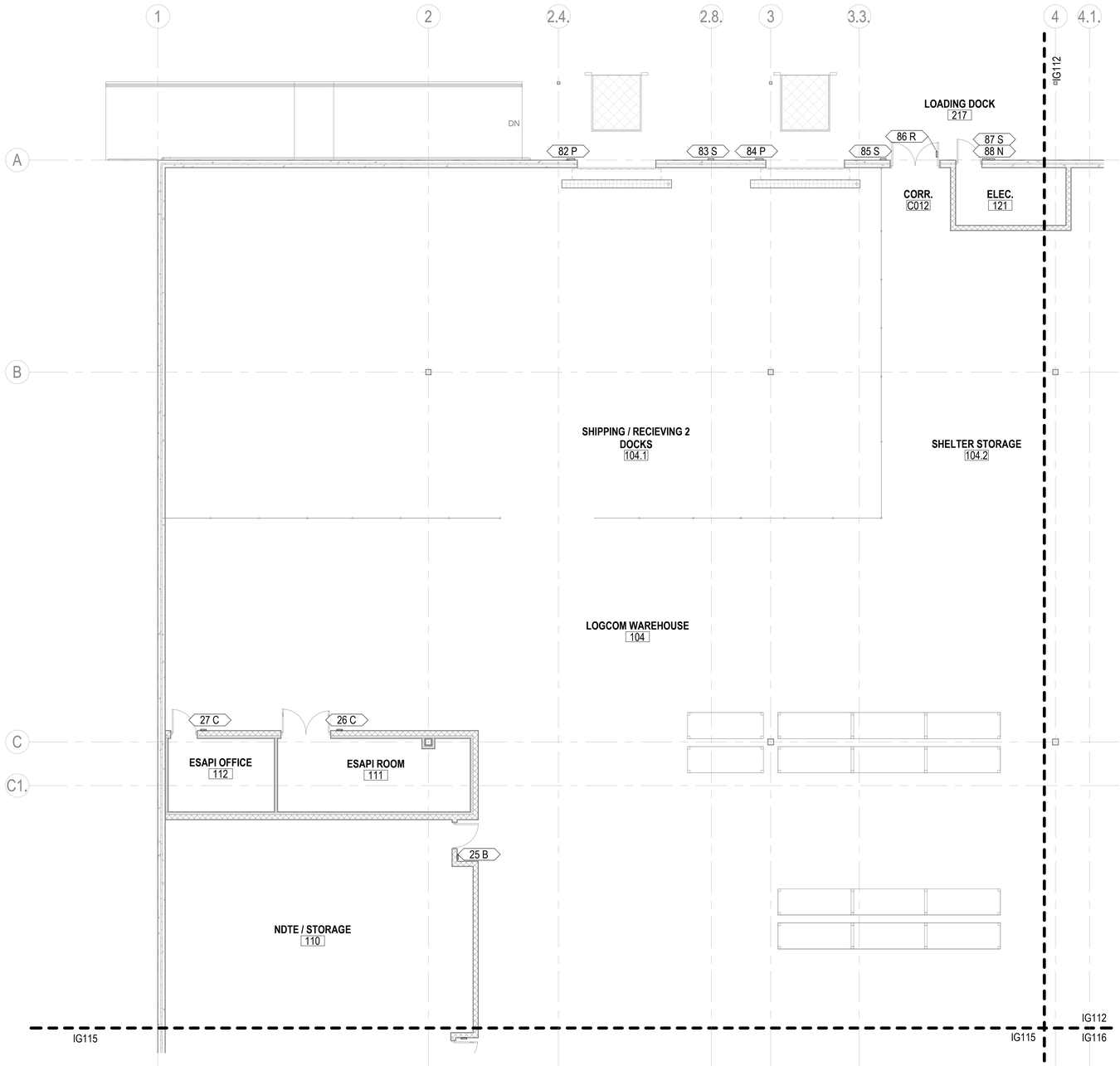

A1 SIGNAGE - 1ST FLOOR PLAN - AREA A
SCALE: 1/8" = 1'-0"

LEGEND - SIGNAGE (TYPE)

TYPE	DESCRIPTION	QUANTITY
A	ROOM ID	16
B	ROOM ID W/ DEPARTMENT	11
C	ROOM ID W/ OCCUPANT	10
D	ROOM ID W/ SLIDER	2
F.1	ROOM ID W/ MULTIPLE LOCATIONS	1
F.2	ROOM ID W/ MULTIPLE LOCATIONS	1
F.3	ROOM ID W/ MULTIPLE LOCATIONS	1
F.4	ROOM ID W/ MULTIPLE LOCATIONS	1
F.5	ROOM ID W/ MULTIPLE LOCATIONS	1
F.6	ROOM ID W/ MULTIPLE LOCATIONS	1
F.7	ROOM ID W/ MULTIPLE LOCATIONS	3
G	MENS	2
H	WOMENS	2
J	UNISEX	2
L	DRINKING FOUNTAIN	2
M	MECHANICAL ROOM ID SPACE/S	8
N	ELECTRICAL ROOM	5
P	BUILDING / OVERHEAD DOOR ID	6
Q.1	DIRECTIONAL	1
Q.2	DIRECTIONAL	1
R	EXIT	7
S	NO SMOKING	17
U	BUILDING ENTRANCE	3
W	BUILDING DIRECTORY	2
X	MANDATORY / INSTRUCTIONAL	5
Y	FACILITY RECOGNITION PLAQUE	1
Z	MAXIMUM OCCUPANCY	1

LEGEND - SIGNAGE (TAG)

XX SIGNAGE TAG
SIGNAGE TYPE
SIGNAGE NUMBER

KEYPLAN

A	B	C	D
E	F	G	H

0 4' - 0" 8' - 0" 16' - 0"
SCALE: 1/8" = 1' - 0"

N

SYM	DESCRIPTION	DATE	APPR

NAVFAC

REGISTERED ARCHITECT PENNSYLVANIA MICHAEL J. KUCHERA No. RA016140
SEAL

RQ W.M. Jordan COMPANY
- A JOINT VENTURE -

Michael Baker
INTERNATIONAL
100 AIRSIDE DRIVE
MOON TOWNSHIP, PA 15108
A/E INFO

APPROVED

FOR COMMANDER NAVFAC

ACTIVITY
MARINE CORPS BASE
CAMP LEJEUNE

SATISFACTORY TO DATE

DES SJK	DRW RDT	CHK NCW	
PM / DM	TOWLER / ROOT		
BRANCH HEAD	DER		
DESIGN DIRECTOR	R.L.Stephens, Jr.		
FIRE PROTECTION	DPS		

DEPARTMENT OF THE NAVY
NAVAL FACILITIES ENGINEERING SYSTEMS COMMAND
NAVAL FACILITIES ENGINEERING SYSTEMS COMMAND ATLANTIC
ATLANTIC DESIGN AND CONSTRUCTION
NORFOLK, VA
MCB CAMP LEJEUNE
JACKSONVILLE, NC
P1527 LOGCOM CSP WAREHOUSE
SIGNAGE - 1ST FLOOR PLAN - AREA A

SCALE:	AS NOTED
EPROJECT NO.:	1639600
CONSTR. CONTR. NO.	N40085-20-C-0059
NAVFAC DRAWING NO.	14111220
SHEET	206 OF 447

IG111

DRAWFORM REVISION: 25 AUGUST 2020

P1527 FINAL SUBMISSION - 11/18/2021

PLOTTED: 11/12/2021 7:16:20 AM

FILE NAME: BIM 360://HF PACKAGE 3/P1527 LOG COM CSP-1639600-A.rvt

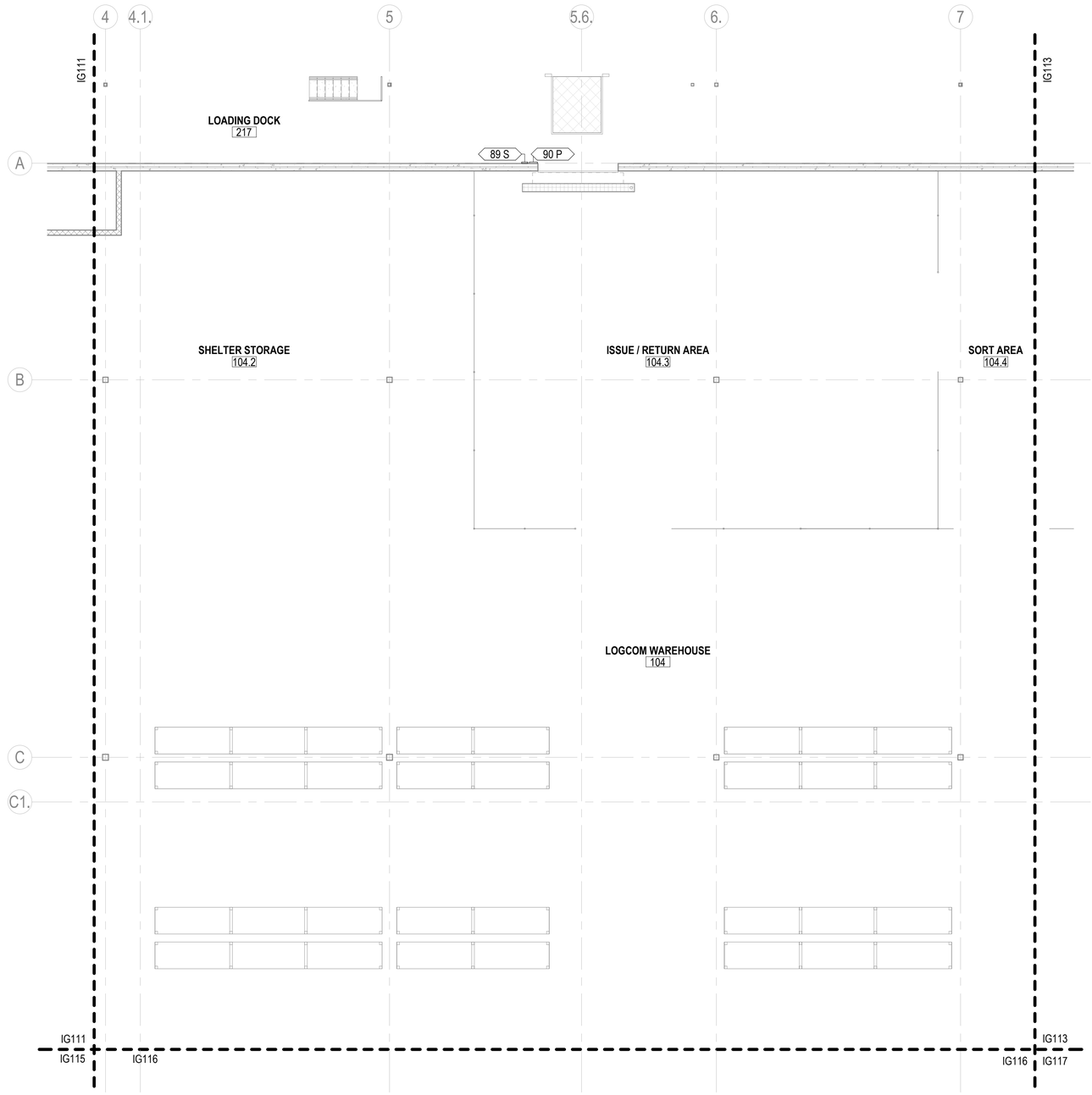

A1 SIGNAGE - 1ST FLOOR PLAN - AREA B
SCALE: 1/8" = 1'-0"

LEGEND - SIGNAGE (TYPE)

TYPE	DESCRIPTION	QUANTITY
A	ROOM ID	16
B	ROOM ID W/ DEPARTMENT	11
C	ROOM ID W/ OCCUPANT	10
D	ROOM ID W/ SLIDER	2
F.1	ROOM ID W/ MULTIPLE LOCATIONS	1
F.2	ROOM ID W/ MULTIPLE LOCATIONS	1
F.3	ROOM ID W/ MULTIPLE LOCATIONS	1
F.4	ROOM ID W/ MULTIPLE LOCATIONS	1
F.5	ROOM ID W/ MULTIPLE LOCATIONS	1
F.6	ROOM ID W/ MULTIPLE LOCATIONS	1
F.7	ROOM ID W/ MULTIPLE LOCATIONS	3
G	MENS	2
H	WOMENS	2
J	UNISEX	2
L	DRINKING FOUNTAIN	2
M	MECHANICAL ROOM ID SPACE/S	8
N	ELECTRICAL ROOM	5
P	BUILDING / OVERHEAD DOOR ID	6
Q.1	DIRECTIONAL	1
Q.2	DIRECTIONAL	1
R	EXIT	7
S	NO SMOKING	17
U	BUILDING ENTRANCE	3
W	BUILDING DIRECTORY	2
X	MANDATORY / INSTRUCTIONAL	5
Y	FACILITY RECOGNITION PLAQUE	1
Z	MAXIMUM OCCUPANCY	1

LEGEND - SIGNAGE (TAG)



KEYPLAN

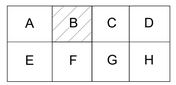

0 4' - 0" 8' - 0" 16' - 0"
SCALE: 1/8" = 1' - 0"

N

APPR	DATE	DESCRIPTION	SYM

NAVFAC

REGISTERED ARCHITECT
COMMONWEALTH OF PENNSYLVANIA
MICHAEL RUCHERA No. RA016140
SEAL

W.M. Jordan COMPANY
A JOINT VENTURE

Michael Baker INTERNATIONAL
100 AIRSIDE DRIVE
MOON TOWNSHIP, PA 15108
A/E INFO

APPROVED

FOR COMMANDER NAVFAC

ACTIVITY
MARINE CORPS BASE
CAMP LEJEUNE

SATISFACTORY TO DATE

DES	SJK	DRW	RDT	CHK	NCW

PM / DM TOWLER / ROOT
BRANCH HEAD DER
DESIGN DIRECTOR R.L.Stephens, Jr.
FIRE PROTECTION DPS

DEPARTMENT OF THE NAVY
NAVAL FACILITIES ENGINEERING SYSTEMS COMMAND
ATLANTIC DESIGN AND CONSTRUCTION
NAVAL FACILITIES ENGINEERING SYSTEMS COMMAND ATLANTIC
NORFOLK, VA
MCB CAMP LEJEUNE
JACKSONVILLE, NC
P1527 LOGCOM CSP WAREHOUSE

SIGNAGE - 1ST FLOOR PLAN - AREA B

SCALE: AS NOTED
EPROJECT NO.: 1639600
CONSTR. CONTR. NO. N40085-20-C-0059
NAVFAC DRAWING NO. 14111221
SHEET 207 OF 447

IG112

DRAWFORM REVISION: 25 AUGUST 2020

P1527 FINAL SUBMISSION - 11/18/2021

PLOTTED: 11/12/2021 7:16:23 AM
FILE NAME: BIM 360://HF PACKAGE 3/P1527 LOG COM CSP-1639600-A.rvt

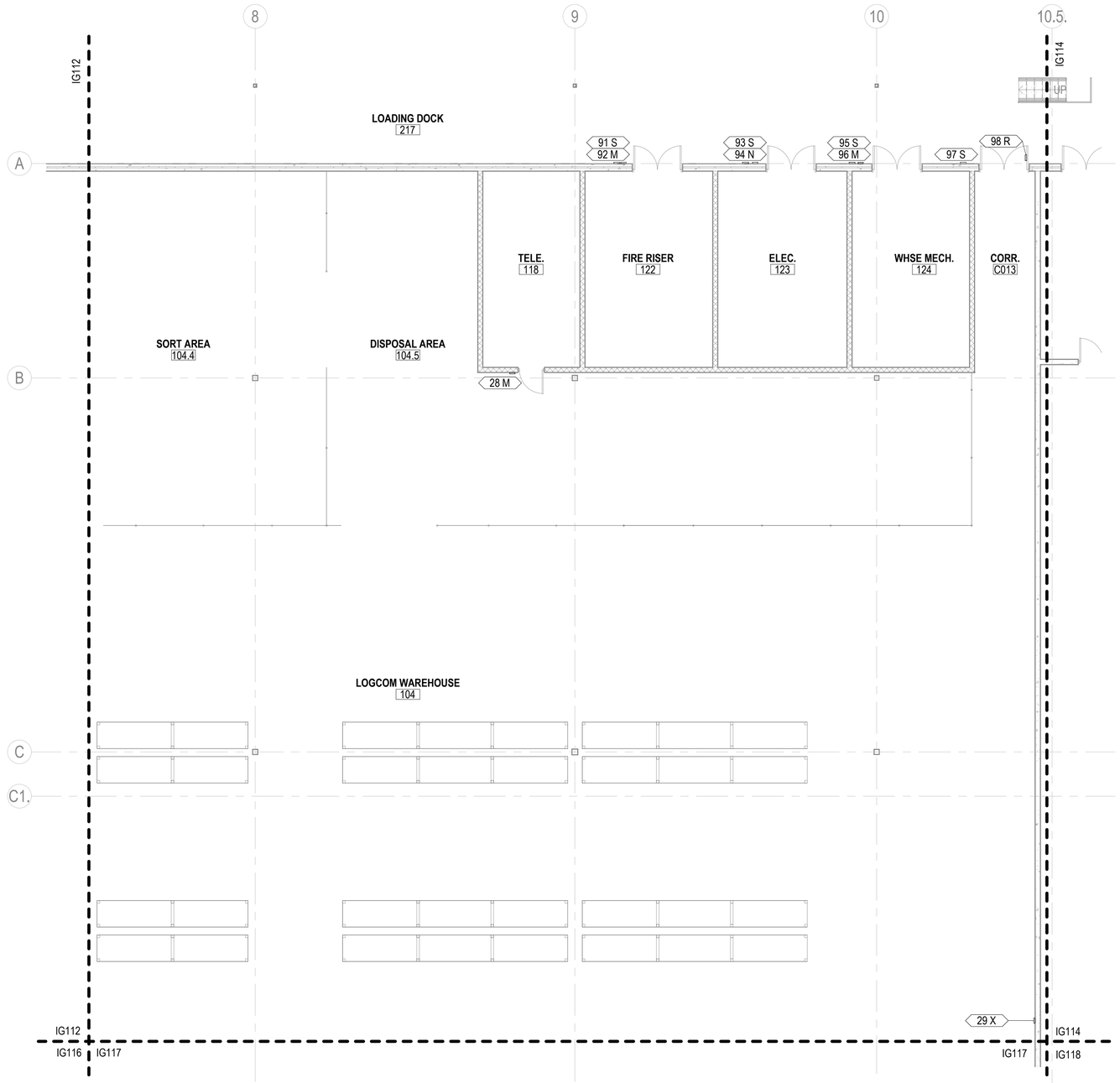

A1 SIGNAGE - 1ST FLOOR PLAN - AREA C
SCALE: 1/8" = 1'-0"

LEGEND - SIGNAGE (TYPE)

TYPE	DESCRIPTION	QUANTITY
A	ROOM ID	16
B	ROOM ID W/ DEPARTMENT	11
C	ROOM ID W/ OCCUPANT	10
D	ROOM ID W/ SLIDER	2
F.1	ROOM ID W/ MULTIPLE LOCATIONS	1
F.2	ROOM ID W/ MULTIPLE LOCATIONS	1
F.3	ROOM ID W/ MULTIPLE LOCATIONS	1
F.4	ROOM ID W/ MULTIPLE LOCATIONS	1
F.5	ROOM ID W/ MULTIPLE LOCATIONS	1
F.6	ROOM ID W/ MULTIPLE LOCATIONS	1
F.7	ROOM ID W/ MULTIPLE LOCATIONS	3
G	MENS	2
H	WOMENS	2
J	UNISEX	2
L	DRINKING FOUNTAIN	2
M	MECHANICAL ROOM ID SPACE/S	8
N	ELECTRICAL ROOM	5
P	BUILDING / OVERHEAD DOOR ID	6
Q.1	DIRECTIONAL	1
Q.2	DIRECTIONAL	1
R	EXIT	7
S	NO SMOKING	17
U	BUILDING ENTRANCE	3
W	BUILDING DIRECTORY	2
X	MANDATORY / INSTRUCTIONAL	5
Y	FACILITY RECOGNITION PLAQUE	1
Z	MAXIMUM OCCUPANCY	1

LEGEND - SIGNAGE (TAG)

XX — SIGNAGE TAG
SIGNAGE TYPE
SIGNAGE NUMBER

KEYPLAN

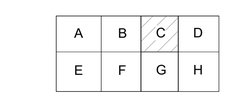

0 4' - 0" 8' - 0" 16' - 0"
SCALE: 1/8" = 1' - 0"

N

SYM	DESCRIPTION	DATE	APPR

NAVFAC

REGISTERED ARCHITECT PENNSYLVANIA MICHAEL J. KUCHERA No. RA016140
SEAL

RQ W.M. Jordan COMPANY - A JOINT VENTURE -

Michael Baker INTERNATIONAL
100 AIRSIDE DRIVE
MOON TOWNSHIP, PA 15108
A/E INFO

APPROVED

FOR COMMANDER NAVFAC

ACTIVITY
MARINE CORPS BASE
CAMP LEJEUNE

SATISFACTORY TO DATE

DES SJK | DRW RDT | CHK NCW
PM / DM TOWLER / ROOT
BRANCH HEAD DER
DESIGN DIRECTOR R.L.Stephens, Jr.
FIRE PROTECTION DPS

DEPARTMENT OF THE NAVY
NAVAL FACILITIES ENGINEERING SYSTEMS COMMAND
NAVAL FACILITIES ENGINEERING SYSTEMS COMMAND ATLANTIC
ATLANTIC DESIGN AND CONSTRUCTION
NORFOLK, VA
MCB CAMP LEJEUNE
JACKSONVILLE, NC
P1527 LOGCOM CSP WAREHOUSE
SIGNAGE - 1ST FLOOR PLAN - AREA C

SCALE: AS NOTED
EPROJECT NO.: 1639600
CONSTR. CONTR. NO. N40085-20-C-0059
NAVFAC DRAWING NO. 14111222
SHEET 208 OF 447

IG113

DRAWFORM REVISION: 25 AUGUST 2020

P1527 FINAL SUBMISSION - 11/18/2021

PLOTTED: 11/12/2021 7:16:27 AM

FILE NAME: BIM 360://HF PACKAGE 3/P1527 LOG COM CSP-1639600-A.rvt

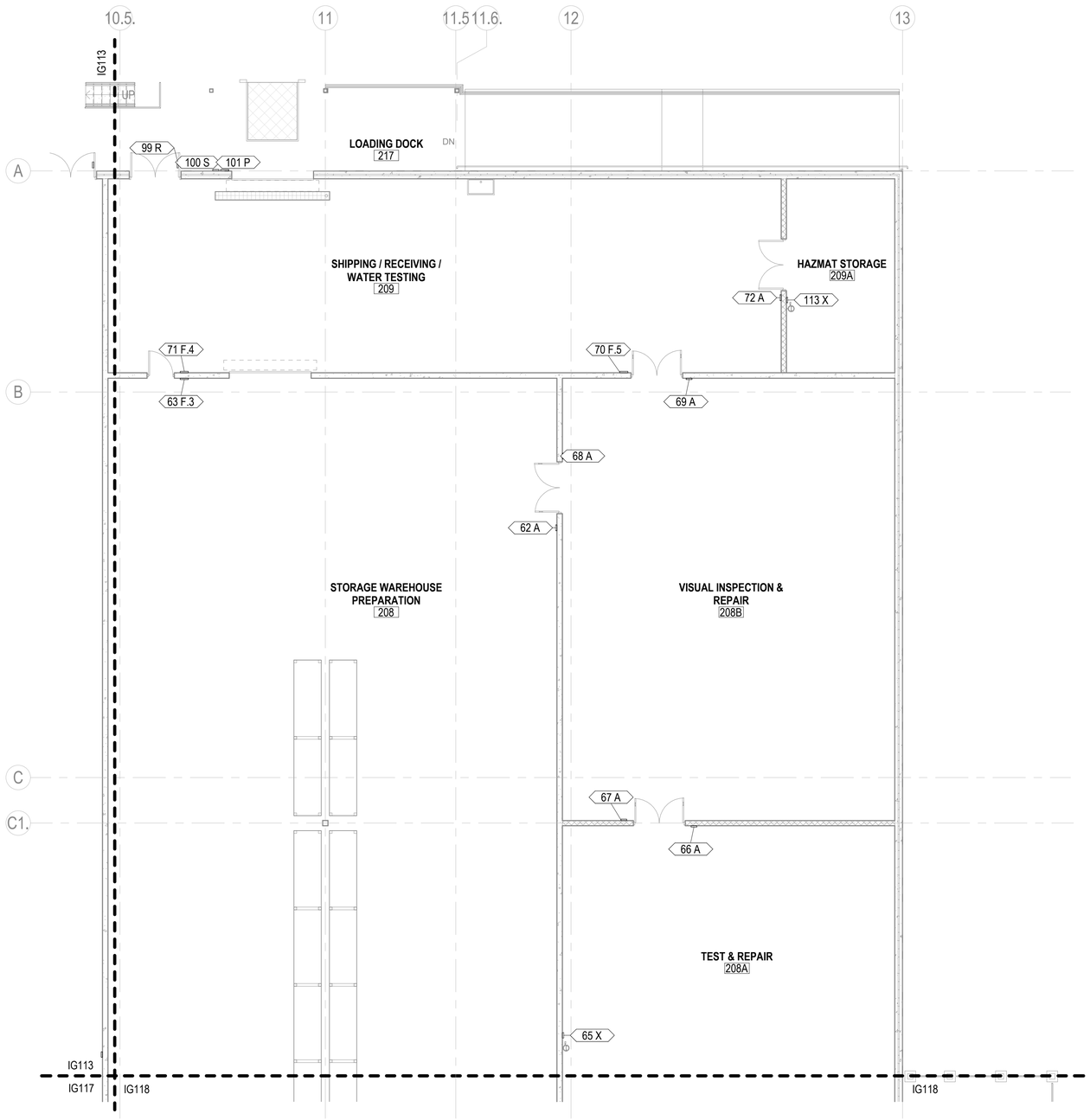

A1 SIGNAGE - 1ST FLOOR PLAN - AREA D
SCALE: 1/8" = 1'-0"

LEGEND - SIGNAGE (TYPE)

TYPE	DESCRIPTION	QUANTITY
A	ROOM ID	16
B	ROOM ID W/ DEPARTMENT	11
C	ROOM ID W/ OCCUPANT	10
D	ROOM ID W/ SLIDER	2
F.1	ROOM ID W/ MULTIPLE LOCATIONS	1
F.2	ROOM ID W/ MULTIPLE LOCATIONS	1
F.3	ROOM ID W/ MULTIPLE LOCATIONS	1
F.4	ROOM ID W/ MULTIPLE LOCATIONS	1
F.5	ROOM ID W/ MULTIPLE LOCATIONS	1
F.6	ROOM ID W/ MULTIPLE LOCATIONS	1
F.7	ROOM ID W/ MULTIPLE LOCATIONS	3
G	MENS	2
H	WOMENS	2
J	UNISEX	2
L	DRINKING FOUNTAIN	2
M	MECHANICAL ROOM ID SPACE/S	8
N	ELECTRICAL ROOM	5
P	BUILDING / OVERHEAD DOOR ID	6
Q.1	DIRECTIONAL	1
Q.2	DIRECTIONAL	1
R	EXIT	7
S	NO SMOKING	17
U	BUILDING ENTRANCE	3
W	BUILDING DIRECTORY	2
X	MANDATORY / INSTRUCTIONAL	5
Y	FACILITY RECOGNITION PLAQUE	1
Z	MAXIMUM OCCUPANCY	1

LEGEND - SIGNAGE (TAG)

XX — SIGNAGE TAG
- SIGNAGE TYPE
- SIGNAGE NUMBER

KEYPLAN

A	B	C	D
E	F	G	H

0 4' - 0" 8' - 0" 16' - 0"
SCALE: 1/8" = 1' - 0"

N

APPR	DATE	DESCRIPTION	SYM

NAVFAC

REGISTERED ARCHITECT COMMONWEALTH OF PENNSYLVANIA MICHAEL P. RUCHERA No. RA016140
SEAL

IRQ WM Jordan COMPANY – A JOINT VENTURE –

Michael Baker INTERNATIONAL
100 AIRSIDE DRIVE
MOON TOWNSHIP, PA 15108
A/E INFO

APPROVED
FOR COMMANDER NAVFAC

ACTIVITY
MARINE CORPS BASE CAMP LEJEUNE

SATISFACTORY TO DATE

DES	DRW	CHK
SJK	RDT	NCW

PM / DM: TOWLER / ROOT
BRANCH HEAD: DER
DESIGN DIRECTOR: R.L.Stephens, Jr.
FIRE PROTECTION: DPS

DEPARTMENT OF THE NAVY
NAVAL FACILITIES ENGINEERING SYSTEMS COMMAND
ATLANTIC DESIGN AND CONSTRUCTION
NAVAL FACILITIES ENGINEERING SYSTEMS COMMAND ATLANTIC
NORFOLK, VA
MCB CAMP LEJEUNE
JACKSONVILLE, NC
P1527 LOGCOM CSP WAREHOUSE
SIGNAGE - 1ST FLOOR PLAN - AREA D

SCALE:	AS NOTED
EPROJECT NO.:	1639600
CONSTR. CONTR. NO.	N40085-20-C-0059
NAVFAC DRAWING NO.	14111223
SHEET	209 OF 447

IG114

DRAWFORM REVISION: 25 AUGUST 2020

P1527 FINAL SUBMISSION - 11/18/2021

PLOTTED: 11/12/2021 7:16:31 AM
FILE NAME: BIM 360://HF PACKAGE 3/P1527 LOG COM CSP--1639600-A.rvt

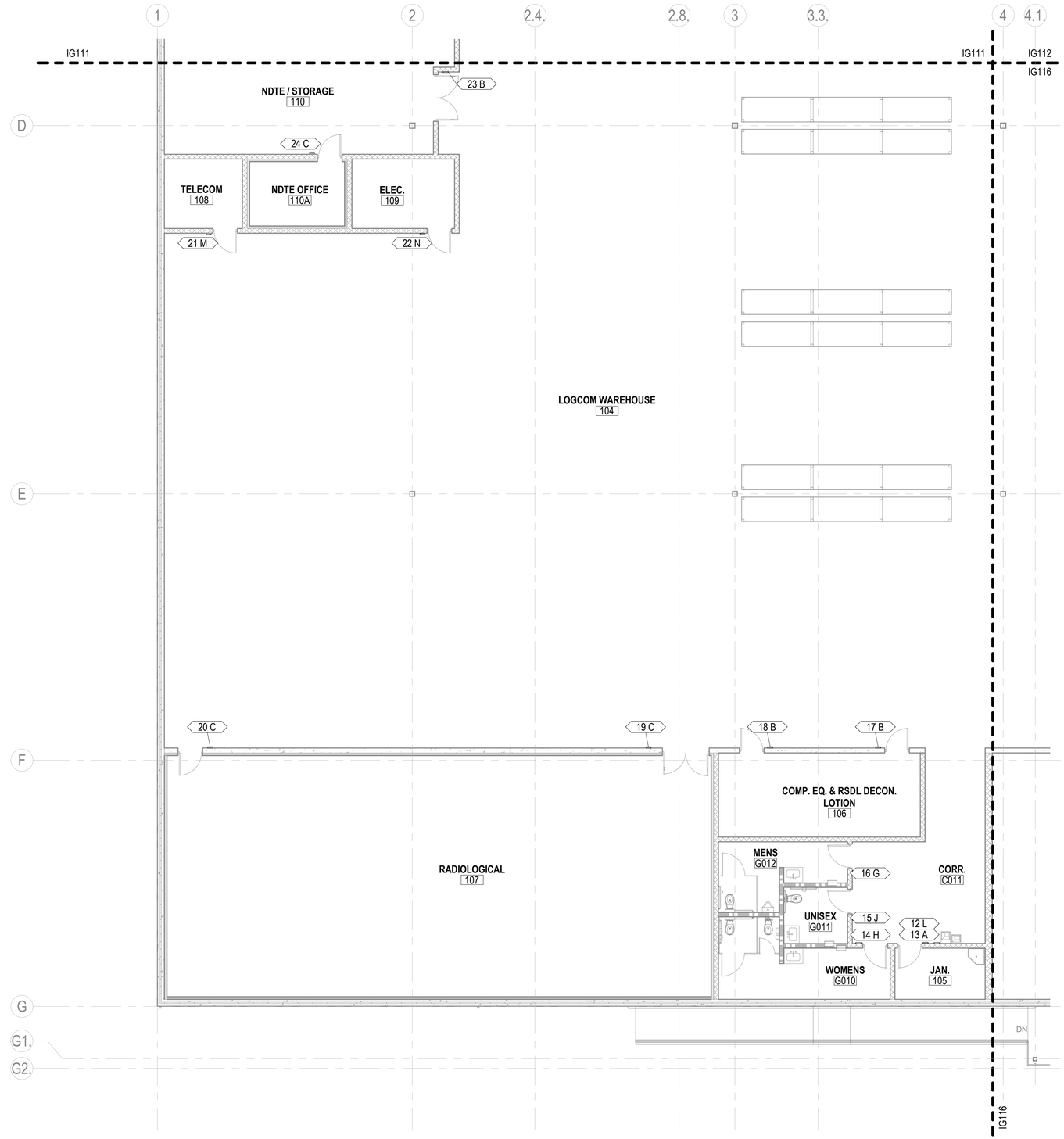

A1 SIGNAGE - 1ST FLOOR PLAN - AREA E
SCALE: 1/8" = 1'-0"

LEGEND - SIGNAGE (TYPE)

TYPE	DESCRIPTION	QUANTITY
A	ROOM ID	16
B	ROOM ID W/ DEPARTMENT	11
C	ROOM ID W/ OCCUPANT	10
D	ROOM ID W/ SLIDER	2
F.1	ROOM ID W/ MULTIPLE LOCATIONS	1
F.2	ROOM ID W/ MULTIPLE LOCATIONS	1
F.3	ROOM ID W/ MULTIPLE LOCATIONS	1
F.4	ROOM ID W/ MULTIPLE LOCATIONS	1
F.5	ROOM ID W/ MULTIPLE LOCATIONS	1
F.6	ROOM ID W/ MULTIPLE LOCATIONS	1
F.7	ROOM ID W/ MULTIPLE LOCATIONS	3
G	MENS	2
H	WOMENS	2
J	UNISEX	2
L	DRINKING FOUNTAIN	2
M	MECHANICAL ROOM ID SPACE/S	8
N	ELECTRICAL ROOM	5
P	BUILDING / OVERHEAD DOOR ID	6
Q.1	DIRECTIONAL	1
Q.2	DIRECTIONAL	1
R	EXIT	7
S	NO SMOKING	17
U	BUILDING ENTRANCE	3
W	BUILDING DIRECTORY	2
X	MANDATORY / INSTRUCTIONAL	5
Y	FACILITY RECOGNITION PLAQUE	1
Z	MAXIMUM OCCUPANCY	1

LEGEND - SIGNAGE (TAG)

XX — SIGNAGE TAG
SIGNAGE TYPE
SIGNAGE NUMBER

KEYPLAN

A	B	C	D
E	F	G	H

0 4' - 0" 8' - 0" 16' - 0"
SCALE: 1/8" = 1' - 0"

N

SYM	DESCRIPTION	DATE	APPR

NAVFAC

REGISTERED ARCHITECT PENNSYLVANIA MICHAEL J. KUCHERA No. RA016140
SEAL

RQ W.M. Jordan COMPANY - A JOINT VENTURE -

Michael Baker INTERNATIONAL
100 AIRSIDE DRIVE
MOON TOWNSHIP, PA 15108
A/E INFO

APPROVED

FOR COMMANDER NAVFAC

ACTIVITY
MARINE CORPS BASE
CAMP LEJEUNE

SATISFACTORY TO DATE

DES SJK	DRW RDT	CHK NCW	
PM / DM	TOWLER / ROOT		
BRANCH HEAD	DER		
DESIGN DIRECTOR	R.L.Stephens, Jr.		
FIRE PROTECTION	DPS		

DEPARTMENT OF THE NAVY
NAVAL FACILITIES ENGINEERING SYSTEMS COMMAND
ATLANTIC DESIGN AND CONSTRUCTION
NAVAL FACILITIES ENGINEERING SYSTEMS COMMAND ATLANTIC
NORFOLK, VA
MCB CAMP LEJEUNE
JACKSONVILLE, NC
P1527 LOGCOM CSP WAREHOUSE
SIGNAGE - 1ST FLOOR PLAN - AREA E

SCALE:	AS NOTED
EPROJECT NO.:	1639600
CONSTR. CONTR. NO.	N40085-20-C-0059
NAVFAC DRAWING NO.	14111224
SHEET	210 OF 447

IG115

DRAWFORM REVISION 25 AUGUST 2020

P1527 FINAL SUBMISSION - 11/18/2021

PLOTTED: 11/12/2021 7:16:34 AM

FILE NAME: BIM 360://HF PACKAGE 3/P1527 LOG COM CSP-1639600-A.rvt

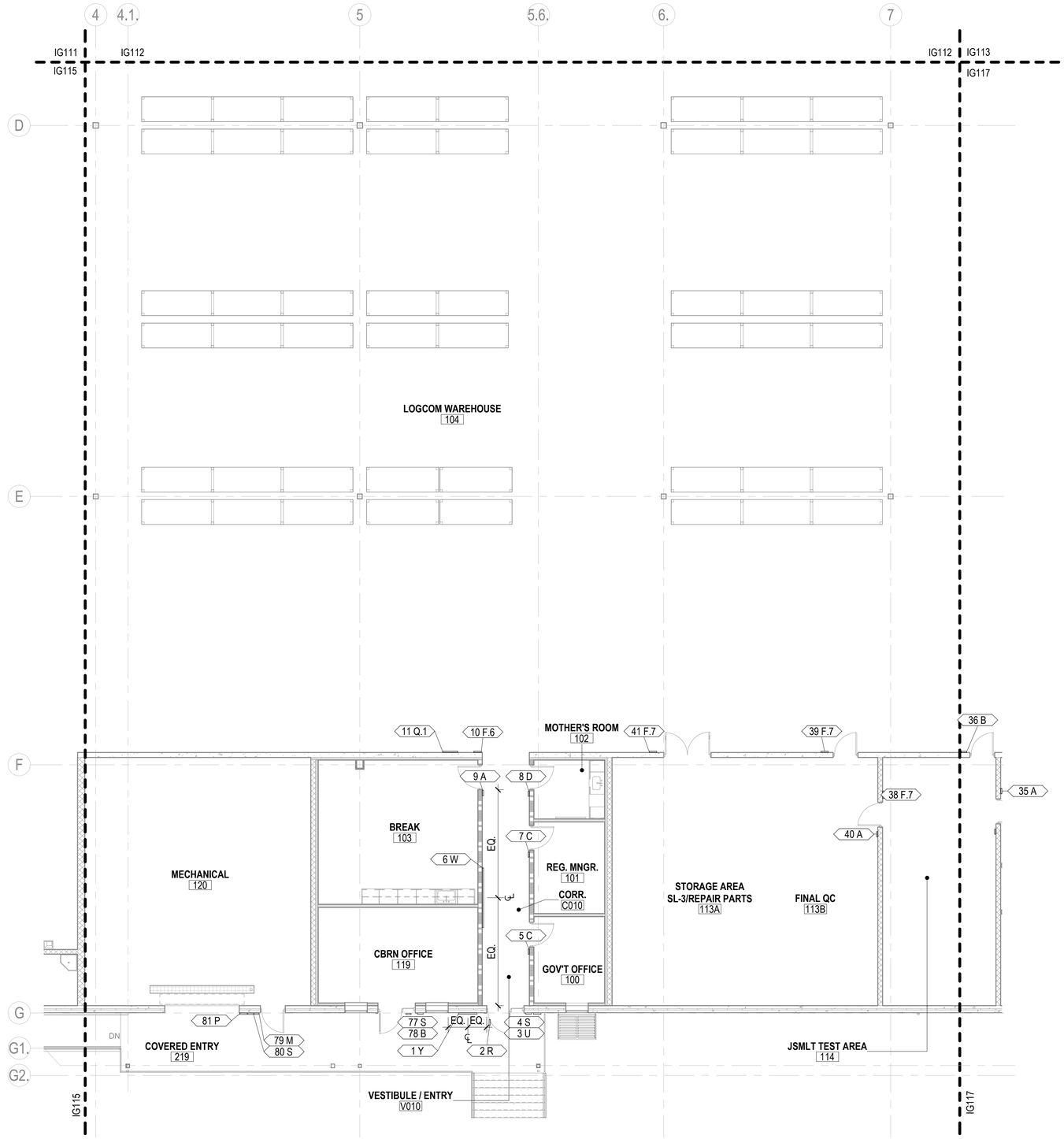

A1 SIGNAGE - 1ST FLOOR PLAN - AREA F

SCALE: 1/8" = 1'-0"

LEGEND - SIGNAGE (TYPE)

TYPE	DESCRIPTION	QUANTITY
A	ROOM ID	16
B	ROOM ID W/ DEPARTMENT	11
C	ROOM ID W/ OCCUPANT	10
D	ROOM ID W/ SLIDER	2
F.1	ROOM ID W/ MULTIPLE LOCATIONS	1
F.2	ROOM ID W/ MULTIPLE LOCATIONS	1
F.3	ROOM ID W/ MULTIPLE LOCATIONS	1
F.4	ROOM ID W/ MULTIPLE LOCATIONS	1
F.5	ROOM ID W/ MULTIPLE LOCATIONS	1
F.6	ROOM ID W/ MULTIPLE LOCATIONS	1
F.7	ROOM ID W/ MULTIPLE LOCATIONS	3
G	MENS	2
H	WOMENS	2
J	UNISEX	2
L	DRINKING FOUNTAIN	2
M	MECHANICAL ROOM ID SPACE/S	8
N	ELECTRICAL ROOM	5
P	BUILDING / OVERHEAD DOOR ID	6
Q.1	DIRECTIONAL	1
Q.2	DIRECTIONAL	1
R	EXIT	7
S	NO SMOKING	17
U	BUILDING ENTRANCE	3
W	BUILDING DIRECTORY	2
X	MANDATORY / INSTRUCTIONAL	5
Y	FACILITY RECOGNITION PLAQUE	1
Z	MAXIMUM OCCUPANCY	1

LEGEND - SIGNAGE (TAG)



KEYPLAN

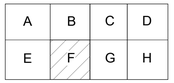

0 4' - 0" 8' - 0" 16' - 0"

SCALE: 1/8" = 1' - 0"

N

APPR	DATE	DESCRIPTION	SYM

NAVFAC

REGISTERED ARCHITECT COMMONWEALTH OF PENNSYLVANIA MICHAEL RUCHERA No. RA010140

SEAL

IRQ WM Jordan COMPANY – A JOINT VENTURE –

Michael Baker INTERNATIONAL

100 AIRSIDE DRIVE
MOON TOWNSHIP, PA 15108 A/E INFO

APPROVED

FOR COMMANDER NAVFAC

ACTIVITY
MARINE CORPS BASE
CAMP LEJEUNE

SATISFACTORY TO DATE

DES	SJK	DRW	RDT	CHK	NCW
PM / DM	TOWLER / ROOT				
BRANCH HEAD	DER				
DESIGN DIRECTOR	R.L.Stephens, Jr.				
FIRE PROTECTION	DPS				

DEPARTMENT OF THE NAVY
NAVAL FACILITIES ENGINEERING SYSTEMS COMMAND
ATLANTIC DESIGN AND CONSTRUCTION
MCB CAMP LEJEUNE

NAVAL FACILITIES ENGINEERING SYSTEMS COMMAND ATLANTIC
NORFOLK, VA

JACKSONVILLE, NC
P1527 LOGCOM CSP WAREHOUSE

SIGNAGE - 1ST FLOOR PLAN - AREA F

SCALE:	AS NOTED
EPROJECT NO.:	1639600
CONSTR. CONTR. NO.	N40085-20-C-0059
NAVFAC DRAWING NO.	14111225
SHEET	211 OF 447

IG116

DRAWFORM REVISION: 25 AUGUST 2020

P1527 FINAL SUBMISSION - 11/18/2021

PLOTTED: 11/12/2021 7:16:38 AM

FILE NAME: BIM 360/IHF PACKAGE 3/P1527 LOG COM CSP-1639600-A.rvt

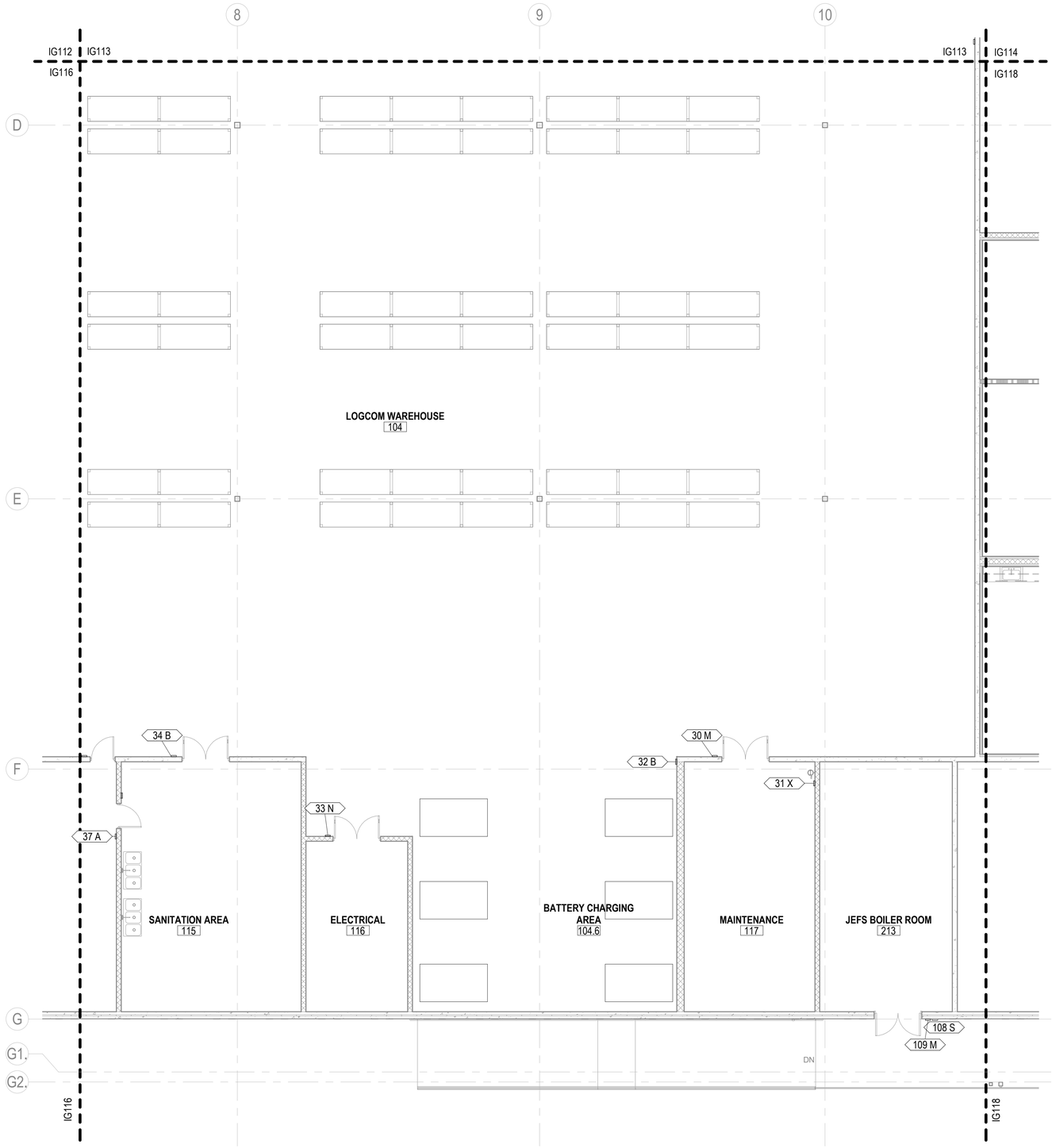

A1 SIGNAGE - 1ST FLOOR PLAN - AREA G
SCALE: 1/8" = 1'-0"

LEGEND - SIGNAGE (TYPE)

TYPE	DESCRIPTION	QUANTITY
A	ROOM ID	16
B	ROOM ID W/ DEPARTMENT	11
C	ROOM ID W/ OCCUPANT	10
D	ROOM ID W/ SLIDER	2
F.1	ROOM ID W/ MULTIPLE LOCATIONS	1
F.2	ROOM ID W/ MULTIPLE LOCATIONS	1
F.3	ROOM ID W/ MULTIPLE LOCATIONS	1
F.4	ROOM ID W/ MULTIPLE LOCATIONS	1
F.5	ROOM ID W/ MULTIPLE LOCATIONS	1
F.6	ROOM ID W/ MULTIPLE LOCATIONS	1
F.7	ROOM ID W/ MULTIPLE LOCATIONS	3
G	MENS	2
H	WOMENS	2
J	UNISEX	2
L	DRINKING FOUNTAIN	2
M	MECHANICAL ROOM ID SPACE/S	8
N	ELECTRICAL ROOM	5
P	BUILDING / OVERHEAD DOOR ID	6
Q.1	DIRECTIONAL	1
Q.2	DIRECTIONAL	1
R	EXIT	7
S	NO SMOKING	17
U	BUILDING ENTRANCE	3
W	BUILDING DIRECTORY	2
X	MANDATORY / INSTRUCTIONAL	5
Y	FACILITY RECOGNITION PLAQUE	1
Z	MAXIMUM OCCUPANCY	1

LEGEND - SIGNAGE (TAG)

XX — SIGNAGE TAG
SIGNAGE TYPE
SIGNAGE NUMBER

KEYPLAN

A	B	C	D
E	F	G	H

0 4' - 0" 8' - 0" 16' - 0"
SCALE: 1/8" = 1' - 0"

N

SYM	DESCRIPTION	DATE	APPR

NAVFAC

REGISTERED ARCHITECT PENNSYLVANIA MICHAEL J. KUCHERA No. RA016140
SEAL

RQ W.M. Jordan COMPANY - A JOINT VENTURE -

Michael Baker INTERNATIONAL
100 AIRSIDE DRIVE
MOON TOWNSHIP, PA 15108
A/E INFO

APPROVED

FOR COMMANDER NAVFAC

ACTIVITY
MARINE CORPS BASE CAMP LEJEUNE

SATISFACTORY TO DATE

DES SJK	DRW RDT	CHK NCW	
PM / DM	TOWLER / ROOT		
BRANCH HEAD	DER		
DESIGN DIRECTOR	R.L.Stephens, Jr.		
FIRE PROTECTION	DPS		

DEPARTMENT OF THE NAVY
NAVAL FACILITIES ENGINEERING SYSTEMS COMMAND
NAVAL FACILITIES ENGINEERING SYSTEMS COMMAND ATLANTIC
ATLANTIC DESIGN AND CONSTRUCTION
NORFOLK, VA
MCB CAMP LEJEUNE
JACKSONVILLE, NC

P1527 LOGCOM CSP WAREHOUSE

SIGNAGE - 1ST FLOOR PLAN - AREA G

SCALE:	AS NOTED
EPROJECT NO.:	1639600
CONSTR. CONTR. NO.	N40085-20-C-0059
NAVFAC DRAWING NO.	14111226
SHEET	212 OF 447

IG117

DRAWFORM REVISION: 25 AUGUST 2020

P1527 FINAL SUBMISSION - 11/18/2021

FILE NAME: BIM 360://HF PACKAGE 3/P1527 LOG COM CSP-1639600-A.rvt
PLOTTED: 11/12/2021 7:16:41 AM

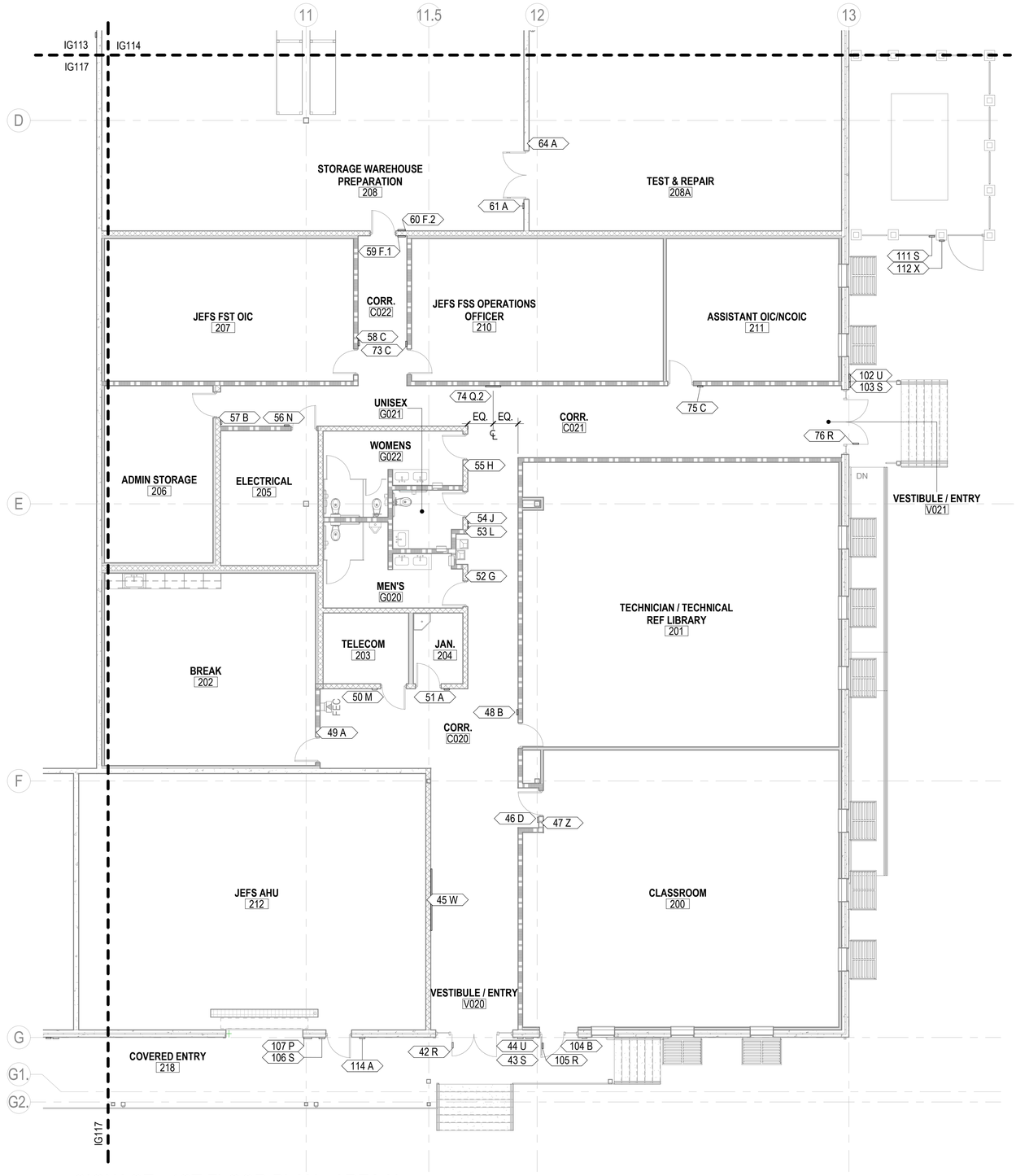

A1 SIGNAGE - 1ST FLOOR PLAN - AREA H
SCALE: 1/8" = 1'-0"

LEGEND - SIGNAGE (TYPE)

TYPE	DESCRIPTION	QUANTITY
A	ROOM ID	16
B	ROOM ID W/ DEPARTMENT	11
C	ROOM ID W/ OCCUPANT	10
D	ROOM ID W/ SLIDER	2
F.1	ROOM ID W/ MULTIPLE LOCATIONS	1
F.2	ROOM ID W/ MULTIPLE LOCATIONS	1
F.3	ROOM ID W/ MULTIPLE LOCATIONS	1
F.4	ROOM ID W/ MULTIPLE LOCATIONS	1
F.5	ROOM ID W/ MULTIPLE LOCATIONS	1
F.6	ROOM ID W/ MULTIPLE LOCATIONS	1
F.7	ROOM ID W/ MULTIPLE LOCATIONS	3
G	MENS	2
H	WOMENS	2
J	UNISEX	2
L	DRINKING FOUNTAIN	2
M	MECHANICAL ROOM ID SPACE/S	8
N	ELECTRICAL ROOM	5
P	BUILDING / OVERHEAD DOOR ID	6
Q.1	DIRECTIONAL	1
Q.2	DIRECTIONAL	1
R	EXIT	7
S	NO SMOKING	17
U	BUILDING ENTRANCE	3
W	BUILDING DIRECTORY	2
X	MANDATORY / INSTRUCTIONAL	5
Y	FACILITY RECOGNITION PLAQUE	1
Z	MAXIMUM OCCUPANCY	1

LEGEND - SIGNAGE (TAG)

XX — SIGNAGE TAG
SIGNAGE TYPE
SIGNAGE NUMBER

KEYPLAN

A	B	C	D
E	F	G	H

0 4' - 0" 8' - 0" 16' - 0"
SCALE: 1/8" = 1' - 0"

N

SYM	DESCRIPTION	DATE	APPR

NAVFAC

REGISTERED ARCHITECT PENNSYLVANIA MICHAEL J. KUCHERA No. RA016140 SEAL

RQ W.M. Jordan COMPANY - A JOINT VENTURE -

Michael Baker INTERNATIONAL
100 AIRSIDE DRIVE
MOON TOWNSHIP, PA 15108
A/E INFO

APPROVED
FOR COMMANDER NAVFAC
ACTIVITY
MARINE CORPS BASE CAMP LEJEUNE
SATISFACTORY TO DATE
DES SJK DRW RDT CHK NCW
PM / DM TOWLER / ROOT
BRANCH HEAD DER
DESIGN DIRECTOR R.L.Stephens, Jr.
FIRE PROTECTION DPS

DEPARTMENT OF THE NAVY
NAVAL FACILITIES ENGINEERING SYSTEMS COMMAND
NAVAL FACILITIES ENGINEERING SYSTEMS COMMAND ATLANTIC
ATLANTIC DESIGN AND CONSTRUCTION
NORFOLK, VA
MCB CAMP LEJEUNE
JACKSONVILLE, NC
P1527 LOGCOM CSP WAREHOUSE
SIGNAGE - 1ST FLOOR PLAN - AREA H

SCALE: AS NOTED
EPROJECT NO.: 1639600
CONSTR. CONTR. NO. N40085-20-C-0059
NAVFAC DRAWING NO. 14111227
SHEET 213 OF 447
IG118
DRAWFORM REVISION: 25 AUGUST 2020

P1527 FINAL SUBMISSION - 11/18/2021

PLOTTED: 11/12/2021 7:16:45 AM
FILE NAME: BIM 360://HIF PACKAGE 3/P1527 LOG COM CSP-1639600-A.rvt

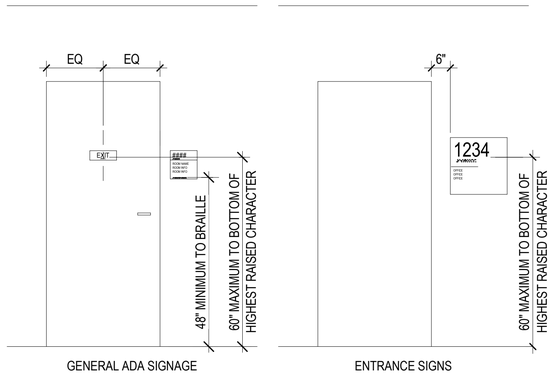

GENERAL ADA SIGNAGE

ENTRANCE SIGNS

INSTALLATION NOTES:
1. MOUNTING OPTIONS VARY PER SIGN TYPE. MOST INTERIOR SIGNS CAN BE EASILY INSTALLED USING A COMBINATION OF CLEAR SILICONE ADHESIVE AND DOUBLE SIDED FOAM TAPE OR CONCEALED MECHANICAL FASTENERS, SEE SPECIFICATIONS FOR FURTHER INFORMATION.
2. WHERE THERE IS LESS THAN 18" CLEAR SPACE ON THE LATCH SIDE OF A SINGLE DOOR, OR ON THE RIGHT SIDE OF DOUBLE DOORS, SIGNS SHALL BE LOCATED ON THE NEAREST ADJACENT WALL.
3. WHERE THERE IS A SIDE LIGHT WINDOW LOCATED ADJACENT TO THE DOOR, MOUNT THE SIGN TO THE GLASS AND PROVIDE A MATCHING BACKER PLATE OF THE SAME SHAPE AS THE SIGN ON THE GLASS TO CONCEAL MOUNTING DEVICE.
4. TEXT SHOWN ON SIGN DETAILS ARE EXAMPLES AND ARE NOT INTENDED FOR DESIGN PURPOSES. SEE SIGNAGE SCHEDULES, IG600 SERIES, FOR SUGGESTED SIGN VERBIAGE. FINAL NUMBERS AND VERBIAGE TO BE COORDINATED WITH OWNER PRIOR TO ORDERING AND INSTALLATION.

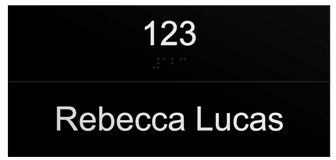

UNFRAMED SIGN SPECIFICATIONS:
BASIS OF DESIGN: 2/90 SYSTEMS KLIK
INSERT A FINISH: PRISMS BLACK 704
INSERT B FINISH: PRISMS BLACK 704
INSERT A COPY FINISH: PRISMS SOFT WHITE 708
INSERT B COPY FINISH: PRISMS SOFT WHITE 708
COPY STYLE: ARIAL

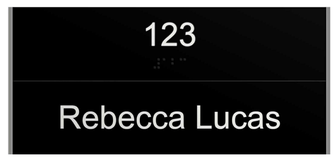

FRAMED SIGN SPECIFICATIONS:
BASIS OF DESIGN: 2/90 SYSTEMS SLIDE
INSERT A FINISH: PRISMS BLACK 704
INSERT B FINISH: PRISMS BLACK 704
INSERT A COPY FINISH: PRISMS SOFT WHITE 708
INSERT B COPY FINISH: PRISMS SOFT WHITE 708
COPY STYLE: ARIAL
END CAP / EDGE RAIL FINISH: ANODIZED - 101 SATIN NATURAL

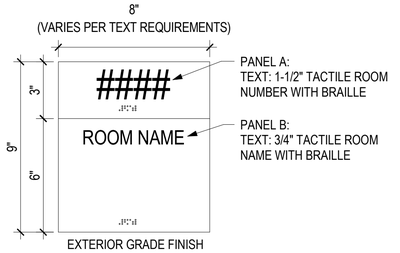

NOTES:
1. HELVETICA NEUE 55 ROMAN TEXT, WHITE LETTERS AND NUMBERS ON BACKGROUND. ROOM LETTERS AND NUMBERS RAISED 1/32" MIN. GRADE 2 BRAILLE ON BACKGROUND COLOR.
2. INTERIOR GRADE FINISH.
3. SUPPY ELECTRICAL EQUIPMENT CALL OUT PER IFC 605.3.1. ADD AND ADJUST BRAILLE LOCATION AS REQUIRED. SEE SIGNAGE SCHEDULE FOR LOCATIONS.
4. COORDINATE FINAL ELECTRICAL EQUIPMENT LOCATIONS IN FIELD PRIOR TO ORDERING AND INSTALLATION.

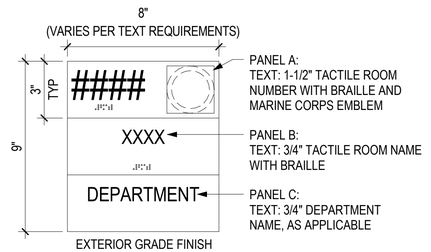

NOTES:
1. HELVETICA NEUE 55 ROMAN TEXT, WHITE LETTERS AND NUMBERS ON BACKGROUND. ROOM LETTERS AND NUMBERS RAISED 1/32" MIN. GRADE 2 BRAILLE ON BACKGROUND COLOR.

C1 TYPICAL ELEVATION OF SIGN INSTALLATION
SCALE: 1/2" = 1'-0"

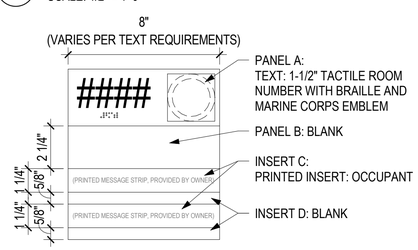

NOTES:
1. HELVETICA NEUE 55 ROMAN TEXT, WHITE LETTERS AND NUMBERS ON BACKGROUND. ROOM LETTERS AND NUMBERS RAISED 1/32" MIN. GRADE 2 BRAILLE ON BACKGROUND COLOR.
2. INTERIOR GRADE FINISH

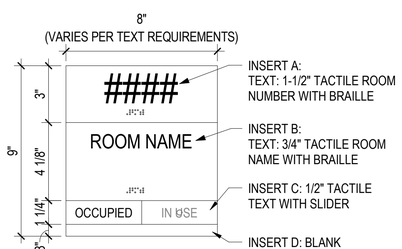

NOTES:
1. HELVETICA NEUE 55 ROMAN TEXT, WHITE LETTERS AND NUMBERS ON BACKGROUND. ROOM LETTERS AND NUMBERS RAISED 1/32" MIN. GRADE 2 BRAILLE ON BACKGROUND COLOR.
2. INTERIOR GRADE FINISH

C3 SIGNAGE DETAIL - BASIS OF DESIGN
SCALE:NTS

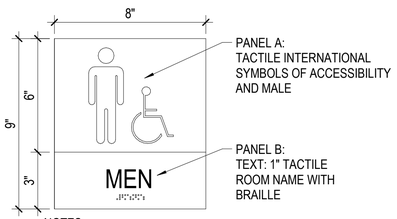

NOTES:
1. HELVETICA NEUE 55 ROMAN TEXT, WHITE LETTERS AND NUMBERS ON BACKGROUND. ROOM LETTERS AND NUMBERS RAISED 1/32" MIN. GRADE 2 BRAILLE ON BACKGROUND COLOR.
2. INTERIOR GRADE FINISH

C4 ROOM ID - TYPE A
SCALE:NTS

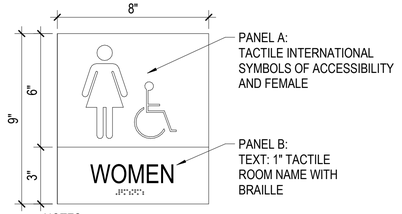

NOTES:
1. HELVETICA NEUE 55 ROMAN TEXT, WHITE LETTERS AND NUMBERS ON BACKGROUND. ROOM LETTERS AND NUMBERS RAISED 1/32" MIN. GRADE 2 BRAILLE ON BACKGROUND COLOR.
2. INTERIOR GRADE FINISH

C5 ROOM ID WITH DEPARTMENT TYPE B
SCALE:NTS

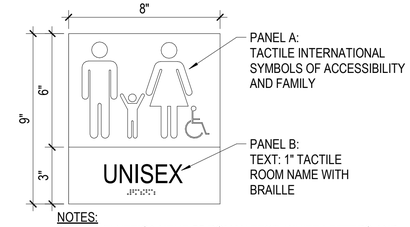

NOTES:
1. HELVETICA NEUE 55 ROMAN TEXT, WHITE LETTERS AND NUMBERS ON BACKGROUND. ROOM LETTERS AND NUMBERS RAISED 1/32" MIN. GRADE 2 BRAILLE ON BACKGROUND COLOR.
2. INTERIOR GRADE FINISH

B1 ROOM ID WITH OCCUPANT - TYPE C
SCALE:NTS

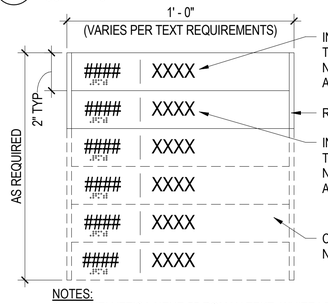

NOTES:
1. HELVETICA NEUE 55 ROMAN TEXT, WHITE LETTERS AND NUMBERS ON BACKGROUND. ROOM LETTERS AND NUMBERS RAISED 1/32" MIN. GRADE 2 BRAILLE ON BACKGROUND COLOR.
2. INTERIOR GRADE FINISH

B2 ROOM ID WITH SLIDER - TYPE D
SCALE:NTS

TYPE F.1: INSERT A: 208 | STG WAREHOUSE PREPARATION
INSERT B: 208A | TEST & REPAIR
INSERT C: 208B | VISUAL INSPECTION AND REPAIR
INSERT D: 209 | SHIPPING / RECEIVING / WATER TESTING
INSERT E: 209A | HAZMAT STORAGE

TYPE F.2: INSERT A: 200 | CLASSROOM
INSERT B: 201 | TECHNICAL REFERENCE LIBRARY
INSERT C: 207 - 211 | OFFICES
INSERT D: BREAK | RESTROOMS

TYPE F.3: INSERT A: 209 | SHIPPING / RECEIVING / WATER TESTING
INSERT B: 209A | HAZMAT STORAGE

TYPE F.4: INSERT A: 200 | CLASSROOM
INSERT B: 201 | TECHNICAL REFERENCE LIBRARY
INSERT C: 207 - 211 | OFFICES
INSERT D: 208 | STG WAREHOUSE PREPARATION
INSERT E: BREAK | RESTROOMS

B3 MENS - TYPE G
SCALE:NTS

TYPE F.5: INSERT A: 208A | TEST AND REPAIR
INSERT B: 208B | VISUAL INSPECTION AND REPAIR

TYPE F.6: INSERT A: 100 - 101 | OFFICES
INSERT B: 102 | MOTHER'S ROOM
INSERT C: 103 | BREAK ROOM

TYPE F.7: INSERT A: 113A | STORAGE AREA SL-3 / REPAIR PARTS
INSERT B: 113B | FINAL QC

B4 WOMENS - TYPE H
SCALE:NTS

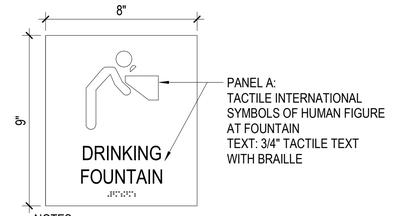

NOTES:
1. HELVETICA NEUE 55 ROMAN TEXT, WHITE LETTERS AND NUMBERS ON BACKGROUND. ROOM LETTERS AND NUMBERS RAISED 1/32" MIN. GRADE 2 BRAILLE ON BACKGROUND COLOR.
2. INTERIOR GRADE FINISH

B5 UNISEX - TYPE J
SCALE:NTS

A1 ROOM ID WITH MULTIPLE LOCATIONS - TYPE F
SCALE: NTS

A4 DRINKING FOUNTAIN - TYPE L
SCALE:NTS

0 1' - 0" 2' - 0" 4' - 0"
SCALE: 1/2" = 1' - 0"

APPR	DATE	DESCRIPTION	SYM

NAVFAC

REGISTERED ARCHITECT COMMONWEALTH OF PENNSYLVANIA RUCHERA NO. RA010140 SEAL

W.M. Jordan COMPANY – A JOINT VENTURE –

Michael Baker INTERNATIONAL
100 AIRSIDE DRIVE
MOON TOWNSHIP, PA 15108
A/E INFO

APPROVED

FOR COMMANDER NAVFAC

ACTIVITY
MARINE CORPS BASE CAMP LEJEUNE

SATISFACTORY TO DATE

DES SJK	DRW RDT	CHK NCW
PM / DM	TOWLER / ROOT	
BRANCH HEAD	DER	
DESIGN DIRECTOR	R.L.Stephens, Jr.	
FIRE PROTECTION	DPS	

DEPARTMENT OF THE NAVY
NAVAL FACILITIES ENGINEERING SYSTEMS COMMAND
ATLANTIC DESIGN AND CONSTRUCTION
NAVAL FACILITIES ENGINEERING SYSTEMS COMMAND ATLANTIC
NORFOLK, VA
MCB CAMP LEJEUNE
JACKSONVILLE, NC
P1527 LOGCOM CSP WAREHOUSE
SIGNAGE - BASIS OF DESIGN AND DETAILS

SCALE:	AS NOTED
EPROJECT NO.:	1639600
CONSTR. CONTR. NO.	N40085-20-C-0059
NAVFAC DRAWING NO.	14111228
SHEET	214 OF 447

IG501

DRAWFORM REVISION: 25 AUGUST 2020

P1527 FINAL SUBMISSION - 11/18/2021

PLOTTED: 11/12/2021 7:16:48 AM

FILE NAME: BIM 360://HF PACKAGE 3/P1527 LOG COM CSP-1639600-A.rvt

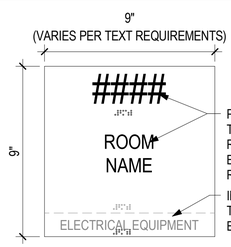

NOTES:
1. HELVETICA NEUE 55 ROMAN TEXT, WHITE LETTERS AND NUMBERS ON BACKGROUND. ROOM LETTERS AND NUMBERS RAISED 1/32" MIN. GRADE 2 BRAILLE ON BACKGROUND COLOR.
2. INTERIOR AND EXTERIOR GRADE FINISHES AS APPLICABLE.
3. SUPPY ELECTRICAL EQUIPMENT CALL OUT PER IFC 605.3.1. ADD AND ADJUST BRAILLE LOCATION AS REQUIRED. SEE SIGNAGE SCHEDULE FOR LOCATIONS.
4. COORDINATE FINAL ELECTRICAL EQUIPMENT LOCATIONS IN FIELD PRIOR TO ORDERING AND INSTALLATION.

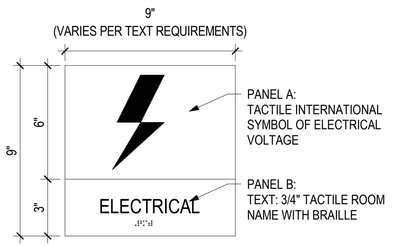

NOTES:
1. HELVETICA NEUE 55 ROMAN TEXT, WHITE LETTERS AND NUMBERS ON BACKGROUND. ROOM LETTERS AND NUMBERS RAISED 1/32" MIN. GRADE 2 BRAILLE ON BACKGROUND COLOR.
2. INTERIOR AND EXTERIOR GRADE FINISHES AS APPLICABLE

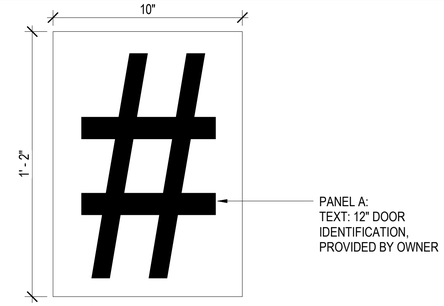

NOTES:
1. HELVETICA NEUE 55 ROMAN TEXT, WHITE LETTERS AND NUMBERS ON BACKGROUND. ROOM LETTERS AND NUMBERS RAISED 1/32" MIN. GRADE 2 BRAILLE ON BACKGROUND COLOR.
2. COORDINATE FINAL LOCATIONS AND ID VERBIAGE WITH GENERAL CONTRACTOR AND OWNER PRIOR TO ORDERING AND INSTALLATION.
3. EXTERIOR GRADE FINISH.

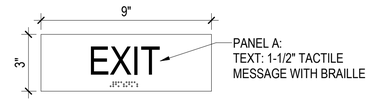

NOTES:
1. HELVETICA NEUE 55 ROMAN TEXT, WHITE LETTERS AND NUMBERS ON BACKGROUND. ROOM LETTERS AND NUMBERS RAISED 1/32" MIN. GRADE 2 BRAILLE ON BACKGROUND COLOR.
1. MOUNT SIGN ON INTERIOR DOOR LEADING TO EXIT.
2. EXTERIOR GRADE FINISH.

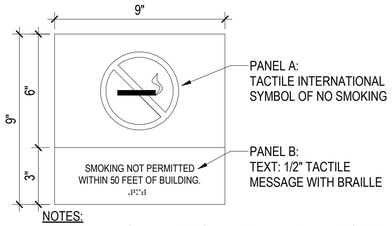

NOTES:
1. HELVETICA NEUE 55 ROMAN TEXT, WHITE LETTERS AND NUMBERS ON BACKGROUND. ROOM LETTERS AND NUMBERS RAISED 1/32" MIN. GRADE 2 BRAILLE ON BACKGROUND COLOR.
2. INTERIOR AND EXTERIOR GRADE FINISHES AS APPLICABLE

D1 MECHANICAL ROOM ID SPACE/S - TYPE M
SCALE: NTS

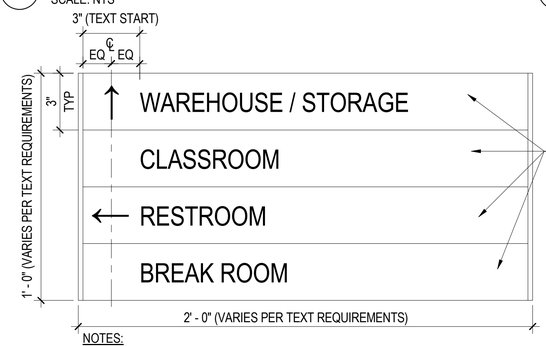

NOTES:
1. HELVETICA NEUE 55 ROMAN TEXT, WHITE LETTERS AND NUMBERS ON BACKGROUND. ROOM LETTERS AND NUMBERS RAISED 1/32" MIN. GRADE 2 BRAILLE ON BACKGROUND COLOR.
2. DIRECTIONAL SIGNS SHOWN ARE DESIGN SUGGESTIONS ONLY AND WILL VARY PER TEXT REQUIREMENTS. ALL INFORMATION INCLUDING ROOM NAMES AND NUMBERS, DIRECTIONS, ETC. MUST BE COORDINATED IN FIELD WITH OWNER PRIOR TO ORDERING AND INSTALLATION.
3. ADD AND REMOVE PANELS AS NEEDED TO FIT EACH DIRECTIONAL.
4. INTERIOR GRADE FINISH.
5. NOTIFY ARCHITECT / INTERIOR DESIGNER OF RECORD OF ANY IN FIELD IDENTIFICATION AND NUMERICAL CHANGES.

D2 ELECTRICAL ROOM - TYPE N
SCALE: NTS

D3 OVERHEAD DOOR ID - TYPE P
SCALE:NTS

D4 EXIT - TYPE R
SCALE:NTS

D5 NO SMOKING - TYPE S
SCALE:NTS

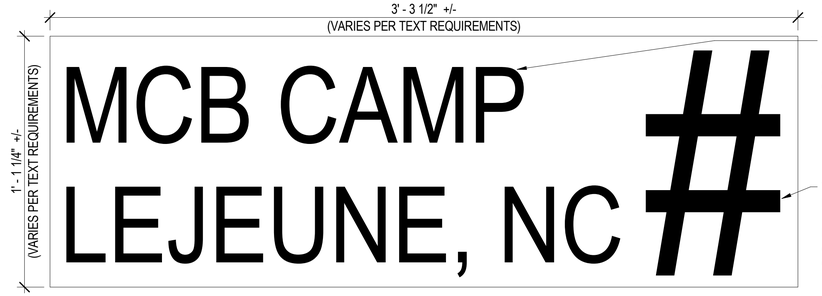

NOTES:
1. HELVETICA NEUE 55 ROMAN TEXT, WHITE LETTERS AND NUMBERS ON BACKGROUND. ROOM LETTERS AND NUMBERS RAISED 1/32" MIN. GRADE 2 BRAILLE ON BACKGROUND COLOR.
2. PROVIDE BUILDING ID SIGNS AS APPLICABLE.
3. COORDINATE FINAL QUANTITIES, STREET ADDRESS, LOCATIONS AND ID VERBIAGE WITH GENERAL CONTRACTOR, LOCAL AUTHORITY AND OWNER PRIOR TO ORDERING AND INSTALLATION.
4. EXTERIOR GRADE FINISH.

B1 DIRECTIONAL - TYPE Q
SCALE:NTS

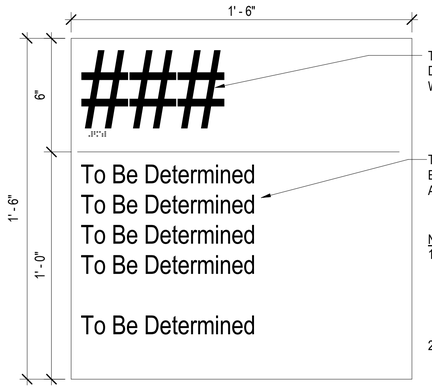

NOTES:
1. HELVETICA NEUE 55 ROMAN TEXT, WHITE LETTERS AND NUMBERS ON BACKGROUND. ROOM LETTERS AND NUMBERS RAISED 1/32" MIN. GRADE 2 BRAILLE ON BACKGROUND COLOR.
2. EXTERIOR GRADE FINISH.

A1 BUILDING ENTRANCE - TYPE U
SCALE:NTS

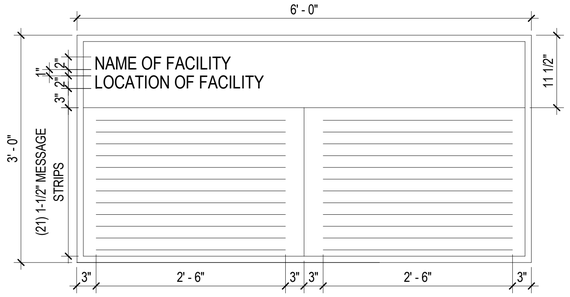

NOTES:
1. HELVETICA NEUE 55 ROMAN TEXT, WHITE LETTERS AND NUMBERS ON BACKGROUND. ROOM LETTERS AND NUMBERS RAISED 1/32" MIN. GRADE 2 BRAILLE ON BACKGROUND COLOR.
2. PROVIDE LOGO/S AND ARTWORK AS REQUIRED.
3. VERIFY BUILDING DIRECTORY VERBIAGE AND INFORMATION WITH GENERAL CONTRACTOR AND OWNER.
4. FINAL DESIGN, QUANTITIES AND LOCATIONS TO BE COORDINATED IN FIELD WITH GENERAL CONTRACTOR AND OWNER PRIOR TO ORDERING AND INSTALLATION.

A2 BUILDING DIRECTORY - TYPE W
SCALE:NTS

B4 BUILDING ID - (REFERENCE ONLY)
SCALE:NTS

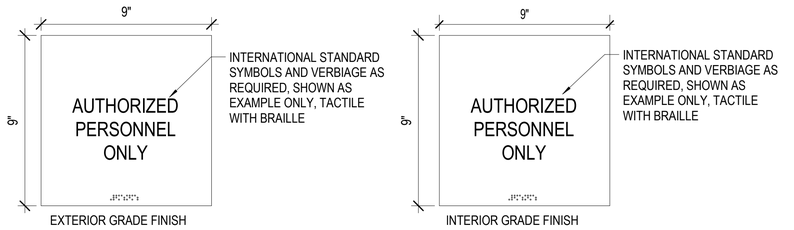

NOTES:
1. PROVIDE VARYING LIFE SAFETY AND INSTRUCTIONAL INSERT/S AS APPLICABLE PER ABAAS AND LIFE SAFETY REQUIREMENTS.
2. PROVIDE VARYING BUILDING ENGINEERING INSERT/S AS APPLICABLE PER MANDATORY BUILDING CODES.
3. COORDINATE FINAL REQUIREMENTS, MAXIMUM OCCUPANCY LOADS, LOCATIONS, QUANTITIES, PICTORALS AND VERBIAGE IN FIELD WITH CONSTRUCTION DOCUMENTS, SPECIFICATIONS, LOCAL AUTHORITY HAVING JURISDICTION AND OWNER PRIOR TO ORDERING AND INSTALLATION.
4. PROVIDE EXTERIOR SIGN AT PRIMARY AND SECONDARY ENTRANCES STATING, “ELECTRONIC DEVICES INCLUDING CELLULAR PHONES PROHIBITED.” APPLICABILITY MUST BE VERIFIED BY AE2 WITH MCB CAMP LEJEUNE.
5. PROVIDE EXTERIOR SIGN AT PRIMARY AND SECONDARY ENTRANCES STATING, “DO NOT ENTER IF IDS INDICATOR LIGHT IS ON. ALARM WILL SOUND.” APPLICABILITY MUST BE VERIFIED BY AE2 WITH MCB CAMP LEJEUNE.

A4 MANDATORY / INSTRUCTIONAL - TYPE X
SCALE: NTS

APPR	DATE	DESCRIPTION	SYM

NAVFAC

SEAL

Michael Baker INTERNATIONAL
100 AIRSIDE DRIVE
MOON TOWNSHIP, PA 15108
A/E INFO

APPROVED

FOR COMMANDER NAVFAC

ACTIVITY
MARINE CORPS BASE
CAMP LEJEUNE

SATISFACTORY TO DATE

DES SJK	DRW RDT	CHK NCW
PM / DM	TOWLER / ROOT	
BRANCH HEAD	DER	
DESIGN DIRECTOR	R.L.Stephens, Jr.	
FIRE PROTECTION	DPS	

DEPARTMENT OF THE NAVY
NAVAL FACILITIES ENGINEERING SYSTEMS COMMAND
ATLANTIC DESIGN AND CONSTRUCTION
MCB CAMP LEJEUNE

NAVAL FACILITIES ENGINEERING SYSTEMS COMMAND ATLANTIC
NORFOLK, VA
JACKSONVILLE, NC
P1527 LOGCOM CSP WAREHOUSE

SIGNAGE - DETAILS

SCALE:	AS NOTED
EPROJECT NO.:	1639600
CONSTR. CONTR. NO.	N40085-20-C-0059
NAVFAC DRAWING NO.	14111229
SHEET	215 OF 447

IG502

DRAWFORM REVISION: 25 AUGUST 2020

P1527 FINAL SUBMISSION - 11/18/2021

PLOTTED: 11/12/2021 7:16:49 AM

FILE NAME: BIM 360://NF PACKAGE 3/P1527 LOG COM CSP-1639600-A.rvt

RECOGNITION PLAQUE NOTES:

1. PLAQUE MUST BE PERMANENT INSTALLATION, NOT REQUIRING MAINTENANCE FOR THE LIFE OF THE FACILITY.
2. PLAQUE IS CAST ALUMINUM. SEE SPECIFICATIONS FOR MORE INFORMATION.
3. MESSAGE FIGURES MUST BE PERMANENTLY RAISED, CAST OR CUT INTO FACE OF PLAQUE.
4. PLAQUE SIZE AS DIMENSIONED, HOWEVER, ENSURE THAT THE PLAQUE IS LARGE ENOUGH FOR THE NAMES ON THE PLAQUE TO BE LEDGABLE AT A DISTANCE OF 5'-0".
5. THE PLAQUE DESIGN SHALL BE ACCOMPLISHED AT THE END OF THE PROJECT DURATION TO ASSURE THAT CURRENT PARTICIPANTS CAN BE IDENTIFIED AND RECOGNIZED ON THE PLAQUE.
6. SEE FC 1-300-09N SECTION 16-11 FOR FURTHER INFORMATION.
7. CONFIRM THE NAME AND ORGANIZATION OF EACH PERSON RECOGNIZED WITH THE CONTRACTING OFFICER AND INCLUDE THE FOLLOWING INFORMATION ITEMS AND LEADERSHIP PARTICIPANTS AS A MINIMUM:
   - FACILITY NAME
   - IDENTIFY ANY RECOGNITION APPLIED TO THE FACILITY OR PERSON FOR WHICH THE FACILITY HAS BEEN DEDICATED
   - DATE OF OCCUPANCY (MONTH/YEAR)
   - THIRD PARTY CERTIFICATION/S ACHIEVED (IF APPLICABLE)
   - USING ACTIVITY COMMANDER / COMMANDING OFFICER/S
   - BASE COMMANDER / COMMANDING OFFICER/S
   - NAVFAC COMPONENT COMMANDER / FACILITY ENGINEERING COMPONENT COMMANDING OFFICER/S
   - PRIME CONTRACTOR/S
   - MAIN FACILITY ARCHITECT/S
   - MAIN FACILITY INTERIOR DESIGNER/S
   - MAIN FACILITY ENGINEER/S

A1 FACILITY RECOGNITION PLAQUE - TYPE Y
SCALE:NTS

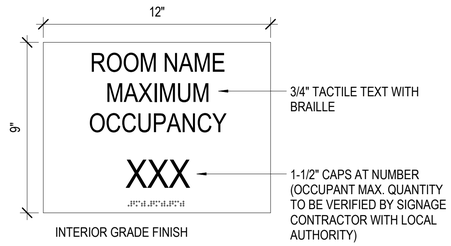

NOTES:

1. HELVETICA NEUE 55 ROMAN TEXT, WHITE LETTERS AND NUMBERS ON BACKGROUND. ROOM LETTERS AND NUMBERS RAISED 1/32" MIN. GRADE 2 BRAILLE ON BACKGROUND COLOR.

A3 MAXIMUM OCCUPANCY - TYPE Z
SCALE: NTS

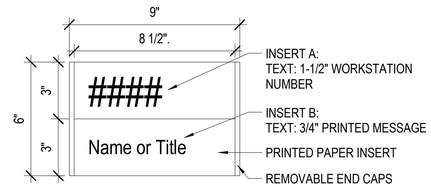

NOTES:

1. HELVETICA NEUE 55 ROMAN TEXT, WHITE LETTERS AND NUMBERS ON BACKGROUND. ROOM LETTERS AND NUMBERS RAISED 1/32" MIN. GRADE 2 BRAILLE ON BACKGROUND COLOR.
2. IDENTIFICATION SIGN SHOULD BE MOUNTED WITH OVER-THE-PANEL HANGARS, MOUNTING BRACKETS, HOOK AND LOOP (VELCRO), OR OTHER SIMILAR METHODS DEPENDING ON FURNITURE SELECTED.
3. MOUNT ON GLASS PANELS USING DOUBLE-FACED FOAM TAPE AND VINYL.
4. INTERIOR GRADE FINISH

A4 WORKSTATION SIGN (REFERENCE ONLY)
SCALE: NTS

SYM	DESCRIPTION	DATE	APPR

SEAL

Michael Baker INTERNATIONAL
100 AIRSIDE DRIVE
MOON TOWNSHIP, PA 15108
A/E INFO

APPROVED
FOR COMMANDER NAVFAC

ACTIVITY
MARINE CORPS BASE CAMP LEJEUNE

SATISFACTORY TO DATE

DES	SJK	DRW RDT	CHK NCW
PM / DM		TOWLER / ROOT	
BRANCH HEAD		DER	
DESIGN DIRECTOR		R.L.Stephens, Jr.	
FIRE PROTECTION		DPS	

DEPARTMENT OF THE NAVY
NAVAL FACILITIES ENGINEERING SYSTEMS COMMAND
ATLANTIC DESIGN AND CONSTRUCTION
MCB CAMP LEJEUNE
NAVAL FACILITIES ENGINEERING SYSTEMS COMMAND ATLANTIC
NORFOLK, VA
JACKSONVILLE, NC
P1527 LOGCOM CSP WAREHOUSE
SIGNAGE - DETAILS

SCALE:	AS NOTED
EPROJECT NO.:	1639600
CONSTR. CONTR. NO.	N40085-20-C-0059
NAVFAC DRAWING NO.	14111230
SHEET	216 OF 447

IG503

DRAWFORM REVISION: 25 AUGUST 2020

P1527 FINAL SUBMISSION - 11/18/2021

PLOTTED: 11/12/2021 7:16:51 AM
FILE NAME: BIM 360/IHF PACKAGE 3/P1527 LOG COM CSP-1639600-A.rvt

SCHEDULE - SIGNAGE

SIGN			ROOM			
TAG	TYPE	DESCRIPTION	NO.	NAME	SIGN MESSAGE	COMMENTS
1	Y	FACILITY RECOGNITION PLAQUE	219	COVERED ENTRY	SEE SIGNAGE DETAILS, IG500 SERIES	
2	R	EXIT	219	COVERED ENTRY	SEE SIGNAGE DETAILS, IG500 SERIES	
3	U	BUILDING ENTRANCE	219	COVERED ENTRY	SEE SIGNAGE DETAILS, IG500 SERIES	
4	S	NO SMOKING	219	COVERED ENTRY	SEE SIGNAGE DETAILS, IG500 SERIES	
5	C	ROOM ID W/ OCCUPANT	V010	VESTIBULE / ENTRY	100 I GOVERNMENT OFFICE | OCCUPANT INSERT (PROVIDED BY OWNER)	
6	W	BUILDING DIRECTORY	C010	CORR.	SEE SIGNAGE DETAILS, IG500 SERIES	
7	C	ROOM ID W/ OCCUPANT	C010	CORR.	101 I REGIONAL MANAGER OFFICE | OCCUPANT INSERT (PROVIDED BY OWNER)	
8	D	ROOM ID W/ SLIDER	C010	CORR.	102 I MOTHER'S ROOM	
9	A	ROOM ID	C010	CORR.	103 I BREAK ROOM	
10	F.6	ROOM ID W/ MULTIPLE LOCATIONS	104	LOGCOM WAREHOUSE	SEE SIGNAGE DETAILS, IG500 SERIES	
11	Q.1	DIRECTIONAL	104	LOGCOM WAREHOUSE	SEE SIGNAGE DETAILS, IG500 SERIES	
12	L	DRINKING FOUNTAIN	C011	CORR.	SEE SIGNAGE DETAILS, IG500 SERIES	
13	A	ROOM ID	C011	CORR.	105 I JANITOR	
14	H	WOMENS	C011	CORR.	SEE SIGNAGE DETAILS, IG500 SERIES	
15	J	UNISEX	C011	CORR.	SEE SIGNAGE DETAILS, IG500 SERIES	
16	G	MENS	C011	CORR.	SEE SIGNAGE DETAILS, IG500 SERIES	
17	B	ROOM ID W/ DEPARTMENT	104	LOGCOM WAREHOUSE	106 I COMPUTER EQUIPMENT AND RSDL DECON LOTION	
18	B	ROOM ID W/ DEPARTMENT	104	LOGCOM WAREHOUSE	106 I COMPUTER EQUIPMENT AND RSDL DECON LOTION	
19	C	ROOM ID W/ OCCUPANT	104	LOGCOM WAREHOUSE	107 I RADIOLOGICAL	
20	C	ROOM ID W/ OCCUPANT	104	LOGCOM WAREHOUSE	107 I RADIOLOGICAL	
21	M	MECHANICAL ROOM ID SPACE/S	104	LOGCOM WAREHOUSE	108 I COMMUNICATIONS	ADD ELECTRICAL EQUIPMENT INSERT
22	N	ELECTRICAL ROOM	104	LOGCOM WAREHOUSE	SEE SIGNAGE DETAILS, IG500 SERIES	
23	B	ROOM ID W/ DEPARTMENT	104	LOGCOM WAREHOUSE	110 I NDTE STORAGE	
24	C	ROOM ID W/ OCCUPANT	110	NDTE / STORAGE	110A I NDTE OFFICE | OCCUPANT INSERT (PROVIDED BY OWNER)	
25	B	ROOM ID W/ DEPARTMENT	104	LOGCOM WAREHOUSE	110 I NDTE STORAGE	
26	C	ROOM ID W/ OCCUPANT	104	LOGCOM WAREHOUSE	111 I ESAPI ROOM | OCCUPANT INSERT (PROVIDED BY OWNER)	
27	C	ROOM ID W/ OCCUPANT	104	LOGCOM WAREHOUSE	112 I ESAPI OFFICE | OCCUPANT INSERT (PROVIDED BY OWNER)	
28	M	MECHANICAL ROOM ID SPACE/S	104.5	DISPOSAL AREA	118 I TELECOMMUNICATIONS	ADD ELECTRICAL EQUIPMENT INSERT
29	X	MANDATORY / INSTRUCTIONAL	104	LOGCOM WAREHOUSE	EYE WASH I SEE SIGNAGE DETAILS, IG500 SERIES	
30	M	MECHANICAL ROOM ID SPACE/S	104	LOGCOM WAREHOUSE	117 I MAINTENANCE	
31	X	MANDATORY / INSTRUCTIONAL	117	MAINTENANCE	EYE WASH I SEE SIGNAGE DETAILS, IG500 SERIES	
32	B	ROOM ID W/ DEPARTMENT	104	LOGCOM WAREHOUSE	104.6 I BATTERY CHARGING AREA	
33	N	ELECTRICAL ROOM	104.6	BATTERY CHARGING AREA	SEE SIGNAGE DETAILS, IG500 SERIES	
34	B	ROOM ID W/ DEPARTMENT	104	LOGCOM WAREHOUSE	115 I SANITATION AREA	
35	A	ROOM ID	115	SANITATION AREA	114 I JSMLT TEST AREA	
36	B	ROOM ID W/ DEPARTMENT	104	LOGCOM WAREHOUSE	114 I JSMLT TEST AREA	
37	A	ROOM ID	114	JSMLT TEST AREA	115 I SANITATION AREA	
38	F.7	ROOM ID W/ MULTIPLE LOCATIONS	114	JSMLT TEST AREA	SEE SIGNAGE DETAILS, IG500 SERIES	
39	F.7	ROOM ID W/ MULTIPLE LOCATIONS	104	LOGCOM WAREHOUSE	SEE SIGNAGE DETAILS, IG500 SERIES	
40	A	ROOM ID	113B	FINAL QC	114 I JSMLT TEST AREA	
41	F.7	ROOM ID W/ MULTIPLE LOCATIONS	104	LOGCOM WAREHOUSE	SEE SIGNAGE DETAILS, IG500 SERIES	
42	R	EXIT	218	COVERED ENTRY	SEE SIGNAGE DETAILS, IG500 SERIES	
43	S	NO SMOKING	218	COVERED ENTRY	SEE SIGNAGE DETAILS, IG500 SERIES	
44	U	BUILDING ENTRANCE	218	COVERED ENTRY	SEE SIGNAGE DETAILS, IG500 SERIES	
45	W	BUILDING DIRECTORY	C020	CORR.	SEE SIGNAGE DETAILS, IG500 SERIES	
46	D	ROOM ID W/ SLIDER	C020	CORR.	200 I CLASSROOM	
47	Z	MAXIMUM OCCUPANCY	200	CLASSROOM	73 I SEE SIGNAGE DETAILS, IG500 SERIES	CONFIRM MAXIMUM OCCUPANCY
48	B	ROOM ID W/ DEPARTMENT	C020	CORR.	201 I TECHNICAL REFERENCE LIBRARY	
49	A	ROOM ID	C020	CORR.	202 I BREAK ROOM	
50	M	MECHANICAL ROOM ID SPACE/S	C020	CORR.	203 I TELECOMMUNICATIONS	ADD ELECTRICAL EQUIPMENT INSERT
51	A	ROOM ID	C020	CORR.	204 I JANITOR	
52	G	MENS	C020	CORR.	SEE SIGNAGE DETAILS, IG500 SERIES	
53	L	DRINKING FOUNTAIN	C020	CORR.	SEE SIGNAGE DETAILS, IG500 SERIES	
54	J	UNISEX	C020	CORR.	SEE SIGNAGE DETAILS, IG500 SERIES	

SCHEDULE - SIGNAGE

SIGN			ROOM			
TAG	TYPE	DESCRIPTION	NO.	NAME	SIGN MESSAGE	COMMENTS
55	H	WOMENS	C020	CORR.	SEE SIGNAGE DETAILS, IG500 SERIES	
56	N	ELECTRICAL ROOM	C021	CORR.	SEE SIGNAGE DETAILS, IG500 SERIES	
57	B	ROOM ID W/ DEPARTMENT	C021	CORR.	206 I ADMIN STORAGE	
58	C	ROOM ID W/ OCCUPANT	C022	CORR.	207 | JEFS FST OIC | OCCUPANT INSERT (PROVIDED BY OWNER)	
59	F.1	ROOM ID W/ MULTIPLE LOCATIONS	C022	CORR.	SEE SIGNAGE DETAILS, IG500 SERIES	
60	F.2	ROOM ID W/ MULTIPLE LOCATIONS	208	STORAGE WAREHOUSE PREPARATION	SEE SIGNAGE DETAILS, IG500 SERIES	
61	A	ROOM ID	208	STORAGE WAREHOUSE PREPARATION	208A I TEST AND REPAIR	
62	A	ROOM ID	208	STORAGE WAREHOUSE PREPARATION	208B I VISUAL INSPECTION AND REPAIR	
63	F.3	ROOM ID W/ MULTIPLE LOCATIONS	208	STORAGE WAREHOUSE PREPARATION	SEE SIGNAGE DETAILS, IG500 SERIES	
64	A	ROOM ID	208A	TEST & REPAIR	208 I STORAGE WAREHOUSE PREPARATION	
65	X	MANDATORY / INSTRUCTIONAL	208A	TEST & REPAIR	EYE WASH I SEE SIGNAGE DETAILS, IG500 SERIES	
66	A	ROOM ID	208A	TEST & REPAIR	208B I VISUAL INSPECTION AND REPAIR	
67	A	ROOM ID	208B	VISUAL INSPECTION & REPAIR	208A I TEST AND REPAIR	
68	A	ROOM ID	208B	VISUAL INSPECTION & REPAIR	208 I STORAGE WAREHOUSE PREPARATION	
69	A	ROOM ID	208B	VISUAL INSPECTION & REPAIR	209 I SHIPPING / RECEIVING / WATER TESTING	
70	F.5	ROOM ID W/ MULTIPLE LOCATIONS	209	SHIPPING / RECEIVING / WATER TESTING	SEE SIGNAGE DETAILS, IG500 SERIES	
71	F.4	ROOM ID W/ MULTIPLE LOCATIONS	209	SHIPPING / RECEIVING / WATER TESTING	208 I STORAGE WAREHOUSE PREPARATION	
72	A	ROOM ID	209	SHIPPING / RECEIVING / WATER TESTING	209A I HAZMAT STORAGE	
73	C	ROOM ID W/ OCCUPANT	C022	CORR.	210 | JEFS FSS OPERATIONS OFFICER | OCCUPANT INSERT (PROVIDED BY OWNER)	
74	Q.2	DIRECTIONAL	C021	CORR.	SEE SIGNAGE DETAILS, IG500 SERIES	
75	C	ROOM ID W/ OCCUPANT	C021	CORR.	211 | ASSISTANT OIC / NCOIC | OCCUPANT INSERT (PROVIDED BY OWNER)	
76	R	EXIT	220	COVERED ENTRY	SEE SIGNAGE DETAILS, IG500 SERIES	
77	S	NO SMOKING	219	COVERED ENTRY	SEE SIGNAGE DETAILS, IG500 SERIES	
78	B	ROOM ID W/ DEPARTMENT	219	COVERED ENTRY	119 I CBRN OFFICE	
79	M	MECHANICAL ROOM ID SPACE/S	219	COVERED ENTRY	120 I MECHANICAL	
80	S	NO SMOKING	219	COVERED ENTRY	SEE SIGNAGE DETAILS, IG500 SERIES	
81	P	BUILDING / OVERHEAD DOOR ID	219	COVERED ENTRY	DOCK "A"	
82	P	BUILDING / OVERHEAD DOOR ID	217	LOADING DOCK	DOCK "F"	
83	S	NO SMOKING	217	LOADING DOCK	SEE SIGNAGE DETAILS, IG500 SERIES	
84	P	BUILDING / OVERHEAD DOOR ID	217	LOADING DOCK	DOCK "E"	
85	S	NO SMOKING	217	LOADING DOCK	SEE SIGNAGE DETAILS, IG500 SERIES	
86	R	EXIT	217	LOADING DOCK	SEE SIGNAGE DETAILS, IG500 SERIES	
87	S	NO SMOKING	217	LOADING DOCK	SEE SIGNAGE DETAILS, IG500 SERIES	
88	N	ELECTRICAL ROOM	217	LOADING DOCK	SEE SIGNAGE DETAILS, IG500 SERIES	
89	S	NO SMOKING	217	LOADING DOCK	SEE SIGNAGE DETAILS, IG500 SERIES	
90	P	BUILDING / OVERHEAD DOOR ID	217	LOADING DOCK	DOCK "D"	
91	S	NO SMOKING	217	LOADING DOCK	SEE SIGNAGE DETAILS, IG500 SERIES	
92	M	MECHANICAL ROOM ID SPACE/S	217	LOADING DOCK	122 I FIRE RISER	
93	S	NO SMOKING	217	LOADING DOCK	SEE SIGNAGE DETAILS, IG500 SERIES	
94	N	ELECTRICAL ROOM	217	LOADING DOCK	SEE SIGNAGE DETAILS, IG500 SERIES	
95	S	NO SMOKING	217	LOADING DOCK	SEE SIGNAGE DETAILS, IG500 SERIES	
96	M	MECHANICAL ROOM ID SPACE/S	217	LOADING DOCK	124 I WAREHOUSE MECHANICAL	
97	S	NO SMOKING	217	LOADING DOCK	SEE SIGNAGE DETAILS, IG500 SERIES	
98	R	EXIT	217	LOADING DOCK	SEE SIGNAGE DETAILS, IG500 SERIES	
99	R	EXIT	217	LOADING DOCK	SEE SIGNAGE DETAILS, IG500 SERIES	
100	S	NO SMOKING	217	LOADING DOCK	SEE SIGNAGE DETAILS, IG500 SERIES	
101	P	BUILDING / OVERHEAD DOOR ID	217	LOADING DOCK	DOCK "C"	
102	U	BUILDING ENTRANCE	220	COVERED ENTRY	SEE SIGNAGE DETAILS, IG500 SERIES	
103	S	NO SMOKING	220	COVERED ENTRY	SEE SIGNAGE DETAILS, IG500 SERIES	
104	B	ROOM ID W/ DEPARTMENT	218	COVERED ENTRY	200 I CLASSROOM (USE OTHER DOOR)	
105	R	EXIT	218	COVERED ENTRY	SEE SIGNAGE DETAILS, IG500 SERIES	
106	S	NO SMOKING	218	COVERED ENTRY	SEE SIGNAGE DETAILS, IG500 SERIES	
107	P	BUILDING / OVERHEAD DOOR ID	218	COVERED ENTRY	DOCK "B"	
108	S	NO SMOKING	218	COVERED ENTRY	SEE SIGNAGE DETAILS, IG500 SERIES	
109	M	MECHANICAL ROOM ID SPACE/S	218	COVERED ENTRY	213 I JEFS BOILER ROOM	
111	S	NO SMOKING	220	COVERED ENTRY	SEE SIGNAGE DETAILS, IG500 SERIES	
112	X	MANDATORY / INSTRUCTIONAL	220	COVERED ENTRY	SEE SIGNAGE DETAILS, IG500 SERIES	
113	X	MANDATORY / INSTRUCTIONAL	209A	HAZMAT STORAGE	SEE SIGNAGE DETAILS, IG500 SERIES	
114	A	ROOM ID	218	COVERED ENTRY	212 I JEFS AHU	

NOTES - SIGNAGE

1 REFER TO ABAAS REQUIREMENTS REGARDING SIGN MOUNTING HEIGHT, USE OF PICTOGRAMS, FINISH, CONTRAST AND BRAILLE REQUIREMENTS.
2 SIGN FINISHES, STYLES AND COLORS ARE LOCATED ON THE MATERIAL & COLOR SCHEDULE LOCATED IN THE IN-SERIES DRAWINGS.
3 SIGNS ARE MOUNTED AS SHOWN ON THE SIGNAGE DETAILS SHEETS IN THE IG-SERIES.
4 SIGNS MOUNTED ON GLASS HAVE MATCHING VINYL BACKING OF THE SAME SHAPE AS THE SIGN AND SHALL MATCH THE COLOR OF THE SIGN INSERT.
5 SIGNS MOUNTED ON THE EXTERIOR MUST BE CONSTRUCTED OF DURABLE FACTORY-FINISHED BAKED ENAMEL WITH REFLECTIVE SHEETING. FASTENERS SHALL BE CONCEALED AND RUST PROOF.
6 PROVIDE REQUIRED MOUNTINGS / HANGING MECHANISMS FOR SPECIFIED SIGNS PER MANUFACTURERS RECOMMENDATIONS FOR LOAD.
7 SURFACE APPLIED VINYL LETTERS OR GRAPHICS THAT CAN BE RUBBED OFF OR DAMAGED AND EXPOSED PAPER INSERTS ARE PROHIBITED.
8 CONTRACTOR TO PROVIDE SOFTWARE, ADDITIONAL MESSAGE SLOTS FOR FUTURE INSERTS AND ATTIC STOCK FOR SIGNS; COORDINATE WITH OWNER.
9 INTERIOR MODULAR SIGN SYSTEM MUST CONSIST OF THREE PRIMARY ELEMENTS AND BE INTERCHANGEABLE. A STRUCTURAL RAIL WITH COORDINATING RAIL JOINERS TO INCREASE SIGN HEIGHT IN FIELD, REMOVABLE COPY INSERTS AND INTERLOCKING END CAPS OR FRAME AND TRIM.
10 FINAL ROOM NUMBERS AND NAMES ARE COORDINATED WITH OWNER IN FIELD.
11 EXTERIOR SIGNS CONFORM TO MANUFACTURER RECOMMENDATIONS FOR APPLICATION AND ARE APPROVED BY OWNER.
12 CONTRACTOR PROVIDES ELEVATOR HOIST WALL LEVEL INDICATOR SIGNS, REQUIRED ON ELEVATOR JAMS.
13 CONTRACTOR PROVIDES FLAG SIGNS INDICATING DEFIBRILLATOR LOCATION, MOUNTED ABOVE EACH DEFIBRILLATOR.
14 CONTRACTOR PROVIDES FLAG SIGNS INDICATING FIRE EXTINGUISHER LOCATION, MOUNTED ABOVE EACH EXTINGUISHER.
15 SEE OTHER DISCIPLINE DRAWINGS AND SPECIFICATIONS FOR DEVICE RELATED SIGNAGE. CONFIRM REQUIREMENTS WITH BASE AND LOCAL JURISDICTION PRIOR TO PROCUREMENT.
16 SIGNS ARE DESIGN SUGGESTIONS ONLY. ALL INFORMATION, INCLUDING ROOM NAMES AND NUMBERS, DIRECTIONS, ETC; MUST BE COORDINATED IN FIELD WITH OWNER PRIOR TO ORDERING AND INSTALLATION. NOTIFY ARCHITECT OF RECORD OF ANY IN FIELD IDENTIFICATION & NUMERICAL CHANGES.

APPR | DATE | DESCRIPTION | SYM

NAVFAC

SEAL

W.M. Jordan COMPANY – A JOINT VENTURE –

Michael Baker INTERNATIONAL
100 AIRSIDE DRIVE
MOON TOWNSHIP, PA 15108 A/E INFO

APPROVED

FOR COMMANDER NAVFAC

ACTIVITY
MARINE CORPS BASE
CAMP LEJEUNE

SATISFACTORY TO DATE

DES SJK	DRW RDT	CHK NCW
PM / DM	TOWLER / ROOT	
BRANCH HEAD	DER	
DESIGN DIRECTOR	R.L.Stephens, Jr.	
FIRE PROTECTION	DPS	

DEPARTMENT OF THE NAVY
NAVAL FACILITIES ENGINEERING SYSTEMS COMMAND ATLANTIC
ATLANTIC DESIGN AND CONSTRUCTION
MCB CAMP LEJEUNE

NAVAL FACILITIES ENGINEERING SYSTEMS COMMAND ATLANTIC
NORFOLK, VA
JACKSONVILLE, NC
P1527 LOGCOM CSP WAREHOUSE

SIGNAGE - SCHEDULE AND DETAILED NOTES

SCALE:	AS NOTED
EPROJECT NO.:	1639600
CONSTR. CONTR. NO.	N40085-20-C-0059
NAVFAC DRAWING NO.	14111231
SHEET	217 OF 447

IG601

DRAWFORM REVISION: 25 AUGUST 2020

P1527 FINAL SUBMISSION - 11/18/2021

PLOTTED: 11/12/2021 7:16:54 AM

FILE NAME: BIM 360://HF PACKAGE 3/P1527 LOG COM CSP-1639600-A.rvt

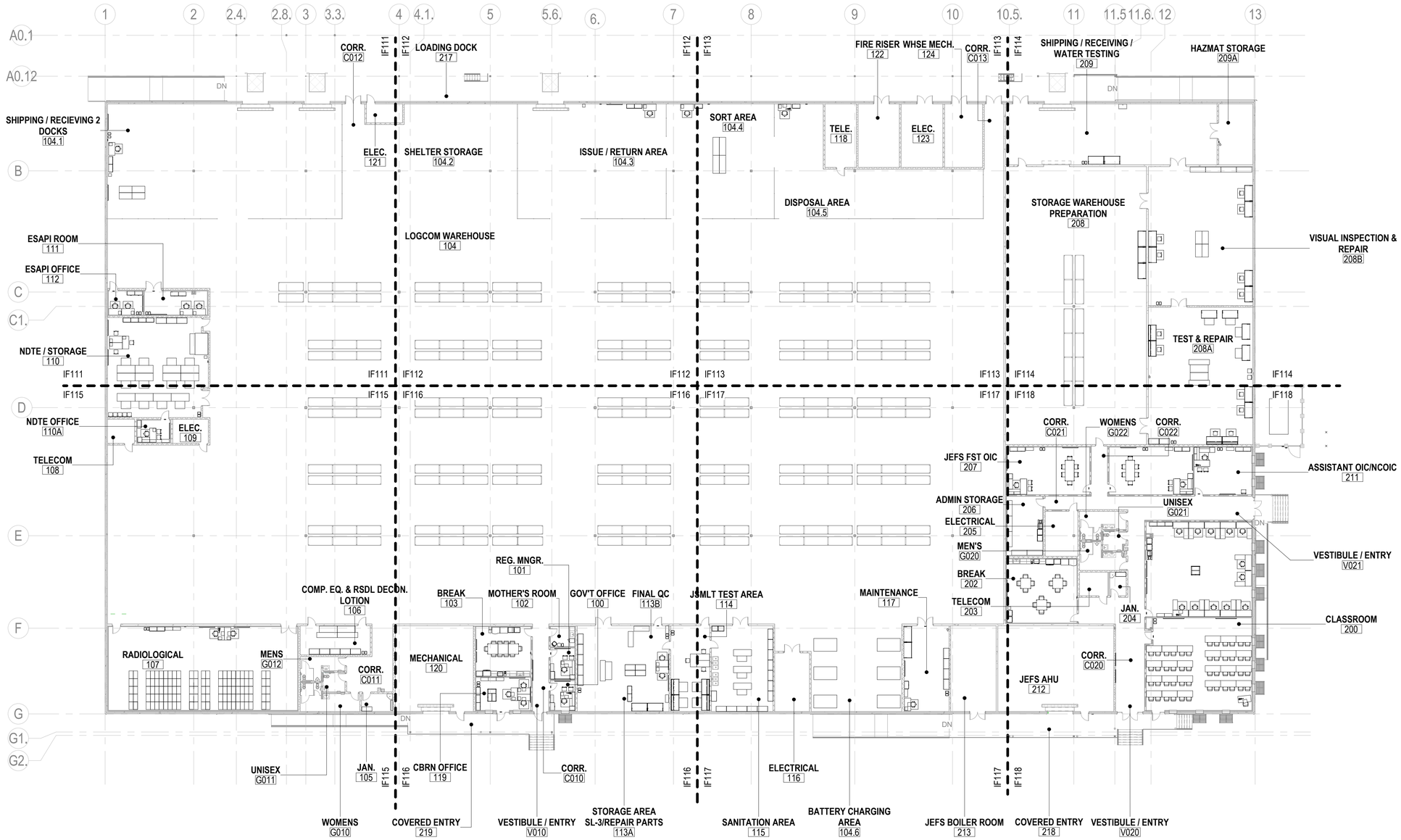

INTERIOR FF&E - OVERALL 1ST FLOOR PLAN

SCALE: 3/64" = 1'-0"

KEYPLAN

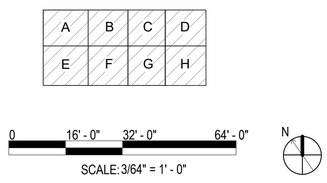

SCALE: 3/64" = 1' - 0"

APPR	
DATE	
DESCRIPTION	
SYM	

NAVFAC

REGISTERED ARCHITECT COMMONWEALTH OF PENNSYLVANIA MICHAEL WILLIAM RUCHERA No. RA016140 SEAL

W.M. Jordan COMPANY – A JOINT VENTURE –

Michael Baker INTERNATIONAL
100 AIRSIDE DRIVE
MOON TOWNSHIP, PA 15108
A/E INFO

APPROVED

FOR COMMANDER NAVFAC

ACTIVITY: MARINE CORPS BASE CAMP LEJEUNE

SATISFACTORY TO DATE

DES	SJK	DRW RDT	CHK NCW
PM / DM	TOWLER / ROOT		
BRANCH HEAD	DER		
DESIGN DIRECTOR	R.L.Stephens, Jr.		
FIRE PROTECTION	DPS		

NAVAL FACILITIES ENGINEERING SYSTEMS COMMAND ATLANTIC NORFOLK, VA

DEPARTMENT OF THE NAVY
NAVAL FACILITIES ENGINEERING SYSTEMS COMMAND
ATLANTIC DESIGN AND CONSTRUCTION
MCB CAMP LEJEUNE

JACKSONVILLE, NC
P1527 LOGCOM CSP WAREHOUSE

INTERIOR FF&E - OVERALL 1ST FLOOR PLAN

SCALE:	AS NOTED
EPROJECT NO.:	1639600
CONSTR. CONTR. NO.	N40085-20-C-0059
NAVFAC DRAWING NO.	14111232
SHEET	218 OF 447

IF110

DRAWFORM REVISION: 25 AUGUST 2020

P1527 FINAL SUBMISSION - 11/18/2021

PLOTTED: 11/12/2021 6:59:54 AM

FILE NAME: BIM 360://AIF PACKAGE 3/P1527 LOG COM CSP-1639600-A.rvt

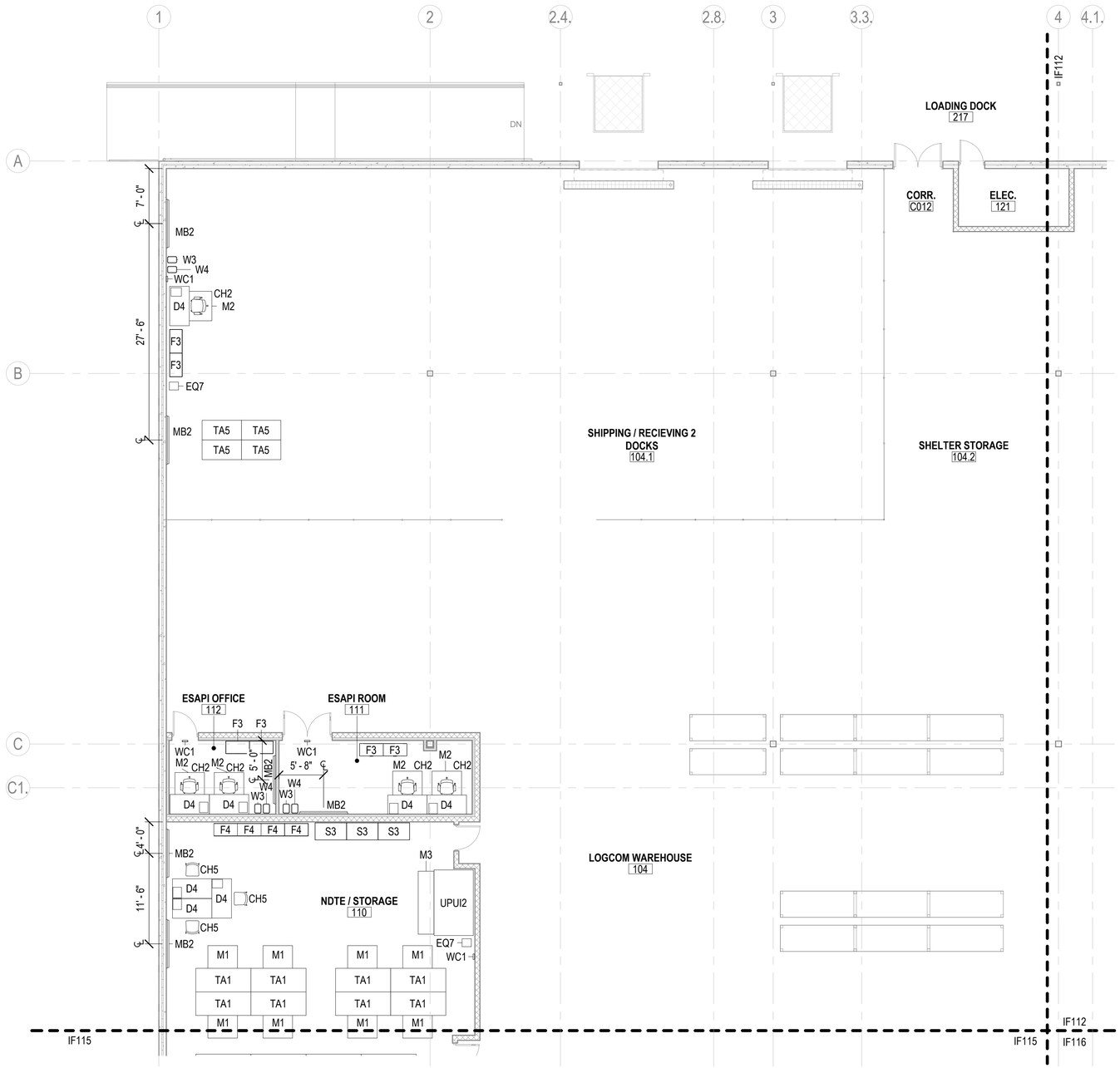

A1 INTERIOR FF&E - 1ST FLOOR PLAN - AREA A
SCALE: 1/8" = 1'-0"

LEGEND - INTERIOR - (FF&E)

TAG	DESCRIPTION	QTY
BC1	BOOKCASE - 5 HIGH	13
BC2	BOOKCASE - 4 HIGH	3
CH1	CHAIR - DINING	22
CH2	CHAIR - TASK	34
CH3	CHAIR - GUEST	25
CH4	CHAIR - TRAINING	49
CH5	CHAIR - WORK STOOL WITHOUT ARMS	25
CH6	CHAIR - LOUNGE	1
D1	DESK - WORKBENCH W/ STORAGE SHELVING ABOVE	8
D2	DESK - STANDARD WORKBENCH	21
D3	DESK - L-SHAPED	3
D4	DESK - OPEN WORKSTATION (NON-PANEL BASED)	13
D5	DESK - U-SHAPED	3
D6	DESK - SINGLE, 2-BUILT-IN BOX/BOX/FILES	6
D7	DESK - L-SHAPED LIBRARY	12
D8	DESK - INSTRUCTOR	1
DA1	DESK ACCESSORY - DUAL MONITOR STAND	6
DA2	DESK ACCESSORY - PENCIL DRAWER	12
DA3	DESK ACCESSORY - IN-OUT BOX TRAY	22
EQ1	EQUIPMENT - ICE MAKER	2
EQ2	EQUIPMENT - COFFEE MAKER	2
EQ3	EQUIPMENT - FIRE EXTINGUISHER - 10LB ABC	4
EQ4	EQUIPMENT - MICROWAVE	2
EQ5	EQUIPMENT - REFRIGERATOR	2
EQ6	EQUIPMENT - U.C. REFRIGERATOR	1
EQ7	EQUIPMENT - WATER COOLER	5
F1	FILE - TWO-DRAWER LATERAL	4
F2	FILE - THREE-DRAWER LATERAL	6
F3	FILE - FOUR-DRAWER LATERAL	17
F4	FILE - FIVE-DRAWER LATERAL	12
F5	FILE - HIGH-DENSITY SHELVING UNIT	4
F6	FILE - LATERAL (DESK)	3
F7	FILE - MOBILE PEDESTAL B/B/F (DESK)	18
F8	FILE - MOBILE PEDESTAL B/B/F (DESK)	10
FT1	FILE TOP - LAMINATE	1
FT2	FILE TOP - LAMINATE	1
J1	JANITOR CART	2
M1	MAT - ANTI-FATIGUE	35
M2	MAT - CHAIR FLOOR	34
M3	MAT - ANTI-STATIC	6
MR1	MASK RACK	13
S1	STORAGE - CABINET	2
S2	STORAGE - SHELVING - OPEN, INDUSTRIAL	11
S3	STORAGE - SHELVING - OPEN, SMALL PARTS	21
S4	STORAGE - OVERHEAD HUTCH 36" (DESK)	3
S5	STORAGE - OVERHEAD HUTCH 66" (DESK)	3
S6	STORAGE - WARDROBE - 24"D X 24W" (DESK)	3
S7	STORAGE - WARDROBE - 24"D X 20"W (DESK)	3
TA1	TABLE - ANTI-STATIC ASSEMBLY	14
TA2	TABLE - TRAINING WITH CASTERS	24
TA3	TABLE - DINING	6
TA4	TABLE - TEAR DOWN	3
TA5	TABLE - STANDARD WORK TABLE	4
TA6	TABLE - SIDE TABLE	1
TA7	TABLE - MEETING TABLE	2
TA8	TABLE - ASSEMBLY TABLE	4
TA9	TABLE - ASSEMBLY TABLE - LONG	10
W1	WASTE - 40 GAL SQUARE	5
W2	WASTE - 40 GAL SQUARE (RECYCLING)	5
W3	WASTE - 7-GAL SMALL DESK SIZE	22
W4	WASTE - 7-GAL SMALL DESK SIZE (RECYCLING)	21
WC1	WALL CLOCK - BATTERY OPERATED	21

NOTES - INTERIOR FF&E

1. ITEMS LISTED IN 'UPUI' LEGEND ARE USER FURNISHED AND USER INSTALLED. THEY ARE SHOWN FOR COORDINATION PURPOSES ONLY.
2. ITEMS LISTED IN 'CFCI' LEGEND ARE ITEMS THAT ARE PROVIDED BY THE CONTRACTOR UNDER THE CURRENT CONSTRUCTION CONTRACT.
3. ITEMS LISTED IN 'FF&E' LEGEND ARE PART OF THE FF&E PACKAGE THAT IS PART OF A PLANNED CONTRACT MODIFICATION AND ARE SHOWN FOR COORDINATION PURPOSES ONLY.
4. SEE TELECOM DRAWINGS FOR TV SIZE AND MOUNT INFORMATION.
5. PROVIDE BLOCKING FOR WALL MOUNTED FF&E ITEMS AS REQUIRED. REFER TO A-SERIES FOR MORE INFORMATION.
6. CONTRACTOR TO COORDINATE PLUMBING / ELECTRICAL / DATA REQUIREMENTS AND STRUCTURAL BLOCKING FOR ITEMS PROVIDED BY USERS AS APPROVED BY THE CONTRACTING OFFICER. REFER TO OTHER DISCIPLINE DRAWINGS FOR MORE INFORMATION.
7. MOUNT WALL CLOCKS AT 7'-6" A.F.F. TO BOTTOM OF FIXTURE. CENTER WHERE POSSIBLE AT DOORS.
8. MARKERBOARDS TO HAVE ANODIZED ALUMINUM TRIM AND TRAY. MOUNT AT 42" AFF TO BOTTOM EDGE. INCLUDE (1) SET OF TOOLS PER BOARD.

LEGEND - INTERIOR EQUIPMENT - (CFCI)

TAG	DESCRIPTION	QTY
AW1	COMMAND BOARD - LARGE, GREAT AMERICAN ART OR EQ.	1
AW2	COMMAND BOARD - SMALL, GREAT AMERICAN ART OR EQ.	2
J2	JANITOR SHELF - MOP/BROOM, BOBRICK B-239 x34 OR EQ.	1
MB1	MAGNETIC DRY ERASE BOARD - 8'W X 4'H, CLARIDGE OR EQ.	2
MB2	MAGNETIC DRY ERASE BOARD - 6'W X 4'H, CLARIDGE OR EQ.	25
TB1	LOCKABLE TACKBOARD - 4'W X 3'H, CLARIDGE OR EQ.	4

LEGEND - INTERIOR EQUIPMENT - (UPUI)

TAG	DESCRIPTION	QTY
UPUI1	MULTI-FUNCTION DEVICE	2
UPUI2	X-RAY MACHINE	1
UPUI3	VENDING - CANDY	2
UPUI4	VENDING - SODA	2

KEYPLAN

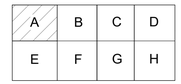

0 4' - 0" 8' - 0" 16' - 0"
SCALE: 1/8" = 1' - 0"

N

APPR	DATE	DESCRIPTION	SYM

NAVFAC

REGISTERED ARCHITECT COMMONWEALTH OF PENNSYLVANIA MICHAEL P. KUCHERA No. RA016140 SEAL

W.M. Jordan COMPANY – A JOINT VENTURE –

Michael Baker INTERNATIONAL
100 AIRSIDE DRIVE
MOON TOWNSHIP, PA 15108 A/E INFO

APPROVED

FOR COMMANDER NAVFAC

ACTIVITY
MARINE CORPS BASE CAMP LEJEUNE

SATISFACTORY TO DATE

DES	SJK	DRW RDT	CHK NCW
PM / DM		TOWLER / ROOT	
BRANCH HEAD		DER	
DESIGN DIRECTOR		R.L.Stephens, Jr.	
FIRE PROTECTION		DPS	

DEPARTMENT OF THE NAVY
NAVAL FACILITIES ENGINEERING SYSTEMS COMMAND
ATLANTIC DESIGN AND CONSTRUCTION
MCB CAMP LEJEUNE

NAVAL FACILITIES ENGINEERING SYSTEMS COMMAND ATLANTIC
NORFOLK, VA
JACKSONVILLE, NC
P1527 LOGCOM CSP WAREHOUSE

INTERIOR FF&E - 1ST FLOOR PLAN - AREA A

SCALE:	AS NOTED
EPROJECT NO.:	1639600
CONSTR. CONTR. NO.	N40085-20-C-0059
NAVFAC DRAWING NO.	14111233
SHEET	219 OF 447

IF111

DRAWFORM REVISION: 25 AUGUST 2020

P1527 FINAL SUBMISSION - 11/18/2021

PLOTTED: 11/12/2021 7:00:00 AM

FILE NAME: BIM 360/IHF PACKAGE 3/P1527 LOG COM CSP-1639600-A.rvt

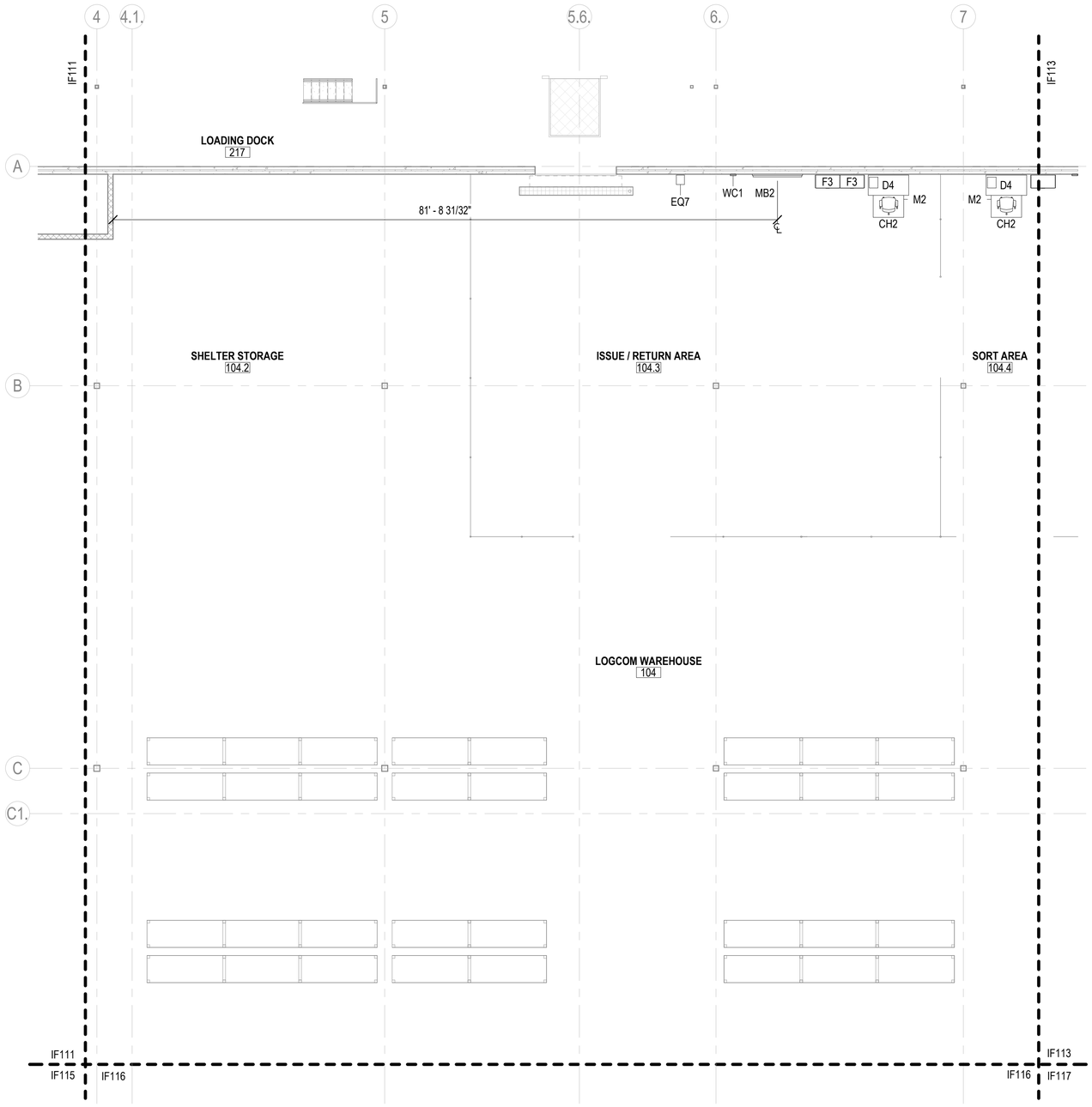

A1 INTERIOR FF&E - 1ST FLOOR PLAN - AREA B
SCALE: 1/8" = 1'-0"

LEGEND - INTERIOR - (FF&E)

TAG	DESCRIPTION	QTY
BC1	BOOKCASE - 5 HIGH	13
BC2	BOOKCASE - 4 HIGH	3
CH1	CHAIR - DINING	22
CH2	CHAIR - TASK	34
CH3	CHAIR - GUEST	25
CH4	CHAIR - TRAINING	49
CH5	CHAIR - WORK STOOL WITHOUT ARMS	25
CH6	CHAIR - LOUNGE	1
D1	DESK - WORKBENCH W/ STORAGE SHELVING ABOVE	8
D2	DESK - STANDARD WORKBENCH	21
D3	DESK - L-SHAPED	3
D4	DESK - OPEN WORKSTATION (NON-PANEL BASED)	13
D5	DESK - U-SHAPED	3
D6	DESK - SINGLE, 2-BUILT-IN BOX/BOX/FILES	6
D7	DESK - L-SHAPED LIBRARY	12
D8	DESK - INSTRUCTOR	1
DA1	DESK ACCESSORY - DUAL MONITOR STAND	6
DA2	DESK ACCESSORY - PENCIL DRAWER	12
DA3	DESK ACCESSORY - IN-OUT BOX TRAY	22
EQ1	EQUIPMENT - ICE MAKER	2
EQ2	EQUIPMENT - COFFEE MAKER	2
EQ3	EQUIPMENT - FIRE EXTINGUISHER - 10LB ABC	4
EQ4	EQUIPMENT - MICROWAVE	2
EQ5	EQUIPMENT - REFRIGERATOR	2
EQ6	EQUIPMENT - U.C. REFRIGERATOR	1
EQ7	EQUIPMENT - WATER COOLER	5
F1	FILE - TWO-DRAWER LATERAL	4
F2	FILE - THREE-DRAWER LATERAL	6
F3	FILE - FOUR-DRAWER LATERAL	17
F4	FILE - FIVE-DRAWER LATERAL	12
F5	FILE - HIGH-DENSITY SHELVING UNIT	4
F6	FILE - LATERAL (DESK)	3
F7	FILE - MOBILE PEDESTAL B/B/F (DESK)	18
F8	FILE - MOBILE PEDESTAL B/B/F (DESK)	10
FT1	FILE TOP - LAMINATE	1
FT2	FILE TOP - LAMINATE	1
J1	JANITOR CART	2
M1	MAT - ANTI-FATIGUE	35
M2	MAT - CHAIR FLOOR	34
M3	MAT - ANTI-STATIC	6
MR1	MASK RACK	13
S1	STORAGE - CABINET	2
S2	STORAGE - SHELVING - OPEN, INDUSTRIAL	11
S3	STORAGE - SHELVING - OPEN, SMALL PARTS	21
S4	STORAGE - OVERHEAD HUTCH 36" (DESK)	3
S5	STORAGE - OVERHEAD HUTCH 66" (DESK)	3
S6	STORAGE - WARDROBE - 24"D X 24W" (DESK)	3
S7	STORAGE - WARDROBE - 24"D X 20"W (DESK)	3
TA1	TABLE - ANTI-STATIC ASSEMBLY	14
TA2	TABLE - TRAINING WITH CASTERS	24
TA3	TABLE - DINING	6
TA4	TABLE - TEAR DOWN	3
TA5	TABLE - STANDARD WORK TABLE	4
TA6	TABLE - SIDE TABLE	1
TA7	TABLE - MEETING TABLE	2
TA8	TABLE - ASSEMBLY TABLE	4
TA9	TABLE - ASSEMBLY TABLE - LONG	10
W1	WASTE - 40 GAL SQUARE	5
W2	WASTE - 40 GAL SQUARE (RECYCLING)	5
W3	WASTE - 7-GAL SMALL DESK SIZE	22
W4	WASTE - 7-GAL SMALL DESK SIZE (RECYCLING)	21
WC1	WALL CLOCK - BATTERY OPERATED	21

NOTES - INTERIOR FF&E

1 ITEMS LISTED IN 'UPUI' LEGEND ARE USER FURNISHED AND USER INSTALLED. THEY ARE SHOWN FOR COORDINATION PURPOSES ONLY.
2 ITEMS LISTED IN 'CFCI' LEGEND ARE ITEMS THAT ARE PROVIDED BY THE CONTRACTOR UNDER THE CURRENT CONSTRUCTION CONTRACT.
3 ITEMS LISTED IN 'FF&E' LEGEND ARE PART OF THE FF&E PACKAGE THAT IS PART OF A PLANNED CONTRACT MODIFICATION AND ARE SHOWN FOR COORDINATION PURPOSES ONLY.
4 SEE TELECOM DRAWINGS FOR TV SIZE AND MOUNT INFORMATION.
5 PROVIDE BLOCKING FOR WALL MOUNTED FF&E ITEMS AS REQUIRED. REFER TO A-SERIES FOR MORE INFORMATION.
6 CONTRACTOR TO COORDINATE PLUMBING / ELECTRICAL / DATA REQUIREMENTS AND STRUCTURAL BLOCKING FOR ITEMS PROVIDED BY USERS AS APPROVED BY THE CONTRACTING OFFICER. REFER TO OTHER DISCIPLINE DRAWINGS FOR MORE INFORMATION.
7 MOUNT WALL CLOCKS AT 7'-6" A.F.F. TO BOTTOM OF FIXTURE. CENTER WHERE POSSIBLE AT DOORS.
8 MARKERBOARDS TO HAVE ANODIZED ALUMINUM TRIM AND TRAY. MOUNT AT 42" AFF TO BOTTOM EDGE. INCLUDE (1) SET OF TOOLS PER BOARD.

LEGEND - INTERIOR EQUIPMENT - (CFCI)

TAG	DESCRIPTION	QTY
AW1	COMMAND BOARD - LARGE, GREAT AMERICAN ART OR EQ.	1
AW2	COMMAND BOARD - SMALL, GREAT AMERICAN ART OR EQ.	2
J2	JANITOR SHELF - MOP/BROOM, BOBRICK B-239 x34 OR EQ.	1
MB1	MAGNETIC DRY ERASE BOARD - 8'W X 4'H, CLARIDGE OR EQ.	2
MB2	MAGNETIC DRY ERASE BOARD - 6'W X 4'H, CLARIDGE OR EQ.	25
TB1	LOCKABLE TACKBOARD - 4'W X 3'H, CLARIDGE OR EQ.	4

LEGEND - INTERIOR EQUIPMENT - (UPUI)

TAG	DESCRIPTION	QTY
UPUI1	MULTI-FUNCTION DEVICE	2
UPUI2	X-RAY MACHINE	1
UPUI3	VENDING - CANDY	2
UPUI4	VENDING - SODA	2

KEYPLAN

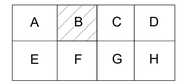

0 4' - 0" 8' - 0" 16' - 0"
SCALE: 1/8" = 1' - 0"

N

APPR	DATE	DESCRIPTION	SYM

NAVFAC

REGISTERED ARCHITECT COMMONWEALTH OF PENNSYLVANIA MICHAEL RUCHERA NO. RA010140
SEAL

RQ W.M. Jordan COMPANY – A JOINT VENTURE –

Michael Baker INTERNATIONAL
100 AIRSIDE DRIVE
MOON TOWNSHIP, PA 15108
A/E INFO

APPROVED
FOR COMMANDER NAVFAC

ACTIVITY
MARINE CORPS BASE
CAMP LEJEUNE

SATISFACTORY TO DATE

DES	SJK	DRW	RDT	CHK	NCW
PM / DM	TOWLER / ROOT				
BRANCH HEAD	DER				
DESIGN DIRECTOR	R.L.Stephens, Jr.				
FIRE PROTECTION	DPS				

DEPARTMENT OF THE NAVY
NAVAL FACILITIES ENGINEERING SYSTEMS COMMAND
ATLANTIC DESIGN AND CONSTRUCTION
MCB CAMP LEJEUNE

NAVAL FACILITIES ENGINEERING SYSTEMS COMMAND ATLANTIC
NORFOLK, VA
JACKSONVILLE, NC
P1527 LOGCOM CSP WAREHOUSE

INTERIOR FF&E - 1ST FLOOR PLAN - AREA B

SCALE:	AS NOTED
EPROJECT NO.:	1639600
CONSTR. CONTR. NO.	N40085-20-C-0059
NAVFAC DRAWING NO.	14111234
SHEET	220 OF 447

IF112

DRAWFORM REVISION: 25 AUGUST 2020

P1527 FINAL SUBMISSION - 11/18/2021

PLOTTED: 11/12/2021 7:00:05 AM

FILE NAME: BIM 360://HF PACKAGE 3/P1527 LOG COM CSP-1639600-A.rvt

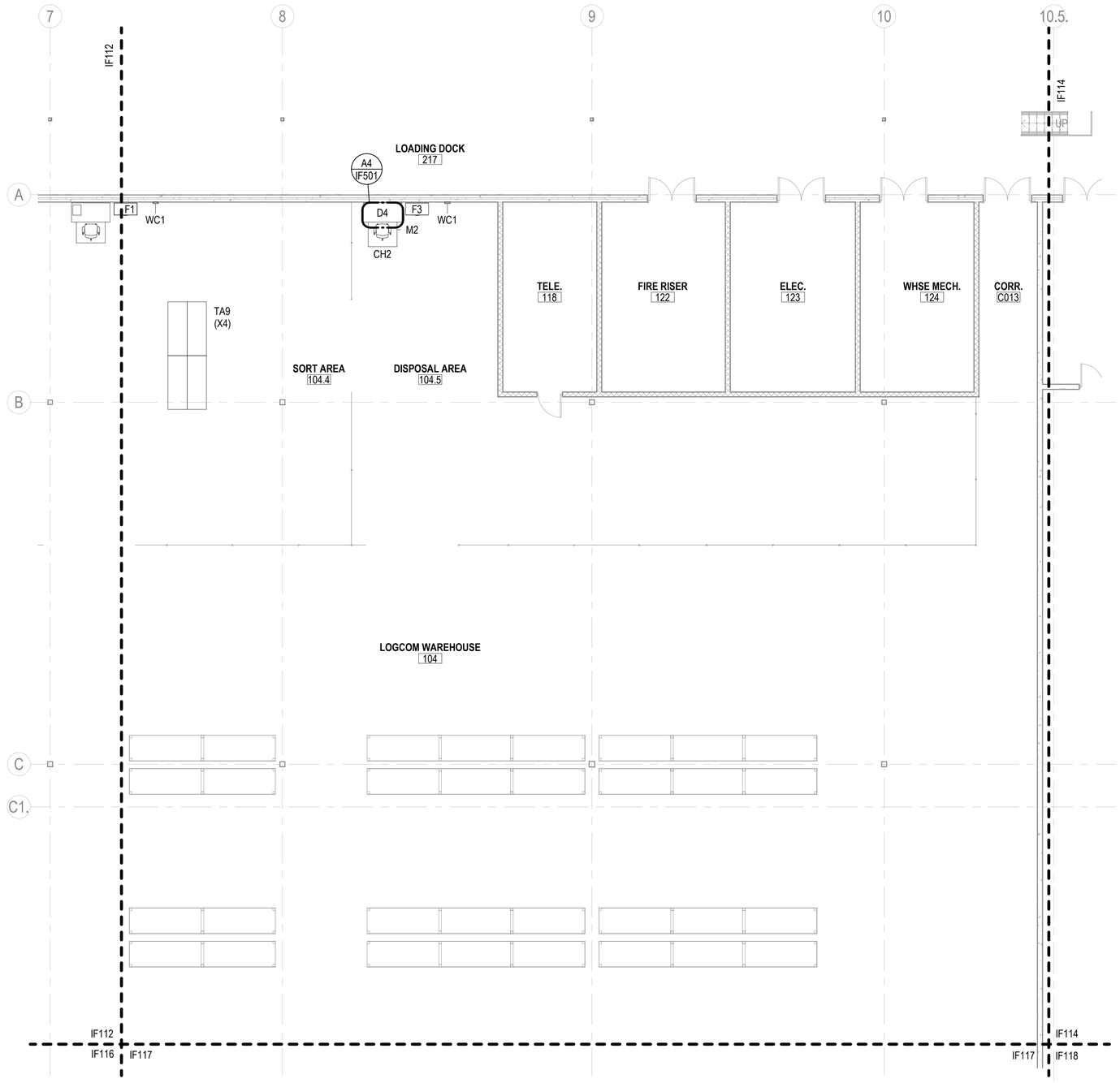

LEGEND - INTERIOR - (FF&E)

TAG	DESCRIPTION	QTY
BC1	BOOKCASE - 5 HIGH	13
BC2	BOOKCASE - 4 HIGH	3
CH1	CHAIR - DINING	22
CH2	CHAIR - TASK	34
CH3	CHAIR - GUEST	25
CH4	CHAIR - TRAINING	49
CH5	CHAIR - WORK STOOL WITHOUT ARMS	25
CH6	CHAIR - LOUNGE	1
D1	DESK - WORKBENCH W/ STORAGE SHELVING ABOVE	8
D2	DESK - STANDARD WORKBENCH	21
D3	DESK - L-SHAPED	3
D4	DESK - OPEN WORKSTATION (NON-PANEL BASED)	13
D5	DESK - U-SHAPED	3
D6	DESK - SINGLE, 2-BUILT-IN BOX/BOX/FILES	6
D7	DESK - L-SHAPED LIBRARY	12
D8	DESK - INSTRUCTOR	1
DA1	DESK ACCESSORY - DUAL MONITOR STAND	6
DA2	DESK ACCESSORY - PENCIL DRAWER	12
DA3	DESK ACCESSORY - IN-OUT BOX TRAY	22
EQ1	EQUIPMENT - ICE MAKER	2
EQ2	EQUIPMENT - COFFEE MAKER	2
EQ3	EQUIPMENT - FIRE EXTINGUISHER - 10LB ABC	4
EQ4	EQUIPMENT - MICROWAVE	2
EQ5	EQUIPMENT - REFRIGERATOR	2
EQ6	EQUIPMENT - U.C. REFRIGERATOR	1
EQ7	EQUIPMENT - WATER COOLER	5
F1	FILE - TWO-DRAWER LATERAL	4
F2	FILE - THREE-DRAWER LATERAL	6
F3	FILE - FOUR-DRAWER LATERAL	17
F4	FILE - FIVE-DRAWER LATERAL	12
F5	FILE - HIGH-DENSITY SHELVING UNIT	4
F6	FILE - LATERAL (DESK)	3
F7	FILE - MOBILE PEDESTAL B/B/F (DESK)	18
F8	FILE - MOBILE PEDESTAL B/B/F (DESK)	10
FT1	FILE TOP - LAMINATE	1
FT2	FILE TOP - LAMINATE	1
J1	JANITOR CART	2
M1	MAT - ANTI-FATIGUE	35
M2	MAT - CHAIR FLOOR	34
M3	MAT - ANTI-STATIC	6
MR1	MASK RACK	13
S1	STORAGE - CABINET	2
S2	STORAGE - SHELVING - OPEN, INDUSTRIAL	11
S3	STORAGE - SHELVING - OPEN, SMALL PARTS	21
S4	STORAGE - OVERHEAD HUTCH 36" (DESK)	3
S5	STORAGE - OVERHEAD HUTCH 66" (DESK)	3
S6	STORAGE - WARDROBE - 24"D X 24W" (DESK)	3
S7	STORAGE - WARDROBE - 24"D X 20"W (DESK)	3
TA1	TABLE - ANTI-STATIC ASSEMBLY	14
TA2	TABLE - TRAINING WITH CASTERS	24
TA3	TABLE - DINING	6
TA4	TABLE - TEAR DOWN	3
TA5	TABLE - STANDARD WORK TABLE	4
TA6	TABLE - SIDE TABLE	1
TA7	TABLE - MEETING TABLE	2
TA8	TABLE - ASSEMBLY TABLE	4
TA9	TABLE - ASSEMBLY TABLE - LONG	10
W1	WASTE - 40 GAL SQUARE	5
W2	WASTE - 40 GAL SQUARE (RECYCLING)	5
W3	WASTE - 7-GAL SMALL DESK SIZE	22
W4	WASTE - 7-GAL SMALL DESK SIZE (RECYCLING)	21
WC1	WALL CLOCK - BATTERY OPERATED	21

NOTES - INTERIOR FF&E

1 ITEMS LISTED IN 'UPUI' LEGEND ARE USER FURNISHED AND USER INSTALLED. THEY ARE SHOWN FOR COORDINATION PURPOSES ONLY.
2 ITEMS LISTED IN 'CFCI' LEGEND ARE ITEMS THAT ARE PROVIDED BY THE CONTRACTOR UNDER THE CURRENT CONSTRUCTION CONTRACT.
3 ITEMS LISTED IN 'FF&E' LEGEND ARE PART OF THE FF&E PACKAGE THAT IS PART OF A PLANNED CONTRACT MODIFICATION AND ARE SHOWN FOR COORDINATION PURPOSES ONLY.
4 SEE TELECOM DRAWINGS FOR TV SIZE AND MOUNT INFORMATION.
5 PROVIDE BLOCKING FOR WALL MOUNTED FF&E ITEMS AS REQUIRED. REFER TO A-SERIES FOR MORE INFORMATION.
6 CONTRACTOR TO COORDINATE PLUMBING / ELECTRICAL / DATA REQUIREMENTS AND STRUCTURAL BLOCKING FOR ITEMS PROVIDED BY USERS AS APPROVED BY THE CONTRACTING OFFICER. REFER TO OTHER DISCIPLINE DRAWINGS FOR MORE INFORMATION.
7 MOUNT WALL CLOCKS AT 7'-6" A.F.F. TO BOTTOM OF FIXTURE. CENTER WHERE POSSIBLE AT DOORS.
8 MARKERBOARDS TO HAVE ANODIZED ALUMINUM TRIM AND TRAY. MOUNT AT 42" AFF TO BOTTOM EDGE. INCLUDE (1) SET OF TOOLS PER BOARD.

LEGEND - INTERIOR EQUIPMENT - (CFCI)

TAG	DESCRIPTION	QTY
AW1	COMMAND BOARD - LARGE, GREAT AMERICAN ART OR EQ.	1
AW2	COMMAND BOARD - SMALL, GREAT AMERICAN ART OR EQ.	2
J2	JANITOR SHELF - MOP/BROOM, BOBRICK B-239 x34 OR EQ.	1
MB1	MAGNETIC DRY ERASE BOARD - 8'W X 4'H, CLARIDGE OR EQ.	2
MB2	MAGNETIC DRY ERASE BOARD - 6'W X 4'H, CLARIDGE OR EQ.	25
TB1	LOCKABLE TACKBOARD - 4'W X 3'H, CLARIDGE OR EQ.	4

LEGEND - INTERIOR EQUIPMENT - (UPUI)

TAG	DESCRIPTION	QTY
UPUI1	MULTI-FUNCTION DEVICE	2
UPUI2	X-RAY MACHINE	1
UPUI3	VENDING - CANDY	2
UPUI4	VENDING - SODA	2

KEYPLAN

A	B	C	D
E	F	G	H

0 4' - 0" 8' - 0" 16' - 0"
SCALE: 1/8" = 1' - 0"

N

	DESCRIPTION	DATE	APPR
SYM			

NAVFAC

REGISTERED ARCHITECT COMMONWEALTH OF PENNSYLVANIA MICHAEL RAYMOND KUCHERA NO. RA010140
SEAL

W.M. Jordan COMPANY – A JOINT VENTURE –

Michael Baker INTERNATIONAL
100 AIRSIDE DRIVE
MOON TOWNSHIP, PA 15108
A/E INFO

APPROVED
FOR COMMANDER NAVFAC

ACTIVITY
MARINE CORPS BASE CAMP LEJEUNE

SATISFACTORY TO DATE

DES	SJK	DRW RDT CHK	NCW
PM / DM		TOWLER / ROOT	
BRANCH HEAD		DER	
DESIGN DIRECTOR		R.L.Stephens, Jr.	
FIRE PROTECTION		DPS	

DEPARTMENT OF THE NAVY
NAVAL FACILITIES ENGINEERING SYSTEMS COMMAND
ATLANTIC DESIGN AND CONSTRUCTION
NAVAL FACILITIES ENGINEERING SYSTEMS COMMAND ATLANTIC
NORFOLK, VA
MCB CAMP LEJEUNE
JACKSONVILLE, NC
P1527 LOGCOM CSP WAREHOUSE
INTERIOR FF&E - 1ST FLOOR PLAN - AREA C

SCALE:	AS NOTED
EPROJECT NO.:	1639600
CONSTR. CONTR. NO.	N40085-20-C-0059
NAVFAC DRAWING NO.	14111235
SHEET	221 OF 447

IF113

DRAWFORM REVISION: 25 AUGUST 2020

P1527 FINAL SUBMISSION - 11/18/2021

A1 INTERIOR FF&E - 1ST FLOOR PLAN - AREA C
SCALE: 1/8" = 1'-0"

PLOTTED: 11/12/2021 7:00:11 AM
FILE NAME: BIM 360://#F PACKAGE 3/P1527 LOG COM CSP-1639600-A.rvt

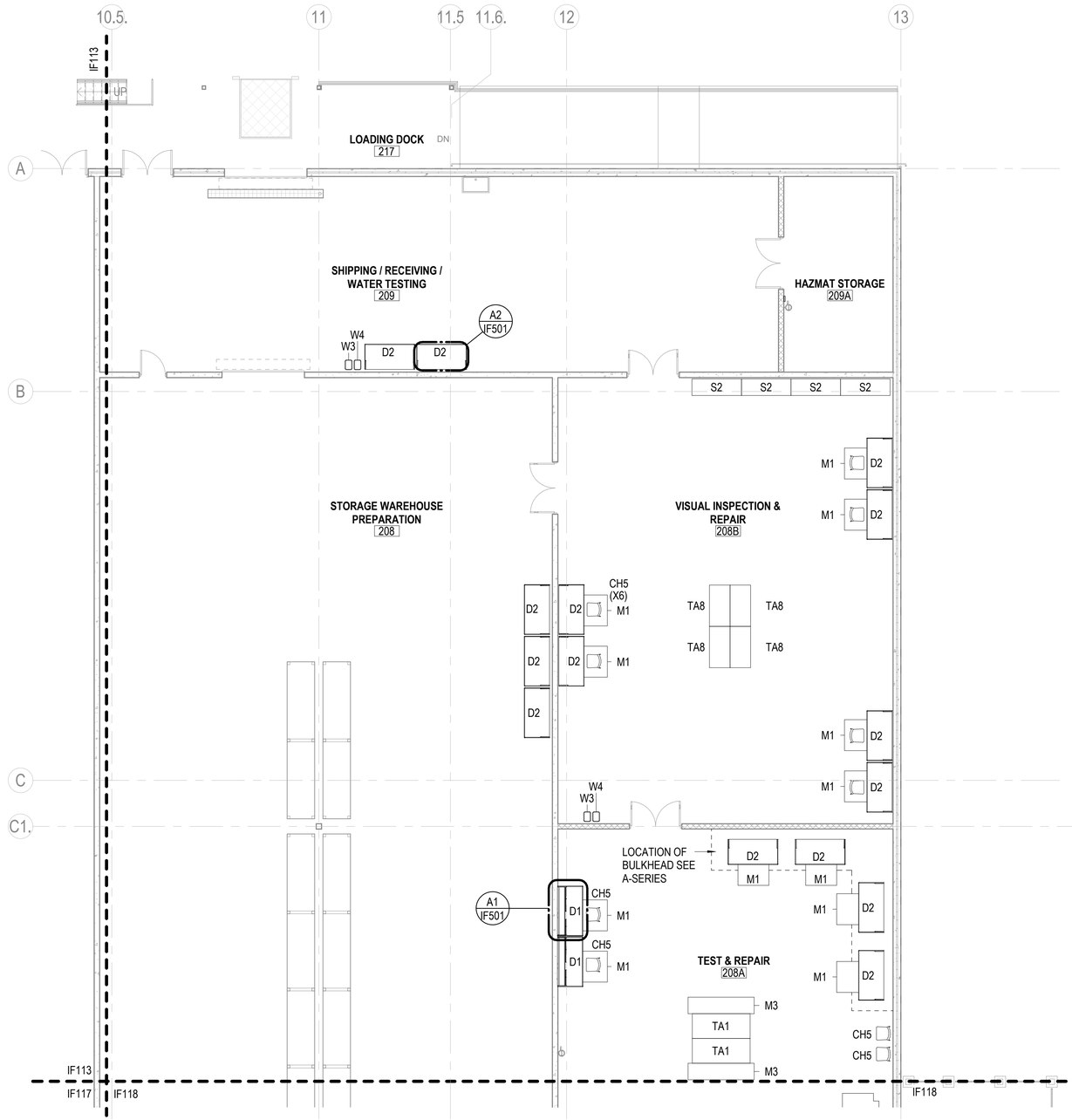

A1 INTERIOR FF&E - 1ST FLOOR PLAN - AREA D
SCALE: 1/8" = 1'-0"

LEGEND - INTERIOR - (FF&E)

TAG	DESCRIPTION	QTY
BC1	BOOKCASE - 5 HIGH	13
BC2	BOOKCASE - 4 HIGH	3
CH1	CHAIR - DINING	22
CH2	CHAIR - TASK	34
CH3	CHAIR - GUEST	25
CH4	CHAIR - TRAINING	49
CH5	CHAIR - WORK STOOL WITHOUT ARMS	25
CH6	CHAIR - LOUNGE	1
D1	DESK - WORKBENCH W/ STORAGE SHELVING ABOVE	8
D2	DESK - STANDARD WORKBENCH	21
D3	DESK - L-SHAPED	3
D4	DESK - OPEN WORKSTATION (NON-PANEL BASED)	13
D5	DESK - U-SHAPED	3
D6	DESK - SINGLE, 2-BUILT-IN BOX/BOX/FILES	6
D7	DESK - L-SHAPED LIBRARY	12
D8	DESK - INSTRUCTOR	1
DA1	DESK ACCESSORY - DUAL MONITOR STAND	6
DA2	DESK ACCESSORY - PENCIL DRAWER	12
DA3	DESK ACCESSORY - IN-OUT BOX TRAY	22
EQ1	EQUIPMENT - ICE MAKER	2
EQ2	EQUIPMENT - COFFEE MAKER	2
EQ3	EQUIPMENT - FIRE EXTINGUISHER - 10LB ABC	4
EQ4	EQUIPMENT - MICROWAVE	2
EQ5	EQUIPMENT - REFRIGERATOR	2
EQ6	EQUIPMENT - U.C. REFRIGERATOR	1
EQ7	EQUIPMENT - WATER COOLER	5
F1	FILE - TWO-DRAWER LATERAL	4
F2	FILE - THREE-DRAWER LATERAL	6
F3	FILE - FOUR-DRAWER LATERAL	17
F4	FILE - FIVE-DRAWER LATERAL	12
F5	FILE - HIGH-DENSITY SHELVING UNIT	4
F6	FILE - LATERAL (DESK)	3
F7	FILE - MOBILE PEDESTAL B/B/F (DESK)	18
F8	FILE - MOBILE PEDESTAL B/B/F (DESK)	10
FT1	FILE TOP - LAMINATE	1
FT2	FILE TOP - LAMINATE	1
J1	JANITOR CART	2
M1	MAT - ANTI-FATIGUE	35
M2	MAT - CHAIR FLOOR	34
M3	MAT - ANTI-STATIC	6
MR1	MASK RACK	13
S1	STORAGE - CABINET	2
S2	STORAGE - SHELVING - OPEN, INDUSTRIAL	11
S3	STORAGE - SHELVING - OPEN, SMALL PARTS	21
S4	STORAGE - OVERHEAD HUTCH 36" (DESK)	3
S5	STORAGE - OVERHEAD HUTCH 66" (DESK)	3
S6	STORAGE - WARDROBE - 24"D X 24W" (DESK)	3
S7	STORAGE - WARDROBE - 24"D X 20"W (DESK)	3
TA1	TABLE - ANTI-STATIC ASSEMBLY	14
TA2	TABLE - TRAINING WITH CASTERS	24
TA3	TABLE - DINING	6
TA4	TABLE - TEAR DOWN	3
TA5	TABLE - STANDARD WORK TABLE	4
TA6	TABLE - SIDE TABLE	1
TA7	TABLE - MEETING TABLE	2
TA8	TABLE - ASSEMBLY TABLE	4
TA9	TABLE - ASSEMBLY TABLE - LONG	10
W1	WASTE - 40 GAL SQUARE	5
W2	WASTE - 40 GAL SQUARE (RECYCLING)	5
W3	WASTE - 7-GAL SMALL DESK SIZE	22
W4	WASTE - 7-GAL SMALL DESK SIZE (RECYCLING)	21
WC1	WALL CLOCK - BATTERY OPERATED	21

NOTES - INTERIOR FF&E

1. ITEMS LISTED IN 'UPUI' LEGEND ARE USER FURNISHED AND USER INSTALLED. THEY ARE SHOWN FOR COORDINATION PURPOSES ONLY.
2. ITEMS LISTED IN 'CFCI' LEGEND ARE ITEMS THAT ARE PROVIDED BY THE CONTRACTOR UNDER THE CURRENT CONSTRUCTION CONTRACT.
3. ITEMS LISTED IN 'FF&E' LEGEND ARE PART OF THE FF&E PACKAGE THAT IS PART OF A PLANNED CONTRACT MODIFICATION AND ARE SHOWN FOR COORDINATION PURPOSES ONLY.
4. SEE TELECOM DRAWINGS FOR TV SIZE AND MOUNT INFORMATION.
5. PROVIDE BLOCKING FOR WALL MOUNTED FF&E ITEMS AS REQUIRED. REFER TO A-SERIES FOR MORE INFORMATION.
6. CONTRACTOR TO COORDINATE PLUMBING / ELECTRICAL / DATA REQUIREMENTS AND STRUCTURAL BLOCKING FOR ITEMS PROVIDED BY USERS AS APPROVED BY THE CONTRACTING OFFICER. REFER TO OTHER DISCIPLINE DRAWINGS FOR MORE INFORMATION.
7. MOUNT WALL CLOCKS AT 7'-6" A.F.F. TO BOTTOM OF FIXTURE. CENTER WHERE POSSIBLE AT DOORS.
8. MARKERBOARDS TO HAVE ANODIZED ALUMINUM TRIM AND TRAY. MOUNT AT 42" AFF TO BOTTOM EDGE. INCLUDE (1) SET OF TOOLS PER BOARD.

LEGEND - INTERIOR EQUIPMENT - (CFCI)

TAG	DESCRIPTION	QTY
AW1	COMMAND BOARD - LARGE, GREAT AMERICAN ART OR EQ.	1
AW2	COMMAND BOARD - SMALL, GREAT AMERICAN ART OR EQ.	2
J2	JANITOR SHELF - MOP/BROOM, BOBRICK B-239 x34 OR EQ.	1
MB1	MAGNETIC DRY ERASE BOARD - 8'W X 4'H, CLARIDGE OR EQ.	2
MB2	MAGNETIC DRY ERASE BOARD - 6'W X 4'H, CLARIDGE OR EQ.	25
TB1	LOCKABLE TACKBOARD - 4'W X 3'H, CLARIDGE OR EQ.	4

LEGEND - INTERIOR EQUIPMENT - (UPUI)

TAG	DESCRIPTION	QTY
UPUI1	MULTI-FUNCTION DEVICE	2
UPUI2	X-RAY MACHINE	1
UPUI3	VENDING - CANDY	2
UPUI4	VENDING - SODA	2

KEYPLAN



0 4' - 0" 8' - 0" 16' - 0"
SCALE: 1/8" = 1' - 0"

N

APPR | DATE | DESCRIPTION | SYM

NAVFAC

SEAL

W.M. Jordan COMPANY – A JOINT VENTURE –

Michael Baker INTERNATIONAL
100 AIRSIDE DRIVE
MOON TOWNSHIP, PA 15108
A/E INFO

APPROVED
FOR COMMANDER NAVFAC

ACTIVITY
MARINE CORPS BASE CAMP LEJEUNE

SATISFACTORY TO DATE
DES SJK | DRW RDT | CHK NCW
PM / DM TOWLER / ROOT
BRANCH HEAD DER
DESIGN DIRECTOR R.L.Stephens, Jr.
FIRE PROTECTION DPS

DEPARTMENT OF THE NAVY
NAVAL FACILITIES ENGINEERING SYSTEMS COMMAND
ATLANTIC DESIGN AND CONSTRUCTION
MCB CAMP LEJEUNE

NAVAL FACILITIES ENGINEERING SYSTEMS COMMAND ATLANTIC
NORFOLK, VA
JACKSONVILLE, NC
P1527 LOGCOM CSP WAREHOUSE

INTERIOR FF&E - 1ST FLOOR PLAN - AREA D

SCALE: AS NOTED
EPROJECT NO.: 1639600
CONSTR. CONTR. NO. N40085-20-C-0059
NAVFAC DRAWING NO. 14111236
SHEET 222 OF 447

IF114

DRAWFORM REVISION: 25 AUGUST 2020

P1527 FINAL SUBMISSION - 11/18/2021

PLOTTED: 11/12/2021 7:00:21 AM

FILE NAME: BIM 360/.HF PACKAGE 3/P1527 LOG COM CSP-1639600-A.rvt

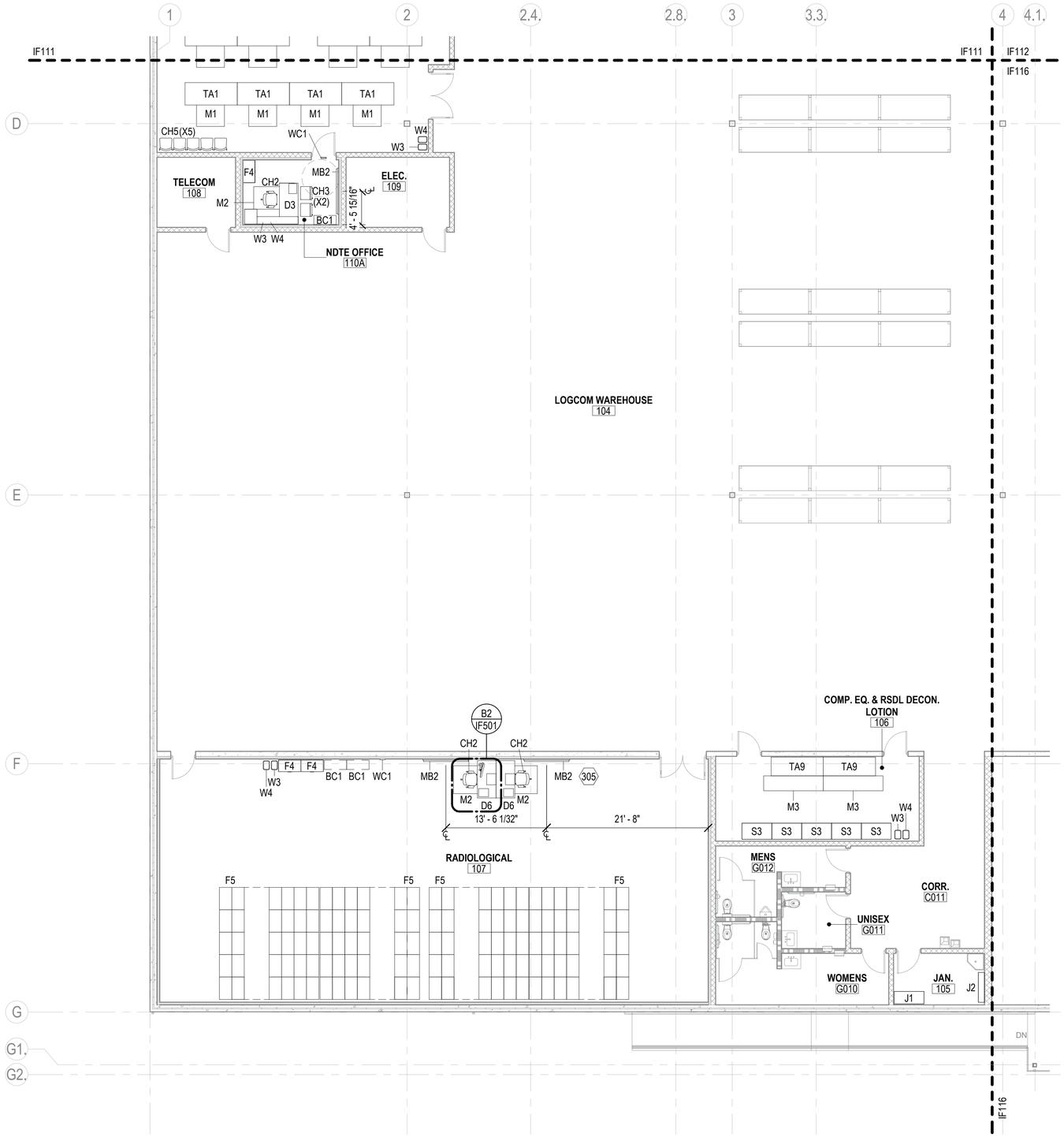

A1 INTERIOR FF&E - 1ST FLOOR PLAN - AREA E
SCALE: 1/8" = 1'-0"

LEGEND - INTERIOR - (FF&E)

TAG	DESCRIPTION	QTY
BC1	BOOKCASE - 5 HIGH	13
BC2	BOOKCASE - 4 HIGH	3
CH1	CHAIR - DINING	22
CH2	CHAIR - TASK	34
CH3	CHAIR - GUEST	25
CH4	CHAIR - TRAINING	49
CH5	CHAIR - WORK STOOL WITHOUT ARMS	25
CH6	CHAIR - LOUNGE	1
D1	DESK - WORKBENCH W/ STORAGE SHELVING ABOVE	8
D2	DESK - STANDARD WORKBENCH	21
D3	DESK - L-SHAPED	3
D4	DESK - OPEN WORKSTATION (NON-PANEL BASED)	13
D5	DESK - U-SHAPED	3
D6	DESK - SINGLE, 2-BUILT-IN BOX/BOX/FILES	6
D7	DESK - L-SHAPED LIBRARY	12
D8	DESK - INSTRUCTOR	1
DA1	DESK ACCESSORY - DUAL MONITOR STAND	6
DA2	DESK ACCESSORY - PENCIL DRAWER	12
DA3	DESK ACCESSORY - IN-OUT BOX TRAY	22
EQ1	EQUIPMENT - ICE MAKER	2
EQ2	EQUIPMENT - COFFEE MAKER	2
EQ3	EQUIPMENT - FIRE EXTINGUISHER - 10LB ABC	4
EQ4	EQUIPMENT - MICROWAVE	2
EQ5	EQUIPMENT - REFRIGERATOR	2
EQ6	EQUIPMENT - U.C. REFRIGERATOR	1
EQ7	EQUIPMENT - WATER COOLER	5
F1	FILE - TWO-DRAWER LATERAL	4
F2	FILE - THREE-DRAWER LATERAL	6
F3	FILE - FOUR-DRAWER LATERAL	17
F4	FILE - FIVE-DRAWER LATERAL	12
F5	FILE - HIGH-DENSITY SHELVING UNIT	4
F6	FILE - LATERAL (DESK)	3
F7	FILE - MOBILE PEDESTAL B/B/F (DESK)	18
F8	FILE - MOBILE PEDESTAL B/B/F (DESK)	10
FT1	FILE TOP - LAMINATE	1
FT2	FILE TOP - LAMINATE	1
J1	JANITOR CART	2
M1	MAT - ANTI-FATIGUE	35
M2	MAT - CHAIR FLOOR	34
M3	MAT - ANTI-STATIC	6
MR1	MASK RACK	13
S1	STORAGE - CABINET	2
S2	STORAGE - SHELVING - OPEN, INDUSTRIAL	11
S3	STORAGE - SHELVING - OPEN, SMALL PARTS	21
S4	STORAGE - OVERHEAD HUTCH 36" (DESK)	3
S5	STORAGE - OVERHEAD HUTCH 66" (DESK)	3
S6	STORAGE - WARDROBE - 24"D X 24W" (DESK)	3
S7	STORAGE - WARDROBE - 24"D X 20"W (DESK)	3
TA1	TABLE - ANTI-STATIC ASSEMBLY	14
TA2	TABLE - TRAINING WITH CASTERS	24
TA3	TABLE - DINING	6
TA4	TABLE - TEAR DOWN	3
TA5	TABLE - STANDARD WORK TABLE	4
TA6	TABLE - SIDE TABLE	1
TA7	TABLE - MEETING TABLE	2
TA8	TABLE - ASSEMBLY TABLE	4
TA9	TABLE - ASSEMBLY TABLE - LONG	10
W1	WASTE - 40 GAL SQUARE	5
W2	WASTE - 40 GAL SQUARE (RECYCLING)	5
W3	WASTE - 7-GAL SMALL DESK SIZE	22
W4	WASTE - 7-GAL SMALL DESK SIZE (RECYCLING)	21
WC1	WALL CLOCK - BATTERY OPERATED	21

KEYNOTES

305	MAGNETIC TACK BOARDS IN THIS ROOM HAVE TACK STRIP AT TOP AND BOTTOM

NOTES - INTERIOR FF&E

1. ITEMS LISTED IN 'UPUI' LEGEND ARE USER FURNISHED AND USER INSTALLED. THEY ARE SHOWN FOR COORDINATION PURPOSES ONLY.
2. ITEMS LISTED IN 'CFCI' LEGEND ARE ITEMS THAT ARE PROVIDED BY THE CONTRACTOR UNDER THE CURRENT CONSTRUCTION CONTRACT.
3. ITEMS LISTED IN 'FF&E' LEGEND ARE PART OF THE FF&E PACKAGE THAT IS PART OF A PLANNED CONTRACT MODIFICATION AND ARE SHOWN FOR COORDINATION PURPOSES ONLY.
4. SEE TELECOM DRAWINGS FOR TV SIZE AND MOUNT INFORMATION.
5. PROVIDE BLOCKING FOR WALL MOUNTED FF&E ITEMS AS REQUIRED. REFER TO A-SERIES FOR MORE INFORMATION.
6. CONTRACTOR TO COORDINATE PLUMBING / ELECTRICAL / DATA REQUIREMENTS AND STRUCTURAL BLOCKING FOR ITEMS PROVIDED BY USERS AS APPROVED BY THE CONTRACTING OFFICER. REFER TO OTHER DISCIPLINE DRAWINGS FOR MORE INFORMATION.
7. MOUNT WALL CLOCKS AT 7'-6" A.F.F. TO BOTTOM OF FIXTURE. CENTER WHERE POSSIBLE AT DOORS.
8. MARKERBOARDS TO HAVE ANODIZED ALUMINUM TRIM AND TRAY. MOUNT AT 42" AFF TO BOTTOM EDGE. INCLUDE (1) SET OF TOOLS PER BOARD.

LEGEND - INTERIOR EQUIPMENT - (CFCI)

TAG	DESCRIPTION	QTY
AW1	COMMAND BOARD - LARGE, GREAT AMERICAN ART OR EQ.	1
AW2	COMMAND BOARD - SMALL, GREAT AMERICAN ART OR EQ.	2
J2	JANITOR SHELF - MOP/BROOM, BOBRICK B-239 x34 OR EQ.	1
MB1	MAGNETIC DRY ERASE BOARD - 8'W X 4'H, CLARIDGE OR EQ.	2
MB2	MAGNETIC DRY ERASE BOARD - 6'W X 4'H, CLARIDGE OR EQ.	25
TB1	LOCKABLE TACKBOARD - 4'W X 3'H, CLARIDGE OR EQ.	4

LEGEND - INTERIOR EQUIPMENT - (UPUI)

TAG	DESCRIPTION	QTY
UPUI1	MULTI-FUNCTION DEVICE	2
UPUI2	X-RAY MACHINE	1
UPUI3	VENDING - CANDY	2
UPUI4	VENDING - SODA	2

KEYPLAN

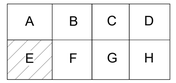

0 4' - 0" 8' - 0" 16' - 0"
SCALE: 1/8" = 1' - 0"

N

APPR | DATE | DESCRIPTION | SYM

NAVFAC

REGISTERED ARCHITECT
COMMONWEALTH OF PENNSYLVANIA
MICHAEL RUCHERA No. RA016140
SEAL

RQ W.M. Jordan COMPANY
~A JOINT VENTURE~

Michael Baker INTERNATIONAL
100 AIRSIDE DRIVE
MOON TOWNSHIP, PA 15108
A/E INFO

APPROVED
FOR COMMANDER NAVFAC
ACTIVITY
MARINE CORPS BASE
CAMP LEJEUNE
SATISFACTORY TO DATE

DES	SJK	DRW RDT	CHK NCW
PM / DM	TOWLER / ROOT		
BRANCH HEAD	DER		
DESIGN DIRECTOR	R.L.Stephens, Jr.		
FIRE PROTECTION	DPS		

DEPARTMENT OF THE NAVY
NAVAL FACILITIES ENGINEERING SYSTEMS COMMAND
ATLANTIC DESIGN AND CONSTRUCTION
NAVAL FACILITIES ENGINEERING SYSTEMS COMMAND ATLANTIC
NORFOLK, VA
MCB CAMP LEJEUNE
JACKSONVILLE, NC
P1527 LOGCOM CSP WAREHOUSE
INTERIOR FF&E - 1ST FLOOR PLAN - AREA E

SCALE:	AS NOTED
EPROJECT NO.:	1639600
CONSTR. CONTR. NO.	N40085-20-C-0059
NAVFAC DRAWING NO.	14111237
SHEET	223 OF 447

IF115

DRAWFORM REVISION: 25 AUGUST 2020

P1527 FINAL SUBMISSION - 11/18/2021

PLOTTED: 11/12/2021 7:00:25 AM

FILE NAME: BIM 360/IHF PACKAGE 3/P1527 LOG COM CSP-1639600-A.rvt

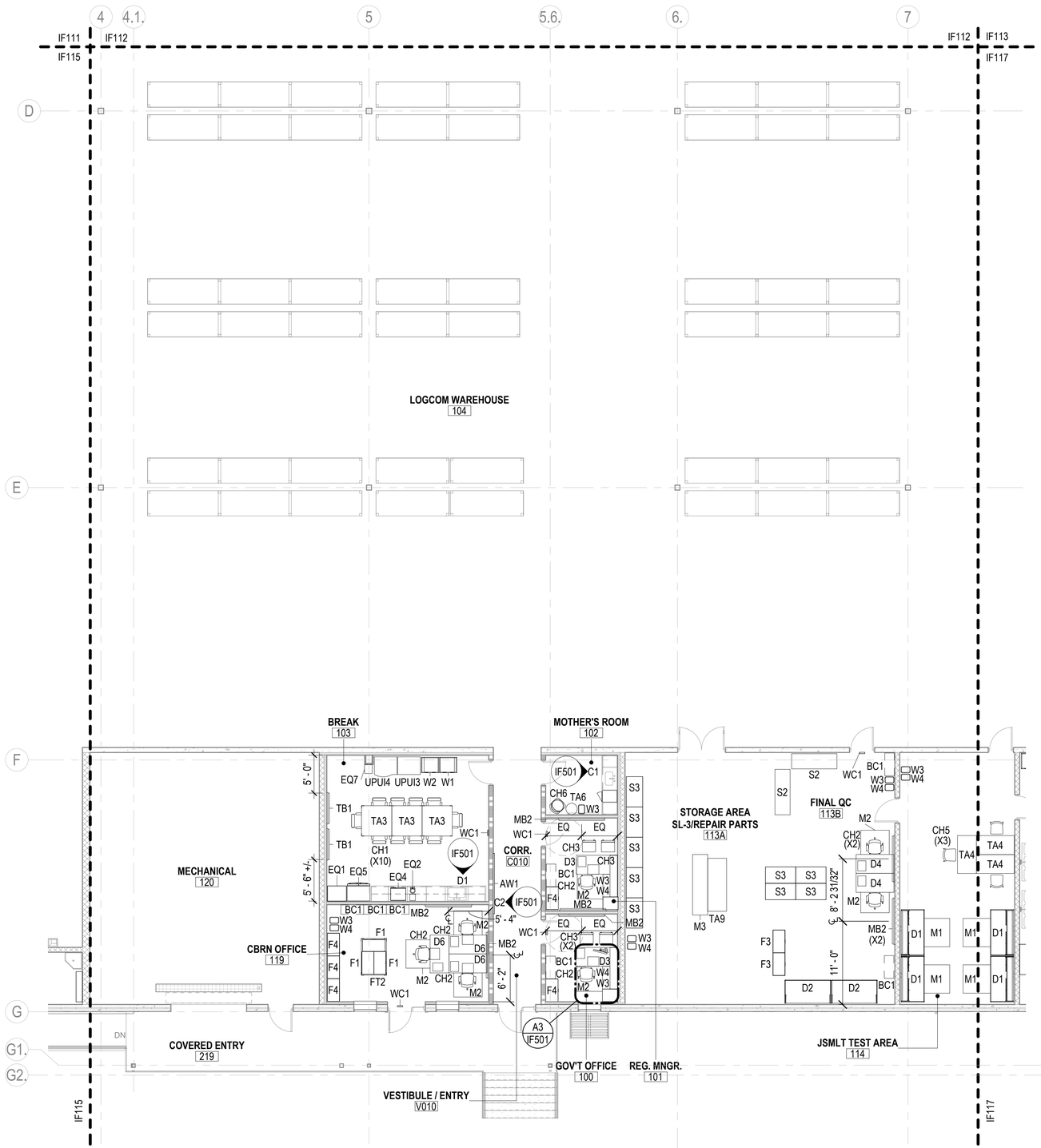

A1 INTERIOR FF&E - 1ST FLOOR PLAN - AREA F

SCALE: 1/8" = 1'-0"

LEGEND - INTERIOR - (FF&E)

TAG	DESCRIPTION	QTY
BC1	BOOKCASE - 5 HIGH	13
BC2	BOOKCASE - 4 HIGH	3
CH1	CHAIR - DINING	22
CH2	CHAIR - TASK	34
CH3	CHAIR - GUEST	25
CH4	CHAIR - TRAINING	49
CH5	CHAIR - WORK STOOL WITHOUT ARMS	25
CH6	CHAIR - LOUNGE	1
D1	DESK - WORKBENCH W/ STORAGE SHELVING ABOVE	8
D2	DESK - STANDARD WORKBENCH	21
D3	DESK - L-SHAPED	3
D4	DESK - OPEN WORKSTATION (NON-PANEL BASED)	13
D5	DESK - U-SHAPED	3
D6	DESK - SINGLE, 2-BUILT-IN BOX/BOX/FILES	6
D7	DESK - L-SHAPED LIBRARY	12
D8	DESK - INSTRUCTOR	1
DA1	DESK ACCESSORY - DUAL MONITOR STAND	6
DA2	DESK ACCESSORY - PENCIL DRAWER	12
DA3	DESK ACCESSORY - IN-OUT BOX TRAY	22
EQ1	EQUIPMENT - ICE MAKER	2
EQ2	EQUIPMENT - COFFEE MAKER	2
EQ3	EQUIPMENT - FIRE EXTINGUISHER - 10LB ABC	4
EQ4	EQUIPMENT - MICROWAVE	2
EQ5	EQUIPMENT - REFRIGERATOR	2
EQ6	EQUIPMENT - U.C. REFRIGERATOR	1
EQ7	EQUIPMENT - WATER COOLER	5
F1	FILE - TWO-DRAWER LATERAL	4
F2	FILE - THREE-DRAWER LATERAL	6
F3	FILE - FOUR-DRAWER LATERAL	17
F4	FILE - FIVE-DRAWER LATERAL	12
F5	FILE - HIGH-DENSITY SHELVING UNIT	4
F6	FILE - LATERAL (DESK)	3
F7	FILE - MOBILE PEDESTAL B/B/F (DESK)	18
F8	FILE - MOBILE PEDESTAL B/B/F (DESK)	10
FT1	FILE TOP - LAMINATE	1
FT2	FILE TOP - LAMINATE	1
J1	JANITOR CART	2
M1	MAT - ANTI-FATIGUE	35
M2	MAT - CHAIR FLOOR	34
M3	MAT - ANTI-STATIC	6
MR1	MASK RACK	13
S1	STORAGE - CABINET	2
S2	STORAGE - SHELVING - OPEN, INDUSTRIAL	11
S3	STORAGE - SHELVING - OPEN, SMALL PARTS	21
S4	STORAGE - OVERHEAD HUTCH 36" (DESK)	3
S5	STORAGE - OVERHEAD HUTCH 66" (DESK)	3
S6	STORAGE - WARDROBE - 24"D X 24W" (DESK)	3
S7	STORAGE - WARDROBE - 24"D X 20"W (DESK)	3
TA1	TABLE - ANTI-STATIC ASSEMBLY	14
TA2	TABLE - TRAINING WITH CASTERS	24
TA3	TABLE - DINING	6
TA4	TABLE - TEAR DOWN	3
TA5	TABLE - STANDARD WORK TABLE	4
TA6	TABLE - SIDE TABLE	1
TA7	TABLE - MEETING TABLE	2
TA8	TABLE - ASSEMBLY TABLE	4
TA9	TABLE - ASSEMBLY TABLE - LONG	10
W1	WASTE - 40 GAL SQUARE	5
W2	WASTE - 40 GAL SQUARE (RECYCLING)	5
W3	WASTE - 7-GAL SMALL DESK SIZE	22
W4	WASTE - 7-GAL SMALL DESK SIZE (RECYCLING)	21
WC1	WALL CLOCK - BATTERY OPERATED	21

NOTES - INTERIOR FF&E

1 ITEMS LISTED IN 'UPUI' LEGEND ARE USER FURNISHED AND USER INSTALLED. THEY ARE SHOWN FOR COORDINATION PURPOSES ONLY.

2 ITEMS LISTED IN 'CFCI' LEGEND ARE ITEMS THAT ARE PROVIDED BY THE CONTRACTOR UNDER THE CURRENT CONSTRUCTION CONTRACT.

3 ITEMS LISTED IN 'FF&E' LEGEND ARE PART OF THE FF&E PACKAGE THAT IS PART OF A PLANNED CONTRACT MODIFICATION AND ARE SHOWN FOR COORDINATION PURPOSES ONLY.

4 SEE TELECOM DRAWINGS FOR TV SIZE AND MOUNT INFORMATION.

5 PROVIDE BLOCKING FOR WALL MOUNTED FF&E ITEMS AS REQUIRED. REFER TO A-SERIES FOR MORE INFORMATION.

6 CONTRACTOR TO COORDINATE PLUMBING / ELECTRICAL / DATA REQUIREMENTS AND STRUCTURAL BLOCKING FOR ITEMS PROVIDED BY USERS AS APPROVED BY THE CONTRACTING OFFICER. REFER TO OTHER DISCIPLINE DRAWINGS FOR MORE INFORMATION.

7 MOUNT WALL CLOCKS AT 7'-6" A.F.F. TO BOTTOM OF FIXTURE. CENTER WHERE POSSIBLE AT DOORS.

8 MARKERBOARDS TO HAVE ANODIZED ALUMINUM TRIM AND TRAY. MOUNT AT 42" AFF TO BOTTOM EDGE. INCLUDE (1) SET OF TOOLS PER BOARD.

LEGEND - INTERIOR EQUIPMENT - (CFCI)

TAG	DESCRIPTION	QTY
AW1	COMMAND BOARD - LARGE, GREAT AMERICAN ART OR EQ.	1
AW2	COMMAND BOARD - SMALL, GREAT AMERICAN ART OR EQ.	2
J2	JANITOR SHELF - MOP/BROOM, BOBRICK B-239 x34 OR EQ.	1
MB1	MAGNETIC DRY ERASE BOARD - 8'W X 4'H, CLARIDGE OR EQ.	2
MB2	MAGNETIC DRY ERASE BOARD - 6'W X 4'H, CLARIDGE OR EQ.	25
TB1	LOCKABLE TACKBOARD - 4'W X 3'H, CLARIDGE OR EQ.	4

LEGEND - INTERIOR EQUIPMENT - (UPUI)

TAG	DESCRIPTION	QTY
UPUI1	MULTI-FUNCTION DEVICE	2
UPUI2	X-RAY MACHINE	1
UPUI3	VENDING - CANDY	2
UPUI4	VENDING - SODA	2

KEYPLAN

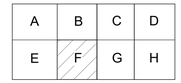

0 4' - 0" 8' - 0" 16' - 0"

SCALE: 1/8" = 1' - 0"

N

APPR	DATE	DESCRIPTION	SYM

NAVFAC

REGISTERED ARCHITECT COMMONWEALTH OF PENNSYLVANIA MICHAEL RUCHERA NO. RA016140 SEAL

IRQ W.M. Jordan COMPANY – A JOINT VENTURE –

Michael Baker INTERNATIONAL
100 AIRSIDE DRIVE
MOON TOWNSHIP, PA 15108 A/E INFO

APPROVED

FOR COMMANDER NAVFAC

ACTIVITY
MARINE CORPS BASE
CAMP LEJEUNE

SATISFACTORY TO DATE

DES	SJK	DRW	RDT	CHK	NCW
PM / DM	TOWLER / ROOT				
BRANCH HEAD	DER				
DESIGN DIRECTOR	R.L.Stephens, Jr.				
FIRE PROTECTION	DPS				

NAVAL FACILITIES ENGINEERING SYSTEMS COMMAND ATLANTIC
NORFOLK, VA
JACKSONVILLE, NC

DEPARTMENT OF THE NAVY
NAVAL FACILITIES ENGINEERING SYSTEMS COMMAND
ATLANTIC DESIGN AND CONSTRUCTION
MCB CAMP LEJEUNE

P1527 LOGCOM CSP WAREHOUSE

INTERIOR FF&E - 1ST FLOOR PLAN - AREA F

SCALE:	AS NOTED
EPROJECT NO.:	1639600
CONSTR. CONTR. NO.	N40085-20-C-0059
NAVFAC DRAWING NO.	14111238
SHEET	224 OF 447

IF116

DRAWFORM REVISION: 25 AUGUST 2020

P1527 FINAL SUBMISSION - 11/18/2021

PLOTTED: 11/12/2021 7:00:32 AM

FILE NAME: BIM 360://HF PACKAGE 3/P1527 LOG COM CSP-1639600-A.rvt

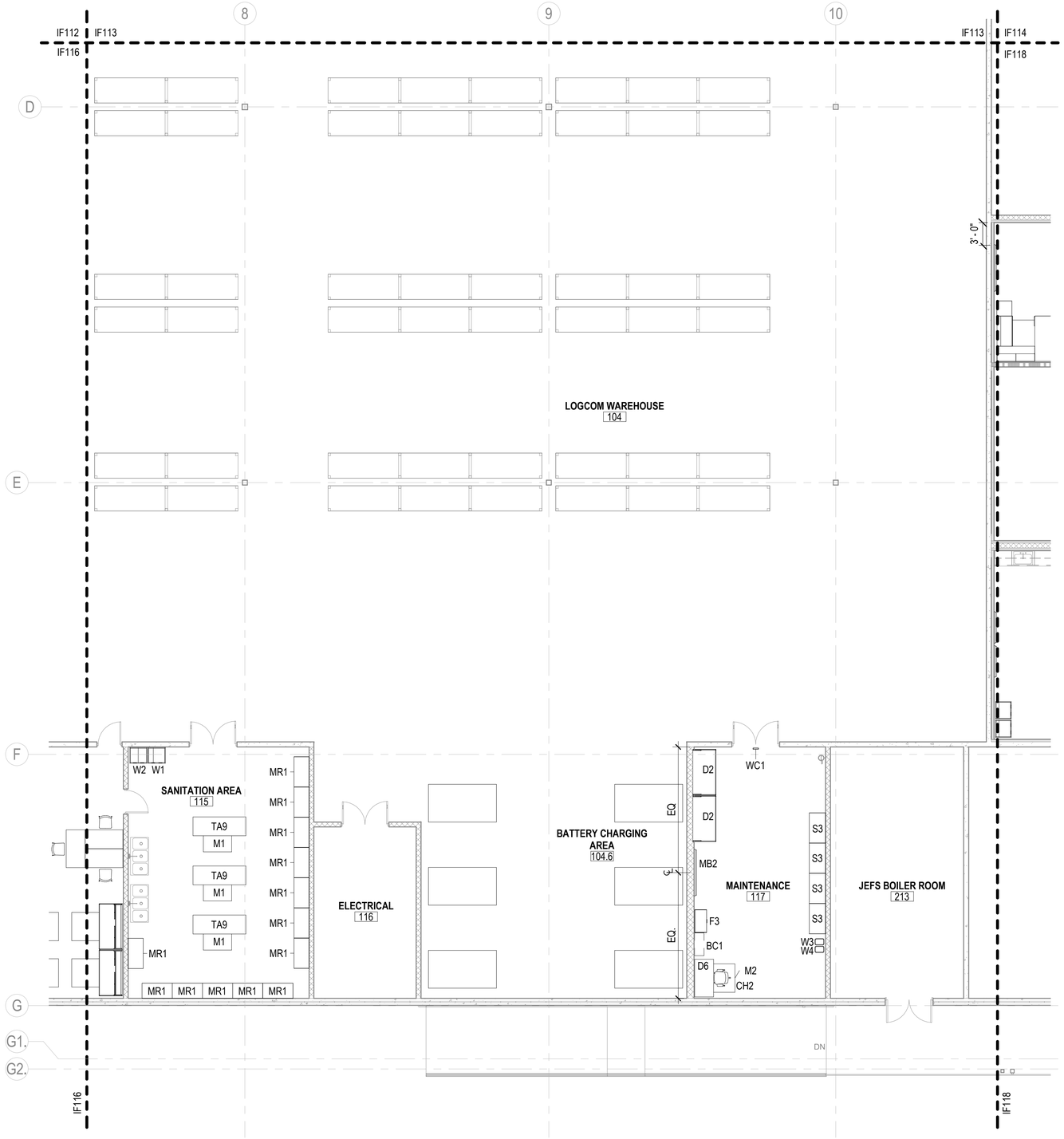

A1 INTERIOR FF&E - 1ST FLOOR PLAN - AREA G
SCALE: 1/8" = 1'-0"

LEGEND - INTERIOR - (FF&E)

TAG	DESCRIPTION	QTY
BC1	BOOKCASE - 5 HIGH	13
BC2	BOOKCASE - 4 HIGH	3
CH1	CHAIR - DINING	22
CH2	CHAIR - TASK	34
CH3	CHAIR - GUEST	25
CH4	CHAIR - TRAINING	49
CH5	CHAIR - WORK STOOL WITHOUT ARMS	25
CH6	CHAIR - LOUNGE	1
D1	DESK - WORKBENCH W/ STORAGE SHELVING ABOVE	8
D2	DESK - STANDARD WORKBENCH	21
D3	DESK - L-SHAPED	3
D4	DESK - OPEN WORKSTATION (NON-PANEL BASED)	13
D5	DESK - U-SHAPED	3
D6	DESK - SINGLE, 2-BUILT-IN BOX/BOX/FILES	6
D7	DESK - L-SHAPED LIBRARY	12
D8	DESK - INSTRUCTOR	1
DA1	DESK ACCESSORY - DUAL MONITOR STAND	6
DA2	DESK ACCESSORY - PENCIL DRAWER	12
DA3	DESK ACCESSORY - IN-OUT BOX TRAY	22
EQ1	EQUIPMENT - ICE MAKER	2
EQ2	EQUIPMENT - COFFEE MAKER	2
EQ3	EQUIPMENT - FIRE EXTINGUISHER - 10LB ABC	4
EQ4	EQUIPMENT - MICROWAVE	2
EQ5	EQUIPMENT - REFRIGERATOR	2
EQ6	EQUIPMENT - U.C. REFRIGERATOR	1
EQ7	EQUIPMENT - WATER COOLER	5
F1	FILE - TWO-DRAWER LATERAL	4
F2	FILE - THREE-DRAWER LATERAL	6
F3	FILE - FOUR-DRAWER LATERAL	17
F4	FILE - FIVE-DRAWER LATERAL	12
F5	FILE - HIGH-DENSITY SHELVING UNIT	4
F6	FILE - LATERAL (DESK)	3
F7	FILE - MOBILE PEDESTAL B/B/F (DESK)	18
F8	FILE - MOBILE PEDESTAL B/B/F (DESK)	10
FT1	FILE TOP - LAMINATE	1
FT2	FILE TOP - LAMINATE	1
J1	JANITOR CART	2
M1	MAT - ANTI-FATIGUE	35
M2	MAT - CHAIR FLOOR	34
M3	MAT - ANTI-STATIC	6
MR1	MASK RACK	13
S1	STORAGE - CABINET	2
S2	STORAGE - SHELVING - OPEN, INDUSTRIAL	11
S3	STORAGE - SHELVING - OPEN, SMALL PARTS	21
S4	STORAGE - OVERHEAD HUTCH 36" (DESK)	3
S5	STORAGE - OVERHEAD HUTCH 66" (DESK)	3
S6	STORAGE - WARDROBE - 24"D X 24W" (DESK)	3
S7	STORAGE - WARDROBE - 24"D X 20"W (DESK)	3
TA1	TABLE - ANTI-STATIC ASSEMBLY	14
TA2	TABLE - TRAINING WITH CASTERS	24
TA3	TABLE - DINING	6
TA4	TABLE - TEAR DOWN	3
TA5	TABLE - STANDARD WORK TABLE	4
TA6	TABLE - SIDE TABLE	1
TA7	TABLE - MEETING TABLE	2
TA8	TABLE - ASSEMBLY TABLE	4
TA9	TABLE - ASSEMBLY TABLE - LONG	10
W1	WASTE - 40 GAL SQUARE	5
W2	WASTE - 40 GAL SQUARE (RECYCLING)	5
W3	WASTE - 7-GAL SMALL DESK SIZE	22
W4	WASTE - 7-GAL SMALL DESK SIZE (RECYCLING)	21
WC1	WALL CLOCK - BATTERY OPERATED	21

NOTES - INTERIOR FF&E

1 ITEMS LISTED IN 'UPUI' LEGEND ARE USER FURNISHED AND USER INSTALLED. THEY ARE SHOWN FOR COORDINATION PURPOSES ONLY.
2 ITEMS LISTED IN 'CFCI' LEGEND ARE ITEMS THAT ARE PROVIDED BY THE CONTRACTOR UNDER THE CURRENT CONSTRUCTION CONTRACT.
3 ITEMS LISTED IN 'FF&E' LEGEND ARE PART OF THE FF&E PACKAGE THAT IS PART OF A PLANNED CONTRACT MODIFICATION AND ARE SHOWN FOR COORDINATION PURPOSES ONLY.
4 SEE TELECOM DRAWINGS FOR TV SIZE AND MOUNT INFORMATION.
5 PROVIDE BLOCKING FOR WALL MOUNTED FF&E ITEMS AS REQUIRED. REFER TO A-SERIES FOR MORE INFORMATION.
6 CONTRACTOR TO COORDINATE PLUMBING / ELECTRICAL / DATA REQUIREMENTS AND STRUCTURAL BLOCKING FOR ITEMS PROVIDED BY USERS AS APPROVED BY THE CONTRACTING OFFICER. REFER TO OTHER DISCIPLINE DRAWINGS FOR MORE INFORMATION.
7 MOUNT WALL CLOCKS AT 7'-6" A.F.F. TO BOTTOM OF FIXTURE. CENTER WHERE POSSIBLE AT DOORS.
8 MARKERBOARDS TO HAVE ANODIZED ALUMINUM TRIM AND TRAY. MOUNT AT 42" AFF TO BOTTOM EDGE. INCLUDE (1) SET OF TOOLS PER BOARD.

LEGEND - INTERIOR EQUIPMENT - (CFCI)

TAG	DESCRIPTION	QTY
AW1	COMMAND BOARD - LARGE, GREAT AMERICAN ART OR EQ.	1
AW2	COMMAND BOARD - SMALL, GREAT AMERICAN ART OR EQ.	2
J2	JANITOR SHELF - MOP/BROOM, BOBRICK B-239 x34 OR EQ.	1
MB1	MAGNETIC DRY ERASE BOARD - 8'W X 4'H, CLARIDGE OR EQ.	2
MB2	MAGNETIC DRY ERASE BOARD - 6'W X 4'H, CLARIDGE OR EQ.	25
TB1	LOCKABLE TACKBOARD - 4'W X 3'H, CLARIDGE OR EQ.	4

LEGEND - INTERIOR EQUIPMENT - (UPUI)

TAG	DESCRIPTION	QTY
UPUI1	MULTI-FUNCTION DEVICE	2
UPUI2	X-RAY MACHINE	1
UPUI3	VENDING - CANDY	2
UPUI4	VENDING - SODA	2

KEYPLAN

A	B	C	D
E	F	G	H

0 4' - 0" 8' - 0" 16' - 0"
SCALE: 1/8" = 1' - 0"

N

APPR | DATE | DESCRIPTION | SYM

NAVFAC

REGISTERED ARCHITECT COMMONWEALTH OF PENNSYLVANIA MICHAEL J. KUCHERA NO. RA010140
SEAL

WNJ Jordan COMPANY – A JOINT VENTURE –

Michael Baker INTERNATIONAL
100 AIRSIDE DRIVE
MOON TOWNSHIP, PA 15108
A/E INFO

APPROVED
FOR COMMANDER NAVFAC

ACTIVITY
MARINE CORPS BASE
CAMP LEJEUNE

SATISFACTORY TO DATE

DES	SJK	DRW RDT CHK	NCW
PM / DM		TOWLER / ROOT	
BRANCH HEAD		DER	
DESIGN DIRECTOR		R.L.Stephens, Jr.	
FIRE PROTECTION		DPS	

DEPARTMENT OF THE NAVY
NAVAL FACILITIES ENGINEERING SYSTEMS COMMAND
ATLANTIC DESIGN AND CONSTRUCTION
MCB CAMP LEJEUNE

NAVAL FACILITIES ENGINEERING SYSTEMS COMMAND ATLANTIC
NORFOLK, VA
JACKSONVILLE, NC
P1527 LOGCOM CSP WAREHOUSE

INTERIOR FF&E - 1ST FLOOR PLAN - AREA G

SCALE:	AS NOTED
EPROJECT NO.:	1639600
CONSTR. CONTR. NO.	N40085-20-C-0059
NAVFAC DRAWING NO.	14111239
SHEET	225 OF 447

IF117

DRAWFORM REVISION: 25 AUGUST 2020

P1527 FINAL SUBMISSION - 11/18/2021

PLOTTED: 11/12/2021 7:00:35 AM
FILE NAME: BIM 360://HF PACKAGE 3/P1527 LOG COM CSP-1639600-A.rvt



A1 INTERIOR FF&E - 1ST FLOOR PLAN - AREA H

SCALE: 1/8" = 1'-0"

LEGEND - INTERIOR - (FF&E)

TAG	DESCRIPTION	QTY
BC1	BOOKCASE - 5 HIGH	13
BC2	BOOKCASE - 4 HIGH	3
CH1	CHAIR - DINING	22
CH2	CHAIR - TASK	34
CH3	CHAIR - GUEST	25
CH4	CHAIR - TRAINING	49
CH5	CHAIR - WORK STOOL WITHOUT ARMS	25
CH6	CHAIR - LOUNGE	1
D1	DESK - WORKBENCH W/ STORAGE SHELVING ABOVE	8
D2	DESK - STANDARD WORKBENCH	21
D3	DESK - L-SHAPED	3
D4	DESK - OPEN WORKSTATION (NON-PANEL BASED)	13
D5	DESK - U-SHAPED	3
D6	DESK - SINGLE, 2-BUILT-IN BOX/BOX/FILES	6
D7	DESK - L-SHAPED LIBRARY	12
D8	DESK - INSTRUCTOR	1
DA1	DESK ACCESSORY - DUAL MONITOR STAND	6
DA2	DESK ACCESSORY - PENCIL DRAWER	12
DA3	DESK ACCESSORY - IN-OUT BOX TRAY	22
EQ1	EQUIPMENT - ICE MAKER	2
EQ2	EQUIPMENT - COFFEE MAKER	2
EQ3	EQUIPMENT - FIRE EXTINGUISHER - 10LB ABC	4
EQ4	EQUIPMENT - MICROWAVE	2
EQ5	EQUIPMENT - REFRIGERATOR	2
EQ6	EQUIPMENT - U.C. REFRIGERATOR	1
EQ7	EQUIPMENT - WATER COOLER	5
F1	FILE - TWO-DRAWER LATERAL	4
F2	FILE - THREE-DRAWER LATERAL	6
F3	FILE - FOUR-DRAWER LATERAL	17
F4	FILE - FIVE-DRAWER LATERAL	12
F5	FILE - HIGH-DENSITY SHELVING UNIT	4
F6	FILE - LATERAL (DESK)	3
F7	FILE - MOBILE PEDESTAL B/B/F (DESK)	18
F8	FILE - MOBILE PEDESTAL B/B/F (DESK)	10
FT1	FILE TOP - LAMINATE	1
FT2	FILE TOP - LAMINATE	1
J1	JANITOR CART	2
M1	MAT - ANTI-FATIGUE	35
M2	MAT - CHAIR FLOOR	34
M3	MAT - ANTI-STATIC	6
MR1	MASK RACK	13
S1	STORAGE - CABINET	2
S2	STORAGE - SHELVING - OPEN, INDUSTRIAL	11
S3	STORAGE - SHELVING - OPEN, SMALL PARTS	21
S4	STORAGE - OVERHEAD HUTCH 36" (DESK)	3
S5	STORAGE - OVERHEAD HUTCH 66" (DESK)	3
S6	STORAGE - WARDROBE - 24"D X 24W" (DESK)	3
S7	STORAGE - WARDROBE - 24"D X 20"W (DESK)	3
TA1	TABLE - ANTI-STATIC ASSEMBLY	14
TA2	TABLE - TRAINING WITH CASTERS	24
TA3	TABLE - DINING	6
TA4	TABLE - TEAR DOWN	3
TA5	TABLE - STANDARD WORK TABLE	4
TA6	TABLE - SIDE TABLE	1
TA7	TABLE - MEETING TABLE	2
TA8	TABLE - ASSEMBLY TABLE	4
TA9	TABLE - ASSEMBLY TABLE - LONG	10
W1	WASTE - 40 GAL SQUARE	5
W2	WASTE - 40 GAL SQUARE (RECYCLING)	5
W3	WASTE - 7-GAL SMALL DESK SIZE	22
W4	WASTE - 7-GAL SMALL DESK SIZE (RECYCLING)	21
WC1	WALL CLOCK - BATTERY OPERATED	21

KEYNOTES

X	
305	MAGNETIC TACK BOARDS IN THIS ROOM HAVE TACK STRIP AT TOP AND BOTTOM

NOTES - INTERIOR FF&E

1. ITEMS LISTED IN 'UPUI' LEGEND ARE USER FURNISHED AND USER INSTALLED. THEY ARE SHOWN FOR COORDINATION PURPOSES ONLY.
2. ITEMS LISTED IN 'CFCI' LEGEND ARE ITEMS THAT ARE PROVIDED BY THE CONTRACTOR UNDER THE CURRENT CONSTRUCTION CONTRACT.
3. ITEMS LISTED IN 'FF&E' LEGEND ARE PART OF THE FF&E PACKAGE THAT IS PART OF A PLANNED CONTRACT MODIFICATION AND ARE SHOWN FOR COORDINATION PURPOSES ONLY.
4. SEE TELECOM DRAWINGS FOR TV SIZE AND MOUNT INFORMATION.
5. PROVIDE BLOCKING FOR WALL MOUNTED FF&E ITEMS AS REQUIRED. REFER TO A-SERIES FOR MORE INFORMATION.
6. CONTRACTOR TO COORDINATE PLUMBING / ELECTRICAL / DATA REQUIREMENTS AND STRUCTURAL BLOCKING FOR ITEMS PROVIDED BY USERS AS APPROVED BY THE CONTRACTING OFFICER. REFER TO OTHER DISCIPLINE DRAWINGS FOR MORE INFORMATION.
7. MOUNT WALL CLOCKS AT 7'-6" A.F.F. TO BOTTOM OF FIXTURE. CENTER WHERE POSSIBLE AT DOORS.
8. MARKERBOARDS TO HAVE ANODIZED ALUMINUM TRIM AND TRAY. MOUNT AT 42" AFF TO BOTTOM EDGE. INCLUDE (1) SET OF TOOLS PER BOARD.

LEGEND - INTERIOR EQUIPMENT - (CFCI)

TAG	DESCRIPTION	QTY
AW1	COMMAND BOARD - LARGE, GREAT AMERICAN ART OR EQ.	1
AW2	COMMAND BOARD - SMALL, GREAT AMERICAN ART OR EQ.	2
J2	JANITOR SHELF - MOP/BROOM, BOBRICK B-239 x34 OR EQ.	1
MB1	MAGNETIC DRY ERASE BOARD - 8'W X 4'H, CLARIDGE OR EQ.	2
MB2	MAGNETIC DRY ERASE BOARD - 6'W X 4'H, CLARIDGE OR EQ.	25
TB1	LOCKABLE TACKBOARD - 4'W X 3'H, CLARIDGE OR EQ.	4

LEGEND - INTERIOR EQUIPMENT - (UPUI)

TAG	DESCRIPTION	QTY
UPUI1	MULTI-FUNCTION DEVICE	2
UPUI2	X-RAY MACHINE	1
UPUI3	VENDING - CANDY	2
UPUI4	VENDING - SODA	2

KEYPLAN

A	B	C	D
E	F	G	H

0 4' - 0" 8' - 0" 16' - 0"

SCALE: 1/8" = 1' - 0"

N

APPR	DATE	DESCRIPTION	SYM

NAVFAC

REGISTERED ARCHITECT COMMONWEALTH OF PENNSYLVANIA MICHAEL RUCHERA No. RA016140 SEAL

W.M. Jordan COMPANY – A JOINT VENTURE –

Michael Baker INTERNATIONAL

100 AIRSIDE DRIVE MOON TOWNSHIP, PA 15108 A/E INFO

APPROVED

FOR COMMANDER NAVFAC

ACTIVITY: MARINE CORPS BASE CAMP LEJEUNE

SATISFACTORY TO DATE

DES	SJK	DRW RDT	CHK NCW
PM / DM	TOWLER / ROOT		
BRANCH HEAD	DER		
DESIGN DIRECTOR	R.L.Stephens, Jr.		
FIRE PROTECTION	DPS		

DEPARTMENT OF THE NAVY
NAVAL FACILITIES ENGINEERING SYSTEMS COMMAND
ATLANTIC DESIGN AND CONSTRUCTION
NAVAL FACILITIES ENGINEERING SYSTEMS COMMAND ATLANTIC NORFOLK, VA
MCB CAMP LEJEUNE
P1527 LOGCOM CSP WAREHOUSE
JACKSONVILLE, NC
INTERIOR FF&E - 1ST FLOOR PLAN - AREA H

SCALE:	AS NOTED
EPROJECT NO.:	1639600
CONSTR. CONTR. NO.	N40085-20-C-0059
NAVFAC DRAWING NO.	14111240
SHEET	226 OF 447

IF118

DRAWFORM REVISION: 25 AUGUST 2020

P1527 FINAL SUBMISSION - 11/18/2021

PLOTTED: 11/12/2021 7:00:36 AM

FILE NAME: BIM 360://HFF PACKAGE 3/P1527 LOG COM CSP-1639600-A.rvt

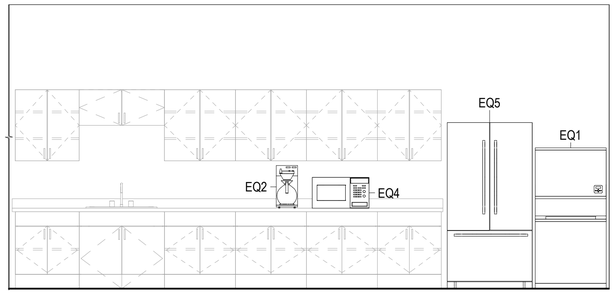

D1 INTERIOR ELEVATION - BREAK ROOM 103
SCALE: 3/8" = 1'-0"

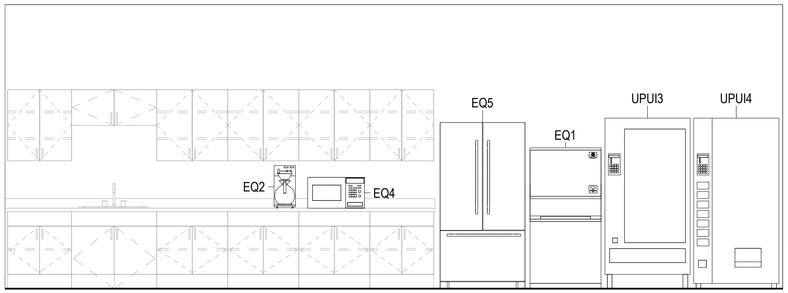

D2 INTERIOR ELEVATION - BREAK ROOM 202
SCALE: 3/8" = 1'-0"

LEGEND - INTERIOR EQUIPMENT (CFCI)

TAG	DESCRIPTION	QTY
AW1	COMMAND BOARD - LARGE, GREAT AMERICAN ART OR EQ.	1
AW2	COMMAND BOARD - SMALL, GREAT AMERICAN ART OR EQ.	2
J2	JANITOR SHELF - MOP/BROOM, BOBRICK B-239 x34 OR EQ.	1
MB1	MAGNETIC DRY ERASE BOARD - 8'W X 4'H, CLARIDGE OR EQ.	2
MB2	MAGNETIC DRY ERASE BOARD - 6'W X 4'H, CLARIDGE OR EQ.	25
TB1	LOCKABLE TACKBOARD - 4'W X 3'H, CLARIDGE OR EQ.	4

LEGEND - INTERIOR EQUIPMENT (UPUI)

TAG	DESCRIPTION	QTY
UPUI1	MULTI-FUNCTION DEVICE	2
UPUI2	X-RAY MACHINE	1
UPUI3	VENDING - CANDY	2
UPUI4	VENDING - SODA	2

NOTES - INTERIOR FF&E

1 ITEMS LISTED IN 'UPUI' LEGEND ARE USER FURNISHED AND USER INSTALLED. THEY ARE SHOWN FOR COORDINATION PURPOSES ONLY.
2 ITEMS LISTED IN 'CFCI' LEGEND ARE ITEMS THAT ARE PROVIDED BY THE CONTRACTOR UNDER THE CURRENT CONSTRUCTION CONTRACT.
3 ITEMS LISTED IN 'FF&E' LEGEND ARE PART OF THE FF&E PACKAGE THAT IS PART OF A PLANNED CONTRACT MODIFICATION AND ARE SHOWN FOR COORDINATION PURPOSES ONLY.
4 SEE TELECOM DRAWINGS FOR TV SIZE AND MOUNT INFORMATION.
5 PROVIDE BLOCKING FOR WALL MOUNTED FF&E ITEMS AS REQUIRED. REFER TO A-SERIES FOR MORE INFORMATION.
6 CONTRACTOR TO COORDINATE PLUMBING / ELECTRICAL / DATA REQUIREMENTS AND STRUCTURAL BLOCKING FOR ITEMS PROVIDED BY USERS AS APPROVED BY THE CONTRACTING OFFICER. REFER TO OTHER DISCIPLINE DRAWINGS FOR MORE INFORMATION.
7 MOUNT WALL CLOCKS AT 7'-6" A.F.F. TO BOTTOM OF FIXTURE. CENTER WHERE POSSIBLE AT DOORS.
8 MARKERBOARDS TO HAVE ANODIZED ALUMINUM TRIM AND TRAY. MOUNT AT 42" AFF TO BOTTOM EDGE. INCLUDE (1) SET OF TOOLS PER BOARD.

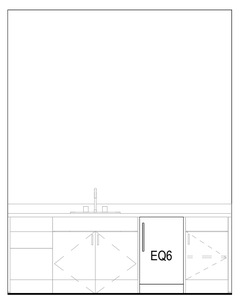

C1 INTERIOR ELEVATION - MOTHER'S
SCALE: 3/8" = 1'-0"

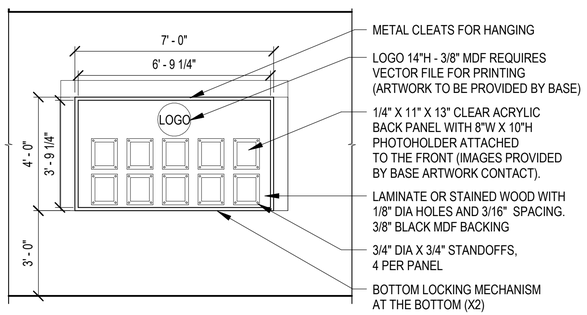

C2 INTERIOR DETAIL - ARTWORK - AW1
SCALE: 3/8" = 1'-0"

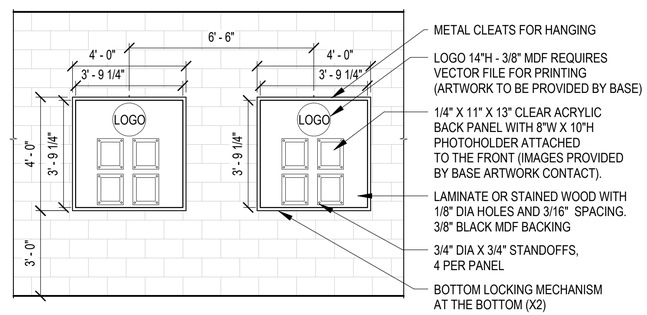

C3 INTERIOR DETAIL - ARTWORK - AW2
SCALE: 3/8" = 1'-0"

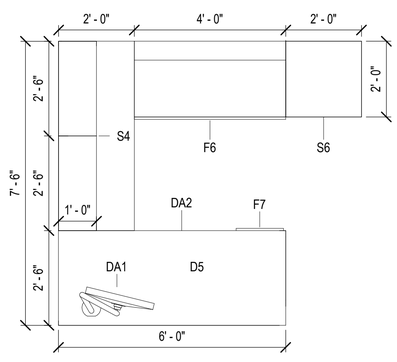

B1 INTERIOR DESK DETAIL - D5
SCALE: 1/2" = 1'-0"

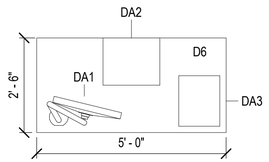

B2 INTERIOR DESK DETAIL - D6
SCALE: 1/2" = 1'-0"

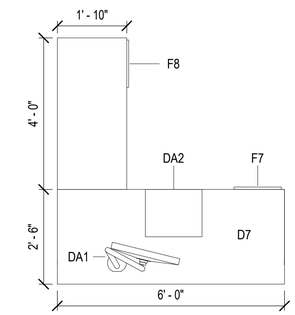

B3 INTERIOR DESK DETAIL - D7
SCALE: 1/2" = 1'-0"

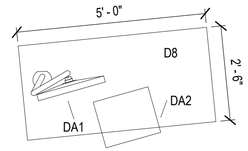

B4 INTERIOR DESK DETAIL - D8
SCALE: 1/2" = 1'-0"

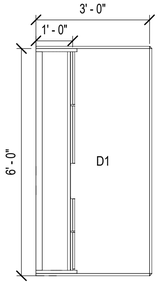

A1 INTERIOR DESK DETAIL - D1
SCALE: 1/2" = 1'-0"

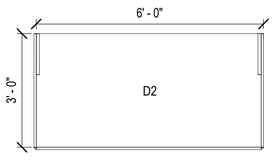

A2 INTERIOR DESK DETAIL - D2
SCALE: 1/2" = 1'-0"

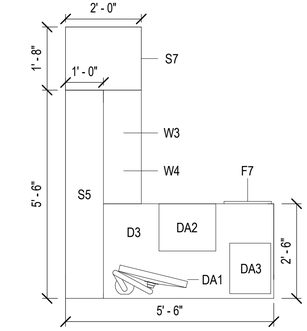

A3 INTERIOR DESK DETAIL - D3
SCALE: 1/2" = 1'-0"

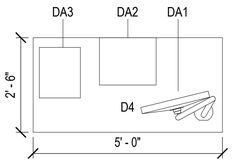

A4 INTERIOR DESK DETAIL - D4
SCALE: 1/2" = 1'-0"

LEGEND - INTERIOR (FF&E)

TAG	DESCRIPTION	QTY
BC1	BOOKCASE - 5 HIGH	13
BC2	BOOKCASE - 4 HIGH	3
CH1	CHAIR - DINING	22
CH2	CHAIR - TASK	34
CH3	CHAIR - GUEST	25
CH4	CHAIR - TRAINING	49
CH5	CHAIR - WORK STOOL WITHOUT ARMS	25
CH6	CHAIR - LOUNGE	1
D1	DESK - WORKBENCH W/ STORAGE SHELVING ABOVE	8
D2	DESK - STANDARD WORKBENCH	21
D3	DESK - L-SHAPED	3
D4	DESK - OPEN WORKSTATION (NON-PANEL BASED)	13
D5	DESK - U-SHAPED	3
D6	DESK - SINGLE, 2-BUILT-IN BOX/BOX/FILES	6
D7	DESK - L-SHAPED LIBRARY	12
D8	DESK - INSTRUCTOR	1
DA1	DESK ACCESSORY - DUAL MONITOR STAND	6
DA2	DESK ACCESSORY - PENCIL DRAWER	12
DA3	DESK ACCESSORY - IN-OUT BOX TRAY	22
EQ1	EQUIPMENT - ICE MAKER	2
EQ2	EQUIPMENT - COFFEE MAKER	2
EQ3	EQUIPMENT - FIRE EXTINGUISHER - 10LB ABC	4
EQ4	EQUIPMENT - MICROWAVE	2
EQ5	EQUIPMENT - REFRIGERATOR	2
EQ6	EQUIPMENT - U.C. REFRIGERATOR	1
EQ7	EQUIPMENT - WATER COOLER	5
F1	FILE - TWO-DRAWER LATERAL	4
F2	FILE - THREE-DRAWER LATERAL	6
F3	FILE - FOUR-DRAWER LATERAL	17
F4	FILE - FIVE-DRAWER LATERAL	12
F5	FILE - HIGH-DENSITY SHELVING UNIT	4
F6	FILE - LATERAL (DESK)	3
F7	FILE - MOBILE PEDESTAL B/B/F (DESK)	18
F8	FILE - MOBILE PEDESTAL B/B/F (DESK)	10
FT1	FILE TOP - LAMINATE	1
FT2	FILE TOP - LAMINATE	1
J1	JANITOR CART	2
M1	MAT - ANTI-FATIGUE	35
M2	MAT - CHAIR FLOOR	34
M3	MAT - ANTI-STATIC	6
MR1	MASK RACK	13
S1	STORAGE - CABINET	2
S2	STORAGE - SHELVING - OPEN, INDUSTRIAL	11
S3	STORAGE - SHELVING - OPEN, SMALL PARTS	21
S4	STORAGE - OVERHEAD HUTCH 36" (DESK)	3
S5	STORAGE - OVERHEAD HUTCH 66" (DESK)	3
S6	STORAGE - WARDROBE - 24"D X 24W" (DESK)	3
S7	STORAGE - WARDROBE - 24"D X 20"W (DESK)	3
TA1	TABLE - ANTI-STATIC ASSEMBLY	14
TA2	TABLE - TRAINING WITH CASTERS	24
TA3	TABLE - DINING	6
TA4	TABLE - TEAR DOWN	3
TA5	TABLE - STANDARD WORK TABLE	4
TA6	TABLE - SIDE TABLE	1
TA7	TABLE - MEETING TABLE	2
TA8	TABLE - ASSEMBLY TABLE	4
TA9	TABLE - ASSEMBLY TABLE - LONG	10
W1	WASTE - 40 GAL SQUARE	5
W2	WASTE - 40 GAL SQUARE (RECYCLING)	5
W3	WASTE - 7-GAL SMALL DESK SIZE	22
W4	WASTE - 7-GAL SMALL DESK SIZE (RECYCLING)	21
WC1	WALL CLOCK - BATTERY OPERATED	21

4' - 0" 2' - 0" 1' - 0" 0 1/2" = 1' - 0" SCALE:

8' - 0" 4' - 0" 2' - 0" 0 3/8" = 1' - 0" SCALE:

APPR	DATE	DESCRIPTION	SYM

NAVFAC

REGISTERED ARCHITECT COMMONWEALTH OF PENNSYLVANIA MICHAEL P. KUCHERA No. RA016140 SEAL

IRQ W.M. Jordan COMPANY – A JOINT VENTURE –

Michael Baker INTERNATIONAL
100 AIRSIDE DRIVE
MOON TOWNSHIP, PA 15108
A/E INFO

APPROVED

FOR COMMANDER NAVFAC

ACTIVITY
MARINE CORPS BASE CAMP LEJEUNE

SATISFACTORY TO DATE

DES SJK	DRW RDT	CHK NCW
PM / DM	TOWLER / ROOT	
BRANCH HEAD	DER	
DESIGN DIRECTOR	R.L.Stephens, Jr.	
FIRE PROTECTION	DPS	

NAVAL FACILITIES ENGINEERING SYSTEMS COMMAND
DEPARTMENT OF THE NAVY
NAVAL FACILITIES ENGINEERING SYSTEMS COMMAND ATLANTIC
NORFOLK, VA
ATLANTIC DESIGN AND CONSTRUCTION
JACKSONVILLE, NC
MCB CAMP LEJEUNE
P1527 LOGCOM CSP WAREHOUSE

INTERIOR FF&E - DESK & ARTWORK DETAILS AND BREAK ROOM EQUIPMENT ELEVATIONS

SCALE:	AS NOTED
EPROJECT NO.:	1639600
CONSTR. CONTR. NO.	N40085-20-C-0059
NAVFAC DRAWING NO.	14111241
SHEET	227 OF 447

IF501

DRAWFORM REVISION: 25 AUGUST 2020

P1527 FINAL SUBMISSION - 11/18/2021

PLOTTED: 11/12/2021 7:00:43 AM

FILE NAME: BIM 360://NF PACKAGE 3/P1527 LOG COM CSP-1639600-A.rvt

FIRE ALARM LEGEND

SYMBOL	DESCRIPTION
FMCP	FIRE ALARM/ MASS NOTIFICATION PANEL
FAAP	FIRE ALARM ANNUNCIATOR PANEL
DACT	DIGITAL ALARM COMMUNICATOR PANEL
TRX	GFGI TRX-401 MNS TRANSCEIVER; PROVIDED BY GOVT
NAC	NOTIFICATION APPLIANCE CIRCUIT PANEL
DOC	DOCUMENT CABINET
LOC	LOCAL OPERATOR CONTROL
SPD	SURGE PROTECTION DEVICE
CM	CONTROL MODULE
MM	MONITOR MODULE
F	MANUAL PULL STATION
P	SMOKE DETECTOR / PHOTOELECTRIC
ID	SMOKE DETECTOR / IN DUCT
CO	CARBON MONOXIDE SENSOR
C, CD	COMBINATION SPEAKER / VISUAL NOTIFICATION APPLIANCE CD INDICATES CANDELA RATING C INDICATES CEILING
C, W, S, WP	SPEAKER ONLY APPLIANCE W INDICATES WALL MOUNTED C INDICATES CEILING MOUNTED WP INDICATES WEATHER RESISTANT
C, F, CD	VISUAL ONLY NOTIFICATION APPLIANCE C INDICATES CEILING CD INDICATES CANDELA RATING
F S	FLOW SWITCH
T S	TAMPER SWITCH
P S	PRESSURE SWITCH

FIRE ALARM AND MASS NOTIFICATION GENERAL NOTES

1. PROVIDE A COMPLETE, ADDRESSABLE, FIRE ALARM AND MASS NOTIFICATION SYSTEM IN THE FACILITY. FIRE ALARM AND MASS NOTIFICATION SYSTEM MUST BE DESIGNED AND INSTALLED TO MEET THE REQUIREMENTS OF UFC 3-600-01, UFC 4-021-01, NFPA 70, NFPA 72, AND NFPA 101. SYSTEM SHALL BE SIMPLEX, NOTIFIER, OR FIRE-LITE.
2. IT IS THE INTENT OF THESE DOCUMENTS TO PROVIDE DESIGN, MATERIALS, AND EQUIPMENT FOR A FULLY FUNCTIONAL COMBINATION FIRE ALARM AND MASS NOTIFICATION SYSTEMS, INCLUDING THE PROPER INTERFACE AND COORDINATION WITH OTHER BUILDING SYSTEMS.
3. THE GENERAL CHARACTER AND SCOPE OF THE WORK IS ILLUSTRATED IN THE SPECIFICATIONS AND THE DRAWINGS. THE SPECIFICATIONS AND DRAWINGS ARE DIVIDED INTO SEVERAL SECTIONS FOR CONVENIENCE ONLY AND THE CONTRACT DOCUMENTS MUST BE CONSIDERED AS A WHOLE. THE CONTRACTOR MUST BE RESPONSIBLE FOR THE COORDINATION OF ALL TRADES, SUBCONTRACTORS, AND VENDORS ENGAGED IN THIS WORK.
4. THESE DRAWINGS DEPICT GENERAL LOCATIONS OF FIRE ALARM AND MASS NOTIFICATION SYSTEM EQUIPMENT AND FIELD DEVICES. FINAL LOCATIONS, QUANTITIES, APPLIANCE RATINGS, ETC. MUST BE PROVIDED BY THE INSTALLING CONTRACTOR IN ACCORDANCE WITH THE APPLICABLE CODES, STANDARDS, AND CONTRACT DOCUMENTS.
5. THE CONTRACTOR MUST OBTAIN REQUIRED PERMITS AND APPROVALS AS REQUIRED BY THE AUTHORITY HAVING JURISDICTION. THE CONTRACTOR MUST PAY FOR AND SECURE PERMITS AND FEES FOR FIRE PROTECTION SYSTEMS WORK.
6. PROVIDE FINAL SYSTEM LAYOUT DRAWINGS INCLUDING BATTERY CALCULATIONS AND VOLTAGE DROP CALCULATIONS AND OBTAIN APPROVAL OF THE FIRE MARSHAL AND ALL AUTHORITIES HAVING JURISDICTION. BATTERY CALCULATIONS MUST INCLUDE 20 PERCENT SAFETY MARGIN IN ADDITION TO THE CALCULATED AMP-HOUR RATING PER NFPA 72. A BILL OF MATERIAL AND A TABLE SHOWING THE ADDRESS, TYPE AND DESCRIPTION OF EACH ADDRESSABLE DEVICE MUST BE INCLUDED IN THE SHOP DRAWINGS AND AS-BUILT DRAWINGS.
7. PROVIDE FIRE ALARM AND MASS NOTIFICATION SPEAKERS AND STROBES THROUGHOUT ALL AREAS. PROVIDE ADDITIONAL NOTIFICATION APPLIANCE CIRCUIT (NAC) PANELS AS REQUIRED. EACH NAC LOADING MUST NOT EXCEED 75% OF ITS RATED OUTPUT.
8. PROVIDE DUCT SMOKE DETECTORS IN ALL SUPPLY DUCTS OF AIR HANDLING UNITS GREATER THAN 2,000 CFM . PROVIDE RELAYS FOR SHUT DOWN OF ASSOCIATED AIR HANDLING UNITS.
9. PROVIDE MONITOR MODULES, TAMPER AND FLOW SWITCHES FOR THE SPRINKLER RISER AND CONTROL VALVES.
10. WIRING FOR DEVICES MUST BE CLASS AS PROVIDE ALL FIRE ALARM CIRCUITS IN ELECTRICAL METALLIC TUBING (EMT) OR INTERMEDIATE METAL CONDUIT (IMC).
11. ALL RACEWAYS MUST BE FACTORY PAINTED RED. FLEXIBLE METALLIC OCNDUIT (FMC) SHALL NOT EXCEED 6 FEET AND MUST ONLY BE PERMITTED FOR CONNECTIONS TO JUNCTION BOXES TO FIELD DEVICES. PROVIDE A RACEWAY LISTED FOR THE INSTALLATION IN WET LOCATIONS, SUCH AS RIGID METALLIC CONDUIT (RMC) AND LIQUID TIGHT FLEXIBLE METAL CONDUIT (LFMC). WET LOCATIONS ARE CONSIDERED ANY LOCATION WITHIN A 5 FOOT RADIUS OF FIRE SUPPRESSION EQUIPMENT AS DEFINED BY NFPA 70.
12. DEVICES MUST BE FACTORY FINISHED WHITE.
13. PROVIDE RECHARGEABLE SEALED LEAD ACID TYPE BATTERIES TO OPERATE THE FIRE ALARM SYSTEM UNDER SUPERVISORY CONDITIONS FOR 48 HOURS AND AUDIBLE AND ALARM DEVICES FOR AN ADDITIONAL 15 MINUTES OR 60 MINUTES FOR THE MASS NOTIFICATION SYSTEM IMMEDIATELY UPON LOSS OF POWER, WHICHEVER IS GREATER.
14. INSTALLING CONTRACTOR MUST COORDINATE WITH MECHANICAL, ELECTRICAL AND OTHER TRADES TO FACILITATE INSTALLATION THAT IS COORDINATED AND CONSISTENT WITH BUILDING DESIGN, USE AND INTENT.
15. COORDINATE FINAL SYSTEM TESTING WITH OTHER CONTRACTORS TO PROVIDE FULL SYSTEM OPERATION AT TIME OF TESTING.
16. THE FIRE PROTECTION CONTRACTOR MUST BE RESPONSIBLE FOR SCHEDULING AND PERFORMING INSPECTIONS AND TESTS AS REQUIRED BY THE CONTRACTING OFFICER.
17. FLOOR AND WALL CONDUIT PENETRATIONS MUST BE SLEEVED AND SEALED AS REQUIRED.
18. PENETRATIONS OF THE BUILDING AIR BARRIER MUST BE SEALED TO MAINTAIN THE INTEGRITY OF THE AIR BARRIER.
19. CONDUIT SIZE AND PERCENTAGE OF FILL TO BE DETERMINED BY INSTALLING CONTRACTOR AND MUST COMPLY WITH APPLICABLE STANDARDS AND SYSTEM MANUFACTURER'S REQUIREMENTS.
20. CONDUIT AND WIRING MUST BE CONCEALED ABOVE CEILINGS IN FINISHED AREAS AND AREAS WITH DROPPED CEILINGS. CONDUIT AND WIRING INSTALLED ABOVE CEILINGS MUST NOT INTERFERE WITH THE REMOVAL OF THE CEILING TILES, AND HVAC UNIT AIR FILTERS. IN AREAS WITHOUT CEILING, CONDUIT AND WIRING MUST BE INSTALLED AS TIGHT AS POSSIBLE TO UNDERSIDE OF FLOOR SLAB, UNLESS OBSTRUCTIONS REQUIRE OTHERWISE.
20. FIRE ALARM WIRING MUST NOT BE INSTALLED IN THE SAME CONDUITS OR JUNCTION BOXES AS LIGHTING, POWER OR OTHER WIRING.
21. RUN WIRING TO CONTROL PANELS IN THE VERTICAL OR HORIZONTAL PLANE, MAKE TURNS AT 90 DEGREE ANGLES, AND TIGHTLY BUNDLE, WRAP, AND IDENTIFY CONDUCTORS INDIVIDUALLY WITH PERMANENT MARKINGS.
22. PULL CONDUCTORS SPLICE FREE. THE USE OF WIRE NUTS, CRIMPED CONNECTORS, OR TWISTING OF CONDUCTORS IS PROHIBITED.
23. TERMINATIONS MUST BE AT A TERMINAL STRIP. DEVICES MUST HAVE SCREW TERMINALS.
24. SIGNALING LINE AND INITIATING DEVICE CIRCUITS MUST BE MINIMUM 16 GAUGE WIRE.
25. WALL ADDRESSABLE CONTROL MODULES AND ADDRESSABLE MONITOR MODULES MUST BE LOCATED WITHIN 10 FEET OF THE DEVICES BEING MONITORED. DUCT SMOKE DETECTORS MUST BE WITHIN 3 FEET OF ADDRESSABLE RELAY.
26. CONTRACTOR MUST PROVIDE ADEQUATE AUDIBLE NOTIFICATION DEVICES TO MEET THE AUDIBILITY AND INTELLIGIBILITY REQUIREMENTS OF NFPA 72 AND UFC 4-021-01. THE MINIMUM REQUIRED COMMON INTELLIGIBILITY SCALE IS 0.7.
27. PROVIDE HORN SPEAKERS MOUNTED ON THE EXTERIOR OF THE BUILDING IN ADDITION TO PROVIDE NOTIFICATION OF ANY AREAS COMMONLY USED BY BUILDING OCCUPANTS. AREAS INCLUDE COURTYARDS, COVERED BREAK AREAS, DESIGNATED SMOKING AREAS, AND SIDEWALKS LEADING FROM THE BUILDING'S EXIT DOORS TO A PUBLIC STREET OR FROM PARKING AREAS FOR A DISTANCE UP TO 16 FEET FROM THE BUILDING.
28. PROVIDE VISIBLE NOTIFICATION APPLIANCES IN COMMON AND PUBLIC SPACES AS REQUIRED BY THE APPLICABLE CODES TO MEET VISIBLE SIGNALING INTENSITY REQUIREMENTS.
29. PROVIDE CLEAR STROBE MARKED "ALERT" FOR FIRE ALARM AND MASS NOTIFICATION SYSTEM.
30. COORDINATE DUCT SMOKE DETECTION WITH MECHANICAL DESIGN CONTRACTOR. DUCT SMOKE DETECTOR REMOTE LAMPS AND TEST STATION MUST BE WALL MOUNTED, ACCESSIBLE, VISIBLE, AND PERMANENTLY LABELED. THE DUCT DETECTORS MUST RECEIVE THEIR POWER AND RESET FROM THE FIRE ALARM CONTROL UNIT.
31. PROVIDE REMOTE TEST LAMPS FOR ANY INACCESSIBLE DEVICES.
32. PROVIDE SURGE PROTECTION FOR CIRCUITS THAT ENTER OR EXIT A BUILDING.
33. PROVIDE WEATHERPROOF DEVICES AS REQUIRED AND AS INDICATED.
34. DEVICES MOUNTED IN SUSPENDED CEILING MUST BE MOUNTED IN THE CENTER OF THE CEILING TILE.
35. PROVIDE A DOCUMENTATION CABINET ADJACENT TO FIRE ALARM CONTROL PANEL. CABINET MUST BE STEEL WITH LOCKING, HINGE MOUNTED DOOR PROMINENTLY LABELED "SYSTEM RECORD DOCUMENTS". CABINET MUST STORE LIFE SAFETY, FIRE ALARM, AND SPRINKLER AS-BUILT DRAWINGS AND NFPA 72 RECORD OF COMPLETION IN PAPER FORMAT. CD/DVD OF SITE-SPECIFIC SOFTWARE, FIRE ALARM AND SPRINKLER AS-BUILT DRAWINGS, NFPA 72 RECORD OF COMPLETION, AND OPERATIONS AND MAINTENANCE MANUALS MUST BE STORED IN A CD JEWEL CASE.
36. PROVIDE A PARTS BOX ADJACENT TO THE FMCP. CABINET MUST BE STEEL, LOCKING, WITH HINGE-MOUNTED DOOR, KEYED THE SAME AS THE FMCP. CABINET MUST INCLUDE SPARE PARTS AS DEFINED IN THE PROJECT SPECIFICATIONS, PLUS FOUR (4) FUSES FOR EACH FUSED CONDUIT.
37. DUAL-ACTION, MANUAL FIRE PULL STATIONS MUST BE PROVIDED WITHIN 5 FEET OF EVERY EXIT OF THE BUILDING. MANUAL PULL STATIONS MUST BE RESET WITH THE USE OF A KEY ONLY. USE OF A WRENCH, HEX KEY, ALLEN KEY, OR ALLEN WRENCH TO OPEN A MANUAL PULL STATION MUST NOT BE PERMITTED.
38. WATER FLOW ALARM AND VALVE TAMPER SWITCHES ATTACHED TO THE BUILDING WET-PIPE SPRINKLER SYSTEM TO PROVIDE REQUIRED SUPERVISION MUST BE CONNECTED TO THE FIRE ALARM SYSTEM.
39. INSTALL A POINT REPORTING DIGITAL ALARM COMMUNICATOR TRANSMITTER THAT IS COMPATIBLE WITH THE SUR-GARD SYSTEM III MULTI-PLATFORM DIGITAL TELEPHONE RECEIVER AND IS PROGRAMMED TO REPORT BY POINTS VIA CONTACT ID PROTOCOL. PROVIDE TWO (2) CAT 6 UTP CABLES INSIDE 1-INCH CONDUIT FROM THE FMCP TO THE TELEPHONE EQUIPMENT ROOM.
40. THE GOVERNMENT WILL INSTALL THE TRX-401 MASS NOTIFICATION TRANSCEIVER. THE CONTRACTOR MUST PROVIDE CONDUIT FOR MOUNTING THE MASS NOTIFICATION ANTENNA, CONDUIT FOR THE MASS NOTIFICATION ANTENNA CABLE, CONDUIT TO CONNECT THE TRANSCEIVER TO THE FIRE ALARM CONTROL PANEL, AND 120V POWER FOR THE TRANSCEIVER.
41. PROVIDE AND ATTACH A LEGIBLE, TYPED LABEL ON ALL ADDRESSABLE DEVICES TO INDICATE ITS ADDRESS. FOR ANY DEVICE LOCATED ABOVE A FALSE CEILING, CONTRACTOR MUST PROVIDE A LEGIBLE, TYPED LABEL ATTACHED TO THE CEILING GRID THE DEVICE NOMENCLATURE AND ADDRESS.

APPR | DATE | DESCRIPTION | SYM

NAVFAC

COLORADO LICENSED JASON MILLER 55216 PROFESSIONAL ENGINEER
SEAL

IRQ Jordan COMPANY – A JOINT VENTURE –

Michael Baker INTERNATIONAL
100 AIRSIDE DRIVE MOON TOWNSHIP, PA 15108 A/E INFO

APPROVED
FOR COMMANDER NAVFAC

ACTIVITY
MARINE CORPS BASE CAMP LEJEUNE

SATISFACTORY TO DATE DD/MM/YY
DES JAM | DRW ADH | CHK ALS
PM / DM TOWLER / ROOT
BRANCH HEAD
DESIGN DIRECTOR R.L.Stephens, Jr.
FIRE PROTECTION DPS

DEPARTMENT OF THE NAVY
NAVAL FACILITIES ENGINEERING SYSTEMS COMMAND
ATLANTIC DESIGN AND CONSTRUCTION
NAVAL FACILITIES ENGINEERING SYSTEMS COMMAND ATLANTIC NORFOLK, VA
MCB CAMP LEJEUNE
JACKSONVILLE, NC
P1527 LOGCOM CSP WAREHOUSE

FIRE ALARM - GENERAL NOTES, ABBREVIATIONS, & SYMBOLS

SCALE: AS NOTED
EPROJECT NO.: 1639600
CONSTR. CONTR. NO. N40085-20-C-0059
NAVFAC DRAWING NO. 14111245
SHEET 228 OF 447

FA001

DRAWFORM REVISION: 25 AUGUST 2020

P1527 FINAL SUBMISSION - 11/18/2021

PLOTTED: 11/15/2021 7:28:34 AM

FILE NAME: BIM 360://HF PACKAGE 3/P1527 LOG COM CSP-1639600-F.rvt

GENERAL NOTES

1. REFER TO SHEET FA001 FOR GENERAL NOTES AND SYMBOLS.

		A	B	C	D	E	F	G	H	I	J	K	L	M	N
		ANNUNCIATE ALARM SIGNAL AT CONTROL PANEL	ANNUNCIATE TROUBLE SIGNAL AT CONTROL PANEL	ANNUNCIATE SUPERVISORY SIGNAL AT CONTROL PANEL	ACTIVATE FIRE ALARM/MASS NOTIFICATION VISUAL AND AUDIBLE APPLIANCES	SEND ALARM SIGNAL TO SUPERVISING STATION	SEND TROUBLE SIGNAL TO SUPERVISING STATION	SEND SUPERVISORY SIGNAL TO SUPERVISING STATION	SHUTDOWN ASSOCIATED AIR HANDLING UNITS	ACTIVATE WATERFLOW ALARM ELECTRIC BELL	DEACTIVATE FIRE ALARM AUDIBLE SIGNALS	RETURN LIGHTING TO NORMAL LEVELS	SEND SIGNAL TO BASEWIDE MASS NOTIFICATION SYSTEM	SILENCE PA SYSTEM	INITIATE UNIQUE CARBON MONOXIDE MASS NOTIFICATION MESSAGE
ACTIVATION OF A MANUAL FIRE ALARM PULL STATION	1	X			X	X						X		X	
ACTIVATION OF AREA SMOKE DETECTOR	2	X			X	X						X		X	
ACTIVATION OF WATERFLOW OR PRESSURE SWITCH	3	X			X	X				X		X		X	
FIRE PUMP RUN	4	X				X									
ACTIVATION OF A CARBON MONOXIDE DETECTOR	5	X			X	X						X		X	X
COMMON TROUBLE	6		X				X								
FIELD WIRING OR SYSTEM COMPONENT FAULT	7		X				X								
LOSS OF PRIMARY AC POWER	8		X				X								
OPEN CIRCUIT	9		X				X								
NAC SHORT	10		X				X								
LOW BATTERY	11		X				X								
CIRCUIT DISCONNECT	12		X				X								
GROUND FAULT	13		X				X								
ACTIVATION OF DUCT SMOKE DETECTOR	14			X				X	X						
FIRE PUMP LOSS OF PHASE/POWER	15			X				X							
FIRE PUMP PHASE REVERSAL	16			X				X							
COMMON SUPERVISORY	17			X				X							
TAMPER SWITCH	18			X				X							
DRY SYSTEM LOW AIR	19			X				X							
ACTIVATION OF MASS NOTIFICATION SYSTEM	20			X	X			X				X	X	X	
LOCAL MICROPHONE MNS OPERATION	21			X	X			X			X		X	X	
LOC ACTIVATION OR PRE-RECORDED MNS MESSAGES	22			X	X			X			X		X	X	
SIGNAL FROM WIDE AREA MASS NOTIFICATION SYSTEM	23			X	X			X			X			X	

SEQUENCE OF OPERATIONS

APPR		
DATE		
DESCRIPTION		
SYM		

NAVFAC

COLORADO LICENSED
JASON MILLER
55216
PROFESSIONAL ENGINEER
SEAL

WNM Jordan COMPANY – A JOINT VENTURE –

Michael Baker INTERNATIONAL
100 AIRSIDE DRIVE
MOON TOWNSHIP, PA 15108
A/E INFO

APPROVED

FOR COMMANDER NAVFAC

ACTIVITY
MARINE CORPS BASE
CAMP LEJEUNE

SATISFACTORY TO DATE DD/MM/YY

DES JAM | DRW ADH | CHK ALS

PM / DM TOWLER / ROOT

BRANCH HEAD

DESIGN DIRECTOR R.L.Stephens, Jr.

FIRE PROTECTION DPS

DEPARTMENT OF THE NAVY
NAVAL FACILITIES ENGINEERING SYSTEMS COMMAND
ATLANTIC DESIGN AND CONSTRUCTION
MCB CAMP LEJEUNE

NAVAL FACILITIES ENGINEERING SYSTEMS COMMAND ATLANTIC
NORFOLK, VA

JACKSONVILLE, NC
P1527 LOGCOM CSP WAREHOUSE

FIRE ALARM - SEQUENCE OF OPERATIONS

SCALE: AS NOTED

EPROJECT NO.: 1639600

CONSTR. CONTR. NO.
N40085-20-C-0059

NAVFAC DRAWING NO.
14111246

SHEET 229 OF 447

FA002

DRAWFORM REVISION: 25 AUGUST 2020

P1527 FINAL SUBMISSION - 11/18/2021

PLOTTED: 11/15/2021 7:28:35 AM

FILE NAME: BIM 360://HF PACKAGE 3/P1527 LOG COM CSP-1639600-F.rvt

UNCLASSIFIED

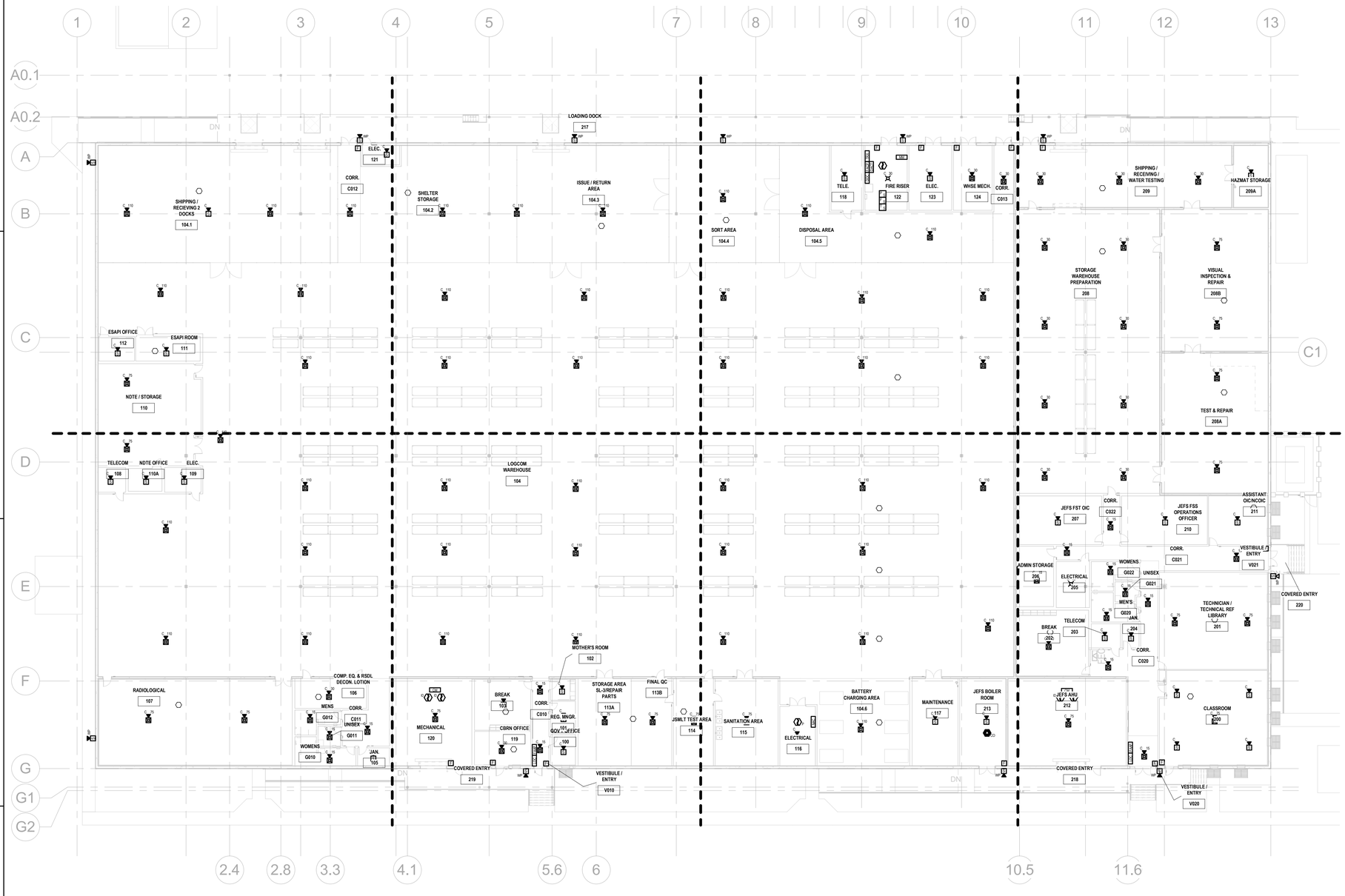

A1 FIRE ALARM - OVERALL - 1ST FLOOR PLAN

SCALE: 3/64" = 1'-0"

KEYPLAN

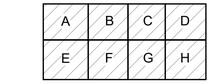

0 16' - 0" 32' - 0" 64' - 0"

SCALE: 3/64" = 1'-0"

N

APPR | DATE | DESCRIPTION | SYM

NAVFAC

COLORADO LICENSED
JASON MILLER
55216
PROFESSIONAL ENGINEER
SEAL

IRQ W.M. Jordan COMPANY – A JOINT VENTURE –

Michael Baker INTERNATIONAL
100 AIRSIDE DRIVE
MOON TOWNSHIP, PA 15108
A/E INFO

APPROVED

FOR COMMANDER NAVFAC

ACTIVITY
MARINE CORPS BASE
CAMP LEJEUNE

SATISFACTORY TO DATE DD/MM/YY

DES JAM | DRW ADH | CHK ALS

PM / DM TOWLER / ROOT

BRANCH HEAD

DESIGN DIRECTOR R.L.Stephens, Jr.

FIRE PROTECTION DPS

DEPARTMENT OF THE NAVY
NAVAL FACILITIES ENGINEERING SYSTEMS COMMAND
ATLANTIC DESIGN AND CONSTRUCTION
MCB CAMP LEJEUNE

NAVAL FACILITIES ENGINEERING SYSTEMS COMMAND ATLANTIC
NORFOLK, VA
JACKSONVILLE, NC
P1527 LOGCOM CSP WAREHOUSE

FIRE ALARM - OVERALL - 1ST FLOOR PLAN

SCALE: AS NOTED

EPROJECT NO.: 1639600

CONSTR. CONTR. NO. N40085-20-C-0059

NAVFAC DRAWING NO. 14111247

SHEET 230 OF 447

FA110

DRAWFORM REVISION: 25 AUGUST 2020

P1527 FINAL SUBMISSION - 11/18/2021

PLOTTED: 11/15/2021 7:28:37 AM

FILE NAME: BIM 360://HF PACKAGE 3/P1527 LOG COM CSP-1639600-F.rvt

UNCLASSIFIED

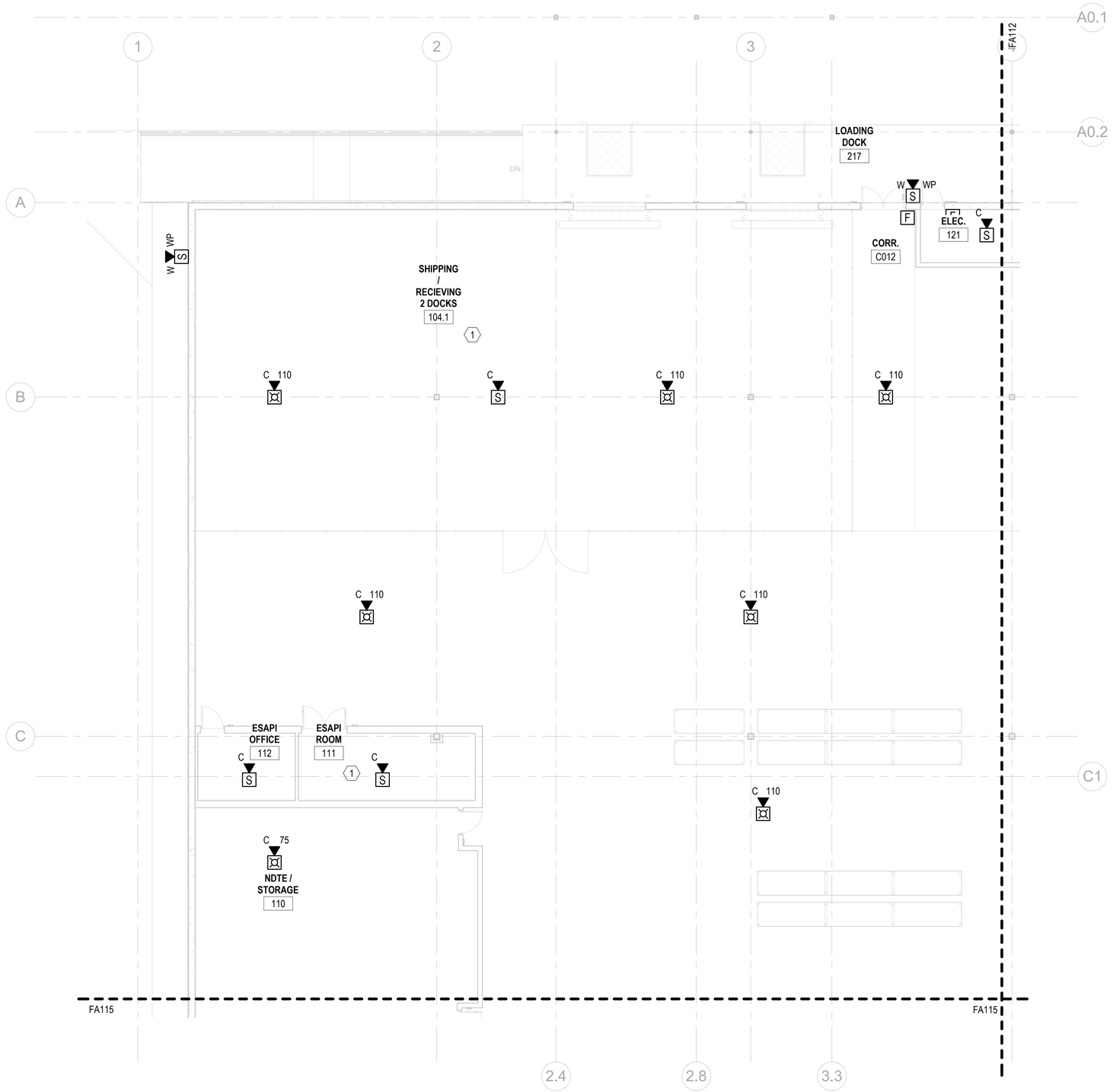

A1 FIRE ALARM - 1ST FLOOR PLAN - AREA A
SCALE: 1/8" = 1'-0"

GENERAL NOTES

1. REFER TO SHEET FA001 FOR GENERAL NOTES AND SYMBOLS.

KEYNOTES

1 PROVIDE AUXILIARY INPUT/ OUTPUT INTERFACE TO ALLOW INPUT FROM FIRE ALARM PANEL TO OVERRIDE LIGHTING CONTROLS. PROGRAM STANDALONE DEVICE SO THAT CONTROLLED LIGHTING ALONG THE PATH OF EGRESS COMES TO FULL BRIGHTNESS UPON FIRE ALARM ACTIVATION. SEE DETAIL B3 ON SHEET E-503 FOR MORE INFORMATION.

KEYPLAN

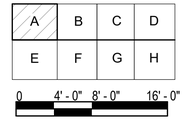

SCALE: 1/8" = 1' - 0"

N

APPR	DATE	DESCRIPTION	SYM

NAVFAC

COLORADO LICENSED JASON MILLER 55216 PROFESSIONAL ENGINEER
SEAL

IRQ W.M. Jordan COMPANY – A JOINT VENTURE –

Michael Baker INTERNATIONAL
100 AIRSIDE DRIVE
MOON TOWNSHIP, PA 15108 A/E INFO

APPROVED
FOR COMMANDER NAVFAC

ACTIVITY
MARINE CORPS BASE CAMP LEJEUNE

SATISFACTORY TO DATE DD/MM/YY
DES JAM | DRW ADH | CHK ALS
PM / DM TOWLER / ROOT
BRANCH HEAD
DESIGN DIRECTOR R.L.Stephens, Jr.
FIRE PROTECTION DPS

DEPARTMENT OF THE NAVY
NAVAL FACILITIES ENGINEERING SYSTEMS COMMAND
ATLANTIC DESIGN AND CONSTRUCTION
NAVAL FACILITIES ENGINEERING SYSTEMS COMMAND ATLANTIC
NORFOLK, VA
MCB CAMP LEJEUNE
JACKSONVILLE, NC
P1527 LOGCOM CSP WAREHOUSE
FIRE ALARM - 1ST FLOOR PLAN - AREA A

SCALE: AS NOTED
EPROJECT NO.: 1639600
CONSTR. CONTR. NO. N40085-20-C-0059
NAVFAC DRAWING NO. 14111248
SHEET 231 OF 447

FA111

DRAWFORM REVISION: 25 AUGUST 2020

P1527 FINAL SUBMISSION - 11/18/2021

PLOTTED: 11/15/2021 7:28:38 AM
FILE NAME: BIM 360://HF PACKAGE 3/P1527 LOG COM CSP-1639600-F.rvt

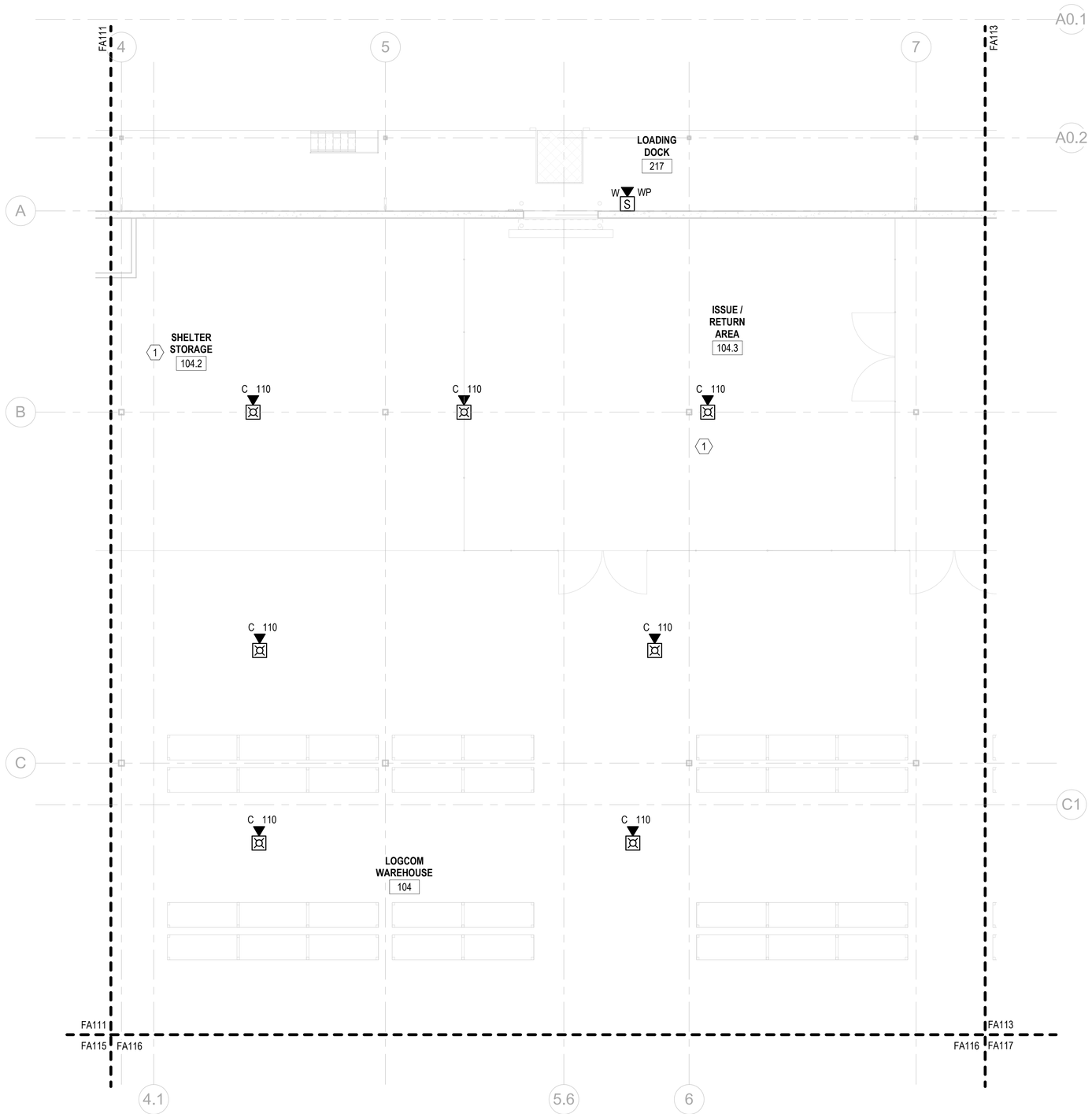

A1 FIRE ALARM - 1ST FLOOR PLAN - AREA B
SCALE: 1/8" = 1'-0"

GENERAL NOTES

1. REFER TO SHEET FA001 FOR GENERAL NOTES AND SYMBOLS.

KEYNOTES

1 PROVIDE AUXILIARY INPUT/ OUTPUT INTERFACE TO ALLOW INPUT FROM FIRE ALARM PANEL TO OVERRIDE LIGHTING CONTROLS. PROGRAM STANDALONE DEVICE SO THAT CONTROLLED LIGHTING ALONG THE PATH OF EGRESS COMES TO FULL BRIGHTNESS UPON FIRE ALARM ACTIVATION. SEE DETAIL B3 ON SHEET E-503 FOR MORE INFORMATION.

KEYPLAN

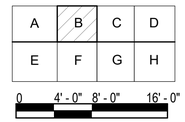

SCALE: 1/8" = 1' - 0"

N

SYM	DESCRIPTION	DATE	APPR

NAVFAC

COLORADO LICENSED
JASON MILLER
55216
PROFESSIONAL ENGINEER
SEAL

RQ W.M. Jordan COMPANY
- A JOINT VENTURE -

Michael Baker
INTERNATIONAL
100 AIRSIDE DRIVE
MOON TOWNSHIP, PA 15108
A/E INFO

APPROVED

FOR COMMANDER NAVFAC

ACTIVITY
MARINE CORPS BASE
CAMP LEJEUNE

SATISFACTORY TO DATE DD/MM/YY

DES JAM | DRW ADH | CHK ALS

PM / DM TOWLER / ROOT

BRANCH HEAD

DESIGN DIRECTOR R.L.Stephens, Jr.

FIRE PROTECTION DPS

DEPARTMENT OF THE NAVY
NAVAL FACILITIES ENGINEERING SYSTEMS COMMAND
NAVAL FACILITIES ENGINEERING SYSTEMS COMMAND ATLANTIC
ATLANTIC DESIGN AND CONSTRUCTION
NORFOLK, VA
MCB CAMP LEJEUNE
JACKSONVILLE, NC
P1527 LOGCOM CSP WAREHOUSE

FIRE ALARM - 1ST FLOOR PLAN - AREA B

SCALE: AS NOTED
EPROJECT NO.: 1639600
CONSTR. CONTR. NO. N40085-20-C-0059
NAVFAC DRAWING NO. 14111249
SHEET 232 OF 447

FA112

DRAWFORM REVISION 25 AUGUST 2020

P1527 FINAL SUBMISSION - 11/18/2021

PLOTTED: 11/15/2021 7:28:39 AM

FILE NAME: BIM 360://HF PACKAGE 3/P1527 LOG COM CSP-1639600-F.rvt

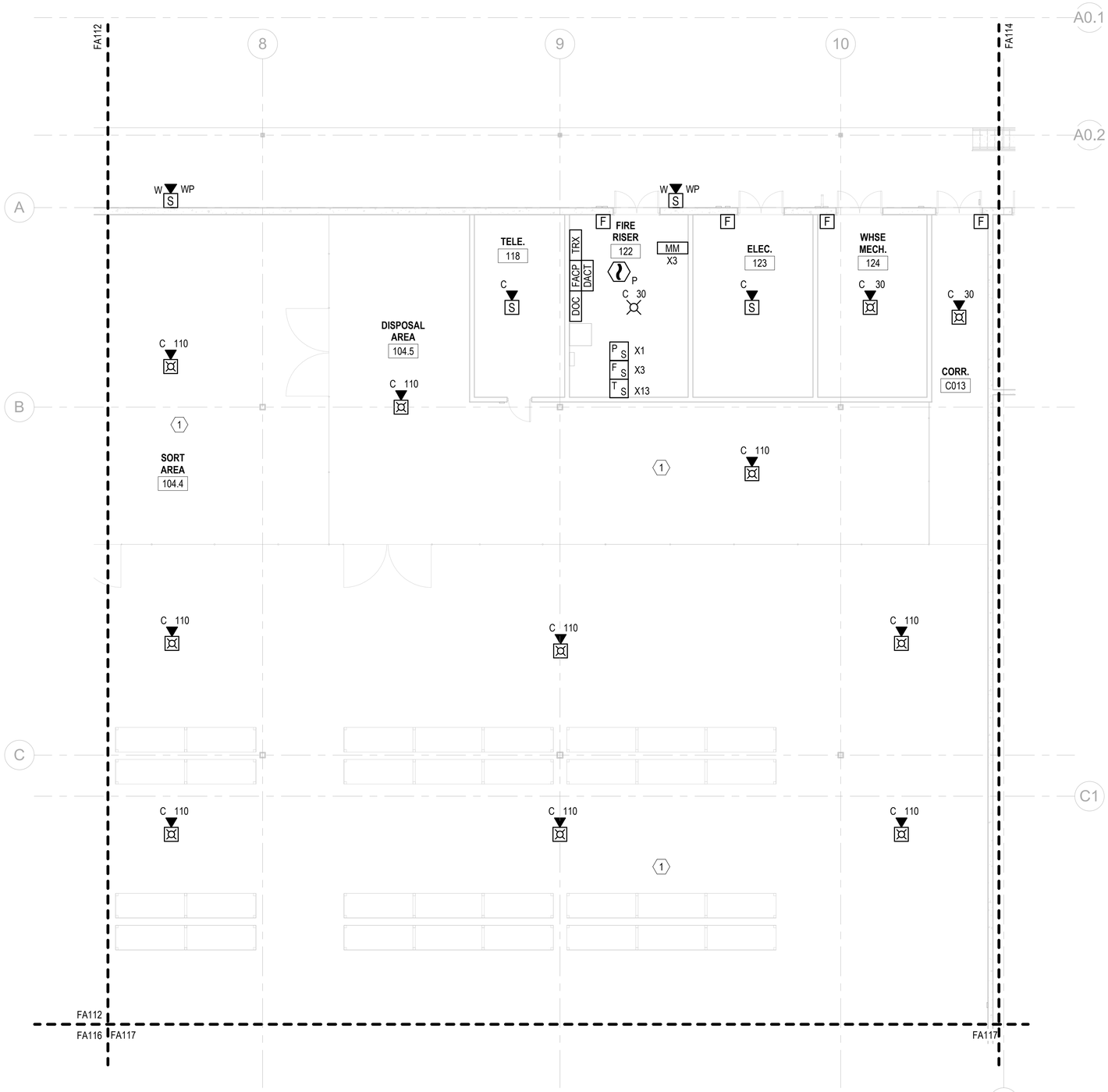

A1 FIRE ALARM - 1ST FLOOR PLAN - AREA C
SCALE: 1/8" = 1'-0"

GENERAL NOTES

1. REFER TO SHEET FA001 FOR GENERAL NOTES AND SYMBOLS.

KEYNOTES

1 PROVIDE AUXILIARY INPUT/ OUTPUT INTERFACE TO ALLOW INPUT FROM FIRE ALARM PANEL TO OVERRIDE LIGHTING CONTROLS. PROGRAM STANDALONE DEVICE SO THAT CONTROLLED LIGHTING ALONG THE PATH OF EGRESS COMES TO FULL BRIGHTNESS UPON FIRE ALARM ACTIVATION. SEE DETAIL B3 ON SHEET E-503 FOR MORE INFORMATION.

KEYPLAN

A	B	C	D
E	F	G	H

0 4' - 0" 8' - 0" 16' - 0"
SCALE: 1/8" = 1' - 0"

N

SYM	DESCRIPTION	DATE	APPR

COLORADO LICENSED
JASON MILLER
55216
PROFESSIONAL ENGINEER
SEAL

IRQ WM Jordan COMPANY – A JOINT VENTURE –

Michael Baker INTERNATIONAL
100 AIRSIDE DRIVE
MOON TOWNSHIP, PA 15108 A/E INFO

APPROVED
FOR COMMANDER NAVFAC
ACTIVITY
MARINE CORPS BASE
CAMP LEJEUNE
SATISFACTORY TO DATE DD/MM/YY
DES JAM DRW ADH CHK ALS
PM / DM TOWLER / ROOT
BRANCH HEAD
DESIGN DIRECTOR R.L.Stephens, Jr.
FIRE PROTECTION DPS

DEPARTMENT OF THE NAVY
NAVAL FACILITIES ENGINEERING SYSTEMS COMMAND
ATLANTIC DESIGN AND CONSTRUCTION
MCB CAMP LEJEUNE

NAVAL FACILITIES ENGINEERING SYSTEMS COMMAND ATLANTIC
NORFOLK, VA
JACKSONVILLE, NC
P1527 LOGCOM CSP WAREHOUSE

FIRE ALARM - 1ST FLOOR PLAN - AREA C

SCALE: AS NOTED
EPROJECT NO.: 1639600
CONSTR. CONTR. NO. N40085-20-C-0059
NAVFAC DRAWING NO. 14111250
SHEET 233 OF 447

FA113

DRAWFORM REVISION: 25 AUGUST 2020

P1527 FINAL SUBMISSION - 11/18/2021

PLOTTED: 11/15/2021 7:28:40 AM
FILE NAME: BIM 360://HF PACKAGE 3/P1527 LOG COM CSP-1639600-F.rvt

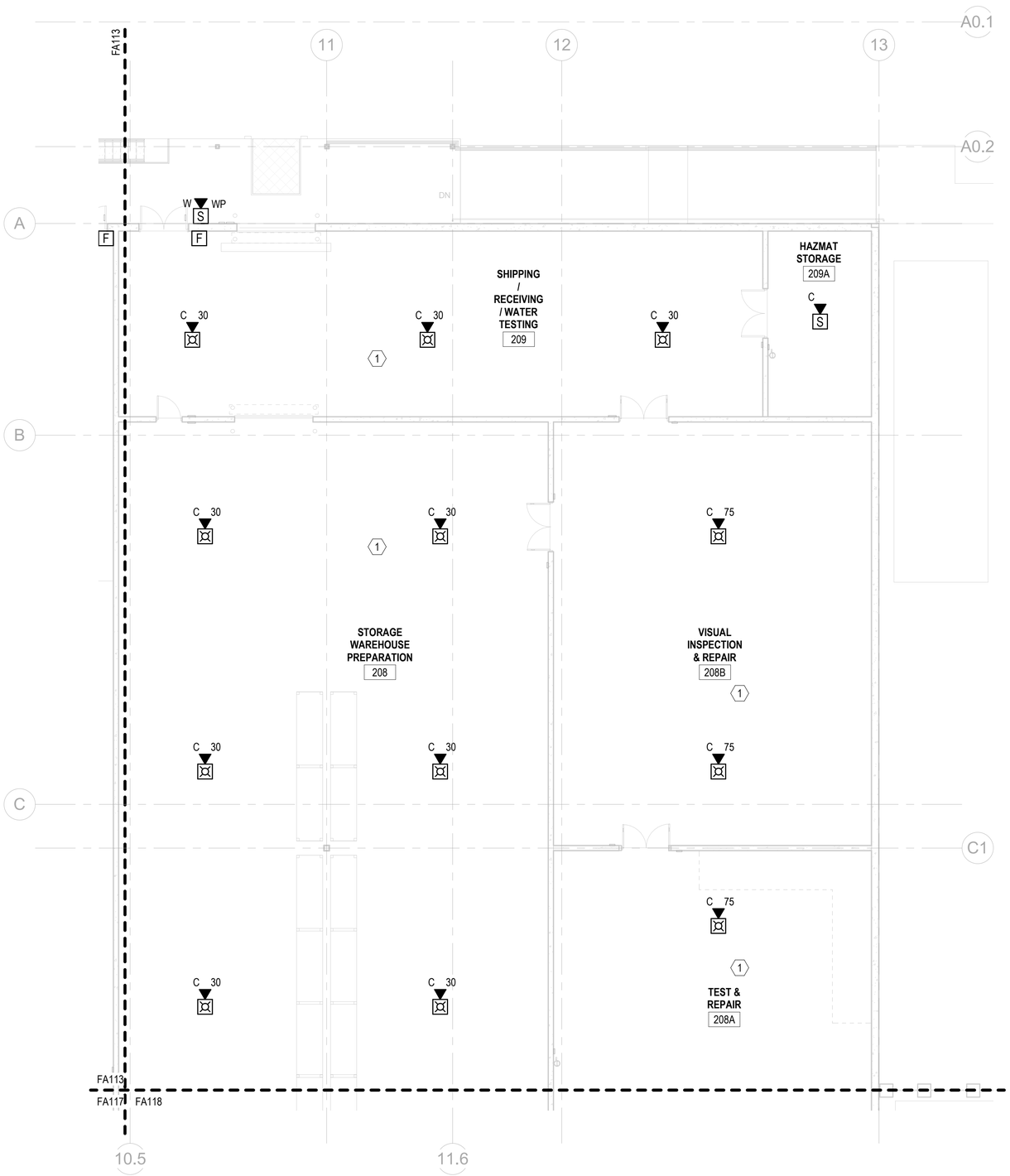

A1 FIRE ALARM - 1ST FLOOR PLAN - AREA D
SCALE: 1/8" = 1'-0"

GENERAL NOTES

1. REFER TO SHEET FA001 FOR GENERAL NOTES AND SYMBOLS.

KEYNOTES

1 PROVIDE AUXILIARY INPUT/ OUTPUT INTERFACE TO ALLOW INPUT FROM FIRE ALARM PANEL TO OVERRIDE LIGHTING CONTROLS. PROGRAM STANDALONE DEVICE SO THAT CONTROLLED LIGHTING ALONG THE PATH OF EGRESS COMES TO FULL BRIGHTNESS UPON FIRE ALARM ACTIVATION. SEE DETAIL B3 ON SHEET E-503 FOR MORE INFORMATION.

KEYPLAN

A	B	C	D
E	F	G	H

0 4' - 0" 8' - 0" 16' - 0"

SCALE: 1/8" = 1' - 0"

N

SYM	DESCRIPTION	DATE	APPR

NAVFAC

COLORADO LICENSED
JASON MILLER
55216
PROFESSIONAL ENGINEER
SEAL

IRQ WM Jordan COMPANY – A JOINT VENTURE –

Michael Baker INTERNATIONAL
100 AIRSIDE DRIVE
MOON TOWNSHIP, PA 15108
A/E INFO

APPROVED
FOR COMMANDER NAVFAC

ACTIVITY
MARINE CORPS BASE
CAMP LEJEUNE

SATISFACTORY TO DATE DD/MM/YY
DES JAM DRW ADH CHK ALS
PM / DM TOWLER / ROOT
BRANCH HEAD
DESIGN DIRECTOR R.L.Stephens, Jr.
FIRE PROTECTION DPS

DEPARTMENT OF THE NAVY
NAVAL FACILITIES ENGINEERING SYSTEMS COMMAND
ATLANTIC DESIGN AND CONSTRUCTION
MCB CAMP LEJEUNE

NAVAL FACILITIES ENGINEERING SYSTEMS COMMAND ATLANTIC
NORFOLK, VA
JACKSONVILLE, NC
P1527 LOGCOM CSP WAREHOUSE

FIRE ALARM - 1ST FLOOR PLAN - AREA D

SCALE: AS NOTED
EPROJECT NO.: 1639600
CONSTR. CONTR. NO. N40085-20-C-0059
NAVFAC DRAWING NO. 14111251
SHEET 234 OF 447

FA114

DRAWFORM REVISION: 25 AUGUST 2020

P1527 FINAL SUBMISSION - 11/18/2021

PLOTTED: 11/15/2021 7:28:41 AM

FILE NAME: BIM 360://HF PACKAGE 3/P1527 LOG COM CSP-1639600-F.rvt

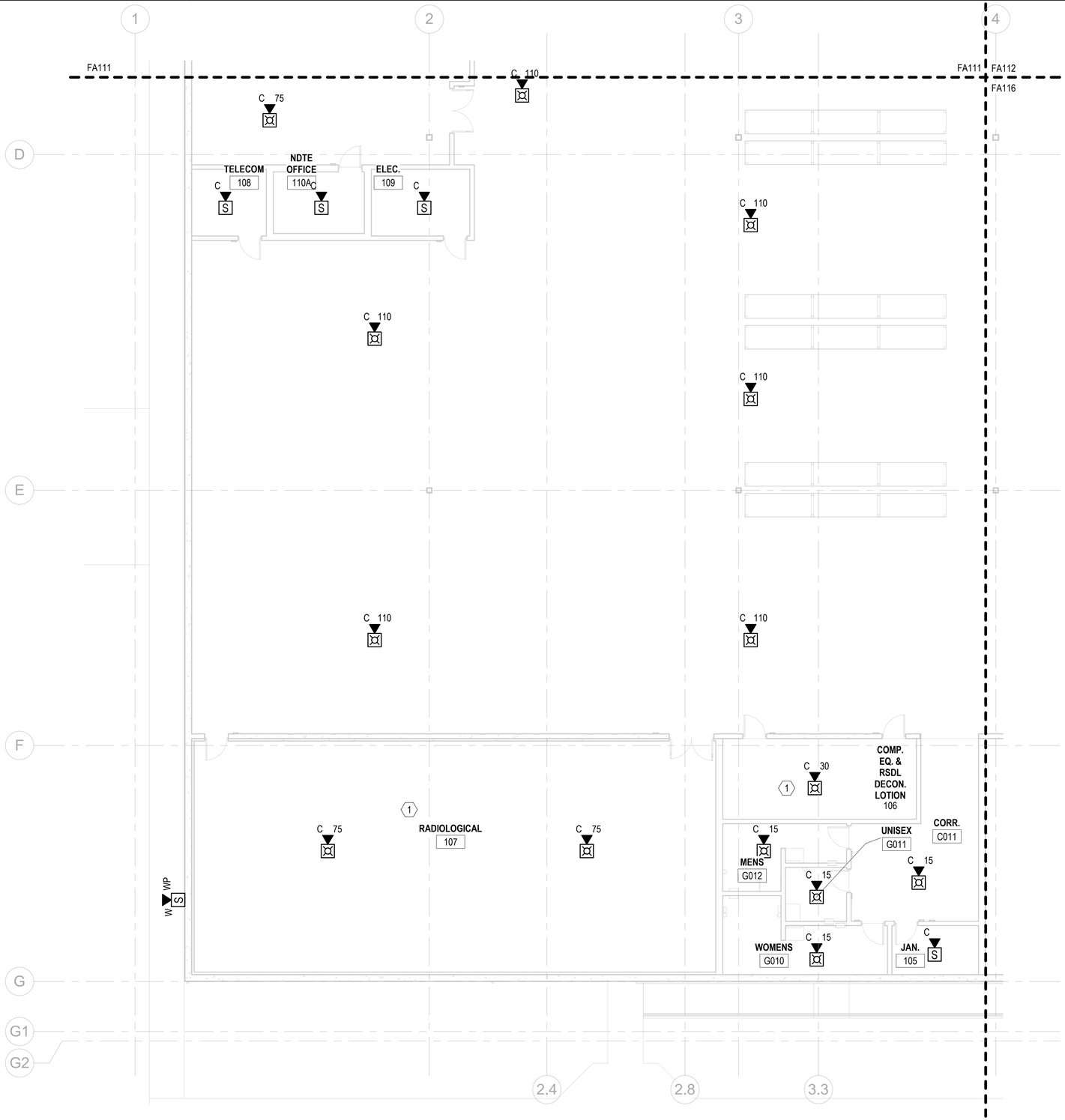

GENERAL NOTES

1. REFER TO SHEET FA001 FOR GENERAL NOTES AND SYMBOLS.

KEYNOTES

1 PROVIDE AUXILIARY INPUT/ OUTPUT INTERFACE TO ALLOW INPUT FROM FIRE ALARM PANEL TO OVERRIDE LIGHTING CONTROLS. PROGRAM STANDALONE DEVICE SO THAT CONTROLLED LIGHTING ALONG THE PATH OF EGRESS COMES TO FULL BRIGHTNESS UPON FIRE ALARM ACTIVATION. SEE DETAIL B3 ON SHEET E-503 FOR MORE INFORMATION.

KEYPLAN

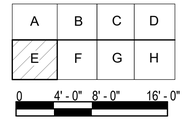

SCALE: 1/8" = 1' - 0"

N

A1 FIRE ALARM - 1ST FLOOR PLAN - AREA E
SCALE: 1/8" = 1'-0"

APPR	DATE	DESCRIPTION	SYM

NAVFAC

COLORADO LICENSED
JASON MILLER
55216
PROFESSIONAL ENGINEER
SEAL

RQ W.M. Jordan COMPANY – A JOINT VENTURE –

Michael Baker INTERNATIONAL
100 AIRSIDE DRIVE
MOON TOWNSHIP, PA 15108 A/E INFO

APPROVED

FOR COMMANDER NAVFAC

ACTIVITY
MARINE CORPS BASE
CAMP LEJEUNE

SATISFACTORY TO DATE DD/MM/YY

DES	JAM	DRW	ADH	CHK	ALS

PM / DM TOWLER / ROOT
BRANCH HEAD
DESIGN DIRECTOR R.L.Stephens, Jr.
FIRE PROTECTION DPS

DEPARTMENT OF THE NAVY
NAVAL FACILITIES ENGINEERING SYSTEMS COMMAND
ATLANTIC DESIGN AND CONSTRUCTION
MCB CAMP LEJEUNE

NAVAL FACILITIES ENGINEERING SYSTEMS COMMAND ATLANTIC
NORFOLK, VA
JACKSONVILLE, NC
P1527 LOGCOM CSP WAREHOUSE

FIRE ALARM - 1ST FLOOR PLAN - AREA E

SCALE: AS NOTED
EPROJECT NO.: 1639600
CONSTR. CONTR. NO. N40085-20-C-0059
NAVFAC DRAWING NO. 14111252
SHEET 235 OF 447

FA115

DRAWFORM REVISION: 25 AUGUST 2020

P1527 FINAL SUBMISSION - 11/18/2021

PLOTTED: 11/15/2021 7:28:42 AM

FILE NAME: BIM 360://HF PACKAGE 3/P1527 LOG COM CSP-1639600-F.rvt

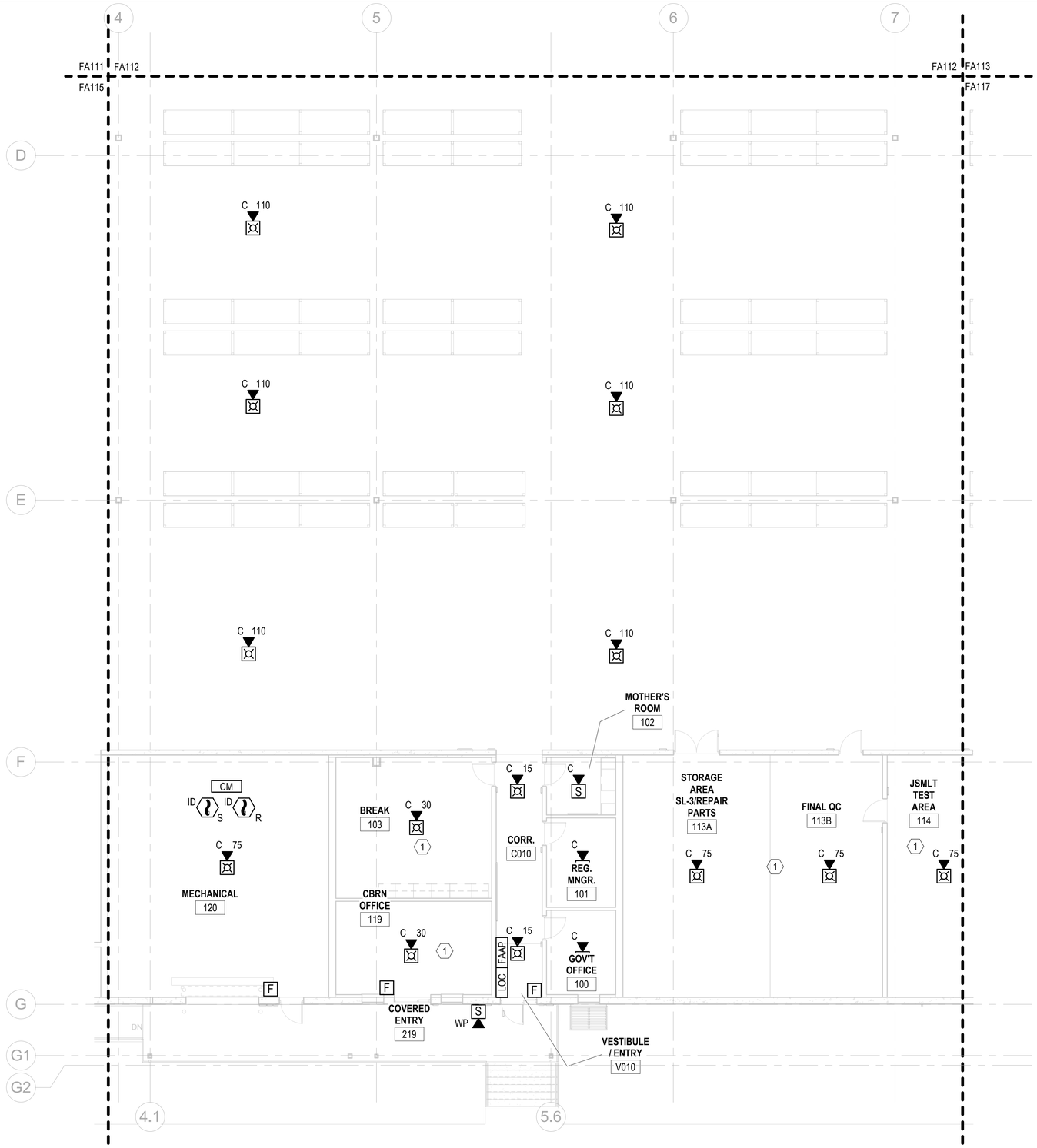

A1 FIRE ALARM - 1ST FLOOR PLAN - AREA F
SCALE: 1/8" = 1'-0"

GENERAL NOTES

1. REFER TO SHEET FA001 FOR GENERAL NOTES AND SYMBOLS.

KEYNOTES

1 PROVIDE AUXILIARY INPUT/ OUTPUT INTERFACE TO ALLOW INPUT FROM FIRE ALARM PANEL TO OVERRIDE LIGHTING CONTROLS. PROGRAM STANDALONE DEVICE SO THAT CONTROLLED LIGHTING ALONG THE PATH OF EGRESS COMES TO FULL BRIGHTNESS UPON FIRE ALARM ACTIVATION. SEE DETAIL B3 ON SHEET E-503 FOR MORE INFORMATION.

KEYPLAN

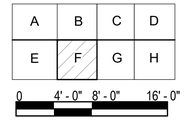

SCALE: 1/8" = 1' - 0"

N

NO.	DESCRIPTION	DATE	APPR

NAVFAC

COLORADO LICENSED
JASON MILLER
55216
PROFESSIONAL ENGINEER
SEAL

IRQ WM Jordan COMPANY – A JOINT VENTURE –

Michael Baker INTERNATIONAL
100 AIRSIDE DRIVE
MOON TOWNSHIP, PA 15108
A/E INFO

APPROVED

FOR COMMANDER NAVFAC

ACTIVITY
MARINE CORPS BASE CAMP LEJEUNE

SATISFACTORY TO DATE DD/MM/YY

DES	DRW	CHK
JAM	ADH	ALS

PM / DM: TOWLER / ROOT
BRANCH HEAD:
DESIGN DIRECTOR: R.L.Stephens, Jr.
FIRE PROTECTION: DPS

DEPARTMENT OF THE NAVY
NAVAL FACILITIES ENGINEERING SYSTEMS COMMAND
ATLANTIC DESIGN AND CONSTRUCTION
MCB CAMP LEJEUNE

NAVAL FACILITIES ENGINEERING SYSTEMS COMMAND ATLANTIC
NORFOLK, VA
JACKSONVILLE, NC
P1527 LOGCOM CSP WAREHOUSE

FIRE ALARM - 1ST FLOOR PLAN - AREA F

SCALE: AS NOTED
EPROJECT NO.: 1639600
CONSTR. CONTR. NO.: N40085-20-C-0059
NAVFAC DRAWING NO.: 14111253
SHEET 236 OF 447

FA116

DRAWFORM REVISION: 25 AUGUST 2020

P1527 FINAL SUBMISSION - 11/18/2021

PLOTTED: 11/15/2021 7:28:43 AM
FILE NAME: BIM 360://HF PACKAGE 3/P1527 LOG COM CSP-1639600-F.rvt

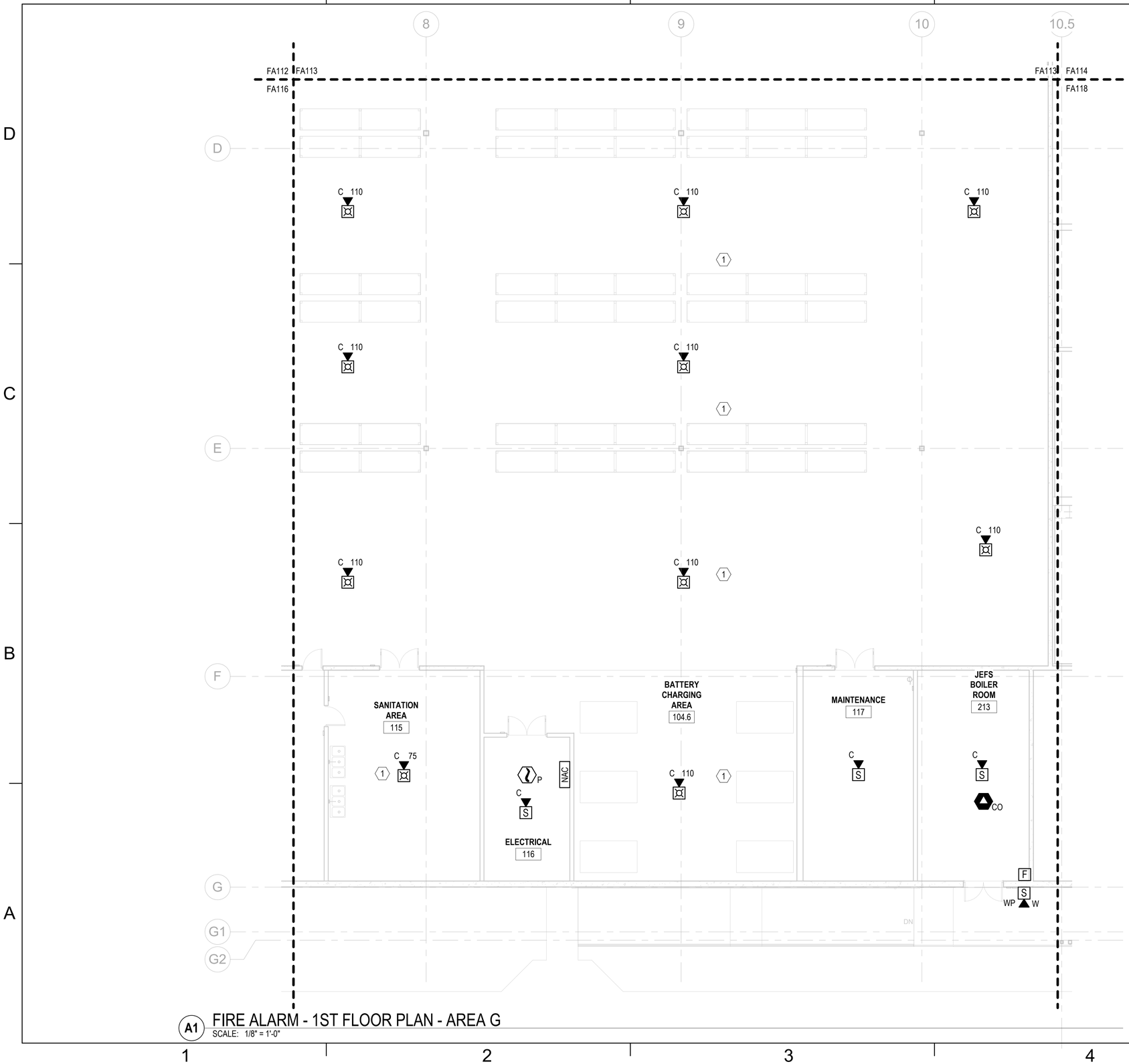

A1 FIRE ALARM - 1ST FLOOR PLAN - AREA G
SCALE: 1/8" = 1'-0"

GENERAL NOTES

1. REFER TO SHEET FA001 FOR GENERAL NOTES AND SYMBOLS.

KEYNOTES

1 PROVIDE AUXILIARY INPUT/ OUTPUT INTERFACE TO ALLOW INPUT FROM FIRE ALARM PANEL TO OVERRIDE LIGHTING CONTROLS. PROGRAM STANDALONE DEVICE SO THAT CONTROLLED LIGHTING ALONG THE PATH OF EGRESS COMES TO FULL BRIGHTNESS UPON FIRE ALARM ACTIVATION. SEE DETAIL B3 ON SHEET E-503 FOR MORE INFORMATION.

KEYPLAN

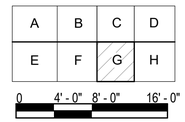

0 4' - 0" 8' - 0" 16' - 0"
SCALE: 1/8" = 1' - 0"

N

APPR	DATE	DESCRIPTION	SYM

NAVFAC

COLORADO LICENSED
JASON MILLER
55216
PROFESSIONAL ENGINEER
SEAL

IRQ WM Jordan COMPANY – A JOINT VENTURE –

Michael Baker INTERNATIONAL
100 AIRSIDE DRIVE
MOON TOWNSHIP, PA 15108
A/E INFO

APPROVED

FOR COMMANDER NAVFAC

ACTIVITY
MARINE CORPS BASE CAMP LEJEUNE

SATISFACTORY TO DATE DD/MM/YY

DES JAM	DRW ADH	CHK ALS

PM / DM TOWLER / ROOT
BRANCH HEAD
DESIGN DIRECTOR R.L.Stephens, Jr.
FIRE PROTECTION DPS

DEPARTMENT OF THE NAVY
NAVAL FACILITIES ENGINEERING SYSTEMS COMMAND
ATLANTIC DESIGN AND CONSTRUCTION
MCB CAMP LEJEUNE

NAVAL FACILITIES ENGINEERING SYSTEMS COMMAND ATLANTIC
NORFOLK, VA
JACKSONVILLE, NC
P1527 LOGCOM CSP WAREHOUSE

FIRE ALARM - 1ST FLOOR PLAN - AREA G

SCALE: AS NOTED
EPROJECT NO.: 1639600
CONSTR. CONTR. NO. N40085-20-C-0059
NAVFAC DRAWING NO. 14111254
SHEET 237 OF 447

FA117

DRAWFORM REVISION: 25 AUGUST 2020

P1527 FINAL SUBMISSION - 11/18/2021

PLOTTED: 11/15/2021 7:28:44 AM
FILE NAME: BIM 360://HF PACKAGE 3/P1527 LOG COM CSP-1639600-F.rvt

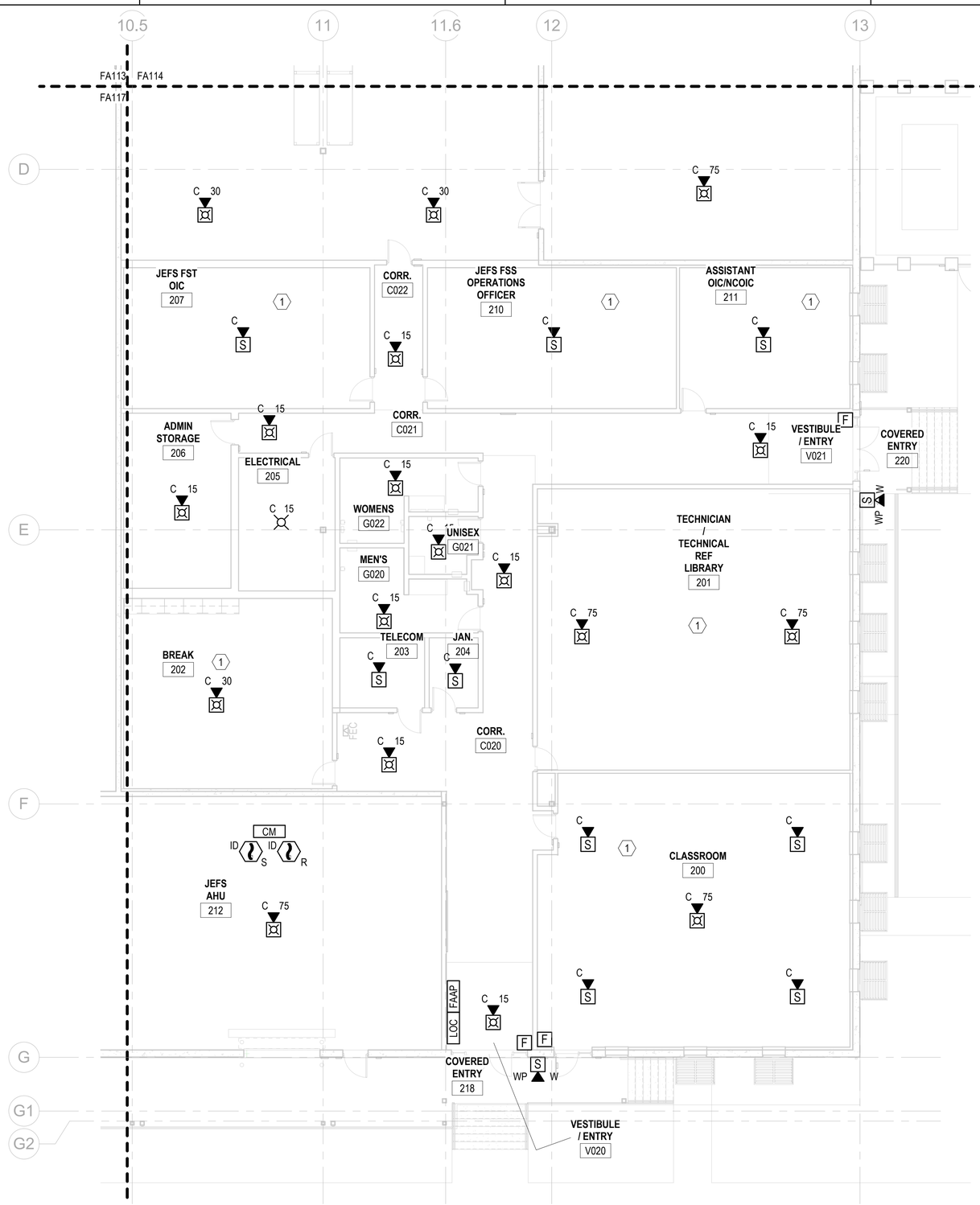

1 FIRE ALARM - 1ST FLOOR PLAN - AREA H
SCALE: 1/8" = 1'-0"

GENERAL NOTES

1. REFER TO SHEET FA001 FOR GENERAL NOTES AND SYMBOLS.

KEYNOTES

1 PROVIDE AUXILIARY INPUT/ OUTPUT INTERFACE TO ALLOW INPUT FROM FIRE ALARM PANEL TO OVERRIDE LIGHTING CONTROLS. PROGRAM STANDALONE DEVICE SO THAT CONTROLLED LIGHTING ALONG THE PATH OF EGRESS COMES TO FULL BRIGHTNESS UPON FIRE ALARM ACTIVATION. SEE DETAIL B3 ON SHEET E-503 FOR MORE INFORMATION.

KEYPLAN

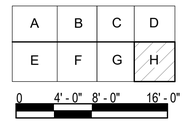

SCALE: 1/8" = 1' - 0"

APPR	DATE	DESCRIPTION	SYM

NAVFAC

COLORADO LICENSED
JASON MILLER
55216
PROFESSIONAL ENGINEER
SEAL

RQ W.M. Jordan COMPANY – A JOINT VENTURE –

Michael Baker INTERNATIONAL
100 AIRSIDE DRIVE
MOON TOWNSHIP, PA 15108
A/E INFO

APPROVED
FOR COMMANDER NAVFAC

ACTIVITY
MARINE CORPS BASE CAMP LEJEUNE

SATISFACTORY TO DATE DD/MM/YY

DES	DRW	CHK
JAM	ADH	ALS

PM / DM: TOWLER / ROOT
BRANCH HEAD:
DESIGN DIRECTOR: R.L.Stephens, Jr.
FIRE PROTECTION: DPS

DEPARTMENT OF THE NAVY
NAVAL FACILITIES ENGINEERING SYSTEMS COMMAND
ATLANTIC DESIGN AND CONSTRUCTION
NAVAL FACILITIES ENGINEERING SYSTEMS COMMAND ATLANTIC
NORFOLK, VA
MCB CAMP LEJEUNE
JACKSONVILLE, NC
P1527 LOGCOM CSP WAREHOUSE
FIRE ALARM - 1ST FLOOR PLAN - AREA H

SCALE:	AS NOTED
EPROJECT NO.:	1639600
CONSTR. CONTR. NO.	N40085-20-C-0059
NAVFAC DRAWING NO.	14111255
SHEET	238 OF 447

FA118

DRAWFORM REVISION: 25 AUGUST 2020

P1527 FINAL SUBMISSION - 11/18/2021

PLOTTED: 11/15/2021 7:28:45 AM

FILE NAME: BIM 360://HF PACKAGE 3/P1527 LOG COM CSP-1639600-F.rvt

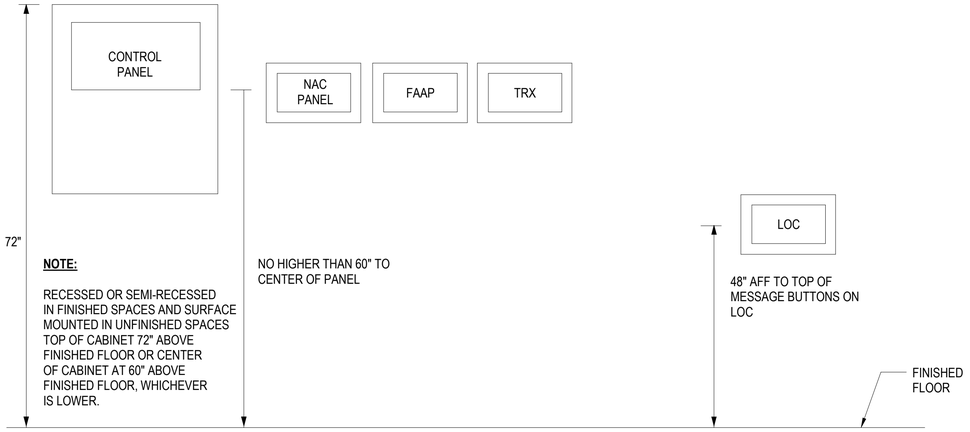

C1 FMCP, FAAP, NAC, AND LOC MOUNTING HEIGHTS
SCALE: NTS

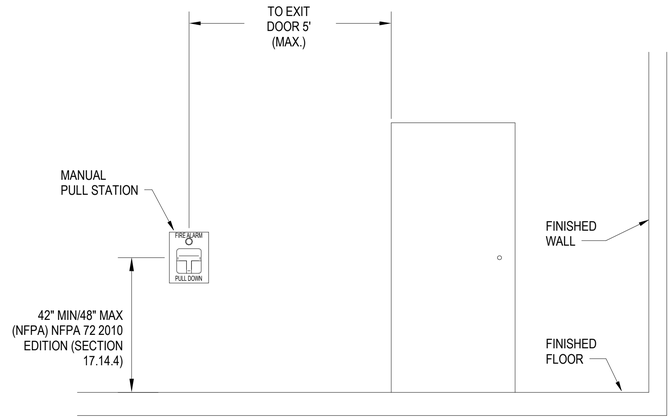

C3 PULL STATION INSTALLATION DETAIL
SCALE: NTS

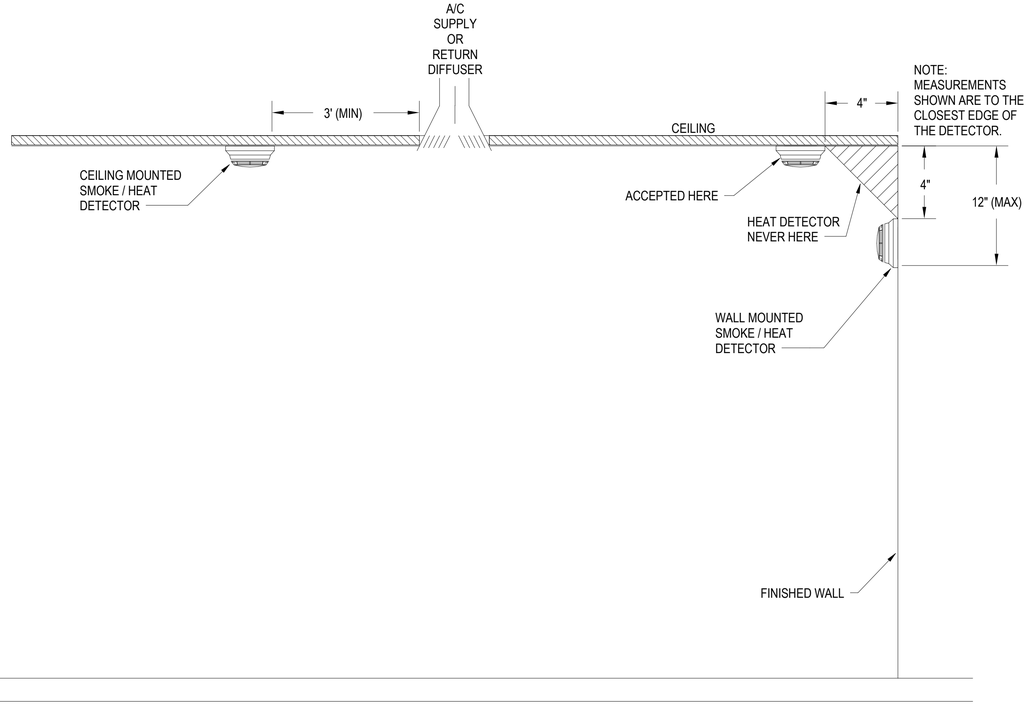

A1 SMOKE / HEAT DETECTOR INSTALLATION REQUIREMENTS
SCALE: NTS

GENERAL NOTES

1. REFER TO SHEET FA001 FOR GENERAL NOTES AND SYMBOLS.

SYM	DESCRIPTION	DATE	APPR

NAVFAC

COLORADO LICENSED
JASON MILLER
55216
PROFESSIONAL ENGINEER
SEAL

IRQ WNM Jordan COMPANY – A JOINT VENTURE –

Michael Baker INTERNATIONAL
100 AIRSIDE DRIVE
MOON TOWNSHIP, PA 15108
A/E INFO

APPROVED

FOR COMMANDER NAVFAC

ACTIVITY
MARINE CORPS BASE CAMP LEJEUNE

SATISFACTORY TO DATE DD/MM/YY

DES JAM | DRW ADH | CHK ALS

PM / DM TOWLER / ROOT

BRANCH HEAD

DESIGN DIRECTOR R.L.Stephens, Jr.

FIRE PROTECTION DPS

DEPARTMENT OF THE NAVY
NAVAL FACILITIES ENGINEERING SYSTEMS COMMAND
ATLANTIC DESIGN AND CONSTRUCTION
NAVAL FACILITIES ENGINEERING SYSTEMS COMMAND ATLANTIC
NORFOLK, VA
MCB CAMP LEJEUNE
JACKSONVILLE, NC
P1527 LOGCOM CSP WAREHOUSE
FIRE ALARM - DETAILS

SCALE: AS NOTED
EPROJECT NO.: 1639600
CONSTR. CONTR. NO. N40085-20-C-0059
NAVFAC DRAWING NO. 14111256
SHEET 239 OF 447

FA501

DRAWFORM REVISION: 25 AUGUST 2020

P1527 FINAL SUBMISSION - 11/18/2021

PLOTTED: 11/15/2021 7:28:46 AM

FILE NAME: BIM 360://HF PACKAGE 3/P1527 LOG COM CSP-1639600-F.rvt

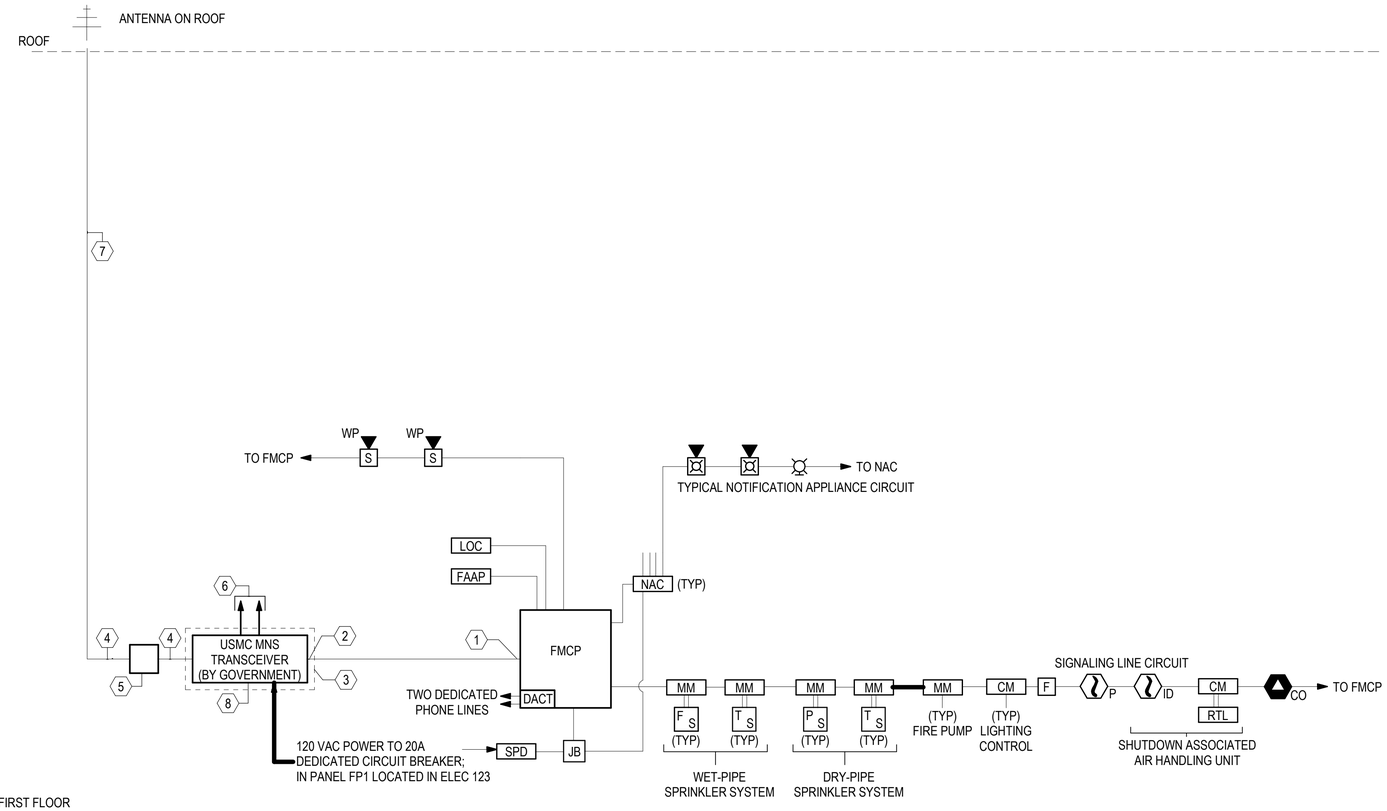

A1 FIRE ALARM RISER DIAGRAM
SCALE: NTS

GENERAL NOTES

1. REFER TO SHEET FA001 FOR GENERAL NOTES AND SYMBOLS.

KEYNOTES

1 PROVIDE AUDIO INPUT AND CONTACT CLOSURE IN THE FMCP PANEL TO ACCEPT EXTERNAL SIGNAL FROM THE MNS TRANSCEIVER.

2 PROVIDE 3/4" RIGID METAL CONDUIT (RMC) BETWEEN THE FMCP PANEL AND MNS TRANSCEIVER PANEL.

3 PROVIDE DEDICATED WALL SPACE FOR 24"X24"X1" MOUNTING BOARD ADJACENT TO THE FMCP PANEL (WITHIN 15 FT MAX). ENSURE THE MOUNTING BOARD IS CLEARLY MARKED "FOR BASE-WIDE MNS USE".

4 PROVIDE 1-1/2" RIGID METAL CONDUIT.

5 PROVIDE 8"X8"X8" PULL BOX.

6 PROVIDE (2) 3/4-INCH ELECTRICAL METAL CONDUIT (EMT) WITH 18 AWG SHIELD AUDIO WIRE FROM THE NEMA-4 ENCLOSURE TO 2 DIFFERENT CENTRAL FACILITY LOCATIONS (DUTY ROOM, ADMINISTRATION AREA, CENTRAL HALLWAY -COORDINATE WITH THE BASE SECURITY FOR LOCATION). AT THESE LOCATIONS TERMINATE RMC IN A FLUSH MOUNTED 4"X4"X2" EMT BOX. ENSURE 2 CONDUIT RUNS AND THE EXIT FLUSH MOUNTED ENCLOSURES ARE LABELED "FOR MNS USE".

7 1-1/2" RMC FROM PULL BOX TO THE ROOF. MAXIMUM CONDUIT LENGTH TO THE ROOF TERMINATION IS 115 FT. TERMINATE THE TOP OF THE EXTERIOR RMC WITH UL LISTED WEATHERHEAD. PROVIDE 50 OHM, UMR-400 RF CABLE IN THE RMC. PROVIDE 3-FT CABLE LENGTH MAINTENANCE LOOP AT BOTH ENDS OF THE CABLE ROUTE AND TERMINATE ROOF CABLE WITH A STRAIGHT MALE N-TYPE CONNECTOR. DO NOT TERMINATE THE RF CABLE AT THE MNS MOUNTING AREA AND CLEARLY LABEL THE RF CABLE "FOR MNS". TEST RF CABLE FOR PROPER CONNECTIVITY. PROVIDE ONE 90DBI OMNI-DIRECTIONAL ANTENNA, COOPER ANT-109-OM OR, MOBILE MARK OD9-2400 OR EQUAL, ON TOP OF ROOFTOP ANTENNA MASS. DIRECTIONAL ANTENNA MAY BE MOUNTED ON FACILITY BELOW ROOFLINE IF PLACEMENT OF ANTENNA LOCATION IS PRE-APPROVED BY SPAWAR OR PHYSICAL SECURITY PERSONNEL.

8 PROVIDE A NON-METALLIC 18" HEIGHT X 16" WIDTH X 10" DEPTH NEMA 4X ENCLOSURE WITH RAISED COVER AND PAD LOCKABLE LATCHES W/INTERIOR MOUNTING PLATE. MOUNT THE PANEL IN THE CENTER OF THE MNS MOUNTING BOARD, PROVIDE 3/4" RMC WITH 3 CONDUCTORS , 12 AWG ELECTRICAL WIRE FROM THE ENCLOSURE TO A DEDICATED 120VAC/15A ELECTRICAL CIRCUIT. PROVIDE A DEDICATED LOCKABLE BREAKER FROM THE SAME POWER PANEL FOR FIRE ALARM CONTROL PANEL. PROVIDE AC POWER SURGE SUPPRESSOR DEVICE INLINE WITH POWER CIRCUIT INSIDE THE LOWER RIGHT CORNER OF THE ENCLOSURE. PROVIDE A DUAL ELECTRICAL OUTLET MOUNTED INSIDE THE MNS ENCLOSURE ABOVE THE SURE SUPPRESSOR ON THE BOTTOM RIGHT OF THE MNS ENCLOSURE WIRE SURGE SUPPRESSOR IN SERIES WITH DUAL ELECTRICAL OUTLET. WIRING MUST BE IN ACCORDANCE WITH NFPA 70.

STM	DESCRIPTION	DATE	APPR

NAVFAC

COLORADO LICENSED
JASON MILLER
55216
PROFESSIONAL ENGINEER
SEAL

WNM Jordan COMPANY – A JOINT VENTURE –

Michael Baker INTERNATIONAL
100 AIRSIDE DRIVE
MOON TOWNSHIP, PA 15108
A/E INFO

APPROVED

FOR COMMANDER NAVFAC

ACTIVITY
MARINE CORPS BASE
CAMP LEJEUNE

SATISFACTORY TO DATE DD/MM/YY

DES	JAM	DRW	ADH	CHK	ALS

PM / DM TOWLER / ROOT
BRANCH HEAD
DESIGN DIRECTOR R.L.Stephens, Jr.
FIRE PROTECTION DPS

DEPARTMENT OF THE NAVY
NAVAL FACILITIES ENGINEERING SYSTEMS COMMAND
ATLANTIC DESIGN AND CONSTRUCTION
NAVAL FACILITIES ENGINEERING SYSTEMS COMMAND ATLANTIC
NORFOLK, VA
MCB CAMP LEJEUNE
JACKSONVILLE, NC
P1527 LOGCOM CSP WAREHOUSE
FIRE ALARM - RISER DIAGRAM

SCALE: AS NOTED
EPROJECT NO.: 1639600
CONSTR. CONTR. NO. N40085-20-C-0059
NAVFAC DRAWING NO. 14111257
SHEET 240 OF 447

FA701

DRAWFORM REVISION: 25 AUGUST 2020

P1527 FINAL SUBMISSION - 11/18/2021

PLOTTED: 11/15/2021 7:28:46 AM

FILE NAME: BIM 360://HF PACKAGE 3/P1527 LOG COM CSP-1639600-F.rvt

FIRE PROTECTION ABBREVIATIONS AND LEGEND

SYMBOL	ABBREV	DESCRIPTION
(ORDINARY)	OH	ORDINARY HAZARD
(DRY)	DRY	ORDINARY HAZARD
(STORAGE)	ST	NFPA 13 CRITERIA FOR ESFR PROTECTION OF STORAGE
[X / X]		SPRINKLER DESIGN DENSITY [GPM/SF / SF]

P1527 PROJECT SITE	
HYDRANT FLOW DATA	
TEST DATE:	JUNE 25, 2021
TESTED BY:	JASON MILLER AND BASE PERSONNEL
STATIC PRESSURE:	62 PSI
RESIDUAL PRESSURE:	50 PSI
FLOW:	3,487 GPM

FIRE PROTECTION NOTES

1. PROVIDE AN AUTOMATIC, SUPERVISED WET PIPE FIRE SPRINKLER SYSTEM THROUGHOUT THE FACILITY.
2. THE CONTRACTOR MUST PERFORM A FIRE HYDRANT FLOW TEST IN ACCORDANCE WITH NFPA 291.
3. THE FIRE PROTECTION SYSTEM MUST COMPLY WITH NFPA 13 (2019), UFC 3-600-01 (7 FEBRUARY 2020), AND WITH THESE CONTRACT DRAWINGS.
4. FIRE PROTECTION MATERIALS MUST BE UL LISTED AND/OR FM APPROVED.
5. INSTALLING CONTRACTOR MUST OBTAIN APPROVAL OF THE AUTHORITIES HAVING JURISDICTION.
6. IT IS THE INTENT OF THESE DOCUMENTS TO PROVIDE DESIGN, MATERIALS AND EQUIPMENT FOR A TOTALLY FUNCTIONING AND OPERATING FIRE PROTECTION SYSTEM, INCLUDING THE PROPER INTERFACING AND COORDINATING WITH ALL OTHER BUILDING SYSTEMS.
7. THE GENERAL CHARACTER AND SCOPE OF THE WORK IS ILLUSTRATED IN THE SPECIFICATIONS AND DRAWINGS. THE SPECIFICATIONS AND DRAWINGS ARE DIVIDED INTO SEVERAL SECTIONS FOR CONVENIENCE ONLY AND THE CONTRACT DOCUMENTS MUST BE CONSIDERED AS A WHOLE. THE CONTRACTOR MUST BE RESPONSIBLE FOR THE COORDINATION OF ALL TRADES, SUBCONTRACTORS, AND VENDORS ENGAGED IN WORK.
8. THE SPRINKLER SYSTEM DESIGNER MUST BE RESPONSIBLE FOR AVOIDING CONFLICTS BETWEEN FIRE PROTECTION SYSTEMS AND LIGHTING FIXTURES, DIFFUSERS, GRILLES, DUCTS, EQUIPMENT FIXTURES, STRUCTURAL MEMBERS, PIPES, CONDUITS, AND OTHER OBSTRUCTIONS ENCOUNTERED.
9. PIPING LAYOUTS, WHERE SHOWN, ARE DIAGRAMMATIC AND SHOW SYSTEM INTENT. PIPING MAY REQUIRE ADDITIONAL OFFSETS, DROPS, AND RISERS. CONTRACTOR MUST BE RESPONSIBLE FOR FINAL PIPING LAYOUT AND HYDRAULIC CALCULATIONS.
10. SPRINKLER PIPING MUST BE INSTALLED SO THAT ALL PORTIONS OF THE SYSTEM CAN BE DRAINED BACK THROUGH THE MAIN DRAIN VALVES. WHERE TRAPPED SECTIONS OF PIPING CANNOT BE AVOIDED, AUXILIARY DRAINS MUST BE PROVIDED. PROVIDE TEST AND DRAIN CONNECTIONS IN ACCORDANCE WITH SPECIFICATIONS AND NFPA 13.
11. THE INCOMING SPRINKLER SERVICE MUST BE PROVIDED WITH A REDUCED PRESSURE ZONE BACKFLOW PREVENTER. NEW BACKFLOW PREVENTER MUST INCLUDE A FORWARD FLOW TEST CONNECTION, WITH ONE 2 1/2 INCH HOSE CONNECTION FOR EVERY 250 GPM OF ANTICIPATED FLOW OF THE SPRINKLER SYSTEM. PROVIDE A MEANS OF DRAINING THE BACKFLOW PREVENTER PRESSURE RELIEF DISCHARGE. DRAIN TO OUTSIDE. SIZE DRAIN PIPE ACCORDING TO MANUFACTURER RECOMMENDATION.
12. DRAINS MUST TERMINATE TO THE EXTERIOR OF THE BUILDING AND BE PROVIDED WITH A SPLASH BLOCK. DRAINS MAY NOT TERMINATE AT JANITOR'S CLOSETS OR OTHER INTERNAL DRAINS.
13. LOCATE CONTROL VALVES, TEST VALVES, AND LOW POINT DRAIN VALVES IN READILY ACCESSIBLE AREAS WITHIN 5 FEET OF THE FLOOR. TEST VALVES MUST DISCHARGE TO THE OUTSIDE OF THE BUILDING ONTO A SPLASH BLOCK IF NOT DISCHARGING TO A PAVED SURFACE.
14. SPRINKLER HYDRAULIC DESIGN MUST BE BASED ON NEW HYDRANT FLOW TESTS PERFORMED BY THE CONTRACTOR. NEW FIRE HYDRANT FLOW TESTS MUST BE PERFORMED IN ACCORDANCE WITH NFPA 291.
15. HYDRAULIC CALCULATIONS MUST BE BASED ON AREA/DENSITY APPROACH ONLY. SPECIAL DESIGN APPROACHES, SUCH AS ROOM DESIGN MUST NOT BE USED.
16. PROVIDE AT LEAST ONE HYDRAULIC CALCULATION FOR EACH HAZARD CLASSIFICATION IN EACH OF THE FACILITIES. HYDRAULIC CALCULATIONS MUST INCLUDE A MINIMUM PRESSURE DROP ACROSS THE BACKFLOW PREVENTERS OF 12 PSI OR THE ACTUAL PRESSURE DROP WHICHEVER IS GREATER, REGARDLESS OF TYPE OR SIZE.
17. THE SPRINKLER SYSTEMS MUST BE DESIGNED HYDRAULICALLY FOR UNIFORM DISCHARGE DENSITIES ON THE FOLLOWING BASIS.

HAZARD CLASSIFICATION		SPRINKLERS: (GPM/FT2)/FT2 [MINIMUM K-FACTOR]	
		CEILING HEIGHT UP TO 30 FEET	CEILING HEIGHT 30 TO 45 FEET
LIGHT	DESIGN	0.1/1,500	0.2/2,500
	K-FACTOR	5.6	11.2
ORDINARY	DESIGN	0.2/2,500	0.2/2,500
	K-FACTOR	8.0	11.2
DRY	DESIGN	0.2/2,500	0.2/3,500
	K-FACTOR	11.2	11.2

SPRINKLER DESIGN CRITERIA FOR ESFR SPRINKLERS PROTECTING RACK STORAGE OF GROUP A PLASTICS (NFPA 13 TABLE 23.6.1)			
DESIGN CRITERIA	MINIMUM K FACTOR	MINIMUM OPERATING PRESSURE (PSI)	NUMBER OF SPRINKLERS IN DESIGN AREA
MAXIMUM STORAGE HEIGHT 30 FT, MAXIMUM CEILING HEIGHT 35 FT	16.8	52	12

18. MAXIMUM SPRINKLER PROTECTION AREA MUST BE 225 SQUARE FEET PER SPRINKLER FOR LIGHT HAZARD AREAS, 130 SQUARE FEET PER SPRINKLER FOR ORDINARY HAZARD AREAS, AND 100 SQUARE FEET PER SPRINKLER FOR EXTRA HAZARD AREAS AND AREAS PROTECTED BY ESFR SPRINLKERS. EXTENDED COVERAGE SPRINKLERS ARE NOT PERMITTED.
19. PROVIDE PROTECTIVE CAGES ON SPRINKLERS LOCATED LESS THAN 7 FEET ABOVE THE FINISHED FLOOR AND IN AREAS SUBJECT TO MECHANICAL DAMAGE.
20. PROVIDE INTERMEDIATE AND HIGH TEMPERATURE HEADS AS NEEDED TO MEET NFPA 13, SECTION 8.3.2.5. THIS INCLUDES BUT IS NOT LIMITED TO UNIT HEATERS, HEATING DUCTS AND DIFFUSERS.
21. CENTER SPRINKLERS IN CENTER OF CEILING TILE.
22. WHERE FREEZE PROTECTION IS REQUIRED FOR A SPECIFIC SPACE, PROVIDE DRY-TYPE SYSTEM.
23. SPRINKLER CONTROL VALVES MUST BE ELECTRICALLY SUPERVISED UNLESS OTHERWISE NOTED.
24. GALVANIZED PIPING IS NOT PERMITTED TO BE USED IN DRY PIPE, PREACTION, OR WET PIPE SPRINKLER SYSTEMS.

FIRE PROTECTION NOTES (CONTINUED)

25. PIPING MUST BE INSTALLED TO MAINTAIN CEILING HEIGHTS OR CLEARANCES IN ACCORDANCE WITH NFPA 13, NFPA 101, AND THE CONTRACT DOCUMENTS.
26. PENETRATIONS OF THE BUILDING AIR BARRIER MUST BE SEALED TO MAINTAIN THE INTEGRITY OF THE AIR BARRIER. REFER TO ARCHITECTURE DRAWINGS FOR LOCATION AND DETAILS OF AIR BARRIERS.
27. DAMAGE TO WALLS, PARTITIONS, CEILINGS AND FLOORS FROM PENETRATIONS, INSTALLATION OR OTHER ACTIONS OF THE SPRINKLER INSTALLER MUST BE PATCHED, REPAIRED, PAINTED WITH NEW MATERIALS TO ORIGINAL CONDITION.
28. STRUCTURAL MEMBERS MUST NOT BE CUT, DRILLED OR BURNED UNLESS PREVIOUSLY APPROVED BY THE PROJECTS STRUCTURAL ENGINEER AND CONTRACTING OFFICER.
29. PROVIDE SPRINKLER PROTECTION UNDER OBSTRUCTIONS, INCLUDING DUCTS, THAT ARE GREATER THAN 4 FEET.
30. PAINT CONCEALED PIPING AND PIPING IN NORMALLY UNOCCUPIED SPACES WITH PRIMER AND TWO COATS OF RED OIL BASED PAINT.
31. PAINT EXPOSED PIPING IN OCCUPIED SPACES WITH PRIMER AND TWO COATS OF OIL BASE MATCHING THE CEILING PAINT IN THE SPACE.
32. PROVIDE SPRINKLER GAUGE INSTALLATION LABELS ON EACH SPRINKLER GAUGE SHOWING SPRINKLER GAUGES HAVE BEEN TEST OR REPLACED WITHIN FIVE YEARS.
33. PROVIDE A FIVE-INCH, 30 DEGREE ELBOW STORZ CONNECTION FOR THE FIRE DEPARTMENT CONNECTION. FIRE DEPARTMENT CONNECTIONS MUST BE THE FREESTANDING TYPE IN ACCORDANCE WITH DISCUSSION FROM THE BASE FIRE DEPARTMENT. FREESTANDING FIRE DEPARTMENT CONNECTIONS MUST BE LOCATED OUTSIDE OF THE COLLAPSE ZONE OF THE BUILDING.
34. POST INDICATOR VALVES SHALL BE INSTALLED NO CLOSER THAN 40 FEET FROM THE BUILDING.
35. PROVIDE DRY PIPE SPRINKLER PROTECTION OF THE LOADING DOCK.
36. THERE SHALL BE A MINIMUM CLEARANCE OF 36 INCHES BETWEEN THE TOP OF STORAGE AND ESFR SPRINKLERS IN ACCORDANCE WITH NFPA 13.

FIRE PUMP NOTES

1. PROVIDE 1 HORIZONTAL SPLIT CASE, ELECTRIC DRIVEN, FIRE PUMP, CONTROLLER, AND ALL APPURTENANCES IN ACCORDANCE WITH NFPA 20. THE PUMP SHALL BE RATED FOR 1,500 GPM AT 90 PSI WITH A 125 HORSEPOWER DRIVER. THE FIRE PUMP SUCTION AND DISCHARGE SHALL BE 10 INCHES, BASED ON THE UNDERGROUND VELOCITY REQUIREMENT OF UFC 3-230-01.
2. PROVIDE AN ELECTRIC IN-LINE, VERTICAL, CENTRIFUGAL TYPE JOCKEY PUMP AND JOCKEY PUMP CONTROLLER. THE JOCKEY PUMP SHALL BE RATED 15 GPM WITH A 2 HORSEPOWER MOTOR.
3. PROVIDE AT LEAST 3 FEET OF CLEARANCE AROUND THE PUMP, PUMP CONTROLLER, AND CONTROL VALVES IN THE PUMP PIPING IN ACCORDANCE WITH UFC 3-600-01.
4. A LINEAR TEST HEADER MANIFOLD SHALL BE PROVIDED FOR TESTING OF BOTH THE FIRE PUMP AND BACKFLOW PREVENTER.
5. A 8 INCH FLOW METER WITH A RANGE OF 1000 TO 4000 GPM SHALL BE PROVIDED IN ADDITION TO THE TEST HEADER ARRANGED SUCH THAT BOTH THE TEST LOOP AND THE TEST HEADER ARRANGEMENT ARE METERED.
6. A BYPASS LOOP SHALL BE PROVIDED AROUND THE FIRE PUMP WITH A CHECK VALVE. PROVIDE BUTTERFLY VALVES WITH TAMPER SWITCHES ON BOTH SIDES OF THE CHECK VALVE.
7. THE BACKFLOW PREVENTER SHALL BE PROVIDED ON THE SUCTION SIDE OF THE FIRE PUMPS.
8. AN AIR RELEASE VALVE SHALL BE INSTALLED ON THE BYPASS LOOP AND FLOW METER LOOP THAT ARE INSTALLED IN AN INVERT "U" ORIENTATION.
9. THE FIRE PUMP SHALL BE ARRANGED TO START AUTOMATICALLY UPON PRESSURE DROP AND ARRANGED TO RUN UNTIL MANUAL SHUTDOWN.
10. PROVIDE RELIEF VALVE WITH DISCHARGE PIPING IN ACCORDANCE WITH NFPA 20.
11. THE FIRE PUMP SHALL BE SIZED SUCH THAT SYSTEM PRESSURE DOES NOT EXCEED 175 PSI.

SYM	DESCRIPTION	DATE	APPR

NAVFAC

COLORADO LICENSED
JASON MILLER
55216
PROFESSIONAL ENGINEER
SEAL

IRQ WM Jordan COMPANY – A JOINT VENTURE –

Michael Baker INTERNATIONAL
100 AIRSIDE DRIVE
MOON TOWNSHIP, PA 15108 A/E INFO

APPROVED

FOR COMMANDER NAVFAC

ACTIVITY
MARINE CORPS BASE CAMP LEJEUNE

SATISFACTORY TO DATE DD/MM/YY

DES	DRW	CHK
JAM	ADH	ALS

PM / DM TOWLER / ROOT
BRANCH HEAD
DESIGN DIRECTOR R.L.Stephens, Jr.
FIRE PROTECTION DPS

DEPARTMENT OF THE NAVY
NAVAL FACILITIES ENGINEERING SYSTEMS COMMAND
ATLANTIC DESIGN AND CONSTRUCTION
NAVAL FACILITIES ENGINEERING SYSTEMS COMMAND ATLANTIC
NORFOLK, VA
MCB CAMP LEJEUNE
JACKSONVILLE, NC
P1527 LOGCOM CSP WAREHOUSE

FIRE PROTECTION GENERAL NOTES, ABBREVIATIONS, & SYMBOLS

SCALE: AS NOTED
EPROJECT NO.: 1639600
CONSTR. CONTR. NO. N40085-20-C-0059
NAVFAC DRAWING NO. 14111258
SHEET 241 OF 447

FX001

DRAWFORM REVISION: 25 AUGUST 2020

P1527 FINAL SUBMISSION - 11/18/2021

PLOTTED: 11/15/2021 7:28:46 AM

FILE NAME: BIM 360://HF PACKAGE 3/P1527 LOG COM CSP-1639600-F.rvt

GENERAL NOTES

1. REFER TO SHEET FX001 FOR GENERAL NOTES AND SYMBOLS.
2. ALL AREAS ARE CLASSIFIED AS LIGHT HAZARD UNLESS OTHERWISE NOTED.

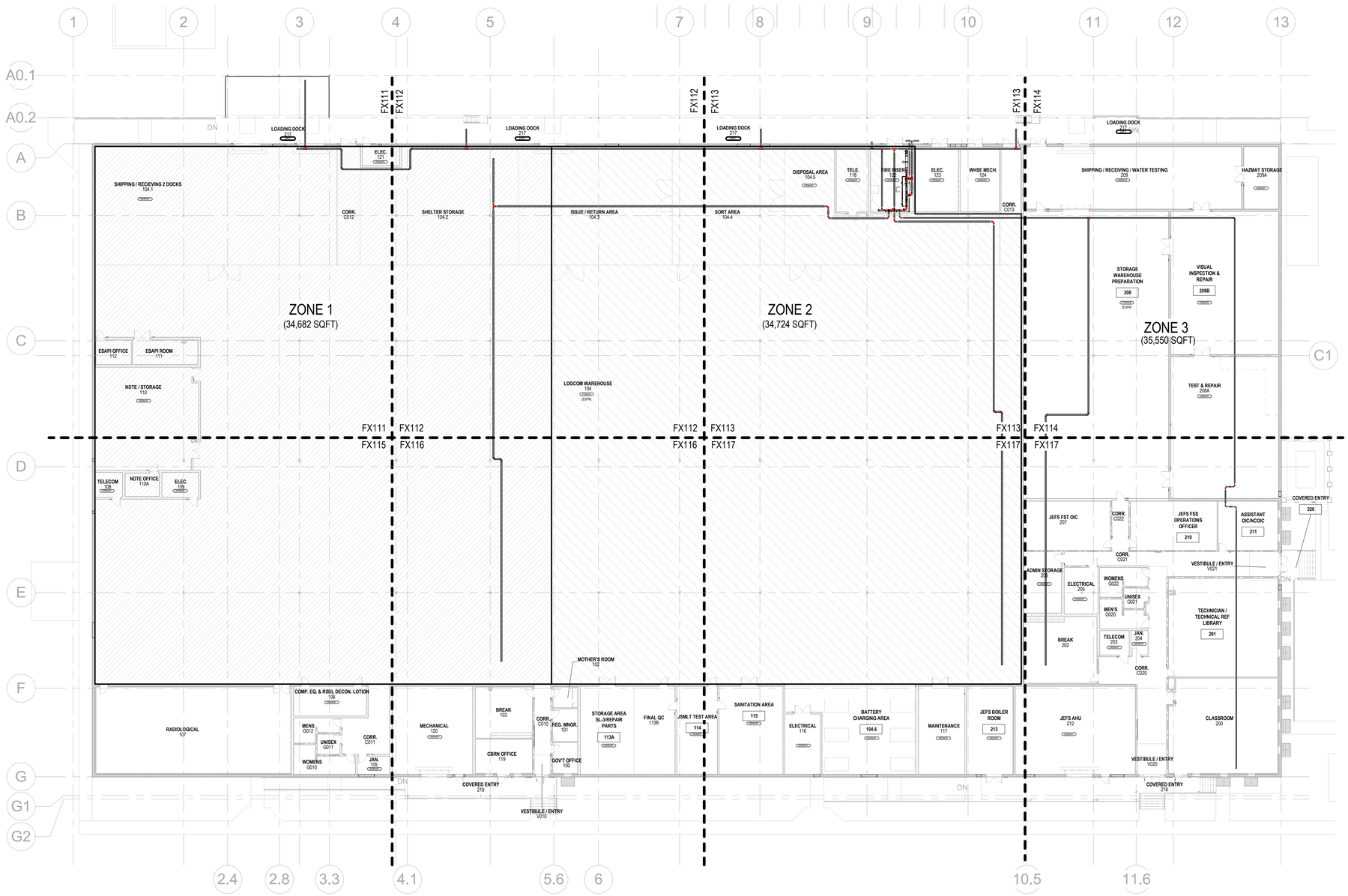

A1 FIRE PROTECTION - OVERALL - 1ST FLOOR
SCALE: 3/64" = 1'-0"

KEYPLAN

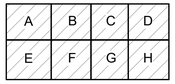

0 16' - 0" 32' - 0" 64' - 0"
SCALE: 3/64" = 1'-0"

N

NO.	DESCRIPTION	DATE	APPR

NAVFAC

COLORADO LICENSED JASON MILLER 55216 PROFESSIONAL ENGINEER
SEAL

IRQ WM Jordan COMPANY – A JOINT VENTURE –

Michael Baker INTERNATIONAL
100 AIRSIDE DRIVE
MOON TOWNSHIP, PA 15108
A/E INFO

APPROVED
FOR COMMANDER NAVFAC

ACTIVITY
MARINE CORPS BASE CAMP LEJEUNE

SATISFACTORY TO DATE DD/MM/YY

DES	JAM	DRW	ADH	CHK	ALS

PM / DM TOWLER / ROOT
BRANCH HEAD
DESIGN DIRECTOR R.L.Stephens, Jr.
FIRE PROTECTION DPS

DEPARTMENT OF THE NAVY
NAVAL FACILITIES ENGINEERING SYSTEMS COMMAND
ATLANTIC DESIGN AND CONSTRUCTION
MCB CAMP LEJEUNE

NAVAL FACILITIES ENGINEERING SYSTEMS COMMAND ATLANTIC
NORFOLK, VA
JACKSONVILLE, NC
P1527 LOGCOM CSP WAREHOUSE

FIRE PROTECTION - OVERALL - 1ST FLOOR PLAN

SCALE:	AS NOTED
EPROJECT NO.:	1639600
CONSTR. CONTR. NO.	N40085-20-C-0059
NAVFAC DRAWING NO.	14111259
SHEET	242 OF 447

FX110
DRAWFORM REVISION: 25 AUGUST 2020

P1527 FINAL SUBMISSION - 11/18/2021

PLOTTED: 11/15/2021 7:28:50 AM
FILE NAME: BIM 360:/HF PACKAGE 3/P1527 LOG COM CSP-1639600-F.rvt

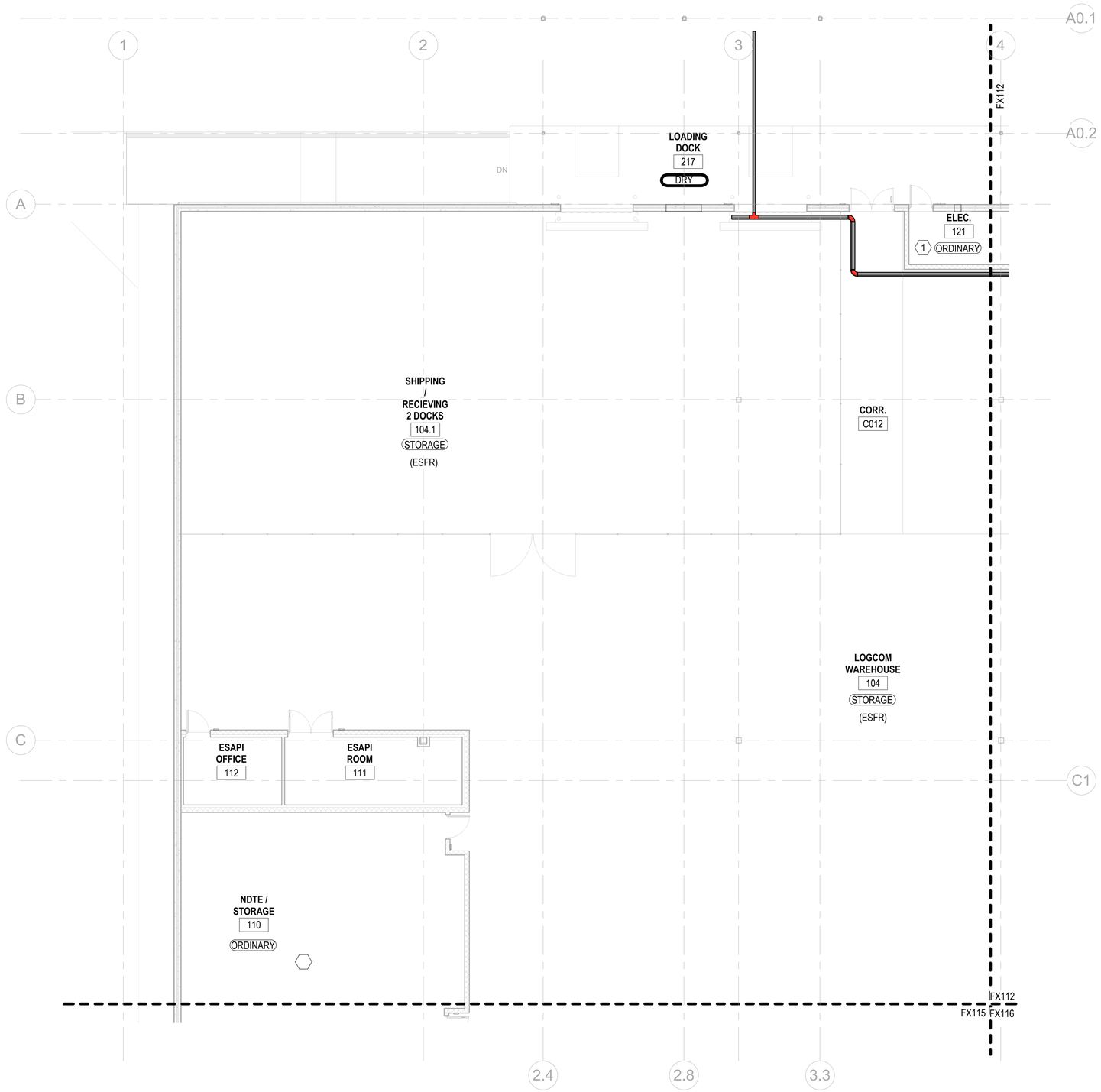

A1 FIRE PROTECTION - 1ST FLOOR - AREA A
SCALE: 1/8" = 1'-0"

GENERAL NOTES

1. REFER TO SHEET FX001 FOR GENERAL NOTES AND SYMBOLS.
2. ALL AREAS ARE CLASSIFIED AS LIGHT HAZARD UNLESS OTHERWISE NOTED.

KEYNOTES

1 SPRINKLER PIPING MUST NOT BE PERMITTED TO TRAVEL THROUGH THE ROOM UNLESS IT IS SERVING THE ROOM. COMPLY WITH NFPA 70 FOR CLEARANCES WITH ELECTRICAL EQUIPMENT. SIDEWALL SPRINKLERS ARE RECOMMENDED.

KEYPLAN

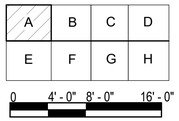

0 4' - 0" 8' - 0" 16' - 0"

SCALE: 1/8" = 1' - 0"

N

NO.	DESCRIPTION	DATE	APPR

NAVFAC

COLORADO LICENSED
JASON MILLER
55216
PROFESSIONAL ENGINEER
SEAL

W.M. Jordan COMPANY – A JOINT VENTURE –

Michael Baker INTERNATIONAL
100 AIRSIDE DRIVE
MOON TOWNSHIP, PA 15108
A/E INFO

APPROVED

FOR COMMANDER NAVFAC

ACTIVITY
MARINE CORPS BASE
CAMP LEJEUNE

SATISFACTORY TO DATE DD/MM/YY

DES JAM | DRW ADH | CHK ALS

PM / DM TOWLER / ROOT

BRANCH HEAD

DESIGN DIRECTOR R.L.Stephens, Jr.

FIRE PROTECTION DPS

DEPARTMENT OF THE NAVY
NAVAL FACILITIES ENGINEERING SYSTEMS COMMAND
ATLANTIC DESIGN AND CONSTRUCTION

NAVAL FACILITIES ENGINEERING SYSTEMS COMMAND ATLANTIC
NORFOLK, VA

MCB CAMP LEJEUNE
JACKSONVILLE, NC

P1527 LOGCOM CSP WAREHOUSE

FIRE PROTECTION - 1ST FLOOR PLAN - AREA A

SCALE: AS NOTED
EPROJECT NO.: 1639600
CONSTR. CONTR. NO. N40085-20-C-0059
NAVFAC DRAWING NO. 14111260
SHEET 243 OF 447

FX111

DRAWFORM REVISION: 25 AUGUST 2020

P1527 FINAL SUBMISSION - 11/18/2021

PLOTTED: 11/15/2021 7:28:52 AM

FILE NAME: BIM 360://HF PACKAGE 3/P1527 LOG COM CSP-1639600-F.rvt

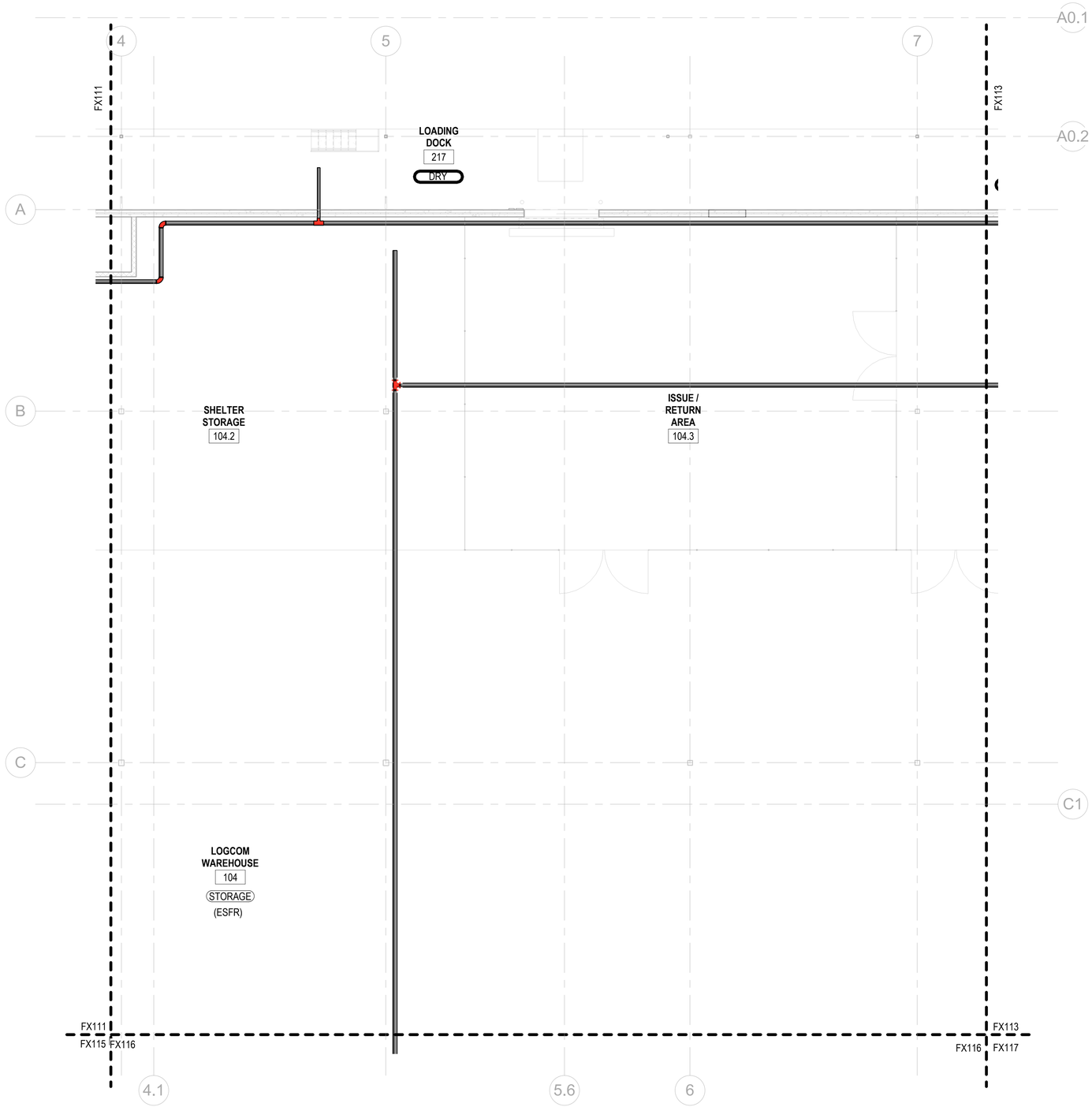

A1 FIRE PROTECTION - 1ST FLOOR - AREA B
SCALE: 1/8" = 1'-0"

GENERAL NOTES

1. REFER TO SHEET FX001 FOR GENERAL NOTES AND SYMBOLS.
2. ALL AREAS ARE CLASSIFIED AS LIGHT HAZARD UNLESS OTHERWISE NOTED.

KEYPLAN

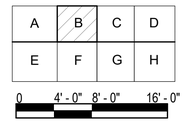

0 4' - 0" 8' - 0" 16' - 0"
SCALE: 1/8" = 1' - 0"

N

NO.	DESCRIPTION	DATE	APPR

NAVFAC

COLORADO LICENSED
JASON MILLER
55216
PROFESSIONAL ENGINEER
SEAL

RQ W.M. Jordan COMPANY
A JOINT VENTURE

Michael Baker
INTERNATIONAL
100 AIRSIDE DRIVE
MOON TOWNSHIP, PA 15108
A/E INFO

APPROVED

FOR COMMANDER NAVFAC

ACTIVITY
MARINE CORPS BASE
CAMP LEJEUNE

SATISFACTORY TO DATE DD/MM/YY

DES	DRW	CHK
JAM	ADH	ALS

PM / DM TOWLER / ROOT
BRANCH HEAD
DESIGN DIRECTOR R.L.Stephens, Jr.
FIRE PROTECTION DPS

DEPARTMENT OF THE NAVY
NAVAL FACILITIES ENGINEERING SYSTEMS COMMAND
ATLANTIC DESIGN AND CONSTRUCTION
MCB CAMP LEJEUNE

NAVAL FACILITIES ENGINEERING SYSTEMS COMMAND ATLANTIC
NORFOLK, VA

JACKSONVILLE, NC
P1527 LOGCOM CSP WAREHOUSE

FIRE PROTECTION - 1ST FLOOR PLAN - AREA B

SCALE: AS NOTED
EPROJECT NO.: 1639600
CONSTR. CONTR. NO. N40085-20-C-0059
NAVFAC DRAWING NO. 14111261
SHEET 244 OF 447

FX112

DRAWFORM REVISION: 25 AUGUST 2020

P1527 FINAL SUBMISSION - 11/18/2021

PLOTTED: 11/15/2021 7:28:54 AM
FILE NAME: BIM 360://HF PACKAGE 3/P1527 LOG COM CSP-1639600-F.rvt

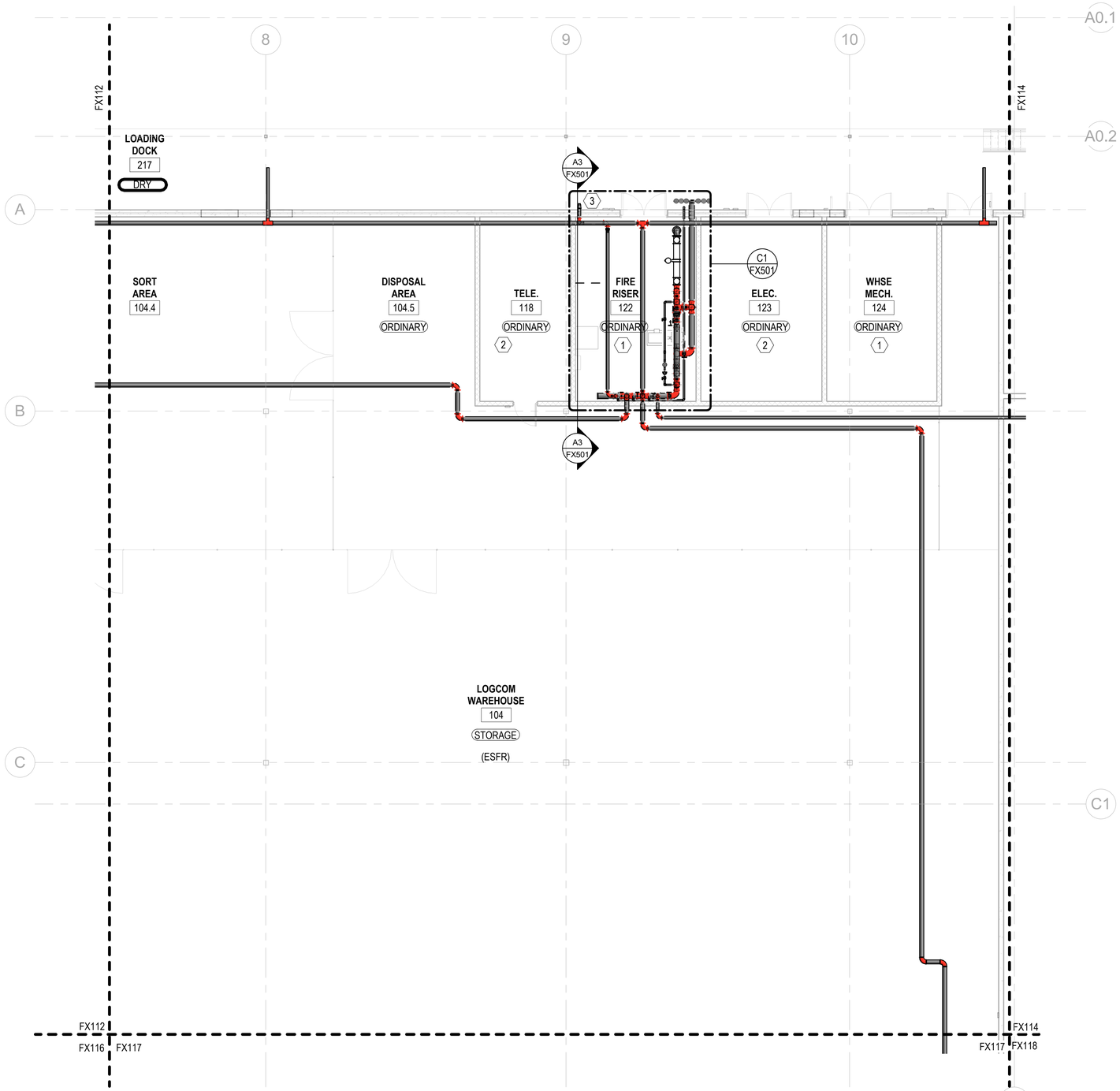

A1 FIRE PROTECTION - 1ST FLOOR - AREA C
SCALE: 1/8" = 1'-0"

GENERAL NOTES

1. REFER TO SHEET FX001 FOR GENERAL NOTES AND SYMBOLS.
2. ALL AREAS ARE CLASSIFIED AS LIGHT HAZARD UNLESS OTHERWISE NOTED.

KEYNOTES

1 PROVIDE PROTECTIVE GUARDS ON SPRINKLERS IN THIS ROOM.
2 SPRINKLER PIPING MUST NOT BE PERMITTED TO TRAVEL THROUGH THE ROOM UNLESS IT IS SERVING THE ROOM. COMPLY WITH NFPA 70 FOR CLEARANCES WITH ELECTRICAL EQUIPMENT. SIDEWALL SPRINKLERS ARE RECOMMENDED.
3 EXTEND TO PEDESTAL MOUNTED FIRE DEPARTMENT CONNECTION WITH STORZ CONNECTION.

KEYPLAN

A	B	C	D
E	F	G	H

0 4' - 0" 8' - 0" 16' - 0"
SCALE: 1/8" = 1' - 0"

N

APPR	DATE	DESCRIPTION	SYM

NAVFAC

COLORADO LICENSED
JASON MILLER
55216
PROFESSIONAL ENGINEER
SEAL

IRQ W.M. Jordan COMPANY – A JOINT VENTURE –

Michael Baker INTERNATIONAL
100 AIRSIDE DRIVE
MOON TOWNSHIP, PA 15108
A/E INFO

APPROVED
FOR COMMANDER NAVFAC

ACTIVITY
MARINE CORPS BASE
CAMP LEJEUNE

SATISFACTORY TO DATE DD/MM/YY
DES JAM | DRW ADH | CHK ALS
PM / DM TOWLER / ROOT
BRANCH HEAD
DESIGN DIRECTOR R.L.Stephens, Jr.
FIRE PROTECTION DPS

DEPARTMENT OF THE NAVY
NAVAL FACILITIES ENGINEERING SYSTEMS COMMAND ATLANTIC
ATLANTIC DESIGN AND CONSTRUCTION
MCB CAMP LEJEUNE

NAVAL FACILITIES ENGINEERING SYSTEMS COMMAND ATLANTIC
NORFOLK, VA
JACKSONVILLE, NC
P1527 LOGCOM CSP WAREHOUSE

FIRE PROTECTION - 1ST FLOOR PLAN - AREA C

SCALE: AS NOTED
EPROJECT NO.: 1639600
CONSTR. CONTR. NO. N40085-20-C-0059
NAVFAC DRAWING NO. 14111262
SHEET 245 OF 447

FX113

DRAWFORM REVISION: 25 AUGUST 2020

P1527 FINAL SUBMISSION - 11/18/2021

PLOTTED: 11/15/2021 7:28:57 AM
FILE NAME: BIM 360://HF PACKAGE 3/P1527 LOG COM CSP-1639600-F.rvt

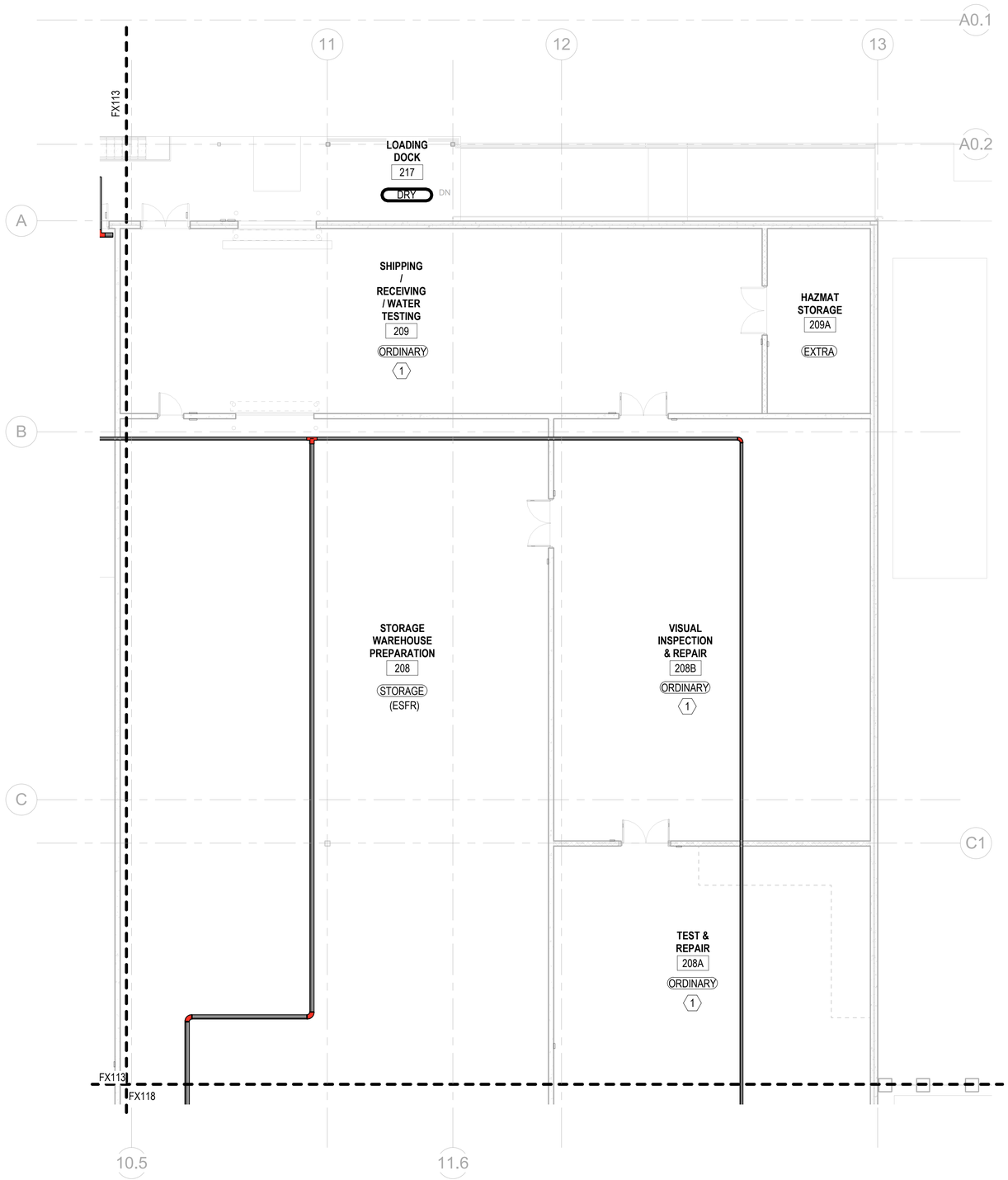

A1 FIRE PROTECTION - 1ST FLOOR - AREA D
SCALE: 1/8" = 1'-0"

GENERAL NOTES

1. REFER TO SHEET FX001 FOR GENERAL NOTES AND SYMBOLS.
2. ALL AREAS ARE CLASSIFIED AS LIGHT HAZARD UNLESS OTHERWISE NOTED.

KEYNOTES

1 PROVIDE PROTECTIVE GUARDS ON SPRINKLERS IN THIS ROOM.

KEYPLAN

A	B	C	D
E	F	G	H

0 4' - 0" 8' - 0" 16' - 0"

SCALE: 1/8" = 1' - 0"

N

NO.	DESCRIPTION	DATE	APPR

NAVFAC

COLORADO LICENSED
JASON MILLER
55216
PROFESSIONAL ENGINEER
SEAL

RQ W.M. Jordan COMPANY – A JOINT VENTURE –

Michael Baker INTERNATIONAL
100 AIRSIDE DRIVE
MOON TOWNSHIP, PA 15108
A/E INFO

APPROVED
FOR COMMANDER NAVFAC

ACTIVITY
MARINE CORPS BASE
CAMP LEJEUNE

SATISFACTORY TO DATE DD/MM/YY

DES	DRW	CHK
JAM	ADH	ALS

PM / DM TOWLER / ROOT
BRANCH HEAD
DESIGN DIRECTOR R.L.Stephens, Jr.
FIRE PROTECTION DPS

DEPARTMENT OF THE NAVY
NAVAL FACILITIES ENGINEERING SYSTEMS COMMAND
ATLANTIC DESIGN AND CONSTRUCTION
NAVAL FACILITIES ENGINEERING SYSTEMS COMMAND ATLANTIC
NORFOLK, VA
MCB CAMP LEJEUNE
JACKSONVILLE, NC
P1527 LOGCOM CSP WAREHOUSE
FIRE PROTECTION - 1ST FLOOR PLAN - AREA D

SCALE: AS NOTED
EPROJECT NO.: 1639600
CONSTR. CONTR. NO. N40085-20-C-0059
NAVFAC DRAWING NO. 14111263
SHEET 246 OF 447

FX114

DRAWFORM REVISION: 25 AUGUST 2020

P1527 FINAL SUBMISSION - 11/18/2021

PLOTTED: 11/15/2021 7:29:00 AM
FILE NAME: BIM 360://HF PACKAGE 3/P1527 LOG COM CSP-1639600-F.rvt

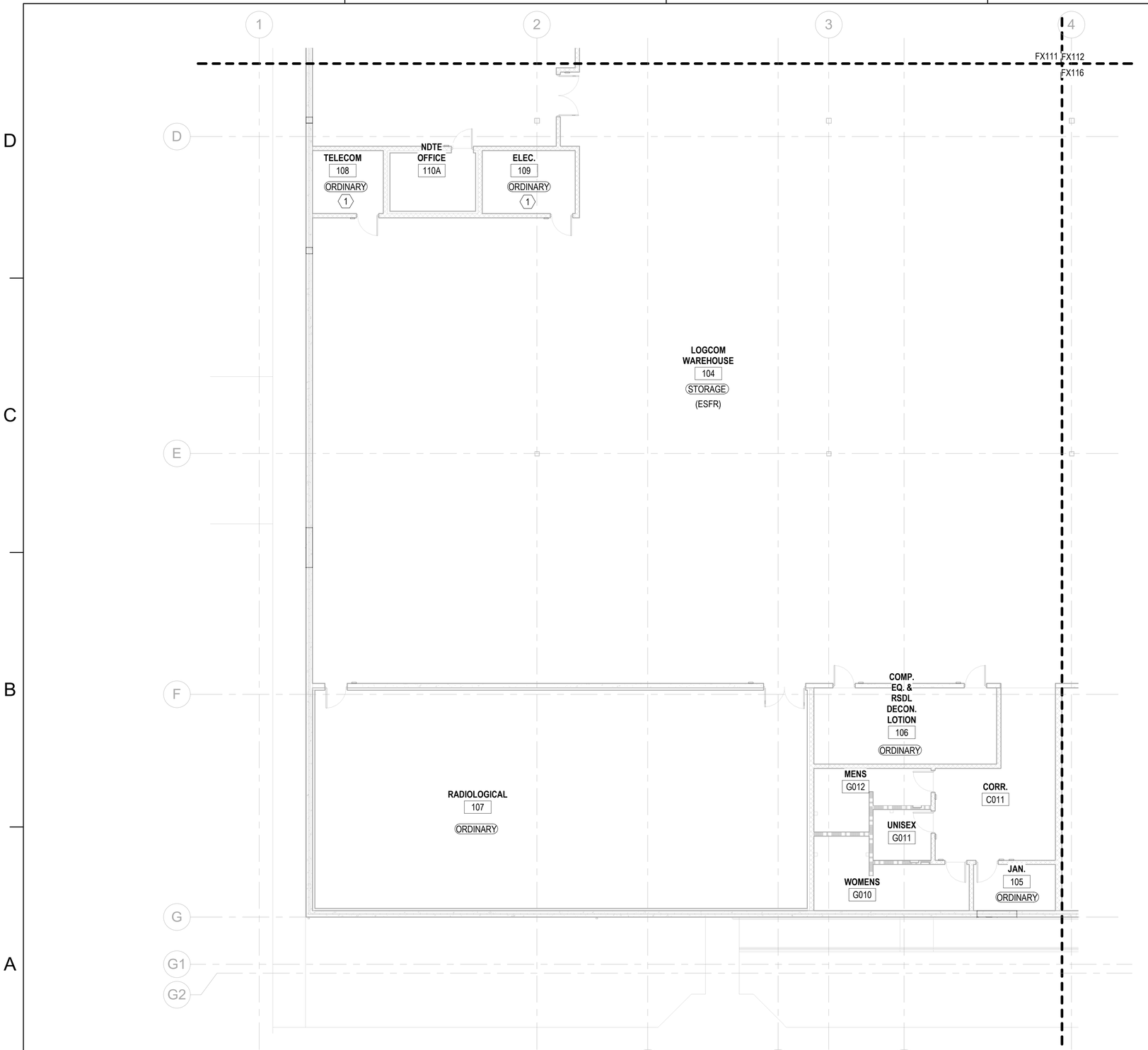

A1 FIRE PROTECTION - 1ST FLOOR - AREA E
SCALE: 1/8" = 1'-0"

GENERAL NOTES

1. REFER TO SHEET FX001 FOR GENERAL NOTES AND SYMBOLS.
2. ALL AREAS ARE CLASSIFIED AS LIGHT HAZARD UNLESS OTHERWISE NOTED.

KEYNOTES

1 SPRINKLER PIPING MUST NOT BE PERMITTED TO TRAVEL THROUGH THE ROOM UNLESS IT IS SERVING THE ROOM. COMPLY WITH NFPA 70 FOR CLEARANCES WITH ELECTRICAL EQUIPMENT. SIDEWALL SPRINKLERS ARE RECOMMENDED.

KEYPLAN

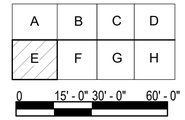

SCALE: 1" = 30' - 0"

N

NO.	DESCRIPTION	DATE	APPR

NAVFAC

COLORADO LICENSED
JASON MILLER
55216
PROFESSIONAL ENGINEER
SEAL

RQ W.M. Jordan COMPANY – A JOINT VENTURE –

Michael Baker INTERNATIONAL
100 AIRSIDE DRIVE
MOON TOWNSHIP, PA 15108
A/E INFO

APPROVED

FOR COMMANDER NAVFAC

ACTIVITY
MARINE CORPS BASE
CAMP LEJEUNE

SATISFACTORY TO DATE DD/MM/YY

DES JAM | DRW ADH | CHK ALS

PM / DM TOWLER / ROOT

BRANCH HEAD

DESIGN DIRECTOR R.L.Stephens, Jr.

FIRE PROTECTION DPS

DEPARTMENT OF THE NAVY
NAVAL FACILITIES ENGINEERING SYSTEMS COMMAND
ATLANTIC DESIGN AND CONSTRUCTION
MCB CAMP LEJEUNE

NAVAL FACILITIES ENGINEERING SYSTEMS COMMAND ATLANTIC
NORFOLK, VA

JACKSONVILLE, NC
P1527 LOGCOM CSP WAREHOUSE

FIRE PROTECTION - 1ST FLOOR PLAN - AREA E

SCALE: AS NOTED
EPROJECT NO.: 1639600
CONSTR. CONTR. NO. N40085-20-C-0059
NAVFAC DRAWING NO. 14111264
SHEET 247 OF 447

FX115

DRAWFORM REVISION: 25 AUGUST 2020

P1527 FINAL SUBMISSION - 11/18/2021

PLOTTED: 11/15/2021 7:29:02 AM

FILE NAME: BIM 360://HF PACKAGE 3/P1527 LOG COM CSP-1639600-F.rvt

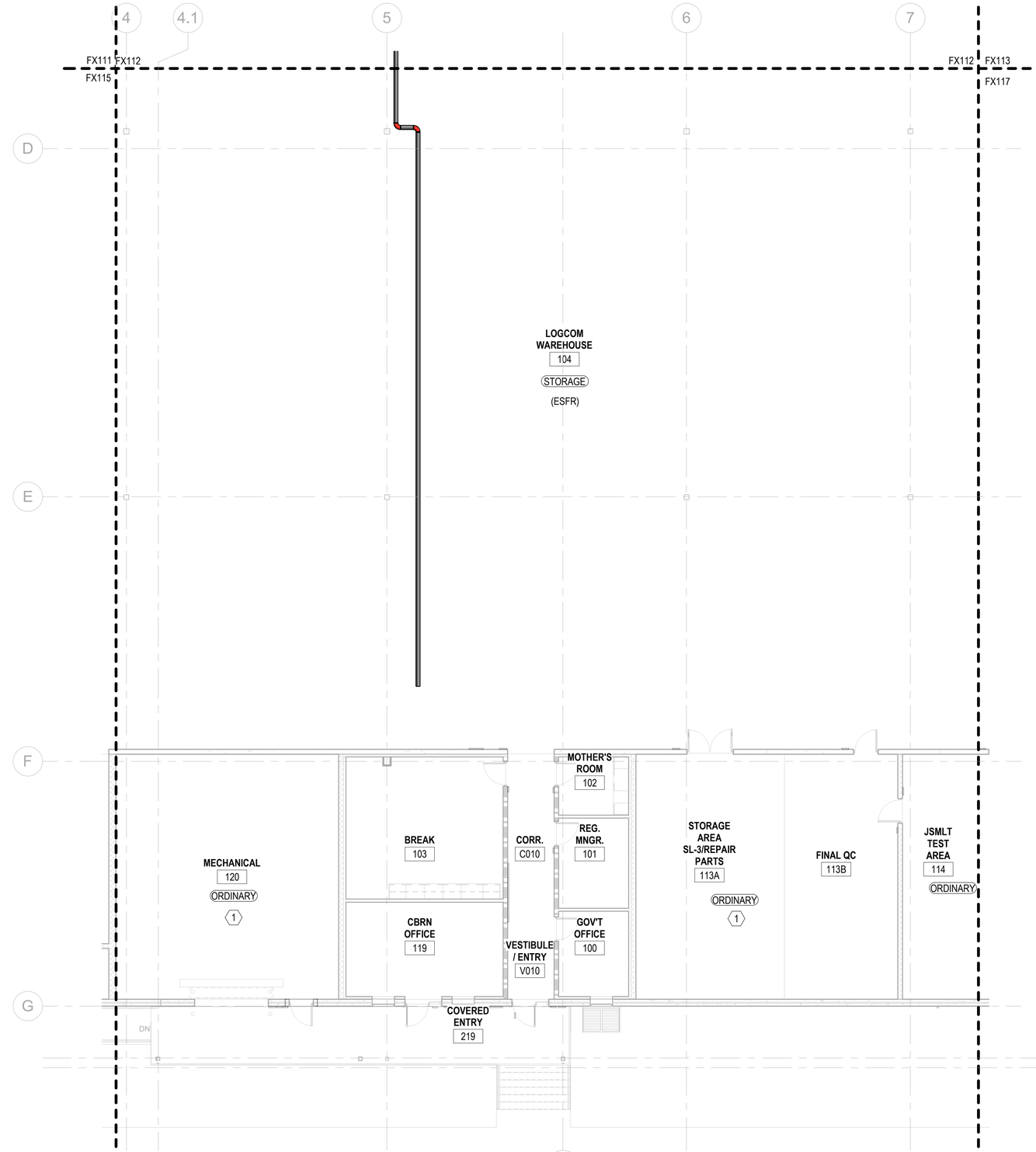

A1 FIRE PROTECTION - 1ST FLOOR - AREA F
SCALE: 1/8" = 1'-0"

GENERAL NOTES

1. REFER TO SHEET FX001 FOR GENERAL NOTES AND SYMBOLS.
2. ALL AREAS ARE CLASSIFIED AS LIGHT HAZARD UNLESS OTHERWISE NOTED.

KEYNOTES

1 PROVIDE PROTECTIVE GUARDS ON SPRINKLERS IN THIS ROOM.

KEYPLAN

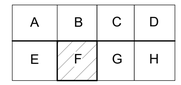

0 4' - 0" 8' - 0" 16' - 0"
SCALE: 1/8" = 1' - 0"

N

SYM	DESCRIPTION	DATE	APPR

NAVFAC

COLORADO LICENSED
JASON MILLER
55216
PROFESSIONAL ENGINEER
SEAL

JRQ WNM Jordan COMPANY – A JOINT VENTURE –

Michael Baker INTERNATIONAL
100 AIRSIDE DRIVE
MOON TOWNSHIP, PA 15108
A/E INFO

APPROVED
FOR COMMANDER NAVFAC
ACTIVITY
MARINE CORPS BASE
CAMP LEJEUNE
SATISFACTORY TO DATE DD/MM/YY
DES JAM | DRW ADH | CHK ALS
PM / DM TOWLER / ROOT
BRANCH HEAD
DESIGN DIRECTOR R.L.Stephens, Jr.
FIRE PROTECTION DPS

DEPARTMENT OF THE NAVY
NAVAL FACILITIES ENGINEERING SYSTEMS COMMAND
ATLANTIC DESIGN AND CONSTRUCTION
NAVAL FACILITIES ENGINEERING SYSTEMS COMMAND ATLANTIC
NORFOLK, VA
MCB CAMP LEJEUNE
JACKSONVILLE, NC
P1527 LOGCOM CSP WAREHOUSE
FIRE PROTECTION - 1ST FLOOR PLAN - AREA F

SCALE: AS NOTED
EPROJECT NO.: 1639600
CONSTR. CONTR. NO. N40085-20-C-0059
NAVFAC DRAWING NO. 14111265
SHEET 248 OF 447

FX116

DRAWFORM REVISION: 25 AUGUST 2020

P1527 FINAL SUBMISSION - 11/18/2021

PLOTTED: 11/15/2021 7:29:05 AM
FILE NAME: BIM 360://HF PACKAGE 3/P1527 LOG COM CSP-1639600-F.rvt

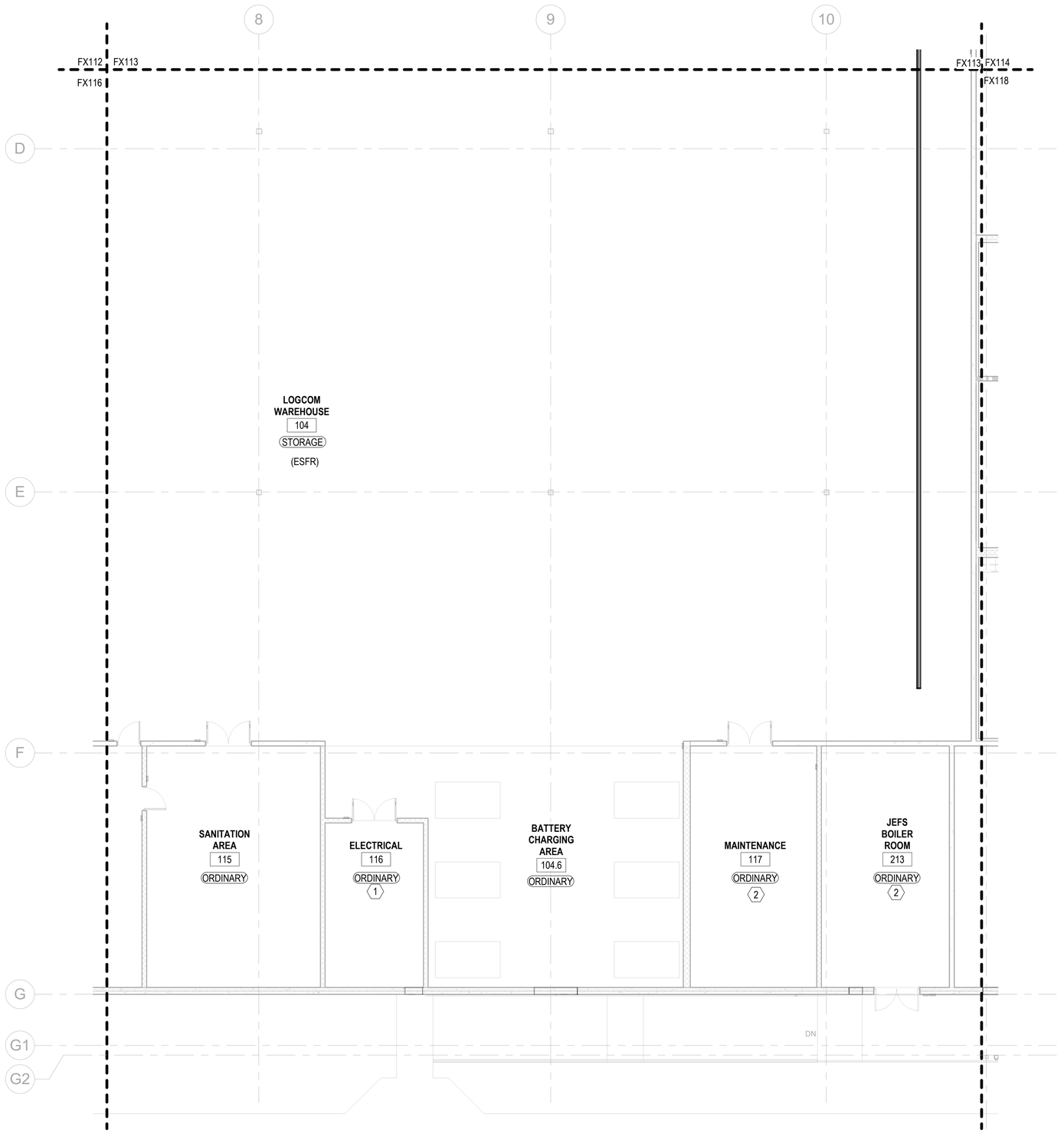

A1 FIRE PROTECTION - 1ST FLOOR - AREA G
SCALE: 1/8" = 1'-0"

GENERAL NOTES

1. REFER TO SHEET FX001 FOR GENERAL NOTES AND SYMBOLS.
2. ALL AREAS ARE CLASSIFIED AS LIGHT HAZARD UNLESS OTHERWISE NOTED.

KEYNOTES

1 SPRINKLER PIPING MUST NOT BE PERMITTED TO TRAVEL THROUGH THE ROOM UNLESS IT IS SERVING THE ROOM. COMPLY WITH NFPA 70 FOR CLEARANCES WITH ELECTRICAL EQUIPMENT. SIDEWALL SPRINKLERS ARE RECOMMENDED.

2 PROVIDE PROTECTIVE GUARDS ON SPRINKLERS IN THIS ROOM.

KEYPLAN

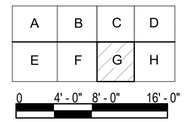

SCALE: 1/8" = 1' - 0"

N

NO.	DESCRIPTION	DATE	APPR

COLORADO LICENSED
JASON MILLER
55216
PROFESSIONAL ENGINEER
SEAL

IRQ WM Jordan COMPANY – A JOINT VENTURE –

Michael Baker INTERNATIONAL
100 AIRSIDE DRIVE
MOON TOWNSHIP, PA 15108
A/E INFO

APPROVED

FOR COMMANDER NAVFAC

ACTIVITY
MARINE CORPS BASE
CAMP LEJEUNE

SATISFACTORY TO DATE DD/MM/YY

DES JAM | DRW ADH | CHK ALS

PM / DM TOWLER / ROOT

BRANCH HEAD

DESIGN DIRECTOR R.L.Stephens, Jr.

FIRE PROTECTION DPS

DEPARTMENT OF THE NAVY
NAVAL FACILITIES ENGINEERING SYSTEMS COMMAND
ATLANTIC DESIGN AND CONSTRUCTION
MCB CAMP LEJEUNE

NAVAL FACILITIES ENGINEERING SYSTEMS COMMAND ATLANTIC
NORFOLK, VA

JACKSONVILLE, NC
P1527 LOGCOM CSP WAREHOUSE

FIRE PROTECTION - 1ST FLOOR PLAN - AREA G

SCALE: AS NOTED
EPROJECT NO.: 1639600
CONSTR. CONTR. NO. N40085-20-C-0059
NAVFAC DRAWING NO. 14111266
SHEET 249 OF 447

FX117

DRAWFORM REVISION: 25 AUGUST 2020

P1527 FINAL SUBMISSION - 11/18/2021

PLOTTED: 11/15/2021 7:29:07 AM

FILE NAME: BIM 360://HF PACKAGE 3/P1527 LOG COM CSP-1639600-F.rvt

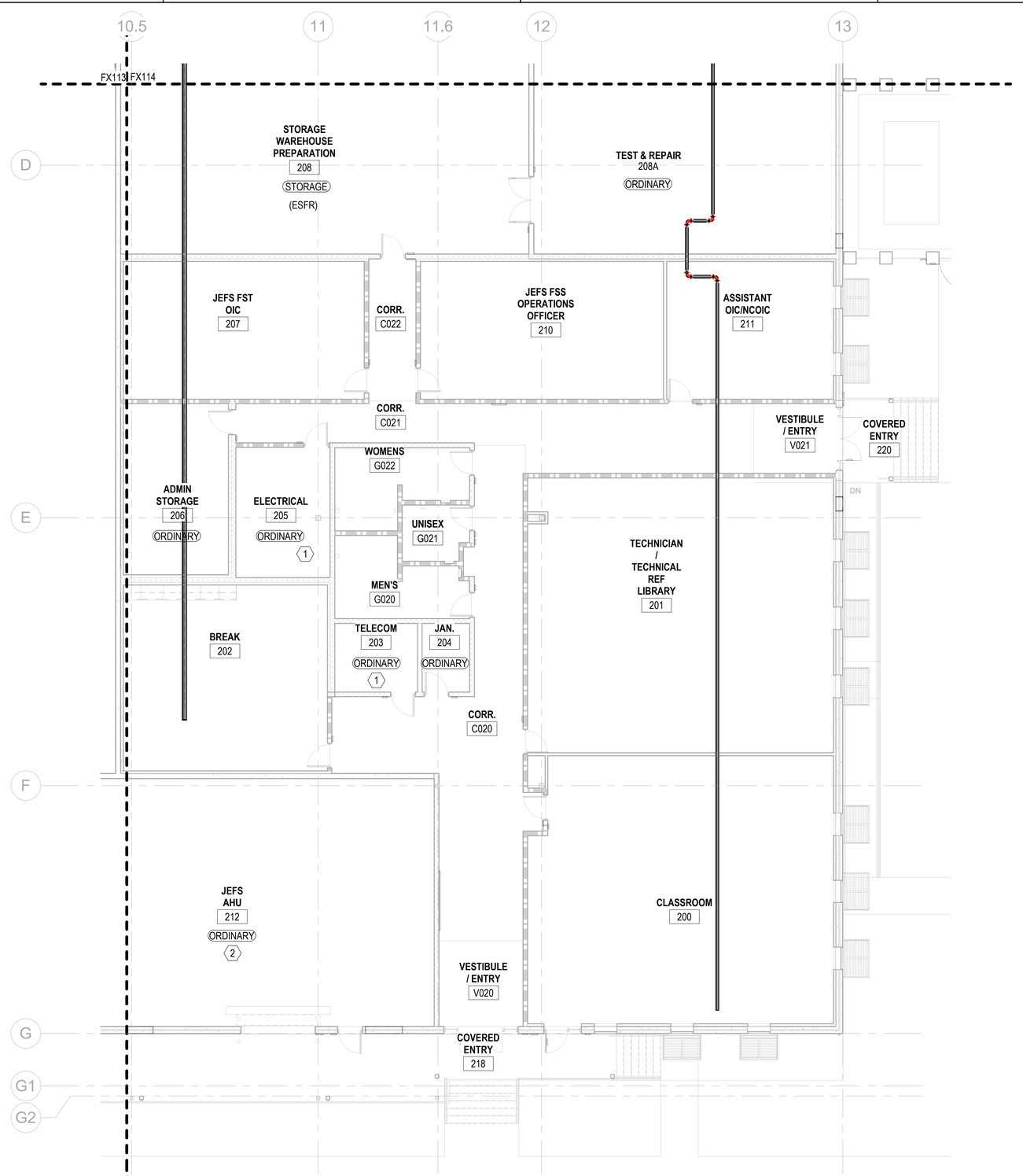

A1 FIRE PROTECTION - 1ST FLOOR - AREA H
SCALE: 1/8" = 1'-0"

GENERAL NOTES

1. REFER TO SHEET FX001 FOR GENERAL NOTES AND SYMBOLS.
2. ALL AREAS ARE CLASSIFIED AS LIGHT HAZARD UNLESS OTHERWISE NOTED.

KEYNOTES

1 SPRINKLER PIPING MUST NOT BE PERMITTED TO TRAVEL THROUGH THE ROOM UNLESS IT IS SERVING THE ROOM. COMPLY WITH NFPA 70 FOR CLEARANCES WITH ELECTRICAL EQUIPMENT. SIDEWALL SPRINKLERS ARE RECOMMENDED.

2 PROVIDE PROTECTIVE GUARDS ON SPRINKLERS IN THIS ROOM.

KEYPLAN

A	B	C	D
E	F	G	H

0 4' - 0" 8' - 0" 16' - 0"

SCALE: 1/8" = 1' - 0"

N

NO.	DESCRIPTION	DATE	APPR

COLORADO LICENSED JASON MILLER 55216 PROFESSIONAL ENGINEER
SEAL

RQ W.M. Jordan COMPANY – A JOINT VENTURE –

Michael Baker INTERNATIONAL
100 AIRSIDE DRIVE
MOON TOWNSHIP, PA 15108
A/E INFO

APPROVED

FOR COMMANDER NAVFAC

ACTIVITY: MARINE CORPS BASE CAMP LEJEUNE

SATISFACTORY TO DATE: DD/MM/YY

DES JAM | DRW ADH | CHK ALS

PM / DM: TOWLER / ROOT

BRANCH HEAD:

DESIGN DIRECTOR: R.L.Stephens, Jr.

FIRE PROTECTION: DPS

DEPARTMENT OF THE NAVY
NAVAL FACILITIES ENGINEERING SYSTEMS COMMAND
ATLANTIC DESIGN AND CONSTRUCTION
MCB CAMP LEJEUNE

NAVAL FACILITIES ENGINEERING SYSTEMS COMMAND ATLANTIC
NORFOLK, VA
JACKSONVILLE, NC
P1527 LOGCOM CSP WAREHOUSE

FIRE PROTECTION - 1ST FLOOR PLAN - AREA H

SCALE: AS NOTED
EPROJECT NO.: 1639600
CONSTR. CONTR. NO. N40085-20-C-0059
NAVFAC DRAWING NO. 14111267
SHEET 250 OF 447

FX118

DRAWFORM REVISION: 25 AUGUST 2020

P1527 FINAL SUBMISSION - 11/18/2021

PLOTTED: 11/15/2021 7:29:10 AM

FILE NAME: BIM 360://HF PACKAGE 3/P1527 LOG COM CSP-1639600-F.rvt

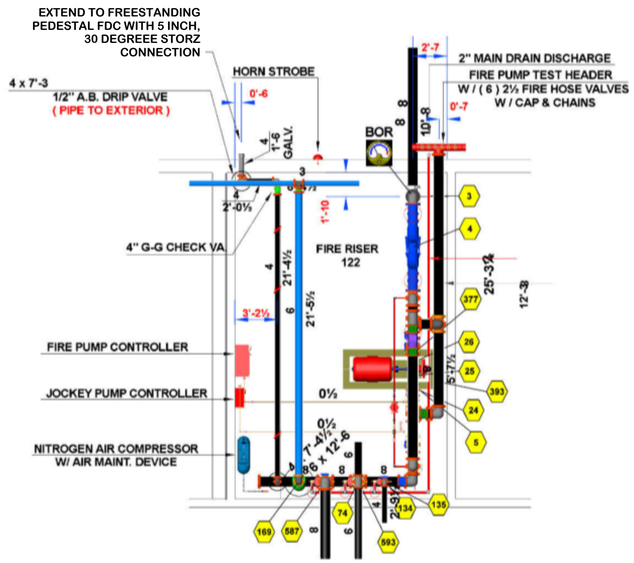

C1 FIRE PROTECTION - FIRE RISER ROOM ENLARGED PLAN
SCALE: NTS

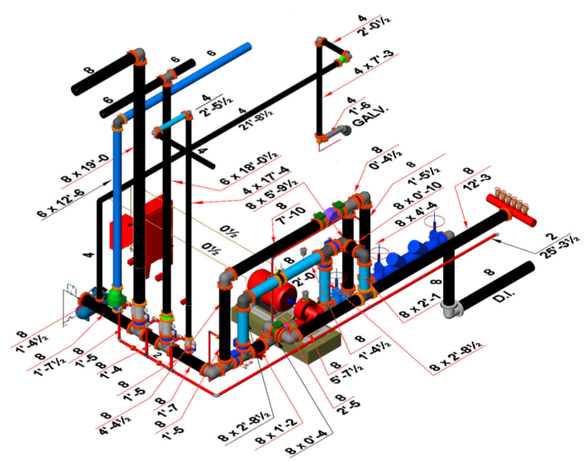

C3 FIRE PROTECTION - FIRE PUMP ISOMETRIC
SCALE: 12" = 1'-0"

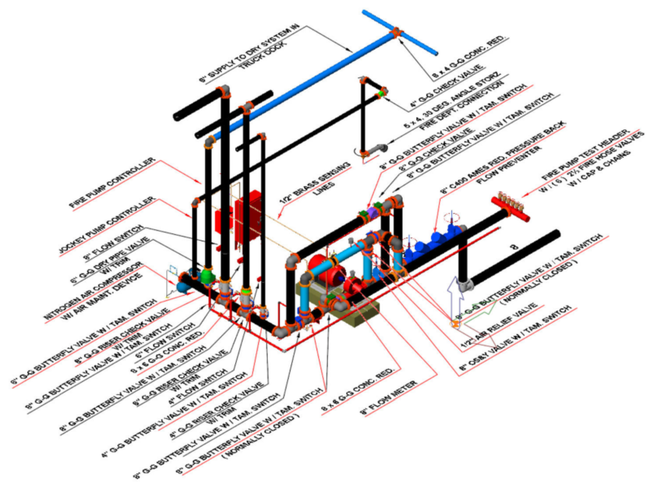

A1 FIRE PROTECTION - JOCKEY PUMP PIPING PLAN
SCALE: 12" = 1'-0"

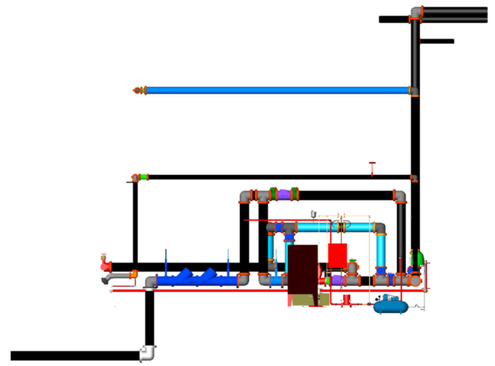

A3 FIRE PROTECTION - PUMP SECTION
SCALE: 12" = 1'-0"

GENERAL NOTES

1. REFER TO SHEET FX001 FOR GENERAL NOTES AND SYMBOLS.

SYM	DESCRIPTION	DATE	APPR

NAVFAC

COLORADO LICENSED JASON MILLER 55216 PROFESSIONAL ENGINEER
SEAL

IRQ W.M. Jordan COMPANY – A JOINT VENTURE –

Michael Baker INTERNATIONAL
100 AIRSIDE DRIVE
MOON TOWNSHIP, PA 15108
A/E INFO

APPROVED

FOR COMMANDER NAVFAC

ACTIVITY
MARINE CORPS BASE CAMP LEJEUNE

SATISFACTORY TO DATE DD/MM/YY

DES	JAM	DRW	ADH	CHK	ALS

PM / DM TOWLER / ROOT
BRANCH HEAD
DESIGN DIRECTOR R.L.Stephens, Jr.
FIRE PROTECTION DPS

DEPARTMENT OF THE NAVY
NAVAL FACILITIES ENGINEERING SYSTEMS COMMAND
ATLANTIC DESIGN AND CONSTRUCTION
MCB CAMP LEJEUNE

NAVAL FACILITIES ENGINEERING SYSTEMS COMMAND ATLANTIC
NORFOLK, VA
JACKSONVILLE, NC
P1527 LOGCOM CSP WAREHOUSE

FIRE PROTECTION - DETAILS

SCALE: AS NOTED
EPROJECT NO.: 1639600
CONSTR. CONTR. NO. N40085-20-C-0059
NAVFAC DRAWING NO. 14111268
SHEET 251 OF 447

FX501

DRAWFORM REVISION: 25 AUGUST 2020

P1527 FINAL SUBMISSION - 11/18/2021

PLOTTED: 11/11/2021 2:33:02 PM

FILE NAME: BIM 360://HF PACKAGE 3/P1527 LOG COM CSP-1639600-F.rvt

PLUMBING SYMBOLS LEGEND

SYMBOL	DESCRIPTION	SYMBOL	DESCRIPTION	SYMBOL	DESCRIPTION	SYMBOL	DESCRIPTION	SYMBOL	DESCRIPTION
	ACCESS PANEL		DIRECTION OF WATER FLOW	FS	PIPING - FLOW SWITCH		PRESSURE REDUCING VALVE		TEE DOWN
ELEV PLAN	ANGLE GATE VALVE		DRAIN VALVE		GATE VALVE		PRESSURE REGULATOR		TEE UP
	ANGLE GLOBE VALVE		ELBOW 90° DOWN		GLOBE VALVE	T&P	PRESSURE RELIEF VALVE (TEMPERATURE & PRESSURE)	T	TEMPERATURE SENSOR
	BACKFLOW PREVENTER		ELBOW 90° UP		GAS REGULATOR	T	PRESSURE RELIEF VALVE (TEMPERATURE)		THERMOMETER
	BALL VALVE		ELBOW 90°		HOSE BIBB	P	PRESSURE RELIEF VALVE (PRESSURE)	T	THERMOSTAT (DASHED LINE RUNS TO CONTROLLED DEVICE)
	BUTTERFLY VALVE		ELBOW 45°		HOSE & QUICK COUPLERS		PT (PRESSURE & TEMPERATURE) TEST PORT		TRAP - ELEVATION
	CALIBRATED BALANCE VALVE	EJ	EXPANSION JOINT	#	KEYNOTE	P-#	PUMP (ARROW IS DIRECTION OF FLOW)		TRAP - PLAN
	CAP	FCO	FLOOR CLEAN-OUT		LUBRICATOR		QUICK DISCONNECT		UNION
	CHECK VALVE (SWING GATE)		FILTER	M	METER		REDUCER		VALVE IN RISE
	CONTROL VALVE (3-WAY)	F/R	FILTER/REGULATOR		MIXING VALVE	RD-#	ROOF DRAIN		VENT THROUGH ROOF
	CONNECT TO EXISTING	F/R/L	FILTER/REGULATOR/LUBRICATOR		PIPE ANCHOR		REMOVE EXISTING TO	WH-#	WALL HYDRANT
CO	CLEAN-OUT		FLEXIBLE CONNECTION		PIPE GUIDE	S	SOLENOID VALVE	WHA-X	WATER HAMMER ARRESTOR
CO	CLEAN-OUT IN VERTICAL	FD-# OR FD-#	FLOOR DRAIN W/ & W/O P-TRAP		PLUG VALVE		STRAINER		
	COMPRESSED AIR OUTLET	FS-# OR FS-#	FLOOR SINK W/ & W/O P-TRAP		PRESSURE GAUGE WITH GAUGE COCK		STRAINER WITH VALVED AND CAPPED BLOW DOWN		

NOTE:
LEGENDS ON THIS SHEET ARE ALL-INCLUSIVE. ALL SYMBOLS, ABBREVIATIONS, OR PIPE SYSTEMS MAY NOT BE PART OF THIS PROJECT.

PLUMBING GENERAL NOTES

1. PROVIDE ALL MATERIALS AND EQUIPMENT AND PERFORM ALL LABOR REQUIRED, TO INSTALL COMPLETE FOR AN OPERABLE PLUMBING SYSTEM AS INDICATED ON THE DRAWINGS, AS SPECIFIED, AND AS REQUIRED BY CODE. ALL MATERIAL SHALL BE NEW AND OF GOOD QUALITY. ALL WORK SHALL BE INSTALLED IN A NEAT AND WORKMAN LIKE MANNER.
2. CONTRACT DOCUMENT DRAWINGS FOR PLUMBING WORK ARE DIAGRAMMATIC AND ARE INTENDED TO CONVEY SCOPE AND GENERAL ARRANGEMENT ONLY. THE LOCATIONS OF ALL ITEMS SHOWN ON THE DRAWINGS OR CALLED FOR IN THE SPECIFICATIONS THAT ARE NOT DEFINITIVELY FIXED BY DRAWING DIMENSIONS ARE APPROXIMATE ONLY. THE EXACT LOCATION NECESSARY TO ACHIEVE THE BEST CONDITIONS AND RESULTS MUST BE DETERMINED BY THE PROJECT SITE CONDITIONS. DO NOT SCALE DRAWINGS. CERTAIN ITEMS SUCH AS RISES AND DROPS IN PIPING, ACCESS DOORS, ETC., ARE INDICATED ON THE CONTRACT DOCUMENT DRAWINGS FOR CLARITY NOT FOR A SPECIFIC LOCATION REQUIREMENT AND SHALL NOT BE INTERPRETED AS THE EXTENT OF THE REQUIREMENTS FOR THESE TYPES OF ITEMS.
3. INSTALL ALL PLUMBING EQUIPMENT AND APPURTENANCES IN ACCORDANCE WITH MANUFACTURER'S RECOMMENDATIONS, CONTRACT DOCUMENTS, AND APPLICABLE CODES AND REGULATIONS. COORDINATE ALL EQUIPMENT CONNECTIONS WITH MANUFACTURERS' CERTIFIED DRAWINGS. COORDINATE AND PROVIDE ALL TRANSITIONS REQUIRED FOR FINAL EQUIPMENT CONNECTIONS TO FURNISHED EQUIPMENT. FIELD VERIFY AND COORDINATE ALL PIPING DIMENSIONS BEFORE FABRICATION. LOCATE ALL PLUMBING EQUIPMENT FOR UNOBSTRUCTED ACCESS TO UNIT ACCESS PANELS, CONTROLS, VALVING, ETC.
4. COORDINATE CONSTRUCTION OF ALL PLUMBING WORK WITH ARCHITECTURAL, STRUCTURAL, CIVIL, SOILS, MECHANICAL, ELECTRICAL, COMMUNICATIONS WORK, ETC., AS SHOWN IN OTHER CONTRACT DOCUMENTS. PROPERLY CONSTRUCTED OFFSETS IN PIPING AROUND OBSTRUCTIONS SHALL BE PROVIDED AT NO ADDITIONAL COST. LOCATIONS AND SIZES OF ALL FLOOR, WALL AND ROOF OPENINGS SHALL BE COORDINATED WITH ALL OTHER TRADES INVOLVED.
5. MAINTAIN A MINIMUM OF 6'-8" CLEARANCE TO UNDERSIDE OF PIPES, CONDUITS, SUSPENDED EQUIPMENT, ETC., THROUGHOUT ACCESS ROUTES IN MECHANICAL ROOMS.
6. ALL TESTS SHALL BE COMPLETED BEFORE ANY EQUIPMENT OR PIPING INSULATION IS APPLIED, OR CONCEALED.
7. LOCATE ALL TEMPERATURE, PRESSURE AND FLOW MEASURING DEVICES IN ACCESSIBLE LOCATIONS WITH A STRAIGHT SECTION OF PIPE UPSTREAM AND DOWNSTREAM, AS RECOMMENDED BY THE DEVICE MANUFACTURER FOR ACCURACY. INSTALL THERMOMETER IN A VERTICAL AND TILTED POSITION TO ALLOW READING BY OBSERVER STANDING ON FLOOR.
8. WHERE TWO OR MORE PRODUCTS OF THE SAME TYPE OF EQUIPMENT ARE REQUIRED, THE PRODUCTS OF A SINGLE MANUFACTURER SHALL BE USED.
9. PROVIDE ACCESS PANELS FOR INSTALLATION IN WALLS AND CEILINGS, WHERE REQUIRED, TO SERVICE VALVES AND OTHER CONCEALED PLUMBING EQUIPMENT, DEVICES, ETC. ACCESS PANELS SHALL BE TURNED OVER TO THE GENERAL CONTRACTOR FOR INSTALLATION.
10. ALL OPENINGS IN FIRE RESISTANCE RATED WALLS DUE TO DUCTWORK, PIPING, CONDUIT, ETC., SHALL BE FIRE STOPPED IN ACCORDANCE WITH THE REQUIREMENTS OF ASTM E 814 & UL 1479. SIMILARLY, SEAL/FIRESTOP AS REQUIRED AT SMOKE RATED SURFACES AS WELL.
11. PROVIDE FLEXIBLE CONNECTIONS IN ALL PIPING CONNECTED TO AIR COMPRESSOR AND OTHER EQUIPMENT WHICH REQUIRES VIBRATION ISOLATION. FLEXIBLE CONNECTIONS SHALL BE PROVIDED AT THE POINT OF CONNECTION TO THE EQUIPMENT UNLESS OTHERWISE INDICATED.
12. INSTALL PIPING SO THAT ALL VALVES, STRAINERS, UNIONS, TRAPS, FLANGES AND OTHER APPURTENANCES REQUIRING ACCESS ARE EASILY ACCESSIBLE. ALL VALVES SHALL BE INSTALLED SO THAT THE VALVE REMAINS IN SERVICE WHEN EQUIPMENT OR PIPING ON EQUIPMENT SIDE OF VALVE IS REMOVED. ALL BALANCING VALVES AND BUTTERFLY VALVES SHALL BE PROVIDED WITH POSITION INDICATORS AND MAXIMUM ADJUSTABLE STOPS (AKA MEMORY STOPS). ALL VALVES (EXCEPT CONTROL VALVES) AND STRAINERS SHALL BE FULL SIZE OF PIPE BEFORE REDUCING SIZE TO MAKE CONNECTIONS TO EQUIPMENT AND CONTROLS.
13. UNIONS AND/OR FLANGES SHALL BE INSTALLED AT EACH PIECE OF EQUIPMENT AND IN BYPASSES TO PERMIT DISASSEMBLY FOR ALTERATION AND REPAIRS. INSTALL ALL PIPING WITHOUT FORCING OR SPRINGING.
14. DRAIN PIPING IN MECHANICAL ROOMS SHALL BE ROUTED SO AS NOT TO CREATE TRIPPING HAZARDS.
15. LOCATIONS WHERE SANITARY, WASTE, AND VENT PIPING PENETRATES THE SLAB, THE TRANSITION FROM PVC PIPE TO CAST IRON PIPE SHALL OCCUR BELOW THE SLAB.
16. PROVIDE HIGH POINT VENTS AND LOW POINT DRAINS. PROVIDE DIELECTRIC CONNECTIONS BETWEEN DISSIMILAR MATERIALS.
17. VENT FROM NATURAL GAS EQUIPMENT PRV'S TO BUILDING EXTERIOR. PIPE SHALL BE SAME SIZE AS VENT OPENING ON PRV'S. PROVIDE GOOSENECK WITH INSECT SCREEN AT EXTERIOR VENT TERMINATION.
18. REFER TO ARCHITECTURAL DRAWINGS FOR PENETRATIONS.
19. PROPERLY SEAL ALL PLUMBING SYSTEMS PIPING AND COMPONENT'S PENETRATIONS OF BUILDING AIR BARRIER.
20. SHUT-OFF VALVES SHALL BE INTEGRATED INTO THE PLUMBING DISTRIBUTION SYSTEMS TO PERMIT THE ISOLATION OF A FIXTURE OR EQUIPMENT TO PERMIT REPAIR OR MAINTENANCE, WITHOUT DISRUPTION OF OTHER FIXTURES OR EQUIPMENT.
21. WATER HAMMER ARRESTORS SHALL BE INSTALLED AT FLUSH VALVE-OPERATED FIXTURES, SOLENOID VALVES, AND ANY OTHER QUICK CLOSING VALVES TO MINIMIZE NOISE IN ACCORDANCE WITH THE INTERNATIONAL PLUMBING CODE AND PDI STANDARD WH201. ARRESTORS SHALL BE INSTALLED WITH PROPER ACCESS PANELS. AIR CHAMBERS SHALL NOT BE PERMITTED.
22. ALL FLOOR DRAINS AND FLOOR SINKS SHALL BE PROVIDED WITH A TRAP PRIMER CONNECTION SUPPLIED FROM A TRAP PRIMER VALVE, CONFORMING TO ASSE 1018 (ASSE 1044 FOR OPEN WAREHOUSE AREA), WITH APPROPRIATE DISTRIBUTION UNIT, TO REDUCE TRAP SEAL EVAPORATION.
23. WATER PIPE SIZES ARE BASED ON A MINIMUM WORKING PRESSURE OF 65 PSI AT A FLOW RATE OF 85 GPM AT THE LOCATION WHERE THE MAIN SERVICE ENTERS THE BUILDING.

PLUMBING ABBREVIATIONS

ABB	DESCRIPTION	ABB	DESCRIPTION	ABB	DESCRIPTION	ABB	DESCRIPTION
ABV	ABOVE	CU FT	CUBIC FEET	FT	FOOT, FEET	POL	PETROLEUM / OIL / LUBRICANT
AC	AIR COMPRESSOR	CUH	CABINET UNIT HEATER	FTG	FOOTING	PSI	POUNDS PER SQUARE INCH
AD	ACCESS DOOR, AIR DRYER	CWBT	CHILLED WATER BUFFER TANK	GA	GAUGE	QTY	QUANTITY
AFF	ABOVE FINISHED FLOOR	CWR	CHILLED WATER RETURN	GBD	GARBAGE DISPOSAL	REQ'D	REQUIRED
AFG	ABOVE FINISHED GRADE	CWS	CHILLED WATER SUPPLY	GC	GENERAL CONTRACTOR	RPM	REVOLUTIONS PER MINUTE
AFR	ABOVE FINISHED ROOF	DEG	DEGREE(S)	GPM	GALLONS PER MINUTE	RWC	RAIN WATER CONDUCTOR
AHU	AIR HANDLING UNIT	DF	DRINKING FOUNTAIN	GWH	GAS WATER HEATER	RWL	RAIN WATER LEADER
AP	ACCESS PANEL	DFU	DRAINAGE FIXTURE UNIT	HP	HORSE POWER	S	SINK
APPROX	APPROXIMATE(LY)	DIA	DIAMETER	HTG	HEATING	SF	SQUARE FEET
ARCH	ARCHITECT OR ARCHITECTURAL	DN	DOWN	HV	HEATING AND VENTILATION	SFU	SUPPLY FIXTURE UNIT(S)
AST	ABOVE GROUND STORAGE TANK	DU	DISTRIBUTION UNIT	HVAC	HEATING VENTILATION / AIR CONDITIONING	SH	SHOWER
C	CELSIUS	DWG	DRAWING	IE	INVERT ELEVATION	SRC	SECONDARY RAIN CONDUCTOR
Kg	KILOGRAM(S)	EC	ELECTRICAL CONTRACTOR	IN	INCH(ES)	SS	SERVICE SINK
L/s	LITERS PER SECOND	EL	EXPANSION LOOP	IRH	INFRARED RADIANT HEATER	STRUC	STRUCTURAL
m	METERS	ELEC	ELECTRIC(AL)	KS	KITCHEN SINK	SWC	SAFE WASTE CONNECTION
m³	CUBIC METERS	ELEV	ELEVATION	KW	KILOWATTS	TD	TRENCH DRAIN
m²	SQUARE METERS	ESEW	EMERGENCY SHOWER & EYE WASH	L	LAVATORY	TE	TOP ELEVATION
m/s	METERS PER SECOND	ET	EXPANSION TANK	LB(S)	POUND(S)	TEMP	TEMPERATURE
mm	MILIMETERS	ETR	EXISTING TO REMAIN	MAX	MAXIMUM	TOF	TOP OF FOOTING
Pa	PASCALS	EW, EEW	EMERGENCY EYE WASH	MC	MECHANICAL CONTRACTOR	TOP	TOP OF PIPE
W	WATT(S)	EWC	ELECTRIC WATER COOLER	MECH	MECHANICAL	TP	TRAP PRIMER VALVE
BLDG	BUILDING	EWH	ELECTRIC WATER HEATER	MFR, MFGR	MANUFACTURER	TYP	TYPICAL
BLW	BELOW	EX, EXIST	EXISTING	MIN	MINIMUM	U	URINAL
BOF	BOTTOM OF FOOTING	(F)	FUTURE	MISC	MISCELLANEOUS	UNO	UNLESS NOTED OTHERWISE
BOT	BOTTOM	F	FAHRENHEIT	MR	MOP RECEPTOR	VOL	VOLUME
C	CELSIUS	FCO	FLOOR CLEANOUT	NC	NORMALLY CLOSED	W	WASTE
CB	CATCH BASIN	FFE	FINISHED FLOOR ELEVATION	NIC	NOT IN CONTRACT	W/	WITH
CFH	CUBIC FEET PER HOUR	FIN	FINISHED	NO	NORMALLY OPEN	W/O	WITHOUT
CLG	CEILING	FLEX	FLEXIBLE	NTS	NOT TO SCALE	WB	WASHER BOX
CONC	CONCRETE	FLR	FLOOR	OB	OUTLET BOX	WC	WATER CLOSET, WATER COLUMN
COND	CONDENSATION	FPM	FEET PER MINUTE	P&T	PRESSURE & TEMPERATURE	WF	WASH FOUNTAIN
CONN	CONNECTION	FRP	FIBERGLASS REINFORCED PLASTIC PIPING	PC	PLUMBING CONTRACTOR	WH	WATER HEATER
CONT	CONTINUOUS, CONTINUATION			PDI	PLUMBING & DRAINAGE INSTITUTE		
CONTR	CONTRACTOR						

PLUMBING PIPE LEGEND

SYMBOL	ABBREV	DESCRIPTION
——CA——	CA	COMPRESSED AIR
—— – —— – ——	CW	DOMESTIC COLD WATER
—— – – ——	HW	DOMESTIC HOT WATER
—— – – – ——	HWR	DOMESTIC HOT WATER RETURN
—— – – -(140°)–	HW140	DOMESTIC HOT WATER (140°C)
—— – – – -(140°)–	HWR140	DOMESTIC HOT WATER RETURN (140°C)
——FP——	FP	FIRE PROTECTION
——G——	G	NATURAL GAS
——OW——	OW	OIL-LADEN WASTE
——PD——	PD	PUMP DISCHARGE
——SS——	SS	SANITARY SEWER
——ST——	ST	STORM SEWER
----TP----	TP	TRAP PRIMER PIPING
——TW——	TW	TEMPERED WATER
— — — -V- — — —	V	SANITARY VENT

GENERAL NOTES

1. SEE P-001 FOR GENERAL NOTES, ABBREVIATIONS & SYMBOLS.
2. REFER TO STRUCTURAL DRAWINGS FOR THE EXACT SIZE, LOCATION, AND ELEVATION OF FOUNDATIONS, FOOTINGS AND GRADE BEAMS.
3. REFER TO STRUCTURAL DRAWINGS FOR DETAILS OF PIPE CROSSINGS UNDER OR THROUGH THE STRUCTURAL FOUNDATIONS, FOOTINGS AND GRADE BEAMS.
4. ALL UNDERFLOOR SANITARY SEWERS SHALL BE INSTALLED AT A MINIMUM SLOPE OF 1/8"/1'-0", UNLESS NOTED OTHERWISE.
5. UNDERFLOOR VENTS SHALL CONNECT ABOVE CENTERLINE OF WASTE / SANITARY PIPE & SHALL RISE CONTINUOUSLY THROUGH FLOOR A MINIMUM 6" ABOVE FLOOD LEVEL OF FIXTURE. PROVIDE 45° CONNECTION TO WASTE / SANITARY LINE.
6. UNDERFLOOR SANITARY SEWER PIPING SHALL BE A MINIMUM OF 4" UNLESS NOTED OTHERWISE.
7. REFER TO P-700 SERIES FOR RISER DIAGRAMS.
8. SEE CIVIL DWGS FOR ACTUAL FINISHED FLOOR ELEVATION. TOP OF SLAB EQUALS FINISHED FLOOR ELEVATION AND MUST SERVE AS THE REFERENCE ELEVATION 0.0'.

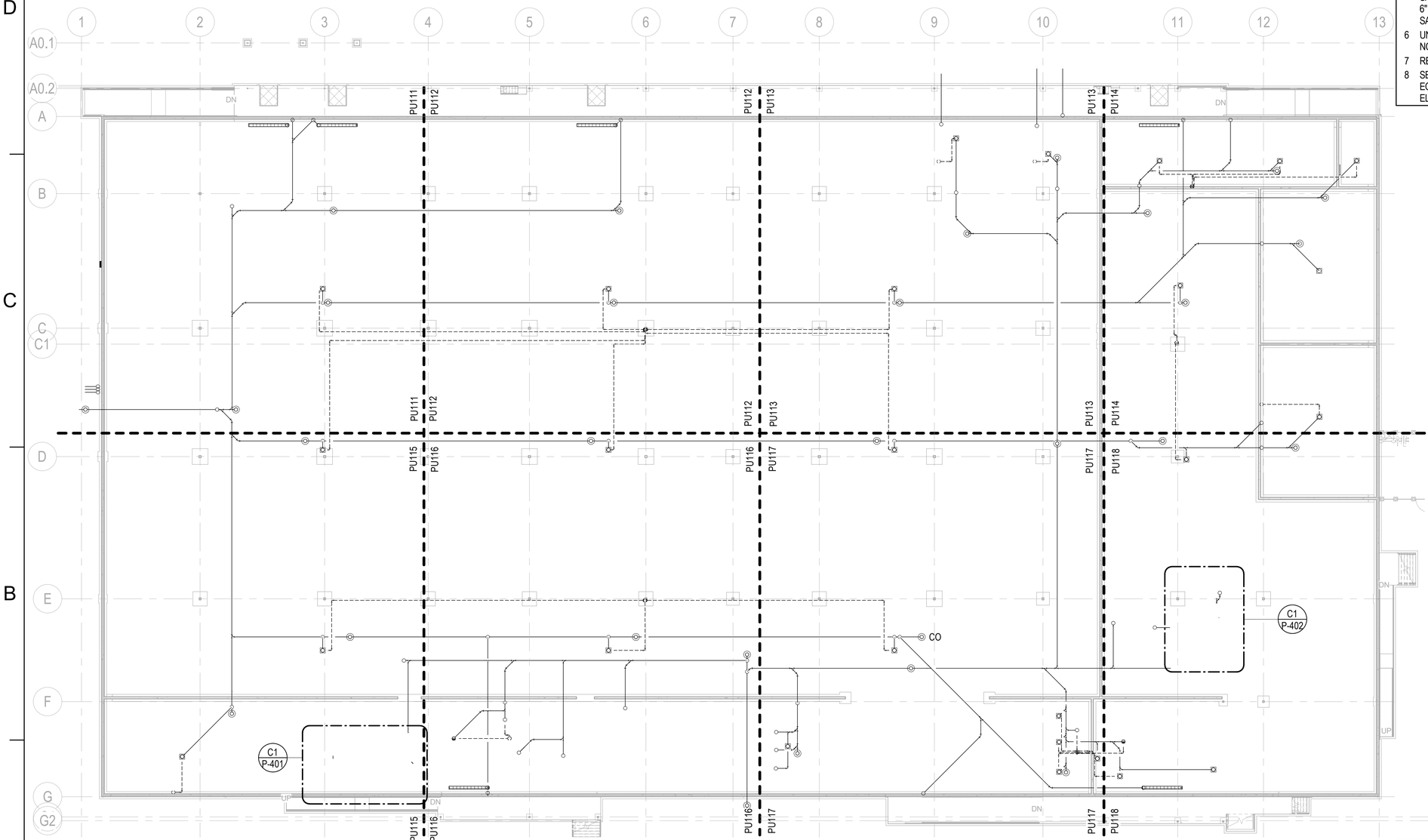

A1 PLUMBING - UNDERGROUND PLAN

SCALE: 1" = 20'-0"

KEYPLAN

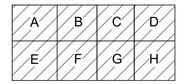

0 10' - 0" 20' - 0" 40' - 0"

SCALE: 1" = 20' - 0"

N

			APPR
			DATE
			DESCRIPTION
			SYM

NAVFAC

COMMONWEALTH OF PENNSYLVANIA
REGISTERED PROFESSIONAL
DAVID W. HURD
ENGINEER
No PE061160
SEAL

IRQ W.M. Jordan COMPANY – A JOINT VENTURE –

Michael Baker INTERNATIONAL
100 AIRSIDE DRIVE
MOON TOWNSHIP, PA 15108
A/E INFO

APPROVED

FOR COMMANDER NAVFAC

ACTIVITY
MARINE CORPS BASE
CAMP LEJEUNE

SATISFACTORY TO DATE DD/MM/YY

DES SKH | DRW JTP | CHK DWH

PM / DM TOWLER / ROOT

BRANCH HEAD SCE

DESIGN DIRECTOR R.L.Stephens, Jr.

FIRE PROTECTION DPS

DEPARTMENT OF THE NAVY
NAVAL FACILITIES ENGINEERING SYSTEMS COMMAND
ATLANTIC DESIGN AND CONSTRUCTION
MCB CAMP LEJEUNE

NAVAL FACILITIES ENGINEERING SYSTEMS COMMAND ATLANTIC
NORFOLK, VA
JACKSONVILLE, NC
LOGCOM CSP WAREHOUSE

PLUMBING - UNDERGROUND PLAN - OVERALL

SCALE: AS NOTED

EPROJECT NO.: 1639600

CONSTR. CONTR. NO.
N40085-20-C-0059

NAVFAC DRAWING NO.
14111273

SHEET 253 OF 447

PU110

DRAWFORM REVISION: 25 AUGUST 2020

P1527 FINAL SUBMISSION - 11/18/2021

PLOTTED: 11/15/2021 8:33:59 AM

FILE NAME: BIM 360/JHF PACKAGE 3\P1527 LOG COM CSP-1639600-P.rvt

GENERAL NOTES

1. SEE P-001 FOR GENERAL NOTES, ABBREVIATIONS & SYMBOLS.
2. REFER TO STRUCTURAL DRAWINGS FOR THE EXACT SIZE, LOCATION, AND ELEVATION OF FOUNDATIONS, FOOTINGS AND GRADE BEAMS.
3. REFER TO STRUCTURAL DRAWINGS FOR DETAILS OF PIPE CROSSINGS UNDER OR THROUGH THE STRUCTURAL FOUNDATIONS, FOOTINGS AND GRADE BEAMS.
4. ALL UNDERFLOOR SANITARY SEWERS SHALL BE INSTALLED AT A MINIMUM SLOPE OF 1/8"/1'-0", UNLESS NOTED OTHERWISE.
5. UNDERFLOOR VENTS SHALL CONNECT ABOVE CENTERLINE OF WASTE / SANITARY PIPE & SHALL RISE CONTINUOUSLY THROUGH FLOOR A MINIMUM 6" ABOVE FLOOD LEVEL OF FIXTURE. PROVIDE 45° CONNECTION TO WASTE / SANITARY LINE.
6. UNDERFLOOR SANITARY SEWER PIPING SHALL BE A MINIMUM OF 4" UNLESS NOTED OTHERWISE.
7. REFER TO P-700 SERIES FOR RISER DIAGRAMS.
8. SEE CIVIL DWGS FOR ACTUAL FINISHED FLOOR ELEVATION. TOP OF SLAB EQUALS FINISHED FLOOR ELEVATION AND MUST SERVE AS THE REFERENCE ELEVATION 0.0'.

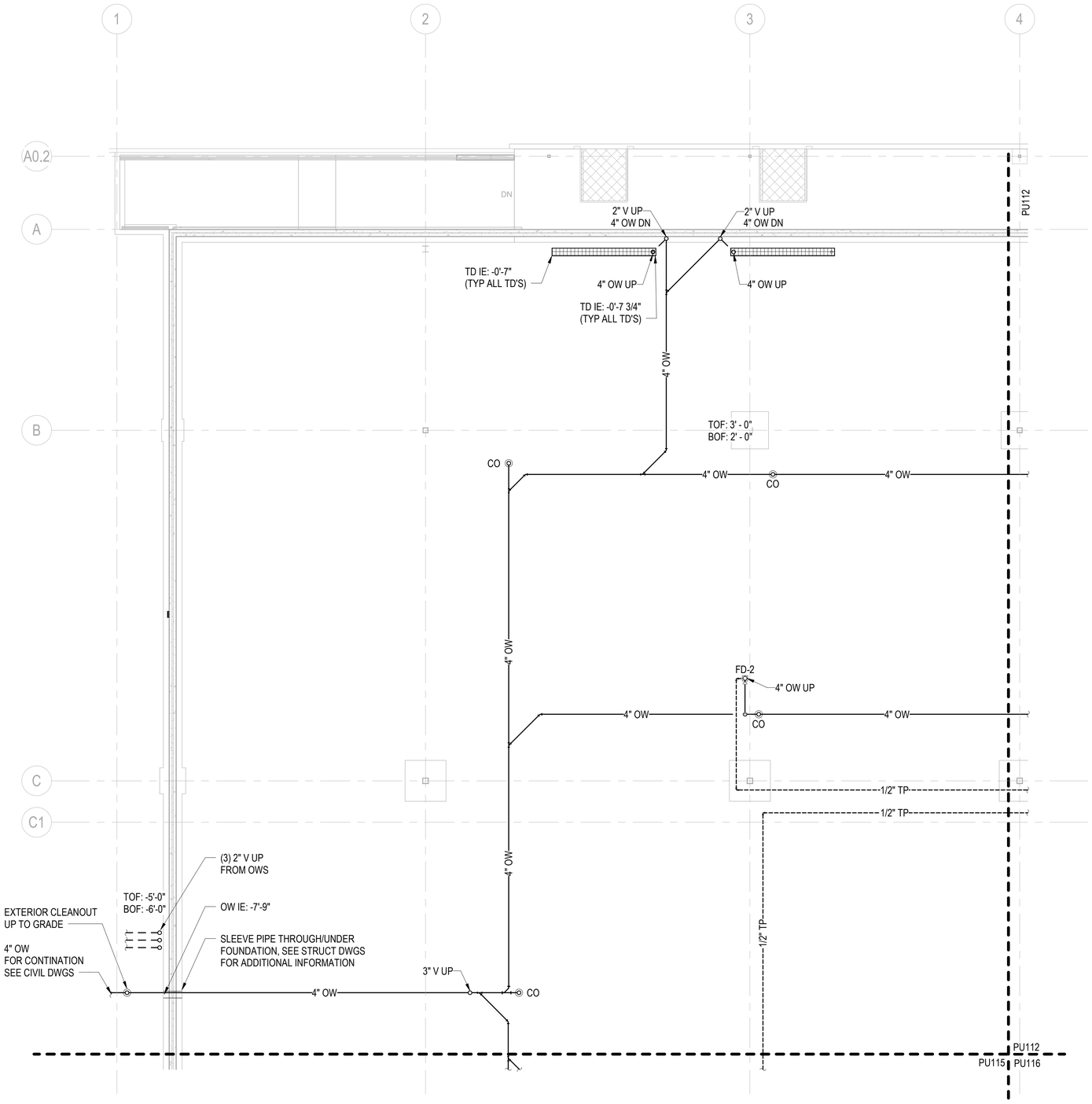

A1 PLUMBING - UNDERGROUND PLAN - AREA A
SCALE: 1/8" = 1'-0"

KEYPLAN

A	B	C	D
E	F	G	H

0 4' - 0" 8' - 0" 16' - 0"
SCALE: 1/8" = 1' - 0"

N

APPR	DATE	DESCRIPTION	SYM

SEAL
COMMONWEALTH OF PENNSYLVANIA
REGISTERED PROFESSIONAL
DAVID W. HURD
ENGINEER
No. PE061160

IRQ Joint Venture — W.M. Jordan Company
Michael Baker INTERNATIONAL
100 AIRSIDE DRIVE
MOON TOWNSHIP, PA 15108
A/E INFO

APPROVED
FOR COMMANDER NAVFAC
ACTIVITY
MARINE CORPS BASE
CAMP LEJEUNE
SATISFACTORY TO DATE DD/MM/YY
DES SKH | DRW JTP | CHK DWH
PM / DM TOWLER / ROOT
BRANCH HEAD SCE
DESIGN DIRECTOR R.L.Stephens, Jr.
FIRE PROTECTION DPS

DEPARTMENT OF THE NAVY
NAVAL FACILITIES ENGINEERING SYSTEMS COMMAND
ATLANTIC DESIGN AND CONSTRUCTION
MCB CAMP LEJEUNE

NAVAL FACILITIES ENGINEERING SYSTEMS COMMAND ATLANTIC
NORFOLK, VA
JACKSONVILLE, NC
LOGCOM CSP WAREHOUSE

PLUMBING - UNDERGROUND PLAN - AREA A

SCALE: AS NOTED
EPROJECT NO.: 1639600
CONSTR. CONTR. NO. N40085-20-C-0059
NAVFAC DRAWING NO. 14111274
SHEET 254 OF 447

PU111

DRAWFORM REVISION: 25 AUGUST 2020

P1527 FINAL SUBMISSION - 11/18/2021

PLOTTED: 11/15/2021 8:34:01 AM
FILE NAME: BIM 360://AIF PACKAGE 3/P1527 LOG COM CSP-1639600-P.rvt

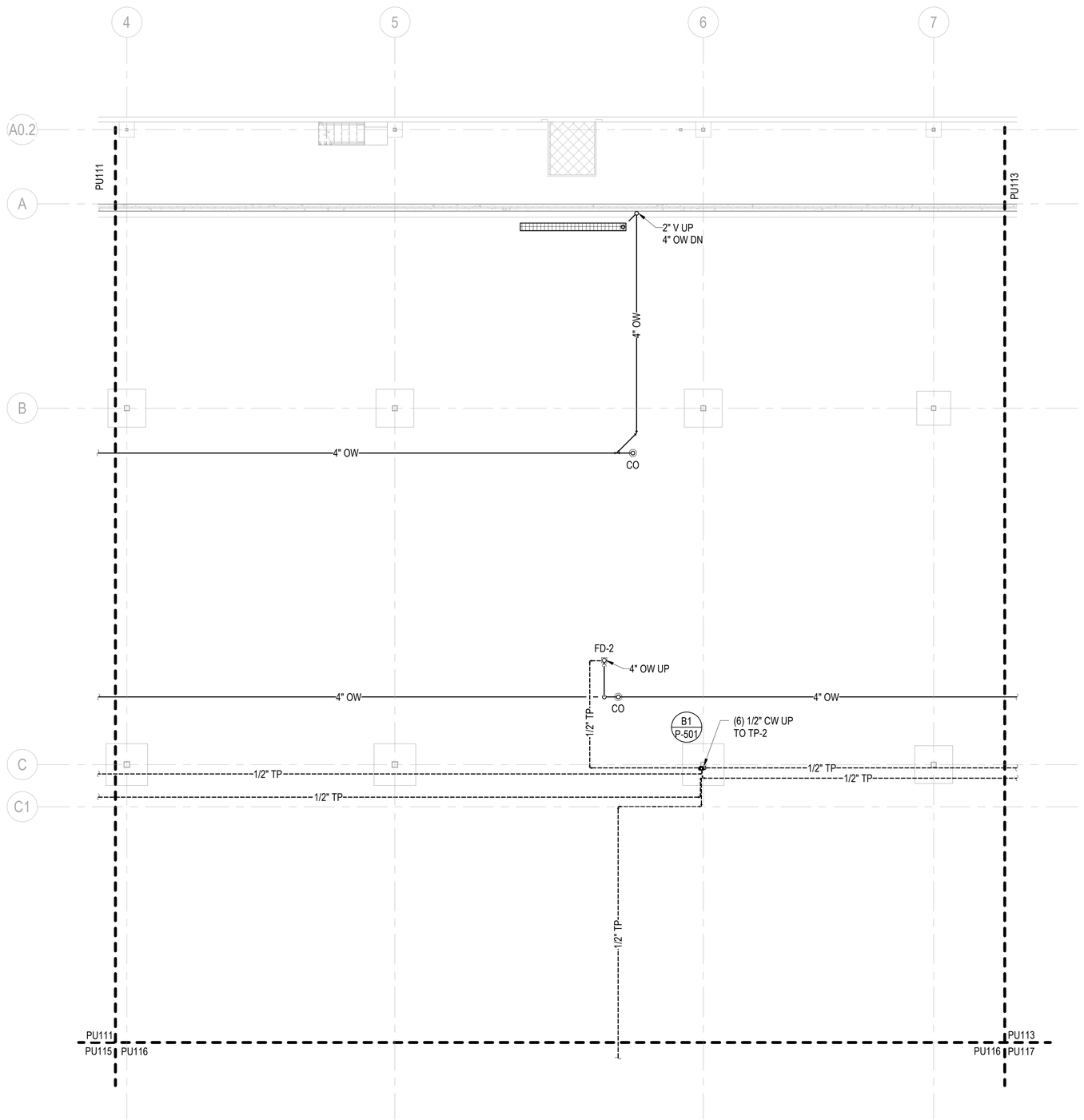

A1 PLUMBING - UNDERGROUND PLAN - AREA B

SCALE: 1/8" = 1'-0"

GENERAL NOTES

1. SEE P-001 FOR GENERAL NOTES, ABBREVIATIONS & SYMBOLS.
2. REFER TO STRUCTURAL DRAWINGS FOR THE EXACT SIZE, LOCATION, AND ELEVATION OF FOUNDATIONS, FOOTINGS AND GRADE BEAMS.
3. REFER TO STRUCTURAL DRAWINGS FOR DETAILS OF PIPE CROSSINGS UNDER OR THROUGH THE STRUCTURAL FOUNDATIONS, FOOTINGS AND GRADE BEAMS.
4. ALL UNDERFLOOR SANITARY SEWERS SHALL BE INSTALLED AT A MINIMUM SLOPE OF 1/8"/1'-0", UNLESS NOTED OTHERWISE.
5. UNDERFLOOR VENTS SHALL CONNECT ABOVE CENTERLINE OF WASTE / SANITARY PIPE & SHALL RISE CONTINUOUSLY THROUGH FLOOR A MINIMUM 6" ABOVE FLOOD LEVEL OF FIXTURE. PROVIDE 45° CONNECTION TO WASTE / SANITARY LINE.
6. UNDERFLOOR SANITARY SEWER PIPING SHALL BE A MINIMUM OF 4" UNLESS NOTED OTHERWISE.
7. REFER TO P-700 SERIES FOR RISER DIAGRAMS.
8. SEE CIVIL DWGS FOR ACTUAL FINISHED FLOOR ELEVATION. TOP OF SLAB EQUALS FINISHED FLOOR ELEVATION AND MUST SERVE AS THE REFERENCE ELEVATION 0.0'.

SYM	DESCRIPTION	DATE	APPR

KEYPLAN

A	B	C	D
E	F	G	H

0 4' - 0" 8' - 0" 16' - 0"

SCALE: 1/8" = 1' - 0"

N

Michael Baker INTERNATIONAL
100 AIRSIDE DRIVE
MOON TOWNSHIP, PA 15108
A/E INFO

APPROVED

FOR COMMANDER NAVFAC

ACTIVITY
MARINE CORPS BASE
CAMP LEJEUNE

SATISFACTORY TO DATE	DD/MM/YY
DES SKH	DRW JTP CHK DWH
PM / DM	TOWLER / ROOT
BRANCH HEAD	SCE
DESIGN DIRECTOR	R.L.Stephens, Jr.
FIRE PROTECTION	DPS

DEPARTMENT OF THE NAVY
NAVAL FACILITIES ENGINEERING SYSTEMS COMMAND
ATLANTIC DESIGN AND CONSTRUCTION
NAVAL FACILITIES ENGINEERING SYSTEMS COMMAND ATLANTIC
NORFOLK, VA
MCB CAMP LEJEUNE
JACKSONVILLE, NC
LOGCOM CSP WAREHOUSE

PLUMBING - UNDERGROUND PLAN - AREA B

SCALE:	AS NOTED
EPROJECT NO.:	1639600
CONSTR. CONTR. NO.	N40085-20-C-0059
NAVFAC DRAWING NO.	14111275
SHEET	255 OF 447

PU112

DRAWFORM REVISION: 25 AUGUST 2020

P1527 FINAL SUBMISSION - 11/18/2021

PLOTTED: 11/15/2021 8:34:04 AM

FILE NAME: BIM 360://HF PACKAGE 3/P1527 LOG COM CSP-1639600-P.rvt

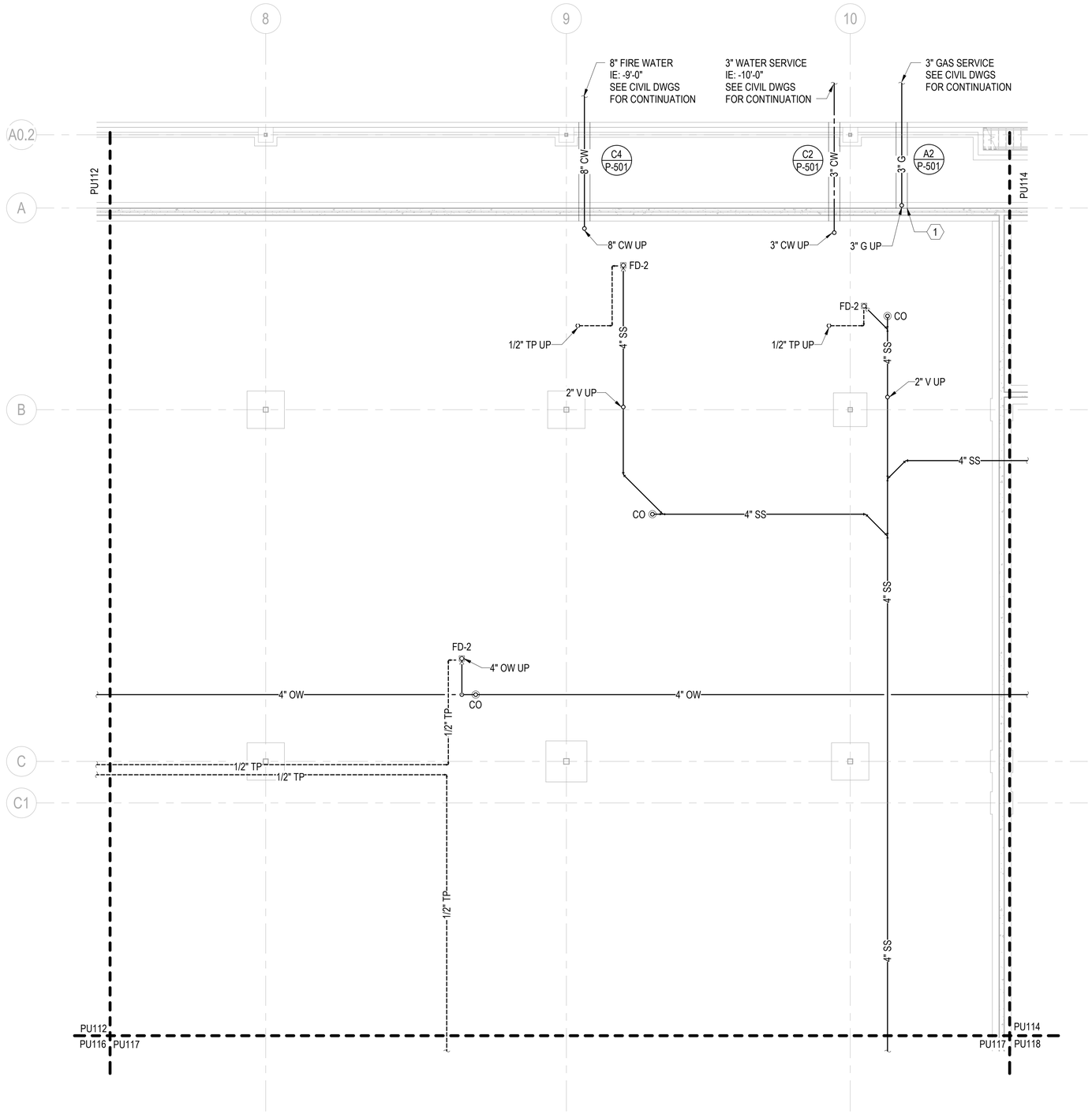

A1 PLUMBING - UNDERGROUND PLAN - AREA C
SCALE: 1/8" = 1'-0"

GENERAL NOTES

1. SEE P-001 FOR GENERAL NOTES, ABBREVIATIONS & SYMBOLS.
2. REFER TO STRUCTURAL DRAWINGS FOR THE EXACT SIZE, LOCATION, AND ELEVATION OF FOUNDATIONS, FOOTINGS AND GRADE BEAMS.
3. REFER TO STRUCTURAL DRAWINGS FOR DETAILS OF PIPE CROSSINGS UNDER OR THROUGH THE STRUCTURAL FOUNDATIONS, FOOTINGS AND GRADE BEAMS.
4. ALL UNDERFLOOR SANITARY SEWERS SHALL BE INSTALLED AT A MINIMUM SLOPE OF 1/8"/1'-0", UNLESS NOTED OTHERWISE.
5. UNDERFLOOR VENTS SHALL CONNECT ABOVE CENTERLINE OF WASTE / SANITARY PIPE & SHALL RISE CONTINUOUSLY THROUGH FLOOR A MINIMUM 6" ABOVE FLOOD LEVEL OF FIXTURE. PROVIDE 45° CONNECTION TO WASTE / SANITARY LINE.
6. UNDERFLOOR SANITARY SEWER PIPING SHALL BE A MINIMUM OF 4" UNLESS NOTED OTHERWISE.
7. REFER TO P-700 SERIES FOR RISER DIAGRAMS.
8. SEE CIVIL DWGS FOR ACTUAL FINISHED FLOOR ELEVATION. TOP OF SLAB EQUALS FINISHED FLOOR ELEVATION AND MUST SERVE AS THE REFERENCE ELEVATION 0.0'.

KEYNOTES

1. 6" DIA PVC ELECTRICAL CONDUIT TO SLEEVE 3" GAS LINE FROM 1 FOOT BEYOND THE FOUNDATION TO 1 FOOT ABOVE LOADING DOCK FLOOR

KEYPLAN

A	B	C	D
E	F	G	H

0 4' - 0" 8' - 0" 16' - 0"
SCALE: 1/8" = 1' - 0"

N

APPR | DATE | DESCRIPTION | SYM

NAVFAC

COMMONWEALTH OF PENNSYLVANIA
REGISTERED PROFESSIONAL
DAVID W. HURD
ENGINEER
No PE061160
SEAL

IRQ WM Jordan COMPANY – A JOINT VENTURE –

Michael Baker INTERNATIONAL
100 AIRSIDE DRIVE
MOON TOWNSHIP, PA 15108
A/E INFO

APPROVED

FOR COMMANDER NAVFAC

ACTIVITY
MARINE CORPS BASE
CAMP LEJEUNE

SATISFACTORY TO DATE DD/MM/YY

DES SKH | DRW JTP | CHK DWH

PM / DM TOWLER / ROOT

BRANCH HEAD SCE

DESIGN DIRECTOR R.L.Stephens, Jr.

FIRE PROTECTION DPS

DEPARTMENT OF THE NAVY
NAVAL FACILITIES ENGINEERING SYSTEMS COMMAND
ATLANTIC DESIGN AND CONSTRUCTION
MCB CAMP LEJEUNE

NAVAL FACILITIES ENGINEERING SYSTEMS COMMAND ATLANTIC
NORFOLK, VA

JACKSONVILLE, NC
LOGCOM CSP WAREHOUSE

PLUMBING - UNDERGROUND PLAN - AREA C

SCALE: AS NOTED
EPROJECT NO.: 1639600
CONSTR. CONTR. NO. N40085-20-C-0059
NAVFAC DRAWING NO. 14111276
SHEET 256 OF 447

PU113

DRAWFORM REVISION: 25 AUGUST 2020

P1527 FINAL SUBMISSION - 11/18/2021

PLOTTED: 11/15/2021 8:34:06 AM

FILE NAME: BIM 360://HF PACKAGE 3/P1527 LOG COM CSP-1639600-P.rvt

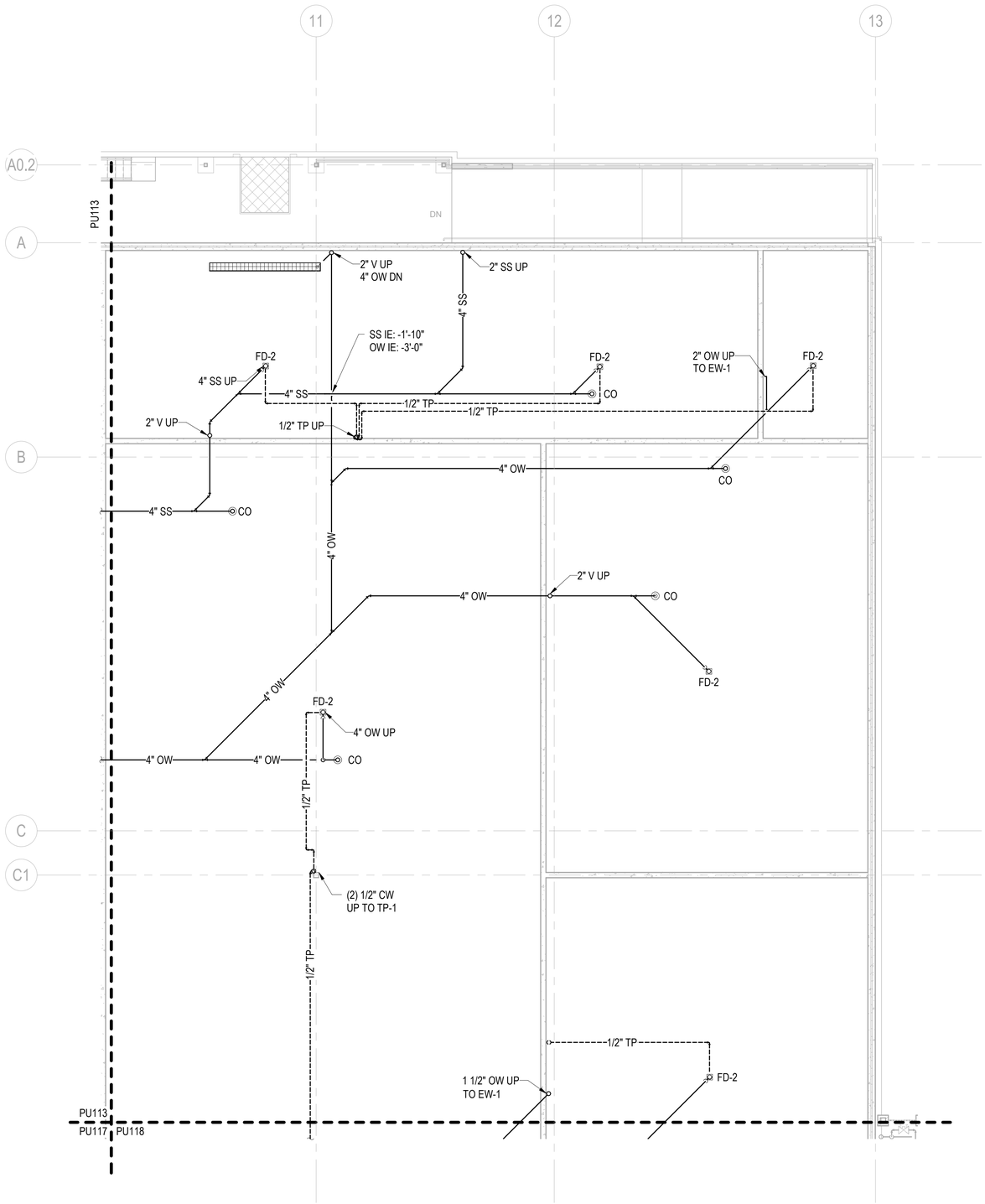

A1 PLUMBING - UNDERGROUND PLAN - AREA D
SCALE: 1/8" = 1'-0"

GENERAL NOTES

1. SEE P-001 FOR GENERAL NOTES, ABBREVIATIONS & SYMBOLS.
2. REFER TO STRUCTURAL DRAWINGS FOR THE EXACT SIZE, LOCATION, AND ELEVATION OF FOUNDATIONS, FOOTINGS AND GRADE BEAMS.
3. REFER TO STRUCTURAL DRAWINGS FOR DETAILS OF PIPE CROSSINGS UNDER OR THROUGH THE STRUCTURAL FOUNDATIONS, FOOTINGS AND GRADE BEAMS.
4. ALL UNDERFLOOR SANITARY SEWERS SHALL BE INSTALLED AT A MINIMUM SLOPE OF 1/8"/1'-0", UNLESS NOTED OTHERWISE.
5. UNDERFLOOR VENTS SHALL CONNECT ABOVE CENTERLINE OF WASTE / SANITARY PIPE & SHALL RISE CONTINUOUSLY THROUGH FLOOR A MINIMUM 6" ABOVE FLOOD LEVEL OF FIXTURE. PROVIDE 45° CONNECTION TO WASTE / SANITARY LINE.
6. UNDERFLOOR SANITARY SEWER PIPING SHALL BE A MINIMUM OF 4" UNLESS NOTED OTHERWISE.
7. REFER TO P-700 SERIES FOR RISER DIAGRAMS.
8. SEE CIVIL DWGS FOR ACTUAL FINISHED FLOOR ELEVATION. TOP OF SLAB EQUALS FINISHED FLOOR ELEVATION AND MUST SERVE AS THE REFERENCE ELEVATION 0.0'.

KEYPLAN

A	B	C	D
E	F	G	H

0 4' - 0" 8' - 0" 16' - 0"
SCALE: 1/8" = 1' - 0"

N

NO	DESCRIPTION	DATE	APPR

NAVFAC

COMMONWEALTH OF PENNSYLVANIA
REGISTERED PROFESSIONAL
DAVID W. HURD
ENGINEER
No PE061162
SEAL

IRQ WM Jordan COMPANY – A JOINT VENTURE –

Michael Baker INTERNATIONAL
100 AIRSIDE DRIVE
MOON TOWNSHIP, PA 15108
A/E INFO

APPROVED
FOR COMMANDER NAVFAC

ACTIVITY
MARINE CORPS BASE
CAMP LEJEUNE

SATISFACTORY TO DATE DD/MM/YY

DES	DRW	CHK
SKH	JTP	DWH

PM / DM TOWLER / ROOT
BRANCH HEAD SCE
DESIGN DIRECTOR R.L.Stephens, Jr.
FIRE PROTECTION DPS

DEPARTMENT OF THE NAVY
NAVAL FACILITIES ENGINEERING SYSTEMS COMMAND
ATLANTIC DESIGN AND CONSTRUCTION
MCB CAMP LEJEUNE

NAVAL FACILITIES ENGINEERING SYSTEMS COMMAND ATLANTIC
NORFOLK, VA
JACKSONVILLE, NC
LOGCOM CSP WAREHOUSE

PLUMBING - UNDERGROUND PLAN - AREA D

SCALE: AS NOTED
EPROJECT NO.: 1639600
CONSTR. CONTR. NO. N40085-20-C-0059
NAVFAC DRAWING NO. 14111277
SHEET 257 OF 447

PU114

DRAWFORM REVISION: 25 AUGUST 2020

P1527 FINAL SUBMISSION - 11/18/2021

PLOTTED: 11/15/2021 8:34:09 AM

FILE NAME: BIM 360/IHF PACKAGE 3/P1527 LOG COM CSP-1639600-P.rvt

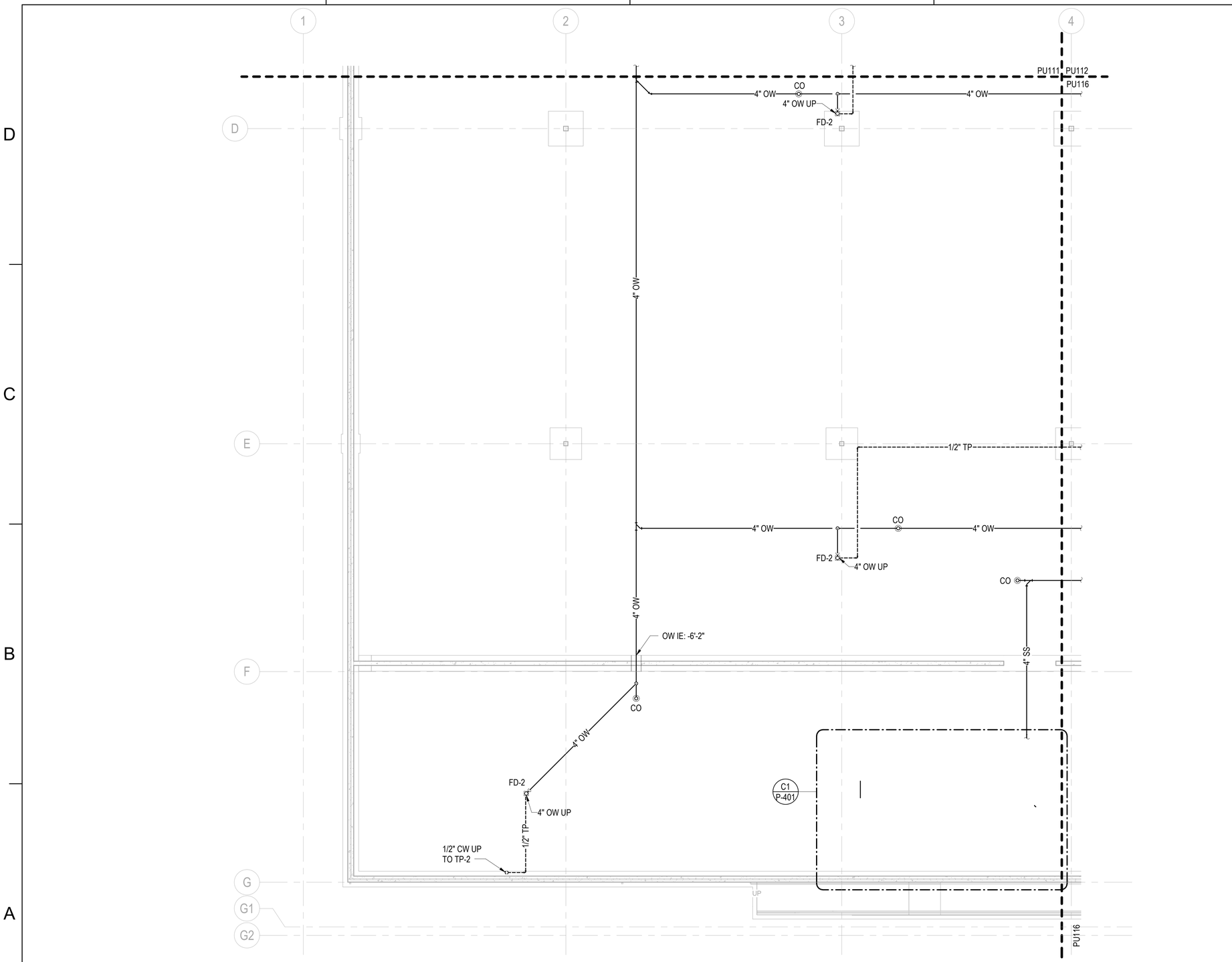

A1 PLUMBING - UNDERGROUND PLAN - AREA E
SCALE: 1/8" = 1'-0"

GENERAL NOTES

1. SEE P-001 FOR GENERAL NOTES, ABBREVIATIONS & SYMBOLS.
2. REFER TO STRUCTURAL DRAWINGS FOR THE EXACT SIZE, LOCATION, AND ELEVATION OF FOUNDATIONS, FOOTINGS AND GRADE BEAMS.
3. REFER TO STRUCTURAL DRAWINGS FOR DETAILS OF PIPE CROSSINGS UNDER OR THROUGH THE STRUCTURAL FOUNDATIONS, FOOTINGS AND GRADE BEAMS.
4. ALL UNDERFLOOR SANITARY SEWERS SHALL BE INSTALLED AT A MINIMUM SLOPE OF 1/8"/1'-0", UNLESS NOTED OTHERWISE.
5. UNDERFLOOR VENTS SHALL CONNECT ABOVE CENTERLINE OF WASTE / SANITARY PIPE & SHALL RISE CONTINUOUSLY THROUGH FLOOR A MINIMUM 6" ABOVE FLOOD LEVEL OF FIXTURE. PROVIDE 45° CONNECTION TO WASTE / SANITARY LINE.
6. UNDERFLOOR SANITARY SEWER PIPING SHALL BE A MINIMUM OF 4" UNLESS NOTED OTHERWISE.
7. REFER TO P-700 SERIES FOR RISER DIAGRAMS.
8. SEE CIVIL DWGS FOR ACTUAL FINISHED FLOOR ELEVATION. TOP OF SLAB EQUALS FINISHED FLOOR ELEVATION AND MUST SERVE AS THE REFERENCE ELEVATION 0.0'.

KEYPLAN

A	B	C	D
E	F	G	H

0 4' - 0" 8' - 0" 16' - 0"
SCALE: 1/8" = 1' - 0"

N

SYM	DESCRIPTION	DATE	APPR

NAVFAC

COMMONWEALTH OF PENNSYLVANIA
REGISTERED PROFESSIONAL
DAVID W. HURD
ENGINEER
No. PE061162
SEAL

RQ W.M. Jordan COMPANY
- A JOINT VENTURE -

Michael Baker INTERNATIONAL
100 AIRSIDE DRIVE
MOON TOWNSHIP, PA 15108
A/E INFO

APPROVED

FOR COMMANDER NAVFAC

ACTIVITY
MARINE CORPS BASE
CAMP LEJEUNE

SATISFACTORY TO DATE DD/MM/YY
DES SKH DRW JTP CHK DWH
PM / DM TOWLER / ROOT
BRANCH HEAD SCE
DESIGN DIRECTOR R.L.Stephens, Jr.
FIRE PROTECTION DPS

DEPARTMENT OF THE NAVY
NAVAL FACILITIES ENGINEERING SYSTEMS COMMAND
NAVAL FACILITIES ENGINEERING SYSTEMS COMMAND ATLANTIC
ATLANTIC DESIGN AND CONSTRUCTION
NORFOLK, VA
MCB CAMP LEJEUNE
JACKSONVILLE, NC
LOGCOM CSP WAREHOUSE
PLUMBING - UNDERGROUND PLAN - AREA E

SCALE: AS NOTED
EPROJECT NO.: 1639600
CONSTR. CONTR. NO. N40085-20-C-0059
NAVFAC DRAWING NO. 14111278
SHEET 258 OF 447

PU115

DRAWFORM REVISION: 25 AUGUST 2020

P1527 FINAL SUBMISSION - 11/18/2021

PLOTTED: 11/15/2021 8:34:11 AM

FILE NAME: BIM 360://HIF PACKAGE 3/P1527 LOG COM CSP-1639600-P.rvt

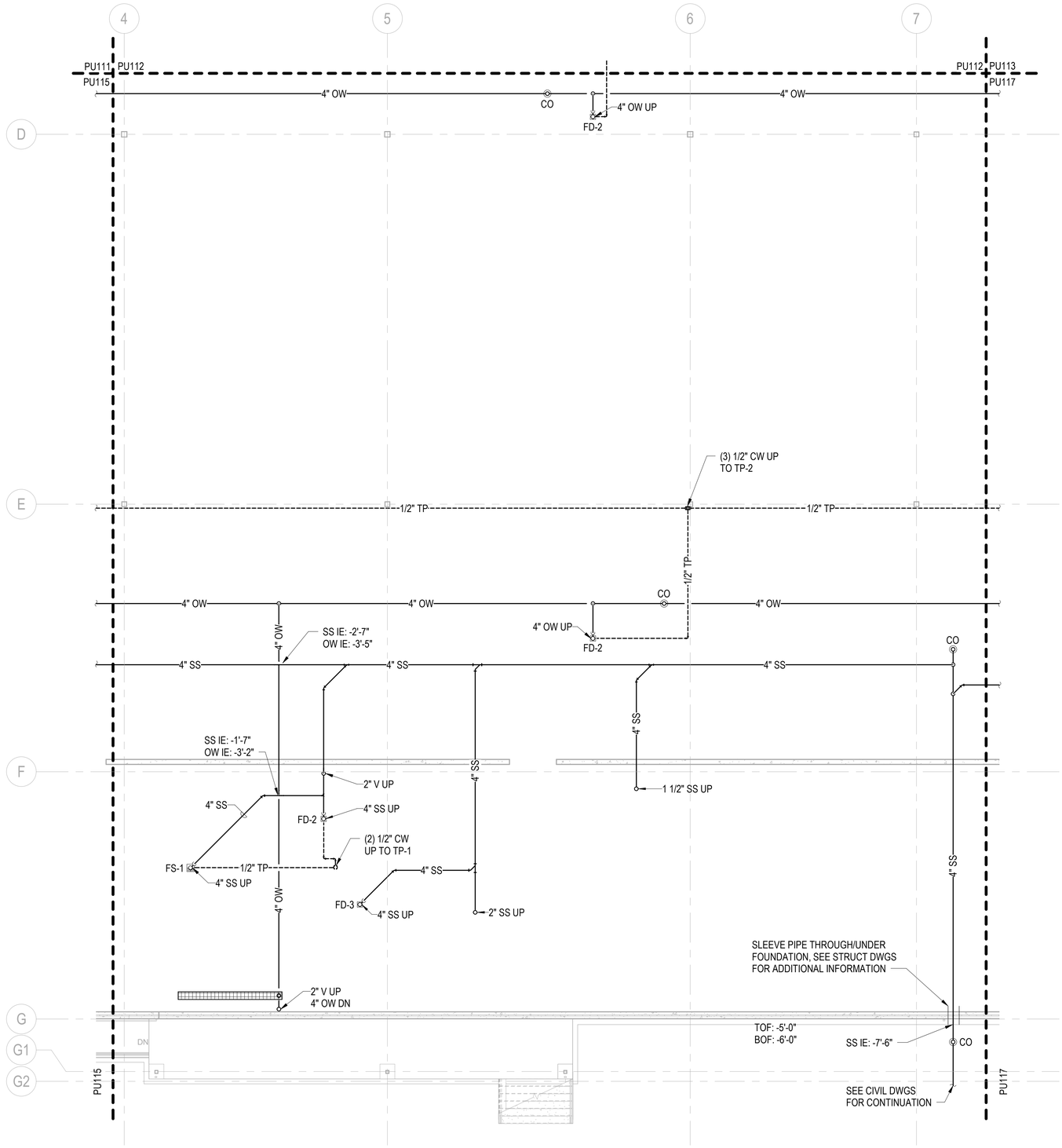

A1 PLUMBING - UNDERGROUND PLAN - AREA F
SCALE: 1/8" = 1'-0"

GENERAL NOTES

1. SEE P-001 FOR GENERAL NOTES, ABBREVIATIONS & SYMBOLS.
2. REFER TO STRUCTURAL DRAWINGS FOR THE EXACT SIZE, LOCATION, AND ELEVATION OF FOUNDATIONS, FOOTINGS AND GRADE BEAMS.
3. REFER TO STRUCTURAL DRAWINGS FOR DETAILS OF PIPE CROSSINGS UNDER OR THROUGH THE STRUCTURAL FOUNDATIONS, FOOTINGS AND GRADE BEAMS.
4. ALL UNDERFLOOR SANITARY SEWERS SHALL BE INSTALLED AT A MINIMUM SLOPE OF 1/8"/1'-0", UNLESS NOTED OTHERWISE.
5. UNDERFLOOR VENTS SHALL CONNECT ABOVE CENTERLINE OF WASTE / SANITARY PIPE & SHALL RISE CONTINUOUSLY THROUGH FLOOR A MINIMUM 6" ABOVE FLOOD LEVEL OF FIXTURE. PROVIDE 45° CONNECTION TO WASTE / SANITARY LINE.
6. UNDERFLOOR SANITARY SEWER PIPING SHALL BE A MINIMUM OF 4" UNLESS NOTED OTHERWISE.
7. REFER TO P-700 SERIES FOR RISER DIAGRAMS.
8. SEE CIVIL DWGS FOR ACTUAL FINISHED FLOOR ELEVATION. TOP OF SLAB EQUALS FINISHED FLOOR ELEVATION AND MUST SERVE AS THE REFERENCE ELEVATION 0.0'.

KEYPLAN

A	B	C	D
E	F	G	H

0 4' - 0" 8' - 0" 16' - 0"
SCALE: 1/8" = 1' - 0"

N

SYM	DESCRIPTION	DATE	APPR

NAVFAC

COMMONWEALTH OF PENNSYLVANIA
REGISTERED PROFESSIONAL
DAVID W. HURD
ENGINEER
No. PE061162
SEAL

RQ W.M. Jordan COMPANY
- A JOINT VENTURE -

Michael Baker INTERNATIONAL
100 AIRSIDE DRIVE
MOON TOWNSHIP, PA 15108
A/E INFO

APPROVED

FOR COMMANDER NAVFAC

ACTIVITY
MARINE CORPS BASE CAMP LEJEUNE

SATISFACTORY TO DATE DD/MM/YY
DES SKH DRW JTP CHK DWH
PM / DM TOWLER / ROOT
BRANCH HEAD SCE
DESIGN DIRECTOR R.L.Stephens, Jr.
FIRE PROTECTION DPS

DEPARTMENT OF THE NAVY
NAVAL FACILITIES ENGINEERING SYSTEMS COMMAND
NAVAL FACILITIES ENGINEERING SYSTEMS COMMAND ATLANTIC
ATLANTIC DESIGN AND CONSTRUCTION
NORFOLK, VA
MCB CAMP LEJEUNE
JACKSONVILLE, NC
LOGCOM CSP WAREHOUSE
PLUMBING - UNDERGROUND PLAN - AREA F

SCALE: AS NOTED
EPROJECT NO.: 1639600
CONSTR. CONTR. NO. N40085-20-C-0059
NAVFAC DRAWING NO. 14111279
SHEET 259 OF 447
PU116
DRAWFORM REVISION: 25 AUGUST 2020

P1527 FINAL SUBMISSION - 11/18/2021

PLOTTED: 11/15/2021 8:34:14 AM
FILE NAME: BIM 360://HIF PACKAGE 3/P1527 LOG COM CSP-1639600-P.rvt

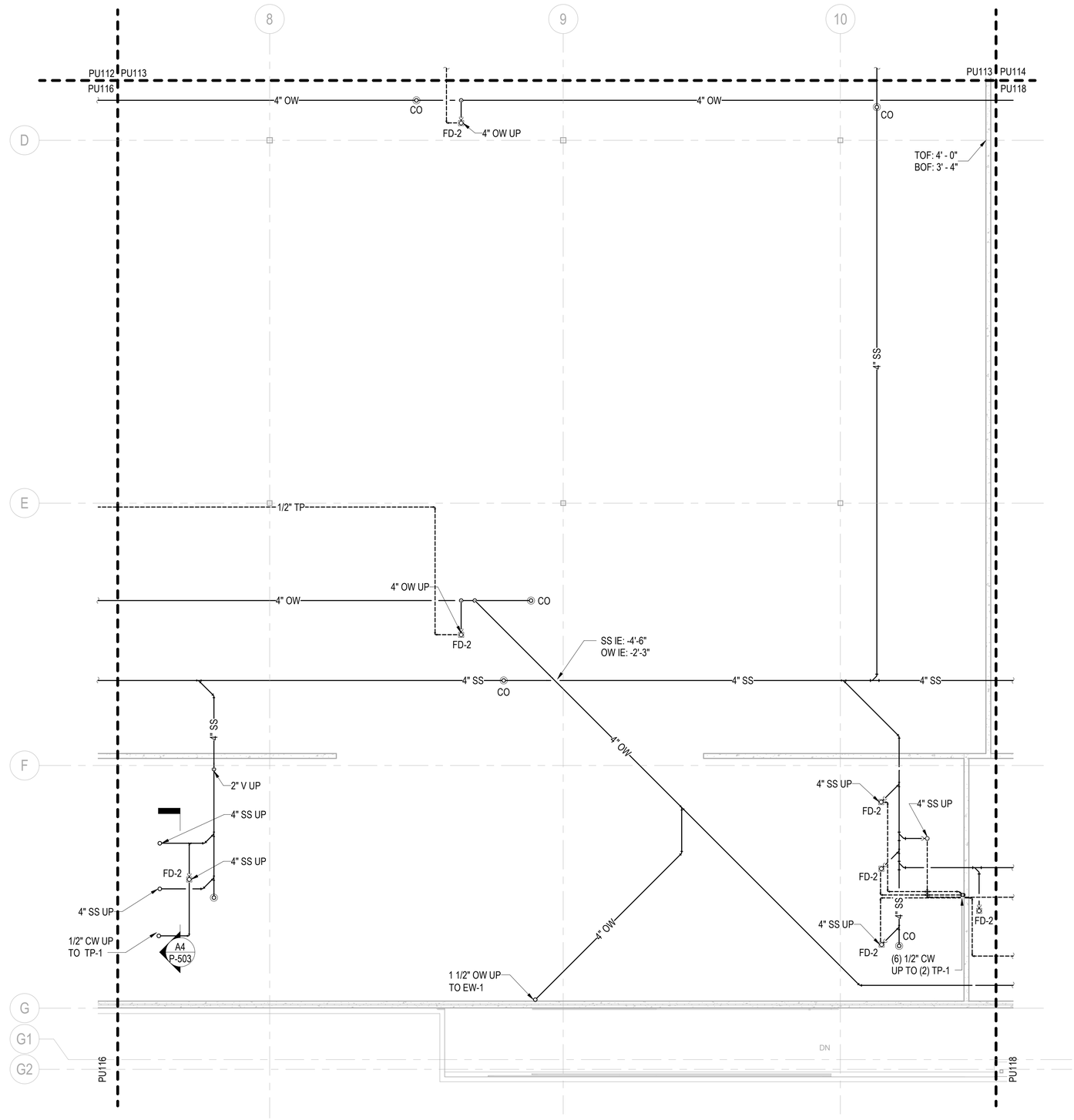

A1 PLUMBING - UNDERGROUND PLAN - AREA G

SCALE: 1/8" = 1'-0"

GENERAL NOTES

1. SEE P-001 FOR GENERAL NOTES, ABBREVIATIONS & SYMBOLS.
2. REFER TO STRUCTURAL DRAWINGS FOR THE EXACT SIZE, LOCATION, AND ELEVATION OF FOUNDATIONS, FOOTINGS AND GRADE BEAMS.
3. REFER TO STRUCTURAL DRAWINGS FOR DETAILS OF PIPE CROSSINGS UNDER OR THROUGH THE STRUCTURAL FOUNDATIONS, FOOTINGS AND GRADE BEAMS.
4. ALL UNDERFLOOR SANITARY SEWERS SHALL BE INSTALLED AT A MINIMUM SLOPE OF 1/8"/1'-0", UNLESS NOTED OTHERWISE.
5. UNDERFLOOR VENTS SHALL CONNECT ABOVE CENTERLINE OF WASTE / SANITARY PIPE & SHALL RISE CONTINUOUSLY THROUGH FLOOR A MINIMUM 6" ABOVE FLOOD LEVEL OF FIXTURE. PROVIDE 45° CONNECTION TO WASTE / SANITARY LINE.
6. UNDERFLOOR SANITARY SEWER PIPING SHALL BE A MINIMUM OF 4" UNLESS NOTED OTHERWISE.
7. REFER TO P-700 SERIES FOR RISER DIAGRAMS.
8. SEE CIVIL DWGS FOR ACTUAL FINISHED FLOOR ELEVATION. TOP OF SLAB EQUALS FINISHED FLOOR ELEVATION AND MUST SERVE AS THE REFERENCE ELEVATION 0.0'.

APPR	DATE	DESCRIPTION	SYM

NAVFAC

COMMONWEALTH OF PENNSYLVANIA
REGISTERED PROFESSIONAL
DAVID W. HURD
ENGINEER
No. PE061160
SEAL

IRQ WM Jordan COMPANY – A JOINT VENTURE –

Michael Baker INTERNATIONAL
100 AIRSIDE DRIVE
MOON TOWNSHIP, PA 15108
A/E INFO

APPROVED

FOR COMMANDER NAVFAC

ACTIVITY
MARINE CORPS BASE
CAMP LEJEUNE

SATISFACTORY TO DATE DD/MM/YY

DES SKH	DRW JTP	CHK DWH

PM / DM TOWLER / ROOT
BRANCH HEAD SCE
DESIGN DIRECTOR R.L.Stephens, Jr.
FIRE PROTECTION DPS

DEPARTMENT OF THE NAVY
NAVAL FACILITIES ENGINEERING SYSTEMS COMMAND
ATLANTIC DESIGN AND CONSTRUCTION
NAVAL FACILITIES ENGINEERING SYSTEMS COMMAND ATLANTIC
NORFOLK, VA
MCB CAMP LEJEUNE
JACKSONVILLE, NC
LOGCOM CSP WAREHOUSE

PLUMBING - UNDERGROUND PLAN - AREA G

SCALE: AS NOTED
EPROJECT NO.: 1639600
CONSTR. CONTR. NO. N40085-20-C-0059
NAVFAC DRAWING NO. 14111280
SHEET 260 OF 447

PU117

DRAWFORM REVISION: 25 AUGUST 2020

KEYPLAN

A	B	C	D
E	F	G	H

0 4' - 0" 8' - 0" 16' - 0"
SCALE: 1/8" = 1' - 0"

N

P1527 FINAL SUBMISSION - 11/18/2021

PLOTTED: 11/15/2021 8:34:15 AM

FILE NAME: BIM 360://HF PACKAGE 3/P1527 LOG COM CSP-1639600-P.rvt

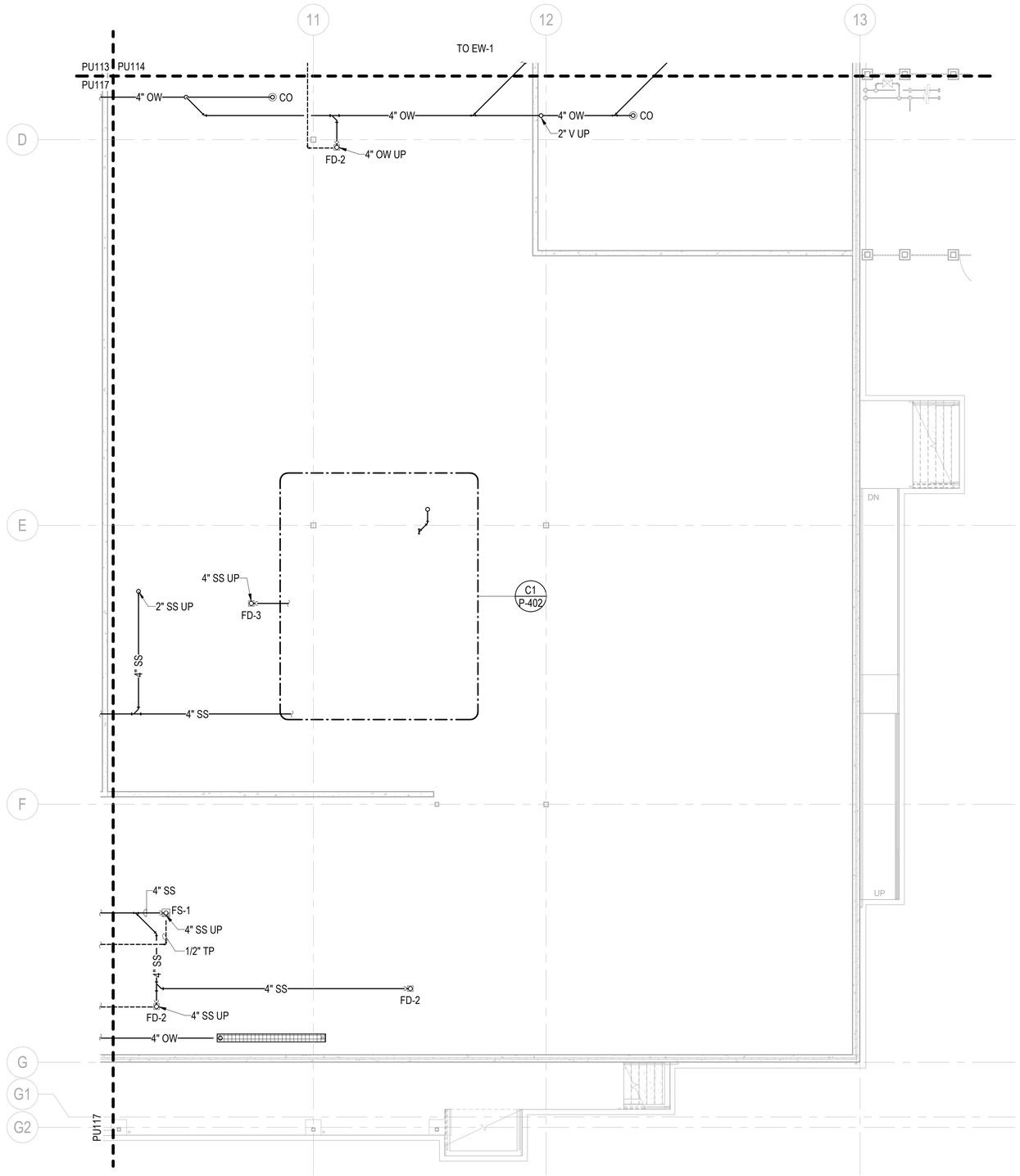

A1 PLUMBING - UNDERGROUND PLAN - AREA H
SCALE: 1/8" = 1'-0"

GENERAL NOTES

1. SEE P-001 FOR GENERAL NOTES, ABBREVIATIONS & SYMBOLS.
2. REFER TO STRUCTURAL DRAWINGS FOR THE EXACT SIZE, LOCATION, AND ELEVATION OF FOUNDATIONS, FOOTINGS AND GRADE BEAMS.
3. REFER TO STRUCTURAL DRAWINGS FOR DETAILS OF PIPE CROSSINGS UNDER OR THROUGH THE STRUCTURAL FOUNDATIONS, FOOTINGS AND GRADE BEAMS.
4. ALL UNDERFLOOR SANITARY SEWERS SHALL BE INSTALLED AT A MINIMUM SLOPE OF 1/8"/1'-0", UNLESS NOTED OTHERWISE.
5. UNDERFLOOR VENTS SHALL CONNECT ABOVE CENTERLINE OF WASTE / SANITARY PIPE & SHALL RISE CONTINUOUSLY THROUGH FLOOR A MINIMUM 6" ABOVE FLOOD LEVEL OF FIXTURE. PROVIDE 45° CONNECTION TO WASTE / SANITARY LINE.
6. UNDERFLOOR SANITARY SEWER PIPING SHALL BE A MINIMUM OF 4" UNLESS NOTED OTHERWISE.
7. REFER TO P-700 SERIES FOR RISER DIAGRAMS.
8. SEE CIVIL DWGS FOR ACTUAL FINISHED FLOOR ELEVATION. TOP OF SLAB EQUALS FINISHED FLOOR ELEVATION AND MUST SERVE AS THE REFERENCE ELEVATION 0.0'.

KEYPLAN

A	B	C	D
E	F	G	H

0 4' - 0" 8' - 0" 16' - 0"
SCALE: 1/8" = 1' - 0"

N

SYM	DESCRIPTION	DATE	APPR

NAVFAC

COMMONWEALTH OF PENNSYLVANIA
REGISTERED PROFESSIONAL
DAVID W. HURD
ENGINEER
No. PE061162
SEAL

RQ W.M. Jordan COMPANY
- A JOINT VENTURE -

Michael Baker INTERNATIONAL
100 AIRSIDE DRIVE
MOON TOWNSHIP, PA 15108
A/E INFO

APPROVED

FOR COMMANDER NAVFAC

ACTIVITY
MARINE CORPS BASE
CAMP LEJEUNE

SATISFACTORY TO DATE DD/MM/YY
DES SKH DRW JTP CHK DWH
PM / DM TOWLER / ROOT
BRANCH HEAD SCE
DESIGN DIRECTOR R.L.Stephens, Jr.
FIRE PROTECTION DPS

DEPARTMENT OF THE NAVY
NAVAL FACILITIES ENGINEERING SYSTEMS COMMAND
NAVAL FACILITIES ENGINEERING SYSTEMS COMMAND ATLANTIC
ATLANTIC DESIGN AND CONSTRUCTION
NORFOLK, VA
MCB CAMP LEJEUNE
JACKSONVILLE, NC
LOGCOM CSP WAREHOUSE
PLUMBING - UNDERGROUND PLAN - AREA H

SCALE: AS NOTED
EPROJECT NO.: 1639600
CONSTR. CONTR. NO. N40085-20-C-0059
NAVFAC DRAWING NO. 14111281
SHEET 261 OF 447

PU118

DRAWFORM REVISION: 25 AUGUST 2020

P1527 FINAL SUBMISSION - 11/18/2021

PLOTTED: 11/15/2021 8:34:18 AM

FILE NAME: BIM 360://HF PACKAGE 3/P1527 LOG COM CSP-1639600-P.rvt

GENERAL NOTES

1. SEE P-001 FOR GENERAL NOTES, ABBREVIATIONS & SYMBOLS.
2. ALL SANITARY SEWERS SHALL BE INSTALLED AT A MINIMUM SLOPE OF 1/8"/1'-0", UNLESS NOTED OTHERWISE.
3. VENTS SHALL CONNECT ABOVE CENTERLINE OF HORIZONTAL WASTE / SANITARY PIPE & SHALL RISE CONTINUOUSLY THROUGH FLOOR A MINIMUM 6" ABOVE FLOOD LEVEL OF FIXTURE. PROVIDE 45° CONNECTION TO WASTE / SANITARY LINE.
4. REFER TO P-700 SERIES FOR RISER DIAGRAMS.

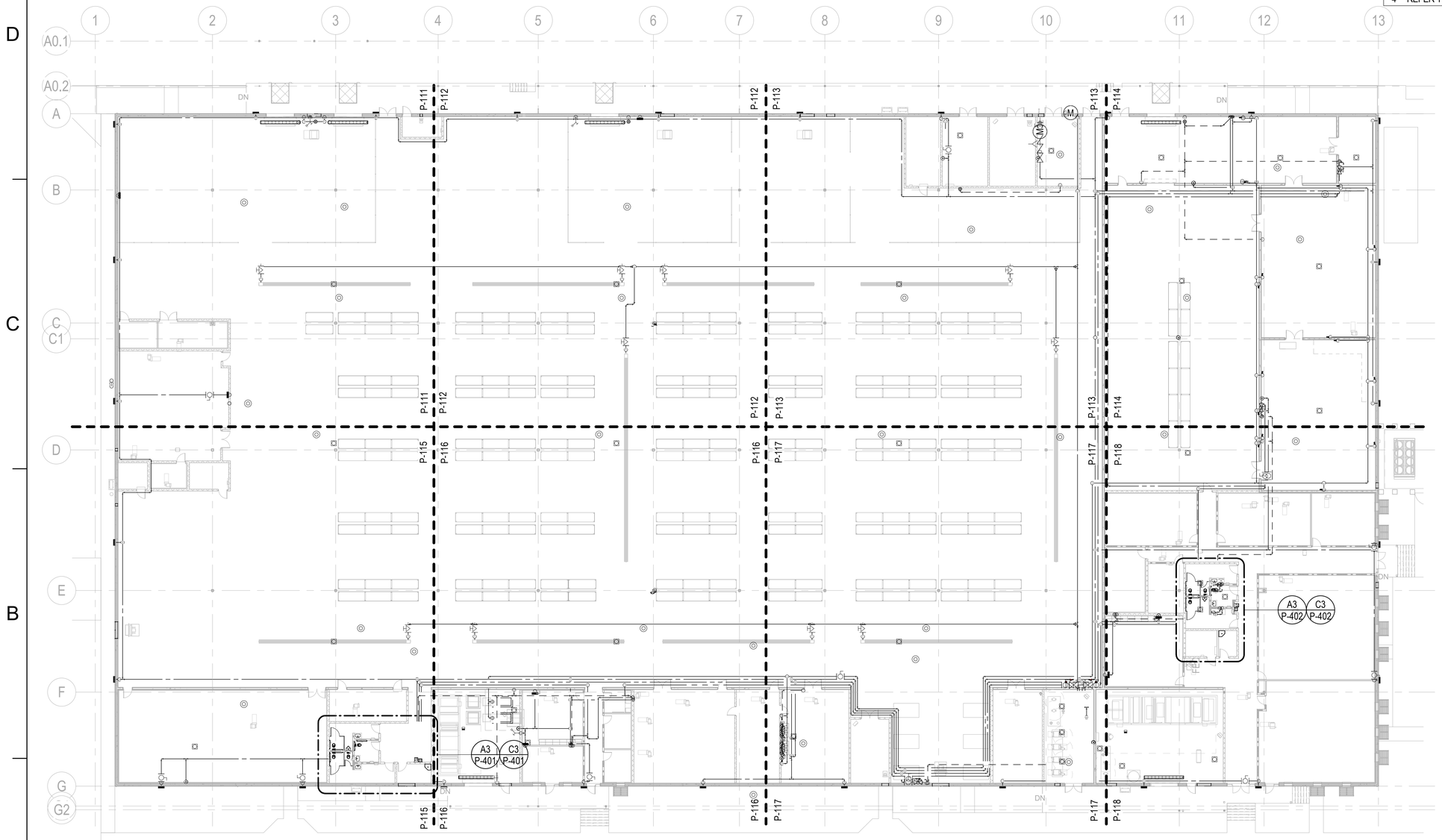

A1 PLUMBING - 1ST FLOOR PLAN - OVERALL
SCALE: 1" = 20'-0"

KEYPLAN

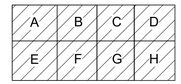

0 10' - 0" 20' - 0" 40' - 0"
SCALE: 1" = 20' - 0"

N

SYM	DESCRIPTION	DATE	APPR

NAVFAC

COMMONWEALTH OF PENNSYLVANIA
REGISTERED PROFESSIONAL
DAVID W. HURD
ENGINEER
No. PE061162
SEAL

RQ W.M. Jordan COMPANY
- A JOINT VENTURE -

Michael Baker INTERNATIONAL
100 AIRSIDE DRIVE
MOON TOWNSHIP, PA 15108
A/E INFO

APPROVED

FOR COMMANDER NAVFAC

ACTIVITY
MARINE CORPS BASE
CAMP LEJEUNE

SATISFACTORY TO DATE	DD/MM/YY
DES SKH	DRW JTP CHK DWH
PM / DM	TOWLER / ROOT
BRANCH HEAD	SCE
DESIGN DIRECTOR	R.L.Stephens, Jr.
FIRE PROTECTION	DPS

DEPARTMENT OF THE NAVY
NAVAL FACILITIES ENGINEERING SYSTEMS COMMAND
NAVAL FACILITIES ENGINEERING SYSTEMS COMMAND ATLANTIC
ATLANTIC DESIGN AND CONSTRUCTION
NORFOLK, VA
MCB CAMP LEJEUNE
JACKSONVILLE, NC

LOGCOM CSP WAREHOUSE

PLUMBING - 1ST FLOOR PLAN - OVERALL

SCALE:	AS NOTED
EPROJECT NO.:	1639600
CONSTR. CONTR. NO.	N40085-20-C-0059
NAVFAC DRAWING NO.	14111282
SHEET	262 OF 447

P-110

DRAWFORM REVISION: 25 AUGUST 2020

P1527 FINAL SUBMISSION - 11/18/2021

PLOTTED: 11/15/2021 8:32:47 AM

FILE NAME: BIM 360://HF PACKAGE 3/P1527 LOG COM CSP-1639600-P.rvt

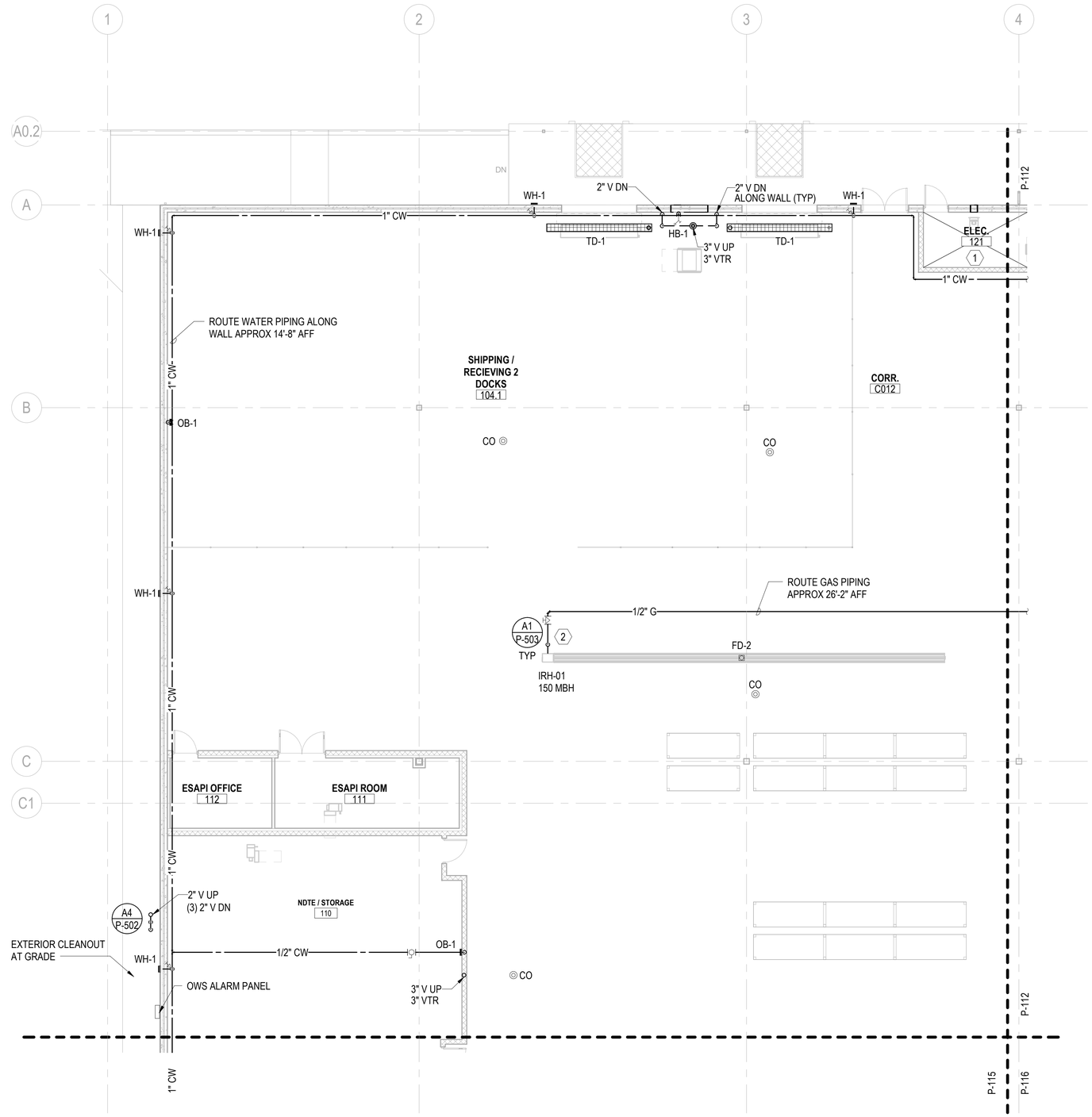

A1 PLUMBING - 1ST FLOOR PLAN - AREA A
SCALE: 1/8" = 1'-0"

GENERAL NOTES

1. SEE P-001 FOR GENERAL NOTES, ABBREVIATIONS & SYMBOLS.
2. ALL SANITARY SEWERS SHALL BE INSTALLED AT A MINIMUM SLOPE OF 1/8"/1'-0", UNLESS NOTED OTHERWISE.
3. VENTS SHALL CONNECT ABOVE CENTERLINE OF HORIZONTAL WASTE / SANITARY PIPE & SHALL RISE CONTINUOUSLY THROUGH FLOOR A MINIMUM 6" ABOVE FLOOD LEVEL OF FIXTURE. PROVIDE 45° CONNECTION TO WASTE / SANITARY LINE.
4. REFER TO P-700 SERIES FOR RISER DIAGRAMS.

KEYNOTES

1. THERE MUST NOT BE ANY PIPING THAT DOES NOT SERVE THIS SPACE INSTALLED ABOVE OR WITHIN THIS SPACE.
2. CONNECT TO EQUIPMENT PROVIDED BY M.C. AT APPROX 24'-6" AFF

KEYPLAN

A	B	C	D
E	F	G	H

0 4' - 0" 8' - 0" 16' - 0"
SCALE: 1/8" = 1' - 0"

N

SYM	DESCRIPTION	DATE	APPR

NAVFAC

COMMONWEALTH OF PENNSYLVANIA
REGISTERED PROFESSIONAL
DAVID W. HURD
ENGINEER
No. PE061162
SEAL

RQ W.M. Jordan COMPANY
- A JOINT VENTURE -

Michael Baker
INTERNATIONAL
100 AIRSIDE DRIVE
MOON TOWNSHIP, PA 15108
A/E INFO

APPROVED

FOR COMMANDER NAVFAC

ACTIVITY
MARINE CORPS BASE
CAMP LEJEUNE

SATISFACTORY TO DATE DD/MM/YY
DES SKH DRW JTP CHK DWH
PM / DM TOWLER / ROOT
BRANCH HEAD SCE
DESIGN DIRECTOR R.L.Stephens, Jr.
FIRE PROTECTION DPS

DEPARTMENT OF THE NAVY
NAVAL FACILITIES ENGINEERING SYSTEMS COMMAND
NAVAL FACILITIES ENGINEERING SYSTEMS COMMAND ATLANTIC
ATLANTIC DESIGN AND CONSTRUCTION
NORFOLK, VA
MCB CAMP LEJEUNE
JACKSONVILLE, NC
LOGCOM CSP WAREHOUSE
PLUMBING - 1ST FLOOR PLAN - AREA A

SCALE: AS NOTED
EPROJECT NO.: 1639600
CONSTR. CONTR. NO. N40085-20-C-0059
NAVFAC DRAWING NO. 14111283
SHEET 263 OF 447

P-111

DRAWFORM REVISION: 25 AUGUST 2020

P1527 FINAL SUBMISSION - 11/18/2021

PLOTTED: 11/15/2021 8:32:50 AM

FILE NAME: BIM 360://HIF PACKAGE 3/P1527 LOG COM CSP-1639600-P.rvt

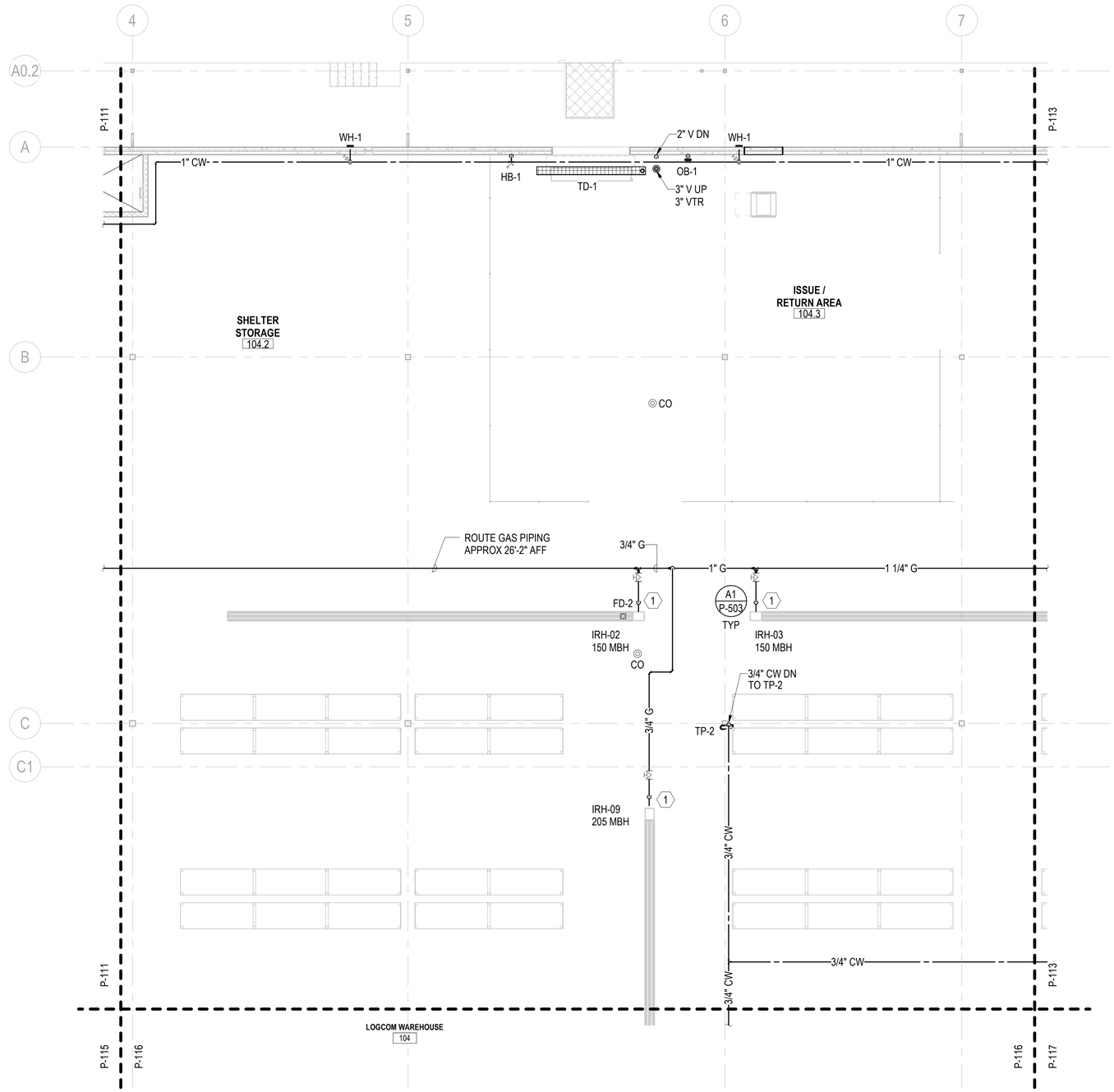

A1 PLUMBING - 1ST FLOOR PLAN - AREA B
SCALE: 1/8" = 1'-0"

GENERAL NOTES

1. SEE P-001 FOR GENERAL NOTES, ABBREVIATIONS & SYMBOLS.
2. ALL SANITARY SEWERS SHALL BE INSTALLED AT A MINIMUM SLOPE OF 1/8"/1'-0", UNLESS NOTED OTHERWISE.
3. VENTS SHALL CONNECT ABOVE CENTERLINE OF HORIZONTAL WASTE / SANITARY PIPE & SHALL RISE CONTINUOUSLY THROUGH FLOOR A MINIMUM 6" ABOVE FLOOD LEVEL OF FIXTURE. PROVIDE 45° CONNECTION TO WASTE / SANITARY LINE.
4. REFER TO P-700 SERIES FOR RISER DIAGRAMS.

KEYNOTES

1. CONNECT TO EQUIPMENT PROVIDED BY M.C. AT APPROX 24'-6" AFF

KEYPLAN

A	B	C	D
E	F	G	H

0 4' - 0" 8' - 0" 16' - 0"
SCALE: 1/8" = 1' - 0"

N

SYM	DESCRIPTION	DATE	APPR

NAVFAC

COMMONWEALTH OF PENNSYLVANIA REGISTERED PROFESSIONAL DAVID W. HURD ENGINEER No PE061162 SEAL

RQ W.M. Jordan COMPANY – A JOINT VENTURE –

Michael Baker INTERNATIONAL
100 AIRSIDE DRIVE
MOON TOWNSHIP, PA 15108
A/E INFO

APPROVED

FOR COMMANDER NAVFAC

ACTIVITY
MARINE CORPS BASE CAMP LEJEUNE

SATISFACTORY TO DATE DD/MM/YY

DES SKH | DRW JTP | CHK DWH

PM / DM TOWLER / ROOT

BRANCH HEAD SCE

DESIGN DIRECTOR R.L.Stephens, Jr.

FIRE PROTECTION DPS

DEPARTMENT OF THE NAVY
NAVAL FACILITIES ENGINEERING SYSTEMS COMMAND
ATLANTIC DESIGN AND CONSTRUCTION
MCB CAMP LEJEUNE
NAVAL FACILITIES ENGINEERING SYSTEMS COMMAND ATLANTIC
NORFOLK, VA
JACKSONVILLE, NC
LOGCOM CSP WAREHOUSE

PLUMBING - 1ST FLOOR PLAN - AREA B

SCALE: AS NOTED
EPROJECT NO.: 1639600
CONSTR. CONTR. NO. N40085-20-C-0059
NAVFAC DRAWING NO. 14111284
SHEET 264 OF 447

P-112

DRAWFORM REVISION: 25 AUGUST 2020

P1527 FINAL SUBMISSION - 11/18/2021

PLOTTED: 11/15/2021 8:32:53 AM
FILE NAME: BIM 360://HF PACKAGE 3/P1527 LOG COM CSP-1639600-P.rvt

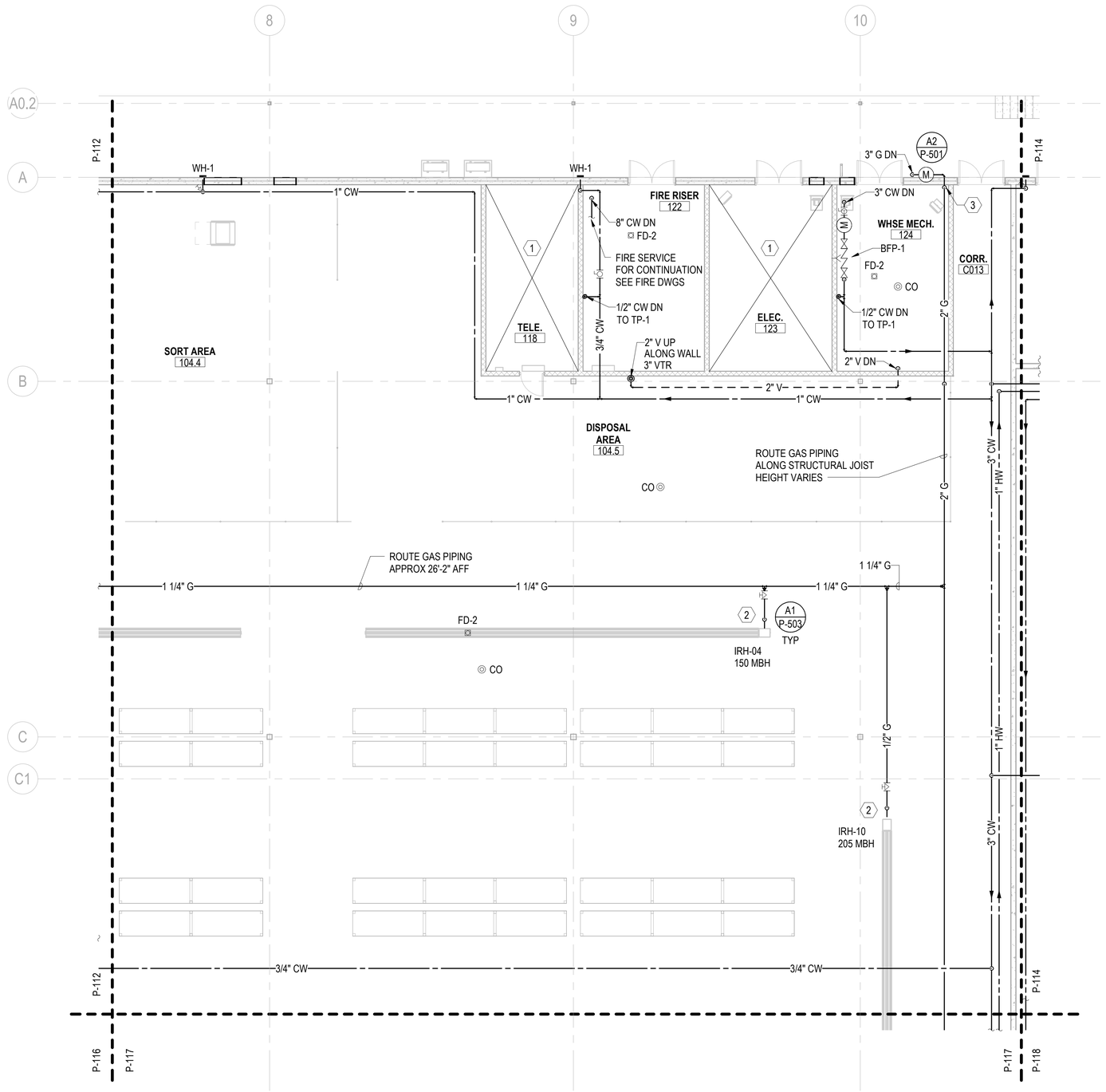

A1 PLUMBING - 1ST FLOOR PLAN - AREA C

SCALE: 1/8" = 1'-0"

GENERAL NOTES

1. SEE P-001 FOR GENERAL NOTES, ABBREVIATIONS & SYMBOLS.
2. ALL SANITARY SEWERS SHALL BE INSTALLED AT A MINIMUM SLOPE OF 1/8"/1'-0", UNLESS NOTED OTHERWISE.
3. VENTS SHALL CONNECT ABOVE CENTERLINE OF HORIZONTAL WASTE / SANITARY PIPE & SHALL RISE CONTINUOUSLY THROUGH FLOOR A MINIMUM 6" ABOVE FLOOD LEVEL OF FIXTURE. PROVIDE 45° CONNECTION TO WASTE / SANITARY LINE.
4. REFER TO P-700 SERIES FOR RISER DIAGRAMS.

KEYNOTES

1. THERE MUST NOT BE ANY PIPING THAT DOES NOT SERVE THIS SPACE INSTALLED ABOVE OR WITHIN THIS SPACE.
2. CONNECT TO EQUIPMENT PROVIDED BY M.C. AT APPROX 24'-6" AFF
3. PROVIDE RED MUSHROOM TYPE EMERGENCY SHUTOFF VALVE IN GAS RISER NEAR EXIT DOOR.

KEYPLAN

A	B	C	D
E	F	G	H

0 4' - 0" 8' - 0" 16' - 0"

SCALE: 1/8" = 1' - 0"

N

APPR	DATE	DESCRIPTION	SYM

NAVFAC

COMMONWEALTH OF PENNSYLVANIA
REGISTERED PROFESSIONAL
DAVID W. HURD
ENGINEER
No. PE061160
SEAL

IRQ W.M. Jordan COMPANY – A JOINT VENTURE –

Michael Baker INTERNATIONAL
100 AIRSIDE DRIVE
MOON TOWNSHIP, PA 15108
A/E INFO

APPROVED

FOR COMMANDER NAVFAC

ACTIVITY
MARINE CORPS BASE
CAMP LEJEUNE

SATISFACTORY TO DATE DD/MM/YY

DES	SKH	DRW	JTP	CHK	DWH

PM / DM TOWLER / ROOT
BRANCH HEAD SCE
DESIGN DIRECTOR R.L.Stephens, Jr.
FIRE PROTECTION DPS

DEPARTMENT OF THE NAVY
NAVAL FACILITIES ENGINEERING SYSTEMS COMMAND
ATLANTIC DESIGN AND CONSTRUCTION
NAVAL FACILITIES ENGINEERING SYSTEMS COMMAND ATLANTIC
NORFOLK, VA
MCB CAMP LEJEUNE
JACKSONVILLE, NC
LOGCOM CSP WAREHOUSE
PLUMBING - 1ST FLOOR PLAN - AREA C

SCALE: AS NOTED
EPROJECT NO.: 1639600
CONSTR. CONTR. NO. N40085-20-C-0059
NAVFAC DRAWING NO. 14111285
SHEET 265 OF 447

P-113

DRAWFORM REVISION: 25 AUGUST 2020

P1527 FINAL SUBMISSION - 11/18/2021

PLOTTED: 11/15/2021 8:32:56 AM

FILE NAME: BIM 360://AIF PACKAGE 3/P1527 LOG COM CSP-1639600-P.rvt

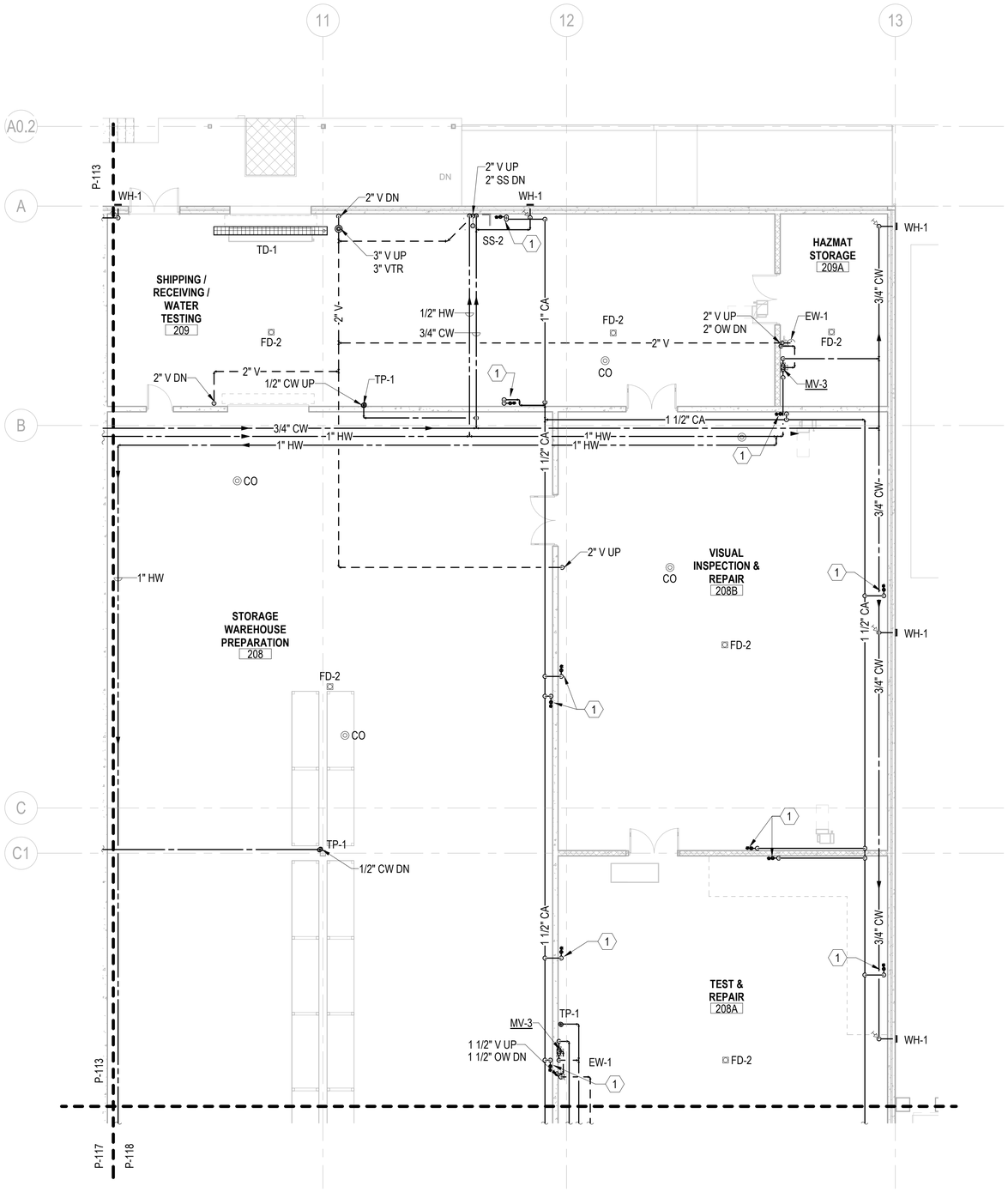

A1 PLUMBING - 1ST FLOOR PLAN - AREA D
SCALE: 1/8" = 1'-0"

GENERAL NOTES

1. SEE P-001 FOR GENERAL NOTES, ABBREVIATIONS & SYMBOLS.
2. ALL SANITARY SEWERS SHALL BE INSTALLED AT A MINIMUM SLOPE OF 1/8"/1'-0", UNLESS NOTED OTHERWISE.
3. VENTS SHALL CONNECT ABOVE CENTERLINE OF HORIZONTAL WASTE / SANITARY PIPE & SHALL RISE CONTINUOUSLY THROUGH FLOOR A MINIMUM 6" ABOVE FLOOD LEVEL OF FIXTURE. PROVIDE 45° CONNECTION TO WASTE / SANITARY LINE.
4. REFER TO P-700 SERIES FOR RISER DIAGRAMS.

KEYNOTES

1. 1/2" CA DROP ALONG WALL. SEE DETAIL A3/P-502 FOR ADDITIONAL INFORMATION.

KEYPLAN

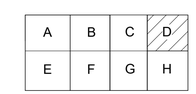

0 4' - 0" 8' - 0" 16' - 0"
SCALE: 1/8" = 1' - 0"

N

SYM	DESCRIPTION	DATE	APPR

NAVFAC

COMMONWEALTH OF PENNSYLVANIA
REGISTERED PROFESSIONAL
DAVID W. HURD
ENGINEER
No. PE061162
SEAL

RQ W.M. Jordan COMPANY
- A JOINT VENTURE -

Michael Baker INTERNATIONAL
100 AIRSIDE DRIVE
MOON TOWNSHIP, PA 15108
A/E INFO

APPROVED

FOR COMMANDER NAVFAC

ACTIVITY
MARINE CORPS BASE CAMP LEJEUNE

SATISFACTORY TO DATE DD/MM/YY
DES SKH DRW JTP CHK DWH
PM / DM TOWLER / ROOT
BRANCH HEAD SCE
DESIGN DIRECTOR R.L.Stephens, Jr.
FIRE PROTECTION DPS

DEPARTMENT OF THE NAVY
NAVAL FACILITIES ENGINEERING SYSTEMS COMMAND
ATLANTIC DESIGN AND CONSTRUCTION
NAVAL FACILITIES ENGINEERING SYSTEMS COMMAND ATLANTIC
NORFOLK, VA
MCB CAMP LEJEUNE
JACKSONVILLE, NC
LOGCOM CSP WAREHOUSE
PLUMBING - 1ST FLOOR PLAN - AREA D

SCALE: AS NOTED
EPROJECT NO.: 1639600
CONSTR. CONTR. NO. N40085-20-C-0059
NAVFAC DRAWING NO. 14111286
SHEET 266 OF 447

P-114

DRAWFORM REVISION: 25 AUGUST 2020

P1527 FINAL SUBMISSION - 11/18/2021

UNCLASSIFIED

PLOTTED: 11/15/2021 8:33:00 AM

FILE NAME: BIM 360://HF PACKAGE 3/P1527 LOG COM CSP-1639600-P.rvt

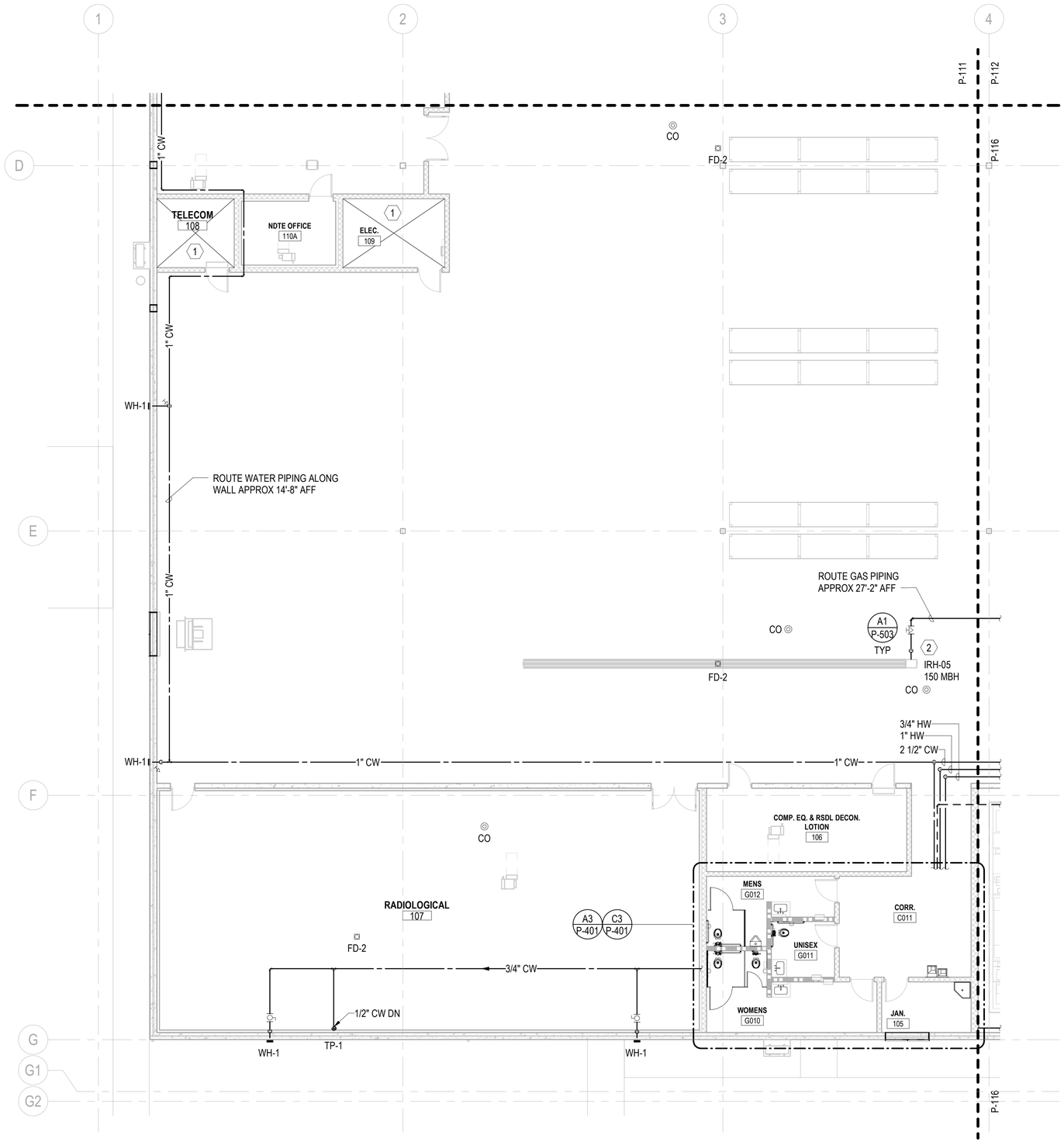

A1 PLUMBING - 1ST FLOOR PLAN - AREA E

SCALE: 1/8" = 1'-0"

GENERAL NOTES

1. SEE P-001 FOR GENERAL NOTES, ABBREVIATIONS & SYMBOLS.
2. ALL SANITARY SEWERS SHALL BE INSTALLED AT A MINIMUM SLOPE OF 1/8"/1'-0", UNLESS NOTED OTHERWISE.
3. VENTS SHALL CONNECT ABOVE CENTERLINE OF HORIZONTAL WASTE / SANITARY PIPE & SHALL RISE CONTINUOUSLY THROUGH FLOOR A MINIMUM 6" ABOVE FLOOD LEVEL OF FIXTURE. PROVIDE 45° CONNECTION TO WASTE / SANITARY LINE.
4. REFER TO P-700 SERIES FOR RISER DIAGRAMS.

KEYNOTES

1. THERE MUST NOT BE ANY PIPING THAT DOES NOT SERVE THIS SPACE INSTALLED ABOVE OR WITHIN THIS SPACE.
2. CONNECT TO EQUIPMENT PROVIDED BY M.C.

KEYPLAN

A	B	C	D
E	F	G	H

0 4' - 0" 8' - 0" 16' - 0"

SCALE: 1/8" = 1' - 0"

N

APPR	DATE	DESCRIPTION	SYM

NAVFAC

COMMONWEALTH OF PENNSYLVANIA
REGISTERED PROFESSIONAL
DAVID W. HURD
ENGINEER
No PE061162
SEAL

IRQ WM Jordan COMPANY – A JOINT VENTURE –

Michael Baker INTERNATIONAL
100 AIRSIDE DRIVE
MOON TOWNSHIP, PA 15108
A/E INFO

APPROVED

FOR COMMANDER NAVFAC

ACTIVITY
MARINE CORPS BASE
CAMP LEJEUNE

SATISFACTORY TO DATE DD/MM/YY

DES	DRW	CHK
SKH	JTP	DWH

PM / DM TOWLER / ROOT
BRANCH HEAD SCE
DESIGN DIRECTOR R.L.Stephens, Jr.
FIRE PROTECTION DPS

DEPARTMENT OF THE NAVY
NAVAL FACILITIES ENGINEERING SYSTEMS COMMAND
ATLANTIC DESIGN AND CONSTRUCTION
NAVAL FACILITIES ENGINEERING SYSTEMS COMMAND ATLANTIC
NORFOLK, VA
MCB CAMP LEJEUNE
JACKSONVILLE, NC
LOGCOM CSP WAREHOUSE

PLUMBING - 1ST FLOOR PLAN - AREA E

SCALE: AS NOTED
EPROJECT NO.: 1639600
CONSTR. CONTR. NO. N40085-20-C-0059
NAVFAC DRAWING NO. 14111287
SHEET 267 OF 447

P-115

DRAWFORM REVISION: 25 AUGUST 2020

P1527 FINAL SUBMISSION - 11/18/2021

PLOTTED: 11/15/2021 8:33:03 AM

FILE NAME: BIM 360://HF PACKAGE 3/P1527 LOG COM CSP-1639600-P.rvt

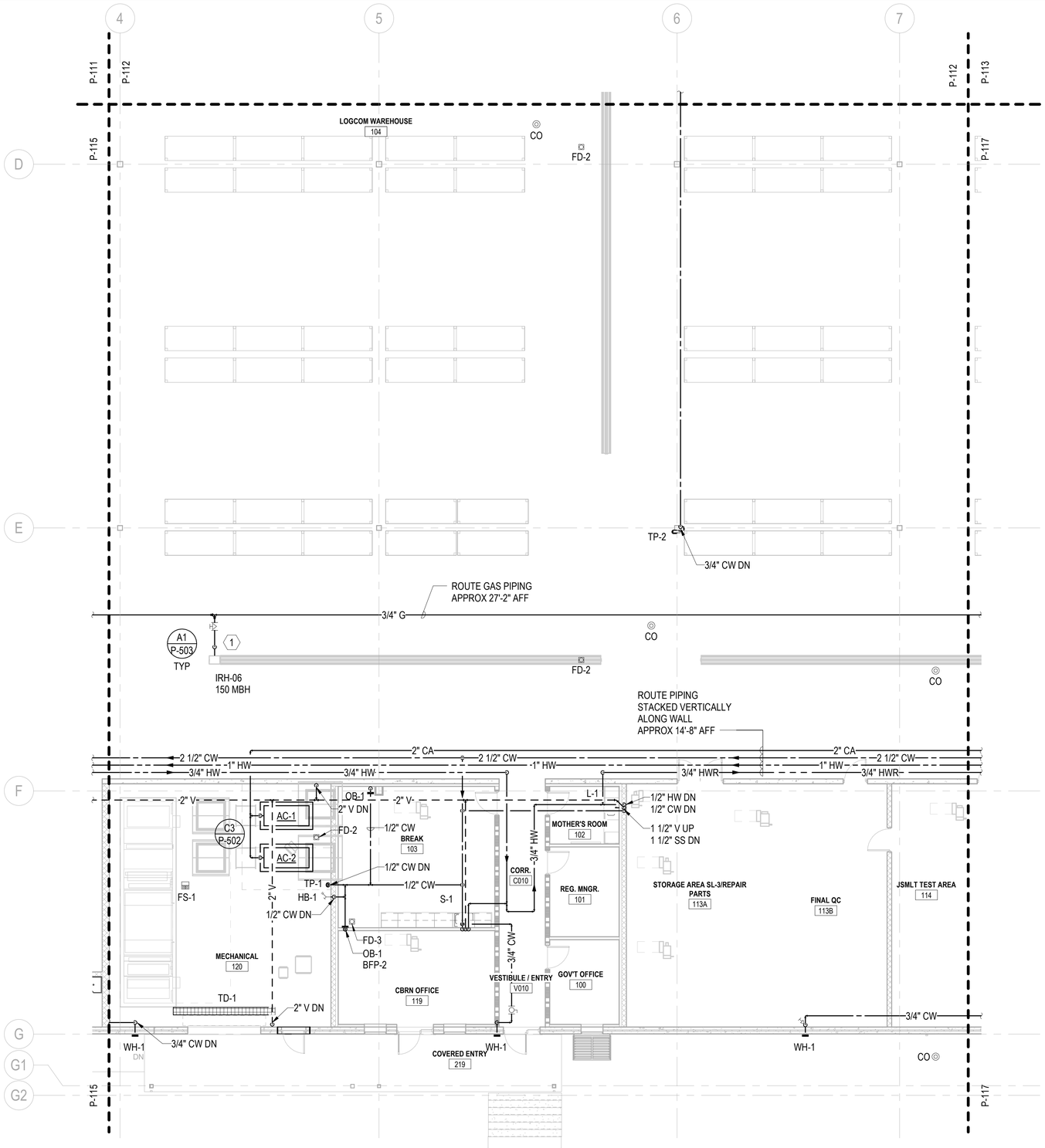

A1 PLUMBING - 1ST FLOOR PLAN - AREA F

SCALE: 1/8" = 1'-0"

GENERAL NOTES

1. SEE P-001 FOR GENERAL NOTES, ABBREVIATIONS & SYMBOLS.
2. ALL SANITARY SEWERS SHALL BE INSTALLED AT A MINIMUM SLOPE OF 1/8"/1'-0", UNLESS NOTED OTHERWISE.
3. VENTS SHALL CONNECT ABOVE CENTERLINE OF HORIZONTAL WASTE / SANITARY PIPE & SHALL RISE CONTINUOUSLY THROUGH FLOOR A MINIMUM 6" ABOVE FLOOD LEVEL OF FIXTURE. PROVIDE 45° CONNECTION TO WASTE / SANITARY LINE.
4. REFER TO P-700 SERIES FOR RISER DIAGRAMS.

KEYNOTES

1. CONNECT TO EQUIPMENT PROVIDED BY M.C. AT APPROX 24'-6" AFF

KEYPLAN

A	B	C	D
E	F	G	H

0 4' - 0" 8' - 0" 16' - 0"

SCALE: 1/8" = 1' - 0"

N

APPR	DATE	DESCRIPTION	SYM

NAVFAC

COMMONWEALTH OF PENNSYLVANIA
REGISTERED PROFESSIONAL
DAVID W. HURD
ENGINEER
No. PE061160
SEAL

IRQ Jordan COMPANY – A JOINT VENTURE –

Michael Baker INTERNATIONAL
100 AIRSIDE DRIVE
MOON TOWNSHIP, PA 15108
A/E INFO

APPROVED

FOR COMMANDER NAVFAC

ACTIVITY
MARINE CORPS BASE
CAMP LEJEUNE

SATISFACTORY TO DATE DD/MM/YY

DES SKH | DRW JTP | CHK DWH

PM / DM TOWLER / ROOT

BRANCH HEAD SCE

DESIGN DIRECTOR R.L.Stephens, Jr.

FIRE PROTECTION DPS

DEPARTMENT OF THE NAVY
NAVAL FACILITIES ENGINEERING SYSTEMS COMMAND
ATLANTIC DESIGN AND CONSTRUCTION
MCB CAMP LEJEUNE

NAVAL FACILITIES ENGINEERING SYSTEMS COMMAND ATLANTIC
NORFOLK, VA
JACKSONVILLE, NC
LOGCOM CSP WAREHOUSE

PLUMBING - 1ST FLOOR PLAN - AREA F

SCALE: AS NOTED

EPROJECT NO.: 1639600

CONSTR. CONTR. NO.
N40085-20-C-0059

NAVFAC DRAWING NO.
14111288

SHEET 268 OF 447

P-116

DRAWFORM REVISION: 25 AUGUST 2020

P1527 FINAL SUBMISSION - 11/18/2021

PLOTTED: 11/15/2021 8:33:07 AM

FILE NAME: BIM 360/IHF PACKAGE 3/P1527 LOG COM CSP-1639600-P.rvt

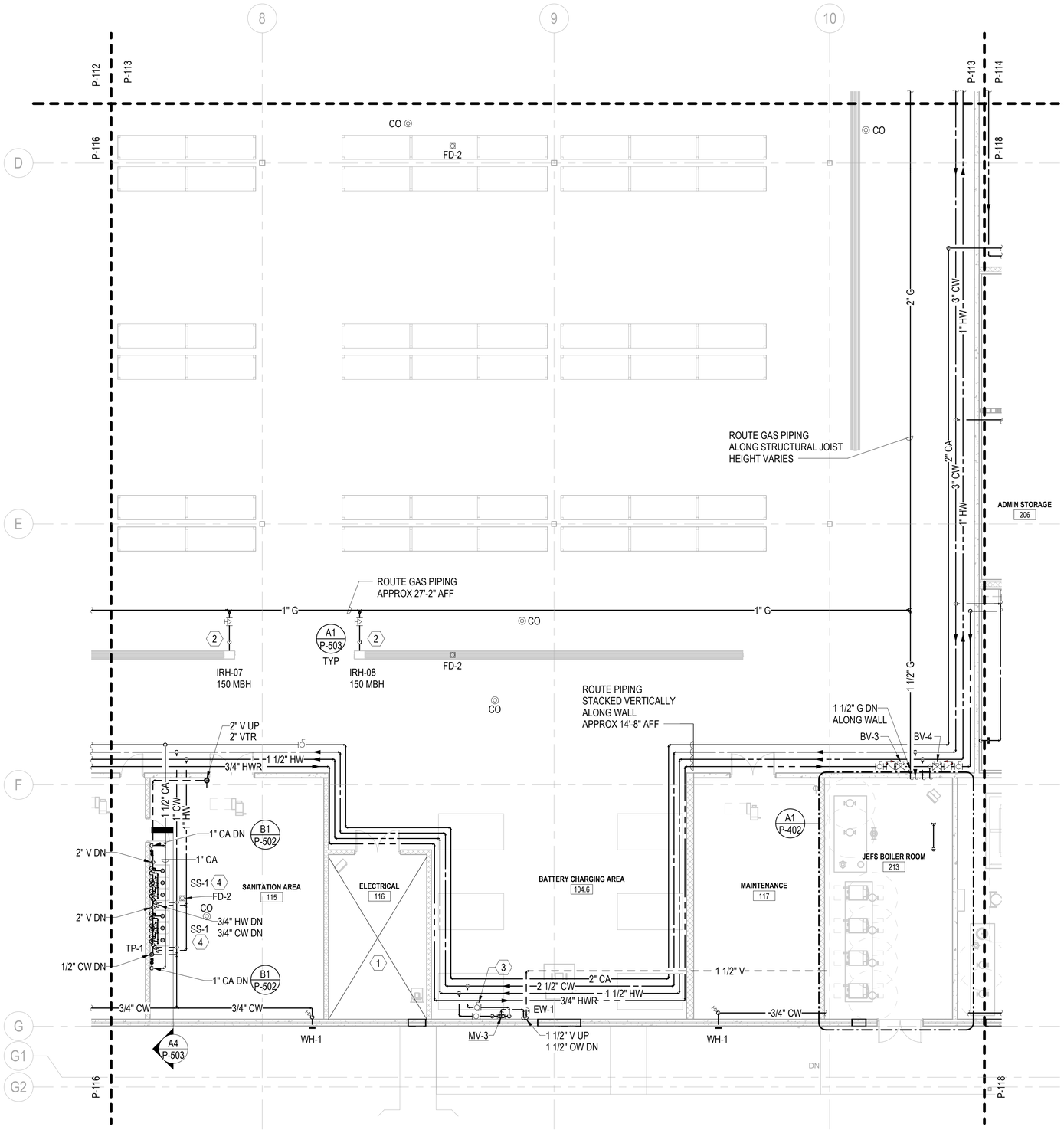

A1 PLUMBING - 1ST FLOOR PLAN - AREA G

SCALE: 1/8" = 1'-0"

GENERAL NOTES

1. SEE P-001 FOR GENERAL NOTES, ABBREVIATIONS & SYMBOLS.
2. ALL SANITARY SEWERS SHALL BE INSTALLED AT A MINIMUM SLOPE OF 1/8"/1'-0", UNLESS NOTED OTHERWISE.
3. VENTS SHALL CONNECT ABOVE CENTERLINE OF HORIZONTAL WASTE / SANITARY PIPE & SHALL RISE CONTINUOUSLY THROUGH FLOOR A MINIMUM 6" ABOVE FLOOD LEVEL OF FIXTURE. PROVIDE 45° CONNECTION TO WASTE / SANITARY LINE.
4. REFER TO P-700 SERIES FOR RISER DIAGRAMS.

KEYNOTES

1. THERE MUST NOT BE ANY PIPING THAT DOES NOT SERVE THIS SPACE INSTALLED ABOVE OR WITHIN THIS SPACE.
2. CONNECT TO EQUIPMENT PROVIDED BY M.C. AT APPROX 24'-6" AFF
3. PROVIDE SIGNAGE AT EYEWASH SHUT OFF VALVES INDICATING "FOR EMERGENCY USE, DO NOT CLOSE"
4. CONTRACTOR IS RESPONSIBLE FOR DISCONNECTION, RELOCATION AND REINSTALLATION OF THE EXISTING SINKS FROM THE CURRENT BUILDING TO THE NEW BUILDING. CONDITION OF THE SINKS TO BE RECORDED AND SUBMITTED PRIOR TO RELOCATION AND INSTALLED IN THE NEW BUILDING IN THE SAME OR BETTER CONDITION.

SYM	DESCRIPTION	DATE	APPR

NAVFAC

COMMONWEALTH OF PENNSYLVANIA
REGISTERED PROFESSIONAL
DAVID W. HURD
ENGINEER
No PE061160
SEAL

IRQ W.M. Jordan COMPANY – A JOINT VENTURE –

Michael Baker INTERNATIONAL
100 AIRSIDE DRIVE
MOON TOWNSHIP, PA 15108
A/E INFO

APPROVED

FOR COMMANDER NAVFAC

ACTIVITY
MARINE CORPS BASE
CAMP LEJEUNE

SATISFACTORY TO DATE	DD/MM/YY
DES SKH	DRW JTP CHK DWH
PM / DM	TOWLER / ROOT
BRANCH HEAD	SCE
DESIGN DIRECTOR	R.L.Stephens, Jr.
FIRE PROTECTION	DPS

DEPARTMENT OF THE NAVY
NAVAL FACILITIES ENGINEERING SYSTEMS COMMAND
ATLANTIC DESIGN AND CONSTRUCTION
NAVAL FACILITIES ENGINEERING SYSTEMS COMMAND ATLANTIC
NORFOLK, VA
MCB CAMP LEJEUNE
JACKSONVILLE, NC
LOGCOM CSP WAREHOUSE

PLUMBING - 1ST FLOOR PLAN - AREA G

KEYPLAN

A	B	C	D
E	F	G	H

0 4' - 0" 8' - 0" 16' - 0"

SCALE: 1/8" = 1' - 0"

N

SCALE:	AS NOTED
EPROJECT NO.:	1639600
CONSTR. CONTR. NO.	N40085-20-C-0059
NAVFAC DRAWING NO.	14111289
SHEET	269 OF 447

P-117

DRAWFORM REVISION: 25 AUGUST 2020

P1527 FINAL SUBMISSION - 11/18/2021

PLOTTED: 11/15/2021 8:33:11 AM

FILE NAME: BIM 360://HF PACKAGE 3/P1527 LOG COM CSP-1639600-P.rvt

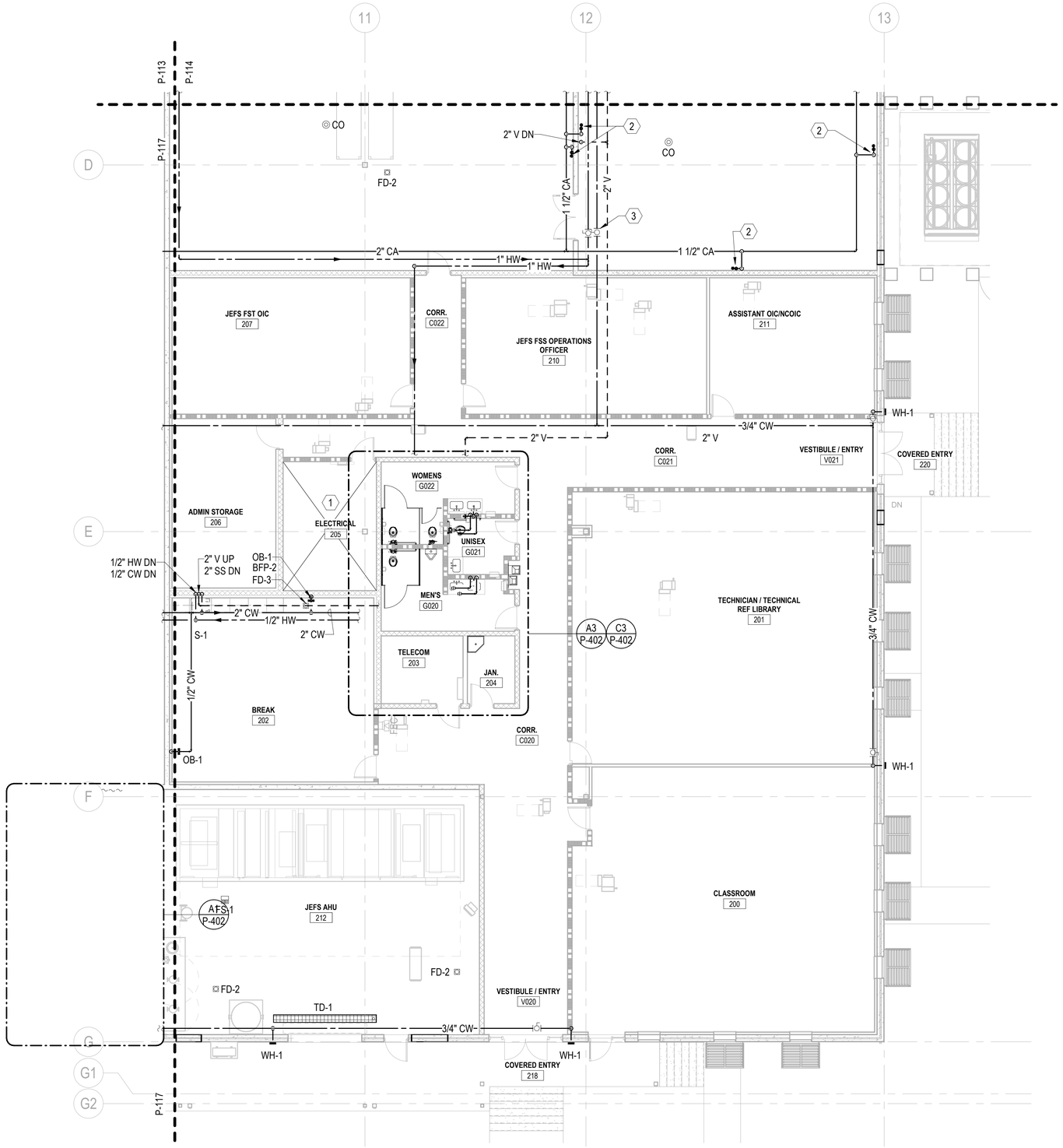

A1 PLUMBING - 1ST FLOOR PLAN - AREA H
SCALE: 1/8" = 1'-0"

GENERAL NOTES

1. SEE P-001 FOR GENERAL NOTES, ABBREVIATIONS & SYMBOLS.
2. ALL SANITARY SEWERS SHALL BE INSTALLED AT A MINIMUM SLOPE OF 1/8"/1'-0", UNLESS NOTED OTHERWISE.
3. VENTS SHALL CONNECT ABOVE CENTERLINE OF HORIZONTAL WASTE / SANITARY PIPE & SHALL RISE CONTINUOUSLY THROUGH FLOOR A MINIMUM 6" ABOVE FLOOD LEVEL OF FIXTURE. PROVIDE 45° CONNECTION TO WASTE / SANITARY LINE.
4. REFER TO P-700 SERIES FOR RISER DIAGRAMS.

KEYNOTES

1. THERE MUST NOT BE ANY PIPING THAT DOES NOT SERVE THIS SPACE INSTALLED ABOVE OR WITHIN THIS SPACE.
2. 1/2" CA DROP ALONG WALL. SEE DETAIL A3/P-502 FOR ADDITIONAL INFORMATION.
3. PROVIDE SIGNAGE AT EYEWASH SHUT OFF VALVES INDICATING "FOR EMERGENCY USE, DO NOT CLOSE"

KEYPLAN

A	B	C	D
E	F	G	H

0 4' - 0" 8' - 0" 16' - 0"
SCALE: 1/8" = 1' - 0"

N

SYM	DESCRIPTION	DATE	APPR

NAVFAC

COMMONWEALTH OF PENNSYLVANIA REGISTERED PROFESSIONAL DAVID W. HURD ENGINEER No. PE061162
SEAL

RQ W.M. Jordan COMPANY - A JOINT VENTURE -

Michael Baker INTERNATIONAL
100 AIRSIDE DRIVE
MOON TOWNSHIP, PA 15108
A/E INFO

APPROVED

FOR COMMANDER NAVFAC

ACTIVITY
MARINE CORPS BASE CAMP LEJEUNE

SATISFACTORY TO DATE DD/MM/YY
DES SKH DRW JTP CHK DWH
PM / DM TOWLER / ROOT
BRANCH HEAD SCE
DESIGN DIRECTOR R.L.Stephens, Jr.
FIRE PROTECTION DPS

DEPARTMENT OF THE NAVY
NAVAL FACILITIES ENGINEERING SYSTEMS COMMAND
NAVAL FACILITIES ENGINEERING SYSTEMS COMMAND ATLANTIC
ATLANTIC DESIGN AND CONSTRUCTION
NORFOLK, VA
MCB CAMP LEJEUNE
JACKSONVILLE, NC
LOGCOM CSP WAREHOUSE
PLUMBING - 1ST FLOOR PLAN - AREA H

SCALE: AS NOTED
EPROJECT NO.: 1639600
CONSTR. CONTR. NO. N40085-20-C-0059
NAVFAC DRAWING NO. 14111290
SHEET 270 OF 447

P-118

DRAWFORM REVISION: 25 AUGUST 2020

P1527 FINAL SUBMISSION - 11/18/2021

PLOTTED: 11/15/2021 8:33:16 AM

FILE NAME: BIM 360://HF PACKAGE 3/P1527 LOG COM CSP-1639600-P.rvt

GENERAL NOTES

1 SEE P-001 FOR GENERAL NOTES, ABBREVIATIONS & SYMBOLS.
2 REFER TO P-700 SERIES FOR RISER DIAGRAMS.

KEYNOTES

1 COORDINATE INSTALLATION WITH STANDING SEAM ROOFING CONTRACTOR. SEE A-508 DETAILS C3 & C4.

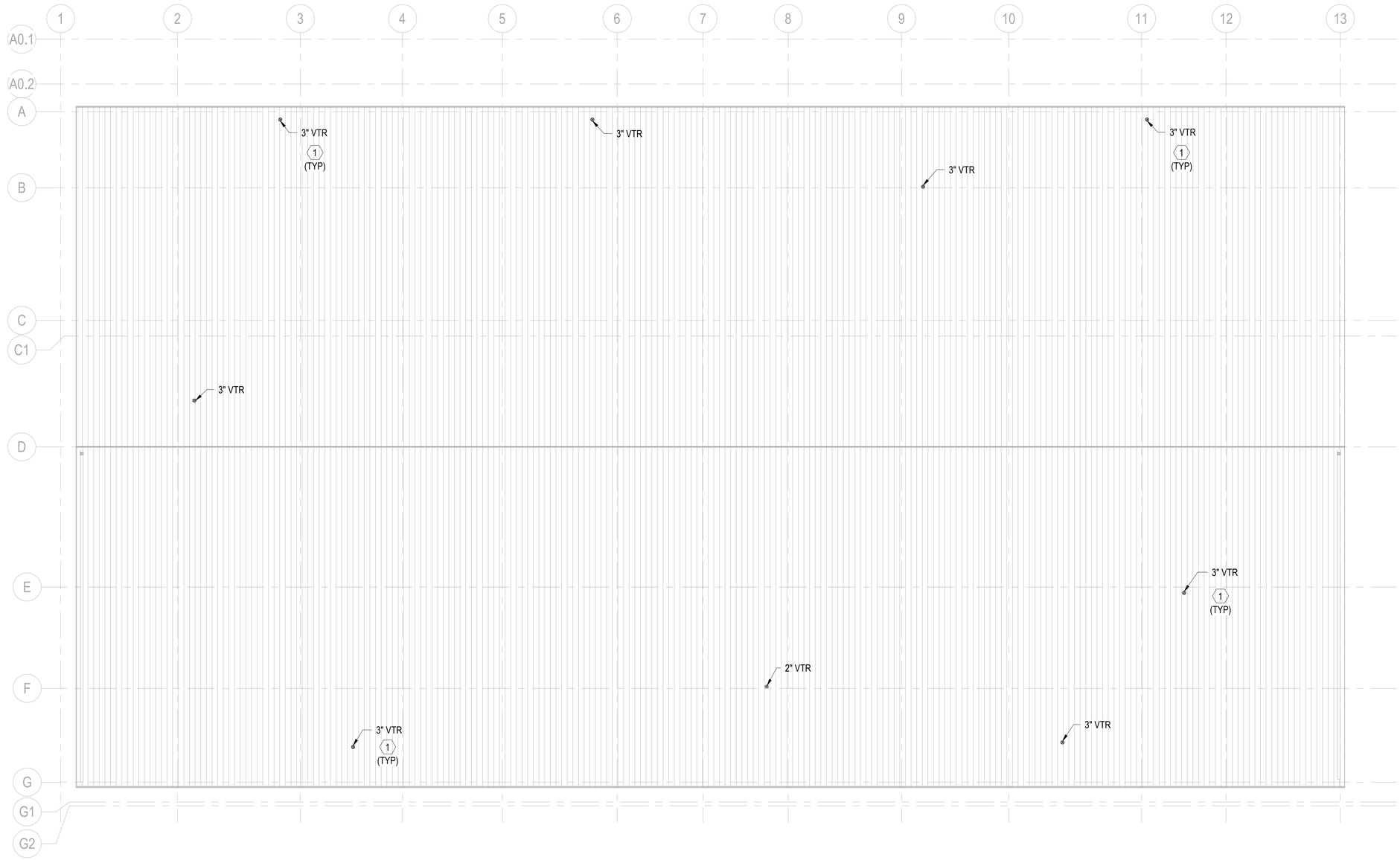

A1 PLUMBING - ROOF PLAN
SCALE: 1" = 20'-0"

KEYPLAN

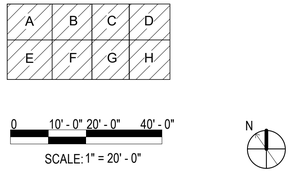

SYM	DESCRIPTION	DATE	APPR

NAVFAC

COMMONWEALTH OF PENNSYLVANIA
REGISTERED PROFESSIONAL
DAVID W. HURD
ENGINEER
No. PE061162
SEAL

RQ W.M. Jordan COMPANY
- A JOINT VENTURE -

Michael Baker INTERNATIONAL
100 AIRSIDE DRIVE
MOON TOWNSHIP, PA 15108
A/E INFO

APPROVED

FOR COMMANDER NAVFAC

ACTIVITY
MARINE CORPS BASE
CAMP LEJEUNE

SATISFACTORY TO DATE DD/MM/YY
DES SKH DRW JTP CHK DWH
PM / DM TOWLER / ROOT
BRANCH HEAD SCE
DESIGN DIRECTOR R.L.Stephens, Jr.
FIRE PROTECTION DPS

DEPARTMENT OF THE NAVY
NAVAL FACILITIES ENGINEERING SYSTEMS COMMAND
NAVAL FACILITIES ENGINEERING SYSTEMS COMMAND ATLANTIC
ATLANTIC DESIGN AND CONSTRUCTION
NORFOLK, VA
MCB CAMP LEJEUNE
JACKSONVILLE, NC
LOGCOM CSP WAREHOUSE

PLUMBING - ROOF PLAN

SCALE: AS NOTED
EPROJECT NO.: 1639600
CONSTR. CONTR. NO. N40085-20-C-0059
NAVFAC DRAWING NO. 14111291
SHEET 271 OF 447

P-151

DRAWFORM REVISION: 25 AUGUST 2020

P1527 FINAL SUBMISSION - 11/18/2021

PLOTTED: 11/15/2021 8:33:19 AM

FILE NAME: BIM 360://HF PACKAGE 3/P1527 LOG COM CSP-1639600-P.rvt

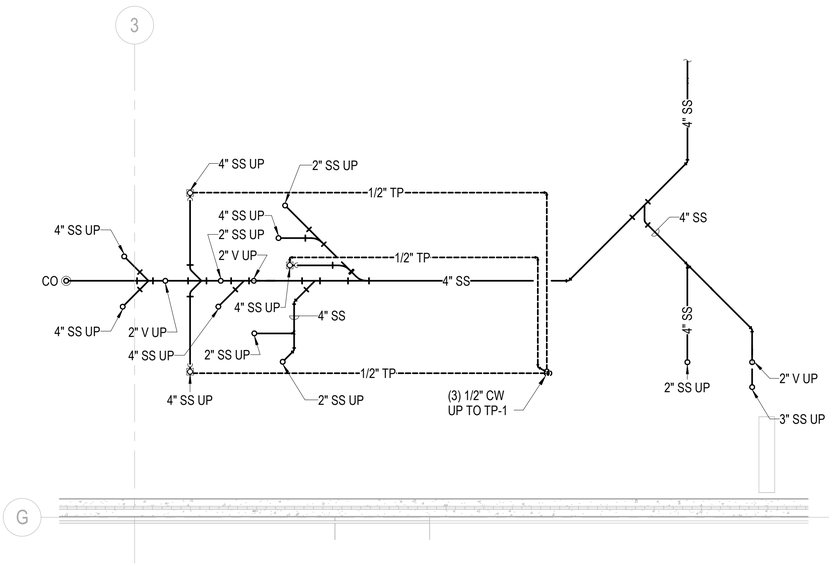

C1 ENLARGED G010/G012 - UNDERGOUND PLAN
SCALE: 1/4" = 1'-0"

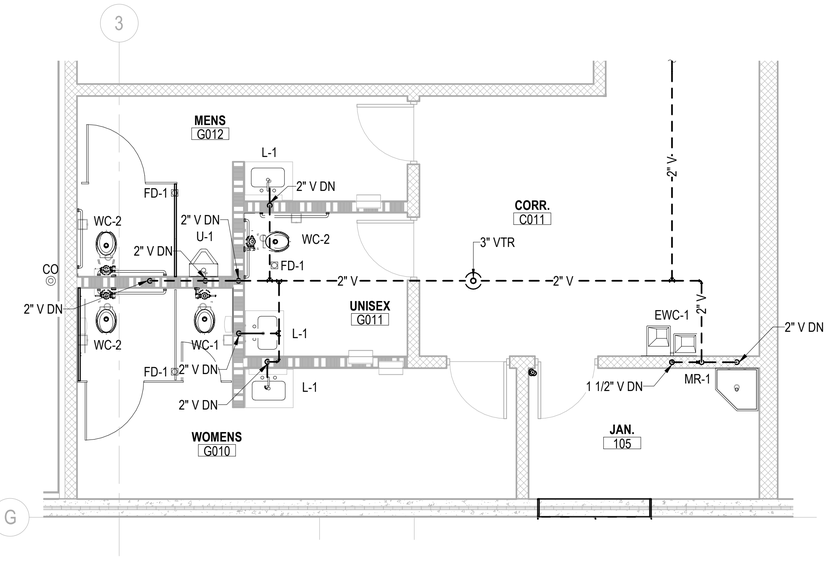

C3 ENLARGED G010/G012 - SANITARY & VENT PLAN
SCALE: 1/4" = 1'-0"

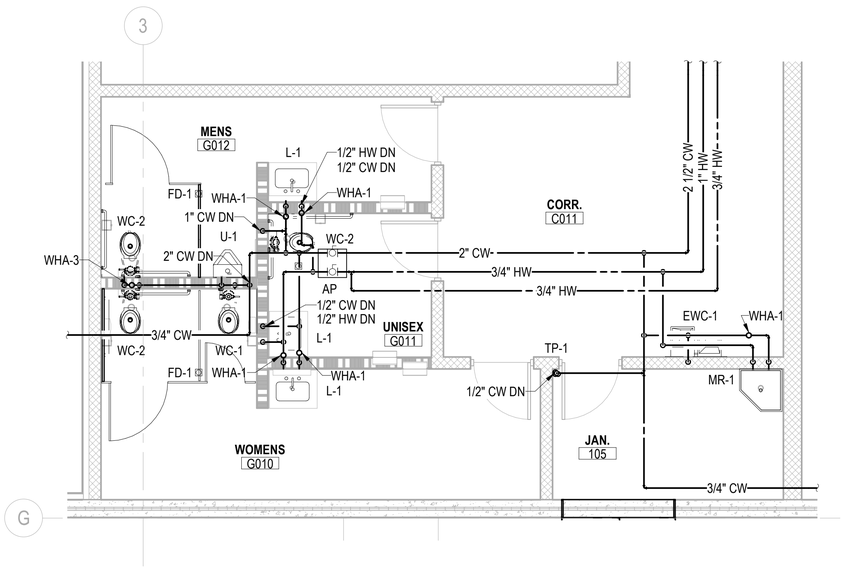

A3 ENLARGED G010/G012 - WATER PLAN
SCALE: 1/4" = 1'-0"

GENERAL NOTES

1. SEE P-001 FOR GENERAL NOTES, ABBREVIATIONS & SYMBOLS.
2. REFER TO STRUCTURAL DRAWINGS FOR THE EXACT SIZE, LOCATION, AND ELEVATION OF FOUNDATIONS, FOOTERS AND GRADE BEAMS.
3. REFER TO STRUCTURAL DRAWINGS FOR DETAILS OF PIPE CROSSINGS UNDER OR THROUGH THE STRUCTURAL FOUNDATIONS, FOOTERS AND GRADE BEAMS.
4. ALL SANITARY SEWERS SHALL BE INSTALLED AT A MINIMUM SLOPE OF 1/8"/1'-0", UNLESS NOTED OTHERWISE.
5. VENTS SHALL CONNECT ABOVE CENTERLINE OF HORIZONTAL WASTE / SANITARY PIPE & SHALL RISE CONTINUOUSLY THROUGH FLOOR A MINIMUM 6" ABOVE FLOOD LEVEL OF FIXTURE. PROVIDE 45° CONNECTION TO WASTE / SANITARY LINE.
6. UNDERFLOOR SANITARY SEWER PIPING SHALL BE A MINIMUM OF 4" UNLESS NOTED OTHERWISE.
7. REFER TO P-700 SERIES FOR RISER DIAGRAMS.

SYM	DESCRIPTION	DATE	APPR

NAVFAC

COMMONWEALTH OF PENNSYLVANIA
REGISTERED PROFESSIONAL
DAVID W. HURD
ENGINEER
No PE061160
SEAL

IRQ Wm. Jordan COMPANY – A JOINT VENTURE –

Michael Baker INTERNATIONAL
100 AIRSIDE DRIVE
MOON TOWNSHIP, PA 15108
A/E INFO

APPROVED

FOR COMMANDER NAVFAC

ACTIVITY
MARINE CORPS BASE
CAMP LEJEUNE

SATISFACTORY TO DATE DD/MM/YY

DES	DRW	CHK
SKH	JTP	DWH

PM / DM: TOWLER / ROOT
BRANCH HEAD: SCE
DESIGN DIRECTOR: R.L.Stephens, Jr.
FIRE PROTECTION: DPS

DEPARTMENT OF THE NAVY
NAVAL FACILITIES ENGINEERING SYSTEMS COMMAND
ATLANTIC DESIGN AND CONSTRUCTION
MCB CAMP LEJEUNE

NAVAL FACILITIES ENGINEERING SYSTEMS COMMAND ATLANTIC
NORFOLK, VA
JACKSONVILLE, NC
LOGCOM CSP WAREHOUSE

PLUMBING - ENLARGED PLANS

SCALE: AS NOTED
EPROJECT NO.: 1639600
CONSTR. CONTR. NO.: N40085-20-C-0059
NAVFAC DRAWING NO.: 14111292
SHEET 272 OF 447

P-401

DRAWFORM REVISION: 25 AUGUST 2020

0 2' - 0" 4' - 0" 8' - 0"
SCALE: 1/4" = 1' - 0"

N

P1527 FINAL SUBMISSION - 11/18/2021

PLOTTED: 11/15/2021 8:33:23 AM

FILE NAME: BIM 360/IHF PACKAGE 3/P1527 LOG COM CSP-1639600-P.rvt

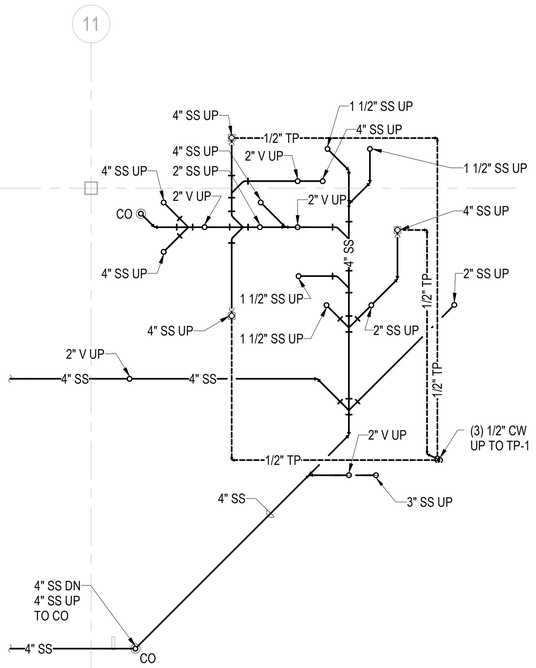

C1 ENLARGED G020/G021/G022 - UNDERGROUND PLAN

SCALE: 1/4" = 1'-0"

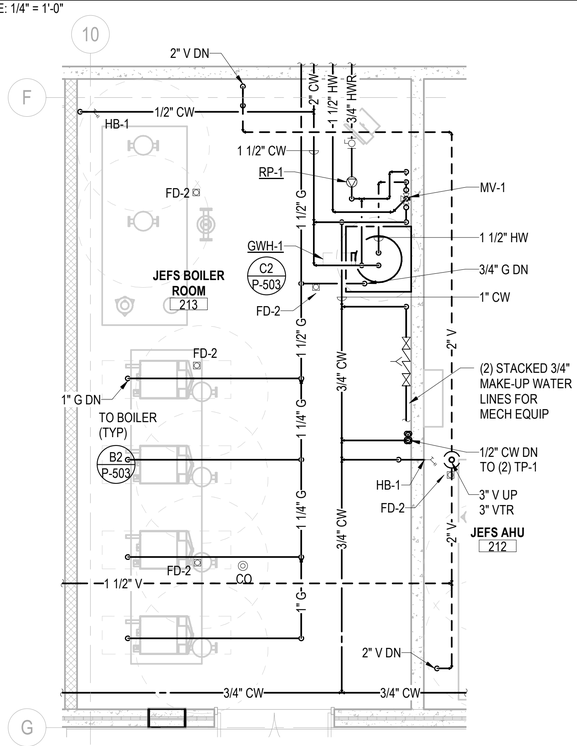

A1 ENLARGED JEFS BOILER ROOM PLAN

SCALE: 1/4" = 1'-0"

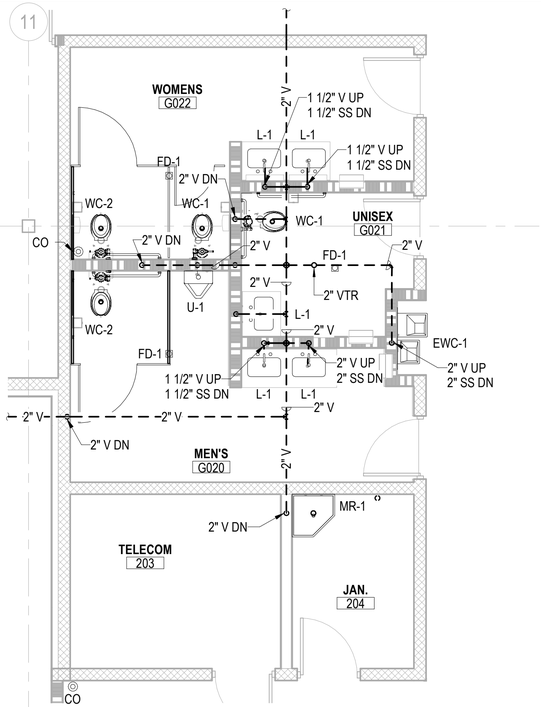

C3 ENLARGED G020/G021/G022 - SANITARY & VENT PLANS

SCALE: 1/4" = 1'-0"

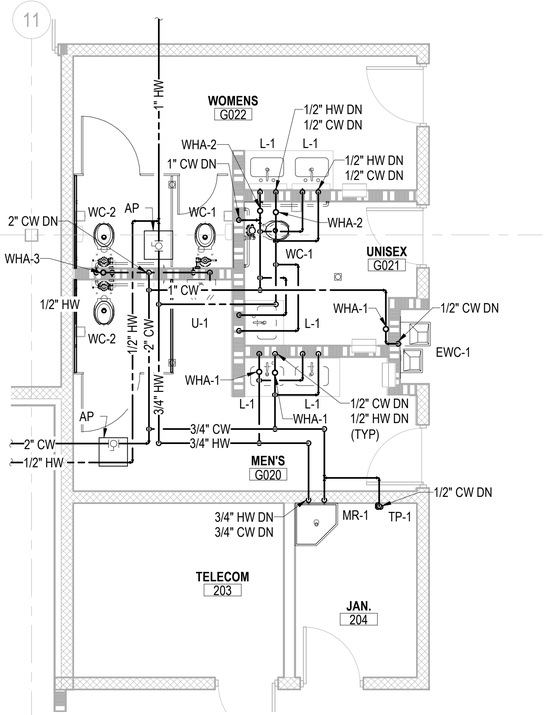

A3 ENLARGED G020/G021/G022 - WATER PLAN

SCALE: 1/4" = 1'-0"

GENERAL NOTES

1. SEE P-001 FOR GENERAL NOTES, ABBREVIATIONS & SYMBOLS.
2. REFER TO STRUCTURAL DRAWINGS FOR THE EXACT SIZE, LOCATION, AND ELEVATION OF FOUNDATIONS, FOOTERS AND GRADE BEAMS.
3. REFER TO STRUCTURAL DRAWINGS FOR DETAILS OF PIPE CROSSINGS UNDER OR THROUGH THE STRUCTURAL FOUNDATIONS, FOOTERS AND GRADE BEAMS.
4. ALL SANITARY SEWERS SHALL BE INSTALLED AT A MINIMUM SLOPE OF 1/8"/1'-0", UNLESS NOTED OTHERWISE.
5. VENTS SHALL CONNECT ABOVE CENTERLINE OF HORIZONTAL WASTE / SANITARY PIPE & SHALL RISE CONTINUOUSLY THROUGH FLOOR A MINIMUM 6" ABOVE FLOOD LEVEL OF FIXTURE. PROVIDE 45° CONNECTION TO WASTE / SANITARY LINE.
6. UNDERFLOOR SANITARY SEWER PIPING SHALL BE A MINIMUM OF 4" UNLESS NOTED OTHERWISE.
7. REFER TO P-700 SERIES FOR RISER DIAGRAMS.

APPR	DATE	DESCRIPTION	SYM

NAVFAC

COMMONWEALTH OF PENNSYLVANIA
REGISTERED PROFESSIONAL
DAVID W. HURD
ENGINEER
No. PE061160
SEAL

IRQ W.M. Jordan COMPANY – A JOINT VENTURE –

Michael Baker INTERNATIONAL
100 AIRSIDE DRIVE
MOON TOWNSHIP, PA 15108
A/E INFO

APPROVED

FOR COMMANDER NAVFAC

ACTIVITY
MARINE CORPS BASE
CAMP LEJEUNE

SATISFACTORY TO DATE	DD/MM/YY
DES SKH	DRW JTP CHK DWH
PM / DM	TOWLER / ROOT
BRANCH HEAD	SCE
DESIGN DIRECTOR	R.L.Stephens, Jr.
FIRE PROTECTION	DPS

DEPARTMENT OF THE NAVY
NAVAL FACILITIES ENGINEERING SYSTEMS COMMAND
ATLANTIC DESIGN AND CONSTRUCTION
MCB CAMP LEJEUNE

NAVAL FACILITIES ENGINEERING SYSTEMS COMMAND ATLANTIC
NORFOLK, VA

JACKSONVILLE, NC

LOGCOM CSP WAREHOUSE

PLUMBING - ENLARGED PLANS

SCALE:	AS NOTED
EPROJECT NO.:	1639600
CONSTR. CONTR. NO.	N40085-20-C-0059
NAVFAC DRAWING NO.	14111293
SHEET	273 OF 447

P-402

DRAWFORM REVISION: 25 AUGUST 2020

0 2' - 0" 4' - 0" 8' - 0"
SCALE: 1/4" = 1' - 0"

N

P1527 FINAL SUBMISSION - 11/18/2021

PLOTTED: 11/15/2021 8:33:30 AM

FILE NAME: BIM 360:/HF PACKAGE 3/P1527 LOG COM CSP-1639600-P.rvt

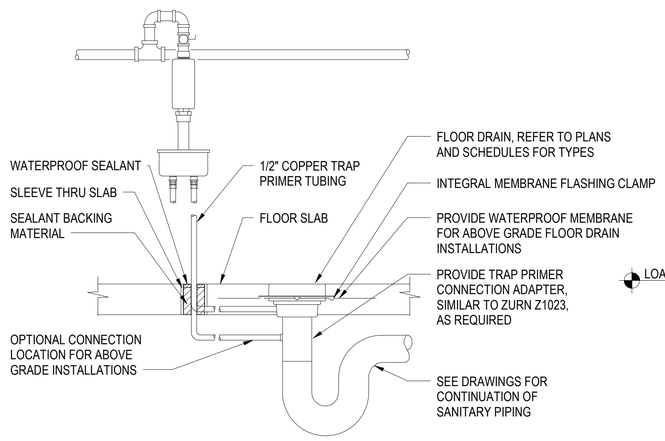

C1 FLOOR DRAIN AND TRAP PRIMER VALVE DETAIL
SCALE:NTS

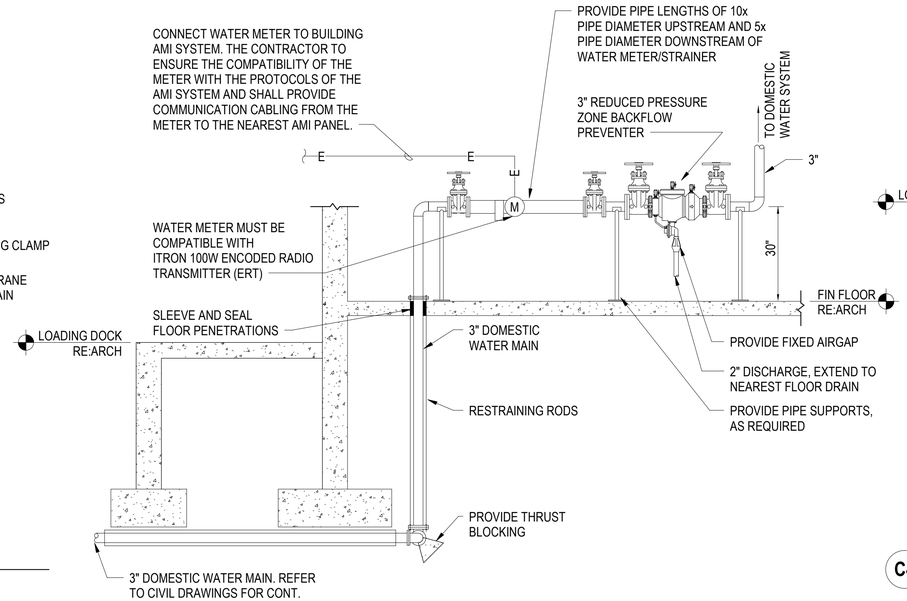

NOTE:
WATER ENTRANCE ASSEMBLY SHALL BE A MINIMUM OF 12" FROM REAR WALL.

C2 WATER SERVICE ENTRANCE DETAIL
SCALE:NTS

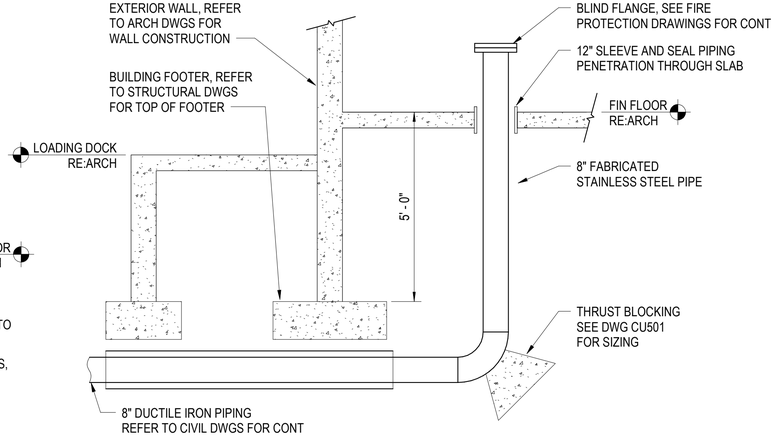

C4 FIRE PROTECTION SERVICE ENTRANCE DETAIL
SCALE:NTS

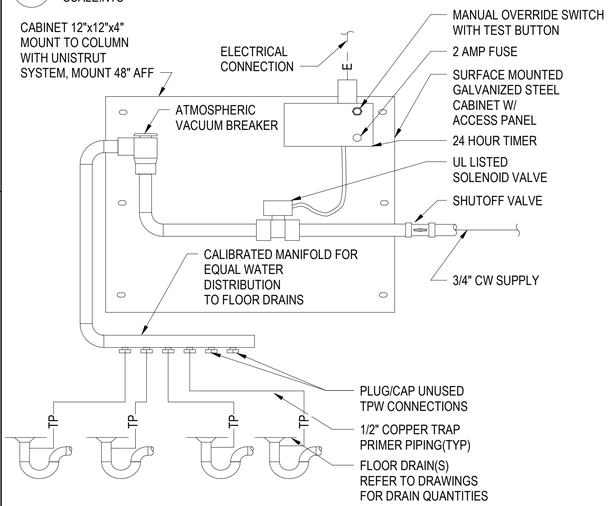

B1 ELECTRONIC TRAP PRIMER VALVE DETAIL
SCALE:NTS

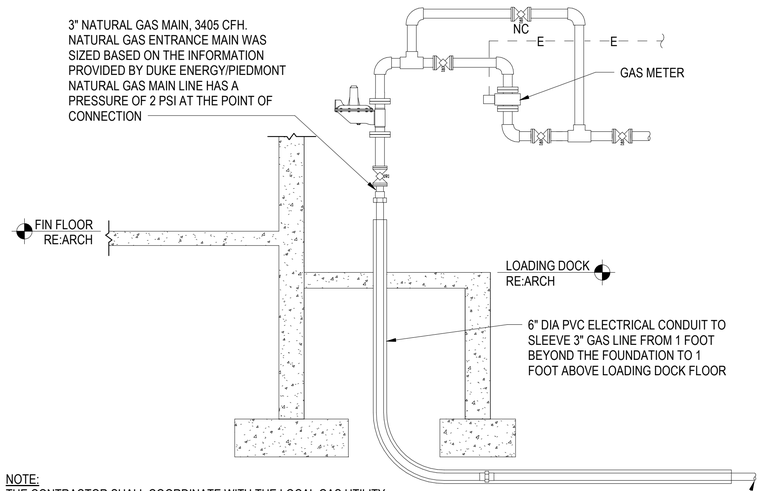

NOTE:
THE CONTRACTOR SHALL COORDINATE WITH THE LOCAL GAS UTILITY TO ENSURE THAT THE GAS METER THAT IS PROVIDED IS COMPATIBLE WITH THE BUILDING AMI SYSTEM. IF THE GAS COMPANY CANNOT PROVIDE AN APPROPRIATE GAS METER, THE CONTRACTOR SHALL BE RESPONSIBLE TO PROVIDE A FLOW METER THAT CAN BE CONNECTED TO THE AMI SYSTEM TO MEASURE NATURAL GAS CONSUMPTION.

A2 GAS METER DETAIL
SCALE:NTS

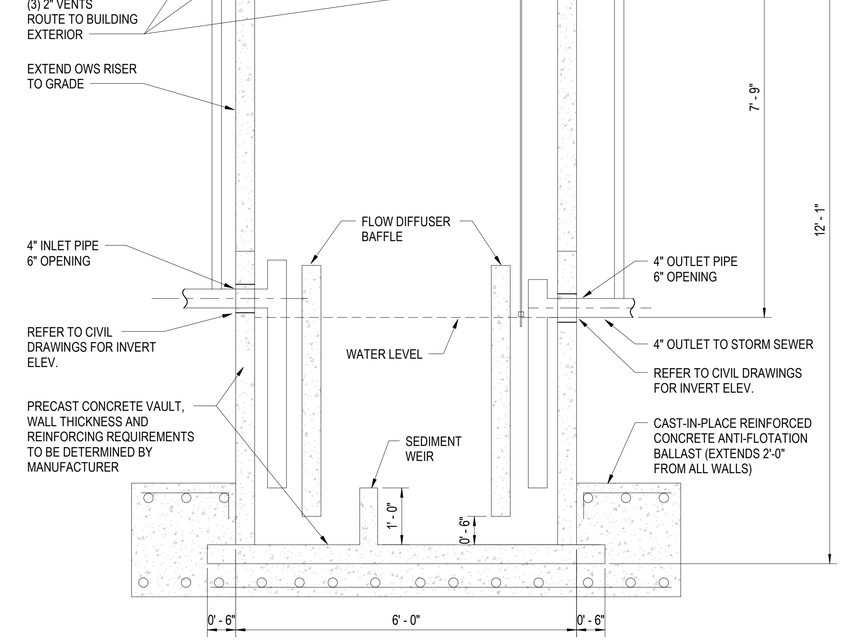

A4 OIL/WATER SEPARATOR DETAIL
SCALE: 3/4" = 1'-0"

APPR	
DATE	
SYM DESCRIPTION	
SEAL	COMMONWEALTH OF PENNSYLVANIA REGISTERED PROFESSIONAL DAVID W. HURD ENGINEER No. PE061160
	RQ W.M. Jordan COMPANY – A JOINT VENTURE –
	Michael Baker INTERNATIONAL
A/E INFO	100 AIRSIDE DRIVE MOON TOWNSHIP, PA 15108
APPROVED	FOR COMMANDER NAVFAC
ACTIVITY	MARINE CORPS BASE CAMP LEJEUNE
SATISFACTORY TO DATE	DD/MM/YY
DES SKH DRW JTP CHK DWH	
PM / DM	TOWLER / ROOT
BRANCH HEAD	SCE
DESIGN DIRECTOR	R.L.Stephens, Jr.
FIRE PROTECTION	DPS
DEPARTMENT OF THE NAVY	NAVAL FACILITIES ENGINEERING SYSTEMS COMMAND ATLANTIC NORFOLK, VA
	NAVAL FACILITIES ENGINEERING SYSTEMS COMMAND ATLANTIC DESIGN AND CONSTRUCTION
	MCB CAMP LEJEUNE
	JACKSONVILLE, NC
	LOGCOM CSP WAREHOUSE
	PLUMBING - DETAILS
SCALE:	AS NOTED
EPROJECT NO.:	1639600
CONSTR. CONTR. NO.	N40085-20-C-0059
NAVFAC DRAWING NO.	14111294
SHEET	274 OF 447
	P-501
DRAWFORM REVISION: 25 AUGUST 2020	

P1527 FINAL SUBMISSION - 11/18/2021

PLOTTED: 11/15/2021 8:33:31 AM

FILE NAME: BIM 360://HF PACKAGE 3/P1527 LOG COM CSP-1639600-P.rvt

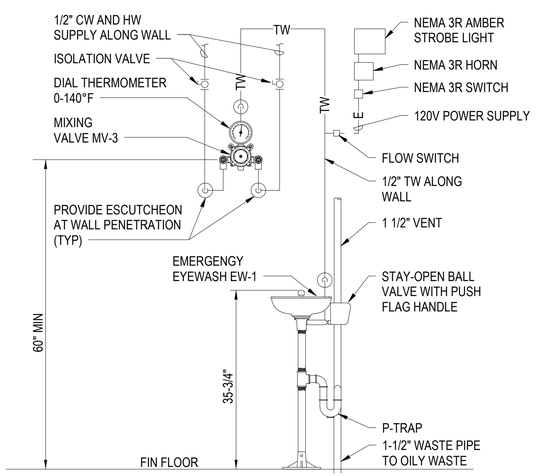

C1 EMERGENCY EYEWASH (EW-1) DETAIL
SCALE:NTS

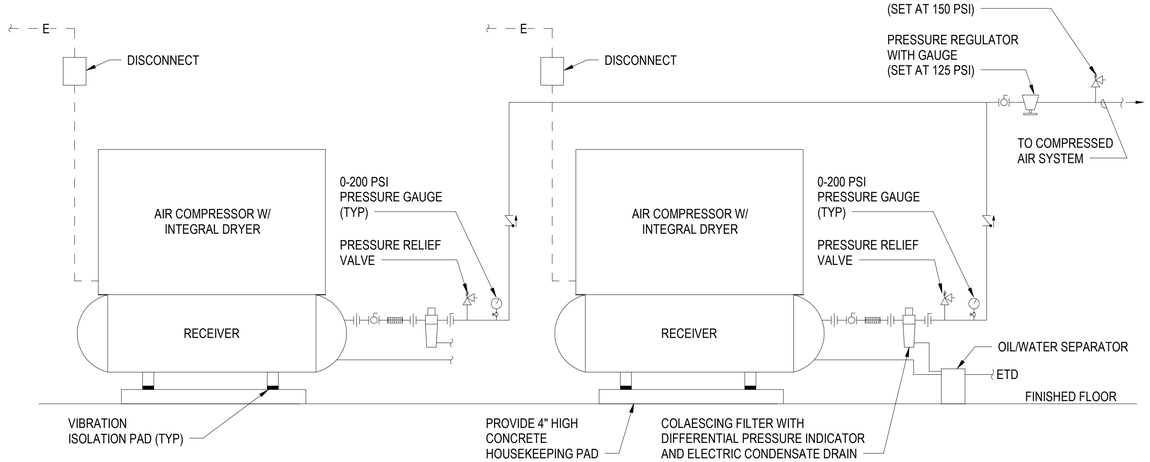

C3 AIR COMPRESSOR DETAIL
SCALE:NTS

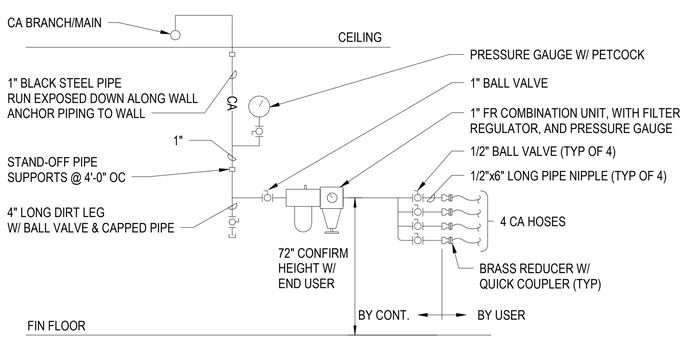

B1 SANITATION ROOM COMPRESSED AIR OUTLET DETAIL
SCALE:NTS

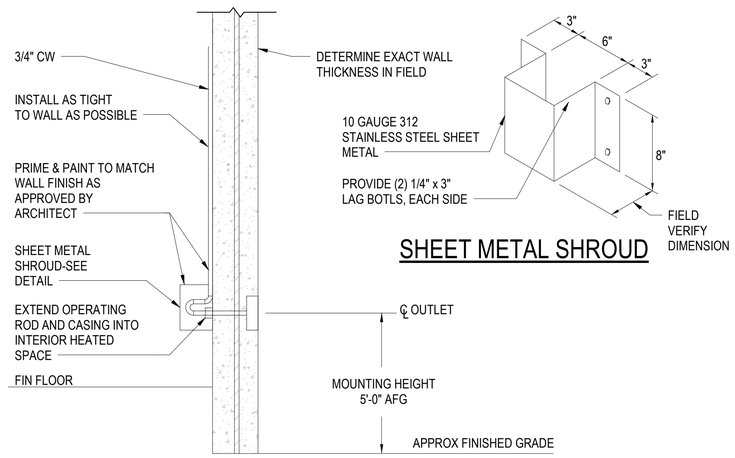

SHEET METAL SHROUD

A1 WALL HYDRANT DETAIL
SCALE:NTS

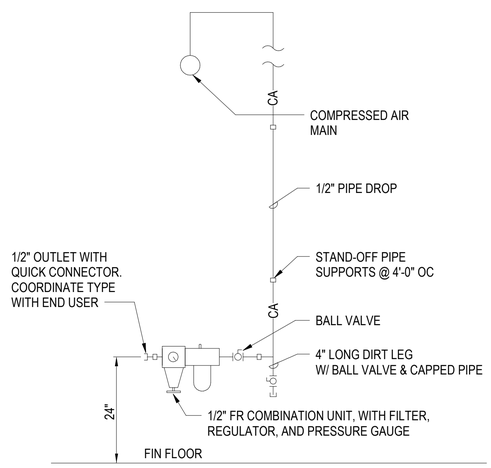

A3 COMPRESSED AIR SINGLE OUTLET DETAIL
SCALE:NTS

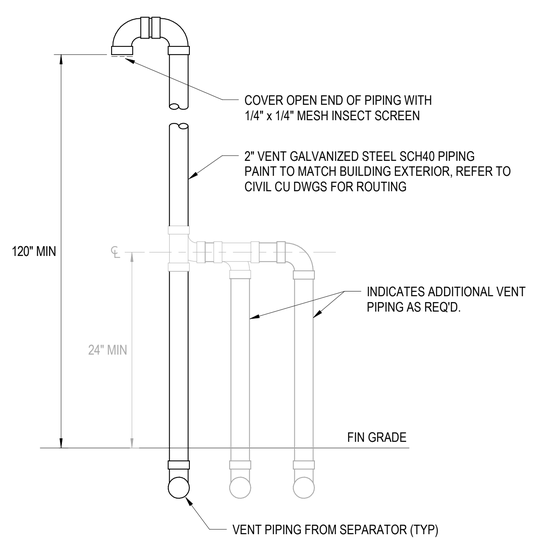

A4 OWS VENT GOOSENECK DETAIL
SCALE:NTS

APPR	DATE	DESCRIPTION	SYM

NAVFAC

COMMONWEALTH OF PENNSYLVANIA — REGISTERED PROFESSIONAL — DAVID W. HURD — ENGINEER — No PE061160
SEAL

IRQ W.M. Jordan COMPANY – A JOINT VENTURE –

Michael Baker INTERNATIONAL
100 AIRSIDE DRIVE
MOON TOWNSHIP, PA 15108
A/E INFO

APPROVED

FOR COMMANDER NAVFAC

ACTIVITY
MARINE CORPS BASE CAMP LEJEUNE

SATISFACTORY TO DATE DD/MM/YY

DES SKH	DRW JTP	CHK DWH
PM / DM	TOWLER / ROOT	
BRANCH HEAD	SCE	
DESIGN DIRECTOR	R.L.Stephens, Jr.	
FIRE PROTECTION	DPS	

DEPARTMENT OF THE NAVY
NAVAL FACILITIES ENGINEERING SYSTEMS COMMAND
ATLANTIC DESIGN AND CONSTRUCTION
NAVAL FACILITIES ENGINEERING SYSTEMS COMMAND ATLANTIC
NORFOLK, VA
JACKSONVILLE, NC
MCB CAMP LEJEUNE
LOGCOM CSP WAREHOUSE

PLUMBING - DETAILS

SCALE:	AS NOTED
EPROJECT NO.:	1639600
CONSTR. CONTR. NO.	N40085-20-C-0059
NAVFAC DRAWING NO.	14111295
SHEET	275 OF 447

P-502

DRAWFORM REVISION: 25 AUGUST 2020

P1527 FINAL SUBMISSION - 11/18/2021

PLOTTED: 11/15/2021 8:33:32 AM

FILE NAME: BIM 360://HF PACKAGE 3/P1527 LOG COM CSP-1639600-P.rvt

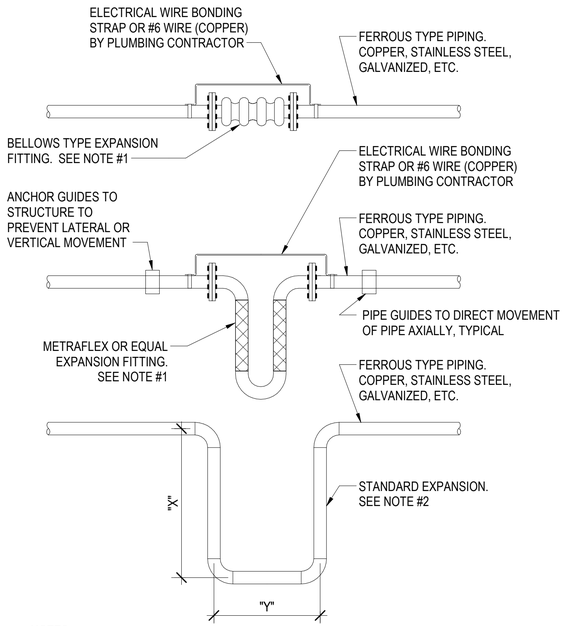

NOTES:
1. (3) OPTIONAL TYPE EXPANSION TYPE JOINTS ARE SHOWN SIZING FOR EXPANSION JOINTS USING FITTINGS SHALL BE SIZED IN ACCORDANCE WITH MANUFACTURERS RECOMMENDATIONS. LOOPS MAY BE INSTALLED INDIVIDUALLY OR NESTED.
2. EXPANSION LOOP TYPE JOINTS SHALL BE SIZED IN ACCORDANCE WITH STANDARD ENGINEERING PRACTICES.
3. PIPE ANCHORS AND GUIDES FOR ALL EXPANSION JOINTS AND LOOPS SHALL BE A REQUIRED BY MANUFACTURERS RECOMMENDATIONS AND STANDARD ENGINEERING PRACTICES.

B1 PIPING EXPANSION LOOP DETAIL
SCALE:NTS

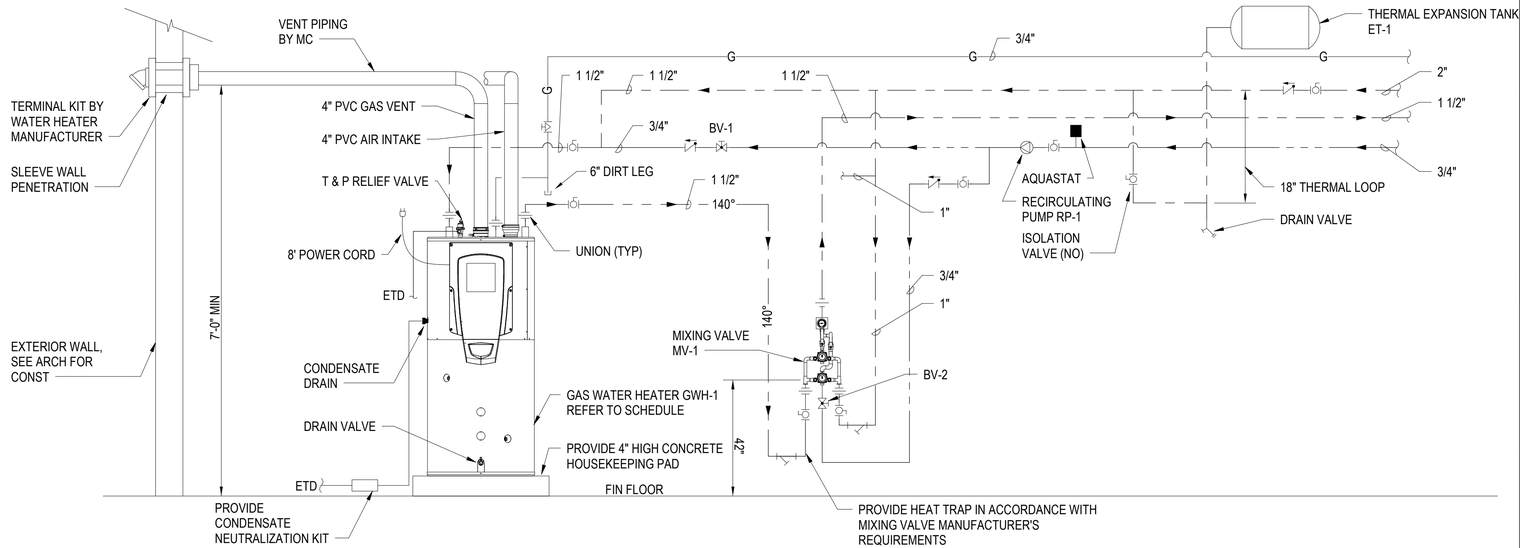

C2 GAS WATER HEATER DETAIL
SCALE:NTS

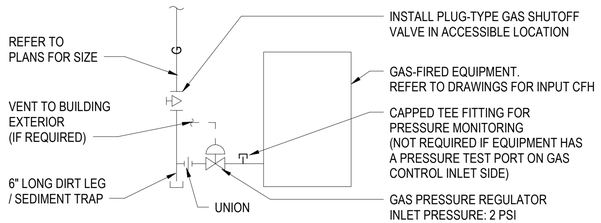

B2 GAS CONNECTION FOR STANDARD EQUIPMENT DETAIL
SCALE:NTS



IMAGE OF EXISTING SANITATION SINK

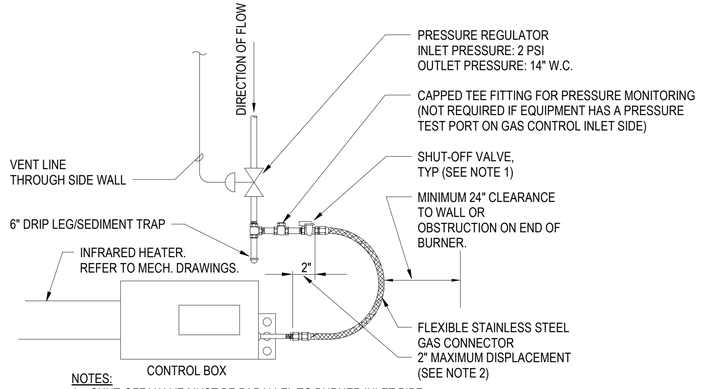

NOTES:
1. SHUT-OFF VALVE MUST BE PARALLEL TO BURNER INLET PIPE.
2. THE 2" DISPLACEMENT AS SHOWN IS FOR THE COLD CONDITION. THIS DISPLACEMENT WILL BE REDUCED AS THE SYSTEM IS FIRED.
3. ALLOW SUFFICIENT CLEARANCES FOR BURNER REMOVAL SERVICE.
4. ALL GAS PIPING SHOWN IS BY PLUMBING CONTRACTOR.

A1 GAS CONNECTION FOR INFRARED HEATER DETAIL
SCALE:NTS

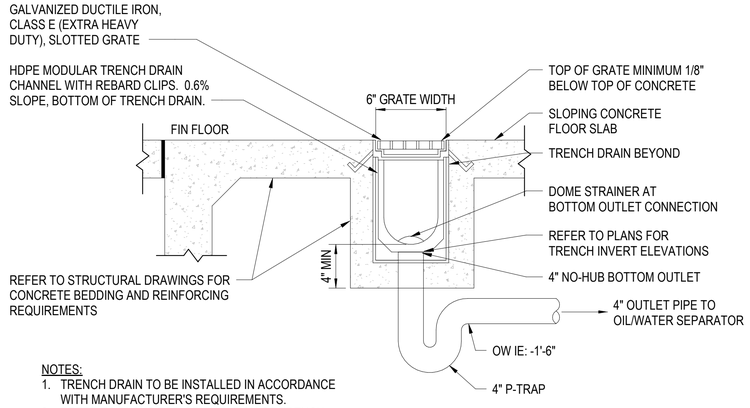

NOTES:
1. TRENCH DRAIN TO BE INSTALLED IN ACCORDANCE WITH MANUFACTURER'S REQUIREMENTS.
2. REFER TO PLANS FOR ORIENTATION OF TRENCH DRAIN OUTLET CONNECTION.

A2 TRENCH DRAIN DETAIL - TD-1
SCALE:NTS

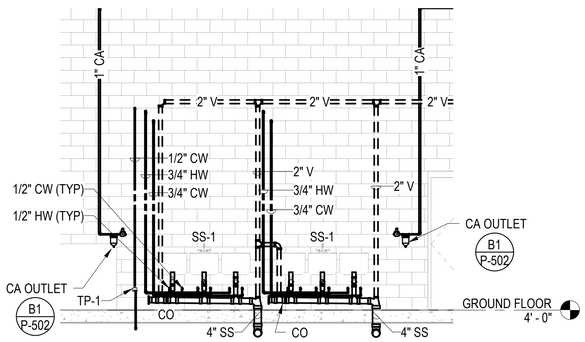

NOTES:
1. PIPING TO BE ROUTED EXPOSED ALONG WALL
2. EACH COMPARTMENT TO HAVE SERVICE FAUCET. CENTER FAUCETS TO BE SWING TYPE SPOUT AND END FAUCETS TO HAVE PRE-RINSE SPRAYER. PROVIDE FOOT VALVE OPERATION AND LEVER DRAIN FOR EACH COMPARTMENT.

A4 SANITATION ROOM SINKS DETAIL
SCALE: 1/4" = 1'-0"

APPR	DATE	DESCRIPTION	SYM

NAVFAC

COMMONWEALTH OF PENNSYLVANIA — REGISTERED PROFESSIONAL — DAVID W. HURD — ENGINEER — No PE061160

SEAL

IRQ Wm. Jordan Company — A JOINT VENTURE

Michael Baker INTERNATIONAL
100 AIRSIDE DRIVE
MOON TOWNSHIP, PA 15108 A/E INFO

APPROVED

FOR COMMANDER NAVFAC

ACTIVITY
MARINE CORPS BASE CAMP LEJEUNE

SATISFACTORY TO DATE DD/MM/YY

DES	DRW	CHK
SKH	JTP	DWH

PM / DM TOWLER / ROOT
BRANCH HEAD SCE
DESIGN DIRECTOR R.L.Stephens, Jr.
FIRE PROTECTION DPS

DEPARTMENT OF THE NAVY
NAVAL FACILITIES ENGINEERING SYSTEMS COMMAND ATLANTIC
ATLANTIC DIVISION AND CONSTRUCTION
NAVAL FACILITIES ENGINEERING SYSTEMS COMMAND
NORFOLK, VA
MCB CAMP LEJEUNE
JACKSONVILLE, NC
LOGCOM CSP WAREHOUSE

PLUMBING - DETAILS

SCALE: AS NOTED
EPROJECT NO.: 1639600
CONSTR. CONTR. NO. N40085-20-C-0059
NAVFAC DRAWING NO. 14111296
SHEET 276 OF 447

P-503

DRAWFORM REVISION: 25 AUGUST 2020

P1527 FINAL SUBMISSION - 11/18/2021

PLOTTED: 11/15/2021 8:33:35 AM

FILE NAME: BIM 360://HF PACKAGE 3/P1527 LOG COM CSP-1639600-P.rvt

OIL/WATER SEPARATOR SCHEDULE

TAG	LOCATION	MATERIAL	CAPACITY (GAL)	FLOW RATE (GPM)	CONNECTIONS			BASIS OF DESIGN		NOTES
					INLET	OUTLET	VENT	MANUF	MODEL	
OWS-1	SEE CIVIL PLANS	PRECAST CONCRETE	550	37	4"	4"	2"	OLDCASTLE	660-SA-550	1, 2, 3

NOTES: 1. INSTALL IN ACCORDANCE WITH MANUFACTURER'S REQUIREMENTS.
2. PROVIDE BASIS OF DESIGN MANUFACTURER/MODEL OR APPROVED EQUAL
3. REFER TO DETAIL A4/P-501

11/12/2021 7:31

MIXING VALVE SCHEDULE

TAG	ASSE NO.	LOCATION	MINIMUM FLOW RATE (GPM)	MAXIMUM FLOW RATE (GPM) (SEE NOTE 2)	CONNECTIONS		BASIS OF DESIGN		NOTES
					INLET (IN)	OUTLET (IN)	MANUF	MODEL	
MV-1	1017	MECH ROOM	1	40	1"	1 1/4"	LEONARD VALVE	TM-820B	1,2
MV-2	1070	SINKS	0.25	2.3	3/8	3/8	LEONARD VALVE	170 LF	1,2
MV-3	1071	EMERGENCY EYEWASH	3	7	1/2	1/2	GUARDIAN	G6020	1,2,3

NOTES: 1. INSTALL IN ACCORDANCE WITH MANUFACTURER'S REQUIREMENTS.
2. AT 10 PSI PRESSURE DROP
3. AT 10 PSI PRESSURE DROP, BYPASS FLOW RATE IS 5 GPM

11/12/2021 7:31

WATER HAMMER ARRESTOR (WHA) SCHEDULE

TAG	P.D.I. SIZE	CONNECTION SIZE (in)	TYPE	FIXTURE UNIT CAPACITY	NOTES
WHA-1	A	3/4"	NESTING BELLOWS	1 TO 11 SFU	1, 2, 3
WHA-2	B	3/4"	NESTING BELLOWS	12 TO 32 SFU	1, 2, 3
WHA-3	C	1"	NESTING BELLOWS	33 TO 60 SFU	1, 2, 3
WHA-4	D	1"	NESTING BELLOWS	61 TO 113 SFU	1, 2, 3
WHA-5	E	1"	NESTING BELLOWS	114 TO 154 SFU	1, 2, 3
WHA-6	F	1"	NESTING BELLOWS	155 TO 330 SFU	1, 2, 3

NOTES: 1. INSTALL IN ACCORDANCE WITH MANUFACTURER'S REQUIREMENTS.
2. PROVIDE WATER HAMMER ARRESTORS AT FLUSH VALVE-OPERATER FIXTURES, SOLENOID VALVES, AND ANY OTHER QUICK CLOSING VALVES.
3. FURNISH ACCESS PANELS, WHERE REQUIRED, FOR INSTALLATION BY GENERAL CONTRACTOR.

11/12/2021 7:31

BACKFLOW PREVENTER SCHEDULE

TAG	TYPE	SYSTEM	LOCATION	NOMINAL SIZE (IN)	FLOW RATE (GPM)	MAXIMUM PRESSURE DROP (PSI)	BASIS OF DESIGN		NOTES
							MANUF	MODEL	
BFP-1	RPZ	DOMESTIC WATER	MECH ROOM	3"	80	12	ZURN	375	1, 2, 3, 4
BFP-2	DUAL CHECK	DOMESTIC WATER	BREAK ROOM	1/2"	0.5	3	WATTS	LF9D	1,3

NOTES: 1. INSTALL IN ACCORDANCE WITH MANUFACTURER'S REQUIREMENTS.
2. PROVIDE FIXED AIRGAP. DISCHARGE TO NEAREST FLOOR DRAIN.
3. ALL INSTALLED BACKFLOW PREVENTERS TO BE TESTED AND CERTIFIED AT THE COMPLETION OF THE PROJECT BY A PERSON CERTIFIED TO TEST THESE DEVICES, AND THE TEST RESULTS SUBMITTED.
4. INSTALL AT A MAXIMUM OF 60" ABOVE FINISHED FLOOR.

11/12/2021 7:31

EXPANSION TANK SCHEDULE

TAG	TYPE	SYSTEM	LOCATION	DIMENSIONS DIA X H (in)	CONNECTIONS (in)	VOLUME		FACTORY PRE-CHARGE PRESSURE (PSI)	BASIS OF DESIGN		NOTES
						TANK (GAL)	ACCEPTANCE (GAL)		MANUF	MODEL	
ET-1	BLADDER	DOMESTIC HOT WATER	MECH ROOM	16 x 24	1	10.3	3.6	40	WESSELS	TTA-30	1,2,3

NOTES: 1. INSTALL IN ACCORDANCE WITH MANUFACTURER'S REQUIREMENTS.
2. HEAVY DUTY BUTLY RUBBER BLADDER TYPE.
3. ASME SECTION VIII, DIVISION 1 COMPLIANT.

11/12/2021 7:31

PLUMBING FIXTURE SCHEDULE

2018 INTERNATIONAL PLUMBING CODE

TAG	FIXTURE	BASIS OF DESIGN	DESCRIPTION	CONNECTION SIZE				DFU	SFU			NOTES
				SAN	VENT	CW	HW		HW	CW	TOTAL	
WC-1	WATER CLOSET	FIXTURE: AMERICAN STANDARD 3451.128 VALVE: SLOAN ECOS 111-1.28-HW	FLOOR MOUNT, VITREOUS CHINA, HARD-WIRED INFRARED FLUSH VALVE, 1.28 GPF	4"	2"	1"	-	4	-	10	10	1,2,3,4
WC-2	WATER CLOSET	FIXTURE: AMERICAN STANDARD 3461.128 VALVE: SLOAN ECOS 111-1.28-HW	FLOOR MOUNT, VITREOUS CHINA, HARD-WIRED INFRARED FLUSH VALVE, 1.28 GPF, ADA HEIGHT	4"	2"	1"	-	4	-	10	10	1,2,3,4
U-1	URINAL	FIXTURE: AMERICAN STANDARD 6590.001 VALVE: SLOAN ECOS 186 HW-0.5	WALL HUNG, VITREOUS CHINA, HARD-WIRED INFRARED FLUSH VALVE, 0.5 GPF, ADA COMPLIANT	2"	1 1/2"	3/4"	-	2	-	5	5	1,2,3,4
L-1	LAVATORY	FIXTURE: INTEGRAL W/ COUNTER FAUCET: ZURN Z7440-XL	INTEGRAL WITH SOLID SURFACE COUNTERTOP, VITREOUS CHINA, MANUAL FAUCET, 0.5 GPM FLOW RATE	1 1/2"	1 1/2"	1/2"	1/2"	1	1.5	1.5	2	1,2,4,5,6
S-1	SINK	FIXTURE: ELKAY DCFU2816 FAUCET: MOEN 8287	SINGLE COMPARTMENT STAINLESS STEEL, UNDERMOUNT SINK, 1.5 GPM FAUCET WITH GOOSENECK SWING SPOUT	1 1/2"	1 1/2"	1/2"	1/2"	2	1	1	1.4	1,2,5
SS-1	SERVICE SINK	RELOCATED FROM EXISTING WAREHOUSE FACILITY	RELOCATE FROM EXISTING WAREHOUSE FACILITY. PROVIDE PRE-RINSE SPRAYER FOR LEFT & RIGHT COMPARTMENT AND TWO HANDLE SERVICE FAUCET WITH SWING SPOUT FOR CENTER COMPARTMENT. PROVIDE FOOT CONTROL AND LEVER DRAIN FOR EACH COMPARTMENT. PROVIDE WATER PIPE & CONNECTIONS, P-TRAPS, DRAIN PIPE, & CONNECTIONS FOR COMPLETE WORKING SINK.	3"	2"	1/2"	1/2"	2	2.25	2.25	1.4	1,2,5
SS-2	SERVICE SINK	FIXTURE: AERO MANUFACTURING S1 FAUCET: AMERICAN STANDARD 8351.076	24"x24", SINGLE COMPARTMENT, STAINLESS STEEL, 1 5/8" OD ADJUSTABLE STAINLESS STEEL LEGS, SERVICE SINK FAUCET WITH INTEGRAL VACUUM BREAKER & WALL BRACE	3"	2"	1/2"	1/2"	2	2.25	2.25	1.4	1,2,5
EWC-1	ELECTRIC WATER COOLER	FIXTURE: ELKAY LZSTL8WSSK	WALL HUNG, DUAL HEIGHT UNIT, FRONT & SIDE PUSH PADS, CANE APRON, BOTTLE FILLER, ADA COMPLIANT	1 1/2"	1 1/2"	1/2"	-	0.5	-	0.25	0.25	1,2
MR-1	MOP RECEPTOR	FIXTURE:FIAT TSB3000 FAUCET: AMERICAN STANDARD 8344.012	24" x 24" TERRAZZO BASIN, STAINLESS STEEL RIM GUARD, SERVICE SINK FAUCET WITH INTEGRAL VACCUUM BREAKER & WALL BRACE, STAINLESS STEEL WALL SURROUND, HOSE & BRACKET	3"	2"	3/4"	3/4"	2	2.25	2.25	3	1,2
OB-1	OUTLET BOX	FIXTURE: OATEY	RECESSED POLYESTRENE BOX, 1/4 TURN VALVE	-	-	1/2"	-	-	-	-	-	1
HB-1	HOSE BIBB	FIXTURE: WATTS SERIES SC8	EXPOSED, WITH VACUUM BREAKER	-	-	1/2"	-	-	-	2.5	2.5	1,2,7
WH-1	WALL HYDRANT	FIXTURE: WATTS HY-725	ENCASED, ANTI-SIPHON, NON-FREEZE, AUTOMATIC DRAINING	-	-	3/4"	-	-	-	3	3	1,2,8
TP-1	TRAP PRIMER DIST UNIT	FIXTURE: PPP P1-500	AUTOMATIC, PRESSURE-ACTIVATED VALVE, 4-WAY DISTRIBUTION UNIT FOR 1-4 FLOOR DRAINS	-	-	1/2"	-	-	-	-	-	1
TP-2	TRAP PRIMER DIST UNIT	FIXTURE: PPP PRIME TIME	AUTOMATIC ELECTRONIC SURFACE MOUNT TRAP PRIMING ASSEMBLY, 120v SOLENOID VALVE	-	-	3/4"	-	-	-	-	-	1
EW-1	EMERGENCY EYEWASH	FIXTURE: GUARDIAN G1760	FLOOR MOUNTED, EMERGENCY EYE & FACEWASH, THERMOSTATIC MIXING VALVE (ASSE 1071), AND FLOW INITIATED HORN AND STROBE	1 1/2"	1 1/2"	1/2"	1/2"	-	-	-	-	1,2

NOTES: 1. INSTALL FIXTURE AND ALL ASSOCIATED ACCESSORIES AND APPURTENANCES IN ACCORDANCE WITH MANUFACTURER'S REQUIREMENTS.
2. PROVIDE ALL REQUIRED ACCESSORIES AND APPURTENANCES, INCLUDING BUT NOT LIMITED TO, COUPLINGS, STUDS & GASKETS, SUPPLIES & STOPS, ESCUTCHEONS, TAILPIECES AND P-TRAPS.
3. PROVIDE FIXTURE FLUSH VALVE WITH PUSH-BUTTON OVERRIDE.
4. REFER TO ARCHITECTURAL DRAWING A-002 FOR MOUNTING HEIGHTS.
5. PROVIDE PRE-MOLDED INSULATION ON EXPOSED CW & HW SUPPLIES AND STOPS, AND DRAIN PIPING BELOW FIXTURES.
6. PROVIDE THERMOSTATIC MIXING VALVE, COMPLYING WITH ASSE 1070, BELOW FIXTURE.
7. INSTALL AT 18" ABOVE FINISHED FLOOR, UNLESS OTHERWISE NOTED.
8. INSTALL AT 36" ABOVE FINISHED FLOOR, UNLESS OTHERWISE NOTED.

11/12/2021 7:31

GAS-FIRED WATER HEATER SCHEDULE

TAG	TYPE	LOCATION	DIMENSIONS DIA x H (IN)	STORAGE (GAL)	RECOVERY (GPH)	TEMPERATURE RISE (°F)	STORAGE TEMPERATURE (°F)	CONNECTIONS					ELECTRICAL			BASIS OF DESIGN		NOTES
								CW (IN)	HW (IN)	GAS	GAS VENT	AIR INLET	VOLTS	PHASE	HERTZ	MANUF	MODEL	
GWH-1	STORAGE TANK	JEFS BOILER ROOM 213	27 3/4"ø x 76 1/2"	100	235	100	140	1 1/2"	1 1/2"	3/4"	4"	4"	120	1	60	AO SMITH	BTH199A	1,2,3,4

NOTES: 1. INSTALL IN ACCORDANCE WITH MANUFACTURER'S REQUIREMENTS.
2. RECOVERY RATE AT 100°F RISE.
3. PROVIDE TERMINAL KIT FOR EXTENSION OF GAS VENT AND COMBUSTION AIR THRU EXTERIOR WALL. REFER TO HVAC DRAWINGS FOR GAS VENTING AND AIR INLET PIPING.
4. PROVIDE CONDENSATE NEUTRALIZATION KIT.

11/12/2021 7:31

PUMP SCHEDULE

TAG	PUMP TYPE	SYSTEM	LOCATION	FLOW RATE (GPM)	HEAD	CONNECTIONS		ELECTRICAL						BASIS OF DESIGN		NOTES
						SUCTION (IN)	DISCHARGE (IN)	HP	AMPS	VOLTS	PHASE	HERTZ	RPM	MANUF	MODEL	
RP-1	IN-LINE CIRCULATOR	DOMESTIC HOT WATER RETURN	JEFS BOILER ROOM 213	4	13	1/2	1/2	0.125	0.65	115	1	60	-	GRUNDFOS	ALPHA1	1, 2, 3

NOTES: 1. INSTALL IN ACCORDANCE WITH MANUFACTURER'S REQUIREMENTS.
2. PROVIDE AQUASTAT AND CONNECTION TO BUILDING DDC SYSTEM FOR PUMP CONTROL.
3. PROVIDE THERMAL OVERLOAD SWITCH.

11/12/2021 7:31

FLOOR DRAIN/TRENCH DRAIN SCHEDULE

TAG	DESCRIPTION	LOCATION	PIPE CONNECTION SIZE (SEE NOTE 3)	STRAINER SIZE	STRAINER MATERIAL	BODY MATERIAL	OPEN DRAIN AREA (in^2)	ACCESSORIES	BASIS OF DESIGN		NOTES
									MANUF	MODEL	
FD-1	FLOOR DRAIN	TOILETS, JANITORS, BREAKROOM	4"	7"ø	NICKEL BRONZE	CAST IRON	12	-	ZURN	Z415	1, 2
FD-2	FLOOR DRAIN	MECH ROOM	4"	9"ø	DURA-COATED CAST IRON	CAST IRON	18	SEDIMENT BUCKET	ZURN	Z511	1, 2
FD-3	FLOOR DRAIN	BREAK ROOM	4"	5"ø	NICKEL BRONZE	CAST IRON	6 1/4	4" FUNNEL ASSEMBLY	ZURN	Z415	1, 2
FS-1	FLOOR SINK	MECH ROOM	4"	12"x12"	NICKEL BRONZE	CAST IRON	25	-	ZURN	ZN1900	1, 2
TD-1	TRENCH DRAIN	WAREHOUSE	4"	5 3/8" WIDE	DUCTILE IRON	HDPE	28.1/FT	SEE NOTES	JAY R SMITH	9931 HDF SERIES	1, 3

NOTES: 1. INSTALL IN ACCORDANCE WITH MANUFACTURER'S REQUIREMENTS.
2. PROVIDE WITH 1/2" TRAP PRIMER CONNECTION.
3. TRENCH DRAIN TO BE LOAD CLASSIFICATION E WITH EXTRA HEAVY DUTY CLASS E DUCTILE IRON SLOTTED GRATE, END CAPS, BOTTOM OUTLET CONNECTION AND DOME STRAINER.

SYM	DESCRIPTION	DATE	APPR

NAVFAC

COMMONWEALTH OF PENNSYLVANIA
REGISTERED PROFESSIONAL
DAVID W. HURD
ENGINEER
No PE061162
SEAL

W.M. Jordan COMPANY
~ A JOINT VENTURE ~

Michael Baker INTERNATIONAL
100 AIRSIDE DRIVE
MOON TOWNSHIP, PA 15108
A/E INFO

APPROVED

FOR COMMANDER NAVFAC

ACTIVITY
MARINE CORPS BASE
CAMP LEJEUNE

SATISFACTORY TO DATE	DD/MM/YY
DES SKH / DRW JTP / CHK DWH	
PM / DM	TOWLER / ROOT
BRANCH HEAD	SCE
DESIGN DIRECTOR	R.L.Stephens, Jr.
FIRE PROTECTION	DPS

NAVAL FACILITIES ENGINEERING SYSTEMS COMMAND ATLANTIC
NORFOLK, VA

JACKSONVILLE, NC

LOGCOM CSP WAREHOUSE

PLUMBING - SCHEDULES

DEPARTMENT OF THE NAVY
NAVAL FACILITIES ENGINEERING SYSTEMS COMMAND
ATLANTIC DIVISION AND CONSTRUCTION
MCB CAMP LEJEUNE

SCALE:	AS NOTED
EPROJECT NO.:	1639600
CONSTR. CONTR. NO.	N40085-20-C-0059
NAVFAC DRAWING NO.	14111297
SHEET	277 OF 447

P-601

DRAWFORM REVISION: 25 AUGUST 2020

P1527 FINAL SUBMISSION - 11/18/2021

PLOTTED: 11/15/2021 8:33:38 AM

FILE NAME: BIM 360/IHF PACKAGE 3/P1527 LOG COM CSP-1639600-P.rvt

COMPRESSED AIR EQUIPMENT SCHEDULE

TAG	DESCRIPTION	TYPE	LOCATION	TANK CAPACITY (GAL)	RATED CAPACITY (CFM)	OUTLET PRESSURE (PSI)	DIMENSIONS W x D x H (IN)	ELECTRICAL						APPROXIMATE WEIGHT (LBS)	BASIS OF DESIGN		NOTES
								HP	AMPS	VOLTS	PHASE	HERTZ	RPM		MANUF	MODEL	
AC-1	AIR COMPRESSOR	ROTARY SCREW	MECHANICAL 120	132.0	122	125.0	33 x 74 x 72	25.0	-	460.0	3.0	60.0	-	1651	ATLAS COPCO	GA18-125	1,2,3,4
AC-2	AIR COMPRESSOR	ROTARY SCREW	MECHANICAL 120	132.0	122	125.0	33 x 74 x 72	25.0	-	460.0	3.0	60.0	-	1651	ATLAS COPCO	GA18-125	1,2,3,4

NOTES: 1. INSTALL IN ACCORDANCE WITH MANUFACTURER'S REQUIREMENTS.
2. PROVIDE VIBRATION ISOLATION ON PIPING AND EQUIPMENT MOUNTING.
3. PROVIDE FILTRATION TO MEET ISO 8573.1:2010 QUALITY CLASS 3.4.4 OR HIGHER.
4. CONTRACTOR TO DO REQUIRED HYDROSTATIC AND OPERATIONAL TESTS WITNESSED BY THE BASE BOILER INSPECTOR.

11/12/2021 7:31

BALANCING VALVE SCHEDULE

TAG	TYPE	LOCATION	NOMINAL SIZE (IN)	FLOW RATE (GPM)	NOTES
BV-1	LEAD-FREE CALIBRATED	JEFS BOILER ROOM 213	3/4"	1.5	1
BV-2	LEAD-FREE CALIBRATED	JEFS BOILER ROOM 213	3/4"	2.5	1
BV-3	LEAD-FREE CALIBRATED	WAREHOUSE 104	3/4"	2.25	1
BV-4	LEAD-FREE CALIBRATED	WAREHOUSE 104	1/2"	1.75	1

NOTES: 1. INSTALL IN ACCORDANCE WITH MANUFACTURER'S REQUIREMENTS.

11/12/2021 7:31

APPR | DATE | DESCRIPTION | SYM

NAVFAC

COMMONWEALTH OF PENNSYLVANIA
REGISTERED PROFESSIONAL
DAVID W. HURD
ENGINEER
No PE061162
SEAL

IRQ Wm. Jordan COMPANY – A JOINT VENTURE –

Michael Baker INTERNATIONAL
100 AIRSIDE DRIVE
MOON TOWNSHIP, PA 15108 A/E INFO

APPROVED

FOR COMMANDER NAVFAC

ACTIVITY
MARINE CORPS BASE
CAMP LEJEUNE

SATISFACTORY TO DATE DD/MM/YY

DES	DRW	CHK
SKH	JTP	DWH

PM / DM TOWLER / ROOT
BRANCH HEAD SCE
DESIGN DIRECTOR R.L.Stephens, Jr.
FIRE PROTECTION DPS

DEPARTMENT OF THE NAVY
NAVAL FACILITIES ENGINEERING SYSTEMS COMMAND
ATLANTIC DESIGN AND CONSTRUCTION
MCB CAMP LEJEUNE
NAVAL FACILITIES ENGINEERING SYSTEMS COMMAND ATLANTIC
NORFOLK, VA
JACKSONVILLE, NC
LOGCOM CSP WAREHOUSE

PLUMBING - SCHEDULES

SCALE: AS NOTED
EPROJECT NO.: 1639600
CONSTR. CONTR. NO. N40085-20-C-0059
NAVFAC DRAWING NO. 14111298
SHEET 278 OF 447

P-602

DRAWFORM REVISION: 25 AUGUST 2020

P1527 FINAL SUBMISSION - 11/18/2021

PLOTTED: 11/15/2021 8:33:38 AM
FILE NAME: BIM 360://HF PACKAGE 3/P1527 LOG COM CSP-1639600-P.rvt

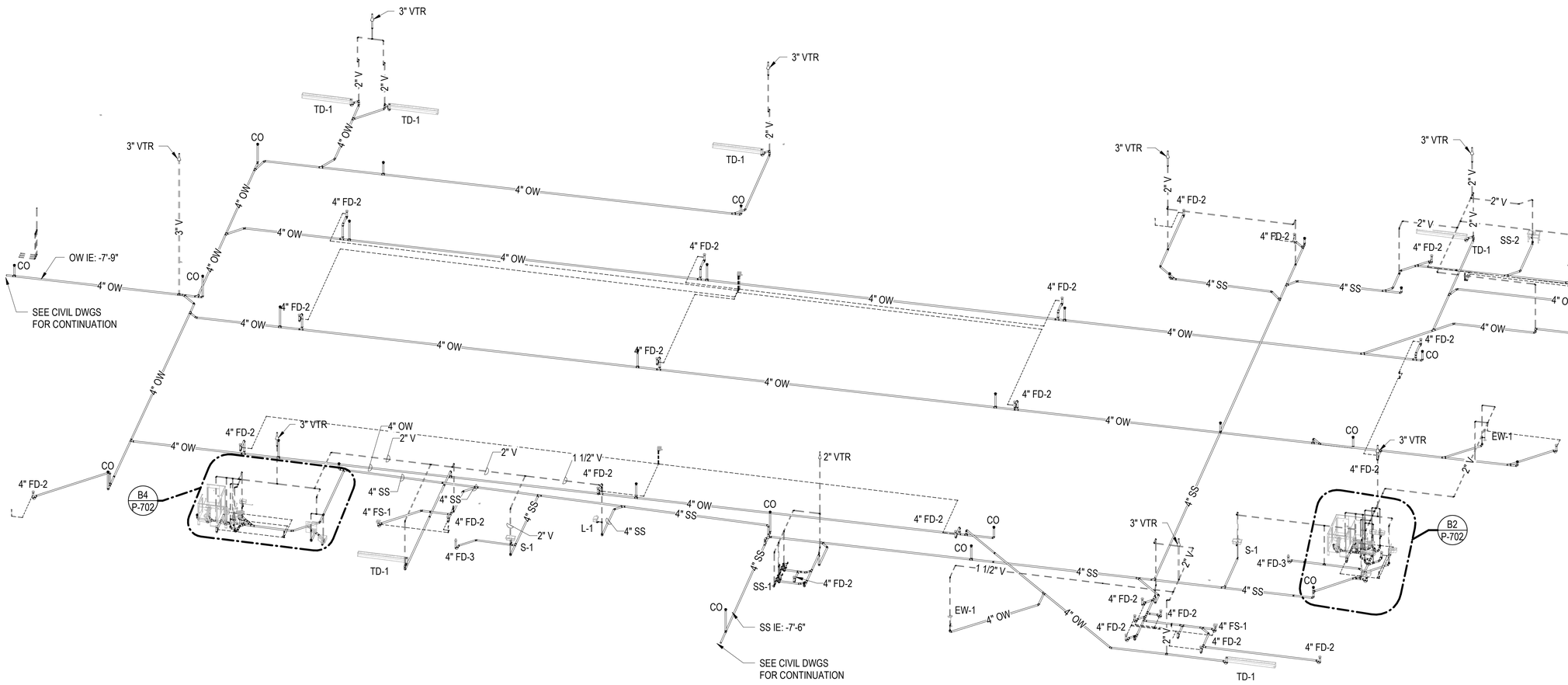

A1 OVERALL SANITARY & VENT/OILY WASTE RISER DIAGRAM

SCALE:NTS

PLOTTED: 11/15/2021 8:33:43 AM

FILE NAME: BIM 360://HF PACKAGE 3/P1527 LOG COM CSP-1639600-P.rvt

APPR	
DATE	
DESCRIPTION	
SYM	

NAVFAC

COMMONWEALTH OF PENNSYLVANIA — REGISTERED PROFESSIONAL ENGINEER — DAVID W. HURD — No PE061182 — SEAL

RQ W.M. Jordan COMPANY — A JOINT VENTURE

Michael Baker INTERNATIONAL

100 AIRSIDE DRIVE
MOON TOWNSHIP, PA 15108 — A/E INFO

APPROVED

FOR COMMANDER NAVFAC

ACTIVITY
MARINE CORPS BASE
CAMP LEJEUNE

SATISFACTORY TO DATE DD/MM/YY

DES	SKH	DRW JTP	CHK DWH
PM / DM	TOWLER / ROOT		
BRANCH HEAD	SCE		
DESIGN DIRECTOR	R.L.Stephens, Jr.		
FIRE PROTECTION	DPS		

DEPARTMENT OF THE NAVY
NAVAL FACILITIES ENGINEERING SYSTEMS COMMAND
ATLANTIC DESIGN AND CONSTRUCTION
MCB CAMP LEJEUNE

NAVAL FACILITIES ENGINEERING SYSTEMS COMMAND ATLANTIC
NORFOLK, VA
JACKSONVILLE, NC

LOGCOM CSP WAREHOUSE

PLUMBING - RISER DIAGRAMS

SCALE:	AS NOTED
EPROJECT NO.:	1639600
CONSTR. CONTR. NO.	N40085-20-C-0059
NAVFAC DRAWING NO.	14111299
SHEET	279 OF 447

P-701

DRAWFORM REVISION: 25 AUGUST 2020

P1527 FINAL SUBMISSION - 11/18/2021

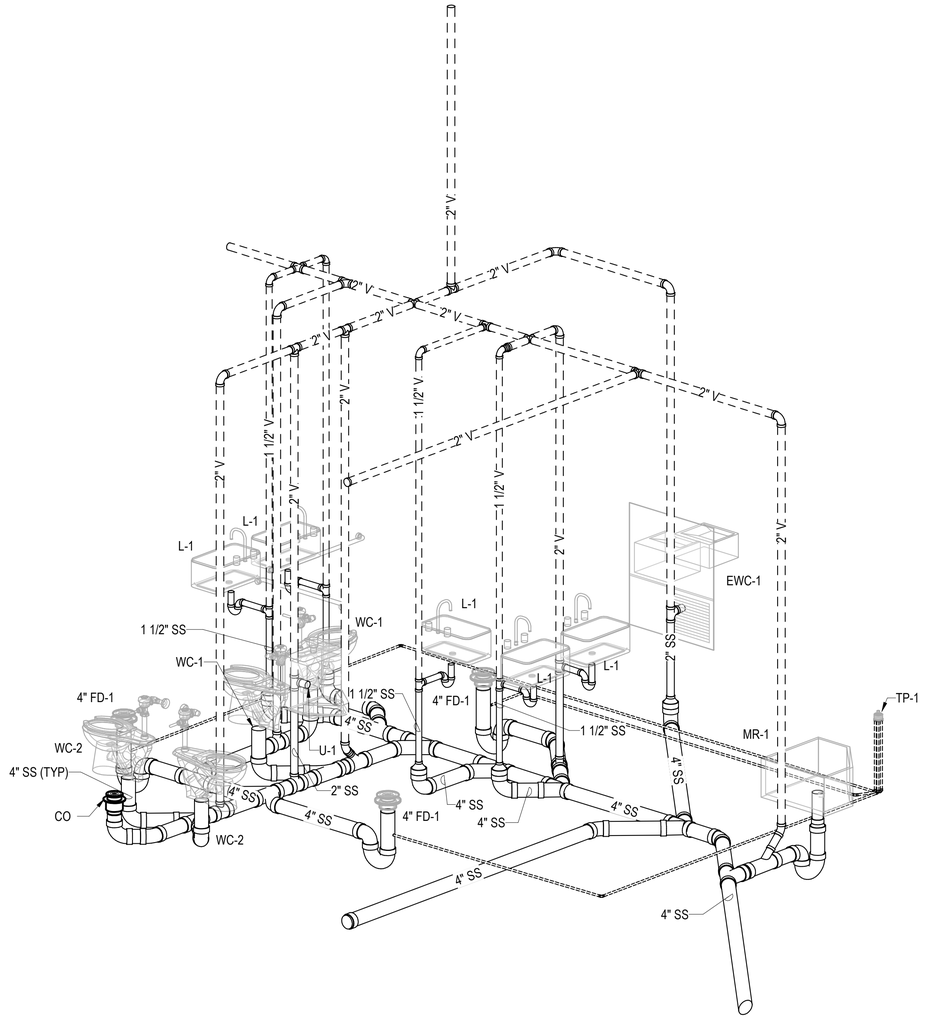

B2 G020/022 SANITARY & VENT RISER DIAGRAM
SCALE:NTS

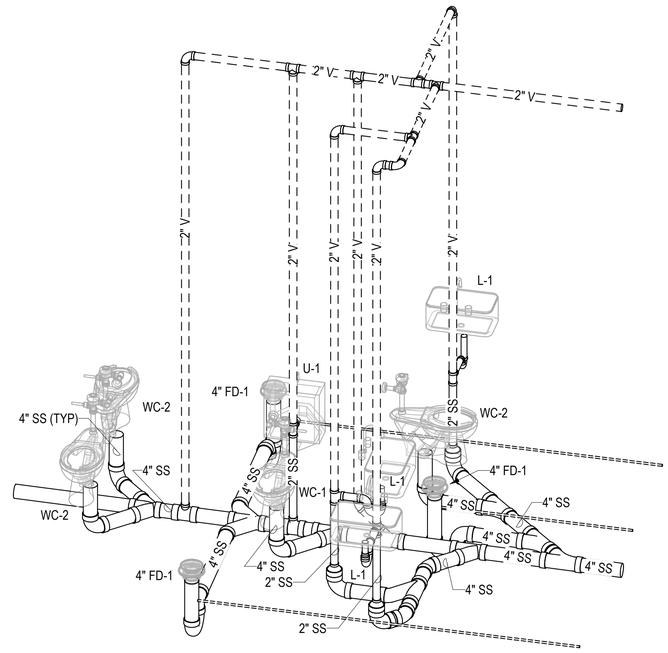

B4 G010/012 SANITARY & VENT RISER DIAGRAM
SCALE:NTS

NO.	DESCRIPTION	DATE	APPR

NAVFAC

COMMONWEALTH OF PENNSYLVANIA
REGISTERED PROFESSIONAL
DAVID W. HURD
ENGINEER
No. PE061160
SEAL

W.M. Jordan COMPANY
A JOINT VENTURE

Michael Baker
INTERNATIONAL
100 AIRSIDE DRIVE
MOON TOWNSHIP, PA 15108
A/E INFO

APPROVED

FOR COMMANDER NAVFAC

ACTIVITY
MARINE CORPS BASE
CAMP LEJEUNE

SATISFACTORY TO DATE DD/MM/YY

DES	DRW	CHK
SKH	JTP	DWH

PM / DM: TOWLER / ROOT
BRANCH HEAD: SCE
DESIGN DIRECTOR: R.L.Stephens, Jr.
FIRE PROTECTION: DPS

DEPARTMENT OF THE NAVY
NAVAL FACILITIES ENGINEERING SYSTEMS COMMAND
ATLANTIC DESIGN AND CONSTRUCTION
MCB CAMP LEJEUNE

NAVAL FACILITIES ENGINEERING SYSTEMS COMMAND ATLANTIC
NORFOLK, VA

JACKSONVILLE, NC
LOGCOM CSP WAREHOUSE

PLUMBING - RISER DIAGRAMS

SCALE: AS NOTED
EPROJECT NO.: 1639600
CONSTR. CONTR. NO.: N40085-20-C-0059
NAVFAC DRAWING NO.: 14111300
SHEET 280 OF 447

P-702

DRAWFORM REVISION: 25 AUGUST 2020

P1527 FINAL SUBMISSION - 11/18/2021

PLOTTED: 11/15/2021 8:33:49 AM

FILE NAME: BIM 360://HF PACKAGE 3/P1527 LOG COM CSP-1639600-P.rvt

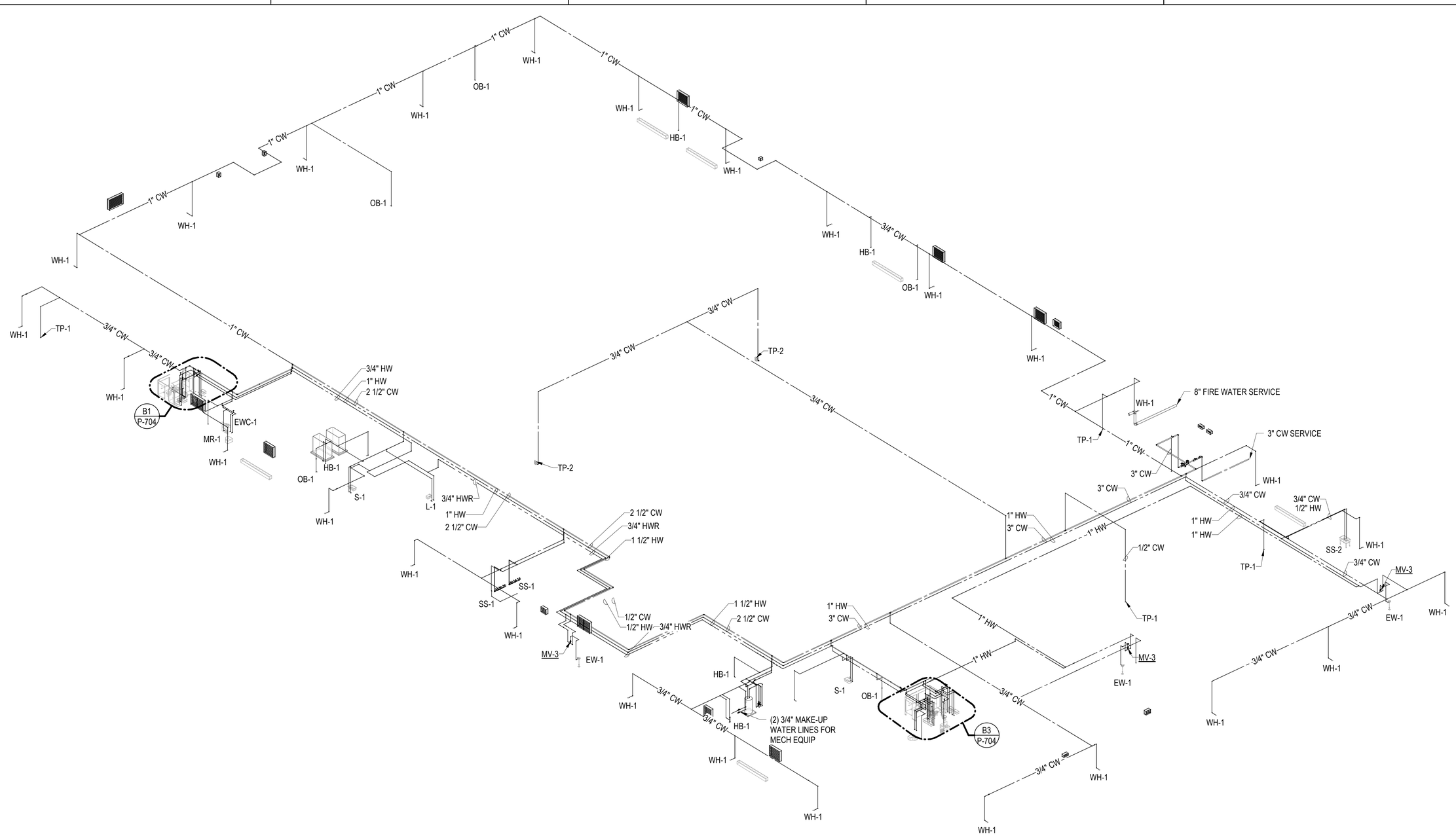

A1 OVERALL WATER RISER DIAGRAM
SCALE:NTS

SCALE:	AS NOTED
EPROJECT NO.:	1639600
CONSTR. CONTR. NO.	N40085-20-C-0059
NAVFAC DRAWING NO.	14111301
SHEET	281 OF 447

P-703

DRAWFORM REVISION: 25 AUGUST 2020

DEPARTMENT OF THE NAVY
NAVAL FACILITIES ENGINEERING SYSTEMS COMMAND
ATLANTIC DESIGN AND CONSTRUCTION
MCB CAMP LEJEUNE
LOGCOM CSP WAREHOUSE
JACKSONVILLE, NC
NAVAL FACILITIES ENGINEERING SYSTEMS COMMAND ATLANTIC
NORFOLK, VA
PLUMBING - RISER DIAGRAMS

Michael Baker INTERNATIONAL
100 AIRSIDE DRIVE
MOON TOWNSHIP, PA 15108
A/E INFO

APPROVED
FOR COMMANDER NAVFAC

ACTIVITY
MARINE CORPS BASE
CAMP LEJEUNE

SATISFACTORY TO DATE	DD/MM/YY
DES SKH	DRW JTP CHK DWH
PM / DM	TOWLER / ROOT
BRANCH HEAD	SCE
DESIGN DIRECTOR	R.L.Stephens, Jr.
FIRE PROTECTION	DPS

COMMONWEALTH OF PENNSYLVANIA
REGISTERED PROFESSIONAL
DAVID W. HURD
ENGINEER
No PE061160
SEAL

APPR | DATE | SYM | DESCRIPTION

P1527 FINAL SUBMISSION - 11/18/2021

PLOTTED: 11/15/2021 8:33:50 AM

FILE NAME: BIM 360://HF PACKAGE 3/P1527 LOG COM CSP-1639600-P.rvt

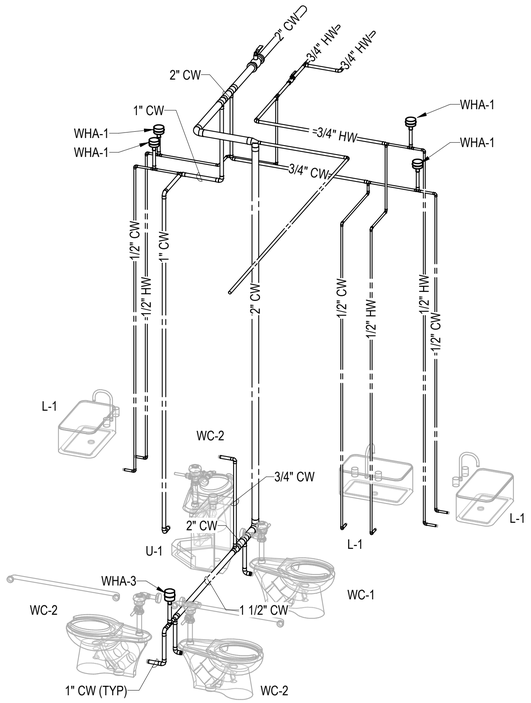

B1 G010/012 WATER RISER DIAGRAM
SCALE: NTS

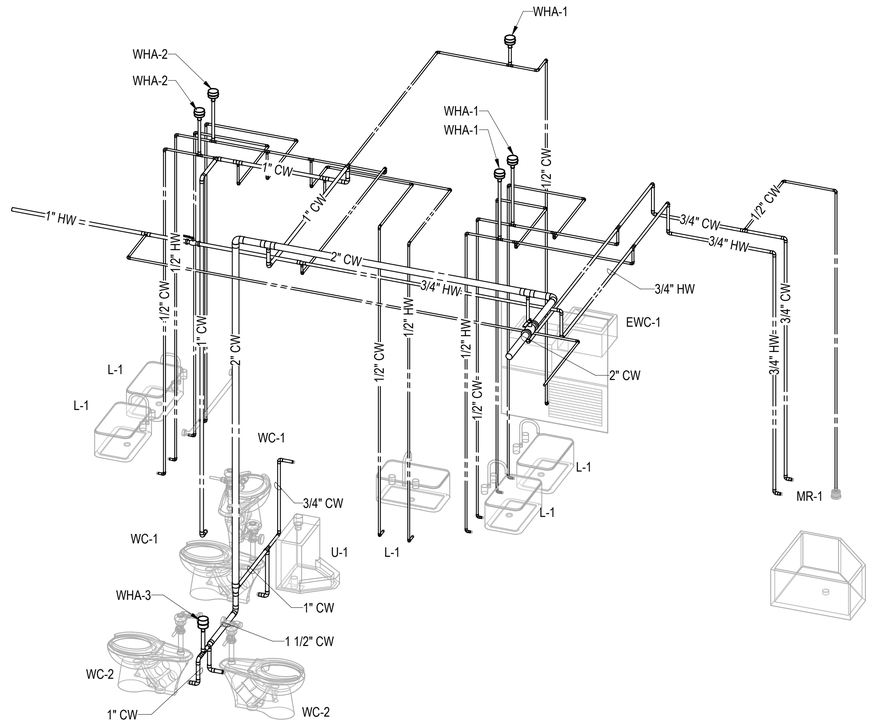

B3 G020/022 WATER RISER DIAGRAM
SCALE: NTS

PLOTTED: 11/15/2021 8:33:52 AM

FILE NAME: BIM 360://HF PACKAGE 3/P1527 LOG COM CSP-1639600-P.rvt

APPR	
DATE	
DESCRIPTION	
SYM	

NAVFAC

COMMONWEALTH OF PENNSYLVANIA — REGISTERED PROFESSIONAL — DAVID W. HURD — ENGINEER — No PE061182 — SEAL

RQ W.M. Jordan COMPANY — A JOINT VENTURE

Michael Baker INTERNATIONAL
100 AIRSIDE DRIVE
MOON TOWNSHIP, PA 15108
A/E INFO

APPROVED

FOR COMMANDER NAVFAC

ACTIVITY: MARINE CORPS BASE CAMP LEJEUNE

SATISFACTORY TO DATE: DD/MM/YY

DES	DRW	CHK
SKH	JTP	DWH

PM / DM	TOWLER / ROOT
BRANCH HEAD	SCE
DESIGN DIRECTOR	R.L.Stephens, Jr.
FIRE PROTECTION	DPS

DEPARTMENT OF THE NAVY
NAVAL FACILITIES ENGINEERING SYSTEMS COMMAND
ATLANTIC DESIGN AND CONSTRUCTION
MCB CAMP LEJEUNE

NAVAL FACILITIES ENGINEERING SYSTEMS COMMAND ATLANTIC
NORFOLK, VA
JACKSONVILLE, NC

LOGCOM CSP WAREHOUSE

PLUMBING - RISER DIAGRAMS

SCALE:	AS NOTED
EPROJECT NO.:	1639600
CONSTR. CONTR. NO.	N40085-20-C-0059
NAVFAC DRAWING NO.	14111302
SHEET	282 OF 447

P-704

DRAWFORM REVISION: 25 AUGUST 2020

P1527 FINAL SUBMISSION - 11/18/2021

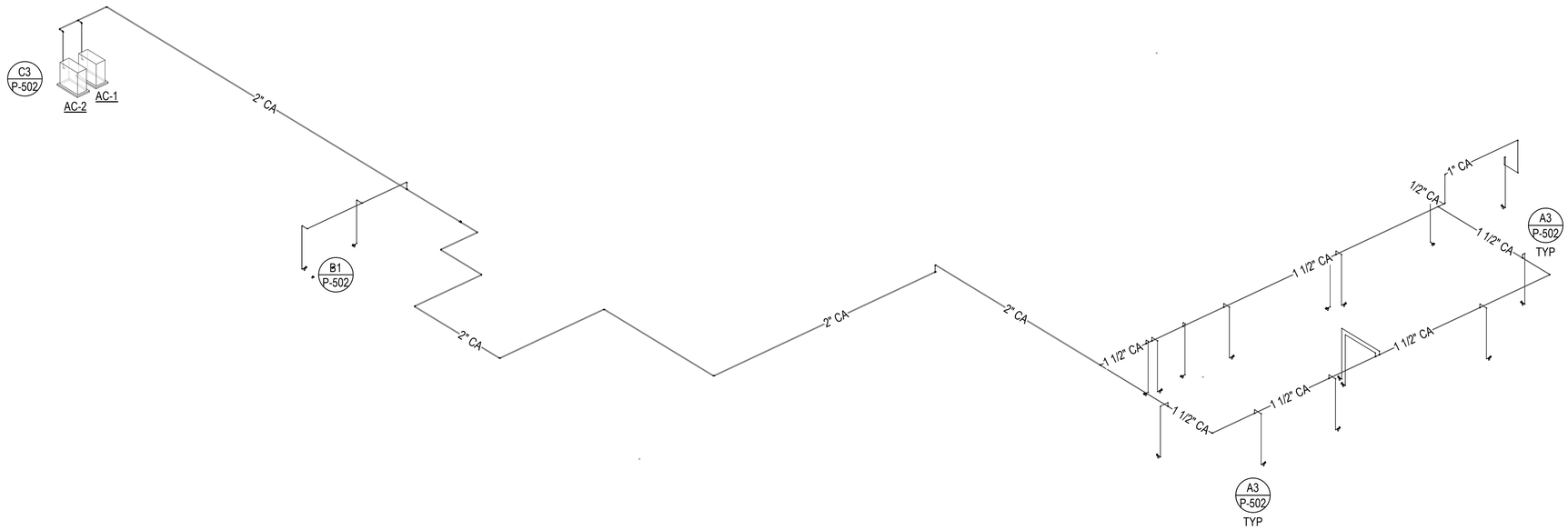

A2 OVERALL COMPRESSED AIR RISER DIAGRAM
SCALE:NTS

SYM	DESCRIPTION	DATE	APPR

NAVFAC

COMMONWEALTH OF PENNSYLVANIA
REGISTERED PROFESSIONAL
DAVID W. HURD
ENGINEER
No. PE061162
SEAL

RQ W.M. Jordan COMPANY
- A JOINT VENTURE -

Michael Baker
INTERNATIONAL
100 AIRSIDE DRIVE
MOON TOWNSHIP, PA 15108
A/E INFO

APPROVED

FOR COMMANDER NAVFAC

ACTIVITY
MARINE CORPS BASE
CAMP LEJEUNE

SATISFACTORY TO DATE DD/MM/YY

DES SKH | DRW JTP | CHK DWH

PM / DM TOWLER / ROOT

BRANCH HEAD SCE

DESIGN DIRECTOR R.L.Stephens, Jr.

FIRE PROTECTION DPS

DEPARTMENT OF THE NAVY
NAVAL FACILITIES ENGINEERING SYSTEMS COMMAND
ATLANTIC DESIGN AND CONSTRUCTION
NAVAL FACILITIES ENGINEERING SYSTEMS COMMAND ATLANTIC
NORFOLK, VA

MCB CAMP LEJEUNE
JACKSONVILLE, NC
LOGCOM CSP WAREHOUSE

PLUMBING - RISER DIAGRAMS

SCALE: AS NOTED
EPROJECT NO.: 1639600
CONSTR. CONTR. NO. N40085-20-C-0059
NAVFAC DRAWING NO. 14111303
SHEET 283 OF 447

P-705

DRAWFORM REVISION: 25 AUGUST 2020

P1527 FINAL SUBMISSION - 11/18/2021

PLOTTED: 11/15/2021 8:33:53 AM

FILE NAME: BIM 360://HF PACKAGE 3/P1527 LOG COM CSP-1639600-P.rvt

DESIGN INFORMATION:
SYSTEM PRESSURE: 2 PSI REGULATED DOWN TO 14" W.C. AT EACH PIECE OF EQUIPMENT

LONGEST RUN: 450 FT

EQUIPMENT:
(1) GWH @ 199 MBH: 199 MBH
(4) BOILERS @ 399 MBH: 1596 MBH
(8) IRH @ 150 MBH: 1200 MBH
(2) IRH @ 205 MBH: 410 MBH
TOTAL LOAD: 3405 MBH

MIN WORKING PRESSURES:
GWH: 4.8" W.C.
IRH: 5" W.C.
BOILERS: 4" W.C.

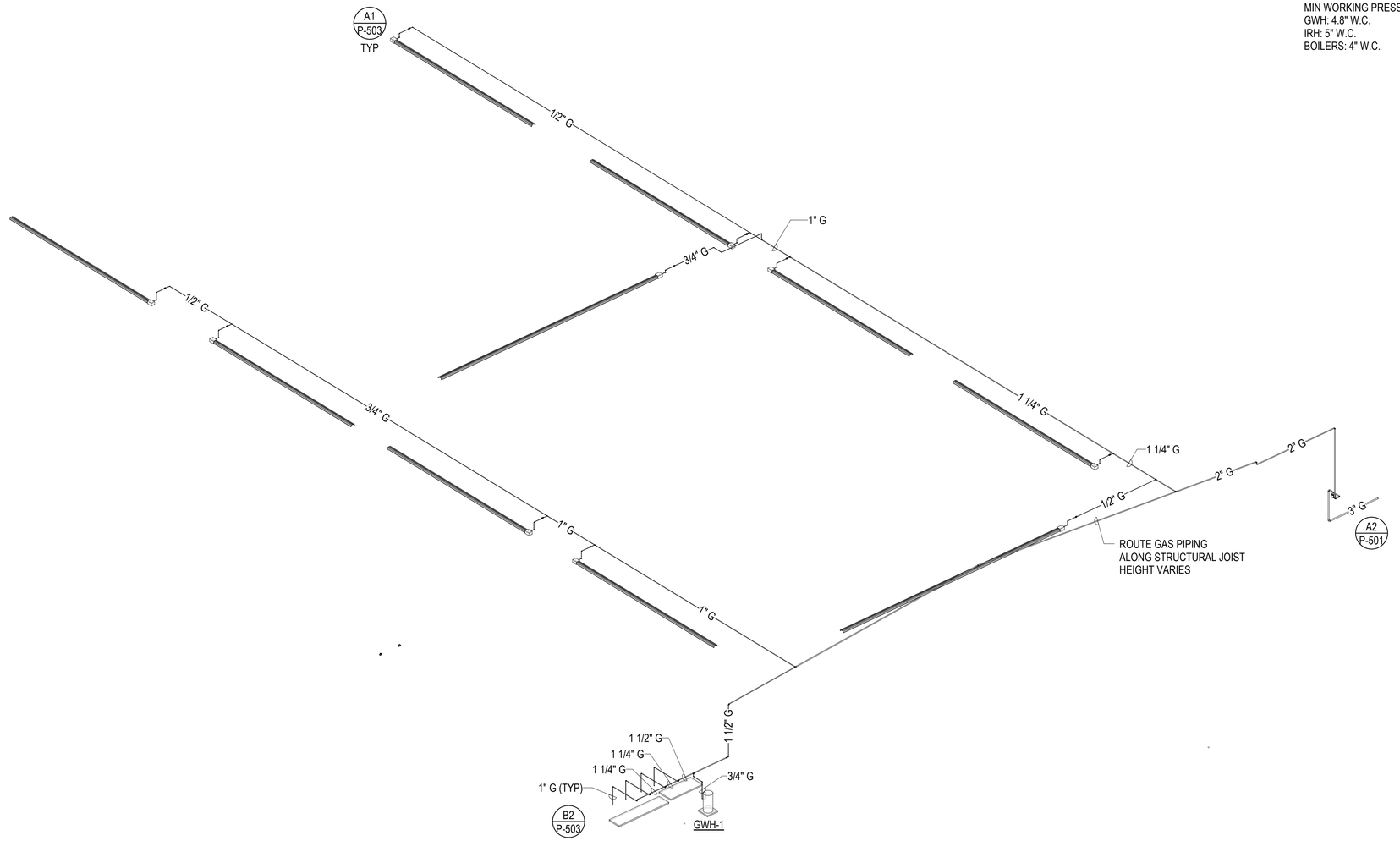

A1 OVERALL NATURAL GAS RISER DIAGRAM
SCALE:NTS

SYM	DESCRIPTION	DATE	APPR

NAVFAC

COMMONWEALTH OF PENNSYLVANIA
REGISTERED PROFESSIONAL
DAVID W. HURD
ENGINEER
No. PE061162
SEAL

RQ W.M. Jordan COMPANY
- A JOINT VENTURE -

Michael Baker
INTERNATIONAL
100 AIRSIDE DRIVE
MOON TOWNSHIP, PA 15108
A/E INFO

APPROVED

FOR COMMANDER NAVFAC

ACTIVITY
MARINE CORPS BASE
CAMP LEJEUNE

SATISFACTORY TO DATE DD/MM/YY
DES SKH DRW JTP CHK DWH
PM / DM TOWLER / ROOT
BRANCH HEAD SCE
DESIGN DIRECTOR R.L.Stephens, Jr.
FIRE PROTECTION DPS

DEPARTMENT OF THE NAVY
NAVAL FACILITIES ENGINEERING SYSTEMS COMMAND
ATLANTIC DESIGN AND CONSTRUCTION
NAVAL FACILITIES ENGINEERING SYSTEMS COMMAND ATLANTIC
NORFOLK, VA
MCB CAMP LEJEUNE
JACKSONVILLE, NC
LOGCOM CSP WAREHOUSE

PLUMBING - RISER DIAGRAMS

SCALE: AS NOTED
EPROJECT NO.: 1639600
CONSTR. CONTR. NO. N40085-20-C-0059
NAVFAC DRAWING NO. 14111304
SHEET 284 OF 447

P-706

DRAWFORM REVISION: 25 AUGUST 2020

P1527 FINAL SUBMISSION - 11/18/2021

PLOTTED: 11/15/2021 8:33:54 AM

FILE NAME: BIM 360://HF PACKAGE 3/P1527 LOG COM CSP-1639600-P.rvt

HVAC PIPE LEGEND

SYMBOL	ABBREV	DESCRIPTION
-CD-	CD	CONDENSATE DRAIN
	CW	DOMESTIC COLD WATER
	HW	DOMESTIC HOT WATER
CHWR	CHWR	CHILLED WATER RETURN
CHWS	CHWS	CHILLED WATER SUPPLY
HWR	HWR	HEATING HOT WATER RETURN
HWS	HWS	HEATING HOT WATER SUPPLY
RS/RL	RS/RL	REFRIGERANT SUCTION / REFRIGERANT LIQUID *

* RS/RL LINES TYPICALLY TO BE SIZED PER EQUIPMENT MANUFACTURER'S RECOMMENDATIONS UNLESS NOTED OTHERWISE.

NOTE: LEGEND AND ABBREVIATIONS ARE ALL INCLUSIVE, SOME SYMBOLS OR ABBREVIATIONS SHOWN MAY NOT BE INCLUDED IN THIS PROJECT

MECHANICAL SYMBOLS LEGEND

SYMBOL	DESCRIPTION	SYMBOL	DESCRIPTION	SYMBOL	DESCRIPTION	SYMBOL	DESCRIPTION	SYMBOL	DESCRIPTION	SYMBOL	DESCRIPTION
ATFP -OR- ATFP	ATFP SHUTDOWN SWITCH	A/B	DUCTWORK - DIMENSIONS - FLAT OVAL (SIDE SHOWN / SIDE NOT SHOWN)		DUCTWORK - FLEXIBLE CONNECTION	MV	PIPING - AIR VENT (MANUAL)		PIPING - EXPANSION JOINT		PIPING - TEE DOWN
NOTE TAG CFM	AIR DEVICE	AØ	DUCTWORK - DIMENSIONS - ROUND		DUCTWORK - EXHAUST OR RETURN DUCT DOWN (SLASH MAY BE FLIPPED)		PIPING - ANGLE GLOBE VALVE		PIPING - UNION		PIPING - TEE UP
	ACCESS PANEL	DN	DUCTWORK - DUCT ELEVATION DROP		DUCTWORK - EXHAUST OR RETURN DUCT UP (SLASH MAY BE FLIPPED)		PIPING - BALL VALVE		PIPING - FLEXIBLE CONNECTION	T	PIPING - TEMPERATURE SENSOR
CO_2	CARBON DIOXIDE SENSOR	UP	DUCTWORK - DUCT ELEVATION RISE		DUCTWORK - SUPPLY DUCT DOWN		PIPING - BUTTERFLY VALVE		PIPING - FLOWMETER - ORIFICE		PIPING - THERMOMETER
CO	CARBON MONOXIDE SENSOR	DN	DUCTWORK - DUCT ELEVATION DROP (ROUND OR FLAT OVAL)		DUCTWORK - SUPPLY DUCT UP		PIPING - CALIBRATED BALANCE VALVE		PIPING - FLOWMETER - VENTURI		PIPING - PRESSURE GAUGE WITH GAUGE COCK
	CONNECT TO EXISTING	UP	DUCTWORK - DUCT ELEVATION RISE (ROUND OR FLAT OVAL)	AxB AxB	DUCTWORK - TRANSITION - RECTANGULAR		PIPING - CAP	FS	PIPING - FLOW SWITCH		PIPING - PT (PRESSURE & TEMPERATURE) TEST PORT
L	DOOR LOUVER	DSD	DUCTWORK - DUCT SMOKE DETECTOR	AxB (AØ) (A/B)	DUCTWORK - TRANSITION - RECTANGULAR TO ROUND / FLAT OVAL		PIPING - CHECK VALVE (SPRING)		PIPING - GATE VALVE	P-#	PIPING - PUMP (ARROW IS DIRECTION OF FLOW)
UC	DOOR UNDERCUT		DUCTWORK - ELBOW 90° UP		EXHAUST FAN		PIPING - CHECK VALVE (SWING GATE)		PIPING - GLOBE VALVE		PIPING - REDUCER
DDCP	DIRECT DIGITAL CONTROL PANEL		DUCTWORK - ELBOW 90° DOWN	H	HUMIDISTAT		PIPING - CONTROL VALVE (2-WAY)		PIPING - PIPE ANCHOR		RETURN OR EXHAUST AIR DEVICE (SLASH MAY BE FLIPPED)
AFS	DUCTWORK - AIRFLOW MEASUREMENT STATION	FD	DUCTWORK - FIRE DAMPER	H_2	HYDROGEN SENSOR		PIPING - CONTROL VALVE (3-WAY)		PIPING - PIPE GUIDE		REMOVE EXISTING TO
BDD	DUCTWORK - BACKDRAFT DAMPER	SD DSD	DUCTWORK - SMOKE DAMPER	#	KEYNOTE		PIPING - DIRECTION OF WATER FLOW		PIPING - PLUG VALVE	#	REVISION
	DUCTWORK - DIRECTION OF AIRFLOW - RETURN	FS DSD	DUCTWORK - COMBINATION FIRE / SMOKE DAMPER		LOUVER		PIPING - ELBOW 90° DOWN		PIPING - PRESSURE REDUCING VALVE	S	STARTER (EQUIPMENT SERVED)
	DUCTWORK - DIRECTION OF AIRFLOW - SUPPLY		DUCTWORK - MANUAL VOLUME DAMPER	NO_x	NITROGEN OXIDE SENSOR		PIPING - ELBOW 90° UP		PIPING - PRESSURE RELIEF VALVE	$	SWITCH
DP	DUCTWORK - DIFFERENTIAL PRESSURE		DUCTWORK - MOTOR OPERATED DAMPER	ϕ	PHASE		PIPING - ELBOW 90°	S	PIPING - SOLENOID VALVE		SQUARE SUPPLY AIR DIFFUSER
AxB	DUCTWORK - DIMENSIONS (SIDE SHOWN x SIDE NOT SHOWN)		DUCTWORK - FLEXIBLE DUCT	AV	PIPING - AIR VENT (AUTOMATIC)		PIPING - ELBOW 45°		PIPING - STRAINER WITH VALVED AND CAPPED BLOW DOWN	T	THERMOSTAT (DASHED LINE RUNS TO CONTROLLED DEVICE)

MECHANICAL ABBREVIATIONS

ABBREV	DESCRIPTION	ABBREV	DESCRIPTION	ABBREV	DESCRIPTION	ABBREV	DESCRIPTION	ABBREV	DESCRIPTION	ABBREV	DESCRIPTION
AC	AIR CONDITIONER, AIR CURTAIN	CONT	CONTINUOUS, CONTINUATION	EXIST, EX	EXISTING	KW	KILOWATTS	PSIG	PSI GAUGE		
ACCU	AIR COOLED CONDENSING UNIT	CONTR	CONTRACTOR	(F)	FUTURE	L	LOUVER	PTAC	PACKAGED TERMINAL AIR CONDITIONER	VFD / VSD	VARIABLE FREQUENCY DRIVE / VARIABLE SPEED DRIVE (ALSO REFERRED TO AS ASD - ADJUSTABLE SPEED DRIVE)
ACU	AIR CONDITIONING UNIT	CONV	CONVECTOR	F	FAHRENHEIT	L/s	LITERS PER SECOND	QTY	QUANTITY		
AD	ACCESS DOOR	CU FT	CUBIC FEET	FAI	FRESH AIR INTAKE	LAT	LEAVING AIR TEMPERATURE	RA	RETURN AIR	VOL	VOLUME
AFF	ABOVE FINISHED FLOOR	CUH	CABINET UNIT HEATER	FCU	FAN COIL UNIT	LBS	POUNDS	REQ'D	REQUIRED	W	WATT(S)
AHU	AIR HANDLING UNIT	CWBT	CHILLED WATER BUFFER TANK	FDB	DEGREES FAHRENHEIT DRY BULB	LWT	LEAVING WATER TEMPERATURE	RF	RETURN FAN	W/	WITH
AP	ACCESS PANEL	CWP	CONDENSER WATER PUMP	FIN FLR	FINISHED FLOOR	m	METERS	RH	RELATIVE HUMIDITY	W/O	WITHOUT
APD	AIR PRESSURE DROP	CWR	CONDENSER WATER RETURN	FLEX	FLEXIBLE	MAG	MAGNETIC	RM	ROOM	WB	WET BULB
APPROX	APPROXIMATE(LY)	CWS	CONDENSER WATER SUPPLY	FPM	FEET PER MINUTE	MAINT	MAINTENANCE	RPM	REVOLUTIONS PER MINUTE	WG	WATER GAUGE
ARCH	ARCHITECT OR ARCHITECTURAL	DB	DRY BULB	FT	FOOT, FEET	MAU	MAKE-UP AIR UNIT	RTU	ROOFTOP AIR HANDLING UNIT	WSHP	WATER SOURCE HEAT PUMP
AS	AIR SEPARATOR	DDC	DIRECT DIGITAL CONTROL	FWB	DEGREES FAHRENHEIT WET BULB	MAX	MAXIMUM	SA	SUPPLY AIR	WST	WATER STORAGE TANK
ASD	ADJUSTABLE SPEED DRIVE (VFD / VSD SIMILAR)	DEG	DEGREE(S)	GA	GAUGE	MBH	1,000 BTUH	SAR	SUPPLY AIR REGISTER	WTWHP	WATER TO WATER HEAT PUMP
B	BOILER	DEH	DEHUMIDIFIER	GC	GENERAL CONTRACTOR	MECH	MECHANICAL	SF	SUPPLY FAN	XFER	TRANSFER
BCU	BLOWER COIL UNIT	DIA	DIAMETER	GMU	GLYCOL MAKEUP UNIT	MFR / MFGR / MANUF	MANUFACTURER	SOV	SHUT-OFF VALVE		
BHP	BREAK HORSEPOWER	DIFF	DIFFUSER	GPM	GALLONS PER MINUTE	MIN	MINIMUM	SP	STATIC PRESSURE (INCHES OF WATER)		
BI	BINARY INPUT	DISC	DISCONNECT	GV	GRAVITY VENTILATOR	MISC	MISCELLANEOUS	SPECS	SPECIFICATIONS		
BLDG	BUILDING	DOAS	DEDICATED OUTDOOR AIR SYSTEM	GWR	GLYCOL WATER RETURN	mm	MILLIMETERS	SQ	SQUARE		
BOT	BOTTOM	DWG	DRAWING	GWS	GLYCOL WATER SUPPLY	MUA	MAKE-UP AIR	SSCU	SPLIT SYSTEM CONDENSING UNIT		
BTU	BRITISH THERMAL UNIT	DWH	DOMESTIC WATER HEATER	HC	HEATING COIL	NC	NORMALLY CLOSED	SSHP	SPLIT SYSTEM HEAT PUMP		
BTUH	BRITISH THERMAL UNIT PER HOUR	EA	EXHAUST AIR	HOA	HAND-OFF-AUTOMATIC	NIC	NOT IN CONTRACT	STRUC	STRUCTURAL		
C	CELSIUS	EAG	EXHAUST AIR GRILLE	HP	HORSE POWER	NO	NORMALLY OPEN	TA	TRANSFER AIR		
CAI	COMBUSTION AIR INTAKE	EAR	EXHAUST AIR REGISTER	HPU	HEAT PUMP UNIT	NTS	NOT TO SCALE	TEMP	TEMPERATURE		
CAP	CAPACITY	EAT	ENTERING AIR TEMPERATURE	HTG	HEATING	OA	OUTSIDE AIR	TXV	THERMAL EXPANSION VALVE		
CCFC	CLOSED CIRCUIT FLUID COOLER	EF	EXHAUST FAN	HTR	HEATER	OD	OUTSIDE DIAMETER	TYP	TYPICAL		
CFM	CUBIC FEET PER MINUTE	ELEC	ELECTRIC(AL)	HVAC	HEATING VENTILATION / AIR CONDITIONING	OED	OPEN END DUCT	UH	UNIT HEATER		
CH	CHILLER	ERU	ENERGY RECOVERY UNIT	HWR	HEATING HOT WATER RETURN	P	PUMP	UNO	UNLESS NOTED OTHERWISE		
CHWR	CHILLED WATER RETURN	ERV	ENERGY RECOVERY VENTILATOR	HWS	HEATING HOT WATER SUPPLY	PLBG	PLUMBING	VAV	VARIABLE AIR VOLUME		
CHWS	CHILLED WATER SUPPLY	ERW	ENERGY RECOVERY WHEEL	ID	INSIDE DIAMETER	POC	POINT OF CONNECTION	VEF	VEHICLE EXHAUST FAN		
CLG	CEILING, COOLING	ESP	EXTERNAL STATIC PRESSURE	IN	INCH(ES)	PRESS	PRESSURE	VEL	VELOCITY		
CON	CONNECTION	ET	EXPANSION TANK	INSUL	INSULATE(D), INSULATION	PRV	PRESSURE RELIEVING VALVE	VENT	VENTILATION, VENTILATOR		
CONC	CONCRETE	EWT	ENTERING WATER TEMPERATURE	Kg	KILOGRAM(S)	PSI	POUNDS PER SQUARE INCH	VER	VEHICLE EXHAUST REEL		
		EXH	EXHAUST					VERT	VERTICAL		

APPR | DATE | DESCRIPTION | SYM

NAVFAC

COMMONWEALTH OF PENNSYLVANIA REGISTERED PROFESSIONAL DAVID W. HURD ENGINEER No. PE061160 SEAL

IRQ W.M. Jordan COMPANY — A JOINT VENTURE —

Michael Baker INTERNATIONAL
100 AIRSIDE DRIVE MOON TOWNSHIP, PA 15108 A/E INFO

APPROVED

FOR COMMANDER NAVFAC

ACTIVITY: MARINE CORPS BASE CAMP LEJEUNE

SATISFACTORY TO DATE DD/MM/YY

DES EMB | DRW AJK | CHK DWH

PM / DM TOWLER / ROOT

BRANCH HEAD SCE

DESIGN DIRECTOR R.L.Stephens, Jr.

FIRE PROTECTION DPS

NAVAL FACILITIES ENGINEERING SYSTEMS COMMAND NORFOLK, VA

DEPARTMENT OF THE NAVY
NAVAL FACILITIES ENGINEERING SYSTEMS COMMAND ATLANTIC
ATLANTIC DESIGN AND CONSTRUCTION
MCB CAMP LEJEUNE

JACKSONVILLE, NC

LOGCOM CSP WAREHOUSE

MECHANICAL - SYMBOLS AND ABBREVIATIONS

SCALE: AS NOTED

EPROJECT NO.: 1639600

CONSTR. CONTR. NO. N40085-20-C-0059

NAVFAC DRAWING NO. 14111308

SHEET 285 OF 447

M-001

DRAWFORM REVISION: 25 AUGUST 2020

P1527 FINAL SUBMISSION - 11/18/2021

PLOTTED: 11/11/2021 3:06:35 PM

FILE NAME: BIM 360://HF PACKAGE 3.0/P1527 LOG COM CSP-1639600-M.rvt

GENERAL NOTES

1.0 GENERAL

1.1 CONTRACT DOCUMENT DRAWINGS FOR MECHANICAL WORK ARE DIAGRAMMATIC AND ARE INTENDED TO CONVEY SCOPE AND GENERAL ARRANGEMENT ONLY. DO NOT SCALE DRAWINGS. CONTRACTOR MUST BE RESPONSIBLE TO FIELD SURVEY ACTUAL SITE CONDITIONS AND ACCOMMODATE ACTUAL SITE CONDITIONS AS PART OF SCOPE OF WORK AT NO ADDITIONAL COST TO GOVERNMENT.

1.2 PROVIDE WORK INDICATED OR IMPLIED ON THE DRAWINGS UNLESS SPECIFICALLY NOTED OTHERWISE.

1.3 PROVIDE MATERIALS, EQUIPMENT AND PERFORM LABOR REQUIRED TO PROVIDE COMPLETE AND OPERABLE MECHANICAL SYSTEMS AS INDICATED ON THE DRAWINGS, AS SPECIFIED, AND AS REQUIRED BY CODE.

1.4 WORK SHOWN ON THE DRAWINGS MUST BE PERFORMED BY THE CONTRACTOR UNLESS SPECIFICALLY NOTED OTHERWISE.

1.5 EQUIPMENT SUBMITTALS AND SHOP DRAWINGS REQUIRED BY THE SPECIFICATIONS MUST BE APPROVED IN ACCORDANCE WITH CONTRACT REQUIREMENTS PRIOR TO PURCHASE, FABRICATION, AND INSTALLATION.

1.6 WHERE TWO OR MORE ITEMS OF THE SAME TYPE OF EQUIPMENT ARE REQUIRED, THE PRODUCTS OF A SINGLE MANUFACTURER MUST BE USED.

1.7 VERIFY EXISTING CONDITIONS AT THE SITE AND REPORT DISCREPANCIES TO THE CONTRACTING OFFICER BEFORE PROCEEDING WITH WORK.

1.8 LIMITS OF WORK ARE SHOWN FOR GENERAL REFERENCE AND DO NOT ESTABLISH PRECISE BOUNDARIES OF WORK FOR TRADES THAT MAY BE REQUIRED TO COMPLETE THE PROJECT.

1.9 THE VERBIAGE ON THE DRAWING INDICATING TYPES OF MATERIALS IS INTENDED TO AID THE CONTRACTOR IN UNDERSTANDING THE VARIOUS CONDITIONS LIKELY TO BE ENCOUNTERED.

1.10 THE CONTRACTOR IS RESPONSIBLE FOR DETERMINING QUANTITIES OF MATERIALS REQUIRED TO COMPLETE THE PROJECT.

1.11 REFER TO DETAILS FOR ADDITIONAL REQUIREMENTS REGARDING SIZES AND ARRANGEMENTS.

1.12 PAINT COLORS AND OTHER FINISHES ARE SUBJECT TO CHANGE FROM THOSE LISTED IN THE CONTRACT DOCUMENTS WITHOUT NOTICE. CONTRACTOR TO SUBMIT SAMPLES OF COLORS AND FINISHES TO CONTRACTING OFFICER FOR REVIEW AND APPROVAL BEFORE THE INSTALLATION/FINISHING OF SURFACES.

1.13 IT IS THE CONTRACTOR'S RESPONSIBILITY TO DETERMINE AND TO MAINTAIN THE BUILDING'S STRUCTURAL INTEGRITY DURING PHASES OF DEMOLITION AND NEW WORK. PROVIDE REQUIRED SUPPORT, SHORING, PINNING, ETC. TO ASSURE THIS REQUIREMENT.

1.14 MAINTAIN BUILDING IN WEATHERPROOF AND WATERTIGHT CONDITIONS THROUGHOUT THE DURATION OF CONSTRUCTION.

1.15 FIRE STOP FLOOR/CEILING PENETRATIONS AND PENETRATIONS THROUGH RATED PARTITIONS/WALLS.

1.16 LEGALLY DISPOSE OF DEMOLISHED MATERIALS OFF-SITE PER REGULATIONS OF AUTHORITIES HAVING JURISDICTION OVER THIS PROJECT.

1.17 WORK SHOWN ON DRAWINGS INVOLVES THE REMOVAL, REPLACEMENT, DEMOLITION, CUTTING, PATCHING AND PLASTERING OF EXISTING SURFACES IN ROOMS ABOVE AND BELOW THE CONSTRUCTION AREA. THE CONTRACTOR MUST RESTORE SURFACES AND FLOORS THAT ARE AFFECTED BY THEIR WORK. THE CONTRACTOR MUST COORDINATE THE PATCHING AND REPAIR OF THEIR WORK WITH THE WORK OF THE GENERAL CONTRACTOR'S FINAL FINISHES.

1.18 MAINTAIN A MINIMUM OF 6'-8" CLEARANCE TO UNDERSIDE OF PIPES, DUCTS, CONDUITS, SUSPENDED EQUIPMENT, SUPPORTS, ETC., THROUGHOUT ACCESS ROUTES IN MECHANICAL ROOMS.

1.19 COORDINATE FINAL EQUIPMENT CONNECTIONS WITH MANUFACTURERS' CERTIFIED DRAWINGS. COORDINATE AND PROVIDE DUCTWORK AND PIPING TRANSITIONS REQUIRED FOR FINAL EQUIPMENT CONNECTIONS. FIELD VERIFY AND COORDINATE DUCTWORK AND PIPING DIMENSIONS BEFORE FABRICATION.

1.20 PROVIDE MISCELLANEOUS STEEL REQUIRED TO ENSURE INSTALLATION AND SUPPORT OF MECHANICAL WORK AS SHOWN IN DETAILS FOR PIPING, DUCTWORK AND EQUIPMENT (UNLESS OTHERWISE NOTED) AT NO ADDITIONAL COST TO THE GOVERNMENT.

1.21 EQUIPMENT, PIPING, DUCTWORK, ETC., MUST BE SUPPORTED AS DETAILED AND SPECIFIED TO PROVIDE A VIBRATION FREE INSTALLATION.

1.22 PROVIDE FLEXIBLE CONNECTIONS IN DUCTWORK SYSTEMS CONNECTED TO FANS AND OTHER EQUIPMENT WHICH REQUIRE VIBRATION ISOLATION. FLEXIBLE CONNECTIONS MUST BE PROVIDED AT THE POINT OF CONNECTION TO THE EQUIPMENT UNLESS OTHERWISE INDICATED.

2.0 COORDINATION

2.1 SEVERAL PROJECTS MAY OCCUR AT THE SITE SIMULTANEOUSLY WITH THIS PROJECT. COORDINATE WORK REQUIREMENTS UNDER THIS CONTRACT WITH THESE PROJECTS.

2.2 THE CONTRACTOR MUST REVIEW DRAWINGS AND INCORPORATE PHASING REQUIREMENTS IN BID.

2.3 MECHANICAL CONTRACTOR MUST REFER TO AND COORDINATE WITH OTHER DISCIPLINE DRAWINGS (INCLUDING ARCHITECTURAL, INTERIORS, TELECOMMUNICATIONS, STRUCTURAL, CIVIL, PLUMBING, ELECTRICAL AND FIRE PROTECTION).

2.4 COORDINATE WITH THE ELECTRICAL CONTRACTOR:

2.4.1 LOCATION AND POWER REQUIREMENTS OF EQUIPMENT, CONTROL PANELS AND DEVICES.

2.4.2 MECHANICAL CONTRACTOR MUST FURNISH MOTOR CONTROL DEVICES TO ELECTRICAL CONTRACTOR FOR INSTALLATION. MOTOR CONTROL DEVICES INCLUDE BUT ARE NOT LIMITED TO FUSED DISCONNECTS, DISCONNECTS, MOTOR STARTING SWITCHES, PUSH BUTTON STATIONS, FRACTIONAL HORSEPOWER MANUAL MOTOR STARTERS WITH THERMAL OVERLOADS, 3 PHASE MOTOR CONTACTORS, COMBINATION MOTOR STARTERS, VARIABLE FREQUENCY DRIVES, SINGLE PHASE MOTOR SPEED ADJUSTMENT DEVICES.

2.4.3 COORDINATE ELECTRICAL REQUIREMENTS AND LOCATIONS OF EQUIPMENT WITH THE ELECTRICAL CONTRACTOR PRIOR TO ORDERING AND INSTALLATION.

2.4.4 LOCATIONS AND SIZES OF FLOOR, WALL AND ROOF OPENINGS MUST BE COORDINATED WITH OTHER TRADES INVOLVED.

2.4.5 PROVIDE CONTROL WIRING FROM REMOTE DISCONNECTS TO VFDs. PROVIDE FAST ACTING AUXILIARY CONTACT IN DISCONNECT CONNECTED TO LOGIC/DIGITAL INPUT ON VFD TO TRIGGER FREEWHEEL STOP.

3.0 HVAC WORK

3.1 COORDINATE THE LOCATIONS OF GRILLES, REGISTERS AND DIFFUSERS WITH THE CEILING GRID, LIGHTING, AUDIO VISUAL EQUIPMENT, AND SPRINKLER HEAD LAYOUTS.

3.2 HEATING DEVICES AND SURFACES WITH ELEVATED TEMPERATURES WHICH CAN BE ACCESSED OR COME IN CONTACT WITH BUILDING OCCUPANTS AND MAINTENANCE PERSONNEL MUST BE PROTECTED, INSULATED, OR CONTROLLED TO REMAIN BELOW 120°F.

3.3 PIPING AND DUCTWORK MUST CLEAR DOORS, WINDOWS, EQUIPMENT CLEARANCES, MAINTENANCE REQUIREMENTS, CODE SETBACKS, ETC. TO ASSURE OPERATION, INSPECTION, AND MAINTENANCE.

3.4 WELDING TO STRUCTURAL MEMBERS MUST NOT BE PERMITTED. ATTACHMENTS MUST BE MADE USING CLAMPS MEETING MSS STANDARDS AS SPECIFIED.

3.5 MECHANICAL EQUIPMENT, DUCTWORK, AND PIPING MUST NOT BE SUPPORTED FROM ROOF OR DECK ASSEMBLY. SUPPORTS MUST ATTACH TO STRUCTURAL MEMBERS.

3.6 PROVIDE VIBRATION ISOLATION FOR MECHANICAL EQUIPMENT TO PREVENT VIBRATION TRANSMISSION TO BUILDING STRUCTURE.

3.7 PROVIDE ACCESS DOORS AT EVERY LOCATION THAT A VOLUME DAMPER, FIRE DAMPER, VALVE OR OTHER CONTROL/BALANCING ITEM WILL BE INSTALLED ABOVE AN INACCESSIBLE CEILING.

4.0 DUCTWORK

4.1 DUCT DIMENSIONS SHOWN ON PLANS ARE THE INSIDE CLEAR DESIGN DIMENSIONS. FLAT OVAL DIMENSIONS ARE FROM OUTSIDE RADIUS TO OUTSIDE RADIUS OF THE ROUNDED DIMENSION (NOT CENTERLINE TO CENTERLINE). INSTALLATION SHALL INCLUDE PROVISIONS FOR DUCT FLANGES, HANGERS, AND INSULATION IN ACCORDANCE WITH SMACNA REQUIREMENTS AS SPECIFIED.

4.2 PROVIDE RADIUS TYPE ELBOWS WITH A CENTERLINE RADIUS OF 1.5 TIMES THE WIDTH OR DIAMETER OF THE DUCT WHERE SPACE PERMITS. OTHERWISE, ELBOWS HAVING A MINIMUM RADIUS EQUAL TO THE WIDTH OR DIAMETER OF THE DUCT OR SQUARE ELBOWS WITH FACTORY FABRICATED SINGLE WIDTH TURNING VANES ARE ALLOWED PROPERLY INSTALLED AND SPACED PER SMACNA GUIDELINES. PROVIDE 90 DEGREE SQUARE DUCT ELBOWS WITH TURNING VANES UNLESS OTHERWISE INDICATED OR SPECIFIED. PROVIDE ACCESS DOORS UPSTREAM OF ELBOWS CONTAINING TURNING VANES.

4.3 DUCTS MUST BE GROUNDED ACROSS FLEXIBLE CONNECTIONS WITH FLEXIBLE COPPER GROUNDING STRAPS. GROUNDING STRAPS MUST BE BOLTED OR SOLDERED TO BOTH THE EQUIPMENT AND THE DUCT.

4.4 WHERE DUCT BRANCHES OR TERMINAL DEVICES ARE REMOVED FROM EXISTING DUCTS, THE CONTRACTOR MUST PATCH THE MAIN WITH LIKE THICKNESS SHEET METAL. EXTEND PATCH TO DUCT EDGES. PATCHES MUST BE MADE WITH HEMMED EDGES. PAINT PATCHES TO MATCH DUCTWORK.

4.5 COORDINATE DUCT ROUTING AND ELEVATION WITH LIGHTING, CEILING GRID, PIPING, CABLE TRAYS, CONDUIT, AND OTHER ITEMS REQUIRED FOR THE COMPLETION OF THIS PROJECT.

4.6 PROVIDE OFFSETS IN DUCTWORK AS REQUIRED TO COORDINATE WITH OTHER TRADES AND FIELD INSTALLED CONDITIONS. DUCTWORK OFFSETS MUST BE MADE WITH GRADUAL TRANSITIONS (NO GREATER THAN 30 DEGREES) AND MAINTAIN EQUIVALENT CROSS-SECTIONAL AREAS.

5.0 PIPING

5.1 PROVIDE PIPING SO THAT VALVES, STRAINERS, UNIONS, TRAPS, FLANGES, AND OTHER APPURTENANCES REQUIRING ACCESS ARE ACCESSIBLE.

5.2 ISOLATION VALVES MUST BE PROVIDED IN A LOCATION AND ELEVATION WHICH ALLOWS FOR EQUIPMENT AND BRANCH PIPING REMOVAL, WHILE MAINTAINING SERVICE UPSTREAM OF THE ISOLATION VALVE.

5.3 VALVES MUST BE ADJUSTED FOR SMOOTH AND EASY OPERATION.

5.4 BALANCING VALVES AND ISOLATION VALVES USED TO ADJUST FLOW RATES MUST BE PROVIDED WITH POSITION INDICATORS AND MAXIMUM ADJUSTABLE STOPS (MEMORY STOPS).

5.5 ISOLATION VALVES (EXCEPT CONTROL VALVES) AND PIPING SPECIALTIES AND STRAINERS MUST BE FULL LINE SIZE BEFORE REDUCING SIZE TO MAKE CONNECTIONS TO EQUIPMENT AND CONTROLS.

5.6 PROVIDE MECHANICAL JOINTS SUCH AS UNIONS, FLANGES, OR THREADED FITTINGS AT EACH EQUIPMENT CONNECTION, IN BYPASSES, AT FLOOR PENETRATIONS, AT CONTROL DEVICES, AND IN LONG PIPE RUNS (100 FEET OR MORE) TO PERMIT DISASSEMBLY FOR ALTERATION AND REPAIRS.

5.7 MEASURE, CUT, AND INSTALL PIPE LENGTH ACCURATELY TO MINIMIZE MISALIGNMENT. INSTALL PIPING WITHOUT FORCING OR SPRINGING.

6.0 EQUIPMENT

6.1 PROVIDE EQUIPMENT AND APPURTENANCES IN ACCORDANCE WITH MANUFACTURER'S RECOMMENDATIONS, CONTRACT DOCUMENTS, APPLICABLE BUILDING, STATE, AND LOCAL CODES, ENERGY CODES, ASHRAE AND NFPA STANDARDS, AND INSURANCE UNDERWRITER REQUIREMENTS.

6.2 ALL MATERIAL AND EQUIPMENT SHALL BE INSTALLED IN ACCORDANCE WITH THE MANUFACTURER'S RECOMMENDATIONS FOR THE INTENDED PURPOSE. USE THE MORE STRINGENT METHODS WHEN MANUFACTURER'S RECOMMENDATIONS AND PLANS & SPECIFICATION REQUIREMENTS DIFFER. BRING ANY CONFLICTS BETWEEN MANUFACTURER'S RECOMMENDATIONS AND PLANS & SPECIFICATION REQUIREMENTS TO THE GOVERNMENT'S ATTENTION.

7.0 CONTROLS

7.1 COORDINATE AUXILIARY CONTACT AND RELAY REQUIREMENTS WITH SEQUENCES OF OPERATION.

7.2 COORDINATE MOTOR AND MOTOR CONTROL REQUIREMENTS WITH EQUIPMENT SCHEDULES AND SEQUENCES OF OPERATION.

7.3 HARDWIRE SAFETIES TO SHUTDOWN HVAC EQUIPMENT.

7.4 LOCATE TEMPERATURE, PRESSURE AND FLOW MEASURING DEVICES IN ACCESSIBLE LOCATIONS WITH A STRAIGHT SECTION OF PIPE OR DUCT UPSTREAM AND DOWNSTREAM, AS RECOMMENDED BY THE MANUFACTURER FOR ACCURACY.

7.5 CONTROL WIRE AND CONDUIT MUST COMPLY WITH THE NATIONAL ELECTRIC CODE, DIVISION 26 OF THE SPECIFICATIONS, AND LOCAL CODES.

7.6 UNLESS OTHERWISE SHOWN, LOCATE ROOM THERMOSTATS WITH CONTROLS BETWEEN 42"-48" ABOVE FINISHED FLOOR IN ACCORDANCE WITH ADA AND ABA REQUIREMENTS. NOTIFY THE CONTRACTING OFFICER OF ROOMS WHERE THE ABOVE LOCATION CANNOT BE MAINTAINED OR WHERE THERE IS A QUESTION ON LOCATION.

8.0 TEST AND INSPECTION

8.1 TESTING ADJUSTING AND BALANCING (TAB) AGENCY MUST BE A MEMBER OF THE ASSOCIATED AIR BALANCING COUNCIL (AABC), THE NATIONAL ENVIRONMENTAL BALANCING BUREAU (NEBB), OR THE TESTING, ADJUSTING AND BALANCING BUREAU (TABB). THE TAB FIRM MUST BE A SUBCONTRACTOR HIRED DIRECTLY BY THE GENERAL CONTRACTOR. TAB FIRM MUST HAVE A MINIMUM OF 5 YEARS EXPERIENCE ON SIMILAR PROJECTS. PERFORM TAB IN ACCORDANCE WITH THE REQUIREMENTS OF THE TAB PROCEDURAL STANDARD RECOMMENDED BY THE TAB TRADE ASSOCIATION THAT APPROVED THE TAB FIRM'S QUALIFICATIONS. COMPLY WITH REQUIREMENTS OF AABC MN-1, NEBB PROCEDURAL STANDARDS, OR SMACNA HVAC TAB(TABB) AS SUPPLEMENTED AND MODIFIED BY SPECIFICATION SECTIONS.

MECHANICAL - HVAC REQUIRED CODES, STANDARDS, & REFERENCES

- INTERNATIONAL BUILDING CODE 2018
- INTERNATIONAL MECHANICAL CODE 2018
- ASHRAE 62.1-2016, VENTILATION FOR ACCEPTABLE INDOOR AIR QUALITY
- ASHRAE 90.1-2013, ENERGY STANDARD FOR BUILDINGS EXCEPT LOW-RISE RESIDENTIAL BUILDINGS
- ASHRAE HANDBOOKS; 2017 FUNDAMENTALS, 2018 REFRIGERATION, 2019 HVAC APPLICATIONS, 2020 HVAC SYSTEMS AND EQUIPMENT
- ASHRAE 189.1-2014, STANDARD FOR THE DESIGN OF HIGH-PERFORMANCE GREEN BUILDINGS EXCEPT LOW-RISE RESIDENTIAL BUILDINGS
- ASHRAE TC 9.9 / TIA-589-D
- ALL OTHER APPLICABLE ASHRAE HANDBOOKS AND GUIDELINES.
- EPACT 2005
- ALL APPLICABLE NATIONAL FIRE PROTECTION ASSOCIATION (NFPA) CODES AND STANDARDS
- SMACNA HVAC DUCT CONSTRUCTION STANDARDS, METAL AND FLEXIBLE
- SMACNA, HVAC SYSTEMS – TESTING, ADJUSTING, AND BALANCING
- CAMP LEJEUNE MECHANICAL DESIGN GUIDANCE
- ASTM - AMERICAN SOCIETY FOR TESTING AND MATERIALS
- UFC 1-200-01, DoD BUILDING CODE - (8 OCTOBER 2019)
- UFC 1-200-02, HIGH PERFORMANCE AND SUSTAINABLE BUILDING REQUIREMENTS - (CHANGE 04, 01 OCTOBER 2019)
- UFC 3-101-01, ARCHITECTURE - (CHANGE 5, 25 SEPTEMBER 2019)
- UFC 3-400-02, DESIGN: ENGINEERING WEATHER DATA - (20 SEPTEMBER 2018)
- UFC 3-410-01, HEATING, VENTILATING, AND AIR CONDITIONING SYSTEMS - (CHANGE 6, 30 MARCH 2020)
- UFC 3-450-01, NOISE AND VIBRATION CONTROL - (15 MAY 2013)
- UFC 3-580-01, TELECOMMUNICATIONS INTERIOR INFASTRUCTURE PLANNING AND DESIGN - (CHANGE 1, 01 JUNE 2016)
- UFC 3-600-01 FIRE PROTECTION ENGINEERING FOR FACITILIES - (CHANGE 4, 7 FEBRUARY 2020)
- UFC 4-010-01, DoD MINIMUM ANTITERRORISM STANDARDS FOR BUILDINGS - (12 DECEMBER 2018)
- UFC 4-010-06, CYBERSECURITY OF FACILITY-RELATED CONTROL SYSTEMS - (CHANGE 1, 18 JANUARY 2017)

DESIGN CONDITIONS

CONDITIONS AS INDICATED IN THE RFP
OUTSIDE DESIGN CONDITIONS:
SUMMER: 91°F DB / 79°F MCWB
WINTER: 26°F DB
INSIDE CONDITIONS:
SUMMER: 78°F DB / 50% RH*
WINTER: 68°F DB*
* CONDITIONS ABOVE ARE PER RFP; REFER TO CONTROLS DRAWINGS AND MCBCL DESIGN POLICIES - A GLOBAL INDOOR TEMPERATURE SETPOINT SHALL BE PROVIDED:
- 70° SETPOINT AT 50° OR BELOW AMBIENT
- 76° SETPOINT AT 80° OR ABOVE AMBIENT
- GLOBAL SETPOINT SHALL RESET LINEARLY BETWEEN 50° AND 80° AMBIENT
- OCCUPANT SHALL BE ALLOWED SPACE ADJUSTMENT OF ±3°F FROM GLOBAL SETPOINT

OUTDOOR CONDITIONS FOR AIR-COOLED EQUIPMENT: 95°F DB
WAREHOUSE AND HEATING ONLY INSIDE CONDITIONS:
SUMMER: 10°F DB ABOVE AMBIENT
WINTER: 60°F DB
HEATING & VENTILATING INSIDE CONDITIONS (ELEC, MECH WITH HEAT PROCUDING EQUIPMENT):
SUMMER: 10°F DB ABOVE AMBIENT
WINTER: 55°F DB
COMMUNICATION, IT ROOMS AND ELECTRICAL ROOMS INSIDE CONDITIONS:
SUMMER: 78°F DB, 55°F DEWPOINT
WINTER: N/A
COLD MECHANICAL ROOMS INSIDE CONDTIONS:
SUMMER: N/A DB, 55°F DEWPOINT
WINTER: 55° DB
UNOCCUPIED MODE (NIGHT SETBACK):
SUMMER: 5°F DB HIGHER THAN INDOOR COOLING DESIGN CONDITIONS BUT NO HIGHER THAN 85°F DB.
WINTER: 10°F DB LOWER THAN INDOOR HEATING DESIGN CONDTIONS BUT NO LOWER THAN 55°F DB.
YEAR ROUND: 60% RH MAXIMUM

APPR | DATE | DESCRIPTION | SYM

NAVFAC

COMMONWEALTH OF PENNSYLVANIA
REGISTERED PROFESSIONAL ENGINEER
DAVID W HURD
No PE061160
SEAL

W.M. Jordan COMPANY – A JOINT VENTURE –

Michael Baker INTERNATIONAL
100 AIRSIDE DRIVE
MOON TOWNSHIP, PA 15108
A/E INFO

APPROVED
FOR COMMANDER NAVFAC

ACTIVITY
MARINE CORPS BASE CAMP LEJEUNE

SATISFACTORY TO DATE DD/MM/YY

DES EMB	DRW AJK	CHK DWH
PM / DM	TOWLER / ROOT	
BRANCH HEAD	SCE	
DESIGN DIRECTOR	R.L.Stephens, Jr.	
FIRE PROTECTION	DPS	

DEPARTMENT OF THE NAVY
NAVAL FACILITIES ENGINEERING SYSTEMS COMMAND ATLANTIC
ATLANTIC DESIGN AND CONSTRUCTION
NAVAL FACILITIES ENGINEERING SYSTEMS COMMAND ATLANTIC
NORFOLK, VA
JACKSONVILLE, NC
LOGCOM CSP WAREHOUSE
MCB CAMP LEJEUNE
MECHANICAL - GENERAL NOTES

SCALE: AS NOTED
EPROJECT NO.: 1639600
CONSTR. CONTR. NO. N40085-20-C-0059
NAVFAC DRAWING NO. 14111309
SHEET 286 OF 447

M-002

DRAWFORM REVISION: 25 AUGUST 2020

P1527 FINAL SUBMISSION - 11/18/2021

PLOTTED: 11/11/2021 3:06:37 PM
FILE NAME: BIM 360://HF PACKAGE 3/P1527 LOG COM CSP-1639600-M.rvt

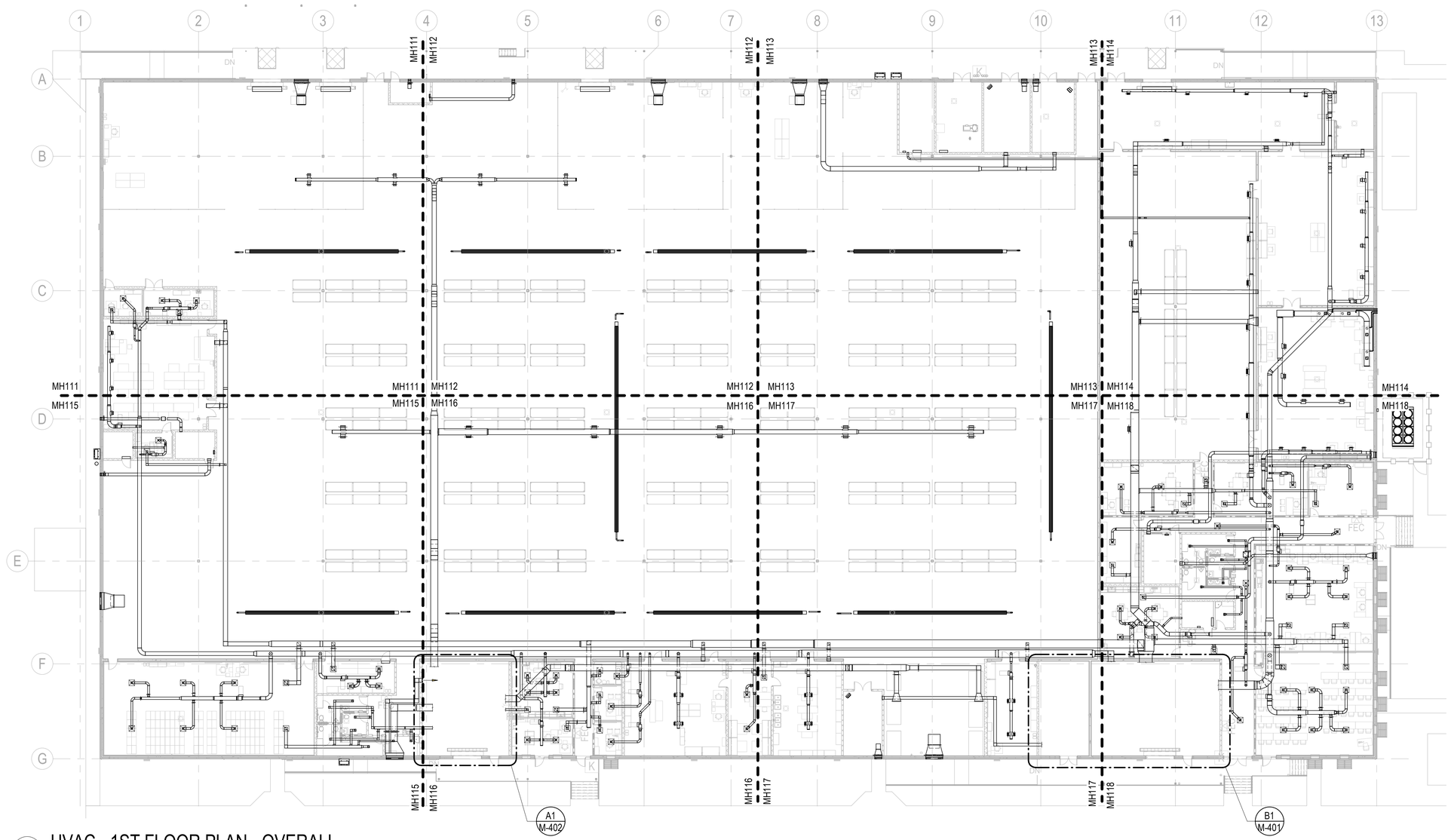

A1 HVAC - 1ST FLOOR PLAN - OVERALL

SCALE: 1" = 20'-0"

KEYPLAN

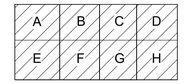

0 10' - 0" 20' - 0" 40' - 0"

SCALE: 1" = 20' - 0"

N

APPR	
DATE	
DESCRIPTION	
SYM	

NAVFAC

COMMONWEALTH OF PENNSYLVANIA
REGISTERED PROFESSIONAL ENGINEER
DAVID W. HURD
No. PE061160
SEAL

RQ W.M. Jordan COMPANY — A JOINT VENTURE —

Michael Baker INTERNATIONAL

100 AIRSIDE DRIVE
MOON TOWNSHIP, PA 15108 A/E INFO

APPROVED

FOR COMMANDER NAVFAC

ACTIVITY
MARINE CORPS BASE
CAMP LEJEUNE

SATISFACTORY TO DATE DD/MM/YY

DES EMB	DRW AJK CHK DWH
PM / DM	TOWLER / ROOT
BRANCH HEAD	SCE
DESIGN DIRECTOR	R.L.Stephens, Jr.
FIRE PROTECTION	DPS

NAVAL FACILITIES ENGINEERING SYSTEMS COMMAND
NORFOLK, VA

DEPARTMENT OF THE NAVY
NAVAL FACILITIES ENGINEERING SYSTEMS COMMAND ATLANTIC
ATLANTIC DESIGN AND CONSTRUCTION

JACKSONVILLE, NC

MCB CAMP LEJEUNE

LOGCOM CSP WAREHOUSE

HVAC - OVERALL - 1ST FLOOR PLAN

SCALE:	AS NOTED
EPROJECT NO.:	1639600
CONSTR. CONTR. NO.	N40085-20-C-0059
NAVFAC DRAWING NO.	14111310
SHEET	287 OF 447

MH110

DRAWFORM REVISION: 25 AUGUST 2020

P1527 FINAL SUBMISSION - 11/18/2021

PLOTTED: 11/11/2021 3:20:48 PM

FILE NAME: BIM 360://HF PACKAGE 3/P1527 LOG COM CSP - 1639600-M.rvt

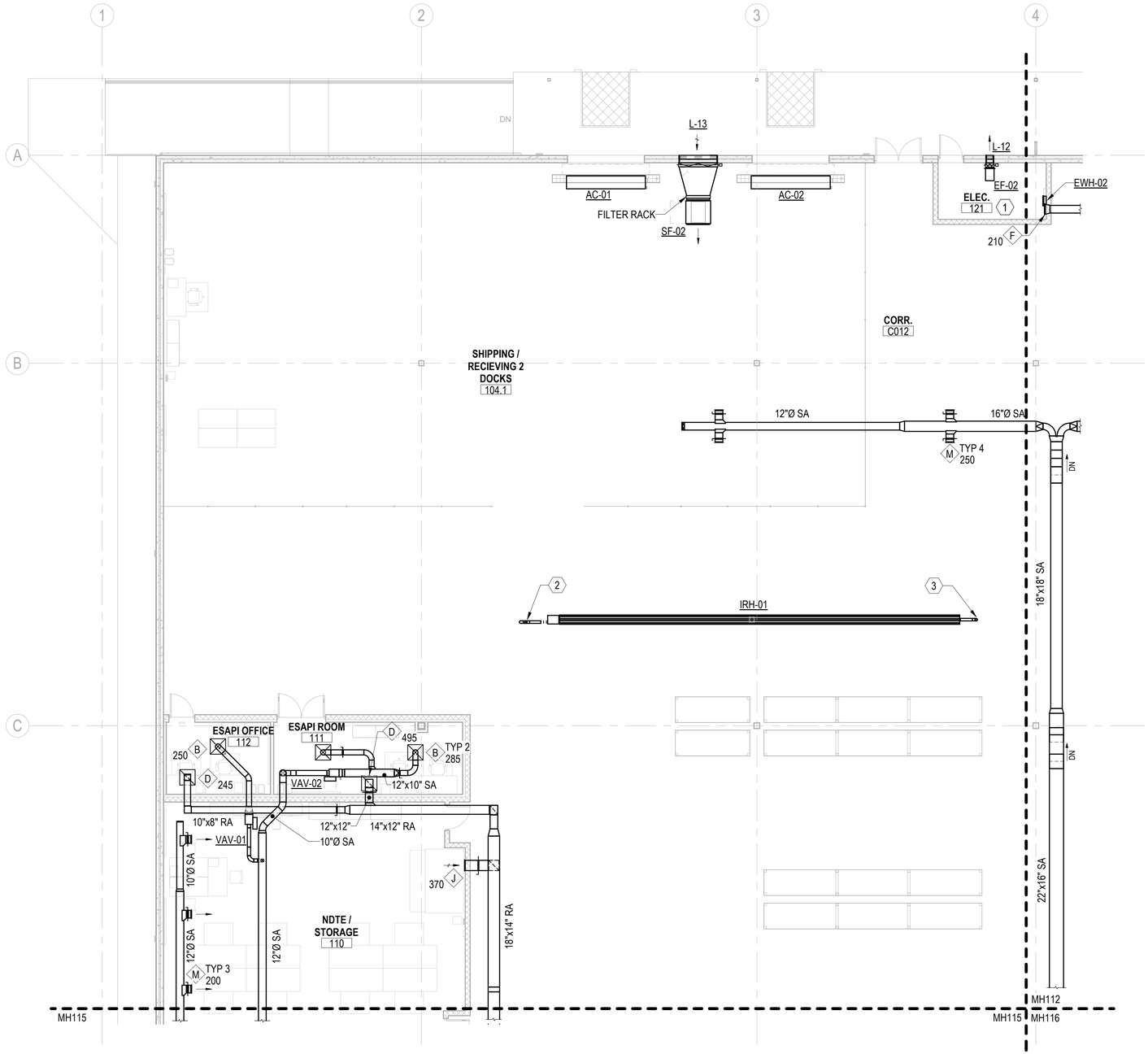

A1 HVAC - 1ST FLOOR PLAN - AREA A
SCALE: 1/8" = 1'-0"

GENERAL NOTES

1. PROVIDE MANUAL VOLUME DAMPERS IN ALL RUN-OUTS TO DIFFUSERS, AT ALL BRANCH TAKE-OFFS FROM MAIN SUPPLY DUCT, AND IN ALL OTHER AREAS AS REQUIRED TO PROVIDE PROPER SYSTEM BALANCING.
2. ALL SUPPLY AIR DUCT RUN-OUTS TO DIFFUSERS AND VAV BOXES SHALL BE SIZED TO MATCH DIFFUSER NECK SIZE OR VAV BOX INLET SIZE UNLESS OTHERWISE INDICATED.
3. SHEET METAL FABRICATOR MAY SUBSTITUTE EQUIVALENT ROUND OR FLAT OVAL DUCTWORK FOR RECTANGULAR SIZES INDICATED. DUCTWORK BETWEEN AHU AND VAV BOXES SHALL BE SIZED TO 0.2" STATIC PRESSURE LOSS PER 100' OF DUCT RUN. DUCTWORK DOWNSTREAM OF VAV BOXES SHALL BE SIZED TO 0.08" STATIC PRESSURE LOSS PER 100' OF DUCT RUN. RETURN, EXHAUST AND TRANSFER AIR DUCTS SHALL BE SIZED TO 0.05"/100' OF DUCT RUN. ALL REVISIONS MUST BE COORDINATED WITH ALL OTHER TRADES AND ILLUSTRATED IN DUCTWORK SHOP DRAWINGS FOR APPROVAL.
4. PLAN DRAWINGS ARE DIAGRAMMATIC IN NATURE AND NOT ILLUSTRATE ALL SPECIFIC DUCT TAKE-OFF CONFIGURATIONS, TAPS, ETC. REFER TO PROJECT SPECIFICATIONS AND DETAILS FOR SPECIFIC REQUIREMENTS.
5. ALL EQUIPMENT SHALL BE INSTALLED WITH MANUFACTURER'S REQUIRED ACCESS SPACE BETWEEN UNIT AND FULL HEIGHT WALLS AND OTHER OBSTRUCTIONS.

KEYNOTES

1. THERE SHALL NOT BE ANY EQUIPMENT (PIPING, DUCTWORK, MACHINERY, ETC.) THAT DOES NOT SERVE THIS SPACE INSTALLED ABOVE OR WITHIN THIS SPACE, NOR SHALL ANY EQUIPMENT NOT SERVING THIS SPACE PASS THROUGH OR ENTER THIS SPACE.
2. COMBUSTION AIR INTAKE UP THROUGH ROOF. REFER TO M-500 SERIES FOR ROOF PENETRATION DETAIL. INSTALL PER MANUFACTURER'S RECOMMENDATIONS AND REQUIREMENTS.
3. FLUE UP TO TERMINATION ON ROOF. REFER TO M-500 SERIES FOR ROOF PENETRATION DETAIL. INSTALL PER MANUFACTURER'S RECOMMENDATIONS AND REQUIREMENTS.

DUCT CONSTRUCTION SCHEDULE

DUCT SYSTEM	MIN PRESS CLASS	MIN. SEAL CLASS	SMACNA DUCT LEAKAGE CLASS (CL)			DUCT TEST PRESS
			RECT	ROUND	FLAT OVAL	
AHU SUPPLY (NON-VAV)	2" W.C.	A	4	2	2	2" W.C.
VAV SUPPLY - UPSTREAM OF BOXES	3" W.C.	A	4	2	2	3" W.C.
VAV SUPPLY - DOWNSTREAM OF BOXES	2" W.C.	A	4	2	2	2" W.C.
EXHAUST DUCTS	±1" W.C.	A	4	2	2	1" W.C.
RETURN DUCTS	±2" W.C.	A	4	2	2	2" W.C.
OUTSIDE AIR DUCTS	-1" W.C.	A	4	2	2	1" W.C.
TRANSFER AIR DUCTS	1" W.C.	A	NA	NA	NA	NA

KEYPLAN

A	B	C	D
E	F	G	H

0 4' - 0" 8' - 0" 16' - 0"
SCALE: 1/8" = 1' - 0"

N

APPR	DATE	DESCRIPTION	SYM

NAVFAC

COMMONWEALTH OF PENNSYLVANIA
REGISTERED PROFESSIONAL
DAVID W. HURD
ENGINEER
No. PE061160
SEAL

IRQ W.M. Jordan COMPANY – A JOINT VENTURE –

Michael Baker INTERNATIONAL
100 AIRSIDE DRIVE
MOON TOWNSHIP, PA 15108
A/E INFO

APPROVED
FOR COMMANDER NAVFAC

ACTIVITY
MARINE CORPS BASE CAMP LEJEUNE

SATISFACTORY TO DATE	DD/MM/YY
DES EMB DRW AJK CHK DWH	
PM / DM	TOWLER / ROOT
BRANCH HEAD	SCE
DESIGN DIRECTOR	R.L.Stephens, Jr.
FIRE PROTECTION	DPS

DEPARTMENT OF THE NAVY
NAVAL FACILITIES ENGINEERING SYSTEMS COMMAND
ATLANTIC DESIGN AND CONSTRUCTION
NAVAL FACILITIES ENGINEERING SYSTEMS COMMAND ATLANTIC
NORFOLK, VA
MCB CAMP LEJEUNE
LOGCOM CSP WAREHOUSE
JACKSONVILLE, NC
HVAC - 1ST FLOOR PLAN - AREA A

SCALE:	AS NOTED
EPROJECT NO.:	1639600
CONSTR. CONTR. NO.	N40085-20-C-0059
NAVFAC DRAWING NO.	14111311
SHEET	288 OF 447

MH111

DRAWFORM REVISION: 25 AUGUST 2020

P1527 FINAL SUBMISSION - 11/18/2021

PLOTTED: 11/11/2021 3:08:05 PM
FILE NAME: BIM 360://HF PACKAGE 3/P1527 LOG COM CSP-1639600-M.rvt

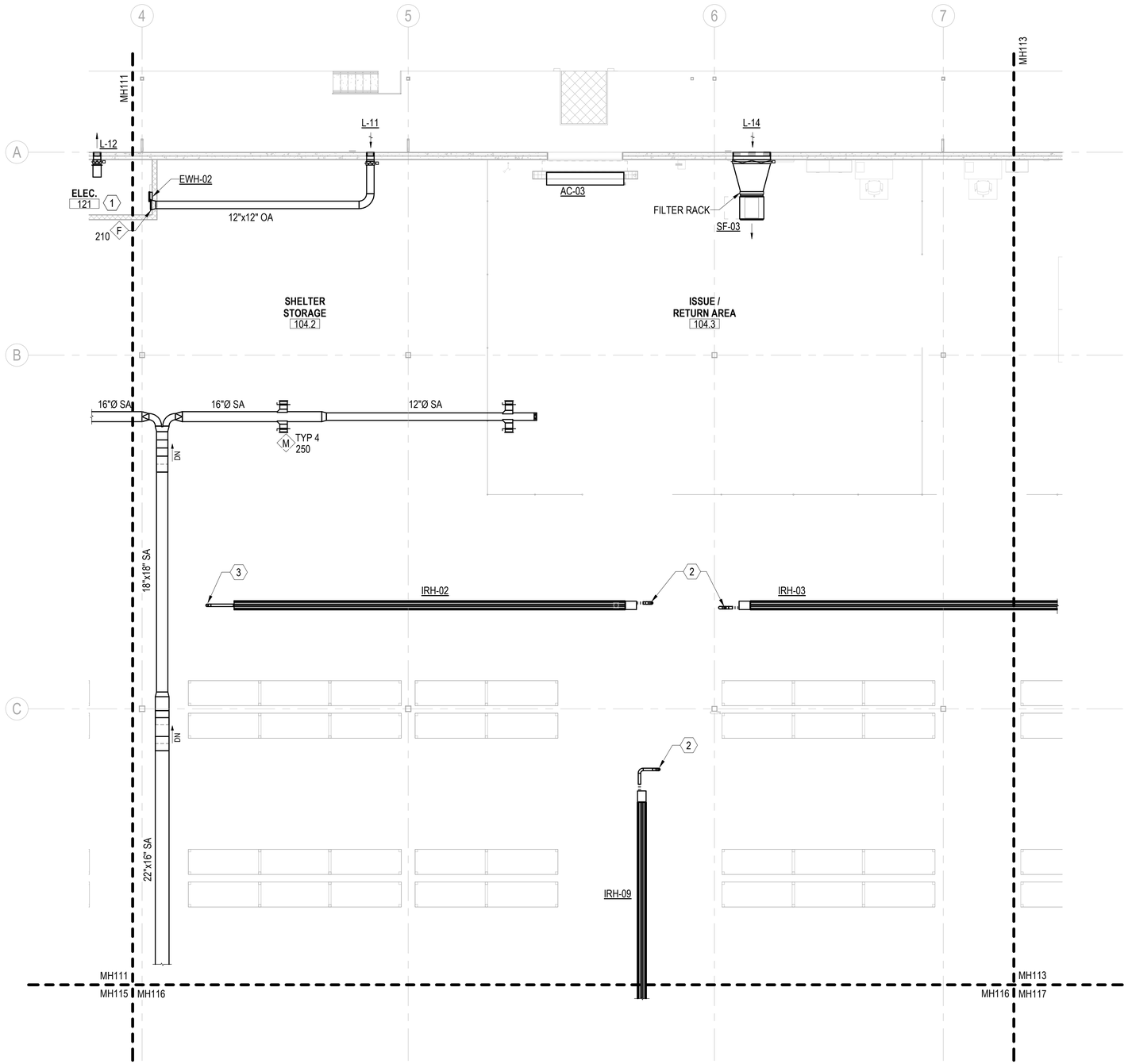

A1 HVAC - 1ST FLOOR PLAN - AREA B
SCALE: 1/8" = 1'-0"

GENERAL NOTES

1. PROVIDE MANUAL VOLUME DAMPERS IN ALL RUN-OUTS TO DIFFUSERS, AT ALL BRANCH TAKE-OFFS FROM MAIN SUPPLY DUCT, AND IN ALL OTHER AREAS AS REQUIRED TO PROVIDE PROPER SYSTEM BALANCING.
2. ALL SUPPLY AIR DUCT RUN-OUTS TO DIFFUSERS AND VAV BOXES SHALL BE SIZED TO MATCH DIFFUSER NECK SIZE OR VAV BOX INLET SIZE UNLESS OTHERWISE INDICATED.
3. SHEET METAL FABRICATOR MAY SUBSTITUTE EQUIVALENT ROUND OR FLAT OVAL DUCTWORK FOR RECTANGULAR SIZES INDICATED. DUCTWORK BETWEEN AHU AND VAV BOXES SHALL BE SIZED TO 0.2" STATIC PRESSURE LOSS PER 100' OF DUCT RUN. DUCTWORK DOWNSTREAM OF VAV BOXES SHALL BE SIZED TO 0.08" STATIC PRESSURE LOSS PER 100' OF DUCT RUN. RETURN, EXHAUST AND TRANSFER AIR DUCTS SHALL BE SIZED TO 0.05"/100' OF DUCT RUN. ALL REVISIONS MUST BE COORDINATED WITH ALL OTHER TRADES AND ILLUSTRATED IN DUCTWORK SHOP DRAWINGS FOR APPROVAL.
4. PLAN DRAWINGS ARE DIAGRAMMATIC IN NATURE AND NOT ILLUSTRATE ALL SPECIFIC DUCT TAKE-OFF CONFIGURATIONS, TAPS, ETC. REFER TO PROJECT SPECIFICATIONS AND DETAILS FOR SPECIFIC REQUIREMENTS.
5. ALL EQUIPMENT SHALL BE INSTALLED WITH MANUFACTURER'S REQUIRED ACCESS SPACE BETWEEN UNIT AND FULL HEIGHT WALLS AND OTHER OBSTRUCTIONS.

KEYNOTES

1. THERE SHALL NOT BE ANY EQUIPMENT (PIPING, DUCTWORK, MACHINERY, ETC.) THAT DOES NOT SERVE THIS SPACE INSTALLED ABOVE OR WITHIN THIS SPACE, NOR SHALL ANY EQUIPMENT NOT SERVING THIS SPACE PASS THROUGH OR ENTER THIS SPACE.
2. COMBUSTION AIR INTAKE UP THROUGH ROOF. REFER TO M-500 SERIES FOR ROOF PENETRATION DETAIL. INSTALL PER MANUFACTURER'S RECOMMENDATIONS AND REQUIREMENTS.
3. FLUE UP TO TERMINATION ON ROOF. REFER TO M-500 SERIES FOR ROOF PENETRATION DETAIL. INSTALL PER MANUFACTURER'S RECOMMENDATIONS AND REQUIREMENTS.

DUCT CONSTRUCTION SCHEDULE

DUCT SYSTEM	MIN PRESS CLASS	MIN. SEAL CLASS	SMACNA DUCT LEAKAGE CLASS (CL)			DUCT TEST PRESS
			RECT	ROUND	FLAT OVAL	
AHU SUPPLY (NON-VAV)	2" W.C.	A	4	2	2	2" W.C.
VAV SUPPLY - UPSTREAM OF BOXES	3" W.C.	A	4	2	2	3" W.C.
VAV SUPPLY - DOWNSTREAM OF BOXES	2" W.C.	A	4	2	2	2" W.C.
EXHAUST DUCTS	±1" W.C.	A	4	2	2	1" W.C.
RETURN DUCTS	±2" W.C.	A	4	2	2	2" W.C.
OUTSIDE AIR DUCTS	-1" W.C.	A	4	2	2	1" W.C.
TRANSFER AIR DUCTS	1" W.C.	A	NA	NA	NA	NA

KEYPLAN

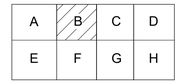

0 4' - 0" 8' - 0" 16' - 0"
SCALE: 1/8" = 1' - 0"

N

		APPR
		DATE
		DESCRIPTION
		SYM

NAVFAC

COMMONWEALTH OF PENNSYLVANIA
REGISTERED PROFESSIONAL
DAVID W. HURD
ENGINEER
No. PE061160
SEAL

IRQ Jordan COMPANY – A JOINT VENTURE –

Michael Baker INTERNATIONAL
100 AIRSIDE DRIVE
MOON TOWNSHIP, PA 15108
A/E INFO

APPROVED
FOR COMMANDER NAVFAC

ACTIVITY
MARINE CORPS BASE
CAMP LEJEUNE

SATISFACTORY TO DATE DD/MM/YY
DES EMB | DRW AJK | CHK DWH
PM / DM TOWLER / ROOT
BRANCH HEAD SCE
DESIGN DIRECTOR R.L.Stephens, Jr.
FIRE PROTECTION DPS

DEPARTMENT OF THE NAVY
NAVAL FACILITIES ENGINEERING SYSTEMS COMMAND
ATLANTIC DESIGN AND CONSTRUCTION
MCB CAMP LEJEUNE

NAVAL FACILITIES ENGINEERING SYSTEMS COMMAND ATLANTIC
NORFOLK, VA
LOGCOM CSP WAREHOUSE
JACKSONVILLE, NC

HVAC - 1ST FLOOR PLAN - AREA B

SCALE: AS NOTED
EPROJECT NO.: 1639600
CONSTR. CONTR. NO. N40085-20-C-0059
NAVFAC DRAWING NO. 14111312
SHEET 289 OF 447

MH112

DRAWFORM REVISION: 25 AUGUST 2020

P1527 FINAL SUBMISSION - 11/18/2021

PLOTTED: 11/11/2021 3:23:15 PM
FILE NAME: BIM 360://HF PACKAGE 3/P1527 LOG COM CSP- 1639600-M.rvt

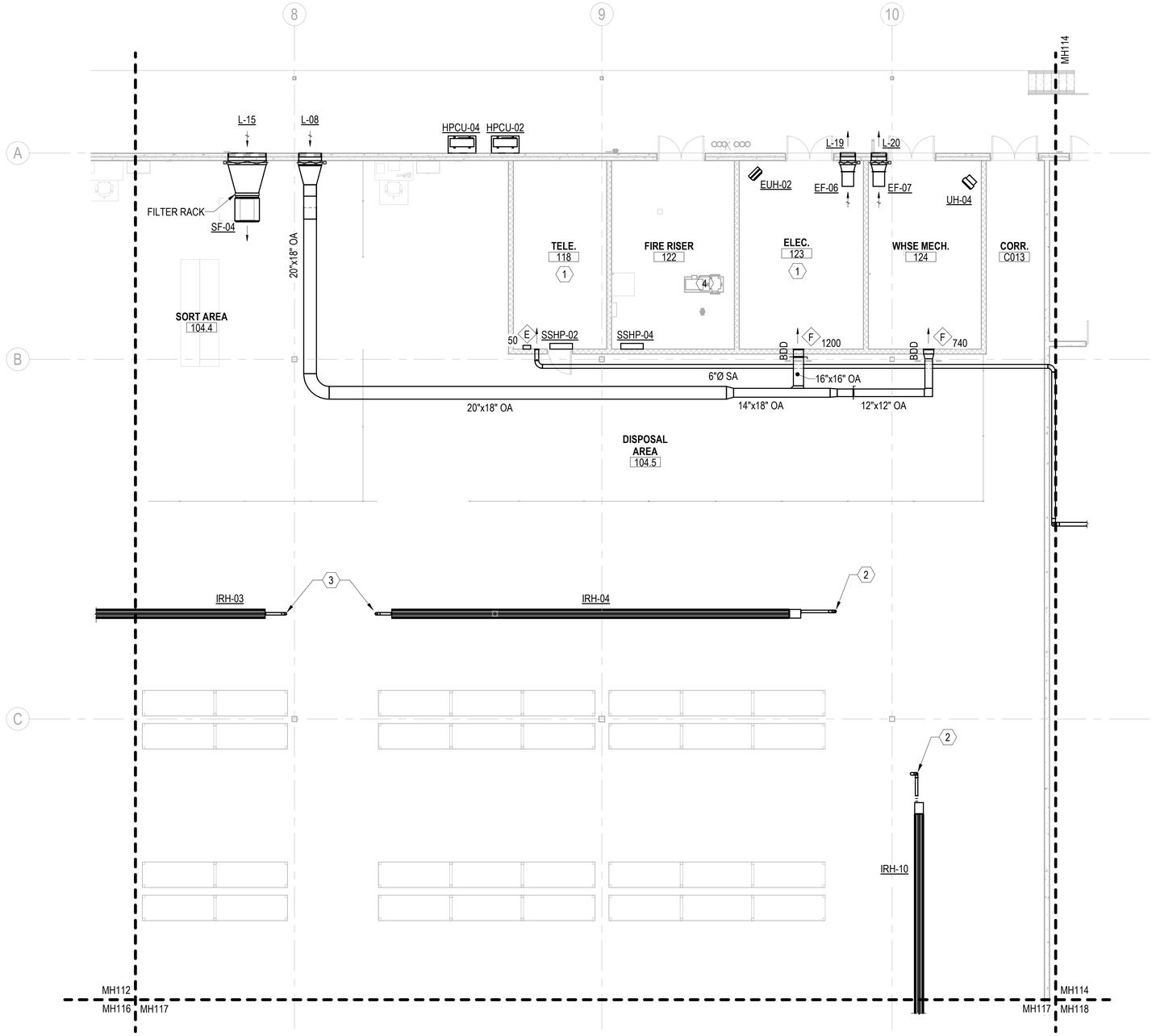

A1 HVAC - 1ST FLOOR PLAN - AREA C

SCALE: 1/8" = 1'-0"

GENERAL NOTES

1. PROVIDE MANUAL VOLUME DAMPERS IN ALL RUN-OUTS TO DIFFUSERS, AT ALL BRANCH TAKE-OFFS FROM MAIN SUPPLY DUCT, AND IN ALL OTHER AREAS AS REQUIRED TO PROVIDE PROPER SYSTEM BALANCING.
2. ALL SUPPLY AIR DUCT RUN-OUTS TO DIFFUSERS AND VAV BOXES SHALL BE SIZED TO MATCH DIFFUSER NECK SIZE OR VAV BOX INLET SIZE UNLESS OTHERWISE INDICATED.
3. SHEET METAL FABRICATOR MAY SUBSTITUTE EQUIVALENT ROUND OR FLAT OVAL DUCTWORK FOR RECTANGULAR SIZES INDICATED. DUCTWORK BETWEEN AHU AND VAV BOXES SHALL BE SIZED TO 0.2" STATIC PRESSURE LOSS PER 100' OF DUCT RUN. DUCTWORK DOWNSTREAM OF VAV BOXES SHALL BE SIZED TO 0.08" STATIC PRESSURE LOSS PER 100' OF DUCT RUN. RETURN, EXHAUST AND TRANSFER AIR DUCTS SHALL BE SIZED TO 0.05"/100' OF DUCT RUN. ALL REVISIONS MUST BE COORDINATED WITH ALL OTHER TRADES AND ILLUSTRATED IN DUCTWORK SHOP DRAWINGS FOR APPROVAL.
4. PLAN DRAWINGS ARE DIAGRAMMATIC IN NATURE AND NOT ILLUSTRATE ALL SPECIFIC DUCT TAKE-OFF CONFIGURATIONS, TAPS, ETC. REFER TO PROJECT SPECIFICATIONS AND DETAILS FOR SPECIFIC REQUIREMENTS.
5. ALL EQUIPMENT SHALL BE INSTALLED WITH MANUFACTURER'S REQUIRED ACCESS SPACE BETWEEN UNIT AND FULL HEIGHT WALLS AND OTHER OBSTRUCTIONS.

KEYNOTES

1. THERE SHALL NOT BE ANY EQUIPMENT (PIPING, DUCTWORK, MACHINERY, ETC.) THAT DOES NOT SERVE THIS SPACE INSTALLED ABOVE OR WITHIN THIS SPACE, NOR SHALL ANY EQUIPMENT NOT SERVING THIS SPACE PASS THROUGH OR ENTER THIS SPACE.
2. COMBUSTION AIR INTAKE UP THROUGH ROOF. REFER TO M-500 SERIES FOR ROOF PENETRATION DETAIL. INSTALL PER MANUFACTURER'S RECOMMENDATIONS AND REQUIREMENTS.
3. FLUE UP TO TERMINATION ON ROOF. REFER TO M-500 SERIES FOR ROOF PENETRATION DETAIL. INSTALL PER MANUFACTURER'S RECOMMENDATIONS AND REQUIREMENTS.
4. FIRE PROTECTION EQUIPMENT, REFER TO FP SERIES DRAWINGS FOR ADDITIONAL INFORMATION.

DUCT CONSTRUCTION SCHEDULE

DUCT SYSTEM	MIN PRESS CLASS	MIN. SEAL CLASS	SMACNA DUCT LEAKAGE CLASS (CL)			DUCT TEST PRESS
			RECT	ROUND	FLAT OVAL	
AHU SUPPLY (NON-VAV)	2" W.C.	A	4	2	2	2" W.C.
VAV SUPPLY - UPSTREAM OF BOXES	3" W.C.	A	4	2	2	3" W.C.
VAV SUPPLY - DOWNSTREAM OF BOXES	2" W.C.	A	4	2	2	2" W.C.
EXHAUST DUCTS	±1" W.C.	A	4	2	2	1" W.C.
RETURN DUCTS	±2" W.C.	A	4	2	2	2" W.C.
OUTSIDE AIR DUCTS	-1" W.C.	A	4	2	2	1" W.C.
TRANSFER AIR DUCTS	1" W.C.	A	NA	NA	NA	NA

KEYPLAN

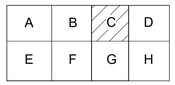

0 4' - 0" 8' - 0" 16' - 0"

SCALE: 1/8" = 1' - 0"

N

		APPR
		DATE
		DESCRIPTION
		SYM

NAVFAC

COMMONWEALTH OF PENNSYLVANIA — REGISTERED PROFESSIONAL ENGINEER — DAVID W. HURD — No. PE061160 — SEAL

WJM Jordan COMPANY — A JOINT VENTURE

Michael Baker INTERNATIONAL

100 AIRSIDE DRIVE
MOON TOWNSHIP, PA 15108 — A/E INFO

APPROVED

FOR COMMANDER NAVFAC

ACTIVITY
MARINE CORPS BASE
CAMP LEJEUNE

SATISFACTORY TO DATE DD/MM/YY

DES EMB | DRW AJK | CHK DWH

PM / DM TOWLER / ROOT

BRANCH HEAD SCE

DESIGN DIRECTOR R.L.Stephens, Jr.

FIRE PROTECTION DPS

DEPARTMENT OF THE NAVY
NAVAL FACILITIES ENGINEERING SYSTEMS COMMAND
ATLANTIC DESIGN AND CONSTRUCTION
NAVAL FACILITIES ENGINEERING SYSTEMS COMMAND ATLANTIC
NORFOLK, VA
MCB CAMP LEJEUNE
JACKSONVILLE, NC
LOGCOM CSP WAREHOUSE
HVAC - 1ST FLOOR PLAN - AREA C

SCALE: AS NOTED
EPROJECT NO.: 1639600
CONSTR. CONTR. NO. N40085-20-C-0059
NAVFAC DRAWING NO. 14111313
SHEET 290 OF 447

MH113

DRAWFORM REVISION: 25 AUGUST 2020

P1527 FINAL SUBMISSION - 11/18/2021

PLOTTED: 11/11/2021 3:23:16 PM

FILE NAME: BIM 360://HF PACKAGE 3/P1527 LOG COM CSP-1639600-M.rvt

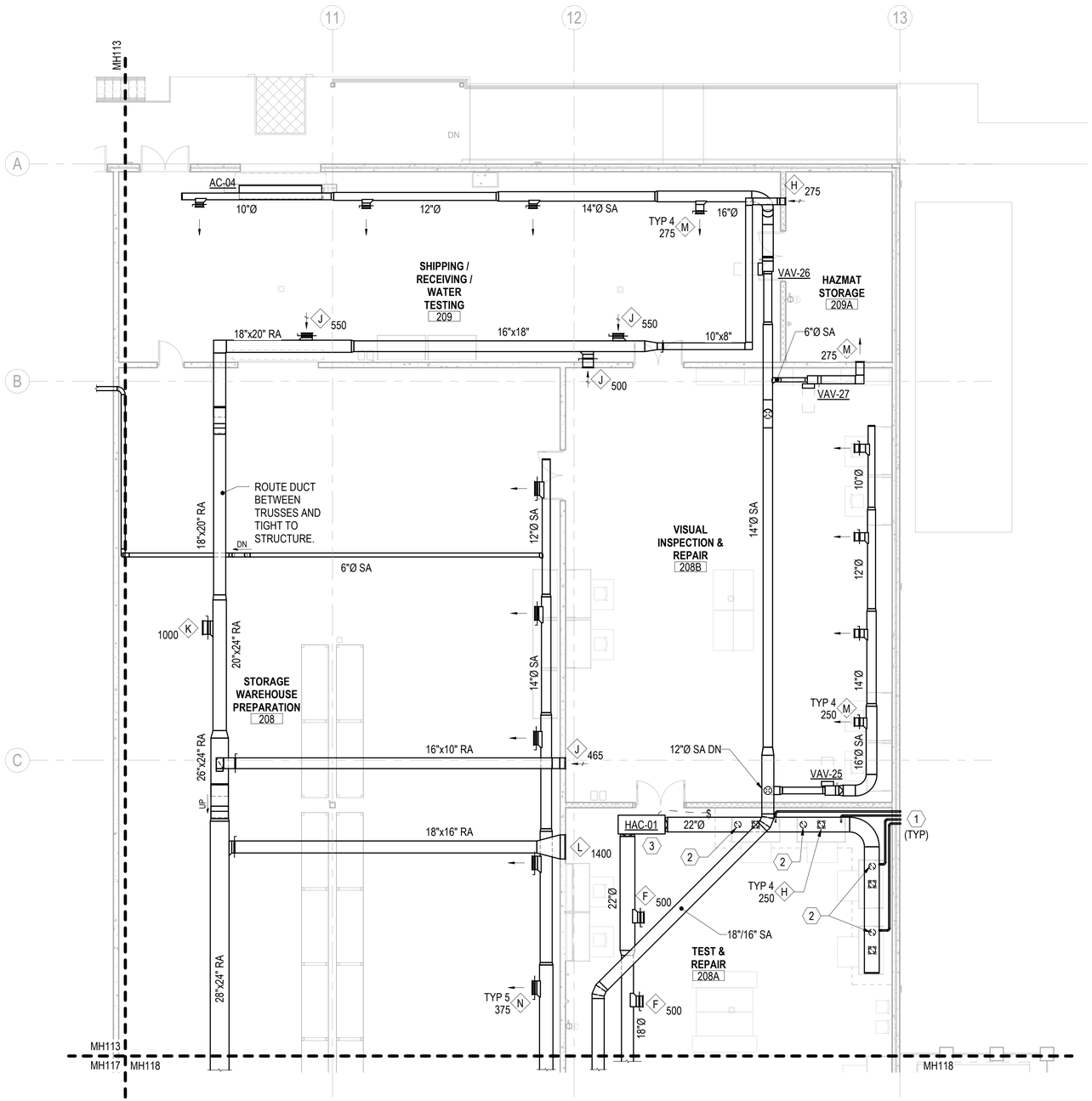

A1 HVAC - 1ST FLOOR PLAN - AREA D

SCALE: 1/8" = 1'-0"

GENERAL NOTES

1. PROVIDE MANUAL VOLUME DAMPERS IN ALL RUN-OUTS TO DIFFUSERS, AT ALL BRANCH TAKE-OFFS FROM MAIN SUPPLY DUCT, AND IN ALL OTHER AREAS AS REQUIRED TO PROVIDE PROPER SYSTEM BALANCING.
2. ALL SUPPLY AIR DUCT RUN-OUTS TO DIFFUSERS AND VAV BOXES SHALL BE SIZED TO MATCH DIFFUSER NECK SIZE OR VAV BOX INLET SIZE UNLESS OTHERWISE INDICATED.
3. SHEET METAL FABRICATOR MAY SUBSTITUTE EQUIVALENT ROUND OR FLAT OVAL DUCTWORK FOR RECTANGULAR SIZES INDICATED. DUCTWORK BETWEEN AHU AND VAV BOXES SHALL BE SIZED TO 0.2" STATIC PRESSURE LOSS PER 100' OF DUCT RUN. DUCTWORK DOWNSTREAM OF VAV BOXES SHALL BE SIZED TO 0.08" STATIC PRESSURE LOSS PER 100' OF DUCT RUN. RETURN, EXHAUST AND TRANSFER AIR DUCTS SHALL BE SIZED TO 0.05"/100' OF DUCT RUN. ALL REVISIONS MUST BE COORDINATED WITH ALL OTHER TRADES AND ILLUSTRATED IN DUCTWORK SHOP DRAWINGS FOR APPROVAL.
4. PLAN DRAWINGS ARE DIAGRAMMATIC IN NATURE AND NOT ILLUSTRATE ALL SPECIFIC DUCT TAKE-OFF CONFIGURATIONS, TAPS, ETC. REFER TO PROJECT SPECIFICATIONS AND DETAILS FOR SPECIFIC REQUIREMENTS.
5. ALL EQUIPMENT SHALL BE INSTALLED WITH MANUFACTURER'S REQUIRED ACCESS SPACE BETWEEN UNIT AND FULL HEIGHT WALLS AND OTHER OBSTRUCTIONS.

KEYNOTES

1. PROVIDE VENT FROM THE GAS MASK TESTING SETTLING CHAMBER TO THE BUILDING'S EXTERIOR. MATCH EXISTING SIZE OF VENT PIPING (APPROX 2 INCHES) FROM RELOCATED TESTING EQUIPMENT. VENT SHALL NOT BE SUBJECTED TO A VACUUM. THE PVC VENT PIPE SHALL PASS THROUGH THE EXTERIOR WALL AT +/- 10 INCHES ABOVE THE FINISHED FLOOR IN 208A TEST & REPAIR.
2. PROVIDE 4" FUME EXTRACTION POSITIONING ARM CAPABLE OF 7' EXTENSION. (CAR-MON MODEL WXL-070).
3. PROVIDE WITH MANUAL WALL ON/OFF SWITCH, PROVIDE SIGN AT WALL SWITCH READING "AIR CLEANING SYSTEM - OPERATE WHILE MASK TESTING IS IN PROGRESS"

DUCT CONSTRUCTION SCHEDULE

DUCT SYSTEM	MIN PRESS CLASS	MIN. SEAL CLASS	SMACNA DUCT LEAKAGE CLASS (CL)			DUCT TEST PRESS
			RECT	ROUND	FLAT OVAL	
AHU SUPPLY (NON-VAV)	2" W.C.	A	4	2	2	2" W.C.
VAV SUPPLY - UPSTREAM OF BOXES	3" W.C.	A	4	2	2	3" W.C.
VAV SUPPLY - DOWNSTREAM OF BOXES	2" W.C.	A	4	2	2	2" W.C.
EXHAUST DUCTS	±1" W.C.	A	4	2	2	1" W.C.
RETURN DUCTS	±2" W.C.	A	4	2	2	2" W.C.
OUTSIDE AIR DUCTS	-1" W.C.	A	4	2	2	1" W.C.
TRANSFER AIR DUCTS	1" W.C.	A	NA	NA	NA	NA

KEYPLAN

A	B	C	D
E	F	G	H

0 4' - 0" 8' - 0" 16' - 0"

SCALE: 1/8" = 1' - 0"

N

APPR	DATE	DESCRIPTION	SYM

NAVFAC

COMMONWEALTH OF PENNSYLVANIA
REGISTERED PROFESSIONAL ENGINEER
DAVID W. HURD
No. PE061160
SEAL

RQ W.M. Jordan COMPANY – A JOINT VENTURE –

Michael Baker INTERNATIONAL
100 AIRSIDE DRIVE
MOON TOWNSHIP, PA 15108
A/E INFO

APPROVED

FOR COMMANDER NAVFAC

ACTIVITY
MARINE CORPS BASE CAMP LEJEUNE

SATISFACTORY TO DATE DD/MM/YY

DES	DRW	CHK
EMB	AJK	DWH

PM / DM TOWLER / ROOT
BRANCH HEAD SCE
DESIGN DIRECTOR R.L.Stephens, Jr.
FIRE PROTECTION DPS

DEPARTMENT OF THE NAVY
NAVAL FACILITIES ENGINEERING SYSTEMS COMMAND
ATLANTIC DESIGN AND CONSTRUCTION
NAVAL FACILITIES ENGINEERING SYSTEMS COMMAND ATLANTIC
NORFOLK, VA
MCB CAMP LEJEUNE
JACKSONVILLE, NC
LOGCOM CSP WAREHOUSE
HVAC - 1ST FLOOR PLAN - AREA D

SCALE: AS NOTED
EPROJECT NO.: 1639600
CONSTR. CONTR. NO. N40085-20-C-0059
NAVFAC DRAWING NO. 14111314
SHEET 291 OF 447

MH114

DRAWFORM REVISION: 25 AUGUST 2020

P1527 FINAL SUBMISSION - 11/18/2021

PLOTTED: 11/11/2021 3:08:21 PM

FILE NAME: BIM 360://HF PACKAGE 3/P1527 LOG COM CSP-1639600-M.rvt

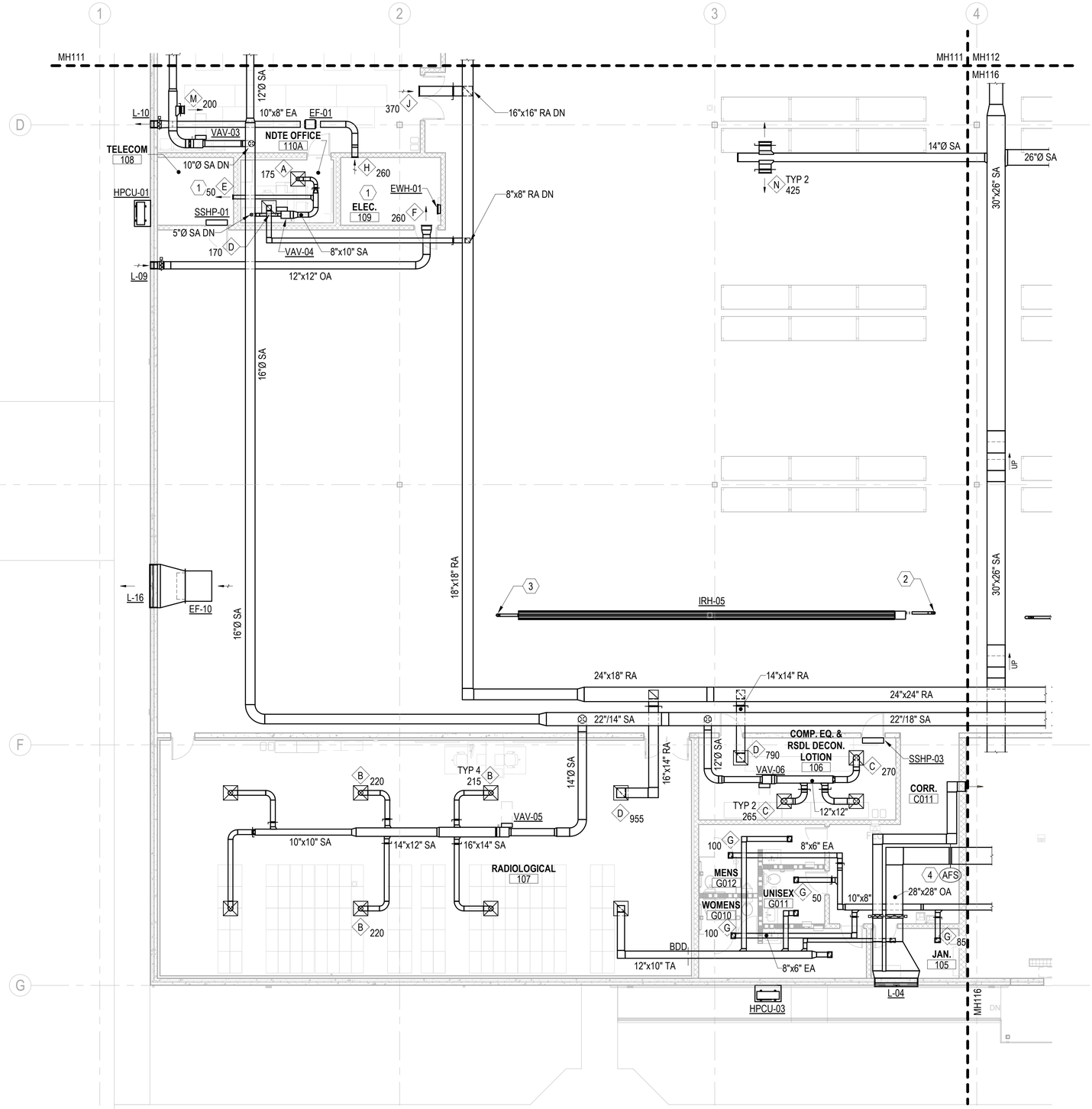

GENERAL NOTES

1. PROVIDE MANUAL VOLUME DAMPERS IN ALL RUN-OUTS TO DIFFUSERS, AT ALL BRANCH TAKE-OFFS FROM MAIN SUPPLY DUCT, AND IN ALL OTHER AREAS AS REQUIRED TO PROVIDE PROPER SYSTEM BALANCING.
2. ALL SUPPLY AIR DUCT RUN-OUTS TO DIFFUSERS AND VAV BOXES SHALL BE SIZED TO MATCH DIFFUSER NECK SIZE OR VAV BOX INLET SIZE UNLESS OTHERWISE INDICATED.
3. SHEET METAL FABRICATOR MAY SUBSTITUTE EQUIVALENT ROUND OR FLAT OVAL DUCTWORK FOR RECTANGULAR SIZES INDICATED. DUCTWORK BETWEEN AHU AND VAV BOXES SHALL BE SIZED TO 0.2" STATIC PRESSURE LOSS PER 100' OF DUCT RUN. DUCTWORK DOWNSTREAM OF VAV BOXES SHALL BE SIZED TO 0.08" STATIC PRESSURE LOSS PER 100' OF DUCT RUN. RETURN, EXHAUST AND TRANSFER AIR DUCTS SHALL BE SIZED TO 0.05"/100' OF DUCT RUN. ALL REVISIONS MUST BE COORDINATED WITH ALL OTHER TRADES AND ILLUSTRATED IN DUCTWORK SHOP DRAWINGS FOR APPROVAL.
4. PLAN DRAWINGS ARE DIAGRAMMATIC IN NATURE AND NOT ILLUSTRATE ALL SPECIFIC DUCT TAKE-OFF CONFIGURATIONS, TAPS, ETC. REFER TO PROJECT SPECIFICATIONS AND DETAILS FOR SPECIFIC REQUIREMENTS.
5. ALL EQUIPMENT SHALL BE INSTALLED WITH MANUFACTURER'S REQUIRED ACCESS SPACE BETWEEN UNIT AND FULL HEIGHT WALLS AND OTHER OBSTRUCTIONS.

KEYNOTES

1. THERE SHALL NOT BE ANY EQUIPMENT (PIPING, DUCTWORK, MACHINERY, ETC.) THAT DOES NOT SERVE THIS SPACE INSTALLED ABOVE OR WITHIN THIS SPACE, NOR SHALL ANY EQUIPMENT NOT SERVING THIS SPACE PASS THROUGH OR ENTER THIS SPACE.
2. COMBUSTION AIR INTAKE UP THROUGH ROOF. REFER TO M-500 SERIES FOR ROOF PENETRATION DETAIL. INSTALL PER MANUFACTURER'S RECOMMENDATIONS AND REQUIREMENTS.
3. FLUE UP TO TERMINATION ON ROOF. REFER TO M-500 SERIES FOR ROOF PENETRATION DETAIL. INSTALL PER MANUFACTURER'S RECOMMENDATIONS AND REQUIREMENTS.
4. LOCATE AIRFLOW MEASUREMENT STATION PER MANUFACTURER'S RECOMMENDED UP AND DOWN STREAM REQUIREMENTS.

DUCT CONSTRUCTION SCHEDULE

DUCT SYSTEM	MIN PRESS CLASS	MIN. SEAL CLASS	SMACNA DUCT LEAKAGE CLASS (CL)			DUCT TEST PRESS
			RECT	ROUND	FLAT OVAL	
AHU SUPPLY (NON-VAV)	2" W.C.	A	4	2	2	2" W.C.
VAV SUPPLY - UPSTREAM OF BOXES	3" W.C.	A	4	2	2	3" W.C.
VAV SUPPLY - DOWNSTREAM OF BOXES	2" W.C.	A	4	2	2	2" W.C.
EXHAUST DUCTS	±1" W.C.	A	4	2	2	1" W.C.
RETURN DUCTS	±2" W.C.	A	4	2	2	2" W.C.
OUTSIDE AIR DUCTS	-1" W.C.	A	4	2	2	1" W.C.
TRANSFER AIR DUCTS	1" W.C.	A	NA	NA	NA	NA

KEYPLAN

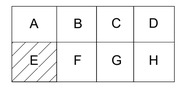

0 4' - 0" 8' - 0" 16' - 0"

SCALE: 1/8" = 1' - 0"

N

A1 HVAC - 1ST FLOOR PLAN - AREA E

SCALE: 1/8" = 1'-0"

			APPR
			DATE
			DESCRIPTION
			SYM

NAVFAC

COMMONWEALTH OF PENNSYLVANIA
REGISTERED PROFESSIONAL
DAVID W HURD
ENGINEER
No PE061160
SEAL

W.M. Jordan COMPANY
A JOINT VENTURE

Michael Baker INTERNATIONAL
100 AIRSIDE DRIVE
MOON TOWNSHIP, PA 15108
A/E INFO

APPROVED

FOR COMMANDER NAVFAC

ACTIVITY
MARINE CORPS BASE
CAMP LEJEUNE

SATISFACTORY TO DATE DD/MM/YY

DES EMB | DRW AJK | CHK DWH

PM / DM TOWLER / ROOT

BRANCH HEAD SCE

DESIGN DIRECTOR R.L.Stephens, Jr.

FIRE PROTECTION DPS

DEPARTMENT OF THE NAVY
NAVAL FACILITIES ENGINEERING SYSTEMS COMMAND
ATLANTIC DESIGN AND CONSTRUCTION
NAVAL FACILITIES ENGINEERING SYSTEMS COMMAND ATLANTIC
NORFOLK, VA
MCB CAMP LEJEUNE
JACKSONVILLE, NC
LOGCOM CSP WAREHOUSE
HVAC - 1ST FLOOR PLAN - AREA E

SCALE: AS NOTED

EPROJECT NO.: 1639600

CONSTR. CONTR. NO. N40085-20-C-0059

NAVFAC DRAWING NO. 14111315

SHEET 292 OF 447

MH115

DRAWFORM REVISION: 25 AUGUST 2020

P1527 FINAL SUBMISSION - 11/18/2021

PLOTTED: 11/11/2021 3:08:28 PM

FILE NAME: BIM 360://HF PACKAGE 3.1P1527 LOG COM CSP-1639600-M.rvt

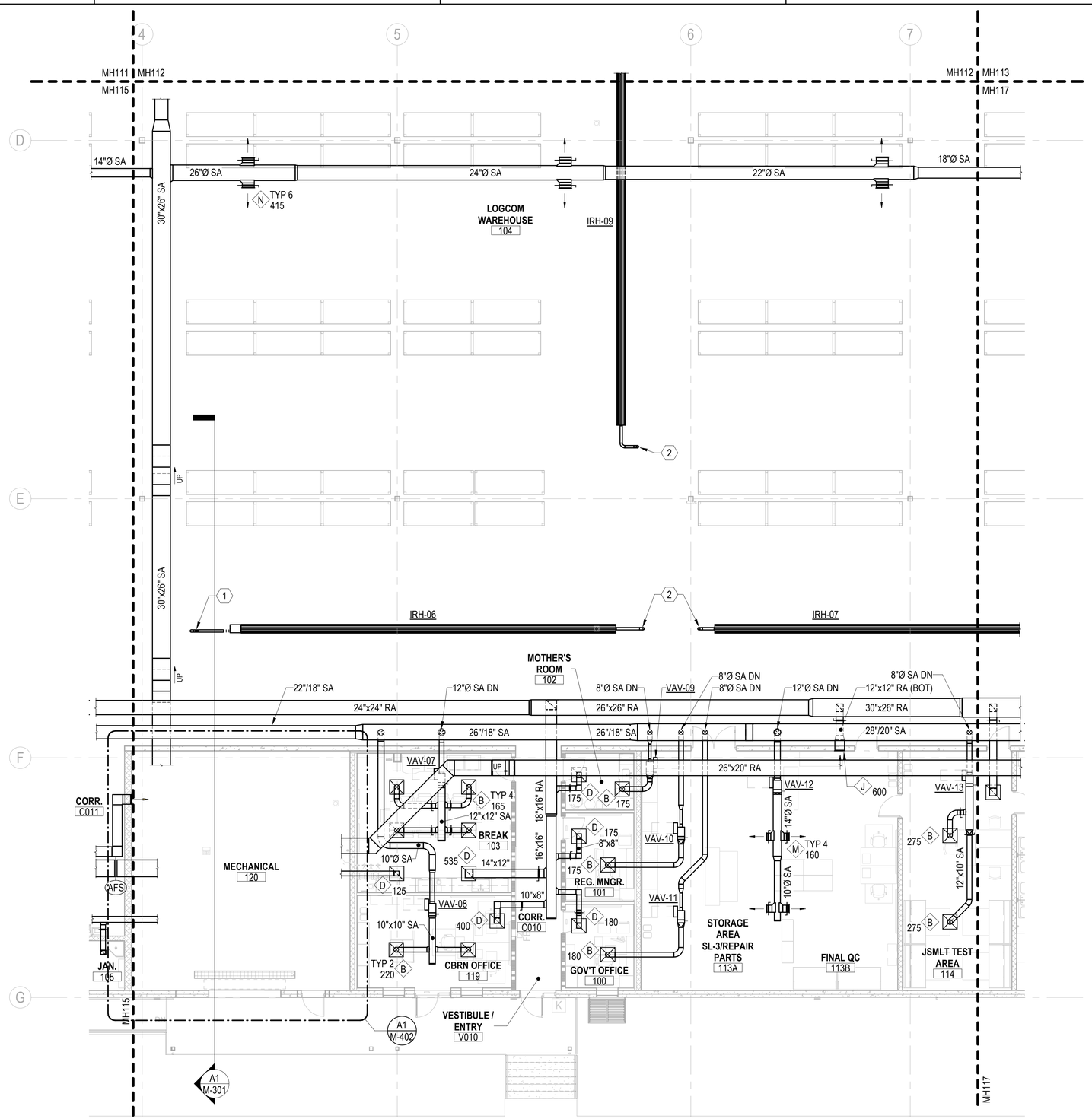

A1 HVAC - 1ST FLOOR PLAN - AREA F

SCALE: 1/8" = 1'-0"

GENERAL NOTES

1. PROVIDE MANUAL VOLUME DAMPERS IN ALL RUN-OUTS TO DIFFUSERS, AT ALL BRANCH TAKE-OFFS FROM MAIN SUPPLY DUCT, AND IN ALL OTHER AREAS AS REQUIRED TO PROVIDE PROPER SYSTEM BALANCING.
2. ALL SUPPLY AIR DUCT RUN-OUTS TO DIFFUSERS AND VAV BOXES SHALL BE SIZED TO MATCH DIFFUSER NECK SIZE OR VAV BOX INLET SIZE UNLESS OTHERWISE INDICATED.
3. SHEET METAL FABRICATOR MAY SUBSTITUTE EQUIVALENT ROUND OR FLAT OVAL DUCTWORK FOR RECTANGULAR SIZES INDICATED. DUCTWORK BETWEEN AHU AND VAV BOXES SHALL BE SIZED TO 0.2" STATIC PRESSURE LOSS PER 100' OF DUCT RUN. DUCTWORK DOWNSTREAM OF VAV BOXES SHALL BE SIZED TO 0.08" STATIC PRESSURE LOSS PER 100' OF DUCT RUN. RETURN, EXHAUST AND TRANSFER AIR DUCTS SHALL BE SIZED TO 0.05"/100' OF DUCT RUN. ALL REVISIONS MUST BE COORDINATED WITH ALL OTHER TRADES AND ILLUSTRATED IN DUCTWORK SHOP DRAWINGS FOR APPROVAL.
4. PLAN DRAWINGS ARE DIAGRAMMATIC IN NATURE AND NOT ILLUSTRATE ALL SPECIFIC DUCT TAKE-OFF CONFIGURATIONS, TAPS, ETC. REFER TO PROJECT SPECIFICATIONS AND DETAILS FOR SPECIFIC REQUIREMENTS.
5. ALL EQUIPMENT SHALL BE INSTALLED WITH MANUFACTURER'S REQUIRED ACCESS SPACE BETWEEN UNIT AND FULL HEIGHT WALLS AND OTHER OBSTRUCTIONS.

KEYNOTES

1. COMBUSTION AIR INTAKE UP THROUGH ROOF. REFER TO M-500 SERIES FOR ROOF PENETRATION DETAIL. INSTALL PER MANUFACTURER'S RECOMMENDATIONS AND REQUIREMENTS.
2. FLUE UP TO TERMINATION ON ROOF. REFER TO M-500 SERIES FOR ROOF PENETRATION DETAIL. INSTALL PER MANUFACTURER'S RECOMMENDATIONS AND REQUIREMENTS.
3. LOCATE AIRFLOW MEASUREMENT STATION PER MANUFACTURER'S RECOMMENDED UP AND DOWN STREAM REQUIREMENTS.

DUCT CONSTRUCTION SCHEDULE

DUCT SYSTEM	MIN PRESS CLASS	MIN. SEAL CLASS	SMACNA DUCT LEAKAGE CLASS (CL)			DUCT TEST PRESS
			RECT	ROUND	FLAT OVAL	
AHU SUPPLY (NON-VAV)	2" W.C.	A	4	2	2	2" W.C.
VAV SUPPLY - UPSTREAM OF BOXES	3" W.C.	A	4	2	2	3" W.C.
VAV SUPPLY - DOWNSTREAM OF BOXES	2" W.C.	A	4	2	2	2" W.C.
EXHAUST DUCTS	±1" W.C.	A	4	2	2	1" W.C.
RETURN DUCTS	±2" W.C.	A	4	2	2	2" W.C.
OUTSIDE AIR DUCTS	-1" W.C.	A	4	2	2	1" W.C.
TRANSFER AIR DUCTS	1" W.C.	A	NA	NA	NA	NA

KEYPLAN

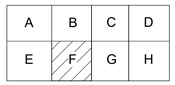

0 4' - 0" 8' - 0" 16' - 0"

SCALE: 1/8" = 1' - 0"

N

		APPR
		DATE
		DESCRIPTION
		SYM

NAVFAC

COMMONWEALTH OF PENNSYLVANIA
REGISTERED PROFESSIONAL ENGINEER
DAVID W. HURD
No. PE061160
SEAL

W.M. Jordan COMPANY – A JOINT VENTURE –

Michael Baker INTERNATIONAL
100 AIRSIDE DRIVE
MOON TOWNSHIP, PA 15108
A/E INFO

APPROVED

FOR COMMANDER NAVFAC

ACTIVITY
MARINE CORPS BASE
CAMP LEJEUNE

SATISFACTORY TO DATE DD/MM/YY

DES	DRW	CHK
EMB	AJK	DWH

PM / DM TOWLER / ROOT
BRANCH HEAD SCE
DESIGN DIRECTOR R.L.Stephens, Jr.
FIRE PROTECTION DPS

DEPARTMENT OF THE NAVY
NAVAL FACILITIES ENGINEERING SYSTEMS COMMAND
ATLANTIC DESIGN AND CONSTRUCTION
MCB CAMP LEJEUNE

NAVAL FACILITIES ENGINEERING SYSTEMS COMMAND ATLANTIC
NORFOLK, VA

JACKSONVILLE, NC
LOGCOM CSP WAREHOUSE

HVAC - 1ST FLOOR PLAN - AREA F

SCALE: AS NOTED
EPROJECT NO.: 1639600
CONSTR. CONTR. NO. N40085-20-C-0059
NAVFAC DRAWING NO. 14111316
SHEET 293 OF 447

MH116

DRAWFORM REVISION: 25 AUGUST 2020

P1527 FINAL SUBMISSION - 11/18/2021

PLOTTED: 11/11/2021 3:24:53 PM

FILE NAME: BIM 360://HF PACKAGE 3/P1527 LOG COM CSP-1639600-M.rvt

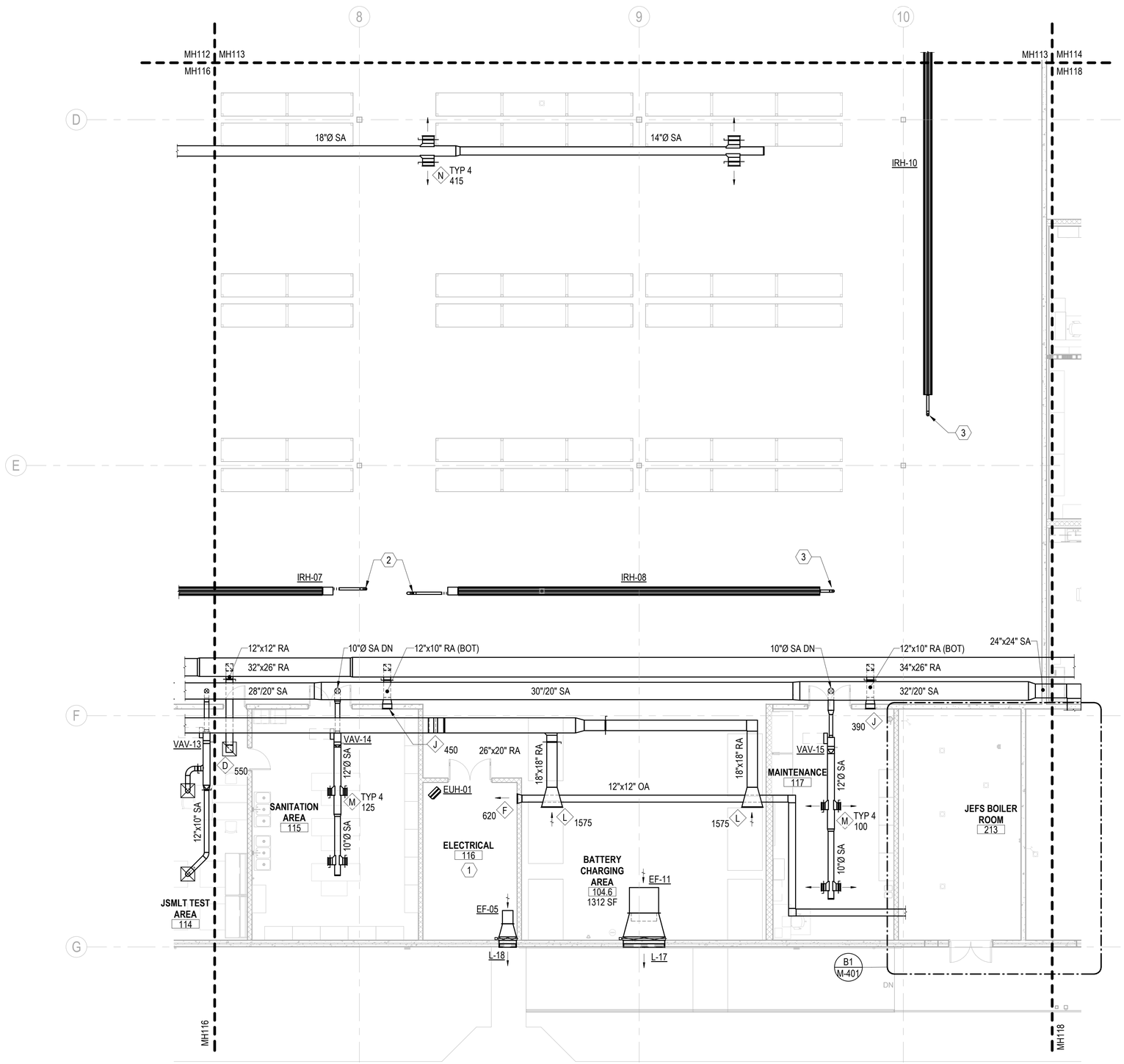

A1 HVAC - 1ST FLOOR PLAN - AREA G
SCALE: 1/8" = 1'-0"

GENERAL NOTES

1. PROVIDE MANUAL VOLUME DAMPERS IN ALL RUN-OUTS TO DIFFUSERS, AT ALL BRANCH TAKE-OFFS FROM MAIN SUPPLY DUCT, AND IN ALL OTHER AREAS AS REQUIRED TO PROVIDE PROPER SYSTEM BALANCING.
2. ALL SUPPLY AIR DUCT RUN-OUTS TO DIFFUSERS AND VAV BOXES SHALL BE SIZED TO MATCH DIFFUSER NECK SIZE OR VAV BOX INLET SIZE UNLESS OTHERWISE INDICATED.
3. SHEET METAL FABRICATOR MAY SUBSTITUTE EQUIVALENT ROUND OR FLAT OVAL DUCTWORK FOR RECTANGULAR SIZES INDICATED. DUCTWORK BETWEEN AHU AND VAV BOXES SHALL BE SIZED TO 0.2" STATIC PRESSURE LOSS PER 100' OF DUCT RUN. DUCTWORK DOWNSTREAM OF VAV BOXES SHALL BE SIZED TO 0.08" STATIC PRESSURE LOSS PER 100' OF DUCT RUN. RETURN, EXHAUST AND TRANSFER AIR DUCTS SHALL BE SIZED TO 0.05"/100' OF DUCT RUN. ALL REVISIONS MUST BE COORDINATED WITH ALL OTHER TRADES AND ILLUSTRATED IN DUCTWORK SHOP DRAWINGS FOR APPROVAL.
4. PLAN DRAWINGS ARE DIAGRAMMATIC IN NATURE AND NOT ILLUSTRATE ALL SPECIFIC DUCT TAKE-OFF CONFIGURATIONS, TAPS, ETC. REFER TO PROJECT SPECIFICATIONS AND DETAILS FOR SPECIFIC REQUIREMENTS.
5. ALL EQUIPMENT SHALL BE INSTALLED WITH MANUFACTURER'S REQUIRED ACCESS SPACE BETWEEN UNIT AND FULL HEIGHT WALLS AND OTHER OBSTRUCTIONS.

KEYNOTES

1. THERE SHALL NOT BE ANY EQUIPMENT (PIPING, DUCTWORK, MACHINERY, ETC.) THAT DOES NOT SERVE THIS SPACE INSTALLED ABOVE OR WITHIN THIS SPACE, NOR SHALL ANY EQUIPMENT NOT SERVING THIS SPACE PASS THROUGH OR ENTER THIS SPACE.
2. COMBUSTION AIR INTAKE UP THROUGH ROOF. REFER TO M-500 SERIES FOR ROOF PENETRATION DETAIL. INSTALL PER MANUFACTURER'S RECOMMENDATIONS AND REQUIREMENTS.
3. FLUE UP TO TERMINATION ON ROOF. REFER TO M-500 SERIES FOR ROOF PENETRATION DETAIL. INSTALL PER MANUFACTURER'S RECOMMENDATIONS AND REQUIREMENTS.

DUCT CONSTRUCTION SCHEDULE

DUCT SYSTEM	MIN PRESS CLASS	MIN. SEAL CLASS	SMACNA DUCT LEAKAGE CLASS (CL)			DUCT TEST PRESS
			RECT	ROUND	FLAT OVAL	
AHU SUPPLY (NON-VAV)	2" W.C.	A	4	2	2	2" W.C.
VAV SUPPLY - UPSTREAM OF BOXES	3" W.C.	A	4	2	2	3" W.C.
VAV SUPPLY - DOWNSTREAM OF BOXES	2" W.C.	A	4	2	2	2" W.C.
EXHAUST DUCTS	±1" W.C.	A	4	2	2	1" W.C.
RETURN DUCTS	±2" W.C.	A	4	2	2	2" W.C.
OUTSIDE AIR DUCTS	-1" W.C.	A	4	2	2	1" W.C.
TRANSFER AIR DUCTS	1" W.C.	A	NA	NA	NA	NA

KEYPLAN

A	B	C	D
E	F	G	H

0 4' - 0" 8' - 0" 16' - 0"
SCALE: 1/8" = 1' - 0"

N

NO.	DESCRIPTION	DATE	APPR

NAVFAC

COMMONWEALTH OF PENNSYLVANIA
REGISTERED PROFESSIONAL
DAVID W. HURD
ENGINEER
No. PE061160
SEAL

RQ W.M. Jordan COMPANY – A JOINT VENTURE –

Michael Baker INTERNATIONAL
100 AIRSIDE DRIVE
MOON TOWNSHIP, PA 15108
A/E INFO

APPROVED
FOR COMMANDER NAVFAC

ACTIVITY
MARINE CORPS BASE
CAMP LEJEUNE

SATISFACTORY TO DATE DD/MM/YY
DES EMB DRW AJK CHK DWH
PM / DM TOWLER / ROOT
BRANCH HEAD SCE
DESIGN DIRECTOR R.L.Stephens, Jr.
FIRE PROTECTION DPS

DEPARTMENT OF THE NAVY
NAVAL FACILITIES ENGINEERING SYSTEMS COMMAND
ATLANTIC DESIGN AND CONSTRUCTION
NAVAL FACILITIES ENGINEERING SYSTEMS COMMAND ATLANTIC
NORFOLK, VA
MCB CAMP LEJEUNE
JACKSONVILLE, NC
LOGCOM CSP WAREHOUSE
HVAC - 1ST FLOOR PLAN - AREA G

SCALE: AS NOTED
EPROJECT NO.: 1639600
CONSTR. CONTR. NO. N40085-20-C-0059
NAVFAC DRAWING NO. 14111317
SHEET 294 OF 447

MH117

DRAWFORM REVISION: 25 AUGUST 2020

P1527 FINAL SUBMISSION - 11/18/2021

PLOTTED: 11/11/2021 3:28:17 PM
FILE NAME: BIM 360://HF PACKAGE 3/P1527 LOG COM CSP--1639600-M.rvt

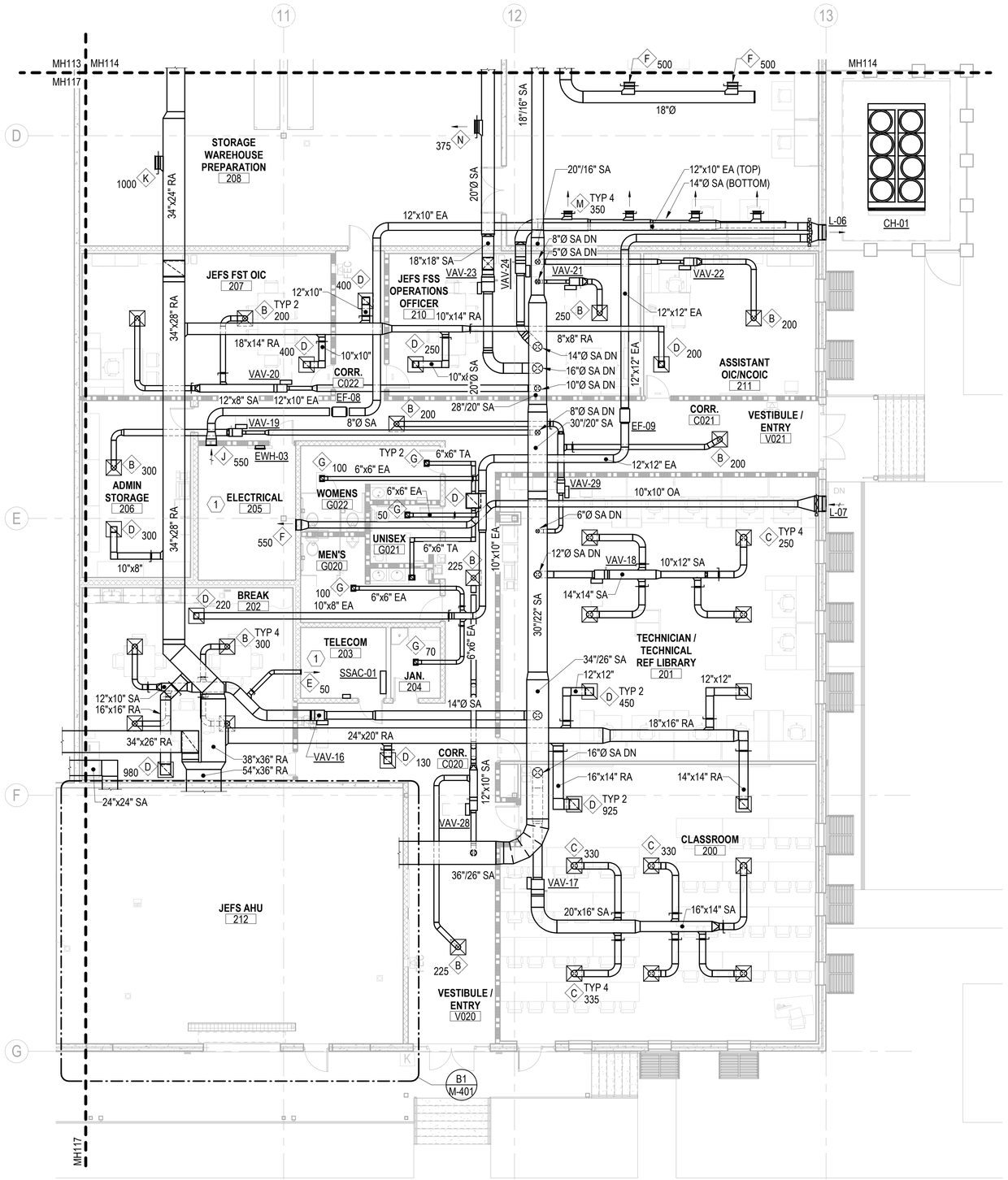

A1 HVAC - 1ST FLOOR PLAN - AREA H
SCALE: 1/8" = 1'-0"

GENERAL NOTES

1. PROVIDE MANUAL VOLUME DAMPERS IN ALL RUN-OUTS TO DIFFUSERS, AT ALL BRANCH TAKE-OFFS FROM MAIN SUPPLY DUCT, AND IN ALL OTHER AREAS AS REQUIRED TO PROVIDE PROPER SYSTEM BALANCING.
2. ALL SUPPLY AIR DUCT RUN-OUTS TO DIFFUSERS AND VAV BOXES SHALL BE SIZED TO MATCH DIFFUSER NECK SIZE OR VAV BOX INLET SIZE UNLESS OTHERWISE INDICATED.
3. SHEET METAL FABRICATOR MAY SUBSTITUTE EQUIVALENT ROUND OR FLAT OVAL DUCTWORK FOR RECTANGULAR SIZES INDICATED. DUCTWORK BETWEEN AHU AND VAV BOXES SHALL BE SIZED TO 0.2" STATIC PRESSURE LOSS PER 100' OF DUCT RUN. DUCTWORK DOWNSTREAM OF VAV BOXES SHALL BE SIZED TO 0.08" STATIC PRESSURE LOSS PER 100' OF DUCT RUN. RETURN, EXHAUST AND TRANSFER AIR DUCTS SHALL BE SIZED TO 0.05"/100' OF DUCT RUN. ALL REVISIONS MUST BE COORDINATED WITH ALL OTHER TRADES AND ILLUSTRATED IN DUCTWORK SHOP DRAWINGS FOR APPROVAL.
4. PLAN DRAWINGS ARE DIAGRAMMATIC IN NATURE AND NOT ILLUSTRATE ALL SPECIFIC DUCT TAKE-OFF CONFIGURATIONS, TAPS, ETC. REFER TO PROJECT SPECIFICATIONS AND DETAILS FOR SPECIFIC REQUIREMENTS.
5. ALL EQUIPMENT SHALL BE INSTALLED WITH MANUFACTURER'S REQUIRED ACCESS SPACE BETWEEN UNIT AND FULL HEIGHT WALLS AND OTHER OBSTRUCTIONS.

KEYNOTES

1. THERE SHALL NOT BE ANY EQUIPMENT (PIPING, DUCTWORK, MACHINERY, ETC.) THAT DOES NOT SERVE THIS SPACE INSTALLED ABOVE OR WITHIN THIS SPACE, NOR SHALL ANY EQUIPMENT NOT SERVING THIS SPACE PASS THROUGH OR ENTER THIS SPACE.

DUCT CONSTRUCTION SCHEDULE

DUCT SYSTEM	MIN PRESS CLASS	MIN. SEAL CLASS	SMACNA DUCT LEAKAGE CLASS (CL)			DUCT TEST PRESS
			RECT	ROUND	FLAT OVAL	
AHU SUPPLY (NON-VAV)	2" W.C.	A	4	2	2	2" W.C.
VAV SUPPLY - UPSTREAM OF BOXES	3" W.C.	A	4	2	2	3" W.C.
VAV SUPPLY - DOWNSTREAM OF BOXES	2" W.C.	A	4	2	2	2" W.C.
EXHAUST DUCTS	±1" W.C.	A	4	2	2	1" W.C.
RETURN DUCTS	±2" W.C.	A	4	2	2	2" W.C.
OUTSIDE AIR DUCTS	-1" W.C.	A	4	2	2	1" W.C.
TRANSFER AIR DUCTS	1" W.C.	A	NA	NA	NA	NA

KEYPLAN

A	B	C	D
E	F	G	H

0 4' - 0" 8' - 0" 16' - 0"
SCALE: 1/8" = 1' - 0"

N

NO.	DESCRIPTION	DATE	APPR

NAVFAC

COMMONWEALTH OF PENNSYLVANIA — REGISTERED PROFESSIONAL ENGINEER — DAVID W HURD — No PE061160 — SEAL

RQ W.M. Jordan COMPANY — A JOINT VENTURE

Michael Baker INTERNATIONAL
100 AIRSIDE DRIVE
MOON TOWNSHIP, PA 15108
A/E INFO

APPROVED
FOR COMMANDER NAVFAC

ACTIVITY
MARINE CORPS BASE CAMP LEJEUNE

SATISFACTORY TO DATE DD/MM/YY
DES EMB | DRW AJK | CHK DWH
PM / DM TOWLER / ROOT
BRANCH HEAD SCE
DESIGN DIRECTOR R.L.Stephens, Jr.
FIRE PROTECTION DPS

DEPARTMENT OF THE NAVY
NAVAL FACILITIES ENGINEERING SYSTEMS COMMAND
ATLANTIC DESIGN AND CONSTRUCTION
NAVAL FACILITIES ENGINEERING SYSTEMS COMMAND ATLANTIC
NORFOLK, VA
MCB CAMP LEJEUNE
JACKSONVILLE, NC
LOGCOM CSP WAREHOUSE
HVAC - 1ST FLOOR PLAN - AREA H

SCALE: AS NOTED
EPROJECT NO.: 1639600
CONSTR. CONTR. NO. N40085-20-C-0059
NAVFAC DRAWING NO. 14111318
SHEET 295 OF 447

MH118

DRAWFORM REVISION: 25 AUGUST 2020

P1527 FINAL SUBMISSION - 11/18/2021

PLOTTED: 11/11/2021 3:28:21 PM
FILE NAME: BIM 360://HF PACKAGE 3/P1527 LOG COM CSP-1639600-M.rvt

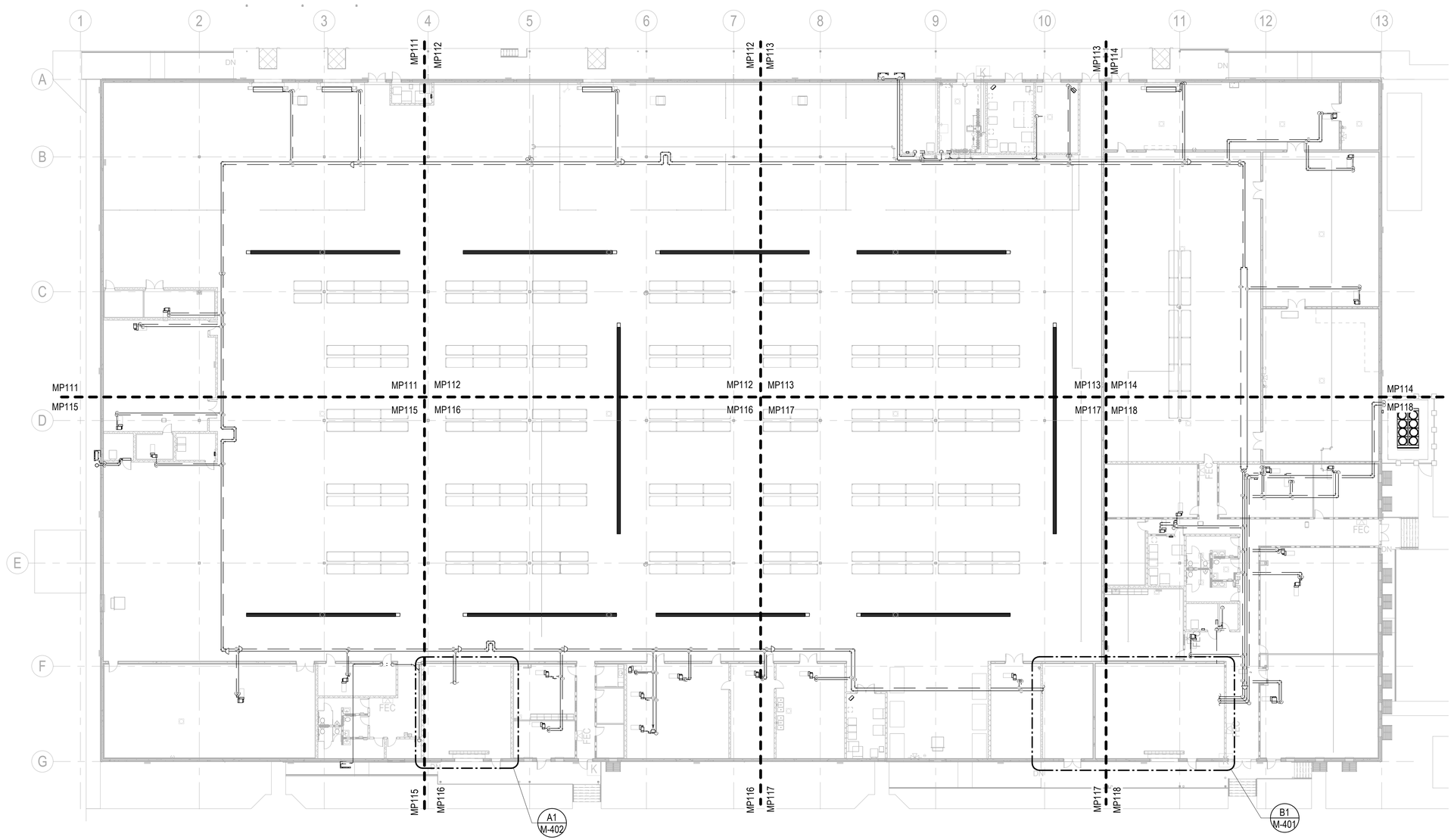

A1 PIPING - 1ST FLOOR PLAN - OVERALL

SCALE: 1" = 20'-0"

KEYPLAN

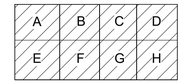

0 10' - 0" 20' - 0" 40' - 0"

SCALE: 1" = 20' - 0"

N

APPR	
DATE	
DESCRIPTION	
SYM	

NAVFAC

COMMONWEALTH OF PENNSYLVANIA
REGISTERED PROFESSIONAL
DAVID W. HURD
ENGINEER
No PE061160
SEAL

RQ W.M. Jordan COMPANY — A JOINT VENTURE —

Michael Baker INTERNATIONAL
100 AIRSIDE DRIVE
MOON TOWNSHIP, PA 15108
A/E INFO

APPROVED

FOR COMMANDER NAVFAC

ACTIVITY
MARINE CORPS BASE
CAMP LEJEUNE

SATISFACTORY TO DATE DD/MM/YY

DES EMB | DRW AJK | CHK DWH

PM / DM TOWLER / ROOT

BRANCH HEAD SCE

DESIGN DIRECTOR R.L.Stephens, Jr.

FIRE PROTECTION DPS

DEPARTMENT OF THE NAVY
NAVAL FACILITIES ENGINEERING SYSTEMS COMMAND
ATLANTIC DESIGN AND CONSTRUCTION

NAVAL FACILITIES ENGINEERING SYSTEMS COMMAND ATLANTIC
NORFOLK, VA

MCB CAMP LEJEUNE
JACKSONVILLE, NC

LOGCOM CSP WAREHOUSE

PIPING - OVERALL - 1ST FLOOR PLAN

SCALE: AS NOTED

EPROJECT NO.: 1639600

CONSTR. CONTR. NO.
N40085-20-C-0059

NAVFAC DRAWING NO.
14111319

SHEET 296 OF 447

MP110

DRAWFORM REVISION: 25 AUGUST 2020

P1527 FINAL SUBMISSION - 11/18/2021

PLOTTED: 11/11/2021 3:20:58 PM

FILE NAME: BIM 360://HF PACKAGE 3/P1527 LOG COM CSP - 1639600-M.rvt

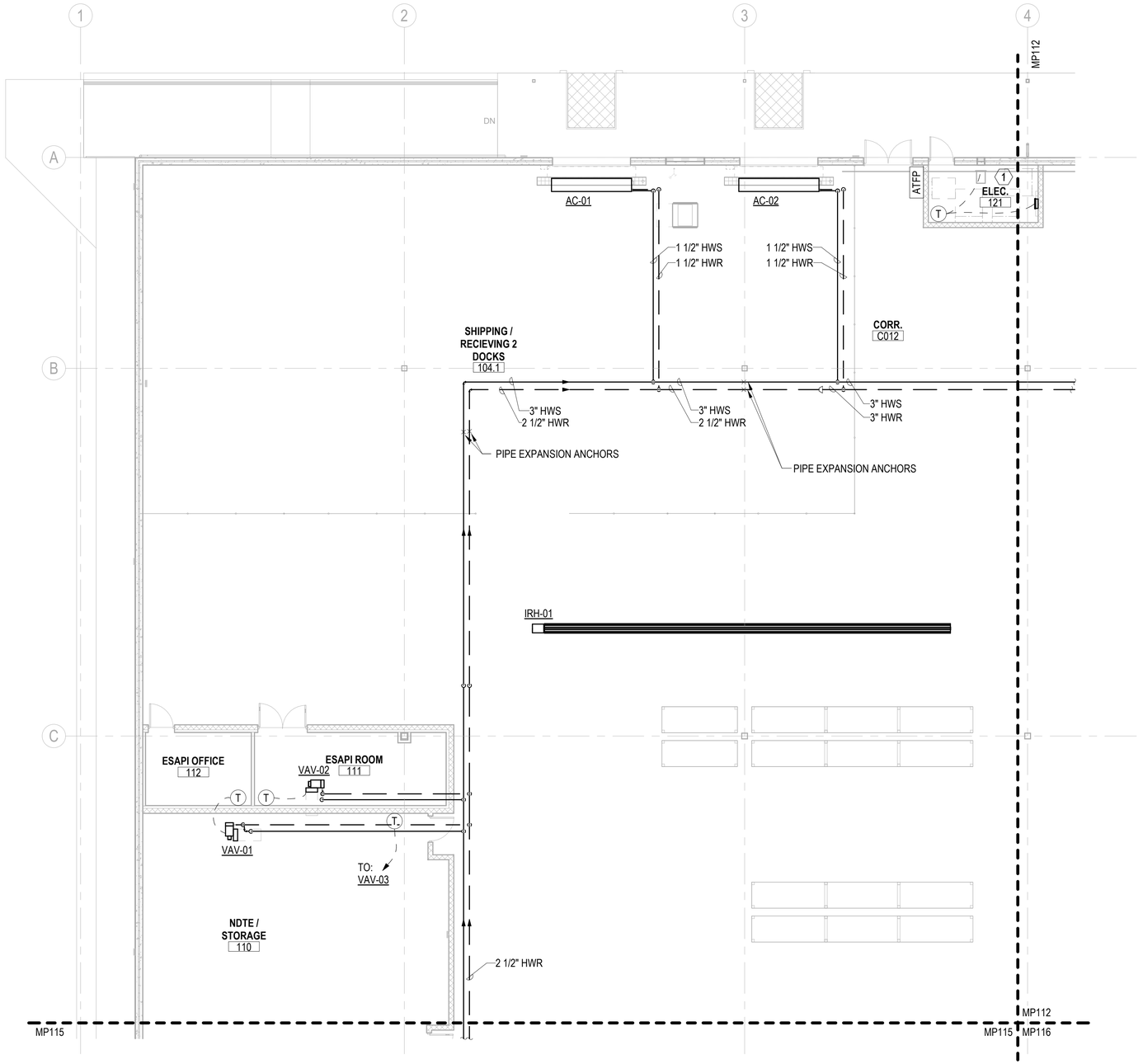

A1 PIPING - 1ST FLOOR PLAN - AREA A

SCALE: 1/8" = 1'-0"

GENERAL NOTES

1. ALL HWS & HWR BRANCHES ARE 3/4" UNLESS NOTED OTHERWISE.
2. PROVIDE AN AIR VENT AT THE HIGH POINT OF EACH DROP IN THE HEATING AND CHILLED WATER PIPING SYSTEMS. ALL PIPING SHALL GRADE TO THE LOW POINTS. PROVIDE HOSE END DRAIN VALVES AT THE BOTTOM OF ALL RISERS AND LOW POINTS.
3. INSTALL PIPING SO THAT ALL VALVES, STRAINERS, UNIONS, TRAPS, FLANGES AND OTHER APPURTENANCES REQUIRING ACCESS ARE EASILY ACCESSIBLE. ALL VALVES SHALL BE INSTALLED SO THAT THE REMAINS IN SERVICE WHEN EQUIPMENT OR PIPING ON EQUIPMENT SIDE OF VALVE IS REMOVED. ALL BALANCING VALVES AND BUTTERFLY VALVES SHALL BE PROVIDED WITH POSITION INDICATORS AND MAXIMUM ADJUSTABLE STOPS (AKA "MEMORY STOPS"). ALL VALVES (EXCEPT CONTROL VALVES) AND STRAINERS SHALL BE FULL SIZE OF PIPE BEFORE REDUCING SIZE TO MAKE CONNECTIONS TO EQUIPMENT AND CONTROLS.
4. INSTALL PIPING WITHOUT FORCING OR SPRINGING.
5. PLAN DRAWINGS ARE DIAGRAMMATIC IN NATURE AND NOT ILLUSTRATE ALL SPECIFIC DUCT TAKE-OFF CONFIGURATIONS, TAPS, ETC. REFER TO PROJECT SPECIFICATIONS AND DETAILS FOR SPECIFIC REQUIREMENTS.

KEYNOTES

1. THERE SHALL NOT BE ANY EQUIPMENT (PIPING, DUCTWORK, MACHINERY, ETC.) THAT DOES NOT SERVE THIS SPACE INSTALLED ABOVE OR WITHIN THIS SPACE, NOR SHALL ANY EQUIPMENT NOT SERVING THIS SPACE PASS THROUGH OR ENTER THIS SPACE.

KEYPLAN

A	B	C	D
E	F	G	H

0 4' - 0" 8' - 0" 16' - 0"

SCALE: 1/8" = 1' - 0"

N

APPR | DATE | DESCRIPTION | SYM

NAVFAC

COMMONWEALTH OF PENNSYLVANIA
REGISTERED PROFESSIONAL ENGINEER
DAVID W. HURD
No. PE061160
SEAL

RQ W.M. Jordan COMPANY — A JOINT VENTURE —

Michael Baker INTERNATIONAL
100 AIRSIDE DRIVE
MOON TOWNSHIP, PA 15108
A/E INFO

APPROVED
FOR COMMANDER NAVFAC

ACTIVITY
MARINE CORPS BASE CAMP LEJEUNE

SATISFACTORY TO DATE DD/MM/YY

DES	DRW	CHK
EMB	AJK	DWH

PM / DM: TOWLER / ROOT
BRANCH HEAD: SCE
DESIGN DIRECTOR: R.L.Stephens, Jr.
FIRE PROTECTION: DPS

DEPARTMENT OF THE NAVY
NAVAL FACILITIES ENGINEERING SYSTEMS COMMAND
ATLANTIC DESIGN AND CONSTRUCTION
NAVAL FACILITIES ENGINEERING SYSTEMS COMMAND ATLANTIC
NORFOLK, VA
MCB CAMP LEJEUNE
JACKSONVILLE, NC
LOGCOM CSP WAREHOUSE
PIPING - 1ST FLOOR PLAN - AREA A

SCALE: AS NOTED
EPROJECT NO.: 1639600
CONSTR. CONTR. NO. N40085-20-C-0059
NAVFAC DRAWING NO. 14111320
SHEET 297 OF 447

MP111

DRAWFORM REVISION: 25 AUGUST 2020

P1527 FINAL SUBMISSION - 11/18/2021

PLOTTED: 11/11/2021 3:44:06 PM

FILE NAME: BIM 360://HF PACKAGE 3/P1527 LOG COM CSP-1639600-M.rvt

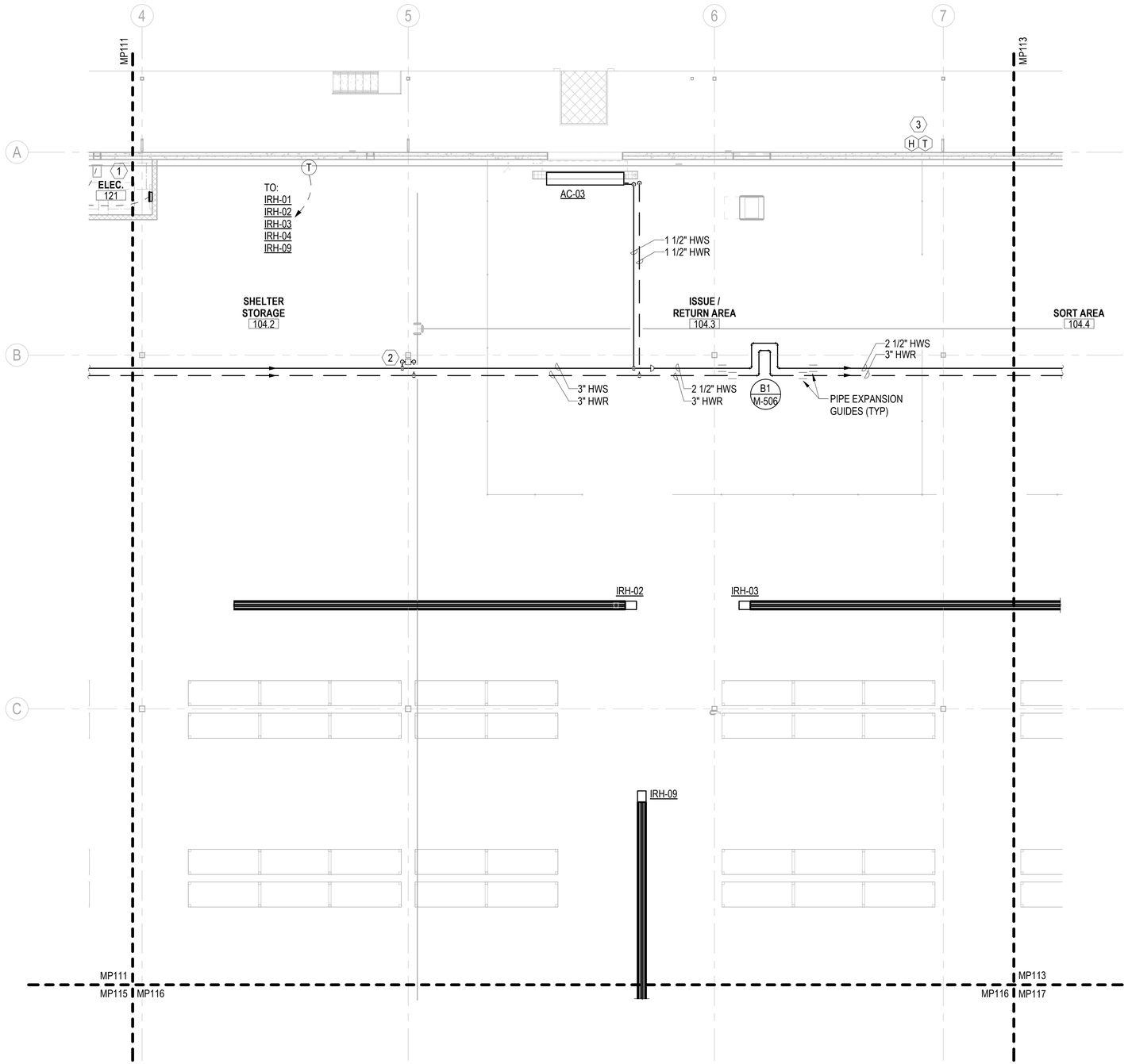

A1 PIPING - 1ST FLOOR PLAN - AREA B
SCALE: 1/8" = 1'-0"

GENERAL NOTES

1 ALL HWS & HWR BRANCHES ARE 3/4" UNLESS NOTED OTHERWISE.

2 PROVIDE AN AIR VENT AT THE HIGH POINT OF EACH DROP IN THE HEATING AND CHILLED WATER PIPING SYSTEMS. ALL PIPING SHALL GRADE TO THE LOW POINTS. PROVIDE HOSE END DRAIN VALVES AT THE BOTTOM OF ALL RISERS AND LOW POINTS.

3 INSTALL PIPING SO THAT ALL VALVES, STRAINERS, UNIONS, TRAPS, FLANGES AND OTHER APPURTENANCES REQUIRING ACCESS ARE EASILY ACCESSIBLE. ALL VALVES SHALL BE INSTALLED SO THAT THE REMAINS IN SERVICE WHEN EQUIPMENT OR PIPING ON EQUIPMENT SIDE OF VALVE IS REMOVED. ALL BALANCING VALVES AND BUTTERFLY VALVES SHALL BE PROVIDED WITH POSITION INDICATORS AND MAXIMUM ADJUSTABLE STOPS (AKA "MEMORY STOPS"). ALL VALVES (EXCEPT CONTROL VALVES) AND STRAINERS SHALL BE FULL SIZE OF PIPE BEFORE REDUCING SIZE TO MAKE CONNECTIONS TO EQUIPMENT AND CONTROLS.

4 INSTALL PIPING WITHOUT FORCING OR SPRINGING.

5 PLAN DRAWINGS ARE DIAGRAMMATIC IN NATURE AND NOT ILLUSTRATE ALL SPECIFIC DUCT TAKE-OFF CONFIGURATIONS, TAPS, ETC. REFER TO PROJECT SPECIFICATIONS AND DETAILS FOR SPECIFIC REQUIREMENTS.

KEYNOTES

1 THERE SHALL NOT BE ANY EQUIPMENT (PIPING, DUCTWORK, MACHINERY, ETC.) THAT DOES NOT SERVE THIS SPACE INSTALLED ABOVE OR WITHIN THIS SPACE, NOR SHALL ANY EQUIPMENT NOT SERVING THIS SPACE PASS THROUGH OR ENTER THIS SPACE.

2 DP SENSOR FOR SECONDARY HW PUMP CONTROL; LOCATE NO MORE THAN 12'-0" AFF.

3 OUTSIDE AIR CONDITIONS SENSORS, REFER TO OUTSIDE AIR CONDITIONS CONTROL DIAGRAM.

KEYPLAN

A	B	C	D
E	F	G	H

0 4' - 0" 8' - 0" 16' - 0"
SCALE: 1/8" = 1' - 0"

N

APPR	DATE	DESCRIPTION	SYM

NAVFAC

COMMONWEALTH OF PENNSYLVANIA
REGISTERED PROFESSIONAL ENGINEER
DAVID W. HURD
No. PE061160
SEAL

RQ W.M. Jordan COMPANY — A JOINT VENTURE —

Michael Baker INTERNATIONAL
100 AIRSIDE DRIVE
MOON TOWNSHIP, PA 15108
A/E INFO

APPROVED
FOR COMMANDER NAVFAC

ACTIVITY
MARINE CORPS BASE
CAMP LEJEUNE

SATISFACTORY TO DATE	DD/MM/YY
DES EMB	DRW AJK CHK DWH
PM / DM	TOWLER / ROOT
BRANCH HEAD	SCE
DESIGN DIRECTOR	R.L.Stephens, Jr.
FIRE PROTECTION	DPS

DEPARTMENT OF THE NAVY
NAVAL FACILITIES ENGINEERING SYSTEMS COMMAND
ATLANTIC DESIGN AND CONSTRUCTION
MCB CAMP LEJEUNE

NAVAL FACILITIES ENGINEERING SYSTEMS COMMAND ATLANTIC
NORFOLK, VA
JACKSONVILLE, NC
LOGCOM CSP WAREHOUSE

PIPING - 1ST FLOOR PLAN - AREA B

SCALE:	AS NOTED
EPROJECT NO.:	1639600
CONSTR. CONTR. NO.	N40085-20-C-0059
NAVFAC DRAWING NO.	14111321
SHEET	298 OF 447

MP112

DRAWFORM REVISION: 25 AUGUST 2020

P1527 FINAL SUBMISSION - 11/18/2021

PLOTTED: 11/11/2021 3:44:11 PM

FILE NAME: BIM 360://HF PACKAGE 3/P1527 LOG COM CSP-1639600-M.rvt

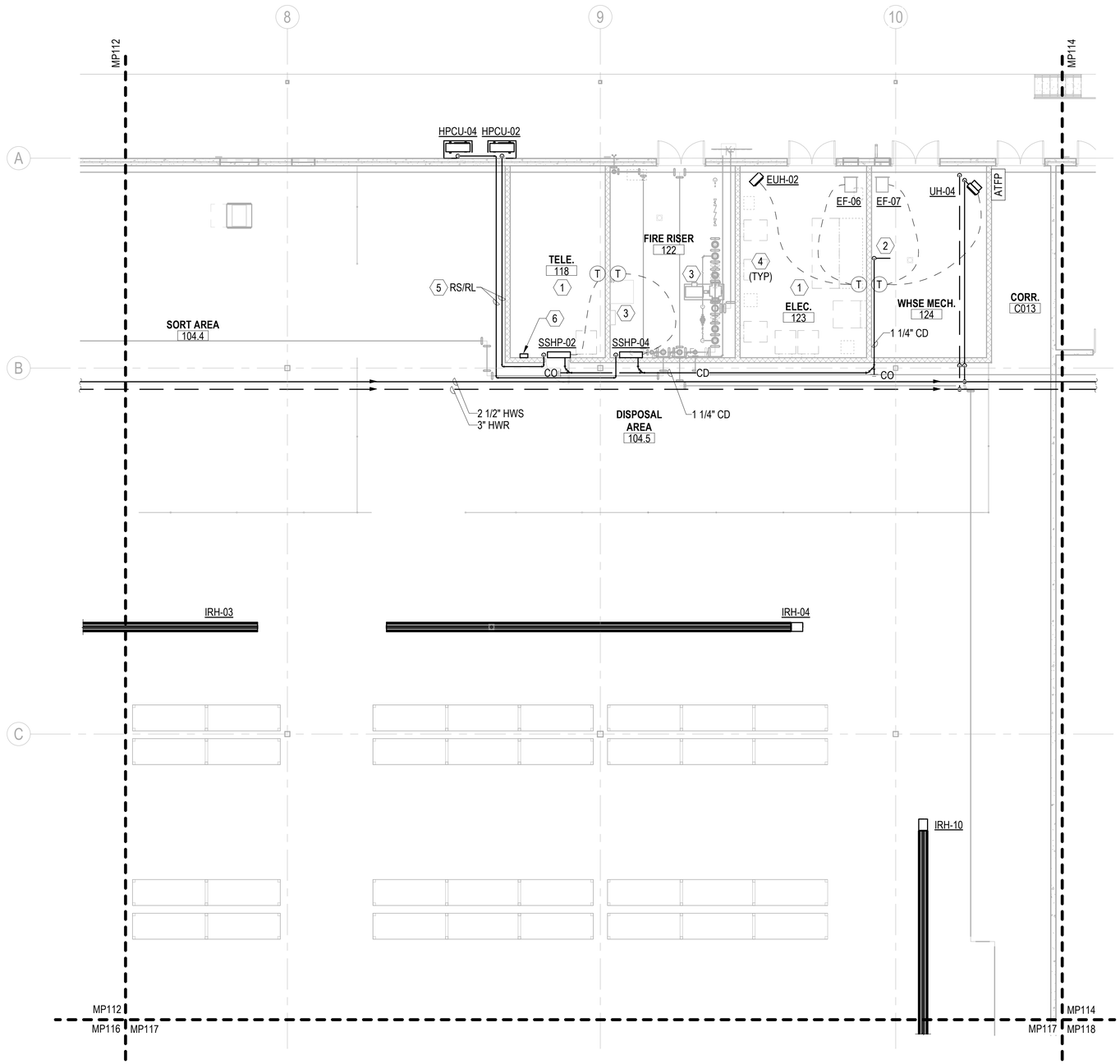

A1 PIPING - 1ST FLOOR PLAN - AREA C
SCALE: 1/8" = 1'-0"

GENERAL NOTES

1 ALL HWS & HWR BRANCHES ARE 3/4" UNLESS NOTED OTHERWISE.

2 PROVIDE AN AIR VENT AT THE HIGH POINT OF EACH DROP IN THE HEATING AND CHILLED WATER PIPING SYSTEMS. ALL PIPING SHALL GRADE TO THE LOW POINTS. PROVIDE HOSE END DRAIN VALVES AT THE BOTTOM OF ALL RISERS AND LOW POINTS.

3 INSTALL PIPING SO THAT ALL VALVES, STRAINERS, UNIONS, TRAPS, FLANGES AND OTHER APPURTENANCES REQUIRING ACCESS ARE EASILY ACCESSIBLE. ALL VALVES SHALL BE INSTALLED SO THAT THE REMAINS IN SERVICE WHEN EQUIPMENT OR PIPING ON EQUIPMENT SIDE OF VALVE IS REMOVED. ALL BALANCING VALVES AND BUTTERFLY VALVES SHALL BE PROVIDED WITH POSITION INDICATORS AND MAXIMUM ADJUSTABLE STOPS (AKA "MEMORY STOPS"). ALL VALVES (EXCEPT CONTROL VALVES) AND STRAINERS SHALL BE FULL SIZE OF PIPE BEFORE REDUCING SIZE TO MAKE CONNECTIONS TO EQUIPMENT AND CONTROLS.

4 INSTALL PIPING WITHOUT FORCING OR SPRINGING.

5 PLAN DRAWINGS ARE DIAGRAMMATIC IN NATURE AND NOT ILLUSTRATE ALL SPECIFIC DUCT TAKE-OFF CONFIGURATIONS, TAPS, ETC. REFER TO PROJECT SPECIFICATIONS AND DETAILS FOR SPECIFIC REQUIREMENTS.

KEYNOTES

1 THERE SHALL NOT BE ANY EQUIPMENT (PIPING, DUCTWORK, MACHINERY, ETC.) THAT DOES NOT SERVE THIS SPACE INSTALLED ABOVE OR WITHIN THIS SPACE, NOR SHALL ANY EQUIPMENT NOT SERVING THIS SPACE PASS THROUGH OR ENTER THIS SPACE.

2 TERMINATE CONDENSATE DRAIN AT FLOOR DRAIN. DO NOT ROUTE PIPING AS TO CREATE A TRIPPING HAZARD.

3 FIRE PROTECTION EQUIPMENT, REFER TO FIRE PROTECTION DRAWINGS FOR ADDITIONAL INFORMATION.

4 ELECTRICAL EQUIPMENT, REFER TO ELECTRICAL DRAWINGS FOR ADDITIONAL INFORMATION.

5 ROUTE PAIR OF REFRIGERANT LINES FROM INDOOR HEAT PUMP TO ASSOCIATED OUTDOOR CONDENSING UNIT. SIZE PER MANUFACTURER'S RECOMMENDATIONS.

6 JACE BOX(ES) LOCATED IN 118 TELE IN WHICH THE TELECOMM BUILDING POINT OF CONNECTION WILL BE PROVIDED.

KEYPLAN

A	B	C	D
E	F	G	H

0 4' - 0" 8' - 0" 16' - 0"
SCALE: 1/8" = 1' - 0"

N

NO.	DESCRIPTION	DATE	APPR

NAVFAC

COMMONWEALTH OF PENNSYLVANIA
REGISTERED PROFESSIONAL ENGINEER
DAVID W. HURD
No. PE061160
SEAL

IRQ Jordan COMPANY — A JOINT VENTURE —

Michael Baker INTERNATIONAL
100 AIRSIDE DRIVE
MOON TOWNSHIP, PA 15108
A/E INFO

APPROVED

FOR COMMANDER NAVFAC

ACTIVITY
MARINE CORPS BASE
CAMP LEJEUNE

SATISFACTORY TO DATE	DD/MM/YY
DES EMB	DRW AJK CHK DWH
PM / DM	TOWLER / ROOT
BRANCH HEAD	SCE
DESIGN DIRECTOR	R.L.Stephens, Jr.
FIRE PROTECTION	DPS

DEPARTMENT OF THE NAVY
NAVAL FACILITIES ENGINEERING SYSTEMS COMMAND
ATLANTIC DESIGN AND CONSTRUCTION
NAVAL FACILITIES ENGINEERING SYSTEMS COMMAND ATLANTIC
NORFOLK, VA
MCB CAMP LEJEUNE
JACKSONVILLE, NC
LOGCOM CSP WAREHOUSE
PIPING - 1ST FLOOR PLAN - AREA C

SCALE:	AS NOTED
EPROJECT NO.:	1639600
CONSTR. CONTR. NO.	N40085-20-C-0059
NAVFAC DRAWING NO.	14111322
SHEET	299 OF 447

MP113

DRAWFORM REVISION: 25 AUGUST 2020

P1527 FINAL SUBMISSION - 11/18/2021

PLOTTED: 11/11/2021 3:44:16 PM

FILE NAME: BIM 360://HF PACKAGE 3/P1527 LOG COM CSP-1639600-M.rvt

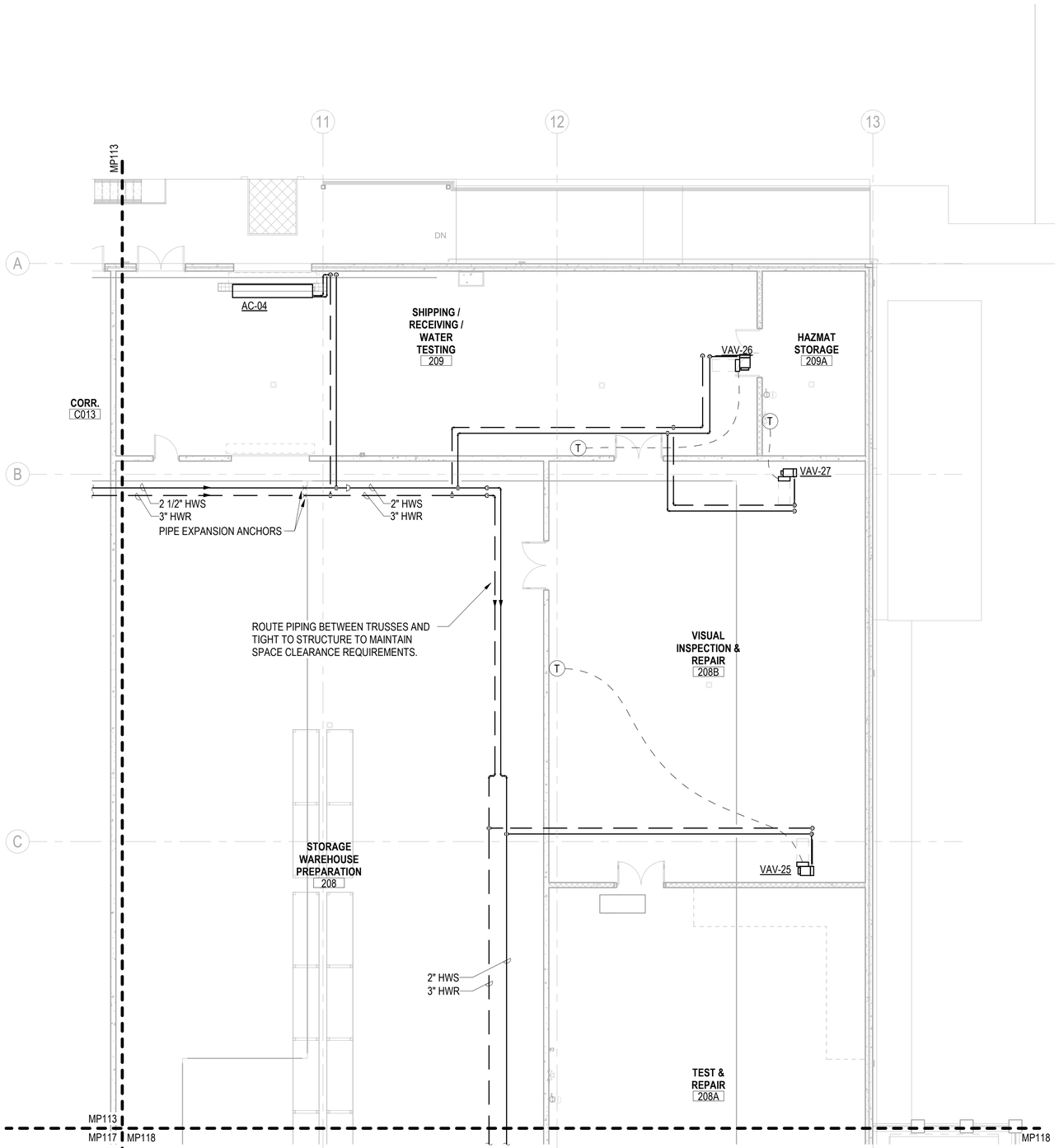

A1 PIPING - 1ST FLOOR PLAN - AREA D
SCALE: 1/8" = 1'-0"

GENERAL NOTES

1. ALL HWS & HWR BRANCHES ARE 3/4" UNLESS NOTED OTHERWISE.
2. PROVIDE AN AIR VENT AT THE HIGH POINT OF EACH DROP IN THE HEATING AND CHILLED WATER PIPING SYSTEMS. ALL PIPING SHALL GRADE TO THE LOW POINTS. PROVIDE HOSE END DRAIN VALVES AT THE BOTTOM OF ALL RISERS AND LOW POINTS.
3. INSTALL PIPING SO THAT ALL VALVES, STRAINERS, UNIONS, TRAPS, FLANGES AND OTHER APPURTENANCES REQUIRING ACCESS ARE EASILY ACCESSIBLE. ALL VALVES SHALL BE INSTALLED SO THAT THE REMAINS IN SERVICE WHEN EQUIPMENT OR PIPING ON EQUIPMENT SIDE OF VALVE IS REMOVED. ALL BALANCING VALVES AND BUTTERFLY VALVES SHALL BE PROVIDED WITH POSITION INDICATORS AND MAXIMUM ADJUSTABLE STOPS (AKA "MEMORY STOPS"). ALL VALVES (EXCEPT CONTROL VALVES) AND STRAINERS SHALL BE FULL SIZE OF PIPE BEFORE REDUCING SIZE TO MAKE CONNECTIONS TO EQUIPMENT AND CONTROLS.
4. INSTALL PIPING WITHOUT FORCING OR SPRINGING.
5. PLAN DRAWINGS ARE DIAGRAMMATIC IN NATURE AND NOT ILLUSTRATE ALL SPECIFIC DUCT TAKE-OFF CONFIGURATIONS, TAPS, ETC. REFER TO PROJECT SPECIFICATIONS AND DETAILS FOR SPECIFIC REQUIREMENTS.

KEYNOTES

KEYPLAN

A	B	C	D
E	F	G	H

0 4' - 0" 8' - 0" 16' - 0"
SCALE: 1/8" = 1' - 0"

N

APPR | DATE | DESCRIPTION | SYM

NAVFAC

COMMONWEALTH OF PENNSYLVANIA — REGISTERED PROFESSIONAL ENGINEER — DAVID W. HURD — No. PE061160 — SEAL

RQ W.M. Jordan COMPANY — A JOINT VENTURE

Michael Baker INTERNATIONAL
100 AIRSIDE DRIVE
MOON TOWNSHIP, PA 15108
A/E INFO

APPROVED

FOR COMMANDER NAVFAC

ACTIVITY
MARINE CORPS BASE CAMP LEJEUNE

SATISFACTORY TO DATE DD/MM/YY

DES EMB | DRW AJK | CHK DWH

PM / DM TOWLER / ROOT

BRANCH HEAD SCE

DESIGN DIRECTOR R.L.Stephens, Jr.

FIRE PROTECTION DPS

DEPARTMENT OF THE NAVY
NAVAL FACILITIES ENGINEERING SYSTEMS COMMAND
ATLANTIC DESIGN AND CONSTRUCTION
NAVAL FACILITIES ENGINEERING SYSTEMS COMMAND ATLANTIC
NORFOLK, VA.
MCB CAMP LEJEUNE
JACKSONVILLE, NC
LOGCOM CSP WAREHOUSE
PIPING - 1ST FLOOR PLAN - AREA D

SCALE: AS NOTED
EPROJECT NO.: 1639600
CONSTR. CONTR. NO. N40085-20-C-0059
NAVFAC DRAWING NO. 14111323
SHEET 300 OF 447

MP114

DRAWFORM REVISION: 25 AUGUST 2020

P1527 FINAL SUBMISSION - 11/18/2021

PLOTTED: 11/11/2021 3:44:22 PM

FILE NAME: BIM 360://HF PACKAGE 3/P1527 LOG COM CSP-1639600-M.rvt

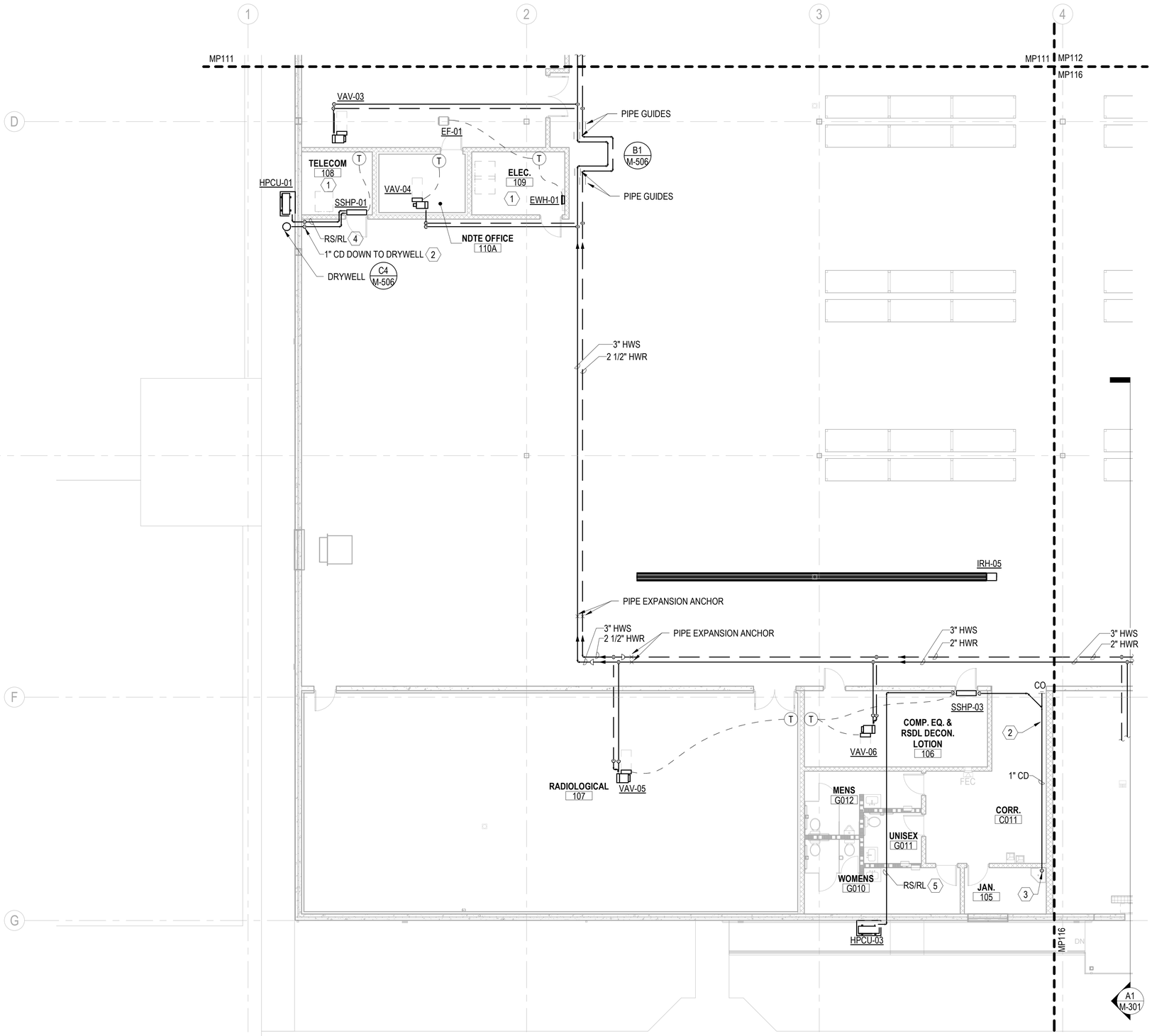

GENERAL NOTES

1. ALL HWS & HWR BRANCHES ARE 3/4" UNLESS NOTED OTHERWISE.
2. PROVIDE AN AIR VENT AT THE HIGH POINT OF EACH DROP IN THE HEATING AND CHILLED WATER PIPING SYSTEMS. ALL PIPING SHALL GRADE TO THE LOW POINTS. PROVIDE HOSE END DRAIN VALVES AT THE BOTTOM OF ALL RISERS AND LOW POINTS.
3. INSTALL PIPING SO THAT ALL VALVES, STRAINERS, UNIONS, TRAPS, FLANGES AND OTHER APPURTENANCES REQUIRING ACCESS ARE EASILY ACCESSIBLE. ALL VALVES SHALL BE INSTALLED SO THAT THE REMAINS IN SERVICE WHEN EQUIPMENT OR PIPING ON EQUIPMENT SIDE OF VALVE IS REMOVED. ALL BALANCING VALVES AND BUTTERFLY VALVES SHALL BE PROVIDED WITH POSITION INDICATORS AND MAXIMUM ADJUSTABLE STOPS (AKA "MEMORY STOPS"). ALL VALVES (EXCEPT CONTROL VALVES) AND STRAINERS SHALL BE FULL SIZE OF PIPE BEFORE REDUCING SIZE TO MAKE CONNECTIONS TO EQUIPMENT AND CONTROLS.
4. INSTALL PIPING WITHOUT FORCING OR SPRINGING.
5. PLAN DRAWINGS ARE DIAGRAMMATIC IN NATURE AND NOT ILLUSTRATE ALL SPECIFIC DUCT TAKE-OFF CONFIGURATIONS, TAPS, ETC. REFER TO PROJECT SPECIFICATIONS AND DETAILS FOR SPECIFIC REQUIREMENTS.

KEYNOTES

1. THERE SHALL NOT BE ANY EQUIPMENT (PIPING, DUCTWORK, MACHINERY, ETC.) THAT DOES NOT SERVE THIS SPACE INSTALLED ABOVE OR WITHIN THIS SPACE, NOR SHALL ANY EQUIPMENT NOT SERVING THIS SPACE PASS THROUGH OR ENTER THIS SPACE.
2. ROUTE ALL CONDENSATE PIPING AT 1/8" PER 1'-0" SLOPE TOWARD POINT OF TERMINATION. PROVIDE CLEANOUT AT ALL CHANGES OF DIRECTION GREATER THAN 45°.
3. 1" CD DOWN TO MOP RECEPTOR. TERMINATE PIPE OPEN ENDED APPROXIMATELY 3" ABOVE RECEPTOR.
4. ROUTE PAIR OF REFRIGERANT LINES FROM INDOOR HEAT PUMP TO ASSOCIATED OUTDOOR CONDENSING UNIT. SIZE PER MANUFACTURER'S RECOMMENDATIONS.
5. ROUTE PAIR OF REFRIGERANT LINES FROM INDOOR ACU TO ASSOCIATED OUTDOOR CONDENSING UNIT. SIZE PER MANUFACTURER'S RECOMMENDATIONS.

KEYPLAN

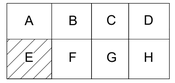

0 4' - 0" 8' - 0" 16' - 0"

SCALE: 1/8" = 1' - 0"

N

A1 PIPING - 1ST FLOOR PLAN - AREA E

SCALE: 1/8" = 1'-0"

NO	DESCRIPTION	DATE	APPR

NAVFAC

COMMONWEALTH OF PENNSYLVANIA — REGISTERED PROFESSIONAL — DAVID W. HURD — ENGINEER — No. PE061160

SEAL

RQ W.M. Jordan COMPANY — A JOINT VENTURE

Michael Baker INTERNATIONAL

100 AIRSIDE DRIVE
MOON TOWNSHIP, PA 15108

A/E INFO

APPROVED

FOR COMMANDER NAVFAC

ACTIVITY
MARINE CORPS BASE
CAMP LEJEUNE

SATISFACTORY TO DATE	DD/MM/YY
DES EMB	DRW AJK CHK DWH
PM / DM	TOWLER / ROOT
BRANCH HEAD	SCE
DESIGN DIRECTOR	R.L.Stephens, Jr.
FIRE PROTECTION	DPS

DEPARTMENT OF THE NAVY
NAVAL FACILITIES ENGINEERING SYSTEMS COMMAND
ATLANTIC DESIGN AND CONSTRUCTION
MCB CAMP LEJEUNE

NAVAL FACILITIES ENGINEERING SYSTEMS COMMAND ATLANTIC
NORFOLK, VA

JACKSONVILLE, NC
LOGCOM CSP WAREHOUSE

PIPING - 1ST FLOOR PLAN - AREA E

SCALE:	AS NOTED
EPROJECT NO.:	1639600
CONSTR. CONTR. NO.	N40085-20-C-0059
NAVFAC DRAWING NO.	14111324
SHEET	301 OF 447

MP115

DRAWFORM REVISION: 25 AUGUST 2020

P1527 FINAL SUBMISSION - 11/18/2021

PLOTTED: 11/11/2021 3:44:28 PM

FILE NAME: BIM 360://HF PACKAGE 3/P1527 LOG COM CSP-1639600-M.rvt

GENERAL NOTES

1. ALL HWS & HWR BRANCHES ARE 3/4" UNLESS NOTED OTHERWISE.
2. PROVIDE AN AIR VENT AT THE HIGH POINT OF EACH DROP IN THE HEATING AND CHILLED WATER PIPING SYSTEMS. ALL PIPING SHALL GRADE TO THE LOW POINTS. PROVIDE HOSE END DRAIN VALVES AT THE BOTTOM OF ALL RISERS AND LOW POINTS.
3. INSTALL PIPING SO THAT ALL VALVES, STRAINERS, UNIONS, TRAPS, FLANGES AND OTHER APPURTENANCES REQUIRING ACCESS ARE EASILY ACCESSIBLE. ALL VALVES SHALL BE INSTALLED SO THAT THE REMAINS IN SERVICE WHEN EQUIPMENT OR PIPING ON EQUIPMENT SIDE OF VALVE IS REMOVED. ALL BALANCING VALVES AND BUTTERFLY VALVES SHALL BE PROVIDED WITH POSITION INDICATORS AND MAXIMUM ADJUSTABLE STOPS (AKA "MEMORY STOPS"). ALL VALVES (EXCEPT CONTROL VALVES) AND STRAINERS SHALL BE FULL SIZE OF PIPE BEFORE REDUCING SIZE TO MAKE CONNECTIONS TO EQUIPMENT AND CONTROLS.
4. INSTALL PIPING WITHOUT FORCING OR SPRINGING.
5. PLAN DRAWINGS ARE DIAGRAMMATIC IN NATURE AND NOT ILLUSTRATE ALL SPECIFIC DUCT TAKE-OFF CONFIGURATIONS, TAPS, ETC. REFER TO PROJECT SPECIFICATIONS AND DETAILS FOR SPECIFIC REQUIREMENTS.

KEYNOTES

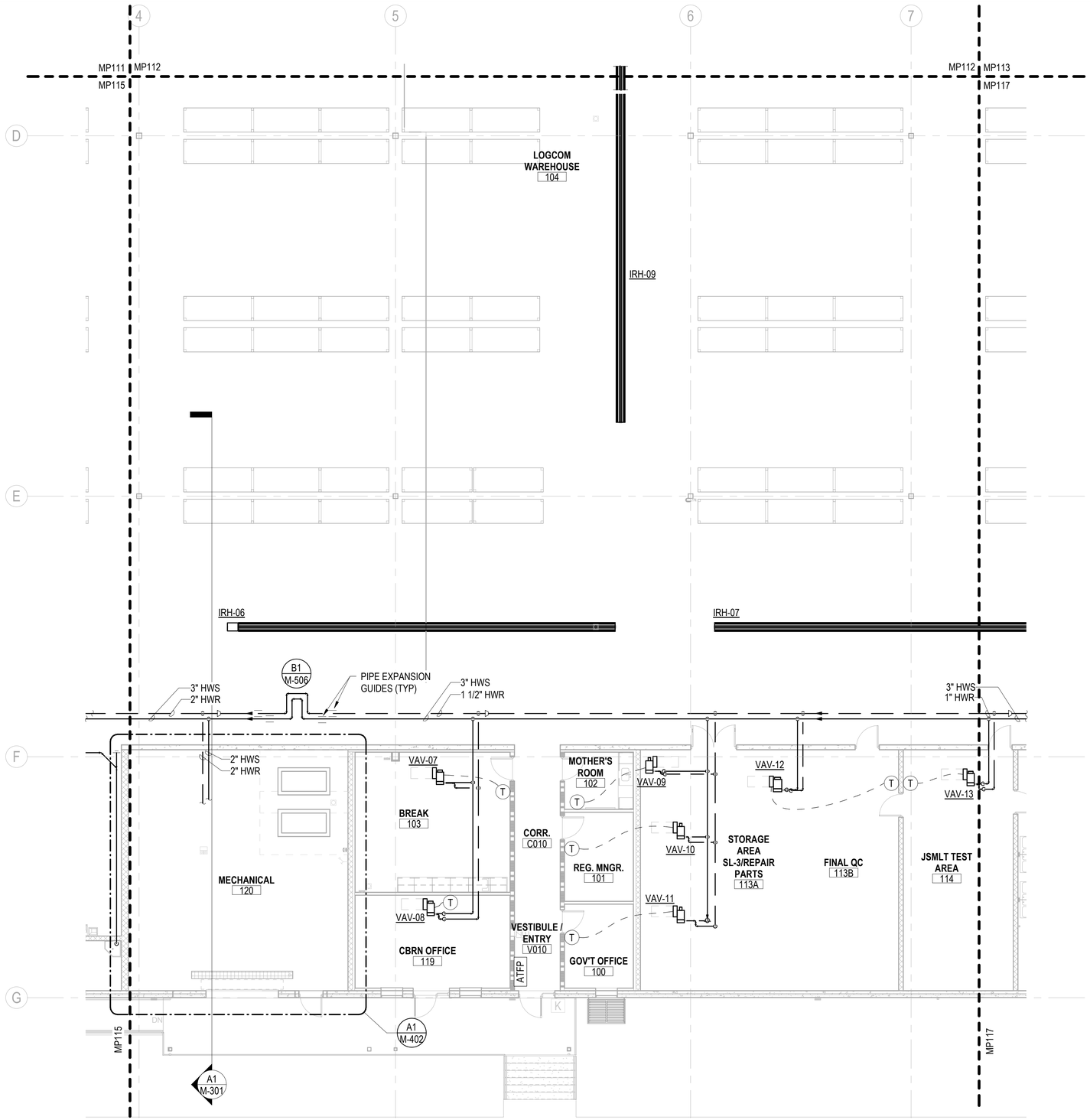

KEYPLAN

A	B	C	D
E	F	G	H

0 4' - 0" 8' - 0" 16' - 0"

SCALE: 1/8" = 1' - 0"

N

A1 PIPING - 1ST FLOOR PLAN - AREA F
SCALE: 1/8" = 1'-0"

APPR	DATE	DESCRIPTION	SYM

NAVFAC

COMMONWEALTH OF PENNSYLVANIA — REGISTERED PROFESSIONAL — DAVID W. HURD — ENGINEER — No. PE061160

SEAL

RQ W.M. Jordan COMPANY — A JOINT VENTURE

Michael Baker INTERNATIONAL
100 AIRSIDE DRIVE
MOON TOWNSHIP, PA 15108
A/E INFO

APPROVED

FOR COMMANDER NAVFAC

ACTIVITY
MARINE CORPS BASE
CAMP LEJEUNE

SATISFACTORY TO DATE DD/MM/YY

DES	DRW	CHK
EMB	AJK	DWH

PM / DM	TOWLER / ROOT
BRANCH HEAD	SCE
DESIGN DIRECTOR	R.L.Stephens, Jr.
FIRE PROTECTION	DPS

DEPARTMENT OF THE NAVY
NAVAL FACILITIES ENGINEERING SYSTEMS COMMAND
ATLANTIC DESIGN AND CONSTRUCTION
MCB CAMP LEJEUNE

NAVAL FACILITIES ENGINEERING SYSTEMS COMMAND ATLANTIC
NORFOLK, VA.

JACKSONVILLE, NC
LOGCOM CSP WAREHOUSE

PIPING - 1ST FLOOR PLAN - AREA F

SCALE:	AS NOTED
EPROJECT NO.:	1639600
CONSTR. CONTR. NO.	N40085-20-C-0059
NAVFAC DRAWING NO.	14111325
SHEET	302 OF 447

MP116

DRAWFORM REVISION: 25 AUGUST 2020

P1527 FINAL SUBMISSION - 11/18/2021

PLOTTED: 11/11/2021 3:44:34 PM

FILE NAME: BIM 360://HF PACKAGE 3/P1527 LOG COM CSP-1639600-M.rvt

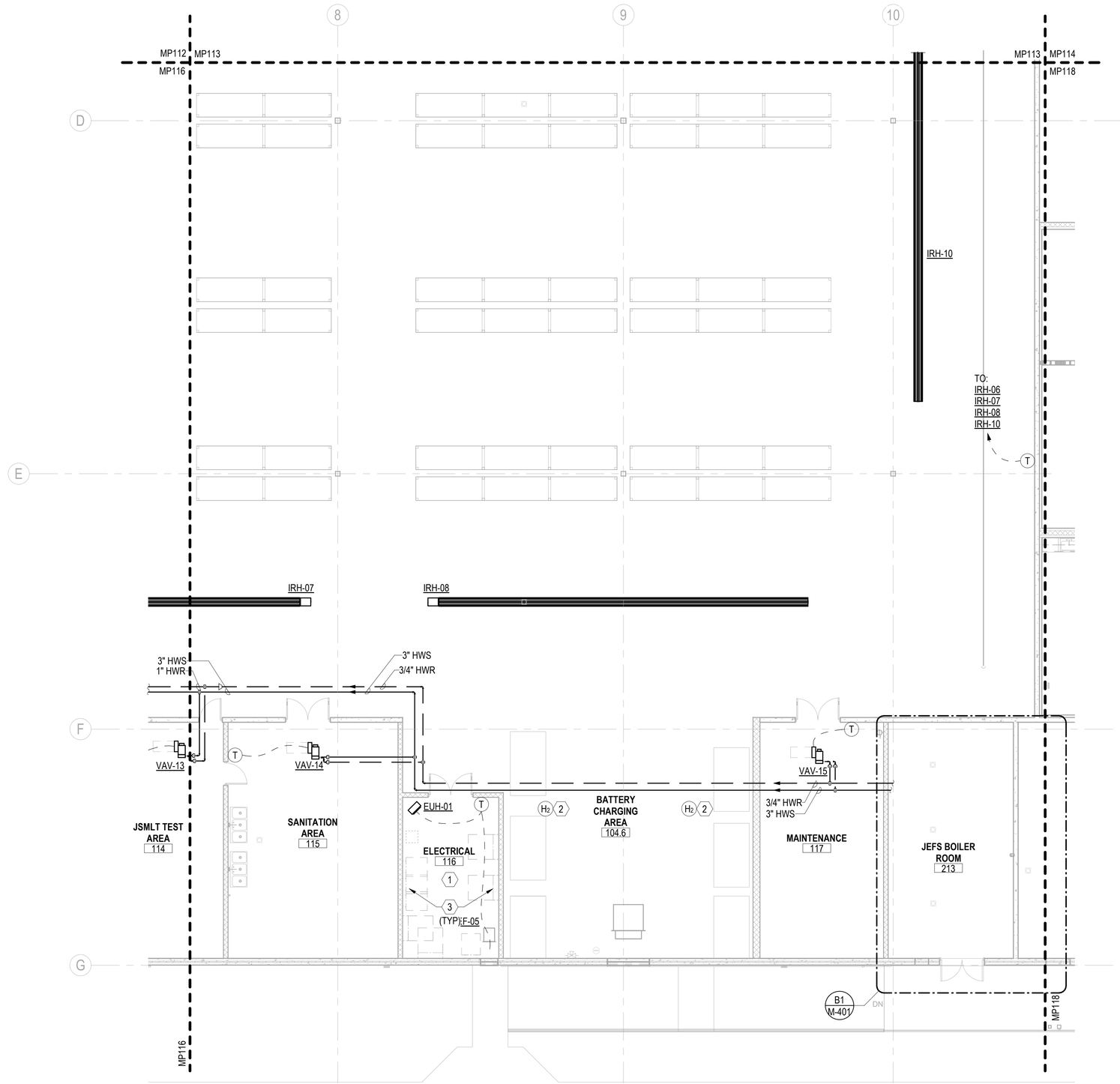

A1 PIPING - 1ST FLOOR PLAN - AREA G
SCALE: 1/8" = 1'-0"

GENERAL NOTES

1 ALL HWS & HWR BRANCHES ARE 3/4" UNLESS NOTED OTHERWISE.
2 PROVIDE AN AIR VENT AT THE HIGH POINT OF EACH DROP IN THE HEATING AND CHILLED WATER PIPING SYSTEMS. ALL PIPING SHALL GRADE TO THE LOW POINTS. PROVIDE HOSE END DRAIN VALVES AT THE BOTTOM OF ALL RISERS AND LOW POINTS.
3 INSTALL PIPING SO THAT ALL VALVES, STRAINERS, UNIONS, TRAPS, FLANGES AND OTHER APPURTENANCES REQUIRING ACCESS ARE EASILY ACCESSIBLE. ALL VALVES SHALL BE INSTALLED SO THAT THE REMAINS IN SERVICE WHEN EQUIPMENT OR PIPING ON EQUIPMENT SIDE OF VALVE IS REMOVED. ALL BALANCING VALVES AND BUTTERFLY VALVES SHALL BE PROVIDED WITH POSITION INDICATORS AND MAXIMUM ADJUSTABLE STOPS (AKA "MEMORY STOPS"). ALL VALVES (EXCEPT CONTROL VALVES) AND STRAINERS SHALL BE FULL SIZE OF PIPE BEFORE REDUCING SIZE TO MAKE CONNECTIONS TO EQUIPMENT AND CONTROLS.
4 INSTALL PIPING WITHOUT FORCING OR SPRINGING.
5 PLAN DRAWINGS ARE DIAGRAMMATIC IN NATURE AND NOT ILLUSTRATE ALL SPECIFIC DUCT TAKE-OFF CONFIGURATIONS, TAPS, ETC. REFER TO PROJECT SPECIFICATIONS AND DETAILS FOR SPECIFIC REQUIREMENTS.

KEYNOTES

1 THERE SHALL NOT BE ANY EQUIPMENT (PIPING, DUCTWORK, MACHINERY, ETC.) THAT DOES NOT SERVE THIS SPACE INSTALLED ABOVE OR WITHIN THIS SPACE, NOR SHALL ANY EQUIPMENT NOT SERVING THIS SPACE PASS THROUGH OR ENTER THIS SPACE.
2 HYDROGEN SENSOR(S) FOR FORKLIFT CHARGING OPERATIONS. SEE CONTROL SEQUENCE & SPECIFICATIONS.
3 ELECTRICAL EQUIPMENT, REFER TO ELECTRICAL DRAWINGS FOR ADDITIONAL INFORMATION.

KEYPLAN

A	B	C	D
E	F	G	H

0 4' - 0" 8' - 0" 16' - 0"
SCALE: 1/8" = 1' - 0"

N

APPR	DATE	DESCRIPTION	SYM

NAVFAC

COMMONWEALTH OF PENNSYLVANIA
REGISTERED PROFESSIONAL ENGINEER
DAVID W. HURD
No. PE061160
SEAL

W.M. Jordan COMPANY – A JOINT VENTURE –

Michael Baker INTERNATIONAL
100 AIRSIDE DRIVE
MOON TOWNSHIP, PA 15108
A/E INFO

APPROVED

FOR COMMANDER NAVFAC

ACTIVITY
MARINE CORPS BASE
CAMP LEJEUNE

SATISFACTORY TO DATE	DD/MM/YY
DES EMB	DRW AJK CHK DWH
PM / DM	TOWLER / ROOT
BRANCH HEAD	SCE
DESIGN DIRECTOR	R.L.Stephens, Jr.
FIRE PROTECTION	DPS

DEPARTMENT OF THE NAVY
NAVAL FACILITIES ENGINEERING SYSTEMS COMMAND
ATLANTIC DESIGN AND CONSTRUCTION
MCB CAMP LEJEUNE

NAVAL FACILITIES ENGINEERING SYSTEMS COMMAND ATLANTIC
NORFOLK, VA
JACKSONVILLE, NC
LOGCOM CSP WAREHOUSE

PIPING - 1ST FLOOR PLAN - AREA G

SCALE:	AS NOTED
EPROJECT NO.:	1639600
CONSTR. CONTR. NO.	N40085-20-C-0059
NAVFAC DRAWING NO.	14111326
SHEET	303 OF 447

MP117

DRAWFORM REVISION: 25 AUGUST 2020

P1527 FINAL SUBMISSION - 11/18/2021

PLOTTED: 11/11/2021 3:44:40 PM

FILE NAME: BIM 360/IHF PACKAGE 3/P1527 LOG COM CSP-1639600-M.rvt

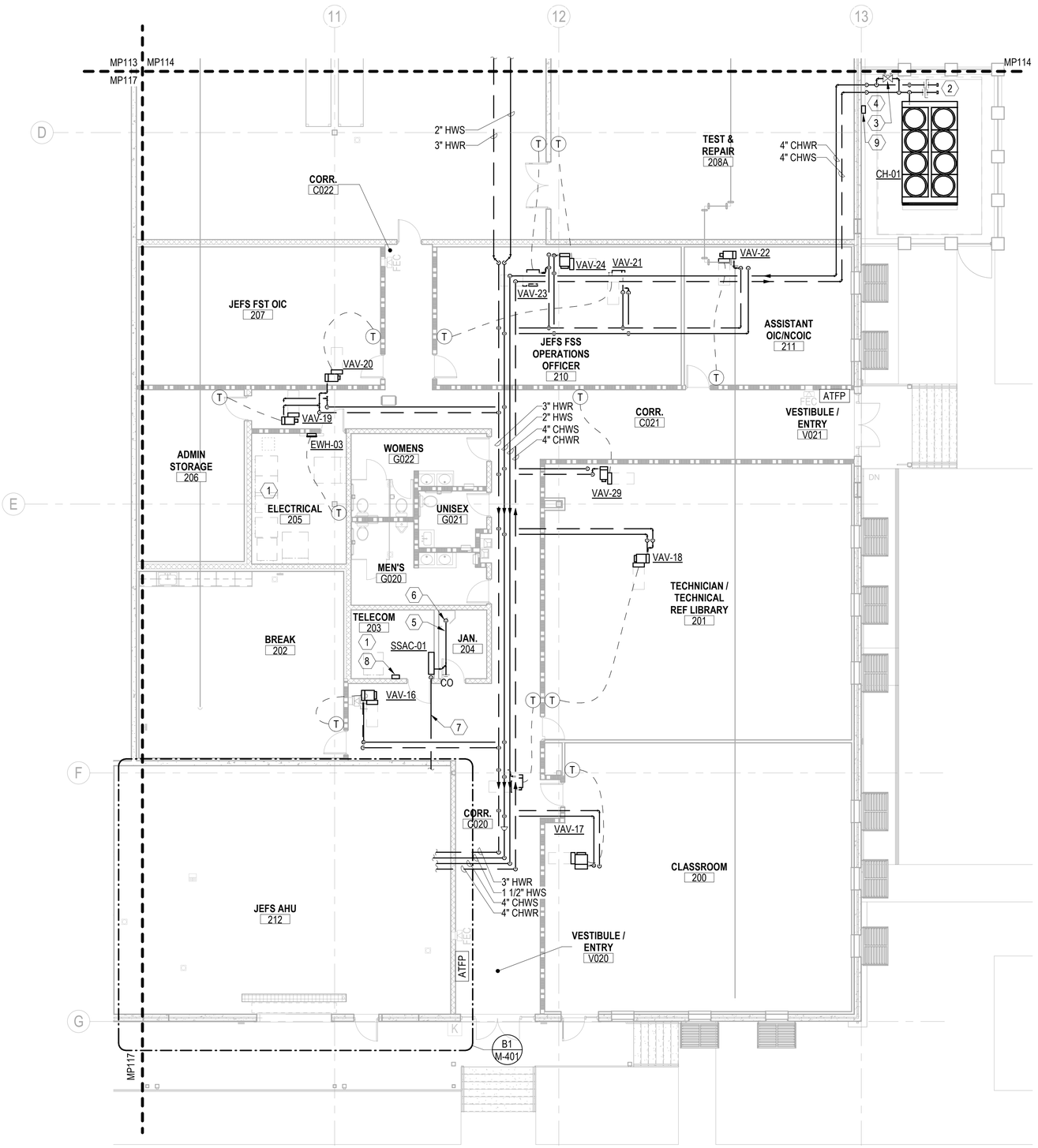

A1 PIPING - 1ST FLOOR PLAN - AREA H

SCALE: 1/8" = 1'-0"

GENERAL NOTES

1. ALL HWS & HWR BRANCHES ARE 3/4" UNLESS NOTED OTHERWISE.
2. PROVIDE AN AIR VENT AT THE HIGH POINT OF EACH DROP IN THE HEATING AND CHILLED WATER PIPING SYSTEMS. ALL PIPING SHALL GRADE TO THE LOW POINTS. PROVIDE HOSE END DRAIN VALVES AT THE BOTTOM OF ALL RISERS AND LOW POINTS.
3. INSTALL PIPING SO THAT ALL VALVES, STRAINERS, UNIONS, TRAPS, FLANGES AND OTHER APPURTENANCES REQUIRING ACCESS ARE EASILY ACCESSIBLE. ALL VALVES SHALL BE INSTALLED SO THAT THE REMAINS IN SERVICE WHEN EQUIPMENT OR PIPING ON EQUIPMENT SIDE OF VALVE IS REMOVED. ALL BALANCING VALVES AND BUTTERFLY VALVES SHALL BE PROVIDED WITH POSITION INDICATORS AND MAXIMUM ADJUSTABLE STOPS (AKA "MEMORY STOPS"). ALL VALVES (EXCEPT CONTROL VALVES) AND STRAINERS SHALL BE FULL SIZE OF PIPE BEFORE REDUCING SIZE TO MAKE CONNECTIONS TO EQUIPMENT AND CONTROLS.
4. INSTALL PIPING WITHOUT FORCING OR SPRINGING.
5. PLAN DRAWINGS ARE DIAGRAMMATIC IN NATURE AND NOT ILLUSTRATE ALL SPECIFIC DUCT TAKE-OFF CONFIGURATIONS, TAPS, ETC. REFER TO PROJECT SPECIFICATIONS AND DETAILS FOR SPECIFIC REQUIREMENTS.

KEYNOTES

1. THERE SHALL NOT BE ANY EQUIPMENT (PIPING, DUCTWORK, MACHINERY, ETC.) THAT DOES NOT SERVE THIS SPACE INSTALLED ABOVE OR WITHIN THIS SPACE, NOR SHALL ANY EQUIPMENT NOT SERVING THIS SPACE PASS THROUGH OR ENTER THIS SPACE.
2. VALVED BLIND FLANGES FOR TEMPORARY / EMERGENCY CHILLER CONNECTION.
3. 4" CHILLER BYPASS / BALANCING VALVE
4. WRAP ALL EXTERIOR ABOVE GROUND PIPING IN HEAT TRACE TO MAINTAIN PROTECT PIPING DOWN TO 10 °F. SIZE HEAT TRACE PER SPECIFICATIONS. INSTALL AND JACKET PER MANUFACTURER'S RECOMMENDATIONS.
5. ROUTE ALL CONDENSATE PIPING AT 1/8" PER 1'-0" SLOPE TOWARD POINT OF TERMINATION. PROVIDE CLEANOUT AT ALL CHANGES OF DIRECTION GREATER THAN 45°.
6. 1" CD DOWN TO MOP RECEPTOR. TERMINATE PIPE OPEN ENDED APPROXIMATELY 3" ABOVE RECEPTOR.
7. ROUTE PAIR OF REFRIGERANT LINES FROM INDOOR ACU TO ASSOCIATED OUTDOOR CONDENSING UNIT. SIZE PER MANUFACTURER'S RECOMMENDATIONS.
8. PROVIDE DDC PANEL TO LIMIT WIRING DISTANCE TO ANY DEVICE LESS THAN 295 FT. PROVIDE JACE IN TELECOM DEMARC ROOM FOR CONNECTION TO EXTERNAL NETWORK.
9. HEAT TRACE CONTROL PANEL.

KEYPLAN

A	B	C	D
E	F	G	H

0 4' - 0" 8' - 0" 16' - 0"

SCALE: 1/8" = 1' - 0"

N

APPR	DATE	DESCRIPTION	SYM

NAVFAC

COMMONWEALTH OF PENNSYLVANIA — REGISTERED PROFESSIONAL ENGINEER — DAVID W HURD — No PE061160 — SEAL

RQ W.M. Jordan COMPANY — A JOINT VENTURE

Michael Baker INTERNATIONAL

100 AIRSIDE DRIVE
MOON TOWNSHIP, PA 15108 A/E INFO

APPROVED

FOR COMMANDER NAVFAC

ACTIVITY
MARINE CORPS BASE
CAMP LEJEUNE

SATISFACTORY TO DATE DD/MM/YY

DES	DRW	CHK
EMB	AJK	DWH

PM / DM TOWLER / ROOT
BRANCH HEAD SCE
DESIGN DIRECTOR R.L.Stephens, Jr.
FIRE PROTECTION DPS

DEPARTMENT OF THE NAVY
NAVAL FACILITIES ENGINEERING SYSTEMS COMMAND
ATLANTIC DESIGN AND CONSTRUCTION
NAVAL FACILITIES ENGINEERING SYSTEMS COMMAND ATLANTIC
NORFOLK, VA
MCB CAMP LEJEUNE
JACKSONVILLE, NC
LOGCOM CSP WAREHOUSE

PIPING - 1ST FLOOR PLAN - AREA H

SCALE: AS NOTED
EPROJECT NO.: 1639600
CONSTR. CONTR. NO. N40085-20-C-0059
NAVFAC DRAWING NO. 14111327
SHEET 304 OF 447

MP118

DRAWFORM REVISION: 25 AUGUST 2020

P1527 FINAL SUBMISSION - 11/18/2021

PLOTTED: 11/11/2021 3:44:42 PM

FILE NAME: BIM 360://HF PACKAGE 3/P1527 LOG COM CSP-1639600-M.rvt

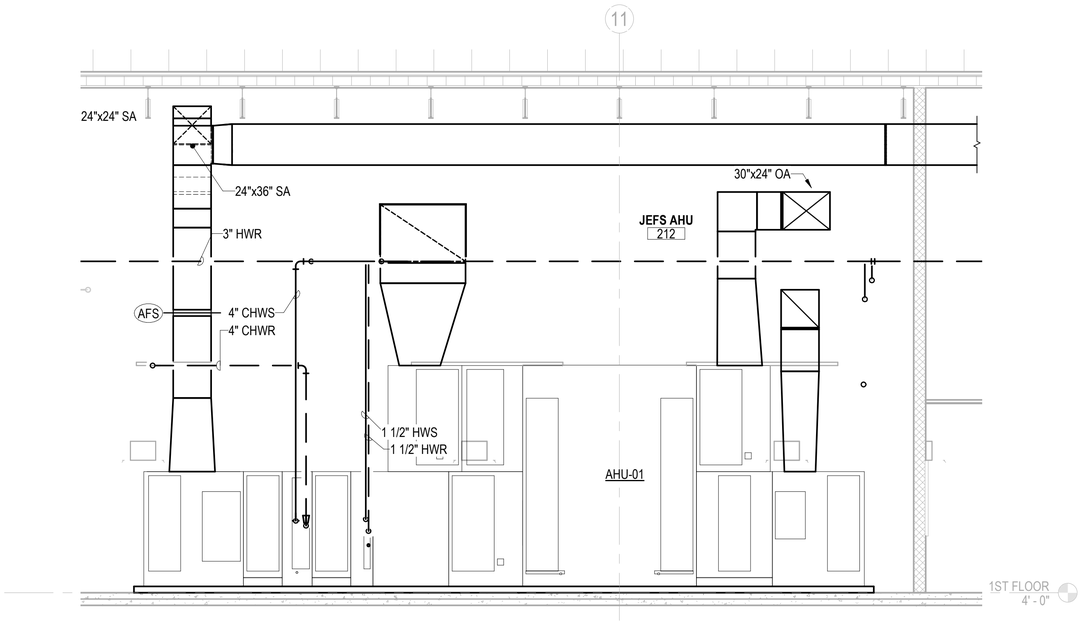

C1 SECTION - AHU-01
SCALE: 1/4" = 1'-0"

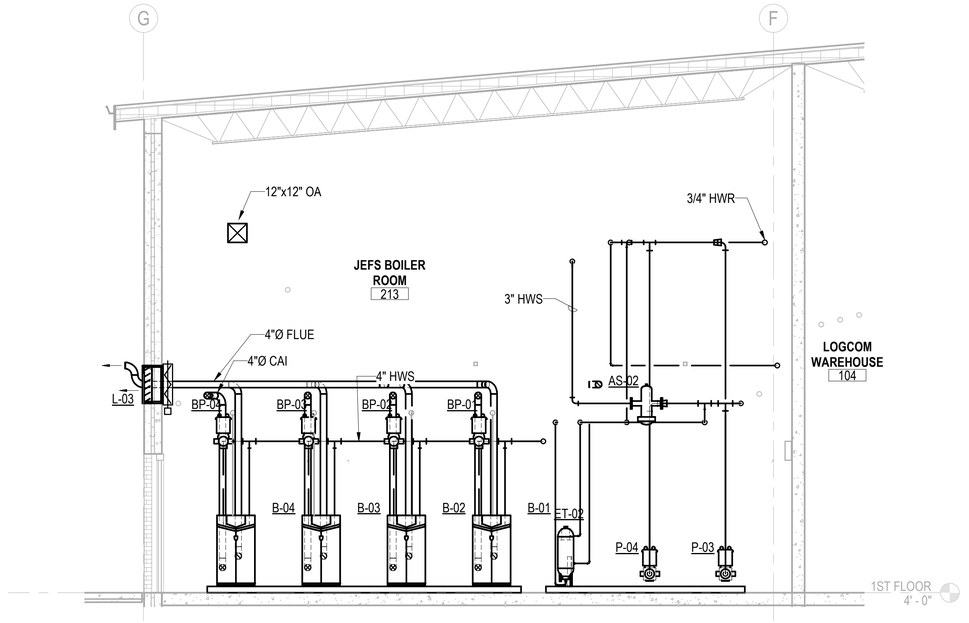

C4 SECTION - JEFS BOILER ROOM
SCALE: 1/4" = 1'-0"

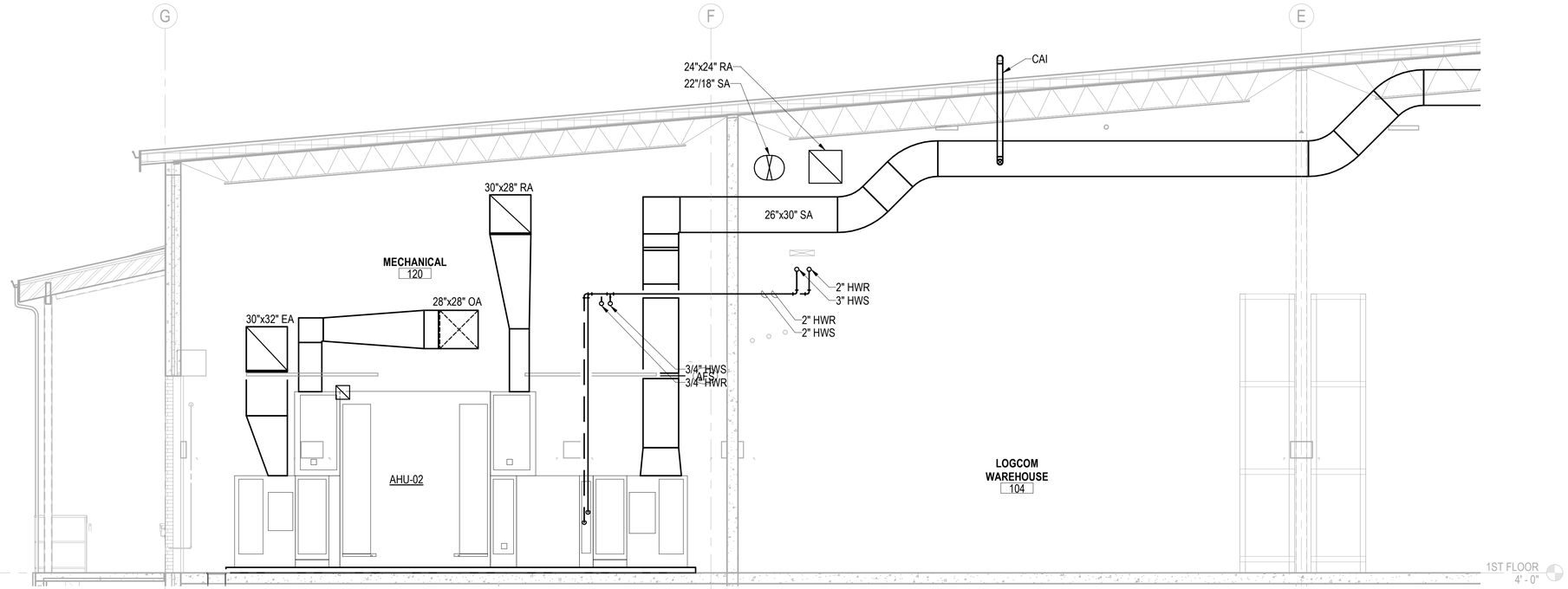

A1 SECTION - AHU-02
SCALE: 1/4" = 1'-0"

0 2' - 0" 4' - 0" 8' - 0"
SCALE: 1/4" = 1' - 0"

APPR	DATE	DESCRIPTION	SYM

NAVFAC

COMMONWEALTH OF PENNSYLVANIA
REGISTERED PROFESSIONAL
DAVID W. HURD
ENGINEER
No. PE061160
SEAL

RQ W.M. Jordan COMPANY — A JOINT VENTURE —

Michael Baker INTERNATIONAL
100 AIRSIDE DRIVE
MOON TOWNSHIP, PA 15108
A/E INFO

APPROVED

FOR COMMANDER NAVFAC

ACTIVITY
MARINE CORPS BASE
CAMP LEJEUNE

SATISFACTORY TO DATE	DD/MM/YY
DES EMB	DRW AJK CHK DWH
PM / DM	TOWLER / ROOT
BRANCH HEAD	SCE
DESIGN DIRECTOR	R.L.Stephens, Jr.
FIRE PROTECTION	DPS

DEPARTMENT OF THE NAVY
NAVAL FACILITIES ENGINEERING SYSTEMS COMMAND
ATLANTIC DESIGN AND CONSTRUCTION
NAVAL FACILITIES ENGINEERING SYSTEMS COMMAND ATLANTIC
NORFOLK, VA
MCB CAMP LEJEUNE
JACKSONVILLE, NC
LOGCOM CSP WAREHOUSE

MECHANICAL - SECTIONS

SCALE:	AS NOTED
EPROJECT NO.:	1639600
CONSTR. CONTR. NO.	N40085-20-C-0059
NAVFAC DRAWING NO.	14111328
SHEET	305 OF 447

M-301

DRAWFORM REVISION: 25 AUGUST 2020

P1527 FINAL SUBMISSION - 11/18/2021

PLOTTED: 11/11/2021 3:06:44 PM

FILE NAME: BIM 360/IHF PACKAGE 3/P1527 LOG COM CSP~1639600-M.rvt

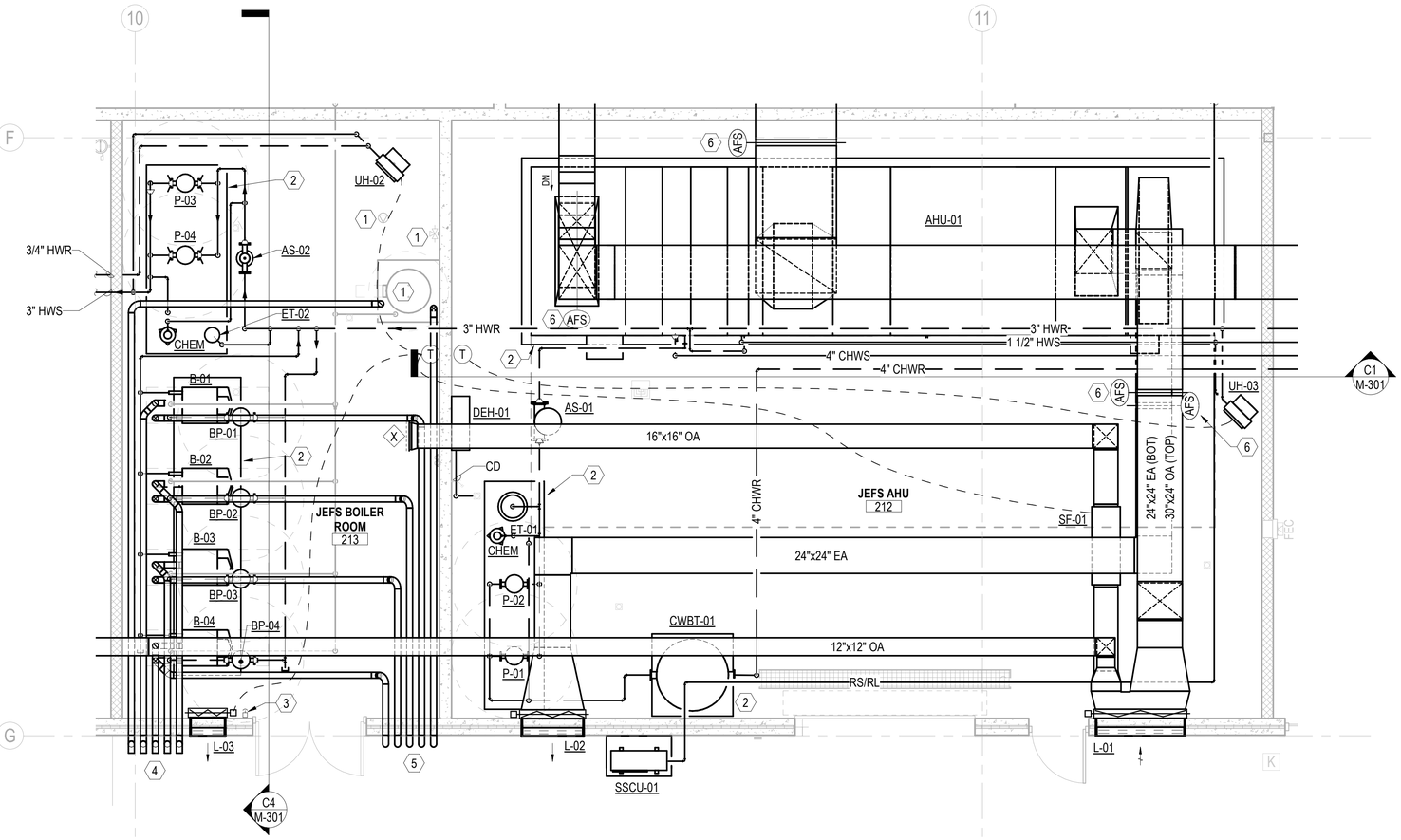

B1 MECHANICAL - ENLARGED JEFS AHU 212 AND JEFS BOILER ROOM 213

SCALE: 1/4" = 1'-0"

GENERAL NOTES

1 PROVIDE MANUAL VOLUME DAMPERS IN ALL RUN-OUTS TO DIFFUSERS, AT ALL BRANCH TAKE-OFFS FROM MAIN SUPPLY DUCT, AND IN ALL OTHER AREAS AS REQUIRED TO PROVIDE PROPER SYSTEM BALANCING.

1 ALL HWS & HWR BRANCHES ARE 3/4" UNLESS NOTED OTHERWISE.

2 ALL SUPPLY AIR DUCT RUN-OUTS TO DIFFUSERS AND VAV BOXES SHALL BE SIZED TO MATCH DIFFUSER NECK SIZE OR VAV BOX INLET SIZE UNLESS OTHERWISE INDICATED.

2 PROVIDE AN AIR VENT AT THE HIGH POINT OF EACH DROP IN THE HEATING AND CHILLED WATER PIPING SYSTEMS. ALL PIPING SHALL GRADE TO THE LOW POINTS. PROVIDE HOSE END DRAIN VALVES AT THE BOTTOM OF ALL RISERS AND LOW POINTS.

3 SHEET METAL FABRICATOR MAY SUBSTITUTE EQUIVALENT ROUND OR FLAT OVAL DUCTWORK FOR RECTANGULAR SIZES INDICATED. DUCTWORK BETWEEN AHU AND VAV BOXES SHALL BE SIZED TO 0.2" STATIC PRESSURE LOSS PER 100' OF DUCT RUN. DUCTWORK DOWNSTREAM OF VAV BOXES SHALL BE SIZED TO 0.08" STATIC PRESSURE LOSS PER 100' OF DUCT RUN. RETURN, EXHAUST AND TRANSFER AIR DUCTS SHALL BE SIZED TO 0.05"/100' OF DUCT RUN. ALL REVISIONS MUST BE COORDINATED WITH ALL OTHER TRADES AND ILLUSTRATED IN DUCTWORK SHOP DRAWINGS FOR APPROVAL.

3 INSTALL PIPING SO THAT ALL VALVES, STRAINERS, UNIONS, TRAPS, FLANGES AND OTHER APPURTENANCES REQUIRING ACCESS ARE EASILY ACCESSIBLE. ALL VALVES SHALL BE INSTALLED SO THAT THE REMAINS IN SERVICE WHEN EQUIPMENT OR PIPING ON EQUIPMENT SIDE OF VALVE IS REMOVED. ALL BALANCING VALVES AND BUTTERFLY VALVES SHALL BE PROVIDED WITH POSITION INDICATORS AND MAXIMUM ADJUSTABLE STOPS (AKA "MEMORY STOPS"). ALL VALVES (EXCEPT CONTROL VALVES) AND STRAINERS SHALL BE FULL SIZE OF PIPE BEFORE REDUCING SIZE TO MAKE CONNECTIONS TO EQUIPMENT AND CONTROLS.

4 PLAN DRAWINGS ARE DIAGRAMMATIC IN NATURE AND NOT ILLUSTRATE ALL SPECIFIC DUCT TAKE-OFF CONFIGURATIONS, TAPS, ETC. REFER TO PROJECT SPECIFICATIONS AND DETAILS FOR SPECIFIC REQUIREMENTS.

5 ALL EQUIPMENT SHALL BE INSTALLED WITH MANUFACTURER'S REQUIRED ACCESS SPACE BETWEEN UNIT AND FULL HEIGHT WALLS AND OTHER OBSTRUCTIONS.

9 INSTALL PIPING WITHOUT FORCING OR SPRINGING.

KEYNOTES

1 PLUMBING EQUIPMENT - REFER TO PLUMBING DRAWINGS.

2 CONCRETE MECHANICAL EQUIPMENT PAD ON LEVEL SURFACE. EXTEND PAD 6" BEYOND THE EDGE OF THE EQUIPMENT IN ALL DIRECTIONS.

3 PROVIDE CSD-1 BOILER KILL SWITCH TO CUT POWER TO BOILERS - REFER TO ELECTRICAL DESIGN FOR DETAILS.

4 EXHAUST FLUE TERMINATION. INSTALL PER EQUIPMENT MANUFACTURER'S TERMINATION REQUIREMENTS AND RECOMMENDATIONS.

5 COMBUSTION AIR INLET TERMINATION. INSTALL PER EQUIPMENT MANUFACTURER'S TERMINATION REQUIREMENTS AND RECOMMENDATIONS.

6 LOCATE AIRFLOW MEASUREMENT STATION PER MANUFACTURER'S RECOMMENDED UP AND DOWN STREAM REQUIREMENTS.

0 2' - 0" 4' - 0" 8' - 0"

SCALE: 1/4" = 1' - 0"

N

APPR | DATE | DESCRIPTION | SYM

NAVFAC

COMMONWEALTH OF PENNSYLVANIA — REGISTERED PROFESSIONAL — DAVID W HURD — ENGINEER — No PE061160

SEAL

RQ W.M. Jordan COMPANY — A JOINT VENTURE

Michael Baker INTERNATIONAL

100 AIRSIDE DRIVE MOON TOWNSHIP, PA 15108 — A/E INFO

APPROVED

FOR COMMANDER NAVFAC

ACTIVITY: MARINE CORPS BASE CAMP LEJEUNE

SATISFACTORY TO DATE DD/MM/YY

DES	DRW	CHK
EMB	AJK	DWH

PM / DM	TOWLER / ROOT
BRANCH HEAD	SCE
DESIGN DIRECTOR	R.L.Stephens, Jr.
FIRE PROTECTION	DPS

DEPARTMENT OF THE NAVY
NAVAL FACILITIES ENGINEERING SYSTEMS COMMAND
ATLANTIC DESIGN AND CONSTRUCTION
MCB CAMP LEJEUNE

NAVAL FACILITIES ENGINEERING SYSTEMS COMMAND ATLANTIC
NORFOLK, VA

JACKSONVILLE, NC

LOGCOM CSP WAREHOUSE

MECHANICAL - ENLARGED PLANS

SCALE:	AS NOTED
EPROJECT NO.:	1639600
CONSTR. CONTR. NO.	N40085-20-C-0059
NAVFAC DRAWING NO.	14111329
SHEET	306 OF 447

M-401

DRAWFORM REVISION: 25 AUGUST 2020

P1527 FINAL SUBMISSION - 11/18/2021

PLOTTED: 11/11/2021 3:06:50 PM

FILE NAME: BIM 360://HF PACKAGE 3/P1527 LOG COM CSP-1639600-M.rvt

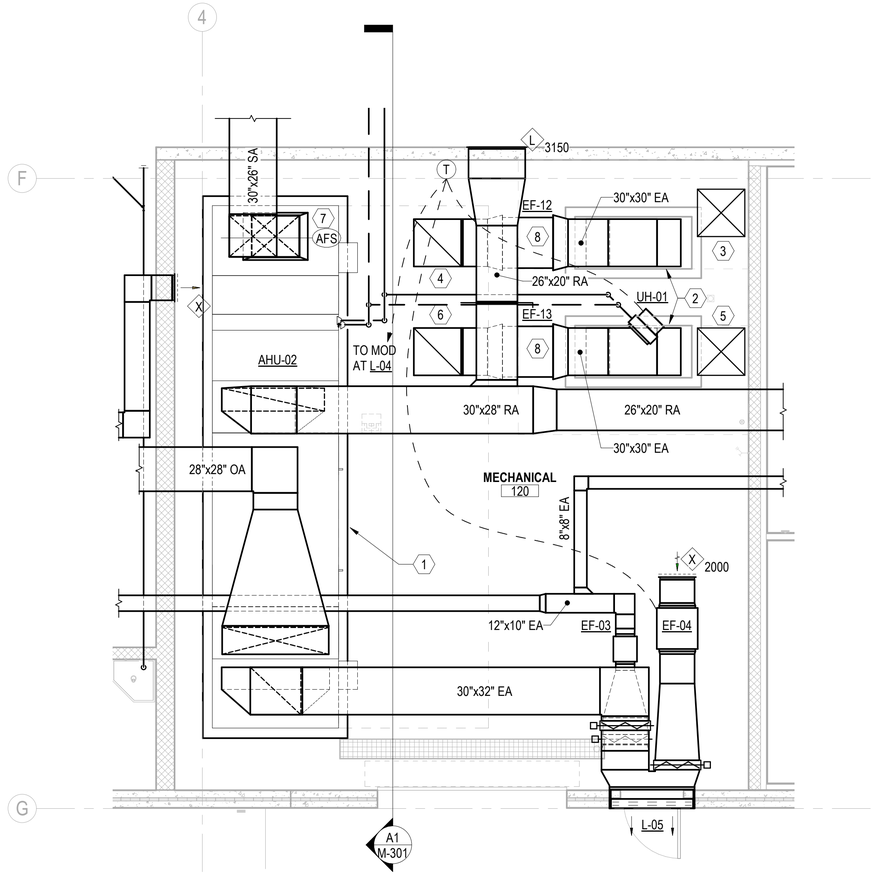

A1 MECHANICAL - ENLARGED MECHANICAL 120

SCALE: 1/4" = 1'-0"

GENERAL NOTES

1 PROVIDE MANUAL VOLUME DAMPERS IN ALL RUN-OUTS TO DIFFUSERS, AT ALL BRANCH TAKE-OFFS FROM MAIN SUPPLY DUCT, AND IN ALL OTHER AREAS AS REQUIRED TO PROVIDE PROPER SYSTEM BALANCING.

1 ALL HWS & HWR BRANCHES ARE 3/4" UNLESS NOTED OTHERWISE.

2 ALL SUPPLY AIR DUCT RUN-OUTS TO DIFFUSERS AND VAV BOXES SHALL BE SIZED TO MATCH DIFFUSER NECK SIZE OR VAV BOX INLET SIZE UNLESS OTHERWISE INDICATED.

2 PROVIDE AN AIR VENT AT THE HIGH POINT OF EACH DROP IN THE HEATING AND CHILLED WATER PIPING SYSTEMS. ALL PIPING SHALL GRADE TO THE LOW POINTS. PROVIDE HOSE END DRAIN VALVES AT THE BOTTOM OF ALL RISERS AND LOW POINTS.

3 SHEET METAL FABRICATOR MAY SUBSTITUTE EQUIVALENT ROUND OR FLAT OVAL DUCTWORK FOR RECTANGULAR SIZES INDICATED. DUCTWORK BETWEEN AHU AND VAV BOXES SHALL BE SIZED TO 0.2" STATIC PRESSURE LOSS PER 100' OF DUCT RUN. DUCTWORK DOWNSTREAM OF VAV BOXES SHALL BE SIZED TO 0.08" STATIC PRESSURE LOSS PER 100' OF DUCT RUN. RETURN, EXHAUST AND TRANSFER AIR DUCTS SHALL BE SIZED TO 0.05"/100' OF DUCT RUN. ALL REVISIONS MUST BE COORDINATED WITH ALL OTHER TRADES AND ILLUSTRATED IN DUCTWORK SHOP DRAWINGS FOR APPROVAL.

3 INSTALL PIPING SO THAT ALL VALVES, STRAINERS, UNIONS, TRAPS, FLANGES AND OTHER APPURTENANCES REQUIRING ACCESS ARE EASILY ACCESSIBLE. ALL VALVES SHALL BE INSTALLED SO THAT THE REMAINS IN SERVICE WHEN EQUIPMENT OR PIPING ON EQUIPMENT SIDE OF VALVE IS REMOVED. ALL BALANCING VALVES AND BUTTERFLY VALVES SHALL BE PROVIDED WITH POSITION INDICATORS AND MAXIMUM ADJUSTABLE STOPS (AKA "MEMORY STOPS"). ALL VALVES (EXCEPT CONTROL VALVES) AND STRAINERS SHALL BE FULL SIZE OF PIPE BEFORE REDUCING SIZE TO MAKE CONNECTIONS TO EQUIPMENT AND CONTROLS.

4 PLAN DRAWINGS ARE DIAGRAMMATIC IN NATURE AND NOT ILLUSTRATE ALL SPECIFIC DUCT TAKE-OFF CONFIGURATIONS, TAPS, ETC. REFER TO PROJECT SPECIFICATIONS AND DETAILS FOR SPECIFIC REQUIREMENTS.

5 ALL EQUIPMENT SHALL BE INSTALLED WITH MANUFACTURER'S REQUIRED ACCESS SPACE BETWEEN UNIT AND FULL HEIGHT WALLS AND OTHER OBSTRUCTIONS.

9 INSTALL PIPING WITHOUT FORCING OR SPRINGING.

KEYNOTES

1 CONCRETE MECHANICAL EQUIPMENT PAD ON LEVEL SURFACE. EXTEND PAD 6" BEYOND THE EDGE OF THE EQUIPMENT IN ALL DIRECTIONS.

2 PLUMBING EQUIPMENT - REFER TO PLUMBING DRAWINGS.

3 OUTDOOR AIR DUCT UP TO GV-01 ON ROOF

4 EXHAUST AIR DUCT UP TO GV-02 ON ROOF

5 OUTDOOR AIR DUCT UP TO GV-03 ON ROOF

6 EXHAUST AIR DUCT UP TO GV-04 ON ROOF

7 LOCATE AIRFLOW MEASUREMENT STATION PER MANUFACTURER'S RECOMMENDED UP AND DOWN STREAM REQUIREMENTS.

8 INTERLOCK FAN OPERATION WITH AIR COMPRESSOR OPERATION.

APPR	DATE	DESCRIPTION	SYM

NAVFAC

COMMONWEALTH OF PENNSYLVANIA
REGISTERED PROFESSIONAL
DAVID W. HURD
ENGINEER
No. PE061160
SEAL

RQ W.M. Jordan COMPANY – A JOINT VENTURE –

Michael Baker INTERNATIONAL
100 AIRSIDE DRIVE
MOON TOWNSHIP, PA 15108
A/E INFO

APPROVED

FOR COMMANDER NAVFAC

ACTIVITY
MARINE CORPS BASE
CAMP LEJEUNE

SATISFACTORY TO DATE DD/MM/YY

DES	EMB	DRW	AJK	CHK	DWH

PM / DM TOWLER / ROOT
BRANCH HEAD SCE
DESIGN DIRECTOR R.L.Stephens, Jr.
FIRE PROTECTION DPS

DEPARTMENT OF THE NAVY
NAVAL FACILITIES ENGINEERING SYSTEMS COMMAND ATLANTIC
ATLANTIC DESIGN AND CONSTRUCTION
NAVAL FACILITIES ENGINEERING SYSTEMS COMMAND ATLANTIC
NORFOLK, VA
MCB CAMP LEJEUNE
JACKSONVILLE, NC
LOGCOM CSP WAREHOUSE
MECHANICAL - ENLARGED PLANS

SCALE: AS NOTED
EPROJECT NO.: 1639600
CONSTR. CONTR. NO. N40085-20-C-0059
NAVFAC DRAWING NO. 14111330
SHEET 307 OF 447

M-402

DRAWFORM REVISION: 25 AUGUST 2020

0 2' - 0" 4' - 0" 8' - 0"
SCALE: 1/4" = 1' - 0"

N

P1527 FINAL SUBMISSION - 11/18/2021

PLOTTED: 11/11/2021 3:06:51 PM

FILE NAME: BIM 360://HF PACKAGE 3/P1527 LOG COM CSP- 1639600-M.rvt

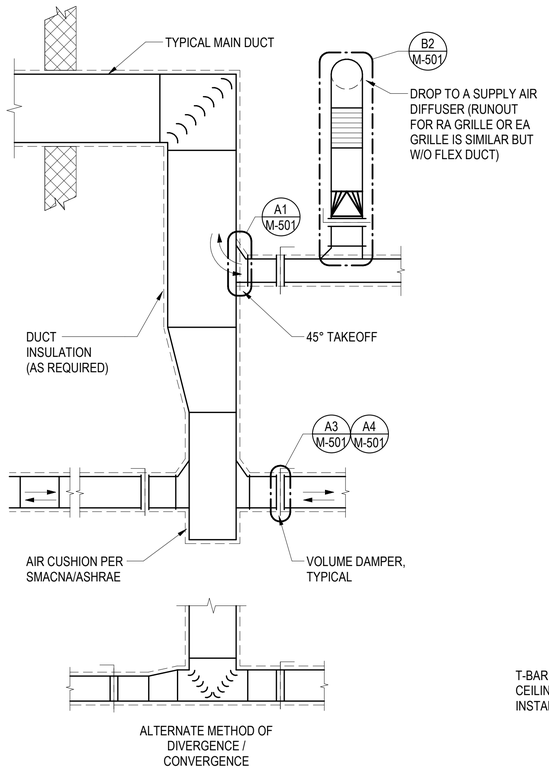

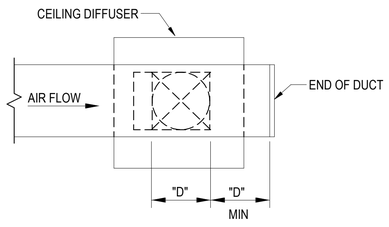

PLAN

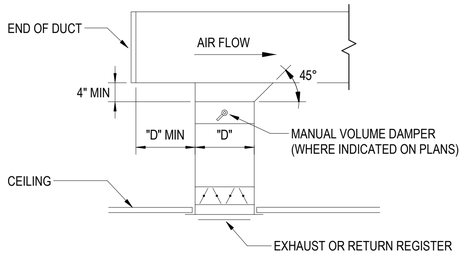

SECTION - EXHAUST OR RETURN

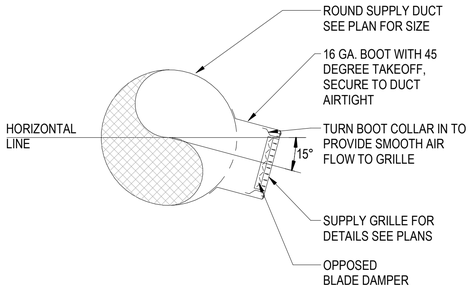

SECTION - SUPPLY, OUTDOOR, OR MAKEUP

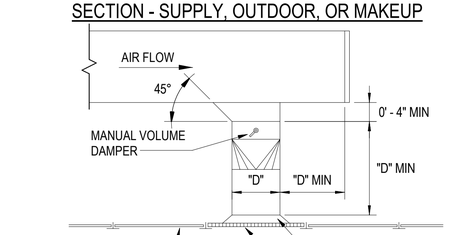

NOTES:
1. "D" IS THROAT DIA OR SIDE DIM. OF SQUARE CONN.
2. MIN LENGTH OF STRAIGHT DUCT ABOVE CD IS "D".
3. ABOVE DETAILS ARE REPRESENTATIVE OF STANDARD DUCT CONNECTIONS, ONLY. THESE DETAILS ARE NOT INTENDED TO SHOW ALL POSSIBLE DUCT CONNECTIONS.

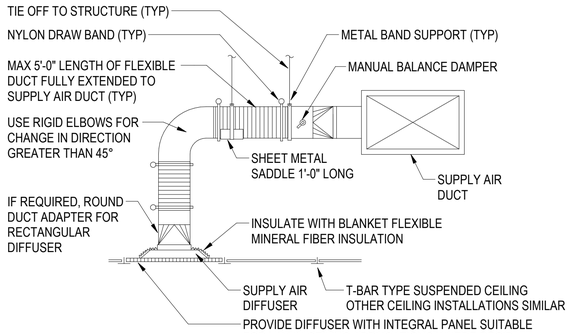

NOTES:
1. SQUARE MAIN DUCT SHOWN, INSTALLATION WITH ROUND MAIN DUCT IS SIMILAR
2. INSTALL MANUAL BALANCE DAMPER AFTER AFTER 45 DEGREE EXPANDED TAKE-OFF; ALTERNATELY 45 DEGREE TAKE-OFFS WITH INTEGRAL MANUAL DAMPERS COMPLYING TO PROJECT SPECIFICATIONS AND SMACNA MAY BE USED.
3. PROVIDE PROPER INSTALLATION OF RADIUS AND SUPPORT PER SMACNA AND FLEX DUCT PER MFGR'S RECOMMENDATIONS FOR NO KINKING OR SIGNIFICANT AREA REDUCTION

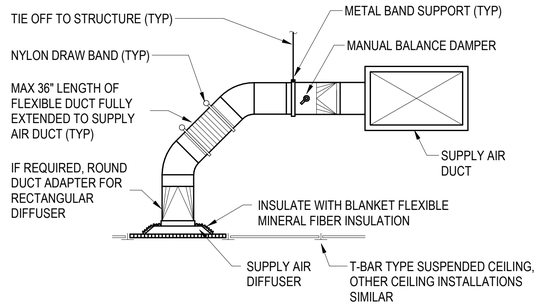

NOTES:
1. SQUARE MAIN DUCT SHOWN, INSTALLATION WITH ROUND MAIN DUCT IS SIMILAR
2. INSTALL MANUAL BALANCE DAMPER AFTER AFTER 45 DEGREE EXPANDED TAKE-OFF; ALTERNATELY 45 DEGREE TAKE-OFFS WITH INTEGRAL MANUAL DAMPERS COMPLYING TO PROJECT SPECIFICATIONS AND SMACNA MAY BE USED.

B1.2 TYPICAL SUPPLY OR RETURN DUCT DETAIL
SCALE: NTS

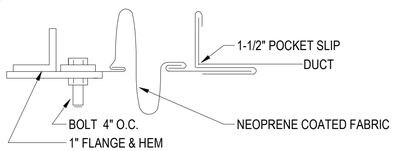

B2 DUCT CONNECTION DETAILS
SCALE: NTS

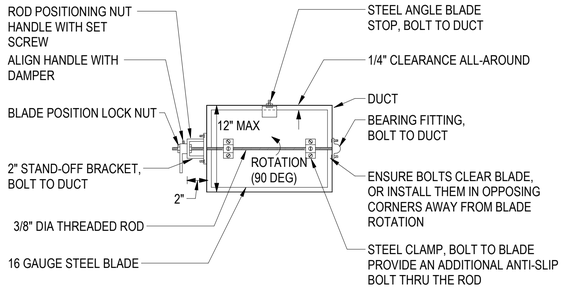

NOTES:
1. DAMPERS FOR ROUND DUCTS SHALL BE SIMILAR TO THE DAMPER SHOWN ABOVE
2. ENSURE THAT FULL 90 DEGREE DAMPER BLADE MOVEMENT IS UNOBSTRUCTED
3. FOR DUCT HEIGHTS MORE THAN 12" PROVIDE FACTORY-FABRICATED OPPOSED BLADE DAMPERS

B1.1 FLEXIBLE CONNECTION DETAIL
SCALE: NTS

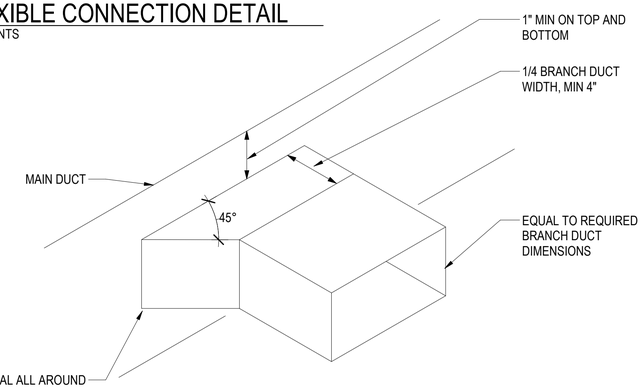

A1 TYPICAL BRANCH DUCT TAKEOFF FITTING DETAIL
SCALE: NTS

A3 MANUAL VOLUME DAMPER DETAIL - 12" OR LESS
SCALE: NTS

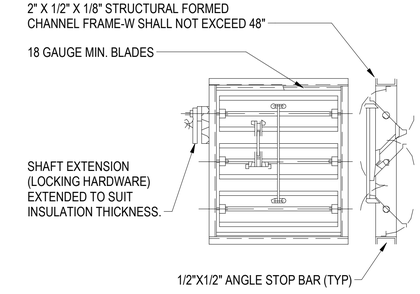

NOTE:
1) ALL BRANCH DUCTS SHALL HAVE VOLUME DAMPERS

A4 MANUAL VOLUME DAMPER DETAIL - 12" OR MORE
SCALE: NTS

APPR | DATE | DESCRIPTION | SYM

NAVFAC

COMMONWEALTH OF PENNSYLVANIA — REGISTERED PROFESSIONAL — DAVID W. HURD — ENGINEER — No. PE061160 — SEAL

RQ | W.M. Jordan COMPANY — A JOINT VENTURE

Michael Baker INTERNATIONAL
100 AIRSIDE DRIVE
MOON TOWNSHIP, PA 15108 A/E INFO

APPROVED
FOR COMMANDER NAVFAC

ACTIVITY
MARINE CORPS BASE CAMP LEJEUNE

SATISFACTORY TO DATE	DD/MM/YY
DES EMB	DRW AJK CHK DWH
PM / DM	TOWLER / ROOT
BRANCH HEAD	SCE
DESIGN DIRECTOR	R.L.Stephens, Jr.
FIRE PROTECTION	DPS

DEPARTMENT OF THE NAVY
NAVAL FACILITIES ENGINEERING SYSTEMS COMMAND ATLANTIC
ATLANTIC DESIGN AND CONSTRUCTION
NAVAL FACILITIES ENGINEERING SYSTEMS COMMAND ATLANTIC
NORFOLK, VA
JACKSONVILLE, NC
MCB CAMP LEJEUNE
LOGCOM CSP WAREHOUSE
MECHANICAL - DETAILS

SCALE:	AS NOTED
EPROJECT NO.:	1639600
CONSTR. CONTR. NO.	N40085-20-C-0059
NAVFAC DRAWING NO.	14111331
SHEET	308 OF 447

M-501

DRAWFORM REVISION: 25 AUGUST 2020

P1527 FINAL SUBMISSION - 11/18/2021

PLOTTED: 11/11/2021 3:06:52 PM

FILE NAME: BIM 360://HF PACKAGE 3/P1527 LOG COM CSP- 1639600-M.rvt

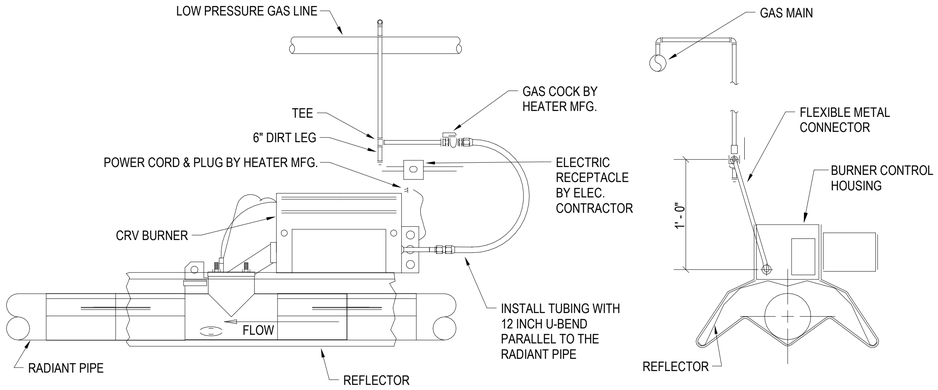

NOTES:
1. SHUT-OFF VALVE MUST BE PARALLEL TO ONE HALF INCH BURNER INLET PIPE.
2. THE 2" DISPLACEMENT AS SHOWN IS FOR THE COLD CONDITION. THIS DISPLACEMENT WILL BE REDUCED AS THE SYSTEM IS FIRED.
3. ALLOW MINIMUM 0F 16-5/8" CLEARANCE FROM CENTER OF PIPE TO OBSTRUCTIONS ABOVE FOR BURNER REMOVAL

C1 OVERHEAD RADIANT HEATING SYSTEM BURNER DETAIL
SCALE: NTS

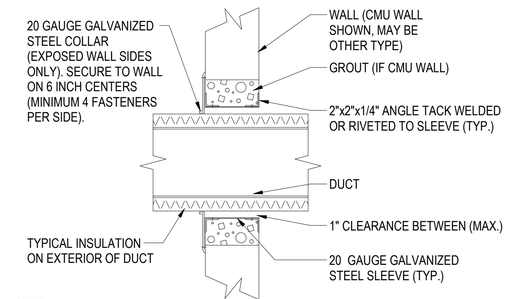

NOTES:
1. THIS DETAIL IS NOT APPLICABLE TO FIRE OR SMOKE RATED WALLS, REFER TO LIFE SAFETY DRAWINGS FOR LOCATION OF ALL FIRE/SMOKE RATED WALLS.
2. DUCTWORK PENETRATING FIRE RATED WALLS SHALL BE MIN 16 GAUGE THICK.
3. WALL PENETRATIONS OF RATED WALLS NOT INDICATED AS REQUIRING DAMPERS ON THE PLANS SHALL BE PROVIDED WITH FIRESTOPPING IN ACCORDANCE WITH SPECIFICATION SECTION 07 84 00 FIRESTOPPING.
4. STEEL COLLAR IS REQUIRED ONLY IN LOCATIONS WHERE THE WALL IS VISIBLE FROM THE SPACE, NOT REQUIRED WHERE PENETRATING WALLS ABOVE FINISHED CEILINGS.

C3 DUCT PENETRATION THRU WALL DETAIL
SCALE: NTS

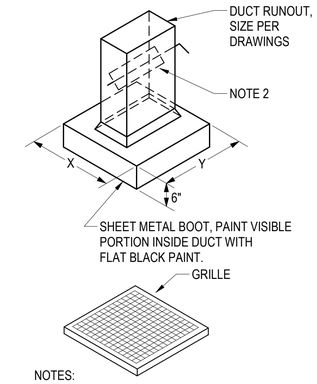

NOTES:
1. REFER TO GRILL, REGISTER AND DIFFUSER SCHEDULE FOR X & Y DUCT NECK SIZE CONNECTION TO RETURN GRILLE/REGISTER.
2. WHERE CFM IS SHOWN ON PLANS, DAMPER SHALL BE PLACED IN RETURN/EXHAUST DUCTWORK IN LOCATION SHOWN ON PLANS

C4 DUCTED RETURN AIR CONNECTION DETAIL
SCALE: NTS

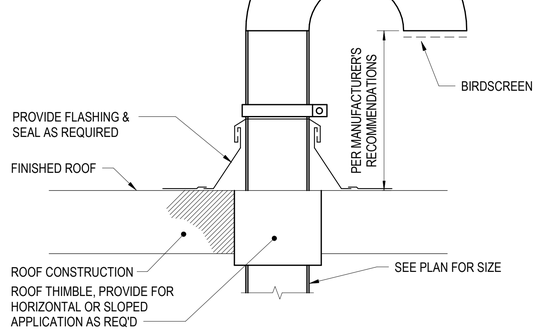

B2 COMBUSTION AIR INTAKE DETAIL
SCALE: NTS

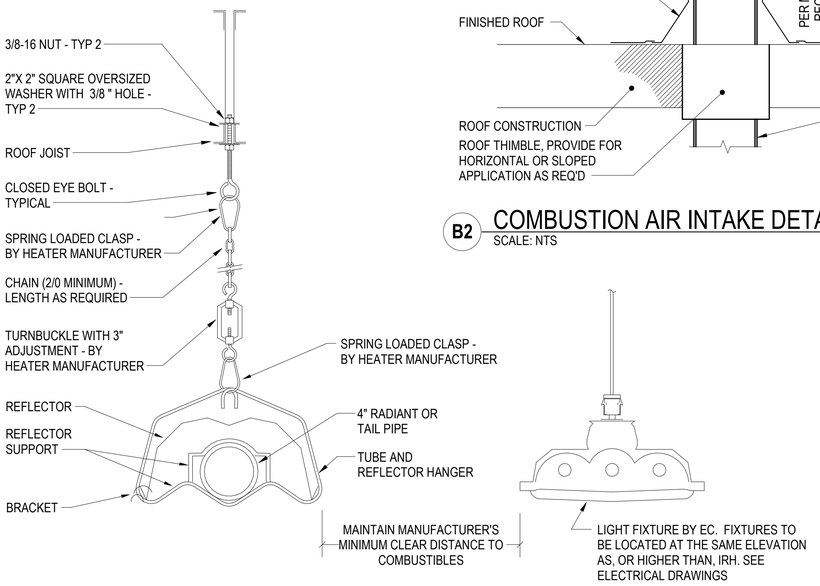

A1 OVERHEAD RADIANT HEATING SYSTEM TUBE/HANGER DETAIL
SCALE: NTS

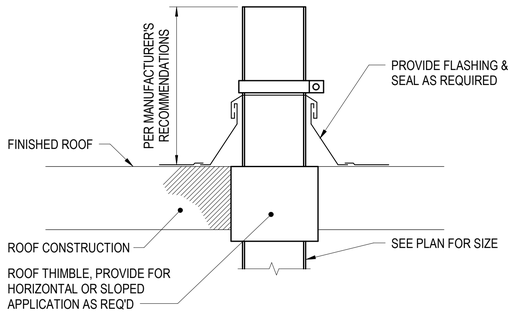

A3 VENT/ FLUE DETAIL
SCALE: NTS

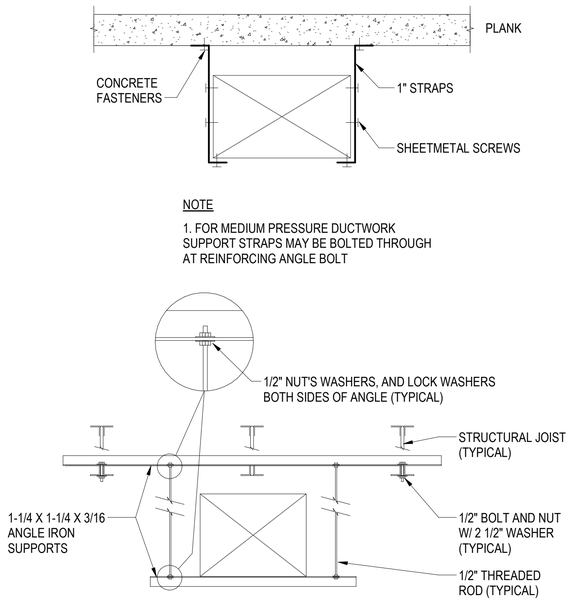

NOTE

1. FOR MEDIUM PRESSURE DUCTWORK SUPPORT STRAPS MAY BE BOLTED THROUGH AT REINFORCING ANGLE BOLT

NOTE:
ALL DUCT SUPPORTS PER SMACNA.

A4 DUCT HANGER DETAIL
SCALE: NTS

APPR	
DATE	
DESCRIPTION	
SYM	

NAVFAC

COMMONWEALTH OF PENNSYLVANIA — REGISTERED PROFESSIONAL ENGINEER — DAVID W. HURD — No. PE061160 — SEAL

RQ W.M. Jordan COMPANY — A JOINT VENTURE

Michael Baker INTERNATIONAL
100 AIRSIDE DRIVE, MOON TOWNSHIP, PA 15108 — A/E INFO

APPROVED

FOR COMMANDER NAVFAC

ACTIVITY: MARINE CORPS BASE CAMP LEJEUNE

SATISFACTORY TO DATE: DD/MM/YY

DES	DRW	CHK
EMB	AJK	DWH

PM / DM: TOWLER / ROOT
BRANCH HEAD: SCE
DESIGN DIRECTOR: R.L.Stephens, Jr.
FIRE PROTECTION: DPS

DEPARTMENT OF THE NAVY
NAVAL FACILITIES ENGINEERING SYSTEMS COMMAND
ATLANTIC DESIGN AND CONSTRUCTION
NAVAL FACILITIES ENGINEERING SYSTEMS COMMAND ATLANTIC — NORFOLK, VA
MCB CAMP LEJEUNE — JACKSONVILLE, NC
LOGCOM CSP WAREHOUSE
MECHANICAL - DETAILS

SCALE:	AS NOTED
EPROJECT NO.:	1639600
CONSTR. CONTR. NO.	N40085-20-C-0059
NAVFAC DRAWING NO.	14111332
SHEET	309 OF 447

M-502

DRAWFORM REVISION: 25 AUGUST 2020

P1527 FINAL SUBMISSION - 11/18/2021

PLOTTED: 11/11/2021 3:06:53 PM

FILE NAME: BIM 360://HF PACKAGE 3/P1527 LOG COM CSP-1639600-M.rvt

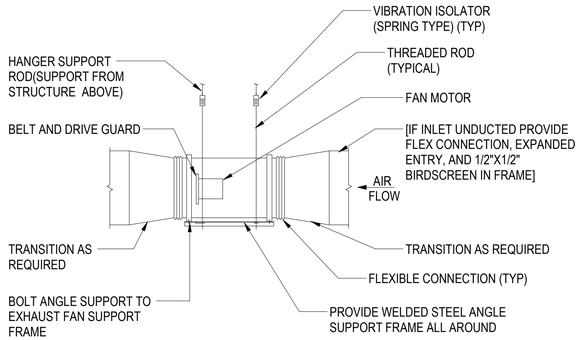

NOTES:
1. PROVIDE ADDITIONAL LATERAL OR AXIAL BRACING IF REQUIRED.
2. INLINE CABINET FAN IS SIMILAR.

C2 INLINE FAN DETAIL
SCALE: NTS

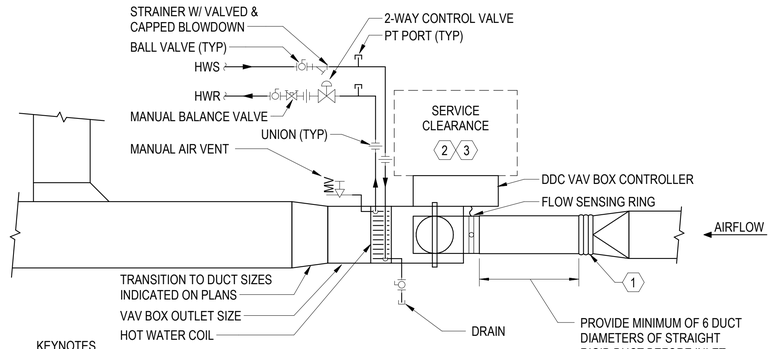

KEYNOTES
1. PROVIDE FLEX DUCT CONNECTION FOR ALLIGNMENT WHERE REQ'D-NOT IN EXCESS 12" IN LENGTH AND NO MORE THAN 2" ALIGNMENT (DO NOT KINK)
2. PROVIDE MINIMUM 3'-0" NEC SERVICE CLEARANCE AT CONTROLLER SIDE OF VAV BOX
3. PROVIDE CEILING ACCESS DOOR WHEN INSTALLED ABOVE NON-ACCESSIBLE CEILINGS

C4 VARIABLE AIR VOLUME (VAV) BOX DETAIL
SCALE: NTS

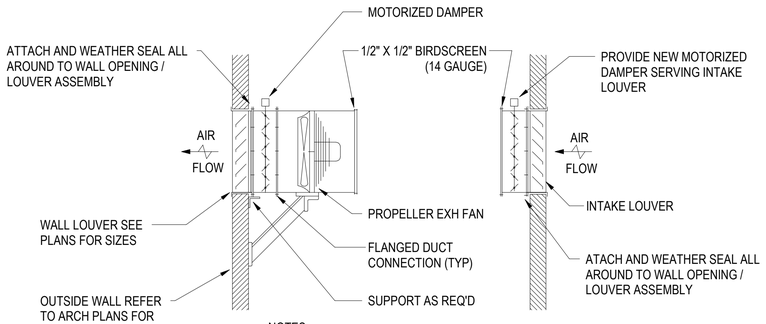

NOTES:
1. PROVIDE BIRD SCREEEN ON THE INSIDE FACE OF THE DISCHARGE LOUVER.
2. PROVIDE OSHA APPROVED GUARDS AT FAN.

A1 WALL PROPELLER EXHAUST FAN AND ASSOCIATED INTAKE LOUVER/DAMPER ASSEMBLY DETAIL
SCALE: NTS

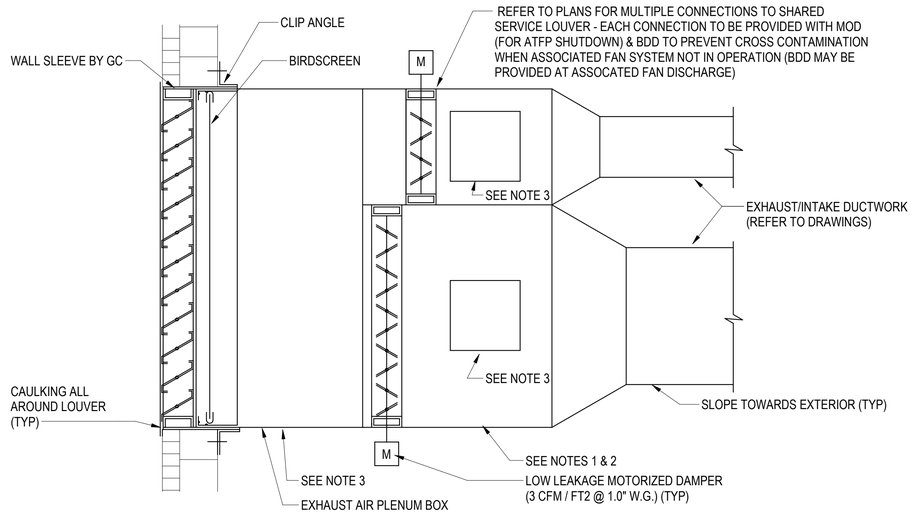

NOTES:
1. FOR UNDUCTED APPLICATIONS PROVIDE SUFFICIENT DUCTWORK TO HOUSE MOTORIZED DAMPER.
2. FOR APPLICATIONS WITHOUT MOTORIZED DAMPER CONNECT DUCT DIRECTLY TO LOUVER.
3. PROVIDE DUCT ACCESS DOOR FOR SERVICING OF MOTOR OPERATED DAMPER (IF REQUIRED). MAY BE MOUNTED ON PLENUM BOX IN LIEU OF INDIVIDUAL DUCTS

A4 SHARED SERVICE LOUVER W/ PLENUM BOX AND MOTORIZED DAMPER DETAIL
SCALE: NTS

APPR | DATE | DESCRIPTION | SYM

NAVFAC

COMMONWEALTH OF PENNSYLVANIA — REGISTERED PROFESSIONAL — DAVID W. HURD — ENGINEER — No. PE061160
SEAL

RQ W.M. Jordan COMPANY — A JOINT VENTURE

Michael Baker INTERNATIONAL
100 AIRSIDE DRIVE
MOON TOWNSHIP, PA 15108
A/E INFO

APPROVED

FOR COMMANDER NAVFAC

ACTIVITY
MARINE CORPS BASE CAMP LEJEUNE

SATISFACTORY TO DATE DD/MM/YY

DES	DRW	CHK
EMB	AJK	DWH

PM / DM: TOWLER / ROOT
BRANCH HEAD: SCE
DESIGN DIRECTOR: R.L.Stephens, Jr.
FIRE PROTECTION: DPS

DEPARTMENT OF THE NAVY
NAVAL FACILITIES ENGINEERING SYSTEMS COMMAND ATLANTIC
ATLANTIC DESIGN AND CONSTRUCTION
MCB CAMP LEJEUNE
NAVAL FACILITIES ENGINEERING SYSTEMS COMMAND ATLANTIC
NORFOLK, VA
JACKSONVILLE, NC
LOGCOM CSP WAREHOUSE
MECHANICAL - DETAILS

SCALE: AS NOTED
EPROJECT NO.: 1639600
CONSTR. CONTR. NO. N40085-20-C-0059
NAVFAC DRAWING NO. 14111333
SHEET 310 OF 447

M-503

DRAWFORM REVISION: 25 AUGUST 2020

P1527 FINAL SUBMISSION - 11/18/2021

PLOTTED: 11/11/2021 3:06:54 PM

FILE NAME: BIM 360/.IHF PACKAGE 3/P1527 LOG COM CSP-1639600-M.rvt

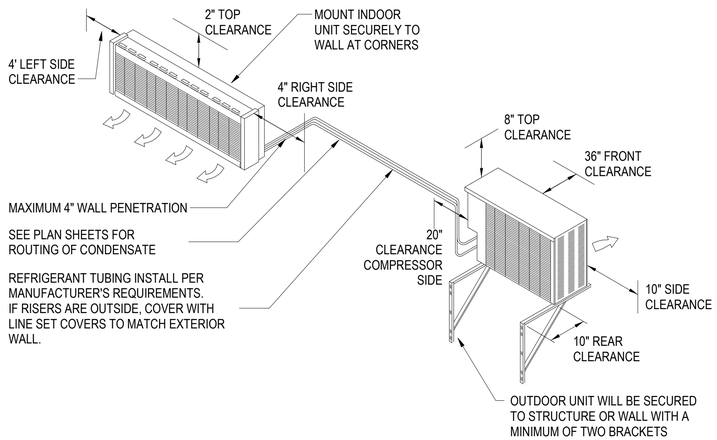

C1 SPLIT SYSTEM AIR CONDITIONING UNIT (DUCTLESS)
SCALE: NTS

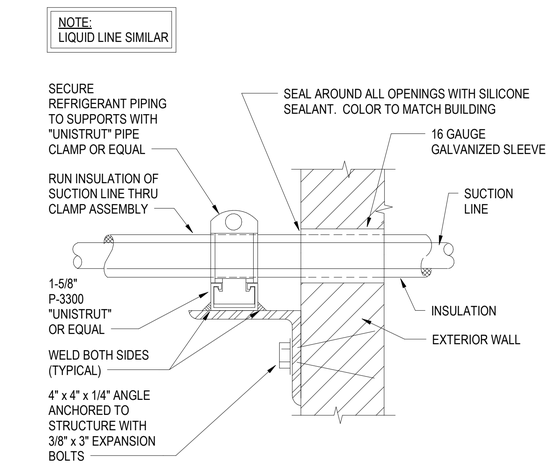

C3 EXTERIOR WALL PENETRATION DETAIL
SCALE: NTS

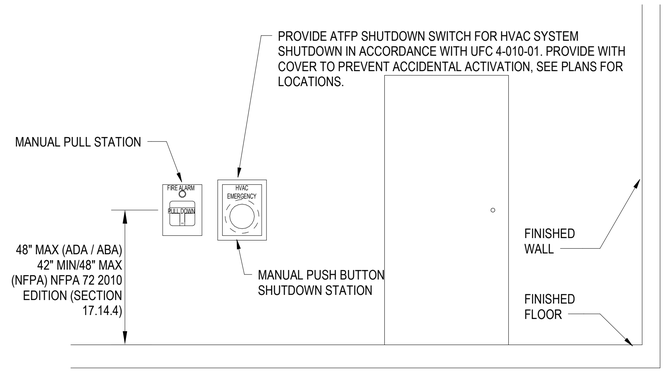

NOTES:
1. LOCATE ADJACENT TO FIRE ALARM MANUAL PULL STATION IF APPLICABLE.
2. INTERLOCK WITH DDC SYSTEM, SEE SEQUENCE OF CONTROLS.
3. PROVIDE LABEL ON SWITCH AS FOLLOWS: "HVAC EMERGENCY"

C4 HVAC SHUTDOWN STATION INSTALLATION DETAIL
SCALE: NTS

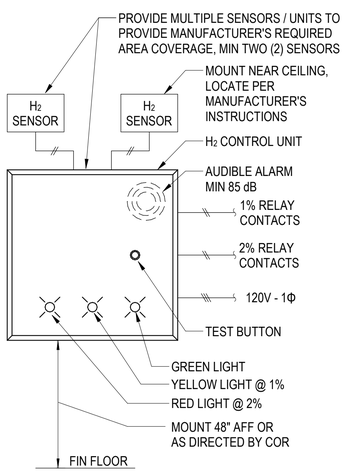

SEQUENCE OF CONTROL

A HYDROGEN (H2) GAS DETECTION SYSTEM (STORAGE BATTERY SYSTEMS SBS-H2 HYDROGEN MONITORING SYSTEM OR EQUAL) SHALL BE INSTALLED IN THE BATTERY CHARGING AREA CONSISTING OF A WALL MOUNTED CENTRAL CONTROLLER WITH AUDIBLE AND VISIBLE ALARMS AND RELAYS FOR REMOTE ALARM AND SYSTEM CONTROL. THE HYDROGEN (H2) SENSOR(S) SHALL BE LOCATED AT THE ROOF LEVEL PER MANUFACTURER'S INSTRUCTIONS DIRECTLY ABOVE THE CHARGING STATION(S). PROVIDE MULTIPLE SENSORS/UNITS TO PROVIDE MANUFACTURER'S REQUIRED AREA COVERAGE MINIMUM OF 2 SENSORS.

GREEN LIGHT SHALL INDICATE UNIT IS POWERED AND FUNCTIONING CORRECTLY.

UPON DETECTION OF H2 LEVELS AT 1% LEVEL (WARNING LEVEL) THE CENTRAL H2 SYSTEM CONTROLLER SHALL INIDCATE A YELLOW WARNING SIGNAL AND A WARNING RELAY SIGNAL SHALL BE SENT TO THE DDC SYSTEM TO INITIATE OPERATION OF THE HEATING AND VENTILATING SYSTEM (AHU-02) DURING UNOCCUPIED HOURS.

UPON DETECTION OF H2 LEVELS AT 2% LEVEL (ALARM LEVEL) THE CENTRAL H2 SYSTEM CONTROLLER SHALL INDICATE A RED WARNING SIGNAL COUPLED WITH AN AUDIBLE ALARM. AN ALARM RELAY SIGNAL SHALL DISABLE POWER TO THE BATTERY CHARGING SYSTEM, AND AN ALARM SIGNAL SHALL BE SENT TO THE FIRE ALARM SYSTEM. THE HEATING AND VENTILATING SYSTEM (AHU-02) SHALL CONTINUE TO OPERATE.

UPON LEVELS OF HYDROGEN LOWERING THE SEQUENCE SHALL REVERSE.

B1 HYDROGEN SENSOR DETAIL
SCALE: NTS

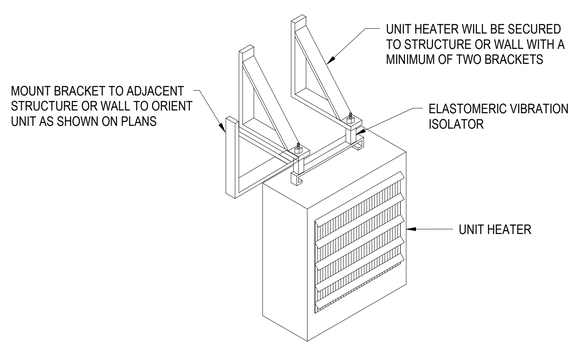

B3 ELECTRIC UNIT HEATER DETAIL
SCALE: NTS

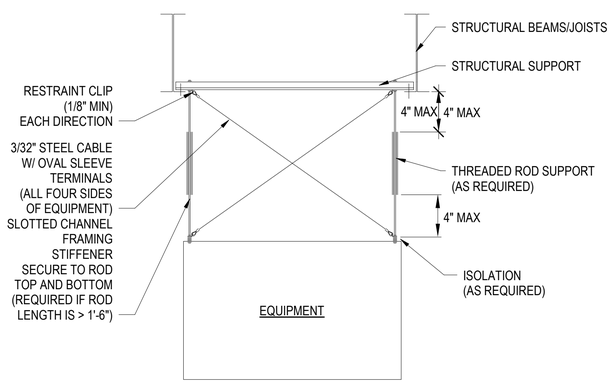

** THIS DETAIL APPLIES TO ALL OVERHEAD MECHANICAL "EQUIPMENT" WEIGHING 31 LBS OR MORE,(DOES NOT APPLY TO DISTRIBUTION SYSTEMS SUCH AS PIPING AND DUCTWORK.)**

B4 ATFP EQUIPMENT BRACING DETAIL
SCALE: NTS

APPR	DATE	DESCRIPTION	SYM

NAVFAC

COMMONWEALTH OF PENNSYLVANIA — REGISTERED PROFESSIONAL — DAVID W HURD — ENGINEER — No PE061160 — SEAL

RQ W.M. Jordan COMPANY — A JOINT VENTURE

Michael Baker INTERNATIONAL
100 AIRSIDE DRIVE
MOON TOWNSHIP, PA 15108 — A/E INFO

APPROVED

FOR COMMANDER NAVFAC

ACTIVITY
MARINE CORPS BASE CAMP LEJEUNE

SATISFACTORY TO DATE	DD/MM/YY
DES EMB	DRW KC CHK DWH
PM / DM	TOWLER / ROOT
BRANCH HEAD	SCE
DESIGN DIRECTOR	R.L.Stephens, Jr.
FIRE PROTECTION	DPS

DEPARTMENT OF THE NAVY
NAVAL FACILITIES ENGINEERING SYSTEMS COMMAND
ATLANTIC DESIGN AND CONSTRUCTION
NAVAL FACILITIES ENGINEERING SYSTEMS COMMAND ATLANTIC — NORFOLK, VA
JACKSONVILLE, NC
MCB CAMP LEJEUNE
LOGCOM CSP WAREHOUSE
MECHANICAL - DETAILS

SCALE:	AS NOTED
EPROJECT NO.:	1639600
CONSTR. CONTR. NO.	N40085-20-C-0059
NAVFAC DRAWING NO.	14111334
SHEET	311 OF 447

M-504

DRAWFORM REVISION: 25 AUGUST 2020

P1527 FINAL SUBMISSION - 11/18/2021

PLOTTED: 11/11/2021 3:06:56 PM

FILE NAME: BIM 360://HF PACKAGE 3/P1527 LOG COM CSP-1639600-M1r1

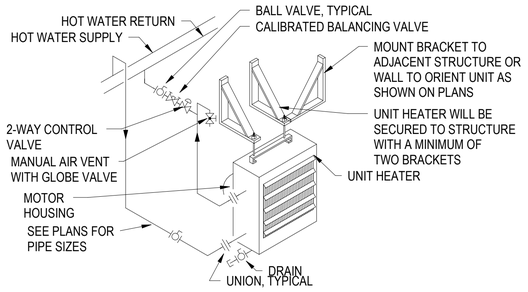

C1 HOT WATER UNIT HEATER DETAIL
SCALE: NTS

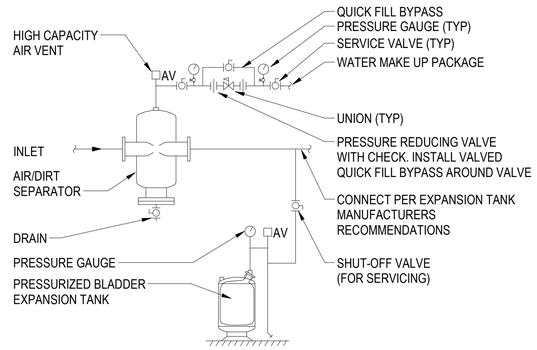

HYDRONICS SYSTEM AIR SEPARATOR & EXPANSION TANK SYSTEM CONNECTION
B1 SCALE: NTS

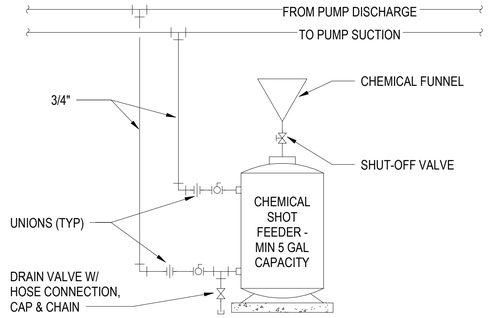

B2 CHEMICAL SHOT FEEDER DETAIL
SCALE: NTS

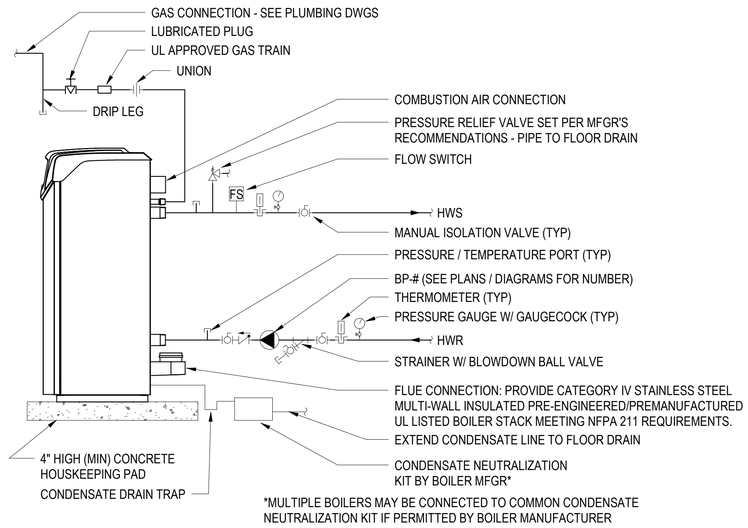

C4 BOILER PIPING DETAIL
SCALE: NTS

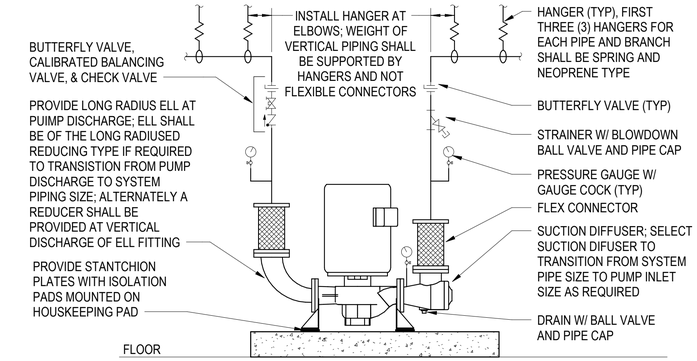

B4 FLOOR SUPPORTED INLINE PUMP DETAIL
SCALE: NTS

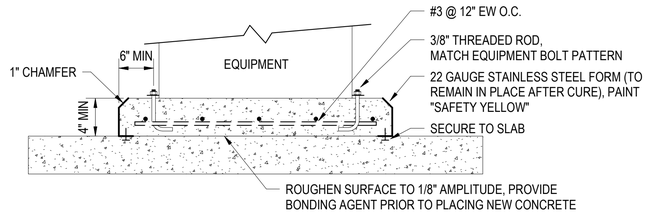

A2 EQUIPMENT PAD DETAIL
SCALE: NTS

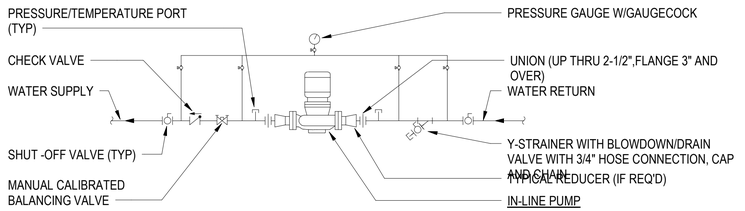

NOTE:
SUPPORT PUMP FROM WALL, FLOOR, OR ROOF STEEL, DO NOT PIPE SUPPORT.

A4 IN-LINE PUMP DETAIL
SCALE: NTS

APPR	
DATE	
DESCRIPTION	
SYM	

NAVFAC

COMMONWEALTH OF PENNSYLVANIA — REGISTERED PROFESSIONAL ENGINEER — DAVID W. HURD — No. PE061160

SEAL

RQ — W.M. Jordan COMPANY — A JOINT VENTURE

Michael Baker INTERNATIONAL
100 AIRSIDE DRIVE
MOON TOWNSHIP, PA 15108
A/E INFO

APPROVED
FOR COMMANDER NAVFAC

ACTIVITY
MARINE CORPS BASE CAMP LEJEUNE

SATISFACTORY TO DATE	DD/MM/YY
DES EMB	DRW KC CHK DWH
PM / DM	TOWLER / ROOT
BRANCH HEAD	SCE
DESIGN DIRECTOR	R.L.Stephens, Jr.
FIRE PROTECTION	DPS

DEPARTMENT OF THE NAVY
NAVAL FACILITIES ENGINEERING SYSTEMS COMMAND
ATLANTIC DESIGN AND CONSTRUCTION
NAVAL FACILITIES ENGINEERING SYSTEMS COMMAND ATLANTIC
NORFOLK, VA
JACKSONVILLE, NC
LOGCOM CSP WAREHOUSE
MCB CAMP LEJEUNE

MECHANICAL - DETAILS

SCALE:	AS NOTED
EPROJECT NO.:	1639600
CONSTR. CONTR. NO.	N40085-20-C-0059
NAVFAC DRAWING NO.	14111335
SHEET	312 OF 447

M-505

DRAWFORM REVISION: 25 AUGUST 2020

P1527 FINAL SUBMISSION - 11/18/2021

PLOTTED: 11/11/2021 3:06:57 PM

FILE NAME: BIM 360://HF PACKAGE 3/P1527 LOG COM CSP-1639600-M.rvt

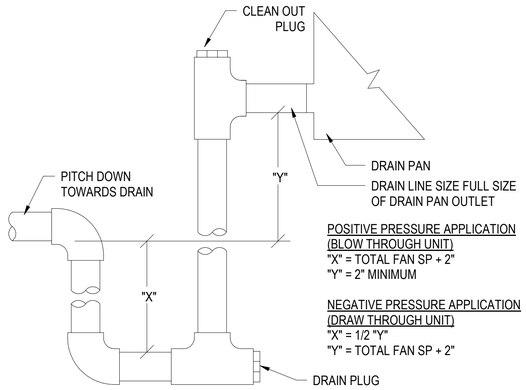

C1 CONDENSATE TRAP/DRAIN DETAIL
SCALE: NTS

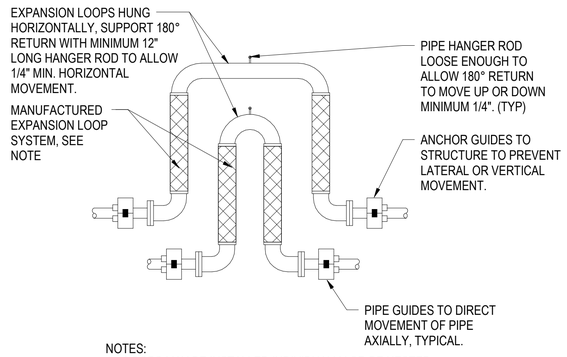

NOTES:
1. LOOPS MAY BE INSTALLED INDIVIDUALLY OR BE NESTED (AS SHOWN) PER MANUFACTURERS RECOMMENDATIONS.

B1 HYDRONIC EXPANSION LOOP DETAIL
SCALE: NTS

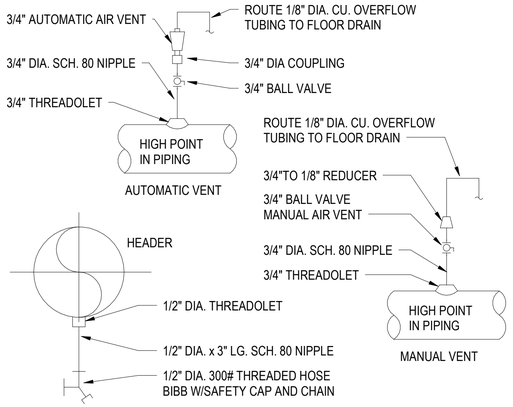

A1 VENT AND DRAIN DETAIL
SCALE: NTS

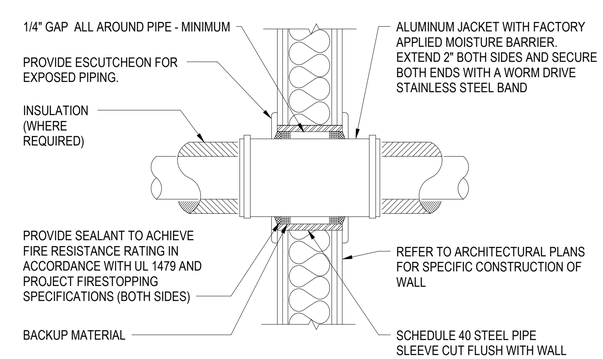

NOTES:
1. FOR GYB BOARD WALLS PROVIDE MIN. 16 GUAGE GALV. STEEL SLEEVE WITH LOCK-TYPE LONGITUDINAL SEAM.
2. PIPE SLEEVES FOR NON-FIRE RATED WALLS SHALL BE PROVIDED WITH CLEARANCES IN ACCORDANCE WITH THE MECHANICAL SEISMIC SPECIFICATIONS.

C2 WALL PENETRATON DETAIL
SCALE: NTS

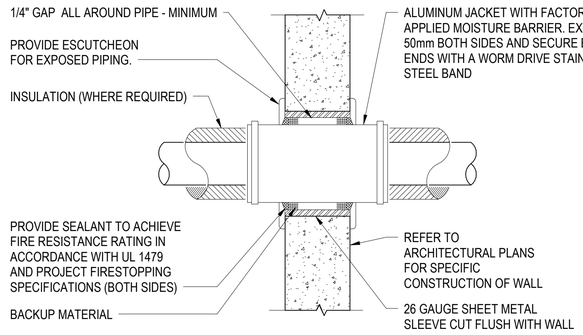

NOTES:
1. FOR GYB. BOARD WALLS PROVIDE MIN. 16 GAUGE GALV. STEEL SLEEVE WITH LOCK-TYPE LONGITUDINAL SEAM.

B2 PIPE WALL PENETRATION DETAIL
SCALE: NTS

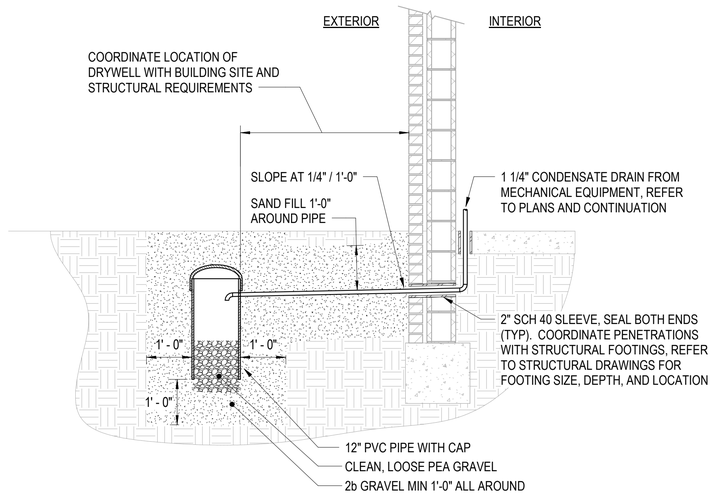

C4 DRYWELL DETAIL
SCALE: NTS

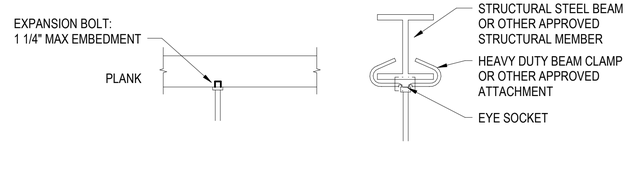

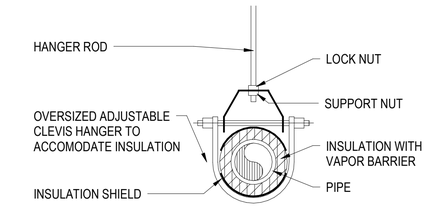

NOTES:
1. REFER TO SPECIFICATIONS FOR HANGER ROD SIZES AND SPACING. THE SPACING SHOWN IN SPECIFICATION IS MAXIMUM SPACING PIPE WILL SPAN. THE HANGER SUPPORTS AND STRUCTURAL ELEMENTS OF THE BUILDING SHOULD BE CHECKED FOR LOAD SUPPORT. SPACING MAY HAVE TO BE REDUCED TO LIGHTEN LOAD ON CERTAIN HANGER SUPPORTS. DERATE EXP. SHIELDS BY 50%.

A4.2 PIPE HANGER DETAIL
SCALE: NTS

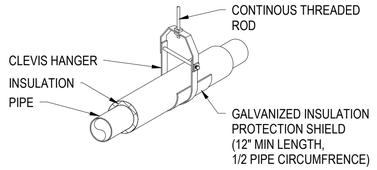

A4.1 TYPICAL PIPE SUPPORT DETAIL
SCALE: NTS

APPR	
DATE	
DESCRIPTION	
SYM	

NAVFAC

COMMONWEALTH OF PENNSYLVANIA — REGISTERED PROFESSIONAL ENGINEER — DAVID W HURD — No PE061160 — SEAL

WJM Jordan COMPANY — A JOINT VENTURE

Michael Baker INTERNATIONAL
100 AIRSIDE DRIVE
MOON TOWNSHIP, PA 15108
A/E INFO

APPROVED

FOR COMMANDER NAVFAC

ACTIVITY: MARINE CORPS BASE CAMP LEJEUNE

SATISFACTORY TO DATE	DD/MM/YY
DES EMB	DRW KC CHK DWH
PM / DM	TOWLER / ROOT
BRANCH HEAD	SCE
DESIGN DIRECTOR	R.L.Stephens, Jr.
FIRE PROTECTION	DPS

DEPARTMENT OF THE NAVY
NAVAL FACILITIES ENGINEERING SYSTEMS COMMAND
ATLANTIC DESIGN AND CONSTRUCTION
NAVAL FACILITIES ENGINEERING SYSTEMS COMMAND ATLANTIC
NORFOLK, VA
MCB CAMP LEJEUNE
JACKSONVILLE, NC
LOGCOM CSP WAREHOUSE
MECHANICAL - DETAILS

SCALE:	AS NOTED
EPROJECT NO.:	1639600
CONSTR. CONTR. NO.	N40085-20-C-0059
NAVFAC DRAWING NO.	14111336
SHEET	313 OF 447

M-506

DRAWFORM REVISION: 25 AUGUST 2020

P1527 FINAL SUBMISSION - 11/18/2021

PLOTTED: 11/11/2021 3:06:59 PM

FILE NAME: BIM 360://HF PACKAGE 3/P1527 LOG COM CSP- 1639600-M.rvt

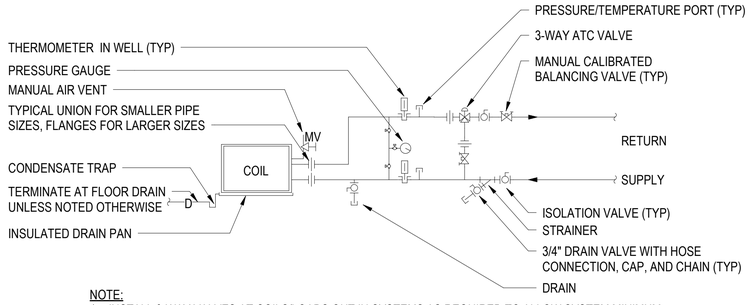

NOTE:
1. INSTALL 3-WAY VALVES AT COILS/LOADS OUT IN SYSTEMS AS REQUIRED TO ALLOW SYSTEM MINIMUM FLOWS, AND TO ALLOW PIPING SYSTEM THROUGHOUT BUILDING TO STAY AT TEMPERATURE
2. DRAIN PAN & TRAP REQUIRED ON HYDRONIC HEATING COILS UNLESS NOTED OTHERWISE

C4 COIL PIPING W/ 3-WAY VALVES
SCALE: NTS

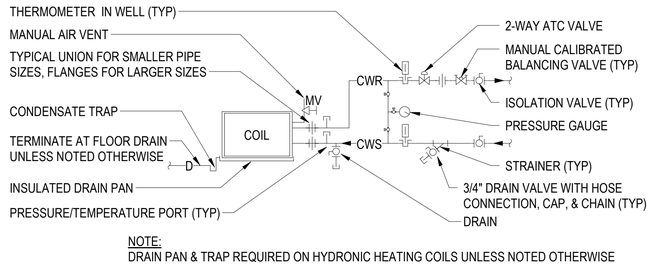

NOTE:
DRAIN PAN & TRAP REQUIRED ON HYDRONIC HEATING COILS UNLESS NOTED OTHERWISE

B4 COIL PIPING W/ 2-WAY VALVES DETAIL
SCALE: NTS

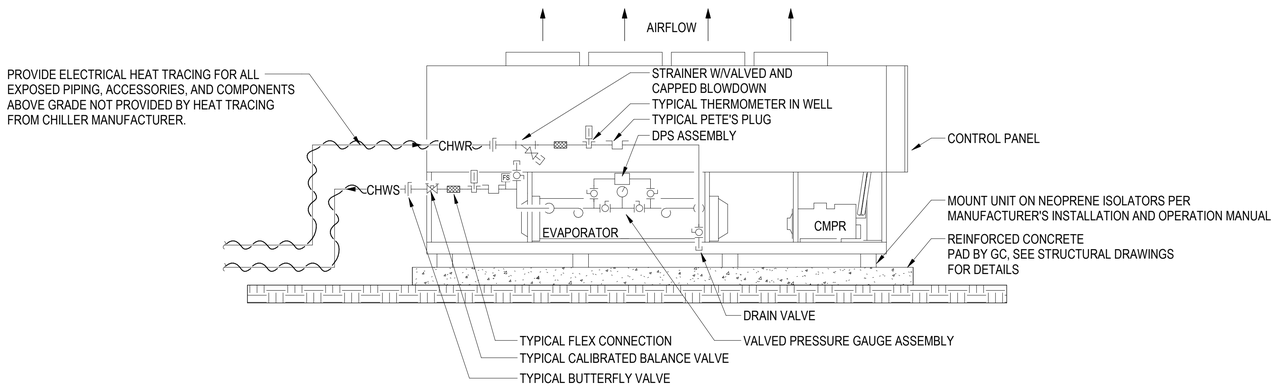

A3 AIR COOLED CHILLER PIPING DETAIL
SCALE: NTS

APPR	DATE	DESCRIPTION	SYM

NAVFAC

COMMONWEALTH OF PENNSYLVANIA — REGISTERED PROFESSIONAL ENGINEER — DAVID W. HURD — No. PE061160

SEAL

RQ W.M. Jordan COMPANY — A JOINT VENTURE

Michael Baker INTERNATIONAL
100 AIRSIDE DRIVE
MOON TOWNSHIP, PA 15108
A/E INFO

APPROVED

FOR COMMANDER NAVFAC

ACTIVITY
MARINE CORPS BASE
CAMP LEJEUNE

SATISFACTORY TO DATE DD/MM/YY

DES	DRW	CHK
EMB	KC	DWH

PM / DM: TOWLER / ROOT
BRANCH HEAD: SCE
DESIGN DIRECTOR: R.L.Stephens, Jr.
FIRE PROTECTION: DPS

DEPARTMENT OF THE NAVY
NAVAL FACILITIES ENGINEERING SYSTEMS COMMAND ATLANTIC
ATLANTIC DESIGN AND CONSTRUCTION
NAVAL FACILITIES ENGINEERING SYSTEMS COMMAND ATLANTIC
NORFOLK, VA
MCB CAMP LEJEUNE
JACKSONVILLE, NC
LOGCOM CSP WAREHOUSE

MECHANICAL - DETAILS

SCALE: AS NOTED
EPROJECT NO.: 1639600
CONSTR. CONTR. NO. N40085-20-C-0059
NAVFAC DRAWING NO. 14111337
SHEET 314 OF 447

M-507

DRAWFORM REVISION: 25 AUGUST 2020

P1527 FINAL SUBMISSION - 11/18/2021

PLOTTED: 11/11/2021 3:07:00 PM

FILE NAME: BIM 360://HF PACKAGE 3/P1527 LOG COM CSP-1639600-M.rvt

AIR HANDING UNIT (AHU) SCHEDULE - P1527

TAG	UNIT AIRFLOWS			CHILLED WATER COOLING COIL											HOT WATER HEATING COIL										ENERGY RECOVERY SECTION				SUPPLY FAN DATA				EXHAUST FAN DATA				ELECTRICAL					BASIS OF DESIGN		NOTES
				CAPACITY		EAT		LAT																	SUMMER		WINTER																	
	SUPPLY (CFM) MAX / MIN	OA (CFM)	EXH/ RELIEF (CFM)	TOTAL (MBH)	SENSIBLE (MBH)	DB (°F)	WB (°F)	DB (°F)	WB (°F)	ROWS/ (FINS PER FT)	FLOW (GPM)	EWT (°F)	LWT (°F)	WPD (FT H2O)	APD (IN H2O)	CAP (MBH)	EAT (°F)	LAT (°F)	ROWS/ (FINS PER FT)	FLOW (GPM)	EWT (°F)	LWT (°F)	WPD (FT H2O)	APD (IN H2O)	OA	RET/EXH	OA	RET/EXH	FAN QTY	FAN HP (EA)	TOTAL SP (IN WG)	EXT SP (IN WG)	FAN QTY	FAN HP (EA)	TOTAL SP (IN WG)	EXT SP (IN WG)	CIRCUIT	VOLT / PHASE / HERTZ	FLA	MCA	MOP	MANUF	MODEL	
																									ENT AIR (TOP) LVG AIR (BOT) (DB °F/ WB °F)	ENT AIR (TOP) LVG AIR (BOT) (DB °F/ WB °F)	ENT AIR (TOP) LVG AIR (BOT) (°F)	ENT AIR (TOP) LVG AIR (BOT) (°F)																
AHU-01	20,000 / 11, 925	6,200	4,200	1086	647	82.0	69.7	53.0	52.5	8 / (84)	208.1	42.0	52.4	17.6	1.13	223	46.1	63	1 / (80)	14.9	140	110	0.74	0.07	91.0 / 79.0	78.0 / 65.0	26.0	68.0	4	15	8.15	3.00	1	7.5	3.76	2.00	1 - SF	460 / 3 / 60	80.0	100.0	175	TRANE	CSAA	1 - 6
																									83.2 / 72.9	89.6 / 75.3	47.7	35.9									2 - EF	460 / 3 / 60	11.0	13.8	20.0			
AHU-02	7,000 / 7,000	7,000	6,300	---	---	---	---	---	---	---	---	---	----	---	---	486	26.0	90	2 / (132)	32.5	140	110	0.42	0.10	---	---	26.0	60.0	2	7.5	6.13	2.00	2	5	4.28	1.50	1 - SF	460 / 3 / 60	21.0	26.3	45	TRANE	CSAA	1 - 4
																									---	---	43.1	41.0									2 - EF	460 / 3 / 60	14.0	17.5	30.0			

NOTES:
1. HEATING AND COOLING COIL SIZING BASED ON REMOVAL/FAILURE OF ENERGY RECOVERY SECTION.
2. UNIT SHALL BE FACTORY WIRED BY MANUFACTUER; CIRCUIT CONNECTIONS AS SCHEDULED FOR SUPPLY/EXHAUST FAN SECTIONS.
3. UNIT COILS SHALL BE COPPER TUBE ALUMINIM FIN WITH ELECTROFIN COATING; ALL INTERIOR CASING PANELS SHALL BE STAINLESS STEEL.
4. PROVIDE WITH MERV 8 AND MERV 13 FILTERS UPSTREAM OF THE UNIT HEAT EXCHANGER IN BOTH THE OUTSIDE AIR AND EXHAUST AIR STREAMS; PROVIDE WITH 2 SETS OF FILTERS; PROVIDE DIFFERNTIAL PRESSURE GAUGES ACROSS FILTER SECTIONS.
5. PROVIDE 120/1/60 ELECTRICAL FEED FOR UV COIL DISINFECTION SYSTEM.
6. HEATING COIL TO BE PROVIDED WITH 3-WAY VALVE FOR TO ALLOW MINIUM FLOW BYPASS AND CONTINUOUS HOT WATER DISTRUBTION TO END OF REVERSE RETURN LOOPS.

VIBRATION ISOLATION SCHEDULE - P1527

EQUIPMENT TYPE	TAG	HP	BASE TYPE	ISOLATOR TYPE	MINIMUM LOADED STATIC DEFLECTION (INCHES)	NOTES
AIR HANDLING UNIT	AHU-01, 02	ANY	4" HOUSKEEPING PAD	NA (SEE NOTE 2)	NA (SEE NOTE 2)	1 - 4
PUMPS (INLINE/FLOOR MOUNTED)	P-01, 02, 03, 04	5 TO 25	DIRECT	SPRING	0.75	1, 4
FANS; INLINE ≤ 22" DIA	EF, SF-#	ANY	MFG RECOMMENDED	SPRING HANGAR	0.75	1, 3
BOILERS	B-01, 02, 03, 04	ALL	DIRECT	RUBBER PAD	0.25	1, 2, 4
AIR COOLED CHILLER	CH-01	ANY	OUTDOOR EQUIPMENT PAD	NA (SEE NOTE 2)	NA (SEE NOTE 2)	1, 2, 4

NOTES:
1. REFER TO SPECIFICATION SECTION 22 05 48.00 20 MECHANICAL SOUND, VIBRATION AND SEISMIC CONTROL.
2. FANS, PUMPS, COMPRESSORS, ETC. WITHIN MANUFACTURER SUPPLIED EQUIPMENT SHALL BE PROVIDED WITH MANUFACTUER'S RECOMMENDED VIBRATION ISOLATION.
3. FLEXIBLE DUCT CONNECTIONS SHALL BE PROVIDED AT CONNECTIONS TO DUCTWORK.
4. FLEXIBLE PIPING CONNECTIONS SHALL BE PROVIDED AT CONNECTIONS TO SYSTEM PIPING.

11/10/2021 19:37

PACKAGED AIR COOLED CHILLER (CH) SCHEDULE - P1527

TAG	NOMINAL CAPACITY (TONS)	NET CAPACITY @95° OAT (TONS)	EFFICIENCY		EVAPORATOR				CONDENSER FANS		COMPRESSOR				ELECTRICAL			BASIS OF DESIGN		NOTES
			EER	NPLV	EWT (°F)	LWT (°F)	GPM	PD (FT H2O)	NO. OF FANS	FAN FLA (EACH)	QTY	TYPE	NO. OF CIRCUITS	REFRIG. TYPE	VOLTS/ PHASE/ HERTZ	MCA	MOP	MANUF.	MODEL	
CH-01	100	95.2	9.97	14.8	52.9	42	208.1	12.8	8	3.2	4	SCROLL	2	R-410A	460 / 3 / 60	205	225	TRANE	CGAM	1 - 10

NOTES:
1. UNIT PERFORMANCE INDICATED BASED ON 96° AMBIENT AIR TEMPERATURE; CHILLER PHYSICAL DATA: LENGTH = 166"; WIDTH = 89"; HEIGHT = 93"; OPERATING WEIGHT = 6800 LBS; REFRIGERANT CHARGE = 180 LB.
2. PROVIDE CHILLER WITH BACNET COMPATIBLE CHILLER CONTROL...
3. CHILLER TO BE EQUIPPED WITH LOW SOUND FANS; SHELL AND TUBE TYPE EVAPORTATOR HEAT EXCHANGER; MICROCHANNEL CONDENSER WITH CORROSION RESISTANT COATING.
4. CONDENSER FANS TO HAVE SOUND ATTENUATION AS REQUIRED TO REDUCE SOUND PRESSURE LEVELS TO 85 dBA OR LESS WITH WITH A REFERENCE PRESSURE OF 20 MICROPASCALS IAQ AHRI 575.
5. ALL COILS SHALL HAVE COATINGS THAT PASS A 6000 HR ASTM B117 SALT-SPRAY TEST. COIL COATING MUST BE FLEXIBLE POLYMER E-COATING UNIFORMLY COVERING THE COIL. COATING MUST MEET 5B RATING FOR CROSS HATCH ADHESION IN ACCORDANCE WITH ASTM D3359-97. COILS MUST INCLUDE TOP COAT TO PREVENT UV DEGRADATION OF E-COATING FILM; TOP COATING MUST HAVE DRY FILM THICKNESS FROM 120-170µm. FIELD COATED COILS WILL NOT BE ACCEPTED.
6. ELECTRICAL DATA LISTED IS FOR SINGLE POINT POWER CONNECTION; PROVIDE WITH FACTORY INSTALLED SINGLE POINT NON-FUSED DISCONNECT, UNIT MOUNTED WITH LOCKABLE HANDLE. CHILLER TO INCLUDE PHASE LOSS WITH UNDER/OVER VOLTAGE PROTECTION WITH LED INDICATION OF THE FAULT TYPE.
7. PROVIDE WITH VARIABLE FREQUENCY DRIVE UL1995 RATED PANEL FOR CAPACTY CONTROL AND SOFT START. VFD SHALL BE FACTORY MOUNTED AND PRE-WIRED TO COMPRESSOR MOTORS AND CONTROL PANEL.
8. PROVIDE CHILLER WITH FACTORY INSTALLED THERMOSTATICALLY CONTROLLED HEATERS/HEAT TRACING TO PROTECT DOWN TO 10°F AMBIENT IN OFF-CYCLE. HEAT TRACING OF CHW PIPING OUTSIDE OF UNIT TO BE PROVIDED SEPARATELY.
9. CHILLER SHALL BE CAPABLE OF OPERATION IN AMBIENT CONDITIONS TO 15° F.
10. PROVIDE WITH THERMAL DISPERSION TYPE FLOW SWITCH ON EVAPORATOR TO INDICATE PROOF OF FLOW (PADDLE TYPE FLOW SWITCHES ARE NOT ACCEPTABLE).
11. PROVIDE WITH LOUVERED PANELS TO COVER THE CONDENSER COIL FOR PROTECTION AGAINST VANDALISM, DEBRIS OR HAIL.

11/10/2021 19:37

CONTROL & BALANCE VALVE SCHEDULE (CV) - P1527

VALVE	FLOW (GPM)	DESIGN FLOW COEFFICIENT (Cv)	CONFIGURATION (2 WAY OR 3 WAY)	ACTION (MODULATING OR 2 POSITION)	NOTES
VAV BOX HW COILS	0.5	0.25	SEE NOTE 4	MODULATING	1 - 5
	1.0	0.50	SEE NOTE 4	MODULATING	1 - 5
	1.5	0.75	SEE NOTE 4	MODULATING	1 - 5
	2.0	1.00	SEE NOTE 4	MODULATING	1 - 5
	2.5	1.25	SEE NOTE 4	MODULATING	1 - 5
	3.0	1.50	SEE NOTE 4	MODULATING	1 - 5
	3.5	1.75	SEE NOTE 4	MODULATING	1 - 5
	4.0	2.00	SEE NOTE 4	MODULATING	1 - 5
	4.5	2.25	SEE NOTE 4	MODULATING	1 - 5
AHU-01 CHW	208.1	104.05	3 WAY	MODULATING	1 - 3, 5
AHU-01 HW	14.9	7.45	3 WAY	MODULATING	1 - 3, 5
AHU-02 HW	32.5	16.25	2 WAY	MODULATING	1 - 3, 5

NOTES:
1. THE INFORMATION IN THIS SCHEDULE IS BASED ON EQUIPMENT SELECTIONS MADE DURING THE DESIGN. THE CONTRACTOR SHALL VERIFY THE VALVE REQUIREMENTS FOR THE ACTUAL EQUIPMENT PROVIDED.
2. THE FLOW COEFFICIENT Cv (OR FLOW-CAPACITY RATING OF VALVE) IS $C v = Q\sqrt{(SG/\Delta P)}$ WHERE: Q IS THE RATE OF FLOW(GPM), SG IS THE SPECIFIC GRAVITY OF THE FLUID (FOR WATER = 1), ΔP IS THE PRESSURE DROP ACROSS THE VALVE (AT 4 PSI IN THIS SCHEDULE). CONTRACTOR MAY SELECT A DIFFERENT PRESSURE DROP TO SUIT EQUIPMENT REQUIREMENTS IF REQUIRED.
3. TWO POSITION ON/OFF CONTROL VALVE BODIES SHALL BE LINE SIZED. MODULATING VALVE BODIES SHALL BE LINE SIZED WITH CHARACTERIZED PORTING OR ONE TO TWO SIZES SMALLER TO ENSURE CONTROLLABILITY OVER FULL ACTUATOR RANGE. Cv VALUES INDICATED ARE BASED ON FULL FLOW.
4. VAV BOXES SHALL BE PROVIDE WITH MANUFACTURER'S VALVE PACKAGE. VALVES SHALL BE EITHER 2-WAY (TYPICAL) OR 3-WAY (END OF REVERSE RETURN LOOP, BOXES VAV 1.16, 1.17 & 1.18) MODULATING CONTROL VALVE IN ACCORDANCE WITH MANUFACTURER'S EQUIPMENT REQUIREMENTS.
5. BALANCING VALVES AT EACH UNIT WILL HAVE THE SAME FULL FLOW PERFORMANCE AS CONTROL VALVES AS SYSTEM IS BALANCED AT FULL FLOW. AFTER INITIAL SYSTEM BALANCE, THEIR POSITION WILL BE FIXED.

11/10/2021 19:37

DUCTLESS MINI-SPLIT AIR CONDITIONER (SSAC/SSCU) & HEAT PUMP (SSHP/HPCU) SYSTEM SCHEDULE - P1527

TAG (INDOOR / OUTDOOR UNIT)	SPACE SERVED	ARI COOLING CAPACITY		HEATING CAPACITY		ARI MATCHED PAIR EFFICIENCY			INDOOR UNIT				OUTDOOR UNIT					REFRIGERANT PIPING				BASIS OF DESIGN		NOTES
		TOTAL (MBH)	MIN. (MBH)	@ AHRI 47° OUTDOOR	@ 17° OUTDOOR	SEER	EER	HSPF	FAN AIRFLOW MIN-MAX (CFM)	TYPE	SIZE LENGTH X HEIGHT X DEPTH (INCHES)	WEIGHT (LBS)	ELECTRICAL (SEE NOTE 1) VOLTS/ PHASE/ HERTZ	MCA (AMPS)	MOCP (AMPS)	SIZE LENGTH X WIDTH X HEIGHT (INCHES)	WEIGHT (LBS)	LIQUID LINE Ø	VAPOR LINE Ø	MAX PIPING LENGTH (FT)	MAX ELEVATION (FT)	MANUF	MODEL (INDOOR / OUTDOOR UNIT)	
SSAC-01 / SSCU-01	203 TELECOM	12	4.4	-	-	21.0	13.3	-	265 - 455	WALL MTD	36 x 10 x 12	30	208 / 1 / 60	11	28	32 x 12 x 25	100	1/4	1/2	165	100	MITSUBISHI	PKA / PUY	1-3,5-11
SSHP-01 / HPCU-01	108 TELECOM	12	4.4	18	11.1	20.8	12.0	10.2	320 - 425	WALL MTD	36 x 10 x 12	30	208 / 1 / 60	11	28	32 x 12 x 25	100	1/4	1/2	100	100	MITSUBISHI	PKA / PUZ	1 - 11
SSHP-02 / HPCU-02	118 TELECOM	24	10	28	18.3	21.4	12.2	11	635 - 775	WALL MTD	46 x 12 x 15	50	208 / 1 / 60	19	26	38 x 14 x 38	155	3/8	5/8	165	100	MITSUBISHI	PKA / PUZ	1 - 11
SSHP-03 / HPCU-03	106 COMP. EQ. & RSDL DECON. LOTION	24	10	28	18.3	21.4	12.2	11	635 - 775	WALL MTD	46 x 12 x 15	50	208 / 1 / 60	19	26	38 x 14 x 38	155	3/8	5/8	165	100	MITSUBISHI	PKA / PUZ	1 - 10
SSHP-04 / HPCU-04	122 FIRE RISER	18	8	19	11.3	18.5	9.9	10.2	320 - 425	WALL MTD	36 x 10 x 12	30	208 / 1 / 60	11	28	32 x 12 x 25	100	1/4	1/2	100	100	MITSUBISHI	PKA / PUZ	1 - 11

NOTES:
1. INDOOR UNIT SHALL BE POWERED BY THE OUTDOOR UNIT. POWER AND CONTROL WIRING BETWEEN INDOOR AND OUTDOOR UNITS PROVIDED BY MECHANICAL CONTRACTOR.
2. PROVIDE WITH LOCAL DISCONNECT, OVERCURRENT PROTECTION, AND STARTER.
3. ARI COOLING RATED CAPACITIES ARE BASED ON 80°F DB/67°F WB INDOOR TEMPERATURES AND 95°F DB/75°F WB OUTDOOR TEMPERATURES.
4. ARI HEATING RATED CAPACITIES ARE BASED ON 70°F DB/60°F WB INDOOR TEMPERATURES AND 47°F DB/43°F WB OUTDOOR TEMPERATURES.
5. PROVIDE UNIT WITH LOW AMBIENT COOLING CAPABILITY DOWN TO 15°F OR LESS.
6. PROVIDE WITH CONDENSATE PUMP AS REQUIRED TO PROVIDE NECESSARY LIFT TO ACCOMMODATE GRAVITY CONDENSATE DRAINAGE TO POINT OF TERMINATION AS INDICATED ON PLANS.
7. PROVIDE WITH COMPONENTS FULLY CHARGED WITH R-410A REFRIGRANT AND INTERCONNECTING REFRIGERANT PIPING FOR FIELD INSTALLATION.
8. PROVIDE WITH MANUFACTURER'S STANDARD WASHABLE AIR FILTER/FILTRATION SYSTEM.
9. UNIT TO BE PROVIDED WITH BACNET CONTROLLER FOR CONNECTION AND CONTROL FROM BUILDING DDC SYSTEM
10. OUTDOOR UNIT TO BE PROVIDED WITH MANUFACTURER'S STANDARD SEACOAST PROTECTION SYETEM FOR CORROSION RESISTANCE WHEN INSTALLED IN A COASTAL ENVIRONMENT.
11. CONTRACTOR TO VERIFY PERFORMANCE REQUIREMENTS BASED ON COMMUNICATION EQUIPMENT TO BE INSTALLED BY THE GOVERNMENT/END USER; NOTIFY ENGINEER OF INSTALLED COMMUNICATION LOADS FOR REVIEW PRIOR TO PURCHASE OF HVAC EQUIPMENT.

11/10/2021 19:37

APPR | DATE | DESCRIPTION | SYM

NAVFAC

COMMONWEALTH OF PENNSYLVANIA — REGISTERED PROFESSIONAL — DAVID W HURD — ENGINEER — No PE061160 — SEAL

IRQ W.M. Jordan COMPANY — A JOINT VENTURE

Michael Baker INTERNATIONAL
100 AIRSIDE DRIVE
MOON TOWNSHIP, PA 15108 — A/E INFO

APPROVED
FOR COMMANDER NAVFAC
ACTIVITY
MARINE CORPS BASE CAMP LEJEUNE
SATISFACTORY TO DATE DD/MM/YY
DES EMB | DRW AJK | CHK DWH
PM / DM TOWLER / ROOT
BRANCH HEAD SCE
DESIGN DIRECTOR R.L.Stephens, Jr.
FIRE PROTECTION DPS

DEPARTMENT OF THE NAVY
NAVAL FACILITIES ENGINEERING SYSTEMS COMMAND ATLANTIC
ATLANTIC DESIGN AND CONSTRUCTION
MCB CAMP LEJEUNE
NAVAL FACILITIES ENGINEERING SYSTEMS COMMAND
NORFOLK, VA
JACKSONVILLE, NC
LOGCOM CSP WAREHOUSE
MECHANICAL - SCHEDULES

SCALE: AS NOTED
EPROJECT NO.: 1639600
CONSTR. CONTR. NO. N40085-20-C-0059
NAVFAC DRAWING NO. 14111338
SHEET 315 OF 447

M-601

DRAWFORM REVISION: 25 AUGUST 2020

P1527 FINAL SUBMISSION - 11/18/2021

PLOTTED: 11/11/2021 3:07:03 PM

FILE NAME: BIM 360://HF PACKAGE 3/P1527 LOG COM CSP- 1639600-M.rvt

INFRARED RADIANT HEATER (IRH) SCHEDULE - P1527

TAG	BURNER MAX INPUT (MBH)	BURNER MIN INPUT (MBH)	RADIANT TUBE LENGTH PER BURNER (FT)	BURNER QTY	GAS INLET PRESSURE MIN/MAX (IN WC)	MOUNTING HEIGHT	ELECTRICAL DATA		BASIS OF DESIGN		NOTES
							VOLT/ PHASE/ HERTZ	AMPS RUN / START	MANUF	MODEL	
IRH-01	150	115	52	1	5 / 14	24'-6"	120 / 1 / 1	1	A.R.S.	DUH150-S50	1 - 3
IRH-02	150	115	52	1	5 / 14	24'-6"	120 / 1 / 1	1	A.R.S.	DUH150-S50	1 - 3
IRH-03	150	115	52	1	5 / 14	24'-6"	120 / 1 / 1	1	A.R.S.	DUH150-S50	1 - 3
IRH-04	150	115	52	1	5 / 14	24'-6"	120 / 1 / 1	1	A.R.S.	DUH150-S50	1 - 3
IRH-05	150	115	52	1	5 / 14	24'-6"	120 / 1 / 1	1	A.R.S.	DUH150-S50	1 - 3
IRH-06	150	115	52	1	5 / 14	24'-6"	120 / 1 / 1	1	A.R.S.	DUH150-S50	1 - 3
IRH-07	150	115	52	1	5 / 14	24'-6"	120 / 1 / 1	1	A.R.S.	DUH150-S50	1 - 3
IRH-08	150	115	52	1	5 / 14	24'-6"	120 / 1 / 1	1	A.R.S.	DUH150-S50	1 - 3
IRH-09	205	160	72	1	5 / 14	27'-0"	120 / 1 / 1	1	A.R.S.	DUH205-S70	1 - 3
IRH-10	205	160	72	1	5 / 14	27'-0"	120 / 1 / 1	1	A.R.S.	DUH205-S70	1 - 3

NOTES:
1. PROVIDE HEAT SHIELDS WHERE RADIANT TUBES PASS OVER ADJACENT ITEMS AS REQUIRED.
2. PROVIDE WITH FULLY AUTOMATIC 4-TRY DIRECT SPARK IGNITION CONTROL, 100% SHUT OFF.
3. PROVIDE THERMOSTAT, VENT PIPE, ROOF TERMINATION KIT AND BURNER / BLOWER ASSEMBLY.

11/10/2021 19:37

HYDRONIC UNIT HEATER (UH) / SCHEDULE - P1527

TAG	SPACE SERVED	AIRFLOW (CFM)	GPM	EWT/ LWT (°F)	MBH	MAX WPD (FT H20)	ELECTRICAL DATA			BASIS OF DESIGN		NOTES
							FAN MOTOR HP OR (W)	AMPS	VOLT/ PHASE/ HERTZ	MANUF.	MODEL	
UH-01	120 MECHANICAL	500	0.7	140 / 110	9.5	0.9	(16)	0.8	115 / 1 / 60	STERLING	HS-118A	1, 2
UH-02	213 JEFS BOILER ROOM	500	0.7	140 / 110	9.5	0.9	(16)	0.8	115 / 1 / 60	STERLING	HS-118A	1, 2
UH-03	212 JEFS AHU	500	0.7	140 / 110	9.5	0.9	(16)	0.8	115 / 1 / 60	STERLING	HS-118A	1, 2
UH-04	124 WHSE MECH	500	0.7	140 / 110	9.5	0.9	(16)	0.8	115 / 1 / 60	STERLING	HS-118A	1, 2
			2.8									

NOTES:
1. PROVIDE WITH LOCAL DISCONNECT, OVERCURRENT PROTECTION, AND STARTER.
2. UNIT TO BE CONTROLLED BY DDC SYSTEM THERMOSTAT - REFER TO CONTROLS DRAWINGS.

11/10/2021 19:37

VARIABLE AIR VOLUME (VAV) BOX SCHEDULE - P1527

TAG	SPACE SERVED	COOLING CFM		INLET DUCT SIZE (DIA)	REHEAT COIL DATA								BASIS OF DESIGN		NOTES
		MAX	MIN		HTG AIRFLOW (CFM)	MBH	GPM	COIL ROWS	HW TEMP (°F) EWT	HW TEMP (°F) LWT	MAX. WPD (FT H2O)	LAT (°F)	MANUF	MODEL	
VAV-01	112 ESAPI OFFICE	250	140	5	140	6.7	0.5	2	140	113.2	5.00	99.1	TRANE	VCWF	1 - 4
VAV-02	111 ESAPI ROOM	570	285	8	285	13.8	1.0	3	140	112.4	5.00	99.6	TRANE	VCWF	1 - 4
VAV-03	110 NDTE / STORAGE	800	440	10	440	19.2	1.5	2	140	114.3	5.00	95.3	TRANE	VCWF	1 - 4
VAV-04	110A NDTE STORAGE, 108 TELECOM	225	135	5	135	6.6	0.5	2	140	113.7	5.00	99.9	TRANE	VCWF	1 - 4
VAV-05	107 RADIOLOGICAL	1,300	1,060	12	1,060	49.3	4.0	3	140	115.3	5.00	97.9	TRANE	VCWF	1 - 4
VAV-06	106 COMP EQ & RSDL	800	400	10	400	18.2	1.5	2	140	115.7	5.00	98.0	TRANE	VCWF	1 - 4
VAV-07	103 BREAK	660	330	8	330	13.5	1.5	2	140	122.0	5.00	92.8	TRANE	VCWF	1 - 4
VAV-08	119 CBRN OFFICE	440	300	8	300	14.1	1.0	3	140	111.8	5.00	98.3	TRANE	VCWF	1 - 4
VAV-09	102 MOTHER'S ROOM	175	90	4	90	3.9	0.5	1	140	124.3	5.00	95.3	TRANE	VCWF	1 - 4
VAV-10	101 REG MGR	175	90	4	90	3.9	0.5	1	140	124.3	5.00	95.3	TRANE	VCWF	1 - 4
VAV-11	100 GOV'T OFFICE	180	130	4	130	6.5	0.5	2	140	114.2	5.00	100.8	TRANE	VCWF	1 - 4
VAV-12	113A STORAGE AREA SL-3 / REPAIR PARTS, 113B FINAL QC	650	440	10	440	19.2	1.5	2	140	114.3	5.00	95.3	TRANE	VCWF	1 - 4
VAV-13	114 JSMLT TEST AREA	550	265	8	265	13.3	1.0	3	140	113.3	5.00	101.5	TRANE	VCWF	1 - 4
VAV-14	115 SANITATION AREA	500	320	8	320	14.4	1.0	3	140	111.1	5.00	96.7	TRANE	VCWF	1 - 4
VAV-15	117 MAINTENANCE	400	245	6	245	10.7	1.0	2	140	118.6	5.00	96.2	TRANE	VCWF	1 - 4
VAV-16	202 BREAKROOM, 203 TELECOM	1,250	625	12	625	25.4	2.0	2	140	114.6	5.00	92.5	TRANE	VCWF	1 - 5
VAV-17	200 CLASSROOM	2,000	1,000	14	1,000	42.1	3.5	2	140	115.9	5.00	93.9	TRANE	VCWF	1 - 5
VAV-18	201 TECHNICIAN / TECHNICAL REF LIBRARY	1,000	500	10	500	22.2	2.0	2	140	117.8	5.00	96.0	TRANE	VCWF	1 - 5
VAV-19	206 ADMIN STORAGE	300	150	5	150	6.7	0.5	2	140	113.2	5.00	99.1	TRANE	VCWF	1 - 4
VAV-20	207 JEFS FST OIC	400	200	6	200	9.8	1.0	2	140	120.4	5.00	100.1	TRANE	VCWF	1 - 4
VAV-21	210 JEFS FSS OPERATIONS OFFICER	250	125	5	125	4.5	0.5	1	140	121.9	5.00	88.3	TRANE	VCWF	1 - 4
VAV-22	211 ASSISTANT OIC / NCOIC	200	180	5	180	9.2	1.0	2	140	121.5	5.00	102.4	TRANE	VCWF	1 - 4
VAV-23	208 STORAGE WAREHOUSE PREPERATION, 118 TELECOM	2,300	1,150	14	1,150	48.3	4.5	2	140	118.5	5.00	93.8	TRANE	VCWF	1 - 4
VAV-24	208A TEST & REPAIR	1,400	825	12	825	33.0	3.0	2	140	118.0	5.00	92.1	TRANE	VCWF	1 - 4
VAV-25	208B VISUAL INSPECTION & REPAIR	1,000	800	10	800	30.4	3.0	2	140	119.7	5.00	90.5	TRANE	VCWF	1 - 4
VAV-26	209 SHIPPING / RECEIVING / WATER TESTING	1,100	940	12	940	44.9	3.5	3	140	114.3	5.00	99.2	TRANE	VCWF	1 - 4
VAV-27	209A HAZMAT STORAGE	275	275	6	275	14.3	1.0	3	140	111.4	5.00	103.8	TRANE	VCWF	1 - 4
VAV-28	C020 CORR, V020 VESTIBULE/ENTRY	450	270	8	270	13.5	1.0	3	140	113.0	5.00	101.0	TRANE	VCWF	1 - 4
VAV-29	C021 CORR, C022 CORR, V021 VESTIBULE/ENTRY	400	250	6	250	13.7	1.0	3	140	112.5	5.00	105.7	TRANE	VCWF	1 - 4

NOTES:
1. MAXIMUM ALLOWABLE STATIC PRESSURE LOSS ACROSS THE BOX = 0.5 INCHES WATER GAUGE.
2. MAXIMUM DISCHARGE STATIC PRESSURE DOWNSTREAM = 0.5 INCHES WATER GAUGE.
3. MAXIMUM ALLOWABLE DISCHARGE OR RADIATED NOISE CRITERIA (NC) = 30.
4. HOT WATER COIL PERFORMANCE DATA IS BASED ON A 140 DEGREE EWT - MFG TO PROVIDE SPECIFIC COIL PARAMETERS (FPI, ETC.) TO MEET ALL REQUIRED PERFORMANCE CRITERIA (MBH @ 140° INPUT; TOTAL APD ACROSS BOX & COIL)
5. VAV BOX HEATING COIL TO BE PROVIDED WITH 3-WAY VALVE FOR TO ALLOW MINIUM FLOW BYPASS AND CONTINUOUS HOT WATER DISTRUBTION TO END OF REVERSE RETURN LOOPS.

11/10/2021 19:37

ELECTRIC WALL (EWH) & UNIT HEATER (EUH) SCHEDULE - P1527

TAG	AREA (ROOM) SERVED	AIR FLOW (CFM)	HEATER DATA			WEIGHT (LBS)	BASIS OF DESIGN		NOTES
			KW	VOLTS/ PHASE/ HERTZ	AMPS		MANUF	MODEL	
EWH-01	109 ELEC	80	1.5	120 / 1 / 60	12.9	10	INDEECO	WLI	1
EWH-02	121 ELEC	80	1.5	120 / 1 / 60	12.9	10	INDEECO	WLI	1
EWH-03	205 ELECTRICAL	80	1.5	120 / 1 / 60	12.9	10	INDEECO	WLI	1
EUH-01	116 ELECTRICAL	350	3.7	480 / 3 / 60	4.66	25	INDEECO	ULIR	1
EUH-02	123 ELEC	350	3.7	480 / 3 / 60	4.66	25	INDEECO	ULIR	1

NOTES :
1. UNIT SHALL BE CONTROLLED BY BUILDING DDC SYSTEM THERMOSTAT; PROVIDE WITH DISCONNECT.

11/10/2021 19:37

AIR CURTAIN (AC) SCHEDULE - P1527

TAG	AREA SERVED	LENGTH	NET WEIGHT (LB)	MAX CFM @ NOZZLE	MAX FPM @ NOZZLE	dBa @ 10' FROM NOZZLE	HEATING COIL DATA								MOTOR DATA			BASIS OF DESIGN		NOTES
							HTG AIRFLOW (CFM)	MBH	GPM	COIL ROWS	HW TEMP (°F) EWT	HW TEMP (°F) LWT	MAX. WPD (FT H2O)	EAT (°F)	LAT (°F)	VOLT/ PHASE/ HERTZ	HP	AMP EA.	MANUF	MODEL	
AC-01	104.1 SHIPPING / RECEIVING 2 DOCKS	123.2	410	9668	4218	63	7614	244.9	19.4	2	140	114.4	3.9	60	89.5	480 / 3 / 60	3 @ 3/4	1.6	POWERED AIRE, INC.	THS-3-120HW	1 - 3
AC-02	104.1 SHIPPING / RECEIVING 2 DOCKS	123.2	410	9668	4218	63	7614	244.9	19.4	2	140	114.4	3.9	60	89.5	480 / 3 / 60	3 @ 3/4	1.6	POWERED AIRE, INC.	THS-3-120HW	1 - 3
AC-03	104.3 ISSUE / RETURN AREA A	123.2	410	9668	4218	63	7614	244.9	19.4	2	140	114.4	3.9	60	89.5	480 / 3 / 60	3 @ 3/4	1.6	POWERED AIRE, INC.	THS-3-120HW	1 - 3
AC-04	209 SHIPPING / RECEIVING / WATER TESTING	123.2	410	9668	4218	63	7614	244.9	19.4	2	140	114.4	3.9	60	89.5	480 / 3 / 60	3 @ 3/4	1.6	POWERED AIRE, INC.	THS-3-120HW	1 - 3
									77.6											

NOTES:
1. PROVIDE WITH WALL MOUNTED CONTROL PANEL & CONCEALED TYPE MAGNETIC DOOR SWITCH; UNIT SHALL OPERATE WHEN DOOR IS OPEN AND OUTSIDE TEMPERATURES ARE BELOW 55° (ADJ.).
2. SUPPLY COMPLETE WITH WATERTIGHT JUNCTION BOX MOUNTED ON BOTTOM CENTER OF MOTOR ASSEMBLY.
3. PROVIDE WITH MANUAL MOTOR STARTER AND DISCONNECT.

11/10/2021 19:37

APPR | DATE | DESCRIPTION | SYM

NAVFAC

COMMONWEALTH OF PENNSYLVANIA — REGISTERED PROFESSIONAL — DAVID W. HURD — ENGINEER — No. PE061160 — SEAL

IRQ Jordan Company — A JOINT VENTURE

Michael Baker INTERNATIONAL
100 AIRSIDE DRIVE
MOON TOWNSHIP, PA 15108 — A/E INFO

APPROVED
FOR COMMANDER NAVFAC
ACTIVITY
MARINE CORPS BASE CAMP LEJEUNE
SATISFACTORY TO DATE DD/MM/YY
DES EMB | DRW AJK | CHK DWH
PM / DM TOWLER / ROOT
BRANCH HEAD SCE
DESIGN DIRECTOR R.L.Stephens, Jr.
FIRE PROTECTION DPS

DEPARTMENT OF THE NAVY
NAVAL FACILITIES ENGINEERING SYSTEMS COMMAND ATLANTIC
ATLANTIC DESIGN AND CONSTRUCTION
NAVAL FACILITIES ENGINEERING SYSTEMS COMMAND ATLANTIC
NORFOLK, VA
MCB CAMP LEJEUNE
JACKSONVILLE, NC
LOGCOM CSP WAREHOUSE
MECHANICAL - SCHEDULES

SCALE: AS NOTED
EPROJECT NO.: 1639600
CONSTR. CONTR. NO. N40085-20-C-0059
NAVFAC DRAWING NO. 14111339
SHEET 316 OF 447

M-602

DRAWFORM REVISION: 25 AUGUST 2020

P1527 FINAL SUBMISSION - 11/18/2021

PLOTTED: 11/11/2021 3:07:07 PM
FILE NAME: BIM 360://HF PACKAGE 3/P1527 LOG COM CSP-1639600-M.rvt

LOUVER (L) SCHEDULE - P1527

TAG	SERVING	SERVICE	SIZE WxH (IN)	DESIGN AIRFLOW (CFM)	FREE AREA (SQFT)	MAX PRESSURE DROP (IN WG)	BASIS OF DESIGN		NOTES
							MANUF	MODEL	
L-01	AHU-01 INTAKE, SF-01, 116 ELECTRICAL (EF-05)	INTAKE	60x48	8020	>11.5	0.10	RUSKIN	ELF6375DXD	1 - 5
L-02	AHU-01 EXHAUST	EXHAUST	42x48	6000	>7.5	0.10	RUSKIN	ELF6375DXD	1 - 4
L-03	213 JEFS BOILER ROOM (SF-01)	RELIEF	24x24	1400	>1.8	0.10	RUSKIN	ELF6375DXD	1 - 4
L-04	AHU-02 INTAKE, 120 MECH	INTAKE	72x48	9000	>12.9	0.10	RUSKIN	ELF6375DXD	1 - 5
L-05	AHU-02 EXHAUST, EF-03, EF-04	EXHAUST	54x48	7565	>9.5	0.10	RUSKIN	ELF6375DXD	1 - 5
L-06	EF-09, EF-10	EXHAUST	24x18	1000	>1.3	0.10	RUSKIN	ELF6375DXD	1 - 5
L-07	205 ELECTRICAL	INTAKE	24x12	460	>0.7	0.10	RUSKIN	ELF6375DXD	1 - 4
L-08	EF-06, EF-07	INTAKE	36x30	2350	>3.4	0.10	RUSKIN	ELF6375DXD	1 - 5
L-09	109 ELEC (EF-01)	INTAKE	12x18	260	>0.37	0.10	RUSKIN	ELF6375DXD	1 - 4
L-10	EF-01	EXHAUST	12x18	260	>0.33	0.10	RUSKIN	ELF6375DXD	1 - 4
L-11	121 ELEC (EF-02)	INTAKE	12x12	210	>0.3	0.10	RUSKIN	ELF6375DXD	1 - 4
L-12	121 ELEC (EF-02)	EXHAUST	12x12	210	>0.3	0.10	RUSKIN	ELF6375DXD	1 - 4
L-13	104 LOGCOM WAREHOUSE	INTAKE	60x48	8000	>11.45	0.10	RUSKIN	ELF6375DXD	1 - 4
L-14	105 LOGCOM WAREHOUSE	INTAKE	60x48	8000	>11.45	0.10	RUSKIN	ELF6375DXD	1 - 4
L-15	105 LOGCOM WAREHOUSE	INTAKE	60x48	8000	>11.45	0.10	RUSKIN	ELF6375DXD	1 - 4
L-16	105 LOGCOM WAREHOUSE	EXHAUST	72x48	11000	>13.8	0.10	RUSKIN	ELF6375DXD	1 - 4
L-17	105 LOGCOM WAREHOUSE	EXHAUST	72x48	11000	>13.8	0.10	RUSKIN	ELF6375DXD	1 - 4
L-18	116 ELECTRICAL	EXHAUST	30x24	2,000	>2.5	0.10	RUSKIN	ELF6375DXD	1 - 4
L-19	123 ELEC	EXHAUST	24x12	620	>0.8	0.10	RUSKIN	ELF6375DXD	1 - 4
L-20	205 ELECTRICAL	EXHAUST	24x12	550	>0.7	0.10	RUSKIN	ELF6375DXD	1 - 4

NOTES:
1. PROVIDE MANUFACTURER'S STANDARD COLOR AND FINISH CHART WITH SUBMITTAL FOR SELECTION BY ARCHITECT.
2. LOUVER SHALL BE AMCA LISTED TO MEET AMCA 550 (HIGH VELOCITY WIND DRIVEN RAIN RESISTANT) AND MIAMI-DADE COUNTY APPROVED.
3. PROVIDE WITH LOW LEAKAGE MOTORIZED DAMPER(S) FOR ATFP COMPLIANCE (3 CFM/SQFT AGAINST 1" DIFFERENTIAL PRESSURE) INTERNAL OR EXTERNAL TO LOUVER. SEE DRAWINGS FOR LOCATION OF MOTORIZED DAMPERS.
4. PROVIDE CORROSION RESISTANT COATINGS AND MATERIALS; PROVIDE WITH ALUMINUM BIRDSCREEN.
5. LOUVER SELECTED FOR SHARED SERVICE OF MULTIPLE DEVICES; INSULATED PLENUM BOX SHALL BE PROVIDED BEHIND LOUVER WITH DUCTED CONNECTION TO EACH DEVICE (COMPLETE WITH BACKDRAFT DAMPERS TO PREVENT CROSS FLOW IN ADDITION TO MOTORIZED DAMPERS FOR CONTROL AND ATFP SHUTDOWN).

11/10/2021 19:37

DEHUMIDIFIER (DEH) SCHEDULE - P1527

TAG	AREA SERVED	AMBIENT TEMP. OPERATING RANGE	CAPACITY (PINTS PER DAY)	ELECTRICAL			BASIS OF DESIGN		NOTES
				VOLT/ PHASE/ HERTZ	AMPS	CONNECTION (DISCONNECT) TYPE	MANUF	MODEL	
DEH-01	212 JEFS AHU	56-95°F	110	115 / 60 / 1	6.4	HARDWIRED	SANTA FE	CLASSIC	1 - 6

NOTES:
1. UNIT SHALL BE PROVIDED WITH FULL CHARGE OF R-410A REFRIGERANT
2. UNIT WEIGHT = 110 LBS; DIMENSIONS (L x W x H inches): 20 x 17 x 36
3. MOUNT UNIT ON WALL BRACKET; PROVIDE WITH CONDENSATE PUMP AS REQUIRED TO PROVIDE NECESSARY LIFT TO ACCOMMODATE GRAVITY CONDENSATE DRAINAGE TO POINT OF TERMINATION AS INDICATED ON PLANS.
4. CAPACITY RATINGS BASED ON STANDARD DEHUMIDIFIER RATING CONDITIONS OF 80°F, 60% RH.
5. UNIT SHALL BE HARD WIRED WITH DISCONNECT (NO PIGTAIL PLUG) TO DISCOURAGE THEFT/RELOCATION.
6. UNIT SHALL BE WALL MOUNTED WITHIN THE MECHANICAL ROOMS AS INDICATED ON PLANS.

11/10/2021 19:37

GRAVITY VENTILATOR (GV) SCHEDULE - P1527

TAG	AREA SERVED	SERVICE	DESIGN AIRFLOW (CFM)	MAX P.D. @ DESIGN AIRFLOW (IN H20)	MIN THROAT AREA (SQ. FT.)	THROAT SIZE (IN x IN)	BASIS OF DESIGN		NOTES
							MANUF.	MODEL	
GV-01	120 MECHANICAL (AC-01, 02)	INTAKE	6,600	0.1	12.25	42 x 42	GREENHECK	FGI	1 - 3
GV-02	120 MECHANICAL (AC-01, 02)	EXHAUST	6,600	0.08	12.25	42 x 42	GREENHECK	FGR	1 - 3
GV-03	120 MECHANICAL (AC-01, 02)	INTAKE	6,600	0.1	12.25	42 x 42	GREENHECK	FGI	1 - 3
GV-04	120 MECHANICAL (AC-01, 02)	EXHAUST	6,600	0.08	12.25	42 x 42	GREENHECK	FGR	1 - 3

NOTES:
1. ROOF VENTILATOR TO BE CONSTRUCTED FOR DUCTED APPLICATION WITH CORROSION RESISTANT COATING.
2. PROVIDE 18" ROOF CURB. COORDINATE WITH ROOF CONSTRUCTION.
3. ALL ROOF MOUNTED HVAC EQUIPMENT MUST BE PROVIDED MEETING THE MIAME-DADE COUNTY FLORIDA HURRICANE WIND RESISTANCE REQUIRMENTS.

11/10/2021 19:37

EXHAUST FAN (EF) AND SUPPLY FAN (SF) SCHEDULE - P1527

TAG	SERVICE	LOCATION / SPACE SERVED	FAN TYPE	WHEEL TYPE	DRIVE TYPE	AIR FLOW (CFM)	ESP (IN. WG.)	FAN RPM	MAX SOUND (SONES)	MOTOR DATA			BASIS OF DESIGN		NOTES
										MOTOR SIZE (HP)	MOTOR RPM	VOLTS/ PHASE/ HERTZ	MANUF	MODEL	
SF-01	SUPPLY	213 JEFS BOILER ROOM	INLINE	BI	DIRECT	1,500	0.72	1678	12	1/2	1725	115 / 1 / 60	GREENHECK	SQ-120-A	1,2,3,5
SF-02	SUPPLY	104 LOGCOM WAREHOUSE	INLINE	BI	BELT	8,000	1.14	1026	23	5.0	1725	480 / 3 / 60	GREENHECK	BSQ-240-50	1,2,3
SF-03	SUPPLY	104 LOGCOM WAREHOUSE	INLINE	BI	BELT	8,000	1.14	1026	23	5.0	1725	480 / 3 / 60	GREENHECK	BSQ-240-50	1,2,3
SF-04	SUPPLY	104 LOGCOM WAREHOUSE	INLINE	BI	BELT	8,000	1.14	1026	23	5.0	1725	480 / 3 / 60	GREENHECK	BSQ-240-50	1,2,3
EF-01	EXHAUST	109 ELEC	INLINE	BI	DIRECT	260	0.38	1500	7	1/10	1725	115 / 1 / 60	GREENHECK	SQ-80VG	1,2,3,4
EF-02	EXHAUST	121 ELEC	WALL PROP	PROP	DIRECT	210	0.25	1700	10	1/15	1725	115 / 1 / 60	GREENHECK	SE1-8-440-VG	1,2,3,4
EF-03	EXHAUST	103 BREAK, 105 JAN, G010 WOMEN'S, G011 UNISEX, G012 MEN'S	INLINE	BI	DIRECT	460	0.40	1432	7	1/6	1725	115 / 1 / 60	GREENHECK	SQ-95-VG	1,2
EF-04	EXHAUST	120 MECHANICAL	INLINE	BI	DIRECT	2,000	0.50	1000	10	1/2	1140	115 / 1 / 60	GREENHECK	SQ-160-B	1,2,3
EF-05	EXHAUST	116 ELECTRICAL	WALL PROP	PROP	DIRECT	620	0.25	1550	11	1/10	1300	115 / 1 / 60	GREENHECK	SE1-12-425-D	1,2,3,4
EF-06	EXHAUST	123 ELEC	WALL PROP	PROP	DIRECT	1,200	0.25	1680	8	1/4	1725	115 / 1 / 60	GREENHECK	SE1-12-432-VG	1,2,3,4
EF-07	EXHAUST	124 WHSE MECH.	WALL PROP	PROP	DIRECT	740	0.25	1300	10	1/4	1725	115 / 1 / 60	GREENHECK	SE1-12-432-VG	1,2,3,4
EF-08	EXHAUST	205 ELECTRICAL	INLINE	BI	DIRECT	550	0.50	1715	15	1/4	1725	115 / 1 / 60	GREENHECK	SQ-98-VG	1,2,3
EF-09	EXHAUST	202 BREAKROOM, 204 JAN, G020 MENS, G021 UNISEX, G022 WOMENS	INLINE	BI	DIRECT	540	0.50	1696	14	1/4	1725	115 / 1 / 60	GREENHECK	SQ-98-VG	1,2
EF-10	EXHAUST	104 LOGCOM WAREHOUSE	INLINE	PROP	DIRECT	11,000	0.30	629	22	2	650	480 / 3 / 60	GREENHECK	SQ-27-07-0700-VG	1,2,3
EF-11	EXHAUST	104 LOGCOM WAREHOUSE	INLINE	PROP	DIRECT	11,000	0.30	629	22	2	650	480 / 3 / 60	GREENHECK	SQ-27-07-0700-VG	1,2,3
EF-12	EXHAUST	120 MECHANICAL	INLINE	MIXED FLOW	DIRECT	6,600	0.50	886	15	2	1000	480 / 3 / 60	GREENHECK	SQ-22-07-0700-VG	1,2,3,7
EF-13	EXHAUST	120 MECHANICAL	INLINE	MIXED FLOW	DIRECT	6,600	0.50	886	15	2	1000	480 / 3 / 60	GREENHECK	SQ-22-07-0700-VG	1,2,3,7

NOTES:
1. PROVIDE WITH LOCAL DISCONNECT SWITCH FOR FIELD MOUNTING AND INSTALLATION. PROVIDE WITH MOTOR STARTER AND OVERCURRENT PROTECTION.
2. PROVIDE UNIT WITH SOLID STATE SPEED CONTROLLER TO BE MOUNTED ON UNIT (SF-01, EF-04, 05) OR ECM WITH DIAL (EF-01, 02, 03, 06, 07, 08, 09, 10, 11, 12, 13) - FIELD ADJUSTABLE TO SCHEDULED AIRFLOW.
3. CONTROL: CONTROL SHALL BE BY SPACE MOUNTED THERMOSTAT FOR VENTILATION ROOM COOLING - SEE CONTROL DRAWINGS; PROVIDE LOW LEAKAGE MOTORIZED DAMPER AT EXHAUST LOUVER AND ASSOCIATED INTAKE LOUVER.
4. PROVIDE WITH LOW LEAKAGE INSULATED DAMPER.
5. PROVIDE WITH FILTER SECTION UTILIZING 1" PLEATED MERV 8 FILTERS (SIZE 16x25x1).
6. PROVIDE WITH FILTER SECTION UTILIZING 2" PLEATED MERV 13 FILTERS (SIZES 16x25x2 AND 20x25x2).
7. CONTROL: INTERLOCK TO OPERATE CONTINOUSLY IN CONJUNCTION WITH ASSOCIATED AIR COMPRESSOR OPERATION - SEE CONTROL DRAWINGS; PROVIDE WITH LOW LEAKAGE DAMPER AT EXHAUST LOUVER.

11/10/2021 19:37

DIFFUSER, REGISTER AND GRILLE SCHEDULE - P1527

TAG	MAX CFM	SERVICE	TYPE	SIZE (INCHES)		MAX NC	BASIS OF DESIGN		NOTES
				FACE	NECK		MANUF	MODEL	
A	190	SUPPLY	DIFFUSER	24 x 24	6" Ø	<25	TITUS	TMS-AA	1 - 4
B	280	SUPPLY	DIFFUSER	24 x 24	8" Ø	<25	TITUS	TMS-AA	1 - 4
C	430	SUPPLY	DIFFUSER	24 x 24	10" Ø	<25	TITUS	TMS-AA	1 - 4
D	1300	RETURN / EXHAUST / TRANSFER	GRILLE	24 x 24	22 x 22	<20	TITUS	PXP-AA	1 - 3
E	115	SUPPLY	GRILLE	8 x 8	6 x 6	<20	TITUS	300FL	1 - 4
F	810	SUPPLY	GRILLE	18 x 18	16 x 16	<20	TITUS	300FL	1 - 4
G	155	RETURN / EXHAUST / TRANSFER	GRILLE	10 x 8	8 x 6	<20	TITUS	355FL	1 - 3
H	345	RETURN / EXHAUST / TRANSFER	GRILLE	12 x 12	10 x 10	<20	TITUS	355FL	1 - 3
J	810	RETURN / EXHAUST / TRANSFER	GRILLE	18 x 18	16 x 16	<20	TITUS	355FL	1 - 3
K	1285	RETURN / EXHAUST / TRANSFER	GRILLE	22 x 22	20 x 20	<20	TITUS	355FL	1 - 3
L	3450	RETURN / EXHAUST / TRANSFER	GRILLE	38 x 38	36 x 36	<20	TITUS	355FL	1 - 3
M	265	SUPPLY	DRUM LOUVER	14 x 10	12 x 8	<20	TITUS	DL	1 - 3
N	440	SUPPLY	DRUM LOUVER	22 x 12	20 x 10	<20	TITUS	DL	1 - 3
-	-	-	-	-	-	-	-	-	-
X	THIS TAG "X" USED TO DESIGNATE BALANCED CFM OF OPEN ENDED DUCT TERMINATIONS.								5

NOTES:
1. REFER TO DRAWINGS FOR ACTUAL AIR BALANCE QUANTITIES IN SPECIFIC LOCATIONS.
2. CONTRACTOR TO VERIFY CEILING/WALL TYPE AND PROVIDE PROPER FRAME AND BORDER TYPE FOR MOUNTING CONFIGURATION.
3. ALL DIFFUSERS, REGISTERS AND GRILLES ARE TO BE OF ALUMINUM CONSTRUCTION AND PROVIDED WITH MANUFACTURER'S STANDARD ENAMEL PAINT FINISH. REFER TO DIVISION 09 90 00 PAINTS AND COATINGS, AND ARCHITECTURAL DRAWINGS FOR FINISH SCHEDULES TO DETERMINE REQUIRED COLOR/FINISH FOR DIFFUSERS/REGISTERS/GRILLES.
4. NC LEVELS ARE BASED ON DIFFUSER BLADES SET FOR HORIZONTAL AIRFLOW.
5. PROVIDE 1/2" HARDWARE CLOTH IN REMOVEABLE "U" FRAME OVER BELMOUTH AT OPEN END OF DUCT.

11/10/2021 19:37

APPR	DATE	DESCRIPTION	SYM

NAVFAC

COMMONWEALTH OF PENNSYLVANIA — REGISTERED PROFESSIONAL — DAVID W. HURD — ENGINEER — No. PE061160 — SEAL

RQ W.M. Jordan COMPANY — A JOINT VENTURE

Michael Baker INTERNATIONAL
100 AIRSIDE DRIVE
MOON TOWNSHIP, PA 15108 — A/E INFO

APPROVED

FOR COMMANDER NAVFAC

ACTIVITY
MARINE CORPS BASE
CAMP LEJEUNE

SATISFACTORY TO DATE DD/MM/YY

DES	EMB	DRW	AJK	CHK	DWH

PM / DM: TOWLER / ROOT
BRANCH HEAD: SCE
DESIGN DIRECTOR: R.L.Stephens, Jr.
FIRE PROTECTION: DPS

DEPARTMENT OF THE NAVY
NAVAL FACILITIES ENGINEERING SYSTEMS COMMAND ATLANTIC
ATLANTIC DESIGN AND CONSTRUCTION
MCB CAMP LEJEUNE
NAVAL FACILITIES ENGINEERING SYSTEMS COMMAND
NORFOLK, VA
JACKSONVILLE, NC
LOGCOM CSP WAREHOUSE
MECHANICAL - SCHEDULES

SCALE: AS NOTED
EPROJECT NO.: 1639600
CONSTR. CONTR. NO. N40085-20-C-0059
NAVFAC DRAWING NO. 14111340
SHEET 317 OF 447

M-603

DRAWFORM REVISION: 25 AUGUST 2020

P1527 FINAL SUBMISSION - 11/18/2021

PLOTTED: 11/11/2021 3:07:10 PM

FILE NAME: BIM 360:/HF PACKAGE 3/P1527 LOG COM CSP~1639600-M.rvt

PUMP (P) SCHEDULE - P1527

TAG	PUMP TYPE	SERVICE	LOCATION	FLUID TYPE	FLUID TEMP (°F)	GPM	HEAD (FT H2O)	NSPH REQD (FT)	IMPELLER DIAMETER (IN)	MIN EFF. (%)	ELECTRICAL DATA			BASIS OF DESIGN		NOTES
											MTR HP	NOMINAL MOTOR RPM	VOLTS/ PHASE/ HERTZ	MANUF	MODEL	
P-01	FLOOR MTD, HORIZONTAL INLINE	CHW-PRIMARY (CH-1)	212 JEFS AHU	WATER	52	208.1	50	4.8	11	69.1	7.5	1200	480 / 3 / 60	B & G	e-80	1, 2, 4
P-02	FLOOR MTD, HORIZONTAL INLINE	CHW-PRIMARY (CH-1)	212 JEFS AHU	WATER	52	208.1	50	4.8	11	69.1	7.5	1200	480 / 3 / 60	B & G	e-80	1, 2, 4
P-03	FLOOR MTD, HORIZONTAL INLINE	HW - SECONDARY	213 JEFS BOILER...	WATER	140	100	65	7.4	9.375	57.7	5	1800	480 / 3 / 60	B & G	e-80	1, 2, 4, 5
P-04	FLOOR MTD, HORIZONTAL INLINE	HW - SECONDARY	213 JEFS BOILER...	WATER	140	100	65	7.4	9.375	57.7	5	1800	480 / 3 / 60	B & G	e-80	1, 2, 4, 5
BP-01, 02, 03, 04	INLINE, BOILER CIRC	HOT WATER	213 JEFS BOILER...	WATER	110	25	15	4.0	6	54.2	3/4	1200	480 / 3 / 60	B & G	e-80	1, 3

NOTES:
1. MOTORS SHALL BE PREMIUM EFFICIENCY TYPE.
2. INLINE TYPE PUMP - PROVDE WITH ACCESSORIES NECESSARY FOR FLOOR MOUNTING IN HORZONTAL INLINE FASHION ; PROVIDE RIGGING POINTS FOR PUMPS 5 HP AND GREATER.
3. INLINE TYPE PUMP - TO BE MOUNTED ON PIPING / INLINE PUMP SUPPORT RACK AS INDICATED ON PLANS.
4. PROVIDE WITH VARIABLE FREQUENCY DRIVE.
5. MINIMUM FLOW AT RPM EQUAL TO 20.7 GPM.

11/10/2021 19:37

HOT WATER BOILER (B) SCHEDULE - P1527

TAG	TYPE	MAX OUTPUT (MBH)	MAX GAS INPUT (MBH)	MIN GAS INPUT (MBH)	MIN GAS PRESS (IN WG)	WATER DATA				PUMP			BASIS OF DESIGN		NOTES
						EWT (°F)	LWT (°F)	GPM	WPD (FT H20)	MOTOR (HP)	VOLT/ PHASE/ HERTZ	AMPS	MANUF	MODEL	
B-01	CONDENSING	387	399	39.9	4	110	140	25	6	BP-01, SEE PUMP SCEHDULE			LOCHINVAR	KBX0400N	1 - 7
B-02	CONDENSING	387	399	39.9	4	110	140	25	6	BP-02, SEE PUMP SCHEDULE			LOCHINVAR	KBX0400N	1 - 7
B-03	CONDENSING	387	399	39.9	4	110	140	25	6	BP-03, SEE PUMP SCHEDULE			LOCHINVAR	KBX0400N	1 - 7
B-04	CONDENSING	387	399	39.9	4	110	140	25	6	BP-04, SEE PUMP SCHEDULE			LOCHINVAR	KBX0400N	1 - 7

NOTES:
1. PROVIDE WITH MULTIPLE BOILER CONTROLLER AND INTERFACE TO BUILDING DDC SYSTEM (BACNET COMPATIBLE).
2. PROVIDE WITH DIRECT SPARK IGNITION SYSTEM, MODULATING GAS VALVE AND BURNER CAPABLE OF 5:1 TURNDOWN.
3. BOILER SHALL ACHIEVE 95% THERMAL EFFICIENCY & MEET ALL CURRENT LOW NOx REGULATIONS.
4. BOILER TO BE SUPPLIED WITH FORCED COMBUSTION AIR DRAFT SYSTEM.
5. PROVIDE THRU-WALL TERMINATIONS FOR VENTING AND COMBUSTION AIR INLET AS INDICATED ON PLANS.
6. PROVIDE WITH MANUFACTUER'S CONDENSATE TRAP AND NEUTRALIZATION KIT FOR CONDENSATE DISCHARGE.
7. UNIT SHALL COMPLY WITH ASME CSD-1 REQUIREMENTS FOR ELECTRICAL (PART CE) AND WATERSIDE CONTROL (PART CW); PROVIDE BOILER EMERGENCY SHUTDOWN SWITCH AT EXIT(S) OF MECHANICAL ROOMS HOUSING BOILERS (REFER TO CONTROL DRAWINGS).

11/10/2021 19:37

HORIZONTAL AIR CLEANER (HAC) SCHEDULE - P1527

TAG	AREA SERVED	AIRFLOW (CFM)	DIMENSIONS			MOTOR DATA			BASIS OF DESIGN		NOTES
			LENGTH (IN)	WIDTH (IN)	HEIGHT (IN)	VOLT/ PHASE/ HERTZ	MAX POWER CONSUMPTION (WATTS)	FLA	MANUF	MODEL	
HAC-01	208A TEST & REPAIR	2000	70	28	30	480 / 3 / 60	2500	4	CAMFIL	CC-H-2-F-0-R-4	1 - 4
					30						

NOTES:
1. POWER CONSUMPTION AT RATED FLOW AT 4 IN. WG.
2. NOISE LEVELS: 73 dBA AT 5 FT, 63 dBA AT 15 FT.
3. PROVIDE WITH MANUAL MOTOR STARTER AND DISCONNECT.
4. CONTROL: INTERLOCK TO OPERATE CONTINOUSLY IN CONJUNCTION WITH ASSOCIATED MASK TESTING STATIONS - SEE CONTROL DRAWINGS.

11/10/2021 19:37

EXPANSION TANK (ET) SCHEDULE - P1527

TAG	LOCATION	SERVICE	TYPE	SIZE	VOLUME (GALLON)		BASIS OF DESIGN		NOTES
					TANK	ACCEP-TANCE	MANUF	MODEL	
ET-01	212 JEFS AHU	CHILLED WATER	VERTICAL - FLR MTD	10" DIA X 37.5" H	10	10	B & G	B-35LA	1, 2, 3
ET-02	213 JEFS BOILER ROOM	HYDRONIC HOT WATER	VERTICAL - FLR MTD	20" DIA X 34.7" H	34	27	B & G	B-130LA	1, 2, 3

NOTES:
1. HEAVY DUTY BUTYL RUBBER DIAPHRAGM TYPE; PRE-CHARGED TO 10 PSI; 125 PSI RATED DESIGN PRESSURE.
2. TANK ACCEPTANCE VOLUME SHALL BE NO GREATER THAN 50% OF TANK VOLUME REGARDLESS OF MANUFACTURER'S LITERATURE INDICATING BLADDER TANKS WITH 100% TANK VOLUME ACCEPTANCE CAPACITY.
3. CONNECTION SIZE SHALL BE 1" NPT.

11/10/2021 19:37

AIR SEPARATION & SEDIMENT REMOVAL TANK (AS) SCHEDULE - P1527

TAG	LOCATION	SERVICE	TYPE	GPM	CONNECTION SIZE	INSTALLED WEIGHT (LBS)	BASIS OF DESIGN		NOTES
							MANUF	MODEL	
AS-01	212 JEFS AHU	CHILLED WATER	COALSESCING	208.1	4" FLANGED	210	B & G	CRS-4F	1 - 3
AS-02	213 JEFS BOILER ROOM	HYDRONIC HOT WATER	COALSESCING	100	3" FLANGED	135	B & G	CRS-3F	1 - 3

NOTES:
1. REFER TO PIPING DIAGRAMS FOR INSTALLATION LOCATION IN HYDRONIC SYSTEM.
2. PROVIDE WITH BLOW DOWN CONNECTION AND MANUAL BLOW DOWN VALVE.
3. PROVIDE WITH AUTOMATIC AIR VENT FROM SAME MFG.

11/10/2021 19:37

CHILLED WATER BUFFER TANK (CWBT) SCHEDULE - P1527

TAG	TYPE	SERVICE	LOCATION	SIZE DIA x HT (IN)	CONN. SIZE (IN)	CAPACITY (GAL)	BASIS OF DESIGN		NOTES
							MANUF	MODEL	
CWBT-01	VERTICAL	CHILLED WATER	212 JEFS AHU	48 x 96	4" FLANGE	680	CEMLINE	V-CWB-F	1 - 2

NOTES:
1. TANK TO BE PROVIDED WITH 2" FLEXIBLE ELASTOMERIC INSULATION; INTERNAL BAFFLE; 6" FLANGED CONNECTIONS & AIR VENT.
2. UNIT SHALL BE ASME RATED PRESSURE VESSEL - RATED TO 125PSIG @ 375°F; BUILT TO ASME SECTION VIII, DIVISION 1.

11/10/2021 19:37

APPR | DATE | DESCRIPTION | SYM

NAVFAC

COMMONWEALTH OF PENNSYLVANIA — REGISTERED PROFESSIONAL — DAVID W HURD — ENGINEER — No PE061160 — SEAL

IRQ Joint Venture — W.M. Jordan Company

Michael Baker INTERNATIONAL
100 AIRSIDE DRIVE
MOON TOWNSHIP, PA 15108 — A/E INFO

APPROVED

FOR COMMANDER NAVFAC

ACTIVITY: MARINE CORPS BASE CAMP LEJEUNE

SATISFACTORY TO DATE: DD/MM/YY

DES EMB | DRW AJK | CHK DWH

PM / DM: TOWLER / ROOT

BRANCH HEAD: SCE

DESIGN DIRECTOR: R.L.Stephens, Jr.

FIRE PROTECTION: DPS

DEPARTMENT OF THE NAVY
NAVAL FACILITIES ENGINEERING SYSTEMS COMMAND ATLANTIC
ATLANTIC DESIGN AND CONSTRUCTION
NAVAL FACILITIES ENGINEERING SYSTEMS COMMAND ATLANTIC
NORFOLK, VA

MCB CAMP LEJEUNE
LOGCOM CSP WAREHOUSE
JACKSONVILLE, NC

MECHANICAL - SCHEDULES

SCALE: AS NOTED
EPROJECT NO.: 1639600
CONSTR. CONTR. NO.: N40085-20-C-0059
NAVFAC DRAWING NO.: 14111341
SHEET 318 OF 447

M-604

DRAWFORM REVISION: 25 AUGUST 2020

P1527 FINAL SUBMISSION - 11/18/2021

PLOTTED: 11/11/2021 3:07:13 PM

FILE NAME: BIM 360://HF PACKAGE 3/P1527 LOG COM CSP-1639600-M.rvt

VENTILATION SCHEDULE - P1527

ROOM NUMBER	ROOM NAME	VENTILATION CRITERIA / CLASSIFICATION	AREA (FT2)	OCCUPANCY (# PEOPLE)	CFM/SF	CFM/ PERSON	CALCULATED REQUIRED... CFM/SF	CFM/ PERSON	EZ	TOTAL (CFM)	DESIGN OA (CFM)	EXHAUST AIR (EA) CFM/SF	FIXTURE COUNT	CFM/ FIXTURE	TOTAL EA REQ'D (CFM)	DESIGN EA (CFM)	NOTES
100	GOV'T OFFICE	ASHRAE 62.1-2016: OFFICE SPACE	104	3	0.06	5											
101	REG. MNGR.	ASHRAE 62.1-2016: OFFICE SPACE	113	3	0.06	5											
102	MOTHER'S ROOM	ASHRAE 62.1-2016: OFFICE SPACE	72	1	0.06	5											
103	BREAK	ASHRAE 62.1-2016: BREAK ROOM, KITCHENETTE (EXHAUST)	399	10	0.06	5						0.3			120	125	
105	JAN.	ASHRAE 62.1-2016: JANITOR CLOSET	84	-	-	-						1			84	85	
106	COMP. EQ. & RSDL DECON. LOTION	ASHRAE 62.1-2016: OCCUPIABBLE STORAGE	307	2	0.06	5											
107	RADIOLOGICAL	ASHRAE 62.1-2016: OCCUPIABBLE STORAGE	2,397	2	0.06	5											
108	TELECOM	ASHRAE 62.1-2016: COMPUTER (NOT PRINTING)	98	0	0.06	5											
110	NDTE / STORAGE	ASHRAE 62.1-2016: OCCUPIABBLE STORAGE	1,480	3	0.06	5											
110A	NDTE OFFICE	ASHRAE 62.1-2016: OFFICE SPACE	110	3	0.06	5											
111	ESAPI ROOM	ASHRAE 62.1-2016: OFFICE SPACE	224	2	0.06	5											
112	ESAPI OFFICE	ASHRAE 62.1-2016: OFFICE SPACE	124	2	0.06	5											
113A	STORAGE AREA SL-3/REPAIR PARTS	ASHRAE 62.1-2016: OCCUPIABBLE STORAGE	669	0	0.06	5											
113B	FINAL QC	ASHRAE 62.1-2016: OFFICE SPACE	509	2	0.06	5											
114	JSMLT TEST AREA	ASHRAE 62.1-2016: WOOD / METAL SHOP	502	3	0.18	10											
115	SANITATION AREA	ASHRAE 62.1-2016: WOOD / METAL SHOP	797	3	0.18	10											
117	MAINTENANCE	ASHRAE 62.1-2016: WOOD / METAL SHOP	579	3	0.18	10											
118	TELE.	ASHRAE 62.1-2016: COMPUTER (NOT PRINTING)	303	0	0.06	5											
119	CBRN OFFICE	ASHRAE 62.1-2016: OFFICE SPACE	269	3	0.06	5											
200	CLASSROOM	ASHRAE 62.1-2016: LECTURE CLASSROOM	1,452	51	0.06	7.5											
201	TECHNICIAN/ TECHNICAL REF LIBRARY	ASHRAE 62.1-2016: LIBRARIES	1,462	12	0.12	5											
202	BREAKROOM	ASHRAE 62.1-2016: BREAK ROOM, KITCHENETTE (EXHAUST)	693	12	0.06	5						0.3			208	220	
203	TELECOM	ASHRAE 62.1-2016: COMPUTER (NOT PRINTING)	102	0	0.06	5											
206	ADMIN STORAGE	ASHRAE 62.1-2016: OCCUPIABBLE STORAGE	319	0	0.06	5											
207	JEFS FST OIC	ASHRAE 62.1-2016: OFFICE SPACE	579	6	0.06	5											
208	STORAGE WAREHOUSE PREPARATION	ASHRAE 62.1-2016: OCCUPIABBLE STORAGE	5,941	3	0.06	5											
208A	TEST & REPAIR	ASHRAE 62.1-2016: WOOD / METAL SHOP	2163	6	0.18	10											
208B	VISUAL INSPECTION & REPAIR	ASHRAE 62.1-2016: WOOD / METAL SHOP	2,193	4	0.18	10											
209	SHIPPING / RECEIVING / WATER TESTING	ASHRAE 62.1-2016: SHIPPING/RECEIVING	1,966	2	0.12	10											
209A	HAZMAT STORAGE	ASHRAE 62.1-2016: OCCUPIABBLE STORAGE	317	0	0.06	5											
210	JEFS FSS OPERATIONS OFFICER	ASHRAE 62.1-2016: OFFICE SPACE	585	6	0.06	5											
211	ASSISTANT OIC/NCOIC	ASHRAE 62.1-2016: OFFICE SPACE	407	3	0.06	5											
204	JAN.	ASHRAE 62.1-2016: JANITOR CLOSET	59	-	-	-						1			59	70	
C020	CORRIDOR	ASHRAE 62.1-2016: CORRIDOR	749	0	0.06	-											
C021	CORRIDOR	ASHRAE 62.1-2016: CORRIDOR	514	0	0.06	-											
C022	CORRIDOR	ASHRAE 62.1-2016: CORRIDOR	121	0	0.06	-											
G010	WOMEN'S	ASHRAE 62.1-2016: TOILETS (PUBLIC)	194	-	-	-							2	50	100	100	
G011	UNISEX	ASHRAE 62.1-2016: TOILETS (PUBLIC)	65	-	-	-							1	50	50	50	
G012	MEN'S	ASHRAE 62.1-2016: TOILETS (PUBLIC)	129	-	-	-							2	50	100	100	
G020	MENS	ASHRAE 62.1-2016: TOILETS (PUBLIC)	159	-	-	-							2	50	100	100	
G021	UNISEX	ASHRAE 62.1-2016: TOILETS (PUBLIC)	66	-	-	-							1	50	50	50	
G022	WOMENS	ASHRAE 62.1-2016: TOILETS (PUBLIC)	162	-	-	-							2	50	100	100	

THE VENTILATION REQUIREMENT FOR THIS AIR HANDLING SYSTEM HAS BEEN DETERMINED BY UTILIZING THE ASHRAE 62.1 MULTI-ZONE CALCULATION SPREADSHEET THAT ACCOUNTS FOR INDIVIDIAL VAV ZONES AND THEIR RESPECTIVE AREA AND OCCUPANCY AND SPACE CLASSIFICATION IN ACCORDANCE WITH ASHRAE 62.1. THE VAV BOX SCHEDULE MINIMUM AIRFLOWS PER BOX HAVE BEEN ADJUSTED USING THIS SPREADSHEET TO PROVIDE THE REQUIRED VENTILATION TO THEIR ASSOCIATED AHU. THE ASHRAE 62.1 MULTI-ZONE CALCULATIONS ARE INCLUDED IN THE MECHANICAL CALCULATIONS.

NOTES:

11/10/2021 19:37

APPR | DATE | DESCRIPTION | SYM

NAVFAC

COMMONWEALTH OF PENNSYLVANIA — REGISTERED PROFESSIONAL — DAVID W. HURD — ENGINEER — No. PE061160

SEAL

RQ — W.M. Jordan COMPANY — A JOINT VENTURE

Michael Baker INTERNATIONAL

100 AIRSIDE DRIVE
MOON TOWNSHIP, PA 15108 — A/E INFO

APPROVED

FOR COMMANDER NAVFAC

ACTIVITY
MARINE CORPS BASE
CAMP LEJEUNE

SATISFACTORY TO DATE DD/MM/YY

DES EMB | DRW AJK | CHK DWH

PM / DM TOWLER / ROOT

BRANCH HEAD SCE

DESIGN DIRECTOR R.L.Stephens, Jr.

FIRE PROTECTION DPS

DEPARTMENT OF THE NAVY
NAVAL FACILITIES ENGINEERING SYSTEMS COMMAND
ATLANTIC DESIGN AND CONSTRUCTION
MCB CAMP LEJEUNE

NAVAL FACILITIES ENGINEERING SYSTEMS COMMAND ATLANTIC
NORFOLK, VA

JACKSONVILLE, NC
LOGCOM CSP WAREHOUSE

MECHANICAL - SCHEDULES

SCALE: AS NOTED
EPROJECT NO.: 1639600
CONSTR. CONTR. NO. N40085-20-C-0059
NAVFAC DRAWING NO. 14111342
SHEET 319 OF 447

M-605

DRAWFORM REVISION: 25 AUGUST 2020

P1527 FINAL SUBMISSION - 11/18/2021

PLOTTED: 11/11/2021 3:07:15 PM

FILE NAME: BIM 360://HF PACKAGE 3/P1527 LOG COM CSP--1639600-M.rvt

VENTILATION SCHEDULE - P1527

ROOM NUMBER	ROOM NAME	VENTILATION CRITERIA / CLASSIFICATION	AREA (FT2)	OCCUPANCY (# PEOPLE)	CFM/SF	CFM/ PERSON	CALCULATED REQUIRED...					EXHAUST AIR (EA)					NOTES
							CFM/SF	CFM/ PERSON	EZ	TOTAL (CFM)	DESIGN OA (CFM)	CFM/SF	FIXTURE COUNT	CFM/ FIXTURE	TOTAL EA REQ'D (CFM)	DESIGN EA (CFM)	
104	WAREHOUSE AREA	ASHRAE 62.1-2016: WAREHOUSES	52,538	0	0.06	10	3,152	0	0.8	3,940	4,000						
104.1	SHIPPING/RECIEVING 2 DOCKS	ASHRAE 62.1-2016: SHIPPING/RECEIVING	4,075	0	0.12	10	489	0	0.8	611	620						
104.2	SHELTER STORAGE	ASHRAE 62.1-2016: OCCUPIABBLE STORAGE	2,532	0	0.06	5	152	0	0.8	190	200						
104.3	ISSUE/RETURN AREA	ASHRAE 62.1-2016: SORTING, PACKING, LIGHT ASSEMBLY	2,585	1	0.12	7.5	310	8	0.8	397	400						
104.4	SORT AREA	ASHRAE 62.1-2016: SORTING, PACKING, LIGHT ASSEMBLY	1,866	1	0.12	7.5	224	8	0.8	289	300						
104.5	DISPOSAL AREA	ASHRAE 62.1-2016: SORTING, PACKING, LIGHT ASSEMBLY	2,053	1	0.12	7.5	246	8	0.8	317	320						
104.6	BATTERY CHARGING AREA	ASHRAE 62.1-2016: WAREHOUSES	1,316	0	0.06	10	79	0	0.8	99	100						
C010	CORRIDOR	ASHRAE 62.1-2016: CORRIDOR	164	0	0.06	0	10	0	0.8	12	20						
C011	CORR	ASHRAE 62.1-2016: CORRIDOR	346	0	0.06	0	21	0	0.8	26	30						
C012	CORRIDOR	ASHRAE 62.1-2016: CORRIDOR	385	0	0.06	0	23	0	0.8	29	30						
C013	CORRIDOR	ASHRAE 62.1-2016: CORRIDOR	346	0	0.06	0	21	0	0.8	26	30						
											6,050						
109	ELEC.	NO REQUIREMENT	129	-	-	-											
116	ELECTRICAL	NO REQUIREMENT	303	-	-	-											
120	MECHANICAL	NO REQUIREMENT	1,009	-	-	-											
121	ELEC.	NO REQUIREMENT	103	-	-	-											
122	FIRE RISER	NO REQUIREMENT	398	-	-	-											
123	ELEC.	NO REQUIREMENT	403	-	-	-											
124	WHSE MECH.	NO REQUIREMENT	366	-	-	-											
205	ELECTRICAL	NO REQUIREMENT	227	-	-	-											
212	JEFS AHU	NO REQUIREMENT	1,486	-	-	-											
213	JEFS BOILER ROOM	NO REQUIREMENT	582	-	-	-											
V010	VESTIBULE/ENTRY	NO REQUIREMENT	46	-	-	-											
V020	VESTIBULE/ ENTRY	NO REQUIREMENT	131	-	-	-											
V021	VESTIBULE/ENTRY	NO REQUIREMENT	110	-	-	-											

NOTES:

11/10/2021 19:37

APPR | DATE | DESCRIPTION | SYM

NAVFAC

COMMONWEALTH OF PENNSYLVANIA
REGISTERED PROFESSIONAL
DAVID W. HURD
ENGINEER
No PE061160
SEAL

IRQ Joint Venture — W.M. Jordan Company

Michael Baker INTERNATIONAL
100 AIRSIDE DRIVE
MOON TOWNSHIP, PA 15108
A/E INFO

APPROVED

FOR COMMANDER NAVFAC

ACTIVITY
MARINE CORPS BASE
CAMP LEJEUNE

SATISFACTORY TO DATE DD/MM/YY

DES	EMB	DRW	AJK	CHK	DWH
PM / DM	TOWLER / ROOT				
BRANCH HEAD	SCE				
DESIGN DIRECTOR	R.L.Stephens, Jr.				
FIRE PROTECTION	DPS				

DEPARTMENT OF THE NAVY
NAVAL FACILITIES ENGINEERING SYSTEMS COMMAND
ATLANTIC DESIGN AND CONSTRUCTION
MCB CAMP LEJEUNE

NAVAL FACILITIES ENGINEERING SYSTEMS COMMAND ATLANTIC
NORFOLK, VA

JACKSONVILLE, NC

LOGCOM CSP WAREHOUSE

MECHANICAL - SCHEDULES

SCALE:	AS NOTED
EPROJECT NO.:	1639600
CONSTR. CONTR. NO.	N40085-20-C-0059
NAVFAC DRAWING NO.	14111343
SHEET	320 OF 447

M-606

DRAW FORM REVISION: 25 AUGUST 2020

P1527 FINAL SUBMISSION - 11/18/2021

PLOTTED: 11/11/2021 3:07:17 PM

FILE NAME: BIM 360://HF PACKAGE 3/P1527 LOG COM CSP--1639600-M.rvt

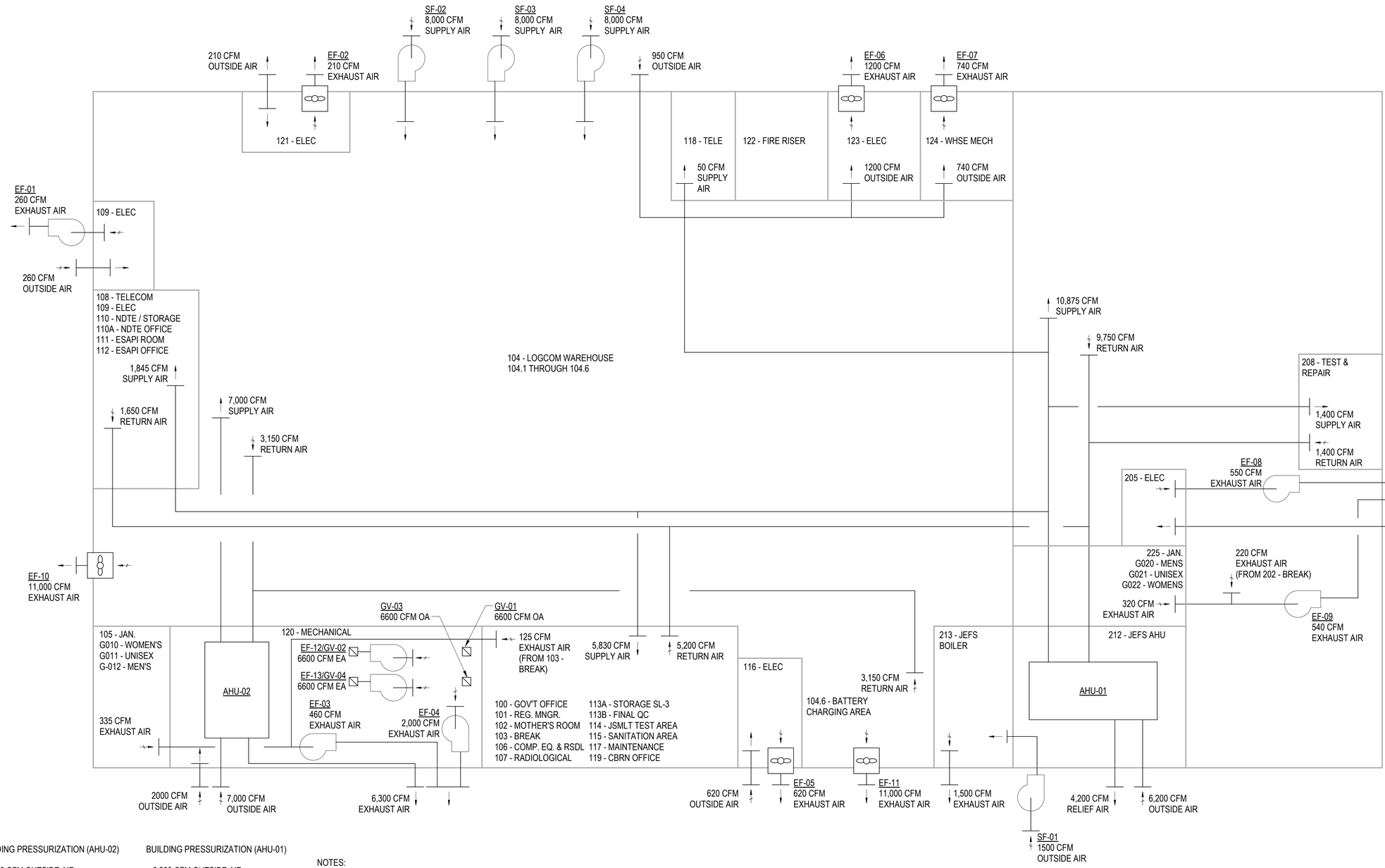

BUILDING PRESSURIZATION (AHU-02)

+ 7,000 CFM OUTSIDE AIR
- 6,300 CFM EXHAUST

700 CFM POSTIIVE PRESSURE

OUTSIDE AIR / EXAHUST AIR = 10.0%

BUILDING PRESSURIZATION (AHU-01)

+ 6,200 CFM OUTSIDE AIR
- 4,200 CFM AHU-01 RELIEF
- 460 CFM EXHAUST EF-03
- 540 CFM EXHAUST EF-09

1,000 CFM POSTIIVE PRESSURE

OUTSIDE AIR / EXAHUST AIR = 16.0%

NOTES:
- AIR BALANCE DIAGRAM SHOWS MAXIMUM AIRFLOW CONDITION DURING BUILDING OCCUPANCY BASED ON PEAK LOAD CONDITIONS.
- INTERMITTENTLY OPERATED OR SEPARATELY ZONED FANS AND SYSTEMS ARE NOT INCLUDED AS PART OF AIR BALANCE.
- DRAWING DOES NOT REPRESENT ACTUAL SPACE LOCATION OR DUCT LAYOUT. IT IS A DIAGRAMMATIC REPRESENTATION OF SYSTEM FOR AIR BALANCE PURPOSES ONLY.
- OUTSIDE AIR REQUIREMENTS ARE BASED ON THE GREATER OF BUILDING EXHAUST OR ASHRAE 62.1 MINIMUM VENTILATION REQUIREMENTS PLUS AN ADDITIONAL 15% VENTILATION AIR FOR BUILDING PRESSURIZATION.

A1 AIR BALANCE DIAGRAM
SCALE: NTS

Title Sheet Revision

APPR	DATE	DESCRIPTION	SYM

NAVFAC

COMMONWEALTH OF PENNSYLVANIA — REGISTERED PROFESSIONAL ENGINEER — DAVID W. HURD — No. PE061160 — SEAL

RQ W.M. Jordan COMPANY — A JOINT VENTURE

Michael Baker INTERNATIONAL
100 AIRSIDE DRIVE
MOON TOWNSHIP, PA 15108
A/E INFO

APPROVED

FOR COMMANDER NAVFAC

ACTIVITY
MARINE CORPS BASE
CAMP LEJEUNE

SATISFACTORY TO DATE DD/MM/YY

DES	DRW	CHK
EMB	AJK	DWH

PM / DM: TOWLER / ROOT
BRANCH HEAD: SCE
DESIGN DIRECTOR: R.L.Stephens, Jr.
FIRE PROTECTION: DPS

DEPARTMENT OF THE NAVY
NAVAL FACILITIES ENGINEERING SYSTEMS COMMAND
ATLANTIC DESIGN AND CONSTRUCTION
NAVAL FACILITIES ENGINEERING SYSTEMS COMMAND ATLANTIC
NORFOLK, VA

JACKSONVILLE, NC
LOGCOM CSP WAREHOUSE
MCB CAMP LEJEUNE

MECHANICAL - DIAGRAMS

SCALE: AS NOTED
EPROJECT NO.: 1639600
CONSTR. CONTR. NO. N40085-20-C-0059
NAVFAC DRAWING NO. 14111344
SHEET 321 OF 447

M-701

DRAWFORM REVISION: 25 AUGUST 2020

P1527 FINAL SUBMISSION - 11/18/2021

PLOTTED: 11/11/2021 3:07:18 PM

FILE NAME: BIM 360://HF PACKAGE 3/P1527 LOG COM CSP-1639600-M.rvt

AIR BALANCE CALCULATION - P1527

DEVICE	ROOM OR AREA SERVED	AIRFLOWS (CFM)							MECH & ELEC AREAS (EXCLUDED FROM AIR BARRIER)			NOTES
		SA (AHU-01 VARIABLE, AHU-02 CONSTANT)	RA (RECIRC) (VARIABLE)	AHU HX RA (EXH) (CONST)	AHU HX OA (CONST)	EA (CONST)	EA (INTER-MITTENT)	+/- PRESS	SA	EA	+/- PRESS	
AHU-02	104 LOGCOM WAREHOUSE (H&V)	7000	0	(6300)	7000			700			POS	
SF-02	104 LOGCOM WAREHOUSE (VENT COOLING)								8000		POS	1, 2
SF-03	104 LOGCOM WAREHOUSE (VENT COOLING)								8000		POS	1, 2
SF-04	104 LOGCOM WAREHOUSE (VENT COOLING)								8000		POS	1, 2
EF-01	109 ELEC									(260)	NEG	1
EF-02	121 ELEC									(210)	NEG	1
EF-04	120 MECHANICAL (VENT COOLING)									(2000)	NEG	1
EF-05	116 ELECTRICAL									(620)	NEG	1
EF-06	123 ELEC									(1200)	NEG	1
EF-07	124 WHSE MECH.									(740)	NEG	1
EF-10	104 LOGCOM WAREHOUSE (VENT COOLING)									(11000)		
EF-11	104 LOGCOM WAREHOUSE (VENT COOLING)									(11000)		
EF-12	120 MECHANICAL (AC-01, 02)									(6600)		
EF-13	120 MECHANICAL (AC-01, 02)									(6600)		
	AREA TOTALS:	7000	0	(6300)	7000	0	0	**700**	24000	(27030)	**(3030)**	
AHU-01	CONDITIONED BUILDING AREAS	20000	(13800)	(4200)	6200			2000			POS	
SF-01	213 JEFS BOILER ROOM (HEATING EQUIPMENT)								1500		POS	1, 2
EF-03	103 BREAK, 105 JAN, G010 WOMEN'S, G011 UNISEX, G012 MEN'S					(460)		NEG				
EF-08	205 ELECTRICAL									(550)	NEG	1
EF-09	202 BREAKROOM, 204 JAN, G020 MEN'S, G021 UNISEX, G022 WOMEN'S					(540)		NEG				
	AREA TOTALS:	20000	(13800)	(4200)	6200	(1000)	0	**1000**				

NOTES

1) EF/SF SHALL OPERATE INTERMITTENTLY BY THERMOSTATIC CONTROL (TSTAT SET AT 85°F - ADJ.) TO PROVIDE VENTILATION BASED COOLING/AIR CHANGES TO MAINTAIN SPACE WITHIN +10°F OF OUTDOOR AMBIENT.
2) SF-01 SHALL PUSH AIR THROUGH MECHANICAL ROOM WITH GAS FIRED EQUIPMENT TO MAINTAIN SPACE POSITIVE PRESSURE IAW RFP.

DEFINITIONS

SA: SUPPLY AIR, CONDITIONED AND DELIVERED THROUGH VAV FOR SPACE CONDITIONING AND VENTILATION
RA (RECIRC): RETURN AIR, RETURNED TO AHU FOR RE-MIXING WITH OA AND REDISTRIBUTION
RA (EXH): RETURN AIR, RETURNED TO AHU FROM SPACE; THEN EXHAUSTED-RELIEVED AT/FROM AHU (USED FOR HX ENERGY RECOVERY)
OA: OUTSIDE AIR, FRESH OUTSIDE AIR FILTERED / PRECONDITIONED BY HX & DELIVERED AS COMPONENT OF SUPPLY AIR TO SPACES SERVED.
EA: EXHAUST AIR, AIR REMOVED FROM BLDG IN BALANCED CONSTANT QTY BY FAN ON NORMAL BASIS DURING OCCUPIED HRS
EA(I): EXHAUST AIR (INTERMITTENT), AIR REMOVED FROM BUILDING BY EXHAUST FAN NOT REGULARLY IN USE, NOT INCLUDED IN AIR BALANCE DETERMINATION

APPR | DATE | DESCRIPTION | SYM

NAVFAC

COMMONWEALTH OF PENNSYLVANIA — REGISTERED PROFESSIONAL — DAVID W. HURD — ENGINEER — No. PE061160

SEAL

IRQ — W.M. Jordan COMPANY — A JOINT VENTURE

Michael Baker INTERNATIONAL
100 AIRSIDE DRIVE
MOON TOWNSHIP, PA 15108
A/E INFO

APPROVED

FOR COMMANDER NAVFAC

ACTIVITY
MARINE CORPS BASE
CAMP LEJEUNE

SATISFACTORY TO DATE DD/MM/YY

DES	DRW	CHK
EMB	AJK	DWH

PM / DM	TOWLER / ROOT
BRANCH HEAD	SCE
DESIGN DIRECTOR	R.L.Stephens, Jr.
FIRE PROTECTION	DPS

DEPARTMENT OF THE NAVY
NAVAL FACILITIES ENGINEERING SYSTEMS COMMAND ATLANTIC
ATLANTIC DESIGN AND CONSTRUCTION
MCB CAMP LEJEUNE

NAVAL FACILITIES ENGINEERING SYSTEMS COMMAND
NORFOLK, VA
JACKSONVILLE, NC
LOGCOM CSP WAREHOUSE

MECHANICAL - DIAGRAMS

SCALE: AS NOTED
EPROJECT NO.: 1639600
CONSTR. CONTR. NO. N40085-20-C-0059
NAVFAC DRAWING NO. 14111345
SHEET 322 OF 447

M-702

DRAWFORM REVISION: 25 AUGUST 2020

P1527 FINAL SUBMISSION - 11/18/2021

PLOTTED: 11/11/2021 3:07:19 PM

FILE NAME: BIM 360://HF PACKAGE 3/P1527 LOG COM CSP-1639600-M.rvt

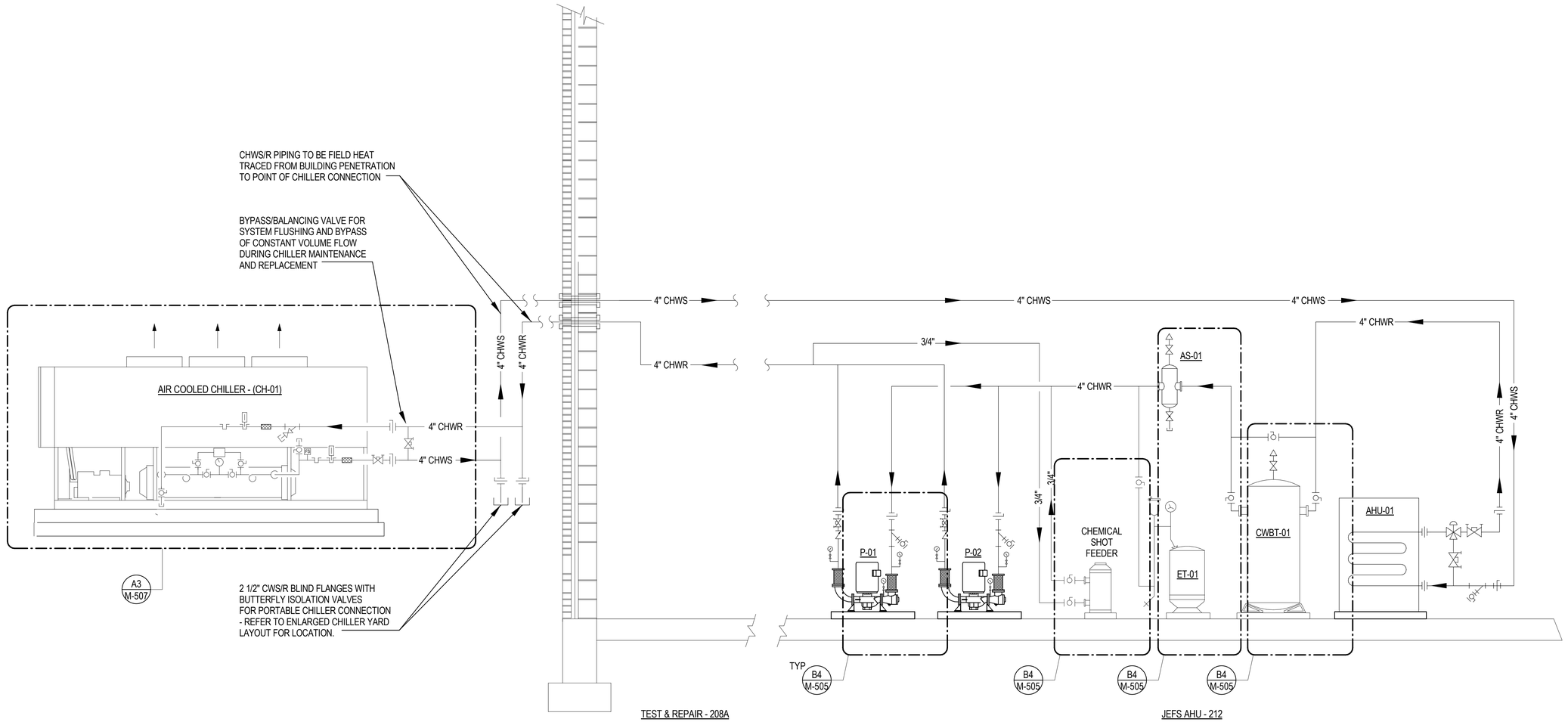

A1 CHILLED WATER FLOW DIAGRAM
SCALE: NTS

SYM	DESCRIPTION	DATE	APPR
	Title Sheet Revision		

NAVFAC

COMMONWEALTH OF PENNSYLVANIA
REGISTERED PROFESSIONAL
DAVID W. HURD
ENGINEER
No PE061160
SEAL

RQ W.M. Jordan COMPANY
- A JOINT VENTURE -

Michael Baker INTERNATIONAL
100 AIRSIDE DRIVE
MOON TOWNSHIP, PA 15108
A/E INFO

APPROVED

FOR COMMANDER NAVFAC

ACTIVITY
MARINE CORPS BASE CAMP LEJEUNE

SATISFACTORY TO DATE DD/MM/YY
DES EMB DRW AJK CHK DWH
PM / DM TOWLER / ROOT
BRANCH HEAD SCE
DESIGN DIRECTOR R.L.Stephens, Jr.
FIRE PROTECTION DPS

DEPARTMENT OF THE NAVY
NAVAL FACILITIES ENGINEERING SYSTEMS COMMAND
NAVAL FACILITIES ENGINEERING SYSTEMS COMMAND ATLANTIC
ATLANTIC DESIGN AND CONSTRUCTION
NORFOLK, VA
MCB CAMP LEJEUNE
JACKSONVILLE, NC
LOGCOM CSP WAREHOUSE
MECHANICAL - DIAGRAMS

SCALE: AS NOTED
EPROJECT NO.: 1639600
CONSTR. CONTR. NO. N40085-20-C-0059
NAVFAC DRAWING NO. 14111346
SHEET 323 OF 447

M-703

DRAWFORM REVISION: 25 AUGUST 2020

P1527 FINAL SUBMISSION - 11/18/2021

PLOTTED: 11/11/2021 3:07:20 PM

FILE NAME: BIM 360://HF PACKAGE 3/P1527 LOG COM CSP-1639600-M.rvt

GENERAL NOTES

1. HOT WATER PIPING DIAGRAMS INDICATED ON THIS DRAWING SHEET ARE DIAGRAMMATIC IN NATURE AND DO NOT NECESSARILY INDICATE ALL REQUIRED PIPING APPURTENANCES. REFER TO EQUIPMENT DETAILS ON M-500 SERIES OF DRAWINGS AS WELL AS MANUFACTURER'S INSTALLATION INSTRUCTIONS AND PROVIDE ALL NECESSARY PIPING APPURTENANCES REQUIRED FOR A COMPLETE INSTALLATION.
2. INSTALL VALVED DRAINS AT ALL SYSTEM HIGH POINTS.
3. BOILERS (B-1, B-2, B-3, & B-4) SHALL FUNCTION VIA THEIR FACTORY CONTROLS. BOILER CONTROLS SHALL HAVE LEAD-LAG SEQUENCES TO PROVIDE BOILER STAGING MODULATION AND EQUAL RUN TIME FOR EACH BOILER.
4. P-3, AND P-4 SHALL BE DUTY/STAND-BY OPERATION. IF DUTY PUMP FAILS BASED ON CURRENT SWITCH MONITORING IT'S OPERATION, THE STAND-BY PUMP SHALL BE ENABLED.

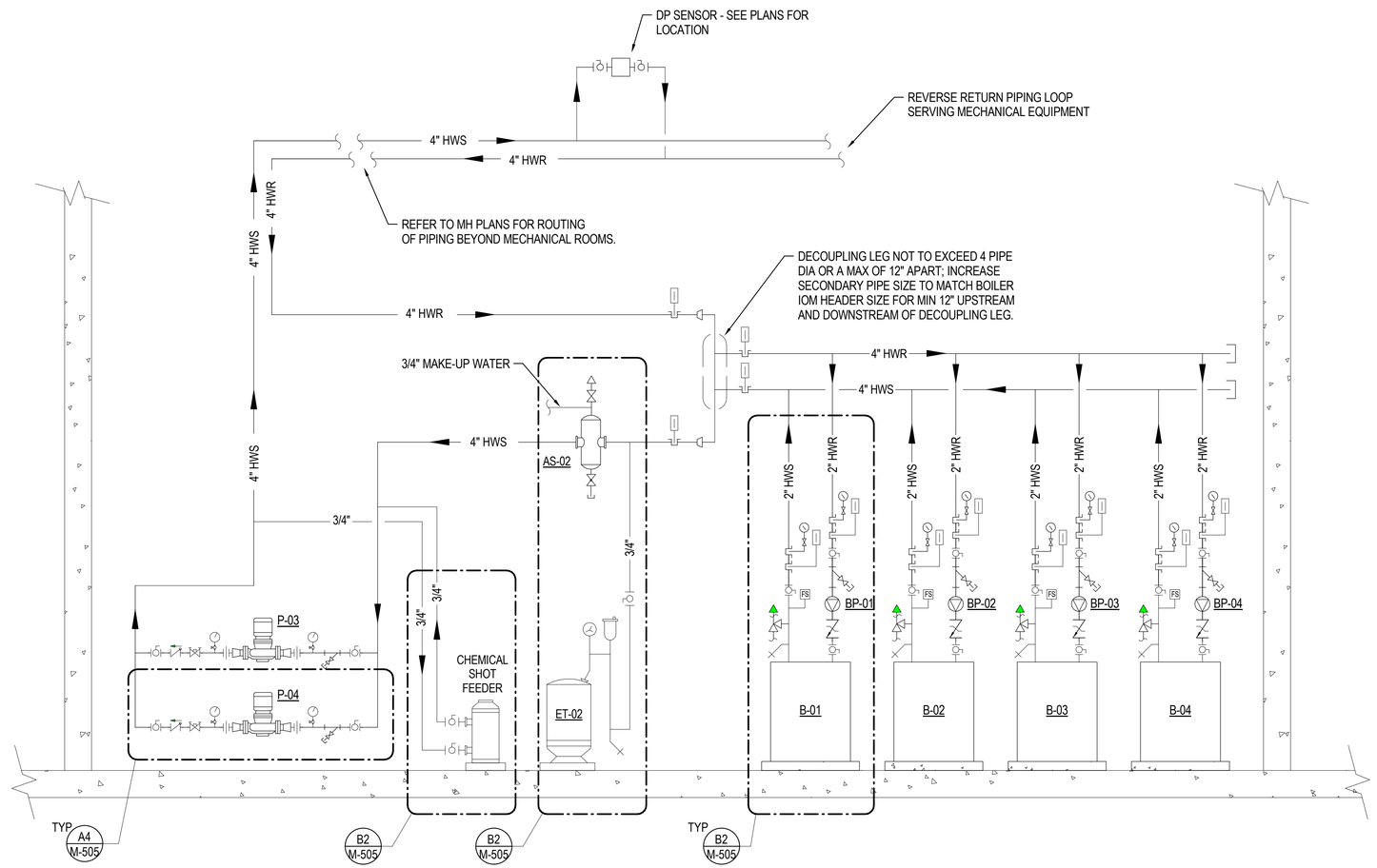

JEFS BOILER ROOM - 213

A2 HOT WATER FLOW DIAGRAM
SCALE: NTS

		APPR
		DATE
		DESCRIPTION
		SYM

NAVFAC

COMMONWEALTH OF PENNSYLVANIA — REGISTERED PROFESSIONAL ENGINEER — DAVID W. HURD — No. PE061160 — SEAL

RQ W.M. Jordan COMPANY — A JOINT VENTURE

Michael Baker INTERNATIONAL
100 AIRSIDE DRIVE
MOON TOWNSHIP, PA 15108
A/E INFO

APPROVED
FOR COMMANDER NAVFAC

ACTIVITY
MARINE CORPS BASE CAMP LEJEUNE

SATISFACTORY TO DATE	DD/MM/YY
DES EMB	DRW AJK CHK DWH
PM / DM	TOWLER / ROOT
BRANCH HEAD	SCE
DESIGN DIRECTOR	R.L.Stephens, Jr.
FIRE PROTECTION	DPS

DEPARTMENT OF THE NAVY
NAVAL FACILITIES ENGINEERING SYSTEMS COMMAND
ATLANTIC DESIGN AND CONSTRUCTION
MCB CAMP LEJEUNE

NAVAL FACILITIES ENGINEERING SYSTEMS COMMAND ATLANTIC
NORFOLK, VA
JACKSONVILLE, NC
LOGCOM CSP WAREHOUSE

MECHANICAL - DIAGRAMS

SCALE:	AS NOTED
EPROJECT NO.:	1639600
CONSTR. CONTR. NO.	N40085-20-C-0059
NAVFAC DRAWING NO.	14111347
SHEET	324 OF 447

M-704

DRAWFORM REVISION: 25 AUGUST 2020

P1527 FINAL SUBMISSION - 11/18/2021

PLOTTED: 11/11/2021 3:07:20 PM

FILE NAME: BIM 360://HF PACKAGE 3/P1527 LOG COM CSP-1639600-M.rvt

CONTROLS - GENERAL NOTES

DIAGRAMMATIC INTENT OF CONTROLS DIAGRAMS AND POINTS LIST

CONTROL POINTS, SENSORS AND DEVICES INDICATED ON THE CONTROL DRAWINGS ARE DIAGRAMMATIC IN NATURE WITH INTENT TO FULLY ILLUSTRATE THE CONTROL SYSTEM FUNCTIONALITY AND DO NOT NECESSARILY REPRESENT THE INSTALLED LOCATION OF DEVICES OR PHYSICAL WIRING BETWEEN DEVICES. CONTROL DEVICES AND POINTS SHOWN MAY BE INTEGRAL COMPONENTS OF AN INSTALLED PIECE OF EQUIPMENT (BOILER, CHILLER, AIR HANDLING UNIT, ETC.) WHERE AVAILABLE EITHER AS A PHYSICALLY INSTALLED DEVICE OR VIA BACNET INTERFACE TO THE DEVICE. REFER TO CONTROL SHOP DRAWINGS AND EQUIPMENT SUBMITTALS FOR PHYSICAL LOCATION OF DEVICES AND FIELD/INTERNAL WIRING SCHEMATICS.

IN ADDITION TO THESE DRAWING, REFER TO PROJECT SPECIFICATIONS **23 09 23.13 22** *BACnet DIRECT DIGITAL CONTROL SYSTEMS FOR HVAC*.

TERMS/ABBREVIATIONS USED WITHIN THE SEQUENCES OF OPERATION:

ADJ.: ADJUSTABLE BY THE END USER, THROUGH THE SUPPLIED USER INTERFACE.

AI: ANALOG INPUT. A PHYSICAL INPUT TO THE CONTROL MODULE.

AO: ANALOG OUTPUT. A PHYSICAL OUTPUT FROM THE CONTROL MODULE.

AV: ANALOG VALUE. AN INTERMEDIATE (SOFTWARE) POINT.

BI: BINARY INPUT. A PHYSICAL INPUT TO THE CONTROL MODULE.

BO: BINARY OUTPUT. A PHYSICAL OUTPUT FROM THE CONTROL MODULE.

BV: BINARY VALUE. AN INTERMEDIATE (SOFTWARE) POINT

LOOP: A CONTROL LOOP. MOST COMMONLY A PID (PROPORTIONAL-INTEGRAL-DERIVATIVE) CONTROL LOOP.

SCHED: SCHEDULE. THE CONTROL ALGORITHM FOR THIS EQUIPMENT SHALL INCLUDE A USER EDITABLE SCHEDULE.

TREND: THE CONTROL SYSTEM SHALL BE CONFIGURED TO COLLECT AND DISPLAY A TREND LOG OF THIS OBJECT. THE TRENDING INTERVAL SHALL BE NO LESS THAN ONE SAMPLE EVERY 5 MINUTES. (CHANGE OF VALUE TRENDING, WHERE A SAMPLE IS TAKEN EVERY TIME THE VALUE CHANGES BY MORE THAN A USER-DEFINED MINIMUM, IS AN ACCEPTABLE ALTERNATIVE.) THE CONTROL SYSTEM SHALL BE CONFIGURED TO GENERATE AN ALARM WHEN THIS OBJECT EXCEEDS USER DEFINABLE LIMITS, AS DESCRIBED IN THE SEQUENCE OF CONTROLS.

NOTE: ALL OF THE ABOVE SHALL BE PROVIDED AS BACNET OBJECTS.

OCCUPANT OVERRIDE SWITCH, OR TIMED LOCAL OVERRIDE:

A CONTROL OPTION THAT ALLOWS BUILDING OCCUPANTS TO OVERRIDE THE PROGRAMMED HVAC SCHEDULE FOR A LIMITED PERIOD OF TIME. WHEN THE OVERRIDE TIME EXPIRES, THE ZONE RETURNS TO ITS UNOCCUPIED STATE.

OCCUPANT SETPOINT ADJUSTMENT:

A CONTROL OPTION THAT ALLOWS BUILDING OCCUPANTS TO ADJUST - WITHIN LIMITS SET BY THE HVAC CONTROL SYSTEM - THE HEATING AND COOLING SETPOINTS OF SELECTED ZONES. TYPICALLY, THE USER INTERFACE FOR THIS FUNCTION IS BUILT INTO THE ZONE SENSOR.

OPTIMAL START-UP:

A CONTROL STRATEGY THAT AUTOMATICALLY STARTS AN HVAC SYSTEM AT THE LATEST POSSIBLE TIME YET ENSURES COMFORT CONDITIONS BY THE TIME THE BUILDING BECOMES OCCUPIED. IN A TYPICAL IMPLEMENTATION, A CONTROLLER MEASURES THE TEMPERATURE OF THE ZONE AND THE OUTSIDE AIR. THEN, USING DESIGN HEATING OR COOLING CAPACITY AT THE DESIGN OUTSIDE AIR TEMPERATURE, THE SYSTEM COMPUTES HOW LONG A UNIT MUST RUN AT MAXIMUM CAPACITY TO BRING THE ZONE TEMPERATURE TO ITS OCCUPIED SETPOINT. THE OPTIMAL START ALGORITHM OFTEN INCLUDES A SELF-LEARNING FEATURE TO ADJUST FOR VARIATIONS FROM DESIGN CAPACITY. A DISTRIBUTED SYSTEM MUST USE RUN ON REQUEST WITH OPTIMAL START. (SEE BELOW.)

REQUESTED, OR RUN ON REQUEST:

A CONTROL STRATEGY THAT OPTIMIZES THE RUNTIME OF A SOURCE PIECE OF EQUIPMENT THAT SUPPLIES ONE OR MORE RECEIVING UNITS - SUCH AS AN AIR HANDLER UNIT SUPPLYING ZONE TERMINAL UNITS WITH HEATING, COOLING, VENTILATION, OR SIMILAR SERVICE. SOURCE EQUIPMENT RUNS ONLY WHEN NEEDED, NOT ON A FIXED SCHEDULE. THE SOURCE EQUIPMENT RUNS WHEN ONE OR MORE RECEIVING UNITS REQUEST ITS SERVICES. AN OPERATOR DETERMINES HOW MANY REQUESTS ARE REQUIRED TO START THE SOURCE EQUIPMENT.

FOR EXAMPLE, IF ALL THE ZONES IN A BUILDING ARE UNOCCUPIED AND THE ZONE TERMINAL UNITS DO NOT NEED HEATING OR COOLING, THE AHU WILL SHUT DOWN. HOWEVER, IF A ZONE BECOMES OCCUPIED OR NEEDS COOLING, THE TERMINAL UNIT WILL SEND A RUN REQUEST TO THE AHU TO INITIATE THE START-UP SEQUENCE. IF THIS AHU DEPENDS ON A CENTRAL CHILLER, IT CAN SEND A RUN REQUEST TO THE CHILLER. THE RUN ON REQUEST ALGORITHM ALSO ALLOWS AN OPERATOR TO SCHEDULE OCCUPANCY FOR INDIVIDUAL ZONES BASED ON THE NEEDS OF THE OCCUPANTS WITHOUT HAVING TO ADJUST THE SCHEDULES OF RELATED AHUS AND CHILLERS.

TRIM AND RESPOND, OR SETPOINT OPTIMIZATION:

A CONTROL STRATEGY THAT OPTIMIZES THE SETPOINT OF A SOURCE PIECE OF EQUIPMENT THAT SUPPLIES ONE OR MORE RECEIVING UNITS - SUCH AS AN AIR HANDLER UNIT SUPPLYING ZONE TERMINAL UNITS WITH HEATING, COOLING, VENTILATION, OR SIMILAR SERVICE. THE SOURCE UNIT COMMUNICATES WITH RECEIVING UNITS TO DETERMINE HEATING, COOLING, AND OTHER REQUIREMENTS, AND THEN ADJUSTS ITS SETPOINT. FOR EXAMPLE, IF ALL ZONES ARE COMFORTABLE AND DO NOT REQUEST COOLING, THE AHU WILL GRADUALLY INCREASE (TRIM) ITS SUPPLY AIR SETPOINT. WHEN A ZONE REQUESTS COOLING, THE AHU RESPONDS BY DROPPING ITS SETPOINT. THE MORE ZONES THAT REQUEST COOLING, THE MORE IT DROPS THE SETPOINT. THE AHU REPEATS THIS PROCESS THROUGHOUT THE DAY TO KEEP ZONES COOL, BUT WITH A SUPPLY AIR SETPOINT THAT IS NO COOLER THAN NECESSARY.

INTERFACE

THE PHYSICAL DEVICE REQUIRED TO PROVIDE INTEGRATION CAPABILITIES FROM AN EQUIPMENT VENDOR'S PRODUCT TO THE CONTROL SYSTEM. THE EQUIPMENT VENDOR MOST NORMALLY FURNISHES THE INTERFACE DEVICE. AN EXAMPLE OF AN INTERFACE IS THE CHILLED WATER TEMPERATURE RESET INTERFACE CARD PROVIDED BY THE CHILLER MANUFACTURER IN ORDER TO ALLOW THE CONTROL SYSTEM TO INTEGRATE THE CHILLED WATER TEMPERATURE RESET FUNCTION INTO THE CONTROL SYSTEM.

INTEGRATE

THE PHYSICAL CONNECTIONS FROM A CONTROL SYSTEM TO ALL SPECIFIED EQUIPMENT THROUGH AN INTERFACE AS REQUIRED TO ALLOW THE SPECIFIED CONTROL AND MONITORING FUNCTIONS OF THE EQUIPMENT TO BE PERFORMED VIA THE CONTROL SYSTEM.

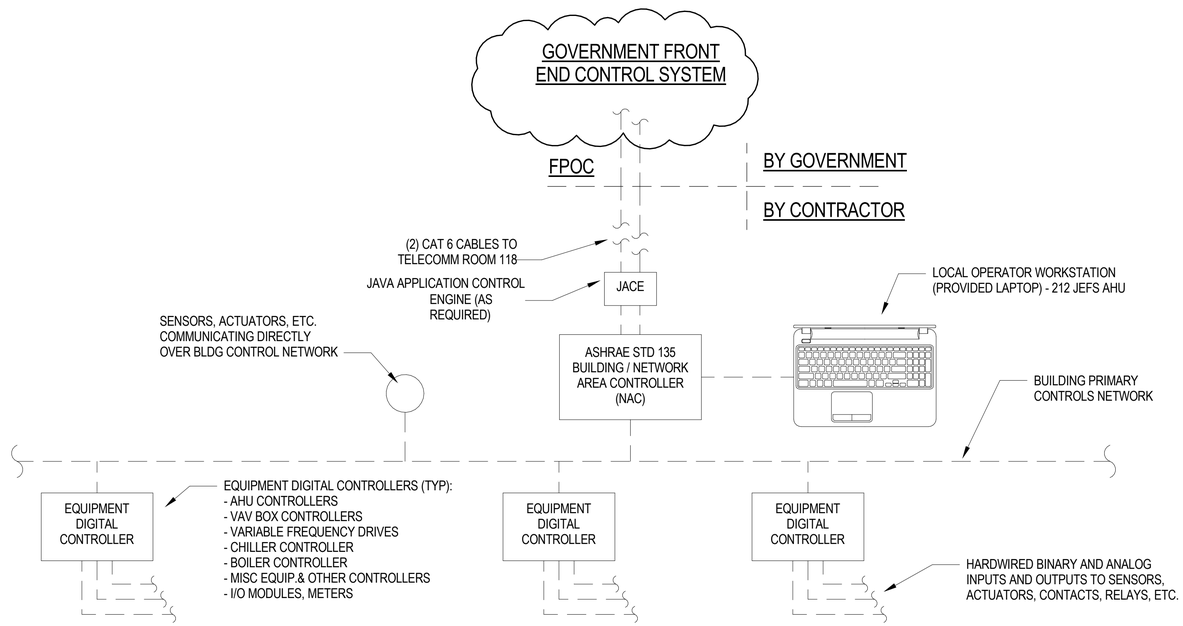

CONTROLS - SYSTEM ARCHITECTURE DIAGRAM

CONTROL DIAGRAM SYMBOLS

M	MOTOR
CT CS	CURRENT TRANSMITTER (CT=AI) / CURRENT SENSOR (CS=BI)
STR	MOTOR STARTER
VFD	VARIABLE FREQUENCY DRIVE
SCR	SILICON CONTROLLED RECTIFIER
[*]F	[E]XHAUST FAN; [R]ETURN FAN; [S]UPPLY FAN; [T]RANSFER FAN, ETC.
F	AIRFLOW MEASUREMENT STATION
	AIR FILTER
H L	DIFFERENTIAL PRESSURE SENSOR WITH HIGH AND LOW
M M NC NO	MOTORIZED DAMPER W/ACTUATOR NC=NORMALLY CLOSED NO=NORMALLY OPEN
	DAMPER STATUS SWITCH
M	VAV / TERMINAL BOX DAMPER
	BACKDRAFT DAMPER

CONTROL DIAGRAM SYMBOLS (CONTINUED)

T	DUCT FREEZE STAT
H	DUCT HUMIDITY SENSOR
T	DUCT TEMPERATURE SENSOR
S	DUCT SMOKE DETECTOR
P-#	PUMP
	WATER FLOW DIRECTION (PIPING)
	WATER FLOW SENSOR (PIPING)
	WATER FLOW METER (PIPING)
T	WATER TEMPERATURE SENSOR (PIPING)
	CONTROL VALVE WITH MOTORIZED OPERATOR - 2 WAY
	CONTROL VALVE WITH MOTORIZED OPERATOR - 3 WAY
H	ROOM HUMIDITY SENSOR
TS	ROOM TEMPERATURE SENSOR
T	ROOM THERMOSTAT
OAT	OUTDOOR AIR TEMP SENSOR

ABBREVIATIONS / ACRONYMS

ADJ. - ADJUSTABLE
AI - ANALOG INPUT
AO - ANALOG OUTPUT
AV - ANALOG VARIABLE
BI - BINARY INPUT
BO - BINARY OUTPUT
BV - BINARY VARIABLE
DX - DIRECT EXPANSION
EC - ELECTRICAL CONTRACTOR
MC - MECHANICAL CONTRACTOR
NC - NORMALLY CLOSED
NO - NORMALLY OPEN

BUILDING OCCUPANCY SCHEDULE

THE BUILDING OCCUPANCY SCHEDULE AS PROGRAMMED INTO THE DDC SYSTEM SHALL BE COORDINATED WITH THE USER/CONTRACTING OFFICER. IF A SPECIFIC OCCUPANCY SCHEDULE CANNOT BE DETERMINED, HOURS OF BUILDING OCCUPANCY SHALL BE MONDAY THRU FRIDAY FROM 6AM TO 6PM. BUILDING OCCUPANCY SCHEDULE SHALL BE ADJUSTABLE.

APPR	DATE	DESCRIPTION	SYM

NAVFAC

COMMONWEALTH OF PENNSYLVANIA — REGISTERED PROFESSIONAL — DAVID W. HURD — ENGINEER — No. PE061160 — SEAL

W.M. Jordan COMPANY — A JOINT VENTURE

Michael Baker INTERNATIONAL
100 AIRSIDE DRIVE
MOON TOWNSHIP, PA 15108 — A/E INFO

APPROVED

FOR COMMANDER NAVFAC

ACTIVITY: MARINE CORPS BASE CAMP LEJEUNE

SATISFACTORY TO DATE: DD/MM/YY

DES	DRW	CHK
DEM	JW	EMB

PM / DM: TOWLER / ROOT
BRANCH HEAD: SCE
DESIGN DIRECTOR: R.L.Stephens, Jr.
FIRE PROTECTION: DPS

DEPARTMENT OF THE NAVY
NAVAL FACILITIES ENGINEERING SYSTEMS COMMAND ATLANTIC
ATLANTIC DESIGN AND CONSTRUCTION
NAVAL FACILITIES ENGINEERING SYSTEMS COMMAND ATLANTIC
NORFOLK, VA
MCB CAMP LEJEUNE
JACKSONVILLE, NC
LOGCOM CSP WAREHOUSE

MECHANICAL - CONTROLS

SCALE: AS NOTED
EPROJECT NO.: 1639600
CONSTR. CONTR. NO. N40085-20-C-0059
NAVFAC DRAWING NO. 14111348
SHEET 325 OF 447

M-801

DRAWFORM REVISION: 25 AUGUST 2020

P1527 FINAL SUBMISSION - 11/18/2021

PLOTTED: 11/11/2021 3:07:22 PM

FILE NAME: BIM 360://HF PACKAGE 3/P1527 LOG COM CSP- 1639600-M.rvt

ELECTRIC METER SEQUENCE OF OPERATION:

ENHANCED POWER AND ENERGY ELECTRIC METER SHALL MONITOR AND TREND POINTS AS INDICATED ON THE PONTS LIST, WITH ONBOARD DATA LOGGING AS WELL AS OUTPUT TO THE BUILDING DDC SYSTEM

NOTE: THIS METER IS SEPARATE AND DISTINCT FROM THE METER INDICATED ON THE ELECTRICAL DRAWINGS. ATC SUB-CONTRACTOR TO PROVIDE.

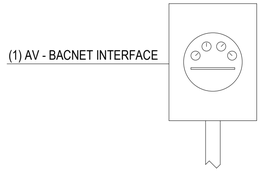

ELECTRIC (ENHANCED POWER AND ENERGY) METER - SYSTEM POINT LIST

POINT NUMBER	SYSTEM POINT DESCRIPTION		HARDWARE POINTS				SYSTEM FEATURES /SOFTWARE POINTS			NOTES
			ANALOG		DIGITAL (BINARY)		PROGRAMS		ALARMS	
	ELECTRIC METER	SHOW ON DISPLAY	INPUT (AI)	OUTPUT (AO)	INPUT (BI)	OUTPUT (BO)	TREND	(AV) ANALOG VALUE	COMM. FAIL	
	DDC CONTROL PANEL									
1	BACNET COMMUNICATIONS INTERFACE	●							●	
2	POWER (REAL, KW) - 3-PHASE TOTAL	●					●	●		
3	POWER (REAL, KW) -PER PHASE	●					●	●		
4	POWER (REACTIVE, kVAR) - 3-PHASE TOTAL	●					●	●		
5	POWER (REACTIVE, kVAR) - PER PHASE	●					●	●		
6	POWER (APPARENT, kVA) - 3-PHASE TOTAL	●					●	●		
7	POWER (APPARENT, kVA) - PER PHASE	●					●	●		
8	POWER FACTOR (3-PHASE AVERAGE)	●					●	●		
9	POWER FACTOR (PER PHASE)	●					●	●		
10	PRESENT POWER DEMAND (REAL, KW) - 3-PHASE TOTAL	●					●	●		
11	PRESENT POWER DEMAND (REAL, KW) -PER PHASE	●					●	●		
12	PRESENT POWER DEMAND (REACTIVE, kVAR) - 3-PHASE TOTAL	●					●	●		
13	PRESENT POWER DEMAND (REACTIVE, kVAR) - PER PHASE	●					●	●		
14	PRESENT POWER DEMAND (APPARENT, kVA) - 3-PHASE TOTAL	●					●	●		
15	PRESENT POWER DEMAND (APPARENT, kVA) - PER PHASE	●					●	●		
16	PEAK POWER DEMAND (REAL, KW) - 3-PHASE TOTAL	●					●	●		
17	PEAK POWER DEMAND (REAL, KW) -PER PHASE	●					●	●		
18	PEAK POWER DEMAND (REACTIVE, kVAR) - 3-PHASE TOTAL	●					●	●		
19	PEAK POWER DEMAND (REACTIVE, kVAR) - PER PHASE	●					●	●		
20	PEAK POWER DEMAND (APPARENT, kVA) - 3-PHASE TOTAL	●					●	●		
21	PEAK POWER DEMAND (APPARENT, kVA) - PER PHASE	●					●	●		
22	CURRENT - 3-PHASE AVERAGE	●					●	●		
23	CURRENT - PER PHASE	●					●	●		
24	VOLTAGE - LINE-LINE	●					●	●		
25	VOLTAGE - LINE-NEUTRAL	●					●	●		
26	FREQUENCY - Hz	●					●	●		
27	ACCUMULATED NET ENERGY - REAL kWh	●					●	●		
28	ACCUMULATED NET ENERGY - REACTIVE kVARh	●					●	●		
29	ACCUMULATED NET ENERGY - APPARENT kVAh	●					●	●		
30	ACCUMULATED REAL ENERGY BY PHASE (kWh)	●					●	●		

B1 ELECTRIC METER CONTROL DIAGRAM
SCALE: NTS

NO	DESCRIPTION	DATE	APPR

NAVFAC

COMMONWEALTH OF PENNSYLVANIA
REGISTERED PROFESSIONAL ENGINEER
DAVID W. HURD
No. PE061160
SEAL

RQ W.M. Jordan COMPANY – A JOINT VENTURE –

Michael Baker INTERNATIONAL
100 AIRSIDE DRIVE
MOON TOWNSHIP, PA 15108
A/E INFO

APPROVED

FOR COMMANDER NAVFAC

ACTIVITY
MARINE CORPS BASE
CAMP LEJEUNE

SATISFACTORY TO DATE DD/MM/YY

DES	DRW	CHK
DEM	JW	EMB

PM / DM TOWLER / ROOT
BRANCH HEAD SCE
DESIGN DIRECTOR R.L. Stephens, Jr.
FIRE PROTECTION DPS

DEPARTMENT OF THE NAVY
NAVAL FACILITIES ENGINEERING SYSTEMS COMMAND ATLANTIC
ATLANTIC DESIGN AND CONSTRUCTION
MCB CAMP LEJEUNE

NAVAL FACILITIES ENGINEERING SYSTEMS COMMAND ATLANTIC
NORFOLK, VA
JACKSONVILLE, NC
LOGCOM CSP WAREHOUSE

MECHANICAL - CONTROLS

SCALE: AS NOTED
EPROJECT NO.: 1639600
CONSTR. CONTR. NO. N40085-20-C-0059
NAVFAC DRAWING NO. 14111349
SHEET 326 OF 447

M-802

DRAWFORM REVISION: 25 AUGUST 2020

P1527 FINAL SUBMISSION - 11/18/2021

PLOTTED: 11/11/2021 3:07:23 PM

FILE NAME: BIM 360://HF PACKAGE 3/P1527 LOG COM CSP- 1639600-M.rvt

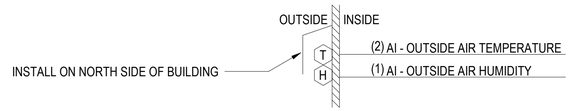

OUTDOOR AIR CONDITIONS SEQUENCE OF OPERATION:

THE CONTROLLER SHALL MONITOR THE OUTSIDE AIR TEMPERATURE AND HUMIDITY AND CALCULATE THE OUTSIDE AIR ENTHALPY ON A CONTINUAL BASIS. THESE VALUES SHALL BE MADE AVAILABLE TO THE SYSTEM AT ALL TIMES.

ALARM SHALL BE GENERATED AS FOLLOWS:

- SENSOR FAILURE: SENSOR READING INDICATES SHORTENED OR DISCONNECTED SENSOR. IN THE EVENT OF A SENSOR FAILURE, AN ALTERNATE OUTSIDE AIR CONDITIONS SENSOR (SUCH AS AHU OA SENSOR) SHALL BE MADE AVAILABLE TO THE SYSTEM WITHOUT INTERRUPTION IN SENSOR READINGS.

IF NO OA TEMP SENSOR CAN BE READ, A DEFAULT VALUE OF 65°F WILL BE USED.

IF NO OA HUMIDITY SENSOR CAN BE READ, A DEFAULT VALUE OF 50% WILL BE USED.

OUTSIDE AIR TEMPERATURE HISTORY:
THE CONTROLLER SHALL MONITOR AND RECORD THE HIGH AND LOW TEMPERATURE READINGS FOR THE OUTSIDE AIR. THESE READINGS SHALL BE RECORDED ON A DAILY, MONTH-TO-DATE, AND YEAR-TO-DATE BASIS.

OUTDOOR AIR CONDITIONS POINT LIST

POINT NUMBER	SYSTEM POINT DESCRIPTION	SHOW ON DISPLAY	HARDWARE POINTS: ANALOG INPUT (AI)	HARDWARE POINTS: ANALOG OUTPUT (AO)	HARDWARE POINTS: DIGITAL (BINARY) INPUT (BI)	HARDWARE POINTS: DIGITAL (BINARY) OUTPUT (BO)	SYSTEM FEATURES /SOFTWARE POINTS: PROGRAMS	SYSTEM FEATURES /SOFTWARE POINTS: ALARMS	NOTES
	OUTDOOR AIR CONDITIONS						TREND; (AV) ANALOG VALUE	FAILURE	
1	OUTSIDE AIR HUMIDITY	●	●				●		
2	OUTSIDE AIR TEMP	●	●				●		
3	OUTSIDE AIR ENTHALPY	●					●		
4	SENSOR FAILURE							●	
-	-								
##	RESERVED FOR FUTURE								

C1 OUTSIDE AIR CONDITIONS CONTROL DIAGRAM
SCALE: NTS

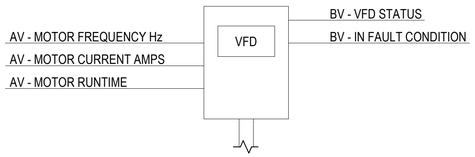

VARIABLE FREQUENCY DRIVE INTERFACE

VARIABLE FREQUENCY DRIVE (VFD) INTERFACE MONITOR:
CURRENT VFD STATUS AND OPERATING CONDITIONS SHALL BE MONITORED THROUGH ITS COMMUNICATIONS INTERFACE PORT. THE INTERFACE SHALL MONITOR AND TREND THE POINTS AS SHOWN ON THE POINTS LIST.

VARIABLE FREQUENCY DRIVE POINTS LIST

POINT NUMBER	SYSTEM POINT DESCRIPTION	SHOW ON DISPLAY	HARDWARE POINTS: ANALOG INPUT (AI)	HARDWARE POINTS: ANALOG OUTPUT (AO)	HARDWARE POINTS: DIGITAL (BINARY) INPUT (BI)	HARDWARE POINTS: DIGITAL (BINARY) OUTPUT (BO)	SYSTEM FEATURES /SOFTWARE POINTS: PROGRAMS	SYSTEM FEATURES /SOFTWARE POINTS: ALARMS	NOTES
	VARIABLE FREQUENCY DRIVE						(AV) ANALOG VALUE; (BV) BINARY VALUE; TREND	GENERAL/STATUS	
1	MOTOR CURRENT AMPS	●					●		
2	MOTOR FREQUENCY HERTZ	●					●		
3	MOTOR RUNTIME	●					●		
4	IN FAULT CONDITION	●					●	●	
5	VFD STATUS	●					●	●	
-	-								
##	RESERVED FOR FUTURE								

A1 VARIABLE FREQUENCY DRIVE (VFD)
SCALE: NTS

ATFP — (1) BI - ATFP SWITCH

ANTI-TERRORISM FORCE PROTECTION (ATFP) SHUTDOWN SEQUENCE OF OPERATION

PROVIDE ATFP SHUTDOWN STATIONS, SEE MP SERIES PLANS AND DETAIL C4/M-504. ATFP SHUTDOWN CONTROL SHALL BE HARDWIRED 120V CIRCUIT WITH KEYED RESET. ACTIVATION OF ANY SWITCH SHALL SHUTDOWN ALL HVAC SYSTEMS MOVING AIR THROUGH THE BUILDING (AS INDICATED IN INDIVIDUAL SEQUENCES) WITHIN 30 SECONDS. ALL DAMPERS TO THE OUTSIDE SHALL CLOSE. OPERATION SHALL BE REGARDLESS OF HAND/OFF/AUTO (HOA) POSITON OF EQUIPMENT. SYSTEM ACTIVATION SHALL GENERATE AN ALARM WITHIN THE HVAC SYSTEM

UPON ACTIVATION OF A SHUTDOWN SWITCH THE FOLLOWING SHALL OCCUR WITHIN 30 SECONDS (IN NORMAL OCCUPIED SPACES):

- ALL FANS SHALL SHUT DOWN (EXCEPT AS INDICATED)
- ALL OUTDOOR AIR DAMPERS SHALL CLOSE
- ALL EXHAUST DAMPERS SHALL CLOSE
- AN ALARM SHALL BE GENERATED

ATFP SHUTDOWN POINT LIST

POINT NUMBER	SYSTEM POINT DESCRIPTION	SHOW ON DISPLAY	HARDWARE POINTS: ANALOG INPUT (AI)	HARDWARE POINTS: ANALOG OUTPUT (AO)	HARDWARE POINTS: DIGITAL (BINARY) INPUT (BI)	HARDWARE POINTS: DIGITAL (BINARY) OUTPUT (BO)	SYSTEM FEATURES /SOFTWARE POINTS: PROGRAMS	SYSTEM FEATURES /SOFTWARE POINTS: ALARMS	NOTES
	ATFP SHUTDOWN						(AV) ANALOG VALUE; (BV) BINARY VALUE; TREND	ACTIVATION	
1	ATFP SWITCH	●			STATUS ON/OFF ●		●	●	
-	-								
##	RESERVED FOR FUTURE								

C3 ATFP SHUTDOWN CONTROL DIAGRAM
SCALE: NTS

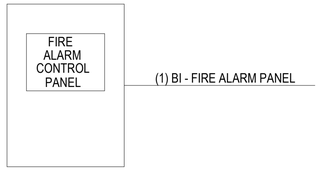

FIRE ALARM SEQUENCE OF OPERATION:

THE CONTROLLER SHALL MONITOR FIRE ALARM. CONNECT TO RELAY MODULE.

UPON ACTIVATION OF FIRE ALARM SYSTEM, THE FOLLOWING SHALL OCCUR WITHIN 30 SECONDS:

- ALL FANS SHALL SHUTDOWN
- ALL OUTDOOR AIR DAMPERS SHALL CLOSE
- ALL EXHAUST DAMPERS SHALL CLOSE
- AN ALARM SHALL BE GENERATED

SYSTEM SHALL SHUTDOWN AND DAMPERS SHALL CLOSE REGARDLESS OF THE POSITION OF HAND-OFF-AUTO SWITCHES.

FIRE ALARM SYSTEM DDC INTERFACE POINT LIST

POINT NUMBER	SYSTEM POINT DESCRIPTION	SHOW ON DISPLAY	HARDWARE POINTS: ANALOG INPUT (AI)	HARDWARE POINTS: ANALOG OUTPUT (AO)	HARDWARE POINTS: DIGITAL (BINARY) INPUT (BI)	HARDWARE POINTS: DIGITAL (BINARY) OUTPUT (BO)	SYSTEM FEATURES /SOFTWARE POINTS: PROGRAMS	SYSTEM FEATURES /SOFTWARE POINTS: ALARMS	NOTES
	FIRE ALARM SYSTEM						(AV) ANALOG VALUE; (BV) BINARY VALUE; TREND	ACTIVATION	
1	FIRE ALARM PANEL	●			STATUS ON/OFF ●			●	
-	-								
##	RESERVED FOR FUTURE								

A4 FIRE ALARM SYSTEM CONTROL DIAGRAM
SCALE: NTS

APPR	DATE	DESCRIPTION	SYM

NAVFAC

COMMONWEALTH OF PENNSYLVANIA — REGISTERED PROFESSIONAL — DAVID W. HURD — ENGINEER — No. PE061160 — SEAL

IRQ Jordan Company — A JOINT VENTURE

Michael Baker INTERNATIONAL
100 AIRSIDE DRIVE
MOON TOWNSHIP, PA 15108 — A/E INFO

APPROVED

FOR COMMANDER NAVFAC

ACTIVITY: MARINE CORPS BASE CAMP LEJEUNE

SATISFACTORY TO DATE	DD/MM/YY
DES DEM / DRW JW / CHK EMB	
PM / DM	TOWLER / ROOT
BRANCH HEAD	SCE
DESIGN DIRECTOR	R.L.Stephens, Jr.
FIRE PROTECTION	DPS

NAVAL FACILITIES ENGINEERING SYSTEMS COMMAND
NORFOLK, VA

DEPARTMENT OF THE NAVY
NAVAL FACILITIES ENGINEERING SYSTEMS COMMAND ATLANTIC
ATLANTIC DESIGN AND CONSTRUCTION
MCB CAMP LEJEUNE

JACKSONVILLE, NC
LOGCOM CSP WAREHOUSE

MECHANICAL - CONTROLS

SCALE:	AS NOTED
EPROJECT NO.:	1639600
CONSTR. CONTR. NO.	N40085-20-C-0059
NAVFAC DRAWING NO.	14111350
SHEET	327 OF 447

M-803

DRAW/FORM REVISION: 25 AUGUST 2020

P1527 FINAL SUBMISSION - 11/18/2021

PLOTTED: 11/11/2021 3:07:26 PM

FILE NAME: BIM 360/.IHF PACKAGE 3/P1527 LOG COM CSP-1639600-M.rvt

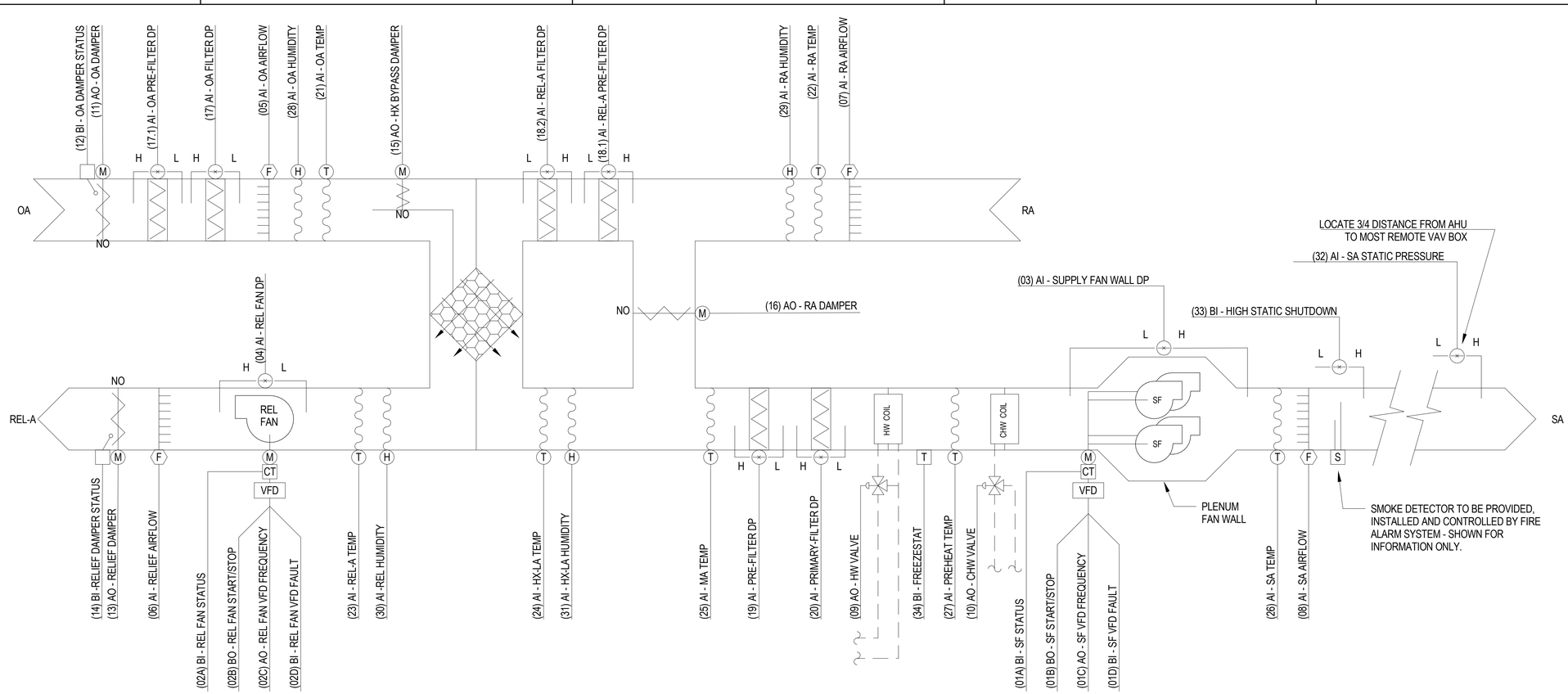

HF-3, P-1527, AHU-01 SOO:

BUILDING AUTOMATION SYSTEM INTERFACE:
THE BUILDING AUTOMATION SYSTEM (BAS) SHALL SEND THE CONTROLLER OCCUPIED/UNOCCUPIED, OCCUPIED BYPASS, MORNING WARM UP/PRE COOL, ATFP ALARM CONDITION AND MODES. THE UNIT SHALL DELIVER SUPPLY AIR AT A CONSTANT 55 °F DB (ADJ.) SUPPLY AIR TEMPERATURE WITH INDIVIDUAL ZONE COOLING/HEATING CONTROLLED AT THE VAV BOX/ZONE LEVEL. THE BAS SHALL ALSO SEND THE DISCHARGE AIR TEMPERATURE SETPOINT (55 °F DB ADJ.) AND THE DUCT STATIC PRESSURE SETPOINT. IF COMMUNICATION IS LOST WITH THE BAS THE CONTROLLER SHALL OPERATE USING DEFAULT MODES AND SETPOINTS.

OCCUPIED MODE:
DURING OCCUPIED PERIODS, THE SUPPLY FAN(S) AND RELIEF FAN SHALL RUN CONTINUOUSLY, AND THE OUTSIDE AIR DAMPER SHALL OPEN/MODULATE IN CONJUNCTION WITH THE RETURN AIR DAMPER TO MAINTAIN THE CONSTANT VENTILATION/RELIEF REQUIREMENTS AND BUILDING PRESSURIZATION. THE CHILLED WATER AND HOT WATER VALVES SHALL MODULATE TO MAINTAIN THE DISCHARGE AIR TEMPERATURE SETPOINT.

UNOCCUPIED MODE:
WHEN THE SPACE TEMPERATURE OF ANY ZONE IS BELOW THE UNOCCUPIED HEATING SETPOINT OF 60.0 DEG. F (ADJ.) THE SUPPLY FAN SHALL START, THE OUTSIDE AIR DAMPER SHALL REMAIN CLOSED, THE RELIEF FAN SHALL REMAIN OFF, AND THE HOT WATER VALVE SHALL OPEN. WHEN THE SPACE TEMPERATURE OF EACH ZONE RISES ABOVE THE UNOCCUPIED HEATING SETPOINT OF 60.0 DEG. F (ADJ.) PLUS THE UNOCCUPIED DIFFERENTIAL OF 4.0 DEG. F (ADJ.) THE SUPPLY FAN SHALL STOP AND THE HOT WATER VALVE SHALL CLOSE.

WHEN THE SPACE TEMPERATURE IS ABOVE THE UNOCCUPIED COOLING SETPOINT OF 85.0 DEG. F (ADJ.) THE SUPPLY FAN SHALL START, THE OUTSIDE AIR DAMPER SHALL REMAIN CLOSED, THE RELIEF FAN SHALL REMAIN OFF, AND THE CHILLED WATER VALVE SHALL OPEN. WHEN THE SPACE TEMPERATURE OF ALL ZONES FALLS BELOW THE UNOCCUPIED COOLING SETPOINT OF 85.0 DEG. F (ADJ.) MINUS THE UNOCCUPIED DIFFERENTIAL OF 4.0 DEG. F (ADJ.) THE SUPPLY FAN SHALL STOP AND THE CHILLED WATER VALVE SHALL CLOSE.

OPTIMAL START:
THE BAS SHALL MONITOR THE SCHEDULED OCCUPIED TIME, OCCUPIED SPACE SETPOINTS AND SPACE TEMPERATURE TO CALCULATE WHEN THE OPTIMAL START OCCURS.

MORNING WARM UP MODE:
DURING OPTIMAL START, IF THE AVERAGE SPACE TEMPERATURE IS BELOW THE OCCUPIED HEATING SETPOINT A MORNING WARM UP MODE SHALL BE ACTIVATED. WHEN MORNING WARM UP IS INITIATED THE UNIT SHALL ENABLE THE HEATING AND SUPPLY FAN. THE OUTSIDE AIR DAMPER SHALL REMAIN CLOSED AND THE RELIEF FAN SHALL REMAIN OFF. WHEN THE SPACE TEMPERATURE REACHES THE OCCUPIED HEATING SETPOINT (ADJ.), THE UNIT SHALL TRANSITION TO THE OCCUPIED MODE.

PRE COOL MODE:
DURING OPTIMAL START, IF THE AVERAGE SPACE TEMPERATURE IS ABOVE THE OCCUPIED COOLING SETPOINT, PRE COOL MODE SHALL BE ACTIVATED. WHEN PRE COOL IS INITIATED THE UNIT SHALL ENABLE THE COOLING AND SUPPLY FAN. THE OUTSIDE AIR DAMPER SHALL REMAIN CLOSED AND THE RELIEF FAN SHALL REMAIN OFF. WHEN THE SPACE TEMPERATURE REACHES OCCUPIED COOLING SETPOINT (ADJ.), THE UNIT SHALL TRANSITION TO THE OCCUPIED MODE.

OCCUPIED BYPASS:
THE BAS SHALL MONITOR THE STATUS OF THE "ON" AND "CANCEL" BUTTONS OF THE VAV SPACE TEMPERATURE SENSORS. WHEN AN OCCUPIED BYPASS REQUEST IS RECEIVED FROM A SPACE SENSOR, THE UNIT SHALL TRANSITION FROM ITS CURRENT OCCUPANCY MODE TO OCCUPIED BYPASS MODE AND THE UNIT SHALL MAINTAIN THE SPACE TEMPERATURE TO THE OCCUPIED SETPOINTS.

FIXED PLATE ENTHALPY HX OPERATION:
UNDER ALL CONDITIONS, THE MIXED AIR TEMPERATURE (MEASURED BY POINT (24)-MA_TEMP) IS DESIGNED TO PROVIDE TEMPERATURE ENTERING THE COOLING AND HEATING COILS AS CLOSE TO SUPPLY AIR SETPOINT (55°F ADJ) AS POSSIBLE.

1) WHEN UNIT IS IN COOLING MODE ((24)-MA_TEMP ENTERING COILS ≥ SA SETPOINT (55°ADJ.)):
   A) IF (21)-OA_TEMP IS HIGHER THAN (22)-RA_TEMP: (15)-HX_BYPASS_DAMPER SHALL BE POSITIONED FOR 0% BYPASS (ALL OA FLOW THROUGH THE EXCHANGER).
   B) IF (21)-OA_TEMP IS LESS THAN (22)-RA_TEMP: (15)-HX_BYPASS DAMPER SHALL BE POSITIONED FOR 100% BYPASS (NO DETRIMENTAL ENERGY RECOVERY ADDING HEAT TO THE OA AIRSTREAM).
2) WHEN UNIT IS IN HEATING MODE ((25)–MA_TEMP ENTERING COILS < SA SETPOINT (55° ADJ.)):
   A) WHEN CONDITION 1.B ABOVE RESULTS IN (25)-MA_TEMP DROPPING BELOW SA SETPOINT, (15)-HX_BYPASS_DAMPER SHALL MODULATE A PERCENTAGE OF OA THROUGH THE HX TO RECOVER HEAT FROM THE EXHAUST AIRSREAM TO MAINTAIN THE UNIT SETPOINT WITHOUT NEED FOR ACTIVATION OF THE HEATING COIL UP TO A POINT OF FULL MODULATION OF OA THROUGH THE HX FOR MAXUMUM AVAILABLE HEAT RECOVERY.
   B) (15)-HX_BYPASS DAMPER MODULATION SHALL BE LIMITED TO PREVENT (23)-REL_A_TEMP FROM FALLING BELOW THE FROST THRESHOLD SETPOINT AS REQUIRED BY HX MANUFACTURER (39°F ADJ.).

SUPPLY FAN (4-FAN "FANWALL"):
THE FANS SHALL BE OFF IN THE UNOCCUPIED MODE. WHEN THE UNIT CONTROLLER IS IN THE OCCUPIED MODE, THE SUPPLY FANS SHALL OPERATE CONTINUOUSLY AND ITS SPEED SHALL BE MODULATED TO MAINTAIN THE DUCT STATIC PRESSURE SETPOINT. THE DUCT STATIC PRESSURE SETPOINT SHALL BE SENT BY THE BAS.

IF AN INDIVIDUAL FAN FAILS TO PROVIDE STATS FOR 30 SECONDS (ADJ., THE SPECIFIC FAN SHALL BE COMMANDED OFF AND AN ALARM SHALL BE ANNUNCIATED AT THE BAS. A MANUAL RESTART SHALL BE REQUIRED TO RESTART THE FAN; REMAINING FANS WITHIN THE FAN ARRAY SHALL CONTINUE TO OPERATE.

A HARDWIRED, HIGH STATIC PRESSURE CUT OFF SWITCH SHALL BE ELECTRICALLY INTERLOCKED WITH THE VARIABLE SPEED DRIVE. IF THE HIGH STATIC PRESSURE CUT OFF SWITCH IS TRIPPED THE FANS SHALL STOP, THE OUTSIDE AIR DAMPER SHALL CLOSE, THE RELIEF FANS SHALL TURN OFF, ALL VALVES SHALL CLOSE AND AN ALARM SHALL BE ANNUNCIATED AT THE BAS. A MANUAL RESET OF THE HIGH STATIC PRESSURE CUT OFF SWITCH SHALL BE REQUIRED TO RESTART THE FANS.

FILTER STATUS: -
A DIFFERENTIAL PRESSURE SWITCH SHALL MONITOR THE DIFFERENTIAL PRESSURE ACROSS THE FILTERS WHEN THE FANS ARE RUNNING. THIS INFORMATION SHALL BE PROVIDED TO THE DDC SYSTEM FOR INFORMATION ONLY. CAMP LEJEUNE MECHANICAL POLICIES DO NOT DESIRE FILTER ALARMS (FILTERS SHALL BE CHANGED ON REGULAR MAINTENANCE INTERVALS).

FREEZE PROTECTION:
A HARDWIRED, LOW LIMIT TEMPERATURE SWITCH SHALL BE ELECTRICALLY INTERLOCKED WITH THE SUPPLY FAN VARIABLE SPEED DRIVE. IF THE LOW LIMIT TEMPERATURE SWITCH IS TRIPPED 38.0 DEG. F (ADJ.), THE OUTSIDE AIR DAMPER SHALL CLOSE, THE RELIEF FAN SHALL TURN OFF, ALL VALVES SHALL OPEN TO 100% (ADJ.) AND AN ALARM SHALL BE ANNUNCIATED AT THE BAS. A MANUAL RESET OF THE LOW LIMIT TEMPERATURE SWITCH SHALL BE REQUIRED TO RESTART THE SUPPLY FAN.

ATFP SHUTDOWN:
UNIT SHALL BE HARDWIRED TO SHUTDOWN AND CLOSE ALL ASSOCIATED DAMPERS UPON ATFP SWITCH ACTIVATION, REFER TO DRAWING M-803 FOR MORE INFORMATION.

BUILDING PRESSURE CONTROL:
THE OUTDOOR AIR DAMPER SHALL MODULATE TO MAINTAIN THE CONSTANT VENTILATION REQUIREMENT AS MEASURED BY THE OUTDOOR AIRFLOW STATION. IF THE OUTSIDE AIR DAMPER IS 100% OPEN, AND THE VENTILATION AIRFLOW IS LESS THAN THE CONSTANT VOLUME REQUIREMENT, THEN THE RETURN AIR DAMPER SHALL SLOWLY MODULATE CLOSED IN ORDER TO ACHIEVE THE CONSTANT VENTILATION REQUIREMENT. THE RETURN AIR DAMPER SHALL NOT BE ALLOWED TO CLOSE FULLY IN ORDER TO PREVENT STARVING THE SUPPLY FAN.

THE RELIEF FAN SPEED SHALL MODULATE TO MAINTAIN THE CONSTANT RELIEF AIRFLOW REQUIREMENT AS MEASURED BY THE RELIEF AIRFLOW STATION. IF THE RELIEF FAN IS AT MINIMUM SPEED, AND THE RELIEF AIRFLOW IS GREATER THAN THE CONSTANT VOLUME REQUIREMENT, THEN THE RELIEF AIR DAMPER SHALL SLOWLY MODULATE CLOSED TO ACHIEVE THE CONSTANT RELIEF AIRFLOW REQUIREMENT. THE RELIEF AIR DAMPER SHALL NOT BE ALLOWED TO CLOSE FULLY TO PREVENT STARVING THE RELIEF FAN.

BY MAINTAINING BOTH THE CONSTANT VENTILATION AND THE CONSTANT RELIEF AIRFLOW REQUIREMENTS, THE RESULTING SPACE PRESSURE SHALL REMAIN SLIGHTLY POSITIVE.

A1 AHU CONTROL DIAGRAM (AHU-01)
SCALE: NTS

APPR	DATE	DESCRIPTION	SYM

NAVFAC

COMMONWEALTH OF PENNSYLVANIA — REGISTERED PROFESSIONAL ENGINEER — DAVID W. HURD — No. PE061160 — SEAL

RQ WJM Jordan COMPANY — A JOINT VENTURE

Michael Baker INTERNATIONAL
100 AIRSIDE DRIVE
MOON TOWNSHIP, PA 15108
A/E INFO

APPROVED
FOR COMMANDER NAVFAC

ACTIVITY
MARINE CORPS BASE CAMP LEJEUNE

SATISFACTORY TO DATE	DD/MM/YY
DES DEM	DRW AJK CHK EMB
PM / DM	TOWLER / ROOT
BRANCH HEAD	SCE
DESIGN DIRECTOR	R.L.Stephens, Jr.
FIRE PROTECTION	DPS

DEPARTMENT OF THE NAVY
NAVAL FACILITIES ENGINEERING SYSTEMS COMMAND ATLANTIC
ATLANTIC DESIGN AND CONSTRUCTION
MCB CAMP LEJEUNE

NAVAL FACILITIES ENGINEERING SYSTEMS COMMAND ATLANTIC
NORFOLK, VA
JACKSONVILLE, NC
LOGCOM CSP WAREHOUSE

MECHANICAL - CONTROLS

SCALE:	AS NOTED
EPROJECT NO.:	1639600
CONSTR. CONTR. NO.	N40085-20-C-0059
NAVFAC DRAWING NO.	14111351
SHEET	328 OF 447

M-804

DRAWFORM REVISION: 25 AUGUST 2020

P1527 FINAL SUBMISSION - 11/18/2021

PLOTTED: 11/11/2021 3:07:28 PM

FILE NAME: BIM 360/:HF PACKAGE 3/P1527 LOG COM CSP-1639600-M.rvt

AHU-01 SYSTEM POINT LIST

POINT NUMBER	SYSTEM POINT DESCRIPTION	HARDWARE POINTS: ANALOG INPUT (AI): SHOW ON DISPLAY	TEMPERATURE	PRESSURE	RELATIVE HUMIDITY	AIRFLOW (CFM)	% OPEN/FREQUENCY	ANALOG OUTPUT (AO): % OPEN / CLOSE	% OPEN/FREQUENCY	DIGITAL INPUT (BI): STATUS ON/OFF	OPEN/CLOSE	SMOKE	DIGITAL OUTPUT (BO): STATUS (FAULT)	START / STOP	SYSTEM FEATURES / SOFTWARE POINTS: PROGRAMS: TREND	TIME SCHEDULING	OPT. START/STOP	EVENT	ALARM INSTRUCT	RUN TIME	AUTO RESTART	ALARMS: HIGH ANALOG	LOW ANALOG	SENSOR FAIL	FLOW FAIL	COMM. FAIL	SMOKE DETECTOR	NOTES
	DDC CONTROL PANEL															●	●	●	●	●	●					●		
01A-D	SUPPLY FAN (FANWALL) VFD	●					●		●				●	●	●										●			1
02A-D	RELIEF FAN VFD	●					●		●				●	●	●										●			1
03	SUPPLY FAN (FANWALL) WALL DP	●		●											●								●					
04	RELIEF FAN DP	●		●											●								●					
05	AFMS - OUTSIDE AIR (OA) AIRFLOW	●				●									●								●	●	●			
06	AFMS - RELIEF AIR (REL-A) AIRFLOW	●				●									●								●	●	●			
07	AFMS - RETURN AIR (RA) AIRFLOW	●				●									●										●			
08	AFMS - SUPPLY AIR (SA) AIRFLOW	●				●									●										●			
09	HOT WATER HEATING (HW) VALVE	●						●							●													
10	CHILLED WATER COOLING (CHW) VALVE	●						●							●													
11	OUTSIDE AIR (OA) DAMPER	●						●							●													
12	OUTSIDE AIR (OA) DAMPER END SWITCH	●									●																	
13	RELIEF AIR (REL-A) DAMPER	●						●							●													
14	RELEIF AIR (REL-A) DAMPER END SWITCH	●									●																	
15	HX BYPASS DAMPER	●						●							●													
16	RETURN AIR (RA) DAMPER	●						●							●													
17.1	OA PRE-FILTER DPS	●		●											●													
17.2	OA FILTER DPS	●		●											●													
18.1	REL-A PRE-FILTER DPS	●		●											●													
18.2	REL-A FILTER DPS	●		●											●													
19	PRE-FILTER DPS	●		●											●													
20	PRIMARY FILTER DPS	●		●											●													
21	OUTSIDE AIR (OA) TEMPERATURE	●	●												●													
22	RETURN AIR (RA) TEMPERATURE	●	●												●													
23	RELIEF AIR (REL-A) TEMPERATURE	●	●												●													
24	HX LEAVING (HX-LA) AIR TEMPERATURE	●	●												●													
25	MIXED AIR (MA) TEMPERATURE	●	●												●									●	●			
26	SUPPLY AIR (SA) TEMPERATURE	●	●												●								●	●	●			
27	PREHEAT TEMPERATURE	●	●												●													
28	OUTSIDE AIR (OA) HUMIDITY	●			●										●													
29	RETURN AIR (OA) HUMIDITY	●			●										●													
30	RELIEF AIR (OA) HUMIDITY	●			●										●													
31	HX LEAVING (HX-LA) AIR HUMIDITY	●			●										●													
32	SUPPLY AIR (SA) STATIC PRESSURE	●		●											●													
33	HIGH STATIC SHUTDOWN SWITCH										●												●					
34	FREEZESTAT										●													●				
##	RESERVED FOR FUTURE																											

NOTES: 1. SUPPLY AND RELIEF FAN & VFD'S AS INDICATED ON THESE DRAWINGS MAY REFER TO FAN-WALL ARRAYS CONSISTING OF MULTIPLE FANS AND VFD'S; FAN WALL SHALL MODULATE PER MANUFACTURER'S PROVIDED CONTROLS FOR OPTIMUM PERFORMANCE AND EFFICIENCY BASED ON COMMON ANALOG OUTPUT SIGNAL.

APPR | DATE | SYM | DESCRIPTION

NAVFAC

COMMONWEALTH OF PENNSYLVANIA — REGISTERED PROFESSIONAL — DAVID W. HURD — ENGINEER — No. PE061160

SEAL

RQ W.M. Jordan COMPANY — A JOINT VENTURE —

Michael Baker INTERNATIONAL

100 AIRSIDE DRIVE
MOON TOWNSHIP, PA 15108 — A/E INFO

APPROVED

FOR COMMANDER NAVFAC

ACTIVITY
MARINE CORPS BASE
CAMP LEJEUNE

SATISFACTORY TO DATE DD/MM/YY

DES DEM | DRW AJK | CHK EMB

PM / DM TOWLER / ROOT

BRANCH HEAD SCE

DESIGN DIRECTOR R.L.Stephens, Jr.

FIRE PROTECTION DPS

DEPARTMENT OF THE NAVY
NAVAL FACILITIES ENGINEERING SYSTEMS COMMAND ATLANTIC
ATLANTIC DESIGN AND CONSTRUCTION
MCB CAMP LEJEUNE

NAVAL FACILITIES ENGINEERING SYSTEMS COMMAND
NORFOLK, VA
JACKSONVILLE, NC
LOGCOM CSP WAREHOUSE

MECHANICAL - CONTROLS

SCALE: AS NOTED

EPROJECT NO.: 1639600

CONSTR. CONTR. NO. N40085-20-C-0059

NAVFAC DRAWING NO. 14111352

SHEET 329 OF 447

M-805

DRAWFORM REVISION: 25 AUGUST 2020

P1527 FINAL SUBMISSION - 11/18/2021

PLOTTED: 11/11/2021 3:07:29 PM

FILE NAME: BIM 360:/HF PACKAGE 3/P1527 LOG COM CSP-1639600-M.rvt

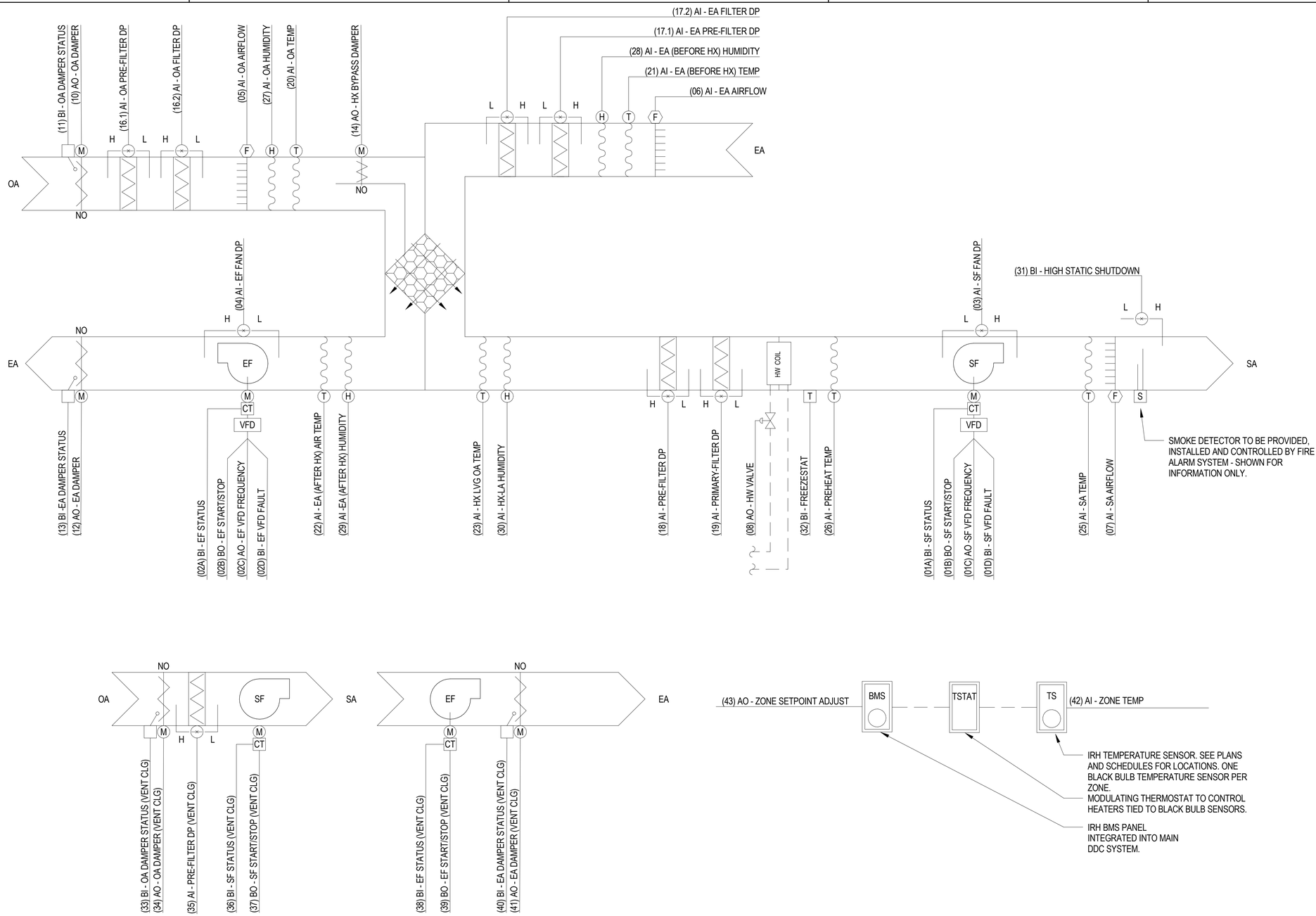

A1 AHU CONTROL DIAGRAM (AHU-02)
SCALE: NTS

SYM	DESCRIPTION	DATE	APPR

NAVFAC

COMMONWEALTH OF PENNSYLVANIA REGISTERED PROFESSIONAL DAVID W. HURD ENGINEER No PE061160 SEAL

RQ W.M. Jordan COMPANY - A JOINT VENTURE -

Michael Baker INTERNATIONAL
100 AIRSIDE DRIVE
MOON TOWNSHIP, PA 15108
A/E INFO

APPROVED

FOR COMMANDER NAVFAC

ACTIVITY
MARINE CORPS BASE CAMP LEJEUNE

SATISFACTORY TO DATE DD/MM/YY
DES DEM DRW AJK CHK EMB
PM / DM TOWLER / ROOT
BRANCH HEAD SCE
DESIGN DIRECTOR R.L.Stephens, Jr.
FIRE PROTECTION DPS

DEPARTMENT OF THE NAVY
NAVAL FACILITIES ENGINEERING SYSTEMS COMMAND
ATLANTIC DESIGN AND CONSTRUCTION
NAVAL FACILITIES ENGINEERING SYSTEMS COMMAND ATLANTIC
NORFOLK, VA
MCB CAMP LEJEUNE
JACKSONVILLE, NC
LOGCOM CSP WAREHOUSE
MECHANICAL - CONTROLS

SCALE: AS NOTED
EPROJECT NO.: 1639600
CONSTR. CONTR. NO. N40085-20-C-0059
NAVFAC DRAWING NO. 14111353
SHEET 330 OF 447

M-806

DRAWFORM REVISION: 25 AUGUST 2020

P1527 FINAL SUBMISSION - 11/18/2021

FILE NAME: BIM 360://HF PACKAGE 3/P1527 LOG COM CSP-1639600-M.rvt
PLOTTED: 11/11/2021 3:07:30 PM

HF-3, P-1527, AHU-02 SOO:

BUILDING AUTOMATION SYSTEM INTERFACE:
THE BUILDING AUTOMATION SYSTEM (BAS) SHALL SEND THE CONTROLLER OCCUPIED/UNOCCUPIED, OCCUPIED BYPASS, ATFP ALARM CONDITION AND MODES. IF COMMUNICATION IS LOST WITH THE BAS, THE CONTROLLER SHALL OPERATE USING DEFAULT MODES AND SETPOINTS.

CONTINUOUS OPERATION MODE:
ROOM TO BE THERMOSTATICALLY CONTROLLED BY COMMON THERMOSTAT CONNECTED TO THE DDC SYSTEM FOR SPACE HEATING AND EXHAUST AND SUPPLY FAN BASED FORCED OUTSIDE AIR VENTILATION COOLING TO MAINTAIN TEMPERATURES WITH 10°F OF AMBIENT OUTDOOR CONDITIONS.

AIR HANDLING UNIT (AHU-02):
WHEN ENABLED, THE SUPPLY FAN AND EXHAUST FAN SHALL OPERATE CONTINUOUSLY.

IF THE SUPPLY OR EXHAUST FAN FAILS TO PROVE STATUS FOR 30 SECONDS (ADJ.), THE FAN SHALL BE COMMANDED OFF, THE OUTSIDE AIR DAMPER SHALL CLOSE, ALL VALVES SHALL CLOSE AND AN ALARM SHALL BE ANNUNCIATED AT THE BAS. A MANUAL RESET SHALL BE REQUIRED TO RESTART THE FAN.

UPON FALL IN SPACE TEMPERATURE BELOW HEATING SETPOINT OF 60°F (ADJ.), THE HOT WATER VALVE SHALL MODULATE TO MAINTAIN SPACE HEATING SETPOINT. UPON RISE IN TEMPERATURE ABOVE 60°F (ADJ.) THE REVERSE SHALL OCCUR.

A HARDWIRED, HIGH STATIC PRESSURE CUT OFF SWITCH SHALL BE ELECTRICALLY INTERLOCKED WITH THE VARIABLE SPEED DRIVE. IF THE HIGH STATIC PRESSURE CUT OFF SWITCH IS TRIPPED THE FAN SHALL STOP, THE OUTSIDE AIR DAMPER SHALL CLOSE, THE EXHAUST FAN SHALL TURN OFF, ALL VALVES SHALL CLOSE AND AN ALARM SHALL BE ANNUNCIATED AT THE BAS. A MANUAL RESET OF THE HIGH STATIC PRESSURE CUT OFF SWITCH SHALL BE REQUIRED TO RESTART THE FAN.

BY MAINTAINING BOTH THE CONSTANT OUTSIDE AIR VENTILATION AND THE CONSTANT EXHAUST AIRFLOW REQUIREMENTS, THE RESULTING SPACE PRESSURE SHALL REMAIN SLIGHTLY POSITIVE.

FIXED PLATE ENTHALPY HX OPERATION:
1) WHEN UNIT IS IN HEATING MODE:
   A) - (14)-HX_BYPASS_DAMPER SHALL MODULATE A PERCENTAGE OF OA THROUGH THE HX TO RECOVER HEAT FROM THE EXHAUST AIRSTREAM TO MAINTAIN THE SPACE SETPOINT WITHOUT NEED FOR ACTIVATION OF THE HEATING COIL UP TO A POINT OF FULL MODULATION OF OA THROUGH THE HX FOR MAXIMUM AVAILABLE HEAT RECOVERY.
   B) (14)-HX_BYPASS DAMPER MODULATION SHALL BE LIMITED TO PREVENT (23)-HX_LVG_OA_TEMP FROM FALLING BELOW THE FROST THRESHOLD SETPOINT AS REQUIRED BY HX MANUFACTURER (26°F ADJ.).

FILTER STATUS:
A DIFFERENTIAL PRESSURE SWITCH SHALL MONITOR THE DIFFERENTIAL PRESSURE ACROSS THE FILTERS WHEN THE FANS ARE RUNNING. THIS INFORMATION SHALL BE PROVIDED TO THE DDC SYSTEM FOR INFORMATION ONLY. CAMP LEJEUNE MECHANICAL POLICIES DO NOT DESIRE FILTER ALARMS (FILTERS SHALL BE CHANGED ON REGULAR MAINTENANCE INTERVALS).

FREEZE PROTECTION:
A HARDWIRED, LOW LIMIT TEMPERATURE SWITCH SHALL BE ELECTRICALLY INTERLOCKED WITH THE SUPPLY FAN VARIABLE SPEED DRIVE. IF THE LOW LIMIT TEMPERATURE SWITCH IS TRIPPED 38.0 DEG. F (ADJ.), THE OUTSIDE AIR DAMPER SHALL CLOSE, THE EXHAUST FAN SHALL TURN OFF, ALL VALVES SHALL OPEN TO 100% (ADJ.) AND AN ALARM SHALL BE ANNUNCIATED AT THE BAS. A MANUAL RESET OF THE LOW LIMIT TEMPERATURE SWITCH SHALL BE REQUIRED TO RESTART THE SUPPLY FAN.

ATFP SHUTDOWN:
UNIT SHALL BE HARDWIRED TO SHUTDOWN AND CLOSE ALL ASSOCIATED DAMPERS UPON ATFP SWITCH ACTIVATION, REFER TO DRAWING M-803 FOR MORE INFORMATION.

BUILDING PRESSURE CONTROL:
THE OUTDOOR AIR DAMPER SHALL MODULATE TO MAINTAIN THE CONSTANT VENTILATION REQUIREMENT AS MEASURED BY THE OUTDOOR AIRFLOW STATION.

THE EXHAUST FAN SPEED SHALL MODULATE TO MAINTAIN THE CONSTANT EXHAUST AIRFLOW REQUIREMENT AS MEASURED BY THE EXHAUST AIRFLOW STATION. IF THE EXHAUST FAN IS AT MINIMUM SPEED, AND THE EXHAUST AIRFLOW IS GREATER THAN THE CONSTANT VOLUME REQUIREMENT, THEN THE EXHAUST AIR DAMPER SHALL SLOWLY MODULATE CLOSED TO ACHIEVE THE CONSTANT EXHAUST AIRFLOW REQUIREMENT. THE EXHAUST AIR DAMPER SHALL NOT BE ALLOWED TO CLOSE FULLY TO PREVENT STARVING THE EXHAUST FAN.

IRH SYSTEM:
WHEN A BLACK BULB TEMPERATURE SENSOR (1 PER ZONE) READS LESS THAN 57 DEG F (ADJ), THE ASSOCIATED IRH BURNERS WILL MODULATE ON PER INTEGRAL CONTROLS. UPON RISE IN TEMPERATURE ABOVE 63 DEG F (ADJ), THE IRH BURNERS WILL MODULATE OFF.

SUPPLY FANS AND EXHAUST FAN (FAN FORCED VENTILATION COOLING) (SF-02, 03, 04 AND EF-10,11):
WHEN ENABLED, THE SUPPLY AND EXHAUST FANS SHALL OPERATE CONTINUOUSLY.

ON RISE IN SPACE TEMPERATURE ABOVE 80°F (ADJ.) DAMPERS ASSOCIATED WITH THE ROOM INTAKE AND EXHAUST LOUVERS SHALL OPEN AND THE EXHAUST AND SUPPLY FANS SHALL OPERATE CONTINUOUSLY. UPON FALL IN SPACE TEMPERATURE BELOW 75°F (ADJ.) THE REVERSE SHALL OCCUR.

IF THE SUPPLY OR EXHAUST FANS FAIL TO PROVE STATUS FOR 30 SECONDS (ADJ.), THE FAN SHALL BE COMMANDED OFF, THE OUTSIDE AIR DAMPER AND EXHAUST AIR DAMPERS SHALL CLOSE, AND AN ALARM SHALL BE ANNUNCIATED AT THE BAS. A MANUAL RESET SHALL BE REQUIRED TO RESTART THE FANS.

ATFP SHUTDOWN: VENTILATION SYSTEM (FAN AND DAMPERS) SHALL BE HARDWIRED TO SHUTDOWN UPON ATFP SWITCH ACTIVATION, REFER TO M-803 FOR MORE INFORMATION.

AHU-02 SYSTEM POINT LIST

POINT NUMBER	SYSTEM POINT DESCRIPTION	SHOW ON DISPLAY	HARDWARE POINTS: ANALOG: INPUT (AI): TEMPERATURE	PRESSURE	RELATIVE HUMIDITY	AIRFLOW (CFM)	% OPEN/FREQUENCY	OUTPUT (AO): % OPEN / CLOSE	% OPEN/FREQUENCY	ZONE SETPOINT ADJ.	DIGITAL (BINARY): INPUT (BI): STATUS ON/OFF	OPEN/CLOSE	SMOKE	STATUS (FAULT)	OUTPUT (BO): START / STOP	SYSTEM FEATURES / SOFTWARE POINTS: PROGRAMS: TREND	TIME SCHEDULING	OPT. START/STOP	EVENT	ALARM INSTRUCT	RUN TIME	AUTO RESTART	ALARMS: HIGH ANALOG	LOW ANALOG	SENSOR FAIL	FLOW FAIL	COMM. FAIL	SMOKE DETECTOR	NOTES
	DDC CONTROL PANEL																●	●	●	●	●	●							
01A-D	SUPPLY FAN VFD	●					●		●					●	●		●										●			1
02A-D	EXHAUST FAN VFD	●					●		●					●	●		●										●			1
03	SUPPLY FAN DP	●		●													●							●						
04	EXHAUST FAN DP	●		●													●							●						
05	AFMS - OUTSIDE AIR (OA) AIRFLOW	●			●												●							●	●	●				
06	AFMS - EXHAUST AIRFLOW	●			●												●							●	●	●				
07	AFMS - SUPPLY AIR (SA) AIRFLOW	●			●												●									●				
08	HOT WATER HEATING (HW) VALVE	●					●										●													
09	NOT USED																													
10	OUTSIDE AIR (OA) DAMPER	●					●										●													
11	OUTSIDE AIR (OA) DAMPER END SWITCH	●										●																		
12	EXHAUST AIR (EA) DAMPER	●					●										●													
13	EXHAUST AIR (EA) DAMPER END SWITCH	●										●																		
14	HX BYPASS DAMPER	●					●										●													
15	NOT USED																													
16.1	OUTSIDE AIR (OA) PRE-FILTER DP	●		●													●													
16.2	OUTSIDE AIR (OA) FILTER DP	●		●													●													
17.1	EXHAUST AIR (EA) PRE-FILTER DP	●		●													●													
17.2	EXHAUST AIR (EA) FILTER DP	●		●													●													
18	PRE-FILTER DP	●		●													●													
19	PRIMARY FILTER DP	●		●													●													
20	OUTSIDE AIR (OA) TEMPERATURE	●	●														●													
21	EXHAUST AIR (EA) BEFORE HX TEMP	●	●														●													
22	EXHAUST AIR (EA) AFTER HX TEMP	●	●														●													
23	HX LEAVING (HX-LVG) OA TEMP	●	●														●													
24	NOT USED																													
25	SUPPLY AIR (SA) TEMPERATURE	●	●														●							●	●	●				
26	PREHEAT TEMPERATURE	●	●														●													
27	OUTSIDE AIR (OA) HUMIDITY	●			●												●													
28	EXHAUST AIR (EA) BEFORE HX HUMIDITY	●			●												●													
29	EXHAUST AIR (EA) AFTER HX HUMIDITY	●			●												●													
30	HX LEAVING (HX-LA) OA AIR HUMIDITY	●			●												●													
31	HIGH STATIC SHUTDOWN SWITCH											●												●						
32	FREEZESTAT											●													●					
33	OUTSIDE AIR (OA) DAMPER END SWITCH (VENT CLG)	●										●																		
34	OUTSIDE AIR (OA) DAMPER (VENT CLG)	●					●										●													
35	PRE-FILTER DP (VENT CLG)	●		●													●													
36	SUPPLY FAN STATUS (VENT CLG)	●										●					●													
37	SUPPLY FAN START/STOP (VENT CLG)	●														●														
38	EXHAUST FAN STATUS (VENT CLG)	●										●					●													
39	EXHAUST FAN START/STOP (VENT CLG)	●														●														
40	EXHAUST AIR (EA) DAMPER END SWITCH	●										●																		
41	EXHAUST AIR (EA) DAMPER	●					●										●													
42	ZONE TEMPERATURE	●	●														●								●	●	●			
43	ZONE SETPOINT ADJUST	●							●								●													
##	RESERVED FOR FUTURE																													

NOTES: 1. SUPPLY AND EXHAUST FAN & VFD'S AS INDICATED ON THESE DRAWINGS MAY REFER TO FAN-WALL ARRAYS CONSISTING OF MULTIPLE FANS AND VFD'S; FAN WALL SHALL MODULATE PER MANUFACTURER'S PROVIDED CONTROLS FOR OPTIMUM PERFORMANCE AND EFFICIENCY BASED ON COMMON ANALOG OUTPUT SIGNAL.

APPR | DATE | DESCRIPTION | SYM

NAVFAC

COMMONWEALTH OF PENNSYLVANIA — REGISTERED PROFESSIONAL — DAVID W. HURD — ENGINEER — No. PE061160 — SEAL

W.M. Jordan COMPANY — A JOINT VENTURE

Michael Baker INTERNATIONAL
100 AIRSIDE DRIVE
MOON TOWNSHIP, PA 15108 — A/E INFO

APPROVED

FOR COMMANDER NAVFAC

ACTIVITY
MARINE CORPS BASE
CAMP LEJEUNE

SATISFACTORY TO DATE DD/MM/YY

DES DEM | DRW AJK | CHK EMB

PM / DM TOWLER / ROOT

BRANCH HEAD SCE

DESIGN DIRECTOR R.L.Stephens, Jr.

FIRE PROTECTION DPS

NAVAL FACILITIES ENGINEERING SYSTEMS COMMAND
NORFOLK, VA

DEPARTMENT OF THE NAVY
NAVAL FACILITIES ENGINEERING SYSTEMS COMMAND ATLANTIC
ATLANTIC DESIGN AND CONSTRUCTION
MCB CAMP LEJEUNE

JACKSONVILLE, NC
LOGCOM CSP WAREHOUSE

MECHANICAL - CONTROLS

SCALE: AS NOTED
EPROJECT NO.: 1639600
CONSTR. CONTR. NO. N40085-20-C-0059
NAVFAC DRAWING NO. 14111354
SHEET 331 OF 447

M-807

DRAWFORM REVISION: 25 AUGUST 2020

P1527 FINAL SUBMISSION - 11/18/2021

PLOTTED: 11/11/2021 3:07:32 PM

FILE NAME: BIM 360://HF PACKAGE 3/P1527 LOG COM CSP-1639600-M1r1

CHILLED WATER SYSTEM SYSTEM POINT LIST

POINT NUMBER	SYSTEM POINT DESCRIPTION	HARDWARE POINTS: ANALOG INPUT (AI): SHOW ON DISPLAY	TEMPERATURE	PRESSURE	KW	PERCENT RLA	FLOW (GPM)	ANALOG OUTPUT (AO): SETPOINT ADJ	FREQUENCY	DIGITAL (BINARY) INPUT (BI): STATUS ON/OFF	FILTER STATUS	STATUS OPEN CLOSE	STATUS (FAULT)	DIGITAL OUTPUT (BO): START/STOP	SYSTEM FEATURES / SOFTWARE POINTS: PROGRAMS: TREND	(AV) ANALOG VALUE	TIME SCHEDULING	ALARM INSTRUCT	RUN TIME	ALARMS: HIGH ANALOG	LOW ANALOG	SENSOR FAIL	FLOW FAIL	COMM. FAIL	CHILLER ALARM	NOTES
	DDC CONTROL PANEL																●	●	●					●		
01	CHILLED WATER SETPOINT							●							●											
02.1-5	CHILLER CH-01	●			●	●				●				●	●				●					●	●	
03	CHWS TEMP SENSOR T-1	●	●												●					●	●	●				
04	CHWR TEMP SENSOR T-2	●	●												●					●	●	●				
05	CH-01 FLOW SWITCH FS-1											●										●	●			
06	PUMP P-01 STATUS	●								●																
07.1	PUMP P-01 START/STOP													●												
07.2	PUMP P-01 VFD FREQUENCY	●							●						●											
07.3	PUMP P-01 VFD FAULT												●													
08	PUMP P-02 STATUS	●								●																
09.1	PUMP P-02 START/STOP													●												
09.2	PUMP P-02 VFD FREQUENCY	●							●						●											
09.3	PUMP P-02 VFD FAULT												●													
10	PUMP P-01,02 DIFFERENTIAL PRESS	●		●											●											
11	SYSTEM FLOW (TOTAL)	●					●								●											
12	BTU'S EXTRACTED	●													●	●										1
-	RESERVED FOR FUTURE																									

NOTES: 1. BTU'S EXTRACTED SHALL BE CALCULATED BY THE DDC SYSTEM BASED ON SYSTEM SUPPLY/RETURN WATER TEMPERATURES AND SYSTEM FLOW.

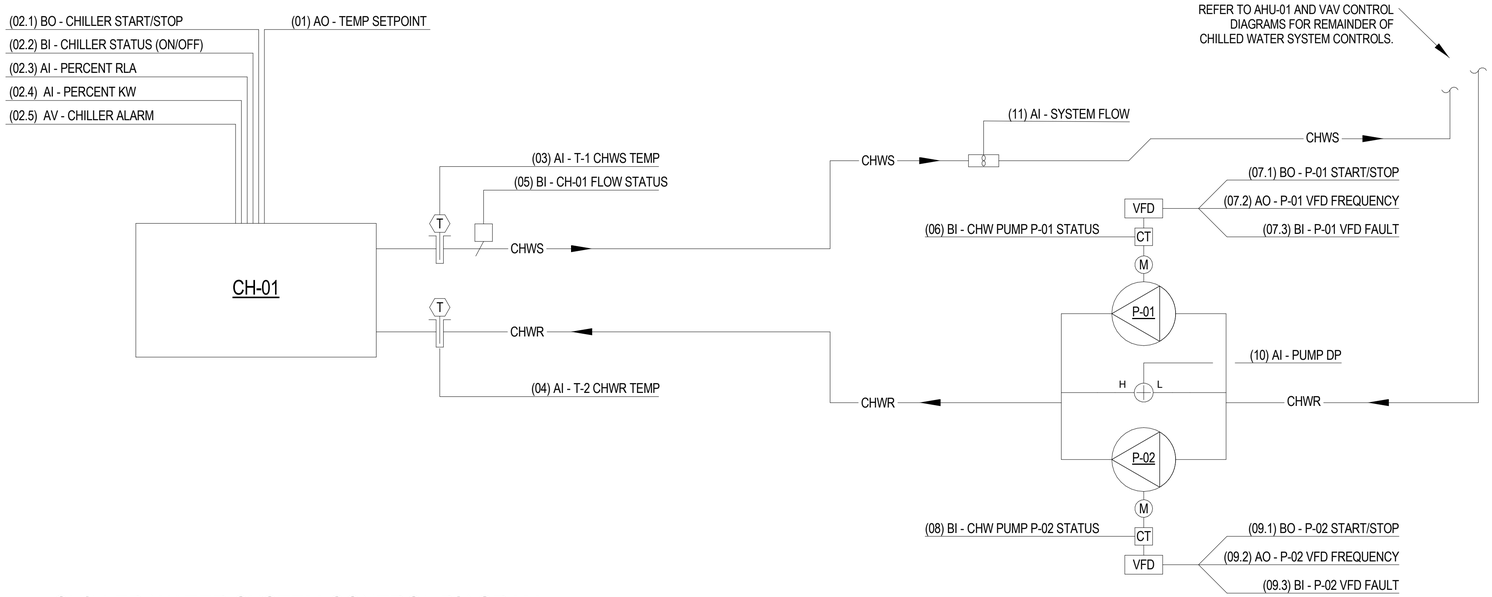

A1 CHILLED WATER SYSTEM CONTROL DIAGRAM
SCALE: NTS

AIR COOLED CHILLED WATER SYSTEM SEQUENCE OF OPERATION

1. CHILLED WATER CONTROL

   1.1. UPON COMMAND FOR CHILLED WATER BY ANY SERVED AHU/VAV UNIT; ENABLE DUTY CHILLED WATER PUMP AND CHILLED WATER PLANT.

   1.2. PUMPS P-01 & P-02 ARE EACH SIZED FOR FULL SYSTEM FLOW AND OPERATE ON A DUTY/STANDBY BASIS. STANDBY PUMP SHALL BE ENABLED UPON A FAILURE OF THE DUTY PUMP. THE DUTY PUMP SHALL BE THE PUMP WITH THE LEAST RUNTIME HOURS; PUMPS SHALL CYCLE BETWEEN DUTY/STANDY SERVICE ON A WEEKLY BASIS.

   1.3. THE COOLING PLANT WILL BE ENERGIZED BY FIRST ENERGIZING DUTY CHW PUMP (P-01 OR P-02) AT FULL SYSTEM CONSTANT VOLUME FLOWRATE. FLOW SHALL BE CONSTANT VOLUME FLOWRATE THE CHILLER.

   1.4. CHILLER SHALL BE PROVIDED WITH AN INTEGRAL FLOW SWITCH TO ASSURE PROOF OF FLOW AND ENABLE CHILLER OPERATION.

2. CHILLED WATER SYSTEM ALARM

   2.1 A LOW TEMPERATURE (36°F ADJUSTABLE) OR HIGH TEMPERATURE (48°F ADJUSTBALE) SENSED AT **T-1** SHALL SIGNAL AN ALARM AT DDC.

   2.2 AN ALARM CONDITION AT THE CHILLER MASTER CONTROL PANEL SHALL SIGNAL AN ALARM CONDITION.

3. ADDITIONAL MONITORING AND ALARMS:

- PUMP (P-01, P-02) STATUS: ON/OFF/FAULT
- CHILLER STATUS: ENABLED/DISABLED/FAULT
- BUILDING CHILLED WATER SUPPLY TEMPERATUERE: MONITOR/LOW ALARM (38°F, ADJ.)/HIGH ALARM (46°F, ADJ.)
- BUILDING CHILLED WATER RETURN TEMPERATUERE: MONITOR/LOW ALARM (44°F, ADJ.)/HIGH ALARM (60°F, ADJ.)
- CHILLER LEAVING WATER TEMPERATURE: MONITOR
- CHILLER ENTERING WATER TEMPERATURE: MONITOR

APPR | DATE | DESCRIPTION | SYM

SEAL
REGISTERED PROFESSIONAL ENGINEER
DAVID W. HURD
No. PE061160
COMMONWEALTH OF PENNSYLVANIA

W.M. Jordan COMPANY – A JOINT VENTURE –

Michael Baker INTERNATIONAL
100 AIRSIDE DRIVE
MOON TOWNSHIP, PA 15108
A/E INFO

APPROVED
FOR COMMANDER NAVFAC

ACTIVITY: MARINE CORPS BASE CAMP LEJEUNE
SATISFACTORY TO DATE: DD/MM/YY
DES DEM | DRW AJK | CHK EMB
PM / DM: TOWLER / ROOT
BRANCH HEAD: SCE
DESIGN DIRECTOR: R.L.Stephens, Jr.
FIRE PROTECTION: DPS

DEPARTMENT OF THE NAVY
NAVAL FACILITIES ENGINEERING SYSTEMS COMMAND ATLANTIC
ATLANTIC DESIGN AND CONSTRUCTION
NAVAL FACILITIES ENGINEERING SYSTEMS COMMAND ATLANTIC
NORFOLK, VA
MCB CAMP LEJEUNE
JACKSONVILLE, NC
LOGCOM CSP WAREHOUSE
MECHANICAL - CONTROLS

SCALE: AS NOTED
EPROJECT NO.: 1639600
CONSTR. CONTR. NO. N40085-20-C-0059
NAVFAC DRAWING NO. 14111355
SHEET 332 OF 447

M-808

DRAWFORM REVISION: 25 AUGUST 2020

P1527 FINAL SUBMISSION - 11/18/2021

PLOTTED: 11/11/2021 3:07:34 PM
FILE NAME: BIM 360://HF PACKAGE 3/P1527 LOG COM CSP-1639600-M.rvt

THIS TYPICAL BOILER INTERFACE SCHEMATIC MAY NOT REFLECT THE ACTUAL SENSORS AND POINTS AS SUPPLIED BY THE BOILER MANUFACTURER. ALL INTERFACE POINTS SHALL BE COORDINATED WITH THE BOILER SUPPLIER. BOILER CONTROL PANELS SHALL BE INTERFACED AND CONTROLLED AS A SINGLE OPERATING BOILER PLANT

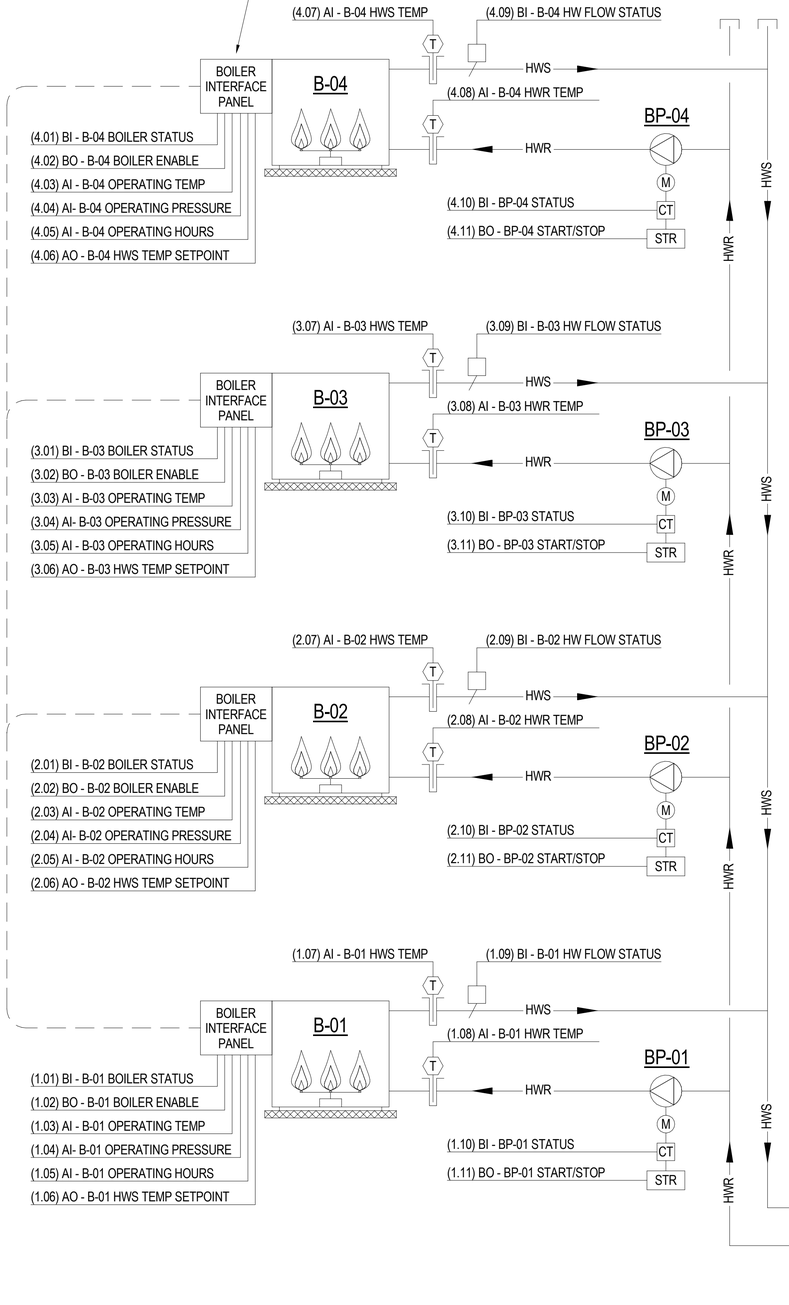

BOILER EMERGENCY SHUTDOWN SWITCH. SWITCH SHALL BE HARDWIRE INTERLOCKED TO CLOSE ALL GAS VALVES IN MECHANICAL ROOM. REFER TO ELECTRICAL DRAWINGS FOR WIRING. PROVIDE CONTACTS TO REPORT SWITCH STATUS TO DDC SYSTEM.

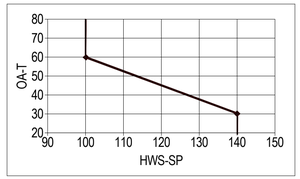

HEATING HW OA RESET SCHEDULE

A1 HOT WATER SYSTEM CONTROL DIAGRAM

SCALE: NTS

APPR	
DATE	
DESCRIPTION	
SYM	

NAVFAC

COMMONWEALTH OF PENNSYLVANIA — REGISTERED PROFESSIONAL — DAVID W. HURD — ENGINEER — No. PE061160 — SEAL

IRQ W.M. Jordan COMPANY — A JOINT VENTURE

Michael Baker INTERNATIONAL
100 AIRSIDE DRIVE
MOON TOWNSHIP, PA 15108
A/E INFO

APPROVED

FOR COMMANDER NAVFAC

ACTIVITY: MARINE CORPS BASE CAMP LEJEUNE

SATISFACTORY TO DATE: DD/MM/YY

DES	DRW	CHK
DEM	AJK	EMB

PM / DM: TOWLER / ROOT
BRANCH HEAD: SCE
DESIGN DIRECTOR: R.L.Stephens, Jr.
FIRE PROTECTION: DPS

DEPARTMENT OF THE NAVY
NAVAL FACILITIES ENGINEERING SYSTEMS COMMAND
ATLANTIC DESIGN AND CONSTRUCTION
NAVAL FACILITIES ENGINEERING SYSTEMS COMMAND ATLANTIC
NORFOLK, VA
MCB CAMP LEJEUNE
JACKSONVILLE, NC
LOGCOM CSP WAREHOUSE

MECHANICAL - CONTROLS

SCALE:	AS NOTED
EPROJECT NO.:	1639600
CONSTR. CONTR. NO.	N40085-20-C-0059
NAVFAC DRAWING NO.	14111356
SHEET	333 OF 447

M-809

DRAWFORM REVISION: 25 AUGUST 2020

P1527 FINAL SUBMISSION - 11/18/2021

PLOTTED: 11/11/2021 3:07:34 PM

FILE NAME: BIM 360://HF PACKAGE 3.1/P1527 LOG COM CSP-1639600-M.rvt

HOT WATER BOILER / HEATING SYSTEM POINT LIST

POINT NUMBER	SYSTEM POINT DESCRIPTION	SHOW ON DISPLAY	HARDWARE POINTS (SEE NOTE 4) — ANALOG — INPUT (AI): TEMPERATURE	PRESSURE	FREQUENCY	FLOWRATE (GPM)	INFO	OUTPUT (AO): SETPOINT ADJ	% OPEN/CLOSE	FREQUENCY	TEMPERATURE	DIGITAL (BINARY) — INPUT (BI): STATUS ON/OFF	FLOW STATUS	STATUS (FAULT)	OUTPUT (BO): OFF/ON (ENABLE)	START / STOP	SYSTEM FEATURES /SOFTWARE POINTS — PROGRAMS: TREND	(AV) ANALOG VALUE	TIME SCHEDULING	ALARM INSTRUCT	RUN TIME	ALARMS: HIGH ANALOG	LOW ANALOG	SENSOR FAIL	FLOW FAIL	COMM. FAIL	NOTES
	DDC CONTROL PANEL																		●	●	●						
[1,2,3,4].01	B-0[1,2,3,4], BOILER STATUS	●										●					●										
[1,2,3,4].02	B-0[1,2,3,4], BOILER ENABLE														●		●										
[1,2,3,4].03	B-0[1,2,3,4], OPERATING TEMP		●														●					●	●				
[1,2,3,4].04	B-0[1,2,3,4], OPERATING PRESSURE			●													●					●					
[1,2,3,4].05	B-0[1,2,3,4], OPERATING HOURS						●										●										
[1,2,3,4].06	B-0[1,2,3,4], HWS TEMP SETPOINT							●									●										
[1,2,3,4].07	B-0[1,2,3,4], HWS (LEAVING) TEMP		●														●					●	●				
[1,2,3,4].08	B-0[1,2,3,4], HWR (ENTERING) TEMP		●														●					●	●				
[1,2,3,4].09	B-0[1,2,3,4], HW FLOW STATUS												●				●								●		
[1,2,3,4].10	BP-0[1,2,3,4], STATUS											●					●				●						
[1,2,3,4].11	BP-0[1,2,3,4], START/STOP (ENABLE)														●		●										
5.1	P-03, STATUS	●										●									●			●			
5.2	P-03, START/STOP															●											
5.3	P-03, VFD FREQUENCY	●								●							●										
5.4	P-03, VFD FAULT													●													
6.1	P-04, STATUS	●										●									●			●			
6.2	P-04, START/STOP															●											
6.3	P-04, VFD FREQUENCY	●								●							●										
6.4	P-04, VFD FAULT													●													
7	SECONDARY MAIN HWS TEMP	●	●														●										
8	SECONDARY MAIN HWR TEMP	●	●														●										
9	SECONDARY PUMPING PRESS	●		●													●					●	●	●			
10	SECONDARY PUMPING FLOW	●				●											●										
11	REMOTE SYSTEM DP	●		●													●										
12	BOILER EMERGENCY STOP											●															
13	OUTSIDE AIR TEMPERATURE										●																1, 3
14	HW SUPPLY TEMP	●									●						●										2, 3
15	BTU'S DELIVERED	●															●	●									5
##	RESERVED FOR FUTURE																										

NOTES:
1. OUTSIDE AIR TEMPERATURE TO BE PROVIDED TO DDC SYSTEM FROM COMMON OAT TEMPERATURE SENSOR (GENERAL CONTROL DIAGRAMS PAGE)
2. SUPPLY WATER TEMPERATURE SHALL RESET LINEARLY FROM A SUPPLY TEMPERATURE OF 140° AT OAT < 30° (ADJ.) TO 100° AT OAT > 60°F (ADJ.)
3. THESE POINTS MAY BE PROVIDED BY THE BOILER MANUFACTUER AND DIRECTLY INTEGRATED TO THE BOILER CONTROLLER, IF DONE THIS WAY, BOILER CONTROLLER SHALL SEND THESE POINTS AS ANALOG INPUTS (AI) TO THE DDC SYSTEM FOR REMOTE OBSERVATION & TROUBLESHOOTING PURPOSES.
4. HARDWARE POINTS MAY BE INTEGRAL TO THE PROVIDED BOILER AND AVAIALBLE FROM BOILER BACNET INTERFACE.
5. BTU'S DELIVERED SHALL BE CALCULATED BY THE DDC SYSTEM BASED ON SECONDARY SUPPLY/RETURN WATER TEMPERATURES AND SYSTEM FLOW.

BOILER & HEATING HOT WATER PRIMARY/SECONDARY SYSTEM SEQUENCE OF OPERATION

1. HEATING HOT WATER CONTROL

1.1. UPON COMMAND FOR HOT WATER BY ANY SERVED DEVICE; ENABLE DUTY SECONDARY HEATING HOT WATER PUMP AND BOILER PLANT (SECONDARY PUMPS ARE FULLY REDUNDANT DUTY/STANDBY).

1.2. THE 4-BOILER PLANT SHALL STAGE AND MODULATE THE BOILERS IN THE MOST ENERGY EFFICIENCY COMBINATION OF ACTIVE BOILERS AND FIRING RATES AS DETERMINED BY THE BOILER MANUFACTURER'S INTEGRAL CONTROL SEQUENCE TO MAINTAIN THE MAIN HWS TEMPERATURE AT THE HW SUPPLY TEMPERATURE SETPOINT COMMANDED BY THE DDC SYSTEM IN RESPONSE TO THE OUTDOOR AIR CONDITIONS PER THE HEATING HW OA RESET SCHEDULE. BOILER MASTER CONTROLLER SHALL ALTERNATE LEAD BOILER TO PROVIDE EQUALIZED RUN TIME.

1.3. TO PREVENT SHORT CYCLING; THE BOILER SYSTEM SHALL RUN FOR AND BE OFF FOR MINIMUM ADJUSTABLE TIMES (BOTH USER DEFINABLE), UNLESS SHUTDOWN ON SAFETIES.

1.4. THE BOILER(S) SHALL RUN SUBJECT TO THEIR OWN INTERNAL SAFETIES AND CONTROLS.

1.5. STANDBY SECONDARY HW PUMP SHALL BE ENABLED UPON A FAILURE OF THE DUTY PUMP. THE DUTY PUMP SHALL BE THE PUMP WITH THE LEAST RUNTIME HOURS; SECONDARY PUMPS SHALL CYCLE BETWEEN DUTY/STANDBY ON A WEEKLY BASIS.

2. SECONDARY PUMP DIFFERENTIAL PRESSURE CONTROL:

2.1. THE OPERATING (DUTY) SECONDARY PUMP VFD SHALL MODULATE THE PUMP SPEED TO MAINTAIN THE DIFFERENTIAL PRESSURE (DP) AS MEASURED AT THE REMOTE SYSTEM DP SENSOR. DP SETPOINT SHALL BE AS DETERMINED/RECOMMENDED BY TAB AGENT TO ACHIEVE SYSTEM BALANCING.

2.2. MINIMUM SYSTEM FLOW SHALL BE BASED UPON MINIMUM PERMISSIBLE VFD SPEED AS INDICATED BY THE VFD MANUFACTURER'S IOM. MINIMUM FLOW PROVISIONS SHALL BE ACHIEVED BY THE 3-WAY VALVES INSTALLED IN THE SECONDARY PIPING SYSTEM VAV BOXES (REFER TO EQUIPMENT SCHEDULES AND CONTROL VALVE SCHEDULE).

3. ALARMS AND SYSTEM MONITORING:

3.1. ALARMS SHALL BE PROVIDED AS INDICATED ON THE POINTS LIST AND AS FOLLOWS:

- SECONDARY HW PUMP FAILURE: COMMANDED ON, BUT STATUS IS OFF.
- SECONDARY HW PUMP RUNNING IN HAND; COMMANDED OFF, BUT STATUS IS ON.
- SECONDARY HW PUMP RUNTIME EXCEEDED; STATUS RUNTIME EXCEEDS 168 HOURS (ADJ.)
- HIGH SECONDARY HW SUPPLY TEMP; IF GREATER THAN 160°F (ADJ).
- LOW SECONDARY HW RETURN TEMP; IF LESS THAN 100° OR 15° BELOW SUPPLY WATER TEMPERATURE (WHICHEVER IS LOWER TO ACCOUNT FOR HW RESET)
- HIGH SYSTEM PRESSURE IF REMOTE DP SENSOR IS 25% (ADJ.) ABOVE SETPOINT.
- LOW SYSTEM PRESSURE IF REMOTE DP SENSOR IS 25% (ADJ.) BELOW SETPOINT.

3.2. SYSTEM MONITORING POINTS SHALL BE AS INDICATED ON THE POINTS LIST, INCLUDING BUT NOT LIMITED TO THE FOLLOWING:

- SECONDARY HWS FLOWRATE (UFC 3-410-01 REQUIRED POINT)
- SECONDARY HWS/R TEMPERATURES
- DIFFERENTIAL PRESSURE ACROSS SECONDARY PUMPS (UFC 3-410-01 REQUIRED POINT)
- BOILER FAILURE ALARMS NOT OTHERWISE INDICATED BUT PROVIDED WITH BOILER CONTROLLER / BOILER BACNET INTERFACE.

APPR	DATE	DESCRIPTION	SYM

NAVFAC

COMMONWEALTH OF PENNSYLVANIA — REGISTERED PROFESSIONAL — DAVID W. HURD — ENGINEER — No. PE061160 — SEAL

W.M. Jordan COMPANY — A JOINT VENTURE

Michael Baker INTERNATIONAL
100 AIRSIDE DRIVE
MOON TOWNSHIP, PA 15108 — A/E INFO

APPROVED

FOR COMMANDER NAVFAC

ACTIVITY
MARINE CORPS BASE
CAMP LEJEUNE

SATISFACTORY TO DATE	DD/MM/YY
DES DEM	DRW AJK CHK EMB
PM / DM	TOWLER / ROOT
BRANCH HEAD	SCE
DESIGN DIRECTOR	R.L.Stephens, Jr.
FIRE PROTECTION	DPS

DEPARTMENT OF THE NAVY
NAVAL FACILITIES ENGINEERING SYSTEMS COMMAND
ATLANTIC DESIGN AND CONSTRUCTION
MCB CAMP LEJEUNE

NAVAL FACILITIES ENGINEERING SYSTEMS COMMAND ATLANTIC
NORFOLK, VA
JACKSONVILLE, NC
LOGCOM CSP WAREHOUSE

MECHANICAL - CONTROLS

SCALE:	AS NOTED
EPROJECT NO.:	1639600
CONSTR. CONTR. NO.	N40085-20-C-0059
NAVFAC DRAWING NO.	14111357
SHEET	334 OF 447

M-810

DRAWFORM REVISION: 25 AUGUST 2020

P1527 FINAL SUBMISSION - 11/18/2021

PLOTTED: 11/11/2021 3:07:36 PM

FILE NAME: BIM 360://HF PACKAGE 3/P1527 LOG COM CSP- 1639600-M.rvt

VAV BOX WITH HW HEATING COIL - SEQUENCE OF OPERATION

1. OPERATING CONDITIONS

1.1. THE VAV BOX SHALL OPERATE ACCORDING TO PROGRAMED SCHEDULE TO MAINTAIN OCCUPIED SPACE TEMPERATURES IN ACCORDANCE WITH MCB CAMP LEJUENE POLICY TO A GLOBAL SETPOINT. THE GLOBAL SETPOINT SHALL BE 70°F INDOOR SPACE TEMPERATURE WHEN OUTDOOR AMBIENT IS 50°F OR BELOW AND 76° INDOOR SPACE TEMPERATURE WHEN OUTDOOR AMBIENT IS 80°F OR ABOVE. BETWEEN OUTDOOR AMBIENT CONDITIONS OF 50-80° THE INDOOR GLOBAL SETPOINT SHALL RESET LINEARLY BETWEEN 70-76°F.

OCCUPANCY OVERRIDES:

- ZONE OCCUPANCY OVERRIDE AT THE ZONE TEMPERATURE SENSOR DURING OTHERWISE UNOCCUPIED PERIODS BY OCCUPANT CONTROL SHALL OVERRIDE THE SCHEDULE AND PLACE THE UNIT INTO AN OCCUPIED MODE FOR AN ADJUSTABLE PERIOD OF TIME (DEFAULT 60 MINUTES). AT THE EXPIRATION OF THIS OVERRIDE TIME PERIOD, CONTROL OF THE UNIT SHALL AUTOMATICALLY RETURN TO THE SCHEDULE.

1.2. ZONE SETPOINT ADJUST(MENT):

ROOM OCCUPANTS SHALL BE ABLE TO ADJUST THE ZONE SETPOINT AT THE ZONE CONTROLLER. USER SELECTED INPUTS SHALL BE LIMITED TO ± 3°F OF THE GLOBAL SETPOINT. SPACE HEATING AND COOLING SETPOINTS FOR EQUIPMENT CONTROL SHALL BE ± 1°F FROM THIS ZONE ADJUSTED GLOBAL SETPOINT.

1.3. ZONE OPTIMAL START:

THE SYSTEM SHALL UTILIZE AN OPTIMAL START ALGORITHM FOR MORNING START UP IN CONJUNCTION WITH THE ASSOCIATED AHU. THIS ALGORITHM SHALL MINIMIZE THE UNOCCUPIED WARM -UP OR COOL-DOWN PERIOD WHILE STILL ACHIEVING SPACE TEMPERATURE SETPOINT BY THE START OF THE SCHEDULED OCCUPIED PERIOD.

2. VARIABLE VOLUME TERMINAL UNIT – AIRFLOW / HW FLOW CONTROL

2.1. OCCUPIED MODE

- WHEN ZONE TEMPERATURE IS GREATER THAN ZONE COOLING SETPOINT, THE ZONE DAMPER SHALL MODULATE BETWEEN THE SCHEDULED MINIMUM AIRFLOW* AND THE SCHEDULED MAXIMUM COOLING AIRFLOW UNTIL ZONE IS SATISFIED.
- WHEN ZONE TEMPERATURE IS BETWEEN THE COOLING SETPOINT AND THE HEATING SETPOINT, THE ZONE DAMPER SHALL MAINTAIN THE MINIMUM REQUIRED ZONE VENTILATION BY MAINTAINING THE MINIMUM SCHEDULED AIRFLOW.
- WHEN ZONE TEMPERATURE IS LESS THAN ITS HEATING SETPOINT, THE CONTROLLER SHALL ENABLE HEATING TO MAINTAIN THE ZONE TEMPERATURE AT ITS HEATING SETPOINT (SEE "HEATING MODE" BELOW).

2.2. UNOCCUPIED MODE

- WHEN THE BUILDING IS SCHEDULED FOR UNOCCUPIED MODE THE ZONE DAMPER SHALL CLOSE.
- WHEN THE ZONE TEMPERATURE RISES TO THE UNOCCUPIED COOLING SETPOINT OF 83° (ADJUSTABLE), THE ZONE DAMPER SHALL MODULATE BETWEEN A FULLY CLOSED POSITION AND THE MAXIMUM SCHEDULED COOLING AIRFLOW UNTIL ZONE TEMPERATURE REACHES A TARGET TEMPERATURE OF THE UNOCCUPIED COOLING SETPOINT -3°F (80°F ADJ.).
- WHEN THE ZONE TEMPERATURE FALLS TO THE UNOCCUPIED HEATING SETPOINT (60°F), THE CONTROLLER SHALL ENABLE HEATING (SEE "HEATING MODE" BELOW) UNTIL ZONE TEMPERATURE REACHES A TARGET TEMPERATURE OF THE UNOCCUPIED HEATING SETPOINT +5°F (65°F ADJ).

2.3. HEATING MODE

- VAV BOX SHALL BE SET UP TO PROVIDE A "DUAL MAXIMUM CONTROL" STRATEGY.
- WHEN THE SPACE TEMPERATURE DROPS BELOW THE COOLING SETPOINT, THE VAV BOX SHALL REMAIN AT MINIMUM REQUIRED FLOW (SCHEDULED MINIMUM FLOW) THROUGH THE DEADBAND ZONE TEMPERATURE RANGE BETWEEN THE COOLING SETPOINT AND HEATING SETPOINT.
- UPON FALL IN SPACE TEMPERATURE BELOW HEATING SETPOINT, HW VALVE SHALL MODULATE OPEN TO MAINTAIN SPACE HEATING SETPOINT THROUGH RANGE OF DISCHARGE AIR TEMPERATURES RANGING FROM LOW (AS SUPPLED FROM AHU), UP TO A HIGH DISCHARGE AIR (SA TO ZONE) TEMPERATURE OF 90°F.
- UPON FURTHER DEMAND FOR HEATING ONCE DISCHARGE AIR (SA TO ZONE) REACHES 90°F THE VAV BOX SHALL INCREASE AIRFLOW FROM THE COOLING MINIMUM AIR FLOWRATE AS SCHEDULED TO THE HEATING AIR FLOWRATE AS SCHEDULED, AND THE HW VALVE SHALL MODULATE TO MAINTAIN DISCHARGE AIR TEMPERATURE AT 90°F.

3. ALARMS AND SYSTEM MONITORING:

3.1. ALARMS SHALL BE PROVIDED AS INDICATED ON THE POINTS LIST AND AS FOLLOWS:

- COMMUNICATIONS FAILURE BETWEEN VAV BOX CONTROLLER AND DDC SYSTEM.
- FAILURE OF SA AIRFLOW SENSOR
- FAILURE OF DISCHARGE AIR TEMPERATURE SENSOR
- FAILURE OF ZONE TEMPERATURE (THERMOSTAT) SETPOINT/INTERFACE

3.2. SYSTEM MONITORING POINTS SHALL BE AS INDICATED ON THE POINTS LIST, INCLUDING BUT NOT LIMITED TO THE FOLLOWING:

- VAV BOX DISCHARGE AIR TEMPERATURE (UFC 3-410-01 REQUIRED POINT)

VAV TERMINAL BOX WITH HOT WATER REHEAT - POINT LIST

POINT NUMBER	SYSTEM POINT DESCRIPTION	HARDWARE POINTS: ANALOG INPUT (AI): SHOW ON DISPLAY	AI: TEMPERATURE	AI: FLOWRATE (CFM)	AI: % OPEN/CLOSE	HARDWARE POINTS: ANALOG OUTPUT (AO)	HARDWARE POINTS: DIGITAL (BINARY) INPUT (BI): OCCUPANCY STATUS	HARDWARE POINTS: DIGITAL (BINARY) OUTPUT (BO)	SYSTEM FEATURES /SOFTWARE POINTS: PROGRAMS: TREND	PROGRAMS: TIME SCHEDULING	PROGRAMS: ALARM INSTRUCT	PROGRAMS: AUTOMATIC RESTART	ALARMS: SENSOR FAIL	ALARMS: COMM. FAIL	NOTES
	VAV BOX CONTROLLER								●	●	●	●		●	1
01	SA AIRFLOW	●		●					●				●		
02	VAV DAMPER	●			●				●						
03	HW VALVE	●			●				●						
04	DISCHARGE AIR (DA) TEMP	●	●						●				●		2
05	ZONE TEMPERATURE	●	●						●				●		
06	ZONE OCCUPANCY OVERRIDE	●					●								
07	ZONE SETPOINT ADJUST	●	●						●						
##	RESERVED FOR FUTURE														

NOTES: 1. VAV BOX CONTROLLER SHALL BE CAPABLE OF ZONE CONTROL INDEPENDENT OF STATUS OF CONNECTION TO BUILDING DDC SYSTEM.
2. MONITORING POINT IN DISCHARGE AIR DUCT AS REQUIRED BY UFC 3-410-01 & FOR DUAL MAXIMUM REHEAT CONTROL.

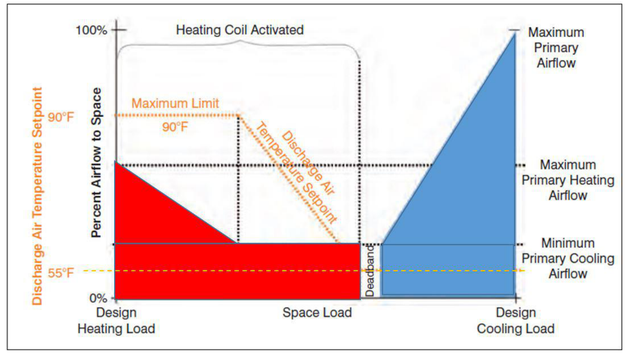

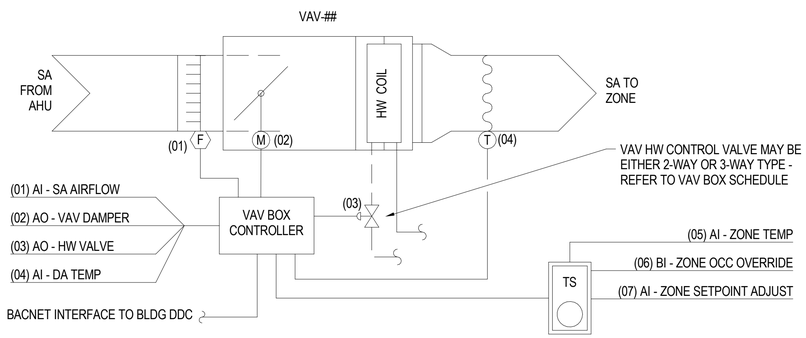

A1 VAV BOX WITH HW HEATING CONTROL DIAGRAM
SCALE: NTS

APPR | DATE | DESCRIPTION | SYM

NAVFAC

COMMONWEALTH OF PENNSYLVANIA — REGISTERED PROFESSIONAL — DAVID W. HURD — ENGINEER — No. PE061160 — SEAL

IRQ Jordan Company — A JOINT VENTURE

Michael Baker INTERNATIONAL
100 AIRSIDE DRIVE
MOON TOWNSHIP, PA 15108 — A/E INFO
APPROVED
FOR COMMANDER NAVFAC
ACTIVITY: MARINE CORPS BASE CAMP LEJEUNE
SATISFACTORY TO DATE: DD/MM/YY
DES DEM | DRW AJK | CHK EMB
PM / DM: TOWLER / ROOT
BRANCH HEAD: SCE
DESIGN DIRECTOR: R.L.Stephens, Jr.
FIRE PROTECTION: DPS

DEPARTMENT OF THE NAVY
NAVAL FACILITIES ENGINEERING SYSTEMS COMMAND ATLANTIC
ATLANTIC DESIGN AND CONSTRUCTION
NAVAL FACILITIES ENGINEERING SYSTEMS COMMAND
NORFOLK, VA
JACKSONVILLE, NC
MCB CAMP LEJEUNE
LOGCOM CSP WAREHOUSE
MECHANICAL - CONTROLS

SCALE: AS NOTED
EPROJECT NO.: 1639600
CONSTR. CONTR. NO. N40085-20-C-0059
NAVFAC DRAWING NO. 14111358
SHEET 335 OF 447

M-811

DRAWFORM REVISION: 25 AUGUST 2020

P1527 FINAL SUBMISSION - 11/18/2021

PLOTTED: 11/11/2021 3:07:38 PM
FILE NAME: BIM 360://HF PACKAGE 3/P1527 LOG COM CSP-1639600-M.rvt

ELECTRICAL ROOM FAN FORCED VENTILATION COOLING / ELECTRIC HEATING - SEQUENCE OF OPERATION

1. ROOM TO BE THERMOSTATICALLY CONTROLLED BY COMMON THERMOSTAT CONNECTED TO THE DDC SYSTEM FOR SPACE HEATING AND EXHAUST BASED FORCED OUTSIDE AIR VENTILATION COOLING TO MAINTAIN TEMPERATURES WITH 10°F OF AMBIENT OUTDOOR CONDITIONS.
2. ON RISE IN SPACE TEMPERATURE ABOVE 80°F (ADJ.) DAMPERS ASSOCIATED WITH THE ROOM INTAKE AND EXHAUST LOUVERS SHALL OPEN AND THE EXHAUST FAN SHALL OPERATE CONTINUOUSLY. UPON FALL IN SPACE TEMPERATURE BELOW 75°F (ADJ.) THE REVERSE SHALL OCCUR.
3. UPON FALL IN SPACE TEMPERATURE BELOW HEATING SETPOINT OF 55°F (ADJ.), ELECTRIC UNIT/WALL HEATER SERVING SPACE SHALL ENERGIZE BY STARTING FAN AND ELECTRIC HEATING COIL TO MAINTAIN SPACE HEATING SETPOINT. UPON RISE IN TEMPERATURE ABOVE 60°F (ADJ.), THE REVERSE SHALL OCCUR. WHERE ELECTRIC HEATERS PROVIDED WITH INTEGRAL THERMOSTATIC CONTROL, SET SUC CONTROL AT 55°; PROVIDE ALARM TO DDC SYSTEM OF SPACE TEMPERATURE FALLS BELOW 50°.
4. ATFP SHUTDOWN: VENTILATION SYSTEM (FAN AND DAMPERS) SHALL BE HARDWIRED TO SHUTDOWN UPON ATFP SWITCH ACTIVATION, REFER TO M-803 FOR MORE INFORMATION.

EXHAUST FAN / VENTILATION DAMPERS / ELECTRIC UNIT HEATER SYSTEM POINT LIST

POINT NUMBER	SYSTEM POINT DESCRIPTION: EXHAUST FAN / VENTILATION COOLING & ASSOCIATED LOUVERS / ELECTRIC HEATERS	SHOW ON DISPLAY	HARDWARE POINTS: ANALOG INPUT (AI): TEMPERATURE	ANALOG OUTPUT(AO): SETPOINT ADJ	DIGITAL (BINARY) INPUT (BI): STATUS	DIGITAL (BINARY) OUTPUT (BO): START/STOP	OPEN/CLOSED	ON/OFF	SYSTEM FEATURES /SOFTWARE POINTS PROGRAMS: TREND - START/STOP	TREND - STATUS	TREND - OPEN/CLOSED	TREND - HEATER	ALARMS: FAILURE	IN HAND	RUNTIME EXCEEDED	LOW/ ANALOG	NOTES
1	ZONE TEMP	●	●													●	
2	HEATING SETPOINT*	●		●												●	1
3	COOLING (VENTILATION) SETPOINT	●		●													
4	EXHAUST FAN STATUS	●			●					●			●	●	●		
5	EXHAUST FAN START/STOP	●				●					●						
6.1	EXHAUST DAMPER	●					●					●					
6.2	EXHAUST DAMPER STATUS	●			●												
7.1	OUTDOOR AIR DAMPER	●					●					●					
7.2	OUTDOOR AIR DAMPER STATUS	●			●												
8.1	EUH FAN START/STOP*	●				●					●						1
8.2	EUH FAN STATUS	●			●												
9	UNIT HEATER ELECTRIC COIL*	●						●					●				1
-	-																
##	RESERVED FOR FUTURE																

NOTES: 1. *ELECTRIC HEATERS MAY OPERATE OFF UNIT CONTROLLER / CONTROLLED INTEGRAL THERMOSTATS WHERE PROVIDED WITH EQUIPMENT; DDC SYSTEM TO MONITOR SPACE TEMPERATURE AND SIGNAL ALARM IF SPACE TEMP FALLS 5° BELOW SPACE HEATING SETPOINT OF 55°

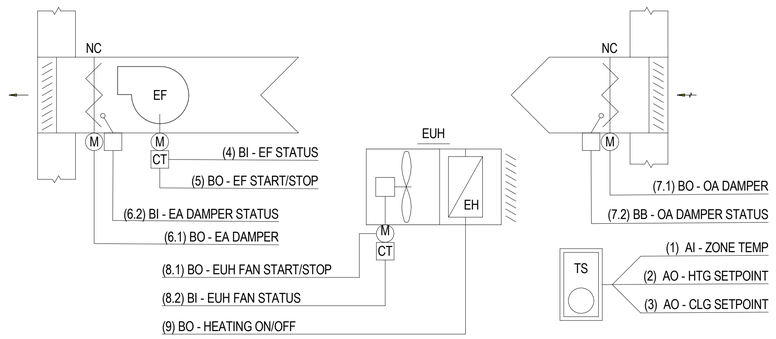

A1 ELECTRICAL ROOM CONTROL DIAGRAM (EF-01, 02, 05, 06 & 08 , EWH-01, 02 & 03 / EUH-01 & 02)
SCALE: NTS

SPLIT DX HEAT PUMP - SEQUENCE OF OPERATION

1. REMOTE CONTROL PANEL BY UNIT/SYSTEM MANUFACTURER SHALL BE WALL MOUNTED AND CONTROL COOLING AND HEATING MODES OF OPERATION. TEMPERATURE AND HUMIDITY SENSORS SHALL BE INTEGRAL TO THE CONTROL PANEL (IF AVAILABLE FROM MANUFACTURER) OR MOUNTED SEPARATELY ADJACENT TO THE CONTROL PANEL BY THE CONTROLS CONTRACTOR.
2. MANUFACTUER'S CONTROL PANEL SHALL INCLUDE AUTOMATIC UNIT SWITCHING OPERATIONS (HEATING / COOLING) AND DISPLAY NORMAL FUNCTIONS, MALFUNCTIONS AND SERVICE DIAGNOSTICS ON AN INTEGRAL LCD DISPLAY. BACNET INTERFACE MODULE SHALL BE PROVIDED (IF AVAILABLE FROM MANUFACTURER) TO INTEGRATE INTO BUILDING DDC SYSTEM.
3. ALARM CONDITIONS, IN ADDITION TO BEING DISPLAYED ON THE LOCAL LCD CONTROL PANEL SHALL BE RELAYED TO THE DDC SYSTEM. IF BACNET INTERFACE IS AVAILABLE, ALARM SPECIFICS SHALL BE SENT TO THE DDC SYSTEM, OTHERWISE A BASIC ALARM RELAY SHALL BE PROVIDED TO SIGNAL AN ALARM CONDITION TO THE DDC TO ALERT BUILDING OPERATOR OF CONDITION.
4. THE UNIT SHALL OPERATE CONTINUOUSLY. THE HEATING TEMPERATURE SETPOINT (HEAT PUMPS) IS 68° F DB (ADJ). THE COOLING TEMPERATURE SETPOINT IS 78°F DB (ADJ). ALARMS SHALL BE PROVIDED WHEN SPACE TEMPERATURE CONDITIONS FALL OUTSIDE THE HEATING (HEAT PUMPS ONLY) AND COOLING SETPOINTS BY 5°F OR WHEN SPACE HUMIDITY EXCEEDS 65%. ALL ALARM POINTS SHALL BE ADJUSTABLE.
5. CONTROL CONTRACTOR SHALL PROVIDE ALL INTERCONNECTING WIRING, RELAYS AND CONNECTIONS BETWEEN MANUFACTURER'S CONTROL PANEL, INDOOR UNIT AND OUTDOOR CONDENSING UNIT AND INTERFACE TO BUILDING DDC SYSTEM.

DUCTLESS MINI-SPLIT COOLING/ HEAT PUMP SYSTEMS (SSAC / SSCU & SSHP / HPCU) POINT LIST

POINT NUMBER	SYSTEM POINT DESCRIPTION: SPLIT DX HEAT PUMP	SHOW ON DISPLAY	HARDWARE POINTS: ANALOG INPUT (AI): TEMPERATURE	RELATIVE HUMIDITY	ANALOG OUTPUT (AO): TEMPERATURE	DIGITAL (BINARY) INPUT (BI): UNIT STATUS	DIGITAL (BINARY) OUTPUT (BO)	SYSTEM FEATURES /SOFTWARE POINTS PROGRAMS: TREND	ALARMS: HIGH ANALOG	LOW/ ANALOG	NOTES
	DDC SYSTEM BACNET INTERFACE	●									
1	SYSTEM STATUS	●				●		●			1
2	CONDENSING UNIT STATUS	●				●		●			1
3	SPACE TEMPERATURE	●	●			●		●			
4	SPACE HUMIDITY	●		●		●					
5	COOLING SETPOINT	●			●						
6	HEATING SETPOINT	●			●						2
7	ZONE TEMP ALARM - COOLING								●		
8	ZONE TEMP ALARM - HEATING									●	2
9	ZONE HIGH HUMIDITY ALARM								●		
##	RESERVED FOR FUTURE										

NOTES:
1. POINT MAY BE ACQUIRED THROUGH SYSTEM BACNET INTERFACE
2. APPLICABLE TO HEAT PUMP SYSTEMS ONLY.

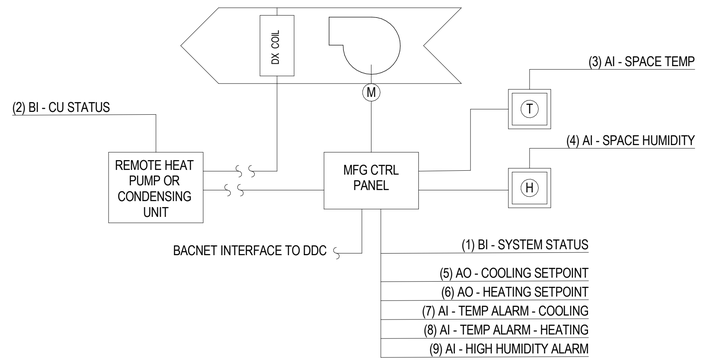

A3 SPLIT DX AIR CONDITIONER / HEAT PUMP - CONTROL DIAGRAM
SCALE: NTS

APPR | DATE | DESCRIPTION | SYM

NAVFAC

COMMONWEALTH OF PENNSYLVANIA — REGISTERED PROFESSIONAL ENGINEER — DAVID W. HURD — No. PE061160 — SEAL

IRQ Jordan Company — A JOINT VENTURE

Michael Baker INTERNATIONAL
100 AIRSIDE DRIVE
MOON TOWNSHIP, PA 15108 — A/E INFO

APPROVED
FOR COMMANDER NAVFAC
ACTIVITY
MARINE CORPS BASE CAMP LEJEUNE
SATISFACTORY TO DATE DD/MM/YY
DES DEM | DRW AJK | CHK EMB
PM / DM TOWLER / ROOT
BRANCH HEAD SCE
DESIGN DIRECTOR R.L.Stephens, Jr.
FIRE PROTECTION DPS

DEPARTMENT OF THE NAVY
NAVAL FACILITIES ENGINEERING SYSTEMS COMMAND ATLANTIC
ATLANTIC DESIGN AND CONSTRUCTION
NAVAL FACILITIES ENGINEERING SYSTEMS COMMAND
NORFOLK, VA
MCB CAMP LEJEUNE
JACKSONVILLE, NC
LOGCOM CSP WAREHOUSE
MECHANICAL - CONTROLS

SCALE: AS NOTED
EPROJECT NO.: 1639600
CONSTR. CONTR. NO. N40085-20-C-0059
NAVFAC DRAWING NO. 14111359
SHEET 336 OF 447

M-812

DRAWFORM REVISION: 25 AUGUST 2020

P1527 FINAL SUBMISSION - 11/18/2021

PLOTTED: 11/11/2021 3:07:41 PM
FILE NAME: BIM 360://HF PACKAGE 3/P1527 LOG COM CSP- 1639600-M.rvt

COLD MECHANICAL ROOM HYDRONIC HEATING AND DEHUMIDIFICATION - SEQUENCE OF OPERATION

1. ROOM TO BE DEHUMIDIFIED BY DEHUMIDIFIER INTERNAL CONTROLS. UPON RISE IN RELATIVE HUMIDITY ABOVE 55°F DEWPOINT (ADJ.), DEHUMIDIFIER TO TURN ON AND OPERATE CONTINUOUSLY. UPON FALL IN DEWPOINT BELOW 55°F DEWPOINT (ADJ.), THE REVERSE SHALL OCCUR.
2. ZONE HUMIDITY SENSOR TO SEND ROOM HUMIDITY LEVEL TO DDC SYSTEM. UPON RISE IN HUMIDITY LEVEL ABOVE 65°F DEWPOINT (ADJ.), ALARM SHALL BE GENERATED.
3. UPON FALL IN SPACE TEMPERATURE BELOW HEATING SETPOINT OF 55°F (ADJ.), HYDRONIC UNIT HEATER SERVING SPACE SHALL ENERGIZE BY STARTING FAN AND FULLY OPENING HOT WATER VALVE TO MAINTAIN SPACE HEATING SETPOINT. UPON RISE IN TEMPERATURE ABOVE 60°F (ADJ.), THE REVERSE SHALL OCCUR.

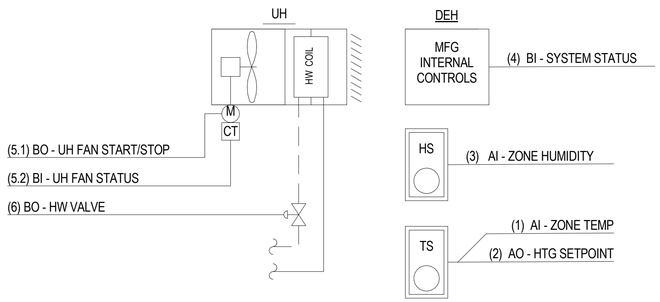

C1 JEFS AHU 212 CONTROL DIAGRAM (UH-03, DEH-01)
SCALE: NTS

HYDRONIC UNIT HEATER / DEHUMIDIFIER (UH / DEH) POINTS LIST

POINT NUMBER	SYSTEM POINT DESCRIPTION	HARDWARE POINTS: ANALOG INPUT (AI)			HARDWARE POINTS: ANALOG OUTPUT(AO)			HARDWARE POINTS: DIGITAL (BINARY) INPUT (BI)			HARDWARE POINTS: DIGITAL (BINARY) OUTPUT (BO)			SYSTEM FEATURES /SOFTWARE POINTS: PROGRAMS			SYSTEM FEATURES /SOFTWARE POINTS: ALARMS				NOTES
	HYDRONIC UNIT HEATERS AND DEHUMIDIFIER	COLOR GRAPHIC	TEMPERATURE	HUMIDITY	SETPOINT ADJ			STATUS			START/STOP	POSITION		TREND	TREND - STATUS	TREND - HEATER	FAILURE	IN HAND	RUNTIME EXCEEDED	LOW ANALOG	
1	ZONE TEMP	●	●											●						●	
2	HEATING SETPOINT	●			●																
3	AI - ZONE HUMIDITY	●		●										●						●	
4	BI - SYSTEM STATUS	●						●							●		●	●			
5.1	UNIT HEATER FAN START/STOP	●									●					●					
5.2	UNIT HEATER FAN STATUS	●						●							●						
6	UNIT HEATER HW VALVE	●										●		●							
-	-																				
##	RESERVED FOR FUTURE																				

HOT MECHANICAL ROOM FAN FORCED VENTILATION COOLING/HYDRONIC HEATING - SEQUENCE OF OPERATION

1. ROOM TO BE THERMOSTATICALLY CONTROLLED BY COMMON THERMOSTAT CONNECTED TO THE DDC SYSTEM FOR SPACE HEATING AND SUPPLY BASED FORCED OUTSIDE AIR VENTILATION COOLING TO MAINTAIN TEMPERATURES WITH 10°F OF AMBIENT OUTDOOR CONDITIONS.
2. ON RISE IN SPACE TEMPERATURE ABOVE 80°F (ADJ.) DAMPERS ASSOCIATED WITH THE ROOM INTAKE AND EXHAUST LOUVERS SHALL OPEN AND THE EXHAUST FAN SHALL OPERATE CONTINUOUSLY. UPON FALL IN SPACE TEMPERATURE BELOW 75°F (ADJ.) THE REVERSE SHALL OCCUR.
3. UPON FALL IN SPACE TEMPERATURE BELOW HEATING SETPOINT OF 55°F (ADJ.), HYDRONIC UNIT HEATER SERVING SPACE SHALL ENERGIZE BY STARTING FAN AND MODULATING HOT WATER VALVE TO MAINTAIN SPACE HEATING SETPOINT. UPON RISE IN TEMPERATURE ABOVE 60°F (ADJ.) THE REVERSE SHALL OCCUR.
4. ATFP SHUTDOWN: VENTILATION SYSTEM (FAN AND DAMPERS) SHALL BE HARDWIRED TO SHUTDOWN UPON ATFP SWITCH ACTIVATION, REFER TO M-803 FOR MORE INFORMATION.

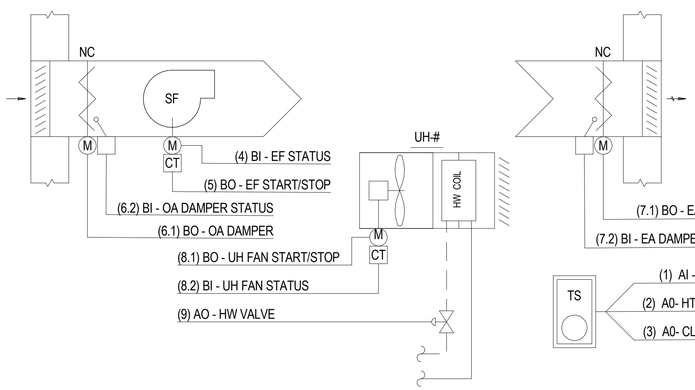

B1 JEFS BOILER ROOM 213 CONTROL DIAGRAM (SF-01, UH-02)
SCALE: NTS

SUPPLY FAN / VENTILATION DAMPERS / UNIT HEATER SYSTEM POINT LIST

POINT NUMBER	SYSTEM POINT DESCRIPTION	HARDWARE POINTS: ANALOG INPUT (AI)			HARDWARE POINTS: ANALOG OUTPUT(AO)			HARDWARE POINTS: DIGITAL (BINARY) INPUT (BI)			HARDWARE POINTS: DIGITAL (BINARY) OUTPUT (BO)				SYSTEM FEATURES /SOFTWARE POINTS: PROGRAMS				SYSTEM FEATURES /SOFTWARE POINTS: ALARMS				NOTES
	SUPPLY FAN / VENTILATION COOLING & ASSOCIATED LOUVERS / HYDRONIC HEATERS	SHOW ON GRAPHIC	TEMPERATURE		SETPOINT ADJ	POSITION / % OPEN		STATUS			START/STOP	OPEN/CLOSED	ON/OFF		TREND	TREND - STATUS	TREND - OPEN/CLOSED	TREND - HEATER	FAILURE	IN HAND	RUNTIME EXCEEDED	LOW ANALOG	
1	ZONE TEMP	●	●												●							●	
2	HEATING SETPOINT	●			●																		
3	COOLING (VENTILATION) SETPOINT	●			●																		
4	SUPPY FAN STATUS	●						●							●	●			●	●			
5	SUPPLY FAN START/STOP	●									●												
6.1	INTAKE (OA) DAMPER	●										●			●		●						
6.2	INTAKE (OA) DAMPER STATUS	●						●															
7.1	EXHAUST AIR DAMPER	●										●			●								
7.2	EXHAUST AIR DAMPER STATUS	●						●															
8.1	UNIT HEATER FAN START/STOP	●									●							●					
8.2	UNIT HEATER FAN STATUS	●						●								●							
9	UNIT HEATER HW VALVE	●				●									●								
-	-																						
##	RESERVED FOR FUTURE																						

EXHAUST FAN (EF-03 & EF-09) - SEQUENCE OF OPERATION

1. THE FAN SHALL RUN DURING OCCUPIED HOURS IN IN CONJUNCTION WITH AHU-01, UNLESS SHUTDOWN ON SAFETIES.
2. THE FAN SHALL SHUTDOWN, THE ASSOCIATED EXHAUST DAMPER SHALL CLOSE, AND AN ALARM SHALL BE GENERATED UPON RECEIVING AN ATFP SHUTDOWN SIGNAL.
3. THE CONTROLLER SHALL MONITOR THE FAN STATUS.
4. ALARMS SHALL BE PROVIDED AS FOLLOWS:
   - FAN FAILURE: COMMANDED ON, BUT THE STATUS IS OFF.
   - FAN IN HAND: COMMANDED OFF, BUT THE STATUS IS ON.
   - FAN RUNTIME EXCEEDED: FAN STATUS RUNTIME EXCEEDS A USER DEFINABLE LIMIT (ADJ.).
5. ATFP SHUTDOWN: VENTILATION SYSTEM (FAN AND DAMPERS) SHALL BE HARDWIRED TO SHUTDOWN UPON ATFP SWITCH ACTIVATION, REFER TO M-803 FOR MORE INFORMATION.

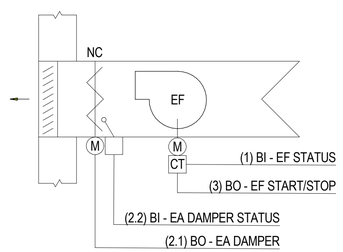

A1 EXHAUST FAN (EF-03, EF-09) & DAMPER CONTROL DIAGRAM
SCALE: NTS

EXHAUST FAN EF-03, EF-09 & DAMPER POINT LIST

POINT NUMBER	SYSTEM POINT DESCRIPTION	HARDWARE POINTS: ANALOG INPUT (AI)			HARDWARE POINTS: ANALOG OUTPUT (AO)			HARDWARE POINTS: DIGITAL (BINARY) INPUT (BI)			HARDWARE POINTS: DIGITAL (BINARY) OUTPUT (BO)				SYSTEM FEATURES / SOFTWARE POINTS: PROGRAMS				SYSTEM FEATURES / SOFTWARE POINTS: ALARMS				NOTES
	EXHAUST FAN / ASSOCIATED LOUVER	SHOW ON DISPLAY						STATUS			START/STOP	OPEN/CLOSED			TREND - START/STOP	TREND - STATUS	TREND - OPEN/CLOSED		FAILURE	IN HAND	RUNTIME EXCEEDED	LOW ANALOG	
1	EXHAUST FAN STATUS	●						●							●	●			●	●	●		
2.1	EXHAUST DAMPER	●										●					●						
2.2	EXHAUST DAMPER STATUS	●						●															
3	EXHAUST FAN START/STOP	●									●												
-	-																						
##	RESERVED FOR FUTURE																						

NAVAL FACILITIES ENGINEERING SYSTEMS COMMAND ATLANTIC
NORFOLK, VA
DEPARTMENT OF THE NAVY
NAVAL FACILITIES ENGINEERING SYSTEMS COMMAND
ATLANTIC DESIGN AND CONSTRUCTION
MCB CAMP LEJEUNE
JACKSONVILLE, NC
LOGCOM CSP WAREHOUSE
MECHANICAL - CONTROLS
COMMONWEALTH OF PENNSYLVANIA REGISTERED PROFESSIONAL DAVID W. HURD ENGINEER No. PE061160 SEAL
RQ W.M. Jordan COMPANY – A JOINT VENTURE –
Michael Baker INTERNATIONAL
100 AIRSIDE DRIVE
MOON TOWNSHIP, PA 15108
A/E INFO

APPROVED	
FOR COMMANDER NAVFAC	
ACTIVITY	MARINE CORPS BASE CAMP LEJEUNE
SATISFACTORY TO DATE	DD/MM/YY
DES DEM / DRW KC / CHK EMB	
PM / DM	TOWLER / ROOT
BRANCH HEAD	SCE
DESIGN DIRECTOR	R.L.Stephens, Jr.
FIRE PROTECTION	DPS
SCALE:	AS NOTED
EPROJECT NO.:	1639600
CONSTR. CONTR. NO.	N40085-20-C-0059
NAVFAC DRAWING NO.	14111360
SHEET	337 OF 447

M-813

DRAWFORM REVISION: 25 AUGUST 2020

APPR	DATE	DESCRIPTION	SYM

P1527 FINAL SUBMISSION - 11/18/2021

PLOTTED: 11/11/2021 3:07:44 PM

FILE NAME: BIM 360://HF PACKAGE 3/P1527 LOG COM CSP- 1639600-M.rvt

HEAT TRACE - SEQUENCE OF OPERATION

1. UPON DROP IN PIPE SURFACE TEMPERATURE TO 35°F (ADJ.), HEAT TRACE TO ACTIVATE. UPON RISE IN PIPE SURFACE TEMPERATURE ABOVE 38°F (ADJ.), HEAT TRACE TO DEACTIVE. HEAT TRACE CABLE TO BE SELF-REGULATING TYPE, MODULATING OUTPUT TO KEEP PIPE SURFACE TEMPERATURE ABOVE 35°F (ADJ.).

2. HEAT TRACE CONTROLLER TO MONITOR SYSTEM STATUS AND SEND TO DDC SYSTEM. UPON LOSS OF POWER TO HEAT TRACE CABLE, ALARM TO BE SENT TO HEAT TRACE CONTROLLER AND DDC SYSTEM.

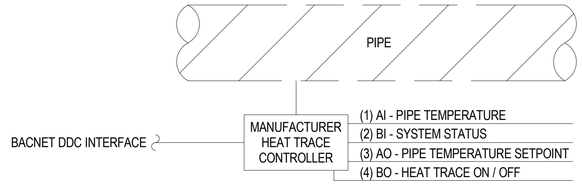

C1 HEAT TRACE CONTROL DIAGRAM
SCALE: NTS

HEAT TRACE SYSTEM POINT LIST

POINT NUMBER	SYSTEM POINT DESCRIPTION: HEAT TRACE	SHOW ON DISPLAY	ANALOG: INPUT (AI) TEMPERATURE	ANALOG: OUTPUT(AO) TEMPERATURE	DIGITAL (BINARY): INPUT (BI) STATUS	DIGITAL (BINARY): OUTPUT (BO) ON / OFF	SYSTEM FEATURES: ALARMS FAILURE	SYSTEM FEATURES: PROGRAMS TREND	NOTES
1	PIPE TEMPERATURE	●	●					●	
2	SYSTEM STATUS	●			●		●		
3	PIPE TEMPERATURE SETPOINT	●		●				●	
4	HEAT TRACE ON / OFF	●				●			
##	RESERVED FOR FUTURE								

MECHANICAL ROOM FAN FORCED VENTILATION COOLING/HYDRONIC HEATING - SEQUENCE OF OPERATION

1. ROOM TO BE THERMOSTATICALLY CONTROLLED BY COMMON THERMOSTAT CONNECTED TO THE DDC SYSTEM FOR SPACE HEATING AND EXHAUST BASED FORCED OUTSIDE AIR VENTILATION COOLING TO MAINTAIN TEMPERATURES WITH 10°F OF AMBIENT OUTDOOR CONDITIONS.

2. ON RISE IN SPACE TEMPERATURE ABOVE 80°F (ADJ.) DAMPERS ASSOCIATED WITH THE ROOM INTAKE AND EXHAUST LOUVERS SHALL OPEN AND THE EXHAUST FAN SHALL OPERATE CONTINUOUSLY. UPON FALL IN SPACE TEMPERATURE BELOW 75°F (ADJ.) THE REVERSE SHALL OCCUR.

3. UPON FALL IN SPACE TEMPERATURE BELOW HEATING SETPOINT OF 55°F (ADJ.), HYDRONIC UNIT HEATER SERVING SPACE SHALL ENERGIZE BY STARTING FAN AND MODULATING HOT WATER VALVE TO MAINTAIN SPACE HEATING SETPOINT. UPON RISE IN TEMPERATURE ABOVE 60°F (ADJ.) THE REVERSE SHALL OCCUR.

4. ATFP SHUTDOWN: VENTILATION SYSTEM (FAN AND DAMPERS) SHALL BE HARDWIRED TO SHUTDOWN UPON ATFP SWITCH ACTIVATION, REFER TO M-803 FOR MORE INFORMATION.

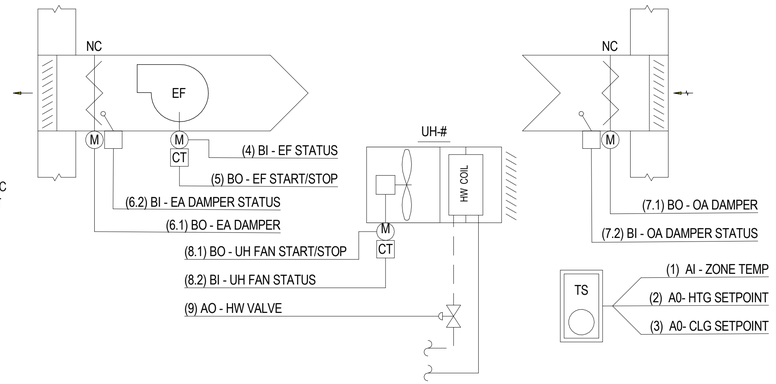

B1 MECH ROOM 120 (EF-04, UH-01) AND WHSE MECH 124 CONTROL DIAGRAM (EF-07, U-04)
SCALE: NTS

EXHAUST FAN / VENTILATION DAMPERS / HYDRONIC UNIT HEATER SYSTEM POINT LIST

POINT NUMBER	SYSTEM POINT DESCRIPTION: EXHAUST FAN / VENTILATION COOLING & ASSOCIATED LOUVERS / HYDRONIC HEATERS	SHOW ON GRAPHIC	HARDWARE POINTS: ANALOG INPUT (AI) TEMPERATURE	ANALOG: OUTPUT(AO) SETPOINT ADJ	ANALOG: OUTPUT(AO) POSITION / % OPEN	DIGITAL (BINARY): INPUT (BI) STATUS	DIGITAL (BINARY): OUTPUT (BO) START/STOP	DIGITAL (BINARY): OUTPUT (BO) OPEN/CLOSED	DIGITAL (BINARY): OUTPUT (BO) ON/OFF	SYSTEM FEATURES /SOFTWARE POINTS: PROGRAMS TREND	PROGRAMS TREND - STATUS	PROGRAMS TREND - OPEN/CLOSED	PROGRAMS TREND - HEATER	ALARMS FAILURE	ALARMS IN HAND	ALARMS RUNTIME EXCEEDED	ALARMS LOW ANALOG	NOTES
1	ZONE TEMP	●	●							●							●	
2	HEATING SETPOINT	●		●														
3	COOLING (VENTILATION) SETPOINT	●		●														
4	EXHAUST FAN STATUS	●				●				●	●			●	●			
5	EXHAUST FAN START/STOP	●					●											
6.1	EXHAUST (EA) DAMPER	●						●		●		●						
6.2	EXHAUST (EA) DAMPER STATUS	●				●												
7.1	INTAKE (OA) DAMPER	●						●		●								
7.2	INTAKE (OA) DAMPER STATUS	●				●												
8.1	UNIT HEATER FAN START/STOP	●					●							●				
8.2	UNIT HEATER FAN STATUS	●				●						●						
9	UNIT HEATER HW VALVE	●		●						●								
-	-																	
##	RESERVED FOR FUTURE																	

HYDROGEN GAS DETECTOR - BATTERY CHARGING AREA - SEQUENCE OF OPERATION

1. A HYDROGEN (H2) GAS DETECTION SYSTEM (STORAGE BATTERY SYSTEMS SBS-H2 HYDROGEN MONITORING SYSTEM OR EQUAL) SHALL BE INSTALLED IN THE BATTERY CHARGING AREA CONSISTING OF A WALL MOUNTED CENTRAL CONTROLLER WITH AUDIBLE AND VISIBLE ALARMS AND RELAYS FOR REMOTE ALARM AND SYSTEM CONTROL. THE HYDROGEN (H2) SENSOR(S) SHALL BE LOCATED AT THE ROOF LEVEL PER MANUFACTURER'S INSTRUCTIONS DIRECTLY ABOVE THE CHARGING STATION(S). PROVIDE MULTIPLE SENSORS/UNITS TO PROVIDE MANUFACTURER'S REQUIRED AREA COVERAGE MINIMUM OF 2 SENSORS.

2. GREEN LIGHT SHALL INDICATE UNIT IS POWERED AND FUNCTIONING CORRECTLY.

3. UPON DETECTION OF H2 LEVELS AT 1% LEVEL (WARNING LEVEL) THE CENTRAL H2 SYSTEM CONTROLLER SHALL INDICATE A YELLOW WARNING SIGNAL AND A WARNING RELAY SIGNAL SHALL BE SENT TO THE DDC SYSTEM TO INITIATE OPERATION OF THE HEATING AND VENTILATING SYSTEM (AHU-02) DURING UNOCCUPIED HOURS.

4. UPON DETECTION OF H2 LEVELS AT 2% LEVEL (ALARM LEVEL) THE CENTRAL H2 SYSTEM CONTROLLER SHALL INDICATE A RED WARNING SIGNAL COUPLED WITH AN AUDIBLE ALARM. AN ALARM RELAY SIGNAL SHALL DISABLE POWER TO THE BATTERY CHARGING SYSTEM, AND AN ALARM SIGNAL SHALL BE SENT TO THE FIRE ALARM SYSTEM. THE HEATING AND VENTILATING SYSTEM (AHU-02) SHALL CONTINUE TO OPERATE.

5. UPON LEVELS OF HYDROGEN LOWERING THE SEQUENCE SHALL REVERSE.

PART OF CONTROL SEQUENCE – H&V UNIT (AHU-02) – BATTERY CHARGING AREA

6. HYDROGEN DILUTION VENTILATION SEQUENCE OF CONTROL (WAREHOUSE BUILDING):
UPON ALARM SIGNAL FROM THE HYDROGEN SENSOR(S) (AS LOCATED ON THE PLANS); THE AHU-02 SERVING THE WAREHOUSE SHALL ACTIVATE AND OPERATE IN 'OCCUPIED' MODE AT SCHEDULED SUPPLY AND EXHAUST AIRFLOWS REGARDLESS OF BUILDING SCHEDULED OCCUPANCY. THE UNIT SHALL CONTINUE TO OPERATE IN OCCUPIED MODE FOR 30 MINUTES (ADJUSTABLE) AFTER THE HYDROGEN SENSOR ALARM SIGNAL HAS CLEARED.

APPR	DATE	DESCRIPTION	SYM

NAVFAC

COMMONWEALTH OF PENNSYLVANIA — REGISTERED PROFESSIONAL ENGINEER — DAVID W HURD — No PE061160 — SEAL

W.M. Jordan Company — A JOINT VENTURE

Michael Baker INTERNATIONAL
100 AIRSIDE DRIVE
MOON TOWNSHIP, PA 15108 A/E INFO

APPROVED

FOR COMMANDER NAVFAC

ACTIVITY
MARINE CORPS BASE
CAMP LEJEUNE

SATISFACTORY TO DATE DD/MM/YY

DES	DRW	CHK
EMB	AJK	DWH

PM / DM TOWLER / ROOT
BRANCH HEAD SCE
DESIGN DIRECTOR R.L.Stephens, Jr.
FIRE PROTECTION DPS

DEPARTMENT OF THE NAVY
NAVAL FACILITIES ENGINEERING SYSTEMS COMMAND
ATLANTIC DESIGN AND CONSTRUCTION
NAVAL FACILITIES ENGINEERING SYSTEMS COMMAND ATLANTIC
NORFOLK, VA
MCB CAMP LEJEUNE
JACKSONVILLE, NC
LOGCOM CSP WAREHOUSE
MECHANICAL - CONTROLS

SCALE: AS NOTED
EPROJECT NO.: 1639600
CONSTR. CONTR. NO. N40085-20-C-0059
NAVFAC DRAWING NO. 14111361
SHEET 338 OF 447

M-814

DRAWFORM REVISION: 25 AUGUST 2020

P1527 FINAL SUBMISSION - 11/18/2021

PLOTTED: 11/11/2021 3:07:45 PM

FILE NAME: BIM 360://HF PACKAGE 3/P1527 LOG COM CSP-1639600-M.rvt

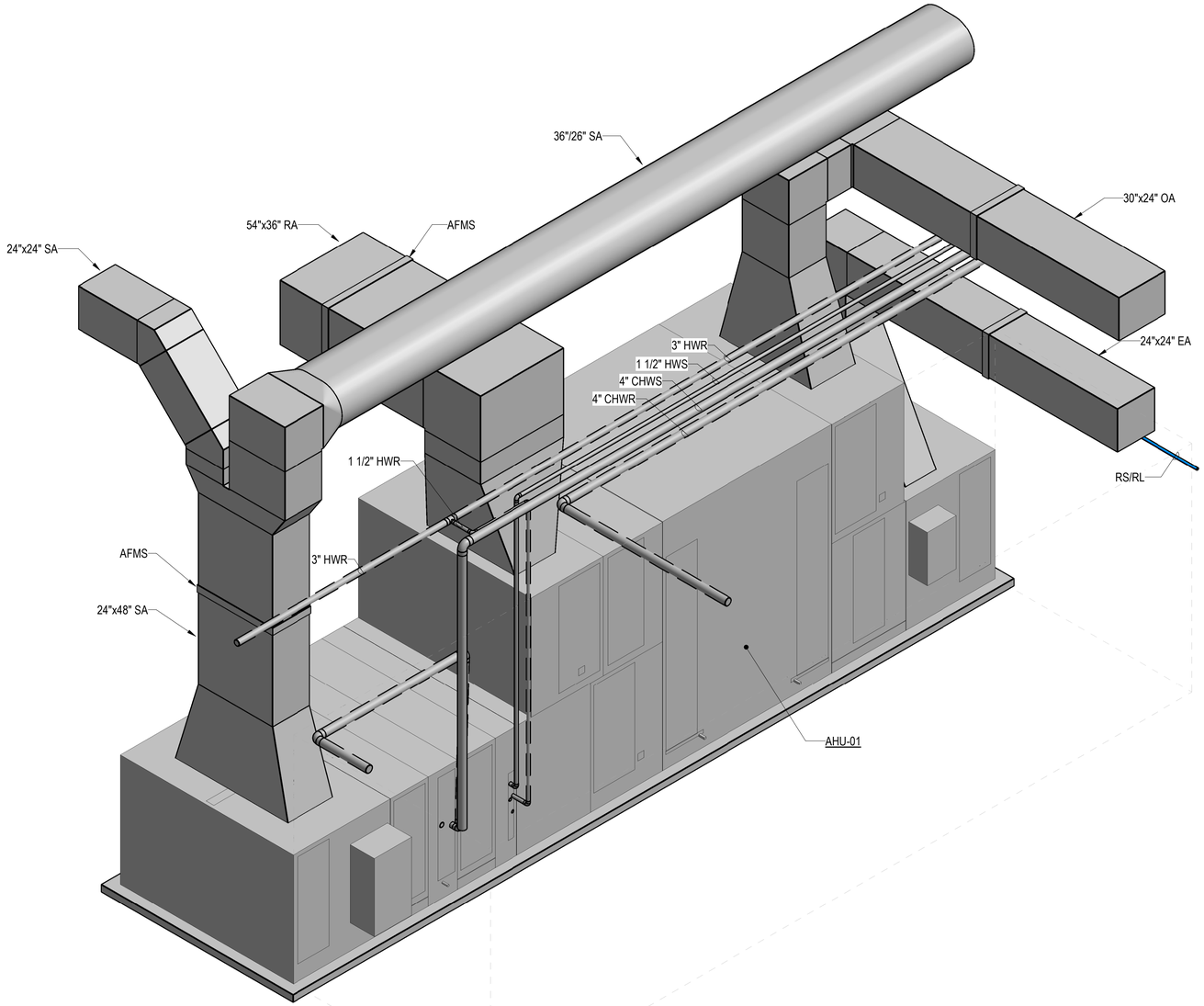

A1 MECHANICAL - ISOMETRIC - AHU ROOM 212
SCALE: NTS

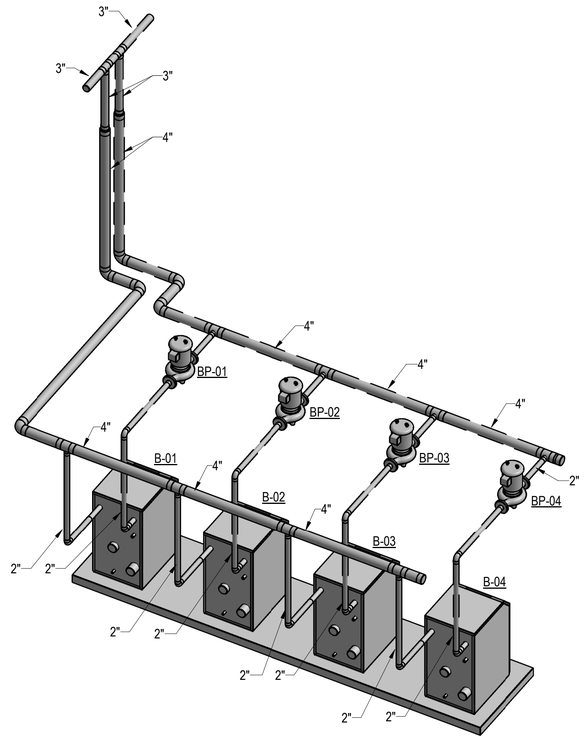

B4 MECHANICAL - ISOMETRIC - BOILER ROOM 213
SCALE: NTS

APPR	
DATE	
DESCRIPTION	
SYM	

NAVFAC

COMMONWEALTH OF PENNSYLVANIA
REGISTERED PROFESSIONAL ENGINEER
DAVID W HURD
No PE061160
SEAL

RQ W.M. Jordan COMPANY — A JOINT VENTURE —

Michael Baker INTERNATIONAL
100 AIRSIDE DRIVE
MOON TOWNSHIP, PA 15108
A/E INFO

APPROVED
FOR COMMANDER NAVFAC

ACTIVITY
MARINE CORPS BASE
CAMP LEJEUNE

SATISFACTORY TO DATE DD/MM/YY
DES Designer DRW Author CHK Checker
PM / DM TOWLER / ROOT
BRANCH HEAD
DESIGN DIRECTOR R.L.Stephens, Jr.
FIRE PROTECTION DPS

DEPARTMENT OF THE NAVY
NAVAL FACILITIES ENGINEERING SYSTEMS COMMAND
ATLANTIC DESIGN AND CONSTRUCTION
MCB CAMP LEJEUNE

NAVAL FACILITIES ENGINEERING SYSTEMS COMMAND ATLANTIC
NORFOLK, VA
JACKSONVILLE, NC
LOGCOM CSP WAREHOUSE

MECHANICAL - ISOMETRIC

SCALE:	AS NOTED
EPROJECT NO.:	1639600
CONSTR. CONTR. NO.	N40085-20-C-0059
NAVFAC DRAWING NO.	14111362
SHEET	339 OF 447

M-901

DRAWFORM REVISION: 25 AUGUST 2020

P1527 FINAL SUBMISSION - 11/18/2021

PLOTTED: 11/1/2021 3:07:47 PM

FILE NAME: BIM 360://HF PACKAGE 3/P1527 LOG COM CSP-1639600-M.rvt

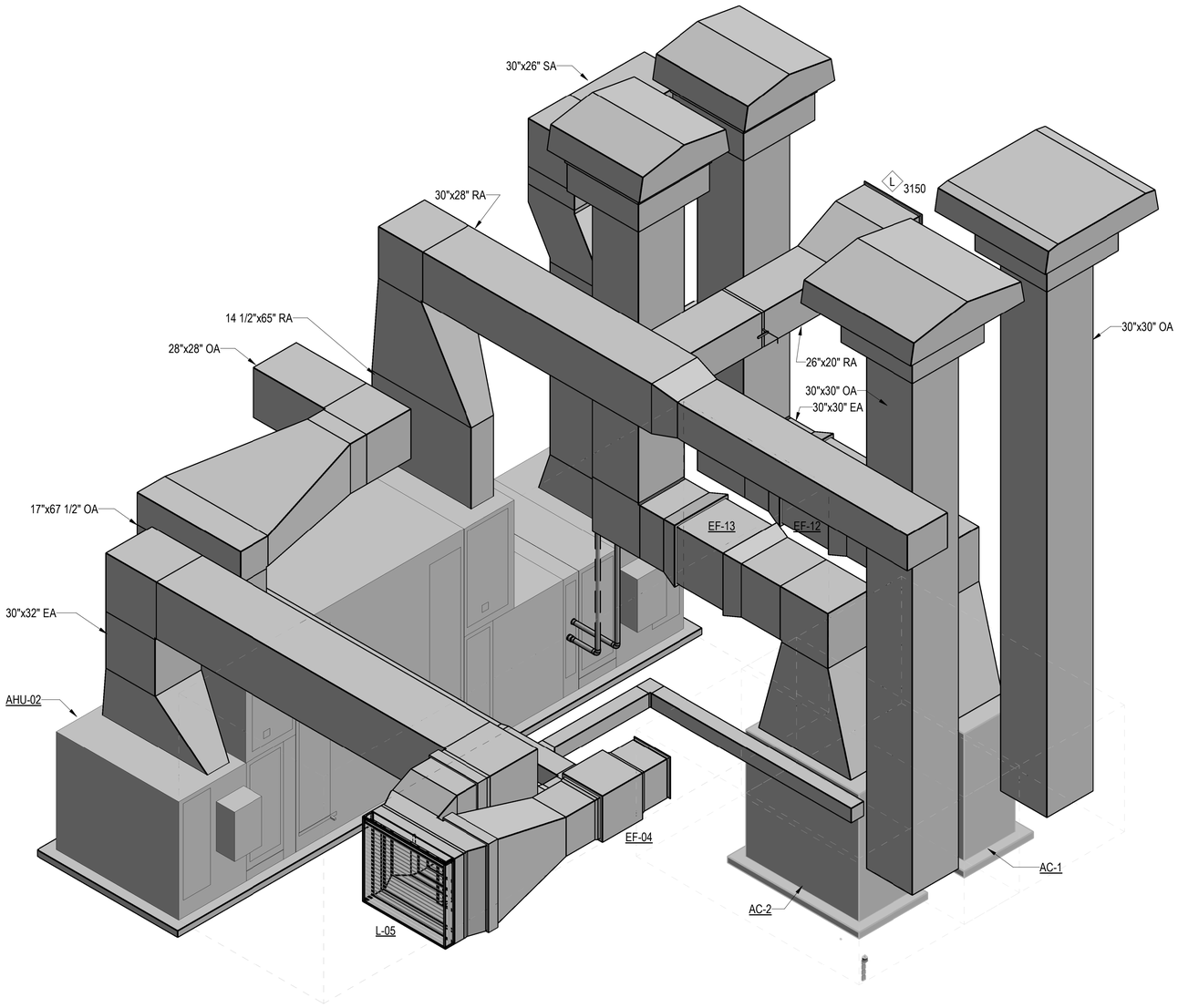

A1 MECHANICAL - ISOMETRIC - MECH ROOM 120
SCALE:

APPR	DATE	DESCRIPTION	SYM

NAVFAC

COMMONWEALTH OF PENNSYLVANIA
REGISTERED PROFESSIONAL
DAVID W. HURD
ENGINEER
No PE061160
SEAL

RQ W.M. Jordan COMPANY
A JOINT VENTURE

Michael Baker
INTERNATIONAL
100 AIRSIDE DRIVE
MOON TOWNSHIP, PA 15108
A/E INFO

APPROVED
FOR COMMANDER NAVFAC

ACTIVITY
MARINE CORPS BASE
CAMP LEJEUNE

SATISFACTORY TO DATE DD/MM/YY
DES Designer DRW Author CHK Checker
PM / DM TOWLER / ROOT
BRANCH HEAD
DESIGN DIRECTOR R.L.Stephens, Jr.
FIRE PROTECTION DPS

DEPARTMENT OF THE NAVY
NAVAL FACILITIES ENGINEERING SYSTEMS COMMAND
ATLANTIC DESIGN AND CONSTRUCTION
MCB CAMP LEJEUNE

NAVAL FACILITIES ENGINEERING SYSTEMS COMMAND ATLANTIC
NORFOLK, VA

JACKSONVILLE, NC

LOGCOM CSP WAREHOUSE

MECHANICAL - ISOMETRIC

SCALE: AS NOTED
EPROJECT NO.: 1639600
CONSTR. CONTR. NO. N40085-20-C-0059
NAVFAC DRAWING NO. 14111363
SHEET 340 OF 447

M-902

DRAWFORM REVISION: 25 AUGUST 2020

P1527 FINAL SUBMISSION - 11/18/2021

PLOTTED: 11/11/2021 3:48:19 PM

FILE NAME: BIM 360://HF PACKAGE 3/P1527 LOG COM CSP-1639600-M.rvt

SYMBOL — POWER

- LP2A-1,3 — HOME RUN TO PANELBOARD LETTERS AND NUMBERS DESIGNATE PANEL AND CIRCUITS. PROVIDE ONE PHASE CONDUCTOR, ONE NEUTRAL CONDUCTOR , AND ONE EQUIPMENT GROUNDING CONDUCTOR FOR SINGLE POLE CIRCUIT BREAKER CIRCUITS. PROVIDE TWO PHASE CONDUCTORS AND ONE EQUIPMENT GROUNDING CONDUCTOR FOR TWO POLE CIRCUIT BREAKER CIRCUITS. PROVIDE THREE PHASE CONDUCTORS AND ONE EQUIPMENT GROUNDING CONDUCTOR FOR THREE POLE CIRCUIT BREAKER CIRCUITS.
- CONDUIT AND CABLE, CONCEALED IN FINISHED SPACES, EXPOSED ELSEWHERE.
- CONDUIT AND CABLE, BELOW GRADE OR SLAB.
- EU — UNDERGROUND DUCTBANK:
  - EU = DENOTES ELECTRICAL
  - GAS = DENOTES GAS LINE
  - OE = DENOTES OVERHEAD ELECTRIC LINE
  - T = DENOTES TELECOMMUNICATIONS
- CONDUIT TURNED UP.
- CONDUIT TURNED DOWN.
- TW — GROUND ROD TEST WELL
- GROUND ROD
- EXOTHERMIC WELD.
- CLAMP CONNECTOR
- BOLTED CONNECTION
- AIR TERMINAL
- GROUND / GROUND ROD / GEC
- LIGHTNING PROTECTION MAIN CONDUCTOR
- G — BARE COPPER GROUNDING CONDUCTOR.
- GROUNDING BUSBAR
- S Xa — WALL SWITCH UNLESS OTHERWISE NOTED MOUNTED 48"AFF. "X" REPRESENTS TYPE. "a" REPRESENTS LIGHTS SWITCHED.
  - LV4 = 4 BUTTON LOW VOLTAGE SWITCH WITH RAISE/LOWER AND ON/OFF
  - LV8 = 8 BUTTON LOW VOLTAGE SWITCH WITH RAISE/LOWER AND ON/OFF AND 4 ZONES
  - TP = TOUCH PAD - ON/OFF DIMMING UP TO 16 ZONE CONTROL
  - D = 4 BUTTON LOW VOLTAGE SWITCH WITH RAISE/LOWER AND ON/OFF
  - LV = LOW VOLTAGE SWITCH
  - = NO DESIGNATION IS STANDARD LINE VOLTAGE SWITCH
  - 3,4 = 3 OR 4 WAY LINE VOLTAGE SWITCH AS INDICATED
  - ES = EXPLOSION PROOF SWITCH
- SINGLE, DUPLEX, 4-PLEX RECEPTACLE, MOUNTED 18"AFF UON.
  - WP = WEATHERPROOF
  - SP = SURGE SUPPRESSION
  - TR = TAMPER RESISTANT
  - AC = MOUNTED ABOVE COUNTER
  - XP = EXPLOSION PROOF, AS INDICATED ON PLANS
  - SW = SWITCHED RECEPTACLE
- SPECIAL PURPOSE RECEPTACLE, SIZE AND TYPE AS SHOWN ON THE DRAWING.
- GFI DUPLEX RECEPTACLE.
- DUPLEX RECEPTACLE. FLUSH FLOOR MOUNTED, UNLESS OTHERWISE NOTED.
- DUPLEX RECEPTACLE. CEILING MOUNTED, UNLESS OTHERWISE NOTED.
- DUPLEX RECEPTACLE WITH TWO 5VDC USB PORTS, ONE TYPE A USB PORT AND ONE TYPE B USB PORT.
- PB — PULLBOX SIZE PER NEC UNLESS OTHERWISE NOTED.
- T — TRANSFORMER.
- J, XP — JUNCTION BOX SIZE PER NEC UNLESS OTHERWISE NOTED. 'XP' DENOTES EXPLOSION PROOF, AS INDICATED ON PLANS.
- E — EQUIPMENT CONNECTION POINT.
- PANELBOARD SURFACE OR FLUSH MOUNTED AS INDICATED.
- VFD — VARIABLE FREQUENCY DRIVE.
- 3 — MOTOR CONNECTION. "3" REPRESENTS 3HP MOTOR.
- M — SINGLE POLE MANUAL MOTOR STARTER, WITH THERMAL OVERLOAD PROTECTION.
- 100/3/3R — NON-FUSIBLE DISCONNECT. "100/3/3R" DENOTES 100A, 3P, '3R'.
- 200/3/3R/150 — FUSIBLE DISCONNECT SWITCH. "200/3/3R/150" DENOTES 200A, 3P, '3R', WITH 150A FUSES.
- 100/3/3R — ENCLOSED THERMAL MAGNETIC CIRCUIT BREAKER INDIVIDUALLY MOUNTED. "100/3/3R" DENOTES 100A, 3P, '3R' (NOTATION TYPICAL).
- MAGNETIC MOTOR STARTER INDIVIDUALLY MOUNTED.
- 100/3 — FUSIBLE DISCONNECT SWITCH TYPE COMBINATION MAGNETIC MOTOR STARTER, CIRCUIT NUMBER AS SHOWN ON THE DRAWINGS. INDIVIDUALLY MOUNTED 54 IN. ABOVE FINISHED FLOOR.
- MOTOR CIRCUIT PROTECTOR TYPE COMBINATION MAGNETIC MOTOR STARTER, CIRCUIT NUMBERS AS SHOWN ON THE DRAWINGS. INDIVIDUALLY MOUNTED 54 IN. ABOVE FINISHED FLOOR.
- SURFACE METAL RACEWAY, (SMR) COORDINATE SIZE WITH SPECIFICATION, MOUNTED ABOVE COUNTER TOP, UNLESS OTHERWISE NOTED.
- EMERGENCY PUSH BUTTON
- PUSHBUTTON CONTROLLER

SYMBOL — LIGHTING

- A LP1-2b — STRIP LIGHTING FIXTURE. "LP1"=PANELBOARD, "2"=CIRCUIT NUMBER, "b"=SWITCH LETTER, "A"=FIXTURE TYPE LETTER. SEE LIGHTING FIXTURE SCHEDULE FOR DETAILS.
- A LP1-2b — LIGHTING FIXTURE. "LP1"=PANELBOARD, "2"=CIRCUIT NUMBER, "b"=SWITCH LETTER, "A"=FIXTURE TYPE LETTER.
- A LP1-2b — LIGHTING FIXTURE. "LP1"=PANELBOARD, "2"=CIRCUIT NUMBER, "b"=SWITCH LETTER, "A"=FIXTURE TYPE LETTER. SHADING DENOTES FIXTURE IS PROVIDED WITH EMERGENCY BATTERY BALLAST/DRIVER CONNECTED TO UNSWITCHED SENSING CIRCUIT WIRE.
- A LP1-2 — LIGHTING FIXTURE. "LP1"=PANELBOARD, "2"=CIRCUIT NUMBER, "A"=FIXTURE TYPE LETTER. FULL SHADING DENOTES FIXTURE IS UNSWITCHED AND PROVIDED WITH EMERGENCY BATTERY BALLAST/DRIVER.
- PENDANT MOUNTED LIGHTING FIXTURE.
- PENDANT MOUNTED STRIP LIGHTING FIXTURE
- CEILING MOUNTED LIGHTING FIXTURE.
- WALL MOUNTED LIGHTING FIXTURE.
- SITE LIGHTING ASSEMBLY.
- TWIN SITE LIGHTING ASSEMBLY.
- R1 — EXTERIOR WALL MOUNTED SCONSE LIGHT. "R1" = RELAY # IN LIGHTING CONTROL PANEL CONTROLLING EXT. LTG. SEE DETAIL A1 ON E-503 FOR MORE INFORMATION.
- R1 — EXTERIOR WALL MOUNTED SCONSE LIGHT WITH EMERGENCY BALLAST/DRIVER. "R1" = RELAY # IN LIGHTING CONTROL PANEL CONTROLLING EXT. LTG. SEE DETAIL A1 ON E-503 FOR MORE INFORMATION.
- PC — PHOTOCELL. COMPATIBLE WITH LIGHTING CONTROL PANEL.
- CEILING MOUNTED EXIT SIGN, DRAWINGS INDICATE SINGLE OR DOUBLE FACED WITH DIRECTIONAL ARROWS..
- WALL MOUNTED EXIT SIGN, DRAWINGS INDICATE SINGLE OR DOUBLE FACED WITH DIRECTIONAL ARROWS. MOUNT 8'-0"AFF.
- W LP1-12 — EMERGENCY LIGHTING MASTER UNIT, BATTERY POWERED. CONNECT TO UNSWITCHED PORTION OF LOCAL LIGHTING CIRCUIT.
  - LP1 DENOTES PANELBOARD DESIGNATION.
  - 12 DENOTES CIRCUIT NUMBER.
  - W DENOTES FIXTURE TYPE LETTER.
- WALL SWITCH DUAL TECH, VACANCY SENSOR
- D — WALL SWITCH DUAL TECH, VACANCY SENSOR DIMMER
- OS — WALL SWITCH DUAL TECH, OCCUPANCY SENSOR
- CEILING MOUNTED, DUAL TECH LOW VOLTAGE OCCUPANCY SENSOR
- CEILING MOUNTED, DUAL TECH, LOW VOLTAGE ULTRASONIC CORRIDOR OCCUPANCY SENSOR - PROVIDE MASKING FOR CORRIDOR
- CEILING MOUNTED DUAL TECH LOW VOLTAGE VACANCY SENSOR
- NOT USED
- VS — CEILING MOUNTED, DUAL TECH HIGH BAY VACANCY SENSOR
- OS — CEILING MOUNTED, DUAL TECH HIGH BAY OCCUPANCY SENSOR
- P — SMART POWER PACK WITH DIMMING. PROVIDE REQUIRED ACCESS PANELS IN DRYWALL CEILING. nLIGHT OR EQUIVALENT.
- PP — SMART POWER PACK FOR PLUG LOAD. PROVIDE REQUIRED ACCESS PANELS IN DRYWALL CEILING. nLIGHT OR EQUIVALENT.
- LCP — LIGHTING CONTROL CONTACTOR PANEL.
- DC — DOOR CONTACT LIGHT SWITCH.
- LVS — LOW VOLTAGE SWITCH

SYMBOL — SINGLE-LINE DIAGRAM

- SINGLE LINE DIAGRAM THERMAL-MAGNETIC CIRCUIT BREAKER.
- SINGLE LINE DIAGRAM COMBINATION MOTOR STARTER WITH MOTOR CIRCUIT PROTECTOR (MCP) AND THERMAL OVERLOAD (OL).
- SINGLE LINE DIAGRAM NON-FUSED DISCONNECT SWITCH.
- SINGLE LINE DIAGRAM FUSED DISCONNECT SWITCH.
- SINGLE LINE DIAGRAM TRANSFORMER
- VFD — VARIABLE FREQUENCY DRIVE WITH INTERNAL OVERCURRENT DISCONNECT DEVICE.
- WOOD UTILITY POLE
- ATS
- GROUNDING ELECTRODE
- G — GENERATOR
- M — SINGLE LINE DIAGRAM METER
- HANDHOLE

SYMBOL — GENERAL

- X — SHEET KEYNOTE
  X = KEYNOTE NUMBER

GENERAL NOTES

1. THIS IS A STANDARD LEGEND SHEET. NOT ALL SYMBOLS OR ABBREVIATIONS MAY APPEAR ON DRAWINGS.
2. MOUNTING DEVICES AND EQUIPMENT PER SPECIFICATIONS UNLESS OTHERWISE NOTED.
3. ENCLOSURES MUST BE NEMA 1 UNLESS OTHERWISE NOTED. 3R=NEMA 3R, 4X=NEMA 4X, WP=WEATHERPROOF, AND XP=EXPLOSION PROOF.
4. PROVIDE GROUND CONDUCTOR FOR BRANCH, FEED, AND EQUIPMENT CIRCUITS SIZED PER NEC, UNLESS OTHERWISE INDICATED.
5. WHERE MULTIPLE CIRCUITS ARE COMBINED IN A SINGLE RACEWAY DETERMINE THE EXACT NUMBER OF CONDUCTORS, ROUTING, AND SIZE OF THE RACEWAY. SIZE THE WIRE AMPACITY IN ACCORDANCE WITH THE NEC.
6. COORDINATE CONDUIT PENETRATIONS AND PROVIDE CONDUIT SEALS IN HAZARDOUS LOCATION. PENETRATION SEALS, EXPANSION/VIBRATION ISOLATION FITTINGS AS APPLICABLE.
7. MAINTAIN AIR BARRIER INTEGRITY FOR ELECTRICAL RACEWAY PENETRATION.
8. WIRING FOR LIGHTING AND POWER CIRCUITS MUST BE NO. 12 AWG MINIMUM.
9. WIRING FOR CONTROL MUST BE NO. 14 AWG MINIMUM.
10. CONDUIT MUST BE MINIMUM 3/4" FOR POWER, MINIMUM 1-1/4" FOR DATA/COMM, AND MINIMUM 1" FOR BAS (FACP, WAP, DDC)
11. THE WIRE SIZE FROM A 20 AMPERE, SINGLE POLE, 277 VOLT CIRCUIT BREAKER MOUNTED IN A LIGHTING PANELBOARD TO THE LOAD MUST BE AS FOLLOWS: NO. 12 AWG WIRE UP TO 100 FEET RUN; NO. 10 AWG WIRE; 101 FEET RUN UP TO 200 FEET RUN; NO. 8 AWG WIRE 201 FEET RUN UP TO 300 FEET RUN.
12. SELF CONTAINED UNIT EQUIPMENT SERVING EXIT AND EGRESS LIGHTING SYSTEMS MUST BE CONNECTED TO THE UNSWITCHED PORTION OF THE LOCAL LIGHTING CIRCUIT IN COMPLIANCE WITH NEC 700.12 (F).
13. COMPLY WITH CONTRACT REQUIREMENTS AND APPLICABLE CODES, LAWS, AND REGULATIONS, INCLUDING NATIONAL ELECTRICAL CODE, OSHA, AND NATIONAL ELECTRICAL SAFETY CODE.
14. THIS SPECIFICATION AND THE DRAWINGS ARE NOT INTENDED TO SHOW DETAILS, WIRING, BOXES, COVERS, FITTINGS, AND SPECIAL CONSTRUCTION WHICH MAY BE NECESSARY OR REQUIRED. FURNISH, INSTALL, AND CONNECT REQUIRED WORK IN ORDER TO MAKE THE INSTALLATION COMPLETE AS INDICATED BY THIS SPECIFICATION AND THE DRAWINGS. "PROVIDE" MUST MEAN FURNISH AND INSTALL COMPLETE. "APPROVED" MUST MEAN APPROVED BY OWNER'S REPRESENTATIVE. "DIRECTED" MUST MEAN DIRECTED BY THE OWNER'S REPRESENTATIVE.
15. THE DRAWINGS ARE DIAGRAMMATIC AND DO NOT SHOW EXACT ROUTES OF WIRING AND EXACT LOCATION OF EQUIPMENT. BECOME FAMILIAR WITH JOB CONDITIONS AND MUST ARRANGE WORK TO AVOID CONFLICTS. FINAL LOCATIONS OF CONDUITS, OUTLETS, AND EQUIPMENT MUST BE SUBJECT TO APPROVAL.
16. PROVIDE ITEMS INDICATED ON DRAWINGS AND REQUIRED BY SPECIFICATIONS, INCLUDING: SUPPORTS, HARDWARE AND ACCESSORIES, BRANCH CIRCUIT WIRING, AND DEVICES.
17. PRIOR TO EXECUTION OF THIS CONTRACT, VISIT THE SITE (BY APPOINTMENT) AND EXAMINE EXISTING CONDITIONS WHICH MAY AFFECT THE WORK. SUBMISSION OF A BID MUST BE CONSIDERED INDICATIVE THAT THE SITE HAS BEEN VISITED AND EXISTING CONDITIONS WHICH MAY HAVE AFFECT THE CONTRACT WORK HAVE BEEN DETERMINED AND COSTS RELATED TO SITE CONDITIONS IN THE AMOUNT BID HAVE BEEN INCLUDED.
18. PROVIDE ARC FLASH LABELING IAW NEC 110.16.
19. LISTED MATERIALS AND EQUIPMENT ARE INDICATIVE OF COMPLETE AND WHOLE UNITS (UNLESS SPECIFICALLY INDICATED TO THE CONTRARY) AND MUST BE FURNISHED AS SUCH.
20. CONSTRUCTION UNDER THIS CONTRACT MUST BE INSTALLED IN A NEAT AND WORKMANLIKE MANNER BY MECHANICS SKILLED IN THE TRADE. REMOVE AND REPLACE WORK WHICH IS NOT INSTALLED AS APPROVED.
21. UNLESS NOTED OTHERWISE, MATERIALS AND EQUIPMENT MUST BE APPROVED QUALITY, SPECIFICATION GRADE, AND LISTED BY UNDERWRITER'S LABORATORIES OF NATIONAL BOARD OF FIRE UNDERWRITERS.
22. CUTTING REQUIRED FOR THE INSTALLATION OF ELECTRICAL CONSTRUCTION UNDER THIS CONTRACT MUST BE ACCOMPLISHED IN SUCH MANNER AS NOT TO CAUSE STRUCTURAL OR ARCHITECTURAL DAMAGE TO BUILDING OR LEAVE UNSIGHTLY SURFACES. PATCH TO PROVIDE A NEAT AND FINISHED SURFACE EQUAL TO SURROUNDING UNDISTURBED SURFACES WHEREVER CUTTING, PATCHING, DAMAGE OR REMOVAL OF EQUIPMENT IS PERFORMED UNDER THIS CONTRACT. PATCHING AND RESTORING OF SURFACES MUST BE PERFORMED BY WORKMEN SKILLED IN THE TRADE INVOLVED AND MUST BE SUBJECT TO APPROVAL.
23. PROVIDE ROUGH-IN CONNECTIONS FOR OFOI/OFCI EQUIPMENT INCLUDING BUT NOT LIMITED TO PRINTER, COPIER, FAX MACHINES, INTERCOM, CAMERAS, PROJECTORS, PODIUMS, SMARTBOARDS, FLAT SCREEN MONITORS, FURNITURE SYSTEMS, AND SECURITY SYSTEMS.
24. REVIEW REQUIREMENTS FOR THE INSTALLATION OF ELECTRICAL PORTIONS OF WORK INDICATED ON THE CONSTRUCTION DOCUMENTS OF OTHER TRADES AND INCLUDE REQUIREMENTS IN BIDDING THIS CONTRACT.
25. BE CURRENT ON LICENSES AND CERTIFICATIONS REQUIRED IN THE STATE OF NORTH CAROLINA FOR THE INSTALLATION, SPLICING, AND TERMINATION OF MEDIUM VOLTAGE CABLES AND ASSOCIATED MEDIUM VOLTAGE WORK.
26. INSTALLATION MUST BE COMPLIANT WITH LOCAL TELECOMM SPECIFICATIONS 27 10 00, 33 82 00, AND UFGS CHAPTER 26 / 27 / 33.

SYMBOL — PHASING

- NEW CONSTRUCTION
- DEMOLITION
- EXISTING TO REMAIN
- RR — REMOVE AND RELOCATE
- ER — EXISTING RELOCATED

ABBREVIATIONS

A	AMPS	XFMR	TRANSFORMER
AFF	ABOVE FINISHED FLOOR	XP	EXPLOSION PROOF
AFG	ABOVE FINISHED GROUND		
AHU	AIR HANDLING UNIT		
AIC	CURRENT INTERRUPTER CAPACITY		
ATS	AUTOMATIC TRANSFER SWITCH		
AWG	AMERICAN WIRE GAUGE		
BFC	BELOW FINISHED CEILING		
BRKR	CIRCUIT BREAKER		
C	CONDUIT		
CB	CIRCUIT BREAKER		
CFCI	CONTRACTOR FURNISHED CONTRACTOR INSTALLED		
CPR	COPIER		
CRAC	COMPUTER ROOM AIR CONDITIONER		
CRCU	COMPUTER ROOM CONDENSING UNIT		
CT	CONTROL TRANSFORMERS		
DB	DIRECT BURIED		
DIA	DIAMETER		
DP	DISTRIBUTION PANEL		
DWG	DRAWING		
EGC	EQUIPMENT GROUNDING CONDUCTOR		
EMT	ELECTRICAL METALLIC TUBING		
ER	EXISTING RELOCATED		
ERU	ENERGY RECOVERY UNIT		
ETR	EXISTING TO REMAIN		
EWC	ELECTRIC WATER COOLER		
EXST	EXISTING		
FB	FLOOR BOX		
GEC	GROUNDING ELECTRODE CONDUCTOR		
GFP	GROUND FAULT PROTECTION		
GND	GROUND		
GRD	GROUND		
GRS	GALVANIZED RIGID STEEL		
IAW	IN ACCORDANCE WITH		
IDS	INTRUSION DETECTION SYSTEM		
IMC	INTERMEDIATE METALLIC CONDUIT		
KVA	KILO VOLT AMPS		
KW	KILO WATT		
LCP	LIGHTING CONTROL PANEL		
LED	LIGHT EMITTING DIODE		
LP	LIGHTING PANEL		
MC	MECHANICAL CONTRACTOR		
MCP	MOTOR CIRCUIT PROTECTOR		
MCS	MOLDED CASE SWITCH		
MEP	MECHANICAL EQUIPMENT PANEL		
MIN	MINIMUM		
MLO	MAIN LUG ONLY		
MTD	MOUNTED		
MUA	MAKE UP AIR UNIT		
NEC	NATIONAL ELECTRIC CODE		
NEMA	NATIONAL ELECTRICAL MANUFACTURERS ASSOCIATION		
NESC	NATIONAL ELECTRICAL SAFETY CODE		
NFPA	NATIONAL FIRE PROTECTION ASSOCIATION		
NIC	NOT IN CONTRACT		
NO	NUMBER		
NP	NIPRNET SENDER		
NS	SIPRNET SENDER		
NTS	NOT TO SCALE		
OEM	ORIGINAL EQUIPMENT MANUFACTURER		
OFCI	OWNER FURNISHED CONTRACTOR INSTALLED		
OFOI	OWNER FURNISHED OWNER INSTALLED		
OL	THERMAL OVERLOAD		
OSHA	OCCUPATIONAL SAFETY AND HEALTH ADMINISTRATION		
OSP	OUTSIDE PLANT		
P	POLE		
PH	PHASE		
PIV	POST INDICATOR VALVE		
PP	POWER PANEL		
PSI	POUNDS PER SQUARE INCH		
PT	POTENTIAL TRANSFORMERS		
PVC	POLYVINYL CHLORIDE		
QTY	QUANTITY		
RCD	RESIDUAL CURRENT DEVICE		
RECEPT	RECEPTACLE		
RR	REMOVE AND RELOCATE		
RGS	RIGID GALVANIZED STEEL CONDUIT		
RMC	RIGID METAL CONDUIT		
RS	RIGID STEEL		
SCH	SCHEDULE		
SDP	STANDBY DISTRIBUTION PANEL		
SGP	SINGLE GROUND POINT		
SLP	STANDBY LIGHTING PANEL		
SP	SIPRNET PRINTER		
SPD	SURGE PROTECTION DEVICE		
SPP	STANDBY POWER PANEL		
SS	SIPRNET SENDER		
SW	SWITCHED		
T	TRANSFORMER		
TV	TELEVISION		
TW	TEST WELL		
TX	TRANSFORMER		
TYP	TYPICAL		
U/G	UNDERGROUND		
UON	UNLESS OTHERWISE NOTED		
V	VOLTS		
VAV	VARIABLE AIR VOLUME		
VDC	VOLTS DIRECT CURRENT		
VFD	VARIABLE FREQUENCY DRIVE		
W	WATTS OR WIRE		
WP	WEATHERPROOF		

APPR	DATE	NO.	DESCRIPTION

NAVFAC

COMMONWEALTH OF MASSACHUSETTS — SENOL DURUR — ELECTRICAL — No. 47946 — REGISTERED PROFESSIONAL ENGINEER

IRQ WM Jordan COMPANY — A JOINT VENTURE

Michael Baker INTERNATIONAL
100 AIRSIDE DRIVE
MOON TOWNSHIP, PA 15108 — A/E INFO

APPROVED

FOR COMMANDER NAVFAC
ACTIVITY
MARINE CORPS BASE CAMP LEJEUNE

SATISFACTORY TO DATE	DD/MM/YY
DES ZAK	DRW LAK CHK BSR
PM / DM	TOWLER / ROOT
BRANCH HEAD	SEK
DESIGN DIRECTOR	R.L.Stephens, Jr.
FIRE PROTECTION	DPS

DEPARTMENT OF THE NAVY
NAVAL FACILITIES ENGINEERING SYSTEMS COMMAND ATLANTIC
ATLANTIC DESIGN AND CONSTRUCTION
NAVAL FACILITIES ENGINEERING SYSTEMS COMMAND ATLANTIC
NORFOLK, VA
MCB CAMP LEJEUNE
JACKSONVILLE, NC
LOGCOM CSP WAREHOUSE

ELECTRICAL - NOTES, SYMBOLS, AND ABBREVIATIONS

SCALE:	AS NOTED
EPROJECT NO.:	1639600
CONSTR. CONTR. NO.	N40085-20-C-0059
NAVFAC DRAWING NO.	14111367
SHEET	341 OF 447

E-001

DRAWFORM REVISION: 25 AUGUST 2020

P1527 FINAL SUBMISSION - 11/18/2021

PLOTTED: 11/11/2021 9:18:36 AM

FILE NAME: BIM 360://HF PACKAGE 3/P1527 LOG COM CSP-1639600-E.rvt

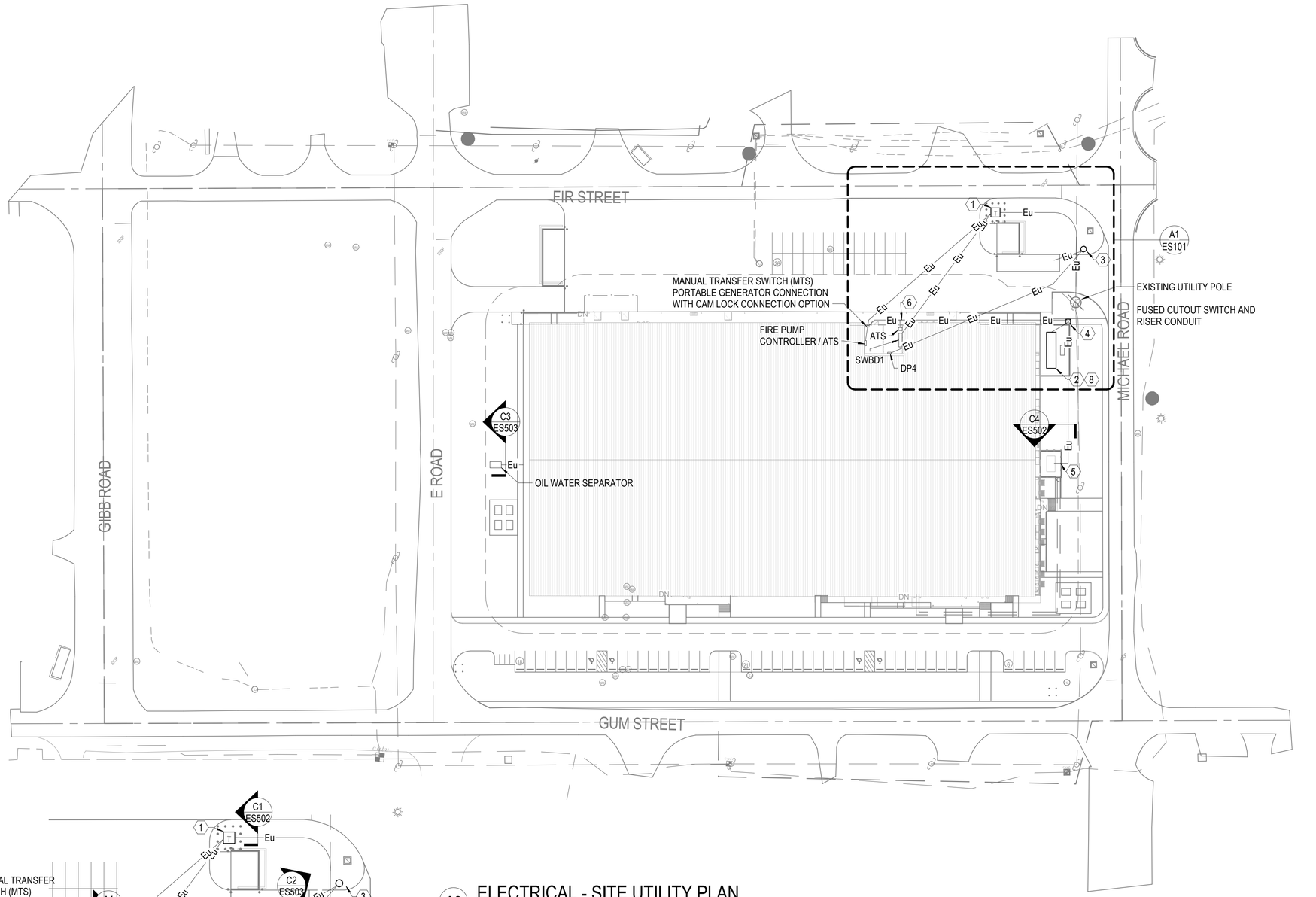

A2 ELECTRICAL - SITE UTILITY PLAN
SCALE: 1" = 50'-0"

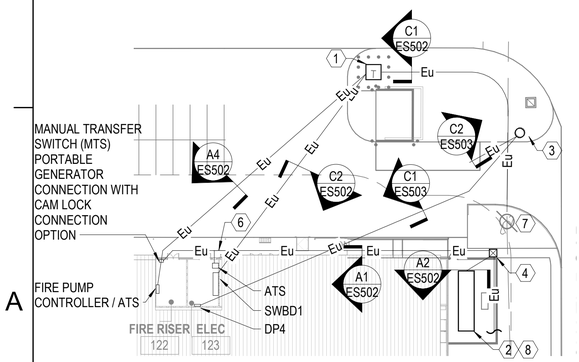

A1 ELECTRICAL - SITE UTILITY PLAN
SCALE: 1" = 40'-0"

GENERAL NOTES

1. SEE SHEET E-001 FOR ELECTRICAL NOTES, SYMBOLS, AND ABBREVIATIONS.
2. DEPTH OF DUCTBANKS MUST BE COORDINATED WITH OTHER UTILITIES.
3. SEE SHEETS ES502 AND ES503 FOR DUCTBANK DETAILS.
4. COORDINATE DUCTBANK RUNS WITH OTHER TRADES, REFER TO CIVIL PLANS. ADJUST DEPTH AT CROSSINGS TO AVOID CONFLICTS.

KEYNOTES

1. 12.47kV-480Y/277V, 3PH, 4W, 60Hz, OIL FILLED UTILITY TRANSFORMER, OVER A PRECAST TRANSFORMER PAD, SEE ES501 FOR DETAILS. FOR ADDITIONAL INFORMATION SEE DRAWING E-602.
2. 480Y/277V, DIESEL GENERATOR WITH SUBBASE FUEL TANK AND CONCRETE PAD. FOR ADDITIONAL INFORMATION SEE DRAWINGS E-502 / E-602.
3. POWER PEDESTAL WITH HEAVY-DUTY NEMA 4X STAINLESS STEEL AND FUSED DISCONNECT SWITCH. COORDINATE FINAL POWER LOCATIONS WITH FINAL PEDESTAL LOCATION. SEE DETAIL A3 ON SHEET E-502 FOR MORE DETAILS.
4. TYPE 4 TRAFFIC/AIRFIELD RATED HANDHOLE FOR POWER. COORDINATE HANDHOLE LOCATIONS WITH FINAL POWER LOCATIONS. SEE DETAIL UG-5 ON ES505.
5. COORDINATE FINAL TERMINATION POINT FOR ELECTRICAL CONNECTIONS TO CHILLER BEFORE RUNNING CONDUIT.
6. RUN CHILLER CONDUITS UNDER ELECTRICAL ROOM SLAB AND STUB UP AT SWITCHBOARD LOCATION. SEE SHEET E-402 FOR SWITCHBOARD LOCATION.
7. SEE NAVFAC STANDARD OVERHEAD TEMPLATES ON SHEET ES504.
8. COORDINATE FINAL CONCRETE PAD DIMENSIONS WITH CUSTOM COASTAL RATED WEATHERPROOF ALUMINUM GENERATOR ENCLOSURE.

KEYPLAN

A	B	C	D
E	F	G	H

0 20' - 0" 40' - 0" 80' - 0"
SCALE:0' - 1" = 40' - 0"

0 25' - 0" 50' - 0" 100' - 0"
SCALE:0' - 1" = 50' - 0"

N

NUM	DESCRIPTION	DATE	APP'R

NAVFAC

COMMONWEALTH OF MASSACHUSETTS
SENOL DURUR
ELECTRICAL
No. 47946
REGISTERED PROFESSIONAL ENGINEER

IRQ WM Jordan COMPANY – A JOINT VENTURE –

Michael Baker INTERNATIONAL
100 AIRSIDE DRIVE
MOON TOWNSHIP, PA 15108
A/E INFO

APPROVED

FOR COMMANDER NAVFAC

ACTIVITY
MARINE CORPS BASE
CAMP LEJEUNE

SATISFACTORY TO DATE DD/MM/YY

DES	DRW	CHK
ZAK	LAK	BSR

PM / DM TOWLER / ROOT
BRANCH HEAD SEK
DESIGN DIRECTOR R.L.Stephens, Jr.
FIRE PROTECTION DPS

DEPARTMENT OF THE NAVY
NAVAL FACILITIES ENGINEERING SYSTEMS COMMAND
ATLANTIC DESIGN AND CONSTRUCTION
NAVAL FACILITIES ENGINEERING SYSTEMS COMMAND ATLANTIC
NORFOLK, VA
MCB CAMP LEJEUNE
JACKSONVILLE, NC
LOGCOM CSP WAREHOUSE

ELECTRICAL - SITE UTILITY PLAN

SCALE: AS NOTED
EPROJECT NO.: 1639600
CONSTR. CONTR. NO. N40085-20-C-0059
NAVFAC DRAWING NO. 14111368
SHEET 342 OF 447

ES101

DRAWFORM REVISION: 25 AUGUST 2020

P1527 FINAL SUBMISSION - 11/18/2021

PLOTTED: 11/11/2021 9:20:29 AM
FILE NAME: BIM 360://AIF PACKAGE 3/P1527 LOG COM CSP-1639600-E.rvt

SITE LIGHTING FIXTURE SCHEDULE

TYPE	DESCRIPTION	MOUNTING	MANUFACTURER / CATALOG #	LAMP TYPE	FIXTURE QUANTITY	INPUT WATTAGE	VOLTAGE	REMARKS
SB-A	DSXB SERIES BOLLARD ASYMMETRIC DISTRIBUTION LED SITE LIGHTING	BOLLARD	LITHONIA LIGHTING DSXB-LED-12C-350-40-ASY-DDBXD OR APPROVED EQUAL	LED 80 CRI, 1238 LUMENS 4000K CCT	53	16	277	BOLLARD HEIGHT: 42" FIXTURE FINISH OPTION: DARK BRONZE SEE BOLLARD DETAIL ON SHEET ES505 FOR MORE INFORMATION.
SL0	RSX1 SERIES IES TYPE III LED SITE LIGHTING	POLE	LITHONIA LIGHTING RSX1-LED-P1-40K-R3-MVOLT-RPA-PER7-DMG-FAO-HS-DDBXD OR APPROVED EQUAL	LED 80 CRI, 5413 LUMENS 4000K CCT	5	52	277	MOUNT SINGLE FIXTURE AT 30'-0" ABOVE FINISHED GRADE UNLESS OTHERWISE NOTED ON PLANS. FIXTURE FINISH OPTION: DARK BRONZE
SL1	DSX1 SERIES IES TYPE VLS LED SITE LIGHTING	POLE	LITHONIA LIGHTING DSX1-LED-P1-40K-VLS-MVOLT-RPA-PER7-DMG-FAO-HS-DDBXD OR APPROVED EQUAL	LED 80 CRI, 8177 LUMENS 4000K CCT	3	54	277	MOUNT SINGLE FIXTURE AT 10'-0" ABOVE FINISHED GRADE UNLESS OTHERWISE NOTED ON PLANS. FIXTURE FINISH OPTION: DARK BRONZE
SL2	RSX1 SERIES IES TYPE V LED SITE LIGHTING	POLE	LITHONIA LIGHTING RSX1-LED-P1-40K-R5S-MVOLT-RPA-PER7-DMG-FAO-HS-DDBXD OR APPROVED EQUAL	LED 80 CRI, 7478 LUMENS 4000K CCT	3	52	277	MOUNT SINGLE FIXTURE AT 30'-0" ABOVE FINISHED GRADE UNLESS OTHERWISE NOTED ON PLANS. FIXTURE FINISH OPTION: DARK BRONZE
SL3	RSX1 SERIES IES TYPE II LED SITE LIGHTING	POLE	LITHONIA LIGHTING RSX1-LED-P1-40K-R2-MVOLT-RPA-PER7-DMG-XD-DDBXD OR APPROVED EQUAL	LED 80 CRI, 7123 LUMENS 4000 CCT	1	52	277	MOUNT SINGLE FIXTURE 30'-0" ABOVE FINISHED GRADE UNLESS OTHERWISE NOTED ON PLANS. FIXTURE FINISH OPTION: DARK BRONZE
SL4	RSX1 SERIES TYPE IV DISTRIBUTION LED SITE LIGHTING	POLE	LITHONIA LIGHTING RSX1-LED-P4-40K-R4-MVOLT-RPA-HS-PER7-DMG-FAO-DDBXD OR APPROVED EQUAL	LED 80 CRI, 12042 LUMENS 4000 CCT	1	133	277	MOUNT FIXTURE 30' ABOVE FINISHED GRADE. FIXTURE FINISH OPTION: DARK BRONZE

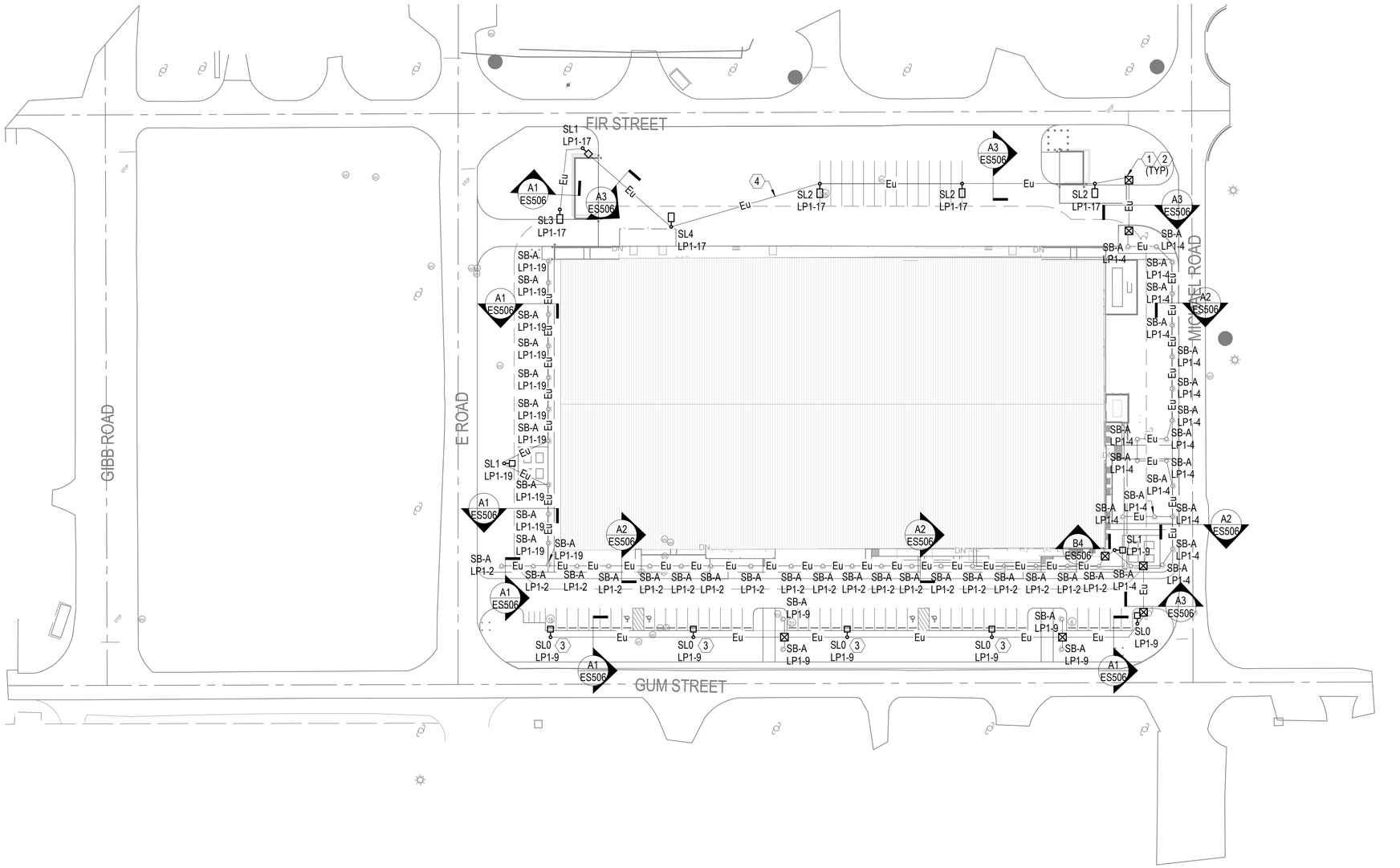

ELECTRICAL - SITE LIGHTING PLAN

SCALE: 1" = 50'-0"

GENERAL NOTES

1. SEE SHEET E-001 FOR ELECTRICAL NOTES, SYMBOLS, AND ABBREVIATIONS.
2. UNDERGROUND CONDUITS BELOW PAVED AREAS MUST BE CONCRETE ENCASED.
3. COORDINATE DUCTBANK RUNS WITH OTHER TRADES, REFER TO CIVIL PLANS. CONTRACTOR MUST ADJUST DEPTH AT CROSSINGS TO AVOID CONFLICTS.
4. SEE SHEET ES505 FOR HANDHOLE AND LIGHT FIXTURE DETAILS.
5. SEE SHEET ES506 FOR SITE LIGHTING POLE AND POLE FOUNDATION DETAILS.
6. SEE SHEET ES506 FOR SITE LIGHTING DIRECT BURIED CONDUIT AND DUCTBANK DETAILS.
7. PROVIDE BUILDING MOUNTED CENTRALIZED PHOTOCELL FOR SITE LIGHTING ON TRUE NORTH SIDE OF BUILDING.

KEYNOTES

1. SITE LIGHTING HAND HOLE, SIZE PER NEC. SEE SHEET ES505 FOR MORE DETAILS.
2. TYPE 3 TRAFFIC/AIRFIELD RATED HANDHOLE FOR SITE LIGHTING. COORDINATE HANDHOLE LOCATIONS WITH FINAL SITE LIGHTING LOCATIONS. SEE DETAIL UG-5 ON ES505.
3. COORDINATE POLE PLACEMENT WITH TREE LINE. CENTER POLE BETWEEN THE TREES ON EITHER SIDE.
4. COORDINATE DUCTBANK DEPTH WITH CROSSING COMMUNICATION DUCTBANK.

KEYPLAN

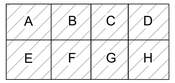

0 25' - 0" 50' - 0" 100' - 0"

SCALE:0' - 1" = 50' - 0"

N

APPR | DATE | NO. | DESCRIPTION | SYM

NAVFAC

SENOL DURUR ELECTRICAL No. 47946 REGISTERED PROFESSIONAL ENGINEER COMMONWEALTH OF MASSACHUSETTS

IRQ W.M. Jordan COMPANY – A JOINT VENTURE –

Michael Baker INTERNATIONAL
100 AIRSIDE DRIVE
MOON TOWNSHIP, PA 15108
A/E INFO

APPROVED

FOR COMMANDER NAVFAC

ACTIVITY
MARINE CORPS BASE
CAMP LEJEUNE

SATISFACTORY TO DATE	DD/MM/YY
DES ZAK	DRW LAK CHK BSR
PM / DM	TOWLER / ROOT
BRANCH HEAD	SEK
DESIGN DIRECTOR	R.L.Stephens, Jr.
FIRE PROTECTION	DPS

DEPARTMENT OF THE NAVY
NAVAL FACILITIES ENGINEERING SYSTEMS COMMAND
ATLANTIC DESIGN AND CONSTRUCTION
MCB CAMP LEJEUNE

NAVAL FACILITIES ENGINEERING SYSTEMS COMMAND ATLANTIC
NORFOLK, VA

JACKSONVILLE, NC
LOGCOM CSP WAREHOUSE

ELECTRICAL - SITE LIGHTING PLAN

SCALE:	AS NOTED
EPROJECT NO.:	1639600
CONSTR. CONTR. NO.	N40085-20-C-0059
NAVFAC DRAWING NO.	14111369
SHEET	343 OF 447

ES102

DRAWFORM REVISION: 25 AUGUST 2020

P1527 FINAL SUBMISSION - 11/18/2021

PLOTTED: 11/11/2021 9:20:33 AM

FILE NAME: BIM 360:/HF PACKAGE 3/P1527 LOG COM CSP-1639600-E.rvt

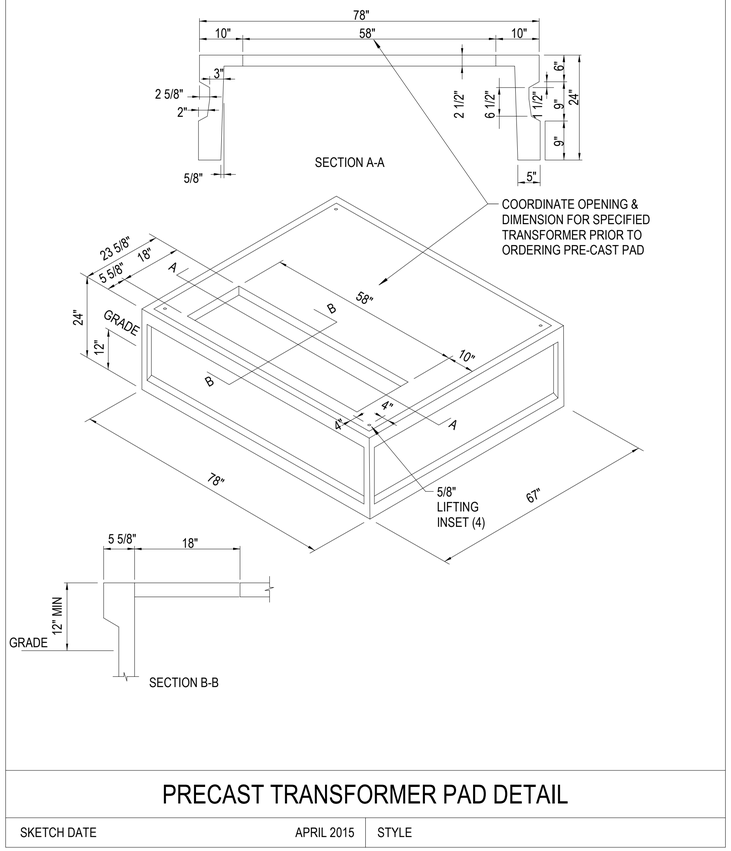

PRECAST TRANSFORMER PAD DETAIL

SKETCH DATE	APRIL 2015	STYLE

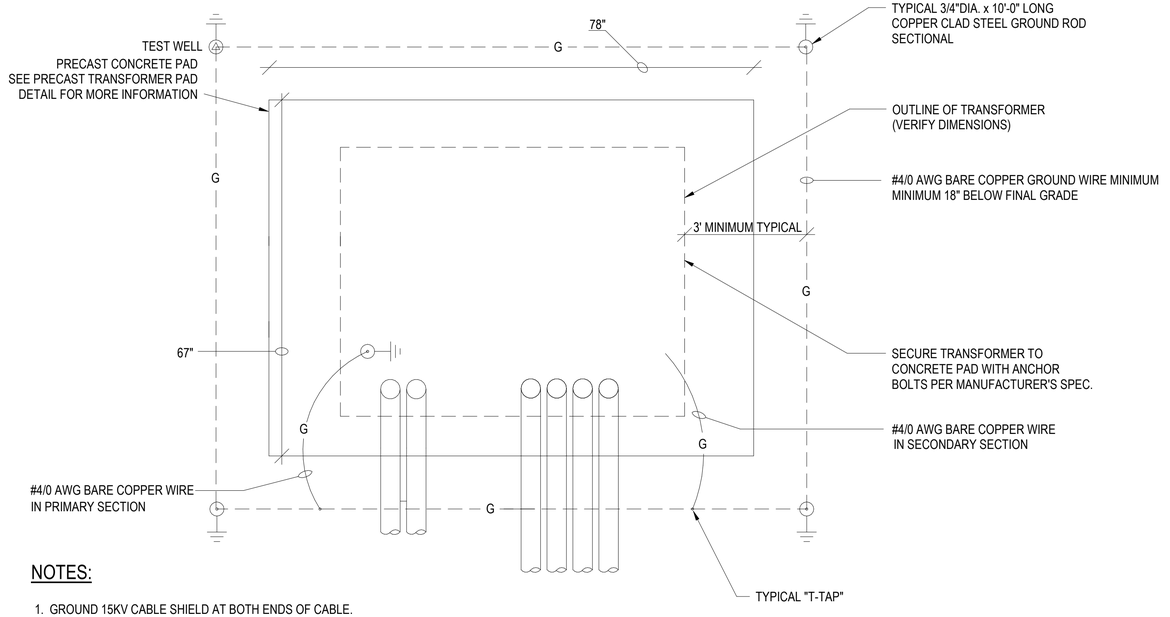

NOTES:

1. GROUND 15KV CABLE SHIELD AT BOTH ENDS OF CABLE.
2. FINAL CONNECTIONS TO EXISTING PRIMARY SYSTEM MUST BE MADE BY CONTRACTOR AFTER INSPECTION BY THE BASE EXTERIOR ELECTRICAL SHOP. ALL MATERIALS REQUIRED MUST BE PROVIDED BY CONTRACTOR.
3. PROVIDE WINDOWS IN PAD PER TRANSFORMER MANUFACTURER'S RECOMMENDATIONS.

C3 PRECAST TRANSFORMER PAD GROUNDING DETAIL

SCALE: NTS

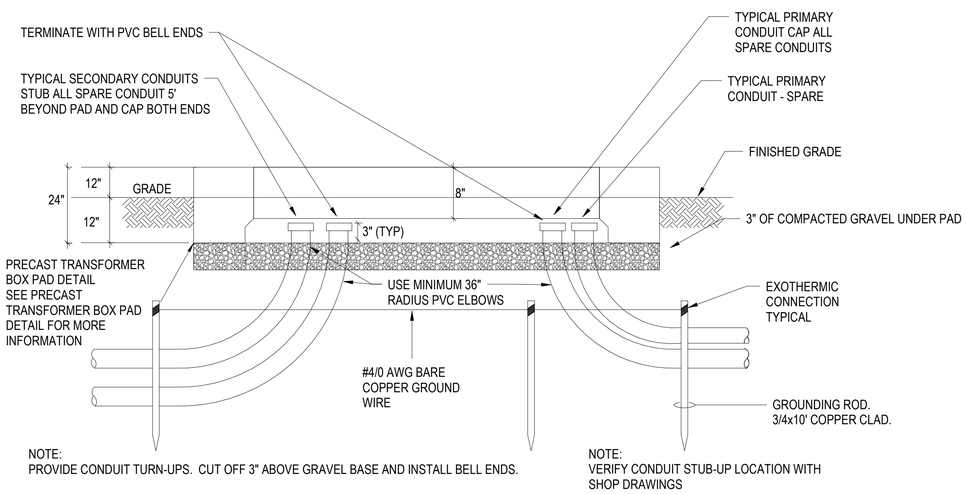

A1 PRECAST TRANSFORMER PAD GROUNDING SECTION

SCALE: NTS

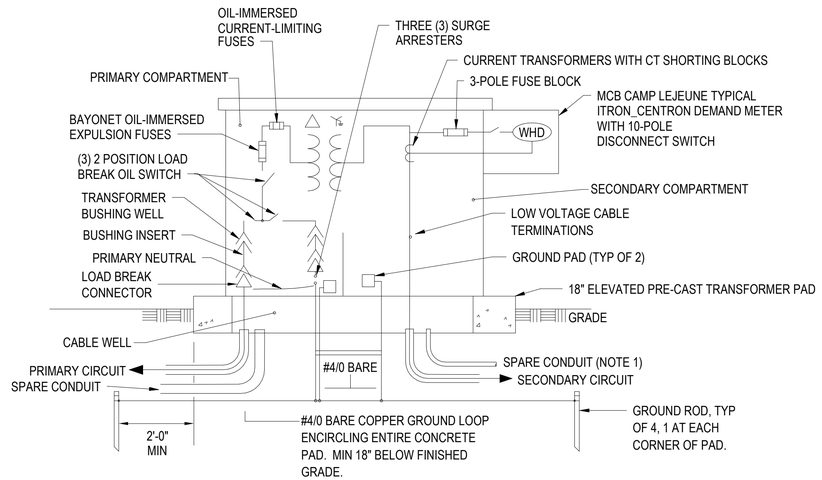

NOTE 1: PROVIDE ONE 2" SPARE CONDUIT STUBBED-OUT FIVE FEET FROM PAD. COORDINATE WITH ACTIVITY FOR ADDITIONAL METERING INPUT (GAS, STEAM OR WATER SYSTEMS).

A3 PAD MOUNTED TRANSFORMER DETAIL

SCALE: NTS

NO.	DESCRIPTION	DATE	APPR

NAVFAC

COMMONWEALTH OF MASSACHUSETTS
SENOL DURUR
ELECTRICAL
No. 47946
REGISTERED PROFESSIONAL ENGINEER

IRQ W.M. Jordan COMPANY – A JOINT VENTURE –

Michael Baker INTERNATIONAL
100 AIRSIDE DRIVE
MOON TOWNSHIP, PA 15108
A/E INFO

APPROVED
FOR COMMANDER NAVFAC
ACTIVITY
MARINE CORPS BASE CAMP LEJEUNE
SATISFACTORY TO DATE DD/MM/YY
DES ZAK | DRW LAK | CHK BSR
PM / DM TOWLER / ROOT
BRANCH HEAD SEK
DESIGN DIRECTOR R.L.Stephens, Jr.
FIRE PROTECTION DPS

DEPARTMENT OF THE NAVY
NAVAL FACILITIES ENGINEERING SYSTEMS COMMAND
ATLANTIC DESIGN AND CONSTRUCTION
MCB CAMP LEJEUNE
NAVAL FACILITIES ENGINEERING SYSTEMS COMMAND ATLANTIC
NORFOLK, VA
JACKSONVILLE, NC
LOGCOM CSP WAREHOUSE
ELECTRICAL - SITE DETAILS

SCALE: AS NOTED
EPROJECT NO.: 1639600
CONSTR. CONTR. NO. N40085-20-C-0059
NAVFAC DRAWING NO. 14111370
SHEET 344 OF 447

ES501

DRAWFORM REVISION: 25 AUGUST 2020

P1527 FINAL SUBMISSION - 11/18/2021

PLOTTED: 11/11/2021 9:20:34 AM

FILE NAME: BIM 360/IHF PACKAGE 3/P1527 LOG COM CSP-1639600-E.rvt

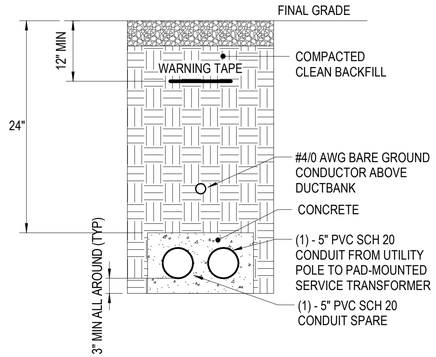

C1 2-WAY CONCRETE ENCASED DUCTBANK

SCALE: NTS (ES101)

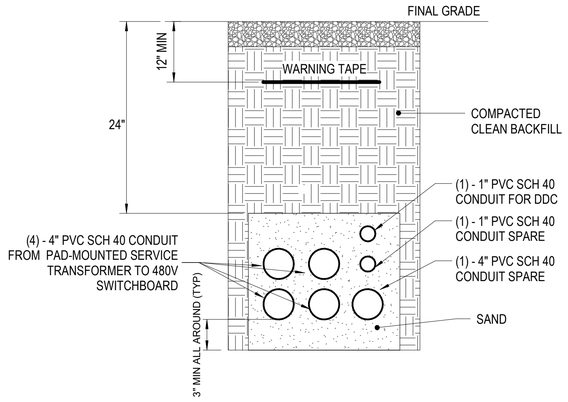

C2 7-WAY DUCTBANK - SWITCHBOARD

SCALE: NTS (ES101)

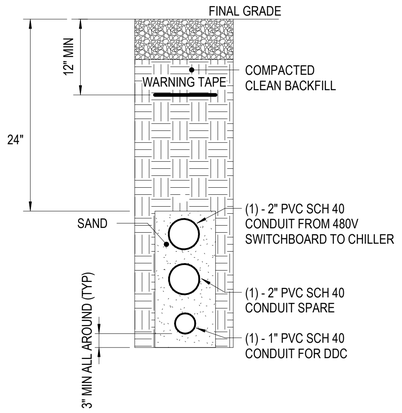

C4 3-WAY DUCTBANK - CHILLER

SCALE: NTS (ES101)

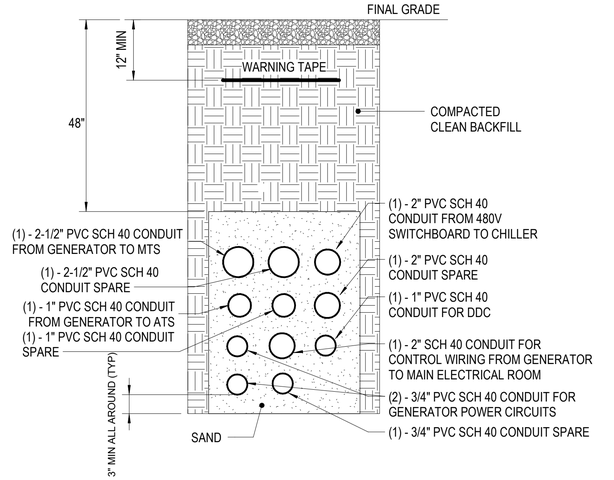

A1 11-WAY DUCTBANK

SCALE: NTS (ES101)

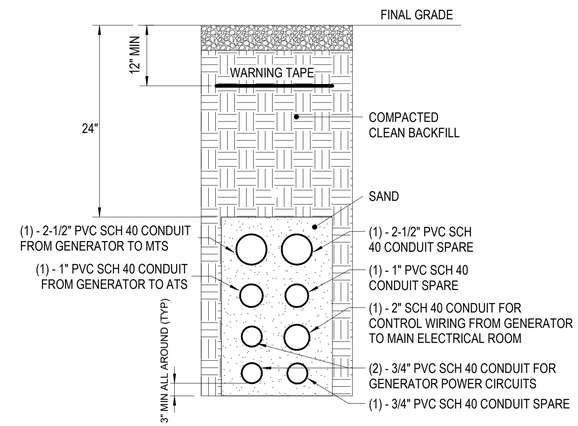

A2 8-WAY DUCTBANK - GEN

SCALE: NTS (ES101)

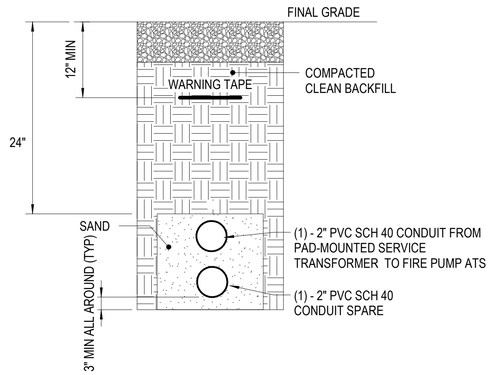

A4 2-WAY DUCTBANK - FIRE PUMP

SCALE: NTS (ES101)

APPR
DATE
DESCRIPTION
NO.S

NAVFAC

COMMONWEALTH OF MASSACHUSETTS
SENOL DURUR
ELECTRICAL
No. 47946
REGISTERED
PROFESSIONAL ENGINEER

IRQ W.M. Jordan COMPANY – A JOINT VENTURE –

Michael Baker
INTERNATIONAL
100 AIRSIDE DRIVE
MOON TOWNSHIP, PA 15108
A/E INFO

APPROVED

FOR COMMANDER NAVFAC

ACTIVITY
MARINE CORPS BASE
CAMP LEJEUNE

SATISFACTORY TO DATE DD/MM/YY

DES ZAK | DRW LAK | CHK BSR

PM / DM TOWLER / ROOT

BRANCH HEAD SEK

DESIGN DIRECTOR R.L.Stephens, Jr.

FIRE PROTECTION DPS

DEPARTMENT OF THE NAVY
NAVAL FACILITIES ENGINEERING SYSTEMS COMMAND
ATLANTIC DESIGN AND CONSTRUCTION
MCB CAMP LEJEUNE

NAVAL FACILITIES ENGINEERING SYSTEMS COMMAND ATLANTIC
NORFOLK, VA
JACKSONVILLE, NC
LOGCOM CSP WAREHOUSE

ELECTRICAL - SITE DETAILS

SCALE: AS NOTED
EPROJECT NO.: 1639600
CONSTR. CONTR. NO. N40085-20-C-0059
NAVFAC DRAWING NO. 14111371
SHEET 345 OF 447

ES502

DRAWFORM REVISION: 25 AUGUST 2020

P1527 FINAL SUBMISSION - 11/18/2021

PLOTTED: 11/11/2021 9:20:35 AM

FILE NAME: BIM 360://HF PACKAGE 3/P1527 LOG COM CSP-1639600-E.rvt

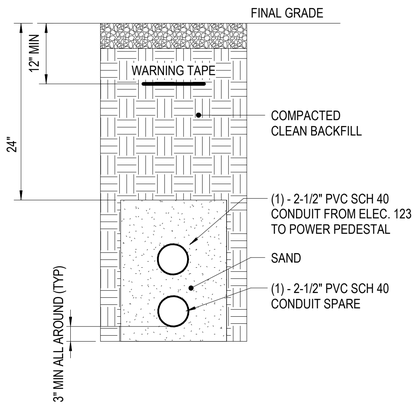

C1 2-WAY DUCTBANK - PEDESTAL

SCALE: NTS (ES101)

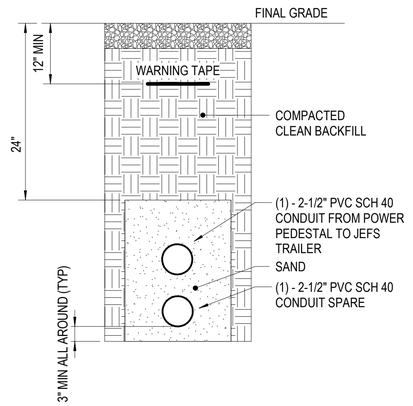

C2 2-WAY DUCTBANK - TRAILER

SCALE: NTS (ES101)

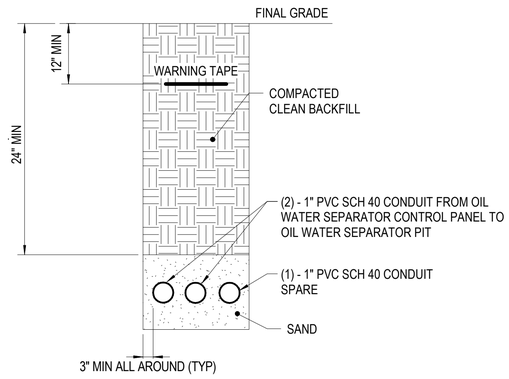

C3 3-WAY DUCTBANK - OIL WATER SEPARATOR

SCALE: NTS (ES101)

APPR	DATE	DESCRIPTION	SYM

NAVFAC

COMMONWEALTH OF MASSACHUSETTS
SENOL DURUR
ELECTRICAL
No. 47946
REGISTERED PROFESSIONAL ENGINEER

IRQ W.M. Jordan COMPANY – A JOINT VENTURE –

Michael Baker INTERNATIONAL
100 AIRSIDE DRIVE
MOON TOWNSHIP, PA 15108 A/E INFO

APPROVED

FOR COMMANDER NAVFAC

ACTIVITY
MARINE CORPS BASE
CAMP LEJEUNE

SATISFACTORY TO DATE DD/MM/YY

DES	DRW	CHK
ZAK	LAK	BSR

PM / DM TOWLER / ROOT
BRANCH HEAD SEK
DESIGN DIRECTOR R.L.Stephens, Jr.
FIRE PROTECTION DPS

DEPARTMENT OF THE NAVY
NAVAL FACILITIES ENGINEERING SYSTEMS COMMAND
ATLANTIC DESIGN AND CONSTRUCTION
MCB CAMP LEJEUNE

NAVAL FACILITIES ENGINEERING SYSTEMS COMMAND ATLANTIC
NORFOLK, VA
JACKSONVILLE, NC
LOGCOM CSP WAREHOUSE

ELECTRICAL - SITE DETAILS

SCALE: AS NOTED
EPROJECT NO.: 1639600
CONSTR. CONTR. NO. N40085-20-C-0059
NAVFAC DRAWING NO. 14111372
SHEET 346 OF 447

ES503

DRAWFORM REVISION: 25 AUGUST 2020

P1527 FINAL SUBMISSION - 11/18/2021

PLOTTED: 11/11/2021 9:20:38 AM

FILE NAME: BIM 360://HF PACKAGE 3/P1527 LOG COM CSP-1639600-E.rvt

POLE LINE MATERIAL LIST

1. FLAT STEEL BRACE (TWO PIECES)
2. MACHINE BOLT, 3/8" X LENGTH NEEDED WITH WASHER, NUT AND LOCKWASHER
3. 8' WOOD CROSSARM WITH CROSS SECTION DIMENSIONS OF 3 1/2" X 4 1/2"
4. MACHINE BOLT, 5/8" X LENGTH NEEDED WITH WASHER, NUT AND LOCKWASHER
5. TIMBER CONNECTOR
6. LAGSCREW, 1/2" X 4"
7. ANGLE STEEL BRACE (TWO PIECES)
8. MACHINE BOLT, 1/2" X LENGTH NEEDED, WITH WASHER, NUT & LOCKWASHER
9. DEADEND BOX
10. STEEL PIN
11. PIN INSULATOR
12. GRID GAIN, USED ONLY WHEN THERE IS NO POLE GAIN
13. ANGLE STEEL BRACE (ONE PIECE)
14. 10' WOOD CROSSARM WITH CROSS SECTION DIMENSIONS OF 3 1/2" X 4 1/2"
15. 5/8" EYE NUT
16. 5/8" EYE BOLT, LENGTH AS NEEDED, WITH WASHER, NUT & LOCKWASHER
17. EXTENSION LINK
18. BELL TYPE SUSPENSION INSULATOR WITH CONNECTING HARDWARE
19. STRAIN CLAMP
20. STEEL ANGLE PIN
21. CLUSTER MOUNTING BRACKET, STEEL
22. TRANSFORMER GROUNDING CONNECTION
23. STIRRUP
24. SECONDARY LEAD SUPPORT BRACKET
25. ADAPTER PLATE FOR CLUSTER MOUNTING
26. CLEVIS BRACKET FOR SPOOL INSULATOR
27. SPOOL INSULATOR
28. U BOLT CLAMP
29. PREFORMED GUY GRIP
30. GUY HOOK
31. GUY STRAIN INSULATOR
32. GUY WIRE, SIZE AS SPECIFIED
33. #4 WP CU. SOFT DRAWN GROUND WIRE
34. GROUND CLAMP
35. CONDUIT COUPLING
36. CONDUIT BEND
37. INSULATED BUSHING
38. PERFORATED STRAPPING, 1-1/2" WIDE
39. HOT LINE CLAMP
40. FUSED CUTOUT, AS SPECIFIED
41. SURGE ARRESTER, AS SPECIFIED
42. POLE TOP PIN (RIDGE PIN) - 24 INCHES LONG
43. CROSSARM ANGLE PIN
44. ANGLE POLE TOP PIN
45. WEATHERPROOF SOFT DRAWN WIRE-SIZE
    (a) T0 MATCH OR EXCEED AMPACITY OF CONNECTING CABLE, OR
    (b) AT 125% OF TRANSFORMER FULL LOAD CURRENT, BUT NOT LESS THAN NO. 4 AWG

POLE LINE MATERIAL LIST

SKETCH DATE:	JUNE 2002	STYLE:	OH-1.5

POLE LINE MATERIAL LIST

46. TRI-MOUNT BRACKET
47. TERMINATOR - POLYMER TYPE
48. MOUNTING BRACKET
49. CABLE GRIP HANGER
50. HOSE CLAMP
51. STUD, 3/4" X 1-3/4"
52. LINE POST INSULATOR
53. TRIPLE INSULATOR BRACKET
54. ANGLE CLAMP
55. INSULATOR, LINE POST CLAMP
56. 4' CROSSARM
57. CROSSARM GAIN BRACKET
58. PULLEY BRACKET
59. WEDGE CLAMP
60. MIDSPAN SERVICE CLAMP
61. STUD, 7"
62. SADDLE, ANGLE
63. SADDLE CROSSARM
64. FITTING, POLE TOP
65. CONNECTOR
66. SUSPENSION CLAMP
67. TIE, SERVICE CABLE
68. 54" FIBERGLASS STRAIN INSULATOR
69. PVC RISER SHIELD
70. PVC EXTENSION SHIELD
71. PVC BACK PLATE
72. 8' WOOD CROSSARM WITH CROSS SECTION DIMENSIONS OF 4 3/4" X 5 3/4"
73. 10' WOOD CROSSARM WITH CROSS SECTION DIMENSIONS OF 4 3/4" X 5 3/4"
74. BACK-UP CURRENT LIMITING FUSE
75. TOP TIE F NECK
76. INSULATOR PIN POLE TOP PIN 20" STEEL
77. INSULATOR PIN 15 KV
78. INSULATOR BRACKET FBG POST INS BRACKET (BULLHORN) 18"
79. DEADEND CLAMP
80. INSULATOR SUPPORT EYEBOLT 5/8"X12"
81. CROSSARM, DEADEND, 60", STEEL
82. INSULATOR DEADEND/SUSPENSION 15 KV POLYMER
83. ALUMINUM ARCHED CLUSTER BRACKET
84. CABLE CONCENTRIC NEUTRAL

SKETCH DATE:	JUNE 2002	STYLE:	OH1.5A

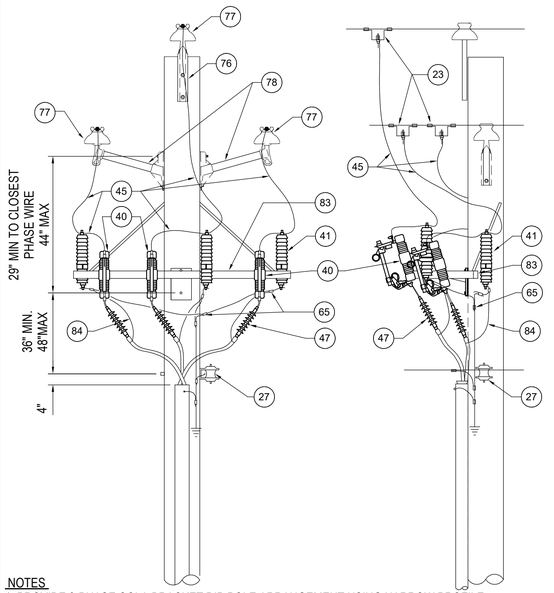

NOTES
1. PROVIDE 3-PHASE COLA BRACKET DIP POLE ARRANGEMENT USING NARROW PROFILE.
2. PROVIDE NARROW PROFILE WITH PIN INSULATORS ON FIBERGLASS BULLHORN STANDOFFS.
3. CONNECT BOTTOM LEAD OF ARRESTER DIRECTLY TO POLE GROUND. INTERCONNECT CABLE INSULATION SHIELD DRAIN WIRES AND CONDUIT RISER GROUND TO MULTI-GROUNDED NEUTRAL (IF EXISTING) AND POLE GROUND.

U.G. TERMINAL (0-25KV)

SKETCH DATE	MARCH 2021	STYLE	OH-62

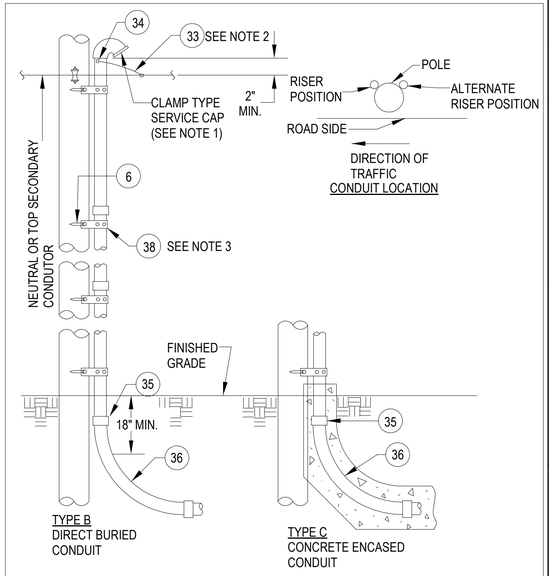

NOTES
1. ON CONDUIT RISER FOR PRIMARY CIRCUITS, ELIMINATE SERVICE CAP AND PROVIDE GROUNDING TYPE INSULATON BUSHING.
2. BOND CONDUIT TO POLE GROUND AND SYSTEM NEUTRAL (IF EXISTING). SEE GROUNDING NOTES ON SKETCH OH-41.
3. SPACE STRAPS AT MAXIMUM OF 4' INTERVALS.

CONDUIT RISER (SIZE & TYPE AS INDICATED)

SKETCH DATE:	JUNE 2002	STYLE:	OH-35

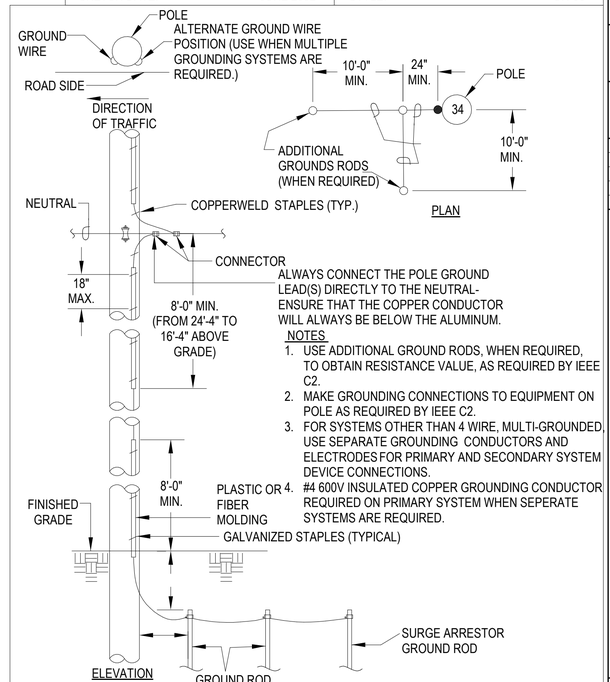

NOTES
1. USE ADDITIONAL GROUND RODS, WHEN REQUIRED, TO OBTAIN RESISTANCE VALUE, AS REQUIRED BY IEEE C2.
2. MAKE GROUNDING CONNECTIONS TO EQUIPMENT ON POLE AS REQUIRED BY IEEE C2.
3. FOR SYSTEMS OTHER THAN 4 WIRE, MULTI-GROUNDED, USE SEPARATE GROUNDING CONDUCTORS AND ELECTRODES FOR PRIMARY AND SECONDARY SYSTEM DEVICE CONNECTIONS.
4. #4 600V INSULATED COPPER GROUNDING CONDUCTOR REQUIRED ON PRIMARY SYSTEM WHEN SEPERATE SYSTEMS ARE REQUIRED.

GROUND

SKETCH DATE:	JUNE 2002	STYLE:	OH-41

APPR | DATE | NO. | DESCRIPTION | SYM

NAVFAC

COMMONWEALTH OF MASSACHUSETTS
SENOL DURUR
ELECTRICAL
No. 47946
REGISTERED
PROFESSIONAL ENGINEER

IRQ W.M. Jordan COMPANY – A JOINT VENTURE –

Michael Baker INTERNATIONAL
100 AIRSIDE DRIVE
MOON TOWNSHIP, PA 15108 A/E INFO

APPROVED

FOR COMMANDER NAVFAC

ACTIVITY
MARINE CORPS BASE CAMP LEJEUNE

SATISFACTORY TO DATE DD/MM/YY

DES ZAK	DRW LAK	CHK BSR
PM / DM	TOWLER / ROOT	
BRANCH HEAD	SEK	
DESIGN DIRECTOR	R.L.Stephens, Jr.	
FIRE PROTECTION	DPS	

DEPARTMENT OF THE NAVY
NAVAL FACILITIES ENGINEERING SYSTEMS COMMAND ATLANTIC
ATLANTIC DESIGN AND CONSTRUCTION
NAVAL FACILITIES ENGINEERING SYSTEMS COMMAND ATLANTIC NORFOLK, VA
MCB CAMP LEJEUNE
LOGCOM CSP WAREHOUSE
JACKSONVILLE, NC

ELECTRICAL - SITE DETAILS

SCALE:	AS NOTED
EPROJECT NO.:	1639600
CONSTR. CONTR. NO.	N40085-20-C-0059
NAVFAC DRAWING NO.	14111373
SHEET	347 OF 447

ES504

DRAWFORM REVISION: 25 AUGUST 2020

P1527 FINAL SUBMISSION - 11/18/2021

PLOTTED: 11/11/2021 9:20:37 AM

FILE NAME: BIM 360:/HF PACKAGE 3P1527 LOG COM CSP-1639600-E.rvt

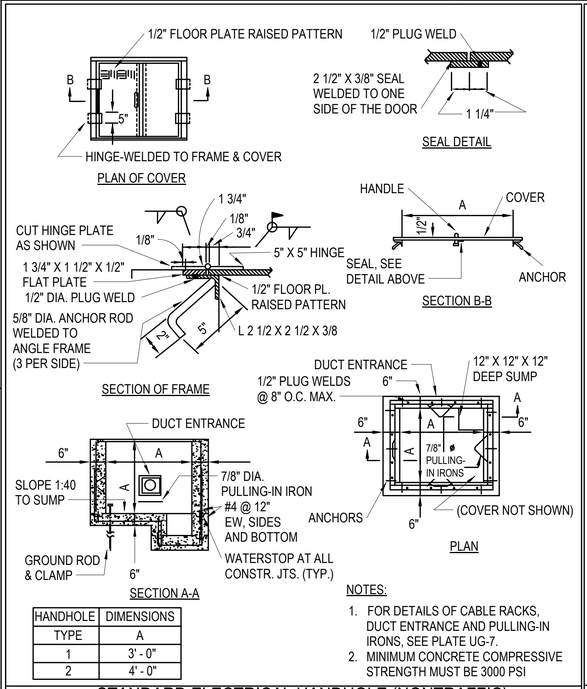

HANDHOLE TYPE	DIMENSIONS A
1	3' - 0"
2	4' - 0"

NOTES:

1. FOR DETAILS OF CABLE RACKS, DUCT ENTRANCE AND PULLING-IN IRONS, SEE PLATE UG-7.
2. MINIMUM CONCRETE COMPRESSIVE STRENGTH MUST BE 3000 PSI

STANDARD ELECTRICAL HANDHOLE (NONTRAFFIC) TYPE 1 & 2

SKETCH DATE:	JUNE 2002	STYLE:	UG - 4

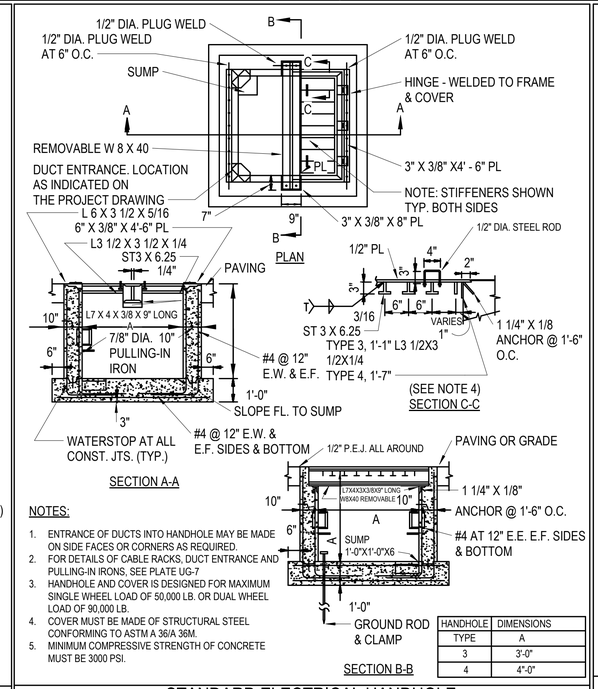

NOTES:

1. ENTRANCE OF DUCTS INTO HANDHOLE MAY BE MADE ON SIDE FACES OR CORNERS AS REQUIRED.
2. FOR DETAILS OF CABLE RACKS, DUCT ENTRANCE AND PULLING-IN IRONS, SEE PLATE UG-7
3. HANDHOLE AND COVER IS DESIGNED FOR MAXIMUM SINGLE WHEEL LOAD OF 50,000 LB. OR DUAL WHEEL LOAD OF 90,000 LB.
4. COVER MUST BE MADE OF STRUCTURAL STEEL CONFORMING TO ASTM A 36/A 36M.
5. MINIMUM COMPRESSIVE STRENGTH OF CONCRETE MUST BE 3000 PSI.

HANDHOLE TYPE	DIMENSIONS A
3	3'-0"
4	4"-0"

STANDARD ELECTRICAL HANDHOLE (TRAFFIC/AIRFIELD) TYPES 3 & 4

SKETCH DATE:	JUNE 2002	STYLE:	UG - 5

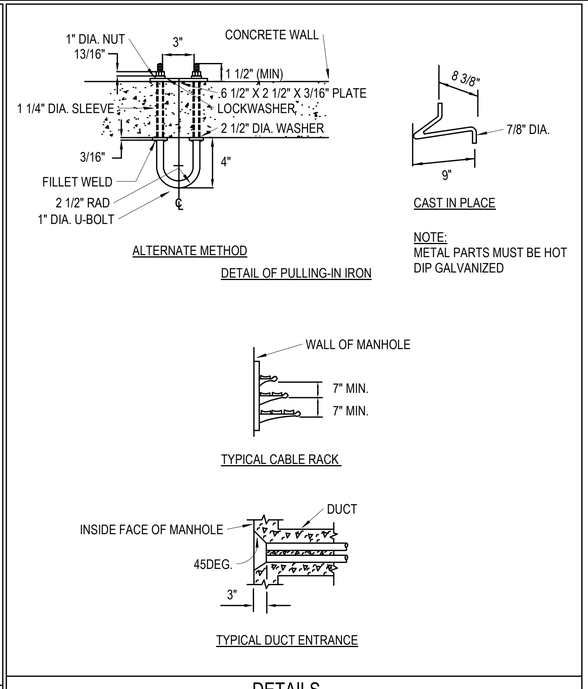

DETAILS (PULLING-IN IRONS, CABLE RACK AND DUCT ENTRANCE)

SKETCH DATE:	JUNE 2002	STYLE:	UG - 7

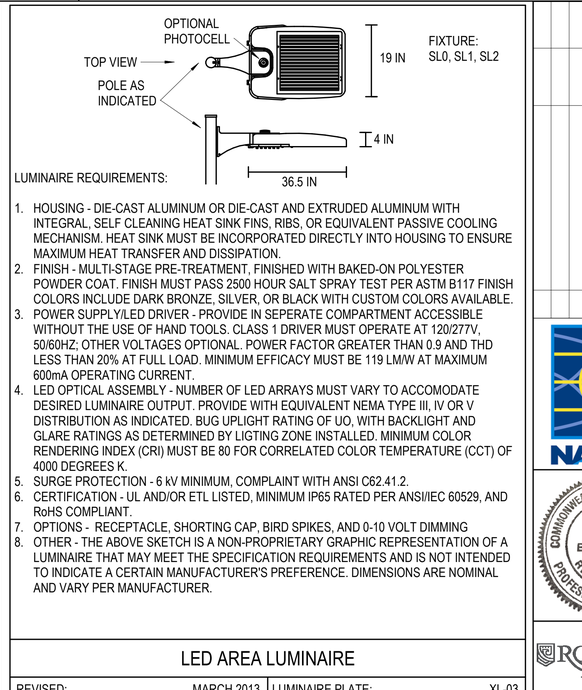

LUMINAIRE REQUIREMENTS:

1. HOUSING - DIE-CAST ALUMINUM OR DIE-CAST AND EXTRUDED ALUMINUM WITH INTEGRAL, SELF CLEANING HEAT SINK FINS, RIBS, OR EQUIVALENT PASSIVE COOLING MECHANISM. HEAT SINK MUST BE INCORPORATED DIRECTLY INTO HOUSING TO ENSURE MAXIMUM HEAT TRANSFER AND DISSIPATION.
2. FINISH - MULTI-STAGE PRE-TREATMENT, FINISHED WITH BAKED-ON POLYESTER POWDER COAT. FINISH MUST PASS 2500 HOUR SALT SPRAY TEST PER ASTM B117 FINISH COLORS INCLUDE DARK BRONZE, SILVER, OR BLACK WITH CUSTOM COLORS AVAILABLE.
3. POWER SUPPLY/LED DRIVER - PROVIDE IN SEPERATE COMPARTMENT ACCESSIBLE WITHOUT THE USE OF HAND TOOLS. CLASS 1 DRIVER MUST OPERATE AT 120/277V, 50/60HZ; OTHER VOLTAGES OPTIONAL. POWER FACTOR GREATER THAN 0.9 AND THD LESS THAN 20% AT FULL LOAD. MINIMUM EFFICACY MUST BE 119 LM/W AT MAXIMUM 600mA OPERATING CURRENT.
4. LED OPTICAL ASSEMBLY - NUMBER OF LED ARRAYS MUST VARY TO ACCOMODATE DESIRED LUMINAIRE OUTPUT. PROVIDE WITH EQUIVALENT NEMA TYPE III, IV OR V DISTRIBUTION AS INDICATED. BUG UPLIGHT RATING OF UO, WITH BACKLIGHT AND GLARE RATINGS AS DETERMINED BY LIGTING ZONE INSTALLED. MINIMUM COLOR RENDERING INDEX (CRI) MUST BE 80 FOR CORRELATED COLOR TEMPERATURE (CCT) OF 4000 DEGREES K.
5. SURGE PROTECTION - 6 kV MINIMUM, COMPLAINT WITH ANSI C62.41.2.
6. CERTIFICATION - UL AND/OR ETL LISTED, MINIMUM IP65 RATED PER ANSI/IEC 60529, AND RoHS COMPLIANT.
7. OPTIONS - RECEPTACLE, SHORTING CAP, BIRD SPIKES, AND 0-10 VOLT DIMMING
8. OTHER - THE ABOVE SKETCH IS A NON-PROPRIETARY GRAPHIC REPRESENTATION OF A LUMINAIRE THAT MAY MEET THE SPECIFICATION REQUIREMENTS AND IS NOT INTENDED TO INDICATE A CERTAIN MANUFACTURER'S PREFERENCE. DIMENSIONS ARE NOMINAL AND VARY PER MANUFACTURER.

LED AREA LUMINAIRE

REVISED:	MARCH 2013	LUMINAIRE PLATE:	XL-03

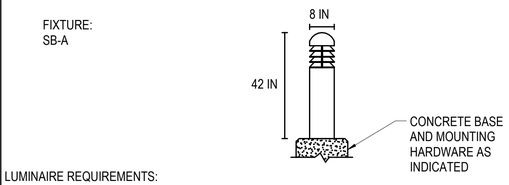

LUMINAIRE REQUIREMENTS:

1. HOUSING - EXTRUDED OR HEAVY- DUTY DIE-CAST ALUMINUM; CONCRETE OPTIONAL. EXPOSED HARDWARE MUST BE STAINLESS STEEL.
2. FINISH - MULTI-STAGE PRE-TREATMENT, FINISHED WITH BAKED-ON POLYESTER POWDER COAT. FINISH MUST PASS 2500 HOUR SALT SPRAY TEST PER ASTM B117. CONCRETE MODEL MUST HAVE OPTIONAL IMPREGNATED COLOR AND SMOOTH OR AGGREGATE FINSIH AS INDICATED.

1. BALLAST/DRIVER - TYPE C - CLASS 1, CONSTANT CURRENT, ELECTRONIC DRIVER FOR LED LIGHT SOURCE

2. OPTICAL ASSEMBLY - TYPE C - DIRECTIONAL LED ASSEMBLIES FOR MAXIMUM BEAM ANGLE PROJECTION THROUGH LOUVERS OR OPENINGS IN LUMINAIRE BODY. PROVIDE NEMA TYPE I, III, OR V DISTRIBUTION AS INDICATED.

3. LIGHT SOURCE - LED.
4. CERTIFICATION - UL AND/OR ETL LISTED FOR WET LOCATION AND RoHS COMPLIANT.
5. OPTIONS - FROSTED LENS, HOUSE SIDE SHIELD FOR 90 DEGREE COVERAGE.
6. OTHER - THE ABOVE SKETCH IS A NON-PROPRIETARY GRAPHIC REPRESENTATION OF A LUMINAIRE THAT MAY MEET THE SPECIFICATION REQUIREMENTS AND IS NOT INTENDED TO INDICATE A CERYAIN MANUFACTURER'S PREFERENCE. DIMENSIONS ARE NOMINAL AND VARY PER MANUFACTURER.

DECORATIVE BOLLARD

REVISED:	MARCH 2013	LUMINAIRE PLATE:	XL-12

APPR			
DATE			
DESCRIPTION			
SYM			

NAVFAC

COMMONWEALTH OF MASSACHUSETTS
SENOL DURUR
ELECTRICAL No. 47946
REGISTERED PROFESSIONAL ENGINEER

IRQ W.M. Jordan COMPANY – A JOINT VENTURE –

Michael Baker INTERNATIONAL
100 AIRSIDE DRIVE
MOON TOWNSHIP, PA 15108
A/E INFO

APPROVED

FOR COMMANDER NAVFAC

ACTIVITY
MARINE CORPS BASE CAMP LEJEUNE

SATISFACTORY TO DATE DD/MM/YY

DES	ZAK	DRW	LAK	CHK	BSR

PM / DM	TOWLER / ROOT
BRANCH HEAD	SEK
DESIGN DIRECTOR	R.L.Stephens, Jr.
FIRE PROTECTION	DPS

DEPARTMENT OF THE NAVY
NAVAL FACILITIES ENGINEERING SYSTEMS COMMAND
ATLANTIC DESIGN AND CONSTRUCTION
NAVAL FACILITIES ENGINEERING SYSTEMS COMMAND ATLANTIC
NORFOLK, VA
JACKSONVILLE, NC
LOGCOM CSP WAREHOUSE
MCB CAMP LEJEUNE

ELECTRICAL - SITE DETAILS

SCALE:	AS NOTED
EPROJECT NO.:	1639600
CONSTR. CONTR. NO.	N40085-20-C-0059
NAVFAC DRAWING NO.	14111374
SHEET	348 OF 447

ES505

DRAWFORM REVISION: 25 AUGUST 2020

P1527 FINAL SUBMISSION - 11/18/2021

PLOTTED: 11/11/2021 9:20:40 AM

FILE NAME: BIM 360://HF PACKAGE 3/P1527 LOG COM CSP-1639600-E.rvt

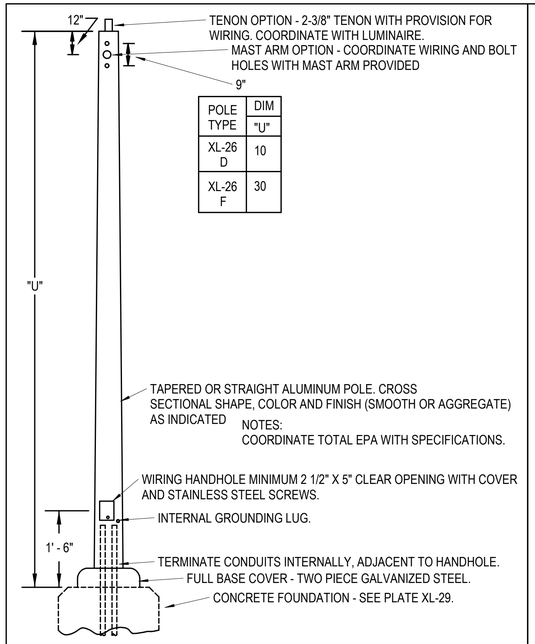

POLE TYPE	DIM "U"
XL-26 D	10
XL-26 F	30

ANCHOR BASE ALUMINUM POLE

REVISED:	MARCH 2013	LUMINAIRE PLATE:	XL - 28

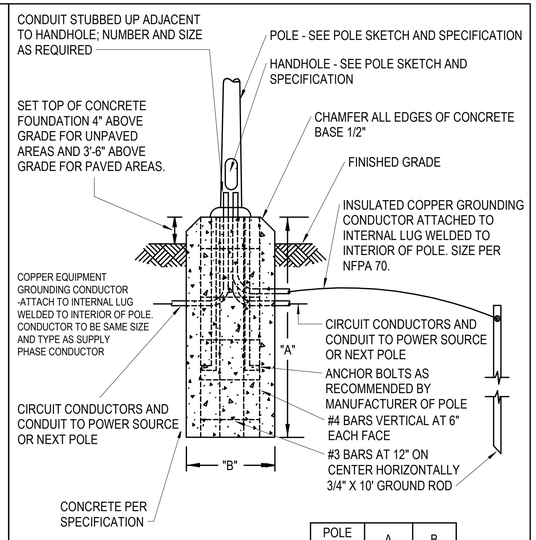

POLE HEIGHT	A	B
10'	36"	12"
30'	72"	24"

ANCHOR BASE POLE FOUNDATION

REVISED:	MARCH 2013	LUMINAIRE PLATE:	XL - 29

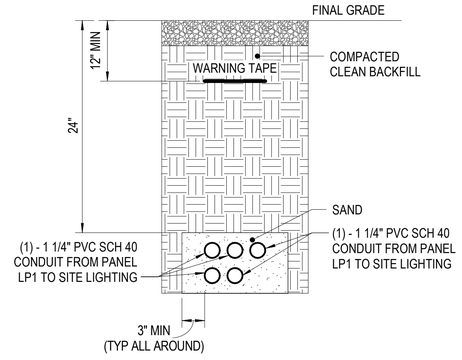

B4 5-WAY DUCTBANK - SITE LIGHTING

SCALE: NTS (ES102)

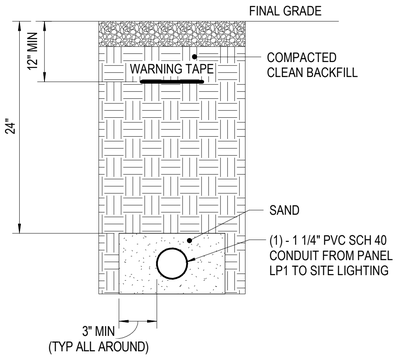

A1 1-WAY DUCTBANK - SITE LIGHTING

SCALE: NTS (ES102)

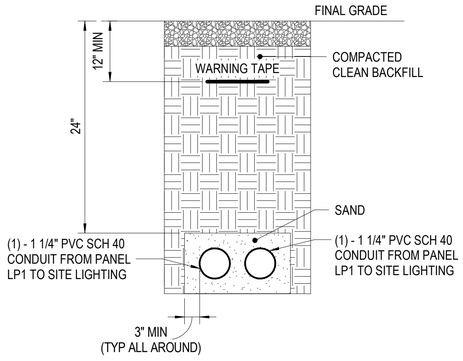

A2 2-WAY DUCTBANK - SITE LIGHTING

SCALE: NTS (ES102)

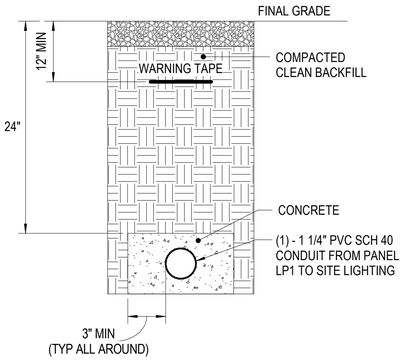

A3 1-WAY DUCTBANK - SITE LIGHTING (A)

SCALE: NTS (ES102)

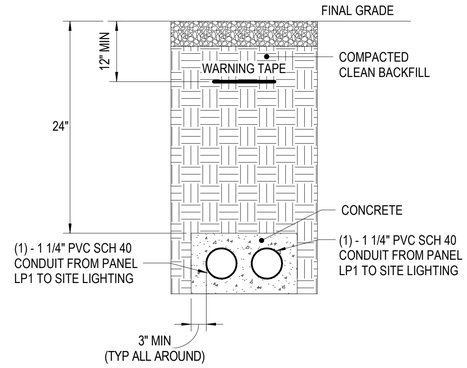

A4 2-WAY DUCTBANK - SITE LIGHTING (A)

SCALE: NTS

NO.	DESCRIPTION	DATE	APP'R

NAVFAC

COMMONWEALTH OF MASSACHUSETTS
SENOL DURUR
ELECTRICAL No. 47946
REGISTERED PROFESSIONAL ENGINEER

IRQ Jordan COMPANY – A JOINT VENTURE –

Michael Baker INTERNATIONAL
100 AIRSIDE DRIVE
MOON TOWNSHIP, PA 15108
A/E INFO

APPROVED

FOR COMMANDER NAVFAC

ACTIVITY
MARINE CORPS BASE CAMP LEJEUNE

SATISFACTORY TO DATE DD/MM/YY

DES ZAK	DRW LAK	CHK BSR
PM / DM	TOWLER / ROOT	
BRANCH HEAD	SEK	
DESIGN DIRECTOR	R.L.Stephens, Jr.	
FIRE PROTECTION	DPS	

DEPARTMENT OF THE NAVY
NAVAL FACILITIES ENGINEERING SYSTEMS COMMAND ATLANTIC
ATLANTIC DESIGN AND CONSTRUCTION
MCB CAMP LEJEUNE

NAVAL FACILITIES ENGINEERING SYSTEMS COMMAND ATLANTIC
NORFOLK, VA
JACKSONVILLE, NC
LOGCOM CSP WAREHOUSE

ELECTRICAL - SITE DETAILS

SCALE:	AS NOTED
EPROJECT NO.:	1639600
CONSTR. CONTR. NO.	N40085-20-C-0059
NAVFAC DRAWING NO.	14111375
SHEET	349 OF 447

ES506

DRAWFORM REVISION: 25 AUGUST 2020

P1527 FINAL SUBMISSION - 11/18/2021

PLOTTED: 11/11/2021 9:20:41 AM

FILE NAME: BIM 360://HF PACKAGE 3/P1527 LOG COM CSP-1639600-E.rvt

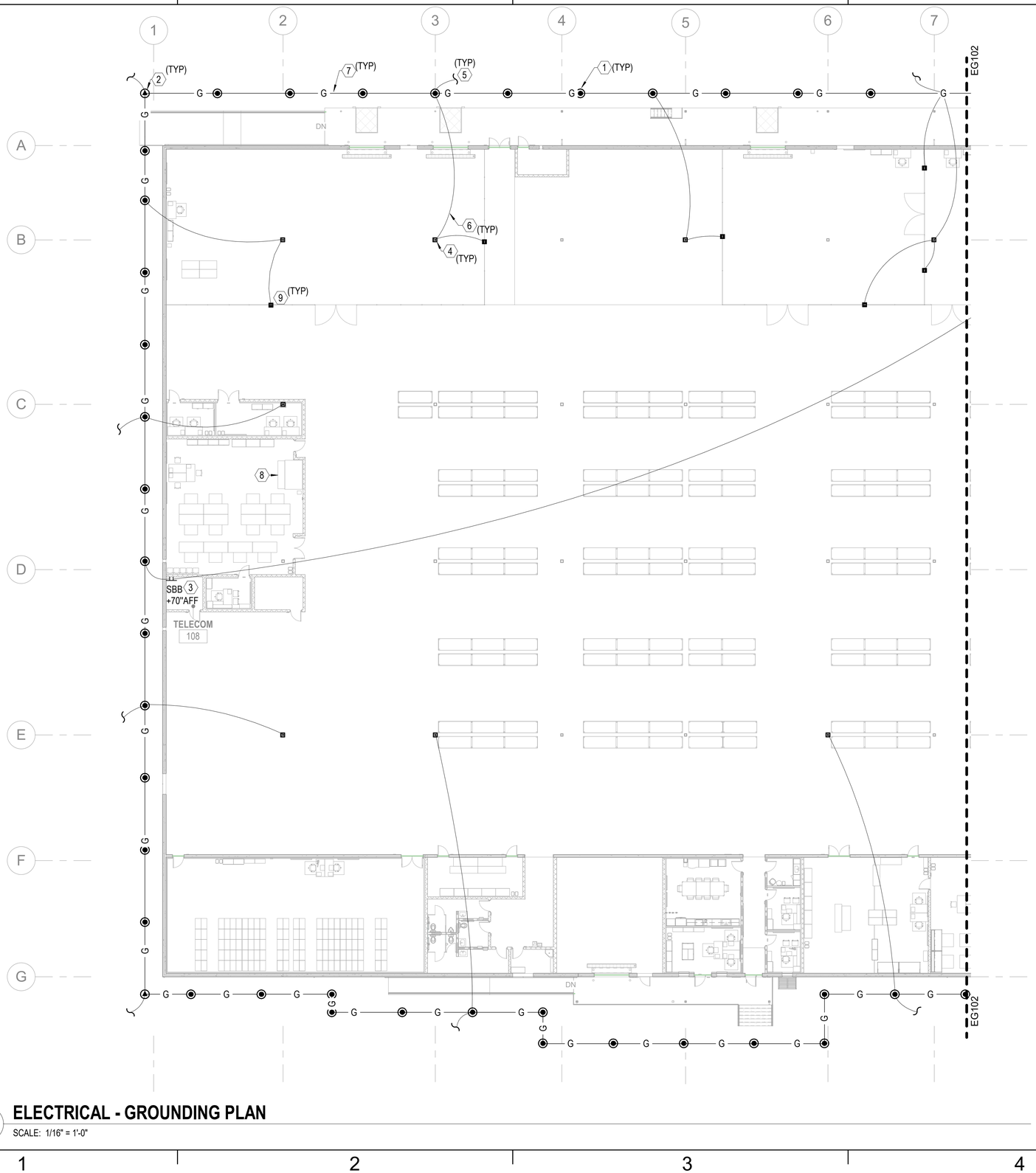

GENERAL NOTES

1. SEE SHEET E-001 FOR ELECTRICAL NOTES, SYMBOLS, AND ABBREVIATIONS.
2. SEE SHEET EG501 FOR GROUNDING DETAILS.
3. SEE SHEETS EG103 - EG104 FOR LIGHTNING PROTECTION PLAN.
4. PENETRATIONS THROUGH FIRE-RATED WALLS MUST BE SEALED WITH FIRE STOPPING TO MAINTAIN FIRE-RATING OF WALL.

KEYNOTES

1. 3/4" DIAMETER BY 10' LONG COPPER CLAD GROUND ROD.
2. GROUND TEST WELL STATION. SEE DETAIL C4 ON SHEET EG501.
3. TELECOMMUNICATION SECONDARY GROUNDING BUSBAR (SBB) MUST BE CONNECTED TO TELECOMMUNICATION PRIMARY GROUNDING BUSBAR (PBB) IN ROOM 118. SEE SHEET T-601 FOR CONDUCTOR SIZE BETWEEN SBB AND PBB.
4. EXOTHERMIC WELD CONNECTION TO BUILDING STEEL.
5. DOWN CONDUCTOR CONNECTION FROM ROOF LIGHTNING PROTECTION SYSTEM. CONCEAL DOWN CONDUCTORS. PROVIDE APPROPRIATE ALUMINUM TO COPPER BIMETALLIC CONNECTORS AS REQURIED FOR CONNECTION TO COPPER CLAD GROUND ROD. COORDINATE WITH LIGHTNING PROTECTION PLANS ON SHEETS EG103 - EG104.
6. #4/0 AWG BARE COPPER GROUND WIRE FOR CONNECTION TO BUILDING STEEL.
7. #4/0 AWG BARE COPPER GROUND LOOP INSTALLED 3' MINIMUM TO 8' MAXIMUM FROM BUILDING FOUNDATION AND BEYOND THE BUILDING PERIMETER.
8. ANTI-STATIC MAT WIRED TO X-RAY MACHINE OUTLET.
9. CAGED FENCE MUST BE BONDED ON BOTH SIDES OF OPENINGS AND CONNECTED TO GROUND RING.

KEYPLAN

A	B	C	D
E	F	G	H

0 8' - 0" 16' - 0" 32' - 0"

SCALE: 0' - 0 1/16" = 1' - 0"

N

A1 ELECTRICAL - GROUNDING PLAN

SCALE: 1/16" = 1'-0"

NO.	DESCRIPTION	DATE	APPR

NAVFAC

SENOL DURUR ELECTRICAL No. 47946 REGISTERED PROFESSIONAL ENGINEER COMMONWEALTH OF MASSACHUSETTS

IRQ Wm. Jordan COMPANY – A JOINT VENTURE –

Michael Baker INTERNATIONAL

100 AIRSIDE DRIVE
MOON TOWNSHIP, PA 15108 A/E INFO

APPROVED

FOR COMMANDER NAVFAC

ACTIVITY
MARINE CORPS BASE
CAMP LEJEUNE

SATISFACTORY TO DATE DD/MM/YY

DES	ZAK	DRW LAK	CHK BSR
PM / DM		TOWLER / ROOT	
BRANCH HEAD		SEK	
DESIGN DIRECTOR		R.L.Stephens, Jr.	
FIRE PROTECTION		DPS	

DEPARTMENT OF THE NAVY
NAVAL FACILITIES ENGINEERING SYSTEMS COMMAND
ATLANTIC DESIGN AND CONSTRUCTION
MCB CAMP LEJEUNE

NAVAL FACILITIES ENGINEERING SYSTEMS COMMAND ATLANTIC
NORFOLK, VA
JACKSONVILLE, NC
LOGCOM CSP WAREHOUSE

ELECTRICAL - GROUNDING PLAN

SCALE:	AS NOTED
EPROJECT NO.:	1639600
CONSTR. CONTR. NO.	N40085-20-C-0059
NAVFAC DRAWING NO.	14111376
SHEET	350 OF 447

EG101

DRAWFORM REVISION: 25 AUGUST 2020

P1527 FINAL SUBMISSION - 11/18/2021

PLOTTED: 11/11/2021 9:19:16 AM

FILE NAME: BIM 360://HF PACKAGE 3/P1527 LOG COM CSP-1639600-E.rvt

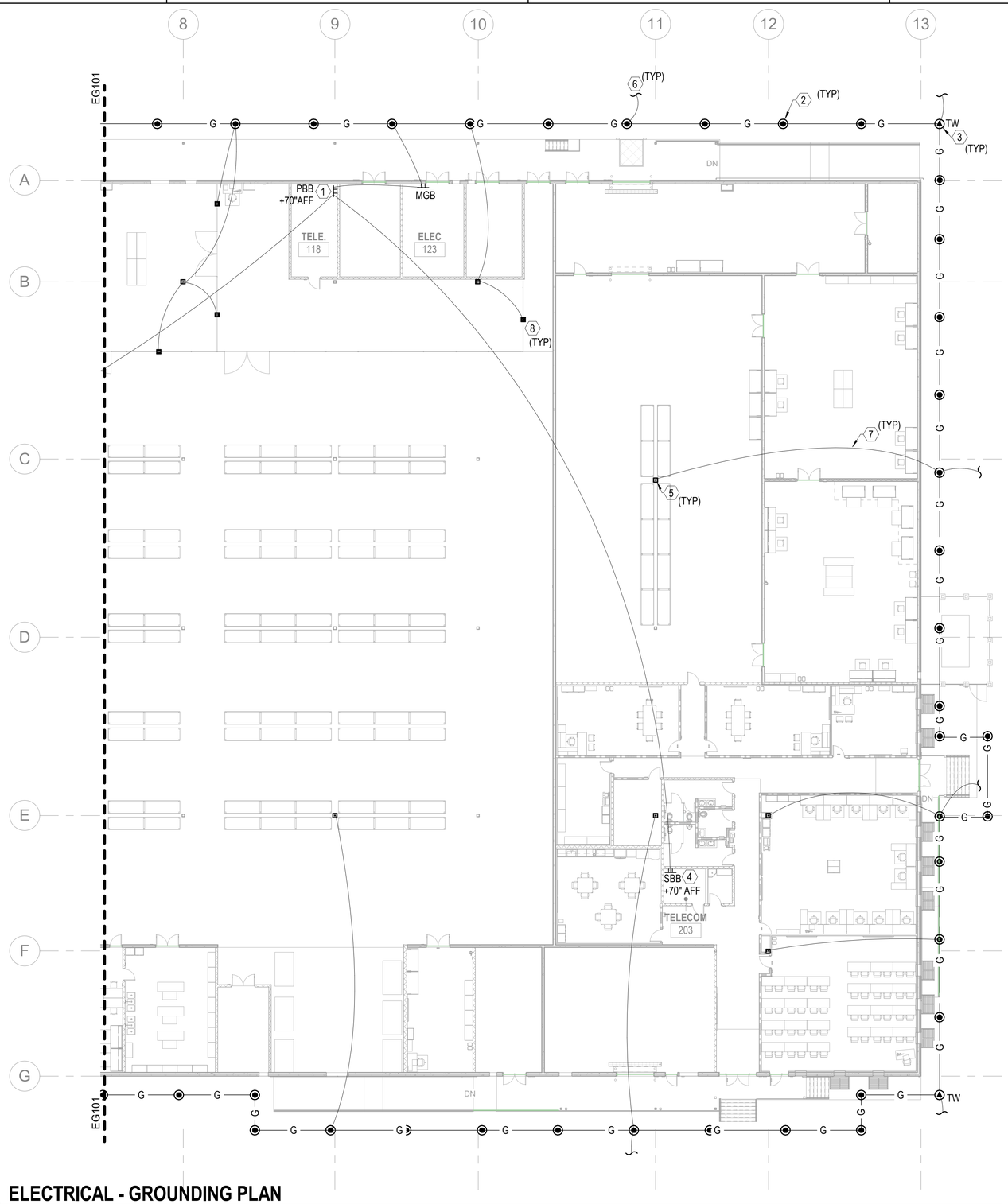

A1 ELECTRICAL - GROUNDING PLAN

SCALE: 1/16" = 1'-0"

GENERAL NOTES

1. SEE SHEET E-001 FOR ELECTRICAL NOTES, SYMBOLS, AND ABBREVIATIONS.
2. SEE SHEET EG501 FOR GROUNDING DETAILS.
3. SEE SHEETS EG103 - EG104 FOR LIGHTNING PROTECTION PLAN.
4. PENETRATIONS THROUGH FIRE-RATED WALLS MUST BE SEALED WITH FIRE STOPPING TO MAINTAIN FIRE-RATING OF WALL.

KEYNOTES

1. TELECOMMUNICATION PRIMARY GROUNDING BUSBAR (PBB) MUST BE CONNECTED TO ELECTRICAL MAIN GROUNDING BUSBAR (MGB) IN ROOM 123. #4/0 AWG BARE COPPER GROUNDING WIRE USED FOR CONNECTION.
2. 3/4" DIAMETER BY 10' LONG COPPER CLAD GROUND ROD.
3. GROUND TEST WELL STATION. SEE DETAIL C4 ON SHEET EG501.
4. TELECOMMUNICATION SECONDARY GROUNDING BUSBAR (SBB) MUST BE CONNECTED TO TELECOMMUNICATION PRIMARY GROUNDING BUSBAR (PBB) IN ROOM 118. SEE SHEET T-601 FOR CONDUCTOR SIZE BETWEEN SBB AND PBB.
5. EXOTHERMIC WELD CONNECTION TO BUILDING STEEL.
6. DOWN CONDUCTOR CONNECTION FROM ROOF LIGHTNING PROTECTION SYSTEM. CONCEAL DOWN CONDUCTORS. PROVIDE APPROPRIATE ALUMINUM TO COPPER BIMETALLIC CONNECTORS AS REQURIED FOR CONNECTION TO COPPER CLAD GROUND ROD. COORDINATE WITH LIGHTNING PROTECTION PLANS ON SHEETS EG103 - EG104.
7. #4/0 AWG BARE COPPER GROUND WIRE FOR CONNECTION TO BUILDING STEEL.
8. CAGED FENCE MUST BE BONDED ON BOTH SIDES OF OPENINGS AND CONNECTED TO GROUND RING.

KEYPLAN

A	B	C	D
E	F	G	H

0 8' - 0" 16' - 0" 32' - 0"

SCALE:0' - 0 1/16" = 1' - 0"

N

NUM	DESCRIPTION	DATE	APP'R

NAVFAC

COMMONWEALTH OF MASSACHUSETTS
SENOL DURUR
ELECTRICAL
No. 47946
REGISTERED
PROFESSIONAL ENGINEER

IRQ W.M. Jordan COMPANY – A JOINT VENTURE –

Michael Baker INTERNATIONAL

100 AIRSIDE DRIVE
MOON TOWNSHIP, PA 15108 A/E INFO

APPROVED

FOR COMMANDER NAVFAC

ACTIVITY
MARINE CORPS BASE
CAMP LEJEUNE

SATISFACTORY TO DATE DD/MM/YY

DES	DRW	CHK
ZAK	LAK	BSR

PM / DM TOWLER / ROOT
BRANCH HEAD SEK
DESIGN DIRECTOR R.L.Stephens, Jr.
FIRE PROTECTION DPS

DEPARTMENT OF THE NAVY
NAVAL FACILITIES ENGINEERING SYSTEMS COMMAND
ATLANTIC DESIGN AND CONSTRUCTION
MCB CAMP LEJEUNE

NAVAL FACILITIES ENGINEERING SYSTEMS COMMAND ATLANTIC
NORFOLK, VA
JACKSONVILLE, NC
LOGCOM CSP WAREHOUSE

ELECTRICAL - GROUNDING PLAN

SCALE: AS NOTED
EPROJECT NO.: 1639600
CONSTR. CONTR. NO. N40085-20-C-0059
NAVFAC DRAWING NO. 14111377
SHEET 351 OF 447

EG102

DRAWFORM REVISION: 25 AUGUST 2020

P1527 FINAL SUBMISSION - 11/18/2021

PLOTTED: 11/11/2021 9:19:18 AM

FILE NAME: BIM 360://HF PACKAGE 3/P1527 LOG COM CSP-1639600-E.rvt

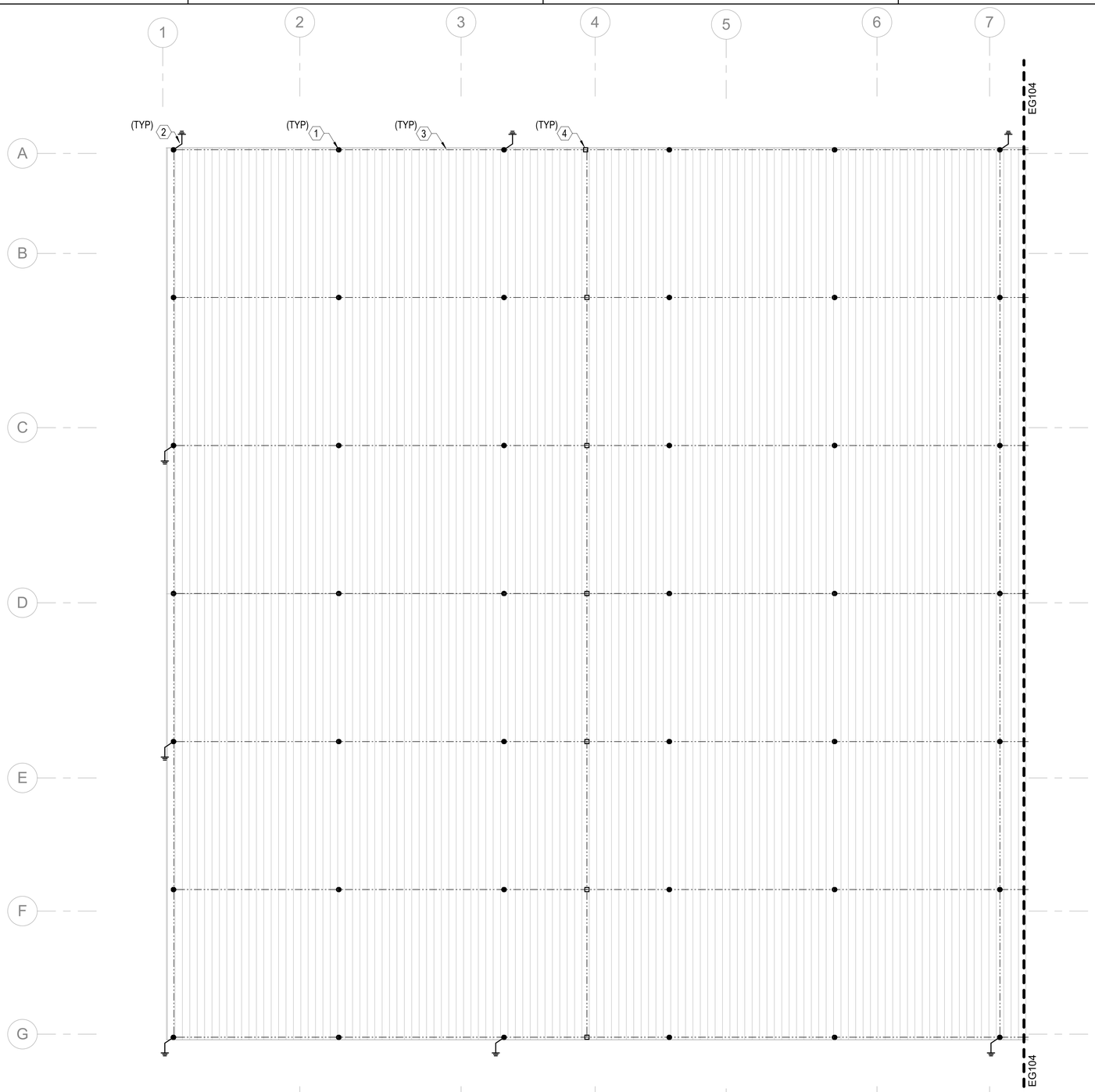

GENERAL NOTES

1. SEE SHEET E-001 FOR ELECTRICAL NOTES, SYMBOLS, AND ABBREVIATIONS.
2. SEE SHEETS EG101 - EG102 FOR GROUNDING PLANS.
3. SEE SHEET EG501 FOR LIGHTNING PROTECTION DETAILS.
4. LIGHTNING PROTECTION DESIGN AND INSTALLATION MUST MEET THE REQUIREMENTS OF NFPA 780 AND UL96. DESIGN MUST HAVE A LIGHTNING PROTECTION INSPECTION CERTIFICATE CERTIFIED TO UL 96A.

KEYNOTES

1. 1/2" BY 10" SOLID ALUMINUM AIR TERMINAL.
2. #1/0 AWG BARE STRANDED CLASS 1 ALUMINUM DOWN CONDUCTOR. CONCEAL DOWN CONDUCTORS. PROVIDE APPROPRIATE ALUMINUM TO COPPER BIMETALLIC CONNECTORS AS REQUIRED FOR CONNECTION TO COPPER CLAD GROUND ROD. COORDINATE CONNECTION WITH GROUNDING PLAN ON SHEET EG101 - EG102.
3. #1/0 AWG BARE STRANDED CLASS 1 ALUMINUM LIGHTNING PROTECTION MAIN CONDUCTOR.
4. ALUMINUM TO ALUMINUM CLAMP CONNECTOR.

KEYPLAN

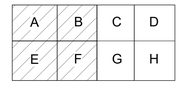



SCALE: 0' - 0 1/16" = 1' - 0"

NO.	DESCRIPTION	DATE	APPR

NAVFAC

SENOL DURUR ELECTRICAL No. 47946 REGISTERED PROFESSIONAL ENGINEER
COMMONWEALTH OF MASSACHUSETTS

IRQ W.M. Jordan COMPANY – A JOINT VENTURE –

Michael Baker INTERNATIONAL
100 AIRSIDE DRIVE
MOON TOWNSHIP, PA 15108
A/E INFO

APPROVED

FOR COMMANDER NAVFAC

ACTIVITY
MARINE CORPS BASE
CAMP LEJEUNE

SATISFACTORY TO DATE DD/MM/YY

DES	ZAK	DRW	LAK	CHK	BSR

PM / DM	TOWLER / ROOT
BRANCH HEAD	SEK
DESIGN DIRECTOR	R.L.Stephens, Jr.
FIRE PROTECTION	DPS

DEPARTMENT OF THE NAVY
NAVAL FACILITIES ENGINEERING SYSTEMS COMMAND
ATLANTIC DESIGN AND CONSTRUCTION

NAVAL FACILITIES ENGINEERING SYSTEMS COMMAND ATLANTIC
NORFOLK, VA

MCB CAMP LEJEUNE
JACKSONVILLE, NC

LOGCOM CSP WAREHOUSE

ELECTRICAL - LIGHTNING PROTECTION PLAN

SCALE:	AS NOTED
EPROJECT NO.:	1639600
CONSTR. CONTR. NO.	N40085-20-C-0059
NAVFAC DRAWING NO.	14111378
SHEET	352 OF 447

EG103

DRAWFORM REVISION: 25 AUGUST 2020

P1527 FINAL SUBMISSION - 11/18/2021

A1 ELECTRICAL - LIGHTNING PROTECTION PLAN

SCALE: 1/16" = 1'-0"

PLOTTED: 11/11/2021 9:19:20 AM

FILE NAME: BIM 360://AIF PACKAGE 3/P1527 LOG COM CSP-1639600-E.rvt

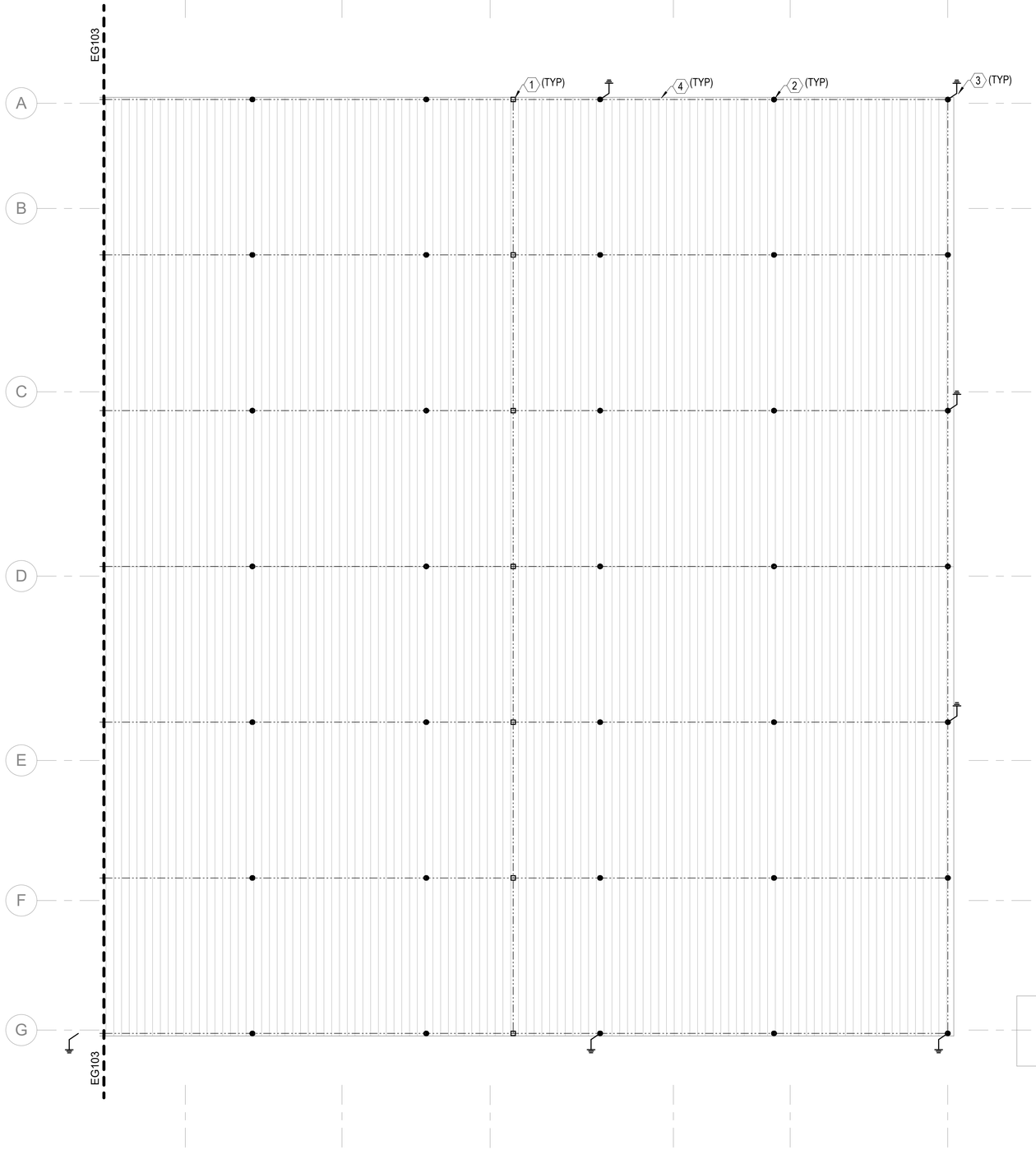

GENERAL NOTES

1. SEE SHEET E-001 FOR ELECTRICAL NOTES, SYMBOLS, AND ABBREVIATIONS.
2. SEE SHEETS EG101 - EG102 FOR GROUNDING PLANS.
3. SEE SHEET EG501 FOR LIGHTNING PROTECTION DETAILS.
4. LIGHTNING PROTECTION DESIGN AND INSTALLATION MUST MEET THE REQUIREMENTS OF NFPA 780 AND UL96. DESIGN MUST HAVE A LIGHTNING PROTECTION INSPECTION CERTIFICATE CERTIFIED TO UL 96A.

KEYNOTES

1. ALUMINUM TO ALUMINUM CLAMP CONNECTOR.
2. 1/2" BY 10" SOLID ALUMINUM AIR TERMINAL.
3. #1/0 AWG BARE STRANDED CLASS 1 ALUMINUM DOWN CONDUCTOR. CONCEAL DOWN CONDUCTORS. PROVIDE APPROPRIATE ALUMINUM TO COPPER BIMETALLIC CONNECTORS AS REQUIRED FOR CONNECTION TO COPPER CLAD GROUND ROD. COORDINATE CONNECTION WITH GROUNDING PLAN ON SHEET EG101 - EG102.
4. #1/0 AWG BARE STRANDED CLASS 1 ALUMINUM LIGHTNING PROTECTION MAIN CONDUCTOR.

KEYPLAN

A	B	C	D
E	F	G	H

0 8' - 0" 16' - 0" 32' - 0"

SCALE: 0' - 0 1/16" = 1' - 0"

N

A1 ELECTRICAL - LIGHTNING PROTECTION PLAN

SCALE: 1/16" = 1'-0"

NO.	DESCRIPTION	DATE	APP'R

NAVFAC

COMMONWEALTH OF MASSACHUSETTS
SENOL DURUR
ELECTRICAL
No. 47946
REGISTERED
PROFESSIONAL ENGINEER

IRQ W.M. Jordan COMPANY – A JOINT VENTURE –

Michael Baker INTERNATIONAL

100 AIRSIDE DRIVE
MOON TOWNSHIP, PA 15108 A/E INFO

APPROVED

FOR COMMANDER NAVFAC

ACTIVITY
MARINE CORPS BASE
CAMP LEJEUNE

SATISFACTORY TO DATE DD/MM/YY

DES	ZAK	DRW LAK	CHK BSR
PM / DM		TOWLER / ROOT	
BRANCH HEAD		SEK	
DESIGN DIRECTOR		R.L.Stephens, Jr.	
FIRE PROTECTION		DPS	

DEPARTMENT OF THE NAVY
NAVAL FACILITIES ENGINEERING SYSTEMS COMMAND
ATLANTIC DESIGN AND CONSTRUCTION
MCB CAMP LEJEUNE

NAVAL FACILITIES ENGINEERING SYSTEMS COMMAND ATLANTIC
NORFOLK, VA
JACKSONVILLE, NC
LOGCOM CSP WAREHOUSE

ELECTRICAL - LIGHTNING PROTECTION PLAN

SCALE:	AS NOTED
EPROJECT NO.:	1639600
CONSTR. CONTR. NO.	N40085-20-C-0059
NAVFAC DRAWING NO.	14111379
SHEET	353 OF 447

EG104

DRAWFORM REVISION: 25 AUGUST 2020

P1527 FINAL SUBMISSION - 11/18/2021

PLOTTED: 11/11/2021 9:19:22 AM

FILE NAME: BIM 360://HF PACKAGE 3/P1527 LOG COM CSP-1639600-E.rvt

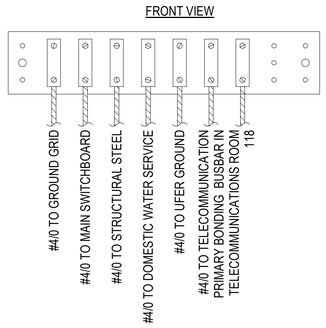

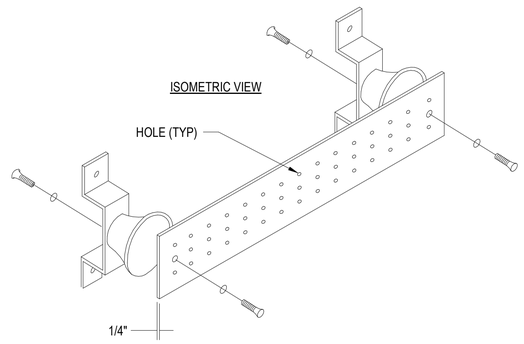

NOTES:
1. GROUND BUSBAR IS PRE-DRILLED COPPER WITH STANDARD NEMA BOLT HOLE SIZING AND SPACING.
2. MGB IS 1/4" THICK AND 4" WIDE.
3. LENGTH SIZED TO ACCOMMODATE GROUND CONNECTIONS OF GROWTH PROVISION. MINIMUM LENGTH MUST BE 24" FOR MAIN GROUND BAR AND 12" FOR SECONDARY GROUND BARS.
4. PROVIDE A GROUND BAR WITH A CLEAR 3/16" THICK POLYCARBONATE OR ACRYLIC COVER 2 INCHES LARGER IN EACH DIRECTION OF THE BAR IT SHIELDS.

C1 ELECTRICAL MAIN GROUNDING BUSBAR

SCALE: NTS

REF EG101 - EG102

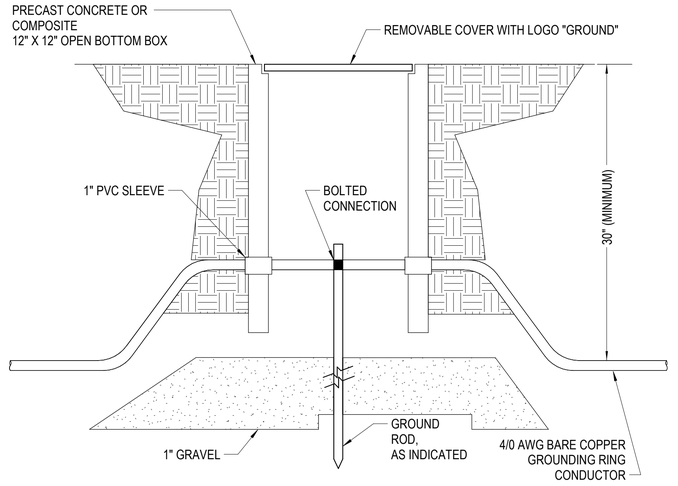

C4 GROUND ROD TEST WELL

SCALE: NTS

REF EG101 - EG102

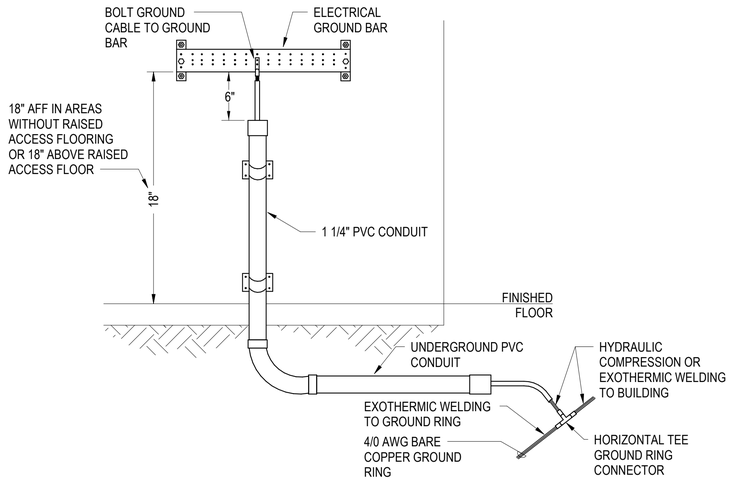

A1 ELECTRICAL GROUND BAR AND GROUND RING CONNECTIONS

SCALE: NTS

REF EG101 - EG102

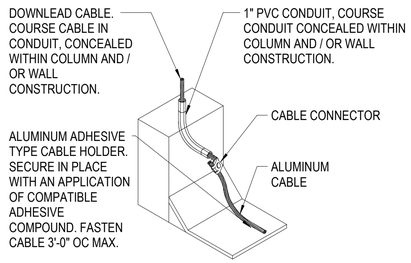

A3 CONCEALED DOWNLEAD TO LOWER ROOF

SCALE: NTS

REF EG103 - EG104

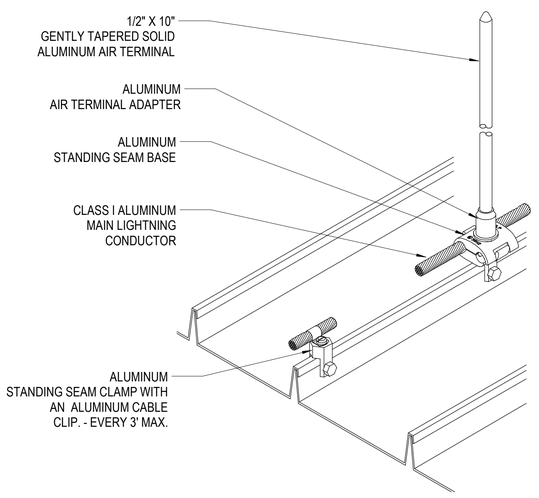

A4 AIR TERMINAL

SCALE: NTS

REF EG103 - EG104

APP'R	
DATE	
DESCRIPTION	
SYM	

NAVFAC

COMMONWEALTH OF MASSACHUSETTS
SENOL DURUR
ELECTRICAL
No. 47946
REGISTERED
PROFESSIONAL ENGINEER

IRQ W.M. Jordan COMPANY – A JOINT VENTURE –

Michael Baker INTERNATIONAL
100 AIRSIDE DRIVE
MOON TOWNSHIP, PA 15108 A/E INFO

APPROVED

FOR COMMANDER NAVFAC

ACTIVITY
MARINE CORPS BASE CAMP LEJEUNE

SATISFACTORY TO DATE DD/MM/YY

DES	ZAK	DRW LAK	CHK BSR
PM / DM	TOWLER / ROOT		
BRANCH HEAD	SEK		
DESIGN DIRECTOR	R.L.Stephens, Jr.		
FIRE PROTECTION	DPS		

NAVAL FACILITIES ENGINEERING SYSTEMS COMMAND ATLANTIC
NORFOLK, VA
JACKSONVILLE, NC
LOGCOM CSP WAREHOUSE
ELECTRICAL - GROUNDING DETAILS
DEPARTMENT OF THE NAVY
NAVAL FACILITIES ENGINEERING SYSTEMS COMMAND
ATLANTIC DESIGN AND CONSTRUCTION
MCB CAMP LEJEUNE

SCALE:	AS NOTED
EPROJECT NO.:	1639600
CONSTR. CONTR. NO.	N40085-20-C-0059
NAVFAC DRAWING NO.	14111380
SHEET	354 OF 447

EG501

DRAWFORM REVISION: 25 AUGUST 2020

P1527 FINAL SUBMISSION - 11/18/2021

PLOTTED: 11/11/2021 9:19:23 AM

FILE NAME: BIM 360/JHF PACKAGE 3/P1527 LOG COM CSP-1639600-E.rvt

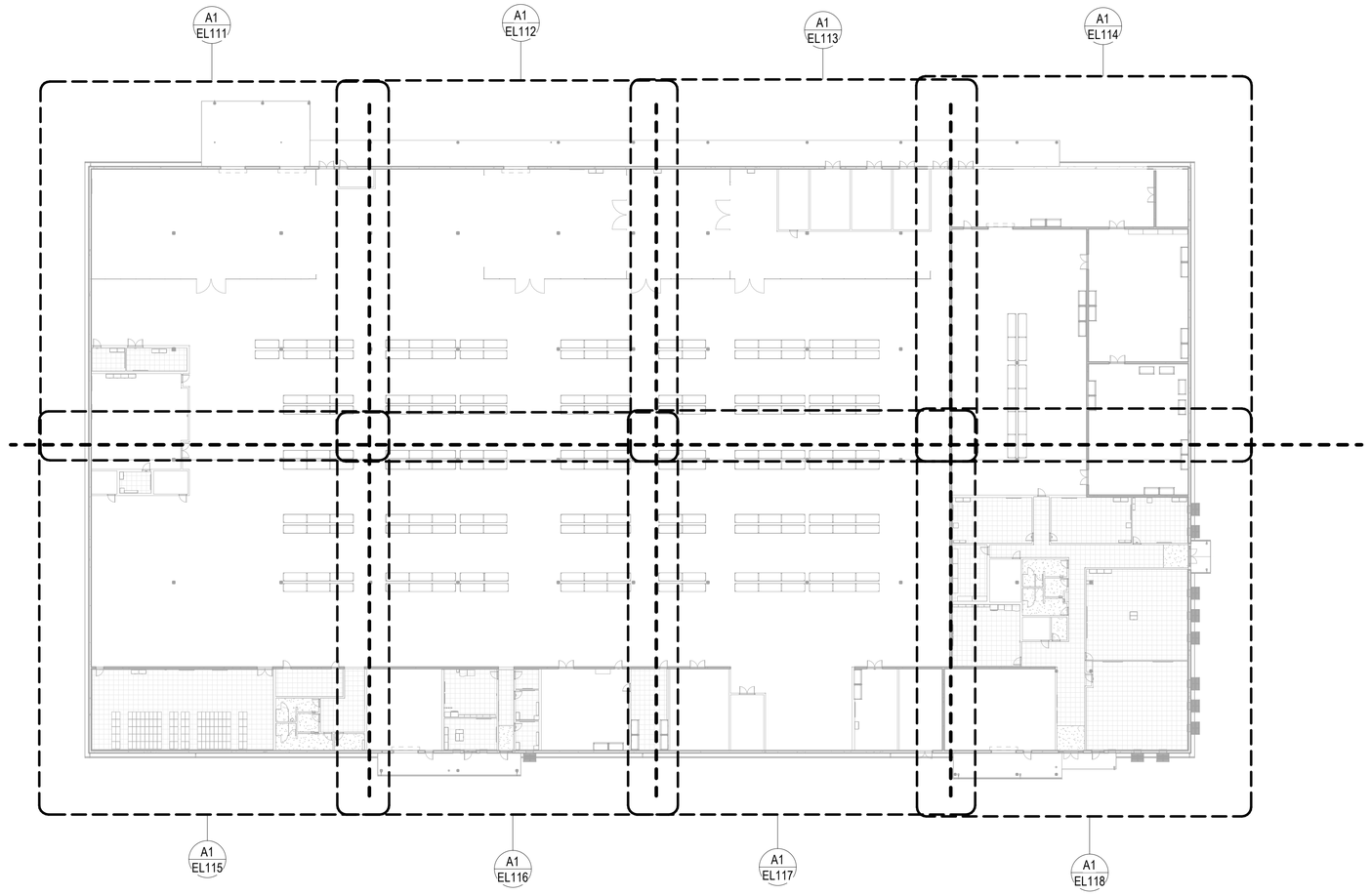

LIGHTING - OVERALL FLOOR PLAN

SCALE: 1" = 30'-0"

GENERAL NOTES

1. SEE SHEET E-001 FOR ELECTRICAL NOTES, SYMBOLS, AND ABBREVIATIONS.
2. SEE SHEET E-601 FOR LIGHTING FIXTURE SCHEDULE.
3. THE WIRING SHOWN ON THE LIGHTING PLANS INDICATE FIXTURES WHICH ARE ON THE SAME CIRCUIT, NOT THE ACTUAL WIRING. ADHERE TO THE SWITCH DESIGNATIONS AND LIGHTING CONTROL DIAGRAMS FOR THE ACTUAL WIRING.
4. CONNECT EXIT SIGN AND EMERGENCY LIGHTING UNITS AHEAD OF THE SWITCH/SENSOR TO THE NORMAL LIGHTING CIRCUIT THAT IS LOCATED IN THE SAME AREA/ROOM IN WHICH THOSE EXIT AND EMERGENCY LUMINAIRES ARE SERVING.
5. MECHANICAL AREA LIGHTING FIXTURES LOCATIONS AND MOUNTING HEIGHTS MUST BE FIELD COORDINATED WITH MECHANICAL PIPING AND DUCTWORK LOCATIONS.
6. PROVIDE POWER PACKS AS REQUIRED FOR PLUG LOAD RECEPTACLE CONTROL, LOCATED ABOVE ACCESSIBLE CEILING. SEE DETAILS B2 AND B4 ON SHEET E-505 FOR MORE INFORMATION.
7. PASSIVE-INFRARED (PIR) SENSOR TECHNOLOGY WILL PICK UP AIR THAT IS HOTTER OR COLDER THAN THE AMBIENT TEMPERATURE. OCCUPANCY / VACANCY SENSORS PLACED SO AIR IS NOT BLOWING ON SENSOR HOUSINGS AND CREATING FALSE TRIPS. OCCUPANCY / VACANCY SENSORS LOCATED A MINIMUM OF 6 FEET FROM ALL AIR DIFFUSERS. FIELD COORDINATE AS REQUIRED.

KEYPLAN

A	B	C	D
E	F	G	H

0 15' - 0" 30' - 0" 60' - 0"

SCALE: 0' - 1" = 30' - 0"

N

APVR	DATE	DESCRIPTION	STM

NAVFAC

COMMONWEALTH OF MASSACHUSETTS
SENOL DURUR
ELECTRICAL
No. 47946
REGISTERED PROFESSIONAL ENGINEER

IRQ W.M. Jordan COMPANY – A JOINT VENTURE –

Michael Baker INTERNATIONAL
100 AIRSIDE DRIVE
MOON TOWNSHIP, PA 15108 A/E INFO

APPROVED

FOR COMMANDER NAVFAC

ACTIVITY
MARINE CORPS BASE
CAMP LEJEUNE

SATISFACTORY TO DATE	DD/MM/YY
DES ZAK	DRW LAK CHK BSR
PM / DM	TOWLER / ROOT
BRANCH HEAD	SEK
DESIGN DIRECTOR	R.L.Stephens, Jr.
FIRE PROTECTION	DPS

DEPARTMENT OF THE NAVY
NAVAL FACILITIES ENGINEERING SYSTEMS COMMAND
ATLANTIC DESIGN AND CONSTRUCTION
MCB CAMP LEJEUNE

NAVAL FACILITIES ENGINEERING SYSTEMS COMMAND ATLANTIC
NORFOLK, VA

JACKSONVILLE, NC
LOGCOM CSP WAREHOUSE

LIGHTING - OVERALL FLOOR PLAN

SCALE:	AS NOTED
EPROJECT NO.:	1639600
CONSTR. CONTR. NO.	N40085-20-C-0059
NAVFAC DRAWING NO.	14111381
SHEET	355 OF 447

EL110

DRAWFORM REVISION: 25 AUGUST 2020

P1527 FINAL SUBMISSION - 11/18/2021

PLOTTED: 11/11/2021 9:19:25 AM

FILE NAME: BIM 360://HF PACKAGE 3/P1527 LOG COM CSP-1639600-E.rvt

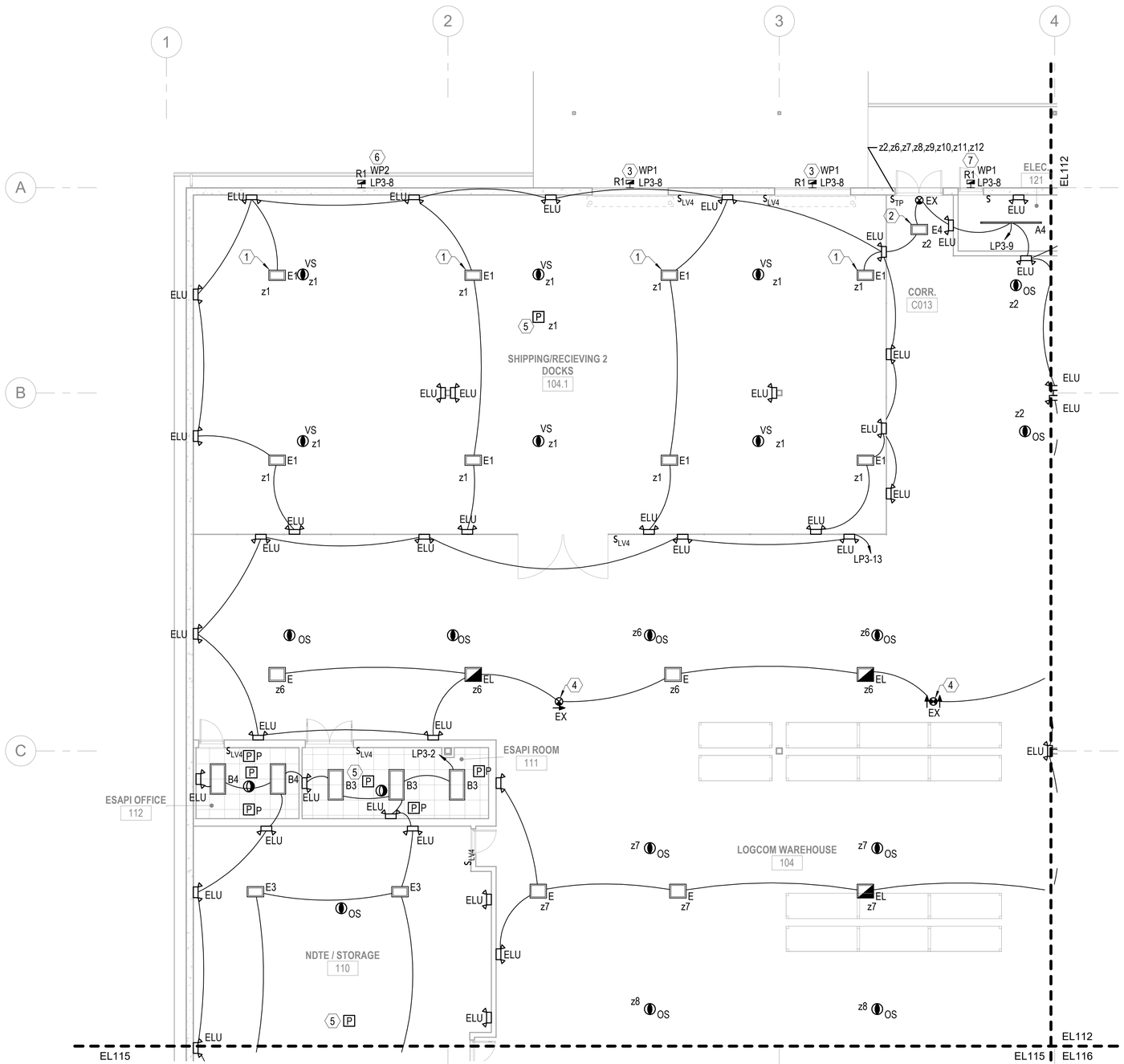

GENERAL NOTES

1. SEE SHEET E-001 FOR ELECTRICAL NOTES, SYMBOLS, AND ABBREVIATIONS.
2. SEE SHEET E-601 FOR LIGHTING FIXTURE SCHEDULE.
3. THE WIRING SHOWN ON THE LIGHTING PLANS INDICATE FIXTURES WHICH ARE ON THE SAME CIRCUIT, NOT THE ACTUAL WIRING. ADHERE TO THE SWITCH DESIGNATIONS AND LIGHTING CONTROL DIAGRAMS FOR THE ACTUAL WIRING.
4. CONNECT EXIT SIGN AND EMERGENCY LIGHTING UNITS AHEAD OF THE SWITCH/SENSOR TO THE NORMAL LIGHTING CIRCUIT THAT IS LOCATED IN THE SAME AREA/ROOM IN WHICH THOSE EXIT AND EMERGENCY LUMINAIRES ARE SERVING.
5. MECHANICAL AREA LIGHTING FIXTURES LOCATIONS AND MOUNTING HEIGHTS MUST BE FIELD COORDINATED WITH MECHANICAL PIPING AND DUCTWORK LOCATIONS.
6. PROVIDE POWER PACKS AS REQUIRED FOR PLUG LOAD RECEPTACLE CONTROL, LOCATED ABOVE ACCESSIBLE CEILING. SEE DETAILS B2 AND B4 ON SHEET E-505 FOR MORE INFORMATION.
7. PASSIVE-INFRARED (PIR) SENSOR TECHNOLOGY WILL PICK UP AIR THAT IS HOTTER OR COLDER THAN THE AMBIENT TEMPERATURE. OCCUPANCY / VACANCY SENSORS PLACED SO AIR IS NOT BLOWING ON SENSOR HOUSINGS AND CREATING FALSE TRIPS. OCCUPANCY / VACANCY SENSORS LOCATED A MINIMUM OF 6 FEET FROM ALL AIR DIFFUSERS. FIELD COORDINATE AS REQUIRED.

KEYNOTES

1. MOUNT FIXTURE AT 25'-0" AFF.
2. MOUNT FIXTURE AT 24'-6" AFF.
3. MOUNT FIXTURE AT 13'-0" ABOVE FINISHED LOADING DOCK PAVEMENT.
4. MOUNT FIXTURE AT 17'-6" AFF.
5. PROVIDE AN AUXILIARY INPUT/OUTPUT INTERFACE TO ALLOW INPUT FROM FIRE ALARM PANEL TO OVERRIDE LIGHTING CONTROLS. PROGRAM STANDALONE DEVICE SO THAT CONTROLLED LIGHTING ALONG THE PATH OF EGRESS COMES TO FULL BRIGHTNESS UPON FIRE ALARM ACTIVATION. SEE DETAIL B3 ON SHEET E-504 FOR MORE INFORMATION.
6. MOUNT FIXTURE AT 15'-0" ABOVE FINISHED LOADING DOCK PAVEMENT.
7. MOUNT FIXTURE AT 8'-0" ABOVE FINISHED LOADING DOCK PAVEMENT.

KEYPLAN

A	B	C	D
E	F	G	H

0 4' - 0" 8' - 0" 16' - 0"

SCALE: 0' - 0 1/8" = 1' - 0"

N

A1 LIGHTING - FIRST FLOOR PLAN - AREA A

SCALE: 1/8" = 1'-0" (EL110)

APPR	DATE	DESCRIPTION
SYM		

NAVFAC

COMMONWEALTH OF MASSACHUSETTS
SENOL DURUR
ELECTRICAL
No. 47946
REGISTERED
PROFESSIONAL ENGINEER

IRQ Joint Venture — W.M. Jordan Company

Michael Baker INTERNATIONAL
100 AIRSIDE DRIVE
MOON TOWNSHIP, PA 15108
A/E INFO

APPROVED

FOR COMMANDER NAVFAC

ACTIVITY
MARINE CORPS BASE
CAMP LEJEUNE

SATISFACTORY TO DATE DD/MM/YY

DES	ZAK	DRW LAK	CHK BSR
PM / DM		TOWLER / ROOT	
BRANCH HEAD		SEK	
DESIGN DIRECTOR		R.L.Stephens, Jr.	
FIRE PROTECTION		DPS	

DEPARTMENT OF THE NAVY
NAVAL FACILITIES ENGINEERING SYSTEMS COMMAND
ATLANTIC DESIGN AND CONSTRUCTION

NAVAL FACILITIES ENGINEERING SYSTEMS COMMAND ATLANTIC
NORFOLK, VA

MCB CAMP LEJEUNE
JACKSONVILLE, NC

LOGCOM CSP WAREHOUSE

LIGHTING - FIRST FLOOR PLAN - AREA A

SCALE:	AS NOTED
EPROJECT NO.:	1639600
CONSTR. CONTR. NO.	N40085-20-C-0059
NAVFAC DRAWING NO.	14111382
SHEET	356 OF 447

EL111

DRAWFORM REVISION: 25 AUGUST 2020

P1527 FINAL SUBMISSION - 11/18/2021

PLOTTED: 11/11/2021 9:19:29 AM

FILE NAME: BIM 360/AHF PACKAGE 3/P1527 LOG COM CSP-1639600-E.rvt

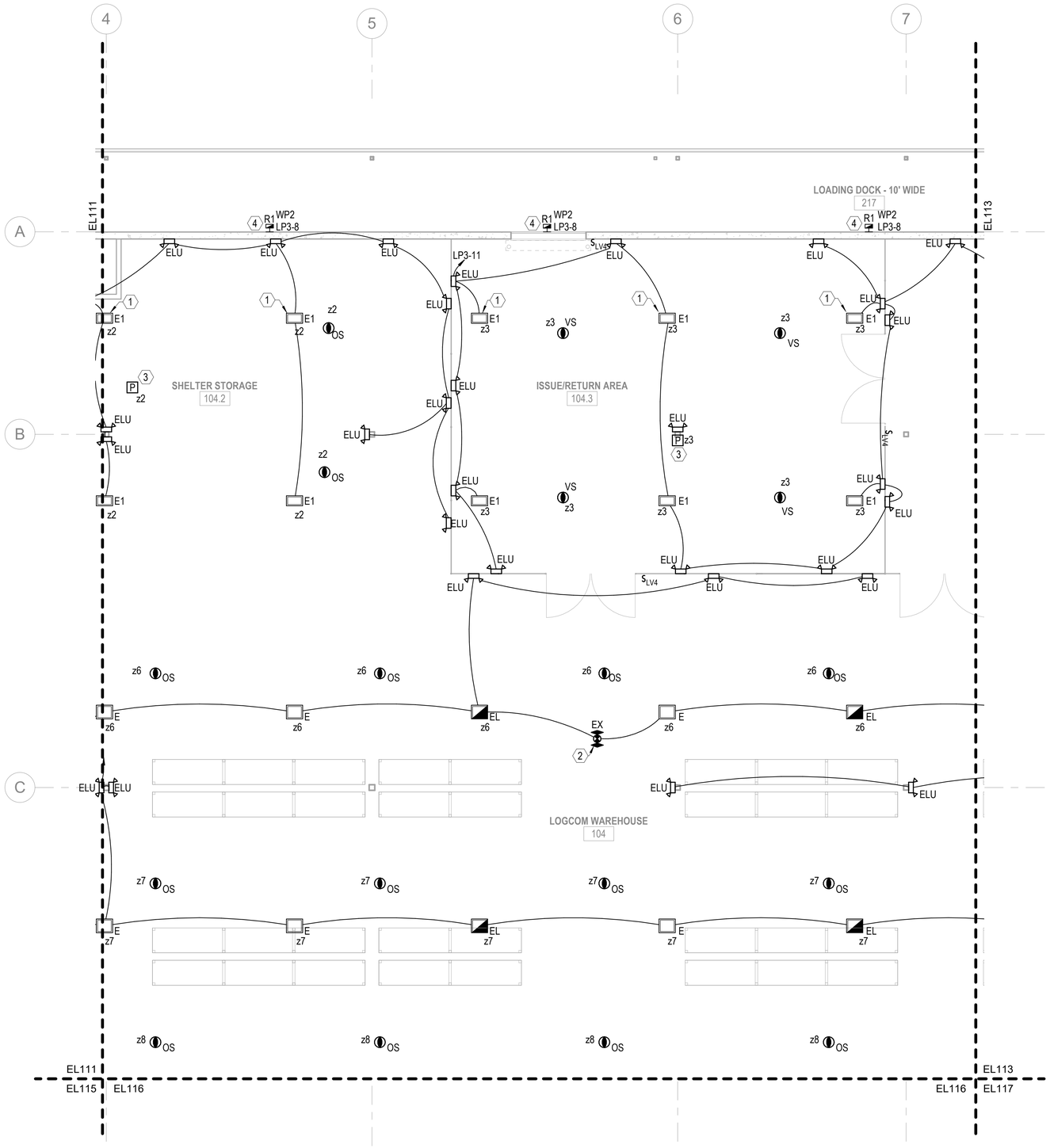

A1 LIGHTING - FIRST FLOOR PLAN - AREA B

SCALE: 1/8" = 1'-0" (EL110)

GENERAL NOTES

1. SEE SHEET E-001 FOR ELECTRICAL NOTES, SYMBOLS, AND ABBREVIATIONS.
2. SEE SHEET E-601 FOR LIGHTING FIXTURE SCHEDULE.
3. THE WIRING SHOWN ON THE LIGHTING PLANS INDICATE FIXTURES WHICH ARE ON THE SAME CIRCUIT, NOT THE ACTUAL WIRING. ADHERE TO THE SWITCH DESIGNATIONS AND LIGHTING CONTROL DIAGRAMS FOR THE ACTUAL WIRING.
4. CONNECT EXIT SIGN AND EMERGENCY LIGHTING UNITS AHEAD OF THE SWITCH/SENSOR TO THE NORMAL LIGHTING CIRCUIT THAT IS LOCATED IN THE SAME AREA/ROOM IN WHICH THOSE EXIT AND EMERGENCY LUMINAIRES ARE SERVING.
5. MECHANICAL AREA LIGHTING FIXTURES LOCATIONS AND MOUNTING HEIGHTS MUST BE FIELD COORDINATED WITH MECHANICAL PIPING AND DUCTWORK LOCATIONS.
6. PROVIDE POWER PACKS AS REQUIRED FOR PLUG LOAD RECEPTACLE CONTROL, LOCATED ABOVE ACCESSIBLE CEILING. SEE DETAILS B2 AND B4 ON SHEET E-505 FOR MORE INFORMATION.
7. PASSIVE-INFRARED (PIR) SENSOR TECHNOLOGY WILL PICK UP AIR THAT IS HOTTER OR COLDER THAN THE AMBIENT TEMPERATURE. OCCUPANCY / VACANCY SENSORS PLACED SO AIR IS NOT BLOWING ON SENSOR HOUSINGS AND CREATING FALSE TRIPS. OCCUPANCY / VACANCY SENSORS LOCATED A MINIMUM OF 6 FEET FROM ALL AIR DIFFUSERS. FIELD COORDINATE AS REQUIRED.

KEYNOTES

1. MOUNT FIXTURE AT 25'-0" AFF.
2. MOUNT FIXTURE AT 17'-6" AFF.
3. PROVIDE AN AUXILIARY INPUT/OUTPUT INTERFACE TO ALLOW INPUT FROM FIRE ALARM PANEL TO OVERRIDE LIGHTING CONTROLS. PROGRAM STANDALONE DEVICE SO THAT CONTROLLED LIGHTING ALONG THE PATH OF EGRESS COMES TO FULL BRIGHTNESS UPON FIRE ALARM ACTIVATION. SEE DETAIL B3 ON SHEET E-504 FOR MORE INFORMATION.
4. MOUNT FIXTURE AT 13'-0" ABOVE FINISHED LOADING DOCK PAVEMENT.

KEYPLAN

A	B	C	D
E	F	G	H

0 4' - 0" 8' - 0" 16' - 0"

SCALE:0' - 0 1/8" = 1' - 0"

N

NO.	DESCRIPTION	DATE	APPR

NAVFAC

COMMONWEALTH OF MASSACHUSETTS
SENOL DURUR
ELECTRICAL
No. 47946
REGISTERED
PROFESSIONAL ENGINEER

IRQ W.M. Jordan COMPANY – A JOINT VENTURE –

Michael Baker INTERNATIONAL

100 AIRSIDE DRIVE
MOON TOWNSHIP, PA 15108 A/E INFO

APPROVED

FOR COMMANDER NAVFAC

ACTIVITY
MARINE CORPS BASE
CAMP LEJEUNE

SATISFACTORY TO DATE DD/MM/YY

DES	ZAK	DRW LAK	CHK BSR
PM / DM	TOWLER / ROOT		
BRANCH HEAD	SEK		
DESIGN DIRECTOR	R.L.Stephens, Jr.		
FIRE PROTECTION	DPS		

DEPARTMENT OF THE NAVY
NAVAL FACILITIES ENGINEERING SYSTEMS COMMAND
ATLANTIC DESIGN AND CONSTRUCTION

NAVAL FACILITIES ENGINEERING SYSTEMS COMMAND ATLANTIC
NORFOLK, VA

MCB CAMP LEJEUNE
JACKSONVILLE, NC

LOGCOM CSP WAREHOUSE

LIGHTING - FIRST FLOOR PLAN - AREA B

SCALE:	AS NOTED
EPROJECT NO.:	1639600
CONSTR. CONTR. NO.	N40085-20-C-0059
NAVFAC DRAWING NO.	14111382
SHEET	357 OF 447

EL112

DRAWFORM REVISION: 25 AUGUST 2020

P1527 FINAL SUBMISSION - 11/18/2021

PLOTTED: 11/11/2021 9:19:32 AM

FILE NAME: BIM 360://HF PACKAGE 3/P1527 LOG COM CSP-1639600-E.rvt

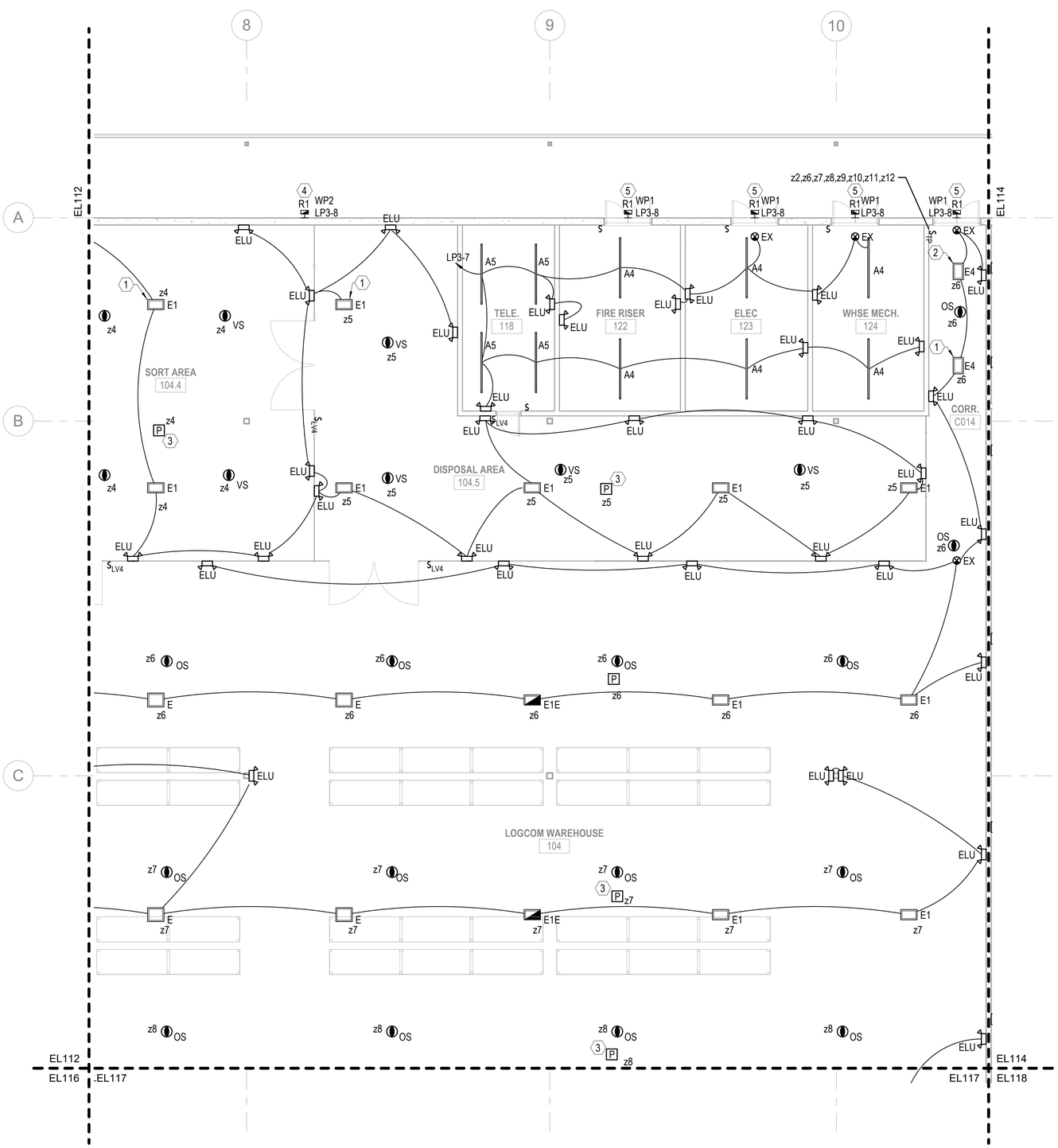

A1 LIGHTING - FIRST FLOOR PLAN - AREA C

SCALE: 1/8" = 1'-0" (EL110)

GENERAL NOTES

1. SEE SHEET E-001 FOR ELECTRICAL NOTES, SYMBOLS, AND ABBREVIATIONS.
2. SEE SHEET E-601 FOR LIGHTING FIXTURE SCHEDULE.
3. THE WIRING SHOWN ON THE LIGHTING PLANS INDICATE FIXTURES WHICH ARE ON THE SAME CIRCUIT, NOT THE ACTUAL WIRING. ADHERE TO THE SWITCH DESIGNATIONS AND LIGHTING CONTROL DIAGRAMS FOR THE ACTUAL WIRING.
4. CONNECT EXIT SIGN AND EMERGENCY LIGHTING UNITS AHEAD OF THE SWITCH/SENSOR TO THE NORMAL LIGHTING CIRCUIT THAT IS LOCATED IN THE SAME AREA/ROOM IN WHICH THOSE EXIT AND EMERGENCY LUMINAIRES ARE SERVING.
5. MECHANICAL AREA LIGHTING FIXTURES LOCATIONS AND MOUNTING HEIGHTS MUST BE FIELD COORDINATED WITH MECHANICAL PIPING AND DUCTWORK LOCATIONS.
6. PROVIDE POWER PACKS AS REQUIRED FOR PLUG LOAD RECEPTACLE CONTROL, LOCATED ABOVE ACCESSIBLE CEILING. SEE DETAILS B2 AND B4 ON SHEET E-505 FOR MORE INFORMATION.
7. PASSIVE-INFRARED (PIR) SENSOR TECHNOLOGY WILL PICK UP AIR THAT IS HOTTER OR COLDER THAN THE AMBIENT TEMPERATURE. OCCUPANCY / VACANCY SENSORS PLACED SO AIR IS NOT BLOWING ON SENSOR HOUSINGS AND CREATING FALSE TRIPS. OCCUPANCY / VACANCY SENSORS LOCATED A MINIMUM OF 6 FEET FROM ALL AIR DIFFUSERS. FIELD COORDINATE AS REQUIRED.

KEYNOTES

1. MOUNT FIXTURE AT 25'-0" AFF.
2. MOUNT FIXTURE AT 24'-9" AFF.
3. PROVIDE AN AUXILIARY INPUT/OUTPUT INTERFACE TO ALLOW INPUT FROM FIRE ALARM PANEL TO OVERRIDE LIGHTING CONTROLS. PROGRAM STANDALONE DEVICE SO THAT CONTROLLED LIGHTING ALONG THE PATH OF EGRESS COMES TO FULL BRIGHTNESS UPON FIRE ALARM ACTIVATION. SEE DETAIL B3 ON SHEET E-504 FOR MORE INFORMATION.
4. MOUNT FIXTURE AT 13'-0" ABOVE FINISHED LOADING DOCK PAVEMENT.
5. MOUNT FIXTURE AT 8'-0" ABOVE FINISHED LOADING DOCK PAVEMENT.

KEYPLAN

A	B	C	D
E	F	G	H

0 4' - 0" 8' - 0" 16' - 0"

SCALE: 0' - 0 1/8" = 1' - 0"

N

NO.	DESCRIPTION	DATE	APPR

NAVFAC

SENOL DURUR ELECTRICAL No. 47946 REGISTERED PROFESSIONAL ENGINEER COMMONWEALTH OF MASSACHUSETTS

IRQ W.M. Jordan COMPANY – A JOINT VENTURE –

Michael Baker INTERNATIONAL

100 AIRSIDE DRIVE
MOON TOWNSHIP, PA 15108 A/E INFO

APPROVED

FOR COMMANDER NAVFAC

ACTIVITY
MARINE CORPS BASE
CAMP LEJEUNE

SATISFACTORY TO DATE DD/MM/YY

DES	DRW	CHK
ZAK	LAK	BSR

PM / DM	TOWLER / ROOT
BRANCH HEAD	SEK
DESIGN DIRECTOR	R.L.Stephens, Jr.
FIRE PROTECTION	DPS

NAVAL FACILITIES ENGINEERING SYSTEMS COMMAND ATLANTIC
NORFOLK, VA

DEPARTMENT OF THE NAVY
NAVAL FACILITIES ENGINEERING SYSTEMS COMMAND ATLANTIC
ATLANTIC DESIGN AND CONSTRUCTION

MCB CAMP LEJEUNE

JACKSONVILLE, NC

LOGCOM CSP WAREHOUSE

LIGHTING - FIRST FLOOR PLAN - AREA C

SCALE:	AS NOTED
EPROJECT NO.:	1639600
CONSTR. CONTR. NO.	N40085-20-C-0059
NAVFAC DRAWING NO.	14111383
SHEET	358 OF 447

EL113

DRAWFORM REVISION: 25 AUGUST 2020

P1527 FINAL SUBMISSION - 11/18/2021

PLOTTED: 11/11/2021 9:19:35 AM

FILE NAME: BIM 360://HF PACKAGE 3/P1527 LOG COM CSP-1639600-E.rvt

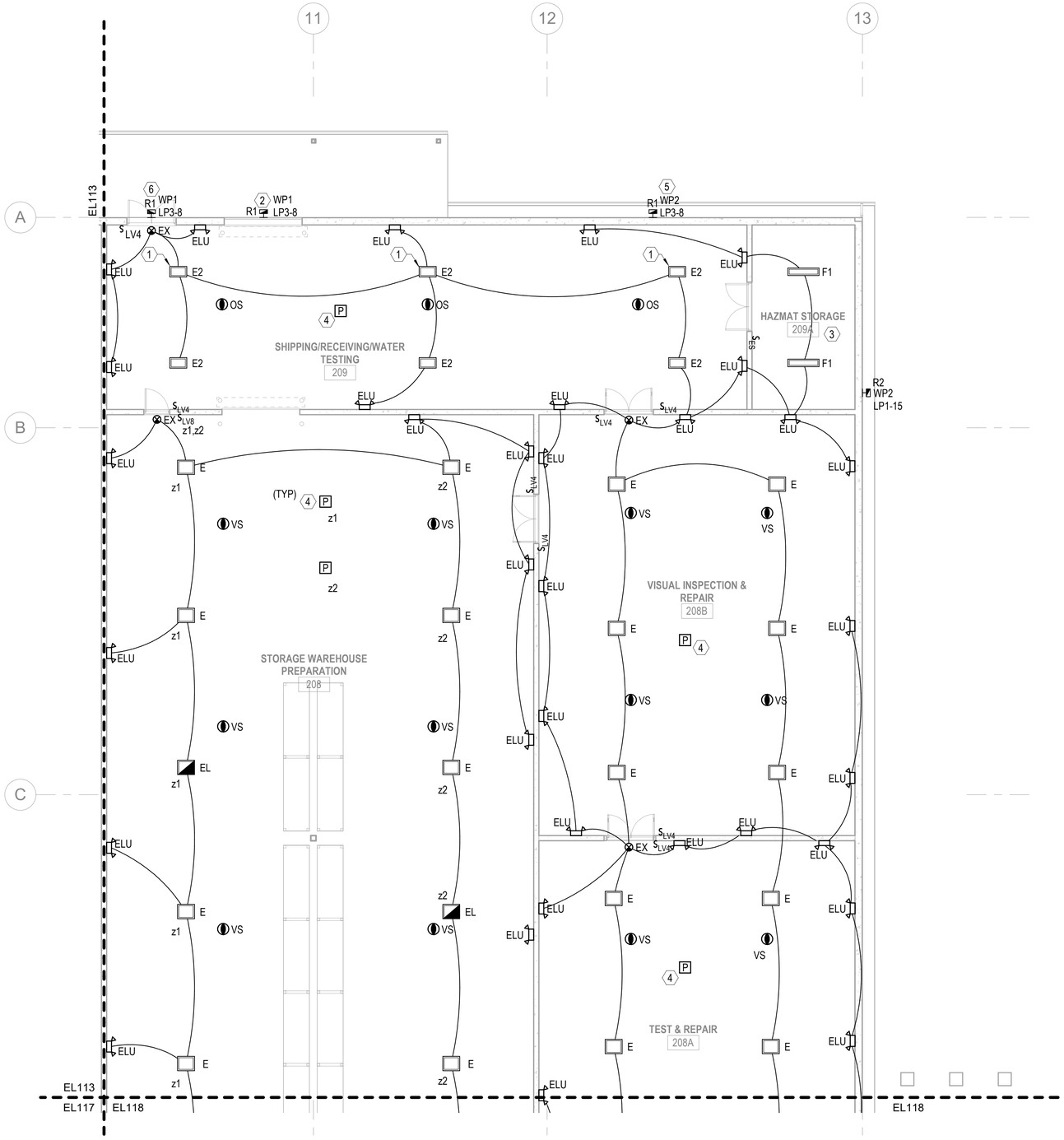

GENERAL NOTES

1. SEE SHEET E-001 FOR ELECTRICAL NOTES, SYMBOLS, AND ABBREVIATIONS.
2. SEE SHEET E-601 FOR LIGHTING FIXTURE SCHEDULE.
3. THE WIRING SHOWN ON THE LIGHTING PLANS INDICATE FIXTURES WHICH ARE ON THE SAME CIRCUIT, NOT THE ACTUAL WIRING. ADHERE TO THE SWITCH DESIGNATIONS AND LIGHTING CONTROL DIAGRAMS FOR THE ACTUAL WIRING.
4. CONNECT EXIT SIGN AND EMERGENCY LIGHTING UNITS AHEAD OF THE SWITCH/SENSOR TO THE NORMAL LIGHTING CIRCUIT THAT IS LOCATED IN THE SAME AREA/ROOM IN WHICH THOSE EXIT AND EMERGENCY LUMINAIRES ARE SERVING.
5. MECHANICAL AREA LIGHTING FIXTURES LOCATIONS AND MOUNTING HEIGHTS MUST BE FIELD COORDINATED WITH MECHANICAL PIPING AND DUCTWORK LOCATIONS.
6. PROVIDE POWER PACKS AS REQUIRED FOR PLUG LOAD RECEPTACLE CONTROL, LOCATED ABOVE ACCESSIBLE CEILING. SEE DETAILS B2 AND B4 ON SHEET E-505 FOR MORE INFORMATION.
7. PASSIVE-INFRARED (PIR) SENSOR TECHNOLOGY WILL PICK UP AIR THAT IS HOTTER OR COLDER THAN THE AMBIENT TEMPERATURE. OCCUPANCY / VACANCY SENSORS PLACED SO AIR IS NOT BLOWING ON SENSOR HOUSINGS AND CREATING FALSE TRIPS. OCCUPANCY / VACANCY SENSORS LOCATED A MINIMUM OF 6 FEET FROM ALL AIR DIFFUSERS. FIELD COORDINATE AS REQUIRED.

KEYNOTES

1. MOUNT FIXTURE AT 24'-9" AFF.
2. MOUNT FIXTURE AT 13'-0" ABOVE FINISHED LOADING DOCK PAVEMENT.
3. PROVIDE SEAL FITTINGS FOR CONDUITS ENTERING THE CLASS 1 DIV. 1 HAZARDOUS SPACE. PROVIDE EQUIPMENT SEALS WITHIN 18 INCHES OF EACH EXPLOSION PROOF ENCLOSURE (RECEPTACLES, LIGHTS, ETC.). ELECTRICAL EQUIPMENT MUST BE RATED FOR HAZARDOUS LOCATION. CONDUITS IN THE HAZARDOUS SPACE MUST BE RMC/IMC TYPE WITH THREADED FITTINGS IAW THE NEC.
4. PROVIDE AN AUXILIARY INPUT/OUTPUT INTERFACE TO ALLOW INPUT FROM FIRE ALARM PANEL TO OVERRIDE LIGHTING CONTROLS. PROGRAM STANDALONE DEVICE SO THAT CONTROLLED LIGHTING ALONG THE PATH OF EGRESS COMES TO FULL BRIGHTNESS UPON FIRE ALARM ACTIVATION. SEE DETAIL B3 ON SHEET E-504 FOR MORE INFORMATION.
5. MOUNT FIXTURE AT 15'-0" ABOVE FINISHED LOADING DOCK PAVEMENT.
6. MOUNT FIXTURE AT 8'-0" ABOVE FINISHED LOADING DOCK PAVEMENT.

KEYPLAN

A	B	C	D
E	F	G	H

0 4' - 0" 8' - 0" 16' - 0"

SCALE:0' - 0 1/8" = 1' - 0"

N

A1 LIGHTING - FIRST FLOOR PLAN - AREA D

SCALE: 1/8" = 1'-0" (EL110)

NO.	DESCRIPTION	DATE	APPR

NAVFAC

SENOL DURUR ELECTRICAL No. 47946 REGISTERED PROFESSIONAL ENGINEER COMMONWEALTH OF MASSACHUSETTS

IRQ WNM Jordan COMPANY – A JOINT VENTURE –

Michael Baker INTERNATIONAL

100 AIRSIDE DRIVE MOON TOWNSHIP, PA 15108 A/E INFO

APPROVED

FOR COMMANDER NAVFAC

ACTIVITY: MARINE CORPS BASE CAMP LEJEUNE

SATISFACTORY TO DATE DD/MM/YY

DES ZAK | DRW LAK | CHK BSR

PM / DM TOWLER / ROOT

BRANCH HEAD SEK

DESIGN DIRECTOR R.L.Stephens, Jr.

FIRE PROTECTION DPS

DEPARTMENT OF THE NAVY
NAVAL FACILITIES ENGINEERING SYSTEMS COMMAND
ATLANTIC DESIGN AND CONSTRUCTION
NAVAL FACILITIES ENGINEERING SYSTEMS COMMAND ATLANTIC NORFOLK, VA
MCB CAMP LEJEUNE
JACKSONVILLE, NC
LOGCOM CSP WAREHOUSE
LIGHTING - FIRST FLOOR PLAN - AREA D

SCALE: AS NOTED

EPROJECT NO.: 1639600

CONSTR. CONTR. NO. N40085-20-C-0059

NAVFAC DRAWING NO. 14111385

SHEET 359 OF 447

EL114

DRAWFORM REVISION: 25 AUGUST 2020

P1527 FINAL SUBMISSION - 11/18/2021

PLOTTED: 11/11/2021 9:19:39 AM

FILE NAME: BIM 360://HF PACKAGE 3/P1527 LOG COM CSP-1639600-E.rvt

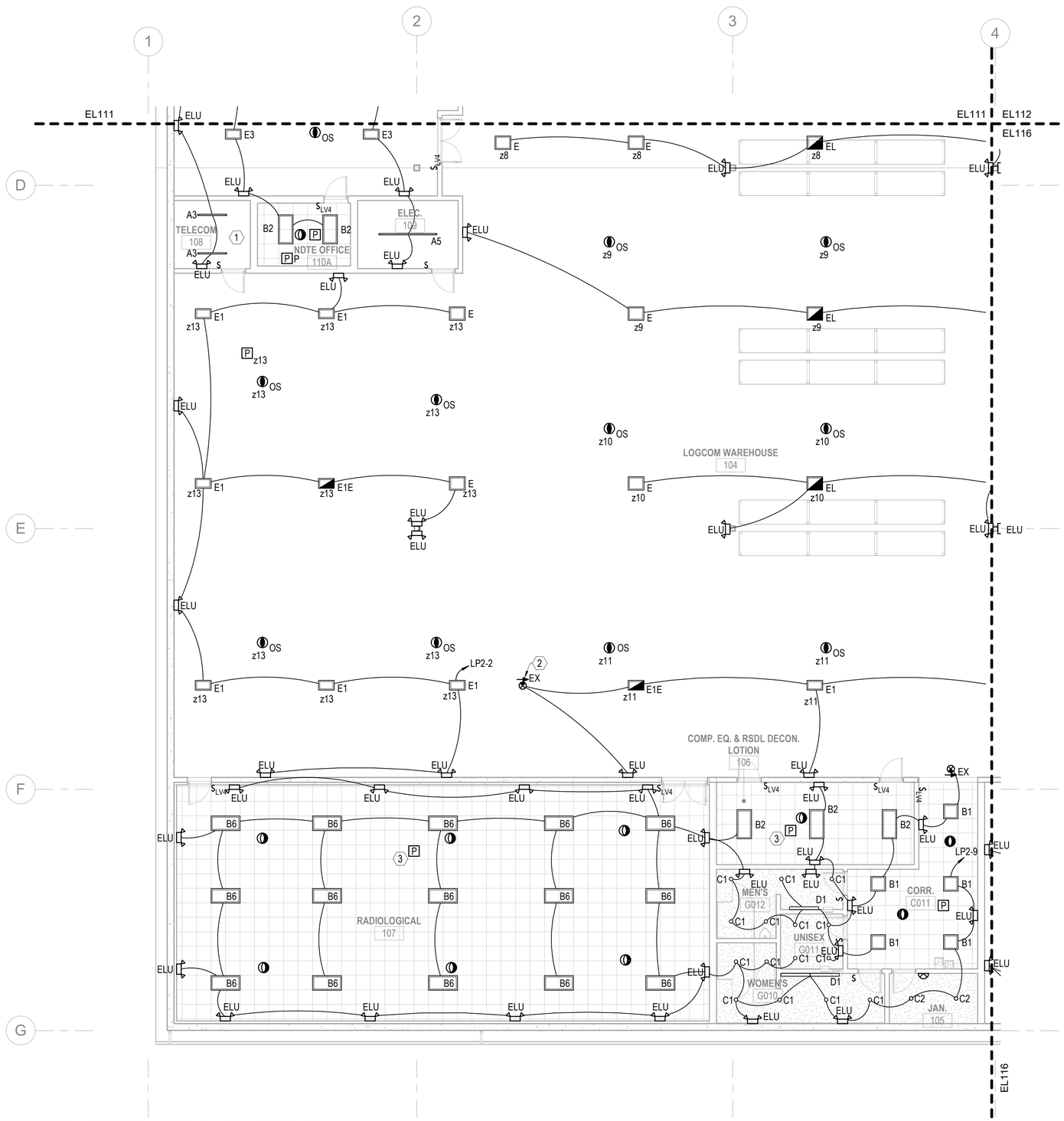

A1 LIGHTING - FIRST FLOOR PLAN - AREA E

SCALE: 1/8" = 1'-0" (EL110)

GENERAL NOTES

1. SEE SHEET E-001 FOR ELECTRICAL NOTES, SYMBOLS, AND ABBREVIATIONS.
2. SEE SHEET E-601 FOR LIGHTING FIXTURE SCHEDULE.
3. THE WIRING SHOWN ON THE LIGHTING PLANS INDICATE FIXTURES WHICH ARE ON THE SAME CIRCUIT, NOT THE ACTUAL WIRING. ADHERE TO THE SWITCH DESIGNATIONS AND LIGHTING CONTROL DIAGRAMS FOR THE ACTUAL WIRING.
4. CONNECT EXIT SIGN AND EMERGENCY LIGHTING UNITS AHEAD OF THE SWITCH/SENSOR TO THE NORMAL LIGHTING CIRCUIT THAT IS LOCATED IN THE SAME AREA/ROOM IN WHICH THOSE EXIT AND EMERGENCY LUMINAIRES ARE SERVING.
5. MECHANICAL AREA LIGHTING FIXTURES LOCATIONS AND MOUNTING HEIGHTS MUST BE FIELD COORDINATED WITH MECHANICAL PIPING AND DUCTWORK LOCATIONS.
6. PROVIDE POWER PACKS AS REQUIRED FOR PLUG LOAD RECEPTACLE CONTROL, LOCATED ABOVE ACCESSIBLE CEILING. SEE DETAILS B2 AND B4 ON SHEET E-505 FOR MORE INFORMATION.
7. PASSIVE-INFRARED (PIR) SENSOR TECHNOLOGY WILL PICK UP AIR THAT IS HOTTER OR COLDER THAN THE AMBIENT TEMPERATURE. OCCUPANCY / VACANCY SENSORS PLACED SO AIR IS NOT BLOWING ON SENSOR HOUSINGS AND CREATING FALSE TRIPS. OCCUPANCY / VACANCY SENSORS LOCATED A MINIMUM OF 6 FEET FROM ALL AIR DIFFUSERS. FIELD COORDINATE AS REQUIRED.

KEYNOTES

1. MOUNT FIXTURE AT 10'-0" AFF.
2. MOUNT FIXTURE AT 17'-6" AFF.
3. PROVIDE AN AUXILIARY INPUT/OUTPUT INTERFACE TO ALLOW INPUT FROM FIRE ALARM PANEL TO OVERRIDE LIGHTING CONTROLS. PROGRAM STANDALONE DEVICE SO THAT CONTROLLED LIGHTING ALONG THE PATH OF EGRESS COMES TO FULL BRIGHTNESS UPON FIRE ALARM ACTIVATION. SEE DETAIL B3 ON SHEET E-504 FOR MORE INFORMATION.

KEYPLAN

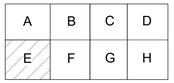

0 4' - 0" 8' - 0" 16' - 0"

SCALE:0' - 0 1/8" = 1' - 0"

N

NUM	DESCRIPTION	DATE	APPR

NAVFAC

SENOL DURUR ELECTRICAL No. 47946 REGISTERED PROFESSIONAL ENGINEER COMMONWEALTH OF MASSACHUSETTS

IRQ W.M. Jordan COMPANY – A JOINT VENTURE –

Michael Baker INTERNATIONAL

100 AIRSIDE DRIVE
MOON TOWNSHIP, PA 15108 A/E INFO

APPROVED

FOR COMMANDER NAVFAC

ACTIVITY
MARINE CORPS BASE
CAMP LEJEUNE

SATISFACTORY TO DATE DD/MM/YY

DES	DRW	CHK
ZAK	LAK	BSR

PM / DM	TOWLER / ROOT
BRANCH HEAD	SEK
DESIGN DIRECTOR	R.L.Stephens, Jr.
FIRE PROTECTION	DPS

DEPARTMENT OF THE NAVY
NAVAL FACILITIES ENGINEERING SYSTEMS COMMAND
ATLANTIC DESIGN AND CONSTRUCTION
MCB CAMP LEJEUNE

NAVAL FACILITIES ENGINEERING SYSTEMS COMMAND ATLANTIC
NORFOLK, VA

JACKSONVILLE, NC
LOGCOM CSP WAREHOUSE

LIGHTING - FIRST FLOOR PLAN - AREA E

SCALE:	AS NOTED
EPROJECT NO.:	1639600
CONSTR. CONTR. NO.	N40085-20-C-0059
NAVFAC DRAWING NO.	14111386
SHEET	360 OF 447

EL115

DRAWFORM REVISION: 25 AUGUST 2020

P1527 FINAL SUBMISSION - 11/18/2021

PLOTTED: 11/11/2021 9:19:42 AM

FILE NAME: BIM 360://HF PACKAGE 3/P1527 LOG COM CSP-1639600-E.rvt

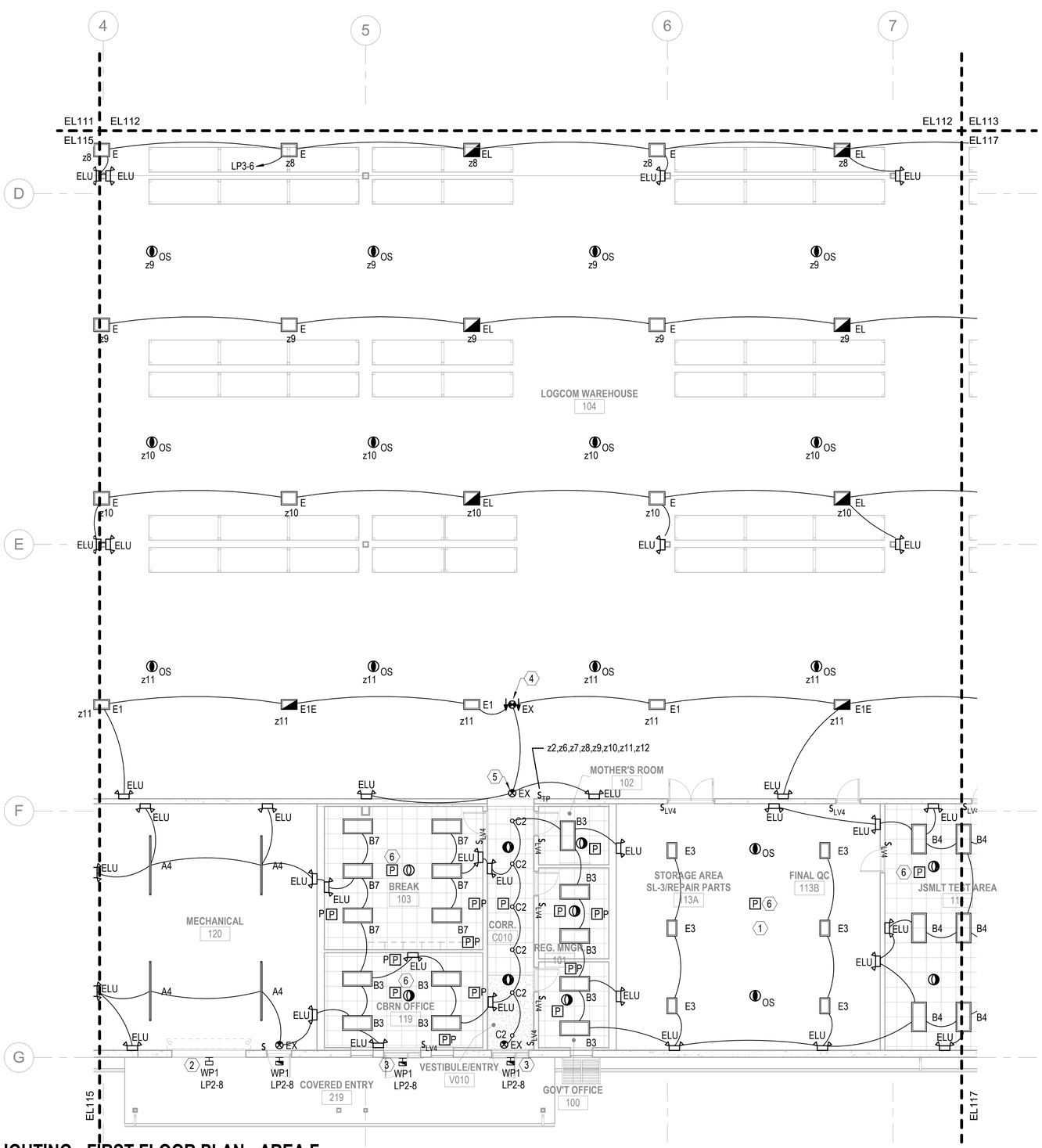

A1 LIGHTING - FIRST FLOOR PLAN - AREA F

SCALE: 1/8" = 1'-0" (EL110)

GENERAL NOTES

1. SEE SHEET E-001 FOR ELECTRICAL NOTES, SYMBOLS, AND ABBREVIATIONS.
2. SEE SHEET E-601 FOR LIGHTING FIXTURE SCHEDULE.
3. THE WIRING SHOWN ON THE LIGHTING PLANS INDICATE FIXTURES WHICH ARE ON THE SAME CIRCUIT, NOT THE ACTUAL WIRING. ADHERE TO THE SWITCH DESIGNATIONS AND LIGHTING CONTROL DIAGRAMS FOR THE ACTUAL WIRING.
4. CONNECT EXIT SIGN AND EMERGENCY LIGHTING UNITS AHEAD OF THE SWITCH/SENSOR TO THE NORMAL LIGHTING CIRCUIT THAT IS LOCATED IN THE SAME AREA/ROOM IN WHICH THOSE EXIT AND EMERGENCY LUMINAIRES ARE SERVING.
5. MECHANICAL AREA LIGHTING FIXTURES LOCATIONS AND MOUNTING HEIGHTS MUST BE FIELD COORDINATED WITH MECHANICAL PIPING AND DUCTWORK LOCATIONS.
6. PROVIDE POWER PACKS AS REQUIRED FOR PLUG LOAD RECEPTACLE CONTROL, LOCATED ABOVE ACCESSIBLE CEILING. SEE DETAILS B2 AND B4 ON SHEET E-505 FOR MORE INFORMATION.
7. PASSIVE-INFRARED (PIR) SENSOR TECHNOLOGY WILL PICK UP AIR THAT IS HOTTER OR COLDER THAN THE AMBIENT TEMPERATURE. OCCUPANCY / VACANCY SENSORS PLACED SO AIR IS NOT BLOWING ON SENSOR HOUSINGS AND CREATING FALSE TRIPS. OCCUPANCY / VACANCY SENSORS LOCATED A MINIMUM OF 6 FEET FROM ALL AIR DIFFUSERS. FIELD COORDINATE AS REQUIRED.

KEYNOTES

1. MOUNT FIXTURE AT 25'-0" AFF.
2. MOUNT FIXTURE AT 12'-6" AFG.
3. MOUNT FIXTURE AT 10'-0" AFG.
4. MOUNT FIXTURE AT 17'-6" AFF.
5. MOUNT FIXTURE AT 10'-0" AFF.
6. PROVIDE AN AUXILIARY INPUT/OUTPUT INTERFACE TO ALLOW INPUT FROM FIRE ALARM PANEL TO OVERRIDE LIGHTING CONTROLS. PROGRAM STANDALONE DEVICE SO THAT CONTROLLED LIGHTING ALONG THE PATH OF EGRESS COMES TO FULL BRIGHTNESS UPON FIRE ALARM ACTIVATION. SEE DETAIL B3 ON SHEET E-504 FOR MORE INFORMATION.

KEYPLAN

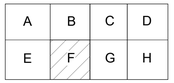

0 4' - 0" 8' - 0" 16' - 0"

SCALE: 0' - 0 1/8" = 1' - 0"

SYM	DESCRIPTION	DATE	APPR

NAVFAC

COMMONWEALTH OF MASSACHUSETTS
SENOL DURUR
ELECTRICAL
No. 47946
REGISTERED PROFESSIONAL ENGINEER

RQ W.M. Jordan COMPANY
- A JOINT VENTURE -

Michael Baker INTERNATIONAL
100 AIRSIDE DRIVE
MOON TOWNSHIP, PA 15108
A/E INFO

APPROVED

FOR COMMANDER NAVFAC

ACTIVITY
MARINE CORPS BASE
CAMP LEJEUNE

SATISFACTORY TO DATE DD/MM/YY
DES ZAK DRW LAK CHK BSR
PM / DM TOWLER / ROOT
BRANCH HEAD SEK
DESIGN DIRECTOR R.L.Stephens, Jr.
FIRE PROTECTION DPS

DEPARTMENT OF THE NAVY
NAVAL FACILITIES ENGINEERING SYSTEMS COMMAND
NAVAL FACILITIES ENGINEERING SYSTEMS COMMAND ATLANTIC
ATLANTIC DESIGN AND CONSTRUCTION
NORFOLK, VA
MCB CAMP LEJEUNE
JACKSONVILLE, NC

LOGCOM CSP WAREHOUSE

LIGHTING - FIRST FLOOR PLAN - AREA F

SCALE: AS NOTED
EPROJECT NO.: 1639600
CONSTR. CONTR. NO. N40085-20-C-0059
NAVFAC DRAWING NO. 14111387
SHEET 361 OF 447

EL116

DRAWFORM REVISION: 25 AUGUST 2020

P1527 FINAL SUBMISSION - 11/18/2021

FILE NAME: BIM 360://HF PACKAGE 3/P1527 LOG COM CSP-1639600-E.rvt
PLOTTED: 11/11/2021 9:19:46 AM

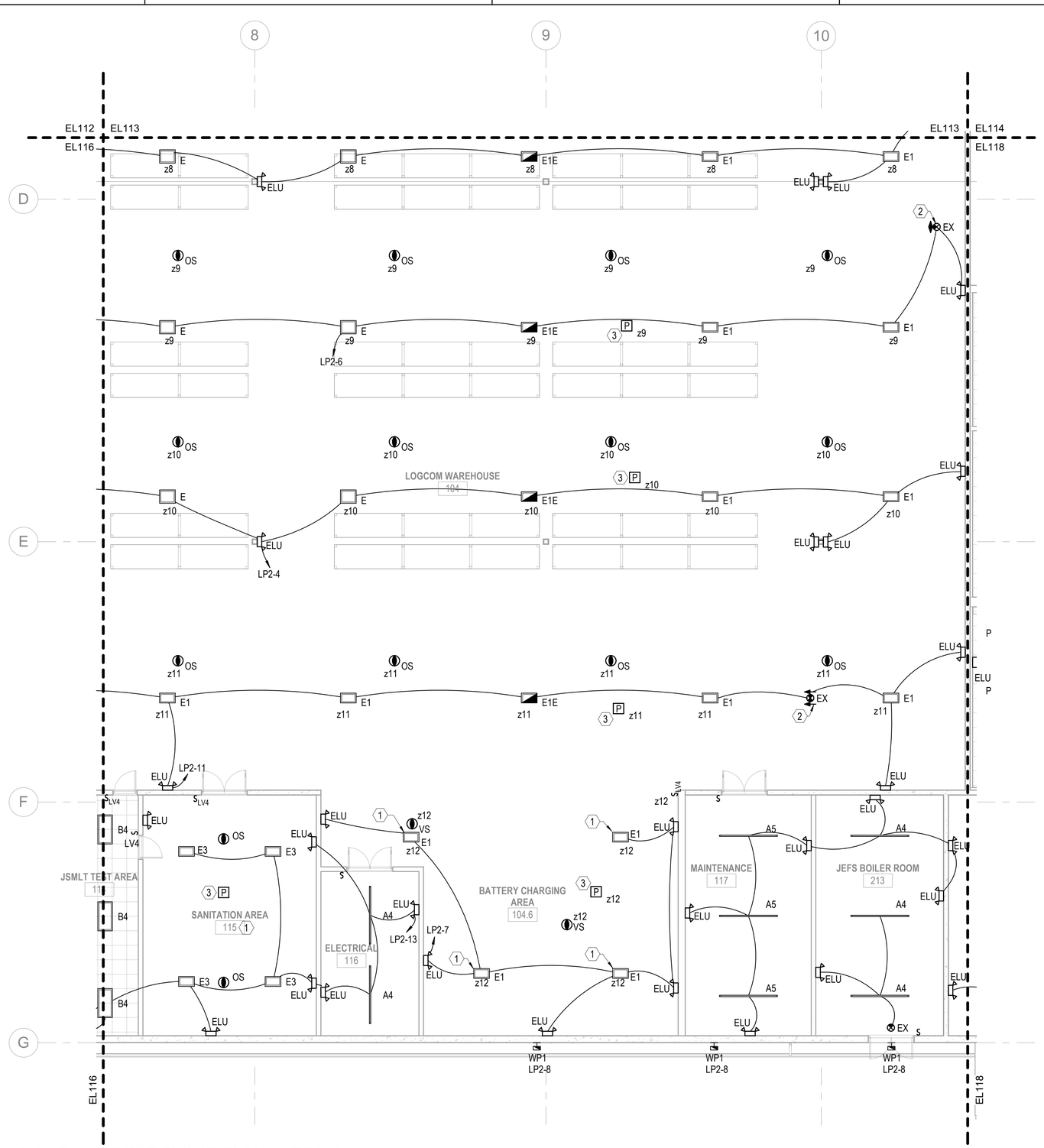

A1 LIGHTING - FIRST FLOOR PLAN - AREA G

SCALE: 1/8" = 1'-0" (EL110)

GENERAL NOTES

1. SEE SHEET E-001 FOR ELECTRICAL NOTES, SYMBOLS, AND ABBREVIATIONS.
2. SEE SHEET E-601 FOR LIGHTING FIXTURE SCHEDULE.
3. THE WIRING SHOWN ON THE LIGHTING PLANS INDICATE FIXTURES WHICH ARE ON THE SAME CIRCUIT, NOT THE ACTUAL WIRING. ADHERE TO THE SWITCH DESIGNATIONS AND LIGHTING CONTROL DIAGRAMS FOR THE ACTUAL WIRING.
4. CONNECT EXIT SIGN AND EMERGENCY LIGHTING UNITS AHEAD OF THE SWITCH/SENSOR TO THE NORMAL LIGHTING CIRCUIT THAT IS LOCATED IN THE SAME AREA/ROOM IN WHICH THOSE EXIT AND EMERGENCY LUMINAIRES ARE SERVING.
5. MECHANICAL AREA LIGHTING FIXTURES LOCATIONS AND MOUNTING HEIGHTS MUST BE FIELD COORDINATED WITH MECHANICAL PIPING AND DUCTWORK LOCATIONS.
6. PROVIDE POWER PACKS AS REQUIRED FOR PLUG LOAD RECEPTACLE CONTROL, LOCATED ABOVE ACCESSIBLE CEILING. SEE DETAILS B2 AND B4 ON SHEET E-505 FOR MORE INFORMATION.
7. PASSIVE-INFRARED (PIR) SENSOR TECHNOLOGY WILL PICK UP AIR THAT IS HOTTER OR COLDER THAN THE AMBIENT TEMPERATURE. OCCUPANCY / VACANCY SENSORS PLACED SO AIR IS NOT BLOWING ON SENSOR HOUSINGS AND CREATING FALSE TRIPS. OCCUPANCY / VACANCY SENSORS LOCATED A MINIMUM OF 6 FEET FROM ALL AIR DIFFUSERS. FIELD COORDINATE AS REQUIRED.

KEYNOTES

1. MOUNT FIXTURE AT 25'-0" AFF.
2. MOUNT FIXTURE AT 17'-6" AFF.
3. PROVIDE AN AUXILIARY INPUT/OUTPUT INTERFACE TO ALLOW INPUT FROM FIRE ALARM PANEL TO OVERRIDE LIGHTING CONTROLS. PROGRAM STANDALONE DEVICE SO THAT CONTROLLED LIGHTING ALONG THE PATH OF EGRESS COMES TO FULL BRIGHTNESS UPON FIRE ALARM ACTIVATION. SEE DETAIL B3 ON SHEET E-504 FOR MORE INFORMATION.

KEYPLAN

A	B	C	D
E	F	G	H

0 4' - 0" 8' - 0" 16' - 0"

SCALE:0' - 0 1/8" = 1' - 0"

N

NO.	DESCRIPTION	DATE	APPR

NAVFAC

SENOL DURUR ELECTRICAL No. 47946 REGISTERED PROFESSIONAL ENGINEER COMMONWEALTH OF MASSACHUSETTS

IRQ WM Jordan COMPANY – A JOINT VENTURE –

Michael Baker INTERNATIONAL

100 AIRSIDE DRIVE MOON TOWNSHIP, PA 15108 A/E INFO

APPROVED

FOR COMMANDER NAVFAC

ACTIVITY
MARINE CORPS BASE CAMP LEJEUNE

SATISFACTORY TO DATE DD/MM/YY

DES ZAK	DRW LAK	CHK BSR
PM / DM	TOWLER / ROOT	
BRANCH HEAD	SEK	
DESIGN DIRECTOR	R.L.Stephens, Jr.	
FIRE PROTECTION	DPS	

DEPARTMENT OF THE NAVY
NAVAL FACILITIES ENGINEERING SYSTEMS COMMAND
ATLANTIC DESIGN AND CONSTRUCTION
MCB CAMP LEJEUNE

NAVAL FACILITIES ENGINEERING SYSTEMS COMMAND ATLANTIC
NORFOLK, VA
JACKSONVILLE, NC
LOGCOM CSP WAREHOUSE

LIGHTING - FIRST FLOOR PLAN - AREA G

SCALE: AS NOTED

EPROJECT NO.: 1639600

CONSTR. CONTR. NO. N40085-20-C-0059

NAVFAC DRAWING NO. 14111388

SHEET 362 OF 447

EL117

DRAWFORM REVISION: 25 AUGUST 2020

P1527 FINAL SUBMISSION - 11/18/2021

PLOTTED: 11/11/2021 9:19:49 AM

FILE NAME: BIM 360://HF PACKAGE 3/P1527 LOG COM CSP-1639600-E.rvt

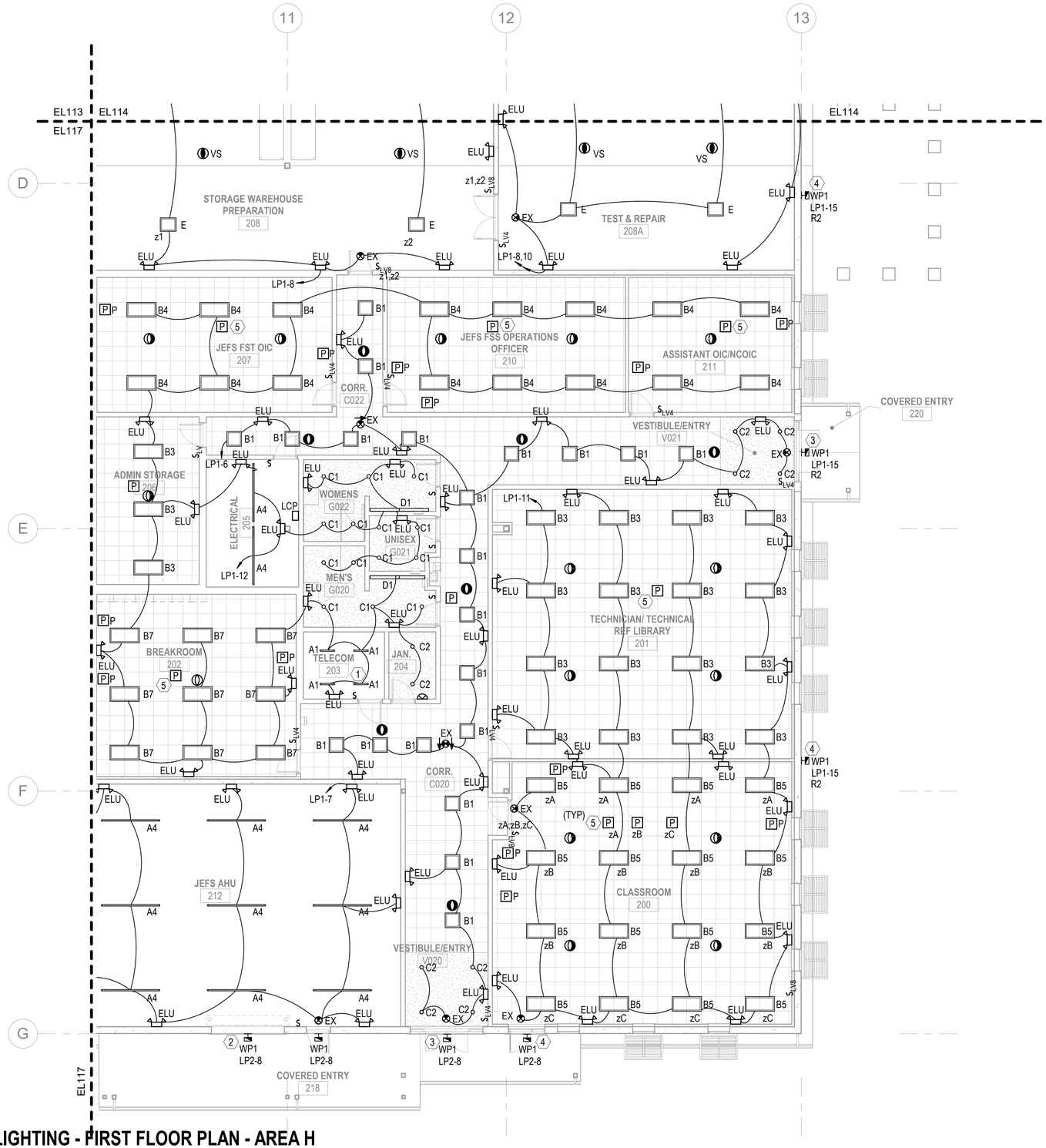

A1 LIGHTING - FIRST FLOOR PLAN - AREA H

SCALE: 1/8" = 1'-0" (EL110)

GENERAL NOTES

1. SEE SHEET E-001 FOR ELECTRICAL NOTES, SYMBOLS, AND ABBREVIATIONS.
2. SEE SHEET E-601 FOR LIGHTING FIXTURE SCHEDULE.
3. THE WIRING SHOWN ON THE LIGHTING PLANS INDICATE FIXTURES WHICH ARE ON THE SAME CIRCUIT, NOT THE ACTUAL WIRING. ADHERE TO THE SWITCH DESIGNATIONS AND LIGHTING CONTROL DIAGRAMS FOR THE ACTUAL WIRING.
4. CONNECT EXIT SIGN AND EMERGENCY LIGHTING UNITS AHEAD OF THE SWITCH/SENSOR TO THE NORMAL LIGHTING CIRCUIT THAT IS LOCATED IN THE SAME AREA/ROOM IN WHICH THOSE EXIT AND EMERGENCY LUMINAIRES ARE SERVING.
5. MECHANICAL AREA LIGHTING FIXTURES LOCATIONS AND MOUNTING HEIGHTS MUST BE FIELD COORDINATED WITH MECHANICAL PIPING AND DUCTWORK LOCATIONS.
6. PROVIDE POWER PACKS AS REQUIRED FOR PLUG LOAD RECEPTACLE CONTROL, LOCATED ABOVE ACCESSIBLE CEILING. SEE DETAILS B2 AND B4 ON SHEET E-505 FOR MORE INFORMATION.
7. PASSIVE-INFRARED (PIR) SENSOR TECHNOLOGY WILL PICK UP AIR THAT IS HOTTER OR COLDER THAN THE AMBIENT TEMPERATURE. OCCUPANCY / VACANCY SENSORS PLACED SO AIR IS NOT BLOWING ON SENSOR HOUSINGS AND CREATING FALSE TRIPS. OCCUPANCY / VACANCY SENSORS LOCATED A MINIMUM OF 6 FEET FROM ALL AIR DIFFUSERS. FIELD COORDINATE AS REQUIRED.

KEYNOTES

1. MOUNT FIXTURE AT 10'-0" AFF.
2. MOUNT FIXTURE AT 12'-6" AFG.
3. MOUNT FIXTURE AT 11'-0" AFG.
4. MOUNT FIXTURE AT 10'-0" AFF.
5. PROVIDE AN AUXILIARY INPUT/OUTPUT INTERFACE TO ALLOW INPUT FROM FIRE ALARM PANEL TO OVERRIDE LIGHTING CONTROLS. PROGRAM STANDALONE DEVICE SO THAT CONTROLLED LIGHTING ALONG THE PATH OF EGRESS COMES TO FULL BRIGHTNESS UPON FIRE ALARM ACTIVATION. SEE DETAIL B3 ON SHEET E-504 FOR MORE INFORMATION.

KEYPLAN

A	B	C	D
E	F	G	H

0 4' - 0" 8' - 0" 16' - 0"

SCALE:0' - 0 1/8" = 1' - 0"

N

NO.	DESCRIPTION	DATE	APPR.

NAVFAC

COMMONWEALTH OF MASSACHUSETTS
SENOL DURUR
ELECTRICAL
No. 47946
REGISTERED
PROFESSIONAL ENGINEER

IRQ WM Jordan COMPANY – A JOINT VENTURE –

Michael Baker INTERNATIONAL
100 AIRSIDE DRIVE
MOON TOWNSHIP, PA 15108
A/E INFO

APPROVED

FOR COMMANDER NAVFAC

ACTIVITY
MARINE CORPS BASE
CAMP LEJEUNE

SATISFACTORY TO DATE DD/MM/YY

DES	DRW	CHK
ZAK	LAK	BSR

PM / DM TOWLER / ROOT
BRANCH HEAD SEK
DESIGN DIRECTOR R.L.Stephens, Jr.
FIRE PROTECTION DPS

DEPARTMENT OF THE NAVY
NAVAL FACILITIES ENGINEERING SYSTEMS COMMAND ATLANTIC
ATLANTIC DESIGN AND CONSTRUCTION
MCB CAMP LEJEUNE

NAVAL FACILITIES ENGINEERING SYSTEMS COMMAND ATLANTIC
NORFOLK, VA
JACKSONVILLE, NC
LOGCOM CSP WAREHOUSE

LIGHTING - FIRST FLOOR PLAN - AREA H

SCALE: AS NOTED
EPROJECT NO.: 1639600
CONSTR. CONTR. NO. N40085-20-C-0059
NAVFAC DRAWING NO. 14111389
SHEET 363 OF 447

EL118

DRAWFORM REVISION: 25 AUGUST 2020

P1527 FINAL SUBMISSION - 11/18/2021

PLOTTED: 11/11/2021 9:19:54 AM

FILE NAME: BIM 360://HF PACKAGE 3/P1527 LOG COM CSP-1639600-E.rvt

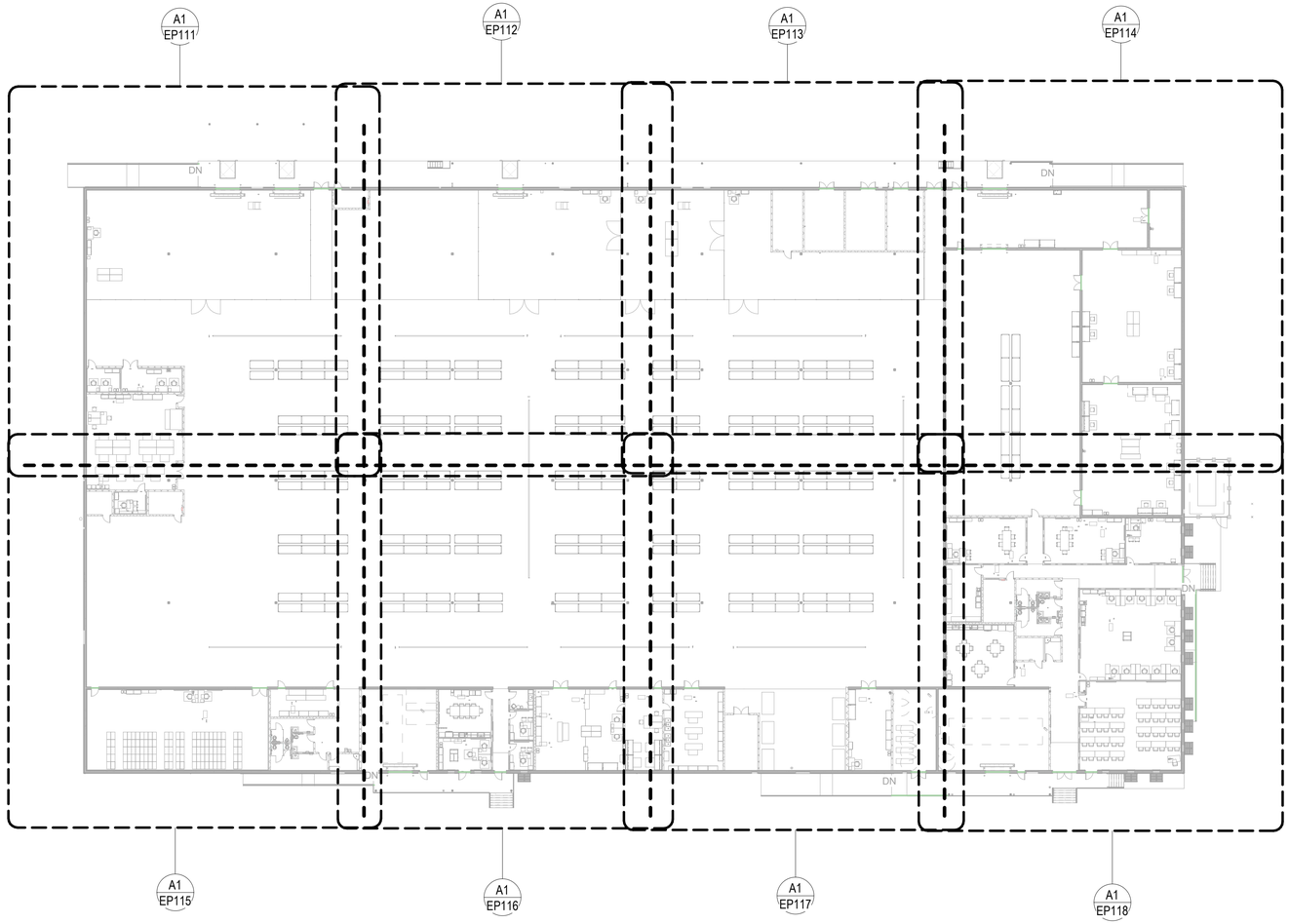

POWER - OVERALL FLOOR PLAN

SCALE: 1" = 30'-0"

GENERAL NOTES

1. SEE SHEET E-001 FOR ELECTRICAL NOTES, SYMBOLS, AND ABBREVIATIONS.
2. ALL JUNCTION BOX LOCATIONS ARE APPROXIMATE. FINAL LOCATIONS BASED ON EQUIPMENT AND FURNITURE FINAL LOCATIONS.
3. RECEPTACLE CONTROL PLUG LOAD POWER PACKS ARE INDICATED ON DRAWINGS EL111-EL118 WITH LIGHTING POWER PACKS. POWER PACKS LOCATED ABOVE ACCESSIBLE CEILING. COORDINATE WITH DETAILS B2 AND B4 ON SHEET E-505.

KEYPLAN

A	B	C	D
E	F	G	H

0 15' - 0" 30' - 0" 60' - 0"

SCALE: 0' - 1" = 30' - 0"

N

NO.	DESCRIPTION	DATE	APPR

SENOL DURUR ELECTRICAL No. 47946 REGISTERED PROFESSIONAL ENGINEER COMMONWEALTH OF MASSACHUSETTS

IRQ W.M. Jordan COMPANY – A JOINT VENTURE –

Michael Baker INTERNATIONAL

100 AIRSIDE DRIVE
MOON TOWNSHIP, PA 15108 A/E INFO

APPROVED

FOR COMMANDER NAVFAC

ACTIVITY
MARINE CORPS BASE
CAMP LEJEUNE

SATISFACTORY TO DATE DD/MM/YY

DES ZAK	DRW LAK	CHK BSR
PM / DM	TOWLER / ROOT	
BRANCH HEAD	SEK	
DESIGN DIRECTOR	R.L.Stephens, Jr.	
FIRE PROTECTION	DPS	

DEPARTMENT OF THE NAVY
NAVAL FACILITIES ENGINEERING SYSTEMS COMMAND
ATLANTIC DESIGN AND CONSTRUCTION
MCB CAMP LEJEUNE

NAVAL FACILITIES ENGINEERING SYSTEMS COMMAND ATLANTIC
NORFOLK, VA

JACKSONVILLE, NC
LOGCOM CSP WAREHOUSE

POWER - OVERALL FLOOR PLAN

SCALE:	AS NOTED
EPROJECT NO.:	1639600
CONSTR. CONTR. NO.	N40085-20-C-0059
NAVFAC DRAWING NO.	14111390
SHEET	364 OF 447

EP110

DRAWFORM REVISION: 25 AUGUST 2020

P1527 FINAL SUBMISSION - 11/18/2021

PLOTTED: 11/11/2021 9:19:57 AM

FILE NAME: BIM 360://HF PACKAGE 3/P1527 LOG COM CSP-1639600-E.rvt

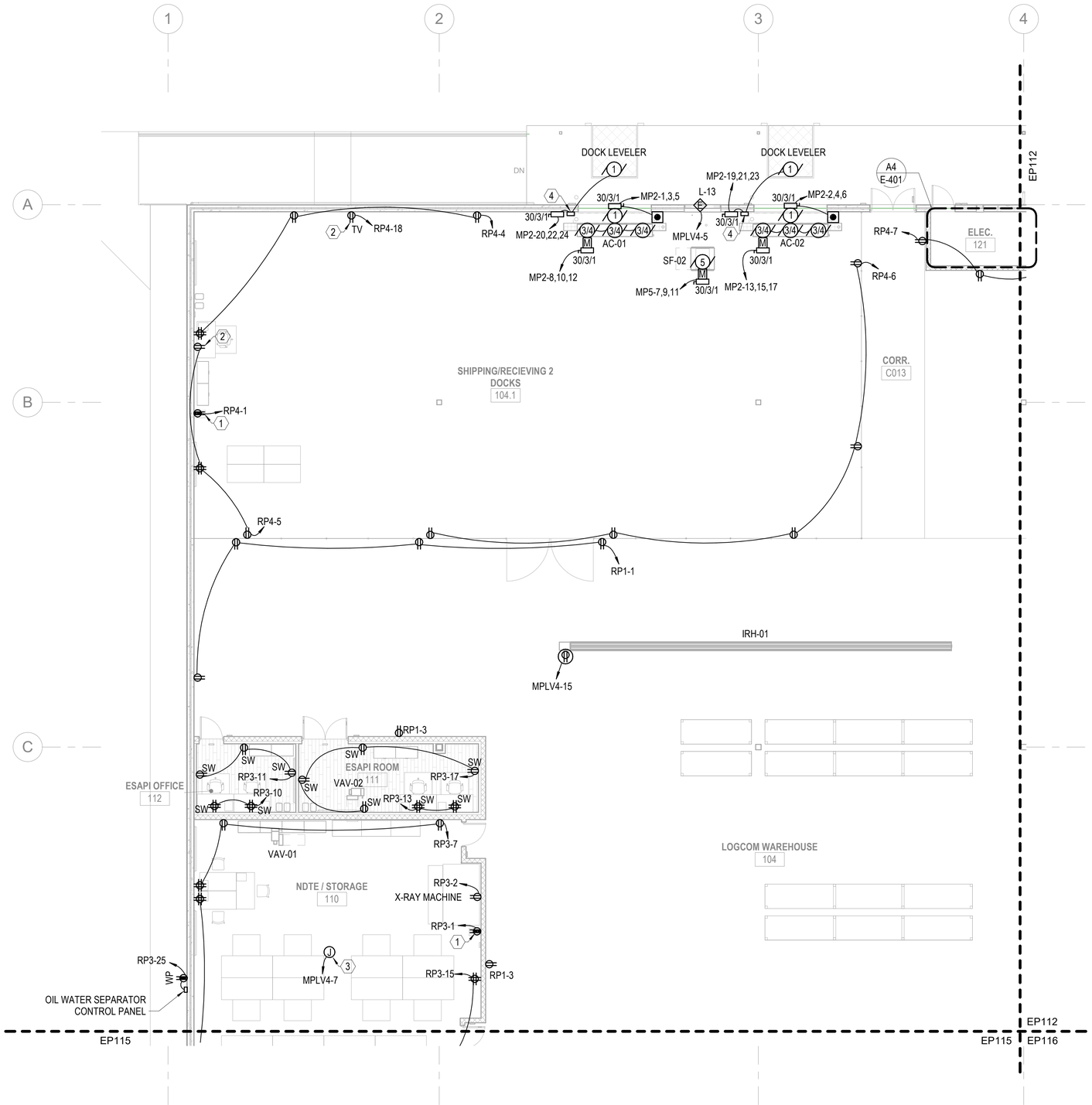

A1 POWER - FIRST FLOOR PLAN - AREA A

SCALE: 1/8" = 1'-0" (EP110)

GENERAL NOTES

1. SEE SHEET E-001 FOR ELECTRICAL NOTES, SYMBOLS, AND ABBREVIATIONS.
2. ALL JUNCTION BOX LOCATIONS ARE APPROXIMATE. FINAL LOCATIONS BASED ON EQUIPMENT AND FURNITURE FINAL LOCATIONS.
3. RECEPTACLE CONTROL PLUG LOAD POWER PACKS ARE INDICATED ON DRAWINGS EL111-EL118 WITH LIGHTING POWER PACKS. POWER PACKS LOCATED ABOVE ACCESSIBLE CEILING. COORDINATE WITH DETAILS B2 AND B4 ON SHEET E-505.

KEYNOTES

1. DEDICATED RECEPTACLE FOR ELECTRIC WATER COOLER. COORDINATE MOUNTING HEIGHT AND INSTALLATION WITH MANUFACTURER'S RECOMMENDATIONS.
2. AV RECESSED DUPLEX RECEPTACLE. COORDINATE MOUNTING HEIGHT AND INSTALLATION WITH AV INSTALLATION.
3. 120V ELECTRICAL CONNECTION FOR VAV BOX 120-24V CONTROL TRANSFORMER. TERMINATE CONDUCTORS ON THE LINE SIDE OF THE TRANSFORMER. 120V POWER BY ELECTRICAL CONTRACTOR. 24V LOW VOLTAGE WIRING FROM THE TRANSFORMER TO THE VAV IS BY OTHERS. COORDINATE WITH MECHANICAL INSTALLATION.
4. NEMA 4X CONTROL BOX FOR DOCK LEVELERS.

KEYPLAN

A	B	C	D
E	F	G	H

0 4' - 0" 8' - 0" 16' - 0"

SCALE: 0' - 0 1/8" = 1' - 0"

N

NO.	DESCRIPTION	DATE	APPR

NAVFAC

SENOL DURUR ELECTRICAL No. 47946 REGISTERED PROFESSIONAL ENGINEER COMMONWEALTH OF MASSACHUSETTS

IRQ W.M. Jordan COMPANY – A JOINT VENTURE –

Michael Baker INTERNATIONAL

100 AIRSIDE DRIVE
MOON TOWNSHIP, PA 15108

A/E INFO

APPROVED

FOR COMMANDER NAVFAC

ACTIVITY
MARINE CORPS BASE
CAMP LEJEUNE

SATISFACTORY TO DATE DD/MM/YY

DES	DRW	CHK
ZAK	LAK	BSR

PM / DM TOWLER / ROOT

BRANCH HEAD SEK

DESIGN DIRECTOR R.L.Stephens, Jr.

FIRE PROTECTION DPS

DEPARTMENT OF THE NAVY
NAVAL FACILITIES ENGINEERING SYSTEMS COMMAND
ATLANTIC DESIGN AND CONSTRUCTION

NAVAL FACILITIES ENGINEERING SYSTEMS COMMAND ATLANTIC
NORFOLK, VA

MCB CAMP LEJEUNE
JACKSONVILLE, NC

LOGCOM CSP WAREHOUSE

POWER - FIRST FLOOR PLAN - AREA A

SCALE: AS NOTED

EPROJECT NO.: 1639600

CONSTR. CONTR. NO. N40085-20-C-0059

NAVFAC DRAWING NO. 14111391

SHEET 365 OF 447

EP111

DRAWFORM REVISION: 25 AUGUST 2020

P1527 FINAL SUBMISSION - 11/18/2021

PLOTTED: 11/11/2021 9:20:00 AM

FILE NAME: BIM 360://HF PACKAGE 3/P1527 LOG COM CSP--1639600-E.rvt

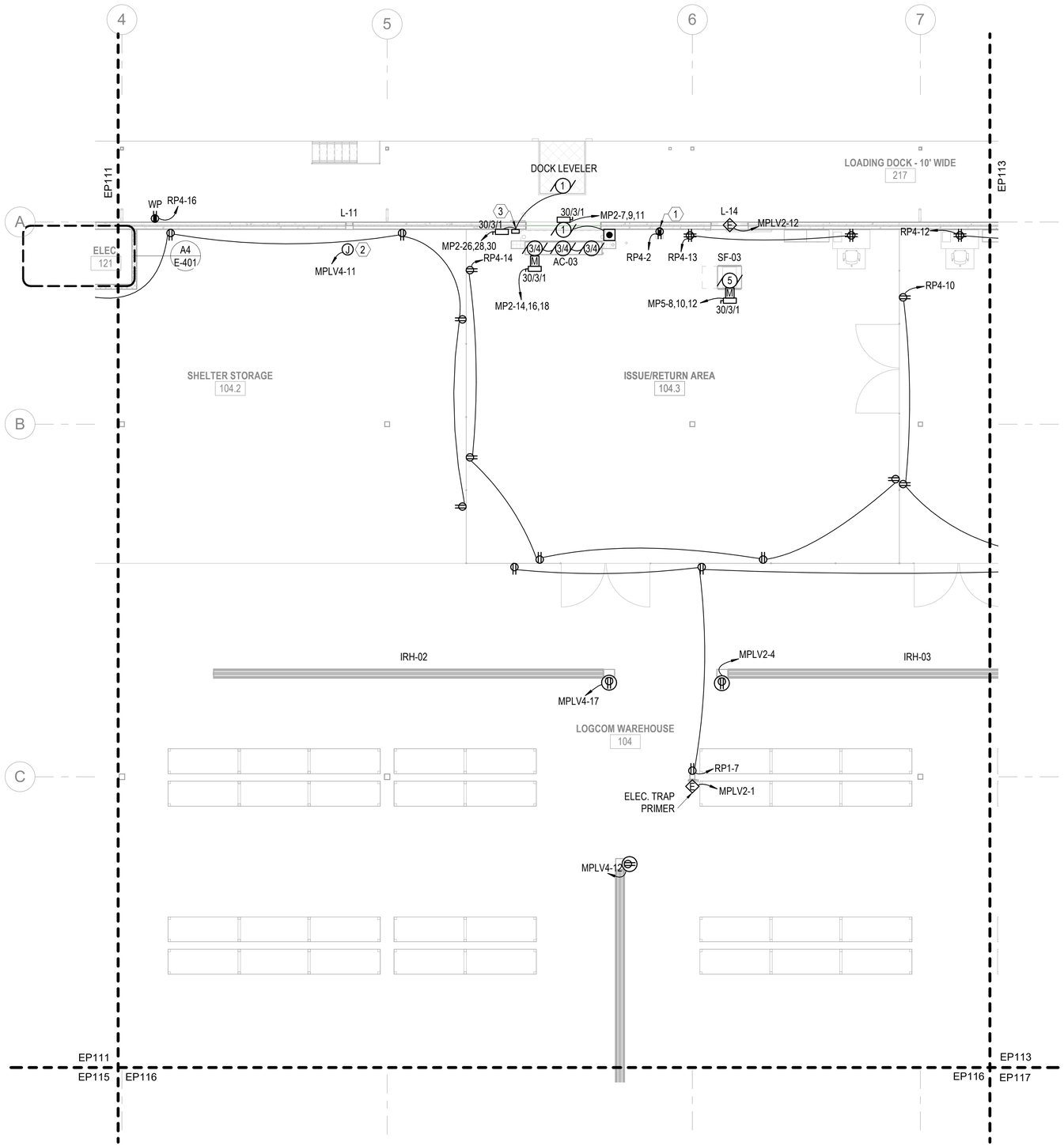

A1 POWER - FIRST FLOOR PLAN - AREA B

SCALE: 1/8" = 1'-0" (EP110)

GENERAL NOTES

1. SEE SHEET E-001 FOR ELECTRICAL NOTES, SYMBOLS, AND ABBREVIATIONS.
2. ALL JUNCTION BOX LOCATIONS ARE APPROXIMATE. FINAL LOCATIONS BASED ON EQUIPMENT AND FURNITURE FINAL LOCATIONS.
3. RECEPTACLE CONTROL PLUG LOAD POWER PACKS ARE INDICATED ON DRAWINGS EL111-EL118 WITH LIGHTING POWER PACKS. POWER PACKS LOCATED ABOVE ACCESSIBLE CEILING. COORDINATE WITH DETAILS B2 AND B4 ON SHEET E-505.

KEYNOTES

1. RECEPTACLE FOR ELECTRIC WATER COOLER. COORDINATE MOUNTING HEIGHT AND INSTALLATION WITH MANUFACTURER'S RECOMMENDATIONS.
2. CEILING MOUNTED JUNCTION BOX FOR POWER TO LOUVER TRANSFORMER. 120V POWER MUST BE PROVIDED BY THE EC TO EACH TRANSFORMER. LOW VOLTAGE WIRING FROM THE TRANSFORMER TO THE LOUVER IS BY OTHERS. COORDINATE LOCATION AND QUANTITY WITH MECHANICAL INSTALLATION.
3. NEMA 4X CONTROL BOX FOR DOCK LEVELERS.

KEYPLAN

A	B	C	D
E	F	G	H

0 4' - 0" 8' - 0" 16' - 0"

SCALE:0' - 0 1/8" = 1' - 0"

MARK	DESCRIPTION	DATE	APPR

SENOL DURUR ELECTRICAL No. 47946 REGISTERED PROFESSIONAL ENGINEER COMMONWEALTH OF MASSACHUSETTS

IRQ W.M. Jordan COMPANY – A JOINT VENTURE –

Michael Baker INTERNATIONAL

100 AIRSIDE DRIVE
MOON TOWNSHIP, PA 15108 A/E INFO

APPROVED

FOR COMMANDER NAVFAC

ACTIVITY
MARINE CORPS BASE
CAMP LEJEUNE

SATISFACTORY TO DATE DD/MM/YY

DES	DRW	CHK
ZAK	LAK	BSR

PM / DM	TOWLER / ROOT
BRANCH HEAD	SEK
DESIGN DIRECTOR	R.L.Stephens, Jr.
FIRE PROTECTION	DPS

DEPARTMENT OF THE NAVY
NAVAL FACILITIES ENGINEERING SYSTEMS COMMAND
ATLANTIC DESIGN AND CONSTRUCTION
MCB CAMP LEJEUNE

NAVAL FACILITIES ENGINEERING SYSTEMS COMMAND ATLANTIC
NORFOLK, VA
JACKSONVILLE, NC
LOGCOM CSP WAREHOUSE

POWER - FIRST FLOOR PLAN - AREA B

SCALE: AS NOTED
EPROJECT NO.: 1639600
CONSTR. CONTR. NO. N40085-20-C-0059
NAVFAC DRAWING NO. 14111392
SHEET 366 OF 447

EP112

DRAWFORM REVISION: 25 AUGUST 2020

P1527 FINAL SUBMISSION - 11/18/2021

PLOTTED: 11/11/2021 9:20:03 AM

FILE NAME: BIM 360/IHF PACKAGE 3/P1527 LOG COM CSP-1639600-E.rvt

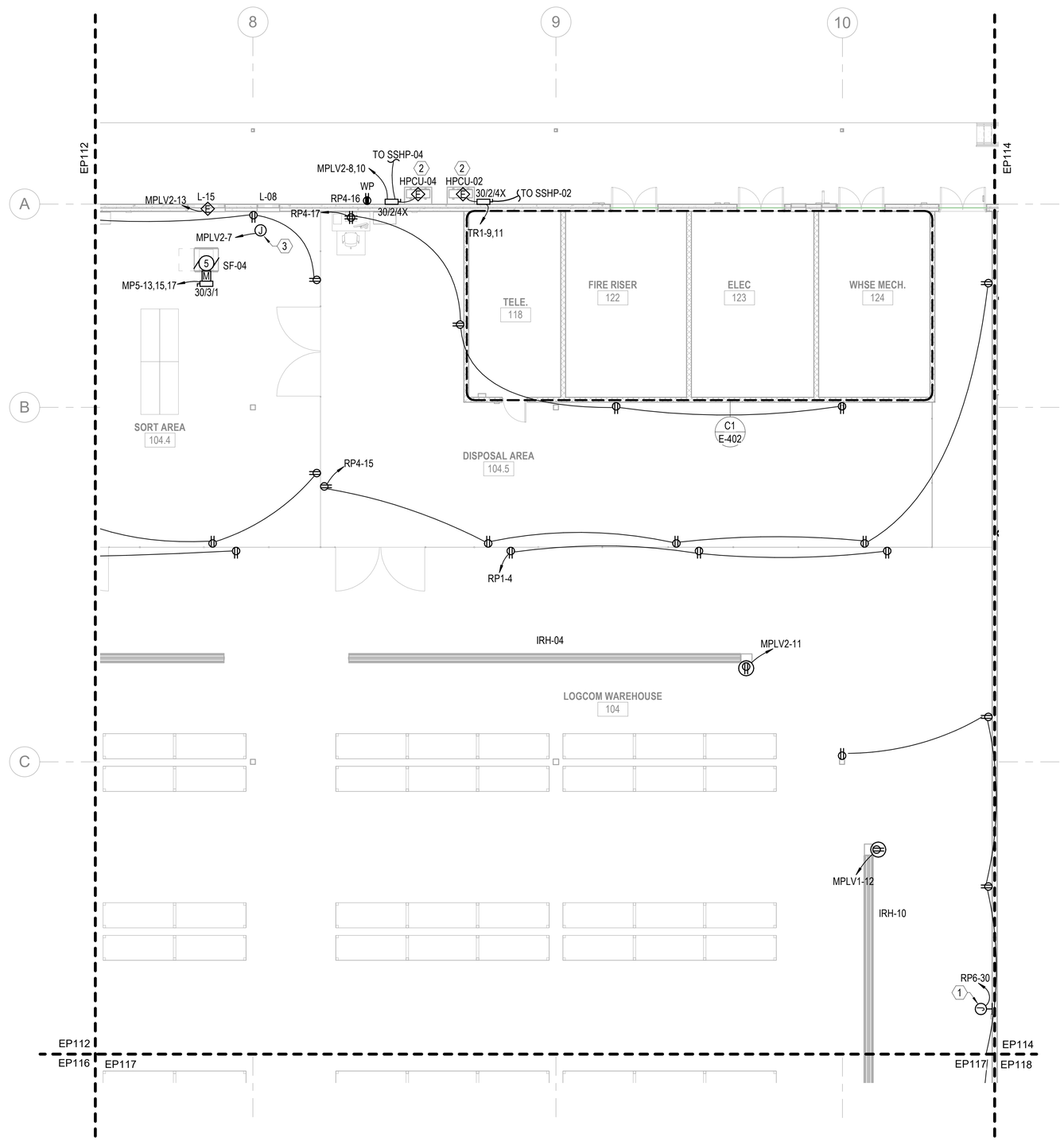

A1 POWER - FIRST FLOOR PLAN - AREA C

SCALE: 1/8" = 1'-0" (EP110)

GENERAL NOTES

1. SEE SHEET E-001 FOR ELECTRICAL NOTES, SYMBOLS, AND ABBREVIATIONS.
2. ALL JUNCTION BOX LOCATIONS ARE APPROXIMATE. FINAL LOCATIONS BASED ON EQUIPMENT AND FURNITURE FINAL LOCATIONS.
3. RECEPTACLE CONTROL PLUG LOAD POWER PACKS ARE INDICATED ON DRAWINGS EL111-EL118 WITH LIGHTING POWER PACKS. POWER PACKS LOCATED ABOVE ACCESSIBLE CEILING. COORDINATE WITH DETAILS B2 AND B4 ON SHEET E-505.

KEYNOTES

1. JUNCTION BOX FOR EMERGENCY EYE WASH STATION. COORDINATE MOUNTING HEIGHT AND INSTALLATION WITH MANUFACTURER'S RECOMMENDATIONS.
2. INDOOR UNIT POWERED BY OUTDOOR UNIT. CONTROL WIRING BETWEEN INDOOR AND OUTDOOR UNITS BY MECHANICAL CONTRACTOR. CONDUIT AND POWER WIRING BETWEEN INDOOR AND OUTDOOR UNITS BY ELECTRICAL CONTRACTOR. SEE MECH. SCHEDULES FOR ADDITIONAL INFORMATION.
3. CEILING MOUNTED JUNCTION BOX FOR POWER TO LOUVER TRANSFORMER. 120V POWER MUST BE PROVIDED BY THE EC TO EACH TRANSFORMER. LOW VOLTAGE WIRING FROM THE TRANSFORMER TO THE LOUVER IS BY OTHERS. COORDINATE LOCATION AND QUANTITY WITH MECHANICAL INSTALLATION.

KEYPLAN

A	B	C	D
E	F	G	H

0 4' - 0" 8' - 0" 16' - 0"

SCALE: 0' - 0 1/8" = 1' - 0"

NO.	DESCRIPTION	DATE	APPR

NAVFAC

SENOL DURUR ELECTRICAL No. 47946 REGISTERED PROFESSIONAL ENGINEER
COMMONWEALTH OF MASSACHUSETTS

IRQ W.M. Jordan COMPANY – A JOINT VENTURE –

Michael Baker INTERNATIONAL
100 AIRSIDE DRIVE
MOON TOWNSHIP, PA 15108
A/E INFO

APPROVED
FOR COMMANDER NAVFAC

ACTIVITY
MARINE CORPS BASE
CAMP LEJEUNE

SATISFACTORY TO DATE	DD/MM/YY		
DES ZAK	DRW LAK	CHK BSR	
PM / DM	TOWLER / ROOT		
BRANCH HEAD	SEK		
DESIGN DIRECTOR	R.L.Stephens, Jr.		
FIRE PROTECTION	DPS		

DEPARTMENT OF THE NAVY
NAVAL FACILITIES ENGINEERING SYSTEMS COMMAND
ATLANTIC DESIGN AND CONSTRUCTION
NAVAL FACILITIES ENGINEERING SYSTEMS COMMAND ATLANTIC
NORFOLK, VA
MCB CAMP LEJEUNE
JACKSONVILLE, NC
LOGCOM CSP WAREHOUSE
POWER - FIRST FLOOR PLAN - AREA C

SCALE:	AS NOTED
EPROJECT NO.:	1639600
CONSTR. CONTR. NO.	N40085-20-C-0059
NAVFAC DRAWING NO.	14111393
SHEET	367 OF 447

EP113

DRAWFORM REVISION: 25 AUGUST 2020

P1527 FINAL SUBMISSION - 11/18/2021

PLOTTED: 11/11/2021 9:20:07 AM

FILE NAME: BIM 360://HF PACKAGE 3/P1527 LOG COM CSP--1639600-E.rvt

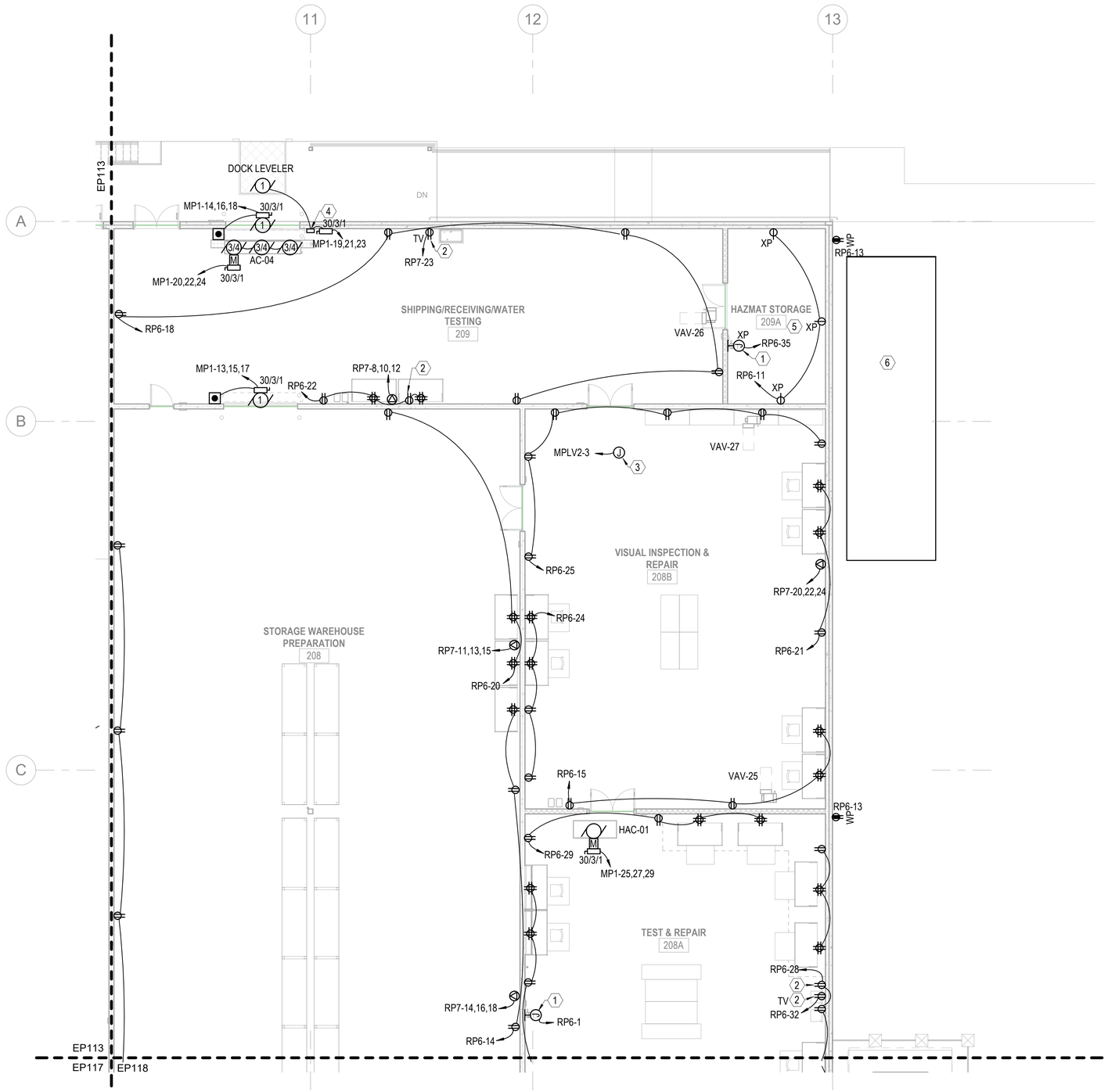

A1 POWER - FIRST FLOOR PLAN - AREA D

SCALE: 1/8" = 1'-0" (EP110)

GENERAL NOTES

1. SEE SHEET E-001 FOR ELECTRICAL NOTES, SYMBOLS, AND ABBREVIATIONS.
2. ALL JUNCTION BOX LOCATIONS ARE APPROXIMATE. FINAL LOCATIONS BASED ON EQUIPMENT AND FURNITURE FINAL LOCATIONS.
3. RECEPTACLE CONTROL PLUG LOAD POWER PACKS ARE INDICATED ON DRAWINGS EL111-EL118 WITH LIGHTING POWER PACKS. POWER PACKS LOCATED ABOVE ACCESSIBLE CEILING. COORDINATE WITH DETAILS B2 AND B4 ON SHEET E-505.

KEYNOTES

1. JUNCTION BOX FOR EMERGENCY EYE WASH STATION. COORDINATE MOUNTING HEIGHT AND INSTALLATION WITH MANUFACTURER'S RECOMMENDATIONS.
2. AV RECESSED DUPLEX RECEPTACLE. COORDINATE MOUNTING HEIGHT AND INSTALLATION WITH AV INSTALLATION.
3. 120V ELECTRICAL CONNECTION FOR VAV BOX 120-24V CONTROL TRANSFORMER. TERMINATE CONDUCTORS ON THE LINE SIDE OF THE TRANSFORMER. 120V POWER BY ELECTRICAL CONTRACTOR. 24V LOW VOLTAGE WIRING FROM THE TRANSFORMER TO THE VAV IS BY OTHERS. COORDINATE WITH MECHANICAL INSTALLATION.
4. NEMA 4X CONTROL BOX FOR DOCK LEVELERS.
5. PROVIDE SEAL FITTINGS FOR CONDUITS ENTERING THE CLASS 1 DIV. 1 HAZARDOUS SPACE. PROVIDE EQUIPMENT SEALS WITHIN 18 INCHES OF EACH EXPLOSION PROOF ENCLOSURE (RECEPTACLES, LIGHTS, ETC.). ELECTRICAL EQUIPMENT MUST BE RATED FOR HAZARDOUS LOCATION. CONDUITS IN THE HAZARDOUS SPACE MUST BE RMC/IMC TYPE WITH THREADED FITTINGS IAW THE NEC.
6. GENERATOR PAD SIZE MUST BE COORDINATED WITH THE ACTUAL GENERATOR ENCLOSURE. EXTEND CONCRETE PAD MINIMUM 8 INCHES AROUND THE GENERATOR ENCLOSURE. THE MINIMUM GENERATOR ENCLOSURE DISTANCE FROM THE BUILDING MUST BE 5'.

LEGEND

XP — 2-GANG EXPLOSION PROOF RECEPTACLE, 20A, 120V, MTG. HEIGHT: 18" AFF.

KEYPLAN

A	B	C	D
E	F	G	H

0 4' - 0" 8' - 0" 16' - 0"

SCALE: 0' - 0 1/8" = 1' - 0"

N

NO.	DESCRIPTION	DATE	APPR

NAVFAC

SENOL DURUR ELECTRICAL No. 47946 REGISTERED PROFESSIONAL ENGINEER COMMONWEALTH OF MASSACHUSETTS

IRQ Jordan COMPANY – A JOINT VENTURE –

Michael Baker INTERNATIONAL

100 AIRSIDE DRIVE MOON TOWNSHIP, PA 15108 A/E INFO

APPROVED

FOR COMMANDER NAVFAC

ACTIVITY
MARINE CORPS BASE CAMP LEJEUNE

SATISFACTORY TO DATE DD/MM/YY

DES ZAK DRW LAK CHK BSR

PM / DM TOWLER / ROOT

BRANCH HEAD SEK

DESIGN DIRECTOR R.L.Stephens, Jr.

FIRE PROTECTION DPS

NAVAL FACILITIES ENGINEERING SYSTEMS COMMAND ATLANTIC NORFOLK, VA

DEPARTMENT OF THE NAVY
NAVAL FACILITIES ENGINEERING SYSTEMS COMMAND
ATLANTIC DESIGN AND CONSTRUCTION

MCB CAMP LEJEUNE

LOGCOM CSP WAREHOUSE

JACKSONVILLE, NC

POWER - FIRST FLOOR PLAN - AREA D

SCALE: AS NOTED

EPROJECT NO.: 1639600

CONSTR. CONTR. NO. N40085-20-C-0059

NAVFAC DRAWING NO. 14111394

SHEET 368 OF 447

EP114

DRAWFORM REVISION: 25 AUGUST 2020

P1527 FINAL SUBMISSION - 11/18/2021

PLOTTED: 11/11/2021 9:20:10 AM

FILE NAME: BIM 360://AIF PACKAGE 3/P1527 LOG COM CSP-1639600-E.rvt

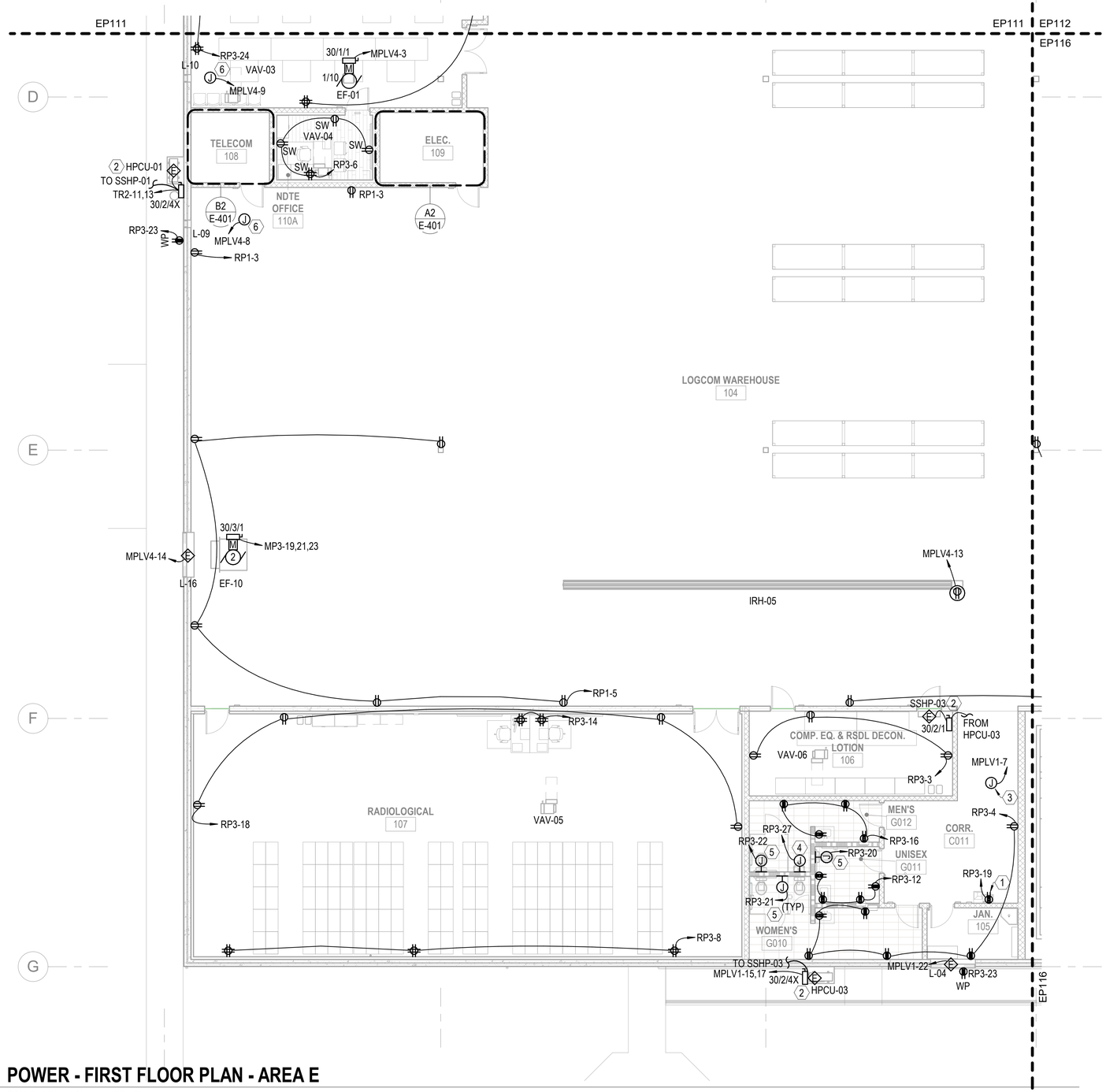

A1 POWER - FIRST FLOOR PLAN - AREA E

SCALE: 1/8" = 1'-0" (EP110)

GENERAL NOTES

1. SEE SHEET E-001 FOR ELECTRICAL NOTES, SYMBOLS, AND ABBREVIATIONS.
2. ALL JUNCTION BOX LOCATIONS ARE APPROXIMATE. FINAL LOCATIONS BASED ON EQUIPMENT AND FURNITURE FINAL LOCATIONS.
3. RECEPTACLE CONTROL PLUG LOAD POWER PACKS ARE INDICATED ON DRAWINGS EL111-EL118 WITH LIGHTING POWER PACKS. POWER PACKS LOCATED ABOVE ACCESSIBLE CEILING. COORDINATE WITH DETAILS B2 AND B4 ON SHEET E-505.

KEYNOTES

1. DEDICATED RECEPTACLE FOR ELECTRIC WATER COOLER. COORDINATE MOUNTING HEIGHT AND INSTALLATION WITH MANUFACTURER'S RECOMMENDATIONS.
2. INDOOR UNIT POWERED BY OUTDOOR UNIT. CONTROL WIRING BETWEEN INDOOR AND OUTDOOR UNITS BY MECHANICAL CONTRACTOR. CONDUIT AND POWER WIRING BETWEEN INDOOR AND OUTDOOR UNITS BY ELECTRICAL CONTRACTOR. SEE MECH. SCHEDULES FOR ADDITIONAL INFORMATION.
3. 120V ELECTRICAL CONNECTION FOR VAV BOX 120-24V CONTROL TRANSFORMER. TERMINATE CONDUCTORS ON THE LINE SIDE OF THE TRANSFORMER. 120V POWER BY ELECTRICAL CONTRACTOR. 24V LOW VOLTAGE WIRING FROM THE TRANSFORMER TO THE VAV IS BY OTHERS. COORDINATE WITH MECHANICAL INSTALLATION.
4. HARD-WIRED 120V/6-24V TRANSFORMER CONNECTION FOR URINAL INFRARED FLUSH VALVE. COORDINATE FINAL LOCATION WITH INSTALLATION OF URINAL. COORDINATE MOUNTING HEIGHT AND INSTALLATION PER MANUFACTURER'S RECOMMENDATIONS.
5. HARD-WIRED 120V/6-24V TRANSFORMER CONNECTION FOR WATER CLOSET INFRARED FLUSH VALVE. COORDINATE FINAL LOCATION WITH INSTALLATION OF WATER CLOSET. COORDINATE MOUNTING HEIGHT AND INSTALLATION PER MANUFACTURER'S RECOMMENDATIONS.
6. CEILING MOUNTED JUNCTION BOX FOR POWER TO LOUVER TRANSFORMER. 120V POWER MUST BE PROVIDED BY THE EC TO EACH TRANSFORMER. LOW VOLTAGE WIRING FROM THE TRANSFORMER TO THE LOUVER IS BY OTHERS. COORDINATE LOCATION AND QUANTITY WITH MECHANICAL INSTALLATION.

KEYPLAN

A	B	C	D
E	F	G	H

0 4' - 0" 8' - 0" 16' - 0"

SCALE: 0' - 0 1/8" = 1' - 0"

N

NUM	DESCRIPTION	DATE	APPR

NAVFAC

SENOL DURUR ELECTRICAL No. 47946 REGISTERED PROFESSIONAL ENGINEER COMMONWEALTH OF MASSACHUSETTS

IRQ W.M. Jordan COMPANY – A JOINT VENTURE –

Michael Baker INTERNATIONAL
100 AIRSIDE DRIVE
MOON TOWNSHIP, PA 15108
A/E INFO

APPROVED

FOR COMMANDER NAVFAC

ACTIVITY
MARINE CORPS BASE
CAMP LEJEUNE

SATISFACTORY TO DATE DD/MM/YY

DES	DRW	CHK
ZAK	LAK	BSR

PM / DM	TOWLER / ROOT
BRANCH HEAD	SEK
DESIGN DIRECTOR	R.L.Stephens, Jr.
FIRE PROTECTION	DPS

DEPARTMENT OF THE NAVY
NAVAL FACILITIES ENGINEERING SYSTEMS COMMAND
ATLANTIC DESIGN AND CONSTRUCTION
NAVAL FACILITIES ENGINEERING SYSTEMS COMMAND ATLANTIC
NORFOLK, VA
MCB CAMP LEJEUNE
JACKSONVILLE, NC
LOGCOM CSP WAREHOUSE
POWER - FIRST FLOOR PLAN - AREA E

SCALE:	AS NOTED
EPROJECT NO.:	1639600
CONSTR. CONTR. NO.	N40085-20-C-0059
NAVFAC DRAWING NO.	14111395
SHEET	369 OF 447

EP115

DRAWFORM REVISION: 25 AUGUST 2020

P1527 FINAL SUBMISSION - 11/18/2021

PLOTTED: 11/11/2021 9:20:14 AM

FILE NAME: BIM 360://HF PACKAGE 3/P1527 LOG COM CSP-1639600-E.rvt

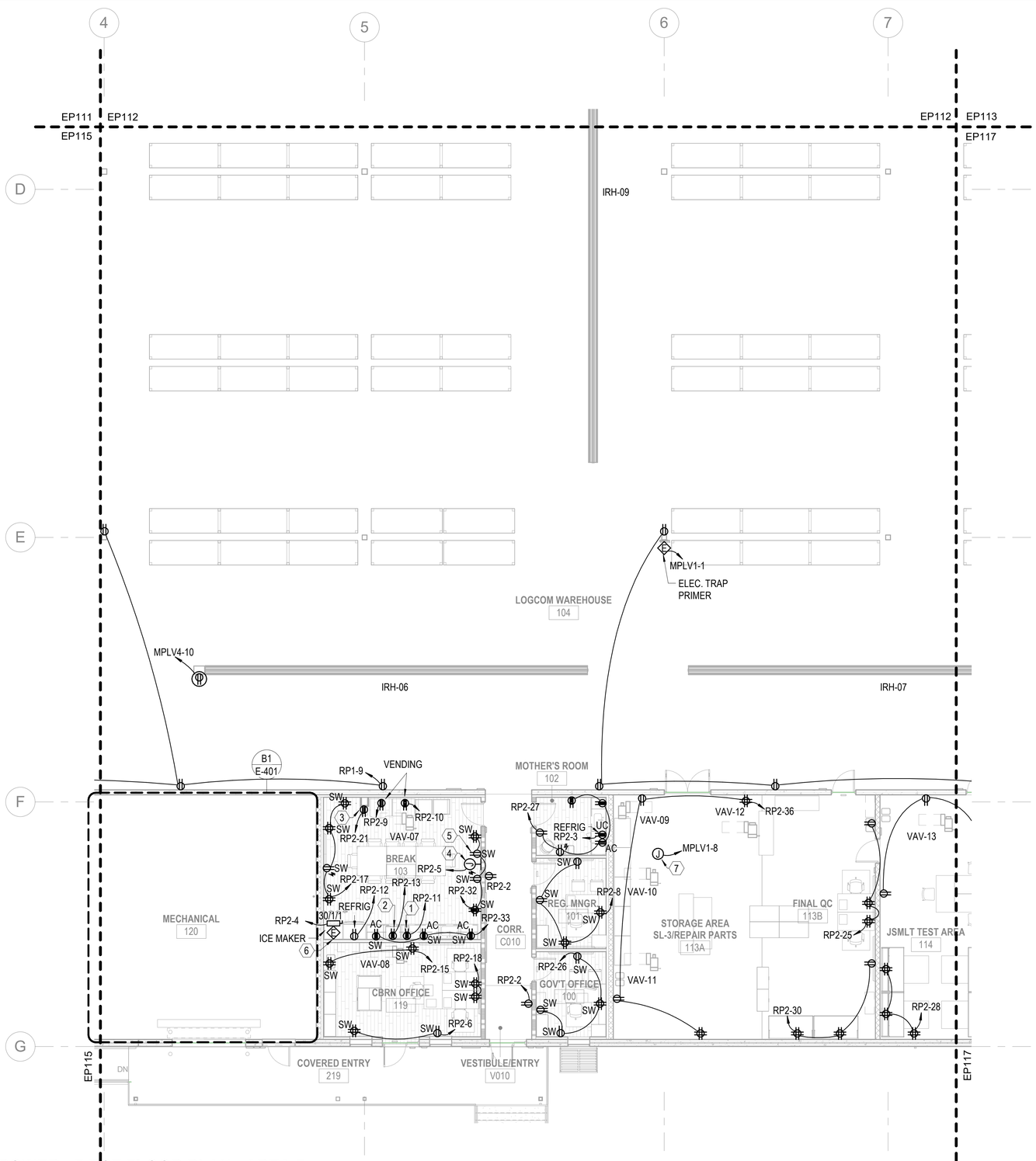

A1 POWER - FIRST FLOOR PLAN - AREA F

SCALE: 1/8" = 1'-0" (EP110)

GENERAL NOTES

1. SEE SHEET E-001 FOR ELECTRICAL NOTES, SYMBOLS, AND ABBREVIATIONS.
2. ALL JUNCTION BOX LOCATIONS ARE APPROXIMATE. FINAL LOCATIONS BASED ON EQUIPMENT AND FURNITURE FINAL LOCATIONS.
3. RECEPTACLE CONTROL PLUG LOAD POWER PACKS ARE INDICATED ON DRAWINGS EL111-EL118 WITH LIGHTING POWER PACKS. POWER PACKS LOCATED ABOVE ACCESSIBLE CEILING. COORDINATE WITH DETAILS B2 AND B4 ON SHEET E-505.

KEYNOTES

1. GFCI RECEPTACLE ABOVE COUNTER DEDICATED FOR COFFEE POT.
2. GFCI RECEPTACLE ABOVE COUNTER DEDICATED FOR MICROWAVE.
3. DEDICATED RECEPTACLE FOR ELECTRIC WATER COOLER. COORDINATE MOUNTING HEIGHT AND INSTALLATION WITH MANUFACTURER'S RECOMMENDATIONS.
4. DEDICATED RECEPTACLE FOR AV FLAT PANEL. RECEPTACLE INSTALLED IN AV WALL BOX. REFERENCE TA-SERIES DRAWINGS FOR DETAILS, MOUNTING HEIGHT, AND LOCATION.
5. AV RECESSED DUPLEX RECEPTACLE. COORDINATE MOUNTING HEIGHT AND INSTALLATION WITH AV INSTALLATION.
6. POWER ELECTRICAL CONNECTION FOR HARDWIRE INPUT TO ICE MAKER. PROVIDE PER MANUFACTURER'S RECOMMENDATIONS.
7. 120V ELECTRICAL CONNECTION FOR VAV BOX 120-24V CONTROL TRANSFORMER. TERMINATE CONDUCTORS ON THE LINE SIDE OF THE TRANSFORMER. 120V POWER BY ELECTRICAL CONTRACTOR. 24V LOW VOLTAGE WIRING FROM THE TRANSFORMER TO THE VAV IS BY OTHERS. COORDINATE WITH MECHANICAL INSTALLATION.

KEYPLAN

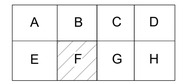

0 4' - 0" 8' - 0" 16' - 0"

SCALE:0' - 0 1/8" = 1' - 0"

MARK	DESCRIPTION	DATE	APPR

NAVFAC

COMMONWEALTH OF MASSACHUSETTS
SENOL DURUR
ELECTRICAL
No. 47946
REGISTERED
PROFESSIONAL ENGINEER

IRQ W.M. Jordan COMPANY – A JOINT VENTURE –

Michael Baker INTERNATIONAL
100 AIRSIDE DRIVE
MOON TOWNSHIP, PA 15108
A/E INFO

APPROVED

FOR COMMANDER NAVFAC

ACTIVITY
MARINE CORPS BASE
CAMP LEJEUNE

SATISFACTORY TO DATE	DD/MM/YY
DES ZAK	DRW LAK CHK BSR
PM / DM	TOWLER / ROOT
BRANCH HEAD	SEK
DESIGN DIRECTOR	R.L.Stephens, Jr.
FIRE PROTECTION	DPS

DEPARTMENT OF THE NAVY
NAVAL FACILITIES ENGINEERING SYSTEMS COMMAND
ATLANTIC DESIGN AND CONSTRUCTION
MCB CAMP LEJEUNE

NAVAL FACILITIES ENGINEERING SYSTEMS COMMAND ATLANTIC
NORFOLK, VA
JACKSONVILLE, NC
LOGCOM CSP WAREHOUSE

POWER - FIRST FLOOR PLAN - AREA F

SCALE:	AS NOTED
EPROJECT NO.:	1639600
CONSTR. CONTR. NO.	N40085-20-C-0059
NAVFAC DRAWING NO.	14111396
SHEET	370 OF 447

EP116

DRAWFORM REVISION: 25 AUGUST 2020

P1527 FINAL SUBMISSION - 11/18/2021

PLOTTED: 11/11/2021 9:20:17 AM

FILE NAME: BIM 360/A/IF PACKAGE 3/P1527 LOG COM CSP-1639600-E.rvt

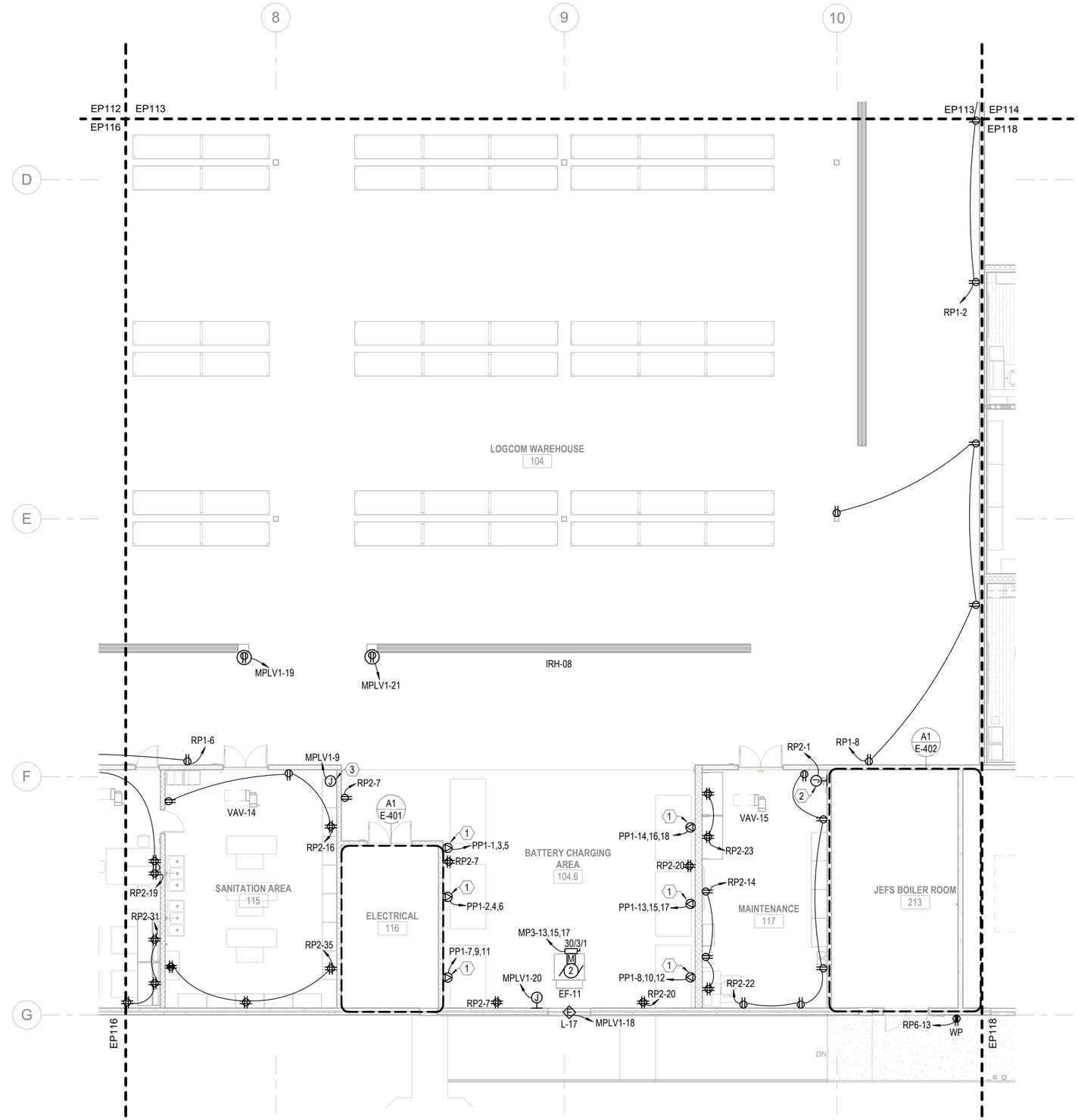

A1 POWER - FIRST FLOOR PLAN - AREA G

SCALE: 1/8" = 1'-0" (EP110)

GENERAL NOTES

1. SEE SHEET E-001 FOR ELECTRICAL NOTES, SYMBOLS, AND ABBREVIATIONS.
2. ALL JUNCTION BOX LOCATIONS ARE APPROXIMATE. FINAL LOCATIONS BASED ON EQUIPMENT AND FURNITURE FINAL LOCATIONS.
3. RECEPTACLE CONTROL PLUG LOAD POWER PACKS ARE INDICATED ON DRAWINGS EL111-EL118 WITH LIGHTING POWER PACKS. POWER PACKS LOCATED ABOVE ACCESSIBLE CEILING. COORDINATE WITH DETAILS B2 AND B4 ON SHEET E-505.

KEYNOTES

1. PROVIDE 600V, 3PH, 30A NEMA LOCKING RECEPTACLE WITH 480V, 3PH POWER FOR BATTERY CHARGERS. COORDINATE FINAL RECEPTACLE TYPE WITH BATTERY CHARGER. COORDINATE MOUNTING HEIGHT AND INSTALLATION PER MANUFACTURER'S RECOMMENDATIONS.
2. JUNCTION BOX FOR EMERGENCY EYE WASH STATION. COORDINATE MOUNTING HEIGHT AND INSTALLATION WITH MANUFACTURER'S RECOMMENDATIONS.
3. 120V ELECTRICAL CONNECTION FOR VAV BOX 120-24V CONTROL TRANSFORMER. TERMINATE CONDUCTORS ON THE LINE SIDE OF THE TRANSFORMER. 120V POWER BY ELECTRICAL CONTRACTOR. 24V LOW VOLTAGE WIRING FROM THE TRANSFORMER TO THE VAV IS BY OTHERS. COORDINATE WITH MECHANICAL INSTALLATION.

KEYPLAN

A	B	C	D
E	F	G	H

0 4' - 0" 8' - 0" 16' - 0"

SCALE:0' - 0 1/8" = 1' - 0"

N

NO.	DESCRIPTION	DATE	APP'R

NAVFAC

SENOL DURUR ELECTRICAL No. 47946 REGISTERED PROFESSIONAL ENGINEER COMMONWEALTH OF MASSACHUSETTS

IRQ WM Jordan COMPANY – A JOINT VENTURE –

Michael Baker INTERNATIONAL

100 AIRSIDE DRIVE
MOON TOWNSHIP, PA 15108 A/E INFO

APPROVED

FOR COMMANDER NAVFAC

ACTIVITY
MARINE CORPS BASE
CAMP LEJEUNE

SATISFACTORY TO DATE DD/MM/YY

DES	DRW	CHK
ZAK	LAK	BSR

PM / DM	TOWLER / ROOT
BRANCH HEAD	SEK
DESIGN DIRECTOR	R.L.Stephens, Jr.
FIRE PROTECTION	DPS

DEPARTMENT OF THE NAVY
NAVAL FACILITIES ENGINEERING SYSTEMS COMMAND
ATLANTIC DESIGN AND CONSTRUCTION
MCB CAMP LEJEUNE

NAVAL FACILITIES ENGINEERING SYSTEMS COMMAND ATLANTIC
NORFOLK, VA

JACKSONVILLE, NC
LOGCOM CSP WAREHOUSE

POWER - FIRST FLOOR PLAN - AREA G

SCALE:	AS NOTED
EPROJECT NO.:	1639600
CONSTR. CONTR. NO.	N40085-20-C-0059
NAVFAC DRAWING NO.	14111397
SHEET	371 OF 447

EP117

DRAWFORM REVISION: 25 AUGUST 2020

P1527 FINAL SUBMISSION - 11/18/2021

PLOTTED: 11/11/2021 9:20:21 AM

FILE NAME: BIM 360/IHF PACKAGE 3/P1527 LOG COM CSP-1639600-E.rvt

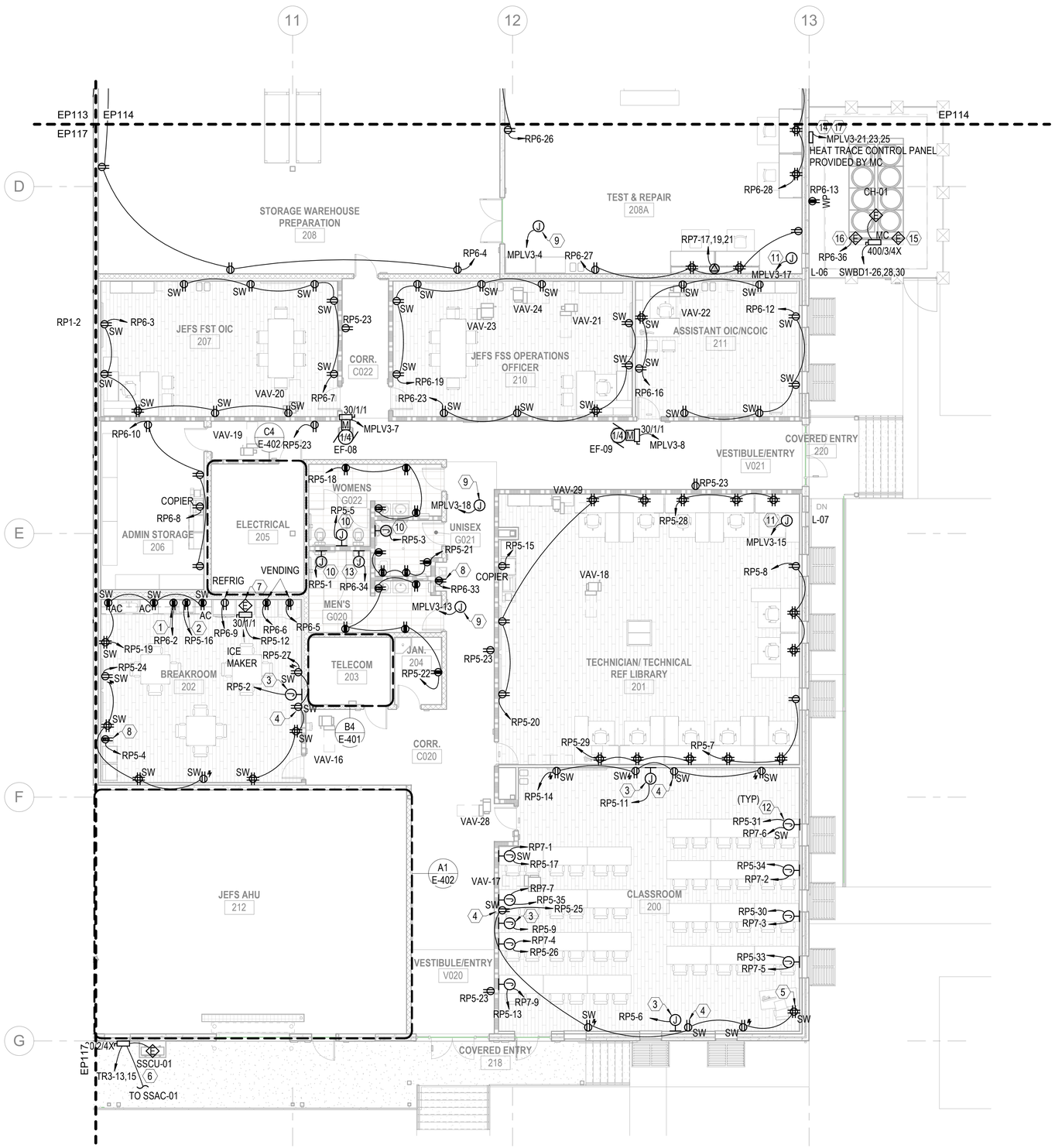

A1 POWER - FIRST FLOOR PLAN - AREA H

SCALE: 1/8" = 1'-0" (EP110)

GENERAL NOTES

1. SEE SHEET E-001 FOR ELECTRICAL NOTES, SYMBOLS, AND ABBREVIATIONS.
2. ALL JUNCTION BOX LOCATIONS ARE APPROXIMATE. FINAL LOCATIONS BASED ON EQUIPMENT AND FURNITURE FINAL LOCATIONS.
3. RECEPTACLE CONTROL PLUG LOAD POWER PACKS ARE INDICATED ON DRAWINGS EL111-EL118 WITH LIGHTING POWER PACKS. POWER PACKS LOCATED ABOVE ACCESSIBLE CEILING. COORDINATE WITH DETAILS B2 AND B4 ON SHEET E-505.

KEYNOTES

1. GFCI RECEPTACLE ABOVE COUNTER DEDICATED FOR COFFEE POT.
2. GFCI RECEPTACLE ABOVE COUNTER DEDICATED FOR MICROWAVE.
3. DEDICATED RECEPTACLE FOR AV FLAT PANEL. RECEPTACLE INSTALLED IN AV WALL BOX. REFERENCE TA-SERIES DRAWINGS FOR DETAILS, MOUNTING HEIGHT, AND LOCATION.
4. AV RECESSED DUPLEX RECEPTACLE. COORDINATE MOUNTING HEIGHT AND INSTALLATION WITH AV INSTALLATION.
5. AV RECESSED QUAD RECEPTACLE. COORDINATE MOUNTING HEIGHT AND INSTALLATION WITH AV INSTALLATION.
6. INDOOR UNIT POWERED BY OUTDOOR UNIT. CONTROL WIRING BETWEEN INDOOR AND OUTDOOR UNITS BY MECHANICAL CONTRACTOR. CONDUIT AND POWER WIRING BETWEEN INDOOR AND OUTDOOR UNITS BY ELECTRICAL CONTRACTOR. SEE MECH. SCHEDULES FOR ADDITIONAL INFORMATION.
7. POWER ELECTRICAL CONNECTION FOR HARDWIRE INPUT TO ICE MAKER. PROVIDE PER MANUFACTURER'S RECOMMENDATIONS.
8. DEDICATED RECEPTACLE FOR ELECTRIC WATER COOLER. COORDINATE MOUNTING HEIGHT AND INSTALLATION WITH MANUFACTURER'S RECOMMENDATIONS.
9. 120V ELECTRICAL CONNECTION FOR VAV BOX 120-24V CONTROL TRANSFORMER. TERMINATE CONDUCTORS ON THE LINE SIDE OF THE TRANSFORMER. 120V POWER BY ELECTRICAL CONTRACTOR. 24V LOW VOLTAGE WIRING FROM THE TRANSFORMER TO THE VAV IS BY OTHERS. COORDINATE WITH MECHANICAL INSTALLATION.
10. HARD-WIRED 120V/6-24V TRANSFORMER CONNECTION FOR WATER CLOSET INFRARED FLUSH VALVE. COORDINATE FINAL LOCATION WITH INSTALLATION OF WATER CLOSET. COORDINATE MOUNTING HEIGHT AND INSTALLATION PER MANUFACTURER'S RECOMMENDATIONS.
11. CEILING MOUNTED JUNCTION BOX FOR POWER TO LOUVER TRANSFORMER. 120V POWER MUST BE PROVIDED BY THE EC TO EACH TRANSFORMER. LOW VOLTAGE WIRING FROM THE TRANSFORMER TO THE LOUVER IS BY OTHERS. COORDINATE LOCATION AND QUANTITY WITH MECHANICAL INSTALLATION.
12. HARD-WIRED POWER CONNECTION FOR SYSTEMS FURNITURE IN A 8 WIRE (3+1) CONFIGURATION AS INDICATED. MAKE ELECTRICAL CONNECTION FOR SYSTEMS FURNITURE POWER IAW MANUFACTURER'S RECOMMENDATIONS.
13. HARD-WIRED 120V/6-24V TRANSFORMER CONNECTION FOR URINAL INFRARED FLUSH VALVE. COORDINATE FINAL LOCATION WITH INSTALLATION OF URINAL. COORDINATE MOUNTING HEIGHT AND INSTALLATION PER MANUFACTURER'S RECOMMENDATIONS.
14. ELECTRICAL CONNECTION FOR CHILLER HEAT TRACING CONTROL PANEL. COORDINATE EXACT POWER CONNECTION LOCATION WITH MECHANICAL DRAWINGS PRIOR TO ROUGH IN. PROVIDE 20A BREAKER WITH 30mA GROUND FAULT TRIP. WIRING AND INSTALLATION PER MANUFACTURER'S RECOMMENDATIONS.
15. PROVIDE SEPARATE DEDICATED CIRCUIT FOR CHILLER INTERNAL HEAT TRACING FROM HEAT TRACING CONTROL PANEL.
16. ELECTRICAL POWER CONNECTION FOR CHILLER CONVENIENCE RECEPTACLE.
17. PROVIDE SEPARATE DEDICATED CIRCUIT FOR EXTERNAL PIPE HEAT TRACING FROM HEAT TRACING CONTROL PANEL.

KEYPLAN

A	B	C	D
E	F	G	H

0 4' - 0" 8' - 0" 16' - 0"

SCALE:0' - 0 1/8" = 1' - 0"

N

NO.	DESCRIPTION	DATE	APPR

NAVFAC

COMMONWEALTH OF MASSACHUSETTS
SENOL DURUR
ELECTRICAL
No. 47946
REGISTERED
PROFESSIONAL ENGINEER

W.M. Jordan COMPANY – A JOINT VENTURE –

Michael Baker INTERNATIONAL
100 AIRSIDE DRIVE
MOON TOWNSHIP, PA 15108
A/E INFO

APPROVED

FOR COMMANDER NAVFAC

ACTIVITY
MARINE CORPS BASE
CAMP LEJEUNE

SATISFACTORY TO DATE	DD/MM/YY
DES ZAK	DRW LAK CHK BSR
PM / DM	TOWLER / ROOT
BRANCH HEAD	SEK
DESIGN DIRECTOR	R.L.Stephens, Jr.
FIRE PROTECTION	DPS

DEPARTMENT OF THE NAVY
NAVAL FACILITIES ENGINEERING SYSTEMS COMMAND
ATLANTIC DESIGN AND CONSTRUCTION
MCB CAMP LEJEUNE

NAVAL FACILITIES ENGINEERING SYSTEMS COMMAND ATLANTIC
NORFOLK, VA
JACKSONVILLE, NC
LOGCOM CSP WAREHOUSE

POWER - FIRST FLOOR PLAN - AREA H

SCALE:	AS NOTED
EPROJECT NO.:	1639600
CONSTR. CONTR. NO.	N40085-20-C-0059
NAVFAC DRAWING NO.	14111398
SHEET	372 OF 447

EP118

DRAWFORM REVISION: 25 AUGUST 2020

P1527 FINAL SUBMISSION - 11/18/2021

PLOTTED: 11/11/2021 9:20:25 AM

FILE NAME: BIM 360/:HF PACKAGE 3/P1527 LOG COM CSP-1639600-E.rvt

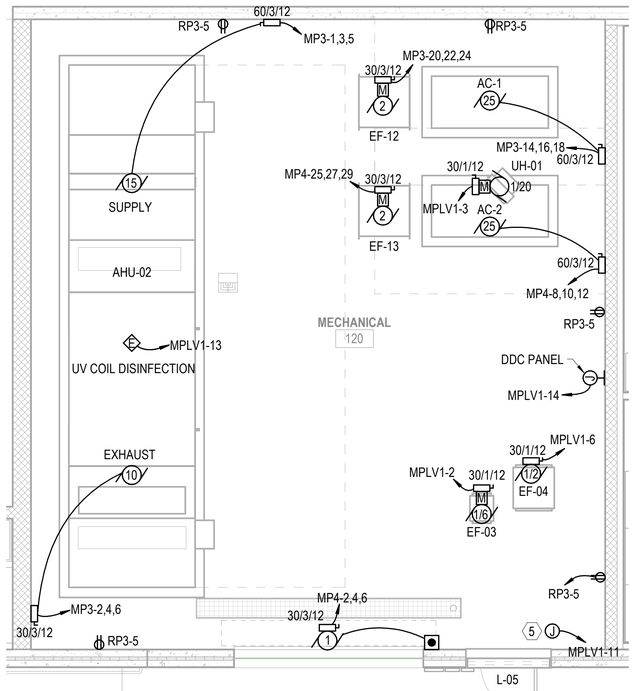

B1 POWER - ENLARGED PLAN

SCALE: 1/4" = 1'-0" (EP111)

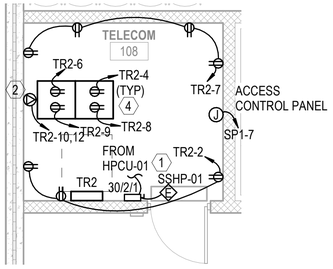

B2 POWER - ENLARGED PLAN

SCALE: 1/4" = 1'-0" (EP111)

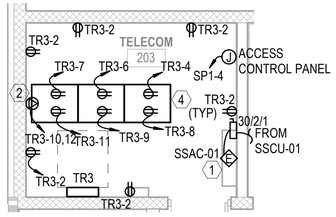

B4 POWER - ENLARGED PLAN

SCALE: 1/4" = 1'-0" (EP111)

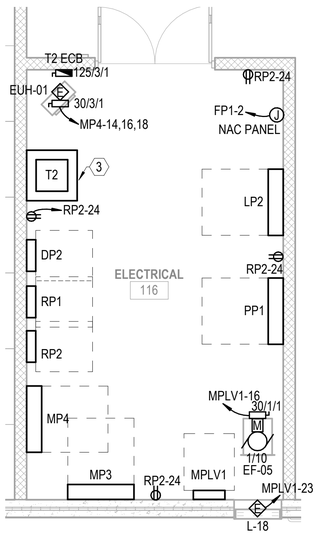

A1 POWER - ENLARGED PLAN

SCALE: 1/4" = 1'-0" (EP111)

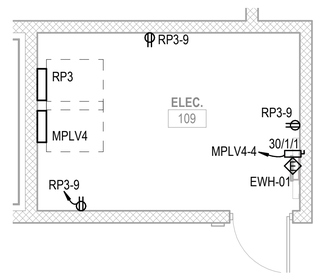

A2 POWER - ENLARGED PLAN

SCALE: 1/4" = 1'-0" (EP111)

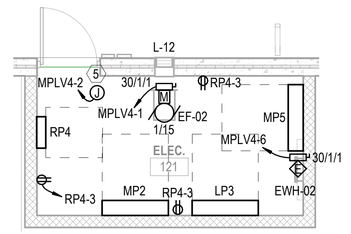

A4 POWER - ENLARGED PLAN

SCALE: 1/4" = 1'-0" (EP111)

GENERAL NOTES

1. SEE SHEET E-001 FOR ELECTRICAL NOTES, SYMBOLS, AND ABBREVIATIONS.
2. ALL JUNCTION BOX LOCATIONS ARE APPROXIMATE. FINAL LOCATIONS BASED ON EQUIPMENT AND FURNITURE FINAL LOCATIONS.
3. RECEPTACLE CONTROL PLUG LOAD POWER PACKS ARE INDICATED ON DRAWINGS EL111-EL118 WITH LIGHTING POWER PACKS. POWER PACKS LOCATED ABOVE ACCESSIBLE CEILING. COORDINATE WITH DETAILS B2 AND B4 ON SHEET E-505.

KEYNOTES

1. INDOOR UNIT POWERED BY OUTDOOR UNIT. CONTROL WIRING BETWEEN INDOOR AND OUTDOOR UNITS BY MECHANICAL CONTRACTOR. CONDUIT AND POWER WIRING BETWEEN INDOOR AND OUTDOOR UNITS BY ELECTRICAL CONTRACTOR. SEE MECH. SCHEDULES FOR ADDITIONAL INFORMATION.
2. L6-30R TWIST LOCK RECEPTACLE - 208V, 1PH, 30A. RECEPTACLE MUST BE INSTALLED 6" ABOVE AND 6" BEHIND THE TELECOM RACKS ON A PIECE OF CHANNELED STRUT SUPPORTED FROM THE CEILING BY A THREADED ROD ACROSS THE BACK OF THE TELECOM CABINETS. RECEPTACLE MOUNTED TO CHANNELED STRUT AND CONDUIT FED FROM CEILING DOWN TO THE OUTLETS.
3. PROVIDE 4-INCH THICK CONCRETE PAD WITH CHAMFERED EDGES FOR FLOOR MOUNTED EQUIPMENT. EXTEND PAD 6-INCH BEYOND EDGE OF EQUIPMENT.
4. TWO (2) DEDICATED 20A DUPLEX RECEPTACLES PER TELECOMMUNICATIONS RACK. RECEPTACLES MUST BE INSTALLED 6" ABOVE AND 6" BEHIND THE TELECOM RACKS ON A PIECE OF CHANNELED STRUT SUPPORTED FROM THE CEILING BY A THREADED ROD ACROSS THE BACK OF THE TELECOM CABINETS. RECEPTACLE MOUNTED TO CHANNELED STRUT AND CONDUIT FED FROM CEILING DOWN TO THE OUTLETS.
5. CEILING MOUNTED JUNCTION BOX FOR POWER TO LOUVER TRANSFORMER. 120V POWER MUST BE PROVIDED BY THE EC TO EACH TRANSFORMER. LOW VOLTAGE WIRING FROM THE TRANSFORMER TO THE LOUVER IS BY OTHERS. COORDINATE LOCATION AND QUANTITY WITH MECHANICAL INSTALLATION.

SYM	DESCRIPTION	DATE	APPR

NAVFAC

SENOL DURUR ELECTRICAL No. 47946 REGISTERED PROFESSIONAL ENGINEER COMMONWEALTH OF MASSACHUSETTS

WNJ Jordan COMPANY – A JOINT VENTURE –

Michael Baker INTERNATIONAL
100 AIRSIDE DRIVE
MOON TOWNSHIP, PA 15108
A/E INFO

APPROVED

FOR COMMANDER NAVFAC

ACTIVITY
MARINE CORPS BASE
CAMP LEJEUNE

SATISFACTORY TO DATE	DD/MM/YY
DES ZAK	DRW LAK CHK BSR
PM / DM	TOWLER / ROOT
BRANCH HEAD	SEK
DESIGN DIRECTOR	R.L.Stephens, Jr.
FIRE PROTECTION	DPS

DEPARTMENT OF THE NAVY
NAVAL FACILITIES ENGINEERING SYSTEMS COMMAND
ATLANTIC DESIGN AND CONSTRUCTION
MCB CAMP LEJEUNE

NAVAL FACILITIES ENGINEERING SYSTEMS COMMAND ATLANTIC
NORFOLK, VA
JACKSONVILLE, NC
LOGCOM CSP WAREHOUSE

ELECTRICAL - ENLARGED PLANS

SCALE:	AS NOTED
EPROJECT NO.:	1639600
CONSTR. CONTR. NO.	N40085-20-C-0059
NAVFAC DRAWING NO.	14111399
SHEET	373 OF 447

E-401

P1527 FINAL SUBMISSION - 11/18/2021

DRAWFORM REVISION: 25 AUGUST 2020

0 2' - 0" 4' - 0" 8' - 0"
SCALE:0' - 0 1/4" = 1' - 0"

N

PLOTTED: 11/11/2021 9:18:41 AM

FILE NAME: BIM 360/IHF PACKAGE 3/P1527 LOG COM CSP-1639600-E.rvt

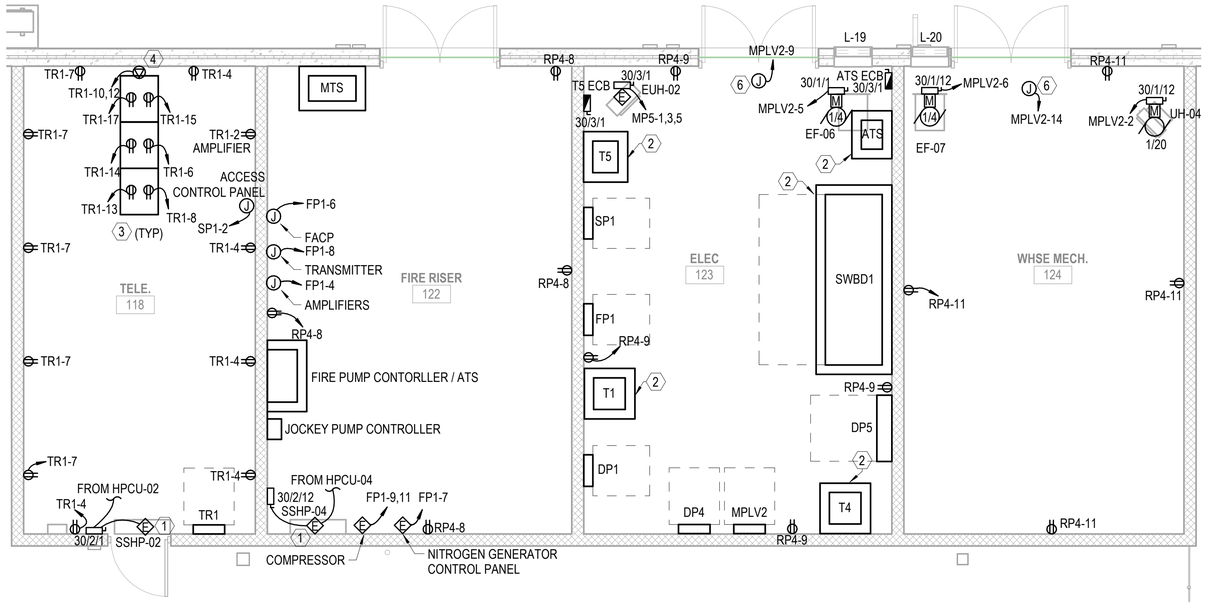

C1 POWER - ENLARGED PLAN

SCALE: 1/4" = 1'-0" (EP111)

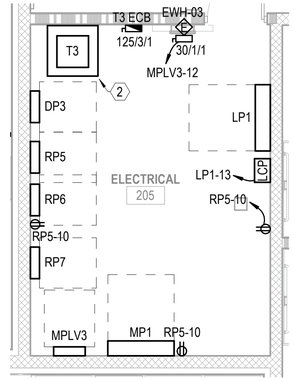

C4 POWER - ENLARGED PLAN

SCALE: 1/4" = 1'-0" (EP111)

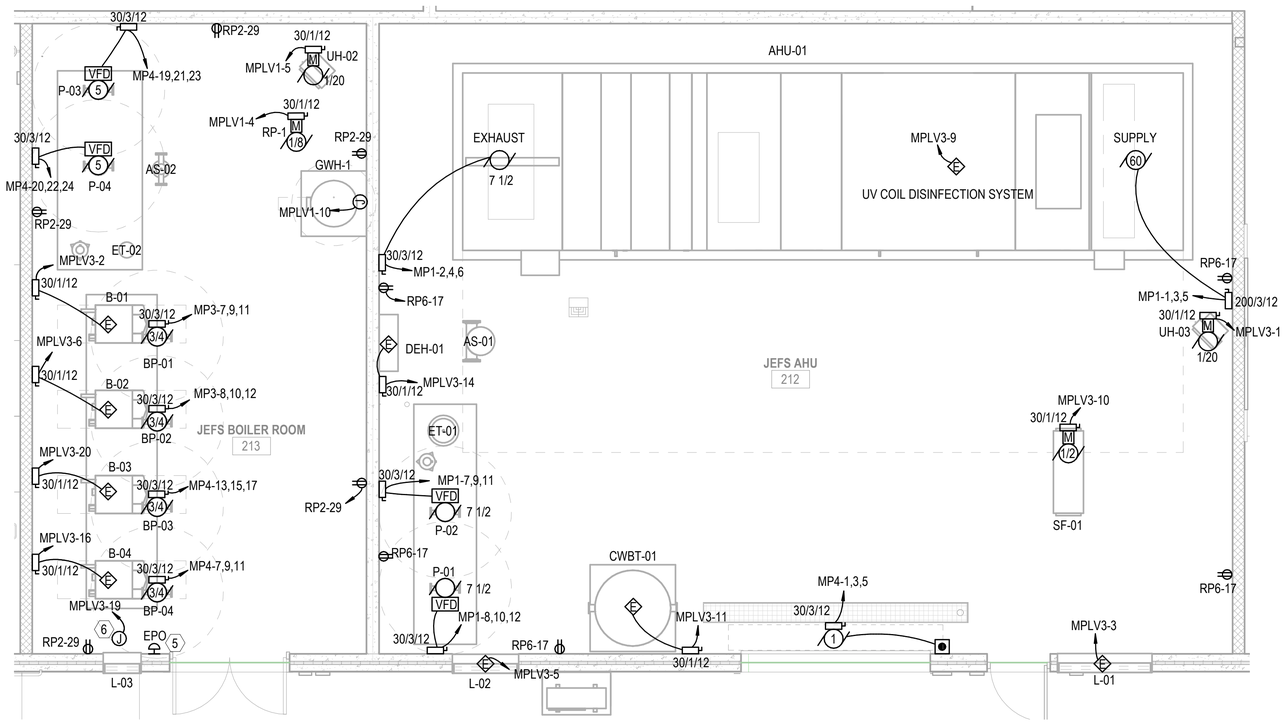

A1 POWER - ENLARGED PLAN

SCALE: 1/4" = 1'-0" (EP111)

GENERAL NOTES

1. SEE SHEET E-001 FOR ELECTRICAL NOTES, SYMBOLS, AND ABBREVIATIONS.
2. ALL JUNCTION BOX LOCATIONS ARE APPROXIMATE. FINAL LOCATIONS BASED ON EQUIPMENT AND FURNITURE FINAL LOCATIONS.
3. RECEPTACLE CONTROL PLUG LOAD POWER PACKS ARE INDICATED ON DRAWINGS EL111-EL118 WITH LIGHTING POWER PACKS. POWER PACKS LOCATED ABOVE ACCESSIBLE CEILING. COORDINATE WITH DETAILS B2 AND B4 ON SHEET E-505.

KEYNOTES

1. INDOOR UNIT POWERED BY OUTDOOR UNIT. CONTROL WIRING BETWEEN INDOOR AND OUTDOOR UNITS BY MECHANICAL CONTRACTOR. CONDUIT AND POWER WIRING BETWEEN INDOOR AND OUTDOOR UNITS BY ELECTRICAL CONTRACTOR. SEE MECH. SCHEDULES FOR ADDITIONAL INFORMATION.
2. PROVIDE 4-INCH THICK CONCRETE PAD WITH CHAMFERED EDGES FOR FLOOR MOUNTED EQUIPMENT. EXTEND PAD 6-INCH BEYOND EDGE OF EQUIPMENT.
3. TWO (2) DEDICATED 20A DUPLEX RECEPTACLES PER TELECOMMUNICATIONS RACK. RECEPTACLES MUST BE INSTALLED 6" ABOVE AND 6" BEHIND THE TELECOM RACKS ON A PIECE OF CHANNELED STRUT SUPPORTED FROM THE CEILING BY A THREADED ROD ACROSS THE BACK OF THE TELECOM CABINETS. RECEPTACLE MOUNTED TO CHANNELED STRUT AND CONDUIT FED FROM CEILING DOWN TO THE OUTLETS.
4. L6-30R TWIST LOCK RECEPTACLE - 208V, 1PH, 30A. RECEPTACLE MUST BE INSTALLED 6" ABOVE AND 6" BEHIND THE TELECOM RACKS ON A PIECE OF CHANNELED STRUT SUPPORTED FROM THE CEILING BY A THREADED ROD ACROSS THE BACK OF THE TELECOM CABINETS. RECEPTACLE MOUNTED TO CHANNELED STRUT AND CONDUIT FED FROM CEILING DOWN TO THE OUTLETS.
5. PROVIDE EMERGENCY POWER OFF MUSHROOM STYLE PUSH OFF/PULL ON WITH CLEAR COVER. PROVIDE LABEL FOR SWITCH: "EMERGENCY BOILER SHUT OFF SWITCH. PULL TO RESET." COMPLY WITH ASME CSD-1 REQUIREMENTS. CONFIRM LOCATION WITH AUTHORITY HAVING JURISDICTION (AHJ) FOR APPROVAL PRIOR TO INSTALLING.
6. CEILING MOUNTED JUNCTION BOX FOR POWER TO LOUVER TRANSFORMER. 120V POWER MUST BE PROVIDED BY THE EC TO EACH TRANSFORMER. LOW VOLTAGE WIRING FROM THE TRANSFORMER TO THE LOUVER IS BY OTHERS. COORDINATE LOCATION AND QUANTITY WITH MECHANICAL INSTALLATION.

0 2' - 0" 4' - 0" 8' - 0"

SCALE: 0' - 0 1/4" = 1' - 0"

N

NO.	DESCRIPTION	DATE	APPR

NAVFAC

COMMONWEALTH OF MASSACHUSETTS
SENOL DURUR
ELECTRICAL
No. 47946
REGISTERED PROFESSIONAL ENGINEER

RQ W.M. Jordan COMPANY – A JOINT VENTURE –

Michael Baker INTERNATIONAL

100 AIRSIDE DRIVE
MOON TOWNSHIP, PA 15108 A/E INFO

APPROVED

FOR COMMANDER NAVFAC

ACTIVITY
MARINE CORPS BASE
CAMP LEJEUNE

SATISFACTORY TO DATE DD/MM/YY

DES ZAK	DRW LAK	CHK BSR
PM / DM	TOWLER / ROOT	
BRANCH HEAD	SEK	
DESIGN DIRECTOR	R.L.Stephens, Jr.	
FIRE PROTECTION	DPS	

DEPARTMENT OF THE NAVY
NAVAL FACILITIES ENGINEERING SYSTEMS COMMAND
ATLANTIC DESIGN AND CONSTRUCTION
NAVAL FACILITIES ENGINEERING SYSTEMS COMMAND ATLANTIC
NORFOLK, VA
MCB CAMP LEJEUNE
JACKSONVILLE, NC
LOGCOM CSP WAREHOUSE

ELECTRICAL - ENLARGED PLANS

SCALE:	AS NOTED
EPROJECT NO.:	1639600
CONSTR. CONTR. NO.	N40085-20-C-0059
NAVFAC DRAWING NO.	14111400
SHEET	374 OF 447

E-402

DRAWFORM REVISION: 25 AUGUST 2020

P1527 FINAL SUBMISSION - 11/18/2021

PLOTTED: 11/11/2021 9:18:44 AM

FILE NAME: BIM 360://AFF PACKAGE 3/P1527 LOG COM CSP-1639600-E.rvt

TYPES: B1, B2, B3, B4, B5, B6, B7

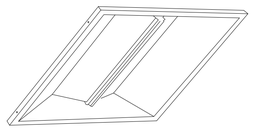

LUMINAIRE REQUIREMENTS:

1. HOUSING - DIE-FORMED, COLD ROLLED STEEL, WITH ONE-PIECE LOWER REFLECTOR HAVING TEXTURED, HIGH REFLECTANCE, WHITE POLYESTER POWDER-COATED FINISH. OPTIONAL SIZES OF 1FT x 4FT, 2FT x 2FT, AND 2FT x 4FT AVAILABLE.
2. LIGHT SOURCE - UPWARD-FACING LEDS WITH DIFFUSE LENS TO ELIMINATE DIRECT VIEW OF LIGHT SOURCE. 3500K COLOR TEMPERATURE UON, MAXIMUM BINNING TOLERANCE OF A 4-STEP MCADAM ELLIPSE, MINIMUM EFFICACY OF 126 LUMENS/WATT, WITH A MINIMUM CRI OF 80. INITIAL LUMEN OUTPUT AS INDICATED IN LUMINAIRE SCHEDULE.
3. DRIVER - REPLACEABLE, INTEGRAL, HIGH-EFFICIENCY DRIVER WITH MINIMUM 0.9 PF, OPERATING VOLTAGE OF 120-277V, THERMAL MANAGEMENT, < 20% TOTAL HARMONIC DISTORTION. STEP-DIMMABLE OR FULLY DIMMABLE AS INDICATED IN LUMINAIRE SCHEDULE.
4. CERTIFICATION - UL 1598, DAMP LOCATION, DLC QUALIFIED, AND ROHS COMPLIANT. COMPLIES WITH LM79, LM80 AND TM21 TESTING STANDARDS. IC RATED WHEN INDICATED.
5. MOUNTING - RECESSED IN SUSPENDED ACOUSTICAL TILE OR HARD CEILING.
6. THIS SKETCH IS A NON-PROPRIETARY GRAPHIC REPRESENTATION OF A LUMINAIRE THAT MAY MEET THE SPECIFICATION REQUIREMENTS. IT IS NOT INTENDED TO INDICATE A CERTAIN MANUFACTURER OR PREFERENCE.

DIRECT/INDIRECT LED TROFFER

REVISED:	APRIL 2016	LIGHTING PLATE:	NL-1

TYPES: A1, A3, A4, A5

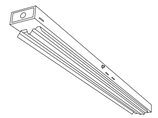

LUMINAIRE REQUIREMENTS:

1. HOUSING - DIE-FORMED, COLD-ROLLED STEEL, WITH REINFORCEMENT RIBS FOR RIGIDITY AND SPECULAR ALUMINUM OR HIGHLY-REFLECTIVE PAINTED STEEL REFLECTORS. OPTIONAL LENGTHS OF 2FT, 4FT, OR 8FT.
2. FINISH - MULTI-STAGE PHOSPHATE BONDING TREATMENT FINISHED WITH HIGH-REFLECTANCE, WHITE POLYESTER POWDER COAT, PAINTED AFTER FABRICATION.
3. LIGHT SOURCE - SOLID STATE LEDS WITH MINIMUM 50K HOURS RATED LIFE AT L70, 3500K CCT UON, MINIMUM 80 CRI, MAXIMUM 4-STEP MCADAM ELLIPSE BINNING TOLERANCE FOR COLOR CONSISTENCY, AND MINIMUM EFFICACY OF 128 LUMENS/WATT. INITIAL LUMEN OUTPUT AS INDICATED IN LUMINAIRE SCHEDULE.
4. DRIVER - REPLACEABLE, INTEGRAL, HIGH-EFFICIENCY DRIVER WITH MINIMUM 0.9 PF, OPERATING VOLTAGE OF 120-277V, THERMAL MANAGEMENT, < 20% TOTAL HARMONIC DISTORTION. ON-OFF CONTROL, STEP-DIMMABLE OR FULLY DIMMABLE AS INDICATED.
5. CERTIFICATION - UL 1598, DAMP LOCATION, DLC QUALIFIED, AND ROHS COMPLIANT. COMPLIES WITH LM79, LM80 AND TM21 TESTING STANDARDS. UL 924 WHEN EQUIPPED WITH EMERGENCY BATTERY BACK-UP.
6. MOUNTING - SURFACE ON CEILING OR SUSPENDED
7. OPTIONS - WIRE GUARD, CHAIN, STEM OR SWIVEL STEM HANGERS.
8. THIS SKETCH IS A NON-PROPRIETARY GRAPHIC REPRESENTATION OF A LUMINAIRE THAT MAY MEET THE SPECIFICATION REQUIREMENTS. IT IS NOT INTENDED TO INDICATE A CERTAIN MANUFACTURER OR PREFERENCE.

LED INDUSTRIAL STRIP

REVISED:	APRIL 2016	LIGHTING PLATE:	NL-7

TYPES: C1, C2

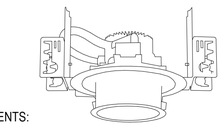

LUMINAIRE REQUIREMENTS:

1. HOUSING - DIE-FORMED, COLD-ROLLED STEEL, OR FORGED ALUMINUM WITH HEAT SINK. DRIVER MUST BE ACCESSIBLE FROM BOTTOM OF LUMINAIRE. PROVIDE T-BAR HANGERS FOR INSTALLATION IN ACOUSTICAL TILE CEILINGS OR TABS WHEN MOUNTING IN HARD CEILINGS.
2. REFLECTOR AND TRIM - SPECIFICATION GRADE, LOW IRRIDESCENT, SPECULAR ALUMINUM REFLECTOR WITH METALLIC OR PAINTED TRIM RING.
3. LIGHT SOURCE - SOLID STATE LEDS WITH MINIMUM 50K HOURS RATED LIFE AT L70, 3500K CCT UON, MINIMUM 80 CRI, MAXIMUM 4-STEP MCADAM ELLIPSE BINNING TOLERANCE FOR COLOR CONSISTENCY, AND MINIMUM EFFICACY OF 80 LUMENS/WATT. INITIAL LUMEN OUTPUT AS INDICATED IN LUMINAIRE SCHEDULE.
4. DRIVER - REPLACEABLE, INTEGRAL, HIGH-EFFICIENCY DRIVER WITH MINIMUM 0.9 PF, OPERATING VOLTAGE OF 120-277V, THERMAL MANAGEMENT, < 20% TOTAL HARMONIC DISTORTION. ON-OFF CONTROL, STEP-DIMMABLE OR FULLY DIMMABLE AS INDICATED.
5. CERTIFICATION - UL 1598, DAMP LOCATION, DLC QUALIFIED, AND ROHS COMPLIANT. COMPLIES WITH LM79, LM80 AND TM21 TESTING STANDARDS. UL 924 WHEN EQUIPPED WITH EMERGENCY BATTERY BACK-UP.
6. MOUNTING - RECESSED IN HARD OR ACOUSTICAL TILE CEILING.
7. OPTIONS - EMERGENCY BATTERY BACK-UP, WALL-WASH TRIM, IC RATED FOR DIRECT CONTACT WITH INSULATION, VARIOUS APERTURE DIAMETERS, AND VARIOUS GLASS LENSES.
8. THIS SKETCH IS A NON-PROPRIETARY GRAPHIC REPRESENTATION OF A LUMINAIRE THAT MAY MEET THE SPECIFICATION REQUIREMENTS. IT IS NOT INTENDED TO INDICATE A CERTAIN MANUFACTURER OR PREFERENCE.

LED RECESSED DOWNLIGHT

REVISED:	APRIL 2016	LIGHTING PLATE:	NL-19

TYPES: WP1, WP2

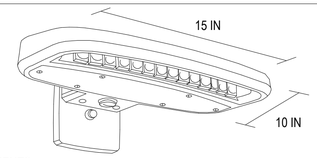

LUMINAIRE REQUIREMENTS:

1. HOUSING - DIE-CAST OR EXTRUDED ALUMINUM WITH INTEGRAL PASSIVE COOLING MECHANISM. HEAT SINK MUST BE INCORPORATED DIRECTLY INTO HOUSING OR DRIVER COMPARTMENT TO ENSURE MAXIMUM HEAT TRANSFER AND DISSIPATION.
2. FINISH - MULTI-STAGE PRE-TREATMENT, FINISHED WITH BAKED-ON POLYESTER POWDER COAT. FINISH MUST PASS 2500 HOUR SALT SPRAY TEST PER ASTM B117. STANDARD FINISH IS DARK BRONZE, WITH OTHER CUSTOM COLORS AVAILABLE.
3. POWER SUPPLY/LED DRIVER - CLASS 1 DRIVER MUST OPERATE AT 120/277 VOLTS, 50/60 HZ, WITH OTHER VOLTAGES OPTIONAL; POWER FACTOR GREATER THAN 0.9 AND THD LESS THAN 20% AT FULL LOAD. MINIMUM EFFICACY MUST BE 108 LM/W AT MAXIMUM 600mA OPERATING CURRENT.
4. LED OPTICAL ASSEMBLY - PRECISION MOLDED ACRYLIC LENS PROVIDED FOR MULTIPLE HIGH-POWERED LEDS PRODUCING NEMA TYPE III DISTRIBUTION OR AS OTHERWISE INDICATED. BUG UPLIGHT RATING OF U0, WITH GLARE RATING AS DETERMINED BY LIGHTING ZONE INSTALLED. MINIMUM COLOR RENDERING INDEX (CRI) MUST BE 80 CRI FOR CORRELATED COLOR TEMPERATURE (CCT) OF 4000 DEGREES K.
5. CERTIFICATION - UL AND/OR ETL LISTED FOR DAMP OR WET LOCATIONS AS INDICATED, AND RoHS COMPLIANT.
6. OPTIONS - VARIOUS LUMEN OUTPUT RATING AS INDICATED, PHOTOCELL, AND 0-10 VOLT DIMMING DRIVER.
7. OTHER - THE ABOVE SKETCH IS A NON-PROPRIETY GRAPHIC REPRESENTATION OF A LUMINAIRE THAT MAY MEET THE SPECIFICATION REQUIREMENTS AND IS NOT INTENDED TO INDICATE A CERTAIN MANUFACTURER'S PREFERENCE. ALL DIMENSIONS ARE NOMINAL AND VARY PER MANUFACTURER.

LED WALL PACK

REVISED:	MARCH 2013	LIGHTING PLATE:	XL-17

TYPES: EX

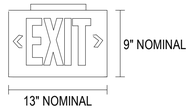

LUMINAIRE REQUIREMENTS:

1. HOUSING - DIE-CAST ALUMINUM. SINGLE OR DOUBLE-FACED AS INDICATED.
2. LETTERS/CHEVRONS - MINIMUM 6" HIGH WITH 3/4" STROKE. RED OR GREEN LETTERS AS INDICATED. PROVIDE CHEVRONS AS INDICATED EITHER LEFT, RIGHT, OR BOTH DIRECTIONS AS INDICATED. CHEVRONS PUNCHED OUT THROUGH HOUSING AS REQUIRED.
3. EMERGENCY PACK - SOLID-STATE, CONSTANT-CURRENT TYPE BATTERY CHARGER WITH MAINTENANCE-FREE, NICKEL-CADMIUM BATTERY, AC-ON INDICATOR LAMP AND TEST SWITCH.
4. MOUNTING - UNIVERSAL MOUNTING KIT FOR CEILING, WALL, OR END OF FIXTURE MOUNTING.
5. ILLUMINATION - PROVIDED BY RED, GREEN, OR WHITE HIGH-OUTPUT LEDS INSIDE OF FIXTURE HOUSING. PROVIDE POLYSTYRENE DIFFUSER IN COLOR INDICATED WITH FREQUENCY-MATCHED SILKSCREEN COATING FOR MAXIMUM LED LIGHT OUTPUT.
6. CERTIFICATION - UL LISTED AND CERTIFIED FOR DAMP LOCATIONS.

LED EXIT SIGN

REVISED:	AUGUST 2004	LIGHTING PLATE:	NL-63

TYPES: ELU

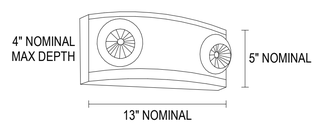

LUMINAIRE REQUIREMENTS:

1. HOUSING - UV STABLE, FLAME-RATED, HIGH-IMPACT THERMOPLASTIC IN WHITE OR BLACK TEXTURED FINISH.
2. INTERNAL COMPONENTS - FULLY AUTOMATIC, SOLID STATE, CONSTANT VOLTAGE, CURRENT-LIMITED BATTERY CHARGER; MAINTENANCE-FREE LEAD-ACID BATTERY; AND BUILT-IN OVERLOAD AND LOW-VOLTAGE BATTERY PROTECTION.
3. EXTERIOR HOUSING INDICATORS - LED AC-ON INDICATOR AND INTEGRAL TEST SWITCH.
4. LAMP HEADS - UV STABLE, FLAME RATED POLYCARBONATE THERMOPLASTIC. LED LAMPS MUST BE 5 WATTS, HIGH-OUTPUT, OR AS INDICATED IN LIGHTING FIXTURE SCHEDULE.
5. MOUNTING - DIRECTLY TO 4" OCTAGONAL OR SQUARE OUTLET BOX.
6. CERTIFICATION - UL LISTED AND LABELED. COMLIES WITH UL 924 AND NFPA 101 REQUIREMENTS. LISTED FOR DAMP LOCATIONS.
7. OPTIONS - VOLTMETER, VANDEL-RESISTANT SHIELD, SELF-DIAGNOSTIC/TESTING ELECTRONICS, AND WIRE GUARD

DECORATIVE EMERGENCY LIGHTING UNIT

REVISED:	AUGUST 2004	LIGHTING PLATE:	NL-67

TYPES: E, E1, E2, E3, E4, E1E, EL

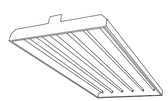

LUMINAIRE REQUIREMENTS:

1. DRIVER HOUSING - CODE GAUGE COLD-ROLLED STEEL MOUNTING BOX WITH DIE CAST ALUMINUM HEAT SINK. AVAILABLE MOUNTING FOR HOOK AND CORD (WITH SPRING LOCK HOOK AND POWER CORD) OR DIRECT CONDUIT PENDANT ATTACHMENT.
2. REFLECTOR - SPECULAR ANODIZED ALUMINUM OR CLEAR OR WHITE ACRYLIC. BOTTOM LENS OPTIONAL FOR ACRYLIC REFLECTOR TYPES.
3. LIGHT SOURCE - SOLID STATE LEDS WITH MINIMUM 50K HOURS RATED LIFE AT L70, 3500K CCT UON, MINIMUM 80 CRI, MAXIMUM 4-STEP MCADAM ELLIPSE BINNING TOLERANCE FOR COLOR CONSISTENCY, AND MINIMUM EFFICACY OF 149 LUMENS/WATT. INITIAL LUMEN OUTPUT AS INDICATED IN LUMINAIRE SCHEDULE.
4. DRIVER - REPLACEABLE, INTEGRAL, HIGH-EFFICIENCY DRIVER WITH MINIMUM 0.9 PF, OPERATING VOLTAGE OF 120-277V, THERMAL MANAGEMENT, < 20% TOTAL HARMONIC DISTORTION. ON-OFF CONTROL, STEP-DIMMABLE OR FULLY DIMMABLE AS INDICATED.
5. CERTIFICATION - UL 1598, DAMP LOCATION, DLC QUALIFIED, AND ROHS COMPLIANT. COMPLIES WITH LM79, LM80 AND TM21 TESTING STANDARDS. UL 924 WHEN EQUIPPED WITH EMERGENCY BATTERY BACK-UP.
6. MOUNTING - PENDANT FROM STRUCTURAL CEILING.
7. OPTIONS - EMERGENCY BATTERY BACK-UP, TWIST-LOCK PLUG ON HOOK AND CORD MODELS, SAFETY CABLE OR CHAIN, INTEGRAL PHOTOCELL, WIRE GUARD.
8. THIS SKETCH IS A NON-PROPRIETARY GRAPHIC REPRESENTATION OF A LUMINAIRE THAT MAY MEET THE SPECIFICATION REQUIREMENTS. IT IS NOT INTENDED TO INDICATE A CERTAIN MANUFACTURER OR PREFERENCE.

LED HIGH BAY INDUSTRIAL

REVISED:	APRIL 2016	LIGHTING PLATE:	NL-21

TYPES: D1

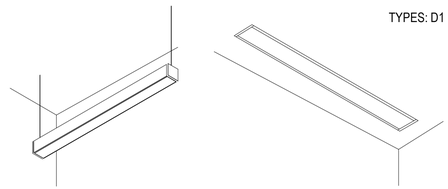

NOTE: THIS SKETCH IS A NON-PROPRIETARY GRAPHIC REPRESENTATION OF A LUMINAIRE THAT MAY MEET THE SPECIFICATION REQUIREMENTS. IT IS NOT INTENDED TO INDICATE A CERTAIN MANUFACTURER OR PREFERENCE.

LUMINAIRE REQUIREMENTS:

1. HOUSING - HEAVY GAUGE COLD ROLLED STEEL, EXTRUDED ALUMINUM, OR DIE CAST ALUMINUM BODY. SIZE AS INDICATED IN LUMINAIRE SCHEDULE.
2. OPTICS - FROSTED ACRYLIC OR POLYCARBONATE LENS. LAMBERTIAN, NARROW, WIDE, OR ASYMMETRIC LIGHT DISTRIBUTION AS INDICATED IN LUMINAIRE SCHEDULE.
3. LIGHT SOURCE - SOLID STATE LEDS, 3500K CCT UON, MINIMUM 80 CRI UON, AND MINIMUM EFFICACY OF 128 LUMENS/WATT UON. INITIAL LUMEN OUTPUT AS INDICATED IN LUMINAIRE SCHEDULE.
4. DRIVER - REPLACEABLE, INTEGRAL, HIGH-EFFICIENCY DRIVER WITH MINIMUM 0.9 PF, OPERATING VOLTAGE OF 120-277V, THERMAL MANAGEMENT, AND < 20% THD. ON-OFF CONTROL AND FULLY DIMMABLE DOWN TO 10% MINIMUM OR AS INDICATED IN LUMINAIRE SCHEDULE.
5. CERTIFICATION - UL LISTED FOR DRY OR DAMP LOCATION, ROHS COMPLIANT, DLC QUALIFIED. COMPLIES WITH IES LM79, LM80 AND TM21 TESTING STANDARDS.
6. MOUNTING - PENDANT, STEM, OR SURFACE MOUNTED WITH STAINLESS STEEL MOUNTING HARDWARE, OR RECESSED IN HARD OR ACOUSTICAL TILE CEILING.
7. OPTIONS - EMERGENCY BATTERY BACK-UP, INTEGRAL OCCUPANCY/VACANCY SENSOR, VARIOUS PROFILE DIMENSIONS AND RUN LENGTHS, AND VARIOUS CLEAR OR FROSTED POLYCARBONATE LENSES, BAFFLES, OR LOUVERS.

LINEAR LED SLOT

REVISED:	NOVEMBER 2020	LIGHTING PLATE:	NL-4

NO.	DESCRIPTION	DATE	APP'R

NAVFAC

COMMONWEALTH OF MASSACHUSETTS
SENOL DURUR
ELECTRICAL No. 47946
REGISTERED PROFESSIONAL ENGINEER

IRQ W.M. Jordan COMPANY – A JOINT VENTURE –

Michael Baker INTERNATIONAL
100 AIRSIDE DRIVE
MOON TOWNSHIP, PA 15108 A/E INFO

APPROVED

FOR COMMANDER NAVFAC

ACTIVITY
MARINE CORPS BASE
CAMP LEJEUNE

SATISFACTORY TO DATE DD/MM/YY

DES ZAK	DRW LAK	CHK BSR
PM / DM	TOWLER / ROOT	
BRANCH HEAD	SEK	
DESIGN DIRECTOR	R.L.Stephens, Jr.	
FIRE PROTECTION	DPS	

DEPARTMENT OF THE NAVY
NAVAL FACILITIES ENGINEERING SYSTEMS COMMAND
ATLANTIC DESIGN AND CONSTRUCTION
MCB CAMP LEJEUNE
NAVAL FACILITIES ENGINEERING SYSTEMS COMMAND ATLANTIC
NORFOLK, VA
JACKSONVILLE, NC
LOGCOM CSP WAREHOUSE

ELECTRICAL - DETAILS

SCALE: AS NOTED
EPROJECT NO.: 1639600
CONSTR. CONTR. NO. N40085-20-C-0059
NAVFAC DRAWING NO. 14111401
SHEET 375 OF 447

E-501

DRAWFORM REVISION: 25 AUGUST 2020

P1527 FINAL SUBMISSION - 11/18/2021

PLOTTED: 11/11/2021 9:18:45 AM

FILE NAME: BIM 360/IHF PACKAGE 3/P1527 LOG COM CSP-1639600-E.rvt

TYPES: F1

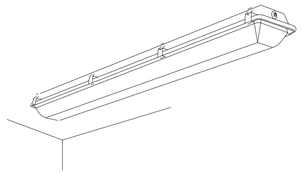

NOTE: THIS SKETCH IS A NON-PROPRIETARY GRAPHIC REPRESENTATION OF A LUMINAIRE THAT MAY MEET THE SPECIFICATION REQUIREMENTS. IT IS NOT INTENDED TO INDICATE A CERTAIN MANUFACTURER OR PREFERENCE.

LUMINAIRE REQUIREMENTS:

1. HOUSING - HIGH-IMPACT RESISTANT, FULLY GASKETED HOUSING CONSTRUCTED OF STAINLESS STEEL OR HEAVY-DUTY DIE CAST ALUMINUM SIZE AS INDICATED IN LUMINAIRE SCHEDULE.
2. OPTICS - UV-STABILIZED, HIGH-IMPACT, FROSTED POLYCARBONATE OR GLASS LENS.
3. LIGHT SOURCE - SOLID STATE LEDS, 4000K CCT UON, MINIMUM 80 CRI UON, AND MINIMUM EFFICACY OF 128 LUMENS/WATT UON. INITIAL LUMEN OUTPUT AS INDICATED IN LUMINAIRE SCHEDULE.
4. DRIVER - REPLACEABLE, INTEGRAL, HIGH-EFFICIENCY DIMMABLE DRIVER WITH MINIMUM 0.9 PF, OPERATING VOLTAGE OF 120-277V, THERMAL MANAGEMENT, AND < 20% THD. ON/OFF CONTROL AND FULLY DIMMABLE DOWN TO 10% MINIMUM OR AS INDICATED IN LUMINAIRE SCHEDULE.
5. CERTIFICATION - UL LISTED FOR WET LOCATION, ROHS COMPLIANT. DLC QUALIFIED. COMPLIES WITH IES LM79, LM80 AND TM21 TESTING STANDARDS. MEETS UL844 REQUIREMENTS FOR CLASS 1 DIVISION 2 HAZARDOUS LOCATIONS.
6. MOUNTING - CEILING OR WALL SURFACE-MOUNTED OR SUSPENDED.
7. OPTIONS - INTEGRAL OCCUPANCY SENSOR, EMERGENCY BATTERY BACK-UP.

LED HAZARDOUS LOCATION LIGHT

REVISED:	NOVEMBER 2020	LIGHTING PLATE:	NL-22

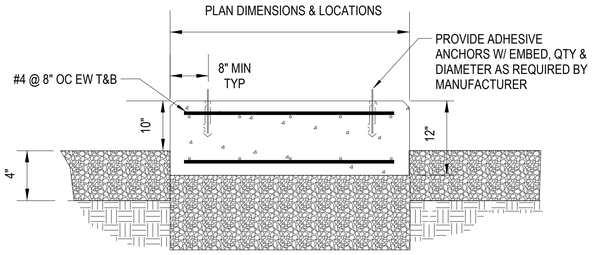

C3 GENERATOR PAD DETAIL

SCALE: NTS

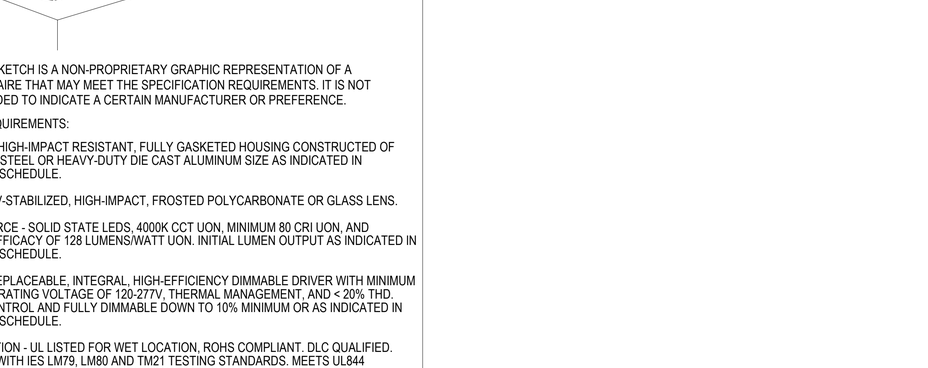

A1 TYPICAL EQUIPMENT PAD DETAIL

SCALE: NTS

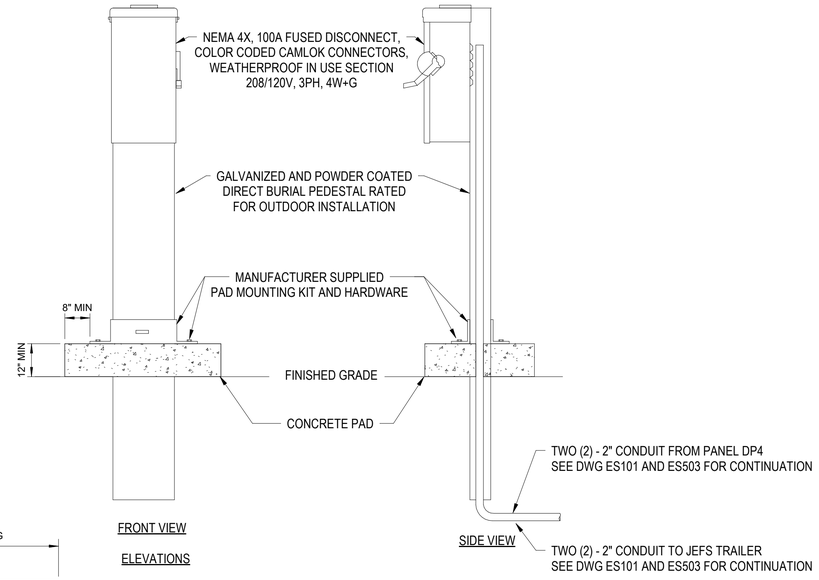

NOTES:
1. PEDESTAL MOUNTED DISCONNECT MUST BE WITH NEUTRAL ASSEMBLY. COORDINATE WITH MANUFACTURER TO FURNISH AND INSTALL PER SPECIFICATIONS.
2. MOUNTING HARDWARE AND ASSEMBLIES PER MANUFACTURER'S RECOMMENDATION.

A3 PAD PEDESTAL MOUNTED DISCONNECT

SCALE: NTS

NO.	DESCRIPTION	DATE	APP'R

SENOL DURUR ELECTRICAL No. 47946 REGISTERED PROFESSIONAL ENGINEER — COMMONWEALTH OF MASSACHUSETTS

RQ W.M. Jordan COMPANY — A JOINT VENTURE —

Michael Baker INTERNATIONAL
100 AIRSIDE DRIVE, MOON TOWNSHIP, PA 15108 — A/E INFO

APPROVED
FOR COMMANDER NAVFAC

ACTIVITY: MARINE CORPS BASE CAMP LEJEUNE

SATISFACTORY TO DATE	DD/MM/YY
DES ZAK	DRW LAK CHK BSR
PM / DM	TOWLER / ROOT
BRANCH HEAD	SEK
DESIGN DIRECTOR	R.L.Stephens, Jr.
FIRE PROTECTION	DPS

DEPARTMENT OF THE NAVY
NAVAL FACILITIES ENGINEERING SYSTEMS COMMAND ATLANTIC
ATLANTIC DESIGN AND CONSTRUCTION
NAVAL FACILITIES ENGINEERING SYSTEMS COMMAND ATLANTIC — NORFOLK, VA
JACKSONVILLE, NC
MCB CAMP LEJEUNE
LOGCOM CSP WAREHOUSE
ELECTRICAL - DETAILS

SCALE:	AS NOTED
EPROJECT NO.:	1639600
CONSTR. CONTR. NO.	N40085-20-C-0059
NAVFAC DRAWING NO.	14111402
SHEET	376 OF 447

E-502

DRAWFORM REVISION: 25 AUGUST 2020

P1527 FINAL SUBMISSION - 11/18/2021

PLOTTED: 11/11/2021 9:18:46 AM

FILE NAME: BIM 360://HF PACKAGE 3/P1527 LOG COM CSP-1639600-E.rvt

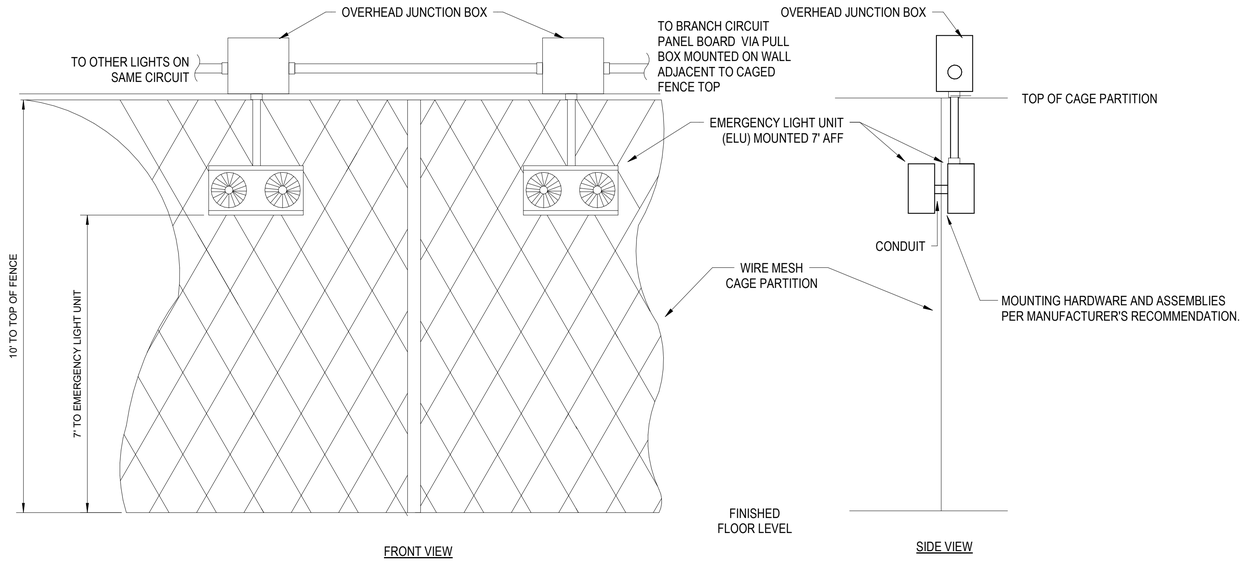

C1 CAGE ELU MOUNTING DETAIL

SCALE: NTS

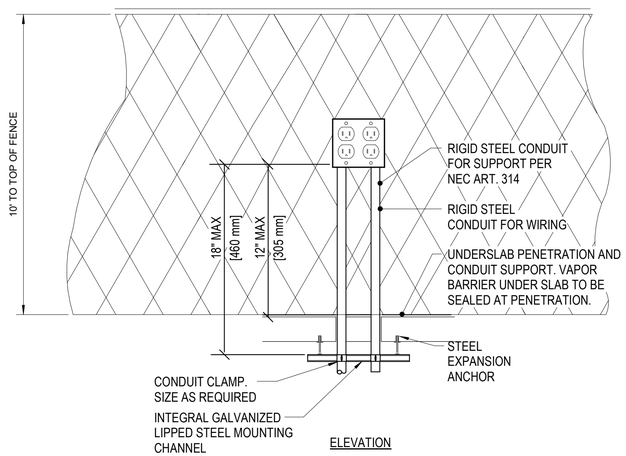

A1 RECEPTACLE MOUNTING DETAIL

SCALE: NTS

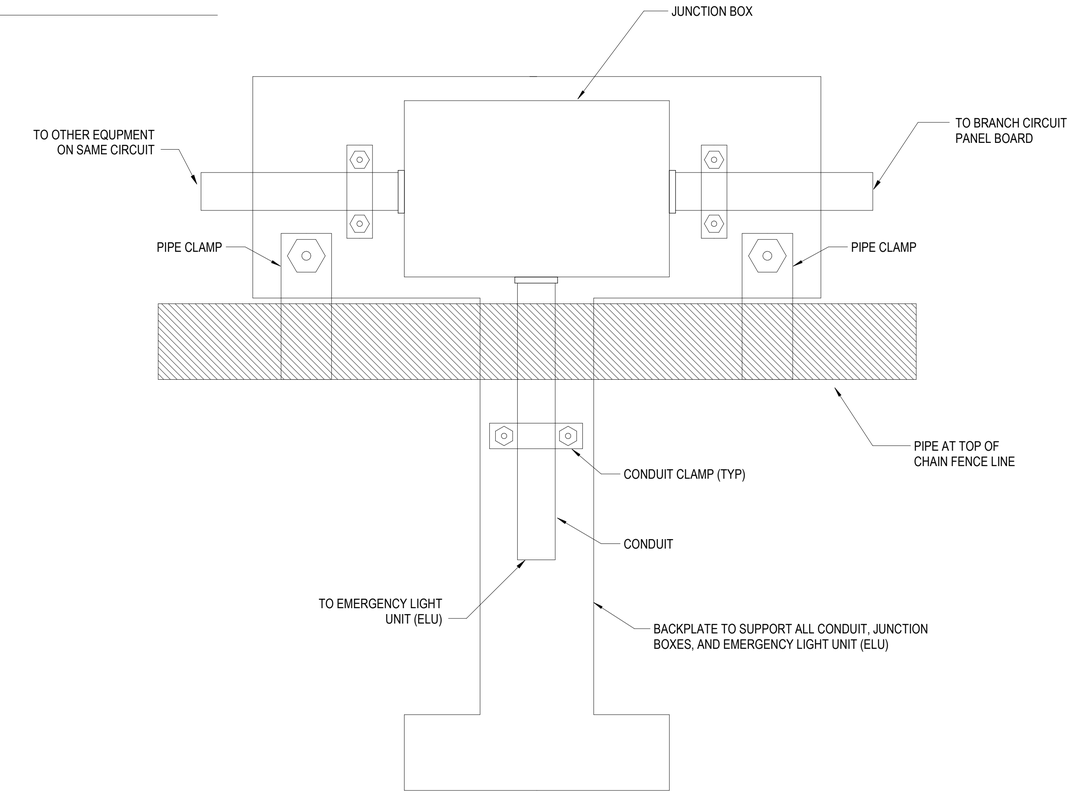

A3 TYPICAL CAGE MOUNTING DETAIL

SCALE: NTS

NO.	DESCRIPTION	DATE	APPR

NAVFAC

COMMONWEALTH OF MASSACHUSETTS
SENOL DURUR
ELECTRICAL
No. 47946
REGISTERED
PROFESSIONAL ENGINEER

IRQ W.M. Jordan COMPANY – A JOINT VENTURE –

Michael Baker INTERNATIONAL
100 AIRSIDE DRIVE
MOON TOWNSHIP, PA 15108
A/E INFO

APPROVED

FOR COMMANDER NAVFAC

ACTIVITY
MARINE CORPS BASE CAMP LEJEUNE

SATISFACTORY TO DATE DD/MM/YY

DES	ZAK	DRW	LAK	CHK	BSR

PM / DM	TOWLER / ROOT
BRANCH HEAD	SEK
DESIGN DIRECTOR	R.L.Stephens, Jr.
FIRE PROTECTION	DPS

DEPARTMENT OF THE NAVY
NAVAL FACILITIES ENGINEERING SYSTEMS COMMAND ATLANTIC
ATLANTIC DESIGN AND CONSTRUCTION
NAVAL FACILITIES ENGINEERING SYSTEMS COMMAND ATLANTIC NORFOLK, VA
MCB CAMP LEJEUNE
LOGCOM CSP WAREHOUSE
JACKSONVILLE, NC

ELECTRICAL - DETAILS

SCALE:	AS NOTED
EPROJECT NO.:	1639600
CONSTR. CONTR. NO.	N40085-20-C-0059
NAVFAC DRAWING NO.	14111403
SHEET	377 OF 447

E-503

DRAWFORM REVISION: 25 AUGUST 2020

P1527 FINAL SUBMISSION - 11/18/2021

PLOTTED: 11/11/2021 9:18:47 AM

FILE NAME: BIM 360://AIF PACKAGE 3/P1527 LOG COM CSP-1639600-E.rvt

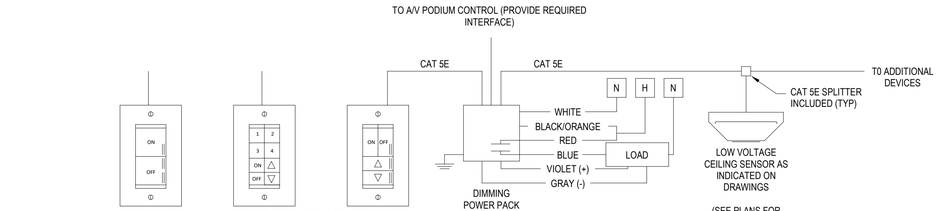

ZONING FOR 8 BUTTON SWITCHES
1. PROVIDE CONTROL OF UP TO 4 ZONES OF LIGHT (3 ZONES FOR CLASSROOMS).
2. PROVIDE WITH RAISE/LOWER AND ON/OFF.
3. AFTER 15 MINUTES OF NO OCCUPANCY, LIGHT FIXTURES MUST TURN OFF.
4. TYPICAL APPLICATION: AS INDICATED ON DRAWINGS.
5. PROVIDE INTERFACE FOR LIGHTING CONTROL FROM A/V PODIUM CONTROL, AT ALL PODIUM LOCATIONS.

OPERATION SEQUENCE
1. CORRIDORS, LOBBIES, AND RESTROOMS MUST ILLUMINATE TO 100% PER OCCUPANCY SENSOR SIGNAL. OTHER SPACES MUST BE PROGRAMMED TO 50% AUTO ON PER OCCUPANCY SENSOR SIGNAL. VACANCY SENSOR IS MANUAL ON.
2. LIGHT FIXTURE MUST CONTINUOUSLY DIM / BRIGHTEN BASED UPON INPUT FROM THE DIMMER.
3. AFTER 15 MINUTES OF NO OCCUPANCY, LIGHT FIXTURES MUST TURN OFF.
4. TYPICAL APPLICATION: AS INDICATED ON DRAWINGS.

C1 CEILING OCCUPANCY / VACANCY SENSOR - DIMMING

SCALE: NTS

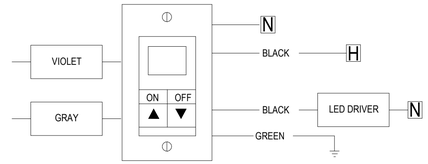

GENERAL NOTES
1. LIGHTING CONTROL BUTTONS ENGRAVED FOR REQUIRED FUNCTIONALITY .
2. FINAL SCENE PRESET TO BE DESIGNATED BY OWNER.
3. CAT 5E CABLES NEED TO BE CHECKED WITH A CAT5E METER FOR PROPER TERMINATION OF RJ45 CONNECTORS.
4. PROVIDE INTERFACE FOR LIGHTING CONTROL AT A/V PODIUM CONTROL, AT PODIUM LOCATIONS.

OPERATION SEQUENCE
1. CORRIDORS, LOBBIES, AND RESTROOMS MUST ILLUMINATE TO 100% PER OCCUPANCY SENSOR SIGNAL. OTHER SPACES MUST BE PROGRAMMED TO 50% AUTO ON PER OCCUPANCY SENSOR SIGNAL. VACANCY SENSOR IS MANUAL ON.
2. LIGHT FIXTURE MUST CONTINUOUSLY DIM / BRIGHTEN BASED UPON INPUT FROM THE DIMMER.
3. AFTER 15 MINUTES OF NO OCCUPANCY, LIGHT FIXTURES MUST TURN OFF.
4. TYPICAL APPLICATION: AS INDICATED ON DRAWINGS

C3 WALL SWITCH OCCUPANCY / VACANCY SENSOR - DIMMING

SCALE: NTS

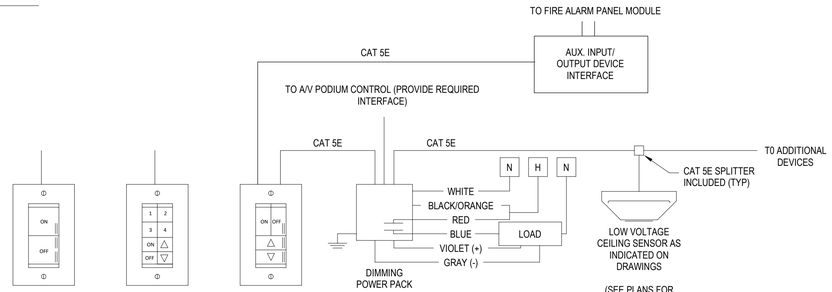

LIGHTING CONTROL SYSTEM NOTES
1. PROVIDE AN AUXILARY INPUT/OUTPUT INTERFACE TO ALLOW INPUT FROM FIRE ALARM PANEL TO OVERRIDE LIGHTING CONTROLS. PROGRAM STANDALONE DEVICES SO THAT CONTROLLED LIGHTING ALONG THE PATH OF EGRESS COMES TO FULL BRIGHTNESS UPON FIRE ALARM ACTIVATION. ROOMS NOT WITHIN THE PATH OF EGRESS SUCH AS PRIVATE OFFICES, SMALL STORAGE ROOMS, PRIVATE RESTROOMS, ETC. ARE NOT REQUIRED TO HAVE INDICATED INTERFACE.
2. SEE KEY NOTES ON PLAN DRAWINGS INDICATING LOCATION FOR FIRE ALARM I/0 LIGHTING CONTROL INTERFACE.
3. MULTIPLE ROOMS CAN BE TIED TOGETHER VIA CAT 5 WIRING, NOT TO EXCEED 16 CHANNELS. COORDINATE WITH MANUFACTURER ON EXACT REQUIREMENTS AND PROVIDE REQUIRED PROGRAMMING.
4. COORDINATE FIRE ALARM INTERFACE WITH EXACT LIGHTING CONTROL MANUFACTURER FOR REQUIRED COMPONENTS FOR A COMPLETE AND OPERATIONAL SYSTEM.
5. FIRE ALARM INPUT MUST BE SPLIT TO PROVIDE MULTIPLE INPUTS TO I/O MODULES IN EACH SIDE OF BUILDING.

OPERATION SEQUENCE
1. CORRIDORS, LOBBIES, AND RESTROOMS MUST ILLUMINATE TO 100% PER OCCUPANCY SENSOR SIGNAL. OTHER SPACES MUST BE PROGRAMMED TO 50% AUTO ON PER OCCUPANCY SENSOR SIGNAL. VACANCY SENSOR IS MANUAL ON.
2. LIGHT FIXTURE MUST CONTINUOUSLY DIM / BRIGHTEN BASED UPON INPUT FROM THE DIMMER.
3. AFTER 15 MINUTES OF NO OCCUPANCY, LIGHT FIXTURES MUST TURN OFF.
4. TYPICAL APPLICATION: AS INDICATED ON DRAWINGS.

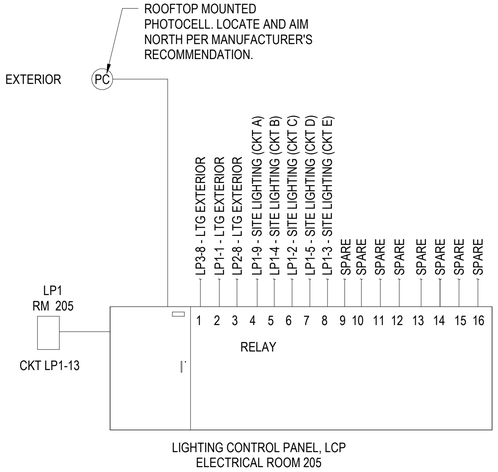

NOTES:

1. SEGREGATE CIRCUITS IN PANEL PER MANUFACTURER RECOMMENDATIONS IN ORDER TO MEET APPLICABLE CODES AND STANDARDS.
2. EXTERIOR BUILDING LIGHTS MUST HAVE PROGRAMMABLE TIMECLOCK TIMED ON/OFF WITH PHOTOCELL OVERRIDE.

A1 TYPICAL EXTERIOR LTG CONTROL WIRING DIAGRAM

SCALE: NTS

B3 CEILING OCCUPANCY / VACANCY SENSOR - DIMMING W/ I/0 FIRE ALARM INTERFACE

SCALE: NTS

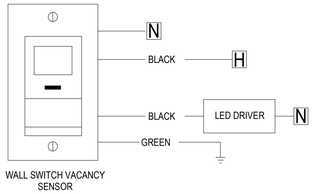

OPERATION SEQUENCE
1. VACANCY SENSOR IS MANUAL ON.
2. AFTER 15 MINUTES OF NO OCCUPANCY, LIGHT FIXTURES MUST TURN OFF.
3. TYPICAL APPLICATION: AS INDICATED ON DRAWINGS

A3 WALL SWITCH VACANCY SENSOR - NON-DIMMING

SCALE: NTS

APP'R | DATE | DESCRIPTION | SYM

NAVFAC

SENOL DURUR ELECTRICAL No. 47946 REGISTERED PROFESSIONAL ENGINEER COMMONWEALTH OF MASSACHUSETTS

IRQ WM Jordan COMPANY – A JOINT VENTURE –

Michael Baker INTERNATIONAL

100 AIRSIDE DRIVE
MOON TOWNSHIP, PA 15108 A/E INFO

APPROVED

FOR COMMANDER NAVFAC

ACTIVITY
MARINE CORPS BASE CAMP LEJEUNE

SATISFACTORY TO DATE DD/MM/YY

DES SD | DRW LAK | CHK YPS

PM / DM TOWLER / ROOT

BRANCH HEAD SEK

DESIGN DIRECTOR R.L.Stephens, Jr.

FIRE PROTECTION DPS

DEPARTMENT OF THE NAVY
NAVAL FACILITIES ENGINEERING SYSTEMS COMMAND
ATLANTIC DESIGN AND CONSTRUCTION
MCB CAMP LEJEUNE

NAVAL FACILITIES ENGINEERING SYSTEMS COMMAND ATLANTIC
NORFOLK, VA

JACKSONVILLE, NC
LOGCOM CSP WAREHOUSE

ELECTRICAL - LIGHTING CONTROL DIAGRAMS

SCALE: AS NOTED

EPROJECT NO.: 1639600

CONSTR. CONTR. NO. N40085-20-C-0059

NAVFAC DRAWING NO. 14111404

SHEET 378 OF 447

E-504

DRAWFORM REVISION: 25 AUGUST 2020

P1527 FINAL SUBMISSION - 11/18/2021

PLOTTED: 11/11/2021 9:18:48 AM

FILE NAME: BIM 360://HF PACKAGE 3/P1527 LOG COM CSP-1639600-E.rvt

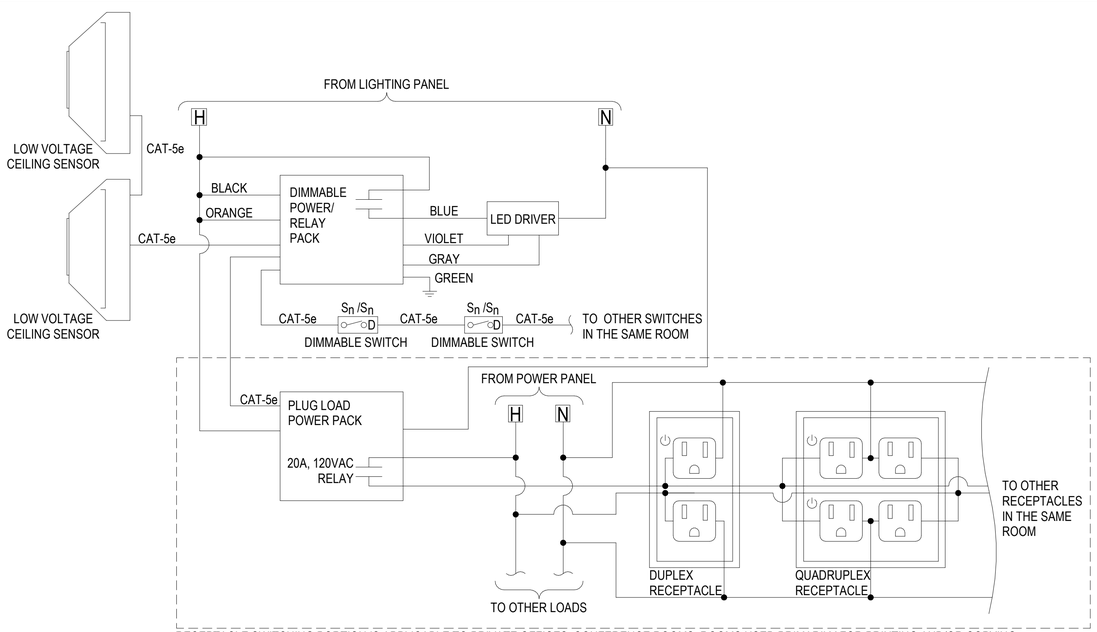

RECEPTACLE SWITCHING PORTION IS APPLICABLE TO PRIVATE OFFICES, CONFERENCE ROOMS, ROOMS USED PRIMARILY FOR PRINTING AND/OR COPYING FUNCTIONS, BREAK ROOMS, AND CLASSROOMS - THESE RECEPTACLES ARE INDICATED WITH "SW" DESIGNATION. ADDITIONAL POWER PACKS FOR EACH SWITCHED RECEPTACLE CIRCUIT IN SINGLE ROOM ARE REQUIRED PER POWER PLAN.
TYPICAL APPLICATION: OPEN OFFICES

OPERATION SEQUENCE:
OCCUPANCY SENSOR:

1. LIGHT FIXTURES MUST TURN ON 50% POWER OUTPUT UPON SENSING OCCUPANCY. THE OTHER 50% MUST BE MANUAL ON.
2. THE GENERAL LIGHTING MUST HAVE AT LEAST ONE CONTROL STEP BETWEEN 30% - 70% (INCLUSIVE) OF FULL LIGHTING POWER IN ADDITION TO OFF.
3. WALL SWITCHES MUST BE PROGRAMMED TO ACHIEVE THE MULTILEVEL CONTROLS.
4. AFTER 15 MINUTE INTERVAL OF OCCUPANTS LEAVING THE SPACE, LIGHT FIXTURES MUST AUTOMATICALLY TURN OFF. TYPICAL APPLICATION: OPEN OFFICES
5. RECEPTACLES WILL SWITCH TO 'ON' POSITION WHEN OCCUPANCY IS SENSED OR LIGHTING SWITCH IS MANUALLY TURNED ON.

B2 LOW VOLTAGE SENSOR (CEILING) - OPEN OFFICES

SCALE: NTS

WALL SWITCH VACANCY SENSOR SHOWN IN THIS DETAIL. BASED UPON VARIOUS ROOM TYPES, THIS MUST ALSO BE OCCUPANCY SENSORS CAPABLE OF PERFORMING THE REQUIRED FUNCTIONS AS STATED IN THE OPERATION SEQUENCE.

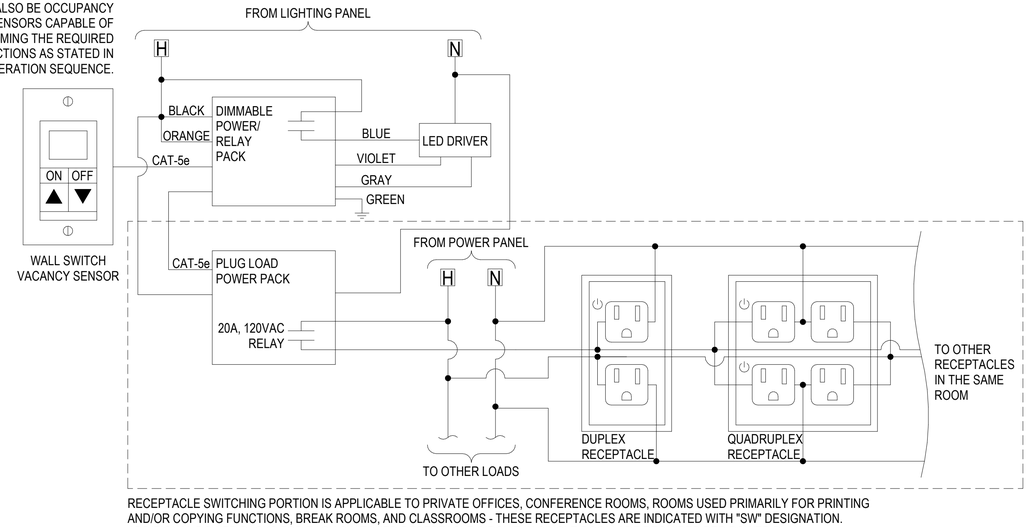

RECEPTACLE SWITCHING PORTION IS APPLICABLE TO PRIVATE OFFICES, CONFERENCE ROOMS, ROOMS USED PRIMARILY FOR PRINTING AND/OR COPYING FUNCTIONS, BREAK ROOMS, AND CLASSROOMS - THESE RECEPTACLES ARE INDICATED WITH "SW" DESIGNATION.
ADDITIONAL POWER PACKS FOR EACH SWITCHED RECEPTACLE CIRCUIT IN SINGLE ROOM ARE REQUIRED PER POWER PLAN.
TYPICAL APPLICATION: PRIVATE OFFICES/ ADMINISTRATION AREAS

OPERATION SEQUENCE:
VACANCY SENSOR:

1. LIGHT FIXTURES MUST BE MANUAL ON TO FULL 100% LIGHTING POWER.
2. THE GENERAL LIGHTING MUST HAVE AT LEAST ONE CONTROL STEP BETWEEN 30% - 70% (INCLUSIVE) OF FULL LIGHTING POWER IN ADDITION TO OFF.
3. WALL SWITCH VACANCY SENSOR MUST BE PROGRAMMED TO ACHIEVE THE MULTILEVEL CONTROLS.
4. AFTER 15 MINUTE INTERVAL OF VACANCY SENSING, LIGHT FIXTURES MUST AUTOMATICALLY TURN OFF.
5. TYPICAL APPLICATION: PRIVATE OFFICES/ ADMINISTRATION AREAS
6. RECEPTACLES WILL SWITCH TO 'ON' POSITION WHEN LIGHTING SWITCH IS MANUALLY TURNED ON.

B4 LOW VOLTAGE SENSOR (WALL) - PRIVATE OFFICES/ ADMINISTRATION AREAS

SCALE: NTS

NO.	DESCRIPTION	DATE	APPR

NAVFAC

COMMONWEALTH OF MASSACHUSETTS
SENOL DURUR
ELECTRICAL No. 47946
REGISTERED PROFESSIONAL ENGINEER

IRQ Jordan COMPANY – A JOINT VENTURE –

Michael Baker INTERNATIONAL
100 AIRSIDE DRIVE
MOON TOWNSHIP, PA 15108
A/E INFO

APPROVED

FOR COMMANDER NAVFAC

ACTIVITY
MARINE CORPS BASE CAMP LEJEUNE

SATISFACTORY TO DATE DD/MM/YY

DES	SD	DRW	LAK	CHK	YPS
PM / DM			TOWLER / ROOT		
BRANCH HEAD			SEK		
DESIGN DIRECTOR			R.L.Stephens, Jr.		
FIRE PROTECTION			DPS		

DEPARTMENT OF THE NAVY
NAVAL FACILITIES ENGINEERING SYSTEMS COMMAND ATLANTIC
ATLANTIC DESIGN AND CONSTRUCTION
MCB CAMP LEJEUNE

NAVAL FACILITIES ENGINEERING SYSTEMS COMMAND ATLANTIC
NORFOLK, VA
JACKSONVILLE, NC
LOGCOM CSP WAREHOUSE

ELECTRICAL - LIGHTING CONTROL DIAGRAMS

SCALE:	AS NOTED
EPROJECT NO.:	1639600
CONSTR. CONTR. NO.	N40085-20-C-0059
NAVFAC DRAWING NO.	14111405
SHEET	379 OF 447

E-505

DRAWFORM REVISION: 25 AUGUST 2020

P1527 FINAL SUBMISSION - 11/18/2021

PLOTTED: 11/11/2021 9:18:49 AM

FILE NAME: BIM 360://AIF PACKAGE 3/P1527 LOG COM CSP-1639600-E.rvt

SEQUENCE OF OPERATION MATRIX

ROOM #	SPACE NAME	OCCUPANCY/VACANCY SENSOR							TIME CLOCK			DAYLIGHT SENSOR		OTHER	
		VACANCY MODE (MANUAL ON)	OCCUPANCY MODE (AUTO ON)	SENSOR TIMEOUT PERIOD (MINUTES)	INITIAL OCCUPIED LIGHTING LEVEL (%)	PREFERRED CONTROL STEP DIMMING (%)	UNOCCUPIED LIGHTING LEVEL (%)	OCCUPANCY SENSOR OVERRIDE -FIRE ALARM PANEL	SCHEDULED "ON" TIME	SCHEDULE "OFF" TIME	REDUCE FIXTURE LIGHTING LEVEL% AT MIDNIGHT OR CLOSING	YES/NO	TARGET LIGHTING LEVEL	MANUAL WALL CONTROL ONLY- (AS INDICATED ON DRAWINGS	RECEPTACLE CONTROL WITH POWER PACK(S)
100	GOVT OFFICE	X		15	100	30-70DIM	0					N	N/A		X
101	REG. MNGR.	X		15	100	30-70DIM	0					N	N/A		X
102	MOTHERS ROOM	X		15	100	30-70DIM	0					N	N/A		
103	BREAK ROOM		X	15	50	30-70DIM	0	X				N	N/A		X
104	LOGCOM WAREHOUSE		X	15	100	30-70DIM	0	X				N	N/A		
104.1	SHIPPING/RECEIVING	X		15	100	30-70DIM	0	X				N	N/A		
104.2	SHELTER STORAGE		X	15	100	30-70DIM	0	X				N	N/A		
104.3	ISSUE/RETURN AREA	X		15	100	30-70DIM	0	X				N	N/A		
104.4	SORT AREA	X		15	100	30-70DIM	0	X				N	N/A		
104.5	DISPOSAL AREA	X		15	100	30-70DIM	0	X				N	N/A		
104.6	BATTERY CHARGING AREA	X		15	100	30-70DIM	0	X				N	N/A		
105	JAN.	X		15	100	30-70DIM	0					N	N/A		
106	COMP. EQ. RSDL DECON LOTION	X		15	100	30-70DIM	0	X				N	N/A		
107	RADIOLOGICAL	X		15	100	30-70DIM	0	X				N	N/A		
108	TELECOM				100		0					N	N/A	X	
109	ELEC.				100		0					N	N/A	X	
110	NDT. STORAGE		X	15	50	30-70DIM	0	X				N	N/A		
110A	NDT. OFFICE	X		15	100	30-70DIM	0					N	N/A		X
111	ESAPI ROOM	X		15	100	30-70DIM	0	X				N	N/A		X
112	ESAPI OFFICE	X		15	100	30-70DIM	0					N	N/A		X
113A	STORAGE AREA SL-3 REPAIR		X	15	50	30-70DIM	0	X				N	N/A		
113B	FINAL QC		X	15	50	30-70DIM	0	X				N	N/A		
114	JSMLT TEST AREA	X		15	100	30-70DIM	0	X				N	N/A		
115	SANITATION AREA		X	15	50	30-70DIM	0	X				N	N/A		
116	ELECTRICAL				100		0					N	N/A	X	
117	MAINTENANCE				100		0					N	N/A	X	
118	TELECOM				100		0					N	N/A	X	
119	CBRN OFFICE	X		15	100	30-70DIM	0	X				N	N/A		X
120	MECHANICAL				100		0					N	N/A	X	
121	ELECTRICAL				100		0					N	N/A	X	
122	FIRE RISER				100		0					N	N/A	X	
123	ELECTRICAL				100		0					N	N/A	X	
124	WHSE. MECHANICAL				100		0					N	N/A	X	
200	CLASSROOM	X		15	100	30-70DIM	0	X				N	N/A		X
201	TECHNICIAN/TECH REF. LIBARAY	X		15	100	30-70DIM	0	X				N	N/A		
202	BREAK ROOM		X	15	50	30-70DIM	0	X				N	N/A		X
203	TELECOM				100		0					N	N/A	X	
204	JAN.	X		15	100	30-70DIM	0					N	N/A		
205	ELECTRICAL				100		0					N	N/A	X	
206	ADMIN. STORAGE	X			100		0					N	N/A		
207	JEFS FST OIC	X		15	100	30-70DIM	0	X				N	N/A		X
208	STORAGE/WAREHOUSE PREP	X		15	100	30-70DIM	0	X				N	N/A		
208A	TEST & REPAIR	X		15	100	30-70DIM	0	X				N	N/A		
208B	VISUAL INSPECT & REPAIR	X		15	100	30-70DIM	0	X				N	N/A		
209	SHIPPING/RECEIVING WTR TEST		X	15	50	30-70DIM	0	X				N	N/A		
209A	HAZMAT STORAGE				100		0					N	N/A	X	
210	JEFS FSS OPERATIONS OFF	X		15	100	30-70DIM	0	X				N	N/A		X
211	ASST. OIC/NCOIC	X		15	100	30-70DIM	0	X				N	N/A		X
212	JEFS AHU				100		0					N	N/A	X	
213	JEFS BOILER ROOM				100		0					N	N/A	X	

SEQUENCE OF OPERATION MATRIX

ROOM #	SPACE NAME	OCCUPANCY/VACANCY SENSOR							TIME CLOCK			DAYLIGHT SENSOR		OTHER	
		VACANCY MODE (MANUAL ON)	OCCUPANCY MODE (AUTO ON)	SENSOR TIMEOUT PERIOD (MINUTES)	INITIAL OCCUPIED LIGHTING LEVEL (%)	PREFERRED CONTROL STEP DIMMING (%)	UNOCCUPIED LIGHTING LEVEL (%)	OCCUPANCY SENSOR OVERRIDE -FIRE ALARM PANEL	SCHEDULED "ON" TIME	SCHEDULE "OFF" TIME	REDUCE FIXTURE LIGHTING LEVEL% AT MIDNIGHT OR CLOSING	YES/NO	TARGET LIGHTING LEVEL	MANUAL WALL CONTROL ONLY- (AS INDICATED ON DRAWINGS	RECEPTACLE CONTROL WITH POWER PACK(S)
C010	CORRIDOR		X	15	100	0-100DIM	50-0	X				N	N/A		
C011	CORRIDOR		X	15	100	0-100DIM	50-0	X				N	N/A		
C012	CORRIDOR		X	15	100	0-100DIM	50-0	X				N	N/A		
C013	CORRIDOR		X	15	100	0-100DIM	50-0	X				N	N/A		
C014	CORRIDOR		X	15	100	0-100DIM	50-0	X				N	N/A		
C020	CORRIDOR		X	15	100	0-100DIM	50-0	X				N	N/A		
C021	CORRIDOR		X	15	100	0-100DIM	50-0	X				N	N/A		
C022	CORRIDOR		X	15	100	0-100DIM	50-0	X				N	N/A		
G010	WOMEN				100		0					N	N/A	X	
G011	UNISEX				100		0					N	N/A	X	
G012	MEN				100		0					N	N/A	X	
G020	WOMEN				100		0					N	N/A	X	
G021	UNISEX				100		0					N	N/A	X	
G022	MEN				100		0					N	N/A	X	
V010	VESTIBULE/ENTRY		X	15	100	0-100DIM	50-0	X				N	N/A		
V020	VESTIBULE/ENTRY		X	15	100	0-100DIM	50-0	X				N	N/A		
V021	VESTIBULE/ENTRY		X	15	100	0-100DIM	50-0	X				N	N/A		

APPR | DATE | DESCRIPTION | SYM

NAVFAC

COMMONWEALTH OF MASSACHUSETTS
SENOL DURUR
ELECTRICAL
No. 47946
REGISTERED
PROFESSIONAL ENGINEER

IRQ WM Jordan COMPANY – A JOINT VENTURE –

Michael Baker INTERNATIONAL
100 AIRSIDE DRIVE
MOON TOWNSHIP, PA 15108 A/E INFO

APPROVED

FOR COMMANDER NAVFAC

ACTIVITY
MARINE CORPS BASE
CAMP LEJEUNE

SATISFACTORY TO DATE DD/MM/YY

DES SD	DRW LAK CHK YPS
PM / DM	TOWLER / ROOT
BRANCH HEAD	SEK
DESIGN DIRECTOR	R.L.Stephens, Jr.
FIRE PROTECTION	DPS

DEPARTMENT OF THE NAVY
NAVAL FACILITIES ENGINEERING SYSTEMS COMMAND
ATLANTIC DESIGN AND CONSTRUCTION
MCB CAMP LEJEUNE

NAVAL FACILITIES ENGINEERING SYSTEMS COMMAND ATLANTIC
NORFOLK, VA
JACKSONVILLE, NC
LOGCOM CSP WAREHOUSE

ELECTRICAL - LIGHTING CONTROL MATRIX

SCALE: AS NOTED
EPROJECT NO.: 1639600
CONSTR. CONTR. NO. N40085-20-C-0059
NAVFAC DRAWING NO. 14111406
SHEET 380 OF 447

E-506

DRAWFORM REVISION: 25 AUGUST 2020

P1527 FINAL SUBMISSION - 11/18/2021

PLOTTED: 11/11/2021 9:18:51 AM

FILE NAME: BIM 360://HF PACKAGE 3/P1527 LOG COM CSP-1639600-E.rvt

LIGHTING FIXTURE SCHEDULE

TYPE	DESCRIPTION	MOUNTING	MANUFACTURER / CATALOG #	LAMP TYPE	INPUT WATTAGE	VOLTAGE	REMARKS
A1	2' SUSPENDED LED STRIP	SUSPENDED	LITHONIA LIGHTING ZL1N L24 3500LM FST MVOLT 35K 80CRI / OR APPROVED EQUAL	LED 80 CRI, 3500 LUMENS 3500K CCT	31	MVOLT	MOUNT FIXTURES AT 10'-0" AFF. UNLESS OTHERWISE NOTED.
A3	4' SUSPENDED LED STRIP	SUSPENDED	LITHONIA LIGHTING ZL1N L48 7000LM FST MVOLT 40K 80CRI / OR APPROVED EQUAL	LED 80 CRI, 7000 LUMENS 3500K CCT	52	MVOLT	MOUNT FIXTURES AT 12'-0" AFF. UNLESS OTHERWISE NOTED.
A4	8' SUSPENDED LED STRIP	SUSPENDED	LITHONIA LIGHTING TZL1N L96 10000LM FST MVOLT 35K 80CRI / OR APPROVED EQUAL	LED 80 CRI, 10,000 LUMENS 3500K CCT	69	MVOLT	MOUNT FIXTURES AT 12'-0" AFF. UNLESS OTHERWISE NOTED.
A5	8' SUSPENDED LED STRIP	SUSPENDED	LITHONIA LIGHTING TZL1N L96 14000LM FST MVOLT 35K 80CRI / OR APPROVED EQUAL	LED 80 CRI, 14,000 LUMENS 3500K CCT	104	MVOLT	MOUNT FIXTURES AT 12'-0" AFF. UNLESS OTHERWISE NOTED.
B1	2' x 2' LED TROFFER	RECESSED	LITHONIA LIGHTING 2BLT2 33LHE ADP LP835 / OR APPROVED EQUAL	LED 82 CRI, 3300 LUMENS 3500K CCT	25	MVOLT	
B2	2' x 4' LED TROFFER	RECESSED	LITHONIA LIGHTING 2BLT4 40LHE ADP LP835 / OR APPROVED EQUAL	LED 82 CRI, 4000 LUMENS 3500K CCT	29	MVOLT	
B3	2' x 4' LED TROFFER	RECESSED	LITHONIA LIGHTING 2BLT4 48LHE ADP LP835 / OR APPROVED EQUAL	LED 82 CRI, 4800 LUMENS 3500K CCT	35	MVOLT	
B4	2' x 4' LED TROFFER	RECESSED	LITHONIA LIGHTING 2BLT4 60LHE ADP LP835 / OR APPROVED EQUAL	LED 82 CRI, 6000 LUMENS 3500K CCT	44	MVOLT	
B5	2' x 4' LED TROFFER	RECESSED	LITHONIA LIGHTING 2BLT4 72LHE ADPT LP835 / OR APPROVED EQUAL	LED 82 CRI, 7200 LUMENS 3500K CCT	53	MVOLT	
B6	2' x 4' LED TROFFER	RECESSED	LITHONIA LIGHTING 2BLT4 85LHE ADP LP835 / OR APPROVED EQUAL	LED 82 CRI, 8500 LUMENS 3500K CCT	61	MVOLT	
B7	2' x 4' LED TROFFER	RECESSED	LITHONIA LIGHTING 2BLT4 30LHE ADP LP835 / OR APPROVED EQUAL	LED 82 CRI, 3000 LUMENS 3500K CCT	23	MVOLT	
C1	6" RECESSED DOWNLIGHT	RECESSED	LITHONIA LIGHTING LDN6 35/05 LO6AR LD / OR APPROVED EQUAL	LED 80 CRI, 500 LUMENS 3500K CCT	6	MVOLT	
C2	6" RECESSED DOWNLIGHT	RECESSED	LITHONIA LIGHTING LDN6 35/15 LO6AR LD / OR APPROVED EQUAL	LED 80 CRI, 1500 LUMENS 3500K CCT	18	MVOLT	
D1	4' FLUSHED LED STRIP LIGHT	RECESSED	3G LIGHTING 3G-4RLI L500 S80 35K UNV FL 4FT / OR APPROVED EQUAL	LED 80 CRI, 500 LUMENS PER FT 3500K CCT	16	MVOLT	LENGTH AS REQUIRED-CONTINUOUS FLUSH LED STRIP LIGHT -PROVIDE WALL TO WALL INSTALLATION WITH EQUAL LENGTH FIXTURES. PROVIDE 1 PIECE FIXTURE FOR LENGTHS UP TO 12 FOOT.
E	LED HIGH BAY	SUSPENDED	LITHONIA LIGHTING / IBG 36000LM HEF ATL ND 35K 80CRI / OR APPROVED EQUAL	LED 80 CRI, 36,000 LUMENS 3500K CCT	214	MVOLT	MOUNT FIXTURES AT 27'-0" AFF. UNLESS OTHERWISE NOTED.
E1	LED HIGH BAY	SUSPENDED	LITHONIA LIGHTING / IBG 30000LM HEF ATL ND 35K 80CRI / OR APPROVED EQUAL	LED 80 CRI, 30,000 LUMENS 3500K CCT	170	MVOLT	MOUNT FIXTURES AT 27'-0" AFF. UNLESS OTHERWISE NOTED.
E1E	LED HIGH BAY	SUSPENDED	LITHONIA LIGHTING / IBG 30000LM HEF ATL ND 35K 80CRI / OR APPROVED EQUAL	LED 80 CRI, 30,000 LUMENS 3500K CCT	170	MVOLT	MOUNT FIXTURES AT 27'-0" AFF. UNLESS OTHERWISE NOTED. PROVIDE WITH 30W EMERGENCY DRIVER.
E2	LED HIGH BAY	SUSPENDED	LITHONIA LIGHTING / IBG 24000LM HEF ATL ND 35K 80CRI / OR APPROVED EQUAL	LED 80 CRI, 24,000 LUMENS 3500K CCT	134	MVOLT	MOUNT FIXTURES AT 27'-0" AFF. UNLESS OTHERWISE NOTED.
E3	LED HIGH BAY	SUSPENDED	LITHONIA LIGHTING / IBG 18000LM HEF ATL ND 35K 80CRI / OR APPROVED EQUAL	LED 80 CRI, 18,000 LUMENS 3500K CCT	100	MVOLT	MOUNT FIXTURES AT 27'-0" AFF. UNLESS OTHERWISE NOTED.
E4	LED HIGH BAY	SUSPENDED	LITHONIA LIGHTING / IBG 12000LM HEF ATL ND 35K 80CRI / OR APPROVED EQUAL	LED 80 CRI, 12,000 LUMENS 3500K CCT	68	MVOLT	
EL	LED HIGH BAY	SUSPENDED	LITHONIA LIGHTING / IBG 36000LM HEF ATL ND 35K 80CRI / OR APPROVED EQUAL	LED 80 CRI, 36,000 LUMENS 3500K CCT	214	MVOLT	MOUNT FIXTURES AT 27'-0" AFF. UNLESS OTHERWISE NOTED. PROVIDE WITH 30W EMERGENCY DRIVER.
ELU	EMERGENCY LIGHTING UNIT W/ AIMABLE REMOTE HEADS MINIMUM 200 LUMENS PER HEAD	WALL	LITHONIA LIGHTING ELM2L / OR APPROVED EQUAL	LED	3W PER LAMP	MVOLT	MOUNT FIXTURE AT 7'-0" AFF UNLESS OTHERWISE NOTED. PROVIDE WITH 90 MINUTE BATTERY FOR EMERGENCY BACKUP POWER.
EX	LED EXIT SIGN W/ RED LETTERING	UNIVERSAL	LITHONIA LIGHTING LQC R ELN SERIES OR APPROVED EQUAL	LED	5	277	MOUNT FIXTURES AT 8'-0" AFF. UNLESS OTHERWISE NOTED.
F1	4' SUSPENDED EXPLOSION PROOF LED STRIP	SUSPENDED	AZZ INDUSTRIAL LIGHTING / XP50L42LU / OR APPROVED EQUAL	LED 84 CRI, 5450 LUMENS 4097K CCT	47	MVOLT	MOUNT FIXTURES AT 12'-0" AFF. UNLESS OTHERWISE NOTED.
WP1	EXTERIOR WALL PACK	EXTERIOR WALL	LITHONIA LIGHTING WDGE1-LED-P1-40K-80CRI-VW OR APPROVED EQUAL	LED 80 CRI, 1983 LUMENS 4000K CCT	15	MVOLT	MOUNT FIXTURE 8'-0" ABOVE FINISHED GRADE. UNLESS OTHERWISE NOTED. PROVIDE HALF SHADED FIXTURES WITH EMERGENCY BATTERY BACKUP.
WP2	EXTERIOR WALL PACK	EXTERIOR WALL	LITHONIA LIGHTING WDGE2-LED-P3SW-40K-80CRI-VW OR APPROVED EQUAL	LED 80 CRI, 3133 LUMENS 4000K CCT	23	277	MOUNT FIXTURE 12'-6" ABOVE FINISHED PAVEMENT. UNLESS OTHERWISE NOTED. PROVIDE HALF SHADED FIXTURES WITH EMERGENCY BATTERY BACKUP.

APP'R | DATE | DESCRIPTION | SYM

NAVFAC

COMMONWEALTH OF MASSACHUSETTS
SENOL DURUR
ELECTRICAL
No. 47946
REGISTERED PROFESSIONAL ENGINEER

IRQ W.M. Jordan COMPANY – A JOINT VENTURE –

Michael Baker INTERNATIONAL
100 AIRSIDE DRIVE
MOON TOWNSHIP, PA 15108
A/E INFO

APPROVED

FOR COMMANDER NAVFAC

ACTIVITY
MARINE CORPS BASE
CAMP LEJEUNE

SATISFACTORY TO DATE DD/MM/YY

DES ZAK | DRW LAK | CHK BSR

PM / DM TOWLER / ROOT

BRANCH HEAD SEK

DESIGN DIRECTOR R.L.Stephens, Jr.

FIRE PROTECTION DPS

NAVAL FACILITIES ENGINEERING SYSTEMS COMMAND
NORFOLK, VA
DEPARTMENT OF THE NAVY
NAVAL FACILITIES ENGINEERING SYSTEMS COMMAND ATLANTIC
ATLANTIC DESIGN AND CONSTRUCTION
MCB CAMP LEJEUNE
JACKSONVILLE, NC
LOGCOM CSP WAREHOUSE

ELECTRICAL - LIGHTING FIXTURE SCHEDULE

SCALE: AS NOTED
EPROJECT NO.: 1639600
CONSTR. CONTR. NO. N40085-20-C-0059
NAVFAC DRAWING NO. 14111407
SHEET 381 OF 447

E-601

DRAWFORM REVISION: 25 AUGUST 2020

P1527 FINAL SUBMISSION - 11/18/2021

PLOTTED: 11/11/2021 9:18:53 AM

FILE NAME: BIM 360://AIF PACKAGE 3/P1527 LOG COM CSP-1639600-E.rvt

FEEDER SCHEDULE

23	(3) #12 AWG + (1) #12 AWG GND IN 3/4" CONDUIT
33	(3 #10 AWG + (1) #10 AWG GND IN 3/4" CONDUIT
33a	(3) #10 AWG + (1) #2 AWG GND IN 1" CONDUIT
45	(5) #8 AWG + (1) #10 AWG GND IN 1" CONDUIT
64	(4) #4 AWG + (1) #6 AWG GND IN 1-1/4" CONDUIT
104	(4) #1 AWG + (1) #8 AWG GND IN 1-1/2" CONDUIT
104a	(4) #1/0 AWG + (1) #6 AWG GND IN 2-1/2" CONDUIT
104b	(4) #4/0 AWG + (1) #2 AWG GND IN 2-1/2" CONDUIT
105	(5) #1 AWG + (1) #8 AWG GND IN 2" CONDUIT
105a	(5) #1/0 AWG + (1) #6 AWG GND IN 2" CONDUIT
105b	(5) #2/0 AWG + (1) #4 AWG GND IN 2" CONDUIT
128	(3) #1/0 AWG + (1) #6 AWG GND IN 1-1/2" CONDUIT
129	(4) #1/0 AWG + (1) #6 AWG GND IN 1-1/2" CONDUIT
154	(4) #1/0 AWG + (1) #6 AWG GND IN 2" CONDUIT
228	(4) #4/0 AWG IN 2" CONDUIT
228a	(3) #4/0 AWG +(1) #4 AWG GND IN 2" CONDUIT
229	(4) #4/0 AWG + (1) #4 AWG GND IN 2" CONDUIT
303	(3) 350kcmil+ (1) #4 AWG GND IN 2-1/2" CONDUIT
304	(4) 350kcmil+ (1) #2 AWG GND IN 3" CONDUIT
305	(5) 350kcmil+ (1) #2 AWG GND IN 3" CONDUIT
604	TWO 3" CONDUITS EACH WITH (4) 350kcmil + (1) #1AWG GND
1204	FOUR 4" CONDUITS EACH WITH (4) 500kcmil + (1) 4" CONDUIT SPARE
MV1	(2) 5"C - ONE WITH (3) #2AWG 15 kV MV-105 133% EPR CU AND CONCENTRIC NEUTRAL & ONE 5"C SPARE IN CONCRETE ENCASED DUCT BANK

GENERAL NOTES

1. SEE SHEET E-001 FOR ELECTRICAL NOTES, SYMBOLS, AND ABBREVIATIONS.
2. ALL SWITCHBOARD AND PANELBOARD BUSES MUST BE COPPER.
3. PROVIDE ARC ENERGY REDUCTION SYSTEM AND CONTINUOUS TRIP RATINGS FOR CIRCUIT BREAKERS 1200A AND HIGHER IAW NEC ARTICLE 240.
4. TR PANELS MUST HAVE A 200% RATED NEUTRAL BUS

KEYNOTES

1. SIZED PER MANUFACTURER'S RECOMMENDATIONS
2. +(1) 2-1/2" SPARE CONDUIT
3. +(1) 3" SPARE CONDUIT
4. +(1) 1" SPARE CONDUIT
5. PANEL DP1 MUST HAVE A LOCK-ON RED CIRCUIT BREAKER FOR FEED TO PANEL FP1. LABEL BREAKER "FIRE PROTECTION EQUIPMENT."

EXISTING 12.47kV UTILITY SERVICE
RISER WITH 15 kV TERMINATIONS, 10 kV SURGE SUPPRESSORS, AND FUSED CUTOUT WITH 80T TYPE FUSE
MV1
LOAD BREAK CONNECTOR
SURGE ARRESTOR
BUSHING INSERT
TRANSFORMER BUSHING
(3) 2 POSITION LOAD OIL SWITCH
BAYONET OIL-IMMERSED CURRENT LIMITING FUSE
OIL-IMMERSED CURRENT LIMITING FUSE
TRN1 750 KVA - CORROSION RESTISTANT, STAINLESS STEEL ASSEMBLY PAD MOUNTED 12470V - 480/277V-3PH-4W 5.32% IMPENDANCE
WHD WATTHOUR DEMAND METER
CT RATIO 800/5
3-POLE FUSE BLOCK
1204

P1527 LOGCOM CSP WAREHOUSE

ELEC. 123
SWBD1 - 1200A BUS 480Y/277V 3PH, 4W - 42 KAIC SERVICE ENTRANCE RATED
1200AT (M) 1200AF 3P, 100% RATED LSIG
#4/0 AWG G.E.C. (1)
125AT 125AF 3P, LSI
100A 3P
100A 3P
100A 3P
125AT 125AF 3P, LSI
600AT 600AF 3P, LSI
125AT 125AF 3P, LSI
225A 3P
125AT 125AF 3P, LSI
30A 3P
228 (2)
128
104
128
604
128
228a (2)
33a
SPD (1)
LP1 100A MCB 480/277V 14KAIC SPD (1) ELEC. 205
LP2 100A MCB 480/277V 14KAIC SPD (1) ELEC. 116
LP3 100A MCB 480/277V 14KAIC SPD (1) ELEC. 121
125/3/1
128
XFMR T1 75 KVA K-13, 480-208/120V ELEC. 123
XFMR T2 75 KVA 480-208/120V ELEC.116
ELEC. 123
DP5 480/277V - 22KAIC 600A, 3PH, 4W
225A 3P
100A 3P
125A 3P
100A 3P
100A 3P
150A 3P
229
104
129
104
154
MP1 225A MCB 3PH,4W 14KAIC ELEC. 205
MP2 100A MCB 3PH,4W 14KAIC ELEC. 121
MP3 125A MCB 3PH,4W 14KAIC ELEC. 116
MP4 100A MCB 3PH,4W 14KAIC ELEC. 116
MP5 100A MCB 3PH,4W 14KAIC ELEC. 121
PP1 150A MCB 3PH,4W 14KAIC ELEC. 116
125/3/1
128
XFMR T3 75KVA 480-208/120V ELEC. 205
304
400A 3P NEMA 4X
228a
CHILLER-01
XFMR T4 75 KVA 480-208/120V ELEC. 123
304
305
304
23
23
2HP JOCKEY PUMP & CONTROLLER (2)
ELEC. 123
DP1 208/120V - 10KAIC 400A, 3PH, 4W, 200% NEUTRAL
300AT 400AF 3P, LSI
100A 3P
100A 3P
100A 3P
40A 3P (5)
(1)
105
105b
105a
45
SPD (1)
TR1 100A MCB 10KAIC SPD (1) TELE. 118
TR2 100A MCB 10KAIC SPD (1) TELECOM 108
TR3 100A MCB 10KAIC SPD (1) TELECOM 203
FP1 40A MLO 208/120V 10KAIC ELEC. 123
ELEC. 116
DP2 208/120V - 10KAIC 400A, 3PH, 4W
300AT 400AF 3P, LSI
100A 3P
150A 3P
100A 3P
100A 3P
104
154
104b
104b
RP1 100A MLO 10KAIC ELEC. 116
RP2 150A MLO 10KAIC ELEC. 116
RP3 100A MCB 10KAIC ELEC. 109
RP4 100A MCB 10KAIC ELEC. 121
ELEC. 205
DP3 208/120V - 10KAIC 400A, 3PH, 4W
300AT 400AF 3P, LSI
125A 3P
125A 3P
225A 3P
129
229
RP5 125A MLO 10KAIC ELEC. 205
RP6 125A MLO 10KAIC ELEC. 205
RP7 225A MLO 10KAIC ELEC. 205
ELEC. 123
DP4 208/120V - 10KAIC 400A, 3PH, 4W
300AT 400AF 3P, LSI
100A 3P
100A 3P
100A 3P
100A 3P
100A 3P
104
2
104a
MPLV1 100A MCB 10KAIC ELEC. 116
MPLV2 100A MLO 10KAIC ELEC. 123
MPLV3 100A MCB 10KAIC ELEC. 205
MPLV4 100A MCB 10KAIC ELEC. 109
100A NEMA 4X
PEDESTAL - JEFS TRAILER
FIRE RISER 122
1000A 3P NEMA 2
228
125
125HP FIRE PUMP & CONTROLLER
303 (3)
400A, 480V, 3PH MTS FOR PORTABLE GENERATOR CONNECTION WITH CAM LOCK CONNECTION OPTION FIRE RISER 122
303 (3)
PORTABLE GENERATOR
300AT 400AF, 3P LSI
GEN
300AT 400AF, 3P LSI
STANDBY GENERATOR 175 KW 480/277V, 3PH, 4W COASTAL RATED WEATHERPROOF ALUMINUM ENCLOSURE
LOAD BANK CONNECTION WITH CAM-LOK CONNECTIONS TYING INTO INTERLOCKED BREAKER
40A ATS WITH MAINTENANCE BYASS ISOLATION SWITCH, 3PH, 3-POLE
SPD
4
33a
30/3/1
ELEC. 123
33
30/3/1
33
XFMR T5 15KVA 480-208/120V ELEC. 123
64
SP1 60A MCB 208/120V 10KAIC LSI SPD (1) ELEC. 123

LEGEND
SWBD- SWITCHBOARD
LP - LIGHTING PANEL
MP - MECHANICAL PANEL
PP - POWER PANEL (BATTERY CHARGERS)
DP - DISTRIBUTION PANEL
TR - TELECOM PANEL
RP - RECEPTACLE PANEL
MPLV - LOW VOLTAGE MECHANICAL PANEL
FP - FIRE PROTECTION PANEL
SP - SECURITY PANEL

A1 **ELECTRICAL - P1527 SINGLE LINE DIAGRAM**
SCALE: NTS

APPR | DATE | SYM | DESCRIPTION

NAVFAC

COMMONWEALTH OF MASSACHUSETTS
SENOL DURUR
ELECTRICAL
No. 47946
REGISTERED PROFESSIONAL ENGINEER

IRQ W.M. Jordan COMPANY – A JOINT VENTURE –

Michael Baker INTERNATIONAL
100 AIRSIDE DRIVE MOON TOWNSHIP, PA 15108 A/E INFO

APPROVED
FOR COMMANDER NAVFAC
ACTIVITY
MARINE CORPS BASE CAMP LEJEUNE
SATISFACTORY TO DATE DD/MM/YY
DES ZAK DRW LAK CHK BSR
PM / DM TOWLER / ROOT
BRANCH HEAD SEK
DESIGN DIRECTOR R.L.Stephens, Jr.
FIRE PROTECTION DPS

DEPARTMENT OF THE NAVY
NAVAL FACILITIES ENGINEERING SYSTEMS COMMAND ATLANTIC
ATLANTIC DESIGN AND CONSTRUCTION
MCB CAMP LEJEUNE
NAVAL FACILITIES ENGINEERING SYSTEMS COMMAND
NORFOLK, VA
JACKSONVILLE, NC
LOGCOM CSP WAREHOUSE
ELECTRICAL - SINGLE LINE DIAGRAM

SCALE: AS NOTED
EPROJECT NO.: 1639600
CONSTR. CONTR. NO. N40085-20-C-0059
NAVFAC DRAWING NO. 14111408
SHEET 382 OF 447
E-602
DRAWFORM REVISION: 25 AUGUST 2020

P1527 FINAL SUBMISSION - 11/18/2021

PLOTTED: 11/11/2021 9:18:56 AM
FILE NAME: BIM 360:/HF PACKAGE 3/P1527 LOG COM CSP-1639600-E rvt

GENERAL NOTES

1. SEE SHEET E-001 FOR ELECTRICAL NOTES, SYMBOLS, AND ABBREVIATIONS.
2. * - SEE E-602 FOR CONDUCTOR SIZES NOT INDICATED IN PANEL SCHEDULES.

PANEL SWBD1

FED FROM:
LOCATION: ELEC 123
MOUNT: FLOOR

1200 A MAIN CIRCUIT BREAKER
3PH 4WIRE 480Y/277V
42K AIC
GROUND BAR

CKT	LOAD SERVED	WIRE	BRKR	PL	A		B		C		PL	BRKR	WIRE	LOAD SERVED	CKT
1	SURGE PROTECTIVE DEVICE	--	30	3	0.00	4.51					3	100	1	LP1	2
3	--	--	--	--			0.00	4.08			--	--	--	--	4
5	--	--	--	--					0.00	4.14	--	--	--	--	6
7	LP2	1	100	3	5.32	5.52					3	100	1	LP3	8
9	--	--	--	--			3.91	5.04			--	--	--	--	10
11	--	--	--	--					4.57	5.08	--	--	--	--	12
13	T1	1/0	125	3	17.47	20.89					3	125	1/0	T4	14
15	--	--	--	--			19.38	21.73			--	--	--	--	16
17	--	--	--	--					18.48	21.68	--	--	--	--	18
19	T2	1/0	125	3	21.54	36.35					3	125	1/0	T3	20
21	--	--	--	--			20.50	38.17			--	--	--	--	22
23	--	--	--	--					21.62	35.25	--	--	--	--	24
25	ATS	10	30	3	2.40	45.45					3	225	4/0	CHILLER CH-01	26
27	--	--	--	--			2.33	45.45			--	--	--	--	28
29	--	--	--	--					3.05	45.45	--	--	--	--	30
31	DP5	*	600	3	117.23	0.00					--	--	--	PROVISIONED SPACE	32
33	--	--	--	--			117.23	0.00			--	--	--	PROVISIONED SPACE	34
35	--	--	--	--					117.23	0.00	--	--	--	PROVISIONED SPACE	36
37	SPARE	--	100	3	0.00	0.00					3	125	--	SPARE	38
39	--	--	--	--			0.00	0.00			--	--	--	--	40
41	--	--	--	--					0.00	0.00	--	--	--	--	42
			TOTAL		276.7		277.8		276.5		KVA				
					998.9		1003.0		998.3		AMPS				
			CONNECTED LOAD		831.0		KVA		999.6		AMPS				
NEC ARTICLE 220			DEMAND LOAD		508.8		KVA		611.9		AMPS				

Load Classification	Connected Load	Demand Factor	Estimated Demand	Panel Totals	
Equipment	144443 VA	100.00%	144443 VA		
Power	28820 VA	100.00%	28820 VA	Total Conn. Load:	831026 VA
RECEPT	159041 VA	53.14%	84520 VA	Total Est. Demand:	508754 VA
LTG	42176 VA	75.00%	31632 VA	Total Conn.:	1000 A
UFC-MOTOR-25%	23601 VA	25.00%	5900 VA	Total Est. Demand:	612 A
FP 100%	6096 VA	100.00%	6096 VA		
UFC-HVAC-70%	11814 VA	70.00%	8270 VA		
UFC-HEATER-80%	12776 VA	80.00%	10221 VA		
UFC-MOTOR-30%	265910 VA	30.00%	79773 VA		
UFC-CHILLER-80%	136347 VA	80.00%	109078 VA		

PANEL DP1

FED FROM: T1
LOCATION: ELEC 123
MOUNT: SURFACE

300 A MAIN CIRCUIT BREAKER
3PH 4WIRE 208Y/120V
10K AIC
GROUND BAR

CKT	LOAD SERVED	WIRE	BRKR	PL	A		B		C		PL	BRKR	WIRE	LOAD SERVED	CKT
1	SURGE PROTECTIVE DEVICE	--	30	3	0.00	3.93					3	100	2/0	TR2	2
3	--	--	--	--			0.00	5.25			--	--	--	--	4
5	--	--	--	--					0.00	4.42	--	--	--	--	6
7	TR1	1	100	3	6.33	1.72					3	40	8	FP1	8
9	--	--	--	--			5.98	1.98			--	--	--	--	10
11	--	--	--	--					6.83	1.98	--	--	--	--	12
13	TR3	1/0	100	3	5.50	0.00					--	--	--	PROVISIONED SPACE	14
15	--	--	--	--			6.17	0.00			--	--	--	PROVISIONED SPACE	16
17	--	--	--	--					5.25	0.00	--	--	--	PROVISIONED SPACE	18
19	SPARE	--	100	3	0.00	0.00					--	--	--	PROVISIONED SPACE	20
21	--	--	--	--			0.00	0.00			--	--	--	PROVISIONED SPACE	22
23	--	--	--	--					0.00	0.00	--	--	--	PROVISIONED SPACE	24
25	PROVISIONED SPACE	--	--	--	0.00	0.00					--	--	--	PROVISIONED SPACE	26
27	PROVISIONED SPACE	--	--	--			0.00	0.00			--	--	--	PROVISIONED SPACE	28
29	PROVISIONED SPACE	--	--	--					0.00	0.00	--	--	--	PROVISIONED SPACE	30
			TOTAL		17.5		19.4		18.5		KVA				
					145.6		162.8		155.3		AMPS				
			CONNECTED LOAD		55.3		KVA		153.5		AMPS				
NEC ARTICLE 220			DEMAND LOAD		53.3		KVA		147.9		AMPS				

Load Classification	Connected Load	Demand Factor	Estimated Demand	Panel Totals	
Equipment	38500 VA	100.00%	38500 VA		
RECEPT	4320 VA	100.00%	4320 VA	Total Conn. Load:	55318 VA
FP 100%	5676 VA	100.00%	5676 VA	Total Est. Demand:	53272 VA
UFC-HVAC-70%	6822 VA	70.00%	4776 VA	Total Conn.:	154 A
				Total Est. Demand:	148 A

PANEL DP2

FED FROM: T2
LOCATION: ELECTRICAL 116
MOUNT: SURFACE

300 A MAIN CIRCUIT BREAKER
3PH 4WIRE 208Y/120V
10K AIC
GROUND BAR

CKT	LOAD SERVED	WIRE	BRKR	PL	A		B		C		PL	BRKR	WIRE	LOAD SERVED	CKT
1	RP1	1	100	3	3.06	10.17					3	150	1/0	RP2	2
3	--	--	--	--			1.98	10.17			--	--	--	--	4
5	--	--	--	--					1.80	10.15	--	--	--	--	6
7	RP3	4/0	100	3	4.53	3.78					3	100	4/0	RP4	8
9	--	--	--	--			4.40	3.96			--	--	--	--	10
11	--	--	--	--					5.58	4.09	--	--	--	--	12
13	SPARE	--	100	3	0.00	0.00					3	150	--	SPARE	14
15	--	--	--	--			0.00	0.00			--	--	--	--	16
17	--	--	--	--					0.00	0.00	--	--	--	--	18
19	PROVISIONED SPACE	--	--	--	0.00	0.00					--	--	--	PROVISIONED SPACE	20
21	PROVISIONED SPACE	--	--	--			0.00	0.00			--	--	--	PROVISIONED SPACE	22
23	PROVISIONED SPACE	--	--	--					0.00	0.00	--	--	--	PROVISIONED SPACE	24
25	PROVISIONED SPACE	--	--	--	0.00	0.00					--	--	--	PROVISIONED SPACE	26
27	PROVISIONED SPACE	--	--	--			0.00	0.00			--	--	--	PROVISIONED SPACE	28
29	PROVISIONED SPACE	--	--	--					0.00	0.00	--	--	--	PROVISIONED SPACE	30
			TOTAL		21.5		20.5		21.6		KVA				
					180.8		170.9		181.5		AMPS				
			CONNECTED LOAD		63.7		KVA		176.7		AMPS				
NEC ARTICLE 220			DEMAND LOAD		41.8		KVA		116.0		AMPS				

Load Classification	Connected Load	Demand Factor	Estimated Demand	Panel Totals	
Equipment	9908 VA	100.00%	9908 VA		
RECEPT	53588 VA	59.33%	31794 VA	Total Conn. Load:	63656 VA
UFC-MOTOR-25%	100 VA	25.00%	25 VA	Total Est. Demand:	41787 VA
FP 100%	60 VA	100.00%	60 VA	Total Conn.:	177 A
				Total Est. Demand:	116 A

PANEL DP3

FED FROM: T3
LOCATION: ELECTRICAL 205
MOUNT: SURFACE

300 A MAIN CIRCUIT BREAKER
3PH 4WIRE 208Y/120V
10K AIC
GROUND BAR

CKT	LOAD SERVED	WIRE	BRKR	PL	A		B		C		PL	BRKR	WIRE	LOAD SERVED	CKT
1	RP5	1/0	125	3	9.03	9.68					3	125	1/0	RP6	2
3	--	--	--	--			10.12	10.41			--	--	--	--	4
5	--	--	--	--					9.07	9.48	--	--	--	--	6
7	SPARE	--	150	3	0.00	17.65					3	225	4/0	RP7	8
9	--	--	--	--			0.00	17.65			--	--	--	--	10
11	--	--	--	--					0.00	16.70	--	--	--	--	12
13	PROVISIONED SPACE	--	--	--	0.00	0.00					--	--	--	PROVISIONED SPACE	14
15	PROVISIONED SPACE	--	--	--			0.00	0.00			--	--	--	PROVISIONED SPACE	16
17	PROVISIONED SPACE	--	--	--					0.00	0.00	--	--	--	PROVISIONED SPACE	18
19	PROVISIONED SPACE	--	--	--	0.00	0.00					--	--	--	PROVISIONED SPACE	20
21	PROVISIONED SPACE	--	--	--			0.00	0.00			--	--	--	PROVISIONED SPACE	22
23	PROVISIONED SPACE	--	--	--					0.00	0.00	--	--	--	PROVISIONED SPACE	24
25	PROVISIONED SPACE	--	--	--	0.00	0.00					--	--	--	PROVISIONED SPACE	26
27	PROVISIONED SPACE	--	--	--			0.00	0.00			--	--	--	PROVISIONED SPACE	28
29	PROVISIONED SPACE	--	--	--					0.00	0.00	--	--	--	PROVISIONED SPACE	30
			TOTAL		36.4		38.2		35.2		KVA				
					304.4		319.5		293.7		AMPS				
			CONNECTED LOAD		109.8		KVA		304.7		AMPS				
NEC ARTICLE 220			DEMAND LOAD		65.6		KVA		182.2		AMPS				

Load Classification	Connected Load	Demand Factor	Estimated Demand	Panel Totals	
Equipment	11360 VA	100.00%	11360 VA		
RECEPT	98133 VA	55.10%	54066 VA	Total Conn. Load:	109773 VA
UFC-MOTOR-25%	100 VA	25.00%	25 VA	Total Est. Demand:	65631 VA
FP 100%	180 VA	100.00%	180 VA	Total Conn.:	305 A
				Total Est. Demand:	182 A

NAVFAC

COMMONWEALTH OF MASSACHUSETTS
SENOL DURUR
ELECTRICAL No. 47946
REGISTERED PROFESSIONAL ENGINEER

RQ W.M. Jordan COMPANY – A JOINT VENTURE –

Michael Baker INTERNATIONAL
100 AIRSIDE DRIVE
MOON TOWNSHIP, PA 15108
A/E INFO

APPROVED

FOR COMMANDER NAVFAC

ACTIVITY
MARINE CORPS BASE
CAMP LEJEUNE

SATISFACTORY TO DATE DD/MM/YY

DES ZAK | DRW LAK | CHK BSR

PM / DM TOWLER / ROOT

BRANCH HEAD SEK

DESIGN DIRECTOR R.L.Stephens, Jr.

FIRE PROTECTION DPS

NAVAL FACILITIES ENGINEERING SYSTEMS COMMAND
NORFOLK, VA
JACKSONVILLE, NC

DEPARTMENT OF THE NAVY
NAVAL FACILITIES ENGINEERING SYSTEMS COMMAND ATLANTIC
ATLANTIC DESIGN AND CONSTRUCTION

LOGCOM CSP WAREHOUSE
MCB CAMP LEJEUNE

ELECTRICAL - PANEL SCHEDULES

SCALE: AS NOTED
EPROJECT NO.: 1639600
CONSTR. CONTR. NO. N40085-20-C-0059
NAVFAC DRAWING NO. 14111409
SHEET 383 OF 447

E-603

DRAWFORM REVISION: 25 AUGUST 2020

P1527 FINAL SUBMISSION - 11/18/2021

APPR	DATE	DESCRIPTION	SYM

PLOTTED: 11/11/2021 9:18:58 AM

FILE NAME: BIM 360://AFF PACKAGE 3/P1527 LOG COM CSP-1639600-E.rvt

GENERAL NOTES

1. SEE SHEET E-001 FOR ELECTRICAL NOTES, SYMBOLS, AND ABBREVIATIONS.
2. * - SEE E-602 FOR CONDUCTOR SIZES NOT INDICATED IN PANEL SCHEDULES.

PANEL DP4

FED FROM: T4
LOCATION: ELEC 123
MOUNT: SURFACE

300 A MAIN CIRCUIT BREAKER
3PH 4WIRE 208Y/120V
10K AIC
GROUND BAR

CKT	LOAD SERVED	WIRE	BRKR	PL	A		B		C		PL	BRKR	WIRE	LOAD SERVED	CKT
1	MPLV4	1	100	3	1.42	1.51					3	100	1	MPLV2	2
3	--	--	--	--			2.10	1.82			--	--	--	--	4
5	--	--	--	--					2.19	1.75	--	--	--	--	6
7	MPLV3	1	100	3	4.89	3.46					3	100	1	MPLV1	8
9	--	--	--	--			4.81	3.39			--	--	--	--	10
11	--	--	--	--					4.64	3.49	--	--	--	--	12
13	JEFS TRAILER PEDESTAL	1/0	100	3	9.61	0.00					3	100	--	SPARE	14
15	--	--	--	--			9.61	0.00			--	--	--	--	16
17	--	--	--	--					9.61	0.00	--	--	--	--	18
19	PROVISIONED SPACE	--	--	--	0.00	0.00					--	--	--	PROVISIONED SPACE	20
21	PROVISIONED SPACE	--	--	--			0.00	0.00			--	--	--	PROVISIONED SPACE	22
23	PROVISIONED SPACE	--	--	--					0.00	0.00	--	--	--	PROVISIONED SPACE	24
25	PROVISIONED SPACE	--	--	--	0.00	0.00					--	--	--	PROVISIONED SPACE	26
27	PROVISIONED SPACE	--	--	--			0.00	0.00			--	--	--	PROVISIONED SPACE	28
29	PROVISIONED SPACE	--	--	--					0.00	0.00	--	--	--	PROVISIONED SPACE	30
				TOTAL	20.9		21.7		21.7		KVA				
					174.1		182.1		181.7		AMPS				
				CONNECTED LOAD	64.3		KVA		178.5		AMPS				
NEC ARTICLE 220				DEMAND LOAD	46.7		KVA		129.5		AMPS				

Load Classification	Connected Load	Demand Factor	Estimated Demand	Panel Totals	
Equipment	3280 VA	100.00%	3280 VA		
Power	28820 VA	100.00%	28820 VA	**Total Conn. Load:**	64293 VA
RECEPT	1800 VA	100.00%	1800 VA	**Total Est. Demand:**	46651 VA
UFC-MOTOR-25%	20076 VA	25.00%	5019 VA	**Total Conn.:**	178 A
FP 100%	180 VA	100.00%	180 VA	**Total Est. Demand:**	129 A
UFC-HVAC-70%	4992 VA	70.00%	3494 VA		
UFC-HEATER-80%	5028 VA	80.00%	4022 VA		
UFC-MOTOR-30%	117 VA	30.00%	35 VA		

PANEL DP5

FED FROM: SWBD1
LOCATION: ELEC 123
MOUNT: SURFACE

600 A MAIN LUG ONLY
3PH 4WIRE 480Y/277V
22K AIC
GROUND BAR

CKT	LOAD SERVED	WIRE	BRKR	PL	A		B		C		PL	BRKR	WIRE	LOAD SERVED	CKT
1	MP1	4/0	225	3	35.50	7.48					3	100	1	MP2	2
3	--	--	--	--			35.50	7.48			--	--	--	--	4
5	--	--	--	--					35.50	7.48	--	--	--	--	6
7	MP3	1/0	125	3	22.84	24.94					3	150	1/0	PP1	8
9	--	--	--	--			22.84	24.94			--	--	--	--	10
11	--	--	--	--					22.84	24.94	--	--	--	--	12
13	MP4	1	100	3	17.92	8.55					3	100	1	MP5	14
15	--	--	--	--			17.92	8.55			--	--	--	--	16
17	--	--	--	--					17.92	8.55	--	--	--	--	18
19	SPARE	--	100	3	0.00	0.00					3	225	--	SPARE	20
21	--	--	--	--			0.00	0.00			--	--	--	--	22
23	--	--	--	--					0.00	0.00	--	--	--	--	24
25	PROVISIONED SPACE	--	--	--	0.00	0.00					--	--	--	PROVISIONED SPACE	26
27	PROVISIONED SPACE	--	--	--			0.00	0.00			--	--	--	PROVISIONED SPACE	28
29	PROVISIONED SPACE	--	--	--					0.00	0.00	--	--	--	PROVISIONED SPACE	30
				TOTAL	117.2		117.2		117.2		KVA				
					423.2		423.2		423.2		AMPS				
				CONNECTED LOAD	351.7		KVA		423.0		AMPS				
NEC ARTICLE 220				DEMAND LOAD	161.6		KVA		194.4		AMPS				

Load Classification	Connected Load	Demand Factor	Estimated Demand	Panel Totals	
Equipment	74825 VA	100.00%	74825 VA		
UFC-MOTOR-25%	3325 VA	25.00%	831 VA	**Total Conn. Load:**	351692 VA
UFC-HEATER-80%	7748 VA	80.00%	6199 VA	**Total Est. Demand:**	161593 VA
UFC-MOTOR-30%	265794 VA	30.00%	79738 VA	**Total Conn.:**	423 A
				Total Est. Demand:	194 A

PANEL MP1

FED FROM: DP5
LOCATION: ELECTRICAL 205
MOUNT: SURFACE

225 A MAIN CIRCUIT BREAKER
3PH 4WIRE 480Y/277V
14K AIC
GROUND BAR

CKT	LOAD SERVED	WIRE	BRKR	PL	A		B		C		PL	BRKR	WIRE	LOAD SERVED	CKT
1	AHU-01 SUPPLY FAN JEFS AHU 212	2/0	175	3	22.17	3.05					3	20	12	AHU-01 EXHAUST FAN JEFS AHU 212	2
3	--	--	--	--			22.17	3.05			--	--	--	--	4
5	--	--	--	--					22.17	3.05	--	--	--	--	6
7	PUMP P-02 JEFS AHU 212	12	20	3	3.05	3.05					3	20	12	PUMP P-01 JEFS AHU 212	8
9	--	--	--	--			3.05	3.05			--	--	--	--	10
11	--	--	--	--					3.05	3.05	--	--	--	--	12
13	OH ROLLING DOOR RM 209	12	20	3	0.58	0.58					3	20	12	OH ROLLING DOOR RM 209	14
15	--	--	--	--			0.58	0.58			--	--	--	--	16
17	--	--	--	--					0.58	0.58	--	--	--	--	18
19	DOCK LEVELER SHIPPING/RECEIVING/WATER...	12	20	3	0.58	1.33					3	20	12	AC-04 CIRCUIT 1 SHIPPING/RECEIVING/WATER...	20
21	--	--	--	--			0.58	1.33			--	--	--	--	22
23	--	--	--	--					0.58	1.33	--	--	--	--	24
25	HAC-01 RM 208A	12	20	3	1.11	0.00					--	--	--	PROVISIONED SPACE	26
27	--	--	--	--			1.11	0.00			--	--	--	PROVISIONED SPACE	28
29	--	--	--	--					1.11	0.00	--	--	--	PROVISIONED SPACE	30
31	SPARE	--	20	3	0.00	0.00					--	--	--	PROVISIONED SPACE	32
33	--	--	--	--			0.00	0.00			--	--	--	PROVISIONED SPACE	34
35	--	--	--	--					0.00	0.00	--	--	--	PROVISIONED SPACE	36
37	SPARE	--	20	3	0.00	0.00					3	20	--	SPARE	38
39	--	--	--	--			0.00	0.00			--	--	--	--	40
41	--	--	--	--					0.00	0.00	--	--	--	--	42
				TOTAL	35.5		35.5		35.5		KVA				
					128.2		128.2		128.2		AMPS				
				CONNECTED LOAD	106.5		KVA		128.1		AMPS				
NEC ARTICLE 220				DEMAND LOAD	31.8		KVA		38.2		AMPS				

Load Classification	Connected Load	Demand Factor	Estimated Demand	Panel Totals	
UFC-MOTOR-25%	3325 VA	25.00%	831 VA		
UFC-MOTOR-30%	103175 VA	30.00%	30952 VA	**Total Conn. Load:**	106500 VA
				Total Est. Demand:	31784 VA
				Total Conn.:	128 A
				Total Est. Demand:	38 A

PANEL MP2

FED FROM: DP5
LOCATION: ELEC. 121
MOUNT: SURFACE

100 A MAIN CIRCUIT BREAKER
3PH 4WIRE 480Y/277V
14K AIC
GROUND BAR

CKT	LOAD SERVED	WIRE	BRKR	PL	A		B		C		PL	BRKR	WIRE	LOAD SERVED	CKT
1	OH ROLLING DOOR AREA 104.1	12	20	3	0.58	0.58					3	20	12	OH ROLLING DOOR AREA 104.1	2
3	--	--	--	--			0.58	0.58			--	--	--	--	4
5	--	--	--	--					0.58	0.58	--	--	--	--	6
7	OH ROLLING DOOR AREA 104.3	12	20	3	0.58	1.33					3	20	12	AC-01 CIRCUIT 1 SHIPPING/RECIEVING 2 DOCKS...	8
9	--	--	--	--			0.58	1.33			--	--	--	--	10
11	--	--	--	--					0.58	1.33	--	--	--	--	12
13	AC-02 CIRCUIT 1 SHIPPING/RECIEVING 2 DOCKS...	12	20	3	1.33	1.33					3	20	12	AC-03 CIRCUIT 1 ISSUE/RETURN AREA 104.3	14
15	--	--	--	--			1.33	1.33			--	--	--	--	16
17	--	--	--	--					1.33	1.33	--	--	--	--	18
19	DOCK LEVELER SHIPPING/RECIEVING 2 DOCKS 104.1	12	20	3	0.58	0.58					3	20	12	DOCK LEVELER SHIPPING/RECIEVING 2 DOCKS 104.1	20
21	--	--	--	--			0.58	0.58			--	--	--	--	22
23	--	--	--	--					0.58	0.58	--	--	--	--	24
25	PROVISIONED SPACE	--	--	--	0.00	0.58					3	20	12	DOCK LEVELER ISSUE/RETURN AREA 104.3	26
27	PROVISIONED SPACE	--	--	--			0.00	0.58			--	--	--	--	28
29	PROVISIONED SPACE	--	--	--					0.00	0.58	--	--	--	--	30
31	PROVISIONED SPACE	--	--	--	0.00	0.00					3	20	--	SPARE	32
33	PROVISIONED SPACE	--	--	--			0.00	0.00			--	--	--	--	34
35	PROVISIONED SPACE	--	--	--					0.00	0.00	--	--	--	--	36
37	SPARE	--	20	3	0.00	0.00					3	20	--	SPARE	38
39	--	--	--	--			0.00	0.00			--	--	--	--	40
41	--	--	--	--					0.00	0.00	--	--	--	--	42
				TOTAL	7.5		7.5		7.5		KVA				
					27.0		27.0		27.0		AMPS				
				CONNECTED LOAD	22.4		KVA		27.0		AMPS				
NEC ARTICLE 220				DEMAND LOAD	6.7		KVA		8.1		AMPS				

Load Classification	Connected Load	Demand Factor	Estimated Demand	Panel Totals	
UFC-MOTOR-30%	22447 VA	30.00%	6734 VA		
				Total Conn. Load:	22447 VA
				Total Est. Demand:	6734 VA
				Total Conn.:	27 A
				Total Est. Demand:	8 A

APPR | DATE | DESCRIPTION | SYM

NAVFAC

COMMONWEALTH OF MASSACHUSETTS
SENOL DURUR
No. 47946
REGISTERED PROFESSIONAL ENGINEER
ELECTRICAL

IRQ Jordan COMPANY – A JOINT VENTURE –

Michael Baker INTERNATIONAL
100 AIRSIDE DRIVE
MOON TOWNSHIP, PA 15108
A/E INFO

APPROVED

FOR COMMANDER NAVFAC

ACTIVITY
MARINE CORPS BASE
CAMP LEJEUNE

SATISFACTORY TO DATE DD/MM/YY

DES	ZAK	DRW LAK	CHK BSR
PM / DM	TOWLER / ROOT		
BRANCH HEAD	SEK		
DESIGN DIRECTOR	R.L.Stephens, Jr.		
FIRE PROTECTION	DPS		

NAVAL FACILITIES ENGINEERING SYSTEMS COMMAND ATLANTIC
NORFOLK, VA
JACKSONVILLE, NC
LOGCOM CSP WAREHOUSE
ELECTRICAL - PANEL SCHEDULES
DEPARTMENT OF THE NAVY
NAVAL FACILITIES ENGINEERING SYSTEMS COMMAND
ATLANTIC DESIGN AND CONSTRUCTION
MCB CAMP LEJEUNE

SCALE: AS NOTED
EPROJECT NO.: 1639600
CONSTR. CONTR. NO. N40085-20-C-0059
NAVFAC DRAWING NO. 14111410
SHEET 384 OF 447

E-604

DRAWFORM REVISION: 25 AUGUST 2020

P1527 FINAL SUBMISSION - 11/18/2021

PLOTTED: 11/11/2021 9:19:00 AM

FILE NAME: BIM 360/IHF PACKAGE 3/P1527 LOG COM CSP-1639600-E.rvt

GENERAL NOTES

1. SEE SHEET E-001 FOR ELECTRICAL NOTES, SYMBOLS, AND ABBREVIATIONS.
2. * - SEE E-602 FOR CONDUCTOR SIZES NOT INDICATED IN PANEL SCHEDULES.

PANEL MP3

FED FROM: DP5
LOCATION: ELECTRICAL 116
MOUNT: SURFACE

125 A MAIN CIRCUIT BREAKER
3PH 4WIRE 480Y/277V
14K AIC
GROUND BAR

CKT	LOAD SERVED	WIRE	BRKR	PL	A		B		C		PL	BRKR	WIRE	LOAD SERVED	CKT
1	AHU-02 SUPPLY FAN MECHANICAL 120	6	45	3	5.82	3.88					3	30	10	AHU-02 EXHAUST FAN MECHANICAL 120	2
3	--	--	--	--			5.82	3.88			--	--	--	--	4
5	--	--	--	--					5.82	3.88	--	--	--	--	6
7	BP-01 JEFS BOILER ROOM 213	12	20	3	0.44	0.44					3	20	12	BP-02 JEFS BOILER ROOM 213	8
9	--	--	--	--			0.44	0.44			--	--	--	--	10
11	--	--	--	--					0.44	0.44	--	--	--	--	12
13	EF-11	12	20	3	0.94	9.42					3	50	6	AC-01 MECHANICAL 120	14
15	--	--	--	--			0.94	9.42			--	--	--	--	16
17	--	--	--	--					0.94	9.42	--	--	--	--	18
19	EF-10	12	20	3	0.94	0.94					3	20	12	EF-12	20
21	--	--	--	--			0.94	0.94			--	--	--	--	22
23	--	--	--	--					0.94	0.94	--	--	--	--	24
25	PROVISIONED SPACE	--	--	--	0.00	0.00					--	--	--	PROVISIONED SPACE	26
27	PROVISIONED SPACE	--	--	--			0.00	0.00			--	--	--	PROVISIONED SPACE	28
29	PROVISIONED SPACE	--	--	--					0.00	0.00	--	--	--	PROVISIONED SPACE	30
31	PROVISIONED SPACE	--	--	--	0.00	0.00					3	50	--	SPARE	32
33	PROVISIONED SPACE	--	--	--			0.00	0.00			--	--	--	--	34
35	PROVISIONED SPACE	--	--	--					0.00	0.00	--	--	--	--	36
37	SPARE	--	20	3	0.00	0.00					3	20	--	SPARE	38
39	--	--	--	--			0.00	0.00			--	--	--	--	40
41	--	--	--	--					0.00	0.00	--	--	--	--	42
				TOTAL	22.8		22.8		22.8		KVA				
					82.4		82.4		82.4		AMPS				
			CONNECTED LOAD		68.5		KVA		82.4		AMPS				
NEC ARTICLE 220			DEMAND LOAD		20.6		KVA		24.7		AMPS				

Load Classification	Connected Load	Demand Factor	Estimated Demand	Panel Totals	
UFC-MOTOR-30%	68506 VA	30.00%	20552 VA		
				Total Conn. Load:	68506 VA
				Total Est. Demand:	20552 VA
				Total Conn.:	82 A
				Total Est. Demand:	25 A

PANEL MP4

FED FROM: DP5
LOCATION: ELECTRICAL 116
MOUNT: SURFACE

100 A MAIN CIRCUIT BREAKER
3PH 4WIRE 480Y/277V
14K AIC
GROUND BAR

CKT	LOAD SERVED	WIRE	BRKR	PL	A		B		C		PL	BRKR	WIRE	LOAD SERVED	CKT
1	OH ROLLING DOOR JEFS AHU 212	12	20	3	0.58	0.58					3	20	12	OH ROLLING DOOR MECHANICAL 120	2
3	--	--	--	--			0.58	0.58			--	--	--	--	4
5	--	--	--	--					0.58	0.58	--	--	--	--	6
7	BP-04 JEFS BOILER ROOM 213	12	20	3	0.44	9.42					3	50	6	AC-02 MECHANICAL 120	8
9	--	--	--	--			0.44	9.42			--	--	--	--	10
11	--	--	--	--					0.44	9.42	--	--	--	--	12
13	BP-03 JEFS BOILER ROOM 213	12	20	3	0.44	1.29					3	20	12	EUH-01 RM 116	14
15	--	--	--	--			0.44	1.29			--	--	--	--	16
17	--	--	--	--					0.44	1.29	--	--	--	--	18
19	PUMP P-03 JEFS BOILER ROOM 213	12	20	3	2.11	2.11					3	20	12	PUMP P-04 JEFS BOILER ROOM 213	20
21	--	--	--	--			2.11	2.11			--	--	--	--	22
23	--	--	--	--					2.11	2.11	--	--	--	--	24
25	EF-13	12	20	3	0.94	0.00					--	--	--	PROVISIONED SPACE	26
27	--	--	--	--			0.94	0.00			--	--	--	PROVISIONED SPACE	28
29	--	--	--	--					0.94	0.00	--	--	--	PROVISIONED SPACE	30
31	PROVISIONED SPACE	--	--	--	0.00	0.00					3	20	--	SPARE	32
33	PROVISIONED SPACE	--	--	--			0.00	0.00			--	--	--	--	34
35	PROVISIONED SPACE	--	--	--					0.00	0.00	--	--	--	--	36
37	SPARE	--	50	3	0.00	0.00					3	20	--	SPARE	38
39	--	--	--	--			0.00	0.00			--	--	--	--	40
41	--	--	--	--					0.00	0.00	--	--	--	--	42
				TOTAL	17.9		17.9		17.9		KVA				
					64.7		64.7		64.7		AMPS				
			CONNECTED LOAD		53.8		KVA		64.7		AMPS				
NEC ARTICLE 220			DEMAND LOAD		18.1		KVA		21.7		AMPS				

Load Classification	Connected Load	Demand Factor	Estimated Demand	Panel Totals	
UFC-HEATER-80%	3874 VA	80.00%	3099 VA		
UFC-MOTOR-30%	49883 VA	30.00%	14965 VA		
				Total Conn. Load:	53757 VA
				Total Est. Demand:	18064 VA
				Total Conn.:	65 A
				Total Est. Demand:	22 A

PANEL MP5

FED FROM: DP5
LOCATION: ELEC. 121
MOUNT: SURFACE

100 A MAIN CIRCUIT BREAKER
3PH 4WIRE 480Y/277V
14K AIC
GROUND BAR

CKT	LOAD SERVED	WIRE	BRKR	PL	A		B		C		PL	BRKR	WIRE	LOAD SERVED	CKT
1	EUH-02 RM 123	12	20	3	1.29	0.94					3	20	12	JOCKEY PUMP RM 122	2
3	--	--	--	--			1.29	0.94			--	--	--	--	4
5	--	--	--	--					1.29	0.94	--	--	--	--	6
7	SF-02	12	20	3	2.11	2.11					3	20	12	SF-03	8
9	--	--	--	--			2.11	2.11			--	--	--	--	10
11	--	--	--	--					2.11	2.11	--	--	--	--	12
13	SF-04	12	20	3	2.11	0.00					3	20	--	SPARE	14
15	--	--	--	--			2.11	0.00			--	--	--	--	16
17	--	--	--	--					2.11	0.00	--	--	--	--	18
19	SPARE	--	20	3	0.00	0.00					--	--	--	PROVISIONED SPACE	20
21	--	--	--	--			0.00	0.00			--	--	--	PROVISIONED SPACE	22
23	--	--	--	--					0.00	0.00	--	--	--	PROVISIONED SPACE	24
25	PROVISIONED SPACE	--	--	--	0.00	0.00					--	--	--	PROVISIONED SPACE	26
27	PROVISIONED SPACE	--	--	--			0.00	0.00			--	--	--	PROVISIONED SPACE	28
29	PROVISIONED SPACE	--	--	--					0.00	0.00	--	--	--	PROVISIONED SPACE	30
31	PROVISIONED SPACE	--	--	--	0.00	0.00					--	--	--	PROVISIONED SPACE	32
33	PROVISIONED SPACE	--	--	--			0.00	0.00			--	--	--	PROVISIONED SPACE	34
35	PROVISIONED SPACE	--	--	--					0.00	0.00	--	--	--	PROVISIONED SPACE	36
37	PROVISIONED SPACE	--	--	--	0.00	0.00					--	--	--	PROVISIONED SPACE	38
39	PROVISIONED SPACE	--	--	--			0.00	0.00			--	--	--	PROVISIONED SPACE	40
41	PROVISIONED SPACE	--	--	--					0.00	0.00	--	--	--	PROVISIONED SPACE	42
				TOTAL	8.6		8.6		8.6		KVA				
					30.9		30.9		30.9		AMPS				
			CONNECTED LOAD		25.7		KVA		30.9		AMPS				
NEC ARTICLE 220			DEMAND LOAD		9.6		KVA		11.6		AMPS				

Load Classification	Connected Load	Demand Factor	Estimated Demand	Panel Totals	
UFC-HEATER-80%	3874 VA	80.00%	3099 VA		
UFC-MOTOR-30%	21782 VA	30.00%	6535 VA		
				Total Conn. Load:	25657 VA
				Total Est. Demand:	9634 VA
				Total Conn.:	31 A
				Total Est. Demand:	12 A

PANEL LP1

FED FROM: SWBD1
LOCATION: ELECTRICAL 205
MOUNT: SURFACE

100 A MAIN CIRCUIT BREAKER
3PH 4WIRE 480Y/277V
14K AIC
GROUND BAR

CKT	LOAD SERVED	WIRE	BRKR	PL	A		B		C		PL	BRKR	WIRE	LOAD SERVED	CKT
1	SURGE PROTECTIVE DEVICE	--	30	3	0.00	0.30					1	20	10	SITE LTG CKT C	2
3	--	--	--	--			0.00	0.30			1	20	10	SITE LTG CKT B	4
5	--	--	--	--					0.00	0.75	1	20	12	LTG RM V020, C020, C021, C022, V021, C021	6
7	LTG RM 117, 213, 212	12	20	1	1.22	2.66					1	20	12	LTG RM 208, 208A, 208B, 209, 209A	8
9	SITE LTG CKT A	10	20	1			0.38	3.23			1	20	12	LTG RM 208A, 208B, 209, 209A	10
11	LTG RM 200, 201	12	20	1					1.50	1.49	1	20	12	LTG RM 202, 204, G020, G021, G022, 206, 207, 210, 21...	12
13	LCP RM 205	12	20	1	0.10	0.00					1	20	--	SPARE	14
15	LTG EXT.	12	20	1			0.17	0.00			1	20	--	SPARE	16
17	SITE LTG CKT E	10	20	1					0.40	0.00	1	20	--	SPARE	18
19	SITE LTG CKT D	10	20	1	0.23	0.00					1	20	--	SPARE	20
21	PROVISIONED SPACE	--	--	--			0.00	0.00			1	20	--	SPARE	22
23	PROVISIONED SPACE	--	--	--					0.00	0.00	--	--	--	PROVISIONED SPACE	24
25	PROVISIONED SPACE	--	--	--	0.00	0.00					--	--	--	PROVISIONED SPACE	26
27	PROVISIONED SPACE	--	--	--			0.00	0.00			--	--	--	PROVISIONED SPACE	28
29	PROVISIONED SPACE	--	--	--					0.00	0.00	--	--	--	PROVISIONED SPACE	30
				TOTAL	4.5		4.1		4.1		KVA				
					16.3		14.7		15.0		AMPS				
			CONNECTED LOAD		12.7		KVA		15.3		AMPS				
NEC ARTICLE 220			DEMAND LOAD		9.5		KVA		11.5		AMPS				

Load Classification	Connected Load	Demand Factor	Estimated Demand	Panel Totals	
LTG	12731 VA	75.00%	9548 VA		
				Total Conn. Load:	12731 VA
				Total Est. Demand:	9548 VA
				Total Conn.:	15 A
				Total Est. Demand:	11 A

NAVFAC

COMMONWEALTH OF MASSACHUSETTS
SENOL DURUR
ELECTRICAL No. 47946
REGISTERED PROFESSIONAL ENGINEER

IRQ WM Jordan COMPANY – A JOINT VENTURE –

Michael Baker INTERNATIONAL
100 AIRSIDE DRIVE
MOON TOWNSHIP, PA 15108 A/E INFO

APPROVED

FOR COMMANDER NAVFAC

ACTIVITY
MARINE CORPS BASE
CAMP LEJEUNE

SATISFACTORY TO DATE DD/MM/YY

DES	ZAK	DRW	LAK	CHK	BSR
PM / DM	TOWLER / ROOT				
BRANCH HEAD	SEK				
DESIGN DIRECTOR	R.L.Stephens, Jr.				
FIRE PROTECTION	DPS				

NAVAL FACILITIES ENGINEERING SYSTEMS COMMAND
NORFOLK, VA
JACKSONVILLE, NC
LOGCOM CSP WAREHOUSE
DEPARTMENT OF THE NAVY
NAVAL FACILITIES ENGINEERING SYSTEMS COMMAND ATLANTIC
ATLANTIC DESIGN AND CONSTRUCTION
MCB CAMP LEJEUNE
ELECTRICAL - PANEL SCHEDULES

SCALE:	AS NOTED
EPROJECT NO.:	1639600
CONSTR. CONTR. NO.	N40085-20-C-0059
NAVFAC DRAWING NO.	14111411
SHEET	385 OF 447

E-605

DRAWFORM REVISION: 25 AUGUST 2020

P1527 FINAL SUBMISSION - 11/18/2021

APP'R	DATE	DESCRIPTION	SYM

PLOTTED: 11/11/2021 9:19:02 AM

FILE NAME: BIM 360/IHF PACKAGE 3/P1527 LOG COM CSP-1639600-E.rvt

GENERAL NOTES

1. SEE SHEET E-001 FOR ELECTRICAL NOTES, SYMBOLS, AND ABBREVIATIONS.
2. * - SEE E-602 FOR CONDUCTOR SIZES NOT INDICATED IN PANEL SCHEDULES.

PANEL LP2

FED FROM: SWBD1
LOCATION: ELECTRICAL 116
MOUNT: SURFACE

100 A MAIN CIRCUIT BREAKER
3PH 4WIRE 480Y/277V
14K AIC
GROUND BAR

CKT	LOAD SERVED	WIRE	BRKR	PL	A		B		C		PL	BRKR	WIRE	LOAD SERVED	CKT
1	SURGE PROTECTIVE DEVICE	--	30	3	0.00	1.66					1	20	10	LTG LOGCOM WAREHOUSE 104	2
3	--	--	--	--			0.00	2.49			1	20	8	LTG LOGCOM WAREHOUSE 104	4
5	--	--	--	--					0.00	2.45	1	20	8	LTG LOGCOM WAREHOUSE 104	6
7	LTG BATTERY CHARGING AREA 104.6	12	20	1	0.71	0.54					1	20	12	LTG EXT.	8
9	LTG RM 107, 106, C011, G012, G010, G011, 105	12	20	1			1.42	0.00			1	20	--	SPARE	10
11	LTG LOGCOM WAREHOUSE 104	8	20	1					2.11	0.00	1	20	--	SPARE	12
13	LTG RM 103, 119, 102, 101, 100, 114, 120, 113A, 113B,...	12	20	1	2.41	0.00					1	20	--	SPARE	14
15	SPARE	--	20	1			0.00	0.00			--	--	--	PROVISIONED SPACE	16
17	SPARE	--	20	1					0.00	0.00	--	--	--	PROVISIONED SPACE	18
19	PROVISIONED SPACE	--	--	--	0.00	0.00					--	--	--	PROVISIONED SPACE	20
21	PROVISIONED SPACE	--	--	--			0.00	0.00			--	--	--	PROVISIONED SPACE	22
23	PROVISIONED SPACE	--	--	--					0.00	0.00	--	--	--	PROVISIONED SPACE	24
25	PROVISIONED SPACE	--	--	--	0.00	0.00					--	--	--	PROVISIONED SPACE	26
27	PROVISIONED SPACE	--	--	--			0.00	0.00			--	--	--	PROVISIONED SPACE	28
29	PROVISIONED SPACE	--	--	--					0.00	0.00	--	--	--	PROVISIONED SPACE	30
				TOTAL	5.3		3.9		4.6		KVA				
					19.6		14.1		16.9		AMPS				
			CONNECTED LOAD		13.8		KVA		16.6		AMPS				
NEC ARTICLE 220			DEMAND LOAD		10.4		KVA		12.5		AMPS				

Load Classification	Connected Load	Demand Factor	Estimated Demand	Panel Totals	
LTG	13804 VA	75.00%	10353 VA		
				Total Conn. Load:	13804 VA
				Total Est. Demand:	10353 VA
				Total Conn.:	17 A
				Total Est. Demand:	12 A

PANEL LP3

FED FROM: SWBD1
LOCATION: ELEC. 121
MOUNT: SURFACE

100 A MAIN CIRCUIT BREAKER
3PH 4WIRE 480Y/277V
14K AIC
GROUND BAR

CKT	LOAD SERVED	WIRE	BRKR	PL	A		B		C		PL	BRKR	WIRE	LOAD SERVED	CKT
1	SURGE PROTECTIVE DEVICE	--	30	3	0.00	0.92					1	20	12	LTG RM 112, 111, 110A, 110, 108, 109	2
3	--	--	--	--			0.00	2.71			1	20	8	LTG LOGCOM WAREHOUSE 104	4
5	--	--	--	--					0.00	2.70	1	20	8	LTG LOGCOM WAREHOUSE 104	6
7	LTG RM 122, 123, 124, 118	12	20	1	0.88	0.58					1	20	12	LTG EXT.	8
9	LTG RM 104.1, 104.2, 121, C013	12	20	1			2.33	0.00			1	20	--	SPARE	10
11	LTG RM 104.3, 104.4, 104.5	12	20	1					2.38	0.00	1	20	--	SPARE	12
13	LTG LOGCOM WAREHOUSE 104, C014	8	20	1	3.13	0.00					1	20	--	SPARE	14
15	SPARE	--	20	1			0.00	0.00			--	--	--	PROVISIONED SPACE	16
17	SPARE	--	20	1					0.00	0.00	--	--	--	PROVISIONED SPACE	18
19	PROVISIONED SPACE	--	--	--	0.00	0.00					--	--	--	PROVISIONED SPACE	20
21	PROVISIONED SPACE	--	--	--			0.00	0.00			--	--	--	PROVISIONED SPACE	22
23	PROVISIONED SPACE	--	--	--					0.00	0.00	--	--	--	PROVISIONED SPACE	24
25	PROVISIONED SPACE	--	--	--	0.00	0.00					--	--	--	PROVISIONED SPACE	26
27	PROVISIONED SPACE	--	--	--			0.00	0.00			--	--	--	PROVISIONED SPACE	28
29	PROVISIONED SPACE	--	--	--					0.00	0.00	--	--	--	PROVISIONED SPACE	30
				TOTAL	5.5		5.0		5.1		KVA				
					19.9		18.2		18.4		AMPS				
			CONNECTED LOAD		15.6		KVA		18.8		AMPS				
NEC ARTICLE 220			DEMAND LOAD		11.7		KVA		14.1		AMPS				

Load Classification	Connected Load	Demand Factor	Estimated Demand	Panel Totals	
LTG	15642 VA	75.00%	11731 VA		
				Total Conn. Load:	15642 VA
				Total Est. Demand:	11731 VA
				Total Conn.:	19 A
				Total Est. Demand:	14 A

PANEL MPLV1

FED FROM: DP4
LOCATION: ELECTRICAL 116
MOUNT: SURFACE

100 A MAIN CIRCUIT BREAKER
3PH 4WIRE 208Y/120V
10K AIC
GROUND BAR

CKT	LOAD SERVED	WIRE	BRKR	PL	A		B		C		PL	BRKR	WIRE	LOAD SERVED	CKT
1	TRAP PRIMER LOGCOM WAREHOUSE 104	12	20	1	0.03	0.53					1	20	12	EF-03 MECHANICAL 120	2
3	UH-01 MECHANICAL 120	12	20	1			0.10	0.12			1	20	12	RP-1 JEFS BOILER ROOM 213	4
5	UH-02 JEFS BOILER ROOM 213	12	20	1					0.10	1.18	1	20	12	EF-04 MECHANICAL 120	6
7	VAV-05 / 06 / 07 / 08	12	20	1	0.72	0.72					1	20	12	VAV-09 / 10 / 11 / 12	8
9	VAV-13 / 14 / 15	12	20	1			0.54	0.60			1	20	12	RECEPT GWH-1 RM 213	10
11	J-BOX LOUVER 24V POWER MECHANICAL 120	12	20	1					0.10	0.18	1	20	12	RECEPT IRH-10 WAREHOUSE 104	12
13	AHU-02 UV COIL DISINFECTION SYSTEM	12	20	1	1.00	0.10					1	20	12	DDC PANEL	14
15	HPCU-03	10	25	2			1.58	0.10			1	20	12	EF-05 ELECTRICAL 116	16
17	--	--	--	--					1.58	0.18	1	20	12	LOUVER L-17	18
19	RECEPT IRH-07 WAREHOUSE 104	12	20	1	0.18	0.18					1	20	12	EMERGENCY SHOWER RM 104.6	20
21	RECEPT IRH-08 WAREHOUSE 104	12	20	1			0.18	0.18			1	20	12	LOUVER L-04	22
23	LOUVER L-18	12	20	1					0.18	0.00	--	--	--	PROVISIONED SPACE	24
25	PROVISIONED SPACE	--	--	--	0.00	0.00					--	--	--	PROVISIONED SPACE	26
27	PROVISIONED SPACE	--	--	--			0.00	0.00			--	--	--	PROVISIONED SPACE	28
29	PROVISIONED SPACE	--	--	--					0.00	0.00	--	--	--	PROVISIONED SPACE	30
31	PROVISIONED SPACE	--	--	--	0.00	0.00					--	--	--	PROVISIONED SPACE	32
33	SPARE	--	30	3			0.00	0.00			--	--	--	PROVISIONED SPACE	34
35	--	--	--	--					0.00	0.00	1	20	--	SPARE	36
37	--	--	--	--	0.00	0.00					1	20	--	SPARE	38
39	SPARE	--	20	1			0.00	0.00			1	20	--	SPARE	40
41	SPARE	--	20	1					0.00	0.00	1	20	--	SPARE	42
				TOTAL	3.5		3.4		3.5		KVA				
					28.9		28.3		29.2		AMPS				
			CONNECTED LOAD		10.3		KVA		28.7		AMPS				
NEC ARTICLE 220			DEMAND LOAD		4.7		KVA		12.9		AMPS				

Load Classification	Connected Load	Demand Factor	Estimated Demand	Panel Totals	
RECEPT	540 VA	100.00%	540 VA		
UFC-MOTOR-25%	6158 VA	25.00%	1540 VA	Total Conn. Load:	10348 VA
FP 100%	180 VA	100.00%	180 VA	Total Est. Demand:	4661 VA
UFC-HVAC-70%	3162 VA	70.00%	2213 VA	Total Conn.:	29 A
UFC-HEATER-80%	192 VA	80.00%	154 VA	Total Est. Demand:	13 A
UFC-MOTOR-30%	117 VA	30.00%	35 VA		

PANEL MPLV2

FED FROM: DP4
LOCATION: ELEC 123
MOUNT: SURFACE

100 A MAIN LUG ONLY
3PH 4WIRE 208Y/120V
10K AIC
GROUND BAR

CKT	LOAD SERVED	WIRE	BRKR	PL	A		B		C		PL	BRKR	WIRE	LOAD SERVED	CKT
1	TRAP PRIMER LOGCOM WAREHOUSE 104	12	20	1	0.03	0.10					1	20	12	UH-04 WHSE MECH. 124	2
3	VAV-25 / 26 / 27	12	20	1			0.54	0.18			1	20	12	RECEPT IRH-03 LOGCOM WAREHOUSE 104	4
5	EF-07 ELEC 123	12	20	1					0.70	0.70	1	20	12	EF-08 WHSE MECH. 124	6
7	J-BOX LOUVER 24V POWER RM 213 SORT AREA 104.4	12	20	1	0.10	0.92					2	25	10	HPCU-04	8
9	J-BOX LOUVER 24V POWER ELEC 123	12	20	1			0.18	0.92			--	--	--	--	10
11	RECEPT IRH-04 LOGCOM WAREHOUSE 104	12	20	1					0.18	0.18	1	20	12	LOUVER L-14	12
13	LOUVER L-15	12	20	1	0.18	0.18					1	20	12	J-BOX LOUVER 24V POWER WHSE MECH. 124	14
15	PROVISIONED SPACE	--	--	--			0.00	0.00			--	--	--	PROVISIONED SPACE	16
17	PROVISIONED SPACE	--	--	--					0.00	0.00	--	--	--	PROVISIONED SPACE	18
19	PROVISIONED SPACE	--	--	--	0.00	0.00					--	--	--	PROVISIONED SPACE	20
21	PROVISIONED SPACE	--	--	--			0.00	0.00			--	--	--	PROVISIONED SPACE	22
23	PROVISIONED SPACE	--	--	--					0.00	0.00	--	--	--	PROVISIONED SPACE	24
25	PROVISIONED SPACE	--	--	--	0.00	0.00					--	--	--	PROVISIONED SPACE	26
27	PROVISIONED SPACE	--	--	--			0.00	0.00			--	--	--	PROVISIONED SPACE	28
29	PROVISIONED SPACE	--	--	--					0.00	0.00	--	--	--	PROVISIONED SPACE	30
31	PROVISIONED SPACE	--	--	--	0.00	0.00					--	--	--	PROVISIONED SPACE	32
33	PROVISIONED SPACE	--	--	--			0.00	0.00			--	--	--	PROVISIONED SPACE	34
35	PROVISIONED SPACE	--	--	--					0.00	0.00	--	--	--	PROVISIONED SPACE	36
37	SPARE	--	25	2	0.00	0.00					1	20	--	SPARE	38
39	--	--	--	--			0.00	0.00			1	20	--	SPARE	40
41	SPARE	--	20	1					0.00	0.00	1	20	--	SPARE	42
				TOTAL	1.5		1.8		1.8		KVA				
					12.5		15.4		14.9		AMPS				
			CONNECTED LOAD		5.1		KVA		14.1		AMPS				
NEC ARTICLE 220			DEMAND LOAD		2.4		KVA		6.7		AMPS				

Load Classification	Connected Load	Demand Factor	Estimated Demand	Panel Totals	
RECEPT	360 VA	100.00%	360 VA		
UFC-MOTOR-25%	2786 VA	25.00%	697 VA	Total Conn. Load:	5072 VA
UFC-HVAC-70%	1830 VA	70.00%	1281 VA	Total Est. Demand:	2415 VA
UFC-HEATER-80%	96 VA	80.00%	77 VA	Total Conn.:	14 A
				Total Est. Demand:	7 A

NAVFAC

COMMONWEALTH OF MASSACHUSETTS
SENOL DURUR
ELECTRICAL
No. 47946
REGISTERED PROFESSIONAL ENGINEER

IRQ W.M. Jordan COMPANY – A JOINT VENTURE –

Michael Baker INTERNATIONAL
100 AIRSIDE DRIVE
MOON TOWNSHIP, PA 15108
A/E INFO

APPROVED

FOR COMMANDER NAVFAC

ACTIVITY
MARINE CORPS BASE
CAMP LEJEUNE

SATISFACTORY TO DATE DD/MM/YY

DES	ZAK	DRW LAK	CHK BSR
PM / DM	TOWLER / ROOT		
BRANCH HEAD	SEK		
DESIGN DIRECTOR	R.L.Stephens, Jr.		
FIRE PROTECTION	DPS		

NAVAL FACILITIES ENGINEERING SYSTEMS COMMAND
NAVAL FACILITIES ENGINEERING SYSTEMS COMMAND ATLANTIC
NORFOLK, VA
JACKSONVILLE, NC

DEPARTMENT OF THE NAVY
NAVAL FACILITIES ENGINEERING SYSTEMS COMMAND
ATLANTIC DESIGN AND CONSTRUCTION
MCB CAMP LEJEUNE

LOGCOM CSP WAREHOUSE

ELECTRICAL - PANEL SCHEDULES

SCALE: AS NOTED
EPROJECT NO.: 1639600
CONSTR. CONTR. NO. N40085-20-C-0059
NAVFAC DRAWING NO. 14111412
SHEET 386 OF 447

E-606

DRAWFORM REVISION: 25 AUGUST 2020

NO.	DESCRIPTION	DATE	APP'R

P1527 FINAL SUBMISSION - 11/18/2021

PLOTTED: 11/11/2021 9:19:04 AM

FILE NAME: BIM 360:/HF PACKAGE 3/P1527 LOG COM CSP-1639600-E.rvt

GENERAL NOTES

1. SEE SHEET E-001 FOR ELECTRICAL NOTES, SYMBOLS, AND ABBREVIATIONS.
2. * - SEE E-602 FOR CONDUCTOR SIZES NOT INDICATED IN PANEL SCHEDULES.

PANEL MPLV3

FED FROM: DP4
LOCATION: ELECTRICAL 205
MOUNT: SURFACE

100 A MAIN CIRCUIT BREAKER
3PH 4WIRE 208Y/120V
10K AIC
GROUND BAR

CKT	LOAD SERVED	WIRE	BRKR	PL	A		B		C		PL	BRKR	WIRE	LOAD SERVED	CKT
1	UH-03 JEFS AHU 212	12	20	1	0.10	0.36					1	20	12	BOILER B-01 RM 213	2
3	LOUVER L-01 JEFS AHU 212	12	20	1			0.18	0.90			1	20	12	VAV 20 / 21 / 22 / 23 / 24	4
5	LOUVER L-02 JEFS AHU 212	12	20	1					0.18	0.36	1	20	12	BOILER B-02 RM 213	6
7	EF-09 CORR. C021	12	20	1	0.70	0.70					1	20	12	EF-10 CORR. C021	8
9	AHU-01 UV COIL DISINFECTION SYSTEM	12	20	1			1.00	1.18			1	20	12	SF-01 JEFS AHU 212	10
11	CWBT-01 JEFS AHU 212	12	20	1					1.00	1.55	1	20	12	EWH-03 ELECTRICAL 205	12
13	VAV-16 / 17 / 18 / 19	12	20	1	0.72	0.77					1	20	12	DEH-01 JEFS AHU 212	14
15	J-BOX LOUVER 24V POWER TECHNICIAN/ TECHNIC...	12	20	1			0.10	0.36			1	20	12	BOILER B-04 RM 213	16
17	J-BOX LOUVER 24V POWER TEST & REPAIR 208A	12	20	1					0.10	0.36	1	20	12	VAV-28 / 29	18
19	J-BOX LOUVER 24V POWER RM 213	12	20	1	0.10	0.36					1	20	12	BOILER B-03 RM 213	20
21	HEAT TRACE CONTROL PANEL	12	20	3			1.09	0.00			--	--	--	PROVISIONED SPACE	22
23	--	--	--	--					1.09	0.00	--	--	--	PROVISIONED SPACE	24
25	--	--	--	--	1.09	0.00					--	--	--	PROVISIONED SPACE	26
27	PROVISIONED SPACE	--	--	--			0.00	0.00			--	--	--	PROVISIONED SPACE	28
29	PROVISIONED SPACE	--	--	--					0.00	0.00	--	--	--	PROVISIONED SPACE	30
31	PROVISIONED SPACE	--	--	--	0.00	0.00					--	--	--	PROVISIONED SPACE	32
33	PROVISIONED SPACE	--	--	--			0.00	0.00			--	--	--	PROVISIONED SPACE	34
35	PROVISIONED SPACE	--	--	--					0.00	0.00	1	20	--	SPARE	36
37	SPARE	--	20	1	0.00	0.00					1	20	--	SPARE	38
39	SPARE	--	20	1			0.00	0.00			1	20	--	SPARE	40
41	SPARE	--	20	1					0.00	0.00	1	20	--	SPARE	42
				TOTAL	4.9		4.8		4.6		KVA				
					41.0		40.3		38.7		AMPS				
				CONNECTED LOAD	14.3		KVA		39.8		AMPS				
NEC ARTICLE 220				DEMAND LOAD	6.9		KVA		19.3		AMPS				

Load Classification	Connected Load	Demand Factor	Estimated Demand	Panel Totals	
Equipment	3280 VA	100.00%	3280 VA		
UFC-MOTOR-25%	9416 VA	25.00%	2354 VA	Total Conn. Load:	14340 VA
UFC-HEATER-80%	1644 VA	80.00%	1315 VA	Total Est. Demand:	6949 VA
				Total Conn.:	40 A
				Total Est. Demand:	19 A

PANEL MPLV4

FED FROM: DP4
LOCATION: ELEC. 109
MOUNT: SURFACE

100 A MAIN CIRCUIT BREAKER
3PH 4WIRE 208Y/120V
10K AIC
GROUND BAR

CKT	LOAD SERVED	WIRE	BRKR	PL	A		B		C		PL	BRKR	WIRE	LOAD SERVED	CKT
1	EF-02 RM 121	12	20	1	0.06	0.18					1	20	12	J-BOX LOUVER 24V POWER ELEC. 121	2
3	EF-01 RM 110	12	20	1			0.09	1.55			1	20	12	EWH-01 ELEC. 109	4
5	LOUVER L-13	12	20	1					0.18	1.55	1	20	12	EWH-02 ELEC. 121	6
7	VAV-01 / 02 / 03 / 04	12	20	1	0.72	0.10					1	20	12	J-BOX LOUVER 24V POWER LOGCOM WAREHOUSE...	8
9	J-BOX LOUVER 24V POWER NDTE / STORAGE 110	12	20	1			0.10	0.18			1	20	12	RECEPT IRH-06 LOGCOM WAREHOUSE 104	10
11	J-BOX LOUVER 24V POWER RM 213 SHELTER...	12	20	1					0.10	0.18	1	20	12	RECEPT IRH-09 LOGCOM WAREHOUSE 104	12
13	RECEPT IRH-05 LOGCOM WAREHOUSE 104	12	20	1	0.18	0.18					1	20	12	LOUVER L-16	14
15	RECEPT IRH-01 LOGCOM WAREHOUSE 104	12	20	1			0.18	0.00			--	--	--	PROVISIONED SPACE	16
17	RECEPT IRH-02 LOGCOM WAREHOUSE 104	12	20	1					0.18	0.00	--	--	--	PROVISIONED SPACE	18
19	PROVISIONED SPACE	--	--	--	0.00	0.00					--	--	--	PROVISIONED SPACE	20
21	PROVISIONED SPACE	--	--	--			0.00	0.00			--	--	--	PROVISIONED SPACE	22
23	PROVISIONED SPACE	--	--	--					0.00	0.00	--	--	--	PROVISIONED SPACE	24
25	PROVISIONED SPACE	--	--	--	0.00	0.00					--	--	--	PROVISIONED SPACE	26
27	PROVISIONED SPACE	--	--	--			0.00	0.00			--	--	--	PROVISIONED SPACE	28
29	PROVISIONED SPACE	--	--	--					0.00	0.00	--	--	--	PROVISIONED SPACE	30
31	PROVISIONED SPACE	--	--	--	0.00	0.00					--	--	--	PROVISIONED SPACE	32
33	PROVISIONED SPACE	--	--	--			0.00	0.00			--	--	--	PROVISIONED SPACE	34
35	PROVISIONED SPACE	--	--	--					0.00	0.00	1	20	--	SPARE	36
37	SPARE	--	20	1	0.00	0.00					1	20	--	SPARE	38
39	SPARE	--	20	1			0.00	0.00			1	20	--	SPARE	40
41	SPARE	--	20	1					0.00	0.00	1	20	--	SPARE	42
				TOTAL	1.4		2.1		2.2		KVA				
					11.9		18.4		19.1		AMPS				
				CONNECTED LOAD	5.7		KVA		15.9		AMPS				
NEC ARTICLE 220				DEMAND LOAD	3.8		KVA		10.6		AMPS				

Load Classification	Connected Load	Demand Factor	Estimated Demand	Panel Totals	
RECEPT	900 VA	100.00%	900 VA		
UFC-MOTOR-25%	1716 VA	25.00%	429 VA	Total Conn. Load:	5712 VA
UFC-HEATER-80%	3096 VA	80.00%	2477 VA	Total Est. Demand:	3806 VA
				Total Conn.:	16 A
				Total Est. Demand:	11 A

PANEL RP1

FED FROM: DP2
LOCATION: ELECTRICAL 116
MOUNT: SURFACE

100 A MAIN LUG ONLY
3PH 4WIRE 208Y/120V
10K AIC
GROUND BAR

CKT	LOAD SERVED	WIRE	BRKR	PL	A		B		C		PL	BRKR	WIRE	LOAD SERVED	CKT
1	RECEPT WAREHOUSE 104	12	20	1	0.72	0.90					1	20	12	RECEPT WAREHOUSE 104	2
3	RECEPT WAREHOUSE 104	12	20	1			0.72	0.54			1	20	12	RECEPT WAREHOUSE 104	4
5	RECEPT WAREHOUSE 104	12	20	1					1.08	0.72	1	20	12	RECEPT WAREHOUSE 104	6
7	RECEPT WAREHOUSE 104	12	20	1	0.72	0.72					1	20	12	RECEPT WAREHOUSE 104	8
9	RECEPT WAREHOUSE 104	12	20	1			0.72	0.00			1	20	--	SPARE	10
11	SPARE	--	20	1					0.00	0.00	1	20	--	SPARE	12
13	SPARE	--	20	1	0.00	0.00					1	20	--	SPARE	14
15	PROVISIONED SPACE	--	--	--			0.00	0.00			--	--	--	PROVISIONED SPACE	16
17	PROVISIONED SPACE	--	--	--					0.00	0.00	--	--	--	PROVISIONED SPACE	18
19	PROVISIONED SPACE	--	--	--	0.00	0.00					--	--	--	PROVISIONED SPACE	20
21	PROVISIONED SPACE	--	--	--			0.00	0.00			--	--	--	PROVISIONED SPACE	22
23	PROVISIONED SPACE	--	--	--					0.00	0.00	--	--	--	PROVISIONED SPACE	24
25	PROVISIONED SPACE	--	--	--	0.00	0.00					--	--	--	PROVISIONED SPACE	26
27	PROVISIONED SPACE	--	--	--			0.00	0.00			--	--	--	PROVISIONED SPACE	28
29	PROVISIONED SPACE	--	--	--					0.00	0.00	--	--	--	PROVISIONED SPACE	30
				TOTAL	3.1		2.0		1.8		KVA				
					25.7		16.7		15.0		AMPS				
				CONNECTED LOAD	6.8		KVA		19.0		AMPS				
NEC ARTICLE 220				DEMAND LOAD	6.8		KVA		19.0		AMPS				

Load Classification	Connected Load	Demand Factor	Estimated Demand	Panel Totals	
RECEPT	6840 VA	100.00%	6840 VA		
				Total Conn. Load:	6840 VA
				Total Est. Demand:	6840 VA
				Total Conn.:	19 A
				Total Est. Demand:	19 A

PANEL RP2

FED FROM: DP2
LOCATION: ELECTRICAL 116
MOUNT: SURFACE

150 A MAIN LUG ONLY
3PH 4WIRE 208Y/120V
10K AIC
GROUND BAR

CKT	LOAD SERVED	WIRE	BRKR	PL	A		B		C		PL	BRKR	WIRE	LOAD SERVED	CKT
1	EMERGENCY SHOWER RM 117	12	20	1	0.06	0.36					1	20	12	RECEPT RM C010 / V010	2
3	RECEPT REFRIG RM 102	12	20	1			0.17	1.00			1	20	12	ICE MAKER RM 103	4
5	RECEPT AV FLAT PANEL RM 103	12	20	1					0.18	0.54	1	20	12	RECEPT RM 119	6
7	RECEPT BATTERY CHARGING AREA 104.6	12	20	1	0.90	1.08					1	20	12	RECEPT RM 101	8
9	RECEPT VENDING RM 103	12	20	1			1.44	1.44			1	20	12	RECEPT VENDING RM 103	10
11	RECEPT COFFEE MAKER RM 103	12	20	1					0.85	1.20	1	20	12	RECEPT REFRIG RM 103	12
13	RECEPT MICROWAVE RM 103	12	20	1	1.65	0.72					1	20	12	RECEPT RM 117	14
15	RECEPT RM 119	12	20	1			0.72	0.72			1	20	12	RECEPT RM 115	16
17	RECEPT RM 103	12	20	1					1.26	0.72	1	20	12	RECEPT RM 119	18
19	RECEPT RM 114	12	20	1	0.72	0.72					1	20	12	RECEPT BATTERY CHARGING AREA 104.6	20
21	RECEPT ELEC. WATER COOLER RM 103	12	20	1			0.72	0.90			1	20	12	RECEPT RM 117	22
23	RECEPT RM 117	12	20	1					0.72	0.72	1	20	12	RECEPT ELECTRICAL 116	24
25	RECEPT RM 113B	12	20	1	0.90	0.90					1	20	12	RECEPT RM 100	26
27	RECEPT RM 102	12	20	1			0.90	1.08			1	20	12	RECEPT RM 114	28
29	RECEPT RM 213	12	20	1					0.90	0.90	1	20	12	RECEPT RM 113B	30
31	RECEPT RM 114	12	20	1	1.08	1.08					1	20	12	RECEPT RM 103	32
33	RECEPT RM 103	12	20	1			1.08	0.00			1	20	--	SPARE	34
35	RECEPT RM 115	12	20	1					1.08	1.08	1	20	12	RECEPT RM 113A	36
37	SPARE	--	20	1	0.00	0.00					1	20	--	SPARE	38
39	SPARE	--	20	1			0.00	0.00			1	20	--	SPARE	40
41	SPARE	--	20	1					0.00	0.00	1	20	--	SPARE	42
				TOTAL	10.2		10.2		10.2		KVA				
					84.8		84.8		84.6		AMPS				
				CONNECTED LOAD	30.5		KVA		84.6		AMPS				
NEC ARTICLE 220				DEMAND LOAD	24.5		KVA		68.0		AMPS				

Load Classification	Connected Load	Demand Factor	Estimated Demand	Panel Totals	
Equipment	8468 VA	100.00%	8468 VA		
RECEPT	21960 VA	72.77%	15980 VA	Total Conn. Load:	30488 VA
FP 100%	60 VA	100.00%	60 VA	Total Est. Demand:	24508 VA
				Total Conn.:	85 A
				Total Est. Demand:	68 A

NO.	DESCRIPTION	DATE	APPR

NAVFAC

COMMONWEALTH OF MASSACHUSETTS
SENOL DURUR
ELECTRICAL No. 47946
REGISTERED PROFESSIONAL ENGINEER

WNJ Jordan COMPANY – A JOINT VENTURE –

Michael Baker INTERNATIONAL
100 AIRSIDE DRIVE
MOON TOWNSHIP, PA 15108 A/E INFO

APPROVED

FOR COMMANDER NAVFAC

ACTIVITY
MARINE CORPS BASE
CAMP LEJEUNE

SATISFACTORY TO DATE DD/MM/YY

DES	DRW	CHK
ZAK	LAK	BSR

PM / DM: TOWLER / ROOT
BRANCH HEAD: SEK
DESIGN DIRECTOR: R.L.Stephens, Jr.
FIRE PROTECTION: DPS

NAVAL FACILITIES ENGINEERING SYSTEMS COMMAND
NORFOLK, VA
JACKSONVILLE, NC

LOGCOM CSP WAREHOUSE

ELECTRICAL - PANEL SCHEDULES

DEPARTMENT OF THE NAVY
NAVAL FACILITIES ENGINEERING SYSTEMS COMMAND ATLANTIC
ATLANTIC DESIGN AND CONSTRUCTION
MCB CAMP LEJEUNE

SCALE: AS NOTED
EPROJECT NO.: 1639600
CONSTR. CONTR. NO. N40085-20-C-0059
NAVFAC DRAWING NO. 14111413
SHEET 387 OF 447

E-607

DRAWFORM REVISION: 25 AUGUST 2020

P1527 FINAL SUBMISSION - 11/18/2021

PLOTTED: 11/11/2021 9:19:07 AM

FILE NAME: BIM 360://HF PACKAGE 3/P1527 LOG COM CSP-1639600-E.rvt

GENERAL NOTES

1. SEE SHEET E-001 FOR ELECTRICAL NOTES, SYMBOLS, AND ABBREVIATIONS.
2. * - SEE E-602 FOR CONDUCTOR SIZES NOT INDICATED IN PANEL SCHEDULES.

PANEL RP3

FED FROM: DP2
LOCATION: ELEC. 109
MOUNT: SURFACE

100 A MAIN CIRCUIT BREAKER
3PH 4WIRE 208Y/120V
10K AIC
GROUND BAR

CKT	LOAD SERVED	WIRE	BRKR	PL	A		B		C		PL	BRKR	WIRE	LOAD SERVED	CKT
1	RECEPT ELEC. WATER COOLER RM 110	12	20	1	0.18	0.18					1	20	12	RECEPT X-RAY MACHINE RM 110	2
3	RECEPT RM 106	12	20	1			0.54	1.08			1	20	12	RECEPT RM G010 / 105 / C011	4
5	RECEPT RM 120	12	20	1					0.90	0.90	1	20	12	RECEPT RM 110A	6
7	RECEPT RM 110	12	20	1	0.72	1.08					1	20	12	RECEPT RM 107	8
9	RECEPT RM 109	12	20	1			0.54	0.72			1	20	12	RECEPT RM 112	10
11	RECEPT RM 112	12	20	1					0.54	0.72	1	20	12	RECEPT RM G011	12
13	RECEPT RM 111	12	20	1	0.72	0.72					1	20	12	RECEPT RM 107	14
15	RECEPT RM 110	12	20	1			0.72	0.72			1	20	12	RECEPT RM G012	16
17	RECEPT RM 111	12	20	1					0.72	0.72	1	20	12	RECEPT RM 107	18
19	RECEPT WATER COOLER RM C011	12	20	1	0.72	0.03					1	20	12	WATER CLOSET RM G011	20
21	WATER CLOSET RM G010	12	20	1			0.03	0.03			1	20	12	WATER CLOSET RM G012	22
23	RECEPT EXTERIOR	12	20	1					0.36	0.72	1	20	12	RECEPT RM 110	24
25	OIL WATER SEPARATOR ALARM EXTERIOR	12	20	1	0.18	0.00					--	--	--	PROVISIONED SPACE	26
27	URINAL RM G012	12	20	1			0.03	0.00			--	--	--	PROVISIONED SPACE	28
29	PROVISIONED SPACE	--	--	--					0.00	0.00	--	--	--	PROVISIONED SPACE	30
31	PROVISIONED SPACE	--	--	--	0.00	0.00					--	--	--	PROVISIONED SPACE	32
33	PROVISIONED SPACE	--	--	--			0.00	0.00			--	--	--	PROVISIONED SPACE	34
35	SPARE	--	20	1					0.00	0.00	--	--	--	PROVISIONED SPACE	36
37	SPARE	--	20	1	0.00	0.00					1	20	--	SPARE	38
39	SPARE	--	20	1			0.00	0.00			1	20	--	SPARE	40
41	SPARE	--	20	1					0.00	0.00	1	20	--	SPARE	42
			TOTAL		4.5		4.4		5.6		KVA				
					37.9		36.6		46.7		AMPS				
			CONNECTED LOAD		14.5		KVA		40.2		AMPS				
NEC ARTICLE 220			DEMAND LOAD		12.8		KVA		35.4		AMPS				

Load Classification	Connected Load	Demand Factor	Estimated Demand	Panel Totals	
Equipment	1080 VA	100.00%	1080 VA		
RECEPT	13320 VA	87.54%	11660 VA	Total Conn. Load:	14500 VA
UFC-MOTOR-25%	100 VA	25.00%	25 VA	Total Est. Demand:	12765 VA
				Total Conn.:	40 A
				Total Est. Demand:	35 A

PANEL RP4

FED FROM: DP2
LOCATION: ELEC. 121
MOUNT: SURFACE

100 A MAIN CIRCUIT BREAKER
3PH 4WIRE 208Y/120V
10K AIC
GROUND BAR

CKT	LOAD SERVED	WIRE	BRKR	PL	A		B		C		PL	BRKR	WIRE	LOAD SERVED	CKT
1	RECEPT ELEC. WATER COOLER RM 104.1	12	20	1	0.18	0.18					1	20	12	RECEPT WATER COOLER RM 104.3	2
3	RECEPT RM 121	12	20	1			0.54	0.72			1	20	12	RECEPT RM 104.1	4
5	RECEPT RM 104.1	12	20	1					0.72	0.90	1	20	12	RECEPT RM 104.1	6
7	RECEPT RM 104.2 / CORR C013	12	20	1	1.08	0.72					1	20	12	RECEPT RM 122	8
9	RECEPT RM 123	12	20	1			0.72	0.72			1	20	12	RECEPT RM 104.4	10
11	RECEPT RM 124	12	20	1					0.72	0.72	1	20	12	RECEPT RM 104.4	12
13	RECEPT RM 104.3	12	20	1	0.72	0.90					1	20	12	RECEPT RM 104.3	14
15	RECEPT RM 104.4 / CORR C014	12	20	1			0.90	0.36			1	20	12	RECEPT EXTERIOR	16
17	RECEPT RM 104.5	12	20	1					0.90	0.13	1	20	12	RECEPT FLAT PANEL DISPLAY 104.1	18
19	PROVISIONED SPACE	--	--	--	0.00	0.00					--	--	--	PROVISIONED SPACE	20
21	PROVISIONED SPACE	--	--	--			0.00	0.00			--	--	--	PROVISIONED SPACE	22
23	PROVISIONED SPACE	--	--	--					0.00	0.00	--	--	--	PROVISIONED SPACE	24
25	SPARE	--	20	1	0.00	0.00					--	--	--	PROVISIONED SPACE	26
27	SPARE	--	20	1			0.00	0.00			1	20	--	SPARE	28
29	SPARE	--	20	1					0.00	0.00	1	20	--	SPARE	30
			TOTAL		3.8		4.0		4.1		KVA				
					31.5		33.2		34.3		AMPS				
			CONNECTED LOAD		11.8		KVA		32.8		AMPS				
NEC ARTICLE 220			DEMAND LOAD		11.1		KVA		30.8		AMPS				

Load Classification	Connected Load	Demand Factor	Estimated Demand	Panel Totals	
Equipment	360 VA	100.00%	360 VA		
RECEPT	11468 VA	93.60%	10734 VA	Total Conn. Load:	11828 VA
				Total Est. Demand:	11094 VA
				Total Conn.:	33 A
				Total Est. Demand:	31 A

PANEL RP5

FED FROM: DP3
LOCATION: ELECTRICAL 205
MOUNT: SURFACE

125 A MAIN LUG ONLY
3PH 4WIRE 208Y/120V
10K AIC
GROUND BAR

CKT	LOAD SERVED	WIRE	BRKR	PL	A		B		C		PL	BRKR	WIRE	LOAD SERVED	CKT
1	WATER CLOSET RM G020	12	20	1	0.03	0.18					1	20	12	RECEPT AV FLAT PANEL RM 202	2
3	WATER CLOSET RM G021	12	20	1			0.03	0.18			1	20	12	RECEPT ELEC. WATER COOLER RM 202	4
5	WATER CLOSET RM G022	12	20	1					0.03	0.34	1	20	12	RECEPT AV FLAT PANEL RM 200	6
7	RECEPT RM 201	12	20	1	0.90	0.90					1	20	12	RECEPT RM 201	8
9	RECEPT AV FLAT PANEL RM 200	12	20	1			0.34	0.54			1	20	12	RECEPT RM 205	10
11	RECEPT AV FLAT PANEL RM 200	12	20	1					0.69	1.00	1	20	12	ICE MAKER RM 202	12
13	SYSTEMS FURNITURE RM 200	12	20	1	1.08	0.72					1	20	12	RECEPT RM 200	14
15	RECEPT COPIER RM 201	12	20	1			1.44	1.65			1	20	12	RECEPT MICROWAVE RM 202	16
17	SYSTEMS FURNITURE RM 200	12	20	1					1.08	0.72	1	20	12	RECEPT RM G022	18
19	RECEPT RM 202	12	20	1	0.90	1.08					1	20	12	RECEPT RM 201	20
21	RECEPT RM G021	12	20	1			0.72	0.90			1	20	12	RECEPT RM 204, G020	22
23	RECEPT RM V020, C020, C021, C022	12	20	1					0.90	1.08	1	20	12	RECEPT RM 202	24
25	RECEPT RM 200	12	20	1	1.08	1.08					1	20	12	SYSTEMS FURNITURE RM 200	26
27	RECEPT RM 202	12	20	1			1.08	1.08			1	20	12	RECEPT RM 201	28
29	RECEPT RM 201	12	20	1					1.08	1.08	1	20	12	SYSTEMS FURNITURE RM 200	30
31	SYSTEMS FURNITURE RM 200	12	20	1	1.08	0.00					--	--	--	PROVISIONED SPACE	32
33	SYSTEMS FURNITURE RM 200	12	20	1			1.08	1.08			1	20	12	SYSTEMS FURNITURE RM 200	34
35	SYSTEMS FURNITURE RM 200	12	20	1					1.08	0.00	1	20	--	SPARE	36
37	SPARE	--	20	1	0.00	0.00					1	20	--	SPARE	38
39	SPARE	--	20	1			0.00	0.00			1	20	--	SPARE	40
41	SPARE	--	20	1					0.00	0.00	1	20	--	SPARE	42
			TOTAL		9.0		10.1		9.1		KVA				
					75.2		84.3		75.6		AMPS				
			CONNECTED LOAD		28.2		KVA		78.3		AMPS				
NEC ARTICLE 220			DEMAND LOAD		21.2		KVA		58.9		AMPS				

Load Classification	Connected Load	Demand Factor	Estimated Demand	Panel Totals	
Equipment	4270 VA	100.00%	4270 VA		
RECEPT	23865 VA	70.95%	16933 VA	Total Conn. Load:	28210 VA
UFC-MOTOR-25%	75 VA	25.00%	19 VA	Total Est. Demand:	21221 VA
				Total Conn.:	78 A
				Total Est. Demand:	59 A

PANEL RP6

FED FROM: DP3
LOCATION: ELECTRICAL 205
MOUNT: SURFACE

125 A MAIN LUG ONLY
3PH 4WIRE 208Y/120V
10K AIC
GROUND BAR

CKT	LOAD SERVED	WIRE	BRKR	PL	A		B		C		PL	BRKR	WIRE	LOAD SERVED	CKT
1	EMERGENCY SHOWER RM 208A	12	20	1	0.06	0.85					1	20	12	RECEPT COFFEE MAKER RM 202	2
3	RECEPT RM 207	12	20	1			1.08	1.08			1	20	12	RECEPT RM 208	4
5	RECEPT VENDING RM 202	12	20	1					1.44	1.44	1	20	12	RECEPT VENDING RM 202	6
7	RECEPT RM 207	12	20	1	0.90	1.44					1	20	12	RECEPT COPIER RM 206	8
9	RECEPT REFRIGERATOR RM 202	12	20	1			1.20	0.54			1	20	12	RECEPT RM 206	10
11	RECEPT RM 209A	12	20	1					0.54	0.72	1	20	12	RECEPT RM 211	12
13	RECEPT EXTERIOR	12	20	1	0.72	0.72					1	20	12	RECEPT RM 208	14
15	RECEPT RM 208B	12	20	1			0.72	0.90			1	20	12	RECEPT RM 211	16
17	RECEPT RM 212	12	20	1					0.90	0.90	1	20	12	RECEPT RM 209	18
19	RECEPT RM 210	12	20	1	0.90	0.90					1	20	12	RECEPT RM 208	20
21	RECEPT RM 208B	12	20	1			0.90	1.08			1	20	12	RECEPT RM 209	22
23	RECEPT RM 210	12	20	1					1.08	1.08	1	20	12	RECEPT RM 208B	24
25	RECEPT RM 208B	12	20	1	1.08	1.08					1	20	12	RECEPT RM 208A	26
27	RECEPT RM 208A	12	20	1			1.08	1.08			1	20	12	RECEPT RM 208A	28
29	RECEPT RM 208A	12	20	1					1.08	0.06	1	20	12	EMERGENCY SHOWER WAREHOUSE 104	30
31	RECEPT RM 208A	12	20	1	0.90	0.13					1	20	12	RECEPT FLAT PANEL DISPLAY RM 208A	32
33	RECEPT WATER COOLER RM C020	12	20	1			0.72	0.03			1	20	12	URINAL RM G020	34
35	EMERGENCY SHOWER RM 209A	12	20	1					0.06	0.18	1	20	12	CONVENIENCE RECEPT CH-01	36
37	SPARE	--	20	1	0.00	0.00					1	20	--	SPARE	38
39	SPARE	--	20	1			0.00	0.00			1	20	--	SPARE	40
41	SPARE	--	20	1					0.00	0.00	1	20	--	SPARE	42
			TOTAL		9.7		10.4		9.5		KVA				
					80.9		87.0		79.0		AMPS				
			CONNECTED LOAD		29.6		KVA		82.1		AMPS				
NEC ARTICLE 220			DEMAND LOAD		23.4		KVA		65.0		AMPS				

Load Classification	Connected Load	Demand Factor	Estimated Demand	Panel Totals	
Equipment	7090 VA	100.00%	7090 VA		
RECEPT	22268 VA	72.45%	16134 VA	Total Conn. Load:	29563 VA
UFC-MOTOR-25%	25 VA	25.00%	6 VA	Total Est. Demand:	23410 VA
FP 100%	180 VA	100.00%	180 VA	Total Conn.:	82 A
				Total Est. Demand:	65 A

NAVFAC

COMMONWEALTH OF MASSACHUSETTS
SENOL DURUR
ELECTRICAL
No. 47946
REGISTERED PROFESSIONAL ENGINEER

IRQ WM Jordan COMPANY – A JOINT VENTURE –

Michael Baker INTERNATIONAL
100 AIRSIDE DRIVE
MOON TOWNSHIP, PA 15108
A/E INFO

APPROVED
FOR COMMANDER NAVFAC

ACTIVITY
MARINE CORPS BASE
CAMP LEJEUNE

SATISFACTORY TO DATE DD/MM/YY
DES ZAK DRW LAK CHK BSR
PM / DM TOWLER / ROOT
BRANCH HEAD SEK
DESIGN DIRECTOR R.L.Stephens, Jr.
FIRE PROTECTION DPS

NAVAL FACILITIES ENGINEERING SYSTEMS COMMAND
NORFOLK, VA
JACKSONVILLE, NC
LOGCOM CSP WAREHOUSE
ELECTRICAL - PANEL SCHEDULES
DEPARTMENT OF THE NAVY
NAVAL FACILITIES ENGINEERING SYSTEMS COMMAND ATLANTIC
ATLANTIC DESIGN AND CONSTRUCTION
MCB CAMP LEJEUNE

SCALE: AS NOTED
EPROJECT NO.: 1639600
CONSTR. CONTR. NO. N40085-20-C-0059
NAVFAC DRAWING NO. 14111414
SHEET 388 OF 447

E-608

DRAWFORM REVISION: 25 AUGUST 2020

P1527 FINAL SUBMISSION - 11/18/2021

APPR | DATE | DESCRIPTION | SYM

PLOTTED: 11/11/2021 9:19:09 AM
FILE NAME: BIM 360://AF PACKAGE 3/P1527 LOG COM CSP-1639600-E.rvt

GENERAL NOTES

1. SEE SHEET E-001 FOR ELECTRICAL NOTES, SYMBOLS, AND ABBREVIATIONS.
2. * - SEE E-602 FOR CONDUCTOR SIZES NOT INDICATED IN PANEL SCHEDULES.

PANEL RP7

FED FROM: DP3
LOCATION: ELECTRICAL 205
MOUNT: SURFACE

225 A MAIN LUG ONLY
3PH 4WIRE 208Y/120V
AIC
GROUND BAR

CKT	LOAD SERVED	WIRE	BRKR	PL	A		B		C		PL	BRKR	WIRE	LOAD SERVED	CKT
1	SYSTEMS FURNITURE RM 200	12	20	1	1.08	1.08					1	20	12	SYSTEMS FURNITURE RM 200	2
3	SYSTEMS FURNITURE RM 200	12	20	1			1.08	1.08			1	20	12	SYSTEMS FURNITURE RM 200	4
5	SYSTEMS FURNITURE RM 200	12	20	1					1.08	1.08	1	20	12	SYSTEMS FURNITURE RM 200	6
7	SYSTEMS FURNITURE RM 200	12	20	1	1.08	2.88					3	30	10	RECEPT SHIPPING/RECEIVING/WATER TESTING 209	8
9	SYSTEMS FURNITURE RM 200	12	20	1			1.08	2.88			--	--	--	--	10
11	RECEPT STORAGE WAREHOUSE PREPARATION 208	10	30	3					2.88	2.88	--	--	--	--	12
13	--	--	--	--	2.88	2.88					3	30	10	RECEPT STORAGE WAREHOUSE PREPARATION 208	14
15	--	--	--	--			2.88	2.88			--	--	--	--	16
17	RECEPT TEST & REPAIR 208A	10	30	3					2.88	2.88	--	--	--	--	18
19	--	--	--	--	2.88	2.88					3	30	10	RECEPT VISUAL INSPECTION & REPAIR 208B	20
21	--	--	--	--			2.88	2.88			--	--	--	--	22
23	RECEPT AV FLAT PANEL RM 209	12	20	1					0.13	2.88	--	--	--	--	24
25	PROVISIONED SPACE	--	--	--	0.00	0.00					--	--	--	PROVISIONED SPACE	26
27	PROVISIONED SPACE	--	--	--			0.00	0.00			--	--	--	PROVISIONED SPACE	28
29	PROVISIONED SPACE	--	--	--					0.00	0.00	--	--	--	PROVISIONED SPACE	30
31	SPARE	--	30	3	0.00	0.00					--	--	--	PROVISIONED SPACE	32
33	--	--	--	--			0.00	0.00			1	20	--	SPARE	34
35	--	--	--	--					0.00	0.00	1	20	--	SPARE	36
37	SPARE	--	30	3	0.00	0.00					1	20	--	SPARE	38
39	--	--	--	--			0.00	0.00			1	20	--	SPARE	40
41	--	--	--	--					0.00	0.00	1	20	--	SPARE	42
				TOTAL	17.7		17.7		16.7		KVA				
					148.3		148.3		139.2		AMPS				
			CONNECTED LOAD		52.0		KVA		144.3		AMPS				
NEC ARTICLE 220			DEMAND LOAD		31.0		KVA		86.0		AMPS				

Load Classification	Connected Load	Demand Factor	Estimated Demand	Panel Totals	
RECEPT	52000 VA	59.62%	31000 VA		
				Total Conn. Load:	52000 VA
				Total Est. Demand:	31000 VA
				Total Conn.:	144 A
				Total Est. Demand:	86 A

PANEL FP1

FED FROM: DP1
LOCATION: ELEC 123
MOUNT: SURFACE

40 A MAIN LUG ONLY
3PH 4WIRE 208Y/120V
10K AIC
GROUND BAR

CKT	LOAD SERVED	WIRE	BRKR	PL	A		B		C		PL	BRKR	WIRE	LOAD SERVED	CKT
1	SURGE PROTECTIVE DEVICE	--	30	3	0.00	0.60					1	20	12	NAC PANEL ELECTRICAL 116	2
3	--	--	--	--			0.00	1.20			1	20	12	AMPLIFIERS FIRE RISER 122	4
5	--	--	--	--					0.00	1.20	1	20	12	FACP FIRE RISER 122	6
7	NITROGEN GENERATOR CONTROL PANEL RM 122	12	20	1	0.52	0.60					1	20	12	TRANSMITTER FIRE RISER 122	8
9	COMPRESSOR RM 122	12	20	2			0.78	0.00			1	20	--	SPARE	10
11	--	--	--	--					0.78	0.00	1	20	--	SPARE	12
13	SPARE	--	20	1	0.00	0.00					2	20	--	SPARE	14
15	SPARE	--	20	1			0.00	0.00			--	--	--	--	16
17	PROVISIONED SPACE	--	--	--					0.00	0.00	--	--	--	PROVISIONED SPACE	18
19	PROVISIONED SPACE	--	--	--	0.00	0.00					--	--	--	PROVISIONED SPACE	20
21	PROVISIONED SPACE	--	--	--			0.00	0.00			--	--	--	PROVISIONED SPACE	22
23	PROVISIONED SPACE	--	--	--					0.00	0.00	--	--	--	PROVISIONED SPACE	24
25	PROVISIONED SPACE	--	--	--	0.00	0.00					--	--	--	PROVISIONED SPACE	26
27	PROVISIONED SPACE	--	--	--			0.00	0.00			--	--	--	PROVISIONED SPACE	28
29	PROVISIONED SPACE	--	--	--					0.00	0.00	--	--	--	PROVISIONED SPACE	30
				TOTAL	1.7		2.0		2.0		KVA				
					14.3		16.8		16.8		AMPS				
			CONNECTED LOAD		5.7		KVA		15.8		AMPS				
NEC ARTICLE 220			DEMAND LOAD		5.7		KVA		15.8		AMPS				

Load Classification	Connected Load	Demand Factor	Estimated Demand	Panel Totals	
FP 100%	5676 VA	100.00%	5676 VA		
				Total Conn. Load:	5676 VA
				Total Est. Demand:	5676 VA
				Total Conn.:	16 A
				Total Est. Demand:	16 A

PANEL SP1

FED FROM: T5
LOCATION: ELEC 123
MOUNT: SURFACE

60 A MAIN LUG ONLY
3PH 4WIRE 208Y/120V
10K AIC
GROUND BAR

CKT	LOAD SERVED	WIRE	BRKR	PL	A		B		C		PL	BRKR	WIRE	LOAD SERVED	CKT
1	SURGE PROTECTIVE DEVICE	--	30	3	0.00	1.20					1	20	12	ACCESS CONTROL PANEL TELE. 118	2
3	--	--	--	--			0.00	1.20			1	20	12	ACCESS CONTROL PANEL TELECOM 203	4
5	--	--	--	--					0.00	1.92	1	20	12	GENERATOR CHARGER	6
7	ACCESS CONTROL PANEL TELECOM 108	12	20	1	1.20	0.00					1	20	--	SPARE	8
9	GENERATOR JACKET WATER HEATER	12	20	2			1.13	0.00			1	20	--	SPARE	10
11	--	--	--	--					1.13	0.00	1	20	--	SPARE	12
13	SPARE	--	20	1	0.00	0.00					1	20	--	SPARE	14
15	PROVISIONED SPACE	--	--	--			0.00	0.00			--	--	--	PROVISIONED SPACE	16
17	PROVISIONED SPACE	--	--	--					0.00	0.00	--	--	--	PROVISIONED SPACE	18
19	PROVISIONED SPACE	--	--	--	0.00	0.00					--	--	--	PROVISIONED SPACE	20
21	PROVISIONED SPACE	--	--	--			0.00	0.00			--	--	--	PROVISIONED SPACE	22
23	PROVISIONED SPACE	--	--	--					0.00	0.00	--	--	--	PROVISIONED SPACE	24
25	PROVISIONED SPACE	--	--	--	0.00	0.00					--	--	--	PROVISIONED SPACE	26
27	PROVISIONED SPACE	--	--	--			0.00	0.00			--	--	--	PROVISIONED SPACE	28
29	PROVISIONED SPACE	--	--	--					0.00	0.00	--	--	--	PROVISIONED SPACE	30
				TOTAL	2.4		2.3		3.0		KVA				
					20.1		19.4		25.5		AMPS				
			CONNECTED LOAD		7.8		KVA		21.6		AMPS				
NEC ARTICLE 220			DEMAND LOAD		7.8		KVA		21.6		AMPS				

Load Classification	Connected Load	Demand Factor	Estimated Demand	Panel Totals	
Equipment	6571 VA	100.00%	6571 VA		
RECEPT	1200 VA	100.00%	1200 VA		
				Total Conn. Load:	7771 VA
				Total Est. Demand:	7771 VA
				Total Conn.:	22 A
				Total Est. Demand:	22 A

PANEL TR1

FED FROM: DP1
LOCATION: TELE. 118
MOUNT: SURFACE

100 A MAIN CIRCUIT BREAKER
3PH 4WIRE 208Y/120V
10K AIC
GROUND BAR

CKT	LOAD SERVED	WIRE	BRKR	PL	A		B		C		PL	BRKR	WIRE	LOAD SERVED	CKT
1	SURGE PROTECTIVE DEVICE	--	30	3	0.00	0.18					1	20	12	RECEPT AMPLIFIER TELE. 118	2
3	--	--	--	--			0.00	0.90			1	20	12	RECEPT RM 118	4
5	--	--	--	--					0.00	1.75	1	20	12	RECEPT TELECOM RACK RM 118	6
7	RECEPT RM 118	12	20	1	0.90	1.75					1	20	12	RECEPT TELECOM RACK RM 118	8
9	HPCU-02	10	25	2			1.58	1.75			2	30	10	TELECOM RACK RM 118	10
11	--	--	--	--					1.58	1.75	--	--	--	--	12
13	RECEPT TELECOM RACK RM 118	12	20	1	1.75	1.75					1	20	12	RECEPT TELECOM RACK RM 118	14
15	RECEPT TELECOM RACK RM 118	12	20	1			1.75	0.00			2	30	--	SPARE	16
17	RECEPT TELECOM RACK RM 118	12	20	1					1.75	0.00	--	--	--	--	18
19	SPARE	--	20	1	0.00	0.00					1	20	--	SPARE	20
21	PROVISIONED SPACE	--	--	--			0.00	0.00			1	20	--	SPARE	22
23	PROVISIONED SPACE	--	--	--					0.00	0.00	1	20	--	SPARE	24
25	PROVISIONED SPACE	--	--	--	0.00	0.00					--	--	--	PROVISIONED SPACE	26
27	PROVISIONED SPACE	--	--	--			0.00	0.00			--	--	--	PROVISIONED SPACE	28
29	PROVISIONED SPACE	--	--	--					0.00	0.00	--	--	--	PROVISIONED SPACE	30
				TOTAL	6.3		6.0		6.8		KVA				
					53.2		49.8		57.4		AMPS				
			CONNECTED LOAD		19.1		KVA		53.1		AMPS				
NEC ARTICLE 220			DEMAND LOAD		18.2		KVA		50.5		AMPS				

Load Classification	Connected Load	Demand Factor	Estimated Demand	Panel Totals	
Equipment	14000 VA	100.00%	14000 VA		
RECEPT	1980 VA	100.00%	1980 VA	Total Conn. Load:	19142 VA
UFC-HVAC-70%	3162 VA	70.00%	2213 VA	Total Est. Demand:	18193 VA
				Total Conn.:	53 A
				Total Est. Demand:	50 A

NO.	DESCRIPTION	DATE	APP'R

NAVFAC

SENOL DURUR ELECTRICAL No. 47946 REGISTERED PROFESSIONAL ENGINEER COMMONWEALTH OF MASSACHUSETTS

IRQ Wm. Jordan COMPANY – A JOINT VENTURE –

Michael Baker INTERNATIONAL
100 AIRSIDE DRIVE
MOON TOWNSHIP, PA 15108 A/E INFO

APPROVED

FOR COMMANDER NAVFAC

ACTIVITY
MARINE CORPS BASE
CAMP LEJEUNE

SATISFACTORY TO DATE DD/MM/YY

DES	ZAK	DRW	LAK	CHK	BSR

PM / DM	TOWLER / ROOT
BRANCH HEAD	SEK
DESIGN DIRECTOR	R.L.Stephens, Jr.
FIRE PROTECTION	DPS

DEPARTMENT OF THE NAVY
NAVAL FACILITIES ENGINEERING SYSTEMS COMMAND
ATLANTIC DESIGN AND CONSTRUCTION
MCB CAMP LEJEUNE

NAVAL FACILITIES ENGINEERING SYSTEMS COMMAND ATLANTIC
NORFOLK, VA
JACKSONVILLE, NC

LOGCOM CSP WAREHOUSE

ELECTRICAL - PANEL SCHEDULES

SCALE: AS NOTED
EPROJECT NO.: 1639600
CONSTR. CONTR. NO. N40085-20-C-0059
NAVFAC DRAWING NO. 14111415
SHEET 389 OF 447

E-609

DRAWFORM REVISION: 25 AUGUST 2020

P1527 FINAL SUBMISSION - 11/18/2021

PLOTTED: 11/11/2021 9:19:11 AM

FILE NAME: BIM 360/JHF PACKAGE 3/P1527 LOG COM CSP-1639600-E.rvt

GENERAL NOTES

1 SEE SHEET E-001 FOR ELECTRICAL NOTES, SYMBOLS, AND ABBREVIATIONS.

2 * - SEE E-602 FOR CONDUCTOR SIZES NOT INDICATED IN PANEL SCHEDULES.

PANEL TR2

FED FROM: DP1
LOCATION: TELECOM 108
MOUNT: SURFACE

100 A MAIN CIRCUIT BREAKER
3PH 4WIRE 208Y/120V
10K AIC
GROUND BAR

CKT	LOAD SERVED	WIRE	BRKR	PL	A		B		C		PL	BRKR	WIRE	LOAD SERVED	CKT
1	SURGE PROTECTIVE DEVICE	--	30	3	0.00	0.54					1	20	12	RECEPT RM 108	2
3	--	--	--	--			0.00	1.75			1	20	12	RECEPT TELECOM RACK RM 108	4
5	--	--	--	--					0.00	1.75	1	20	12	RECEPT TELECOM RACK RM 108	6
7	RECEPT RM 108	12	20	1	0.72	1.75					1	20	12	RECEPT TELECOM RACK RM 108	8
9	RECEPT TELECOM RACK RM 108	12	20	1			1.75	1.75			2	30	10	TELECOM RACK RM 108	10
11	HPCU-01	10	25	2					0.92	1.75	--	--	--	--	12
13	--	--	--	--	0.92	0.00					1	20	--	SPARE	14
15	SPARE	--	30	2			0.00	0.00			1	20	--	SPARE	16
17	--	--	--	--					0.00	0.00	1	20	--	SPARE	18
19	PROVISIONED SPACE	--	--	--	0.00	0.00					1	20	--	SPARE	20
21	PROVISIONED SPACE	--	--	--			0.00	0.00			--	--	--	PROVISIONED SPACE	22
23	PROVISIONED SPACE	--	--	--					0.00	0.00	--	--	--	PROVISIONED SPACE	24
25	PROVISIONED SPACE	--	--	--	0.00	0.00					--	--	--	PROVISIONED SPACE	26
27	PROVISIONED SPACE	--	--	--			0.00	0.00			--	--	--	PROVISIONED SPACE	28
29	PROVISIONED SPACE	--	--	--					0.00	0.00	--	--	--	PROVISIONED SPACE	30
				TOTAL	3.9		5.3		4.4		KVA				
					32.7		44.4		37.4		AMPS				
				CONNECTED LOAD	13.6		KVA		37.7		AMPS				
NEC ARTICLE 220				DEMAND LOAD	13.0		KVA		36.2		AMPS				

Load Classification	Connected Load	Demand Factor	Estimated Demand	Panel Totals	
Equipment	10500 VA	100.00%	10500 VA		
RECEPT	1260 VA	100.00%	1260 VA	Total Conn. Load:	13590 VA
UFC-HVAC-70%	1830 VA	70.00%	1281 VA	Total Est. Demand:	13041 VA
				Total Conn.:	38 A
				Total Est. Demand:	36 A

PANEL TR3

FED FROM: DP1
LOCATION: TELECOM 203
MOUNT: SURFACE

100 A MAIN CIRCUIT BREAKER
3PH 4WIRE 208Y/120V
10K AIC
GROUND BAR

CKT	LOAD SERVED	WIRE	BRKR	PL	A		B		C		PL	BRKR	WIRE	LOAD SERVED	CKT
1	SURGE PROTECTIVE DEVICE	--	30	3	0.00	1.08					1	20	12	RECEPT RM 203	2
3	--	--	--	--			0.00	1.75			1	20	12	RECEPT TELECOM RACK RM 203	4
5	--	--	--	--					0.00	1.75	1	20	12	RECEPT TELECOM RACK RM 203	6
7	RECEPT TELECOM RACK RM 203	12	20	1	1.75	1.75					1	20	12	RECEPT TELECOM RACK RM 203	8
9	RECEPT TELECOM RACK RM 203	12	20	1			1.75	1.75			2	30	10	TELECOM RACK RM 203	10
11	RECEPT TELECOM RACK RM 203	12	20	1					1.75	1.75	--	--	--	--	12
13	SSCU-01	10	25	2	0.92	0.00					2	30	--	SPARE	14
15	--	--	--	--			0.92	0.00			--	--	--	--	16
17	SPARE	--	20	1					0.00	0.00	--	--	--	PROVISIONED SPACE	18
19	SPARE	--	20	1	0.00	0.00					--	--	--	PROVISIONED SPACE	20
21	SPARE	--	20	1			0.00	0.00			--	--	--	PROVISIONED SPACE	22
23	SPARE	--	20	1					0.00	0.00	--	--	--	PROVISIONED SPACE	24
25	PROVISIONED SPACE	--	--	--	0.00	0.00					--	--	--	PROVISIONED SPACE	26
27	PROVISIONED SPACE	--	--	--			0.00	0.00			--	--	--	PROVISIONED SPACE	28
29	PROVISIONED SPACE	--	--	--					0.00	0.00	--	--	--	PROVISIONED SPACE	30
				TOTAL	5.5		6.2		5.3		KVA				
					46.1		51.7		43.8		AMPS				
				CONNECTED LOAD	16.9		KVA		46.9		AMPS				
NEC ARTICLE 220				DEMAND LOAD	16.4		KVA		45.4		AMPS				

Load Classification	Connected Load	Demand Factor	Estimated Demand	Panel Totals	
Equipment	14000 VA	100.00%	14000 VA		
RECEPT	1080 VA	100.00%	1080 VA	Total Conn. Load:	16910 VA
UFC-HVAC-70%	1830 VA	70.00%	1281 VA	Total Est. Demand:	16361 VA
				Total Conn.:	47 A
				Total Est. Demand:	45 A

PANEL PP1

FED FROM: DP5
LOCATION: ELECTRICAL 116
MOUNT: SURFACE

150 A MAIN CIRCUIT BREAKER
3PH 4WIRE 480Y/277V
14K AIC
GROUND BAR

CKT	LOAD SERVED	WIRE	BRKR	PL	A		B		C		PL	BRKR	WIRE	LOAD SERVED	CKT
1	RECEPT FORKLIFT BATTERY CHARGER	10	30	3	4.16	4.16					3	30	10	RECEPT FORKLIFT BATTERY CHARGER	2
3	--	--	--	--			4.16	4.16			--	--	--	--	4
5	--	--	--	--					4.16	4.16	--	--	--	--	6
7	RECEPT FORKLIFT BATTERY CHARGER	10	30	3	4.16	4.16					3	30	10	RECEPT FORKLIFT BATTERY CHARGER	8
9	--	--	--	--			4.16	4.16			--	--	--	--	10
11	--	--	--	--					4.16	4.16	--	--	--	--	12
13	RECEPT FORKLIFT BATTERY CHARGER	10	30	3	4.16	4.16					3	30	10	RECEPT FORKLIFT BATTERY CHARGER	14
15	--	--	--	--			4.16	4.16			--	--	--	--	16
17	--	--	--	--					4.16	4.16	--	--	--	--	18
19	SPARE	--	30	3	0.00	0.00					3	30	--	SPARE	20
21	--	--	--	--			0.00	0.00			--	--	--	--	22
23	--	--	--	--					0.00	0.00	--	--	--	--	24
25	PROVISIONED SPACE	--	--	--	0.00	0.00					--	--	--	PROVISIONED SPACE	26
27	PROVISIONED SPACE	--	--	--			0.00	0.00			--	--	--	PROVISIONED SPACE	28
29	PROVISIONED SPACE	--	--	--					0.00	0.00	--	--	--	PROVISIONED SPACE	30
				TOTAL	24.9		24.9		24.9		KVA				
					90.0		90.0		90.0		AMPS				
				CONNECTED LOAD	74.8		KVA		90.0		AMPS				
NEC ARTICLE 220				DEMAND LOAD	74.8		KVA		90.0		AMPS				

Load Classification	Connected Load	Demand Factor	Estimated Demand	Panel Totals	
Equipment	74825 VA	100.00%	74825 VA		
				Total Conn. Load:	74825 VA
				Total Est. Demand:	74825 VA
				Total Conn.:	90 A
				Total Est. Demand:	90 A

APPR | DATE | DESCRIPTION | SYM

NAVFAC

COMMONWEALTH OF MASSACHUSETTS
SENOL DURUR
No. 47946
REGISTERED PROFESSIONAL ENGINEER
ELECTRICAL

IRQ Jordan COMPANY – A JOINT VENTURE –

Michael Baker INTERNATIONAL
100 AIRSIDE DRIVE
MOON TOWNSHIP, PA 15108
A/E INFO

APPROVED

FOR COMMANDER NAVFAC

ACTIVITY
MARINE CORPS BASE
CAMP LEJEUNE

SATISFACTORY TO DATE DD/MM/YY

DES	ZAK	DRW	LAK	CHK	BSR
PM / DM	TOWLER / ROOT				
BRANCH HEAD	SEK				
DESIGN DIRECTOR	R.L.Stephens, Jr.				
FIRE PROTECTION	DPS				

DEPARTMENT OF THE NAVY
NAVAL FACILITIES ENGINEERING SYSTEMS COMMAND
ATLANTIC DESIGN AND CONSTRUCTION
MCB CAMP LEJEUNE

NAVAL FACILITIES ENGINEERING SYSTEMS COMMAND ATLANTIC
NORFOLK, VA
JACKSONVILLE, NC

LOGCOM CSP WAREHOUSE

ELECTRICAL - PANEL SCHEDULES

SCALE: AS NOTED
EPROJECT NO.: 1639600
CONSTR. CONTR. NO. N40085-20-C-0059
NAVFAC DRAWING NO. 14111416
SHEET 390 OF 447

E-610

DRAWFORM REVISION: 25 AUGUST 2020

P1527 FINAL SUBMISSION - 11/18/2021

PLOTTED: 11/11/2021 9:19:13 AM

FILE NAME: BIM 360://HF PACKAGE 3/P1527 LOG COM CSP-1639600-E.rvt

SYMBOL — TELECOMMUNICATIONS DESCRIPTION

APPLICABLE TO ALL OUTLETS LISTED BELOW:

TERMINATIONS MUST BE PERFORMED USING PIN/PAIR ASSIGNMENTS IN ACCORDANCE WITH THE T568A PIN-OUT SEQUENCE USING 8-PIN 8 CONDUCTOR (8P8C) RJ45 TYPE CONNECTORS RATED FOR THE CATEGORY OF THE INSTALLED CABLE; COLOR MUST MATCH THE U/UTP OUTER JACKET.

TELECOMMUNICATIONS OUTLETS, 8P8C RJ45 TYPE CONNECTOR
- U/UTP CABLES FOR DATA MUST HAVE A GREEN OUTER JACKET
- U/UTP CABLES FOR VOICE MUST HAVE A GREEN OUTER JACKET

X — 1 STANDARD ICT OUTLET WITH FOUR (4) CATEGORY-6A U/UTP CABLE. MOUNTED AT 15" AFF.
X = DENOTES (MUTOA) MULTI-USER TELECOMMUNICATIONS OUTLET ASSEMBLY WHERE (X) DEPICTS THE NUMBER OF DATA OUTLETS

DDC — DIRECT DIGITAL CONTROL (DDC) SYSTEM IT OUTLET WITH TWO (2) CATEGORY 6A U/UTP CABLE. MOUNTED AT 15" AFF

W WP — VOICE-ONLY OUTLET - ONE OUTLET CONNECTOR IN A SINGLE GANG OUTLET FACEPLATE WITH MOUNTING LUGS - MOUNTED AT 48" AFF; WP DESIGNATES "WEATHERPROOF" FOR OUTSIDE BUILDING ENTRANCES

F — FIRE ALARM SYSTEM IT OUTLET WITH TWO (2) CATEGORY 6A U/UTP CABLE, MOUNTED WITH FACP

WAP — WIRELESS ACCESS POINT OUTLET (2 CATEGORY-6A U/UTP OUTLETS), LOCATED 12" ABOVE DROPPED CEILING

CATV SYMBOLS:

TV — CATV OUTLET WITH ONE RG-6 COAXIAL CABLE WITH ONE F-TYPE CONNECTOR, AND TWO (2) CATEGORY-6A U/UTP CABLES MOUNTED AT 72" AFF

CATV BROADBAND INDOOR DISTRIBUTION AMPLIFIER

2-WAY SPLITTER

4-OUTPUT TAP; '#' SPECIFIES DB LOSS

8-OUTPUT TAP; '#' SPECIFIES DB LOSS

TERMINATION

CONTINUANCE

OTHER SYMBOLS:

PA — CEILING MOUNTED PA SYSTEM SPEAKER

GROUNDING BUSBAR, PBB OR SBB AS INDICATED ON PLANS

CABLE TRAY, SIZE AS INDICATED ON PLANS. WELDED WIRE TYPE FOR DISTRIBUTION OF CABLING OUTSIDE OF TELECOMMUNICATION ROOMS AND LADDER RACK TYPE WITHIN TELECOMMUNICATION ROOMS

19" TELECOMMUNICATIONS EQUIPMENT RACK

VERTICAL UPWARD CONDUIT FROM UNDERGROUND OSP

HORIZONTAL CONDUIT RUN FROM TELECOMMUNICATION ROOMS TO RESPECTIVE AREAS AS INDICATED ON PLANS

POWER/DATA PEDESTAL

HH — HANDHOLE

MH — MANHOLE

P — SERVICE PANEL

Cu — UNDERGROUND COMMUNICATIONS DUCTBANK

SYMBOL — TELECOMMUNICATIONS DESCRIPTION

SECURITY SYMBOLS:

IDS — INTRUSION DETECTION SYSTEM CONTROL PANEL

WALL-MOUNTED PASSIVE INFRARED SENSOR (PIR)

CEILING-MOUNTED PASSIVE INFRARED SENSOR (PIR)

HORIZONTAL CONDUIT RUN FROM TELECOMMUNICATION ROOMS TO RESPECTIVE AREAS AS INDICATED ON PLANS

CR — ACCESS CONTROL SYSTEM / INTRUSION DETECTION SYSTEM CARD READER

ES — ELECTRIC STRIKE

HSS — HIGH SECURITY BALANCED MAGNETIC SWITCH

KP — KEYPAD FOR ACCESS CONTROL SYSTEM / INTRUSION DETECTION SYSTEM

REX — REQUEST-TO-EXIT SENSOR

1DC — SINGLE DOOR TCP/IP ACS/IDS CONTROLLER MOUNTED ABOVE ACCESSIBLE CEILING ON SECURE SIDE OF DOOR WITH TWO CATEGORY-6A U/UTP CABLE TO MAIN ACS/IDS CONTROLLER PANEL

2DC — 2-DOOR TCP/IP ACS/IDS CONTROLLER MOUNTED ABOVE ACCESSIBLE CEILING ON SECURE SIDE OF DOOR WITH TWO CATEGORY-6A U/UTP CABLE TO MAIN ACS/IDS CONTROLLER PANEL

4DC — 4-DOOR TCP/IP ACS/IDS CONTROLLER MOUNTED ABOVE ACCESSIBLE CEILING ON SECURE SIDE OF DOOR WITH TWO CATEGORY-6A U/UTP CABLE TO MAIN ACS/IDS CONTROLLER PANEL

TELECOMMUNICATIONS STANDARDS

TELECOMMUNICATIONS INSTALLATION MUST COMPLY WITH THE MOST CURRENT VERSION OF THE FOLLOWING STANDARDS:

AMERICANS WITH DISABILITIES ACT AND ARCHITECTURAL BARRIERS ACT ACCESSIBILITY GUIDELINES (UFAS/ADAAG), 2011

ANSI/TIA-568.0-D - GENERIC TELECOMMUNICATIONS CABLING FOR CUSTOMER PREMISES

ANSI/TIA-568.1-D - COMMERCIAL BUILDING TELECOMMUNICATIONS CABLING STANDARD

ANSI/TIA-568-C.2 - BALANCED TWISTED-PAIR TELECOMMUNICATIONS CABLING AND COMPONENTS STANDARD

ANSI/TIA-568.3-D - OPTICAL FIBER CABLING COMPONENTS STANDARD

ANSI/TIA-568.4-D - BROADBAND COAXIAL CABLING AND COMPONENTS STANDARD

ANSI/TIA-569-D - TELECOMMUNICATIONS PATHWAYS AND SPACES

ANSI/TIA-598-D - OPTICAL FIBER CABLE COLOR CODING.

ANSI/TIA-606-B - ADMINISTRATION STANDARD FOR COMMERCIAL TELECOMMUNICATIONS INFRASTRUCTURE

ANSI/TIA-607-C - COMMERCIAL BUILDING GROUNDING (EARTHING) AND BONDING REQUIREMENTS FOR TELECOMMUNICATIONS

ANSI/TIA-758-B - CUSTOMER-OWNED OUTSIDE PLANT TELECOMMUNICATIONS INFRASTRUCTURE STANDARD

ANSI/TIA-1152, 1152-A - REQUIREMENTS FOR FIELD TEST INSTRUMENTS AND MEASUREMENTS FOR BALANCED TWISTED-PAIR CABLING

TIA-526-7 - MEASUREMENT OF OPTICAL POWER LOSS OF INSTALLED SINGLE-MODE FIBER CABLE PLANT

TIA-526-14-C - OPTICAL POWER LOSS MEASUREMENTS OF INSTALLED MULTIMODE FIBER CABLE PLANT

NFPA 70 - NATIONAL ELECTRICAL CODE (NEC)

NFPA 75 - STANDARD FOR THE PROTECTION OF INFORMATION TECHNOLOGY EQUIPMENT

NFPA 76 - STANDARD FOR THE FIRE PROTECTION OF TELECOMMUNICATIONS FACILITIES

NFPA 780 - STANDARD FOR THE INSTALLATION OF LIGHTNING PROTECTION SYSTEMS

TELECOMMUNICATIONS STANDARDS CONT

UFC-3-580-01 CA - TELECOMMUNICATIONS INTERIOR INFRASTRUCTURE PLANNING AND DESIGN

UFC 4-171-05 - DESIGN GUIDE FOR ARMY RESERVE FACILITIES

USAR IT MANUAL – INFORMATION TECHNOLOGY DESIGN AND CONSTRUCTION GUIDE

NSTISSI NO. 7003 - PROTECTIVE DISTRIBUTION SYSTEMS (PDS)

NSTISSAM TEMPEST/2-95, NATIONAL SECURITY TELECOMMUNICATIONS AND INFORMATION SYSTEMS SECURITY RED/BLACK INSTALLATION GUIDANCE

UFC 4-010-05 - SENSITIVE COMPARTMENTED INFORMATION FACILITIES PLANNING, DESIGN AND CONSTRUCTION

UFC 4-020-04A - ELECTRONIC SECURITY SYSTEMS : SECURITY ENGINEERING

UFC 4-021-02 - ELECTRONIC SECURITY SYSTEMS

MIL-HDBK-232A - RED/BLACK ENGINEERING-INSTALLATION GUIDELINES

MIL-HDBK-419A – GROUNDING, BONDING, AND SHIELDING FOR ELECTRONIC EQUIPMENT AND FACILITIES

MIL-HDBK-1012/3 - TELECOMMUNICATIONS PREMISES DISTRIBUTION PLANNING, DESIGN, AND ESTIMATING

TM 5-853-4 - SECURITY ENGINEERING ELECTRONIC SECURITY SYSTEMS

IC-TECH SPEC ICD/ICS 705 - TECHNICAL SPECIFICATIONS FOR CONSTRUCTION AND MANAGEMENT OF SENSITIVE COMPARTMENTED INFORMATION FACILITIES

ICS-705-1 - PHYSICAL AND TECHNICAL SECURITY STANDARDS FOR SENSITIVE COMPARTMENTED INFORMATION FACILITIES

ICS-705-2 - STANDARDS FOR THE ACCREDIT A TION AND RECIPROCAL USE OF SENSITIVE COMPARTMENTED INFORMATION

IEC/TR 61602 ED. 1.0 B, 1996 - CONNECTORS USED IN THE FIELD OF AUDIO, VIDEO AND AUDIOVISUAL ENGINEERING

IEC 61883-1 ED. 3.0 EN, 2008 - CONSUMER AUDIO/VIDEO EQUIPMENT - DIGITAL INTERFACE - PART 1: GENERAL

IEC 61883-6 ED. 2.0 EN, 2005 - CONSUMER AUDIO/VIDEO EQUIPMENT - DIGITAL INTERFACE - PART 6: AUDIO AND MUSIC DATA TRANSMISSION PROTOCOL

IEC 61938 ED. 1.0 B, 1996 - AUDIO, VIDEO AND AUDIOVISUAL SYSTEMS - INTERCONNECTIONS AND MATCHING VALUES – PREFERRED MATCHING VALUES OF ANALOGUE SIGNALS

IEC 62075 ED. 1.0 B, 2008 - AUDIO/VIDEO, INFORMATION AND COMMUNICATION TECHNOLOGY EQUIPMENT – ENVIRONMENTALLY CONSCIOUS DESIGN

IEC 62087-BD ED. 2.0 EN, 2008 - METHODS OF MEASUREMENT FOR THE POWER CONSUMPTION OF AUDIO, VIDEO AND RELATED EQUIPMENT

NFPA 262 - STANDARD METHOD OF TEST FOR FLAME TRAVEL AND SMOKE OF WIRES AND CABLES FOR USE IN AIR-HANDLING SPACES

AR 380-5 - DEPARTMENT OF THE ARMY INFORMATION SECURITY PROGRAM

AR 380-27 - (FOUO) CONTROL OF COMPROMISING EMANATIONS

AR 380-40 - SAFEGUARDING AND CONTROLLING COMMUNICATIONS SECURITY MATERIAL

CNSSAM TEMPEST/1-13 - (U) RED/BLACK INSTALLATION GUIDANCE

SECRET INTERNET PROTOCOL ROUTER NETWORK (SIPRNET) TECHNICAL IMPLEMENTATION CRITERIA

USASOC REG 380-40 - COMMUNICATIONS SECURITY (COMMSEC) PROTECTED DISTRIBUTION SYSTEM (PDS)

USGS 27 05 29.00 10 - PROTECTED DISTRIBUTION SYSTEM (PDS) FOR SIPRNET COMMUNICATIONS SYSTEMS

BICSI - BUILDING INDUSTRIES CONSULTING SERVICES INTERNATIONAL (TDMM), 13TH ED., 2014, TELECOMMUNICATIONS DISTRIBUTION METHODS MANUAL 13TH EDITION.

LOCAL 27 10 00 - BUILDING TELECOMMUNICATIONS CABLING SYSTEM

LOCAL 33 82 00 - TELECOMMUNICATIONS OUTSIDE PLANT (OSP)

TELECOMMUNICATIONS GENERAL NOTES

1. THIS IS A STANDARD LEGEND SHEET. NOT ALL SYMBOLS OR ABBREVIATIONS MAY APPEAR ON DRAWINGS.
2. REFER TO DIVISIONS 26, 27, 28 AND 33 SPECIFICATIONS FOR TELECOMMUNICATION SYSTEM ITEMS.
3. MOUNTING DEVICES AND EQUIPMENT PER SPECIFICATIONS UNLESS OTHERWISE NOTED.
4. MOUNTING HEIGHTS, UNLESS OTHERWISE NOTED, ARE TO CENTER LINE OF DEVICE.
5. COORDINATE THE EXACT ROUTING OF RACEWAYS WITH OTHER TRADES.
6. COORDINATE RACEWAY PENETRATIONS AND PROVIDE FIREPROOFING AS APPLICABLE.
7. THE MAXIMUM PERMANENT HORIZONTAL LINK DISTANCE MUST NOT EXCEED 295' AND THE MAXIMUM HORIZONTAL CHANNEL (LINK PLUS WORKSTATION CABLES AND PATCH CORDS) WILL BE 328'.
8. ALL HORIZONTAL VOICE AND DATA CABLING MUST BE CATEGORY-6A INSTALLED IN A MINIMUM 1-1/4" CONDUIT UNLESS NOTED OTHERWISE FROM TELECOMM OUTLET LOCATIONS TO THE CABLE TRAY.
9. ALL HORIZONTAL AND BACKBONE CABLING MUST BE PLENUM RATED WITH THE EXCEPTION OF CABLING INSTALLED IN UNDERGROUND CONDUITS. SEE NOTE 21 FOR CABLES INSTALLED IN UNDERGROUND CONDUITS.
10. CATEGORY-6A CABLING MUST BE TERMINATED ON 8-PIN, 8-CONDUCTOR (RJ-45) CONNECTORS USING PIN/PAIR ASSIGNMENTS IN ACCORDANCE WITH T568A PIN-OUT SEQUENCE.
11. CATEGORY-6A JACKS MUST BE THE SAME COLOR AS CORRESPONDING HORIZONTAL VOICE AND DATA CABLING. CATEGORY-6A JACKS MUST BE THE SAME MANUFACTURER AS THE PATCH PANELS.
12. PROVIDE CATEGORY-6A, 8-PIN, 8-CONDUCTOR MODULAR TO 8-PIN, 8-CONDUCTOR MODULAR, PATCH CABLES IN QUANTITIES AND LENGTHS SUCH THAT ALL WORKSTATION CABLES ARE CONNECTED.
13. OPTICAL FIBER CABLES WILL BE TERMINATED WITH DUPLEX SC-TYPE CONNECTORS.
14. THE USE OF J-HOOKS IS NOT PERMITTED. TELECOMMUNICATIONS PATHWAYS WILL BE IN 1-1/4" HOMERUN CONDUIT OR A 1-1/4" CONDUIT THAT STUB-UPS TO THE BASKET TRAY. SIZE BASKET TRAY TO 25% INITIAL FILL PER ANSI/TIA-569-D. CONDUIT STUB-UPS WILL BE BONDED TO CABLE TRAY WITH #6 AWG STRANDED CABLE, BUT WILL BE A CONTINUOUS #2 STRANDED BARE COPPER CABLE FOR THE LENGTH OF THE ENTIRE CABLE TRAY.
15. ALL TELECOMMUNICATIONS RACKS AND SUPPORTING STRUCTURES (CABLE TRAYS, LADDER RACKS, CONDUITS, AND BASKETS) WITHIN A TR MUST BE BONDED TO THE TR SIGNAL GROUND RING OR BUS BAR (PBB OR SBB) AS DEFINED IN ANSI/TIA-569-D AND IN ANSI/TIA-607-C.
16. CABLE TRAY WILL BE WALL MOUNTED (PREFERABLE) OR TRAPEZE MOUNTED. CENTER HUNG CABLE TRAY IS NOT ALLOWED. CABLE TRAY MUST NOT BE USED TO SUPPORT OTHER ITEMS, CONDUIT, CABLE TRAY, PIPING OF UTILITIES. CABLE TRAY SUPPORTS MUST BE PER NEMA STANDARDS PUBLICATION VE 2 - METAL CABLE TRAY INSTALLATION GUIDELINES.
17. PROVIDE ACCESS PANELS IN NON LAY-IN CEILINGS SUCH THAT NO POINT IN THE CABLE TRAY SYSTEM IS MORE THAN 20' FROM AN ACCESS POINT.
18. PROVIDE A MINIMUM OF 12" OF CLEARANCE ABOVE THE TOP, AND MINIMUM OF 12" OF CLEARANCE ON ONE SIDE OF CABLE TRAYS, AS WELL AS A MINIMUM OF 3" CLEARANCE BELOW CABLE TRAYS.
19. COMPLY WITH ANSI/TIA-569-D TELECOMMUNICATION PATHWAYS AND SPACES.
20. USE ONLY COPPER CONDUCTORS FOR GROUND CONNECTIONS. THE USE OF ALUMINUM CONDUCTORS IS NOT ALLOWED.
21. PROVIDE CABLE INSTALLED IN UNDERGROUND CONDUITS LISTED FOR USE IN WET LOCATIONS. PLENUM RATED CABLE MUST NOT BE INSTALLED IN ANY UNDERGROUND CONDUIT.
22. LABEL ALL CABLE TERMINATIONS AND BOTH ENDS OF ALL CABLES IN ACCORDANCE WITH MCBCL 27 10 00.
23. PROVIDE AS-BUILT DOCUMENTATION INCLUDING COMPLETE TEST RESULT REPORTS, FLOOR PLANS SHOWING USER WORKSTATIONS WITH CABLING LABELING, AND BACKBONE CABLE SCHEMATIC AND LABELING IN AN ELECTRONIC FORMAT (PDF) OR OTHER APPROVED FORMAT AND A PRINTED HARDCOPY. TEST RESULTS MUST BE SUPPLIED ELECTRONICALLY THROUGH NAVFAC CM AND FORWARDED TO BASE TELECOM TSD FOR FINAL APPROVAL AND CERTIFICATION/ACCEPTANCE IN ACCORDANCE WITH 01 33 00.
24. ANY MOTOR, TRANSFORMER, OR OTHER ELECTRICAL DEVICE GREATER THAN 5 KVA MUST HAVE A MINIMUM OF A 4' BUFFER FROM ANY WALL OF THE EF, TER, OR TR(S).

TELECOMMUNICATIONS ABBREVIATIONS

110	110 PUNCHDOWN BLOCKS
8P8C	8-PIN, 8-CONDUCTOR
ACS	ACCESS CONTROL SYSTEM
AFF	ABOVE FINISHED FLOOR
AHJ	AUTHORITY HAVING JURISDICTION
ANSI	AMERICAN NATIONAL STANDARDS INSTITUTE
AWG	AMERICAN WIRE GAUGE
BBC	BACKBONE BONDING CONDUCTOR
BCT	BONDING CONDUCTOR FOR TELECOMMUNICATIONS
C	CONDUIT(S)
CAA	CONTROLLED ACCESS AREA
CAT 6	CABLING ETL VERIFIED TO ANSI/TIA-568-C.2 CATEGORY 6
CATV	CABLE TELEVISION
CCH	CLOSET CONNECTOR HOUSING
CCTV	CLOSED-CIRCUIT TELEVISION
CFCI	CONTRACTOR FURNISHED CONTRACTOR INSTALLED
CP	CONSOLIDATION POINT
DB	DIRECT BURIED
DDC	DIRECT DIGITAL CONTROL
DIA	DIAMETER
DWG	DRAWING
ER	EXISTING RELOCATED
EMT	ELECTRICAL METALLIC TUBING
ETR	EXISTING TO REMAIN
EXIST	EXISTING
FB	FLOOR BOX
FT	FEET
GFGI	GOVERNMENT FURNISHED GOVERNMENT INSTALLED
GND	GROUND
GRC	GALVANIZED RIGID CONDUIT
GRS	GALVANIZED RIGID STEEL
IAW	IN ACCORDANCE WITH
IDS	INTRUSION DETECTION SYSTEM
IN	INCHES
LCA	LIMITED CONTROL ACCESS
MC	MECHANICAL CONTRACTOR
MIN	MINIMUM
MTD	MOUNTED
NEC	NATIONAL ELECTRICAL CODE
NEMA	NATIONAL ELECTRICAL MANUFACTURERS ASSOCIATION
NESC	NATIONAL ELECTRICAL SAFETY CODE
NFPA	NATIONAL FIRE PROTECTION ASSOCIATION
NIC	NOT IN CONTRACT
NTS	NOT TO SCALE
OEM	ORIGINAL EQUIPMENT MANUFACTURER
OFCI	OWNER FURNISHED CONTRACTOR INSTALLED
OFOI	OWNER FURNISHED OWNER INSTALLED
OSHA	OCCUPATIONAL SAFETY AND HEALTH ADMINISTRATION
PA	PUBLIC ADDRESS
PBB	PRIMARY BONDING BUSBAR
PE	POLYETHYLENE
PET	PROTECTED ENTRANCE TERMINALS
PDU	POWER DISTRIBUTION UNIT
POTS	PLAIN OLD TELEPHONE SERVICE (SWITCHED TELEPHONE LINE)
PSI	POUNDS PER SQUARE INCH
PTZ	PAN / TILT / ZOOM
QTY	QUANTITY
RBB	RACK BONDING BUSBAR
RBC	RACK BONDING CONDUCTOR
RMC	RIGID METAL CONDUIT
RR	REMOVE AND RELOCATE
RU	RACK UNIT
SBB	SECONDARY BONDING BUSBAR
SCH	SCHEDULE
STP	SHIELDED TWISTED PAIR
TBB	TELECOMMUNICATIONS BONDING BACKBONE
TBC	TELECOMMUNICATIONS BONDING CONDUCTOR
TE	TELECOMMUNICATIONS ENCLOSURE
TEBC	TELECOMMUNICATIONS EQUIPMENT BONDING CONDUCTOR
TEF	TELECOMMUNICATIONS ENTRANCE FACILITY
TYP	TYPICAL
U/G	UNDERGROUND
UON	UNLESS OTHERWISE NOTED
U/UTP	UNSCREENED/UNSHIELDED TWISTED PAIR CABLE
VoIP	VOICE OVER INTERNET PROTOCOL
WP	WEATHERPROOF
XP	EXPLOSION PROOF

	APVR	DATE	DESCRIPTION	SYM

NAVFAC

REGISTERED COMMUNICATIONS DISTRIBUTION DESIGNER — BICSI — JOSHUA L CASEY — BICSI ID# 286760 — EXPIRES 12-31-23 — RCDD — SEAL

W.M. Jordan Company — A JOINT VENTURE

Michael Baker INTERNATIONAL
100 AIRSIDE DRIVE, MOON TOWNSHIP, PA 15108 — A/E INFO

APPROVED

FOR COMMANDER NAVFAC

ACTIVITY: MARINE CORPS BASE CAMP LEJEUNE

SATISFACTORY TO DATE: DD/MM/YY

DES	DRW	CHK
JLC	ETH	JMG

PM / DM: TOWLER / ROOT

BRANCH HEAD: SEK

DESIGN DIRECTOR: R.L.Stephens, Jr.

FIRE PROTECTION: DPS

DEPARTMENT OF THE NAVY
NAVAL FACILITIES ENGINEERING SYSTEMS COMMAND
ATLANTIC DESIGN AND CONSTRUCTION
MCB CAMP LEJEUNE
NAVAL FACILITIES ENGINEERING SYSTEMS COMMAND ATLANTIC
NORFOLK, VA
JACKSONVILLE, NC
LOGCOM CSP WAREHOUSE

TELECOMMUNICATIONS SYMBOLS, SCHEDULES, & NOTES

SCALE: AS NOTED
EPROJECT NO.: 1639600
CONSTR. CONTR. NO.: N40085-20-C-0059
NAVFAC DRAWING NO.: 14111420
SHEET 391 OF 447

T-001

DRAWFORM REVISION: 25 AUGUST 2020

P1527 FINAL SUBMISSION - 11/18/2021

PLOTTED: 11/1/2021 12:38:18 PM

FILE NAME: BIM 360://AIF PACKAGE 3/P1527 LOG COM CSP-1639600-E.rvt

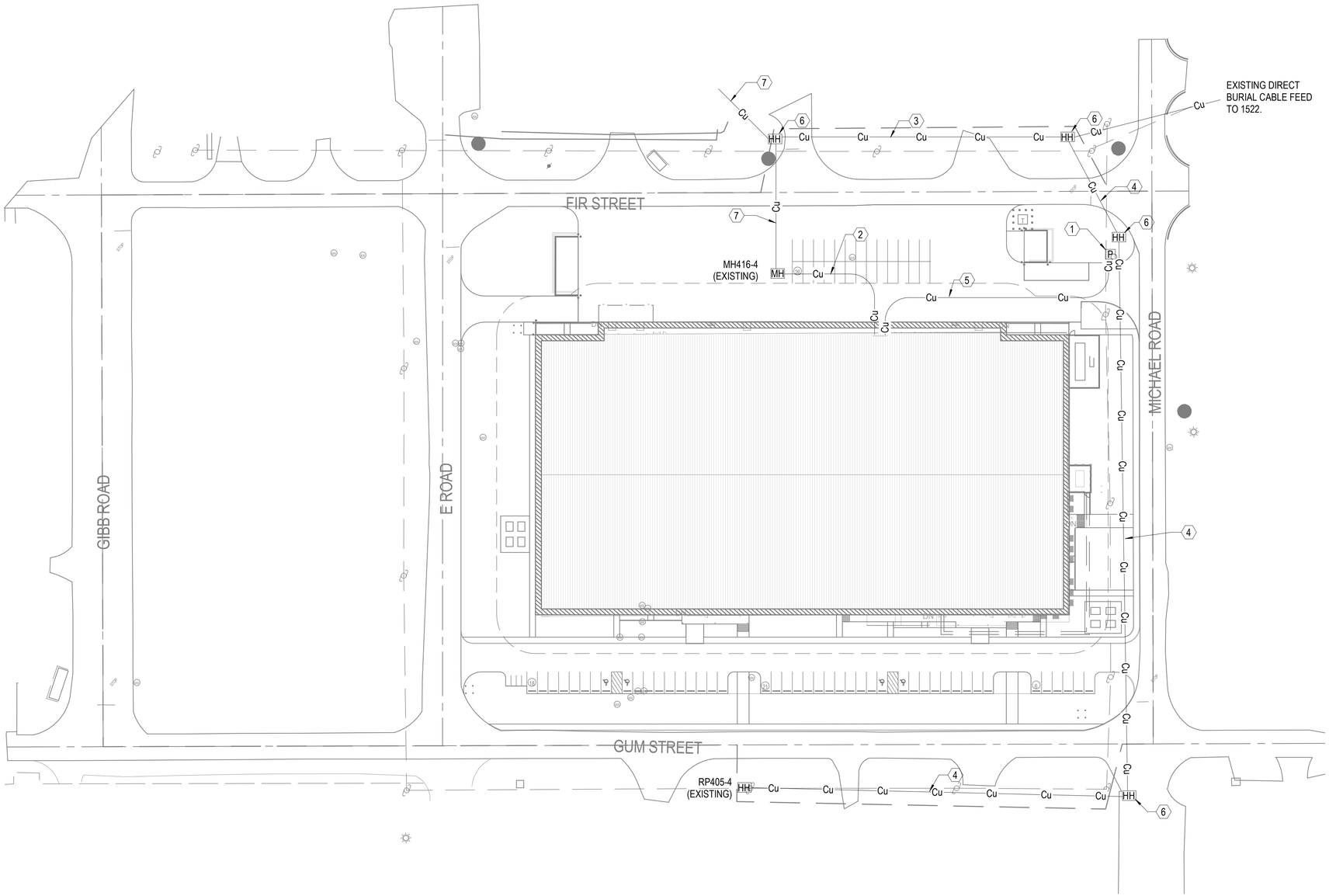

TELECOMMUNICATIONS - SITE PLAN

SCALE: 1" = 50'-0"

GENERAL NOTES

1 SEE SHEET T-001 FOR TELECOMMUNICATIONS NOTES, SYMBOLS, AND ABBREVIATIONS.

KEYNOTES

1 TELECOMMUNICATIONS SERVICE PANEL LOCATION. PROVIDE NEMA-4X ENCLOSURE FOR THE CONNECTIONS AND TERMINATIONS OF FIBER OPTIC AND COPPER CABLING FOR CONNECTIONS TO JEFFS TRAILER.

2 3-WAY 4" CONDUIT DUCTBANK FROM MH416-4 TO BUILDING TELECOM ROOM 118, WITH THREE (3) 3" 3-DUCT FABRIC INNERDUCT INSTALLED IN ONE OF THE CONDUIT. REFER TO DETAIL A1 ON SHEET T-503. PROVIDE AND INSTALL ONE (1) NEW 12-STRAND SINGLEMODE OSP OPTICAL FIBER CABLE AND ONE (1) 50-PAIR OSP PE-39 COPPER CABLE FROM MH416-4 TO NEW FACILITY TELECOM ROOM 118 VIA NEW DUCTBANK SYSTEM, COORDINATE WITH GOVERNMENT FOR PLACING, SPLICING, TERMINATION, AND CUTOVER REQUIREMENTS.

3 2-WAY 4" CONDUIT DUCTBANK FROM MH416-4 TO NEW SITE MANHOLE, PROVIDE THREE (3) 3" 3-DUCT FABRIC INNERDUCT INSTALLED IN ONE (1) CONDUIT. REFER TO DETAIL A2 ON SHEET T-503. INSTALL ONE (1) 25 PAIR OSP PE-39 COPPER CABLE FROM MH416-4 TO NEW HANDHOLE AT FIR ST. AND MICHAEL RD. PROVIDE 15 FEET OF SLACK COILED IN MH416-4 AND NEW HANDHOLE AT FIR ST. AND MICHAEL RD., GOVERNMENT SHALL SPLICE IN MH416-4 AND NEW HANDHOLE AT FIR ST. AND MICHAEL RD.

4 2-WAY 4" CONDUIT DUCTBANK BETWEEN MANHOLE, PROVIDE THREE (3) 3" 3-DUCT FABRIC INNERDUCT INSTALLED IN ONE (1) CONDUIT. REFER TO DETAIL A2 ON SHEET T-503. INSTALL ONE (1) 50 PAIR OSP PE-39 COPPER CABLE FROM RP405-4 TO NEW HANDHOLE AT FIR ST. AND MICHAEL RD. AND NEW HANDHOLE AT GUM ST. AND MICHAEL RD. PROVIDE 15 FEET OF SLACK COILED IN RP405-4 AND NEW HANDHOLE AT FIR ST. AND MICHAEL RD. GOVERNMENT SHALL SPLICE IN RP405-4 AND NEW HANDHOLE AT FIR ST. AND MICHAEL RD.

5 1-WAY 4" CONDUIT DUCTBANK FROM BUILDING TELECOM ROOM 118 TO SERVICE PANEL LOCATION; PROVIDE ONE (1) 3" 3-DUCT FABRIC INNERDUCT INSTALLED IN ONE (1) CONDUIT. REFER TO DETAIL A4 ON SHEET T-503. PROVIDE ONE (1) 25-PAIR OSP PE-39 COPPER CABLE AND ONE (1) 12-STRAND OF SINGLE-MODE OPTICAL FIBER CABLE FROM THE TELECOM ROOM 118 TO THE SERVICE PANEL AND TERMINATE IN THE PATCH PANELS IN THE NEMA 4X ENCLOSURE.

6 4'x4'x4' CONCRETE HANDHOLE, REFER TO TRAFFIC RATED ELECTRICAL HANDHOLE TYPE 4 ON SHEET ES505.

7 2-WAY 4" CONDUIT DUCTBANK BETWEEN MANHOLE, PROVIDE THREE (3) 3" 3-DUCT FABRIC INNERDUCT INSTALLED IN ONE (1) CONDUIT. REFER TO DETAIL A2 ON SHEET T-503. INSTALL ONE (1) 25-PAIR OSP PE-39 COPPER CABLE FROM MH416-4 TO RP416-4-2 NEAR 1504. PROVIDE 15 FEET OF SLACK COILED IN MH416-4 AND RP416-4-2, GOVERNMENT SHALL SPLICE IN MH416-4 AND RP416-4-2.

KEYPLAN

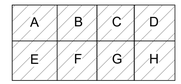

0 25' - 0" 50' - 0" 100' - 0"

SCALE: 0' - 1" = 50' - 0"

N

APPR	DATE	DESCRIPTION	SYM

NAVFAC

REGISTERED COMMUNICATIONS DISTRIBUTION DESIGNER
Bicsi
JOSHUA L CASEY
BICSI ID# 286760
EXPIRES 12-31-23
RCDD
SEAL

IRQ WM Jordan COMPANY
~A JOINT VENTURE~

Michael Baker
INTERNATIONAL
100 AIRSIDE DRIVE
MOON TOWNSHIP, PA 15108
A/E INFO

APPROVED

FOR COMMANDER NAVFAC

ACTIVITY
MARINE CORPS BASE
CAMP LEJEUNE

SATISFACTORY TO DATE	DD/MM/YY
DES JLC	DRW ETH CHK JMG
PM / DM	TOWLER / ROOT
BRANCH HEAD	SEK
DESIGN DIRECTOR	R.L.Stephens, Jr.
FIRE PROTECTION	DPS

DEPARTMENT OF THE NAVY
NAVAL FACILITIES ENGINEERING SYSTEMS COMMAND
ATLANTIC DESIGN AND CONSTRUCTION

NAVAL FACILITIES ENGINEERING SYSTEMS COMMAND ATLANTIC
NORFOLK, VA

MCB CAMP LEJEUNE
JACKSONVILLE, NC

LOGCOM CSP WAREHOUSE

TELECOMMUNICATIONS - SITE PLAN

SCALE:	AS NOTED
EPROJECT NO.:	1639600
CONSTR. CONTR. NO.	N40085-20-C-0059
NAVFAC DRAWING NO.	14111421
SHEET	392 OF 447

TS101

DRAWFORM REVISION: 25 AUGUST 2020

P1527 FINAL SUBMISSION - 11/18/2021

PLOTTED: 11/11/2021 12:38:57 PM

FILE NAME: BIM 360://AIF PACKAGE 3/P1527 LOG COM CSP-1639600-E.rvt

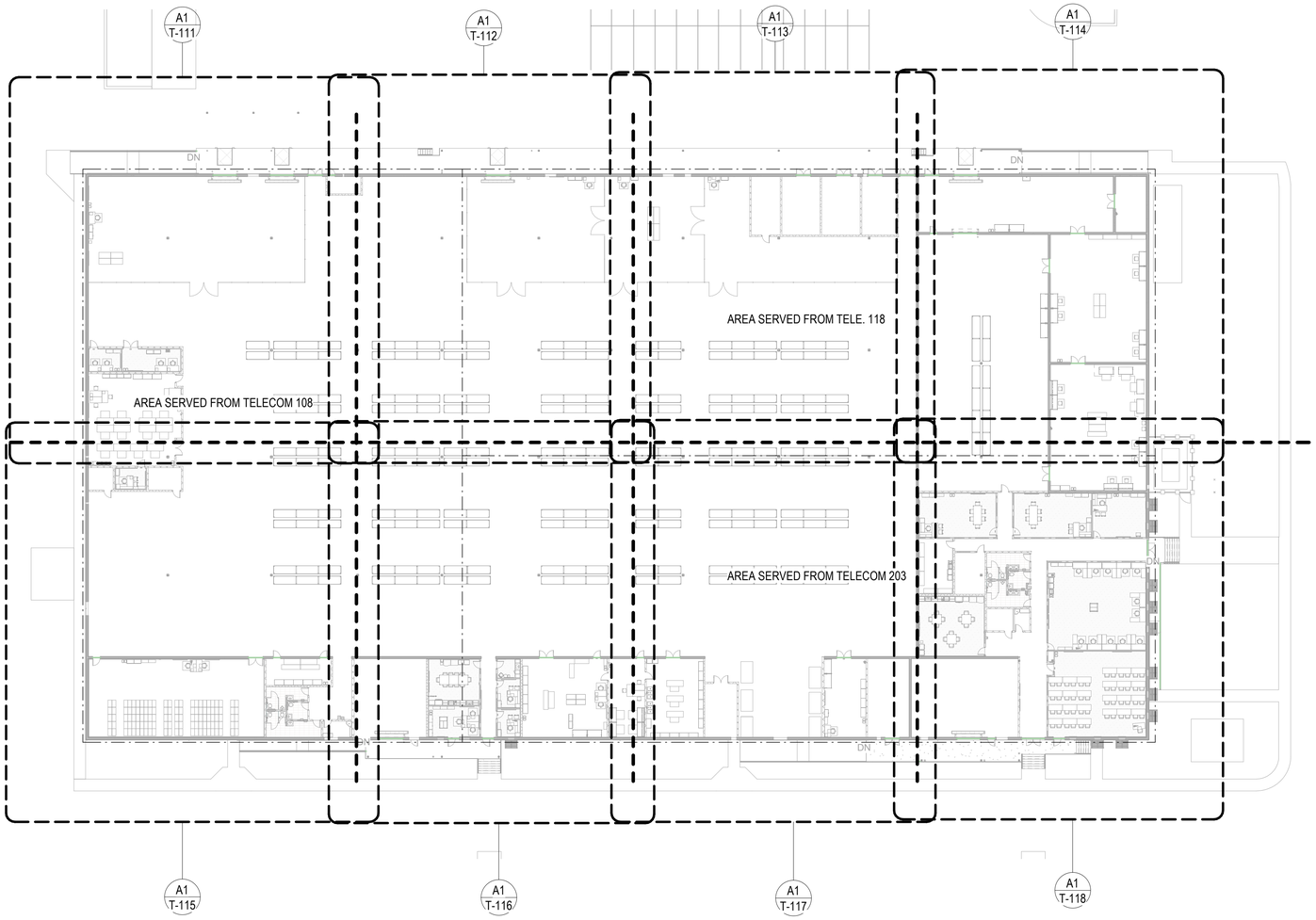

TELECOMMUNICATIONS - OVERALL FLOOR PLAN

SCALE: 1" = 30'-0"

GENERAL NOTES

1 SEE SHEET T-001 FOR TELECOMMUNICATIONS NOTES, SYMBOLS, AND ABBREVIATIONS.

KEYPLAN

A	B	C	D
E	F	G	H

0 15' - 0" 30' - 0" 60' - 0"

SCALE: 0' - 1" = 30' - 0"

N

APPR | DATE | DESCRIPTION | SYM

REGISTERED COMMUNICATIONS DISTRIBUTION DESIGNER
Bicsi
JOSHUA L CASEY
BICSI ID# 286760
EXPIRES 12-31-23
RCDD
SEAL

IRQ Jordan COMPANY – A JOINT VENTURE –

Michael Baker INTERNATIONAL
100 AIRSIDE DRIVE
MOON TOWNSHIP, PA 15108
A/E INFO

APPROVED

FOR COMMANDER NAVFAC

ACTIVITY
MARINE CORPS BASE
CAMP LEJEUNE

SATISFACTORY TO DATE DD/MM/YY

DES JLC	DRW ETH CHK JMG
PM / DM	TOWLER / ROOT
BRANCH HEAD	SEK
DESIGN DIRECTOR	R.L.Stephens, Jr.
FIRE PROTECTION	DPS

DEPARTMENT OF THE NAVY
NAVAL FACILITIES ENGINEERING SYSTEMS COMMAND
ATLANTIC DESIGN AND CONSTRUCTION

NAVAL FACILITIES ENGINEERING SYSTEMS COMMAND ATLANTIC
NORFOLK, VA

MCB CAMP LEJEUNE
JACKSONVILLE, NC
LOGCOM CSP WAREHOUSE

TELECOMMUNICATIONS - OVERALL FLOOR PLAN

SCALE:	AS NOTED
EPROJECT NO.:	1639600
CONSTR. CONTR. NO.	N40085-20-C-0059
NAVFAC DRAWING NO.	14111422
SHEET	393 OF 447

T-110

DRAWFORM REVISION: 25 AUGUST 2020

P1527 FINAL SUBMISSION - 11/18/2021

PLOTTED: 11/11/2021 12:38:21 PM

FILE NAME: BIM 360://HF PACKAGE 3/P1527 LOG COM CSP-1639600-E.rvt

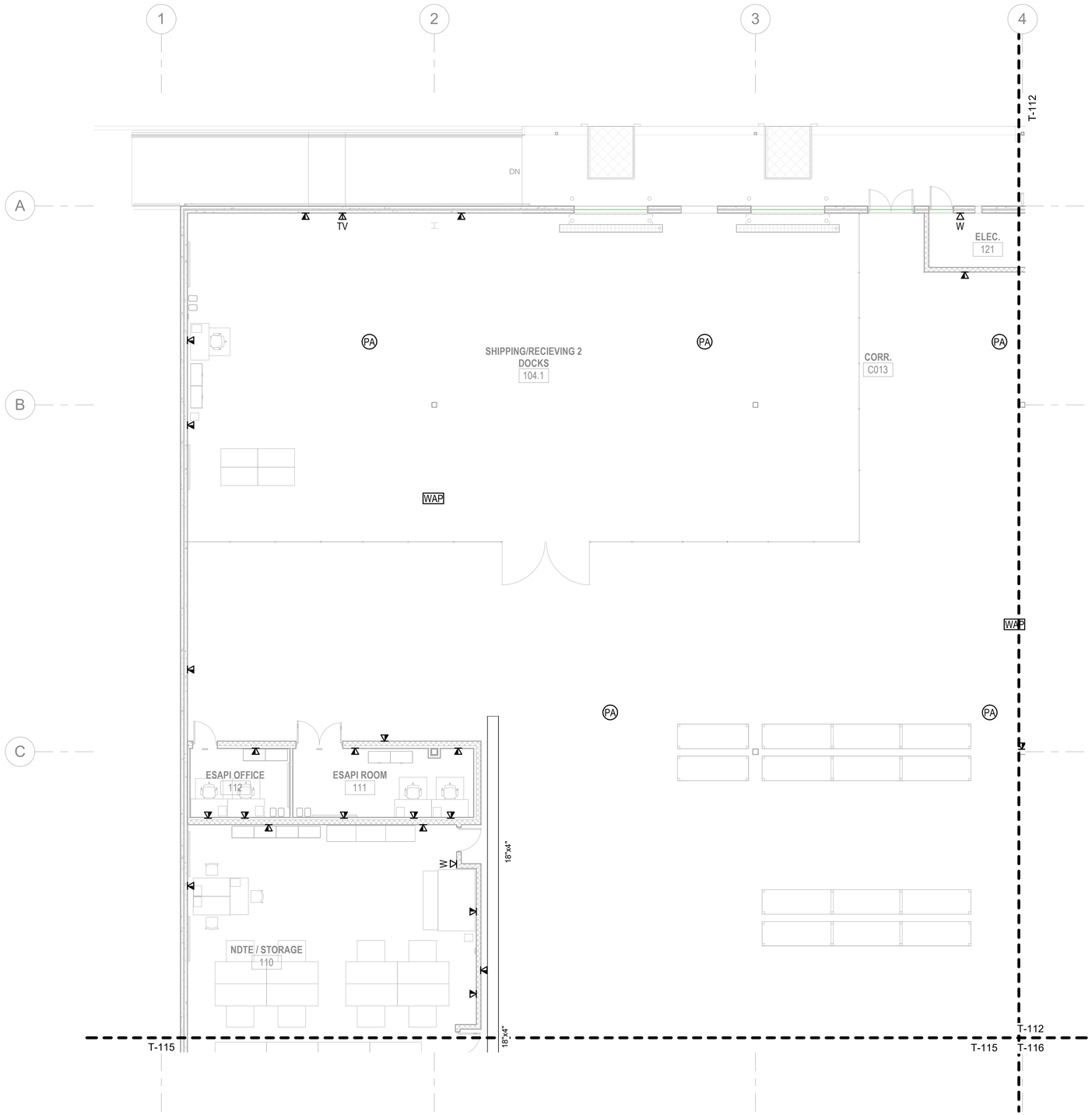

A1 TELECOMMUNICATIONS - FIRST FLOOR PLAN - AREA A

SCALE: 1/8" = 1'-0" (T-110)

GENERAL NOTES

1 SEE SHEET T-001 FOR TELECOMMUNICATIONS NOTES, SYMBOLS, AND ABBREVIATIONS.

KEYNOTES

KEYPLAN

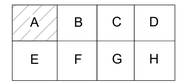

0 4' - 0" 8' - 0" 16' - 0"

SCALE:0' - 0 1/8" = 1' - 0"

APPR	DATE	DESCRIPTION	NO.

NAVFAC

REGISTERED COMMUNICATIONS DISTRIBUTION DESIGNER
Bicsi
JOSHUA L CASEY
BICSI ID# 286760
EXPIRES 12-31-23
RCDD

SEAL

IRQ W.M. Jordan COMPANY – A JOINT VENTURE –

Michael Baker INTERNATIONAL

100 AIRSIDE DRIVE
MOON TOWNSHIP, PA 15108 A/E INFO

APPROVED

FOR COMMANDER NAVFAC

ACTIVITY
MARINE CORPS BASE
CAMP LEJEUNE

SATISFACTORY TO DATE DD/MM/YY

DES JLC	DRW ETH	CHK JMG
PM / DM	TOWLER / ROOT	
BRANCH HEAD	SEK	
DESIGN DIRECTOR	R.L.Stephens, Jr.	
FIRE PROTECTION	DPS	

DEPARTMENT OF THE NAVY
NAVAL FACILITIES ENGINEERING SYSTEMS COMMAND
ATLANTIC DESIGN AND CONSTRUCTION

NAVAL FACILITIES ENGINEERING SYSTEMS COMMAND ATLANTIC
NORFOLK, VA

MCB CAMP LEJEUNE
JACKSONVILLE, NC

LOGCOM CSP WAREHOUSE

TELECOMMUNICATIONS - FIRST FLOOR PLAN - AREA A

SCALE:	AS NOTED
EPROJECT NO.:	1639600
CONSTR. CONTR. NO.	N40085-20-C-0059
NAVFAC DRAWING NO.	14111423
SHEET	394 OF 447

T-111

DRAWFORM REVISION: 25 AUGUST 2020

P1527 FINAL SUBMISSION - 11/18/2021

PLOTTED: 11/11/2021 12:38:23 PM

FILE NAME: BIM 360://AtF PACKAGE 3/P1527 LOG COM CSP-1639600-E.rvt

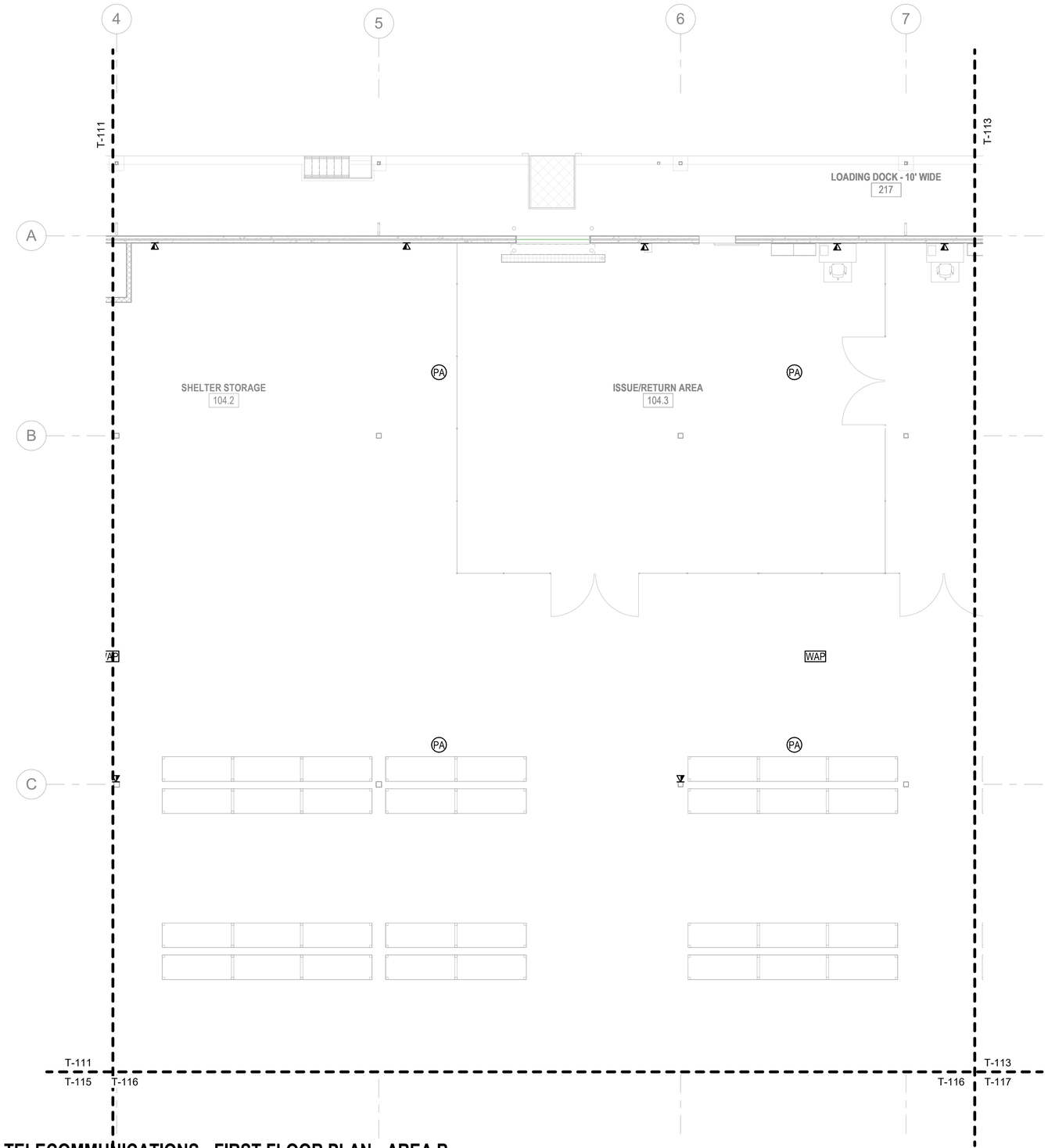

A1 TELECOMMUNICATIONS - FIRST FLOOR PLAN - AREA B

SCALE: 1/8" = 1'-0" (T-110)

GENERAL NOTES

1 SEE SHEET T-001 FOR TELECOMMUNICATIONS NOTES, SYMBOLS, AND ABBREVIATIONS.

KEYNOTES

KEYPLAN

A	B	C	D
E	F	G	H

0 4' - 0" 8' - 0" 16' - 0"

SCALE: 0' - 0 1/8" = 1' - 0"

N

APPR	DATE	DESCRIPTION	SYM

REGISTERED COMMUNICATIONS DISTRIBUTION DESIGNER
Bicsi
JOSHUA L CASEY
BICSI ID# 286760
EXPIRES 12-31-23
RCDD
SEAL

IRQ WM Jordan COMPANY – A JOINT VENTURE –

Michael Baker INTERNATIONAL
100 AIRSIDE DRIVE
MOON TOWNSHIP, PA 15108
A/E INFO

APPROVED

FOR COMMANDER NAVFAC

ACTIVITY
MARINE CORPS BASE
CAMP LEJEUNE

SATISFACTORY TO DATE DD/MM/YY

DES	DRW	CHK
JLC	ETH	JMG

PM / DM TOWLER / ROOT
BRANCH HEAD SEK
DESIGN DIRECTOR R.L.Stephens, Jr.
FIRE PROTECTION DPS

DEPARTMENT OF THE NAVY
NAVAL FACILITIES ENGINEERING SYSTEMS COMMAND
ATLANTIC DESIGN AND CONSTRUCTION
MCB CAMP LEJEUNE

NAVAL FACILITIES ENGINEERING SYSTEMS COMMAND ATLANTIC
NORFOLK, VA

JACKSONVILLE, NC
LOGCOM CSP WAREHOUSE

TELECOMMUNICATIONS - FIRST FLOOR PLAN - AREA B

SCALE: AS NOTED
EPROJECT NO.: 1639600
CONSTR. CONTR. NO. N40085-20-C-0059
NAVFAC DRAWING NO. 14111424
SHEET 395 OF 447

T-112

DRAWFORM REVISION: 25 AUGUST 2020

P1527 FINAL SUBMISSION - 11/18/2021

PLOTTED: 11/11/2021 12:38:25 PM

FILE NAME: BIM 360://HF PACKAGE 3/P1527 LOG COM CSP-1639600-E.rvt

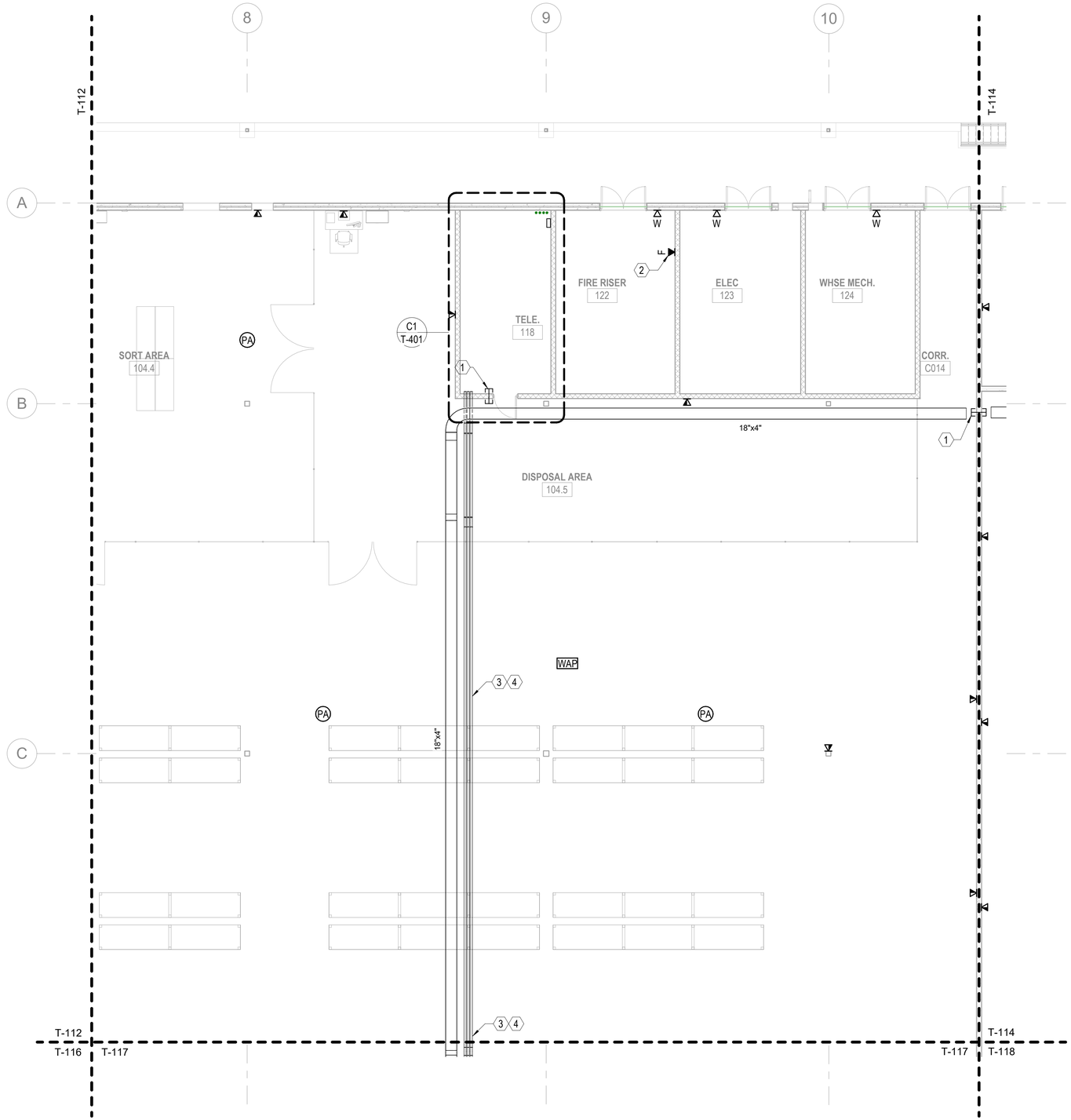

A1 **TELECOMMUNICATIONS - FIRST FLOOR PLAN - AREA C**

SCALE: 1/8" = 1'-0" (T-110)

GENERAL NOTES

1 SEE SHEET T-001 FOR TELECOMMUNICATIONS NOTES, SYMBOLS, AND ABBREVIATIONS.

KEYNOTES

1 PROVIDE FOUR (4) 4" CONDUIT SLEEVES FOR HORIZONTAL CABLE DISTRIBUTION, CAP WITH NYLON BUSHINGS, FIRE STOP PER NFPA.

2 COORDINATE LOCATION OF DATA OUTLETS WITH FIRE ALARM PANEL.

3 PROVIDE THREE (3) 3" CONDUITS IN BETWEEN TELECOM 118 AND TELECOM 108 FOR BACKBONE CABLE DISTRIBUTION, CAP WITH NYLON BUSHINGS, FIRE STOP PER NFPA.

4 PROVIDE THREE (3) 3" CONDUITS IN BETWEEN TELECOM 118 AND TELECOM 203 FOR BACKBONE CABLE DISTRIBUTION, CAP WITH NYLON BUSHINGS, FIRE STOP PER NFPA.

KEYPLAN

A	B	C	D
E	F	G	H

0 4' - 0" 8' - 0" 16' - 0"

SCALE: 0' - 0 1/8" = 1' - 0"

N

SYM	DESCRIPTION	DATE	APPR

NAVFAC

REGISTERED COMMUNICATIONS DISTRIBUTION DESIGNER
Bicsi
JOSHUA L.CASEY
BICSI ID# 286760
EXPIRES 12-31-23
RCDD
SEAL

RQ W.M. Jordan COMPANY
- A JOINT VENTURE -

Michael Baker
INTERNATIONAL
100 AIRSIDE DRIVE
MOON TOWNSHIP, PA 15108
A/E INFO

APPROVED

FOR COMMANDER NAVFAC

ACTIVITY
MARINE CORPS BASE
CAMP LEJEUNE

SATISFACTORY TO DATE DD/MM/YY

DES JLC DRW ETH CHK JMG

PM / DM TOWLER / ROOT

BRANCH HEAD SEK

DESIGN DIRECTOR R.L.Stephens, Jr.

FIRE PROTECTION DPS

DEPARTMENT OF THE NAVY
NAVAL FACILITIES ENGINEERING SYSTEMS COMMAND
NAVAL FACILITIES ENGINEERING SYSTEMS COMMAND ATLANTIC
ATLANTIC DESIGN AND CONSTRUCTION
NORFOLK, VA
MCB CAMP LEJEUNE
JACKSONVILLE, NC

LOGCOM CSP WAREHOUSE

TELECOMMUNICATIONS - FIRST FLOOR PLAN - AREA C

SCALE: AS NOTED

EPROJECT NO.: 1639600

CONSTR. CONTR. NO. N40085-20-C-0059

NAVFAC DRAWING NO. 14111425

SHEET 396 OF 447

T-113

DRAWFORM REVISION: 25 AUGUST 2020

P1527 FINAL SUBMISSION - 11/18/2021

PLOTTED: 11/11/2021 12:38:27 PM

FILE NAME: BIM 360://HF PACKAGE 3/P1527 LOG COM CSP-1639600-E.rvt

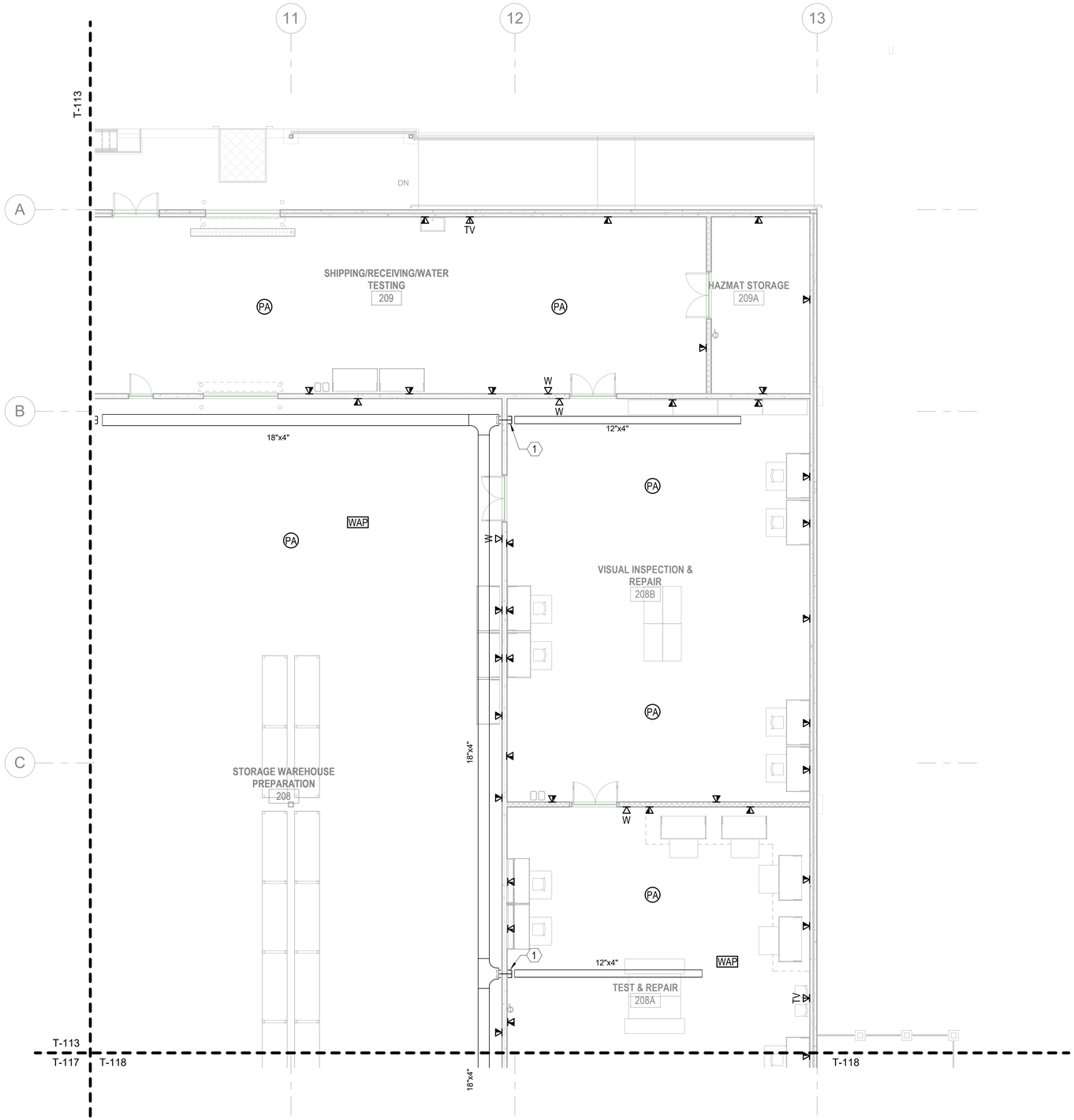

A1 TELECOMMUNICATIONS - FIRST FLOOR PLAN - AREA D

SCALE: 1/8" = 1'-0" (T-110)

GENERAL NOTES

1 SEE SHEET T-001 FOR TELECOMMUNICATIONS NOTES, SYMBOLS, AND ABBREVIATIONS.

KEYNOTES

1 PROVIDE TWO (2) 4" CONDUIT SLEEVES FOR HORIZONTAL CABLE DISTRIBUTION, CAP WITH NYLON BUSHINGS, FIRE STOP PER NFPA.

KEYPLAN

A	B	C	D
E	F	G	H

SCALE: 0' - 0 1/16" = 1' - 0"

APPR	DATE	DESCRIPTION	SYM

NAVFAC

REGISTERED COMMUNICATIONS DISTRIBUTION DESIGNER
Bicsi
JOSHUA L CASEY
BICSI ID# 286760
EXPIRES 12-31-23
RCDD
SEAL

RQ W.M. Jordan COMPANY – A JOINT VENTURE –

Michael Baker INTERNATIONAL
100 AIRSIDE DRIVE
MOON TOWNSHIP, PA 15108
A/E INFO

APPROVED

FOR COMMANDER NAVFAC

ACTIVITY
MARINE CORPS BASE CAMP LEJEUNE

SATISFACTORY TO DATE DD/MM/YY

DES	JLC	DRW	ETH	CHK	JMG

PM / DM TOWLER / ROOT
BRANCH HEAD SEK
DESIGN DIRECTOR R.L.Stephens, Jr.
FIRE PROTECTION DPS

DEPARTMENT OF THE NAVY
NAVAL FACILITIES ENGINEERING SYSTEMS COMMAND
ATLANTIC DESIGN AND CONSTRUCTION
MCB CAMP LEJEUNE

NAVAL FACILITIES ENGINEERING SYSTEMS COMMAND ATLANTIC
NORFOLK, VA

JACKSONVILLE, NC

LOGCOM CSP WAREHOUSE

TELECOMMUNICATIONS - FIRST FLOOR PLAN - AREA D

SCALE: AS NOTED
EPROJECT NO.: 1639600
CONSTR. CONTR. NO. N40085-20-C-0059
NAVFAC DRAWING NO. 14111426
SHEET 397 OF 447

T-114

DRAWFORM REVISION: 25 AUGUST 2020

P1527 FINAL SUBMISSION - 11/18/2021

PLOTTED: 11/11/2021 12:38:29 PM

FILE NAME: BIM 360://HF PACKAGE 3/P1527 LOG COM CSP-1639600-E.rvt

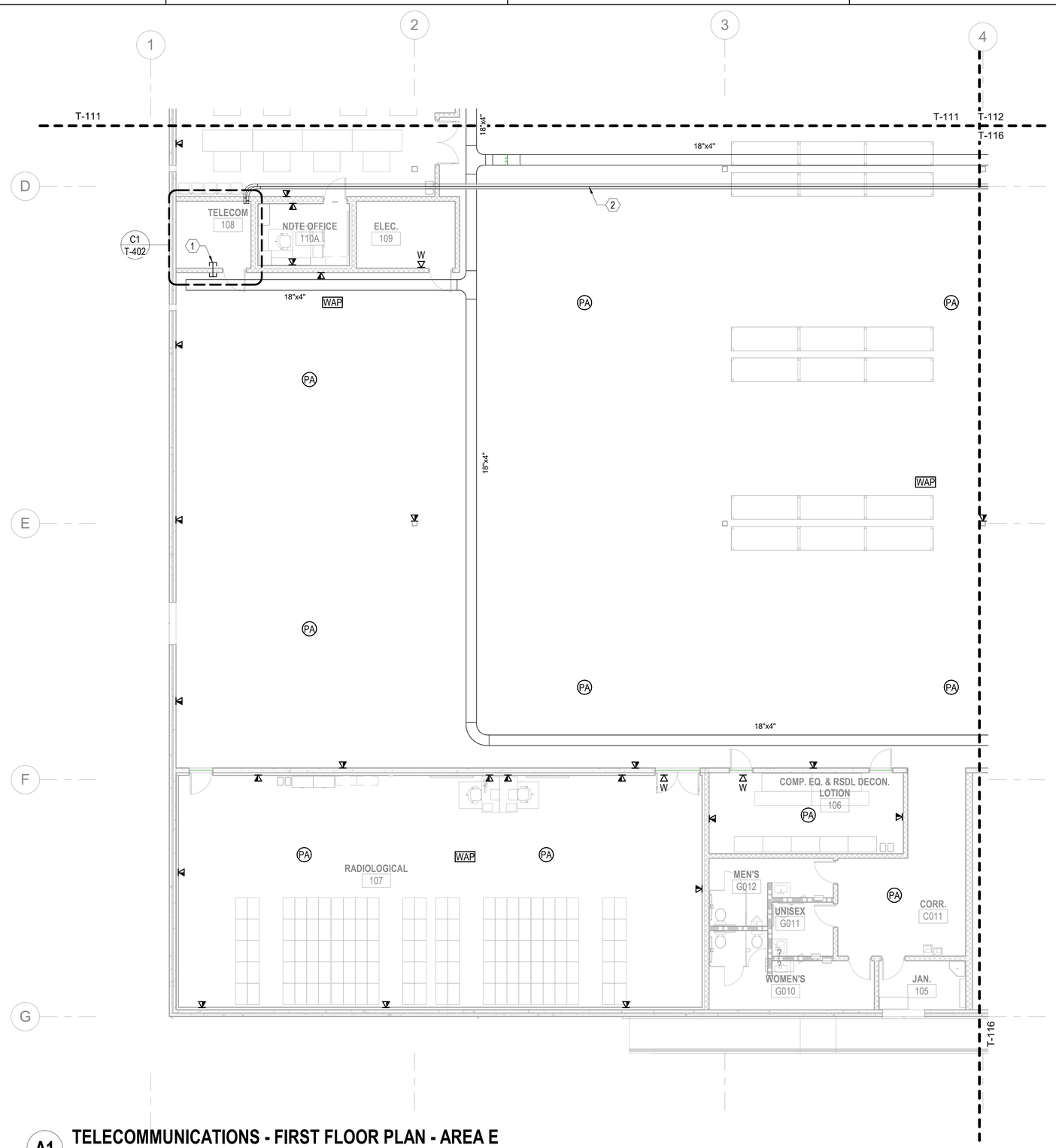

GENERAL NOTES

1 SEE SHEET T-001 FOR TELECOMMUNICATIONS NOTES, SYMBOLS, AND ABBREVIATIONS.

KEYNOTES

1 PROVIDE FOUR (4) 4" CONDUIT SLEEVES FOR HORIZONTAL CABLE DISTRIBUTION, CAP WITH NYLON BUSHINGS, FIRE STOP PER NFPA.

2 PROVIDE THREE (3) 3" CONDUITS IN BETWEEN TELECOM 118 AND TELECOM 108 FOR BACKBONE CABLE DISTRIBUTION, CAP WITH NYLON BUSHINGS, FIRE STOP PER NFPA.

KEYPLAN

A	B	C	D
E	F	G	H

0 4' - 0" 8' - 0" 16' - 0" N

SCALE: 0' - 0 1/8" = 1' - 0"

A1 **TELECOMMUNICATIONS - FIRST FLOOR PLAN - AREA E**

SCALE: 1/8" = 1'-0" (T-110)

APPR | DATE | DESCRIPTION | SYM

REGISTERED COMMUNICATIONS DISTRIBUTION DESIGNER
Bicsi
JOSHUA L CASEY
BICSI ID# 286760
EXPIRES 12-31-23
RCDD

SEAL

IRQ W.M. Jordan COMPANY – A JOINT VENTURE –

Michael Baker INTERNATIONAL

100 AIRSIDE DRIVE
MOON TOWNSHIP, PA 15108 A/E INFO

APPROVED

FOR COMMANDER NAVFAC

ACTIVITY
MARINE CORPS BASE
CAMP LEJEUNE

SATISFACTORY TO DATE DD/MM/YY

DES	JLC	DRW ETH	CHK JMG
PM / DM		TOWLER / ROOT	
BRANCH HEAD		SEK	
DESIGN DIRECTOR		R.L.Stephens, Jr.	
FIRE PROTECTION		DPS	

DEPARTMENT OF THE NAVY
NAVAL FACILITIES ENGINEERING SYSTEMS COMMAND
ATLANTIC DESIGN AND CONSTRUCTION

NAVAL FACILITIES ENGINEERING SYSTEMS COMMAND ATLANTIC
NORFOLK, VA

JACKSONVILLE, NC
LOGCOM CSP WAREHOUSE
MCB CAMP LEJEUNE

TELECOMMUNICATIONS - FIRST FLOOR PLAN - AREA E

SCALE:	AS NOTED
EPROJECT NO.:	1639600
CONSTR. CONTR. NO.	N40085-20-C-0059
NAVFAC DRAWING NO.	14111427
SHEET	398 OF 447

T-115

DRAWFORM REVISION: 25 AUGUST 2020

P1527 FINAL SUBMISSION - 11/18/2021

PLOTTED: 11/11/2021 12:38:31 PM

FILE NAME: BIM 360://HF PACKAGE 3/P1527 LOG COM CSP-1639600-E.rvt

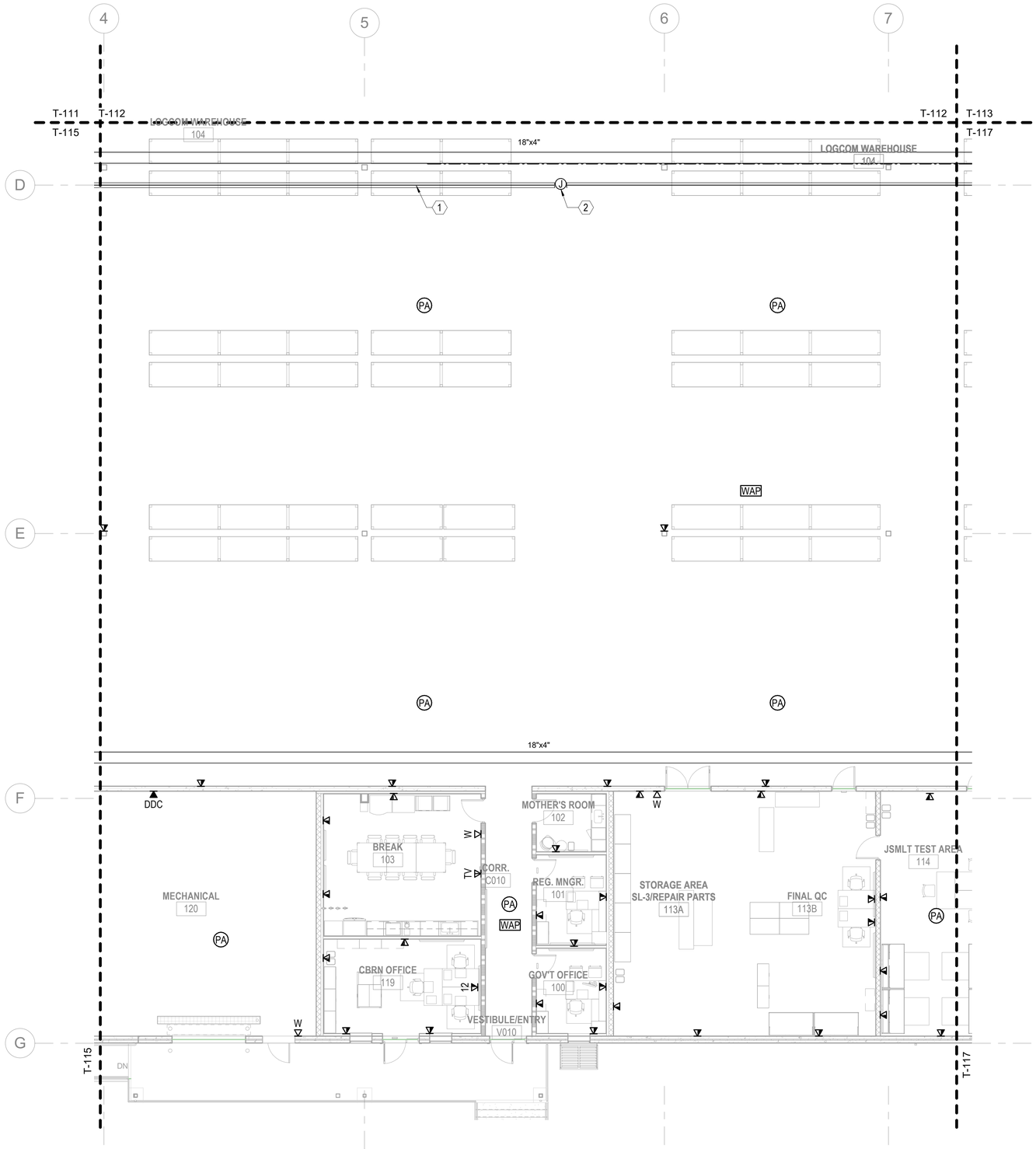

A1 TELECOMMUNICATIONS - FIRST FLOOR PLAN - AREA F

SCALE: 1/8" = 1'-0" (T-110)

GENERAL NOTES

1 SEE SHEET T-001 FOR TELECOMMUNICATIONS NOTES, SYMBOLS, AND ABBREVIATIONS.

KEYNOTES

1 PROVIDE THREE (3) 3" CONDUITS IN BETWEEN TELECOM 118 AND TELECOM 108 FOR BACKBONE CABLE DISTRIBUTION, CAP WITH NYLON BUSHINGS, FIRE STOP PER NFPA.

2 PROVIDE PULL BOX WITH MINIMAL SIZE OF 24" WIDE X 48" LENGTH X 10" DEPTH.

KEYPLAN

A	B	C	D
E	F	G	H

0 4' - 0" 8' - 0" 16' - 0"

SCALE: 0' - 0 1/8" = 1' - 0"

N

APPR | DATE | DESCRIPTION | SYM

REGISTERED COMMUNICATIONS DISTRIBUTION DESIGNER
Bicsi
JOSHUA L CASEY
BICSI ID# 286760
EXPIRES 12-31-23
RCDD

SEAL

IRQ WM Jordan COMPANY – A JOINT VENTURE –

Michael Baker INTERNATIONAL
100 AIRSIDE DRIVE
MOON TOWNSHIP, PA 15108
A/E INFO

APPROVED

FOR COMMANDER NAVFAC

ACTIVITY
MARINE CORPS BASE
CAMP LEJEUNE

SATISFACTORY TO DATE DD/MM/YY

DES JLC | DRW ETH | CHK JMG

PM / DM TOWLER / ROOT

BRANCH HEAD SEK

DESIGN DIRECTOR R.L.Stephens, Jr.

FIRE PROTECTION DPS

DEPARTMENT OF THE NAVY
NAVAL FACILITIES ENGINEERING SYSTEMS COMMAND
ATLANTIC DESIGN AND CONSTRUCTION
MCB CAMP LEJEUNE

NAVAL FACILITIES ENGINEERING SYSTEMS COMMAND ATLANTIC
NORFOLK, VA
JACKSONVILLE, NC

LOGCOM CSP WAREHOUSE

TELECOMMUNICATIONS - FIRST FLOOR PLAN - AREA F

SCALE: AS NOTED
EPROJECT NO.: 1639600
CONSTR. CONTR. NO. N40085-20-C-0059
NAVFAC DRAWING NO. 14111428
SHEET 399 OF 447

T-116

DRAWFORM REVISION: 25 AUGUST 2020

P1527 FINAL SUBMISSION - 11/18/2021

PLOTTED: 11/11/2021 12:38:34 PM

FILE NAME: BIM 360/A/F PACKAGE 3/P1527 LOG COM CSP-1639600-E.rvt

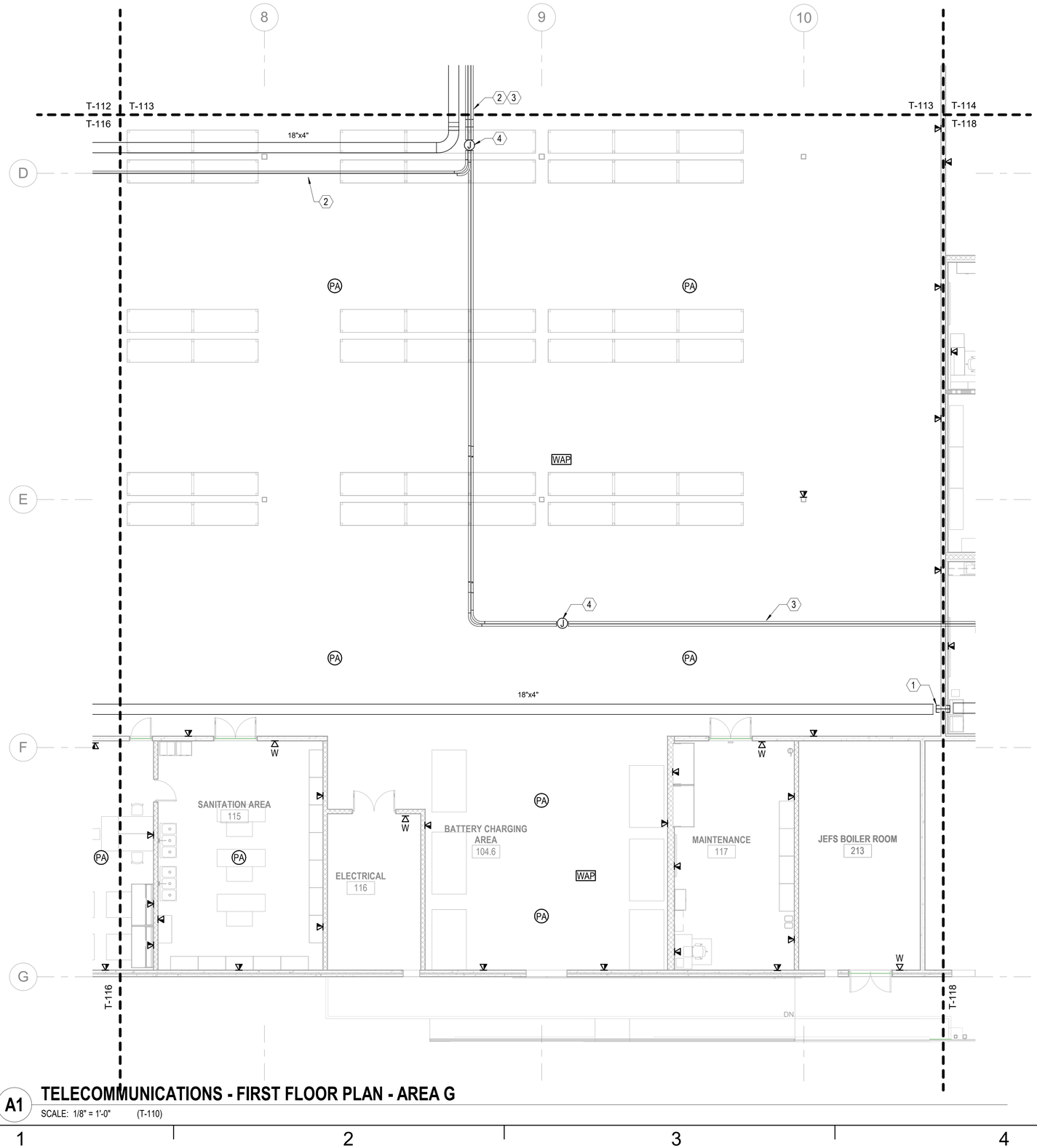

A1 TELECOMMUNICATIONS - FIRST FLOOR PLAN - AREA G

SCALE: 1/8" = 1'-0" (T-110)

GENERAL NOTES

1 SEE SHEET T-001 FOR TELECOMMUNICATIONS NOTES, SYMBOLS, AND ABBREVIATIONS.

KEYNOTES

1 PROVIDE FOUR (4) 4" CONDUIT SLEEVES FOR HORIZONTAL CABLE DISTRIBUTION, CAP WITH NYLON BUSHINGS, FIRE STOP PER NFPA.

2 PROVIDE THREE (3) 3" CONDUITS IN BETWEEN TELECOM 118 AND TELECOM 108 FOR BACKBONE CABLE DISTRIBUTION, CAP WITH NYLON BUSHINGS, FIRE STOP PER NFPA.

3 PROVIDE THREE (3) 3" CONDUITS IN BETWEEN TELECOM 118 AND TELECOM 203 FOR BACKBONE CABLE DISTRIBUTION, CAP WITH NYLON BUSHINGS, FIRE STOP PER NFPA.

4 PROVIDE PULL BOX WITH MINIMAL SIZE OF 24" WIDE X 48" LENGTH X 10" DEPTH.

KEYPLAN

A	B	C	D
E	F	G	H

0 4' - 0" 8' - 0" 16' - 0"

SCALE: 0' - 0 1/8" = 1' - 0"

N

APPR | DATE | DESCRIPTION | SYM

NAVFAC

REGISTERED COMMUNICATIONS DISTRIBUTION DESIGNER
Bicsi
JOSHUA L CASEY
BICSI ID# 286760
EXPIRES 12-31-23
RCDD

SEAL

IRQ W.M. Jordan COMPANY – A JOINT VENTURE –

Michael Baker INTERNATIONAL

100 AIRSIDE DRIVE
MOON TOWNSHIP, PA 15108 A/E INFO

APPROVED

FOR COMMANDER NAVFAC

ACTIVITY
MARINE CORPS BASE
CAMP LEJEUNE

SATISFACTORY TO DATE DD/MM/YY

DES JLC | DRW ETH | CHK JMG

PM / DM TOWLER / ROOT

BRANCH HEAD SEK

DESIGN DIRECTOR R.L.Stephens, Jr.

FIRE PROTECTION DPS

DEPARTMENT OF THE NAVY
NAVAL FACILITIES ENGINEERING SYSTEMS COMMAND
ATLANTIC DESIGN AND CONSTRUCTION
MCB CAMP LEJEUNE

NAVAL FACILITIES ENGINEERING SYSTEMS COMMAND ATLANTIC
NORFOLK, VA

JACKSONVILLE, NC
LOGCOM CSP WAREHOUSE

TELECOMMUNICATIONS - FIRST FLOOR PLAN - AREA G

SCALE: AS NOTED

EPROJECT NO.: 1639600

CONSTR. CONTR. NO. N40085-20-C-0059

NAVFAC DRAWING NO. 14111429

SHEET 400 OF 447

T-117

DRAWFORM REVISION: 25 AUGUST 2020

P1527 FINAL SUBMISSION - 11/18/2021

PLOTTED: 11/11/2021 12:38:36 PM

FILE NAME: BIM 360/JHF PACKAGE 3/P1527 LOG COM CSP-1639600-E.rvt

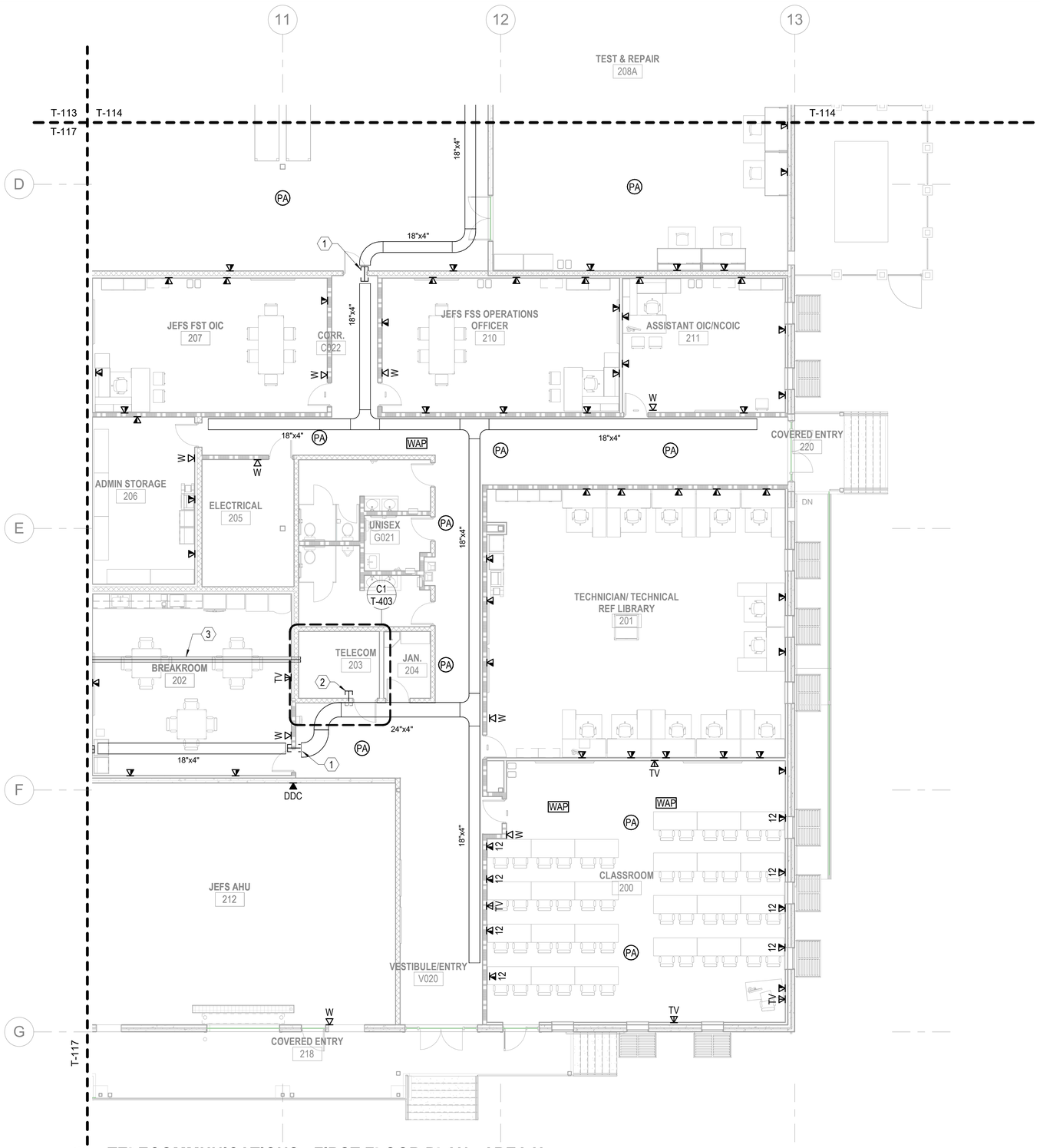

A1 TELECOMMUNICATIONS - FIRST FLOOR PLAN - AREA H

SCALE: 1/8" = 1'-0" (T-110)

GENERAL NOTES

1 SEE SHEET T-001 FOR TELECOMMUNICATIONS NOTES, SYMBOLS, AND ABBREVIATIONS.

KEYNOTES

1 PROVIDE FOUR (4) 4" CONDUIT SLEEVES FOR HORIZONTAL CABLE DISTRIBUTION, CAP WITH NYLON BUSHINGS, FIRE STOP PER NFPA.

2 PROVIDE TEN (10) 4" CONDUIT SLEEVES FOR HORIZONTAL CABLE DISTRIBUTION, CAP WITH NYLON BUSHINGS, FIRE STOP PER NFPA.

3 PROVIDE THREE (3) 3" CONDUITS IN BETWEEN TELECOM 118 AND TELECOM 203 FOR BACKBONE CABLE DISTRIBUTION, CAP WITH NYLON BUSHINGS, FIRE STOP PER NFPA.

KEYPLAN

A	B	C	D
E	F	G	H

0 4' - 0" 8' - 0" 16' - 0"

SCALE: 0' - 0 1/8" = 1' - 0"

N

NO.	DESCRIPTION	DATE	APPR

NAVFAC

REGISTERED COMMUNICATIONS DISTRIBUTION DESIGNER
Bicsi
JOSHUA L CASEY
BICSI ID# 286760
EXPIRES 12-31-23
RCDD
SEAL

IRQ W.M. Jordan COMPANY – A JOINT VENTURE –

Michael Baker INTERNATIONAL
100 AIRSIDE DRIVE
MOON TOWNSHIP, PA 15108
A/E INFO

APPROVED

FOR COMMANDER NAVFAC

ACTIVITY
MARINE CORPS BASE
CAMP LEJEUNE

SATISFACTORY TO DATE	DD/MM/YY
DES JLC	DRW ETH CHK JMG
PM / DM	TOWLER / ROOT
BRANCH HEAD	SEK
DESIGN DIRECTOR	R.L.Stephens, Jr.
FIRE PROTECTION	DPS

DEPARTMENT OF THE NAVY
NAVAL FACILITIES ENGINEERING SYSTEMS COMMAND ATLANTIC
ATLANTIC DESIGN AND CONSTRUCTION
MCB CAMP LEJEUNE
NAVAL FACILITIES ENGINEERING SYSTEMS COMMAND ATLANTIC
NORFOLK, VA
JACKSONVILLE, NC
LOGCOM CSP WAREHOUSE

TELECOMMUNICATIONS - FIRST FLOOR PLAN - AREA H

SCALE:	AS NOTED
EPROJECT NO.:	1639600
CONSTR. CONTR. NO.	N40085-20-C-0059
NAVFAC DRAWING NO.	14111430
SHEET	401 OF 447

T-118

DRAWFORM REVISION: 25 AUGUST 2020

P1527 FINAL SUBMISSION - 11/18/2021

PLOTTED: 11/11/2021 12:38:39 PM

FILE NAME: BIM 360://HF PACKAGE 3/P1527 LOG COM CSP-1639600-E.rvt

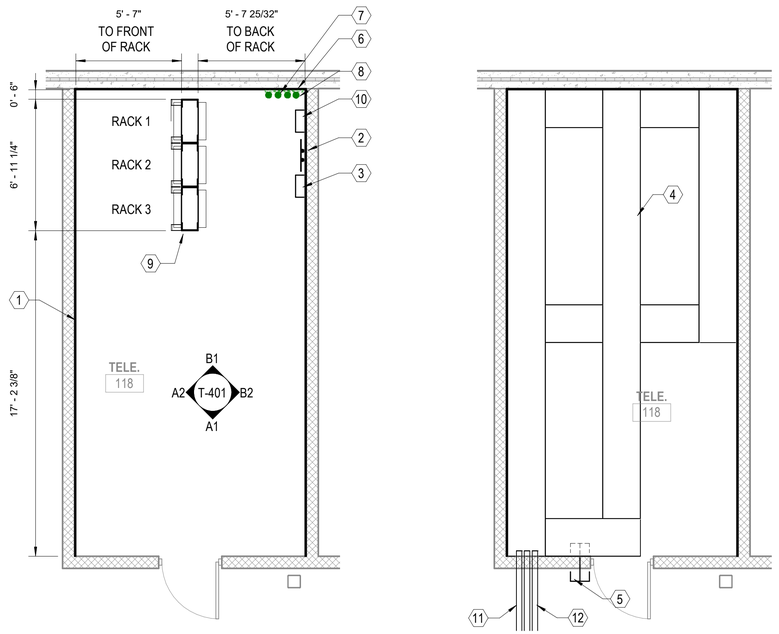

C1 TELECOM 118 ENLARGED PLAN

SCALE: 1/4" = 1'-0" (T-113)

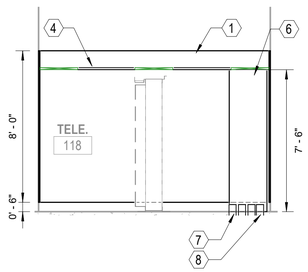

B1 TELECOM 118 NORTH WALL ELEVATION

SCALE: 1/4" = 1'-0" (T-401)

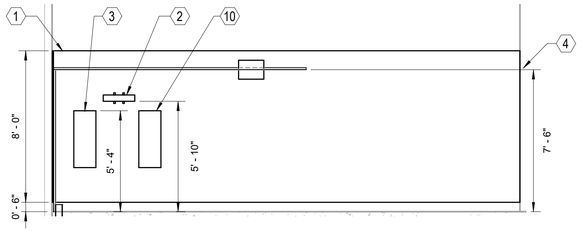

B2 TELECOM 118 EAST WALL ELEVATION

SCALE: 1/4" = 1'-0" (T-401)

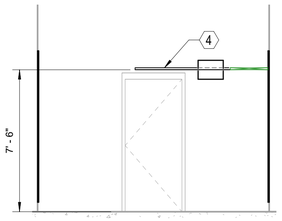

A1 TELECOM 118 SOUTH WALL ELEVATION

SCALE: 1/4" = 1'-0" (T-401)

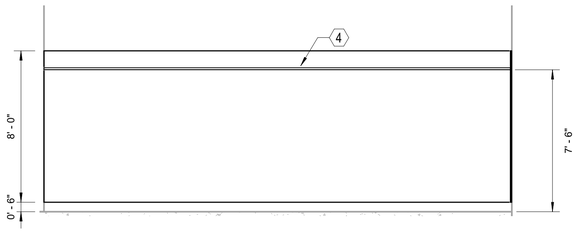

A2 TELECOM 118 WEST WALL ELEVATION

SCALE: 1/4" = 1'-0" (T-401)

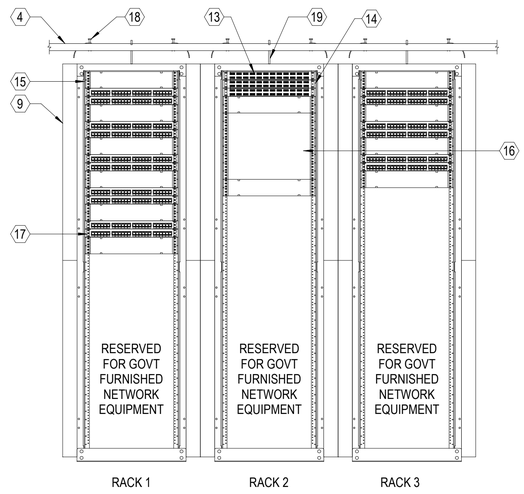

A3 TELE. 118 RACK ELEVATION

SCALE: NTS

GENERAL NOTES

1 SEE SHEET T-001 FOR TELECOMMUNICATIONS NOTES, SYMBOLS, AND ABBREVIATIONS.

KEYNOTES

1 8' HIGH BY 3/4" THICK, AC GRADE, VOID FREE, FIRE-RATED PLYWOOD BACKBOARD COVERING A MINIMUM OF THREE (3) WALLS. DO NOT PAINT. PLYWOOD TO BE INSTALLED AT 6" AFF.

2 PROVIDE TELECOMMUNICATIONS PRIMARY BONDING BUSBAR, MOUNT AT 70" AFF.

3 ALLOCATED SPACE FOR CATV SERVICE PROVIDER PROVIDED BROADBAND INDOOR DISTRIBUTION AMPLIFIER.

4 PROVIDE 24" WIDE CABLE RUNWAY. SECURE TO WALLS AND RACKS. GROUND TO PBB.

5 PROVIDE FOUR (4) 4" CONDUIT SLEEVES FOR HORIZONTAL CABLE DISTRIBUTION, CAP WITH NYLON BUSHINGS, FIRE STOP PER NFPA.

6 PROVIDE 24" WIDE CABLE RUNWAY MOUNTED VERTICALLY ON WALL. SECURE TO WALL AND FLOOR. GROUND TO PBB OR SBB.

7 3-WAY 4" CONDUIT DUCTBANK FROM MH416-4 TO BUILDING TELECOM ROOM 118, WITH THREE (3) 3" 3-DUCT FABRIC INNERDUCT INSTALLED IN ONE OF THE CONDUIT. REFER TO DETAIL A1 ON SHEET T-503. PROVIDE AND INSTALL ONE (1) NEW 12-STRAND SINGLEMODE OSP OPTICAL FIBER CABLE AND ONE (1) 50-PAIR OSP PE-39 COPPER CABLE FROM MH416-4 TO NEW FACILITY TELECOM ROOM 118 VIA NEW DUCTBANK SYSTEM, COORDINATE WITH GOVERNMENT FOR PLACING, SPLICING, TERMINATION, AND CUTOVER REQUIREMENTS.

8 1-WAY 4" CONDUIT DUCTBANK FROM BUILDING TELECOM ROOM 118 TO SERVICE PANEL LOCATION; PROVIDE ONE (1) 3" 3-DUCT FABRIC INNERDUCT INSTALLED IN ONE (1) CONDUIT. REFER TO DETAIL A4 ON SHEET T-503. PROVIDE ONE (1) 25-PAIR OSP PE-39 COPPER CABLE AND ONE (1) 12-STRAND OF SINGLE-MODE OPTICAL FIBER CABLE FROM THE TELECOM ROOM 118 TO THE SERVICE PANEL AND TERMINATE IN THE PATCH PANELS IN THE NEMA 4X ENCLOSURE.

9 PROVIDE 10" DEEP 2-POST RACK, WITH TWO (2) 3"x6" FRONT MOUNTED VERTICAL CABLE MANAGEMENTS ATTECHED TO THE FRONT OF THE RACK. EACH RACK SHALL BE FASTENED TO THE FLOOR AND GROUNDED TO PBB OR SBB.

10 BUILDING ENTRANCE TERMINAL (BET).

11 PROVIDE THREE (3) 3" CONDUITS IN BETWEEN TELECOM 118 AND TELECOM 108 FOR BACKBONE CABLE DISTRIBUTION, CAP WITH NYLON BUSHINGS, FIRE STOP PER NFPA.

12 PROVIDE THREE (3) 3" CONDUITS IN BETWEEN TELECOM 118 AND TELECOM 203 FOR BACKBONE CABLE DISTRIBUTION, CAP WITH NYLON BUSHINGS, FIRE STOP PER NFPA.

13 FIBER OPTIC 24 SC COUPLER 1 RU PATCH PANEL FOR OSP INCOMING FIBER OPTIC CABLE.

14 FIBER OPTIC 24 SC COUPLER 1 RU PATCH PANEL FOR BACKBONE FIBER OPTIC CABLE.

15 2 RU HIGH-DENSITY HORIZONTAL CABLE MANAGER.

16 50 PAIR ANGLED 110 CONNECTOR BLOCKS MOUNTED ON 89D STYLE BRACKET.

17 24-PORT 1 RU MODULAR CATEGORY 6A CABLE PATCH PANEL.

18 CABLE RUNWAY RADIUS DROP, MOUNTS TO RUNWAY CROSS MEMBER.

19 CABLE RUNWAY ELEVATION BRACKET WITH 6" STAND-OFF FROM TOP OF THE EQUIPMENT RACK.

0 2' - 0" 4' - 0" 8' - 0"

SCALE: 0' - 0 1/4" = 1' - 0"

N

APPR | DATE | DESCRIPTION | SYM

NAVFAC

REGISTERED COMMUNICATIONS DISTRIBUTION DESIGNER
Bicsi
JOSHUA L CASEY
BICSI ID# 286760
EXPIRES 12-31-23
RCDD
SEAL

IRQ WM Jordan COMPANY
~A JOINT VENTURE~

Michael Baker INTERNATIONAL
100 AIRSIDE DRIVE
MOON TOWNSHIP, PA 15108
A/E INFO

APPROVED

FOR COMMANDER NAVFAC

ACTIVITY
MARINE CORPS BASE CAMP LEJEUNE

SATISFACTORY TO DATE DD/MM/YY

DES	JLC	DRW ETH	CHK JMG
PM / DM		TOWLER / ROOT	
BRANCH HEAD		SEK	
DESIGN DIRECTOR		R.L.Stephens, Jr.	
FIRE PROTECTION		DPS	

DEPARTMENT OF THE NAVY
NAVAL FACILITIES ENGINEERING SYSTEMS COMMAND
ATLANTIC DESIGN AND CONSTRUCTION
MCB CAMP LEJEUNE

NAVAL FACILITIES ENGINEERING SYSTEMS COMMAND ATLANTIC
NORFOLK, VA
JACKSONVILLE, NC
LOGCOM CSP WAREHOUSE

TELECOMMUNICATIONS - ENLARGED PLANS

SCALE: AS NOTED
EPROJECT NO.: 1639600
CONSTR. CONTR. NO. N40085-20-C-0059
NAVFAC DRAWING NO. 14111431
SHEET 402 OF 447

T-401

DRAWFORM REVISION: 25 AUGUST 2020

P1527 FINAL SUBMISSION - 11/18/2021

PLOTTED: 11/11/2021 12:38:42 PM

FILE NAME: BIM 360:/HF PACKAGE 3/P1527 LOG COM CSP-1639600-E.rvt

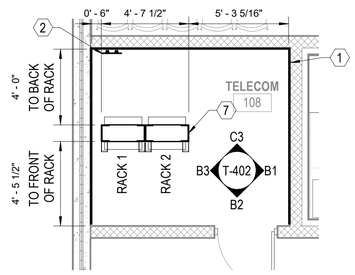

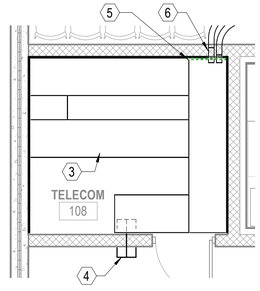

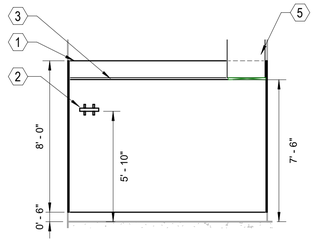

C1 TELECOM 108 ENLARGED PLAN

SCALE: 1/4" = 1'-0" (T-115)

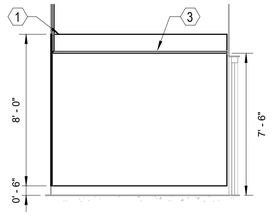

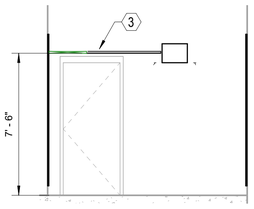

C3 TELECOM 108 NORTH WALL ELEVATION

SCALE: 1/4" = 1'-0" (T-402)

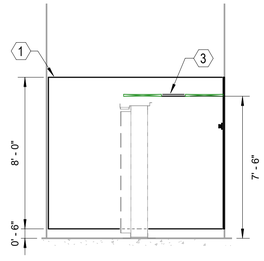

B1 TELECOM 108 EAST WALL ELEVATION

SCALE: 1/4" = 1'-0" (T-402)

B2 TELECOM 108 SOUTH WALL ELEVATION

SCALE: 1/4" = 1'-0" (T-402)

B3 TELECOM 108 WEST WALL ELEVATION

SCALE: 1/4" = 1'-0" (T-402)

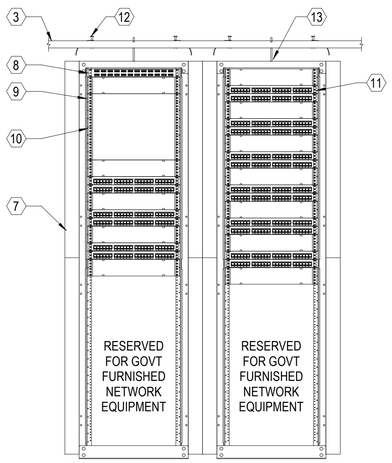

A1 TELECOM 108 RACK ELEVATION

SCALE: NTS

GENERAL NOTES

1 SEE SHEET T-001 FOR TELECOMMUNICATIONS NOTES, SYMBOLS, AND ABBREVIATIONS.

KEYNOTES

1 8' HIGH BY 3/4" THICK, AC GRADE, VOID FREE, FIRE-RATED PLYWOOD BACKBOARD COVERING A MINIMUM OF THREE (3) WALLS. DO NOT PAINT. PLYWOOD TO BE INSTALLED AT 6" AFF.
2 PROVIDE TELECOMMUNICATIONS SECONDARY BONDING BUSBAR, MOUNT AT 70" AFF
3 PROVIDE 24" WIDE CABLE RUNWAY. SECURE TO WALLS AND RACKS. GROUND TO SBB.
4 PROVIDE FOUR (4) 4" CONDUIT SLEEVES FOR HORIZONTAL CABLE DISTRIBUTION, CAP WITH NYLON BUSHINGS, FIRE STOP PER NFPA.
5 PROVIDE 24" WIDE CABLE RUNWAY MOUNTED VERTICALLY ON WALL. SECURE TO WALL AND FLOOR. GROUND TO PBB OR SBB.
6 PROVIDE THREE (3) 3" CONDUITS IN BETWEEN TELECOM 118 AND TELECOM 108 FOR BACKBONE CABLE DISTRIBUTION, CAP WITH NYLON BUSHINGS, FIRE STOP PER NFPA.
7 PROVIDE 10" DEEP 2-POST RACK, WITH TWO (2) 3"x6" FRONT MOUNTED VERTICAL CABLE MANAGEMENTS ATTECHED TO THE FRONT OF THE RACK. EACH RACK SHALL BE FASTENED TO THE FLOOR AND GROUNDED TO PBB OR SBB.
8 FIBER OPTIC 24 SC COUPLER 1 RU PATCH PANEL FOR BACKBONE FIBER OPTIC CABLE.
9 2 RU HIGH-DENSITY HORIZONTAL CABLE MANAGER.
10 50 PAIR ANGLED 110 CONNECTOR BLOCKS MOUNTED ON 89D STYLE BRACKET.
11 24-PORT 1 RU MODULAR CATEGORY 6A CABLE PATCH PANEL.
12 CABLE RUNWAY RADIUS DROP, MOUNTS TO RUNWAY CROSS MEMBER.
13 CABLE RUNWAY ELEVATION BRACKET WITH 6" STAND-OFF FROM TOP OF THE EQUIPMENT RACK.

0 2' - 0" 4' - 0" 8' - 0" N

SCALE:0' - 0 1/4" = 1' - 0"

APPR	DATE	DESCRIPTION	SYM

SEAL

Michael Baker INTERNATIONAL
100 AIRSIDE DRIVE MOON TOWNSHIP, PA 15108 A/E INFO

APPROVED

FOR COMMANDER NAVFAC

ACTIVITY
MARINE CORPS BASE CAMP LEJEUNE

SATISFACTORY TO DATE	DD/MM/YY
DES JLC	DRW ETH CHK JMG
PM / DM	TOWLER / ROOT
BRANCH HEAD	SEK
DESIGN DIRECTOR	R.L.Stephens, Jr.
FIRE PROTECTION	DPS

DEPARTMENT OF THE NAVY
NAVAL FACILITIES ENGINEERING SYSTEMS COMMAND ATLANTIC
ATLANTIC DESIGN AND CONSTRUCTION
NAVAL FACILITIES ENGINEERING SYSTEMS COMMAND ATLANTIC NORFOLK, VA
JACKSONVILLE, NC
MCB CAMP LEJEUNE
LOGCOM CSP WAREHOUSE

TELECOMMUNICATIONS - ENLARGED PLANS

SCALE:	AS NOTED
EPROJECT NO.:	1639600
CONSTR. CONTR. NO.	N40085-20-C-0059
NAVFAC DRAWING NO.	14111432
SHEET	403 OF 447

T-402

DRAWFORM REVISION: 25 AUGUST 2020

P1527 FINAL SUBMISSION - 11/18/2021

PLOTTED: 11/11/2021 12:38:45 PM

FILE NAME: BIM 360://HF PACKAGE 3/P1527 LOG COM CSP-1639600-E.rvt

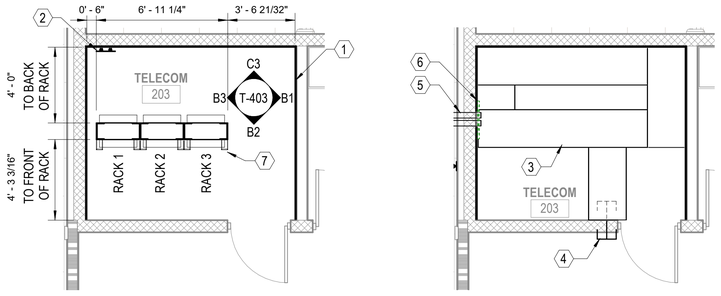

C1 TELECOM 203 ENLARGED PLAN

SCALE: 1/4" = 1'-0" (T-118)

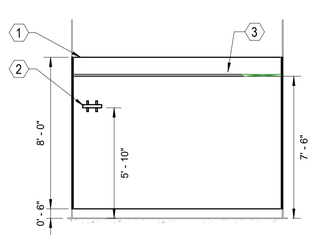

C3 TELECOM 203 NORTH WALL ELEVATION

SCALE: 1/4" = 1'-0" (T-403)

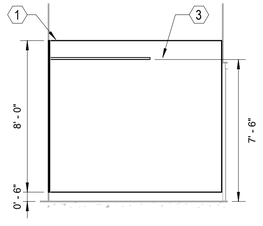

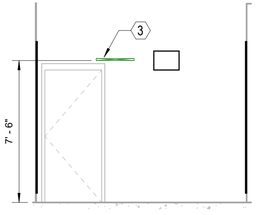

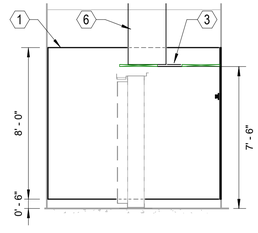

B1 TELECOM 203 EAST WALL ELEVATION

SCALE: 1/4" = 1'-0" (T-403)

B2 TELECOM 203 SOUTH WALL ELEVATION

SCALE: 1/4" = 1'-0" (T-403)

B3 TELECOM 203 WEST WALL ELEVATION

SCALE: 1/4" = 1'-0" (T-403)

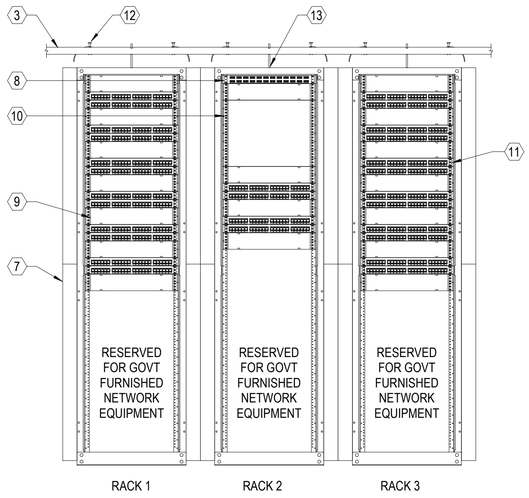

A1 TELECOM 203 RACK ELEVATION

SCALE: NTS

GENERAL NOTES

1 SEE SHEET T-001 FOR TELECOMMUNICATIONS NOTES, SYMBOLS, AND ABBREVIATIONS.

KEYNOTES

1 8' HIGH BY 3/4" THICK, AC GRADE, VOID FREE, FIRE-RATED PLYWOOD BACKBOARD COVERING A MINIMUM OF THREE (3) WALLS. DO NOT PAINT. PLYWOOD TO BE INSTALLED AT 6" AFF.
2 PROVIDE TELECOMMUNICATIONS SECONDARY BONDING BUSBAR, MOUNT AT 70" AFF
3 PROVIDE 24" WIDE CABLE RUNWAY. SECURE TO WALLS AND RACKS. GROUND TO SBB.
4 PROVIDE TEN (10) 4" CONDUIT SLEEVES FOR HORIZONTAL CABLE DISTRIBUTION, CAP WITH NYLON BUSHINGS, FIRE STOP PER NFPA.
5 PROVIDE THREE (3) 3" CONDUITS IN BETWEEN TELECOM 118 AND TELECOM 203 FOR BACKBONE CABLE DISTRIBUTION, CAP WITH NYLON BUSHINGS, FIRE STOP PER NFPA.
6 PROVIDE 24" WIDE CABLE RUNWAY MOUNTED VERTICALLY ON WALL. SECURE TO WALL AND FLOOR. GROUND TO PBB OR SBB.
7 PROVIDE 10" DEEP 2-POST RACK, WITH TWO (2) 3"x6" FRONT MOUNTED VERTICAL CABLE MANAGEMENTS ATTECHED TO THE FRONT OF THE RACK. EACH RACK SHALL BE FASTENED TO THE FLOOR AND GROUNDED TO PBB OR SBB.
8 FIBER OPTIC 24 SC COUPLER 1 RU PATCH PANEL FOR BACKBONE FIBER OPTIC CABLE.
9 2 RU HIGH-DENSITY HORIZONTAL CABLE MANAGER.
10 50 PAIR ANGLED 110 CONNECTOR BLOCKS MOUNTED ON 89D STYLE BRACKET.
11 24-PORT 1 RU MODULAR CATEGORY 6A CABLE PATCH PANEL.
12 CABLE RUNWAY RADIUS DROP, MOUNTS TO RUNWAY CROSS MEMBER.
13 CABLE RUNWAY ELEVATION BRACKET WITH 6" STAND-OFF FROM TOP OF THE EQUIPMENT RACK.

0 2' - 0" 4' - 0" 8' - 0"
SCALE: 0' - 0 1/4" = 1' - 0"

N

APPR	DATE	DESCRIPTION	SYM

NAVFAC

REGISTERED COMMUNICATIONS DISTRIBUTION DESIGNER
BICSI
JOSHUA L CASEY
BICSI ID# 286760
EXPIRES 12-31-23
RCDD
SEAL

IRQ WM Jordan COMPANY – A JOINT VENTURE –

Michael Baker INTERNATIONAL
100 AIRSIDE DRIVE
MOON TOWNSHIP, PA 15108
A/E INFO

APPROVED
FOR COMMANDER NAVFAC

ACTIVITY
MARINE CORPS BASE CAMP LEJEUNE

SATISFACTORY TO DATE	DD/MM/YY
DES JLC	DRW ETH CHK JMG
PM / DM	TOWLER / ROOT
BRANCH HEAD	SEK
DESIGN DIRECTOR	R.L.Stephens, Jr.
FIRE PROTECTION	DPS

DEPARTMENT OF THE NAVY
NAVAL FACILITIES ENGINEERING SYSTEMS COMMAND ATLANTIC
ATLANTIC DESIGN AND CONSTRUCTION
MCB CAMP LEJEUNE

NAVAL FACILITIES ENGINEERING SYSTEMS COMMAND ATLANTIC
NORFOLK, VA
JACKSONVILLE, NC
LOGCOM CSP WAREHOUSE

TELECOMMUNICATIONS - ENLARGED PLANS

SCALE:	AS NOTED
EPROJECT NO.:	1639600
CONSTR. CONTR. NO.	N40085-20-C-0059
NAVFAC DRAWING NO.	14111433
SHEET	404 OF 447

T-403

DRAWFORM REVISION: 25 AUGUST 2020

P1527 FINAL SUBMISSION - 11/18/2021

PLOTTED: 11/11/2021 12:38:48 PM

FILE NAME: BIM 360://HF PACKAGE 3/P1527 LOG COM CSP-1639600-E.rvt

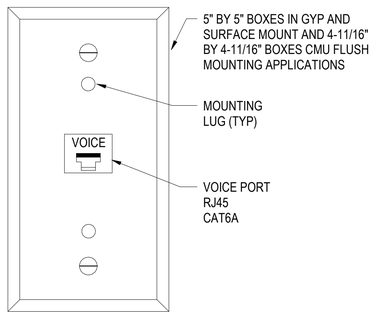

C1 WALL PHONE OUTLET

SCALE: NTS

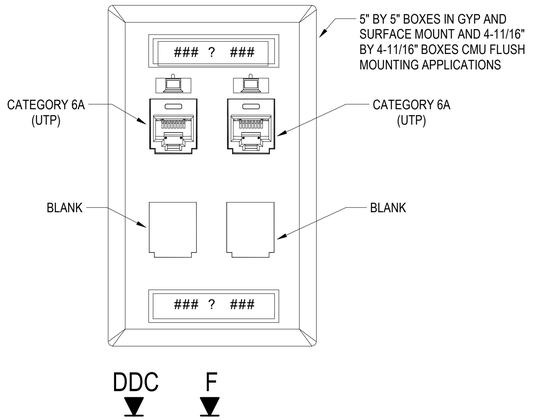

C2 TELECOMMUNICATIONS DUAL OUTLET

SCALE: NTS

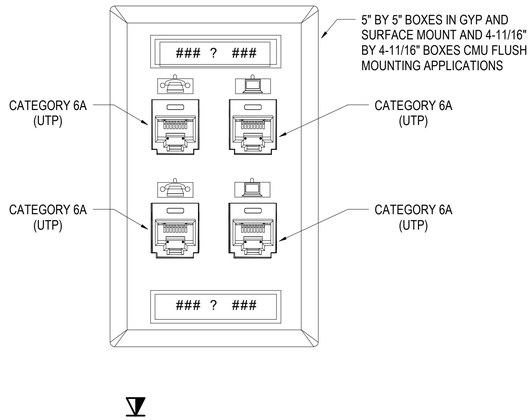

C3 TYPICAL DATA OUTLET DETAIL

SCALE: NTS

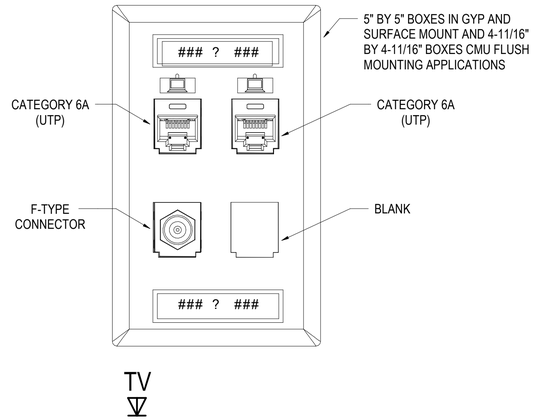

C4 TYPICAL CATV OUTLET

SCALE: NTS

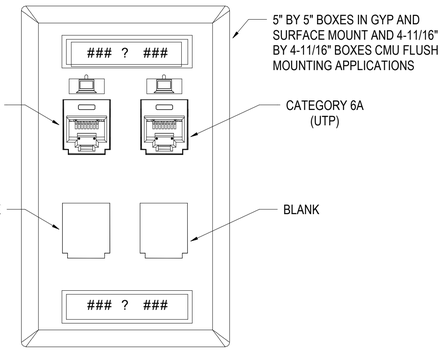

B1 WAP ICT OUTLET FOR ENCLOSURE

SCALE: NTS

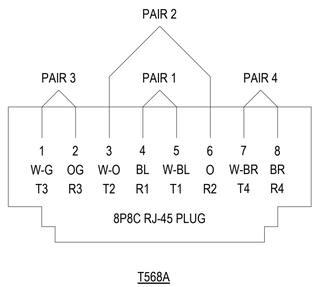

A1 TELECOMMUNICATIONS T568A JACK WIRING DIAGRAM

SCALE: NTS

NOTE:
FOR LABELING PURPOSES ONLY.

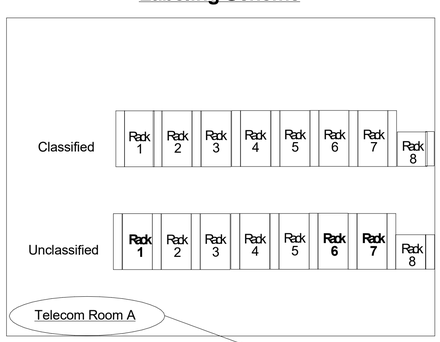

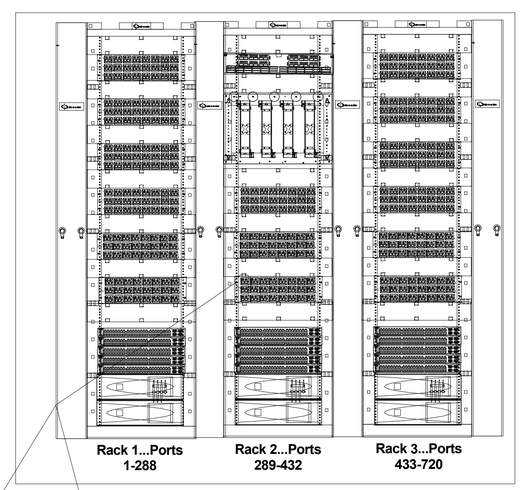

385 A 386

A – identifies Telecom Room

All labels are white
Siemon P/N Ct-FP-LBL-104
W/ Printed Color
U - Green – Unclassified
C - Red – Classified
T - Grey –Top Secret

385 - identifies Patch Panel and port

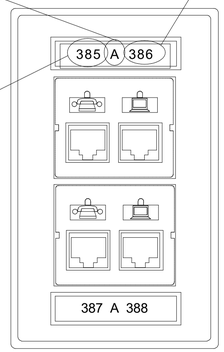

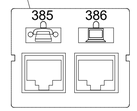

For Classified network

C385 A C386

For top Secret network

T385 A T386

A3 DATA OUTLET LABELING DETAIL

SCALE: NTS

APPR | DATE | DESCRIPTION | SYM

SEAL

REGISTERED COMMUNICATIONS DISTRIBUTION DESIGNER
Bicsi
JOSHUA L CASEY
BICSI ID# 286760
EXPIRES 12-31-23
RCDD

RQ W.M. Jordan COMPANY – A JOINT VENTURE –

Michael Baker INTERNATIONAL
100 AIRSIDE DRIVE
MOON TOWNSHIP, PA 15108
A/E INFO

APPROVED

FOR COMMANDER NAVFAC

ACTIVITY
MARINE CORPS BASE
CAMP LEJEUNE

SATISFACTORY TO DATE	DD/MM/YY
DES JLC	DRW ETH CHK JMG
PM / DM	TOWLER / ROOT
BRANCH HEAD	SEK
DESIGN DIRECTOR	R.L.Stephens, Jr.
FIRE PROTECTION	DPS

DEPARTMENT OF THE NAVY
NAVAL FACILITIES ENGINEERING SYSTEMS COMMAND
ATLANTIC DESIGN AND CONSTRUCTION
NAVAL FACILITIES ENGINEERING SYSTEMS COMMAND ATLANTIC
NORFOLK, VA
MCB CAMP LEJEUNE
JACKSONVILLE, NC
LOGCOM CSP WAREHOUSE
TELECOMMUNICATIONS - DETAILS

SCALE:	AS NOTED
EPROJECT NO.:	1639600
CONSTR. CONTR. NO.	N40085-20-C-0059
NAVFAC DRAWING NO.	14111434
SHEET	405 OF 447

T-501

DRAWFORM REVISION: 25 AUGUST 2020

P1527 FINAL SUBMISSION - 11/18/2021

PLOTTED: 11/11/2021 12:38:50 PM

FILE NAME: BM 360 /HF PACKAGE 3\P1527 LOG COM CSP-1639600-E.rvt

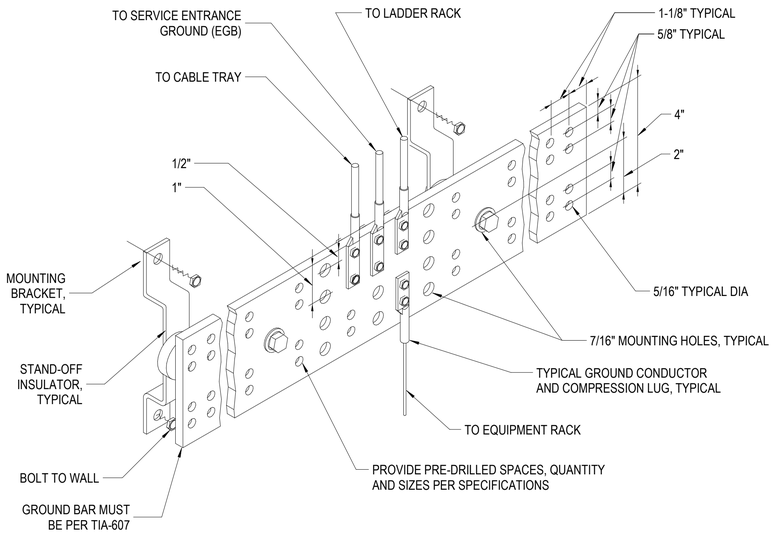

NOTE:
PROVIDE TELECOMMUNICATIONS BONDING CONDUCTOR SIZE PER TIA-607 AND 26 20 00 SPECIFICATIONS.
PLACE METAL SPLIT BOLT ON THE OUTSIDE PORTION OF CABLE TRAY TO ELIMINATE ANY SHARP EDGES WITHIN CABLE TRAY AND POSSIBLE DAMAGING OF CABLES.

C1 TELECOMMUNICATIONS PRIMARY BOUNDING BUSBAR (PBB)

SCALE: NTS

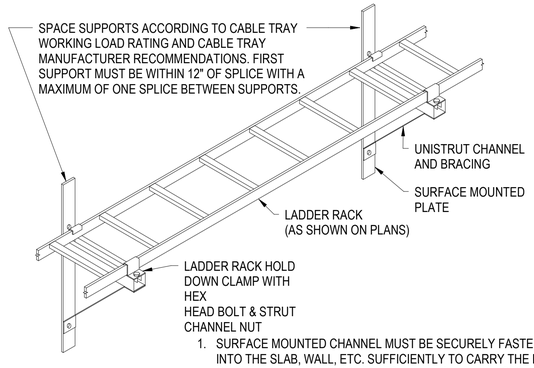

1. SURFACE MOUNTED CHANNEL MUST BE SECURELY FASTENED INTO THE SLAB, WALL, ETC. SUFFICIENTLY TO CARRY THE LOAD OF THE TRAY AND ITS CONTENTS WITH A SAFETY FACTOR OF 3.
2. ALL CHANNEL, TRAY FITTINGS AND ACCESSORIES ARE TO BE GALVANIZED.

C3 LADDER TYPE CABLE RUNWAY WALL MOUNTING DETAIL

SCALE: NTS

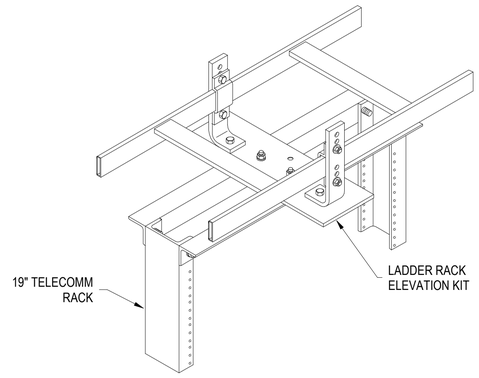

C4 LADDER TYPE CABLE RUNWAY RACK MOUNTING

SCALE: NTS

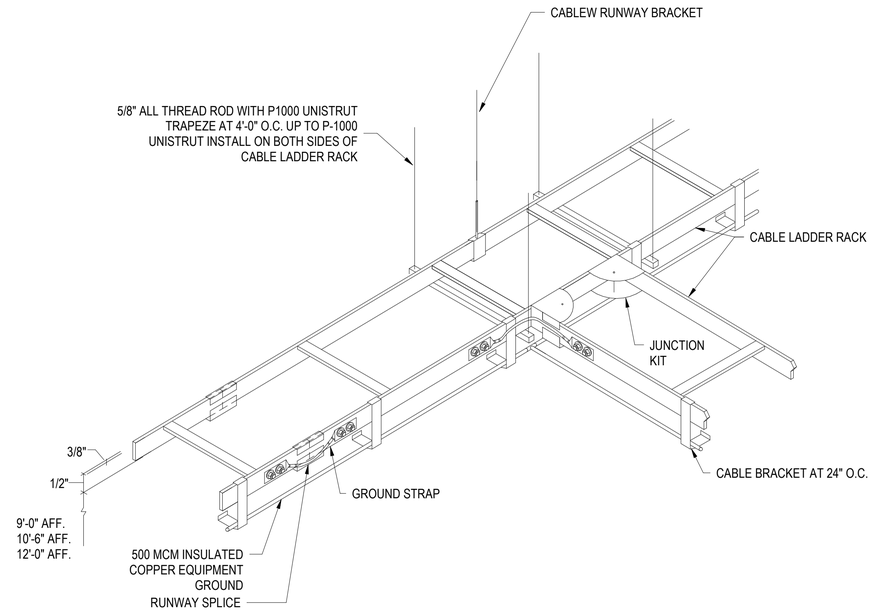

A1 LADDER TYPE CABLE TRAY

SCALE: NTS

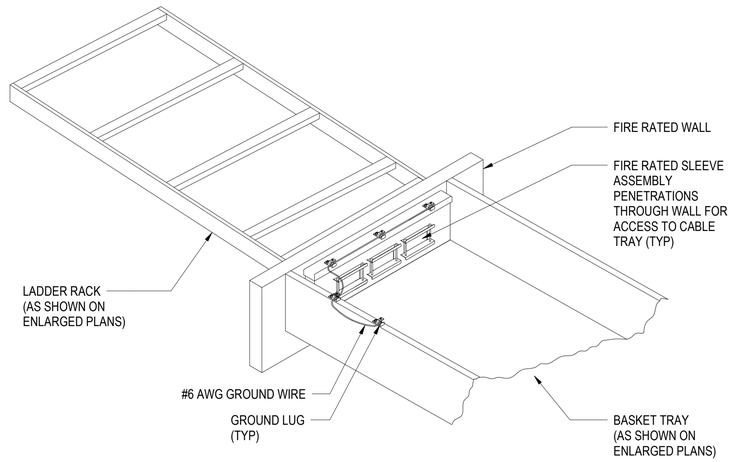

1. SURFACE MOUNTED CHANNEL MUST BE SECURELY FASTENED INTO THE SLAB, WALL, ETC. SUFFICIENTLY TO CARRY THE LOAD OF THE TRAY AND ITS CONTENTS WITH A SAFETY FACTOR OF 3.
2. ALL CHANNEL, TRAY FITTINGS, AND ACCESSORIES ARE TO BE GALVANIZED.

A3 BASKET CABLE TRAY TO LADDER TYPE CABLE RUNWAY WALL PENETRATION

SCALE: NTS

NO.	DESCRIPTION	DATE	APPR

NAVFAC

BICSI REGISTERED COMMUNICATIONS DISTRIBUTION DESIGNER
JOSHUA L CASEY
BICSI ID# 286760
EXPIRES 12-31-23
RCDD
SEAL

IRQ WM Jordan COMPANY – A JOINT VENTURE –

Michael Baker INTERNATIONAL
100 AIRSIDE DRIVE
MOON TOWNSHIP, PA 15108
A/E INFO

APPROVED
FOR COMMANDER NAVFAC

ACTIVITY
MARINE CORPS BASE CAMP LEJEUNE

SATISFACTORY TO DATE DD/MM/YY

DES	JLC	DRW	ETH	CHK	JMG
PM / DM			TOWLER / ROOT		
BRANCH HEAD			SEK		
DESIGN DIRECTOR			R.L.Stephens, Jr.		
FIRE PROTECTION			DPS		

DEPARTMENT OF THE NAVY
NAVAL FACILITIES ENGINEERING SYSTEMS COMMAND
ATLANTIC DESIGN AND CONSTRUCTION
MCB CAMP LEJEUNE
NAVAL FACILITIES ENGINEERING SYSTEMS COMMAND ATLANTIC
NORFOLK, VA
JACKSONVILLE, NC
LOGCOM CSP WAREHOUSE

TELECOMMUNICATIONS - DETAILS

SCALE:	AS NOTED
EPROJECT NO.:	1639600
CONSTR. CONTR. NO.	N40085-20-C-0059
NAVFAC DRAWING NO.	14111435
SHEET	406 OF 447

T-502

DRAWFORM REVISION: 25 AUGUST 2020

P1527 FINAL SUBMISSION - 11/18/2021

PLOTTED: 11/11/2021 12:38:51 PM

FILE NAME: BIM 360://HF PACKAGE 3/P1527 LOG COM CSP-1639600-E.rvt

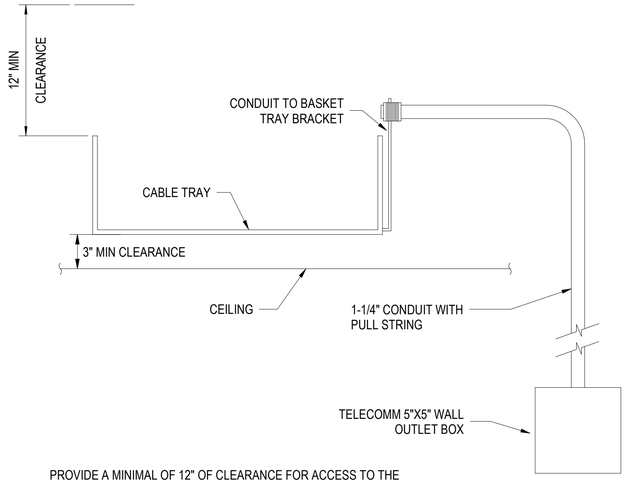

C1 BASKET CABLE TRAY TO OUTLET CONDUIT TRANSITION

SCALE: NTS

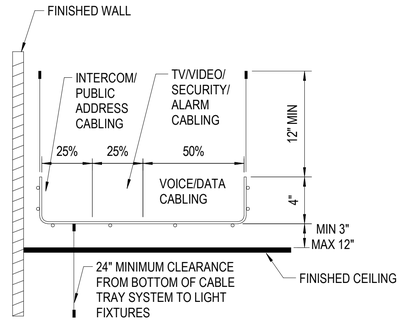

C3 CABLE TRAY ORGANIZATION

SCALE: NTS

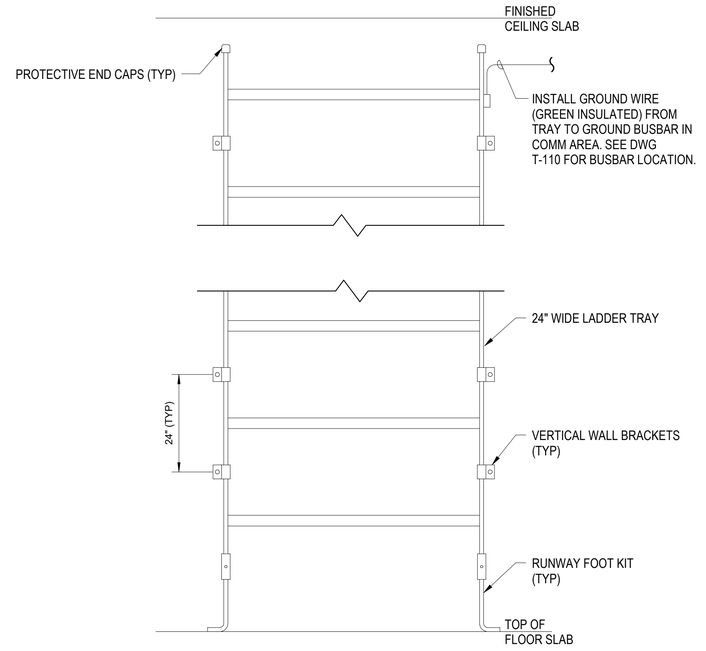

C4 VERTICAL TELECOMMUNICATIONS CABLE RUNWAY

SCALE: NTS

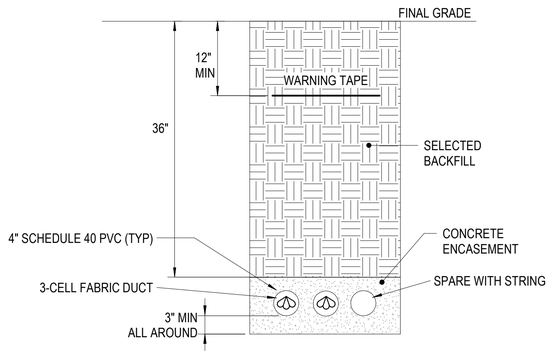

A1 3-WAY CONCRETE ENCASED DUCTBANK

SCALE: NTS

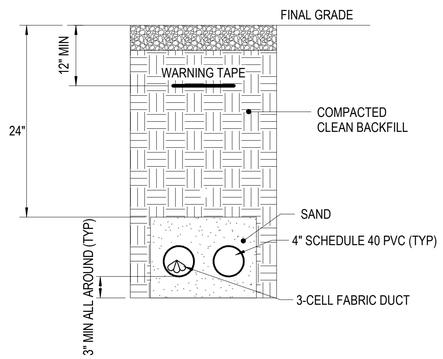

A2 2-WAY 4" CONDUIT CONCRETE ENCASED DUCTBANK

SCALE: NTS

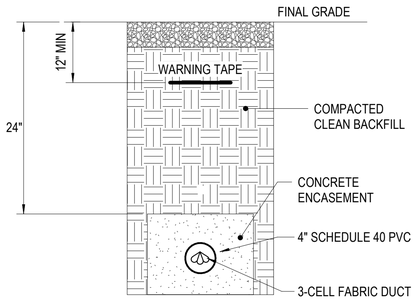

A4 1-WAY 4" CONDUIT CONCRETE ENCASED DUCTBANK

SCALE: NTS

APPR	
DATE	
DESCRIPTION	
SYM	

NAVFAC

REGISTERED COMMUNICATIONS DISTRIBUTION DESIGNER
Bicsi
JOSHUA L CASEY
BICSI ID# 286760
EXPIRES 12-31-23
RCDD
SEAL

IRQ WM Jordan COMPANY – A JOINT VENTURE –

Michael Baker INTERNATIONAL
100 AIRSIDE DRIVE
MOON TOWNSHIP, PA 15108
A/E INFO

APPROVED

FOR COMMANDER NAVFAC

ACTIVITY: MARINE CORPS BASE CAMP LEJEUNE

SATISFACTORY TO DATE: DD/MM/YY

DES	DRW	CHK
JLC	ETH	JMG

PM / DM	TOWLER / ROOT
BRANCH HEAD	SEK
DESIGN DIRECTOR	R.L.Stephens, Jr.
FIRE PROTECTION	DPS

DEPARTMENT OF THE NAVY
NAVAL FACILITIES ENGINEERING SYSTEMS COMMAND
ATLANTIC DESIGN AND CONSTRUCTION
NAVAL FACILITIES ENGINEERING SYSTEMS COMMAND ATLANTIC
NORFOLK, VA
MCB CAMP LEJEUNE
JACKSONVILLE, NC
LOGCOM CSP WAREHOUSE
TELECOMMUNICATIONS - DETAILS

SCALE:	AS NOTED
EPROJECT NO.:	1639600
CONSTR. CONTR. NO.	N40085-20-C-0059
NAVFAC DRAWING NO.	14111436
SHEET	407 OF 447

T-503

DRAWFORM REVISION: 25 AUGUST 2020

P1527 FINAL SUBMISSION - 11/18/2021

PLOTTED: 11/11/2021 12:38:52 PM

FILE NAME: BIM 360://HF PACKAGE 3/P1527 LOG COM CSP-1639600-E.rvt

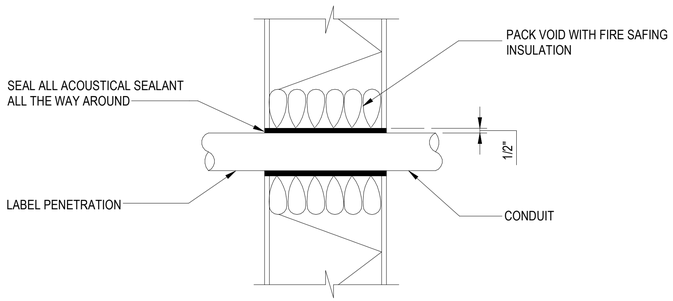

C1 TYPICAL THROUGH WALL CONDUIT PENETRATION

SCALE: NTS

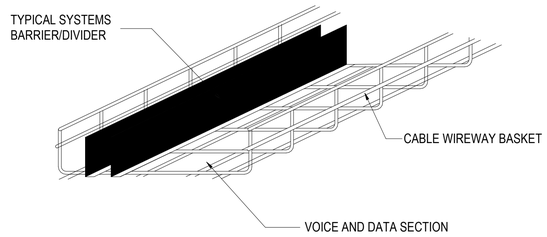

NOTES:

1. PRIMARY PATHWAY CABLE SUPPORTS ARE TO BE USED AS NECESSARY FOR CABLES TO COMPLY WITH THE EIA/TIA REQUIREMENTS FOR CABLE SUPPORT. OTHER ALTERNATIVES MUST BE SUBMITTED TO THE ENGINEER FOR APPROVAL PRIOR TO INSTALLATION.
2. CABLE WIREWAYS MUST BE MOUNTED ABOVE ACOUSTICAL TILE CEILING IN CORRIDORS. CABLE WIREWAY MUST BE SUPPORTED WITH METAL SLOTTED CHANNEL (STRUT) AND THREADED RODS IN A TRAPEZE CONFIGURATION. THREADED RODS MUST BE SECURELY FASTENED TO STRUCTURE ABOVE. SUPPORT CABLE WIREWAY AT INTERVALS AS REQUIRED AND RECOMMENDED BY THE CABLE WIREWAY MANUFACTURER BASED ON MAXIMUM CAPACITY OF CABLES IN WIREWAY.
3. REFER TO MANUFACTURER'S RECOMMENDATIONS FOR MAX LOADING, APPLICATION REQUIREMENTS, AND SECURING TO STRUCTURE.
4. CABLE SUPPORTS MUST BE SPECIFICALLY MANUFACTURED TO SUPPORT HIGH SPEED COMMUNICATIONS CABLES.
5. WIRE BASKET DIVIDERS ARE TO BE USED WHERE DIFFERENT SYSTEM CABLING SEGREGATION IS REQUIRED.

C3 CABLE - WIRE BASKET WITH DIVIDER (PRIMARY PATHWAY)

SCALE: NTS

APPR	DATE	DESCRIPTION	SYM

NAVFAC

REGISTERED COMMUNICATIONS DISTRIBUTION DESIGNER
Bicsi
JOSHUA L CASEY
BICSI ID# 286760
EXPIRES 12-31-23
RCDD
SEAL

IRQ W.M. Jordan COMPANY – A JOINT VENTURE –

Michael Baker INTERNATIONAL
100 AIRSIDE DRIVE
MOON TOWNSHIP, PA 15108
A/E INFO

APPROVED

FOR COMMANDER NAVFAC

ACTIVITY
MARINE CORPS BASE CAMP LEJEUNE

SATISFACTORY TO DATE DD/MM/YY

DES	DRW	CHK
JLC	JLC	JMG

PM / DM	TOWLER / ROOT
BRANCH HEAD	SEK
DESIGN DIRECTOR	R.L.Stephens, Jr.
FIRE PROTECTION	DPS

DEPARTMENT OF THE NAVY
NAVAL FACILITIES ENGINEERING SYSTEMS COMMAND ATLANTIC
ATLANTIC DESIGN AND CONSTRUCTION
MCB CAMP LEJEUNE
NAVAL FACILITIES ENGINEERING SYSTEMS COMMAND
NORFOLK, VA
JACKSONVILLE, NC
LOGCOM CSP WAREHOUSE
TELECOMMUNICATIONS - DETAILS

SCALE:	AS NOTED
EPROJECT NO.:	1639600
CONSTR. CONTR. NO.	N40085-20-C-0059
NAVFAC DRAWING NO.	14111437
SHEET	408 OF 447

T-504

DRAWFORM REVISION: 25 AUGUST 2020

P1527 FINAL SUBMISSION - 11/18/2021

PLOTTED: 11/11/2021 12:38:52 PM

FILE NAME: BIM 360://HF PACKAGE 3/P1527 LOG COM CSP-1639600-E.rvt

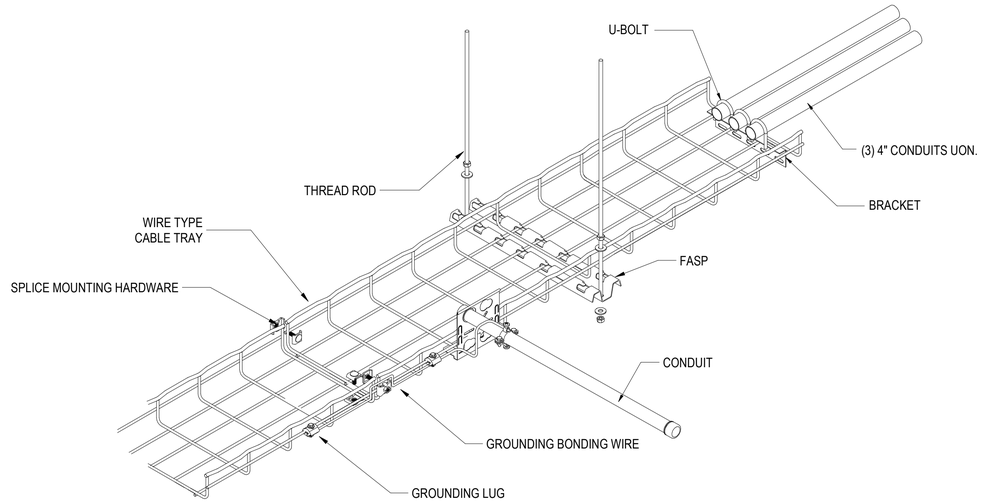

NOTE: THE CONDUIT TO CABLE TRAY TRANSITION MUST BE OFFSET 3-4" FROM TRAY TO SUPPORT FILL CAPACITY WITHOUT INTRODUCING BENDING OF CABLE ENTERING THE TRAY.

C1 CABLE TRAY - STANDARD SUPPORT

SCALE: NTS

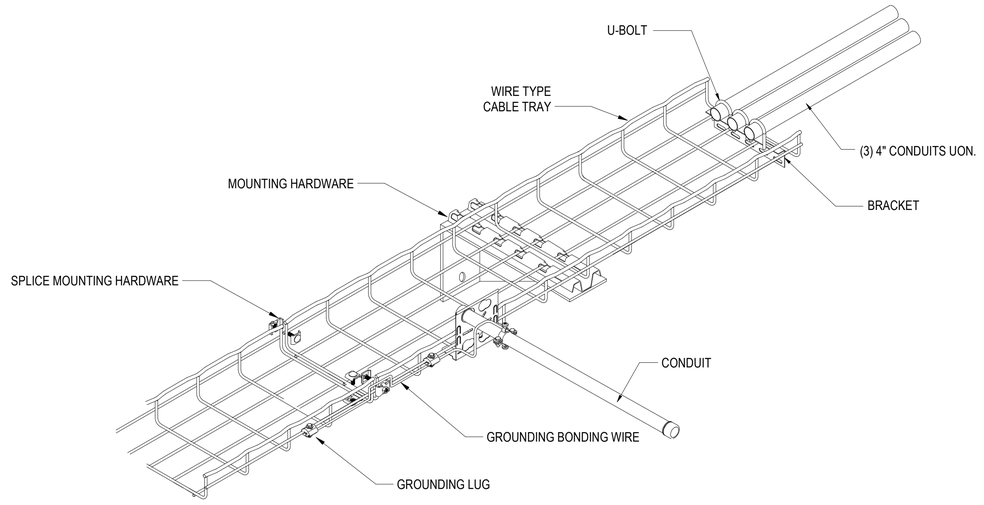

NOTE: THE CONDUIT TO CABLE TRAY TRANSITION MUST BE OFFSET 3-4" FROM TRAY TO SUPPORT FILL CAPACITY WITHOUT INTRODUCING BENDING OF CABLE ENTERING THE TRAY.

C3 CABLE TRAY - WALL MOUNTING

SCALE: NTS

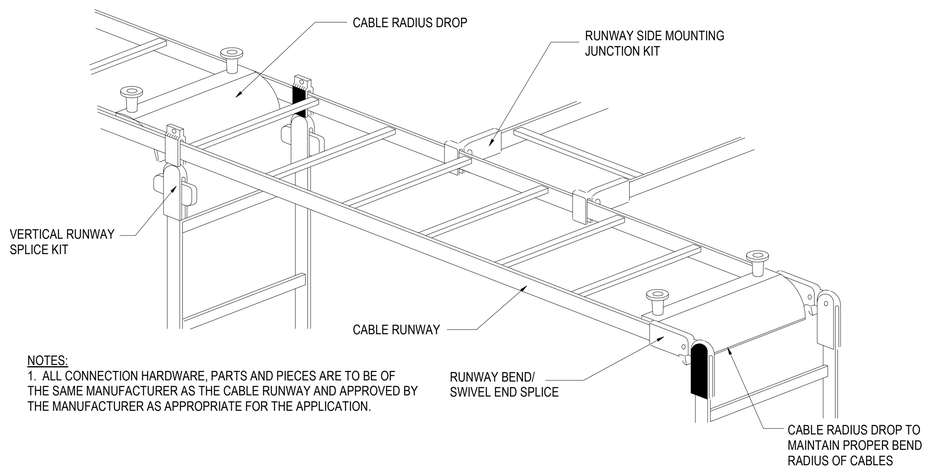

NOTES:
1. ALL CONNECTION HARDWARE, PARTS AND PIECES ARE TO BE OF THE SAME MANUFACTURER AS THE CABLE RUNWAY AND APPROVED BY THE MANUFACTURER AS APPROPRIATE FOR THE APPLICATION.

A1 TYPICAL RUNWAY CONNECTIONS DETAIL

SCALE: NTS

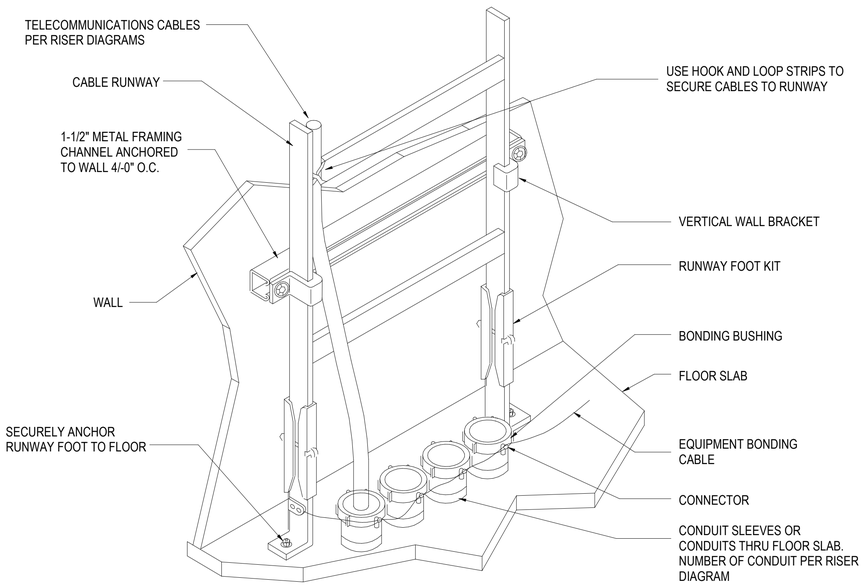

A3 CABLE - VERTICAL RUNWAY MOUNTING

SCALE: NTS

NO.	DATE	DESCRIPTION	APPR

NAVFAC

REGISTERED COMMUNICATIONS DISTRIBUTION DESIGNER
Bicsi
JOSHUA L CASEY
BICSI ID# 286760
EXPIRES 12-31-23
RCDD
SEAL

IRQ W.M. Jordan COMPANY – A JOINT VENTURE –

Michael Baker INTERNATIONAL
100 AIRSIDE DRIVE
MOON TOWNSHIP, PA 15108
A/E INFO

APPROVED
FOR COMMANDER NAVFAC

ACTIVITY
MARINE CORPS BASE
CAMP LEJEUNE

SATISFACTORY TO DATE DD/MM/YY
DES JLC | DRW JLC | CHK JMG
PM / DM TOWLER / ROOT
BRANCH HEAD SEK
DESIGN DIRECTOR R.L.Stephens, Jr.
FIRE PROTECTION DPS

DEPARTMENT OF THE NAVY
NAVAL FACILITIES ENGINEERING SYSTEMS COMMAND
ATLANTIC DESIGN AND CONSTRUCTION
MCB CAMP LEJEUNE

NAVAL FACILITIES ENGINEERING SYSTEMS COMMAND ATLANTIC
NORFOLK, VA
JACKSONVILLE, NC
LOGCOM CSP WAREHOUSE

TELECOMMUNICATIONS - DETAILS

SCALE: AS NOTED
EPROJECT NO.: 1639600
CONSTR. CONTR. NO. N40085-20-C-0059
NAVFAC DRAWING NO. 14111438
SHEET 409 OF 447

T-505

DRAWFORM REVISION: 25 AUGUST 2020

P1527 FINAL SUBMISSION - 11/18/2021

PLOTTED: 11/11/2021 12:38:54 PM

FILE NAME: BIM 360://HF PACKAGE 3/P1527 LOG COM CSP-1639600-E.rvt

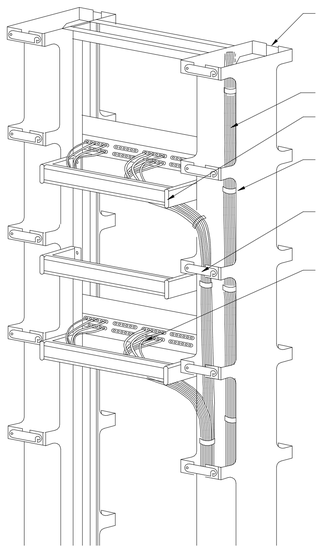

NOTES:
1. PROVIDE CABLE WRAPS ON MINIMUM 12" CENTERS IN VERTICAL WIRE MANAGERS. CABLES MUST BE BUNDLED INTO LOGICAL GROUPS.
2. CABLES MUST BE SECURED TO STRAIN RELIEF BRACKET
3. ATTACH CABLE LABEL BETWEEN STRAIN RELIED BRACKET AND PATCH PANEL SO THE LABEL CAN BE READ AND CORRELATED TO PATCH PANEL PORT WITHOUT UNBUNDLING ADJACENT CABLES.
4. CONTRACTOR MUST ROUTE ALL CABLE BUNDLES TO AVOID SHARP BENDS, AND PINCH POINTS AND ALLOW LATCH OPERATION ON VERTICAL WIRE MANAGER.
5. PROVIDE PROPER QUANTITY OF PATCH PANELS.
6. STRAIN RELIEF BRACKET MUST BE A MINIMUM OF 6" BEHIND PATCH PANEL.

C1 CABLE STRAIN RELIEF DETAIL

SCALE: NTS

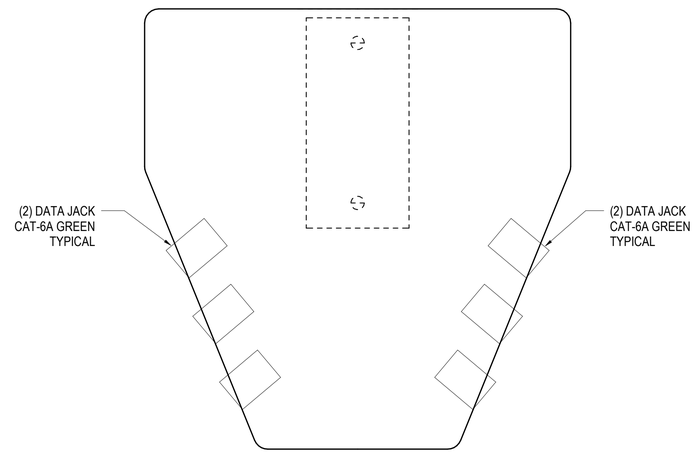

C3 MULTI-USER TELECOM OUTLET ASSEMBLY (MUTOA), 12-PORT

SCALE: NTS

APPR	DATE	DESCRIPTION	SYM

REGISTERED COMMUNICATIONS DISTRIBUTION DESIGNER
Bicsi
JOSHUA L CASEY
BICSI ID# 286760
EXPIRES 12-31-23
RCDD
SEAL

IRQ W.M. Jordan COMPANY – A JOINT VENTURE –

Michael Baker INTERNATIONAL
100 AIRSIDE DRIVE
MOON TOWNSHIP, PA 15108
A/E INFO

APPROVED

FOR COMMANDER NAVFAC

ACTIVITY
MARINE CORPS BASE CAMP LEJEUNE

SATISFACTORY TO DATE DD/MM/YY

DES	DRW	CHK
JLC	JLC	JMG

PM / DM: TOWLER / ROOT
BRANCH HEAD: SEK
DESIGN DIRECTOR: R.L.Stephens, Jr.
FIRE PROTECTION: DPS

DEPARTMENT OF THE NAVY
NAVAL FACILITIES ENGINEERING SYSTEMS COMMAND ATLANTIC
ATLANTIC DESIGN AND CONSTRUCTION
MCB CAMP LEJEUNE

NAVAL FACILITIES ENGINEERING SYSTEMS COMMAND ATLANTIC
NORFOLK, VA
JACKSONVILLE, NC
LOGCOM CSP WAREHOUSE

TELECOMMUNICATIONS - DETAILS

SCALE: AS NOTED
EPROJECT NO.: 1639600
CONSTR. CONTR. NO. N40085-20-C-0059
NAVFAC DRAWING NO.: 14111439
SHEET 410 OF 447

T-506

DRAWFORM REVISION: 25 AUGUST 2020

P1527 FINAL SUBMISSION - 11/18/2021

PLOTTED: 11/11/2021 12:38:55 PM

FILE NAME: BIM 360://AIF PACKAGE 3/P1527 LOG COM CSP-1639600-E.rvt

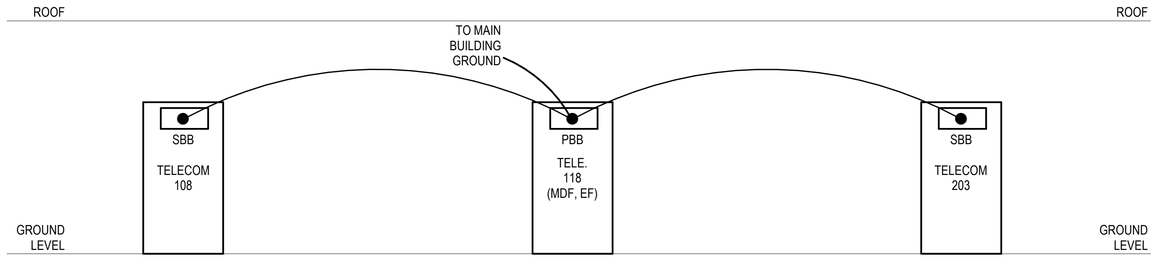

C1 TELECOM GROUNDING LOGICAL DIAGRAM

SCALE: NTS

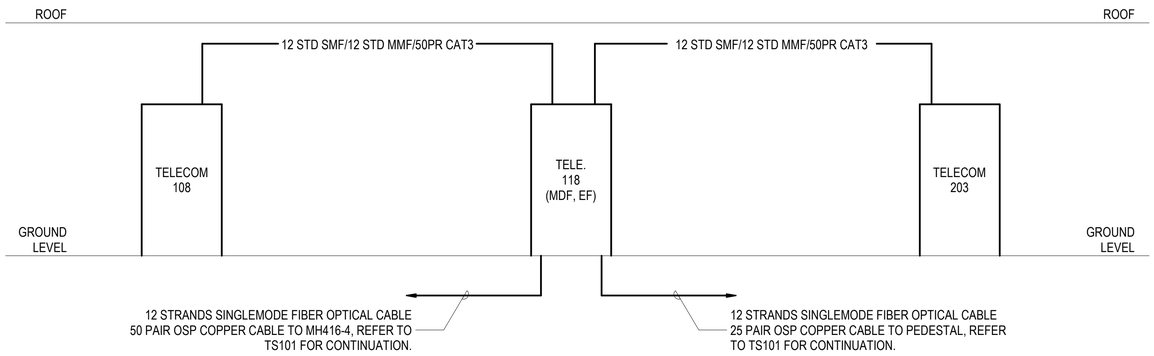

B1 TELECOM BACKBONE CABLING LOGICAL DIAGRAM

SCALE: NTS

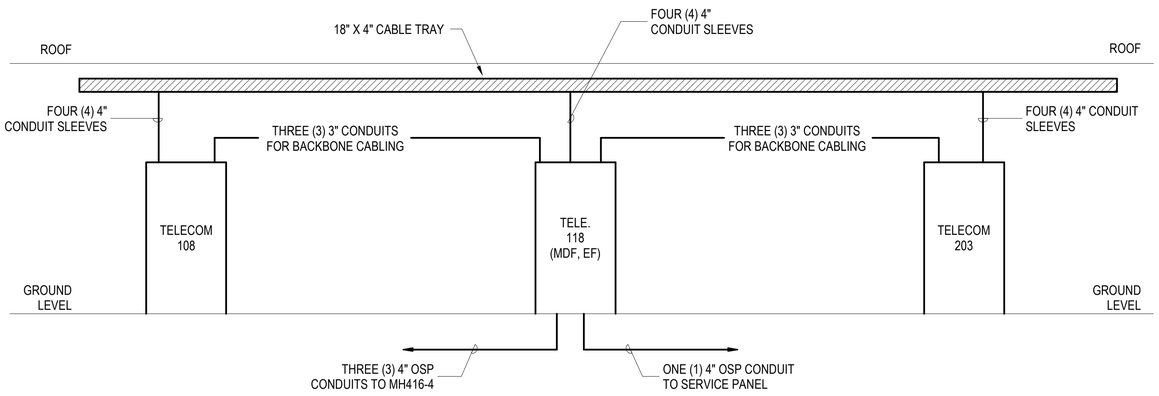

A1 TELECOM PATHWAY LOGICAL DIAGRAM

SCALE: NTS

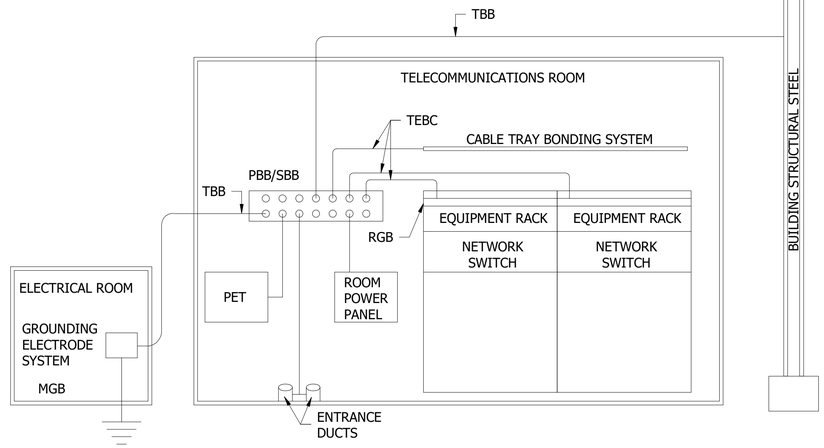

B3 TYPICAL TELECOMMUNICATIONS ROOM GROUNDING DIAGRAM

SCALE: 6" = 1'-0"

ANSI/TIA-607-C TBB CONDUCTOR SIZE CHART	
TBB/GE LINEAR LENGTH (FEET)	AWG #
LESS THAN 13	6
14 - 20	4
21 - 26	3
27 - 33	2
34 - 41	1
42 - 52	1/0
53 - 66	2/0
67 - 84	3/0
85 - 105	4/0
106 - 125	250 KCMIL
126 - 150	300 KCMIL
151 - 175	350 KCMIL
176 - 250	500 KCMIL
251 - 300	600 KCMIL
GREATER THAN 301	750 KCMIL

APPR | DATE | DESCRIPTION | SYM

NAVFAC

REGISTERED COMMUNICATIONS DISTRIBUTION DESIGNER
Bicsi
JOSHUA L CASEY
BICSI ID# 286760
EXPIRES 12-31-23
RCDD
SEAL

W.M. Jordan COMPANY – A JOINT VENTURE –

Michael Baker INTERNATIONAL
100 AIRSIDE DRIVE
MOON TOWNSHIP, PA 15108
A/E INFO

APPROVED
FOR COMMANDER NAVFAC
ACTIVITY
MARINE CORPS BASE CAMP LEJEUNE
SATISFACTORY TO DATE DD/MM/YY
DES JLC | DRW ETH | CHK JMG
PM / DM TOWLER / ROOT
BRANCH HEAD SEK
DESIGN DIRECTOR R.L.Stephens, Jr.
FIRE PROTECTION DPS

DEPARTMENT OF THE NAVY
NAVAL FACILITIES ENGINEERING SYSTEMS COMMAND
ATLANTIC DESIGN AND CONSTRUCTION
MCB CAMP LEJEUNE
NAVAL FACILITIES ENGINEERING SYSTEMS COMMAND ATLANTIC
NORFOLK, VA
JACKSONVILLE, NC
LOGCOM CSP WAREHOUSE
TELECOMMUNICATIONS - DIAGRAMS

SCALE: AS NOTED
EPROJECT NO.: 1639600
CONSTR. CONTR. NO. N40085-20-C-0059
NAVFAC DRAWING NO. 14111440
SHEET 411 OF 447

T-601

DRAWFORM REVISION: 25 AUGUST 2020

P1527 FINAL SUBMISSION - 11/18/2021

PLOTTED: 11/11/2021 12:38:56 PM

FILE NAME: BIM 360://HF PACKAGE 3/P1527 LOG COM CSP-1639600-E.rvt

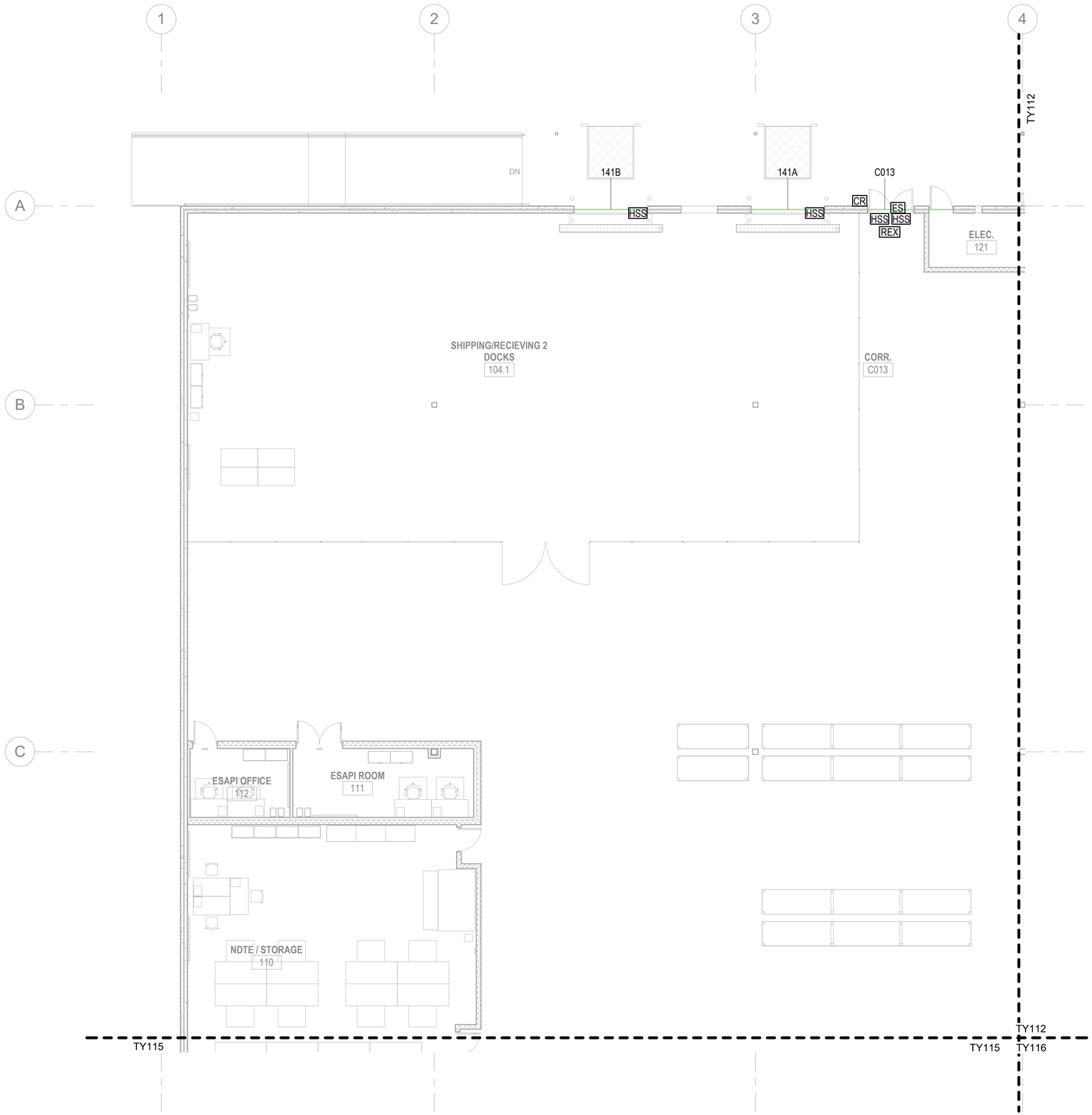

A1 SECURITY - FIRST FLOOR PLAN - AREA A

SCALE: 1/8" = 1'-0"

GENERAL NOTES

1 SEE SHEET T-001 FOR TELECOMMUNICATIONS NOTES, SYMBOLS, AND ABBREVIATIONS.

2 ALL ACCESS CONTROL, VIDEO SURVEILLANCE AND INTRUSION DETECTION IS GOVERNMENT FURNISHED AND GOVERNMENT INSTALLED. PROVIDE ONLY CONDUITS, BACK BOXES AND PULL STRINGS AT LOCATIONS INDICATED ON PLANS.

KEYNOTES

KEYPLAN

A	B	C	D
E	F	G	H

0 4' - 0" 8' - 0" 16' - 0" N

SCALE:0' - 0 1/8" = 1' - 0"

APPR | DATE | DESCRIPTION | SYM

REGISTERED COMMUNICATIONS DISTRIBUTION DESIGNER
Bicsi
JOSHUA L CASEY
BICSI ID# 286760
EXPIRES 12-31-23
RCDD
SEAL

IRQ W.M. Jordan COMPANY – A JOINT VENTURE –

Michael Baker INTERNATIONAL
100 AIRSIDE DRIVE
MOON TOWNSHIP, PA 15108 A/E INFO

APPROVED

FOR COMMANDER NAVFAC

ACTIVITY
MARINE CORPS BASE
CAMP LEJEUNE

SATISFACTORY TO DATE DD/MM/YY

DES JLC | DRW ETH | CHK JMG

PM / DM TOWLER / ROOT

BRANCH HEAD SEK

DESIGN DIRECTOR R.L.Stephens, Jr.

FIRE PROTECTION DPS

DEPARTMENT OF THE NAVY
NAVAL FACILITIES ENGINEERING SYSTEMS COMMAND ATLANTIC
ATLANTIC DESIGN AND CONSTRUCTION
NAVAL FACILITIES ENGINEERING SYSTEMS COMMAND ATLANTIC
NORFOLK, VA
MCB CAMP LEJEUNE
JACKSONVILLE, NC
LOGCOM CSP WAREHOUSE
SECURITY - FIRST FLOOR PLAN - AREA A

SCALE: AS NOTED
EPROJECT NO.: 1639600
CONSTR. CONTR. NO. N40085-20-C-0059
NAVFAC DRAWING NO. 14111441
SHEET 412 OF 447

TY111

DRAWFORM REVISION: 25 AUGUST 2020

P1527 FINAL SUBMISSION - 11/18/2021

PLOTTED: 11/11/2021 12:38:59 PM

FILE NAME: BIM 360://AIF PACKAGE 3/P1527 LOG COM CSP-1639600-E.rvt

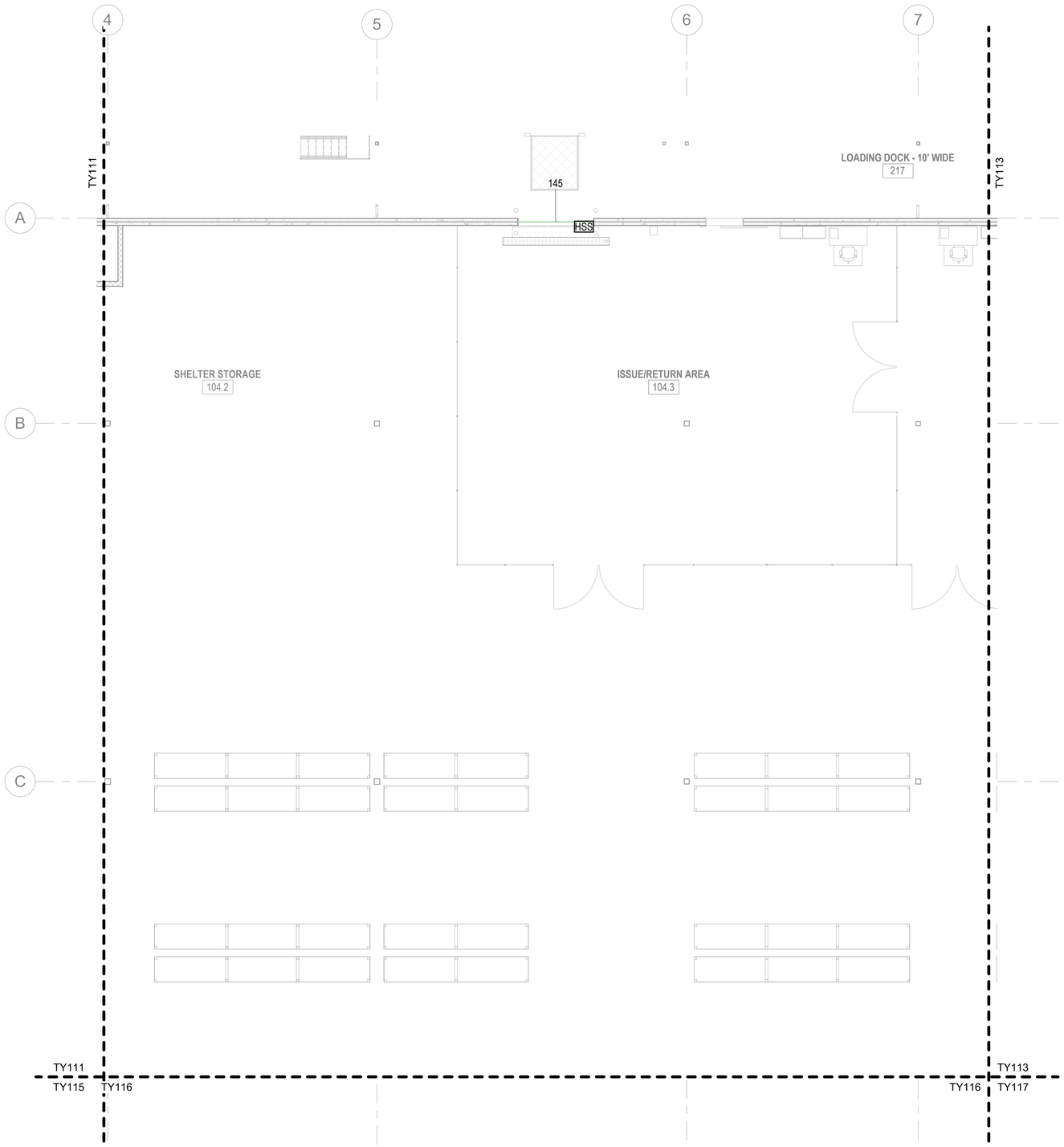

GENERAL NOTES

1 SEE SHEET T-001 FOR TELECOMMUNICATIONS NOTES, SYMBOLS, AND ABBREVIATIONS.

2 ALL ACCESS CONTROL, VIDEO SURVEILLANCE AND INTRUSION DETECTION IS GOVERNMENT FURNISHED AND GOVERNMENT INSTALLED. PROVIDE ONLY CONDUITS, BACK BOXES AND PULL STRINGS AT LOCATIONS INDICATED ON PLANS.

KEYNOTES

KEYPLAN

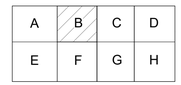

0 4' - 0" 8' - 0" 16' - 0"

SCALE: 0' - 0 1/8" = 1' - 0"

A1 SECURITY - FIRST FLOOR PLAN - AREA B

SCALE: 1/8" = 1'-0"

NO.	DESCRIPTION	DATE	APPR

NAVFAC

REGISTERED COMMUNICATIONS DISTRIBUTION DESIGNER
Bicsi
JOSHUA L CASEY
BICSI ID# 286760
EXPIRES 12-31-23
RCDD
SEAL

IRQ WM Jordan COMPANY – A JOINT VENTURE –

Michael Baker INTERNATIONAL
100 AIRSIDE DRIVE
MOON TOWNSHIP, PA 15108
A/E INFO

APPROVED

FOR COMMANDER NAVFAC

ACTIVITY
MARINE CORPS BASE
CAMP LEJEUNE

SATISFACTORY TO DATE DD/MM/YY

DES JLC | DRW ETH | CHK JMG

PM / DM TOWLER / ROOT

BRANCH HEAD SEK

DESIGN DIRECTOR R.L.Stephens, Jr.

FIRE PROTECTION DPS

DEPARTMENT OF THE NAVY
NAVAL FACILITIES ENGINEERING SYSTEMS COMMAND
ATLANTIC DESIGN AND CONSTRUCTION

NAVAL FACILITIES ENGINEERING SYSTEMS COMMAND ATLANTIC
NORFOLK, VA

MCB CAMP LEJEUNE
JACKSONVILLE, NC
LOGCOM CSP WAREHOUSE

SECURITY - FIRST FLOOR PLAN - AREA B

SCALE: AS NOTED

EPROJECT NO.: 1639600

CONSTR. CONTR. NO.
N40085-20-C-0059

NAVFAC DRAWING NO.
14111442

SHEET 413 OF 447

TY112

DRAWFORM REVISION: 25 AUGUST 2020

P1527 FINAL SUBMISSION - 11/18/2021

PLOTTED: 11/11/2021 12:39:01 PM

FILE NAME: BIM 360://HF PACKAGE 3/P1527 LOG COM CSP-1639600-E.rvt

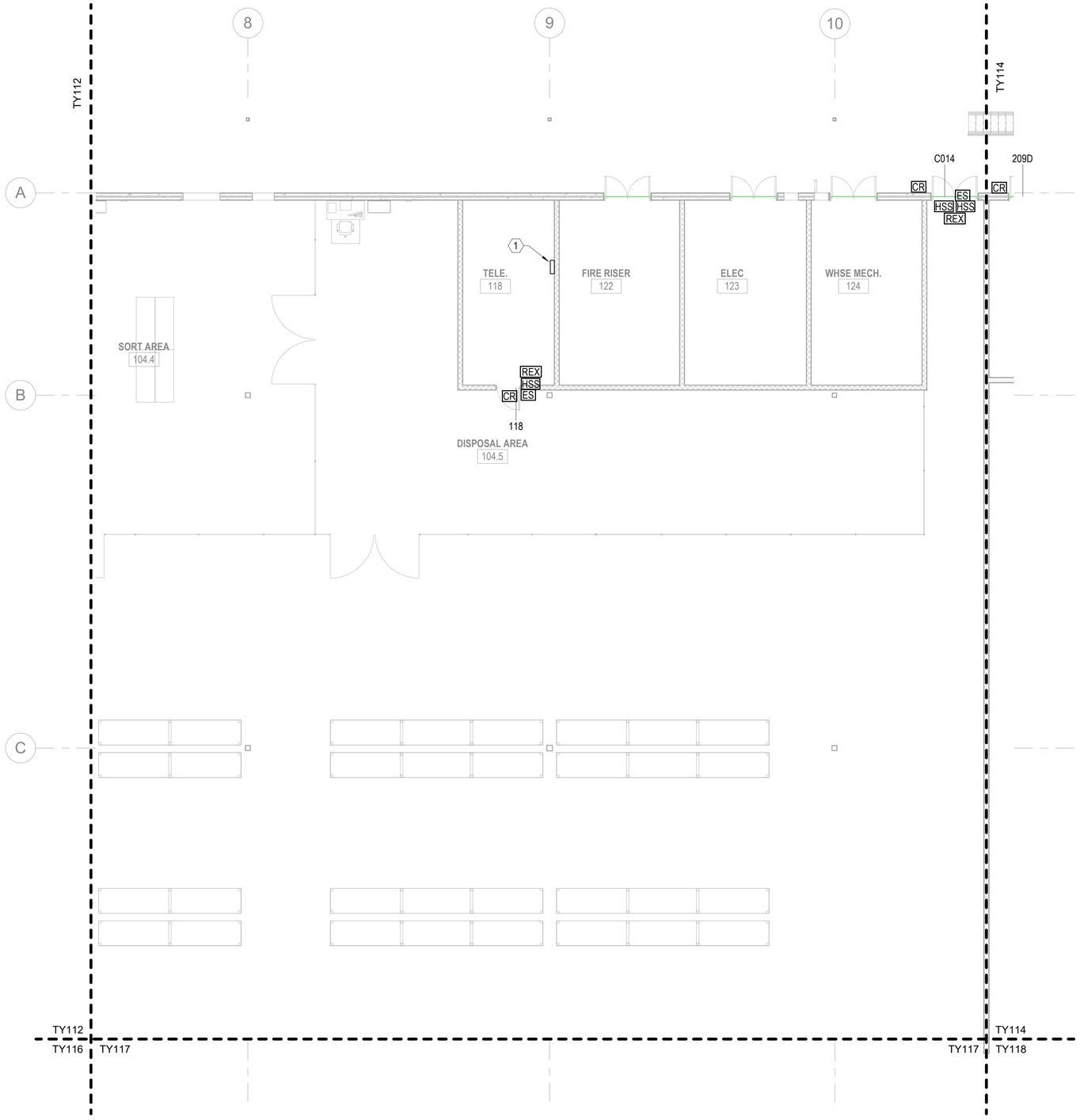

A1 SECURITY - FIRST FLOOR PLAN - AREA C

SCALE: 1/8" = 1'-0"

GENERAL NOTES

1 SEE SHEET T-001 FOR TELECOMMUNICATIONS NOTES, SYMBOLS, AND ABBREVIATIONS.

2 ALL ACCESS CONTROL, VIDEO SURVEILLANCE AND INTRUSION DETECTION IS GOVERNMENT FURNISHED AND GOVERNMENT INSTALLED. PROVIDE ONLY CONDUITS, BACK BOXES AND PULL STRINGS AT LOCATIONS INDICATED ON PLANS.

KEYNOTES

1 ACCESS CONTROL DOOR CONTROLLER PANEL LOCATION. ROUTE ALL SECURITY CABLING FROM ACCESS CONTROL DOOR TO THIS LOCATION AND TERMINATE TO DOOR CONTROLLERS.

KEYPLAN

A	B	C	D
E	F	G	H

0 4' - 0" 8' - 0" 16' - 0" N

SCALE: 0' - 0 1/8" = 1' - 0"

APPR | DATE | DESCRIPTION | SYM

NAVFAC

REGISTERED COMMUNICATIONS DISTRIBUTION DESIGNER
Bicsi
JOSHUA L CASEY
BICSI ID# 286760
EXPIRES 12-31-23
RCDD
SEAL

IRQ W.M. Jordan COMPANY – A JOINT VENTURE –

Michael Baker INTERNATIONAL
100 AIRSIDE DRIVE
MOON TOWNSHIP, PA 15108
A/E INFO

APPROVED

FOR COMMANDER NAVFAC

ACTIVITY
MARINE CORPS BASE
CAMP LEJEUNE

SATISFACTORY TO DATE DD/MM/YY

DES JLC | DRW ETH | CHK JMG

PM / DM TOWLER / ROOT

BRANCH HEAD SEK

DESIGN DIRECTOR R.L.Stephens, Jr.

FIRE PROTECTION DPS

DEPARTMENT OF THE NAVY
NAVAL FACILITIES ENGINEERING SYSTEMS COMMAND
ATLANTIC DESIGN AND CONSTRUCTION
NAVAL FACILITIES ENGINEERING SYSTEMS COMMAND ATLANTIC
NORFOLK, VA
MCB CAMP LEJEUNE
JACKSONVILLE, NC
LOGCOM CSP WAREHOUSE
SECURITY - FIRST FLOOR PLAN - AREA C

SCALE: AS NOTED
EPROJECT NO.: 1639600
CONSTR. CONTR. NO. N40085-20-C-0059
NAVFAC DRAWING NO. 14111443
SHEET 414 OF 447

TY113

DRAWFORM REVISION: 25 AUGUST 2020

P1527 FINAL SUBMISSION - 11/18/2021

PLOTTED: 11/11/2021 12:39:03 PM

FILE NAME: BIM 360://AIF PACKAGE 3/P1527 LOG COM CSP-1639600-E.rvt

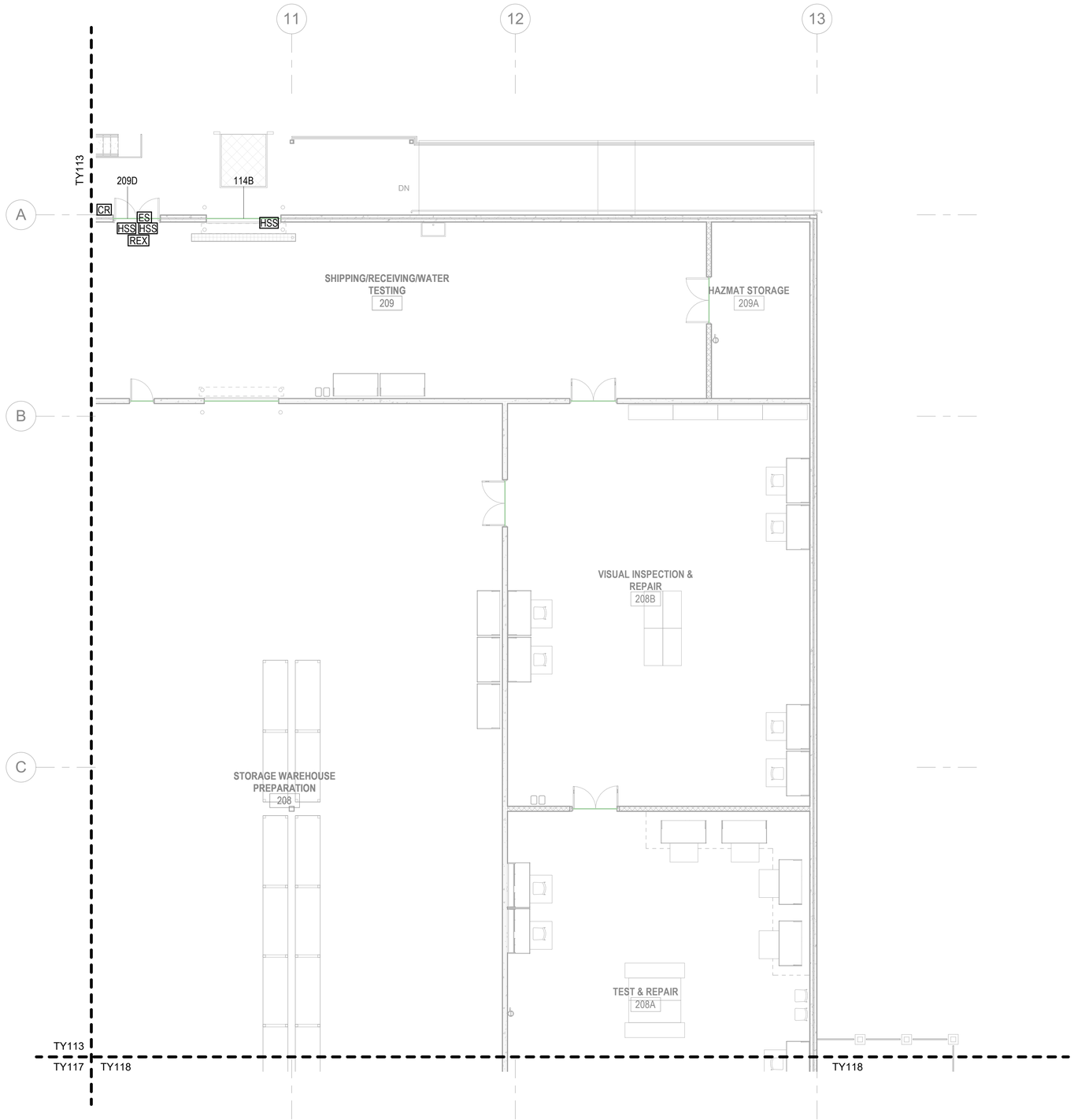

A1 SECURITY - FIRST FLOOR PLAN - AREA D

SCALE: 1/8" = 1'-0"

GENERAL NOTES

1 SEE SHEET T-001 FOR TELECOMMUNICATIONS NOTES, SYMBOLS, AND ABBREVIATIONS.

2 ALL ACCESS CONTROL, VIDEO SURVEILLANCE AND INTRUSION DETECTION IS GOVERNMENT FURNISHED AND GOVERNMENT INSTALLED. PROVIDE ONLY CONDUITS, BACK BOXES AND PULL STRINGS AT LOCATIONS INDICATED ON PLANS.

KEYNOTES

KEYPLAN

A	B	C	D
E	F	G	H

0 4' - 0" 8' - 0" 16' - 0" N

SCALE:0' - 0 1/8" = 1' - 0"

APPR	DATE	DESCRIPTION	SYM

REGISTERED COMMUNICATIONS DISTRIBUTION DESIGNER
Bicsi
JOSHUA L CASEY
BICSI ID# 286760
EXPIRES 12-31-23
RCDD
SEAL

IRQ WM Jordan COMPANY – A JOINT VENTURE –

Michael Baker INTERNATIONAL
100 AIRSIDE DRIVE
MOON TOWNSHIP, PA 15108
A/E INFO

APPROVED

FOR COMMANDER NAVFAC

ACTIVITY
MARINE CORPS BASE CAMP LEJEUNE

SATISFACTORY TO DATE DD/MM/YY

DES	JLC	DRW ETH	CHK JMG
PM / DM		TOWLER / ROOT	
BRANCH HEAD		SEK	
DESIGN DIRECTOR		R.L.Stephens, Jr.	
FIRE PROTECTION		DPS	

DEPARTMENT OF THE NAVY
NAVAL FACILITIES ENGINEERING SYSTEMS COMMAND
ATLANTIC DESIGN AND CONSTRUCTION
MCB CAMP LEJEUNE

NAVAL FACILITIES ENGINEERING SYSTEMS COMMAND ATLANTIC
NORFOLK, VA
JACKSONVILLE, NC
LOGCOM CSP WAREHOUSE

SECURITY - FIRST FLOOR PLAN - AREA D

SCALE: AS NOTED
EPROJECT NO.: 1639600
CONSTR. CONTR. NO. N40085-20-C-0059
NAVFAC DRAWING NO. 14111444
SHEET 415 OF 447

TY114

DRAWFORM REVISION: 25 AUGUST 2020

P1527 FINAL SUBMISSION - 11/18/2021

PLOTTED: 11/11/2021 12:39:05 PM

FILE NAME: BIM 360/IHF PACKAGE 3/P1527 LOG COM CSP-1639600-E.rvt

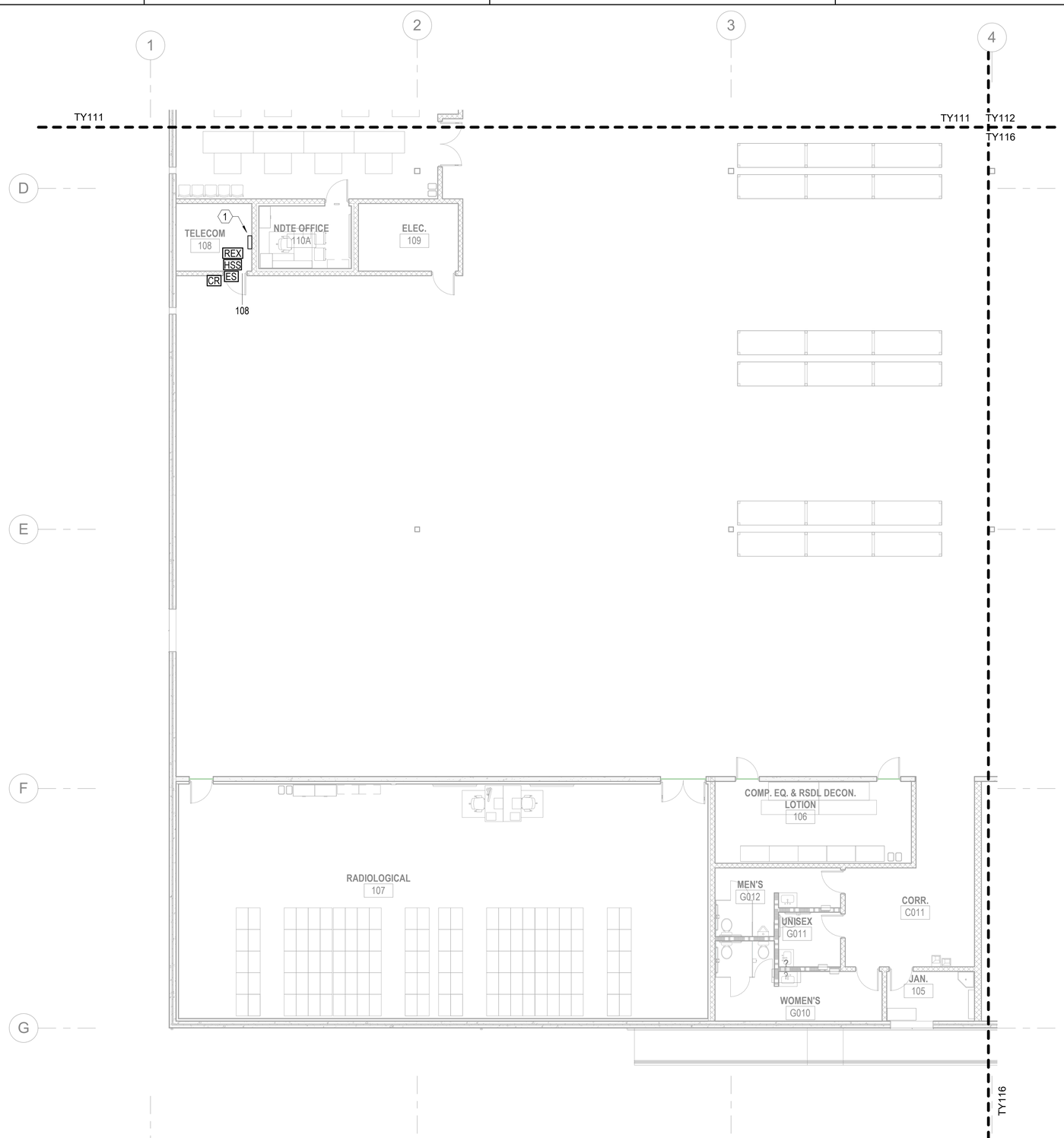

GENERAL NOTES

1 SEE SHEET T-001 FOR TELECOMMUNICATIONS NOTES, SYMBOLS, AND ABBREVIATIONS.

2 ALL ACCESS CONTROL, VIDEO SURVEILLANCE AND INTRUSION DETECTION IS GOVERNMENT FURNISHED AND GOVERNMENT INSTALLED. PROVIDE ONLY CONDUITS, BACK BOXES AND PULL STRINGS AT LOCATIONS INDICATED ON PLANS.

KEYNOTES

1 ACCESS CONTROL DOOR CONTROLLER PANEL LOCATION. ROUTE ALL SECURITY CABLING FROM ACCESS CONTROL DOOR TO THIS LOCATION AND TERMINATE TO DOOR CONTROLLERS.

KEYPLAN

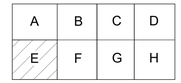

A1 **SECURITY - FIRST FLOOR PLAN - AREA E**

SCALE: 1/8" = 1'-0"

0 4' - 0" 8' - 0" 16' - 0"

SCALE: 0' - 0 1/8" = 1' - 0"

APPR	DATE	DESCRIPTION	SYM

REGISTERED COMMUNICATIONS DISTRIBUTION DESIGNER
Bicsi
JOSHUA L CASEY
BICSI ID# 286760
EXPIRES 12-31-23
RCDD
SEAL

IRQ W.M. Jordan COMPANY – A JOINT VENTURE –

Michael Baker INTERNATIONAL
100 AIRSIDE DRIVE
MOON TOWNSHIP, PA 15108
A/E INFO

APPROVED

FOR COMMANDER NAVFAC

ACTIVITY
MARINE CORPS BASE
CAMP LEJEUNE

SATISFACTORY TO DATE DD/MM/YY

DES	JLC	DRW	ETH	CHK	JMG

PM / DM TOWLER / ROOT

BRANCH HEAD SEK

DESIGN DIRECTOR R.L.Stephens, Jr.

FIRE PROTECTION DPS

DEPARTMENT OF THE NAVY
NAVAL FACILITIES ENGINEERING SYSTEMS COMMAND
ATLANTIC DESIGN AND CONSTRUCTION
MCB CAMP LEJEUNE

NAVAL FACILITIES ENGINEERING SYSTEMS COMMAND ATLANTIC
NORFOLK, VA
JACKSONVILLE, NC
LOGCOM CSP WAREHOUSE

SECURITY - FIRST FLOOR PLAN - AREA E

SCALE:	AS NOTED
EPROJECT NO.:	1639600
CONSTR. CONTR. NO.	N40085-20-C-0059
NAVFAC DRAWING NO.	14111445
SHEET	416 OF 447

TY115

DRAWFORM REVISION: 25 AUGUST 2020

P1527 FINAL SUBMISSION - 11/18/2021

PLOTTED: 11/11/2021 12:39:07 PM

FILE NAME: BIM 360://HF PACKAGE 3/P1527 LOG COM CSP-1639600-E.rvt

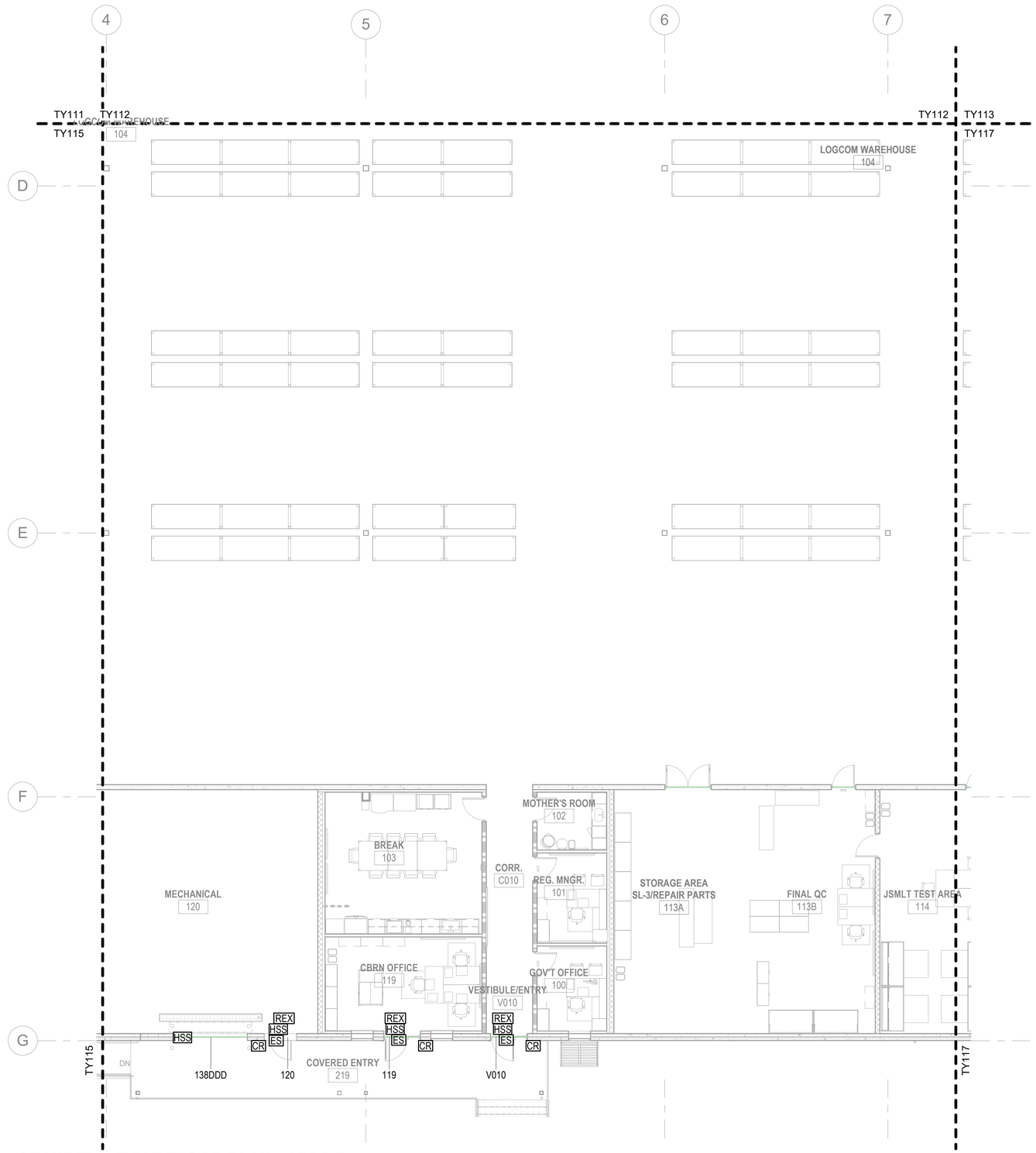

A1 SECURITY - FIRST FLOOR PLAN - AREA F

SCALE: 1/8" = 1'-0"

GENERAL NOTES

1 SEE SHEET T-001 FOR TELECOMMUNICATIONS NOTES, SYMBOLS, AND ABBREVIATIONS.

2 ALL ACCESS CONTROL, VIDEO SURVEILLANCE AND INTRUSION DETECTION IS GOVERNMENT FURNISHED AND GOVERNMENT INSTALLED. PROVIDE ONLY CONDUITS, BACK BOXES AND PULL STRINGS AT LOCATIONS INDICATED ON PLANS.

KEYNOTES

KEYPLAN

A	B	C	D
E	F	G	H

0 4' - 0" 8' - 0" 16' - 0"

SCALE:0' - 0 1/8" = 1' - 0"

N

APPR | DATE | DESCRIPTION | SYM

REGISTERED COMMUNICATIONS DISTRIBUTION DESIGNER
Bicsi
JOSHUA L CASEY
BICSI ID# 286760
EXPIRES 12-31-23
RCDD
SEAL

IRQ W.M. Jordan COMPANY – A JOINT VENTURE –

Michael Baker INTERNATIONAL
100 AIRSIDE DRIVE
MOON TOWNSHIP, PA 15108
A/E INFO

APPROVED
FOR COMMANDER NAVFAC

ACTIVITY
MARINE CORPS BASE
CAMP LEJEUNE

SATISFACTORY TO DATE DD/MM/YY

DES	JLC	DRW ETH CHK	JMG
PM / DM			TOWLER / ROOT
BRANCH HEAD			SEK
DESIGN DIRECTOR			R.L.Stephens, Jr.
FIRE PROTECTION			DPS

DEPARTMENT OF THE NAVY
NAVAL FACILITIES ENGINEERING SYSTEMS COMMAND ATLANTIC
ATLANTIC DESIGN AND CONSTRUCTION
MCB CAMP LEJEUNE

NAVAL FACILITIES ENGINEERING SYSTEMS COMMAND ATLANTIC
NORFOLK, VA
JACKSONVILLE, NC
LOGCOM CSP WAREHOUSE

SECURITY - FIRST FLOOR PLAN - AREA F

SCALE:	AS NOTED
EPROJECT NO.:	1639600
CONSTR. CONTR. NO.	N40085-20-C-0059
NAVFAC DRAWING NO.	14111446
SHEET	417 OF 447

TY116

DRAWFORM REVISION: 25 AUGUST 2020

P1527 FINAL SUBMISSION - 11/18/2021

PLOTTED: 11/11/2021 12:39:10 PM

FILE NAME: BIM 360:/HF PACKAGE 3/P1527 LOG COM CSP-1639600-E.rvt

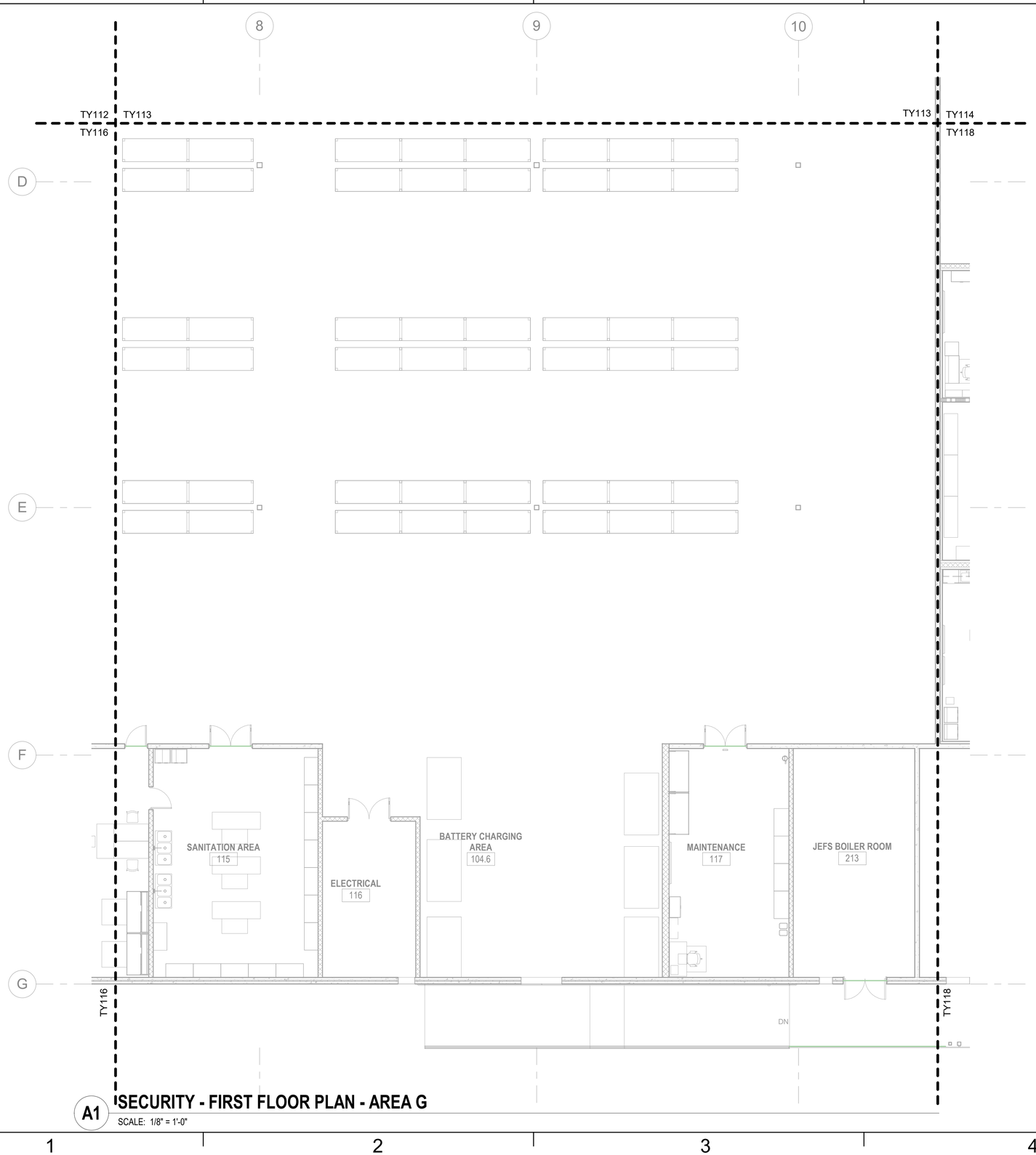

GENERAL NOTES

1. SEE SHEET T-001 FOR TELECOMMUNICATIONS NOTES, SYMBOLS, AND ABBREVIATIONS.
2. ALL ACCESS CONTROL, VIDEO SURVEILLANCE AND INTRUSION DETECTION IS GOVERNMENT FURNISHED AND GOVERNMENT INSTALLED. PROVIDE ONLY CONDUITS, BACK BOXES AND PULL STRINGS AT LOCATIONS INDICATED ON PLANS.

KEYNOTES

KEYPLAN

A	B	C	D
E	F	G	H

0 4' - 0" 8' - 0" 16' - 0"

SCALE: 0' - 0 1/8" = 1' - 0"

A1 **SECURITY - FIRST FLOOR PLAN - AREA G**

SCALE: 1/8" = 1'-0"

APPR | DATE | DESCRIPTION | SYM

REGISTERED COMMUNICATIONS DISTRIBUTION DESIGNER
Bicsi
JOSHUA L CASEY
BICSI ID# 286760
EXPIRES 12-31-23
RCDD
SEAL

IRQ W.M. Jordan COMPANY – A JOINT VENTURE –

Michael Baker INTERNATIONAL
100 AIRSIDE DRIVE
MOON TOWNSHIP, PA 15108
A/E INFO

APPROVED
FOR COMMANDER NAVFAC

ACTIVITY
MARINE CORPS BASE CAMP LEJEUNE

SATISFACTORY TO DATE	DD/MM/YY
DES JLC	DRW ETH CHK JMG
PM / DM	TOWLER / ROOT
BRANCH HEAD	SEK
DESIGN DIRECTOR	R.L.Stephens, Jr.
FIRE PROTECTION	DPS

DEPARTMENT OF THE NAVY
NAVAL FACILITIES ENGINEERING SYSTEMS COMMAND ATLANTIC
ATLANTIC DESIGN AND CONSTRUCTION
MCB CAMP LEJEUNE

NAVAL FACILITIES ENGINEERING SYSTEMS COMMAND ATLANTIC
NORFOLK, VA
JACKSONVILLE, NC
LOGCOM CSP WAREHOUSE

SECURITY - FIRST FLOOR PLAN - AREA G

SCALE:	AS NOTED
EPROJECT NO.:	1639600
CONSTR. CONTR. NO.	N40085-20-C-0059
NAVFAC DRAWING NO.	14111447
SHEET	418 OF 447

TY117

DRAWFORM REVISION: 25 AUGUST 2020

P1527 FINAL SUBMISSION - 11/18/2021

PLOTTED: 11/11/2021 12:39:12 PM

FILE NAME: BIM 360:/HF PACKAGE 3/P1527 LOG COM CSP-1639600-E.rvt

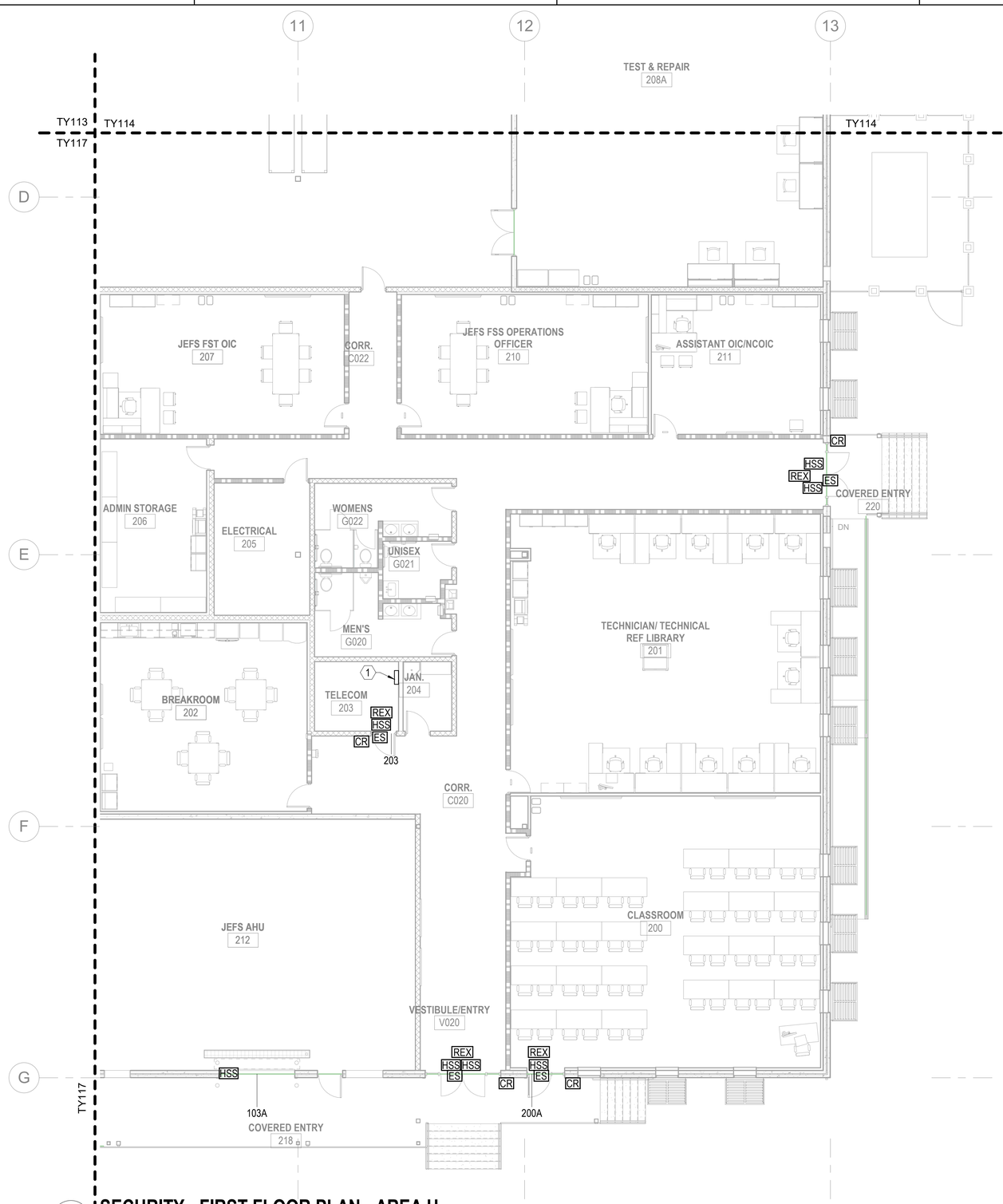

A1 **SECURITY - FIRST FLOOR PLAN - AREA H**

SCALE: 1/8" = 1'-0"

GENERAL NOTES

1 SEE SHEET T-001 FOR TELECOMMUNICATIONS NOTES, SYMBOLS, AND ABBREVIATIONS.

2 ALL ACCESS CONTROL, VIDEO SURVEILLANCE AND INTRUSION DETECTION IS GOVERNMENT FURNISHED AND GOVERNMENT INSTALLED. PROVIDE ONLY CONDUITS, BACK BOXES AND PULL STRINGS AT LOCATIONS INDICATED ON PLANS.

KEYNOTES

1 ACCESS CONTROL DOOR CONTROLLER PANEL LOCATION. ROUTE ALL SECURITY CABLING FROM ACCESS CONTROL DOOR TO THIS LOCATION AND TERMINATE TO DOOR CONTROLLERS.

KEYPLAN

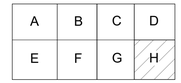

0 4' - 0" 8' - 0" 16' - 0"

SCALE: 0' - 0 1/8" = 1' - 0"

N

APPR | DATE | DESCRIPTION | SYM

NAVFAC

REGISTERED COMMUNICATIONS DISTRIBUTION DESIGNER
Bicsi
JOSHUA L CASEY
BICSI ID# 286760
EXPIRES 12-31-23
RCDD
SEAL

IRQ W.M. Jordan COMPANY – A JOINT VENTURE –

Michael Baker INTERNATIONAL
100 AIRSIDE DRIVE
MOON TOWNSHIP, PA 15108
A/E INFO

APPROVED
FOR COMMANDER NAVFAC

ACTIVITY
MARINE CORPS BASE CAMP LEJEUNE

SATISFACTORY TO DATE DD/MM/YY

DES JLC	DRW ETH CHK JMG
PM / DM	TOWLER / ROOT
BRANCH HEAD	SEK
DESIGN DIRECTOR	R.L.Stephens, Jr.
FIRE PROTECTION	DPS

DEPARTMENT OF THE NAVY
NAVAL FACILITIES ENGINEERING SYSTEMS COMMAND
ATLANTIC DESIGN AND CONSTRUCTION
MCB CAMP LEJEUNE

NAVAL FACILITIES ENGINEERING SYSTEMS COMMAND ATLANTIC
NORFOLK, VA
JACKSONVILLE, NC
LOGCOM CSP WAREHOUSE

SECURITY - FIRST FLOOR PLAN - AREA H

SCALE:	AS NOTED
EPROJECT NO.:	1639600
CONSTR. CONTR. NO.	N40085-20-C-0059
NAVFAC DRAWING NO.	14111448
SHEET	419 OF 447

TY118

DRAWFORM REVISION: 25 AUGUST 2020

P1527 FINAL SUBMISSION - 11/18/2021

PLOTTED: 11/11/2021 12:39:15 PM

FILE NAME: BIM 360://HF PACKAGE 3/P1527 LOG COM CSP-1639600-E.rvt

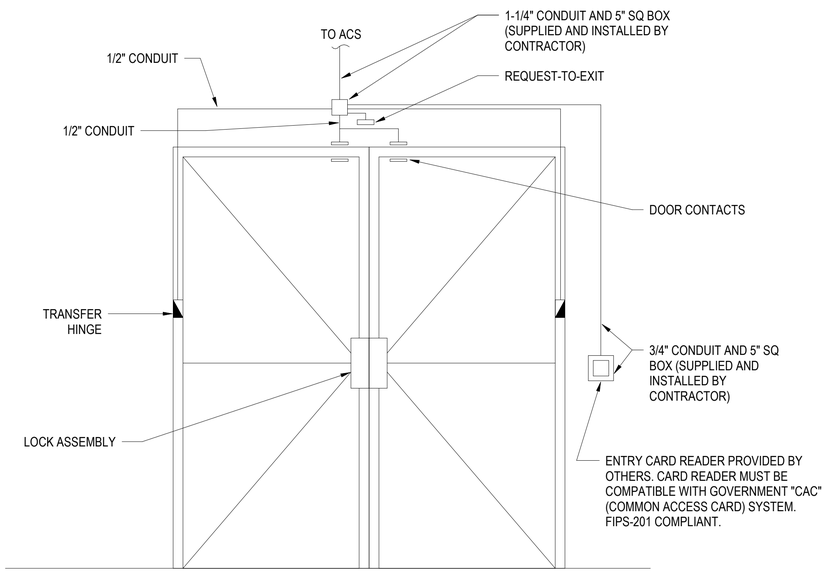

NOTE:
DOORS: C013, C014, 209D

C1 DOUBLE DOOR INTRUSION DETECTION SYSTEM

SCALE: NTS

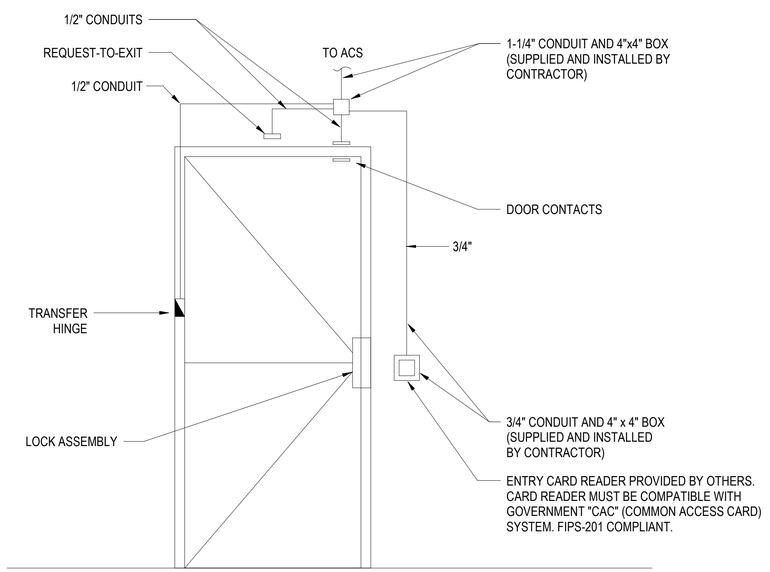

NOTE:
DOORS: V010, 108, 118, 119, 120, 200A, 203

C3 SINGLE DOOR ACCESS CONTROLS SYSTEM

SCALE: NTS

APPR	DATE	DESCRIPTION	SYM

SEAL

REGISTERED COMMUNICATIONS DISTRIBUTION DESIGNER
Bicsi
JOSHUA L CASEY
BICSI ID# 286760
EXPIRES 12-31-23
RCDD

IRQ W.M. Jordan COMPANY – A JOINT VENTURE –

Michael Baker INTERNATIONAL
100 AIRSIDE DRIVE
MOON TOWNSHIP, PA 15108
A/E INFO

APPROVED

FOR COMMANDER NAVFAC

ACTIVITY
MARINE CORPS BASE
CAMP LEJEUNE

SATISFACTORY TO DATE DD/MM/YY

DES	DRW	CHK
JLC	ETH	JMG

PM / DM	TOWLER / ROOT
BRANCH HEAD	SEK
DESIGN DIRECTOR	R.L.Stephens, Jr.
FIRE PROTECTION	DPS

DEPARTMENT OF THE NAVY
NAVAL FACILITIES ENGINEERING SYSTEMS COMMAND ATLANTIC
ATLANTIC DESIGN AND CONSTRUCTION

NAVAL FACILITIES ENGINEERING SYSTEMS COMMAND ATLANTIC
NORFOLK, VA

JACKSONVILLE, NC

MCB CAMP LEJEUNE

LOGCOM CSP WAREHOUSE

SECURITY - DETAILS

SCALE:	AS NOTED
EPROJECT NO.:	1639600
CONSTR. CONTR. NO.	N40085-20-C-0059
NAVFAC DRAWING NO.	14111449
SHEET	420 OF 447

TY501

DRAWFORM REVISION: 25 AUGUST 2020

P1527 FINAL SUBMISSION - 11/18/2021

PLOTTED: 11/11/2021 12:39:15 PM

FILE NAME: BIM 360://AIF PACKAGE 3/P1527 LOG COM CSP-1639600-E.rvt

ABBREVIATIONS

A/E	ARCHITECT/ENGINEER
AAP	ALARM ANNUNCIATOR PANEL
ADA	AMERICANS WITH DISABILITIES ACT
AFC	ABOVE FINISHED CEILING
AFF	ABOVE FINISHED FLOOR
AFG	ABOVE FINISHED GRADE
AHJ	AUTHORITY HAVING JURISDICTION
ARCH	ARCHITECT
AV	AUDIOVISUAL
AWG	AMERICAN WIRE GAUGE
BAS	BUILDING AUTOMATION SYSTEM
BCT	BONDING CONDUCTOR FOR TELECOMMUNICATIONS
BFF	BELOW FINISH FLOOR
BICSI	BUILDING INDUSTRY CONSULTING SERVICE INTERNATIONAL
C	CAMERA
CAT	CATEGORY
CATV	CABLE TELEVISION
CCTV	CLOSED CIRCUIT TELEVISION
CD	CONSTRUCTION DOCUMENTS
CLG	CEILING
CONTR	CONTRACTOR
CT	CABLE TRAY
DEMO	DEMOLITION
DIA	DIAGRAM
EC	ELECTRICAL CONTRACTOR
EQ	EQUIPMENT GROUND
ELEC	ELECTRICAL
EMER	EMERGENCY
ENCL	ENCLOSURE
FT	FEET
FP	FIRE PROTECTION
GND	GROUND
GC	GENERAL CONTRACTOR
HT	HEIGHT
HVAC	HEATING, VENTILATION, AND AIR CONDITIONING
IDS	INTRUSION DETECTION SYSTEM
IN	INCHES
I/O	AUDIOVISUAL I/O PANEL
J-BOX	JUNCTION BOX
LAN	LOCAL AREA NETWORK
LV	LOW VOLTAGE
M	MICROPHONE
MAX	MAXIMUM
MECH	MECHANICAL
MIN	MINIMUM
NEC	NATIONAL ELECTRICAL CODE
NTS	NOT TO SCALE
PB	PULL BOX
PS	PROJECTION SCREEN
PT	POKE THRU
PTZ	PAN / TILT / ZOOM
PWR	POWER
QTY	QUANTITY
RCDD	REGISTERED COMMUNICATIONS DISTRIBUTION DESIGNER
RCP	REFLECTED CEILING PLAN
RECPT	RECEPTACLE
REQD	REQUIRED
RM	ROOM
RS	ROOM SCHEDULER
RU	RACK UNIT
S	SPEAKER
SB	SPECIALTY BACK BOX
TB	TELECOMMUNICATIONS BACKBOARD
TBB	TELECOMMUNICATIONS BONDING BACKBONE
TE	TELECOMMUNICATIONS ENCLOSURE
TC	TELECOMMUNICATIONS CONTRACTOR
TGB	TELECOMMUNICATIONS GROUNDING BUSBAR
TMGB	TELECOMMUNICATIONS MAIN GROUNDING BUSBAR
TV	TELEVISION
TP	TOUCH PANEL
UL	UNDERWRITERS LABORATORY
UON	UNLESS OTHERWISE NOTED
UPS	UNINTERRUPTIBLE POWER SUPPLY
UTIL	UTILITY
WP	WEATHERPROOF
WAP	WIRELESS ACCESS POINT

AUDIOVISUAL SYMBOLS

CEILING MOUNTED DEVICES

- CEILING CONDUIT PENETRATION.
- (AV) # — CEILING MOUNTED AUDIOVISUAL PULL BOX. MOUNT 18" AFC, UNLESS OTHERWISE NOTED. "#" INDICATES NUMBER OF GANGS.
- CEILING MOUNTED DUPLEX AC POWER RECEPTACLE. 120V, 20A, UNLESS OTHERWISE NOTED.
- CEILING MOUNTED DOUBLE DUPLEX AC POWER RECEPTACLE. 120V, 20A, UNLESS OTHERWISE NOTED.
- (P) — CEILING MOUNTED AC POWER PULL BOX.
- CEILING MOUNTED CLOCK AC POWER RECEPTACLE 120V, 20A, UNLESS OTHERWISE NOTED.
- (M) — CEILING MOUNTED PROJECTION SCREEN MOTOR.
- HORIZONTAL CONDUIT
- CABLE TRAY
- (J) — CEILING MOUNTED JUNCTION BOX. MOUNTED 18" AFC.
- (C) — CEILING MOUNTED CAMERA. PROVIDED BY AVC.
- (S) — CEILING MOUNTED SPEAKER. PROVIDED BY AVC.
- (M) — CEILING MOUNTED MICROPHONE. PROVIDED BY AVC.
- (AV) X — CEILING MOUNTED BACK BOX FOR POWER, DATA AND AUDIOVISUAL. "X" INDICATES TYPE OF BOX, SEE MANUFACTURER LIST FOR DETAILS.

FLOOR MOUNTED DEVICES

- FLOOR CONDUIT PENETRATION.
- X — FLOOR BOX FOR POWER, DATA AND AUDIOVISUAL. "X" INDICATES BOX TYPE, SEE MANUFACTURER LIST FOR DETAILS.
- (AV) (PT) X — POKE-THRU FOR POWER, DATA AND AUDIOVISUAL. "X" INDICATES BOX TYPE, SEE MANUFACTURER LIST FOR DETAILS.
- AUDIOVISUAL EQUIPMENT RACK.
- FLOOR BOX/POKE-THRU SPECIALTY AC POWER RECEPTACLE "X"V,"X"A, UNLESS OTHERWISE NOTED.
- FLOOR BOX/POKE-THRU DUPLEX AC POWER RECEPTACLE 120V,20A, UNLESS OTHERWISE NOTED.
- FLOOR BOX/POKE-THRU DOUBLE DUPLEX AC POWER RECEPTACLE 120V,20A, UNLESS OTHERWISE NOTED.
- FLOOR BOX/POKE-THRU AC POWER PULL BOX.

AUDIOVISUAL SYMBOLS CONTINUED

WALL MOUNTED DEVICES

- WALL MOUNTED DUPLEX AC POWER RECEPTACLE 120V, 20A, UNLESS OTHERWISE NOTED.
- WALL MOUNTED DOUBLE DUPLEX AC POWER RECEPTACLE 120V, 20A, UNLESS OTHERWISE NOTED.
- WALL MOUNTED AC POWER PULL BOX.
- WALL MOUNTED CLOCK AC POWER RECEPTACLE 120V, 20A, UNLESS OTHERWISE NOTED.
- * — INDICATES OUTLETS TO BE MOUNTED 6" ABOVE FINISHED COUNTER
- (C) — WALL MOUNTED CAMERA. PROVIDED BY AVC.
- (S) — WALL MOUNTED SPEAKER. PROVIDED BY AVC.
- (AV) X — WALL MOUNTED FLAT PANEL DISPLAY BACK BOX FOR POWER, DATA AND AUDIOVISUAL. "X" INDICATES TYPE OF BOX, SEE MANUFACTURER LIST FOR DETAILS.
- (AV) # — WALL MOUNTED AUDIOVISUAL DEVICE. "#" INDICATES NUMBER OF GANGS.
- RS-A — WALL MOUNTED TOUCH PANEL. PROVIDED AND INSTALLED BY AUDIOVISUAL CONTRACTOR.

MISCELLANEOUS ITEMS

- X / TA-XXX — SINGLE WALL ELEVATION MARKER
- X / X TA-XXX X / X — MULTI WALL ELEVATION MARKER
- X / TA-XXX — ROOM SECTION MARKER
- X / TA-XXX — ENLARGED PLAN CALLOUT MARKER

GENERAL NOTES

1. ALL WALL MOUNTED OUTLETS ARE TO BE MOUNTED AT 18" AFF (TO CL OF BOX), UNLESS OTHERWISE NOTED.
2. ALL POWER RECEPTACLES AND TELECOMMUNICATIONS OUTLETS ARE FOR AV REFERENCE ONLY. REFER TO ELECTRICAL AND TELECOMMUNICATIONS DRAWINGS FOR FINAL LOCATIONS.
3. THE AUDIOVISUAL CONTRACTOR MUST BE RESPONSIBLE FOR CONSTRUCTION SAFETY. THE ARCHITECT AND/OR ENGINEER WILL ASSUME NO RESPONSIBILITY FOR WORKMAN'S OR PEDESTRIAN'S SAFETY.
4. NOTHING CONTAINED IN THE CONTRACT DOCUMENTS MUST BE CONSTRUCTED TO CONFLICT WITH ANY NATIONAL, STATE, MUNICIPAL, OR LOCAL LAW OR REGULATIONS FOR THE WORK INDICATED OR SPECIFIED.
5. THE WORK UNDER THIS CONTRACT MUST INCLUDE THE FURNISHING OF ALL NECESSARY MATERIALS, TOOLS, AND LABOR FOR A COMPLETE AND WORKING INSTALLATION AS DEFINED BY THE PLANS AND SPECIFICATIONS.
6. THE AUDIOVISUAL CONTRACTOR AT THE SITE MUST VERIFY ALL DIMENSIONS AND EXISTING CONDITIONS PERTAINING TO THE INSTALLATION OF THE AUDIOVISUAL SYSTEMS. WHEN THE CONTRACTOR UNCOVERS CONDITIONS NOT INDICATED ON THE PLANS OR IN THE SPECIFICATIONS, THEY MUST NOTIFY THE ARCHITECT AND/OR ENGINEER PRIOR TO PROCEEDING WITH ANY WORK. FAILURE TO NOTIFY WILL MAKE THE CONTRACTOR RESPONSIBLE FOR ALL COSTS AND CONSEQUENCES OF SUCH FAILURE.
7. CONTRACTOR MUST CLEAN UP ALL DEBRIS AT THE END OF EACH WORK DAY.
8. ALL CONDUITS RUN IN EXPOSED AREAS MUST BE MOUNTED TIGHT TO THE UNDERSIDE OF THE STRUCTURAL STEEL.
9. COORDINATE EXACT LOCATIONS OF EQUIPMENT WITH OTHER CONSTRUCTION TRADES
10. EXACT LOCATIONS OF FLOOR BOXES, MUST BE COORDINATED WITH FURNITURE AND EQUIPMENT PLANS.
11. ALL DEVICES SHOWN ON THE EXTERIOR OF THE BUILDING MUST BE WEATHERPROOF TYPE.

INDUSTRY STANDARDS

AUDIOVISUAL INSTALLATION MUST COMPLY WITH THE MOST CURRENT VERSION OF THE FOLLOWING STANDARDS:

AMERICANS WITH DISABILITIES ACT, 2010

ANSI/ASA S12.60; ACOUSTICAL PERFORMANCE CRITERIA, DESIGN REQUIREMENTS, AND GUIDELINES FOR SCHOOLS

ANSI/INFOCOMM 2M-2010, STANDARD GUIDE FOR AUDIOVISUAL SYSTEMS DESIGN AND COORDINATION PROCESS (PROJECT MANAGEMENT PROCESS)

ANSI/INFOCOMM 3M-2011 PROJECTED IMAGE SYSTEM CONTRAST RATIO

ANSI/INFOCOMM 4: 2012 AUDIOVISUAL SYSTEMS ENERGY MANAGEMENT

ANSI/INFOCOMM V202.01:2016, DISPLAY IMAGE SIZE FOR 2D CONTENT IN AUDIOVISUAL SYSTEMS

AV DESIGN REFERENCE MANUAL, FROM INFOCOMM INTERNATIONAL

AV 9000:2012 QUALITY MANAGEMENT SYSTEM CONDUIT, PATHWAY, AND DEDICATED EQUIPMENT ROOM CONSIDERATIONS

AUDIOVISUAL SYSTEM DESIGN AND COORDINATION COMPONENTS, FROM INFOCOMM INTERNATIONAL

ANSI/TIA-568.0-D - GENERIC TELECOMMUNICATIONS CABLING FOR CUSTOMER PREMISES, 2015

ANSI/TIA-568.1-D - COMMERCIAL BUILDING TELECOMMUNICATIONS CABLING STANDARD, 2015

ANSI/TIA-568-C.2 - BALANCED TWISTED-PAIR TELECOMMUNICATIONS CABLING AND COMPONENTS STANDARD, 2009

ANSI/TIA-568.3-D - OPTICAL FIBER CABLING COMPONENTS STANDARD, 2016

ANSI/TIA-568.4-D - BROADBAND COAXIAL CABLING AND COMPONENTS STANDARD, 2017

ANSI/TIA-569-D - TELECOMMUNICATIONS PATHWAYS AND SPACES, 2015

ANSI/TIA/EIA-598-D - OPTICAL FIBER CABLE COLOR CODING, 2014

ANSI/TIA-606-B - ADMINISTRATION STANDARD FOR COMMERCIAL TELECOMMUNICATIONS INFRASTRUCTURE, 2012

ANSI/TIA-607-C - COMMERCIAL BUILDING GROUNDING (EARTHING) AND BONDING REQUIREMENTS FOR TELECOMMUNICATIONS, 2015

DAVIS AND DAVIS, 1987 "SOUND SYSTEM ENGINEERING"

GIDDINGS, 1990, " AUDIO SYSTEMS DESIGN AND INSTALLATION

INFOCOMM, AV/IT INFRASTRUCTURE GUIDELINES FOR HIGHER EDUCATION

NFPA 70 - NATIONAL ELECTRICAL CODE (NEC)

NFPA 72 - NATIONAL FIRE ALARM AND SIGNALING CODE

NFPA 75 - STANDARD FOR THE PROTECTION OF INFORMATION TECHNOLOGY EQUIPMENT

NFPA 76 - STANDARD FOR THE FIRE PROTECTION OF TELECOMMUNICATIONS FACILITIES

MANUFACTURERS LIST

TYPE	MANUFACTURER	MODEL	DETAIL
A	CHIEF	PAC526	C1/TA501
B	FSR	PWB-100	C3/TA501

AUDIOVISUAL SPECIALTY INFRASTRUCTURE SYMBOL NOTES

FLOOR BOX CONFIGURATION

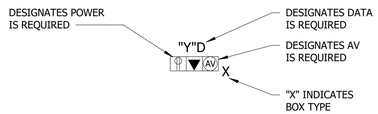

FLAT PANEL DISPLAY BACK BOX CONFIGURATION

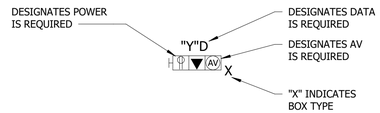

FLAT PANEL TYPE SCHEDULE

TYPE	DIAGONAL SIZE	MAKE	MODEL	ORIENTATION	POWER CONSUMPTION	DISPLAY WIDTH	DISPLAY HEIGHT	DISPLAY DEPTH	WEIGHT	INTERACTIVE	NOTES
FPD-A	55"	PANASONIC	TH-55CQE1W	LANDSCAPE	128 W	48 29/32"	28 19/64"	3 13/64"	35 LBS	NO	PROVIDED & INSTALLED BY AVC
FPD-B	86"	PANASONIC	TH-86CQE1W	LANDSCAPE	340 W	76"	43 1/2"	3 13/64"	111 LBS	NO	PROVIDED & INSTALLED BY AVC
FPD-C	98"	PANASONIC	TH-98CQE1W	LANDSCAPE	685 W	86 13/32"	49 13/64"	3 1/2"	304 LBS	NO	PROVIDED & INSTALLED BY AVC

FLAT PANEL ROOM SCHEDULE

ROOM NUMBER	TYPE	QUANITY
103	FPD-A	1
104.1	FPD-A	1
200	FPD-B	2
200	FPD-C	1
202	FPD-A	1
208A	FPD-A	1
209	FPD-A	1

APPR	DATE	DESCRIPTION	SYM

NAVFAC

AVIXA CERTIFIED TECHNOLOGY SPECIALIST CTS-D Andrew Smith Expiration Date: 01-31-2025 DESIGN

SEAL

WNM Jordan COMPANY — A JOINT VENTURE —

Michael Baker INTERNATIONAL

100 AIRSIDE DRIVE
MOON TOWNSHIP, PA 15108 A/E INFO

APPROVED

FOR COMMANDER NAVFAC

ACTIVITY
MARINE CORPS BASE CAMP LEJEUNE

SATISFACTORY TO DATE DD/MM/YY

DES	AS	DRW AS	CHK BM
PM / DM	TOWLER / ROOT		
BRANCH HEAD	SEK		
DESIGN DIRECTOR	R.L.Stephens, Jr.		
FIRE PROTECTION	DPS		

NAVAL FACILITIES ENGINEERING SYSTEMS COMMAND ATLANTIC
NORFOLK, VA

DEPARTMENT OF THE NAVY
NAVAL FACILITIES ENGINEERING SYSTEMS COMMAND
ATLANTIC DESIGN AND CONSTRUCTION
MCB CAMP LEJEUNE

JACKSONVILLE, NC
P1527 LOGCOM CSP WAREHOUSE

AUDIOVISUAL SYMBOLS AND NOTES

SCALE: AS NOTED
EPROJECT NO.: 1639600
CONSTR. CONTR. NO. N40085-20-C-0059
NAVFAC DRAWING NO. 14111453
SHEET 421 OF 447

TA001

DRAWFORM REVISION: 25 AUGUST 2020

P1527 FINAL SUBMISSION - 11/18/2021

PLOTTED: 11/11/2021 8:25:08 AM

FILE NAME: BIM 360://HF PACKAGE 3/P1527 LOG COM CSP-1639600-T.rvt

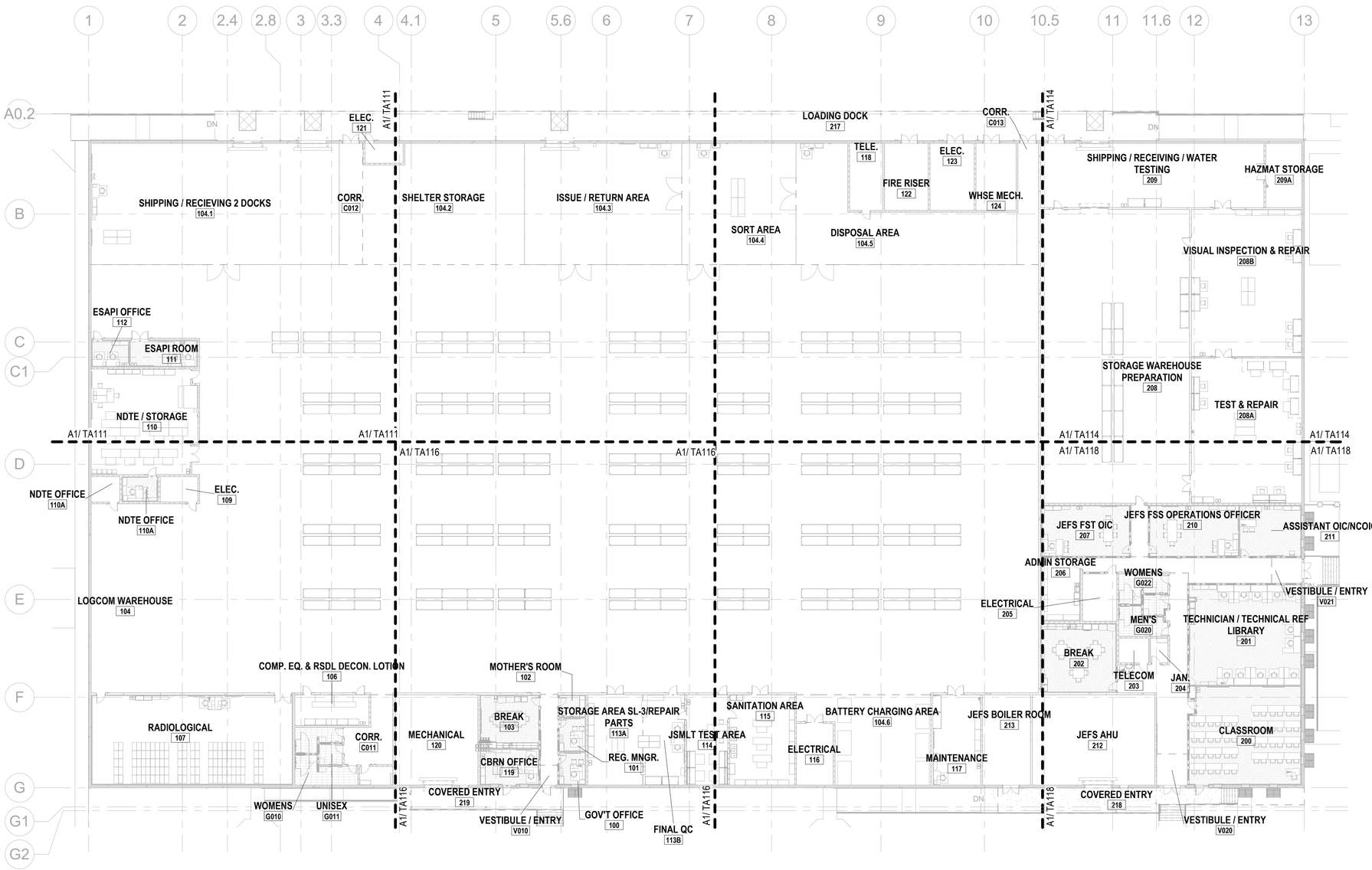

1 1ST FLOOR PLAN AUDIOVISUAL - OVERALL
SCALE: 3/64" = 1'-0"

KEYPLAN

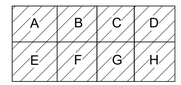

0 128" 256" 512"
SCALE: 3/64" = 12"

N

APPR | DATE | DESCRIPTION | SYM

NAVFAC

AVIXA CERTIFIED TECHNOLOGY SPECIALIST CTS-D
Andrew Smith
Expiration Date: 01-31-2025
DESIGN
SEAL

IRQ WM Jordan COMPANY — A JOINT VENTURE —

Michael Baker INTERNATIONAL
100 AIRSIDE DRIVE
MOON TOWNSHIP, PA 15108
A/E INFO

APPROVED
FOR COMMANDER NAVFAC

ACTIVITY
MARINE CORPS BASE CAMP LEJEUNE

SATISFACTORY TO DATE	DD/MM/YY
DES AS	DRW AS CHK BM
PM / DM	TOWLER / ROOT
BRANCH HEAD	SEK
DESIGN DIRECTOR	R.L.Stephens, Jr.
FIRE PROTECTION	DPS

DEPARTMENT OF THE NAVY
NAVAL FACILITIES ENGINEERING SYSTEMS COMMAND ATLANTIC
ATLANTIC DESIGN AND CONSTRUCTION
NAVAL FACILITIES ENGINEERING SYSTEMS COMMAND
NORFOLK, VA
MCB CAMP LEJEUNE
JACKSONVILLE, NC
P1527 LOGCOM CSP WAREHOUSE
1ST FLOOR PLAN AUDIOVISUAL - OVERALL

SCALE:	AS NOTED
EPROJECT NO.:	1639600
CONSTR. CONTR. NO.	N40085-20-C-0059
NAVFAC DRAWING NO.	14111454
SHEET	422 OF 447

TA110

DRAWFORM REVISION: 25 AUGUST 2020

P1527 FINAL SUBMISSION - 11/18/2021

PLOTTED: 11/11/2021 8:25:10 AM

FILE NAME: BIM 360://HF PACKAGE 3/P1527 LOG COM CSP--1639600-T.rvt

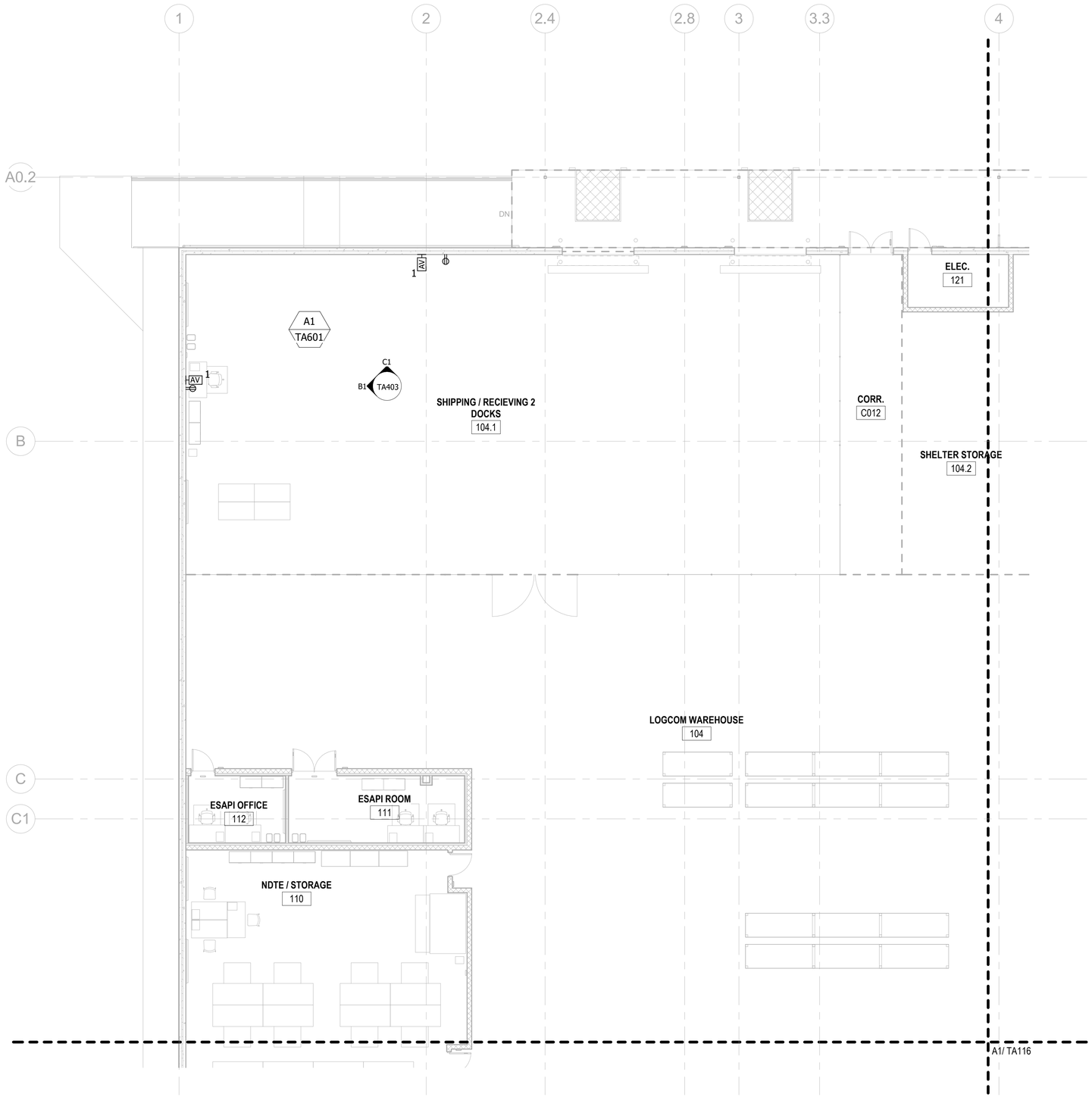

A1 1ST FLOOR PLAN AUDIOVISUAL - AREA A
SCALE: 1/8" = 1'-0"

KEYPLAN

A	B	C	D
E	F	G	H

0 48" 96" 192"
SCALE: 1/8" = 12"

N

NO.	DESCRIPTION	DATE	APPR

NAVFAC

AVIXA CERTIFIED TECHNOLOGY SPECIALIST CTS-D Andrew Smith Expiration Date: 01-31-2025 DESIGN

SEAL

WJM Jordan COMPANY – A JOINT VENTURE –

Michael Baker INTERNATIONAL

100 AIRSIDE DRIVE
MOON TOWNSHIP, PA 15108 A/E INFO

APPROVED

FOR COMMANDER NAVFAC

ACTIVITY
MARINE CORPS BASE
CAMP LEJEUNE

SATISFACTORY TO DATE DD/MM/YY

DES	DRW	CHK
AS	AS	BM

PM / DM	TOWLER / ROOT
BRANCH HEAD	SEK
DESIGN DIRECTOR	R.L.Stephens, Jr.
FIRE PROTECTION	DPS

DEPARTMENT OF THE NAVY
NAVAL FACILITIES ENGINEERING SYSTEMS COMMAND
ATLANTIC DESIGN AND CONSTRUCTION
MCB CAMP LEJEUNE

NAVAL FACILITIES ENGINEERING SYSTEMS COMMAND ATLANTIC
NORFOLK, VA
JACKSONVILLE, NC

P1527 LOGCOM CSP WAREHOUSE

1ST FLOOR PLAN AUDIOVISUAL - AREA A

SCALE:	AS NOTED
EPROJECT NO.:	1639600
CONSTR. CONTR. NO.	N40085-20-C-0059
NAVFAC DRAWING NO.	14111455
SHEET	423 OF 447

TA111

DRAWFORM REVISION: 25 AUGUST 2020

P1527 FINAL SUBMISSION - 11/18/2021

PLOTTED: 11/11/2021 8:25:11 AM

FILE NAME: BIM 360://HF PACKAGE 3/P1527 LOG COM CSP-1639600-T.rvt

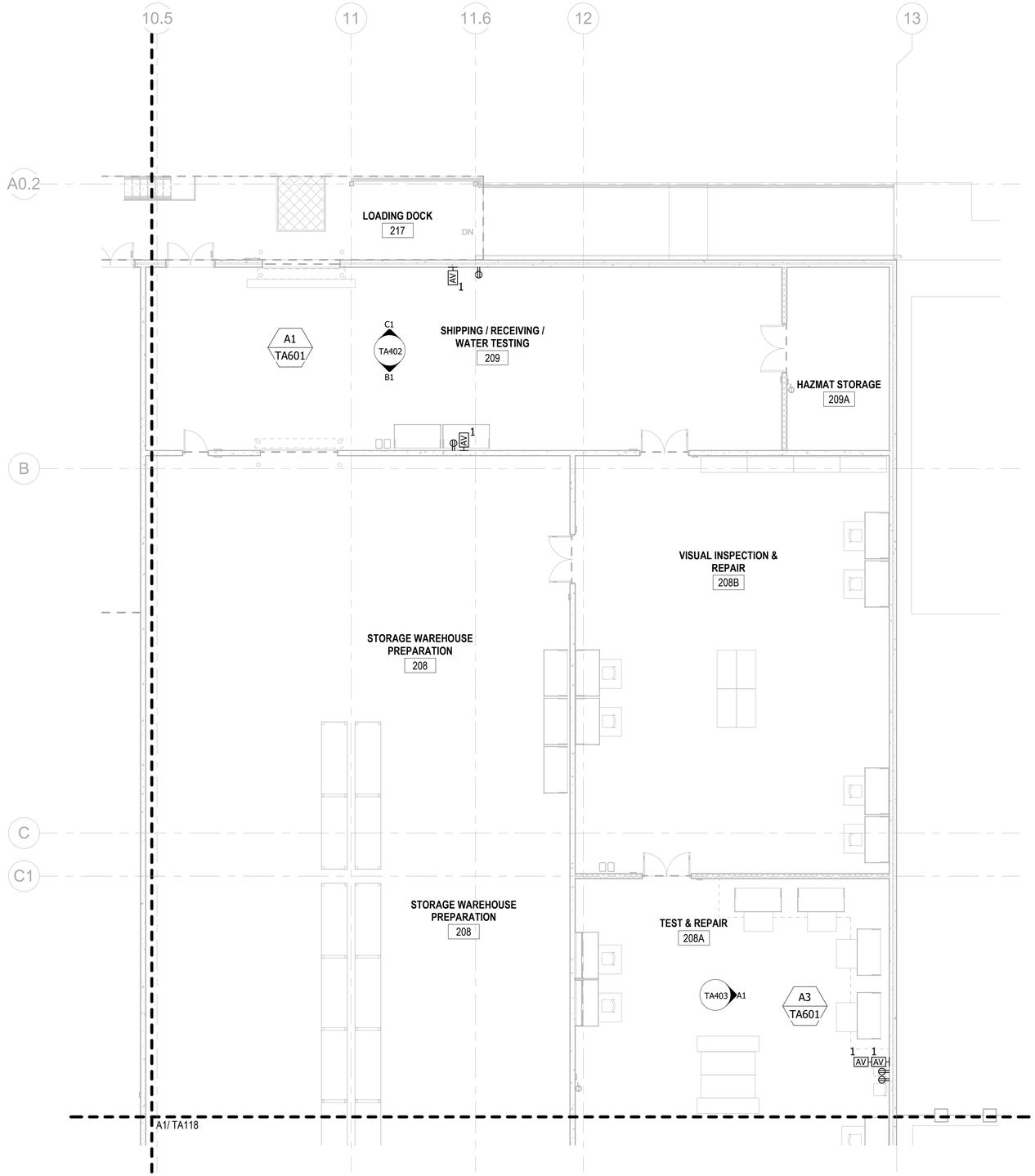

A1 1ST FLOOR PLAN AUDIOVISUAL - AREA D
SCALE: 1/8" = 1'-0"

KEYPLAN

A	B	C	D
E	F	G	H

0 48" 96" 192"
SCALE: 1/8" = 12"

N

APPR	
DATE	
DESCRIPTION	
SYM	

CERTIFIED TECHNOLOGY SPECIALIST — AVIXA CTS-D — Andrew Smith — Expiration Date: 01-31-2025 — DESIGN

SEAL

W.M. Jordan COMPANY — A JOINT VENTURE

Michael Baker INTERNATIONAL
100 AIRSIDE DRIVE
MOON TOWNSHIP, PA 15108
A/E INFO

APPROVED

FOR COMMANDER NAVFAC

ACTIVITY
MARINE CORPS BASE CAMP LEJEUNE

SATISFACTORY TO DATE DD/MM/YY

DES	AS	DRW AS	CHK BM

PM / DM TOWLER / ROOT
BRANCH HEAD SEK
DESIGN DIRECTOR R.L.Stephens, Jr.
FIRE PROTECTION DPS

DEPARTMENT OF THE NAVY
NAVAL FACILITIES ENGINEERING SYSTEMS COMMAND
ATLANTIC DESIGN AND CONSTRUCTION
NAVAL FACILITIES ENGINEERING SYSTEMS COMMAND ATLANTIC
NORFOLK, VA
MCB CAMP LEJEUNE
JACKSONVILLE, NC
P1527 LOGCOM CSP WAREHOUSE
1ST FLOOR PLAN AUDIOVISUAL - AREA D

SCALE:	AS NOTED
EPROJECT NO.:	1639600
CONSTR. CONTR. NO.	N40085-20-C-0059
NAVFAC DRAWING NO.	14111456
SHEET	424 OF 447

TA114

DRAWFORM REVISION: 25 AUGUST 2020

P1527 FINAL SUBMISSION - 11/18/2021

PLOTTED: 11/11/2021 8:25:11 AM

FILE NAME: BIM 360://HF PACKAGE 3/P1527 LOG COM CSP--1639600-T.rvt

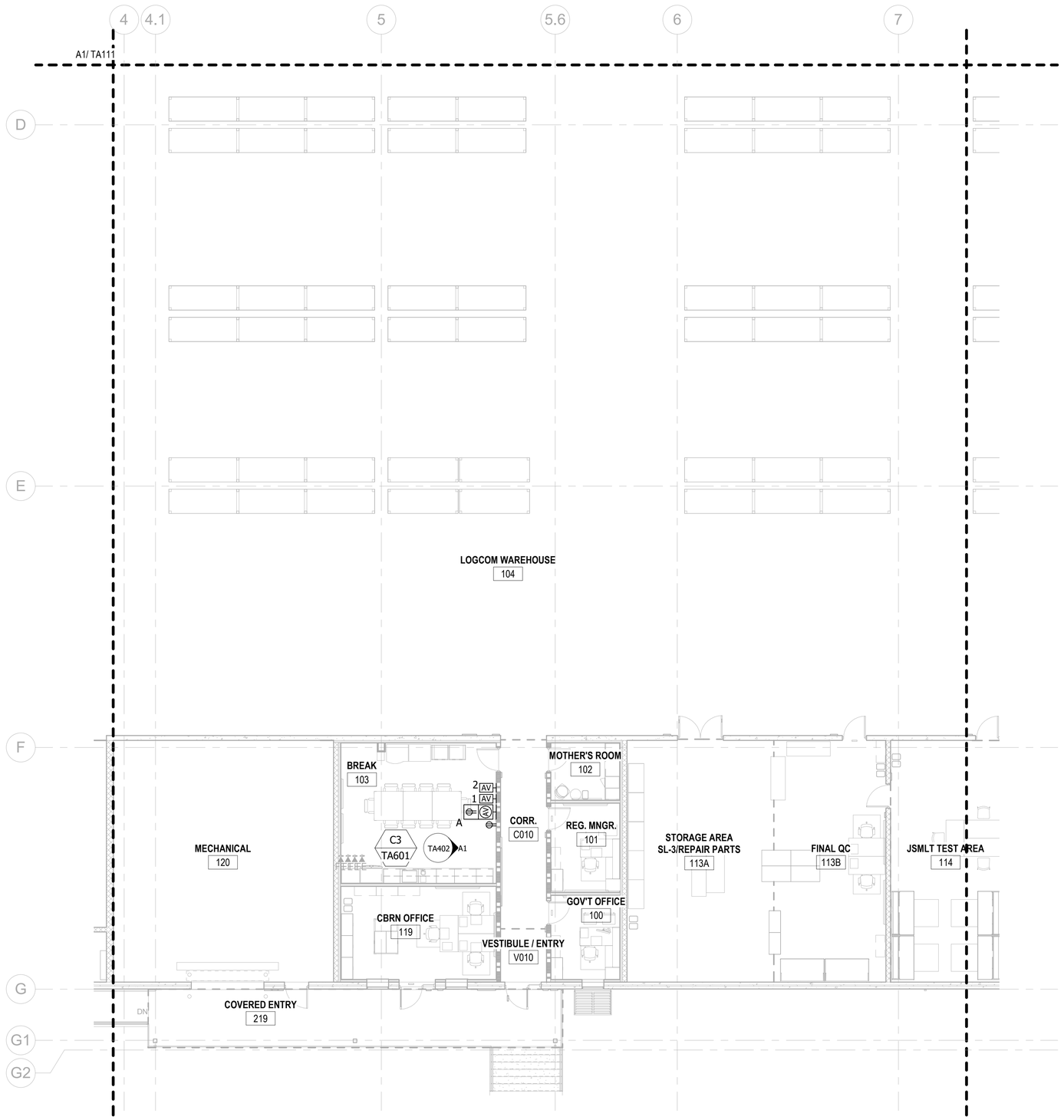

A1 1ST FLOOR PLAN AUDIOVISUAL - AREA F
SCALE: 1/8" = 1'-0"

KEYPLAN

A	B	C	D
E	F	G	H

0 48" 96" 192"
SCALE: 1/8" = 12"

N

APPR.	DATE	DESCRIPTION	SYM

SEAL

CERTIFIED TECHNOLOGY SPECIALIST — AVIXA CTS-D — Andrew Smith — Expiration Date: 01-31-2025 — DESIGN

IRQ — W.M. Jordan COMPANY — A JOINT VENTURE

Michael Baker INTERNATIONAL
100 AIRSIDE DRIVE
MOON TOWNSHIP, PA 15108
A/E INFO

APPROVED

FOR COMMANDER NAVFAC

ACTIVITY
MARINE CORPS BASE
CAMP LEJEUNE

SATISFACTORY TO DATE DD/MM/YY

DES	DRW	CHK
AS	AS	BM

PM / DM	TOWLER / ROOT
BRANCH HEAD	SEK
DESIGN DIRECTOR	R.L.Stephens, Jr.
FIRE PROTECTION	DPS

DEPARTMENT OF THE NAVY
NAVAL FACILITIES ENGINEERING SYSTEMS COMMAND
ATLANTIC DESIGN AND CONSTRUCTION
MCB CAMP LEJEUNE

NAVAL FACILITIES ENGINEERING SYSTEMS COMMAND ATLANTIC
NORFOLK, VA
JACKSONVILLE, NC
P1527 LOGCOM CSP WAREHOUSE

1ST FLOOR PLAN AUDIOVISUAL - AREA F

SCALE:	AS NOTED
EPROJECT NO.:	1639600
CONSTR. CONTR. NO.	N40085-20-C-0059
NAVFAC DRAWING NO.	14111457
SHEET	425 OF 447

TA116

DRAWFORM REVISION: 25 AUGUST 2020

P1527 FINAL SUBMISSION - 11/18/2021

PLOTTED: 11/11/2021 8:25:12 AM

FILE NAME: BIM 360://HF PACKAGE 3/P1527 LOG COM CSP-1639600-T.rvt

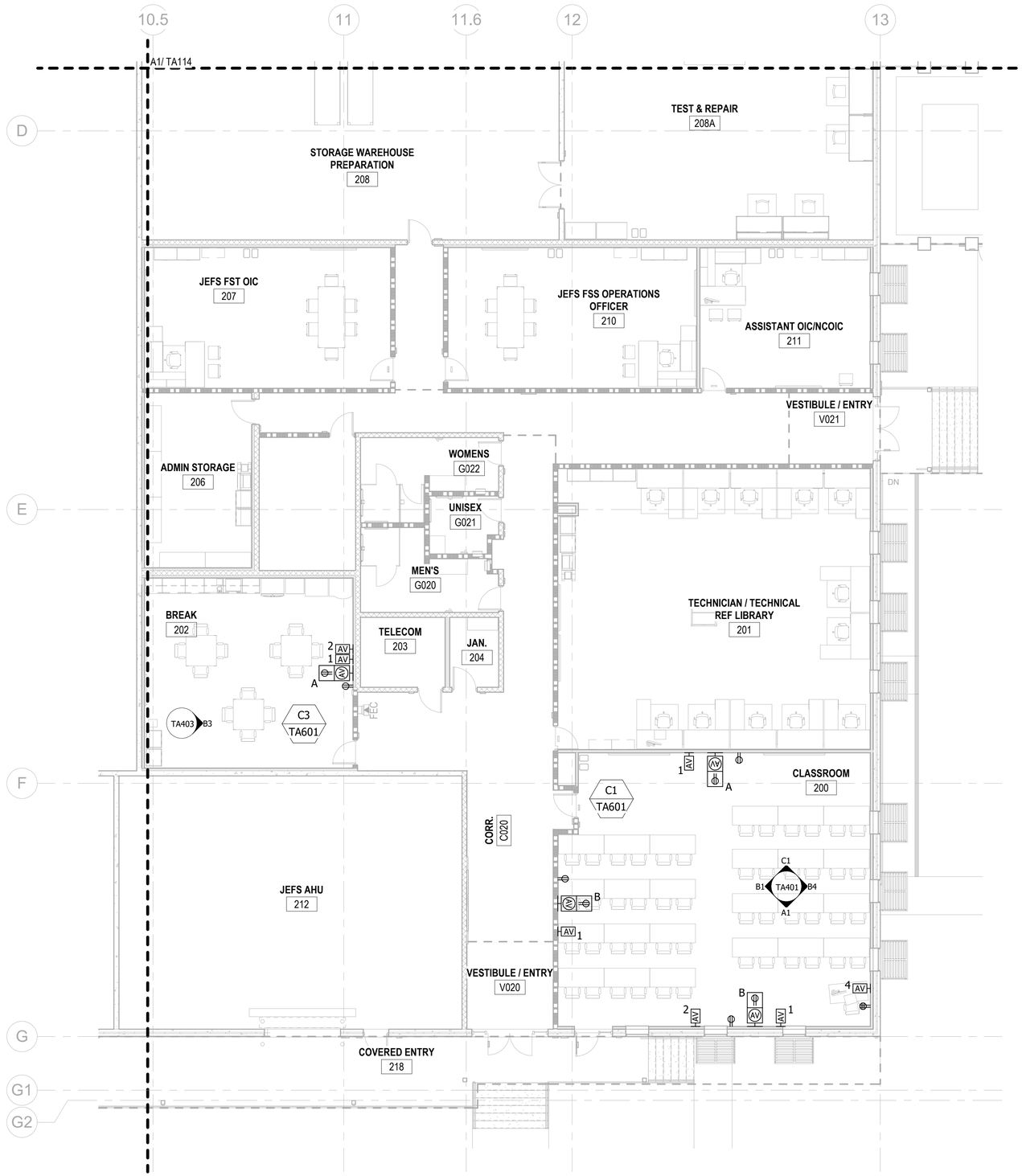

A1 1ST FLOOR PLAN AUDIOVISUAL - AREA H

SCALE: 1/8" = 1'-0"

KEYPLAN

A	B	C	D
E	F	G	H

0 48" 96" 192"

SCALE: 1/8" = 12"

N

APPR	DATE	DESCRIPTION	SYM

NAVFAC

AVIXA CERTIFIED TECHNOLOGY SPECIALIST CTS-D Andrew Smith Expiration Date: 01-31-2025 DESIGN

SEAL

IRQ WM Jordan COMPANY – A JOINT VENTURE –

Michael Baker INTERNATIONAL

100 AIRSIDE DRIVE
MOON TOWNSHIP, PA 15108

A/E INFO

APPROVED

FOR COMMANDER NAVFAC

ACTIVITY
MARINE CORPS BASE
CAMP LEJEUNE

SATISFACTORY TO DATE DD/MM/YY

DES	AS	DRW AS	CHK BM
PM / DM		TOWLER / ROOT	
BRANCH HEAD		SEK	
DESIGN DIRECTOR		R.L.Stephens, Jr.	
FIRE PROTECTION		DPS	

DEPARTMENT OF THE NAVY
NAVAL FACILITIES ENGINEERING SYSTEMS COMMAND
ATLANTIC DESIGN AND CONSTRUCTION

NAVAL FACILITIES ENGINEERING SYSTEMS COMMAND ATLANTIC
NORFOLK, VA

JACKSONVILLE, NC

P1527 LOGCOM CSP WAREHOUSE

MCB CAMP LEJEUNE

1ST FLOOR PLAN AUDIOVISUAL - AREA H

SCALE:	AS NOTED
EPROJECT NO.:	1639600
CONSTR. CONTR. NO.	N40085-20-C-0059
NAVFAC DRAWING NO.	14111458
SHEET	426 OF 447

TA118

DRAWFORM REVISION: 25 AUGUST 2020

P1527 FINAL SUBMISSION - 11/18/2021

PLOTTED: 11/11/2021 8:25:13 AM

FILE NAME: BIM 360/IHF PACKAGE 3/P1527 LOG COM CSP-1639600-T.rvt

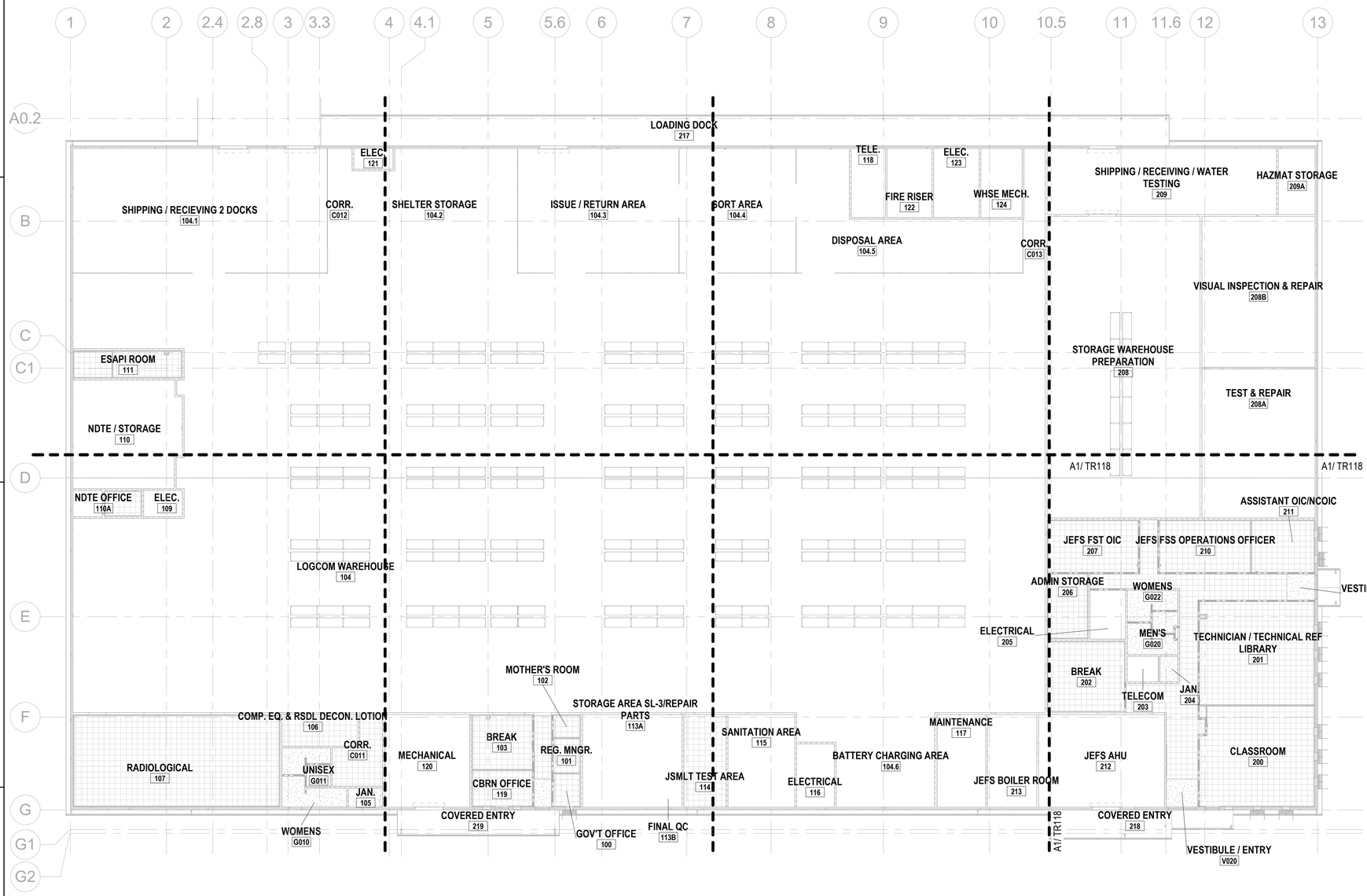

A1 REFLECTED CEILING PLAN AUDIOVISUAL - 1ST FLOOR - OVERALL

SCALE: 3/64" = 1'-0"

KEYPLAN

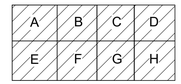

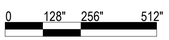

N

APPR	
DATE	
DESCRIPTION	
SYM	

NAVFAC

AVIXA CERTIFIED TECHNOLOGY SPECIALIST CTS-D Andrew Smith Expiration Date: 01-31-2025 DESIGN

SEAL

WNJ Jordan COMPANY – A JOINT VENTURE –

Michael Baker INTERNATIONAL

100 AIRSIDE DRIVE
MOON TOWNSHIP, PA 15108

A/E INFO

APPROVED

FOR COMMANDER NAVFAC

ACTIVITY
MARINE CORPS BASE
CAMP LEJEUNE

SATISFACTORY TO DATE DD/MM/YY

DES AS	DRW AS CHK BM
PM / DM	TOWLER / ROOT
BRANCH HEAD	SEK
DESIGN DIRECTOR	R.L.Stephens, Jr.
FIRE PROTECTION	DPS

DEPARTMENT OF THE NAVY
NAVAL FACILITIES ENGINEERING SYSTEMS COMMAND
ATLANTIC DESIGN AND CONSTRUCTION

NAVAL FACILITIES ENGINEERING SYSTEMS COMMAND ATLANTIC
NORFOLK, VA

MCB CAMP LEJEUNE
JACKSONVILLE, NC

P1527 LOGCOM CSP WAREHOUSE

REFLECTED CEILING PLAN AUDIOVISUAL - 1ST FLOOR - OVERALL

SCALE:	AS NOTED
EPROJECT NO.:	1639600
CONSTR. CONTR. NO.	N40085-20-C-0059
NAVFAC DRAWING NO.	14111459
SHEET	427 OF 447

TR110

DRAWFORM REVISION: 25 AUGUST 2020

P1527 FINAL SUBMISSION - 11/18/2021

PLOTTED: 11/11/2021 8:25:25 AM

FILE NAME: BIM 360://HF PACKAGE 3/P1527 LOG COM CSP-1639600-T.rvt



A1 REFLECTED CEILING PLAN AUDIOVISUAL - 1ST FLOOR - AREA H
SCALE: 1/8" = 1'-0"

KEYPLAN

A	B	C	D
E	F	G	H

0 48" 96" 192"
SCALE: 1/8" = 12"

N

APPR | DATE | DESCRIPTION | SYM

NAVFAC

AVIXA CERTIFIED TECHNOLOGY SPECIALIST CTS-D DESIGN
Andrew Smith
Expiration Date: 01-31-2025
SEAL

IRQ W.M. Jordan COMPANY — A JOINT VENTURE —

Michael Baker INTERNATIONAL
100 AIRSIDE DRIVE
MOON TOWNSHIP, PA 15108
A/E INFO

APPROVED

FOR COMMANDER NAVFAC

ACTIVITY
MARINE CORPS BASE CAMP LEJEUNE

SATISFACTORY TO DATE DD/MM/YY

DES	AS	DRW AS	CHK BM
PM / DM		TOWLER / ROOT	
BRANCH HEAD		SEK	
DESIGN DIRECTOR		R.L.Stephens, Jr.	
FIRE PROTECTION		DPS	

NAVAL FACILITIES ENGINEERING SYSTEMS COMMAND
ATLANTIC DESIGN AND CONSTRUCTION
DEPARTMENT OF THE NAVY
NAVAL FACILITIES ENGINEERING SYSTEMS COMMAND ATLANTIC
NORFOLK, VA
MCB CAMP LEJEUNE
JACKSONVILLE, NC
P1527 LOGCOM CSP WAREHOUSE
REFLECTED CEILING PLAN AUDIOVISUAL - 1ST FLOOR - AREA H

SCALE:	AS NOTED
EPROJECT NO.:	1639600
CONSTR. CONTR. NO.	N40085-20-C-0059
NAVFAC DRAWING NO.	14111460
SHEET	428 OF 447

TR118
DRAWFORM REVISION: 25 AUGUST 2020

P1527 FINAL SUBMISSION - 11/18/2021

PLOTTED: 11/11/2021 8:25:26 AM
FILE NAME: BIM 360://HF PACKAGE 3/P1527 LOG COM CSP-1639600-T.rvt

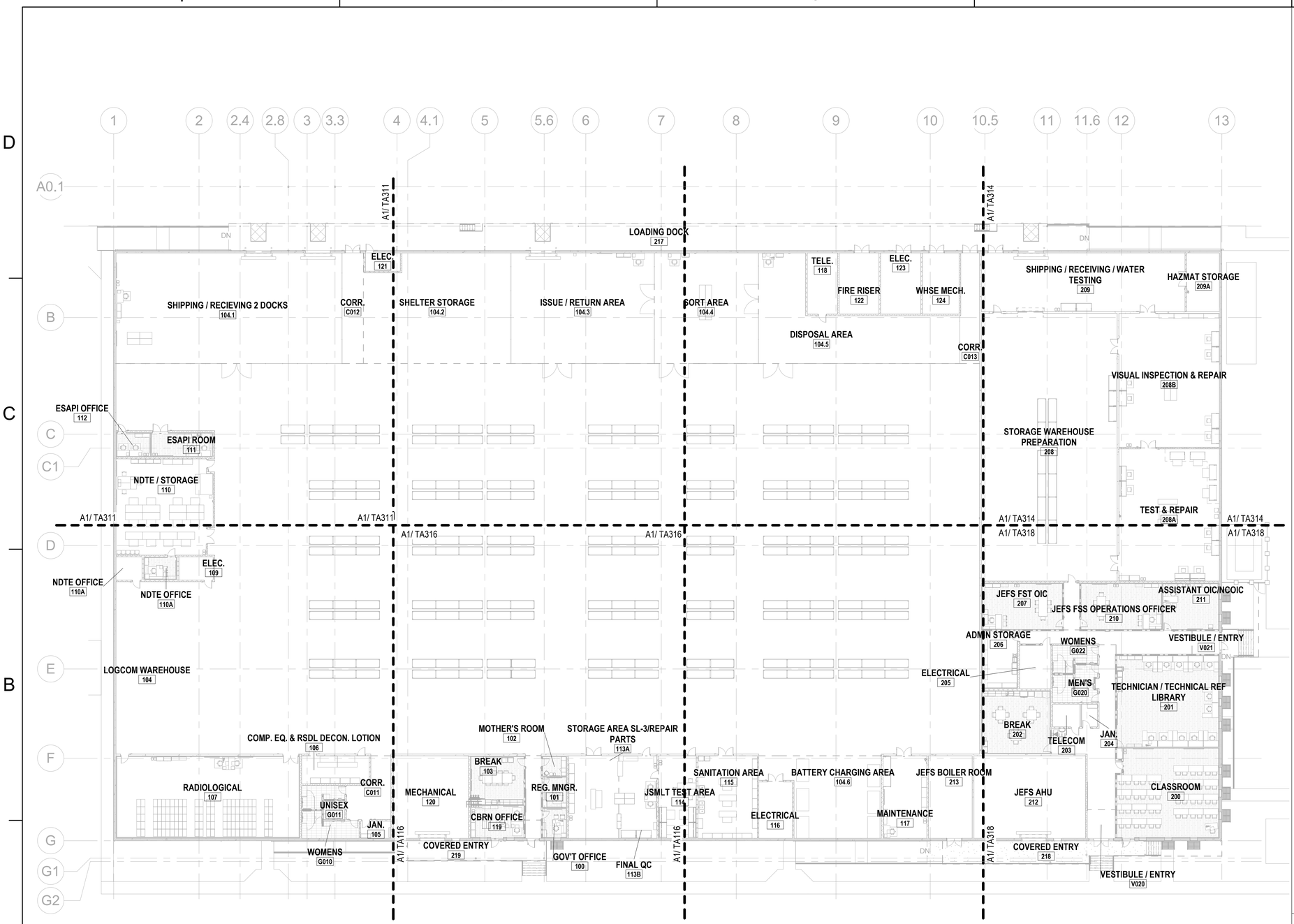

A1 1ST FLOOR PLAN EQUIPMENT - OVERALL

SCALE: 3/64" = 1'-0"

KEYPLAN

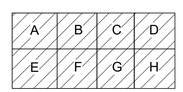

0 128" 256" 512"

SCALE: 3/64" = 12"

N

APPR | DATE | SYM | DESCRIPTION

NAVFAC

AVIXA CERTIFIED TECHNOLOGY SPECIALIST CTS-D Andrew Smith Expiration Date: 01-31-2025 DESIGN

SEAL

IRQ W.M. Jordan COMPANY – A JOINT VENTURE –

Michael Baker INTERNATIONAL

100 AIRSIDE DRIVE
MOON TOWNSHIP, PA 15108 A/E INFO

APPROVED

FOR COMMANDER NAVFAC

ACTIVITY
MARINE CORPS BASE CAMP LEJEUNE

SATISFACTORY TO DATE	DD/MM/YY
DES AS	DRW AS CHK BM
PM / DM	TOWLER / ROOT
BRANCH HEAD	SEK
DESIGN DIRECTOR	R.L.Stephens, Jr.
FIRE PROTECTION	DPS

DEPARTMENT OF THE NAVY
NAVAL FACILITIES ENGINEERING SYSTEMS COMMAND
ATLANTIC DESIGN AND CONSTRUCTION

NAVAL FACILITIES ENGINEERING SYSTEMS COMMAND ATLANTIC
NORFOLK, VA

MCB CAMP LEJEUNE
JACKSONVILLE, NC
P1527 LOGCOM CSP WAREHOUSE

1ST FLOOR PLAN EQUIPMENT - OVERALL

SCALE:	AS NOTED
EPROJECT NO.:	1639600
CONSTR. CONTR. NO.	N40085-20-C-0059
NAVFAC DRAWING NO.	14111461
SHEET	429 OF 447

TA310

DRAWFORM REVISION: 25 AUGUST 2020

P1527 FINAL SUBMISSION - 11/18/2021

PLOTTED: 11/11/2021 8:25:15 AM

FILE NAME: BIM 360://HF PACKAGE 3/P1527 LOG COM CSP-1639600-T.rvt

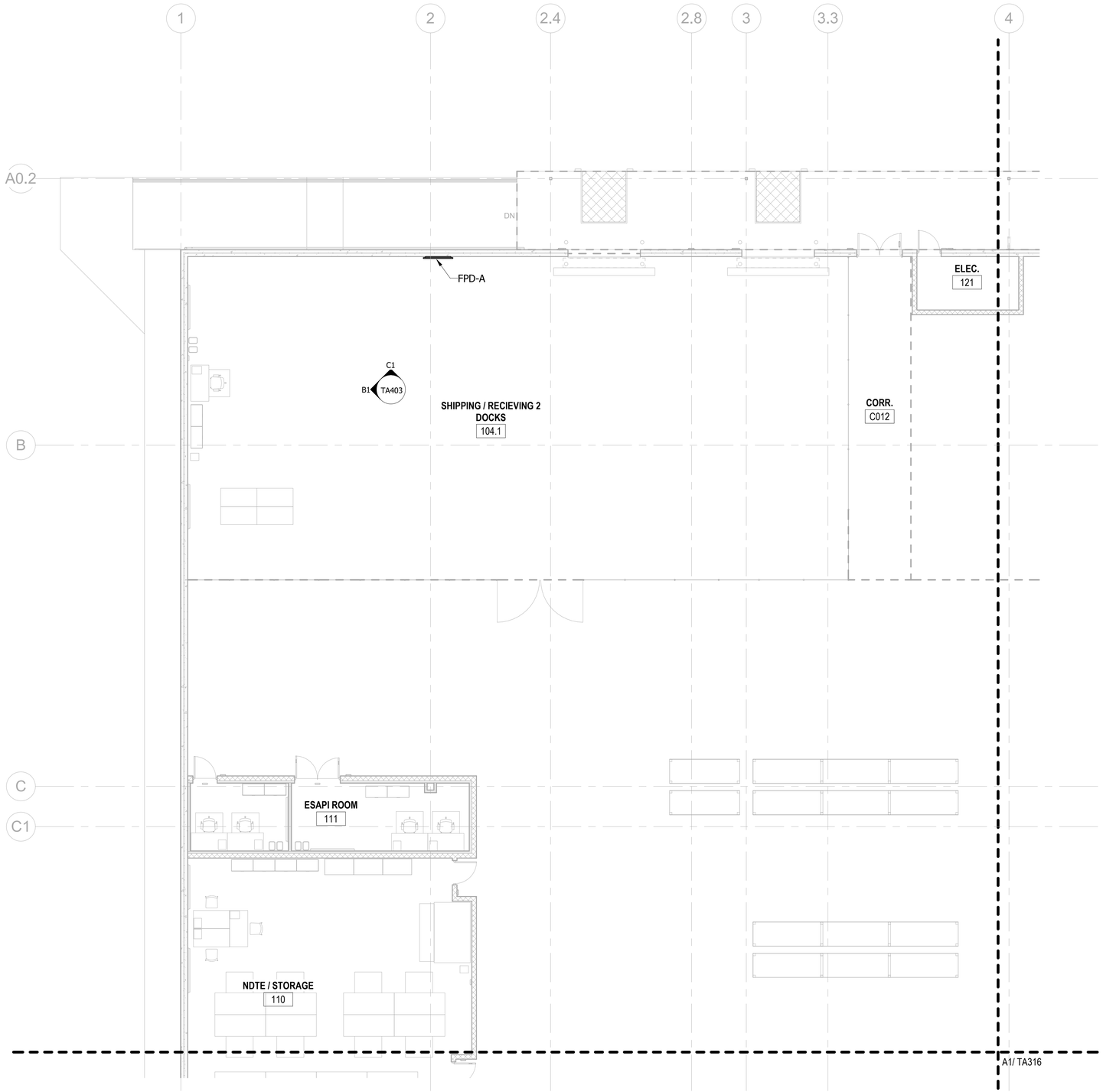

A1 1ST FLOOR PLAN EQUIPMENT - AREA A
SCALE: 1/8" = 1'-0"

KEYPLAN

A	B	C	D
E	F	G	H

0 48" 96" 192"
SCALE: 1/8" = 12"

N

NO.	DESCRIPTION	DATE	APPR

SEAL

AVIXA CERTIFIED TECHNOLOGY SPECIALIST CTS-D DESIGN
Andrew Smith
Expiration Date: 01-31-2025

IRQ WM Jordan COMPANY – A JOINT VENTURE –

Michael Baker INTERNATIONAL
100 AIRSIDE DRIVE
MOON TOWNSHIP, PA 15108
A/E INFO

APPROVED
FOR COMMANDER NAVFAC

ACTIVITY
MARINE CORPS BASE
CAMP LEJEUNE

SATISFACTORY TO DATE DD/MM/YY

DES	DRW	CHK
AS	AS	BM

PM / DM: TOWLER / ROOT
BRANCH HEAD: SEK
DESIGN DIRECTOR: R.L.Stephens, Jr.
FIRE PROTECTION: DPS

DEPARTMENT OF THE NAVY
NAVAL FACILITIES ENGINEERING SYSTEMS COMMAND
ATLANTIC DESIGN AND CONSTRUCTION
NAVAL FACILITIES ENGINEERING SYSTEMS COMMAND ATLANTIC
NORFOLK, VA
MCB CAMP LEJEUNE
JACKSONVILLE, NC
P1527 LOGCOM CSP WAREHOUSE
1ST FLOOR PLAN EQUIPMENT - AREA A

SCALE:	AS NOTED
EPROJECT NO.:	1639600
CONSTR. CONTR. NO.	N40085-20-C-0059
NAVFAC DRAWING NO.	14111462
SHEET	430 OF 447

TA311

DRAWFORM REVISION: 25 AUGUST 2020

P1527 FINAL SUBMISSION - 11/18/2021

PLOTTED: 11/11/2021 8:25:16 AM

FILE NAME: BIM 360://HF PACKAGE 3/P1527 LOG COM CSP--1639600-T.rvt

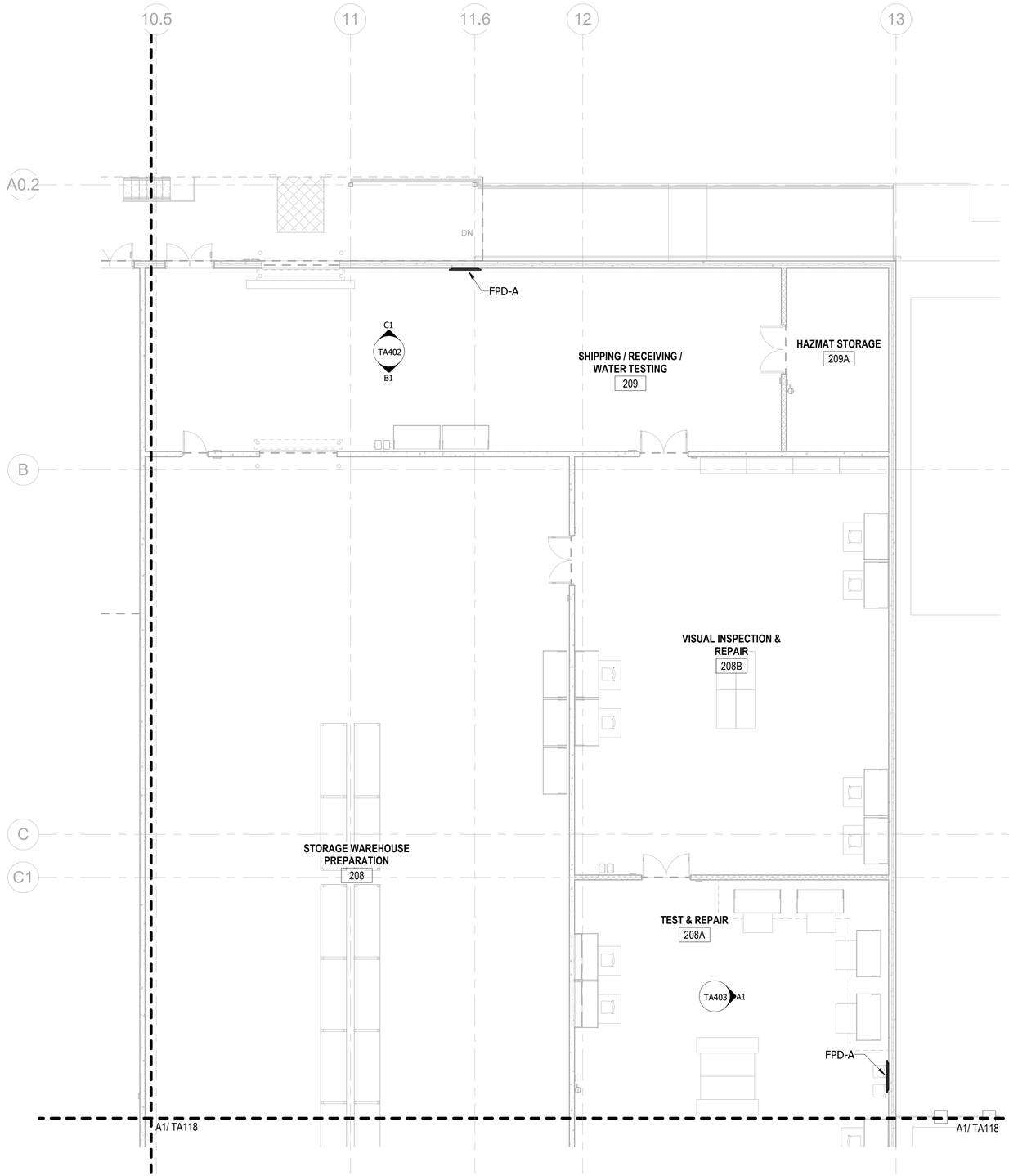

A1 1ST FLOOR PLAN EQUIPMENT - AREA D
SCALE: 1/8" = 1'-0"

KEYPLAN

A	B	C	D
E	F	G	H

0 48" 96" 192"
SCALE: 1/8" = 12"

N

SYM	DESCRIPTION	DATE	APPR

NAVFAC

CERTIFIED TECHNOLOGY SPECIALIST AVIXA CTS-D Andrew Smith Expiration Date: 01-31-2025 DESIGN
SEAL

RQ W.M. Jordan COMPANY – A JOINT VENTURE –

Michael Baker INTERNATIONAL
100 AIRSIDE DRIVE
MOON TOWNSHIP, PA 15108
A/E INFO

APPROVED

FOR COMMANDER NAVFAC

ACTIVITY
MARINE CORPS BASE
CAMP LEJEUNE

SATISFACTORY TO DATE DD/MM/YY
DES AS DRW AS CHK BM
PM / DM TOWLER / ROOT
BRANCH HEAD SEK
DESIGN DIRECTOR R.L.Stephens, Jr.
FIRE PROTECTION DPS

DEPARTMENT OF THE NAVY
NAVAL FACILITIES ENGINEERING SYSTEMS COMMAND
NAVAL FACILITIES ENGINEERING SYSTEMS COMMAND ATLANTIC
ATLANTIC DESIGN AND CONSTRUCTION
NORFOLK, VA
MCB CAMP LEJEUNE
JACKSONVILLE, NC
P1527 LOGCOM CSP WAREHOUSE
1ST FLOOR PLAN EQUIPMENT - AREA D

SCALE: AS NOTED
EPROJECT NO.: 1639600
CONSTR. CONTR. NO. N40085-20-C-0059
NAVFAC DRAWING NO. 14111463
SHEET 431 OF 447

TA314

DRAWFORM REVISION: 25 AUGUST 2020

P1527 FINAL SUBMISSION - 11/18/2021

PLOTTED: 11/11/2021 8:25:17 AM

FILE NAME: BIM 360://HF PACKAGE 3/P1527 LOG COM CSP-1639600-T.rvt

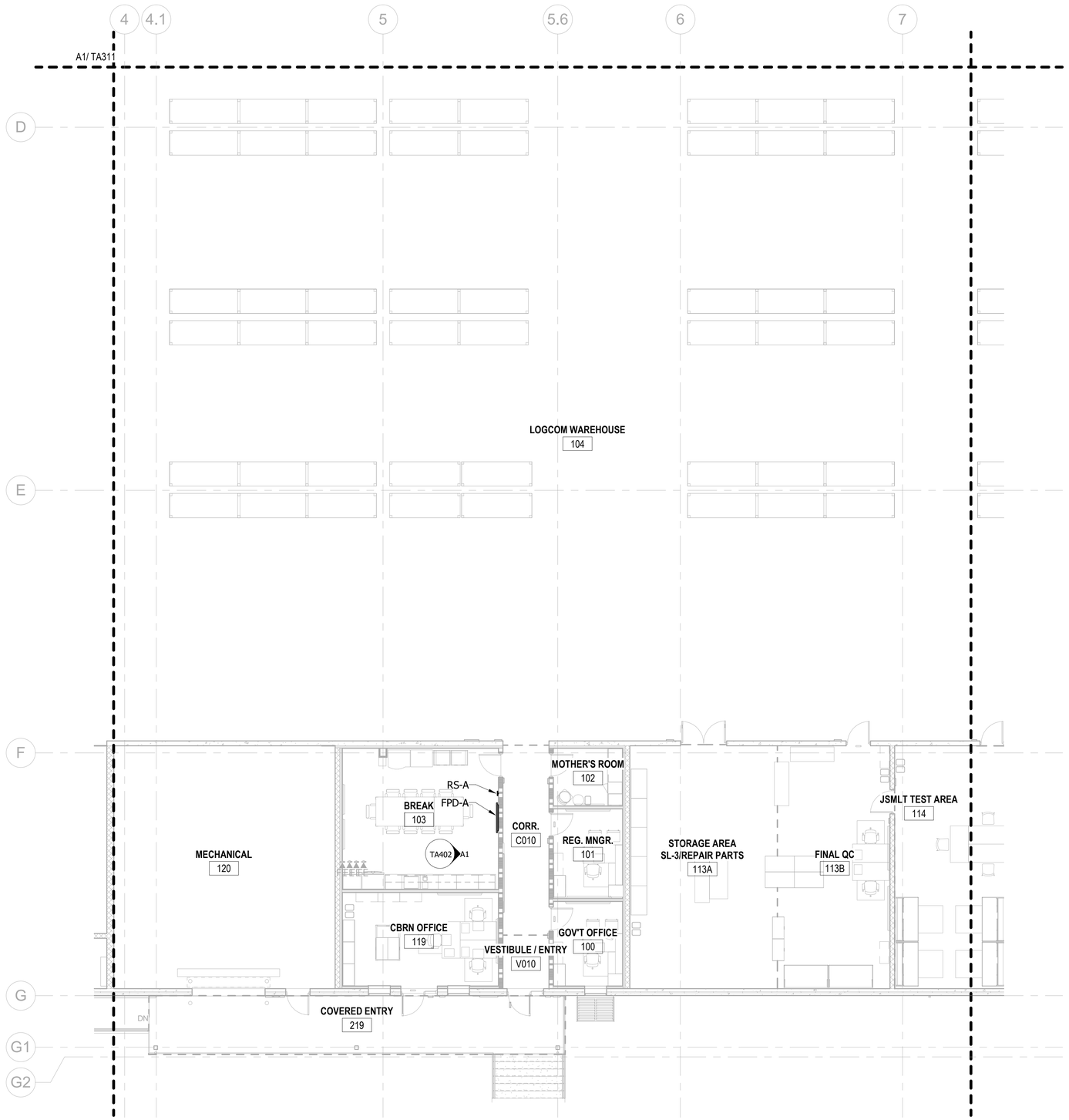

A1 1ST FLOOR PLAN EQUIPMENT - AREA F
SCALE: 1/8" = 1'-0"

KEYPLAN

A	B	C	D
E	F	G	H

0 48" 96" 192"
SCALE: 1/8" = 12"

N

APPR	DATE	DESCRIPTION	SYM

SEAL

CERTIFIED TECHNOLOGY SPECIALIST — AVIXA CTS-D — Andrew Smith — Expiration Date: 01-31-2025 — DESIGN

W.M. Jordan COMPANY — A JOINT VENTURE

Michael Baker INTERNATIONAL
100 AIRSIDE DRIVE
MOON TOWNSHIP, PA 15108
A/E INFO

APPROVED
FOR COMMANDER NAVFAC

ACTIVITY
MARINE CORPS BASE
CAMP LEJEUNE

SATISFACTORY TO DATE DD/MM/YY
DES AS | DRW AS | CHK BM
PM / DM TOWLER / ROOT
BRANCH HEAD SEK
DESIGN DIRECTOR R.L.Stephens, Jr.
FIRE PROTECTION DPS

DEPARTMENT OF THE NAVY
NAVAL FACILITIES ENGINEERING SYSTEMS COMMAND ATLANTIC
ATLANTIC DESIGN AND CONSTRUCTION
NAVAL FACILITIES ENGINEERING SYSTEMS COMMAND
NORFOLK, VA
MCB CAMP LEJEUNE
JACKSONVILLE, NC
P1527 LOGCOM CSP WAREHOUSE
1ST FLOOR PLAN EQUIPMENT - AREA F

SCALE: AS NOTED
EPROJECT NO.: 1639600
CONSTR. CONTR. NO. N40085-20-C-0059
NAVFAC DRAWING NO. 14111464
SHEET 432 OF 447

TA316

DRAWFORM REVISION: 25 AUGUST 2020

P1527 FINAL SUBMISSION - 11/18/2021

PLOTTED: 11/11/2021 8:25:18 AM

FILE NAME: BIM 360:/HF PACKAGE 3/P1527 LOG COM CSP-1639600-T.rvt

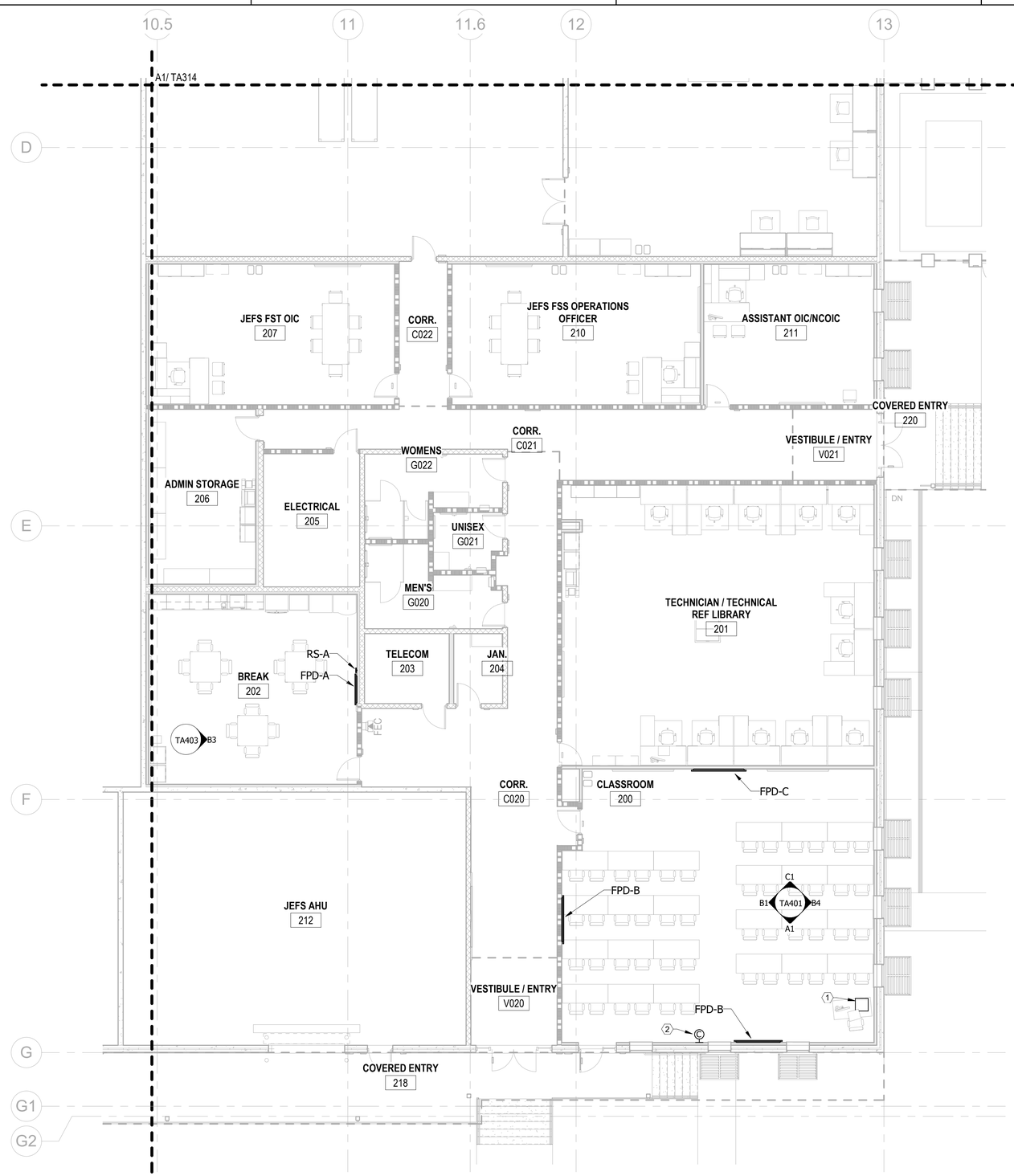

A1 1ST FLOOR PLAN EQUIPMENT - AREA H
SCALE: 1/8" = 1'-0"

KEY NOTE LEGEND

1	AUDIOVISUAL EQUIPMENT RACK, PROVIDED & INSTALLED BY AVC
2	WALL MOUNTED CAMERA PROVIDED & INSTALLED AUDIOVISUAL CONTRACTOR

KEYPLAN

A	B	C	D
E	F	G	H

0 48" 96" 192"
SCALE: 1/8" = 12"

N

APPR. | DATE | DESCRIPTION | SYM

NAVFAC

AVIXA CERTIFIED TECHNOLOGY SPECIALIST CTS-D Andrew Smith Expiration Date: 01-31-2025 DESIGN
SEAL

IRQ WM Jordan COMPANY – A JOINT VENTURE –

Michael Baker INTERNATIONAL
100 AIRSIDE DRIVE
MOON TOWNSHIP, PA 15108
A/E INFO

APPROVED
FOR COMMANDER NAVFAC

ACTIVITY
MARINE CORPS BASE CAMP LEJEUNE

SATISFACTORY TO DATE DD/MM/YY
DES AS | DRW AS | CHK BM
PM / DM TOWLER / ROOT
BRANCH HEAD SEK
DESIGN DIRECTOR R.L.Stephens, Jr.
FIRE PROTECTION DPS

DEPARTMENT OF THE NAVY
NAVAL FACILITIES ENGINEERING SYSTEMS COMMAND
ATLANTIC DESIGN AND CONSTRUCTION
NAVAL FACILITIES ENGINEERING SYSTEMS COMMAND ATLANTIC
NORFOLK, VA
MCB CAMP LEJEUNE
JACKSONVILLE, NC
P1527 LOGCOM CSP WAREHOUSE
1ST FLOOR PLAN EQUIPMENT - AREA H

SCALE: AS NOTED
EPROJECT NO.: 1639600
CONSTR. CONTR. NO. N40085-20-C-0059
NAVFAC DRAWING NO. 14111465
SHEET 433 OF 447

TA318

DRAWFORM REVISION: 25 AUGUST 2020

P1527 FINAL SUBMISSION - 11/18/2021

PLOTTED: 11/11/2021 8:25:19 AM
FILE NAME: BIM 360://HF PACKAGE 3/P1527 LOG COM CSP--1639600-T.rvt

KEY NOTE LEGEND

1	BACKING TO SUPPORT FIVE TIMES WEIGHT OF DISPLAY AND MOUNT
2	CHIEF PAC 526 (DUPLEX, 2D) SEE DETAIL C1/TA501
3	FSR PWB-100 (DUPLEX, 2D) SEE DETAIL C3/TA501
4	DUPLEX RECEPTACLE
5	ONE GANG AV BACK BOX
6	TWO GANG AV BACK BOX FOR CONFERENCE CAMERAS
7	FOUR GANG AV BACK BOX
8	QUAD RECEPTACLE

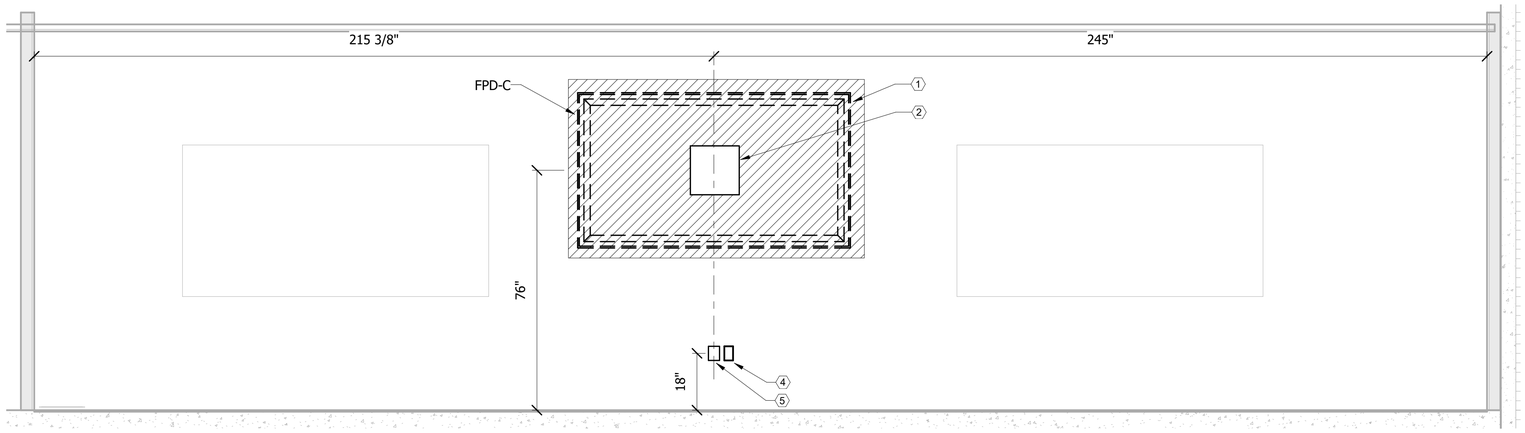

C1 CLASSROOM 200
SCALE: 1/2" = 1'-0"

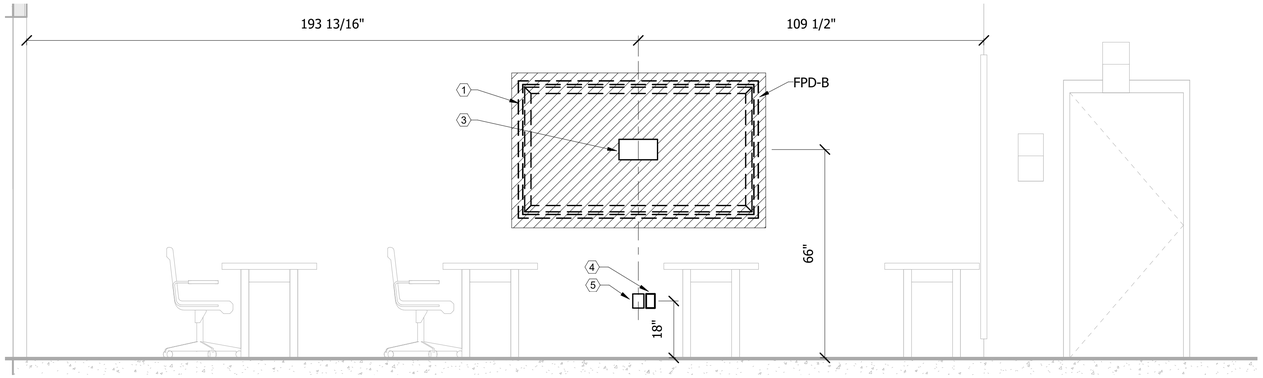

B1 CLASSROOM 200
SCALE: 1/2" = 1'-0"

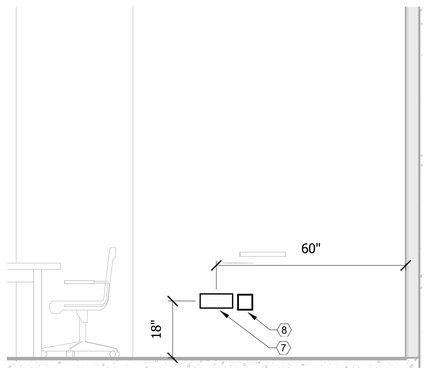

B4 CLASSROOM 200
SCALE: 1/2" = 1'-0"

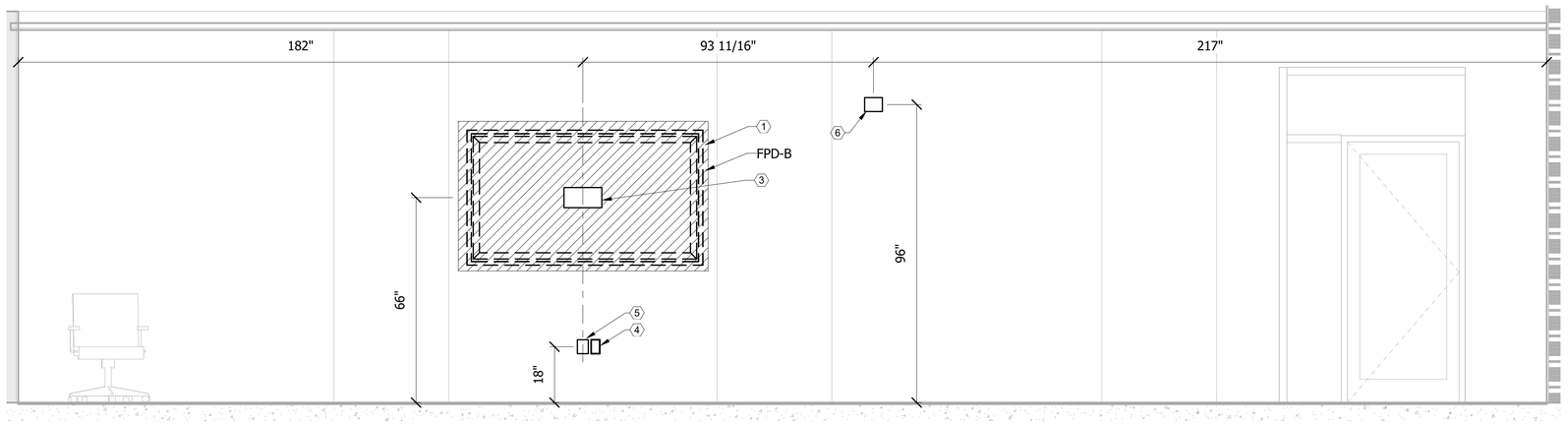

A1 CLASSROOM 200
SCALE: 1/2" = 1'-0"

0 12" 24" 48"
SCALE: 1/2" = 12"

APPR | DATE | DESCRIPTION | SYM

CERTIFIED TECHNOLOGY SPECIALIST — AVIXA CTS-D — Andrew Smith — Expiration Date: 01-31-2025 — DESIGN
SEAL

IRQ WM Jordan COMPANY — A JOINT VENTURE

Michael Baker INTERNATIONAL
100 AIRSIDE DRIVE
MOON TOWNSHIP, PA 15108
A/E INFO

APPROVED
FOR COMMANDER NAVFAC

ACTIVITY
MARINE CORPS BASE
CAMP LEJEUNE

SATISFACTORY TO DATE	DD/MM/YY
DES AS	DRW AS CHK BM
PM / DM	TOWLER / ROOT
BRANCH HEAD	SEK
DESIGN DIRECTOR	R.L.Stephens, Jr.
FIRE PROTECTION	DPS

DEPARTMENT OF THE NAVY
NAVAL FACILITIES ENGINEERING SYSTEMS COMMAND
ATLANTIC DESIGN AND CONSTRUCTION
NAVAL FACILITIES ENGINEERING SYSTEMS COMMAND ATLANTIC
NORFOLK, VA
MCB CAMP LEJEUNE
JACKSONVILLE, NC
P1527 LOGCOM CSP WAREHOUSE
AUDIOVISUAL ELEVATIONS

SCALE:	AS NOTED
EPROJECT NO.:	1639600
CONSTR. CONTR. NO.	N40085-20-C-0059
NAVFAC DRAWING NO.	14111466
SHEET	434 OF 447

TA401

DRAWFORM REVISION: 25 AUGUST 2020

P1527 FINAL SUBMISSION - 11/18/2021

PLOTTED: 11/11/2021 8:25:20 AM
FILE NAME: BIM 360://HF PACKAGE 3/P1527 LOG COM CSP-1639600-T.rvt

KEY NOTE LEGEND

1	ONE GANG AV BACK BOX
2	DUPLEX RECEPTACLE
3	CHIEF PAC 526 (DUPLEX, 2D) SEE DETAIL C1/TA501
4	BACKING TO SUPPORT FIVE TIMES WEIGHT OF DISPLAY AND MOUNT
5	TWO GANG AV BACK BOX FOR TOUCH PANEL
6	FLAT PANEL DISPLAY BRACKET, PROVIDED & INSTALLED BY AVC

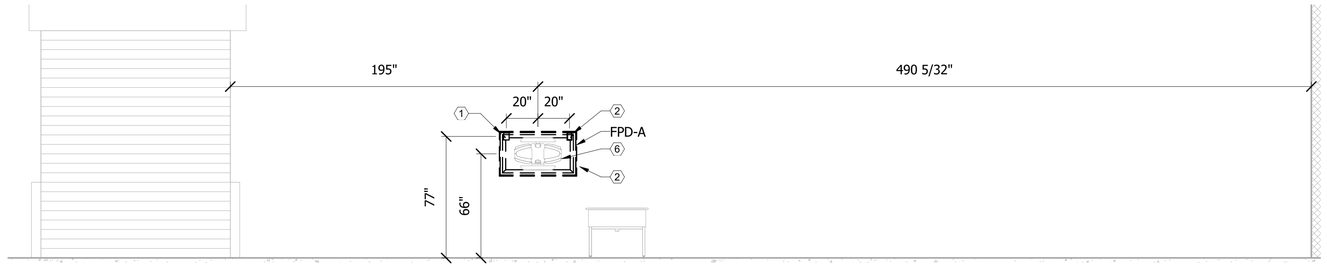

C1 SHIPPING/RECEIVING/WATER TESTING 209
SCALE: 1/4" = 1'-0"

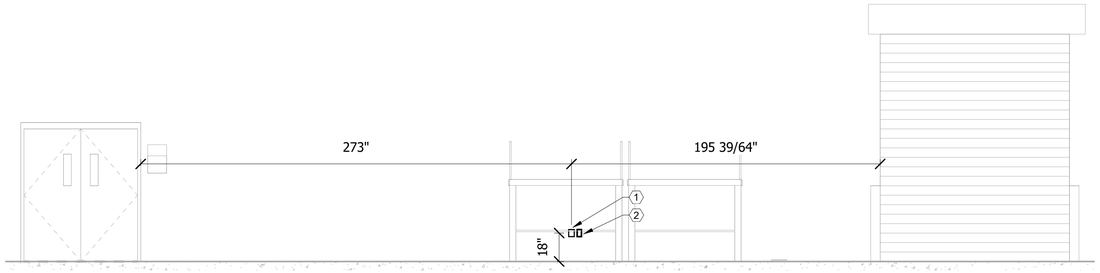

B1 SHIPPING/RECEIVING/WATER TESTING 209
SCALE: 1/4" = 1'-0"

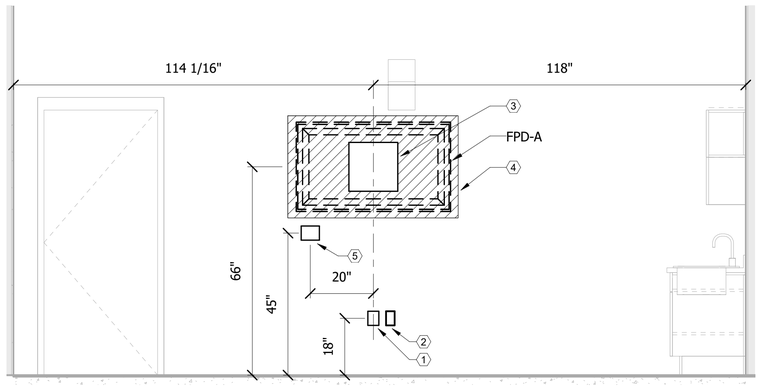

A1 BREAK 103
SCALE: 1/2" = 1'-0"

0 24" 48" 96"
SCALE: 1/4" = 12"

0 12" 24" 48"
SCALE: 1/2" = 12"

SYM	DESCRIPTION	DATE	APPR

NAVFAC

AVIXA CERTIFIED TECHNOLOGY SPECIALIST CTS-D DESIGN
Andrew Smith
Expiration Date: 01-31-2025
SEAL

IRQ W.M. Jordan COMPANY ~A JOINT VENTURE~

Michael Baker INTERNATIONAL
100 AIRSIDE DRIVE
MOON TOWNSHIP, PA 15108
A/E INFO

APPROVED
FOR COMMANDER NAVFAC

ACTIVITY
MARINE CORPS BASE
CAMP LEJEUNE

SATISFACTORY TO DATE DD/MM/YY

DES	AS	DRW AS	CHK BM
PM / DM	TOWLER / ROOT		
BRANCH HEAD	SEK		
DESIGN DIRECTOR	R.L.Stephens, Jr.		
FIRE PROTECTION	DPS		

DEPARTMENT OF THE NAVY
NAVAL FACILITIES ENGINEERING SYSTEMS COMMAND ATLANTIC
ATLANTIC DESIGN AND CONSTRUCTION
NAVAL FACILITIES ENGINEERING SYSTEMS COMMAND ATLANTIC
NORFOLK, VA
MCB CAMP LEJEUNE
JACKSONVILLE, NC
P1527 LOGCOM CSP WAREHOUSE
AUDIOVISUAL ELEVATIONS

SCALE:	AS NOTED
EPROJECT NO.:	1639600
CONSTR. CONTR. NO.	N40085-20-C-0059
NAVFAC DRAWING NO.	14111467
SHEET	435 OF 447

TA402

DRAWFORM REVISION: 25 AUGUST 2020

P1527 FINAL SUBMISSION - 11/18/2021

PLOTTED: 11/11/2021 8:25:20 AM

FILE NAME: BIM 360://HF PACKAGE 3/P1527 LOG COM CSP-1639600-T.rvt

KEY NOTE LEGEND

1	DUPLEX RECEPTACLE
2	ONE GANG AV BACK BOX
3	BACKING TO SUPPORT FIVE TIMES WEIGHT OF DISPLAY AND MOUNT
4	TWO GANG AV BACK BOX FOR TOUCH PANEL
5	CHIEF PAC 526 (DUPLEX, 2D) SEE DETAIL C1/TA501
6	FLAT PANEL DISPLAY BRACKET, PROVIDED & INSTALLED BY AVC

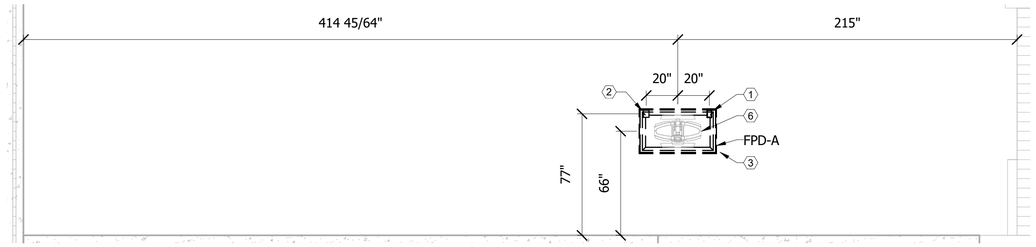

C1 SHIPPING/RECIEVING 2 DOCKS 104.1
SCALE: 1/4" = 1'-0"

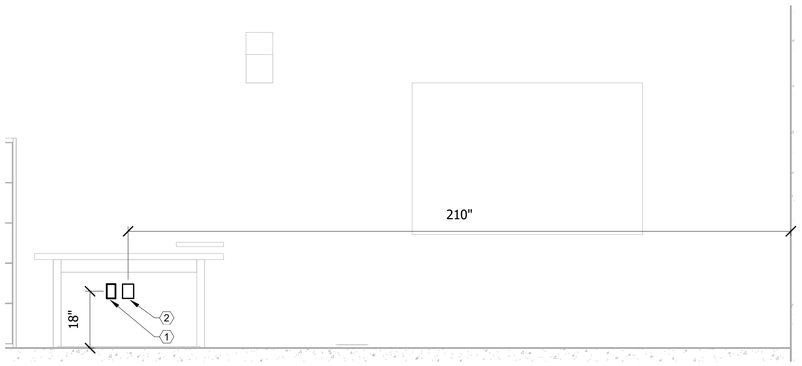

B1 SHIPPING/RECIEVING 2 DOCKS 104.1
SCALE: 1/2" = 1'-0"

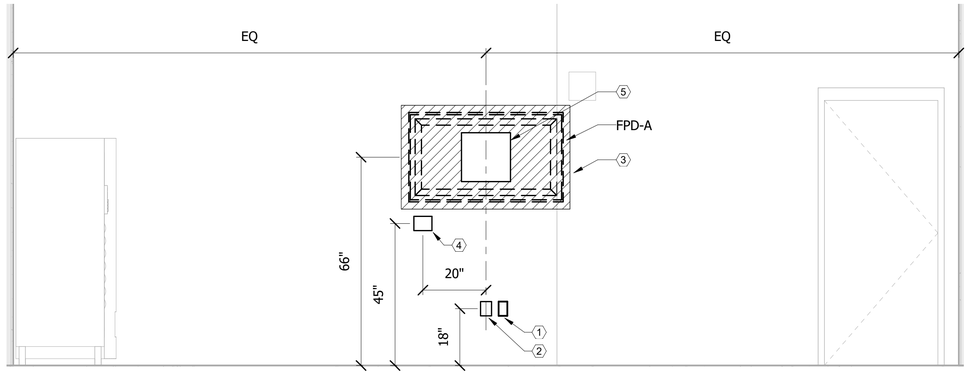

B3 BREAK 202
SCALE: 1/2" = 1'-0"

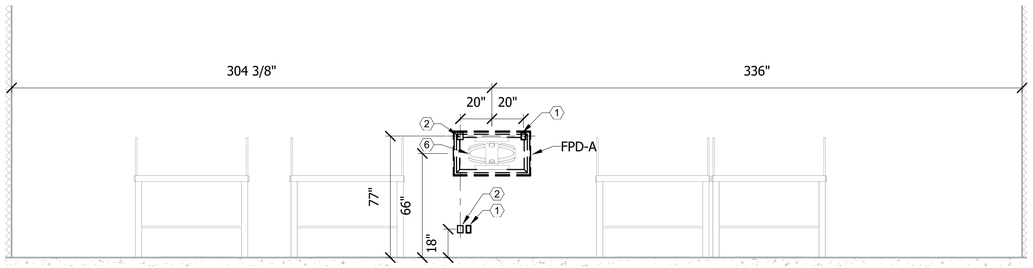

A1 TEST & REPAIR 208A
SCALE: 1/4" = 1'-0"

0 24" 48" 96"
SCALE: 1/4" = 12"

0 12" 24" 48"
SCALE: 1/2" = 12"

APPR	
DATE	
DESCRIPTION	
SYM	

NAVFAC

AVIXA CERTIFIED TECHNOLOGY SPECIALIST CTS-D DESIGN
Andrew Smith
Expiration Date: 01-31-2025
SEAL

IRQ WM Jordan COMPANY – A JOINT VENTURE –

Michael Baker INTERNATIONAL
100 AIRSIDE DRIVE
MOON TOWNSHIP, PA 15108
A/E INFO

APPROVED
FOR COMMANDER NAVFAC

ACTIVITY
MARINE CORPS BASE
CAMP LEJEUNE

SATISFACTORY TO DATE	DD/MM/YY
DES AS	DRW AS CHK BM
PM / DM	TOWLER / ROOT
BRANCH HEAD	SEK
DESIGN DIRECTOR	R.L.Stephens, Jr.
FIRE PROTECTION	DPS

DEPARTMENT OF THE NAVY
NAVAL FACILITIES ENGINEERING SYSTEMS COMMAND
ATLANTIC DESIGN AND CONSTRUCTION
MCB CAMP LEJEUNE
NAVAL FACILITIES ENGINEERING SYSTEMS COMMAND ATLANTIC
NORFOLK, VA
JACKSONVILLE, NC
P1527 LOGCOM CSP WAREHOUSE
AUDIOVISUAL ELEVATIONS

SCALE:	AS NOTED
EPROJECT NO.:	1639600
CONSTR. CONTR. NO.	N40085-20-C-0059
NAVFAC DRAWING NO.	14111468
SHEET	436 OF 447

TA403
DRAWFORM REVISION: 25 AUGUST 2020

P1527 FINAL SUBMISSION - 11/18/2021

PLOTTED: 11/11/2021 8:25:21 AM
FILE NAME: BIM 360://HF PACKAGE 3/P1527 LOG COM CSP-1639600-T.rvt

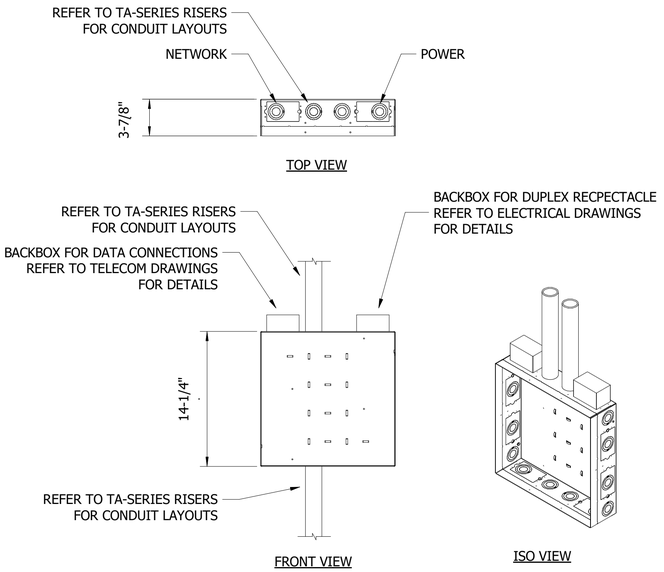

C1 CHIEF PAC 526 AV WALL BOX

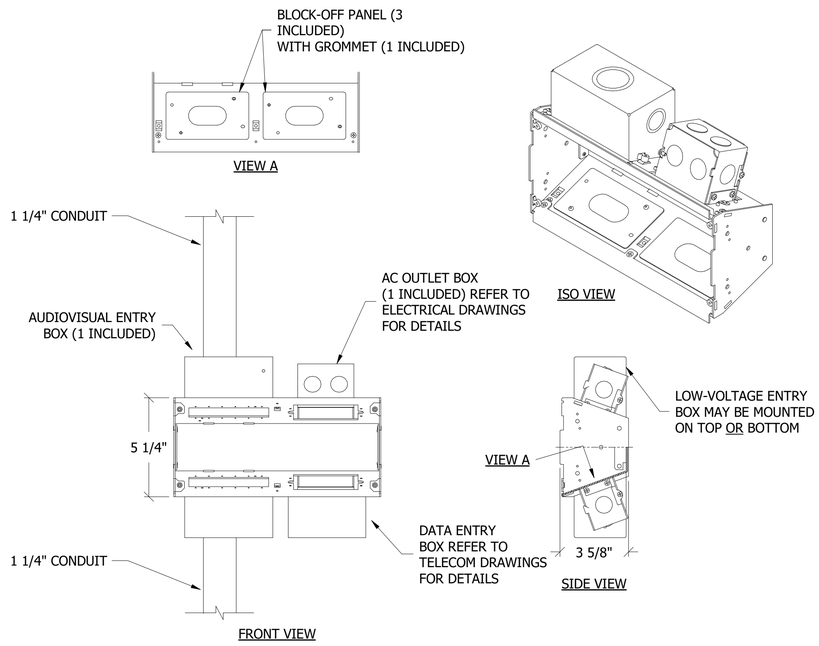

C3 FSR PWB-100 DETAIL

NO.	DESCRIPTION	DATE	APPR

NAVFAC

AVIXA CERTIFIED TECHNOLOGY SPECIALIST CTS-D Andrew Smith Expiration Date: 01-31-2025 DESIGN

SEAL

IRQ WM Jordan COMPANY – A JOINT VENTURE –

Michael Baker INTERNATIONAL

100 AIRSIDE DRIVE
MOON TOWNSHIP, PA 15108 A/E INFO

APPROVED

FOR COMMANDER NAVFAC

ACTIVITY
MARINE CORPS BASE
CAMP LEJEUNE

SATISFACTORY TO DATE DD/MM/YY

DES	DRW	CHK
AS	AS	BM

PM / DM	TOWLER / ROOT
BRANCH HEAD	SEK
DESIGN DIRECTOR	R.L.Stephens, Jr.
FIRE PROTECTION	DPS

DEPARTMENT OF THE NAVY
NAVAL FACILITIES ENGINEERING SYSTEMS COMMAND ATLANTIC
ATLANTIC DESIGN AND CONSTRUCTION
MCB CAMP LEJEUNE

NAVAL FACILITIES ENGINEERING SYSTEMS COMMAND ATLANTIC NORFOLK, VA
JACKSONVILLE, NC
P1527 LOGCOM CSP WAREHOUSE

AUDIOVISUAL DETAILS

SCALE:	AS NOTED
EPROJECT NO.:	1639600
CONSTR. CONTR. NO.	N40085-20-C-0059
NAVFAC DRAWING NO.	14111469
SHEET	437 OF 447

TA501

DRAWFORM REVISION: 25 AUGUST 2020

P1527 FINAL SUBMISSION - 11/18/2021

FILE NAME: BIM 360://HF PACKAGE 3/P1527 LOG COM CSP-1639600-T.rvt

PLOTTED: 11/11/2021 8:25:22 AM

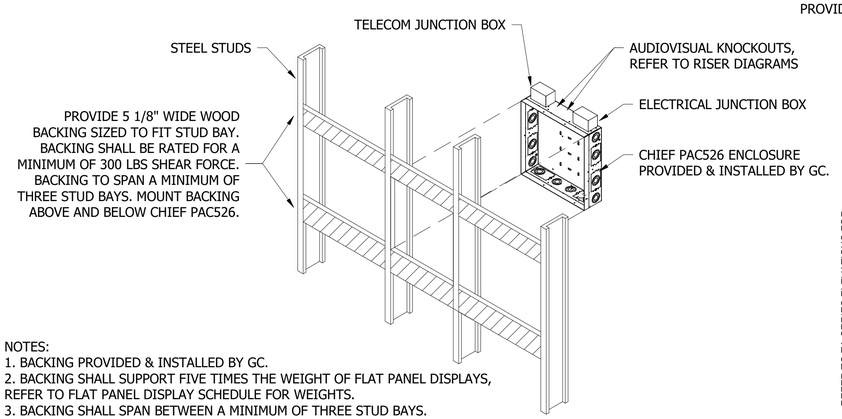

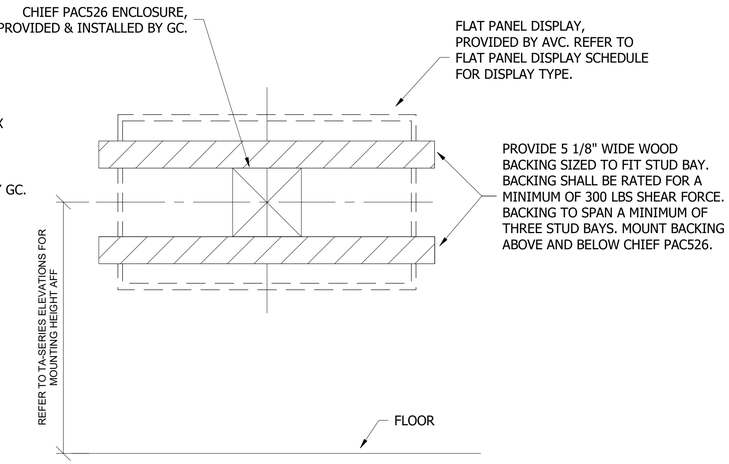

NOTES:
1. BACKING PROVIDED & INSTALLED BY GC.
2. BACKING SHALL SUPPORT FIVE TIMES THE WEIGHT OF FLAT PANEL DISPLAYS, REFER TO FLAT PANEL DISPLAY SCHEDULE FOR WEIGHTS.
3. BACKING SHALL SPAN BETWEEN A MINIMUM OF THREE STUD BAYS.
4. SEE PARTITION TYPES FOR STUD SIZE AND MATERIAL.
5. VERIFY LOCATIONS OF BACKING WITH PLANS AND ROOM ELEVATIONS.
6. FLAT PANEL DISPLAYS AND MOUNTING BRACKETS BY THE AVC.

C1 CHIEF PAC 526 BACKING DETAIL

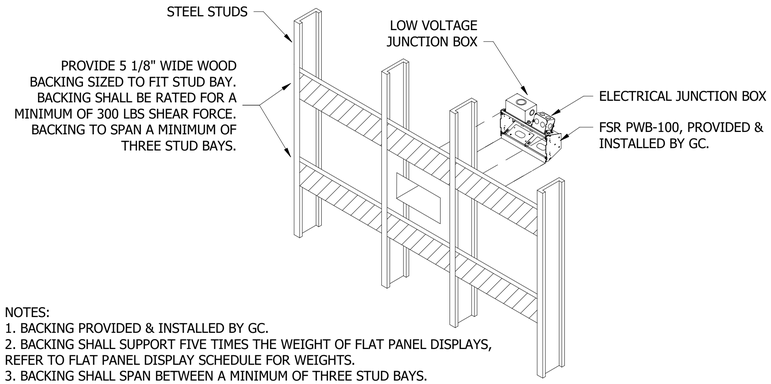

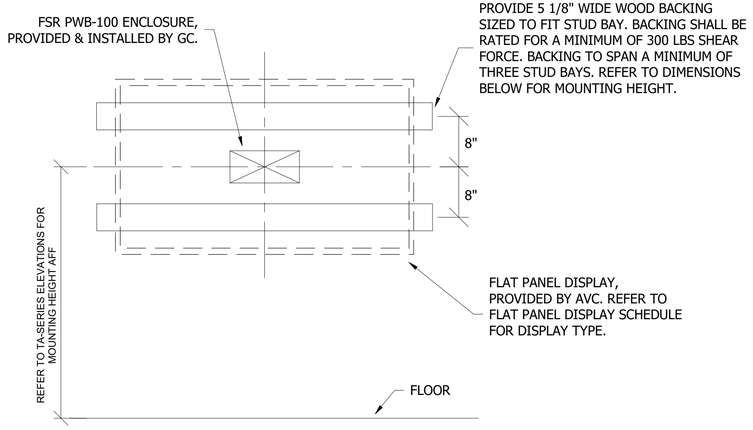

NOTES:
1. BACKING PROVIDED & INSTALLED BY GC.
2. BACKING SHALL SUPPORT FIVE TIMES THE WEIGHT OF FLAT PANEL DISPLAYS, REFER TO FLAT PANEL DISPLAY SCHEDULE FOR WEIGHTS.
3. BACKING SHALL SPAN BETWEEN A MINIMUM OF THREE STUD BAYS.
4. SEE PARTITION TYPES FOR STUD SIZE AND MATERIAL.
5. VERIFY LOCATIONS OF BACKING WITH PLANS AND ROOM ELEVATIONS.
6. FLAT PANEL DISPLAYS AND MOUNTING BRACKETS BY THE AVC.

A1 FSR PWB-100 BACKING DETAIL

APPR	DATE	DESCRIPTION	SYM

NAVFAC

AVIXA CERTIFIED TECHNOLOGY SPECIALIST CTS-D Andrew Smith Expiration Date: 01-31-2025 DESIGN

SEAL

IRQ WM Jordan COMPANY – A JOINT VENTURE –

Michael Baker INTERNATIONAL

100 AIRSIDE DRIVE
MOON TOWNSHIP, PA 15108 A/E INFO

APPROVED

FOR COMMANDER NAVFAC

ACTIVITY
MARINE CORPS BASE CAMP LEJEUNE

SATISFACTORY TO DATE DD/MM/YY

DES	DRW	CHK
AS	AS	BM

PM / DM	TOWLER / ROOT
BRANCH HEAD	SEK
DESIGN DIRECTOR	R.L.Stephens, Jr.
FIRE PROTECTION	DPS

DEPARTMENT OF THE NAVY
NAVAL FACILITIES ENGINEERING SYSTEMS COMMAND
ATLANTIC DESIGN AND CONSTRUCTION
MCB CAMP LEJEUNE

NAVAL FACILITIES ENGINEERING SYSTEMS COMMAND ATLANTIC NORFOLK, VA
JACKSONVILLE, NC

P1527 LOGCOM CSP WAREHOUSE

AUDIOVISUAL DETAILS

SCALE:	AS NOTED
EPROJECT NO.:	1639600
CONSTR. CONTR. NO.	N40085-20-C-0059
NAVFAC DRAWING NO.	14111470
SHEET	438 OF 447

TA502

DRAWFORM REVISION: 25 AUGUST 2020

P1527 FINAL SUBMISSION - 11/18/2021

PLOTTED: 11/11/2021 8:25:22 AM

FILE NAME: BIM 360://HF PACKAGE 3/P1527 LOG COM CSP-1639600-T.rvt

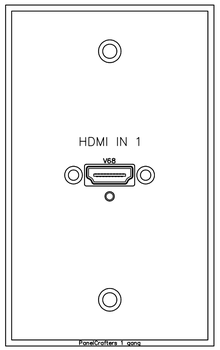

C1 HDMI FACE PLATE

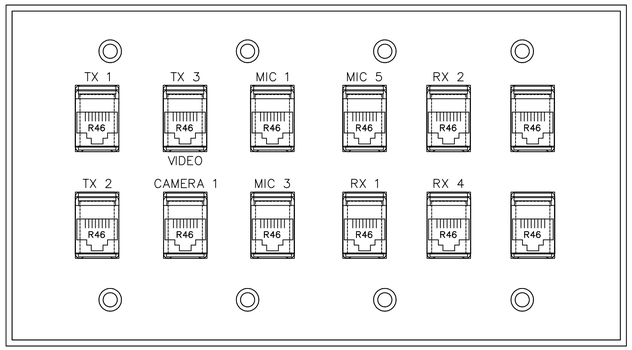

C2 CLASSROOM 200

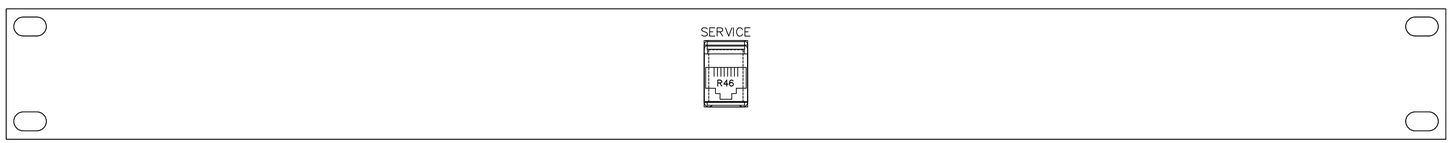

B1 SERVICE PLATE

SYM	DESCRIPTION	DATE	APPR

NAVFAC

CERTIFIED TECHNOLOGY SPECIALIST AVIXA CTS-D Andrew Smith Expiration Date: 01-31-2025 DESIGN

SEAL

RQ W.M. Jordan COMPANY - A JOINT VENTURE -

Michael Baker INTERNATIONAL
100 AIRSIDE DRIVE
MOON TOWNSHIP, PA 15108
A/E INFO

APPROVED

FOR COMMANDER NAVFAC

ACTIVITY
MARINE CORPS BASE CAMP LEJEUNE

SATISFACTORY TO DATE DD/MM/YY

DES AS | DRW AS | CHK BM

PM / DM TOWLER / ROOT

BRANCH HEAD SEK

DESIGN DIRECTOR R.L.Stephens, Jr.

FIRE PROTECTION DPS

DEPARTMENT OF THE NAVY
NAVAL FACILITIES ENGINEERING SYSTEMS COMMAND
ATLANTIC DESIGN AND CONSTRUCTION
NAVAL FACILITIES ENGINEERING SYSTEMS COMMAND ATLANTIC
NORFOLK, VA

MCB CAMP LEJEUNE
JACKSONVILLE, NC

P1527 LOGCOM CSP WAREHOUSE

AUDIOVISUAL DETAILS

SCALE: AS NOTED

EPROJECT NO.: 1639600

CONSTR. CONTR. NO. N40085-20-C-0059

NAVFAC DRAWING NO. 14111471

SHEET 439 OF 447

TA503

DRAWFORM REVISION: 25 AUGUST 2020

P1527 FINAL SUBMISSION - 11/18/2021

FILE NAME:BIM 360://HF PACKAGE 3/P1527 LOG COM CSP-1639600-T.rvt

PLOTTED:11/9/2021 11:00:10 AM

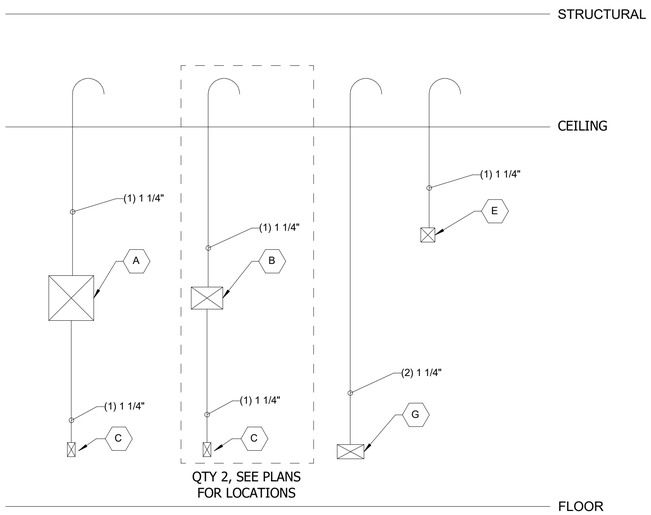

C1 CLASSROOM 200

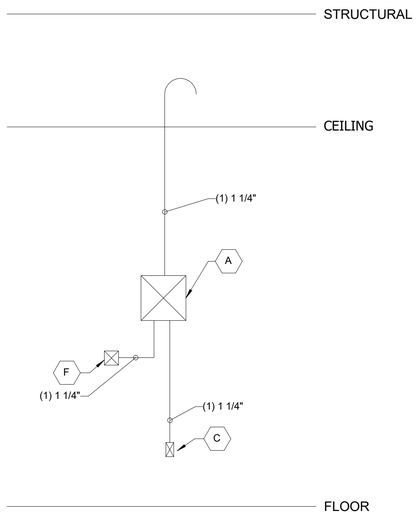

C3 BREAK 103 & 202

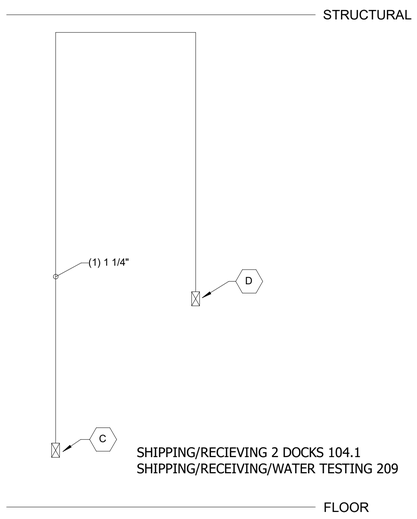

A1 SHIPPING/RECEIVING AREAS

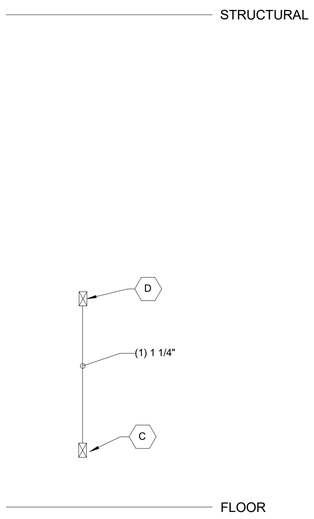

A3 TEST & REPAIR 208A

DEVICE SCHEDULE

TAG	DESCRIPTION
A	CHIEF PAC BOX 526
B	FSR PWB-100
C	ONE GANG BACK BOX FOR AV CONNECTIVITY
D	ONE GANG BACK BOX FOR DISPLAY CONTROL
E	TWO GANG BACKBOX FOR WALL MOUNTED CAMERA
F	TWO GANG BACKBOX FOR WALL MOUNTED TOUCH PANEL
G	FOUR GANG AV BACK BOX

SYM	DESCRIPTION	DATE	APPR

NAVFAC

CERTIFIED TECHNOLOGY SPECIALIST AVIXA CTS-D Andrew Smith Expiration Date: 01-31-2025 DESIGN

SEAL

RQ W.M. Jordan COMPANY – A JOINT VENTURE –

Michael Baker INTERNATIONAL
100 AIRSIDE DRIVE
MOON TOWNSHIP, PA 15108
A/E INFO

APPROVED

FOR COMMANDER NAVFAC

ACTIVITY
MARINE CORPS BASE
CAMP LEJEUNE

SATISFACTORY TO DATE DD/MM/YY

DES AS DRW AS CHK BM

PM / DM TOWLER / ROOT

BRANCH HEAD SEK

DESIGN DIRECTOR R.L.Stephens, Jr.

FIRE PROTECTION DPS

DEPARTMENT OF THE NAVY
NAVAL FACILITIES ENGINEERING SYSTEMS COMMAND
NAVAL FACILITIES ENGINEERING SYSTEMS COMMAND ATLANTIC
ATLANTIC DESIGN AND CONSTRUCTION
NORFOLK, VA

MCB CAMP LEJEUNE
JACKSONVILLE, NC
P1527 LOGCOM CSP WAREHOUSE

AUDIOVISUAL RISER

SCALE: AS NOTED
EPROJECT NO.: 1639600
CONSTR. CONTR. NO. N40085-20-C-0059
NAVFAC DRAWING NO. 14111472
SHEET 440 OF 447

TA601

DRAWFORM REVISION: 25 AUGUST 2020

P1527 FINAL SUBMISSION - 11/18/2021

UNCLASSIFIED

PLOTTED: 11/11/2021 8:25:23 AM

FILE NAME: BIM 360://HF PACKAGE 3/P1527 LOG COM CSP-1639600-T.rvt

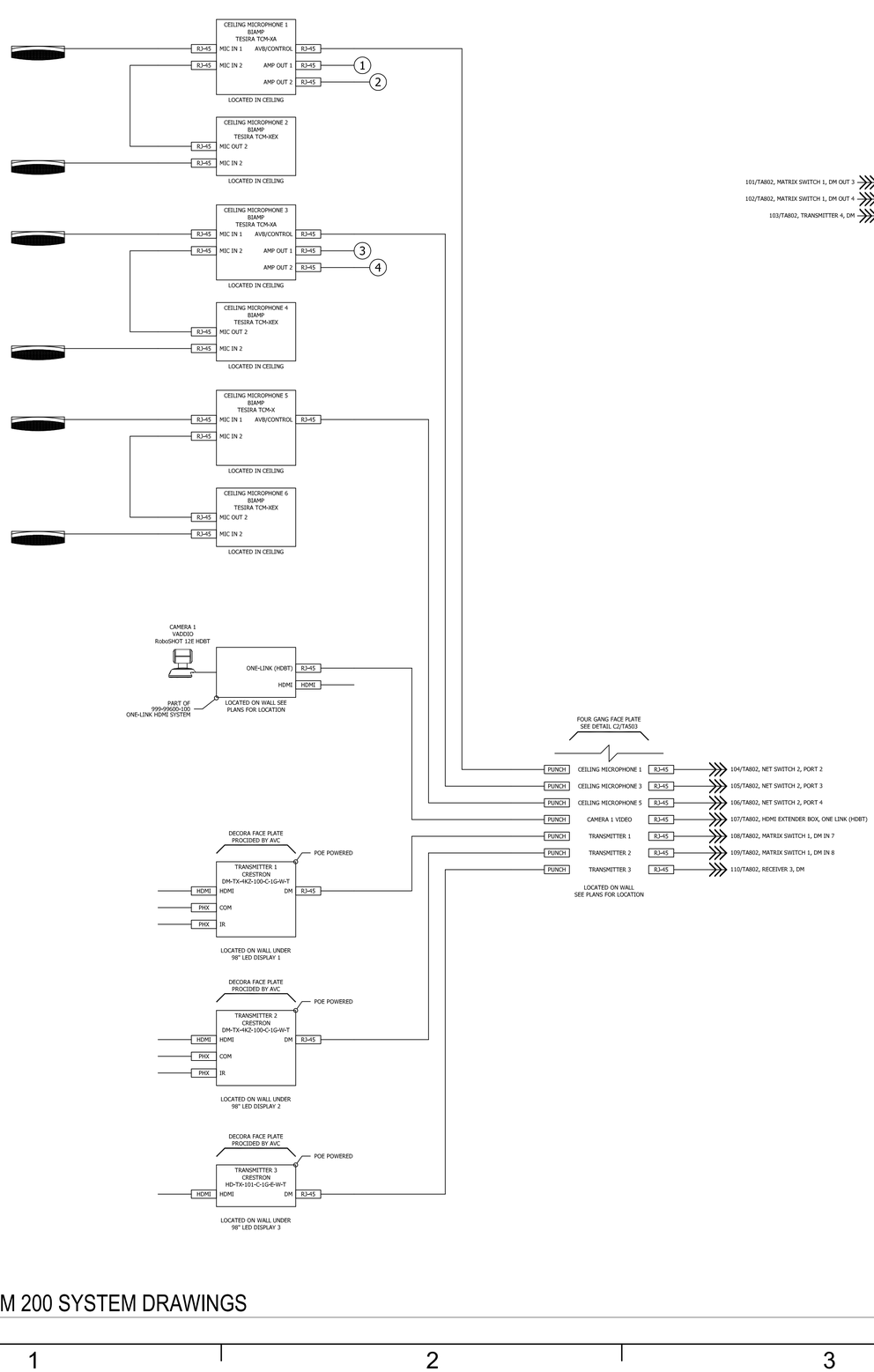

A1 CLASSROOM 200 SYSTEM DRAWINGS

SCALE: NTS

APPR	DATE	DESCRIPTION	MK'S

NAVFAC

AVIXA CTS-D CERTIFIED TECHNOLOGY SPECIALIST DESIGN
Andrew Smith
Expiration Date:
01-31-2025

SEAL

W.M. Jordan COMPANY – A JOINT VENTURE –

Michael Baker INTERNATIONAL
100 AIRSIDE DRIVE
MOON TOWNSHIP, PA 15108
A/E INFO

APPROVED

FOR COMMANDER NAVFAC

ACTIVITY
MARINE CORPS BASE
CAMP LEJEUNE

SATISFACTORY TO DATE DD/MM/YY

DES	AS	DRW	AS	CHK	BM

PM / DM	TOWLER / ROOT
BRANCH HEAD	SEK
DESIGN DIRECTOR	R.L.Stephens, Jr.
FIRE PROTECTION	DPS

DEPARTMENT OF THE NAVY
NAVAL FACILITIES ENGINEERING SYSTEMS COMMAND ATLANTIC
ATLANTIC DESIGN AND CONSTRUCTION
NAVAL FACILITIES ENGINEERING SYSTEMS COMMAND
MCB CAMP LEJEUNE
JACKSONVILLE, NC
NORFOLK, VA
P1527 LOGCOM CSP WAREHOUSE
CLASSROOM 200 SYSTEM DRAWINGS

SCALE:	AS NOTED
EPROJECT NO.:	1639600
CONSTR. CONTR. NO.	N40085-20-C-0059
NAVFAC DRAWING NO.	14111473
SHEET	441 OF 447

TA801

DRAWFORM REVISION: 25 AUGUST 2020

P1527 FINAL SUBMISSION - 11/18/2021

PLOTTED:11/9/2021 11:00:10 AM

FILE NAME:BIM 360://HF PACKAGE 3/P1527 LOG COM CSP-1639600-T.rvt

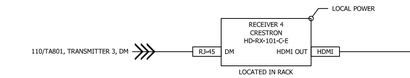

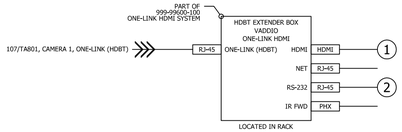

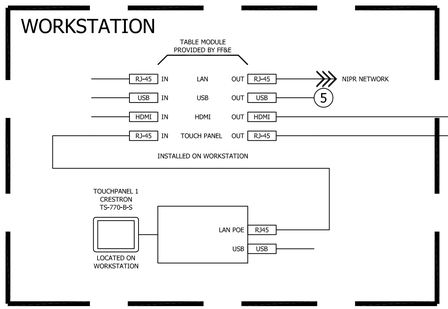

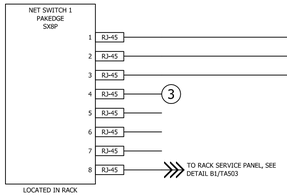

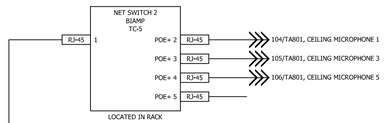

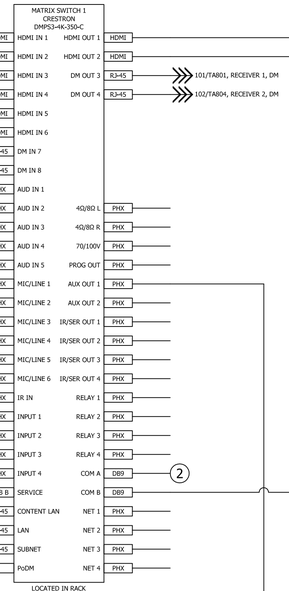

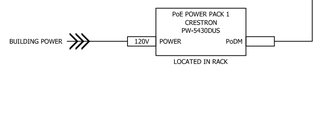

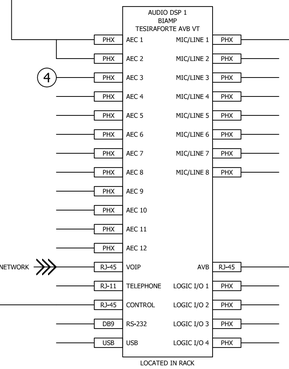

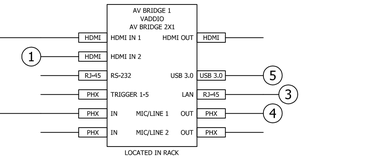

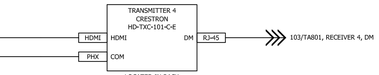

EQUIPMENT RACK

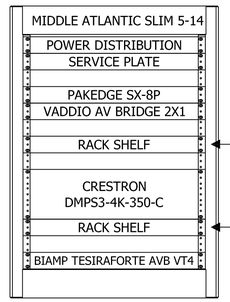

AV EQUIPMENT RACK ACCESSORIES
MIDDLE ATLANTIC 5-RS20
MIDDLE ATLANTIC PD-2015R-NS
MIDDLE ATLANTIC CAB-COOL
MIDDLE ATLANTIC U1V (QTY 2)

CRESTRON HD-TXC-101-C-E
CRESTRON HD-RX-101-C-E
VADDIO HDBT EXTENDER BOX

BIAMP TESIRACONNECT TC-5
CRESTRON PW-5430DUS

B4 CLASSROOM 200 RACK ELEVATION
SCALE: NTS

A1 CLASSROOM 200 SYSTEM DRAWINGS
SCALE: NTS

APPR	DATE	DESCRIPTION	NUM

SEAL

AVIXA CTS-D CERTIFIED TECHNOLOGY SPECIALIST DESIGN
Andrew Smith
Expiration Date:
01-31-2025

WNJ Jordan COMPANY – A JOINT VENTURE –

Michael Baker INTERNATIONAL
100 AIRSIDE DRIVE
MOON TOWNSHIP, PA 15108
A/E INFO

APPROVED
FOR COMMANDER NAVFAC

ACTIVITY
MARINE CORPS BASE
CAMP LEJEUNE

SATISFACTORY TO DATE	DD/MM/YY
DES AS	DRW AS CHK BM
PM / DM	TOWLER / ROOT
BRANCH HEAD	SEK
DESIGN DIRECTOR	R.L.Stephens, Jr.
FIRE PROTECTION	DPS

DEPARTMENT OF THE NAVY
NAVAL FACILITIES ENGINEERING SYSTEMS COMMAND
ATLANTIC DESIGN AND CONSTRUCTION
NAVAL FACILITIES ENGINEERING SYSTEMS COMMAND ATLANTIC
NORFOLK, VA
MCB CAMP LEJEUNE
JACKSONVILLE, NC
P1527 LOGCOM CSP WAREHOUSE
CLASSROOM 200 SYSTEM DRAWINGS

SCALE:	AS NOTED
EPROJECT NO.:	1639600
CONSTR. CONTR. NO.	N40085-20-C-0059
NAVFAC DRAWING NO.	14111474
SHEET	442 OF 447

TA802

DRAWFORM REVISION: 25 AUGUST 2020

P1527 FINAL SUBMISSION - 11/18/2021

PLOTTED:11/9/2021 11:00:10 AM

FILE NAMEBIM 360://HF PACKAGE 3/P1527 LOG COM CSP-1639600-T.rvt

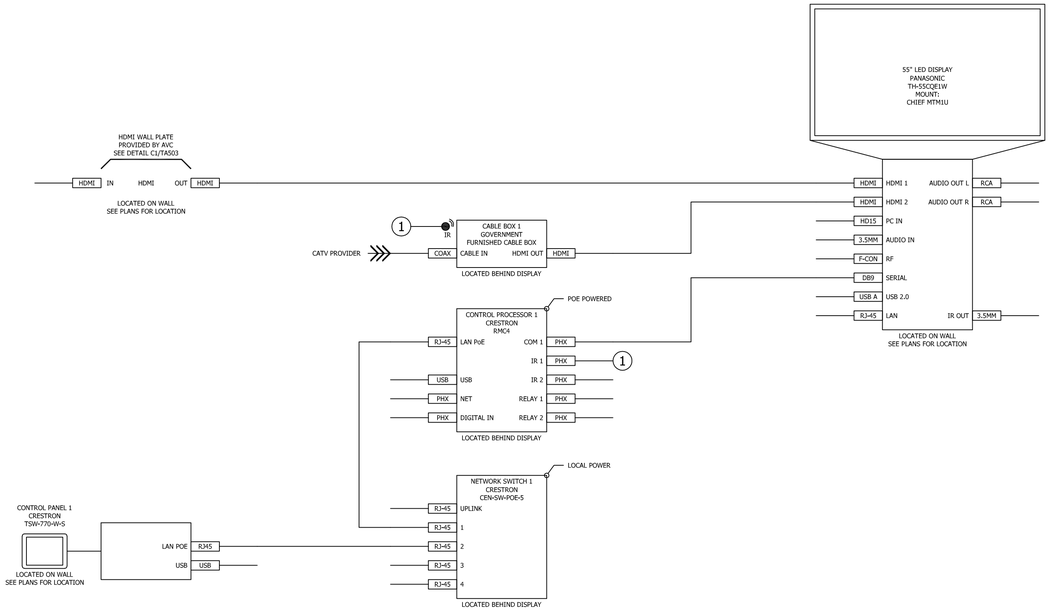

B2 BREAK 202 SYSTEM DRAWINGS

SCALE: NTS

APPR	DATE	DESCRIPTION	STM

SEAL

AVIXA CERTIFIED TECHNOLOGY SPECIALIST — CTS-D — Andrew Smith — Expiration Date: 01-31-2025 — DESIGN

RQ WNJ Jordan COMPANY — A JOINT VENTURE —

Michael Baker INTERNATIONAL
100 AIRSIDE DRIVE
MOON TOWNSHIP, PA 15108
A/E INFO

APPROVED

FOR COMMANDER NAVFAC

ACTIVITY
MARINE CORPS BASE
CAMP LEJEUNE

SATISFACTORY TO DATE DD/MM/YY

DES	AS	DRW	AS	CHK	BM

PM / DM TOWLER / ROOT
BRANCH HEAD SEK
DESIGN DIRECTOR R.L.Stephens, Jr.
FIRE PROTECTION DPS

DEPARTMENT OF THE NAVY
NAVAL FACILITIES ENGINEERING SYSTEMS COMMAND
ATLANTIC DESIGN AND CONSTRUCTION
NAVAL FACILITIES ENGINEERING SYSTEMS COMMAND ATLANTIC
NORFOLK, VA
MCB CAMP LEJEUNE
JACKSONVILLE, NC
P1527 LOGCOM CSP WAREHOUSE
BREAK 202 SYSTEM DRAWINGS

SCALE: AS NOTED
EPROJECT NO.: 1639600
CONSTR. CONTR. NO. N40085-20-C-0059
NAVFAC DRAWING NO. 14111475
SHEET 443 OF 447

TA803

DRAWFORM REVISION: 25 AUGUST 2020

P1527 FINAL SUBMISSION - 11/18/2021

PLOTTED:11/9/2021 11:00:10 AM

FILE NAME:BIM 360://HF PACKAGE 3/P1527 LOG COM CSP-1639600-T.rvt

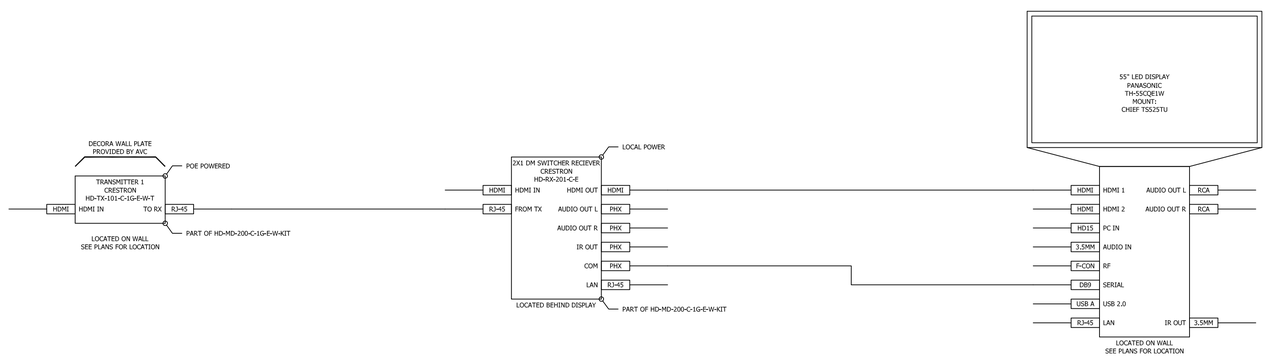

B1 TEST & REPAIR 208 SYSTEM DRAWINGS

SCALE: NTS

APPR	DATE	DESCRIPTION	NUM

NAVFAC

AVIXA CERTIFIED TECHNOLOGY SPECIALIST
AVIXA CTS-D
Andrew Smith
Expiration Date:
01-31-2025
DESIGN

SEAL

RQ Jordan COMPANY
- A JOINT VENTURE -

Michael Baker
INTERNATIONAL
100 AIRSIDE DRIVE
MOON TOWNSHIP, PA 15108
A/E INFO

APPROVED

FOR COMMANDER NAVFAC

ACTIVITY
MARINE CORPS BASE
CAMP LEJEUNE

SATISFACTORY TO DATE DD/MM/YY

DES	AS	DRW	AS	CHK	BM

PM / DM TOWLER / ROOT
BRANCH HEAD SEK
DESIGN DIRECTOR R.L.Stephens, Jr.
FIRE PROTECTION DPS

DEPARTMENT OF THE NAVY
NAVAL FACILITIES ENGINEERING SYSTEMS COMMAND
ATLANTIC DESIGN AND CONSTRUCTION
MCB CAMP LEJEUNE

NAVAL FACILITIES ENGINEERING SYSTEMS COMMAND ATLANTIC
NORFOLK, VA

JACKSONVILLE, NC
P1527 LOGCOM CSP WAREHOUSE

TEST & REPAIR 208 SYSTEM DRAWINGS

SCALE: AS NOTED
EPROJECT NO.: 1639600
CONSTR. CONTR. NO.
N40085-20-C-0059
NAVFAC DRAWING NO.
14111476
SHEET 444 OF 447

TA804

DRAWFORM REVISION: 25 AUGUST 2020

P1527 FINAL SUBMISSION - 11/18/2021

PLOTTED:11/9/2021 11:00:10 AM

FILE NAME:BIM 360://HF PACKAGE 3/P1527 LOG COM CSP-1639600-T.rvt

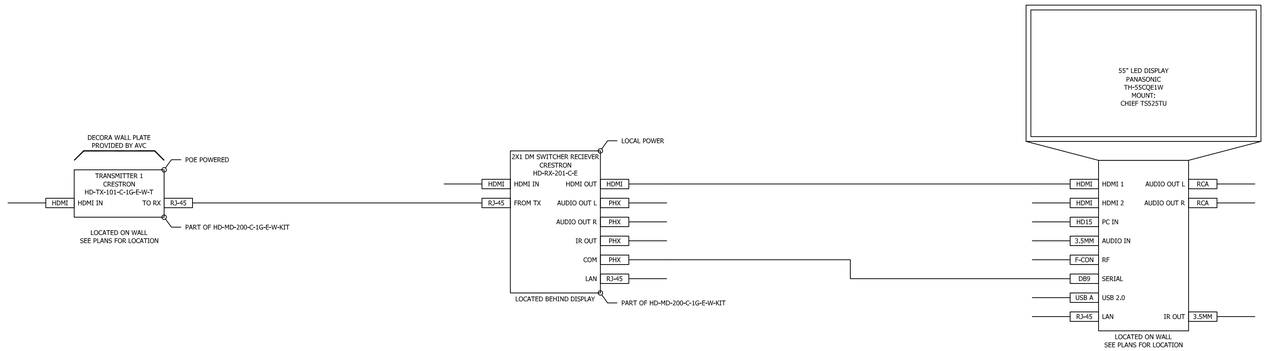

B1 SHIPPING/RECEIVING/WATER TESTING 209 SYSTEM DRAWINGS

SCALE: NTS

NTS	DESCRIPTION	DATE	APPR

SEAL

AVIXA CTS-D Andrew Smith Expiration Date: 01-31-2026

WNJ Jordan COMPANY – A JOINT VENTURE –

Michael Baker INTERNATIONAL

100 AIRSIDE DRIVE
MOON TOWNSHIP, PA 15108 A/E INFO

APPROVED

FOR COMMANDER NAVFAC

ACTIVITY
MARINE CORPS BASE
CAMP LEJEUNE

SATISFACTORY TO DATE DD/MM/YY

DES	AS	DRW AS	CHK BM
PM / DM	TOWLER / ROOT		
BRANCH HEAD	SEK		
DESIGN DIRECTOR	R.L.Stephens, Jr.		
FIRE PROTECTION	DPS		

DEPARTMENT OF THE NAVY
NAVAL FACILITIES ENGINEERING SYSTEMS COMMAND
ATLANTIC DESIGN AND CONSTRUCTION

NAVAL FACILITIES ENGINEERING SYSTEMS COMMAND ATLANTIC
NORFOLK, VA

MCB CAMP LEJEUNE
JACKSONVILLE, NC
P1527 LOGCOM CSP WAREHOUSE

SHIPPING/RECEIVING/WATER TESTING 209 SYSTEM DRAWINGS

SCALE:	AS NOTED
EPROJECT NO.:	1639600
CONSTR. CONTR. NO.	N40085-20-C-0059
NAVFAC DRAWING NO.	14111477
SHEET	445 OF 447

TA805

DRAWFORM REVISION: 25 AUGUST 2020

P1527 FINAL SUBMISSION - 11/18/2021

PLOTTED:1/8/2021 11:00:10 AM

FILE NAME:BIM 360://HF PACKAGE 3/P1527 LOG COM CSP--1639600-T.rvt

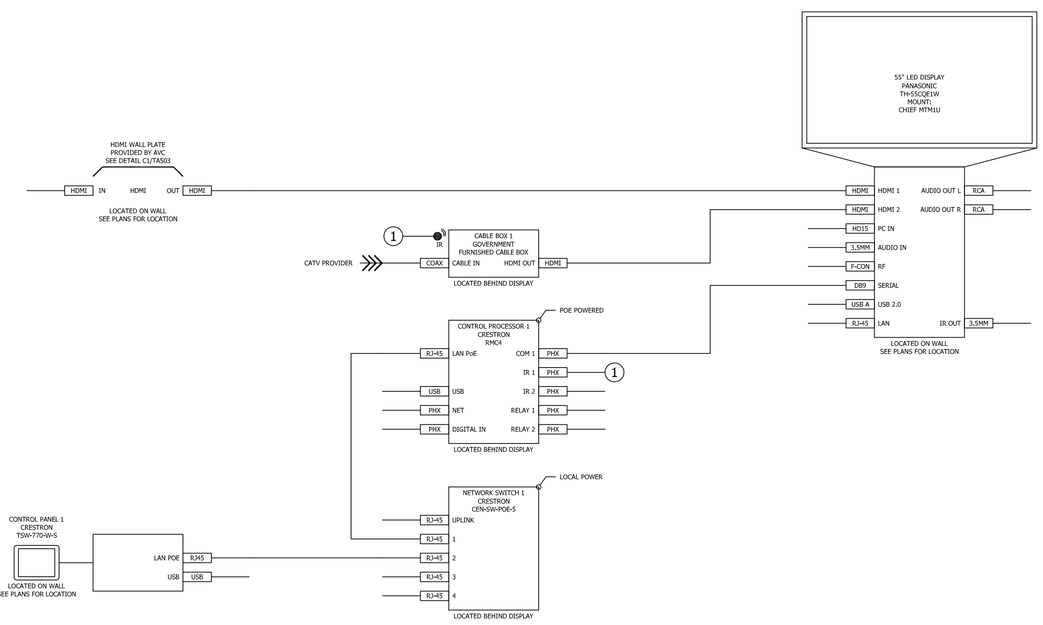

B2 BREAK 103 SYSTEM DRAWINGS

SCALE: NTS

APPR			
DATE			
DESCRIPTION			
NUM			

NAVFAC

AVIXA CERTIFIED TECHNOLOGY SPECIALIST CTS-D DESIGN
Andrew Smith
Expiration Date:
01-31-2025
SEAL

RQ Jordan COMPANY – A JOINT VENTURE –

Michael Baker INTERNATIONAL
100 AIRSIDE DRIVE
MOON TOWNSHIP, PA 15108
A/E INFO

APPROVED

FOR COMMANDER NAVFAC

ACTIVITY
MARINE CORPS BASE
CAMP LEJEUNE

SATISFACTORY TO DATE DD/MM/YY

DES	AS	DRW AS	CHK BM
PM / DM		TOWLER / ROOT	
BRANCH HEAD		SEK	
DESIGN DIRECTOR		R.L.Stephens, Jr.	
FIRE PROTECTION		DPS	

DEPARTMENT OF THE NAVY
NAVAL FACILITIES ENGINEERING SYSTEMS COMMAND
ATLANTIC DESIGN AND CONSTRUCTION
NAVAL FACILITIES ENGINEERING SYSTEMS COMMAND ATLANTIC
NORFOLK, VA
MCB CAMP LEJEUNE
JACKSONVILLE, NC
P1527 LOGCOM CSP WAREHOUSE
BREAK 103 SYSTEM DRAWINGS

SCALE:	AS NOTED
EPROJECT NO.:	1639600
CONSTR. CONTR. NO.	N40085-20-C-0059
NAVFAC DRAWING NO.	14111478
SHEET	446 OF 447

TA806

DRAWFORM REVISION: 25 AUGUST 2020

P1527 FINAL SUBMISSION - 11/18/2021

PLOTTED:11/9/2021 11:00:10 AM

FILE NAMEBIM 360://HF PACKAGE 3/P1527 LOG COM CSP-1639600-T.rvt

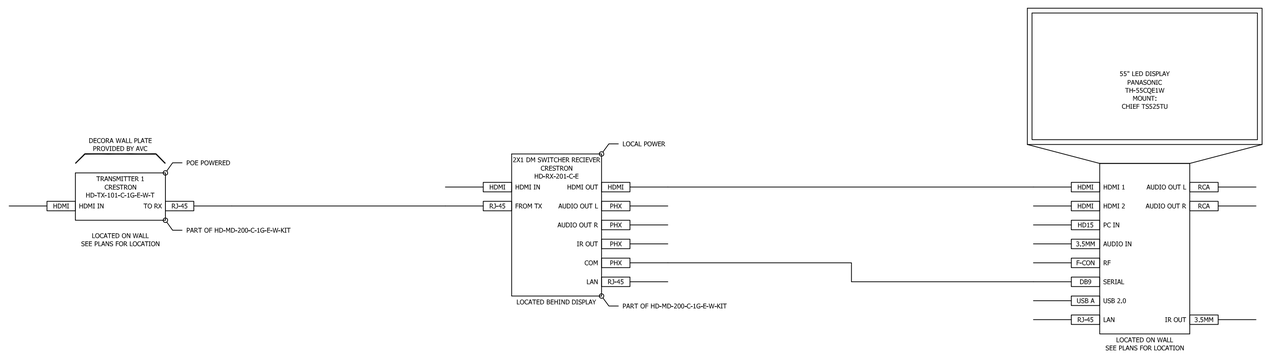

B1 SHIPPING/RECEIVING 2 DOCKS 104.1 SYSTEM DRAWINGS

SCALE: NTS

MK	DESCRIPTION	DATE	APPR

SEAL

AVIXA CERTIFIED TECHNOLOGY SPECIALIST — CTS-D — DESIGN
Andrew Smith
Expiration Date:
01-31-2025

RQ WNJ Jordan COMPANY — A JOINT VENTURE —

Michael Baker INTERNATIONAL
100 AIRSIDE DRIVE
MOON TOWNSHIP, PA 15108
A/E INFO

APPROVED

FOR COMMANDER NAVFAC

ACTIVITY
MARINE CORPS BASE
CAMP LEJEUNE

SATISFACTORY TO DATE	DD/MM/YY
DES AS	DRW AS CHK BM
PM / DM	TOWLER / ROOT
BRANCH HEAD	SEK
DESIGN DIRECTOR	R.L.Stephens, Jr.
FIRE PROTECTION	DPS

DEPARTMENT OF THE NAVY
NAVAL FACILITIES ENGINEERING SYSTEMS COMMAND
ATLANTIC DESIGN AND CONSTRUCTION
NAVAL FACILITIES ENGINEERING SYSTEMS COMMAND ATLANTIC
NORFOLK, VA
MCB CAMP LEJEUNE
JACKSONVILLE, NC
P1527 LOGCOM CSP WAREHOUSE
SHIPPING/RECEIVING 2 DOCKS 104.1 SYSTEM DRAWINGS

SCALE:	AS NOTED
EPROJECT NO.:	1639600
CONSTR. CONTR. NO.	N40085-20-C-0059
NAVFAC DRAWING NO.	14111479
SHEET	447 OF 447

TA807

DRAWFORM REVISION: 25 AUGUST 2020

P1527 FINAL SUBMISSION - 11/18/2021

PLOTTED:11/9/2021 11:00:10 AM

FILE NAME:BIM 360://HF PACKAGE JUP1527 LOG COM CSP-1639600-T.rvt