SYMBOL — TELECOMMUNICATIONS DESCRIPTION

APPLICABLE TO ALL OUTLETS LISTED BELOW:

TERMINATIONS TO BE PERFORMED USING PIN/PAIR ASSIGNMENTS IN ACCORDANCE WITH THE T568A PIN-OUT SEQUENCE USING 8-PIN 8 CONDUCTOR (8P8C) RJ45 TYPE CONNECTORS RATED FOR THE CATEGORY OF THE INSTALLED CABLE; COLOR TO MATCH THE U/UTP OUTER JACKET.

TELECOMMUNICATIONS OUTLETS, 8P8C RJ45 TYPE CONNECTOR
ALL UTP CABLES TO HAVE GREEN PLENUM RATED OUTER JACKET

- STANDARD WORK AREA OUTLET, MOUNTED AT 18" AFF UON: FOUR (4) CATEGORY 6A UTP COPPER CABLES TO SERVING TR, TERMINATE ON RACK MOUNTED PATCH PANELS. SEE DETAILS FOR ADDITIONAL INFORMATION.
- DDC — DIRECT DIGITAL CONTROL (DDC) OUTLET, MOUNTED AT 18" AFF UON: TWO (2) CATEGORY 6A UTP COPPER CABLE TO SERVING TR, TERMINATE ON RACK MOUNTED PATCH PANELS. SEE DETAILFOR ADDITIONAL INFORMATION.
- W WP — WALL MOUNTED TELEPHONE OUTLET, MOUNTED AT 48" AFF UON: ONE (1) CATEGORY 6A UTP COPPER CABLE TO SERVING TR, TERMINATE ON RACK MOUNTED PATCH PANELS. SEE DETAIL FOR ADDITIONAL INFORMATION.
- TV — CATV OUTLET, MOUNTED AT 72" AFF; TWO (2) CATEGORY 6A UTP COPPER CABLES AND ONE (1) RG-6 DUAL-SHIELD COAXIAL COPPER CABLES TO SERVING TR, TERMINATE CATEGORY 6 UTP CABLES ON RACK MOUNTED PATCH PANELS. TERMINATE RG-6 COAXIAL COPPER CABLE ON WALL AREA DESIGNATED FOR CATV.
- M — MULTI-USER TELECOM OUTLET ASSEMBLY (MUTOA), MOUNTED AT COUNTER HEIGHT; TWELVE (12) CATEGORY 6A UTP COPPER CABLES TO SERVICE TR, TERMINATE ON RACK MOUNTED PATCH PANELS. "C" DENOTES CLASSIFIED, "U" DENOTES UNCLASSIFIED. TWO (2) SIPR, TWO (2) CACCTUS, TWO (2) MTWS.
- WAP — WIRELESS ACCESS POINT (WAP) OUTLET, MOUNTED TWO (2) CATEGORY-6A U/UTP OUTLETS), LOCATED 12" ABOVE DROPPED CEILING
- STANDARD WORK ARE OUTLET, FLOORBOX MOUNTED; FOUR (4) CATEGORY 6A UTP COPPER CABLES TO SERVING TR, TERMINATE ON RACK MOUNTED PATCH PANELS. COORDINATE WITH ELECTRICAL AND AUDIOVISUAL FOR FLOORBOX LOCATIONS.
- S — STANDARD WORK ARE OUTLET, SIPRNET, FOUR (4) CATEGORY 6A UTP COPPER CABLES, RED JACKET, TO SIM SERVER RM 304A; TERMINATE ON WALL MOUNTED RACK IN SIM SERVER RM 304A, INSTALL TO DESIGNATED WORK AREAS IN PDS, PER CNSSI 7003. A=SIPR, B=CACCTUS, C=MTWS
- FA — FIRE ALARM SYSTEM PHONE INTERFACE OUTLET, COORDINATE MOUNTING HEIGHT WITH FIRE ALARM EQUIPMENT INSTALLER: TWO (2) CATEGORY 6A UTP COPPER CABLE TO SERVING TR, TERMINATE ON RACK MOUNTED PATCH PANELS. SEE FACEPLATE DETAILS FOR ADDITONAL INFORMATION.
- S6 — PDS USER DROPBOX, SIPRNET, SIX (6) CATEGORY 6A UTP COPPER CABLES, RED JACKET, TO SIM SERVER ROOM 304A; APPROPRIATE RACK IN SIM SERVER ROOM 304A. INSTALL TO DESIGNATED WORK AREAS IN PDS, PER CNSSI 7003; TWO (2) SIPR, TWO (2) CACCTUS, TWO (2) MTWS
- TIE — PDS USER DROPBOX, TIE (CLASSIFIED), SIX (6) CATEGORY 6A UTP COPPER CABLES, RED JACKET TO APPROPRIATE RACK IN SIM SERVER ROOM 304A. INSTALL TO DESIGNATED WORK AREAS IN PDS, PER CNSSI 7003; TWO (2) SIPR, TWO (2) CACCTUS, TWO (2) MTWS
- T — WALL MOUNTED SYNCRONIZED CLOCK, MOUNTED AT 72" AFF MINIMUM; TWO (2) CATEGORY 6A UTP COPPER CABLES, GREEN JACKET, TO SIM SERVER ROOM 304A; TERMINATE IN CACCTUS NTP SERVER RACK
- FLOORBOX LOCATION, TRAINING SIMULATION SYSTEM – UNCLASSIFIED; INSTALLED IN RAISED ACCESS FLOOR. INSTALL EIGHT (8) CATEGORY 6A UTP PLENUM-RATED, GREEN JACKET COPPER CABLES FROM TERMINATING RACK IN SIM SERVER ROOM TO FLOORBOX LOCATION, AND ONE (1) HDMI CABLE FROM FLOORBOX LOCATION TO AV EQUIPMENT IN EXECISE CONTROL ROOM. SEE DETAIL SHEET T-601 FOR TERMINATION DETAILS. SEE E-001 FOR ELECTRICAL INFORMATION
- FB1 — MULTISERVICE FLOOR BOX, SEE E-502 FOR MORE INFORMATION.
- FB2 — MULTISERVICE FLOOR BOX, SEE E-502 FOR MORE INFORMATION.
- FO — FIBER OPTIC HANDHOLE (EXISTING)
- FLOORBOX LOCATION, TRAINING SIMULATION SYSTEM – UNCLASSIFIED; INSTALLED IN RAISED ACCESS FLOOR. INSTALL EIGHT (8) CATEGORY 6A UTP PLENUM-RATED, GREEN JACKET COPPER CABLES FROM TERMINATING RACK IN SIM SERVER ROOM TO FLOORBOX LOCATION. SEE DETAIL SHEET T-602 FOR TERMINATION DETAILS. SEE E-001 FOR ELECTRICAL INFORMATION.
- FLOORBOX LOCATION, TRAINING SIMULATION SYSTEM – CLASSIFIED; INSTALLED IN RAISED ACCESS FLOOR. INSTALL EIGHT (8) CATEGORY 6A UTP PLENUM-RATED, RED JACKET COPPER CABLES FROM TERMINATING RACK IN SIM SERVER ROOM TO FLOORBOX LOCATION. SEE DETAIL SHEET T-602 FOR TERMINATION DETAILS. SEE E-001 FOR ELECTRICAL INFORMATION.

OTHER SYMBOLS:

- PA — CEILING MOUNTED PA SYSTEM SPEAKER
- PA — WALL MOUNTED PA SYSTEM SPEAKER
- GROUNDING BUSBAR, TMGB OR TGB AS INDICATED ON PLANS

SYMBOL — TELECOMMUNICATIONS DESCRIPTION

SECURITY SYMBOLS:

- IDS — INTRUSION DETECTION SYSTEM CONTROL PANEL
- WALL-MOUNTED PASSIVE INFRARED SENSOR (PIR)
- CEILING-MOUNTED PASSIVE INFRARED SENSOR (PIR)
- HORIZONTAL CONDUIT RUN FROM TELECOMMUNICATION ROOMS TO RESPECTIVE AREAS AS INDICATED ON PLANS
- CR — ACCESS CONTROL SYSTEM / INTRUSION DETECTION SYSTEM CARD READER
- ES — ELECTRIC STRIKE
- HSS — HIGH SECURITY BALANCED MAGNETIC SWITCH
- KP — KEYPAD FOR ACCESS CONTROL SYSTEM / INTRUSION DETECTION SYSTEM
- REX — REQUEST-TO-EXIT SENSOR
- 1DC — SINGLE DOOR TCP/IP ACS/IDS CONTROLLER MOUNTED ABOVE ACCESSIBLE CEILING ON SECURE SIDE OF DOOR WITH TWO CATEGORY-6 U/UTP CABLE TO MAIN ACS/IDS CONTROLLER PANEL
- 2DC — 2-DOOR TCP/IP ACS/IDS CONTROLLER MOUNTED ABOVE ACCESSIBLE CEILING ON SECURE SIDE OF DOOR WITH TWO CATEGORY-6 U/UTP CABLE TO MAIN ACS/IDS CONTROLLER PANEL
- 4DC — 4-DOOR TCP/IP ACS/IDS CONTROLLER MOUNTED ABOVE ACCESSIBLE CEILING ON SECURE SIDE OF DOOR WITH TWO CATEGORY-6 U/UTP CABLE TO MAIN ACS/IDS CONTROLLER PANEL
- SECURITY CAMERA, FIXED
- PTZ — SECURITY CAMERA WITH PAN, TILT, ZOOM CAPABILITIES

TELECOMMUNICATIONS STANDARDS

TELECOMMUNICATIONS INSTALLATION MUST COMPLY WITH THE MOST CURRENT VERSION OF THE FOLLOWING STANDARDS:

AMERICANS WITH DISABILITIES ACT AND ARCHITECTURAL BARRIERS ACT ACCESSIBILITY GUIDELINES (UFAS/ADAAG), 2011

ANSI/TIA-568.0-D - GENERIC TELECOMMUNICATIONS CABLING FOR CUSTOMER PREMISES

ANSI/TIA-568.1-D - COMMERCIAL BUILDING TELECOMMUNICATIONS CABLING STANDARD

ANSI/TIA-568-C.2 - BALANCED TWISTED-PAIR TELECOMMUNICATIONS CABLING AND COMPONENTS STANDARD

ANSI/TIA-568.3-D - OPTICAL FIBER CABLING COMPONENTS STANDARD

ANSI/TIA-568.4-D - BROADBAND COAXIAL CABLING AND COMPONENTS STANDARD

ANSI/TIA-569-D - TELECOMMUNICATIONS PATHWAYS AND SPACES

ANSI/TIA-598-D - OPTICAL FIBER CABLE COLOR CODING.

ANSI/TIA-606-B - ADMINISTRATION STANDARD FOR COMMERCIAL TELECOMMUNICATIONS INFRASTRUCTURE

ANSI/TIA-607-C - COMMERCIAL BUILDING GROUNDING (EARTHING) AND BONDING REQUIREMENTS FOR TELECOMMUNICATIONS

ANSI/TIA-758-B - CUSTOMER-OWNED OUTSIDE PLANT TELECOMMUNICATIONS INFRASTRUCTURE STANDARD

ANSI/TIA-1152, 1152-A - REQUIREMENTS FOR FIELD TEST INSTRUMENTS AND MEASUREMENTS FOR BALANCED TWISTED-PAIR CABLING

TIA-526-7 - MEASUREMENT OF OPTICAL POWER LOSS OF INSTALLED SINGLE-MODE FIBER CABLE PLANT

TIA-526-14-C - OPTICAL POWER LOSS MEASUREMENTS OF INSTALLED MULTIMODE FIBER CABLE PLANT

NFPA 70 - NATIONAL ELECTRICAL CODE (NEC)

NFPA 75 - STANDARD FOR THE PROTECTION OF INFORMATION TECHNOLOGY EQUIPMENT

NFPA 76 - STANDARD FOR THE FIRE PROTECTION OF TELECOMMUNICATIONS FACILITIES

NFPA 780 - STANDARD FOR THE INSTALLATION OF LIGHTNING PROTECTION SYSTEMS

TELECOMMUNICATIONS STANDARDS CONT

UFC-3-580-01 CA - TELECOMMUNICATIONS INTERIOR INFRASTRUCTURE PLANNING AND DESIGN

UFC 4-020-04A - ELECTRONIC SECURITY SYSTEMS : SECURITY ENGINEERING

UFC 4-021-02 - ELECTRONIC SECURITY SYSTEMS

MIL-HDBK-232A - RED/BLACK ENGINEERING-INSTALLATION GUIDELINES

MIL-HDBK-419A – GROUNDING, BONDING, AND SHIELDING FOR ELECTRONIC EQUIPMENT AND FACILITIES

MIL-HDBK-1012/3 - TELECOMMUNICATIONS PREMISES DISTRIBUTION PLANNING, DESIGN, AND ESTIMATING

TM 5-853-4 - SECURITY ENGINEERING ELECTRONIC SECURITY SYSTEMS

IEC/TR 61602 ED. 1.0 B, 1996 - CONNECTORS USED IN THE FIELD OF AUDIO, VIDEO AND AUDIOVISUAL ENGINEERING

IEC 61883-1 ED. 3.0 EN, 2008 - CONSUMER AUDIO/VIDEO EQUIPMENT - DIGITAL INTERFACE - PART 1: GENERAL

IEC 61883-6 ED. 2.0 EN, 2005 - CONSUMER AUDIO/VIDEO EQUIPMENT - DIGITAL INTERFACE - PART 6: AUDIO AND MUSIC DATA TRANSMISSION PROTOCOL

IEC 61938 ED. 1.0 B, 1996 - AUDIO, VIDEO AND AUDIOVISUAL SYSTEMS - INTERCONNECTIONS AND MATCHING VALUES – PREFERRED MATCHING VALUES OF ANALOGUE SIGNALS

IEC 62075 ED. 1.0 B, 2008 - AUDIO/VIDEO, INFORMATION AND COMMUNICATION TECHNOLOGY EQUIPMENT – ENVIRONMENTALLY CONSCIOUS DESIGN

IEC 62087-BD ED. 2.0 EN, 2008 - METHODS OF MEASUREMENT FOR THE POWER CONSUMPTION OF AUDIO, VIDEO AND RELATED EQUIPMENT

NFPA 262 - STANDARD METHOD OF TEST FOR FLAME TRAVEL AND SMOKE OF WIRES AND CABLES FOR USE IN AIR-HANDLING SPACES

BICSI - BUILDING INDUSTRIES CONSULTING SERVICES INTERNATIONAL (TDMM), 13TH ED., 2014, TELECOMMUNICATIONS DISTRIBUTION METHODS MANUAL 13TH EDITION.

CAMP LEJEUNE GUIDE SPECIFICATIONS, (CLGS) 27 10 00

CAMP LEJEUNE GUIDE SPECIFICATIONS, (CLGS) 33 82 00

TELECOMMUNICATIONS GENERAL NOTES

1. THIS IS A STANDARD LEGEND SHEET. NOT ALL SYMBOLS OR ABBREVIATIONS MAY APPEAR ON DRAWINGS.
2. REFER TO DIVISIONS 26, 27, 28 AND 33 SPECIFICATIONS FOR TELECOMMUNICATION SYSTEM ITEMS.
3. MOUNTING DEVICES AND EQUIPMENT PER SPECIFICATIONS UNLESS OTHERWISE NOTED.
4. MOUNTING HEIGHTS, UNLESS OTHERWISE NOTED, ARE TO CENTER LINE OF DEVICE.
5. THE CONTRACTOR TO DETERMINE THE EXACT ROUTING OF RACEWAYS.
6. THE CONTRACTOR MUST COORDINATE ALL RACEWAY PENETRATIONS AND PROVIDE FIREPROOFING AS APPLICABLE.
7. THE MAXIMUM PERMANENT HORIZONTAL LINK DISTANCE MUST NOT EXCEED 295' AND THE MAXIMUM HORIZONTAL CHANNEL (LINK PLUS WORKSTATION CABLES AND PATCH CORDS) MUST BE 328'.
8. ALL HORIZONTAL VOICE AND DATA CABLING TO BE CATEGORY-6 INSTALLED IN A MINIMUM 1-1/4" CONDUIT UNLESS NOTED OTHERWISE FROM TELECOMM OUTLET LOCATIONS TO THE CABLE TRAY.
9. ALL HORIZONTAL AND BACKBONE CABLING MUST BE PLENUM RATED WITH THE EXCEPTION OF CABLING INSTALLED IN UNDERGROUND CONDUITS.
10. CATEGORY-6A CABLING TO BE TERMINATED ON 8-PIN, 8-CONDUCTOR (RJ-45) CONNECTORS USING PIN/PAIR ASSIGNMENTS IN ACCORDANCE WITH T568A PIN-OUT SEQUENCE.
11. CATEGORY-6A JACKS TO BE THE SAME COLOR AS CORRESPONDING HORIZONTAL VOICE AND DATA CABLING. CATEGORY-6 JACKS TO BE THE SAME MANUFACTURER AS THE PATCH PANELS.
12. PROVIDE CATEGORY-6, 8-PIN, 8-CONDUCTOR MODULAR TO 8-PIN, 8-CONDUCTOR MODULAR, PATCH CABLES IN QUANTITIES AND LENGTHS SUCH THAT ALL WORKSTATION CABLES ARE CONNECTED.
13. OPTICAL FIBER CABLES TO BE TERMINATED WITH DUPLEX SC-TYPE CONNECTORS.
14. ALL TELECOMMUNICATIONS RACKS AND SUPPORTING STRUCTURES (CABLE TRAYS, LADDER RACKS, CONDUITS, AND BASKETS) WITHIN A TR MUST BE BONDED TO THE TR SIGNAL GROUND RING OR BUS BAR (TGB OR TMGB) AS DEFINED IN ANSI/TIA-569-D AND IN ANSI/TIA-607-B.
15. CABLE TRAY TO BE WALL MOUNTED (PREFERABLE) OR TRAPEZE MOUNTED. CENTER HUNG CABLE TRAY IS NOT ALLOWED. CABLE TRAY MUST NOT BE USED TO SUPPORT OTHER ITEMS, CONDUIT, CABLE TRAY, PIPING OF UTILITIES. CABLE TRAY SUPPORTS TO BE PER NEMA STANDARDS PUBLICATION VE 2 - METAL CABLE TRAY INSTALLATION GUIDELINES.
16. PROVIDE ACCESS PANELS IN NON LAY-IN CEILINGS SUCH THAT NO POINT IN THE CABLE TRAY SYSTEM IS MORE THAN 20' FROM AN ACCESS POINT.
17. PROVIDE A MINIMUM OF 12" OF CLEARANCE ABOVE THE TOP OF CABLE TRAYS AND A MINIMUM OF 3" CLEARANCE BELOW CABLE TRAYS.
18. COMPLY WITH ANSI/TIA-569-D TELECOMMUNICATION PATHWAYS AND SPACES.
19. USE ONLY COPPER CONDUCTORS FOR GROUND CONNECTIONS. THE USE OF ALUMINUM CONDUCTORS IS NOT ALLOWED.
20. PROVIDE CABLE INSTALLED IN UNDERGROUND CONDUITS LISTED FOR USE IN WET LOCATIONS. PLENUM RATED CABLE MUST NOT BE INSTALLED IN ANY UNDERGROUND CONDUIT.
21. LABEL ALL CABLE TERMINATIONS AND BOTH ENDS OF ALL CABLES IN ACCORDANCE WITH UFC 3-580-01 AND ANSI/TIA-606-B.
22. PROVIDE AS-BUILT DOCUMENTATION INCLUDING COMPLETE TEST RESULT REPORTS, FLOOR PLANS SHOWING USER WORKSTATIONS WITH CABLING LABELING, AND BACKBONE CABLE SCHEMATIC AND LABELING IN AN ELECTRONIC FORMAT (PDF) OR OTHER APPROVED FORMAT AND A PRINTED HARDCOPY. TEST RESULTS MUST BE SUPPLIED ELECTRONICALLY TO THE PROJECT RCDD AND CORPS PROJECT ENGINEER/ARCHITECT IN THE TEST PROGRAM NATIVE FORMAT.
23. ANY MOTOR, TRANSFORMER, OR OTHER ELECTRICAL DEVICE GREATER THAN 5 KVA MUST HAVE A MINIMUM OF A 4' BUFFER FROM ANY WALL OF THE EF, TER, OR TR(S).

TELECOMMUNICATIONS ABBREVIATIONS

110	110 PUNCHDOWN BLOCKS
8P8C	8-PIN, 8-CONDUCTOR
ACS	ACCESS CONTROL SYSTEM
AFF	ABOVE FINISHED FLOOR
AHJ	AUTHORITY HAVING JURISDICTION
ANSI	AMERICAN NATIONAL STANDARDS INSTITUTE
AWG	AMERICAN WIRE GAUGE
BBC	BACKBONE BONDING CONDUCTOR
BCT	BONDING CONDUCTOR FOR TELECOMMUNICATIONS
C	CONDUIT(S)
CAA	CONTROLLED ACCESS AREA
CAT 6	CABLING ETL VERIFIED TO ANSI/TIA-568-C.2 CATEGORY 6
CATV	CABLE TELEVISION
CCH	CLOSET CONNECTOR HOUSING
CCTV	CLOSED-CIRCUIT TELEVISION
CFCI	CONTRACTOR FURNISHED CONTRACTOR INSTALLED
CP	CONSOLIDATION POINT
DB	DIRECT BURIED
DDC	DIRECT DIGITAL CONTROL
DIA	DIAMETER
DWG	DRAWING
ER	EXISTING RELOCATED
EMT	ELECTRICAL METALLIC TUBING
ETR	EXISTING TO REMAIN
EXIST	EXISTING
FB	FLOOR BOX
FT	FEET
GFGI	GOVERNMENT FURNISHED GOVERNMENT INSTALLED
GND	GROUND
GRC	GALVANIZED RIGID CONDUIT
GRS	GALVANIZED RIGID STEEL
IAW	IN ACCORDANCE WITH
IDS	INTRUSION DETECTION SYSTEM
IN	INCHES
LCA	LIMITED CONTROL ACCESS
MC	MECHANICAL CONTRACTOR
MIN	MINIMUM
MTD	MOUNTED
NEC	NATIONAL ELECTRICAL CODE
NEMA	NATIONAL ELECTRICAL MANUFACTURERS ASSOCIATION
NESC	NATIONAL ELECTRICAL SAFETY CODE
NFPA	NATIONAL FIRE PROTECTION ASSOCIATION
NIC	NOT IN CONTRACT
NTS	NOT TO SCALE
OEM	ORIGINAL EQUIPMENT MANUFACTURER
OFCI	OWNER FURNISHED CONTRACTOR INSTALLED
OFOI	OWNER FURNISHED OWNER INSTALLED
OSHA	OCCUPATIONAL SAFETY AND HEALTH ADMINISTRATION
PA	PUBLIC ADDRESS
PBB	PRIMARY BONDING BUSBAR
PE	POLYETHYLENE
PET	PROTECTED ENTRANCE TERMINALS
PDU	POWER DISTRIBUTION UNIT
POTS	PLAIN OLD TELEPHONE SERVICE (SWITCHED TELEPHONE LINE)
PSI	POUNDS PER SQUARE INCH
PTZ	PAN / TILT / ZOOM
QTY	QUANTITY
RBB	RACK BONDING BUSBAR
RBC	RACK BONDING CONDUCTOR
RMC	RIGID METAL CONDUIT
RR	REMOVE AND RELOCATE
RU	RACK UNIT
SBB	SECONDARY BONDING BUSBAR
SCH	SCHEDULE
STP	SHIELDED TWISTED PAIR
TBB	TELECOMMUNICATIONS BONDING BACKBONE
TBC	TELECOMMUNICATIONS BONDING CONDUCTOR
TE	TELECOMMUNICATIONS ENCLOSURE
TEBC	TELECOMMUNICATIONS EQUIPMENT BONDING CONDUCTOR
TEF	TELECOMMUNICATIONS ENTRANCE FACILITY
TGB	TELECOMMUNICATIONS GROUNDING BUSBAR
TMGB	TELECOMMUNICATIONS MAIN GROUNDING BUSBAR
TYP	TYPICAL
U/G	UNDERGROUND
UON	UNLESS OTHERWISE NOTED
U/UTP	UNSCREENED/UNSHIELDED TWISTED PAIR CABLE
VoIP	VOICE OVER INTERNET PROTOCOL
WP	WEATHERPROOF
XP	EXPLOSION PROOF

SYM	DESCRIPTION	DATE	APPR

NAVFAC

BICSI — REGISTERED COMMUNICATIONS DISTRIBUTION DESIGNER — JAMES T EHLERS — BICSI ID# 142190 — EXPIRES 12-31-22 — RCDD — SEAL

RQ — W.M. Jordan COMPANY — A JOINT VENTURE

Michael Baker INTERNATIONAL
100 AIRSIDE DRIVE
MOON TOWNSHIP, PA 15108
A/E INFO

APPROVED

FOR COMMANDER NAVFAC
ACTIVITY
CONCURRED BY
MCB-CL AMB
VIA EMAIL
SATISFACTORY TO DATE 12/16/21
DES. /TE | DRW ETH | CHK. JAG
PM / DM TOWLER / ROOT
BRANCH HEAD SEK
DESIGN DIRECTOR PAUL K. SHREM
FIRE PROTECTION DPS.

DEPARTMENT OF THE NAVY
NAVAL FACILITIES ENGINEERING SYSTEMS COMMAND
NAVAL FACILITIES ENGINEERING COMMAND ATLANTIC
ATLANTIC DESIGN AND CONSTRUCTION — NORFOLK, VA
MCB CAMP LEJEUNE — JACKSONVILLE, NC
P1338 II MEF SIMULATION/TRAINING CENTER
REPLACEMENT
TELECOMMUNICATIONS SYMBOLS, SCHEDULES, & NOTES

SCALE: AS NOTED
EPROJECT NO.: 1590892
CONSTR. CONTR. NO. N40085-20-C-0059
NAVFAC DRAWING NO. 14098607
SHEET 373 OF 456

T-001

DRAWFORM REVISION: 25 AUGUST 2020

ISSUED FOR CONSTRUCTION - 16 DEC 21

PLOTTED: 11/18/2021 12:16:37 PM

FILE NAME: BIM 360://HF PACKAGE 3/P1338 MEF SIM CTR-1590892-E.rvt

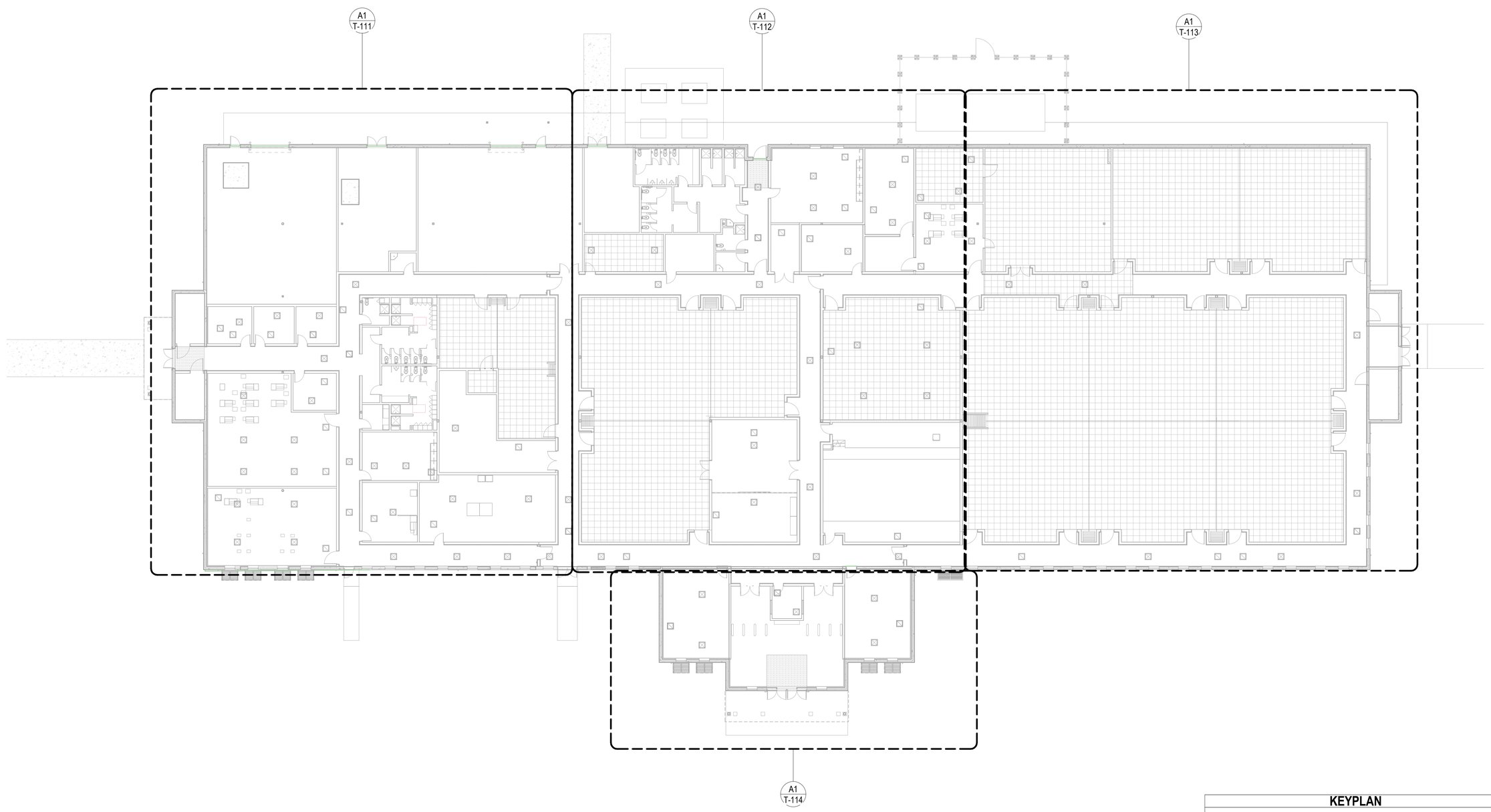

TELECOMMUNICATIONS - FLOOR PLAN OVERALL

SCALE: 1/16" = 1'-0"

KEYPLAN

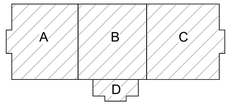

0 8'-0" 16'-0" 32'-0"

SCALE: 0'-0 1/16" = 1'-0"

N

SYM	DESCRIPTION	DATE	APPR

NAVFAC

REGISTERED COMMUNICATIONS DISTRIBUTION DESIGNER
Bicsi
JAMES T EHLERS
BICSI ID# 142190
EXPIRES 12-31-22
RCDD
SEAL

RQ W.M. Jordan COMPANY
~ A JOINT VENTURE ~

Michael Baker INTERNATIONAL
100 AIRSIDE DRIVE
MOON TOWNSHIP, PA 15108
A/E INFO

APPROVED
FOR COMMANDER NAVFAC
ACTIVITY
CONCURRED BY
MCB-CL AMB
VIA EMAIL
SATISFACTORY TO DATE 12/16/21

DES. JTE	DRW ETH	CHK JMG
PM / DM	TOWLER / ROOT	
BRANCH HEAD	SEK	
DESIGN DIRECTOR	PAUL K. SHREM	
FIRE PROTECTION	DPS	

DEPARTMENT OF THE NAVY
NAVAL FACILITIES ENGINEERING SYSTEMS COMMAND
ATLANTIC DESIGN AND CONSTRUCTION
NAVAL FACILITIES ENGINEERING SYSTEMS COMMAND ATLANTIC
NORFOLK, VA
MCB CAMP LEJEUNE
JACKSONVILLE, NC
P1338 II MEF SIMULATION/TRAINING CENTER
REPLACEMENT
TELECOMMUNICATIONS - FLOOR PLAN OVERALL

SCALE: AS NOTED
EPROJECT NO.: 1590892
CONSTR. CONTR. NO. N40085-20-C-0059
NAVFAC DRAWING NO. 14098609
SHEET 375 OF 456

T-100

DRAWFORM REVISION: 25 AUGUST 2020

ISSUED FOR CONSTRUCTION - 16 DEC 21

PLOTTED: 11/18/2021 12:16:43 PM

FILE NAME: BIM 360://HF PACKAGE 3/P1338 MEF SIM CTR-1590892-E.rvt

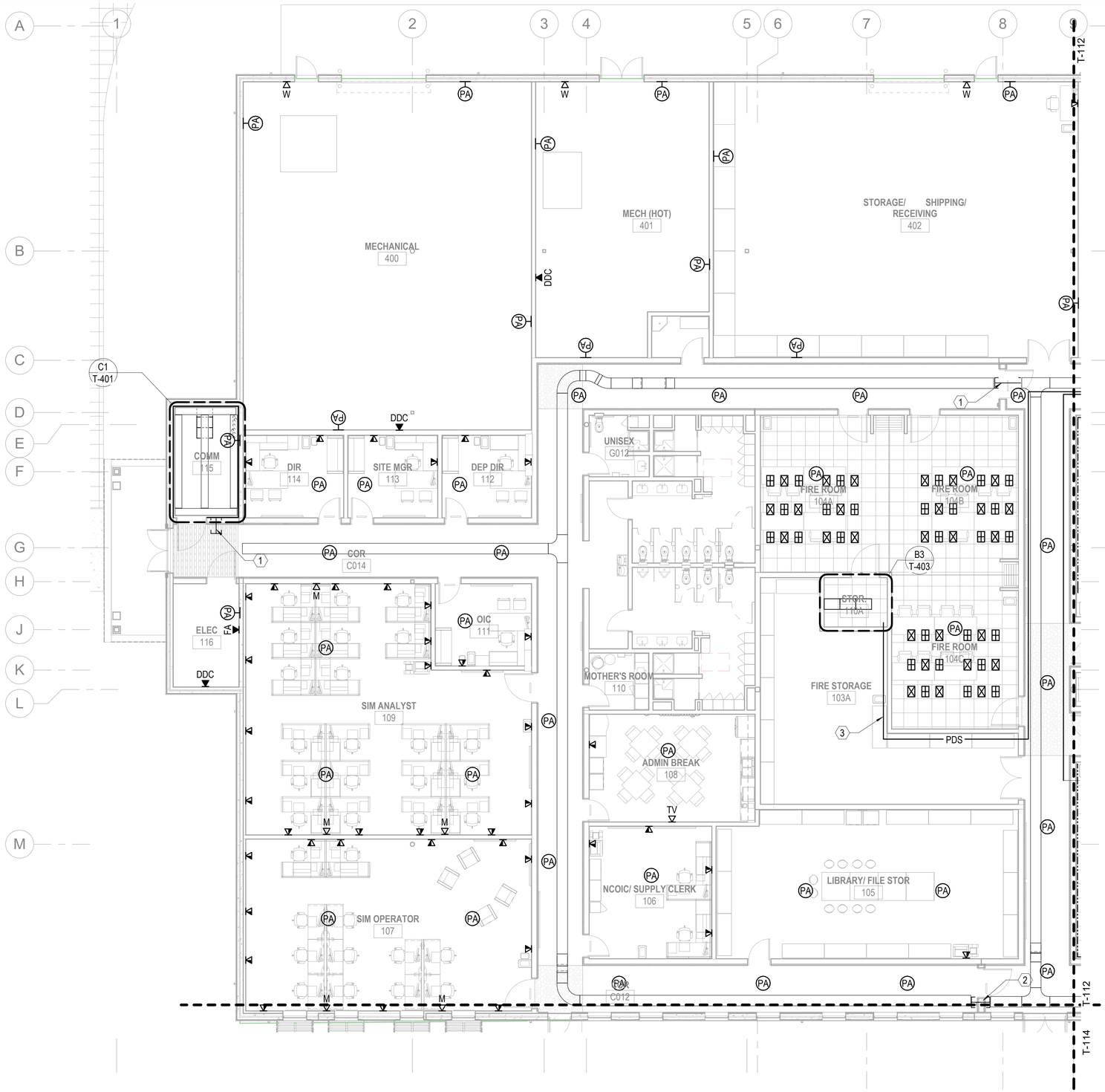

A1 TELECOMMUNICATIONS - FIRST FLOOR PLAN - AREA A

SCALE: 1/8" = 1'-0" (T-100)

GENERAL NOTES

1. SEE SHEET T-001 FOR TELECOMMUNICATIONS NOTES, SYMBOLS, AND ABBREVIATIONS.
2. CONTRACTOR TO PROVIDE ALL PA SYSTEM REQUIREMENTS, TO INCLUDE PATHWAYS, CONDUITS, JUNCTION BOXES, WIRING, CABLING, SPEAKERS, AND SYSTEM COMPONENTS.

KEYNOTES

1. THREE (3) 4" FIRE-RATED PENETRATIONS (TYPICAL ALL LOCATIONS)
2. THREE (3) 4" FIRE-RATED PENETRATIONS (TYPICAL ALL LOCATIONS), WITH NON-CONDUCTIVE DIELECTIC BREAK
3. PROTECTED DISTRIBUTION SYSTEM (PDS) FOR SIPRNET TRANSPORT; COMPLY WITH CNSSI 7003

KEYPLAN

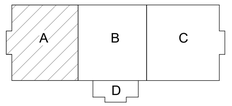

0 4'-0" 8'-0" 16'-0"

SCALE: 0'-0 1/8" = 1'-0"

N

SYM	DESCRIPTION	DATE	APPR

NAVFAC

REGISTERED COMMUNICATIONS DISTRIBUTION DESIGNER
Bicsi
JAMES T EHLERS
BICSI ID# 142190
EXPIRES 12-31-22
RCDD
SEAL

RQ W.M. Jordan COMPANY
~ A JOINT VENTURE ~

Michael Baker INTERNATIONAL
100 AIRSIDE DRIVE
MOON TOWNSHIP, PA 15108
A/E INFO

APPROVED

FOR COMMANDER NAVFAC

ACTIVITY: CONCURRED BY MCB-CL AMB VIA EMAIL

SATISFACTORY TO DATE 12/16/21

DES. /TE | DRW ETH | CHK. /MG

PM / DM: TOWLER / ROOT

BRANCH HEAD: SEK

DESIGN DIRECTOR: PAUL K. SHREM

FIRE PROTECTION: DPS

DEPARTMENT OF THE NAVY
NAVAL FACILITIES ENGINEERING SYSTEMS COMMAND
ATLANTIC DESIGN AND CONSTRUCTION
NAVAL FACILITIES ENGINEERING SYSTEMS COMMAND ATLANTIC
NORFOLK, VA
MCB CAMP LEJEUNE
JACKSONVILLE, NC
P1338 II MEF SIMULATION/TRAINING CENTER
REPLACEMENT
TELECOMMUNICATIONS - FIRST FLOOR PLAN - AREA A

SCALE: AS NOTED

EPROJECT NO.: 1590892

CONSTR. CONTR. NO. N40085-20-C-0059

NAVFAC DRAWING NO. 14098610

SHEET 376 OF 456

T-111

DRAWFORM REVISION: 25 AUGUST 2020

ISSUED FOR CONSTRUCTION - 16 DEC 21

PLOTTED: 11/18/2021 12:16:49 PM

FILE NAME: BIM 360//HF PACKAGE 3/P1338 MEF SIM CTR-1590892-E.rvt

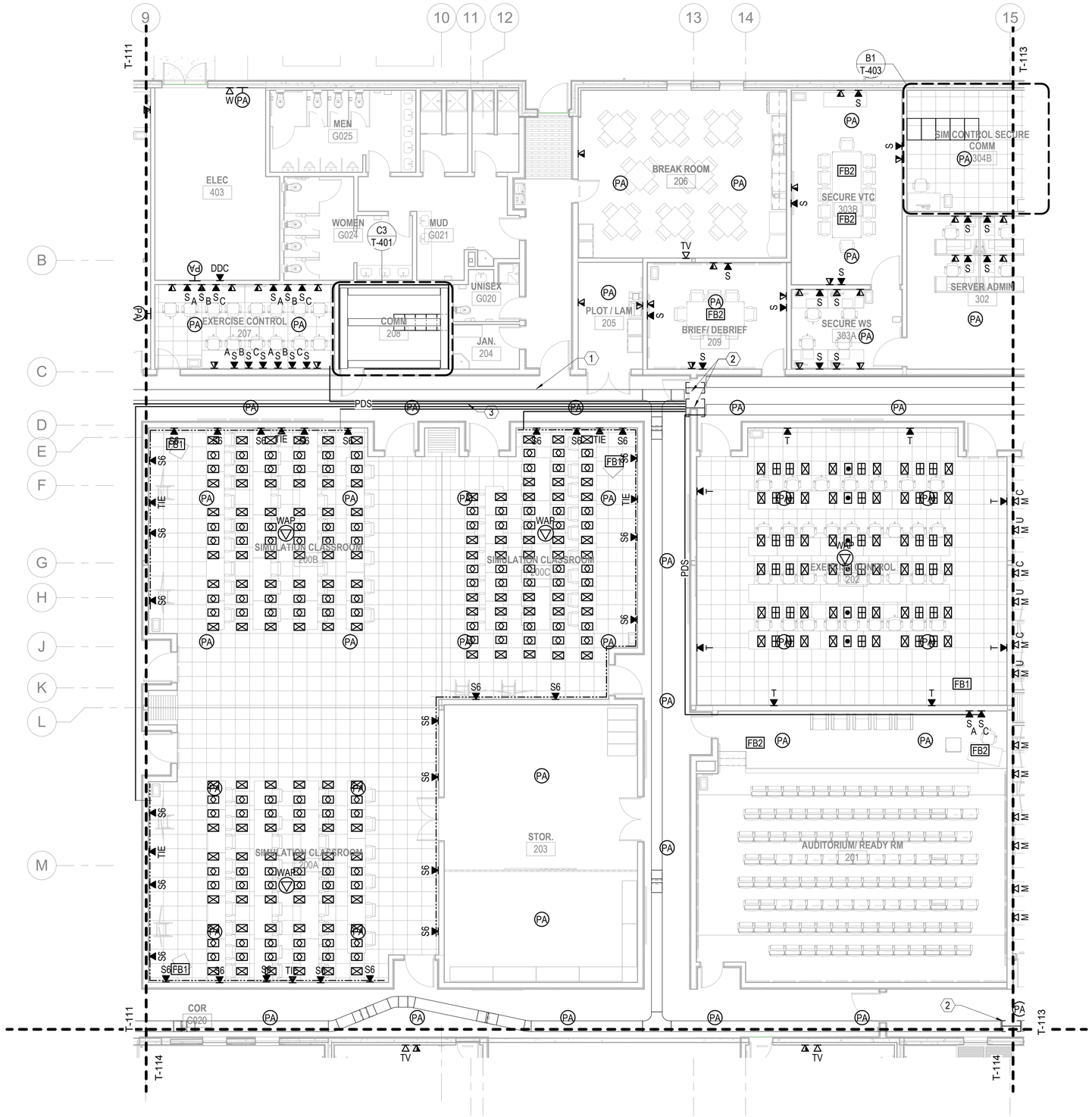

A1 TELECOMMUNICATIONS - FIRST FLOOR PLAN - AREA B

SCALE: 1/8" = 1'-0" (T-100)

GENERAL NOTES

1. SEE SHEET T-001 FOR TELECOMMUNICATIONS NOTES, SYMBOLS, AND ABBREVIATIONS.
2. CONTRACTOR TO PROVIDE ALL PA SYSTEM REQUIREMENTS, TO INCLUDE PATHWAYS, CONDUITS, JUNCTION BOXES, WIRING, CABLING, SPEAKERS, AND SYSTEM COMPONENTS.

KEYNOTES

1. 18" X 4" WIRE-BASKET TYPE CABLE TRAY MOUNTED ABOVE ACCESSIBLE CEILING; COORDINATE TRAY PLACEMENT WITH OTHER TRADES (TYPICAL ALL LOCATIONS)
2. THREE (3) 4" FIRE-RATED PENETRATIONS (TYPICAL ALL LOCATIONS), WITH NON-CONDUCTIVE DIELECTIC BREAK
3. PROTECTED DISTRIBUTION SYSTEM (PDS) FOR SIPRNET TRANSPORT; COMPLY WITH CNSSI 7003

KEYPLAN

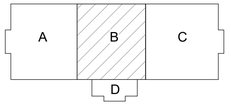

0 4'-0" 8'-0" 16'-0"

SCALE: 0'-0 1/8" = 1'-0"

N

SYM	DESCRIPTION	DATE	APPR

NAVFAC

REGISTERED COMMUNICATIONS DISTRIBUTION DESIGNER
Bicsi
JAMES T EHLERS
BICSI ID# 142190
EXPIRES 12-31-22
RCDD
SEAL

RQ W.M. Jordan COMPANY
~ A JOINT VENTURE ~

Michael Baker INTERNATIONAL
100 AIRSIDE DRIVE
MOON TOWNSHIP, PA 15108
A/E INFO

APPROVED

FOR COMMANDER NAVFAC

ACTIVITY: CONCURRED BY MCB-CL AMB VIA EMAIL

SATISFACTORY TO DATE 12/16/21

DES. /TE | DRW ETH | CHK. JKG

PM / DM: TOWLER / ROOT

BRANCH HEAD: SEK

DESIGN DIRECTOR: PAUL K. SHREM

FIRE PROTECTION: DPS

DEPARTMENT OF THE NAVY
NAVAL FACILITIES ENGINEERING SYSTEMS COMMAND
ATLANTIC DESIGN AND CONSTRUCTION
NAVAL FACILITIES ENGINEERING SYSTEMS COMMAND ATLANTIC
NORFOLK, VA
MCB CAMP LEJEUNE
JACKSONVILLE, NC
P1338 II MEF SIMULATION/TRAINING CENTER
REPLACEMENT
TELECOMMUNICATIONS - FIRST FLOOR PLAN - AREA B

SCALE: AS NOTED

EPROJECT NO.: 1590892

CONSTR. CONTR. NO. N40085-20-C-0059

NAVFAC DRAWING NO. 14098611

SHEET 377 OF 456

T-112

DRAWFORM REVISION: 25 AUGUST 2020

ISSUED FOR CONSTRUCTION - 16 DEC 21

PLOTTED: 11/18/2021 12:16:56 PM

FILE NAME: BIM 360://HF PACKAGE 3/P1338 MEF SIM CTR-1590892-E.rvt

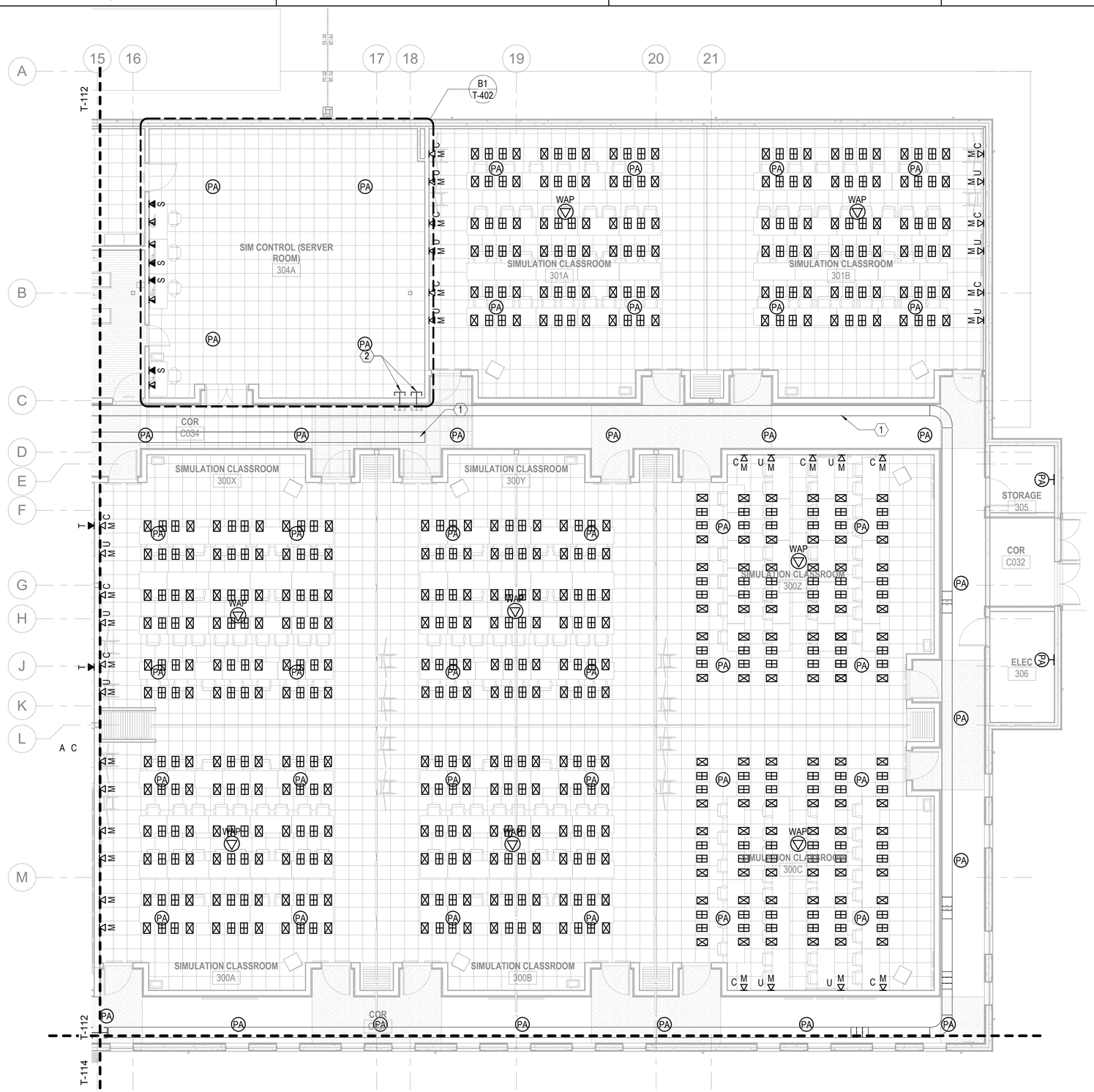

A1 **TELECOMMUNICATIONS - FIRST FLOOR PLAN - AREA C**

SCALE: 1/8" = 1'-0" (T-100)

GENERAL NOTES

1 SEE SHEET T-001 FOR TELECOMMUNICATIONS NOTES, SYMBOLS, AND ABBREVIATIONS.

2 CONTRACTOR TO PROVIDE ALL PA SYSTEM REQUIREMENTS, TO INCLUDE PATHWAYS, CONDUITS, JUNCTION BOXES, WIRING, CABLING, SPEAKERS, AND SYSTEM COMPONENTS.

KEYNOTES

1 18" X 4" WIRE-BASKET TYPE CABLE TRAY MOUNTED ABOVE ACCESSIBLE CEILING; COORDINATE TRAY PLACEMENT WITH OTHER TRADES (TYPICAL ALL LOCATIONS)

2 THREE (3) 4" FIRE-RATED PENETRATIONS (TYPICAL ALL LOCATIONS)

KEYPLAN

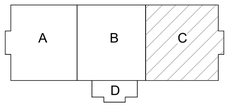

0 4'-0" 8'-0" 16'-0"

SCALE: 0'-0 1/8" = 1'-0"

N

SYM	DESCRIPTION	DATE	APPR

NAVFAC

REGISTERED COMMUNICATIONS DISTRIBUTION DESIGNER
Bicsi
JAMES T EHLERS
BICSI ID# 142190
EXPIRES 12-31-22
RCDD
SEAL

RQ W.M. Jordan COMPANY – A JOINT VENTURE –

Michael Baker INTERNATIONAL
100 AIRSIDE DRIVE
MOON TOWNSHIP, PA 15108
A/E INFO

APPROVED

FOR COMMANDER NAVFAC

ACTIVITY
CONCURRED BY
MCB-CL AMB
VIA EMAIL

SATISFACTORY TO DATE 12/16/21

DES /TE	DRW ETH	CHK JMG
PM / DM	TOWLER / ROOT	
BRANCH HEAD	SEK	
DESIGN DIRECTOR	PAUL K. SHREM	
FIRE PROTECTION	DPS	

DEPARTMENT OF THE NAVY
NAVAL FACILITIES ENGINEERING SYSTEMS COMMAND
ATLANTIC DESIGN AND CONSTRUCTION
NAVAL FACILITIES ENGINEERING SYSTEMS COMMAND ATLANTIC
NORFOLK, VA
MCB CAMP LEJEUNE
JACKSONVILLE, NC
P1338 II MEF SIMULATION/TRAINING CENTER
REPLACEMENT
TELECOMMUNICATIONS - FIRST FLOOR PLAN - AREA C

SCALE: AS NOTED
EPROJECT NO.: 1590892
CONSTR. CONTR. NO.
N40085-20-C-0059
NAVFAC DRAWING NO.
14098612
SHEET 378 OF 456

T-113

DRAWFORM REVISION: 25 AUGUST 2020

ISSUED FOR CONSTRUCTION - 16 DEC 21

PLOTTED: 11/18/2021 12:17:07 PM

FILE NAME: BIM 360://HF PACKAGE 3\P1338 MEF SIM CTR-1590892-E.rvt

GENERAL NOTES

1. SEE SHEET T-001 FOR TELECOMMUNICATIONS NOTES, SYMBOLS, AND ABBREVIATIONS.
2. CONTRACTOR TO PROVIDE ALL PA SYSTEM REQUIREMENTS, TO INCLUDE PATHWAYS, CONDUITS, JUNCTION BOXES, WIRING, CABLING, SPEAKERS, AND SYSTEM COMPONENTS.

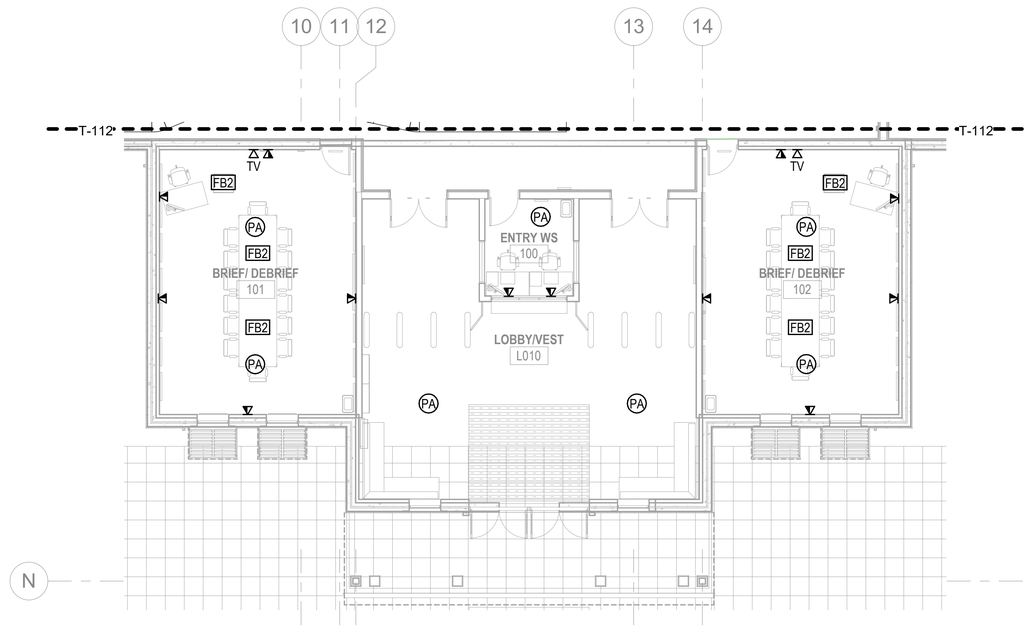

A1 TELECOMMUNICATIONS - FIRST FLOOR PLAN - AREA D

SCALE: 1/8" = 1'-0" (T-100)

KEYPLAN

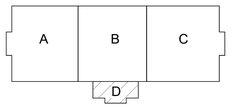

0 4'-0" 8'-0" 16'-0"

SCALE: 0'-0 1/8" = 1'-0"

N

SYM	DESCRIPTION	DATE	APPR

NAVFAC

REGISTERED COMMUNICATIONS DISTRIBUTION DESIGNER
Bicsi
JAMES T EHLERS
BICSI ID# 142190
EXPIRES 12-31-22
RCDD
SEAL

RQ W.M. Jordan COMPANY
~ A JOINT VENTURE ~

Michael Baker INTERNATIONAL
100 AIRSIDE DRIVE
MOON TOWNSHIP, PA 15108
A/E INFO

APPROVED

FOR COMMANDER NAVFAC

ACTIVITY
CONCURRED BY
MCB-CL AMB
VIA EMAIL

SATISFACTORY TO DATE 12/16/21

DES /TE | DRW ETH | CHK JMG

PM / DM TOWLER / ROOT

BRANCH HEAD SEK

DESIGN DIRECTOR PAUL K. SHREM

FIRE PROTECTION DPS

DEPARTMENT OF THE NAVY
NAVAL FACILITIES ENGINEERING SYSTEMS COMMAND
NAVAL FACILITIES ENGINEERING SYSTEMS COMMAND ATLANTIC
ATLANTIC DESIGN AND CONSTRUCTION NORFOLK, VA
MCB CAMP LEJEUNE JACKSONVILLE, NC
P1338 II MEF SIMULATION/TRAINING CENTER
REPLACEMENT
TELECOMMUNICATIONS - FIRST FLOOR PLAN - AREA D

SCALE: AS NOTED

EPROJECT NO.: 1590892

CONSTR. CONTR. NO.
N40085-20-C-0059

NAVFAC DRAWING NO.
14098613

SHEET 379 OF 456

T-114

DRAWFORM REVISION: 25 AUGUST 2020

ISSUED FOR CONSTRUCTION - 16 DEC 21

PLOTTED: 11/18/2021 12:17:10 PM

FILE NAME: BIM 360://HF PACKAGE 3JP1338 MEF SIM CTR-1590892-E.rvt

GENERAL NOTES

1. SEE SHEET T-001 FOR TELECOMMUNICATIONS NOTES, SYMBOLS, AND ABBREVIATIONS.
2. CONTRACTOR TO PROVIDE ALL PA SYSTEM REQUIREMENTS, TO INCLUDE PATHWAYS, CONDUITS, JUNCTION BOXES, WIRING, CABLING, SPEAKERS, AND SYSTEM COMPONENTS.

KEYNOTES

1. FLOOR MOUNTED EQUIPMENT RACK, 27"W X 18"D X 84"H WITH INTEGRATED VERTICAL WIRE MANAGEMENT (TYP)
2. LADDER-STYLE CABLE TRAY, 18" WIDE, MOUNTED AT 90" AFF
3. TELECOMMUNICATIONS BUSBAR, EIA-COMPLIANT, MOUNTED AT 84" AFF
4. 96" X 48" X 3/4" A/C-GRADE PLYWOOD, VOID FREE FIRE-RESISTANT PLYWOOD MOUNTED VERTICALLY AT 6" AFF; TYPICAL ALL WALLS
5. BUILDING ENTRANCE TERMINAL (BET); MOUNTED AT 48" AFF
6. SIX (6) 4" OSP CONDUIT, STUBBED UP AT 6" AFF

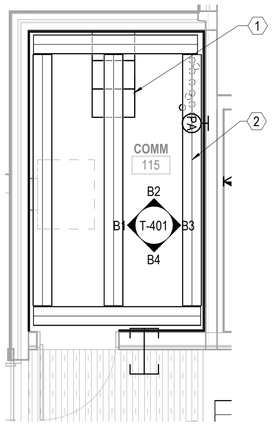

C1 TELECOMMUNICATIONS - ENLARGED ROOM 115

SCALE: 1/4" = 1'-0" (T-111)

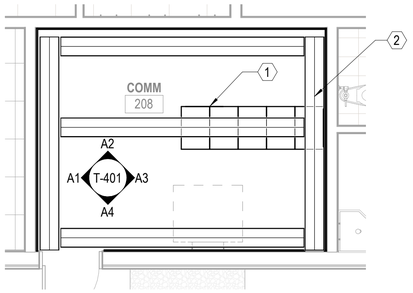

C3 TELECOMMUNICATIONS - ENLARGED ROOM 208

SCALE: 1/4" = 1'-0" (T-111)

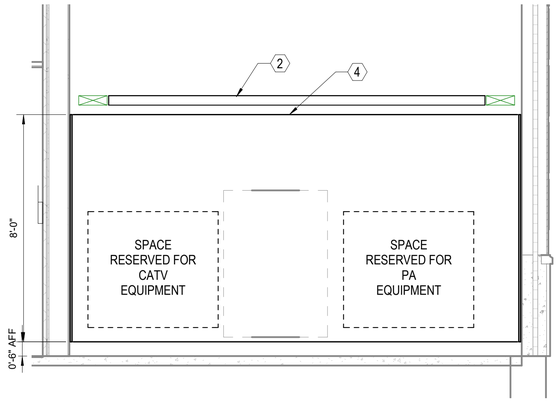

B1 TELECOM RM 115 ELEVATION - DETAIL "B1"

SCALE: 3/8" = 1'-0" (T-401)

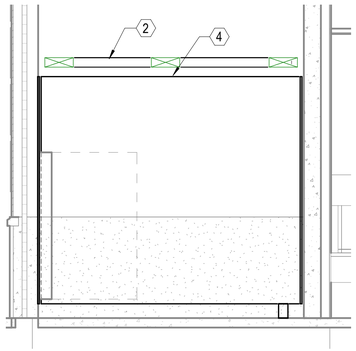

B2 TELECOM RM 115 ELEVATION - DETAIL "B2"

SCALE: 3/8" = 1'-0" (T-401)

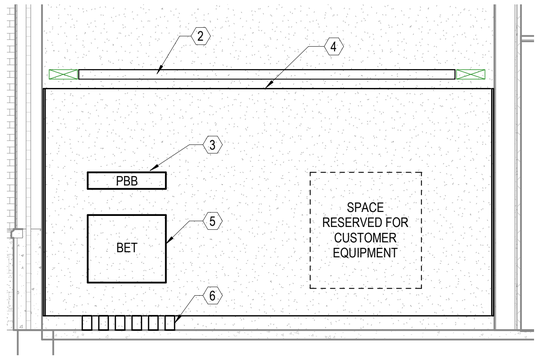

B3 TELECOM RM 115 ELEVATION - DETAIL "B3"

SCALE: 3/8" = 1'-0" (T-401)

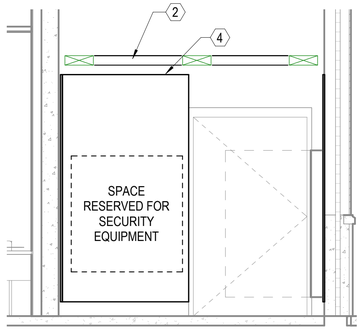

B4 TELECOM RM 115 ELEVATION - DETAIL "B4"

SCALE: 3/8" = 1'-0" (T-401)

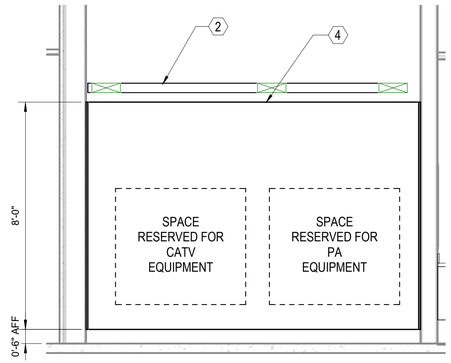

A1 TELECOM RM 208 ELEVATION - DETAIL "A1"

SCALE: 3/8" = 1'-0" (T-401)

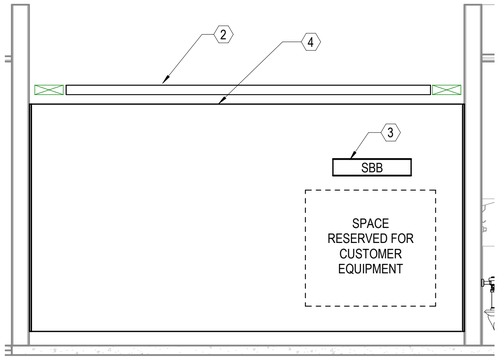

A2 TELECOM RM 208 ELEVATION - DETAIL "A2"

SCALE: 3/8" = 1'-0" (T-401)

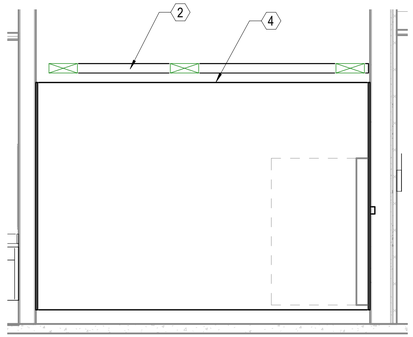

A3 TELECOM RM 208 ELEVATION - DETAIL "A3"

SCALE: 3/8" = 1'-0" (T-401)

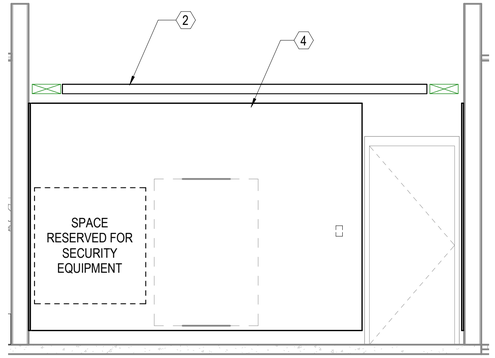

A4 TELECOM RM 208 ELEVATION - DETAIL "A4"

SCALE: 3/8" = 1'-0" (T-401)

0 2'-0" 4'-0" 8'-0"

SCALE: 0'-0 3/8" = 1'-0"

N

SYM	DESCRIPTION	DATE	APPR

NAVFAC

REGISTERED COMMUNICATIONS DISTRIBUTION DESIGNER
Bicsi
JAMES T EHLERS
BICSI ID# 142190
EXPIRES 12-31-22
RCDD
SEAL

RQ W.M. Jordan COMPANY
~ A JOINT VENTURE ~

Michael Baker INTERNATIONAL
100 AIRSIDE DRIVE
MOON TOWNSHIP, PA 15108
A/E INFO

APPROVED
FOR COMMANDER NAVFAC
ACTIVITY
CONCURRED BY
MCB-CL AMB
VIA EMAIL
SATISFACTORY TO DATE 12/16/21
DES /TE | DRW ETH | CHK JKO
PM / DM TOWLER / ROOT
BRANCH HEAD SEK
DESIGN DIRECTOR PAUL K. SHREM
FIRE PROTECTION DPS

NAVAL FACILITIES ENGINEERING SYSTEMS COMMAND
NORFOLK, VA
DEPARTMENT OF THE NAVY
NAVAL FACILITIES ENGINEERING SYSTEMS COMMAND ATLANTIC
ATLANTIC DESIGN AND CONSTRUCTION
MCB CAMP LEJEUNE
JACKSONVILLE, NC
P1338 II MEF SIMULATION/TRAINING CENTER
REPLACEMENT
TELECOMMUNICATIONS - ENLARGED PLANS

SCALE: AS NOTED
EPROJECT NO.: 1590892
CONSTR. CONTR. NO. N40085-20-C-0059
NAVFAC DRAWING NO. 14098616
SHEET 382 OF 456

T-401

DRAWFORM REVISION: 25 AUGUST 2020

ISSUED FOR CONSTRUCTION - 16 DEC 21

PLOTTED: 11/18/2021 12:17:16 PM

FILE NAME: BIM 360://HF PACKAGE 3/P1338 MEF SIM CTR-1590892-E.rvt

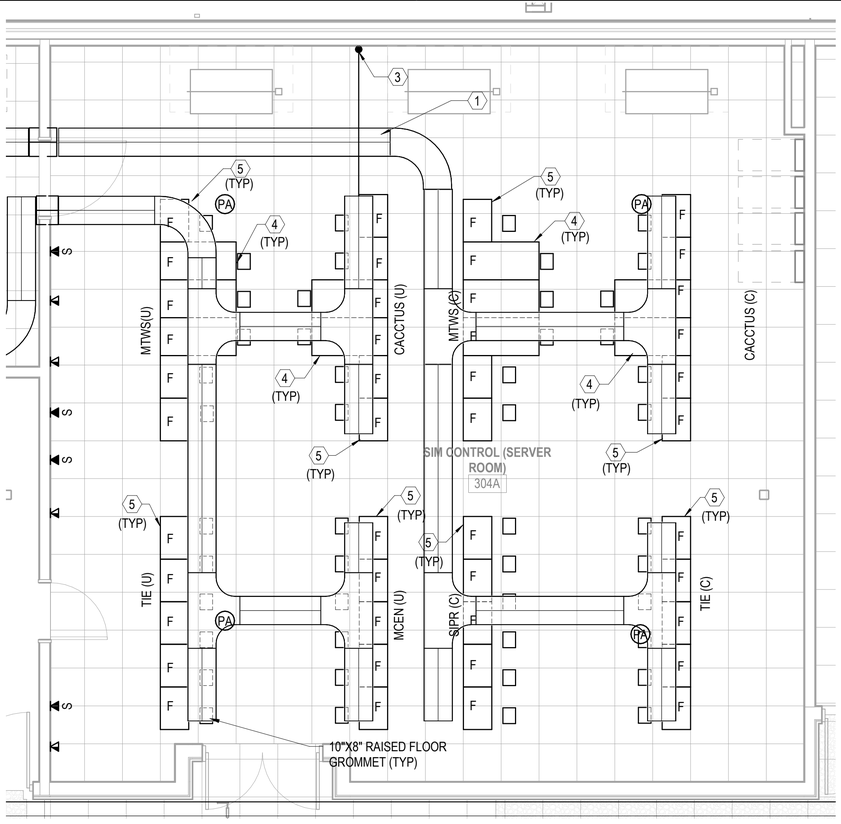

TELECOMMUNICATIONS - ENLARGED ROOM 304A OVERHEAD TRAY LAYOUT

B1

SCALE: 1/4" = 1'-0" (T-111)

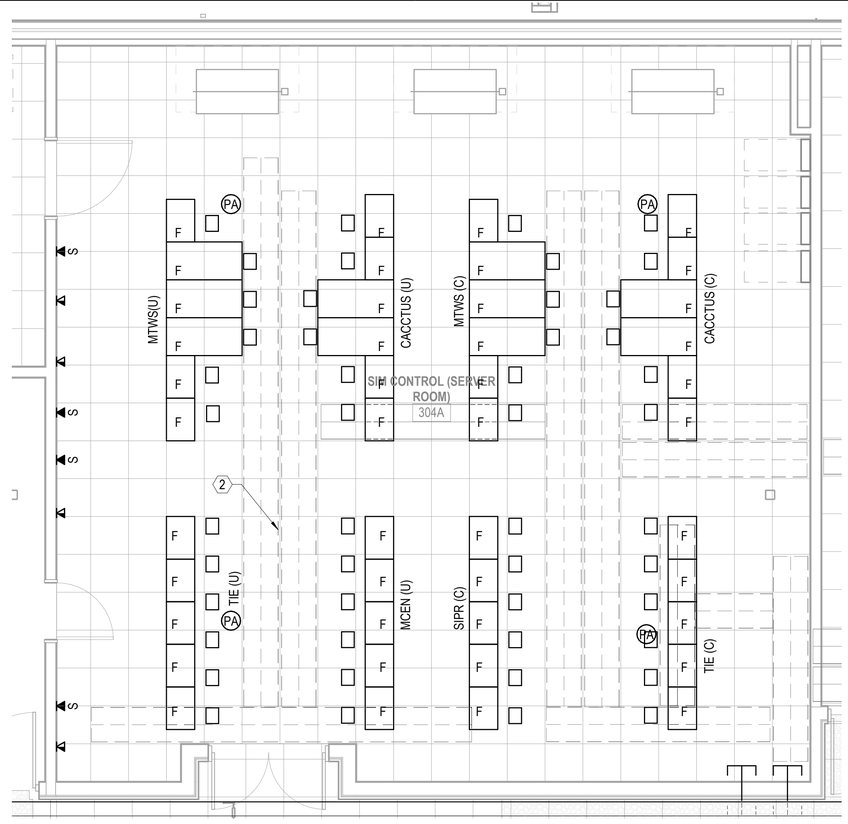

TELECOMMUNICATIONS - ENLARGED ROOM 304A UNDERFLOOR

B3

SCALE: 1/4" = 1'-0"

GENERAL NOTES

1 SEE SHEET T-001 FOR TELECOMMUNICATIONS NOTES, SYMBOLS, AND ABBREVIATIONS.

2 CONTRACTOR TO PROVIDE ALL PA SYSTEM REQUIREMENTS, TO INCLUDE PATHWAYS, CONDUITS, JUNCTION BOXES, WIRING, CABLING, SPEAKERS, AND SYSTEM COMPONENTS.

3 SEE EG-SERIES DRAWINGS FOR INFORMATION RELATED TO EQUIPMENT GROUNDING BUSBAR LAYOUT AND LOCATIONS.

KEYNOTES

1 18" x 4" WIRE BASKET STYLE CABLE TRAY MOUNTED ABOVE CABINET, WITH RADIUS SPILLOUTS INTO CABINET

2 22" x 6" WIRE BASKET STYLE CABLE TRAY MOUNTED UNDER RASIED ACCESS FLOOR, SECURED TO PEDSTALS PER MANUFACTURER'S RECOMMENDATIONS

3 ONE (1) 3" CONDUIT TO ROOF FOR GPS ANTENNA

4 FLOOR MOUNTED EQUIPMENT ENCLOSURE, 24"W X 48"D WITH FRONT AND REAR LOCKABLE MESH DOORS

5 FLOOR MOUNTED EQUIPMENT RACK, 27"W X 18"D WITH INTEGRATED VERTICAL WIRE MANAGEMENT

0 2'-0" 4'-0" 8'-0"

SCALE: 0'-0 1/4" = 1'-0"

N

SYM	DESCRIPTION	DATE	APPR

NAVFAC

REGISTERED COMMUNICATIONS DISTRIBUTION DESIGNER
Bicsi
JAMES T EHLERS
BICSI ID# 142190
EXPIRES 12-31-22
RCDD
SEAL

RQ W.M. Jordan COMPANY
~ A JOINT VENTURE ~

Michael Baker INTERNATIONAL
100 AIRSIDE DRIVE
MOON TOWNSHIP, PA 15108
A/E INFO

APPROVED

FOR COMMANDER NAVFAC

ACTIVITY
CONCURRED BY
MCB-CL AMB
VIA EMAIL

SATISFACTORY TO DATE 12/16/21

DES JTE | DRW ETH | CHK JMG

PM / DM TOWLER / ROOT

BRANCH HEAD SEK

DESIGN DIRECTOR PAUL K. SHREM

FIRE PROTECTION DPS

DEPARTMENT OF THE NAVY
NAVAL FACILITIES ENGINEERING SYSTEMS COMMAND
ATLANTIC DESIGN AND CONSTRUCTION
NAVAL FACILITIES ENGINEERING SYSTEMS COMMAND ATLANTIC
NORFOLK, VA
MCB CAMP LEJEUNE
JACKSONVILLE, NC
P1338 II MEF SIMULATION/TRAINING CENTER
REPLACEMENT
TELECOMMUNICATIONS - ENLARGED PLANS

SCALE: AS NOTED

EPROJECT NO.: 1590892

CONSTR. CONTR. NO.
N40085-20-C-0059

NAVFAC DRAWING NO.
14098617

SHEET 383 OF 456

T-402

DRAWFORM REVISION: 25 AUGUST 2020

ISSUED FOR CONSTRUCTION - 16 DEC 21

PLOTTED: 11/18/2021 12:17:21 PM

FILE NAME: BIM 360://HF PACKAGE 3/P1338 MEF SIM CTR-1590892-E.rvt

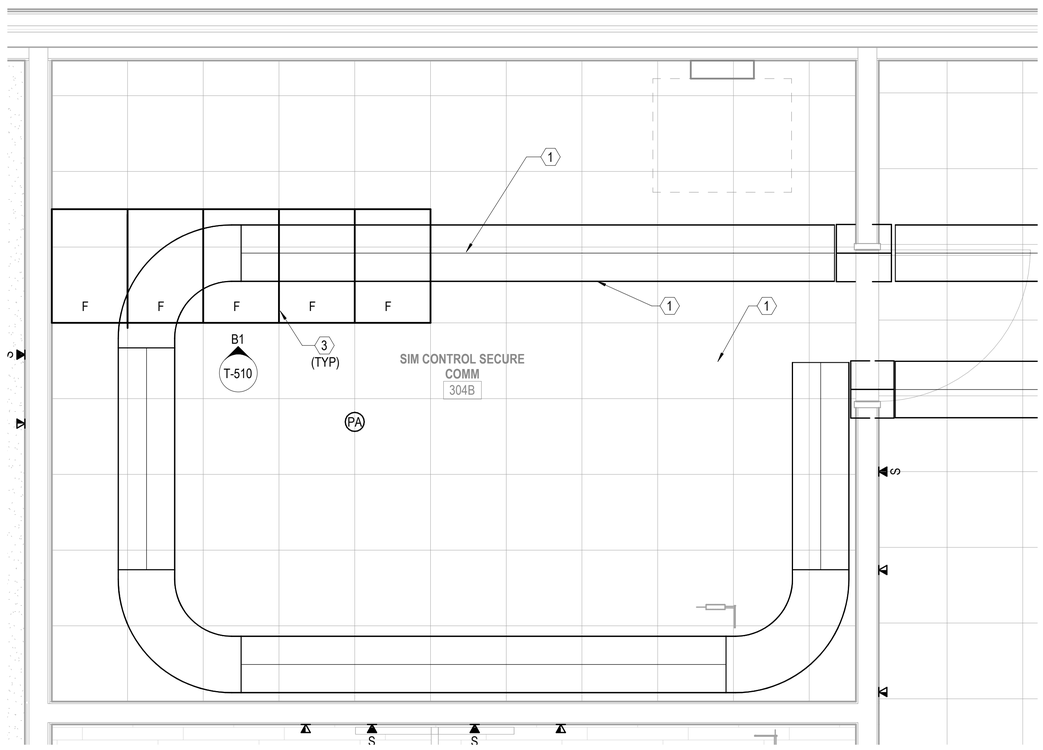

B1 TELECOMMUNICATIONS - ENLARGED ROOM 304B

SCALE: 1/2" = 1'-0" (T-111)

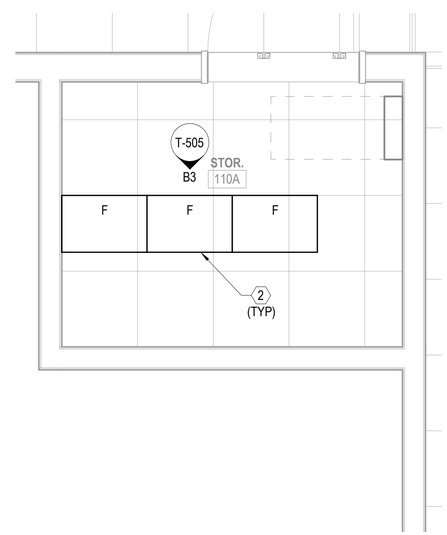

B3 TELECOMMUNICATIONS - ENLARGED ROOM 110A

SCALE: 1/2" = 1'-0" (T-111)

GENERAL NOTES

1. SEE SHEET T-001 FOR TELECOMMUNICATIONS NOTES, SYMBOLS, AND ABBREVIATIONS.
2. CONTRACTOR TO PROVIDE ALL PA SYSTEM REQUIREMENTS, TO INCLUDE PATHWAYS, CONDUITS, JUNCTION BOXES, WIRING, CABLING, SPEAKERS, AND SYSTEM COMPONENTS.
3. SEE EG-SERIES DRAWINGS FOR INFORMATION RELATED TO EQUIPMENT GROUNDING BUSBAR LAYOUT AND LOCATIONS.

KEYNOTES

1. 18" X 4" WIRE BASKET STYLE CABLE TRAY MOUNTED ABOVE CABINET, WITH RADIUS SPILLOUTS INTO CABINETS
2. FLOOR MOUNTED EQUIPMENT RACK, 27"W X 18"D WITH INTEGRATED VERTICAL WIRE MANAGEMENT
3. FLOOR MOUNTED EQUIPMENT ENCLOSURE, 24"W X 36"D WITH FRONT AND REAR LOCKABLE MESH DOORS

SYM	DESCRIPTION	DATE	APPR

REGISTERED COMMUNICATIONS DISTRIBUTION DESIGNER
Bicsi
JAMES T EHLERS
BICSI ID# 142190
EXPIRES 12-31-22
RCDD
SEAL

RQ W.M. Jordan COMPANY
~A JOINT VENTURE~

Michael Baker INTERNATIONAL
100 AIRSIDE DRIVE
MOON TOWNSHIP, PA 15108
A/E INFO

APPROVED
FOR COMMANDER NAVFAC
ACTIVITY
CONCURRED BY
MCB-CL AMB
VIA EMAIL
SATISFACTORY TO DATE 12/16/21

DES JTE	DRW ETH	CHK JMG
PM / DM	TOWLER / ROOT	
BRANCH HEAD	SEK	
DESIGN DIRECTOR	PAUL K. SHREM	
FIRE PROTECTION	DPS	

DEPARTMENT OF THE NAVY
NAVAL FACILITIES ENGINEERING SYSTEMS COMMAND
ATLANTIC DESIGN AND CONSTRUCTION
NAVAL FACILITIES ENGINEERING SYSTEMS COMMAND ATLANTIC
NORFOLK, VA
MCB CAMP LEJEUNE
JACKSONVILLE, NC
P1338 II MEF SIMULATION/TRAINING CENTER
REPLACEMENT
TELECOMMUNICATIONS - ENLARGED PLANS

SCALE: AS NOTED
EPROJECT NO.: 1590892
CONSTR. CONTR. NO. N40085-20-C-0059
NAVFAC DRAWING NO. 14098618
SHEET 384 OF 456

T-403

DRAWFORM REVISION: 25 AUGUST 2020

0 1'-0" 2'-0" 4'-0"
SCALE: 0'-0 1/2" = 1'-0"

N

ISSUED FOR CONSTRUCTION - 16 DEC 21

PLOTTED: 11/18/2021 12:17:25 PM

FILE NAME: BIM 360://HF PACKAGE 3/P1338 MEF SIM CTR-1590892-E.rvt

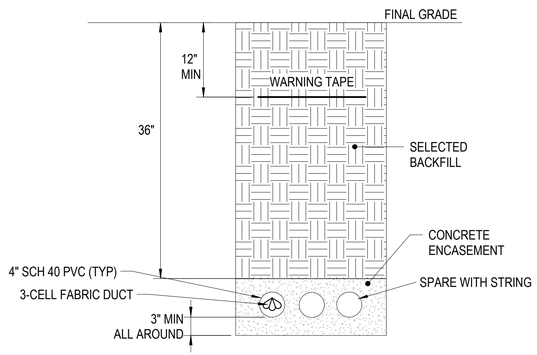

C1 3-WAY 4" CONDUIT CONCRETE ENCASED DUCTBANK

SCALE: NTS

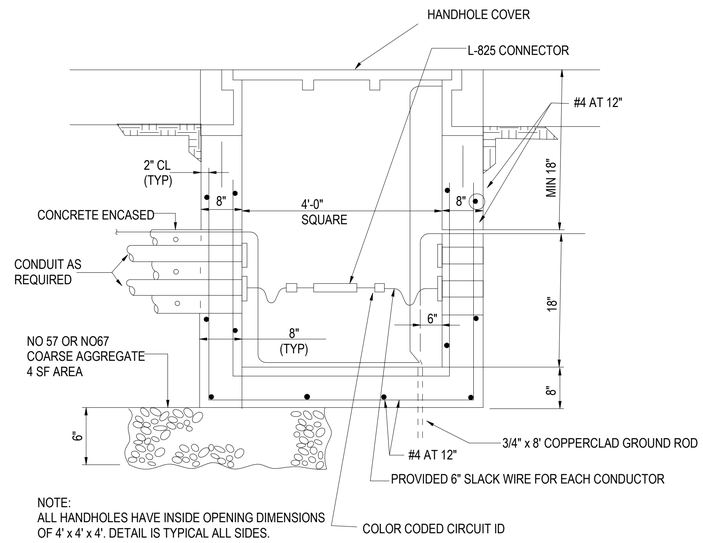

C2 TYPICAL HANDHOLE DETAIL

SCALE: NTS

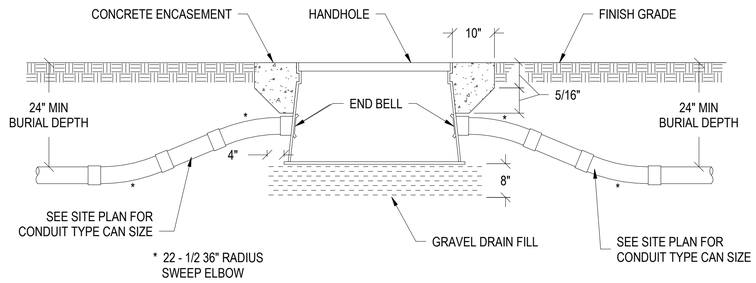

C4 TYPICAL HANDHOLE ENTRY

SCALE: 12" = 1'-0"

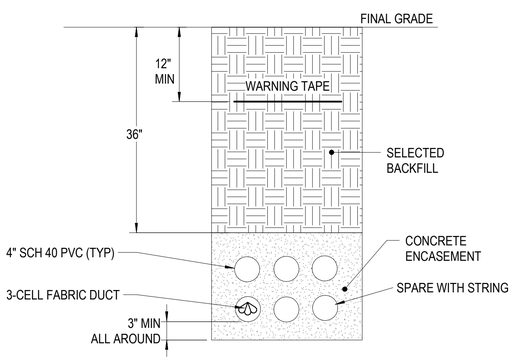

A1 6-WAY 4" CONDUIT CONCRETE ENCASED DUCTBANK

SCALE: NTS

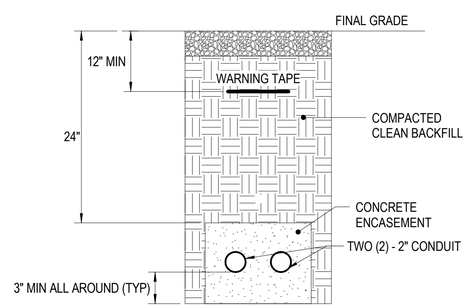

A2 2-WAY 2" CONDUIT CONCRETE ENCASED DUCTBANK

SCALE: NTS

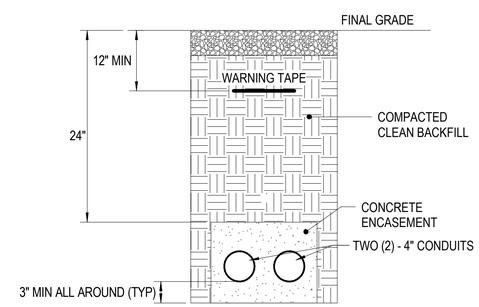

A4 2-WAY 4" CONDUIT CONCRETE ENCASED DUCTBANK

SCALE: NTS

SYM	DESCRIPTION	DATE	APPR.

NAVFAC

REGISTERED COMMUNICATIONS DISTRIBUTION DESIGNER
Bicsi
JAMES T EHLERS
BICSI ID# 142190
EXPIRES 12-31-22
RCDD
SEAL

RQ W.M. Jordan COMPANY
~ A JOINT VENTURE ~

Michael Baker INTERNATIONAL
100 AIRSIDE DRIVE
MOON TOWNSHIP, PA 15108
A/E INFO

APPROVED

FOR COMMANDER NAVFAC

ACTIVITY
CONCURRED BY
MCB-CL AMB
VIA EMAIL

SATISFACTORY TO DATE 12/16/21

DES. JTE	DRW ETH	CHK. JMG

PM / DM	TOWLER / ROOT
BRANCH HEAD	SEK
DESIGN DIRECTOR	PAUL K. SHREM
FIRE PROTECTION	DPS

DEPARTMENT OF THE NAVY
NAVAL FACILITIES ENGINEERING SYSTEMS COMMAND
ATLANTIC DESIGN AND CONSTRUCTION
NAVAL FACILITIES ENGINEERING SYSTEMS COMMAND ATLANTIC
NORFOLK, VA
MCB CAMP LEJEUNE
JACKSONVILLE, NC
P1338 II MEF SIMULATION/TRAINING CENTER
REPLACEMENT
TELECOMMUNICATIONS - DETAILS

SCALE: AS NOTED
EPROJECT NO.: 1590892
CONSTR. CONTR. NO. N40085-20-C-0059
NAVFAC DRAWING NO. 14098619
SHEET 385 OF 456

T-501

DRAWFORM REVISION: 25 AUGUST 2020

ISSUED FOR CONSTRUCTION - 16 DEC 21

PLOTTED: 11/18/2021 12:17:27 PM

FILE NAME: BIM 360://HF PACKAGE 3/P1338 MEF SIM CTR-1590892-E.rvt

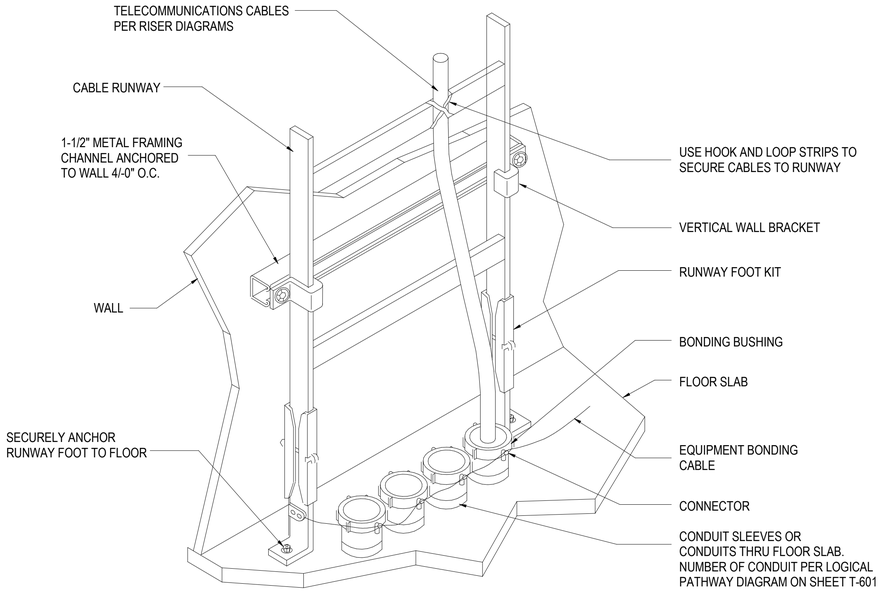

C1 CABLE - VERTICAL RUNWAY MOUNTING

SCALE: NTS

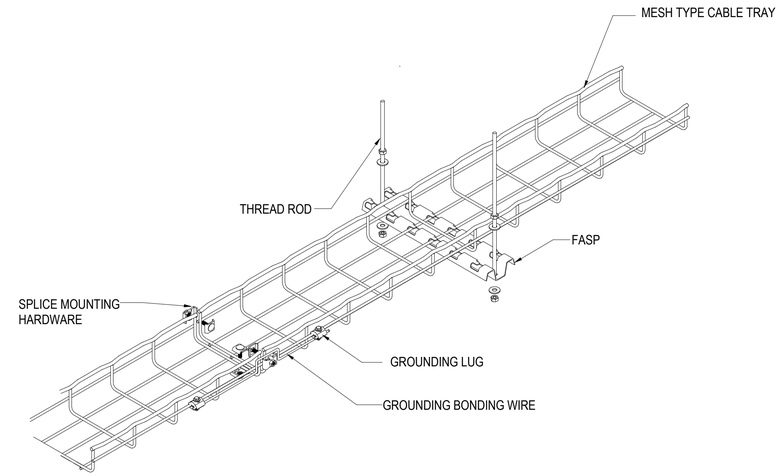

C3 CABLE TRAY - STANDARD SUPPORT DETAIL

SCALE: NTS

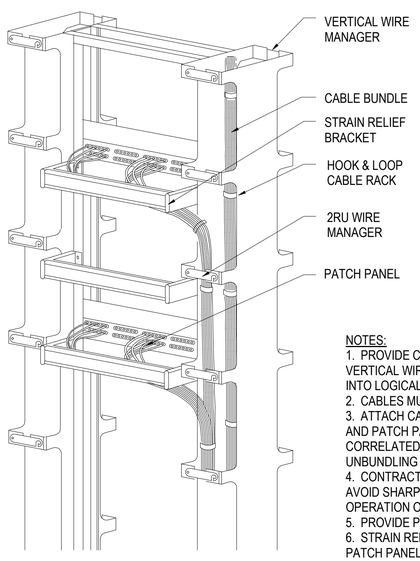

NOTES:
1. PROVIDE CABLE WRAPS ON MINIMUM 12" CENTERS IN VERTICAL WIRE MANAGERS. CABLES MUST BE BUNDLED INTO LOGICAL GROUPS.
2. CABLES MUST BE SECURED TO STRAIN RELIEF BRACKET
3. ATTACH CABLE LABEL BETWEEN STRAIN RELIED BRACKET AND PATCH PANEL SO THE LABEL CAN BE READ AND CORRELATED TO PATCH PANEL PORT WITHOUT UNBUNDLING ADJACENT CABLES.
4. CONTRACTOR MUST ROUTE ALL CABLE BUNDLES TO AVOID SHARP BENDS, AND PINCH POINTS AND ALLOW LATCH OPERATION ON VERTICAL WIRE MANAGER.
5. PROVIDE PROPER QUANTITY OF PATCH PANELS.
6. STRAIN RELIEF BRACKET MUST BE A MINIMUM OF 6" BEHIND PATCH PANEL.

A1 CABLE STRAIN RELIEF DETAIL

SCALE: NTS

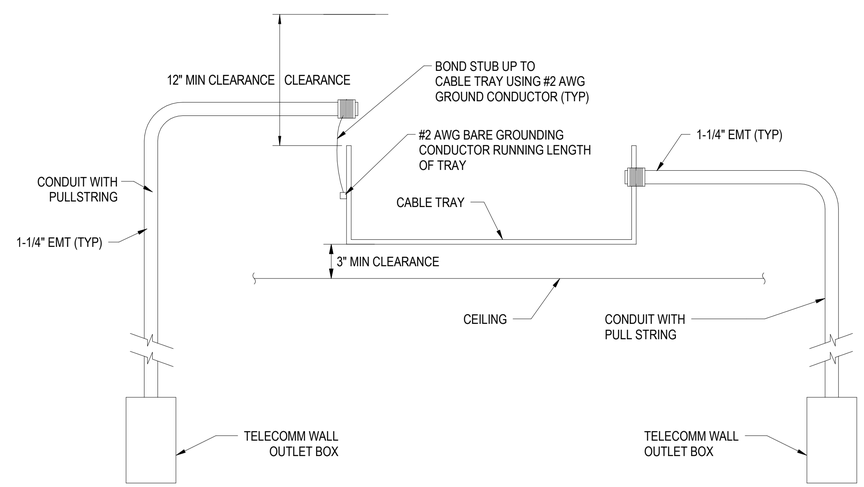

A3 BASKET CABLE TRAY TO OUTLET CONDUIT TRANSITION

SCALE: NTS

SYM	DESCRIPTION	DATE	APPR

NAVFAC

REGISTERED COMMUNICATIONS DISTRIBUTION DESIGNER
Bicsi
JAMES T EHLERS
BICSI ID# 142190
EXPIRES 12-31-22
RCDD
SEAL

RQ W.M. Jordan COMPANY
~ A JOINT VENTURE ~

Michael Baker INTERNATIONAL
100 AIRSIDE DRIVE
MOON TOWNSHIP, PA 15108
A/E INFO

APPROVED

FOR COMMANDER NAVFAC

ACTIVITY: CONCURRED BY MCB-CL AMB VIA EMAIL

SATISFACTORY TO DATE 12/16/21

DES. /TE | DRW ETH | CHK. /MG

PM / DM: TOWLER / ROOT

BRANCH HEAD: SEK

DESIGN DIRECTOR: PAUL K. SHREM

FIRE PROTECTION: DPS

DEPARTMENT OF THE NAVY
NAVAL FACILITIES ENGINEERING SYSTEMS COMMAND
ATLANTIC DESIGN AND CONSTRUCTION
NAVAL FACILITIES ENGINEERING SYSTEMS COMMAND ATLANTIC
NORFOLK, VA
MCB CAMP LEJEUNE
JACKSONVILLE, NC
P1338 II MEF SIMULATION/TRAINING CENTER
REPLACEMENT
TELECOMMUNICATIONS - DETAILS

SCALE: AS NOTED

EPROJECT NO.: 1590892

CONSTR. CONTR. NO. N40085-20-C-0059

NAVFAC DRAWING NO. 14098620

SHEET 386 OF 456

T-502

DRAWFORM REVISION: 25 AUGUST 2020

ISSUED FOR CONSTRUCTION - 16 DEC 21

PLOTTED: 11/18/2021 12:17:29 PM

FILE NAME: BIM 360://HF PACKAGE 3/P1338 MEF SIM CTR-1590892-E.rvt

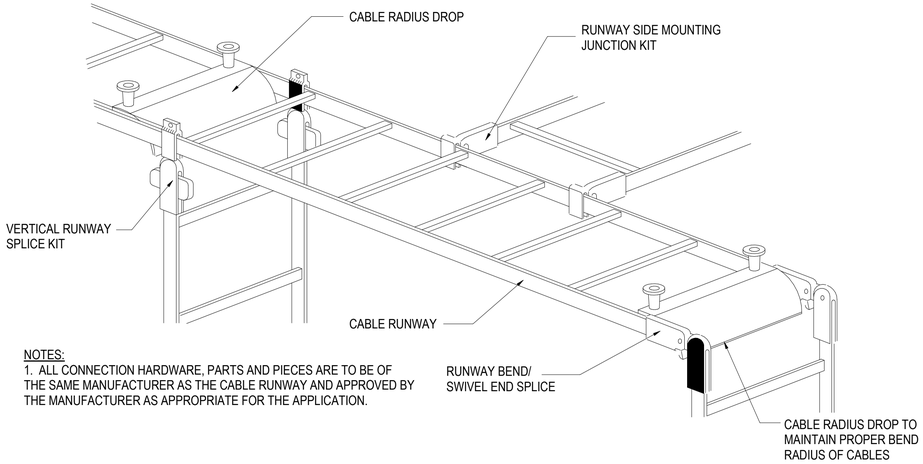

NOTES:
1. ALL CONNECTION HARDWARE, PARTS AND PIECES ARE TO BE OF THE SAME MANUFACTURER AS THE CABLE RUNWAY AND APPROVED BY THE MANUFACTURER AS APPROPRIATE FOR THE APPLICATION.

C1 TYPICAL RUNWAY CONNECTIONS DETAIL

SCALE: NTS

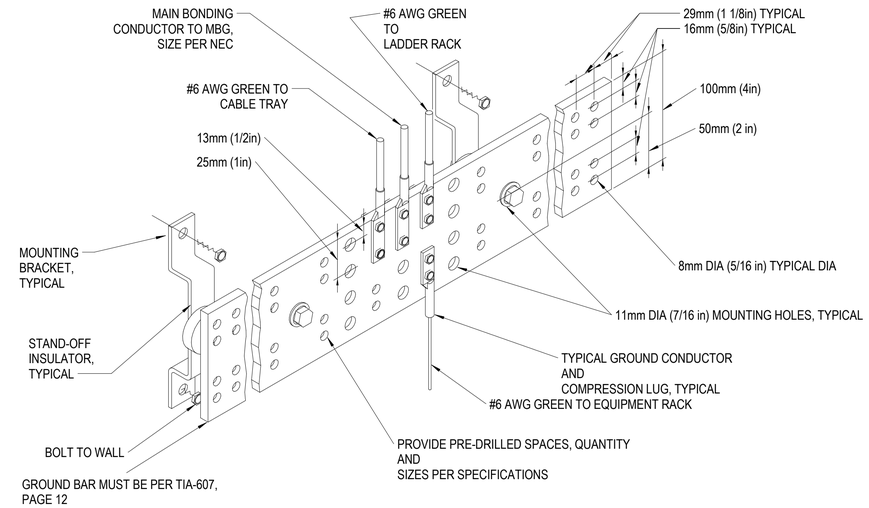

C3 TELECOMMUNICATIONS PRIMARY BUSBAR (PBB) AND SECONDARY (SBB)

SCALE: NTS

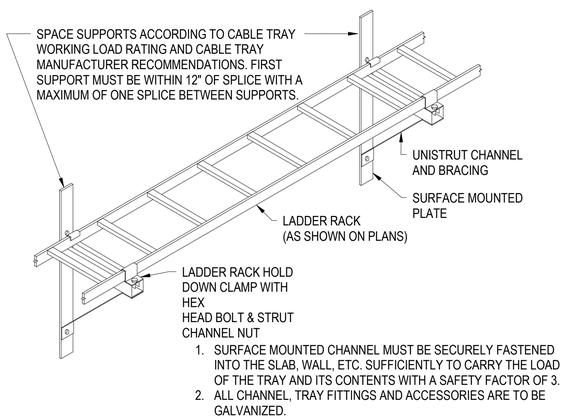

1. SURFACE MOUNTED CHANNEL MUST BE SECURELY FASTENED INTO THE SLAB, WALL, ETC. SUFFICIENTLY TO CARRY THE LOAD OF THE TRAY AND ITS CONTENTS WITH A SAFETY FACTOR OF 3.
2. ALL CHANNEL, TRAY FITTINGS AND ACCESSORIES ARE TO BE GALVANIZED.

B1 LADDER TYPE CABLE RUNWAY WALL MOUNTING DETAIL

SCALE: NTS

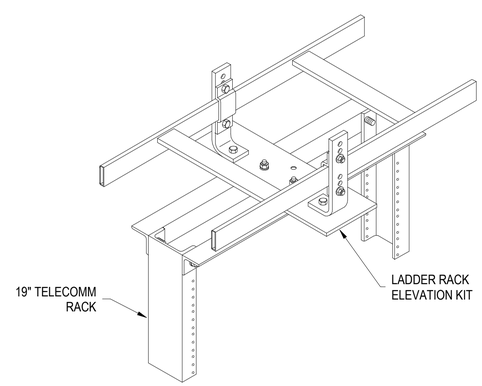

A3 LADDER TYPE CABLE RUNWAY RACK MOUNTING

SCALE: NTS

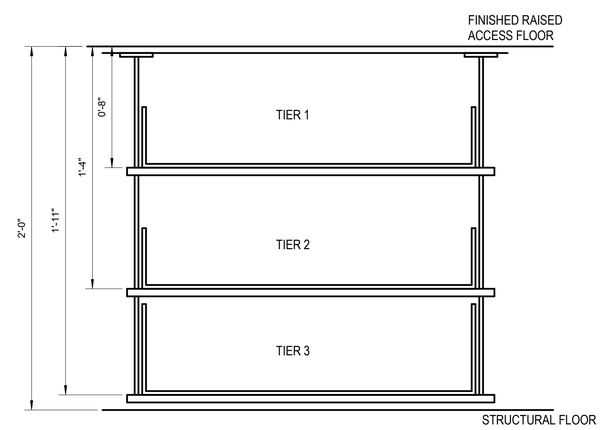

NOTE: SEE SHEET TU113 FOR TRAY SIZE

A4 SIMULATION ROOM UNDERFLOOR TELECOM TRAY PER LAYOUT

SCALE: NTS

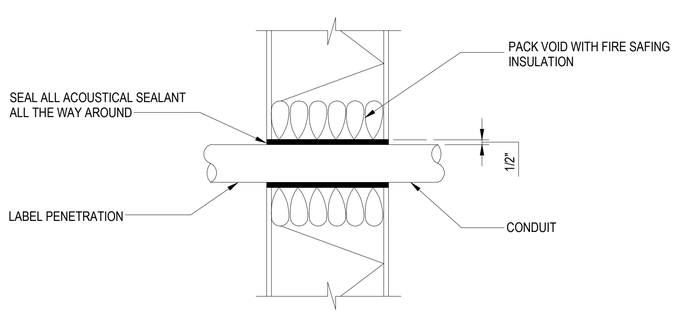

A1 TYPICAL THROUGH WALL CONDUIT PENETRATION

SCALE: NTS

SYM	DESCRIPTION	DATE	APPR

NAVFAC

REGISTERED COMMUNICATIONS DISTRIBUTION DESIGNER
Bicsi
JAMES T EHLERS
BICSI ID# 142190
EXPIRES 12-31-22
RCDD
SEAL

RQ W.M. Jordan COMPANY – A JOINT VENTURE –

Michael Baker INTERNATIONAL
100 AIRSIDE DRIVE
MOON TOWNSHIP, PA 15108
A/E INFO

APPROVED
FOR COMMANDER NAVFAC
ACTIVITY
CONCURRED BY MCB-CL AMB VIA EMAIL
SATISFACTORY TO DATE 12/16/21
DES JTE | DRW ETH | CHK JWG
PM / DM TOWLER / ROOT
BRANCH HEAD SEK
DESIGN DIRECTOR PAUL K. SHREM
FIRE PROTECTION DPS

DEPARTMENT OF THE NAVY
NAVAL FACILITIES ENGINEERING SYSTEMS COMMAND
NAVAL FACILITIES ENGINEERING SYSTEMS COMMAND ATLANTIC
NORFOLK, VA
ATLANTIC DESIGN AND CONSTRUCTION
MCB CAMP LEJEUNE
JACKSONVILLE, NC
P1338 II MEF SIMULATION/TRAINING CENTER
REPLACEMENT
TELECOMMUNICATIONS - DETAILS

SCALE: AS NOTED
EPROJECT NO.: 1590892
CONSTR. CONTR. NO. N40085-20-C-0059
NAVFAC DRAWING NO. 14098621
SHEET 387 OF 456
T-503
DRAWFORM REVISION: 25 AUGUST 2020

ISSUED FOR CONSTRUCTION - 16 DEC 21

PLOTTED: 11/18/2021 12:17:30 PM
FILE NAME: BIM 360://HF PACKAGE 3/P1338 MEF SIM CTR-1590892-E.rvt

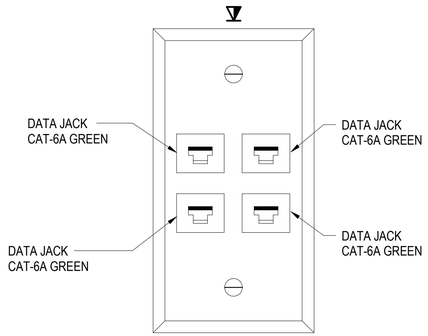

C1 TELECOMMUNICATIONS QUAD OUTLET
SCALE: NTS

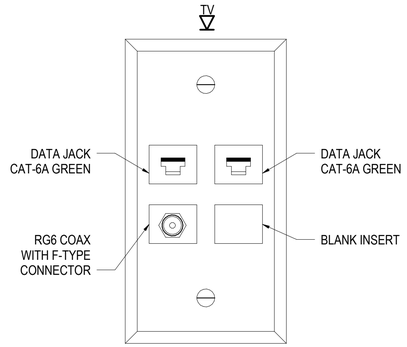

C2 WALL MOUNTED DISPLAY OUTLET
SCALE: NTS

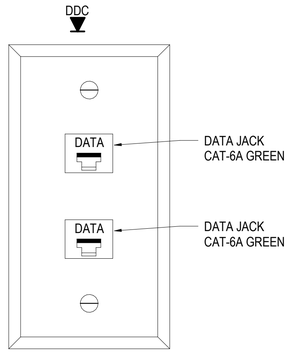

C3 DDC OUTLET
SCALE: NTS

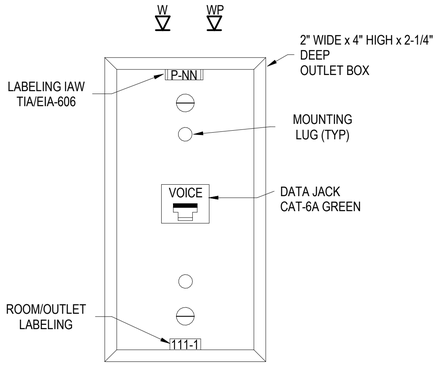

C4 WALL PHONE OUTLET
SCALE: NTS

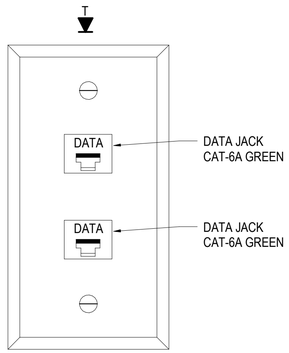

C5 SYNCHRONIZED CLOCK OUTLET
SCALE: NTS

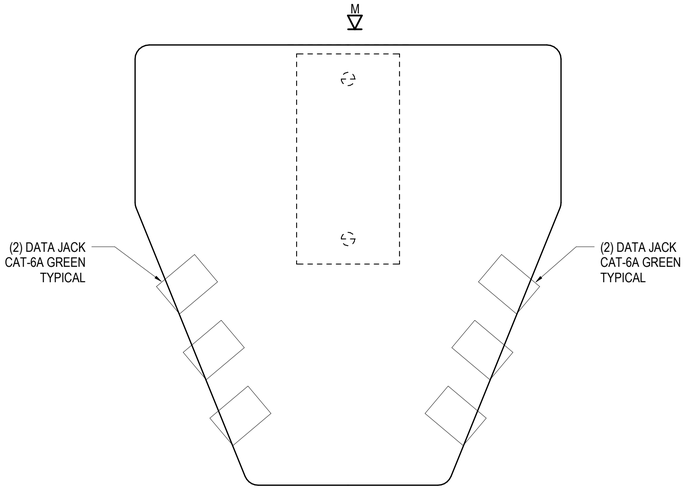

A1 MULTI-USER TELECOM OUTLET ASSEMBLY (MUTOA), 12-PORT
SCALE: NTS

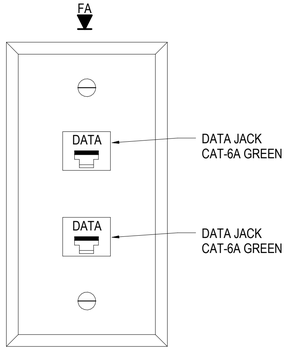

A2 FIRE ALARM INTERFACE OUTLET
SCALE: NTS

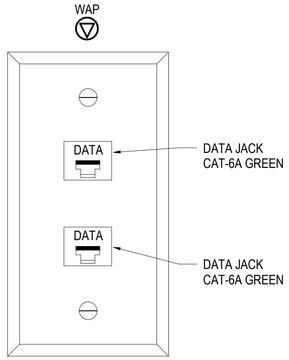

A3 WAP ICT OUTLET FOR ENCLOSURE
SCALE: NTS

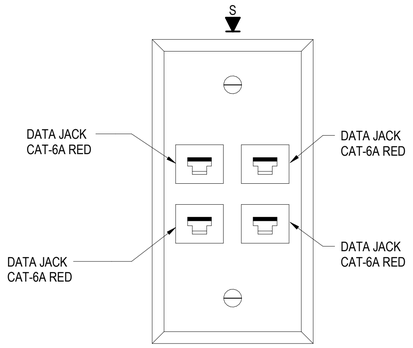

A4 TELECOMMUNICATIONS QUAD OUTLET - SIPRNET
SCALE: NTS

SYM	DESCRIPTION	DATE	APPR

NAVFAC

REGISTERED COMMUNICATIONS DISTRIBUTION DESIGNER
Bicsi
JAMES T EHLERS
BICSI ID# 142190
EXPIRES 12-31-22
RCDD
SEAL

RQ W.M. Jordan COMPANY
~ A JOINT VENTURE ~

Michael Baker INTERNATIONAL
100 AIRSIDE DRIVE
MOON TOWNSHIP, PA 15108
A/E INFO

APPROVED

FOR COMMANDER NAVFAC

ACTIVITY
CONCURRED BY
MCB-CL AMB
VIA EMAIL

SATISFACTORY TO DATE 12/16/21

DES. JTE	DRW ETH	CHK JWG

PM / DM: TOWLER / ROOT
BRANCH HEAD: SEK
DESIGN DIRECTOR: PAUL K. SHREM
FIRE PROTECTION: DPS

DEPARTMENT OF THE NAVY
NAVAL FACILITIES ENGINEERING SYSTEMS COMMAND
ATLANTIC DESIGN AND CONSTRUCTION
NAVAL FACILITIES ENGINEERING SYSTEMS COMMAND ATLANTIC
NORFOLK, VA
MCB CAMP LEJEUNE
JACKSONVILLE, NC
P1338 II MEF SIMULATION/TRAINING CENTER
REPLACEMENT
TELECOMMUNICATIONS - DETAILS

SCALE: AS NOTED
EPROJECT NO.: 1590892
CONSTR. CONTR. NO. N40085-20-C-0059
NAVFAC DRAWING NO. 14098622
SHEET 388 OF 456

T-504

DRAWFORM REVISION: 25 AUGUST 2020

ISSUED FOR CONSTRUCTION - 16 DEC 21

PLOTTED: 11/18/2021 12:17:31 PM

FILE NAME: BIM 360://HF PACKAGE 3/P1338 MEF SIM CTR-1590892-E.rvt

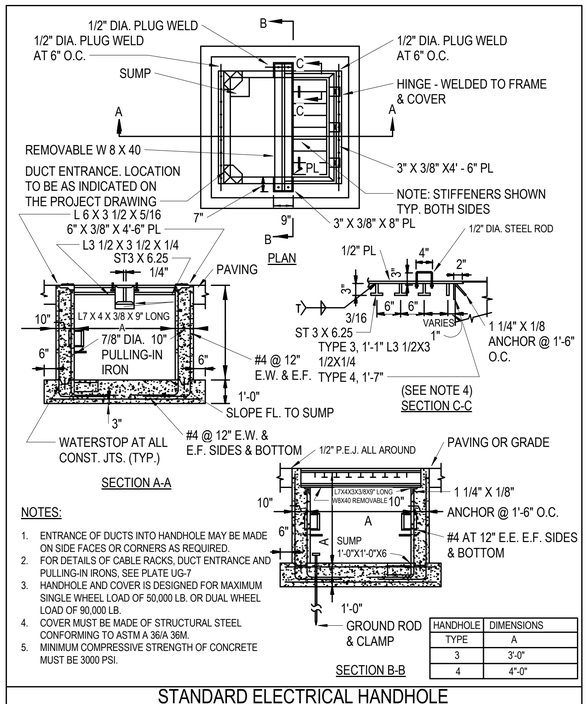

NOTES:

1. ENTRANCE OF DUCTS INTO HANDHOLE MAY BE MADE ON SIDE FACES OR CORNERS AS REQUIRED.
2. FOR DETAILS OF CABLE RACKS, DUCT ENTRANCE AND PULLING-IN IRONS, SEE PLATE UG-7
3. HANDHOLE AND COVER IS DESIGNED FOR MAXIMUM SINGLE WHEEL LOAD OF 50,000 LB. OR DUAL WHEEL LOAD OF 90,000 LB.
4. COVER MUST BE MADE OF STRUCTURAL STEEL CONFORMING TO ASTM A 36/A 36M.
5. MINIMUM COMPRESSIVE STRENGTH OF CONCRETE MUST BE 3000 PSI.

HANDHOLE TYPE	DIMENSIONS A
3	3'-0"
4	4'-0"

STANDARD ELECTRICAL HANDHOLE (TRAFFIC/AIRFIELD) TYPES 3 & 4

SKETCH DATE: JUNE 2002 | STYLE: UG - 5

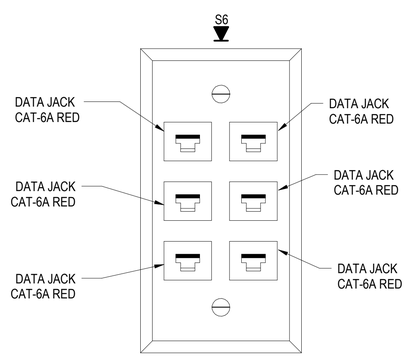

A1 TELECOMMUNICATIONS SIX-PORT FACEPLATE - SIPRNET

SCALE: NTS

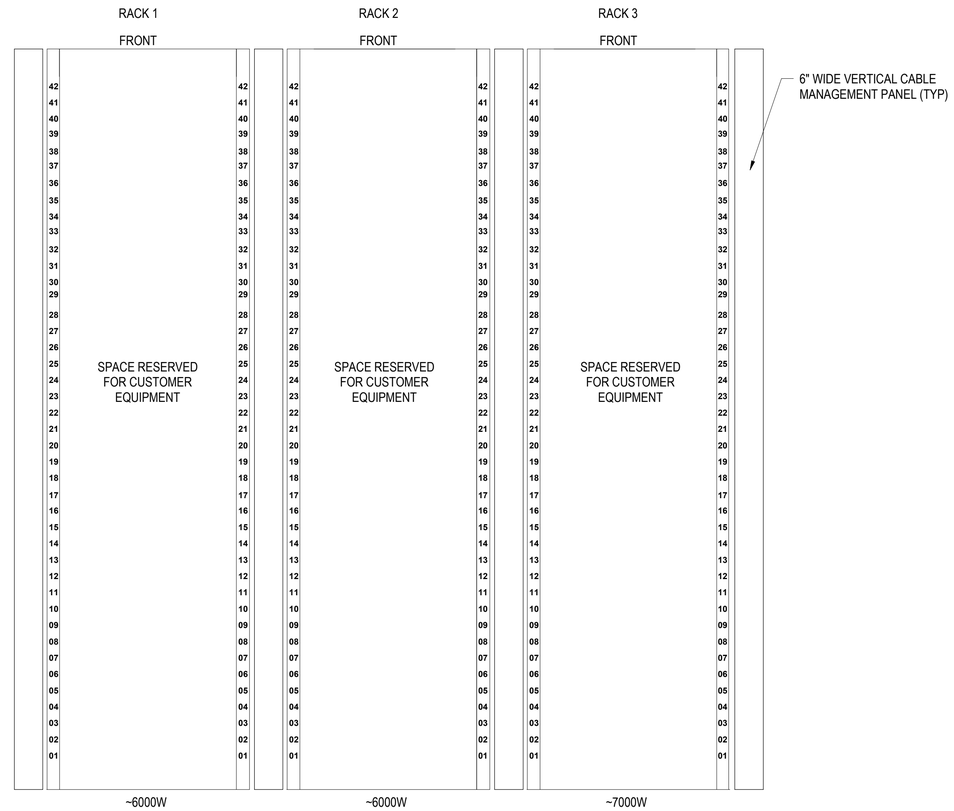

B3 FIRES RM 115A

SCALE: NTS (T-403)

SYM	DESCRIPTION	DATE	APPR.

NAVFAC

REGISTERED COMMUNICATIONS DISTRIBUTION DESIGNER — Bicsi — JAMES T EHLERS — BICSI ID# 142190 — EXPIRES 12-31-22 — RCDD — SEAL

RQ / W.M. Jordan COMPANY — A JOINT VENTURE

Michael Baker INTERNATIONAL
100 AIRSIDE DRIVE
MOON TOWNSHIP, PA 15108
A/E INFO

APPROVED

FOR COMMANDER NAVFAC

ACTIVITY: CONCURRED BY MCB-CL AMB VIA EMAIL

SATISFACTORY TO DATE 12/16/21

DES. JTE | DRW ETH | CHK JMG

PM / DM: TOWLER / ROOT

BRANCH HEAD: SEK

DESIGN DIRECTOR: PAUL K. SHREM

FIRE PROTECTION: DPS

DEPARTMENT OF THE NAVY
NAVAL FACILITIES ENGINEERING SYSTEMS COMMAND
ATLANTIC DESIGN AND CONSTRUCTION
NAVAL FACILITIES ENGINEERING SYSTEMS COMMAND ATLANTIC
NORFOLK, VA
MCB CAMP LEJEUNE
JACKSONVILLE, NC
P1338 II MEF SIMULATION/TRAINING CENTER
REPLACEMENT
TELECOMMUNICATIONS - DETAILS

SCALE: AS NOTED

EPROJECT NO.: 1590892

CONSTR. CONTR. NO. N40085-20-C-0059

NAVFAC DRAWING NO. 14098623

SHEET 389 OF 456

T-505

DRAWFORM REVISION: 25 AUGUST 2020

ISSUED FOR CONSTRUCTION - 16 DEC 21

PLOTTED: 11/18/2021 12:17:34 PM

FILE NAME: BIM 360://HF PACKAGE 3/P1338 MEF SIM CTR-1590892-E.rvt

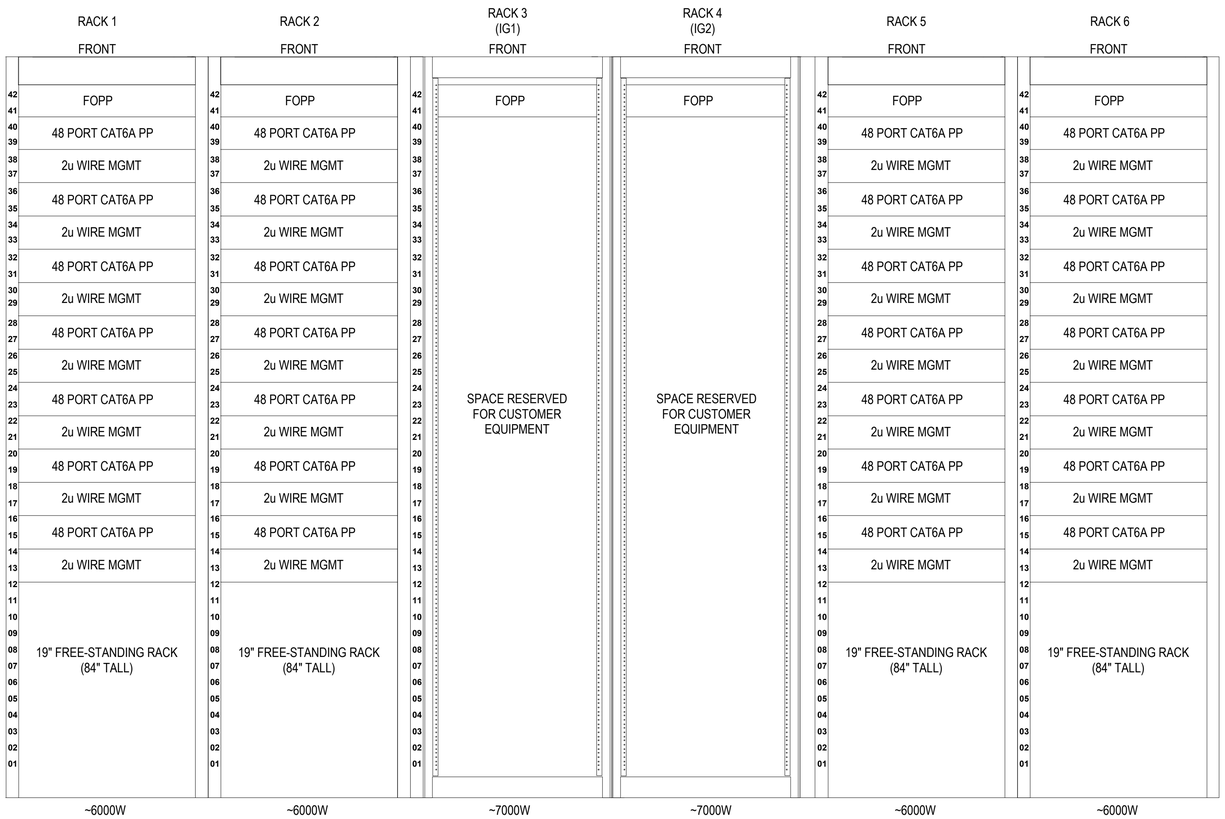

B1 SIM SERVER ROOM 304A - CACCTUS (C)

SCALE: NTS

NOTE:
PROVIDE AND INSTALL 48-STRAND OM4 MULTIMODE OPTICAL FIBER CABLING BETWEEN SERVER RACK AND SWITCH RACKS FOR EACH NETWORK ENCLAVE (MTWS, CACCTUS, TIE, SIPR, MCEN).

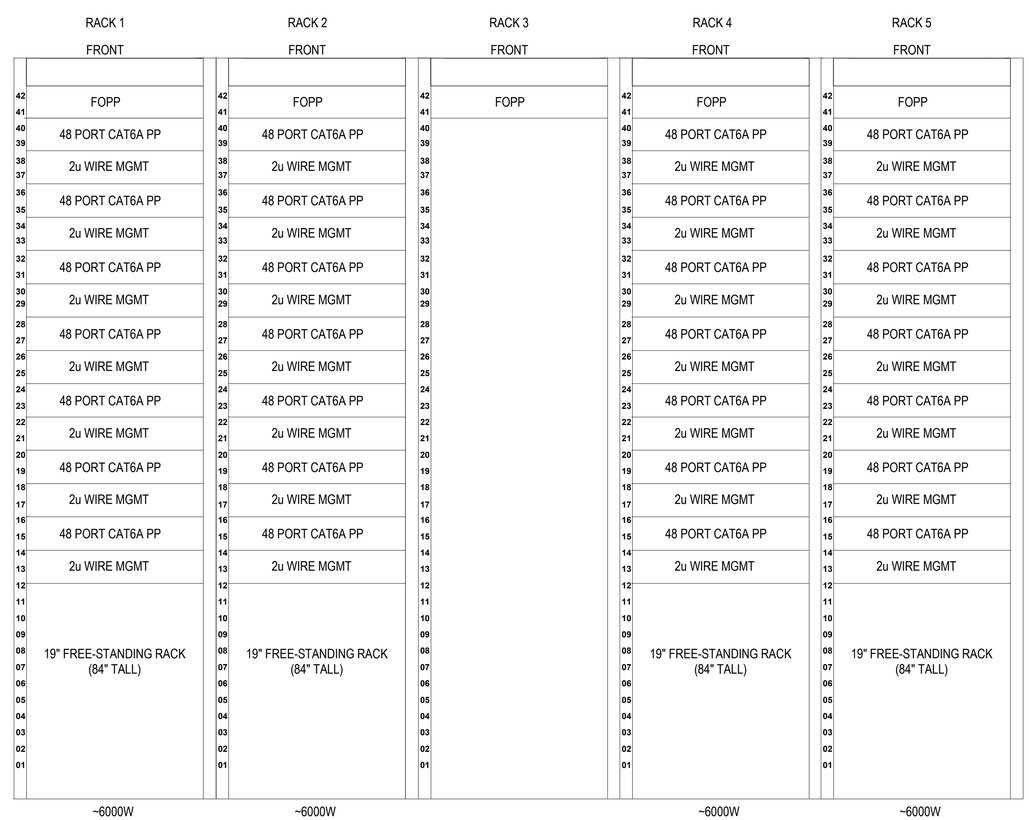

A3 SIM SERVER ROOM 304A - TIE (C)

SCALE: NTS

SYM	DESCRIPTION	DATE	APPR.

NAVFAC

REGISTERED COMMUNICATIONS DISTRIBUTION DESIGNER
Bicsi
JAMES T EHLERS
BICSI ID# 142190
EXPIRES 12-31-22
RCDD
SEAL

RQ W.M. Jordan COMPANY ~A JOINT VENTURE~

Michael Baker INTERNATIONAL
100 AIRSIDE DRIVE
MOON TOWNSHIP, PA 15108
A/E INFO

APPROVED
FOR COMMANDER NAVFAC
ACTIVITY CONCURRED BY MCB-CL AMB VIA EMAIL
SATISFACTORY TO DATE 12/16/21
DES /TE | DRW ETH | CHK JWG
PM / DM TOWLER / ROOT
BRANCH HEAD SEK
DESIGN DIRECTOR PAUL K. SHREM
FIRE PROTECTION DPS

DEPARTMENT OF THE NAVY
NAVAL FACILITIES ENGINEERING SYSTEMS COMMAND
ATLANTIC DESIGN AND CONSTRUCTION
NAVAL FACILITIES ENGINEERING SYSTEMS COMMAND ATLANTIC
NORFOLK, VA
MCB CAMP LEJEUNE
JACKSONVILLE, NC
P1338 II MEF SIMULATION/TRAINING CENTER
REPLACEMENT
TELECOMMUNICATIONS - DETAILS

SCALE: AS NOTED
EPROJECT NO.: 1590892
CONSTR. CONTR. NO. N40085-20-C-0059
NAVFAC DRAWING NO. 14098624
SHEET 390 OF 456
T-506
DRAWFORM REVISION: 25 AUGUST 2020

ISSUED FOR CONSTRUCTION - 16 DEC 21

PLOTTED: 11/18/2021 12:17:36 PM
FILE NAME: BIM 360://HF PACKAGE 3/P1338 MEF SIM CTR-1590892-E.rvt

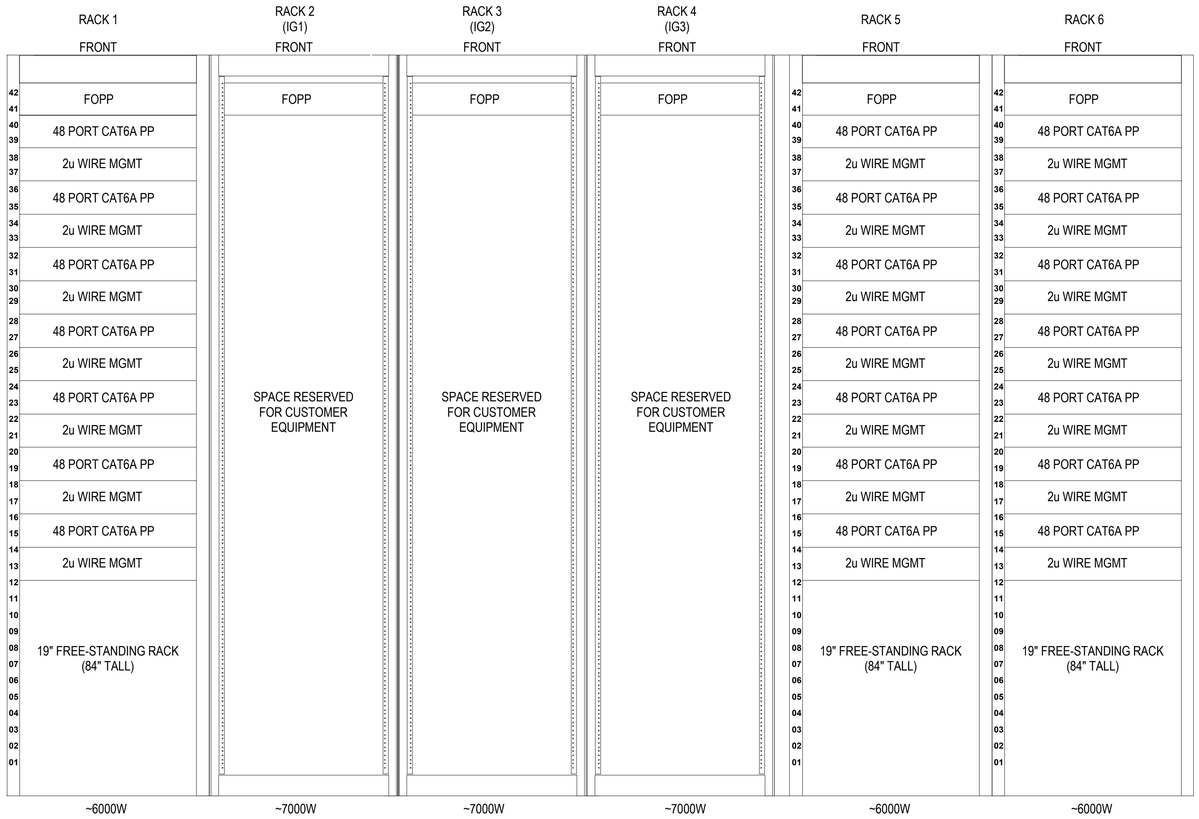

B1 SIM SERVER ROOM 304A - MTWS (C)

SCALE: NTS

NOTE:
PROVIDE AND INSTALL 48-STRAND OM4 MULTIMODE OPTICAL FIBER CABLING BETWEEN SERVER RACK AND SWITCH RACKS FOR EACH NETWORK ENCLAVE (MTWS, CACCTUS, TIE, SIPR, MCEN).

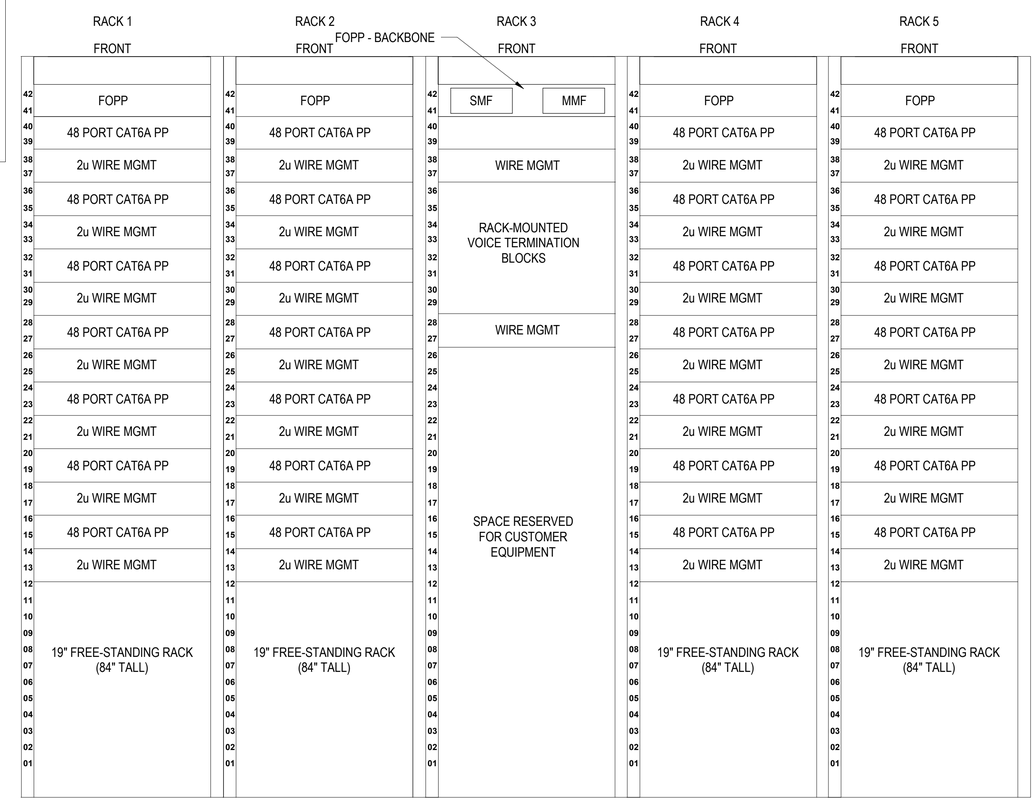

A3 SIM SERVER ROOM 304A - TIE (U)

SCALE: NTS

STM	DESCRIPTION	DATE	APPR

NAVFAC

REGISTERED COMMUNICATIONS DISTRIBUTION DESIGNER
Bicsi
JAMES T EHLERS
BICSI ID# 142190
EXPIRES 12-31-22
RCDD
SEAL

RQ W.M. Jordan COMPANY ~A JOINT VENTURE~

Michael Baker INTERNATIONAL
100 AIRSIDE DRIVE
MOON TOWNSHIP, PA 15108
A/E INFO

APPROVED

FOR COMMANDER NAVFAC

ACTIVITY
CONCURRED BY
MCB-CL AMB
VIA EMAIL

SATISFACTORY TO DATE 12/16/21

DES /TE | DRW ETH | CHK JMG

PM / DM TOWLER / ROOT

BRANCH HEAD SEK

DESIGN DIRECTOR PAUL K. SHREM

FIRE PROTECTION DPS

DEPARTMENT OF THE NAVY
NAVAL FACILITIES ENGINEERING SYSTEMS COMMAND
ATLANTIC DESIGN AND CONSTRUCTION
NAVAL FACILITIES ENGINEERING SYSTEMS COMMAND ATLANTIC
NORFOLK, VA
MCB CAMP LEJEUNE
JACKSONVILLE, NC
P1338 II MEF SIMULATION/TRAINING CENTER
REPLACEMENT
TELECOMMUNICATIONS - DETAILS

SCALE: AS NOTED

EPROJECT NO.: 1590892

CONSTR. CONTR. NO.
N40085-20-C-0059

NAVFAC DRAWING NO.
14098625

SHEET 391 OF 456

T-507

DRAWFORM REVISION: 25 AUGUST 2020

ISSUED FOR CONSTRUCTION - 16 DEC 21

PLOTTED: 11/18/2021 12:17:39 PM

FILE NAME: BIM 360://HF PACKAGE 3/P1338 MEF SIM CTR-1590892-E.rvt

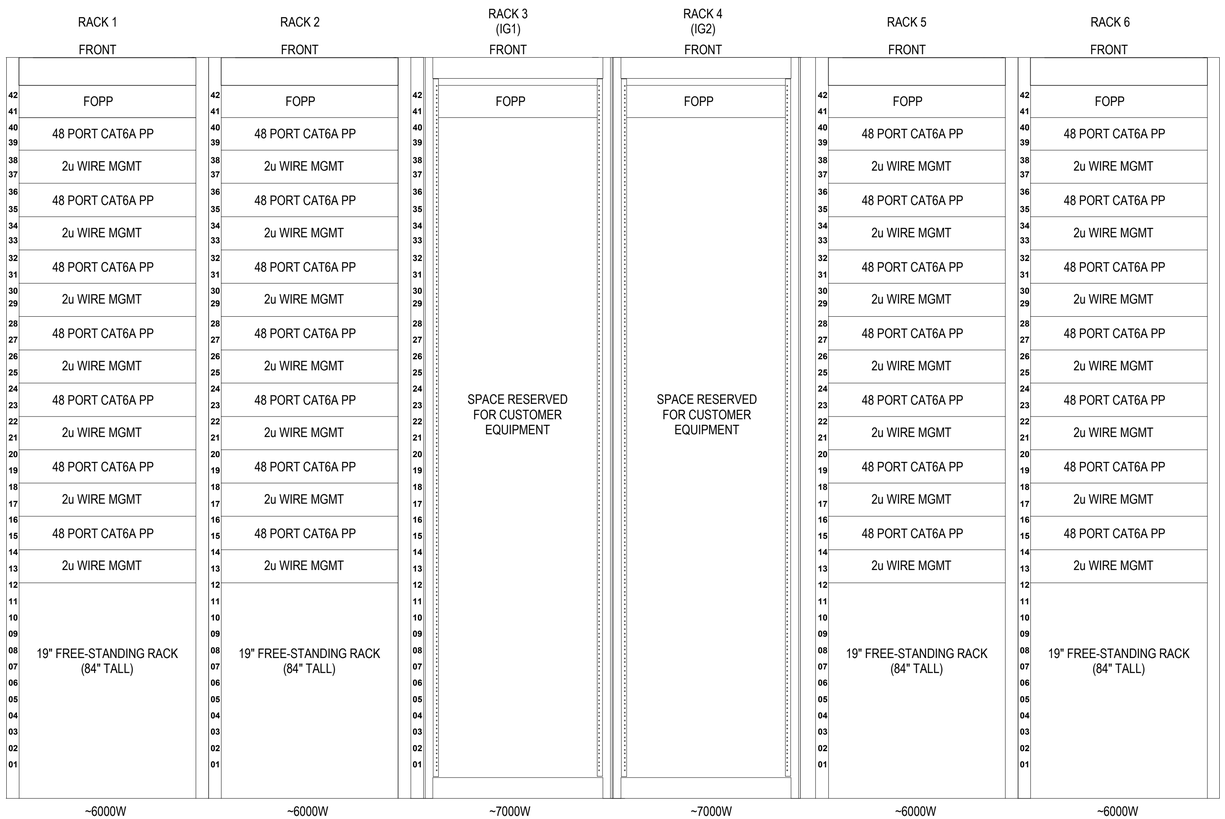

B1 SIM SERVER ROOM 304A - CACCTUS (U)

SCALE: NTS

NOTE:
PROVIDE AND INSTALL 48-STRAND OM4 MULTIMODE OPTICAL FIBER CABLING BETWEEN SERVER RACK AND SWITCH RACKS FOR EACH NETWORK ENCLAVE (MTWS, CACCTUS, TIE, SIPR, MCEN).

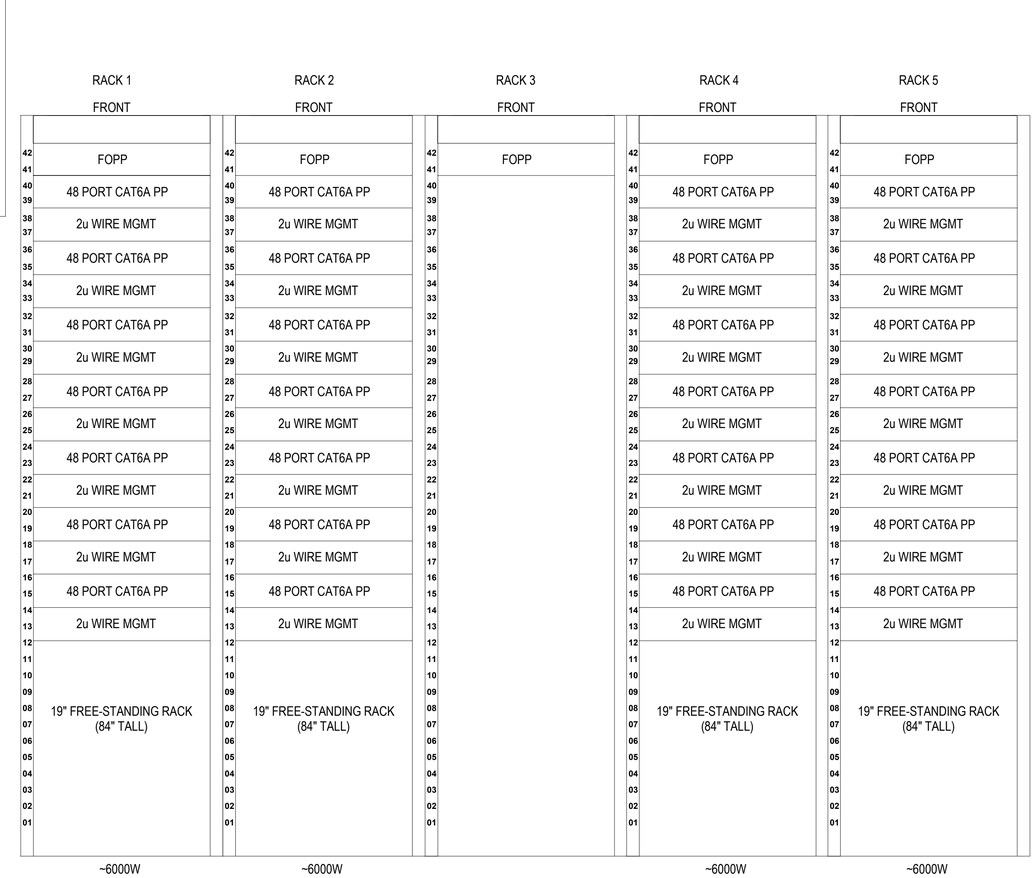

A3 SIM SERVER ROOM 304A - SIPR (C)

SCALE: NTS

STM	DESCRIPTION	DATE	APPR

NAVFAC

REGISTERED COMMUNICATIONS DISTRIBUTION DESIGNER
Bicsi
JAMES T EHLERS
BICSI ID# 142190
EXPIRES 12-31-22
RCDD
SEAL

RQ W.M. Jordan COMPANY ~A JOINT VENTURE~

Michael Baker INTERNATIONAL
100 AIRSIDE DRIVE
MOON TOWNSHIP, PA 15108
A/E INFO

APPROVED

FOR COMMANDER NAVFAC

ACTIVITY: CONCURRED BY MCB-CL AMB VIA EMAIL

SATISFACTORY TO DATE 12/16/21

DES. JTE | DRW ETH | CHK JMG

PM / DM: TOWLER / ROOT

BRANCH HEAD: SEK

DESIGN DIRECTOR: PAUL K. SHREM

FIRE PROTECTION: DPS

DEPARTMENT OF THE NAVY
NAVAL FACILITIES ENGINEERING SYSTEMS COMMAND ATLANTIC
ATLANTIC DESIGN AND CONSTRUCTION
MCB CAMP LEJEUNE

NAVAL FACILITIES ENGINEERING SYSTEMS COMMAND
NORFOLK, VA
JACKSONVILLE, NC
P1338 II MEF SIMULATION/TRAINING CENTER
REPLACEMENT
TELECOMMUNICATIONS - DETAILS

SCALE: AS NOTED

EPROJECT NO.: 1590892

CONSTR. CONTR. NO. N40085-20-C-0059

NAVFAC DRAWING NO. 14098626

SHEET 392 OF 456

T-508

DRAWFORM REVISION: 25 AUGUST 2020

ISSUED FOR CONSTRUCTION - 16 DEC 21

PLOTTED: 11/18/2021 12:17:41 PM

FILE NAME: BIM 360://HF PACKAGE 3/P1338 MEF SIM CTR-1590892-E.rvt

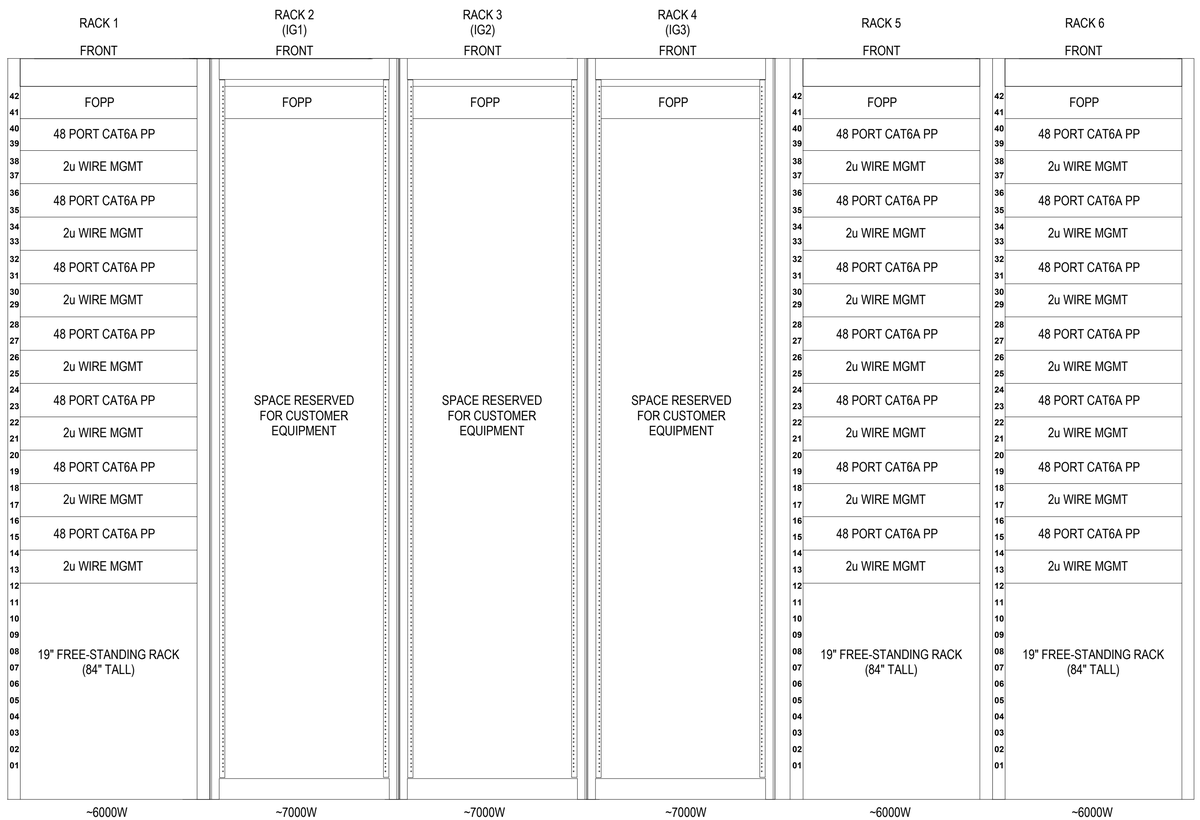

B1 SIM SERVER ROOM 304A - MTWS (U)

SCALE: NTS

NOTE:
PROVIDE AND INSTALL 48-STRAND OM4 MULTIMODE OPTICAL FIBER CABLING BETWEEN SERVER RACK AND SWITCH RACKS FOR EACH NETWORK ENCLAVE (MTWS, CACCTUS, TIE, SIPR, MCEN).

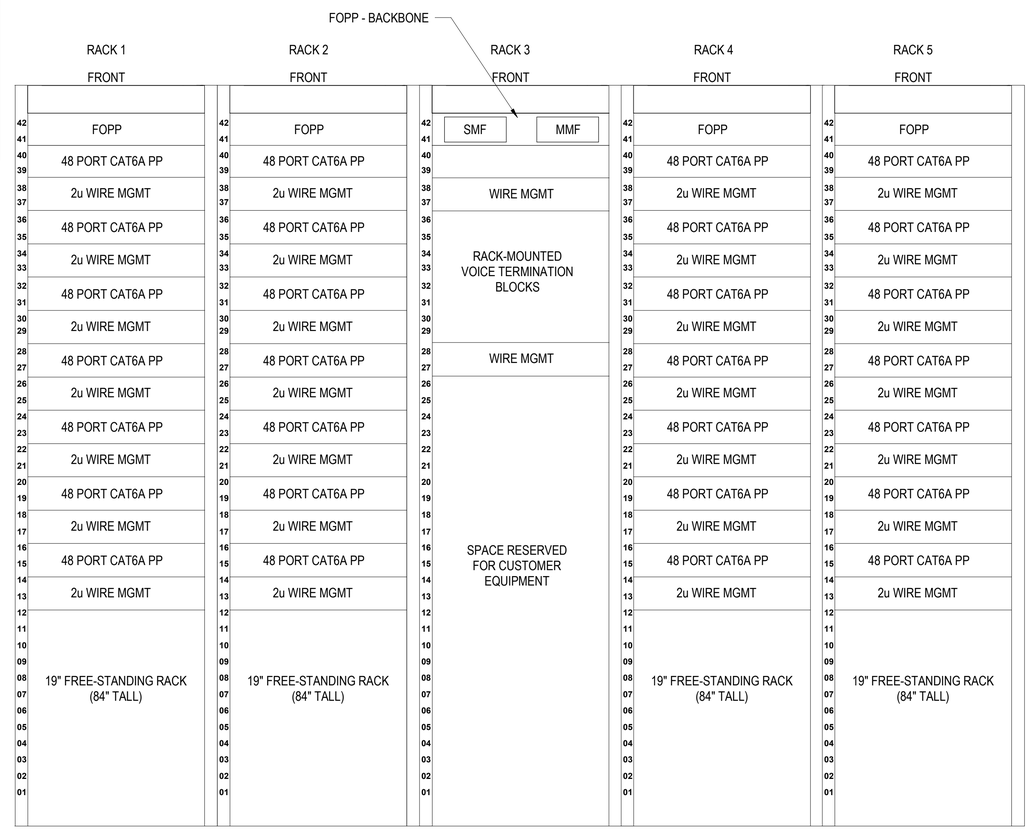

A3 SIM SERVER ROOM 304A - MCEN (U)

SCALE: NTS

STM	DESCRIPTION	DATE	APPR

NAVFAC

REGISTERED COMMUNICATIONS DISTRIBUTION DESIGNER
Bicsi
JAMES T EHLERS
BICSI ID# 142190
EXPIRES 12-31-22
RCDD
SEAL

RQ W.M. Jordan COMPANY
~A JOINT VENTURE~

Michael Baker INTERNATIONAL
100 AIRSIDE DRIVE
MOON TOWNSHIP, PA 15108
A/E INFO

APPROVED

FOR COMMANDER NAVFAC

ACTIVITY
CONCURRED BY
MCB-CL AMB
VIA EMAIL

SATISFACTORY TO DATE 12/16/21

DES. JTE | DRW ETH | CHK JMG

PM / DM TOWLER / ROOT

BRANCH HEAD SEK

DESIGN DIRECTOR PAUL K. SHREM

FIRE PROTECTION DPS

DEPARTMENT OF THE NAVY
NAVAL FACILITIES ENGINEERING SYSTEMS COMMAND
ATLANTIC DESIGN AND CONSTRUCTION
MCB CAMP LEJEUNE

NAVAL FACILITIES ENGINEERING SYSTEMS COMMAND ATLANTIC
NORFOLK, VA

JACKSONVILLE, NC
P1338 II MEF SIMULATION/TRAINING CENTER
REPLACEMENT

TELECOMMUNICATIONS - DETAILS

SCALE: AS NOTED

EPROJECT NO.: 1590892

CONSTR. CONTR. NO.
N40085-20-C-0059

NAVFAC DRAWING NO.
14098627

SHEET 393 OF 456

T-509

DRAWFORM REVISION: 25 AUGUST 2020

ISSUED FOR CONSTRUCTION - 16 DEC 21

PLOTTED: 11/18/2021 12:17:43 PM

FILE NAME: BIM 360//HF PACKAGE 3/P1338 MEF SIM CTR-1590892-E.rvt

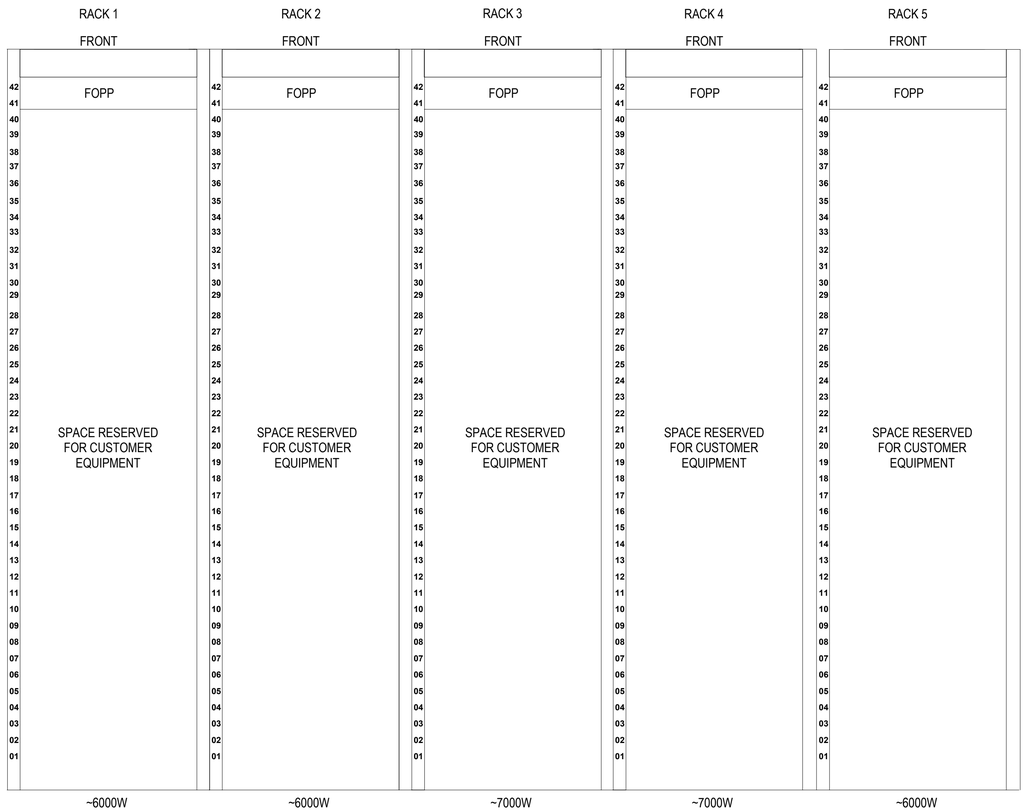

B1 SIM CONTROL SECURE VAULT - RM304B

SCALE: 6" = 1'-0" (T-403)

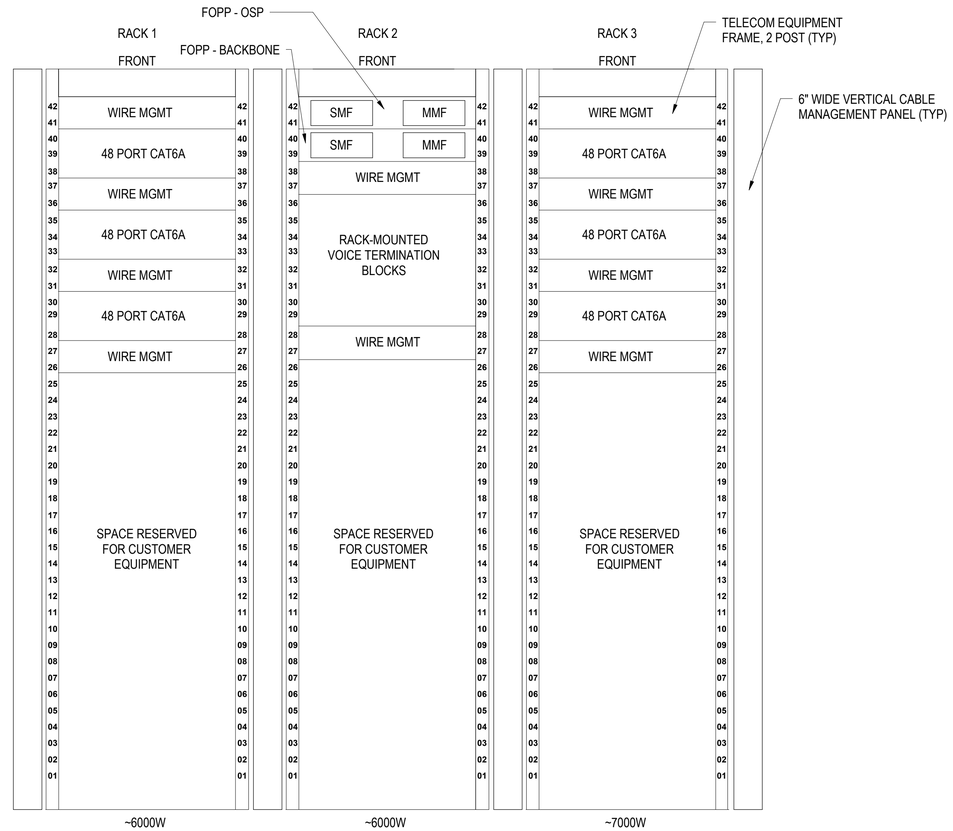

B3 TELECOM RM 115

SCALE: NTS

SYM	DESCRIPTION	DATE	APPR.

NAVFAC

REGISTERED COMMUNICATIONS DISTRIBUTION DESIGNER
Bicsi
JAMES T EHLERS
BICSI ID# 142190
EXPIRES 12-31-22
RCDD
SEAL

RQ W.M. Jordan COMPANY – A JOINT VENTURE –

Michael Baker INTERNATIONAL
100 AIRSIDE DRIVE
MOON TOWNSHIP, PA 15108
A/E INFO

APPROVED
FOR COMMANDER NAVFAC
ACTIVITY
CONCURRED BY
MCB-CL AMB
VIA EMAIL
SATISFACTORY TO DATE 12/16/21
DES /TE | DRW ETH | CHK JMG
PM / DM TOWLER / ROOT
BRANCH HEAD SEK
DESIGN DIRECTOR PAUL K. SHREM
FIRE PROTECTION DPS

DEPARTMENT OF THE NAVY
NAVAL FACILITIES ENGINEERING SYSTEMS COMMAND
ATLANTIC DESIGN AND CONSTRUCTION
NAVAL FACILITIES ENGINEERING SYSTEMS COMMAND ATLANTIC
NORFOLK, VA
MCB CAMP LEJEUNE
JACKSONVILLE, NC
P1338 II MEF SIMULATION/TRAINING CENTER
REPLACEMENT
TELECOMMUNICATIONS - DETAILS

SCALE: AS NOTED
EPROJECT NO.: 1590892
CONSTR. CONTR. NO. N40085-20-C-0059
NAVFAC DRAWING NO. 14098628
SHEET 394 OF 456

T-510

DRAWFORM REVISION: 25 AUGUST 2020

ISSUED FOR CONSTRUCTION - 16 DEC 21

PLOTTED: 11/18/2021 12:17:45 PM

FILE NAME: BIM 360://HF PACKAGE 3/P1338 MEF SIM CTR-1590892-E.rvt

KEYNOTES

1. SECURE USER DROP BOX, SINGLE-GANG, MOUNTED AT MINMUM 48" AFF. COODINATE MOUNTING HEIGHT WITH FURNITURE
2. SECURE RACEWAY CARRIER, 2" x 2"; MOUNTED AT MINIMUM 2" BELOW FINISHED CEILIN
3. SECURE RACEWAY CARRIER, 1" x 1"; WITH DROPOUT FITTING TO 2X2 SECURE CARRIER, TO SECURE USER DROP BOX
4. 2" EMT TO SIPRNET CABINET
5. THRU-WALL PENETRATION UTILIZING DIELECTRIC BREAK
6. THRU-WALL PENETRATION, STANDARD

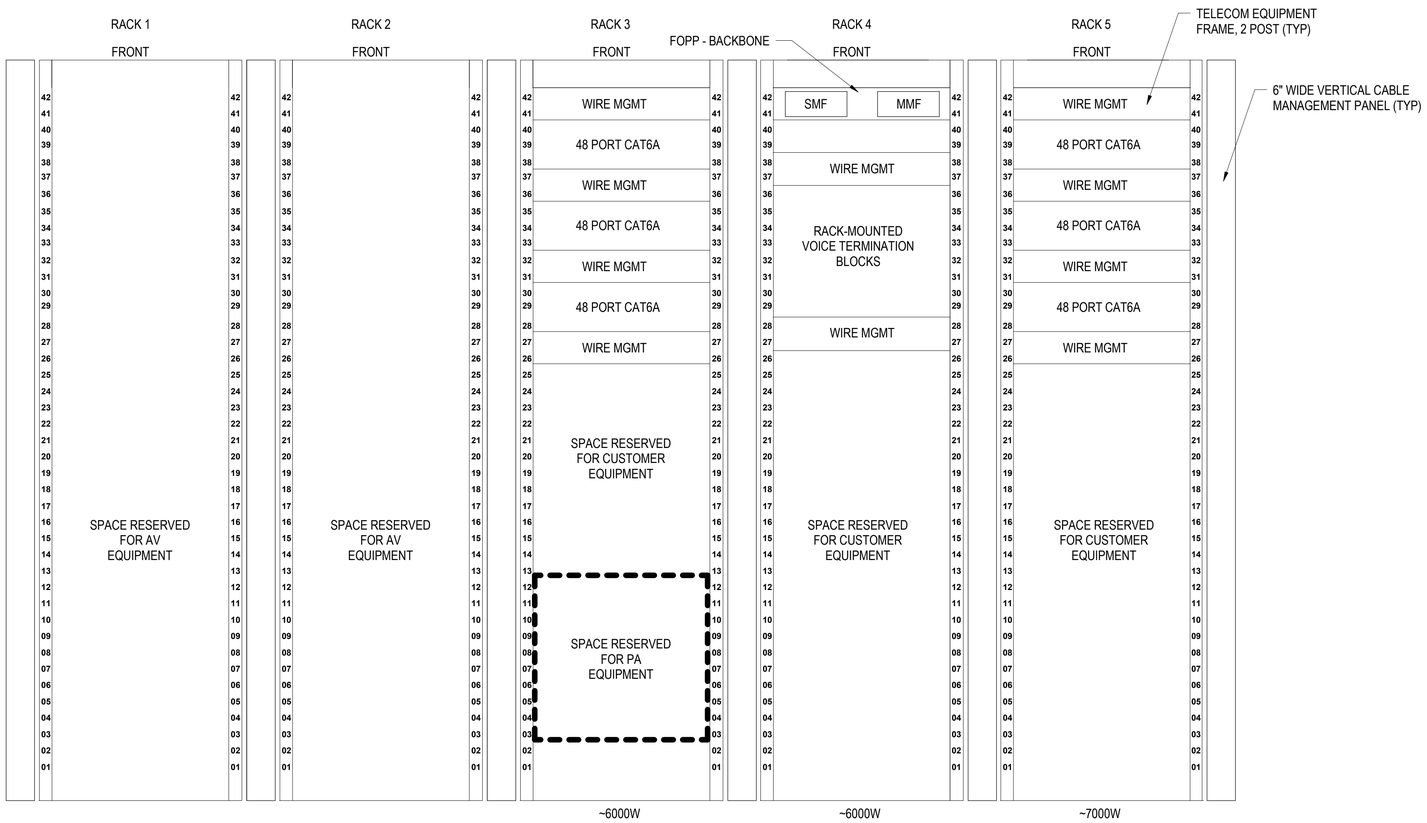

B1 TELECOM RM 208

SCALE: NTS

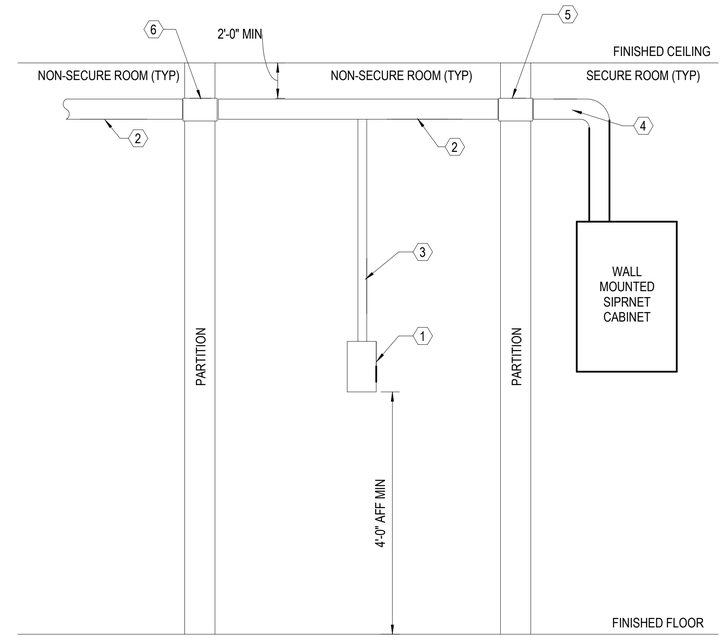

C3 PDS DETAIL

SCALE: NTS

SYM	DESCRIPTION	DATE	APPR

NAVFAC

REGISTERED COMMUNICATIONS DISTRIBUTION DESIGNER
Bicsi
JAMES T EHLERS
BICSI ID# 142190
EXPIRES 12-31-22
RCDD
SEAL

RQ W.M. Jordan COMPANY
~A JOINT VENTURE~

Michael Baker INTERNATIONAL
100 AIRSIDE DRIVE
MOON TOWNSHIP, PA 15108
A/E INFO

APPROVED

FOR COMMANDER NAVFAC

ACTIVITY
CONCURRED BY
MCB-CL AMB
VIA EMAIL

SATISFACTORY TO DATE 12/16/21

DES. JTE	DRW ETH	CHK JMG

PM / DM	TOWLER / ROOT
BRANCH HEAD	SEK
DESIGN DIRECTOR	PAUL K. SHREM
FIRE PROTECTION	DPS

DEPARTMENT OF THE NAVY
NAVAL FACILITIES ENGINEERING SYSTEMS COMMAND
ATLANTIC DESIGN AND CONSTRUCTION
NAVAL FACILITIES ENGINEERING SYSTEMS COMMAND ATLANTIC
NORFOLK, VA
MCB CAMP LEJEUNE
JACKSONVILLE, NC
P1338 II MEF SIMULATION/TRAINING CENTER
REPLACEMENT
TELECOMMUNICATIONS - DETAILS

SCALE: AS NOTED
EPROJECT NO.: 1590892
CONSTR. CONTR. NO. N40085-20-C-0059
NAVFAC DRAWING NO. 14098629
SHEET 395 OF 456

T-511

DRAWFORM REVISION: 25 AUGUST 2020

ISSUED FOR CONSTRUCTION - 16 DEC 21

PLOTTED: 11/18/2021 12:17:47 PM

FILE NAME: BIM 360://HF PACKAGE 3/P1338 MEF SIM CTR-1590892-E.rvt

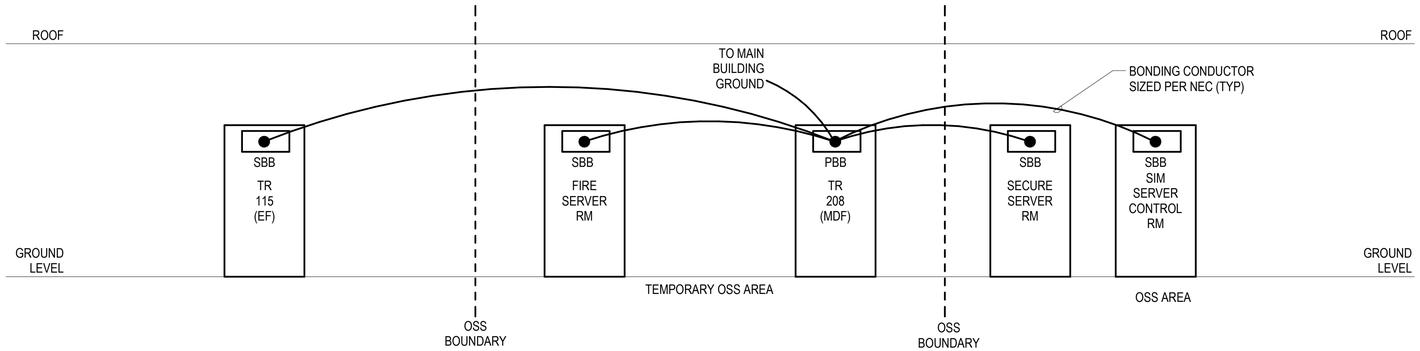

C1 TELECOM GROUNDING LOGICAL DIAGRAM

SCALE: NTS

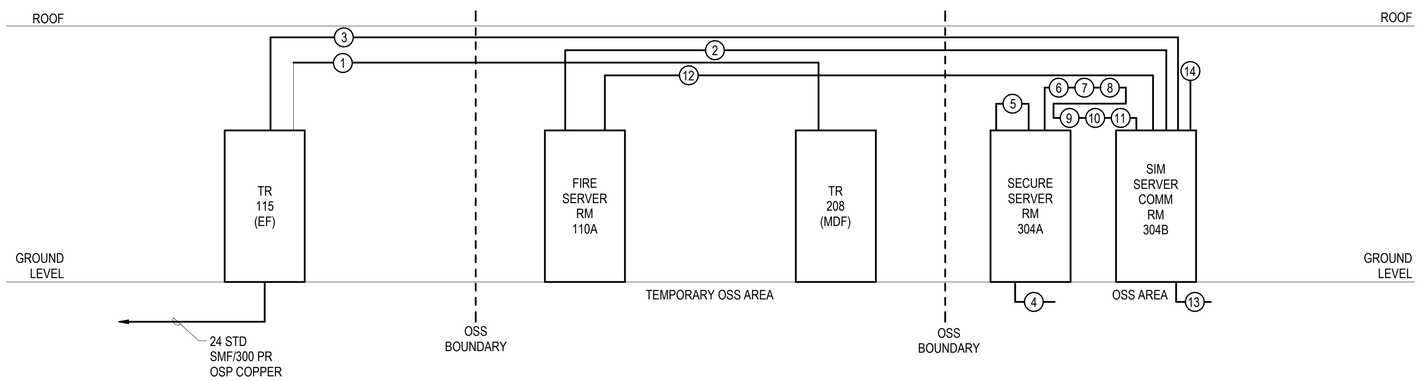

B1 TELECOM BACKBONE CABLING LOGICAL DIAGRAM

SCALE: NTS

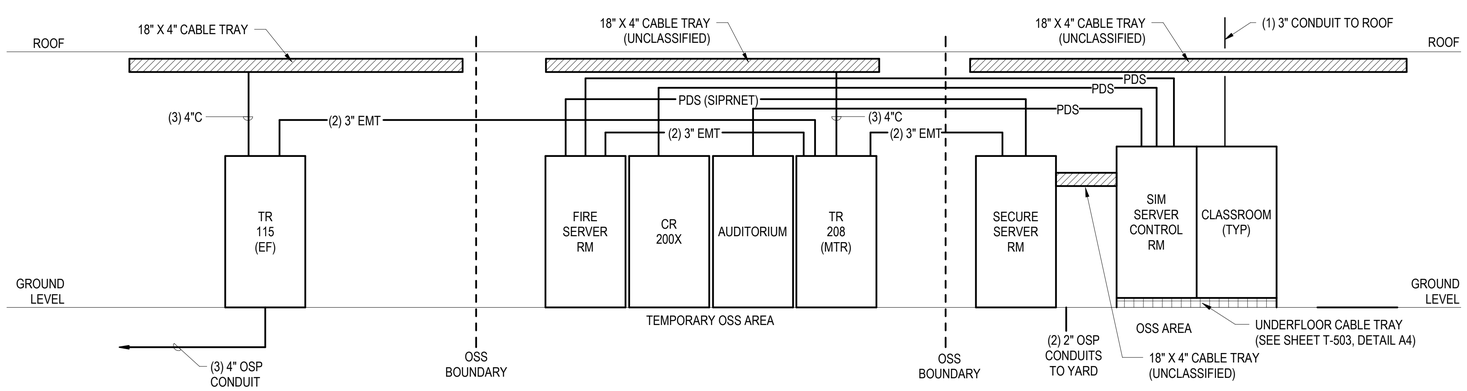

A1 TELECOM PATHWAY LOGICAL DIAGRAM

SCALE: NTS

BACKBONE CABLING LEGEND

	FROM	TO	RISER CAT3	FIBER SM OS2/MM OM4	CAT6A	OTHER
1	TR115	TR208	100	24SM/24MM		
2	TR115	SERVER RM MCEN	200	24SM/24MM		
3	TR115	SIM SECURE COMM		24SM/24MM		
4	SERVER RM MCEN	YARD POP UP	100 (OSP)			
5	SERVER RM MCEN	SERVER RM SIPR		12SM/12MM	12	
6	SIM SECURE COMM	SERVER RM MTWS (U)		12SM/12MM	12	
7	SIM SECURE COMM	SERVER RM MTWS (C)		12SM/12MM	12	
8	SIM SECURE COMM	SERVER RM CACCTUS (U)		12SM/12MM	12	
9	SIM SECURE COMM	SERVER RM CACCTUS (C)		12SM/12MM	12	
10	SIM SECURE COMM	SERVER RM TIE (U)		12SM/12MM	12	
11	SIM SECURE COMM	SERVER RM TIE (C)		12SM/12MM	12	
12	SIM SECURE COMM	FIRE SERVER RM		12SM/12MM	12	
13	SIM SECURE COMM	YARD POP UP		12SM/12MM (OSP)		
14	CACCTUS (U)	ROOF ANTENNAE				LMR400

SYM	DESCRIPTION	DATE	APPR

NAVFAC

REGISTERED COMMUNICATIONS DISTRIBUTION DESIGNER
Bicsi
JAMES T EHLERS
BICSI ID# 142190
EXPIRES 12-31-22
RCDD
SEAL

RQ W.M. Jordan COMPANY
~A JOINT VENTURE~

Michael Baker INTERNATIONAL
100 AIRSIDE DRIVE
MOON TOWNSHIP, PA 15108
A/E INFO

APPROVED
FOR COMMANDER NAVFAC
ACTIVITY
CONCURRED BY MCB-CL AMB VIA EMAIL
SATISFACTORY TO DATE 12/16/21
DES. /TE | DRW ETH | CHK. JAG
PM / DM TOWLER / ROOT
BRANCH HEAD SEK
DESIGN DIRECTOR PAUL K. SHREM
FIRE PROTECTION DPS

DEPARTMENT OF THE NAVY
NAVAL FACILITIES ENGINEERING SYSTEMS COMMAND
NAVAL FACILITIES ENGINEERING SYSTEMS COMMAND ATLANTIC
ATLANTIC DESIGN AND CONSTRUCTION
NORFOLK, VA
MCB CAMP LEJEUNE
JACKSONVILLE, NC
P1338 II MEF SIMULATION/TRAINING CENTER REPLACEMENT
TELECOMMUNICATIONS - DIAGRAMS

SCALE: AS NOTED
EPROJECT NO.: 15908892
CONSTR. CONTR. NO. N40085-20-C-0059
NAVFAC DRAWING NO. 14098630
SHEET 396 OF 456
T-601
DRAWFORM REVISION: 25 AUGUST 2020

ISSUED FOR CONSTRUCTION - 16 DEC 21

PLOTTED: 11/18/2021 12:17:50 PM
FILE NAME: BIM 360://HF PACKAGE 3/P1338 MEF SIM CTR-1590892-E.rvt

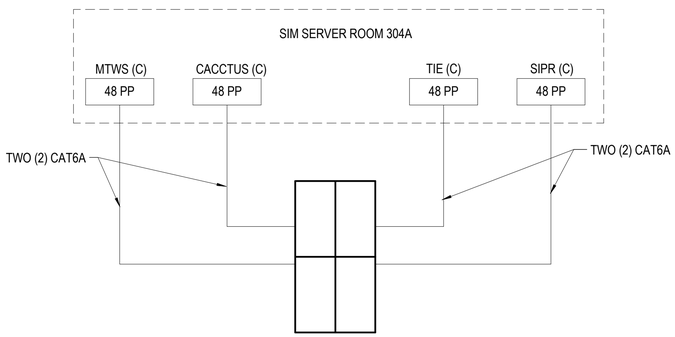

C1 TRAINING SIMULATION ROOM AND EXERCISE CONTROL ROOM FLOORBOX (C), TYPICAL

SCALE: NTS

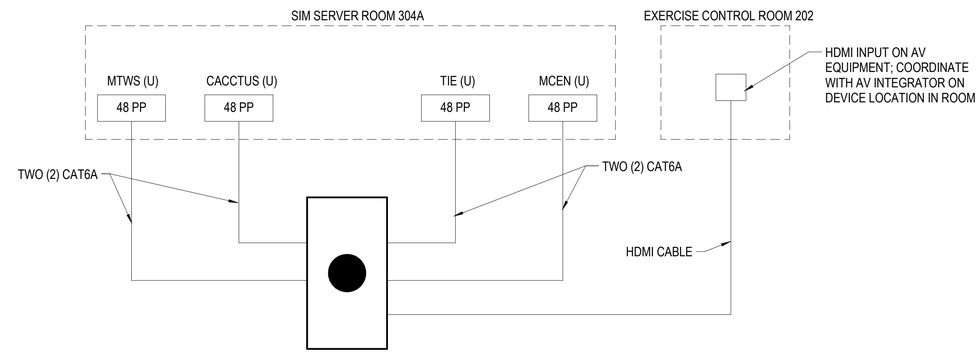

C3 EXERCISE CONTROL ROOM 202 FLOORBOX (U), TYPICAL

SCALE: NTS

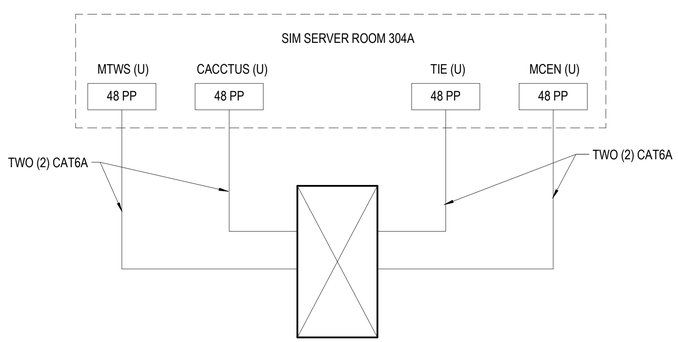

A1 TRAINING SIMULATION ROOM AND EXERCISE CONTROL ROOM FLOORBOX (U), TYPICAL

SCALE: NTS

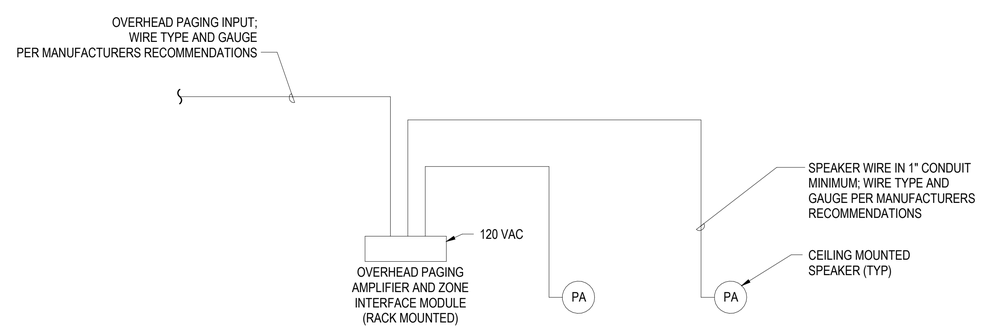

A3 OVERHEAD/PA SYSTEM RISER DIAGRAM

SCALE: NTS

SYM	DESCRIPTION	DATE	APPR

NAVFAC

BICSI REGISTERED COMMUNICATIONS DISTRIBUTION DESIGNER
JAMES T EHLERS
BICSI ID# 142190
EXPIRES 12-31-22
RCDD
SEAL

RQ W.M. Jordan COMPANY – A JOINT VENTURE –

Michael Baker INTERNATIONAL
100 AIRSIDE DRIVE
MOON TOWNSHIP, PA 15108
A/E INFO

APPROVED

FOR COMMANDER NAVFAC

ACTIVITY: CONCURRED BY MCB-CL, AMB VIA EMAIL

SATISFACTORY TO DATE 12/16/21

DES. /TE	DRW ETH	CHK. /MG
PM / DM	TOWLER / ROOT	
BRANCH HEAD	SEK	
DESIGN DIRECTOR	PAUL K. SHREM	
FIRE PROTECTION	DPS	

DEPARTMENT OF THE NAVY
NAVAL FACILITIES ENGINEERING SYSTEMS COMMAND
ATLANTIC DESIGN AND CONSTRUCTION
NAVAL FACILITIES ENGINEERING SYSTEMS COMMAND ATLANTIC
NORFOLK, VA
MCB CAMP LEJEUNE
JACKSONVILLE, NC
P1338 II MEF SIMULATION/TRAINING CENTER
REPLACEMENT
TELECOMMUNICATIONS - DIAGRAMS

SCALE: AS NOTED
EPROJECT NO.: 1590892
CONSTR. CONTR. NO. N40085-20-C-0059
NAVFAC DRAWING NO. 14098631
SHEET 397 OF 456

T-602

DRAWFORM REVISION: 25 AUGUST 2020

ISSUED FOR CONSTRUCTION - 16 DEC 21

PLOTTED: 11/18/2021 12:17:51 PM

FILE NAME: BIM 360://HF PACKAGE 3/P1338 MEF SIM CTR-1590892-E.rvt

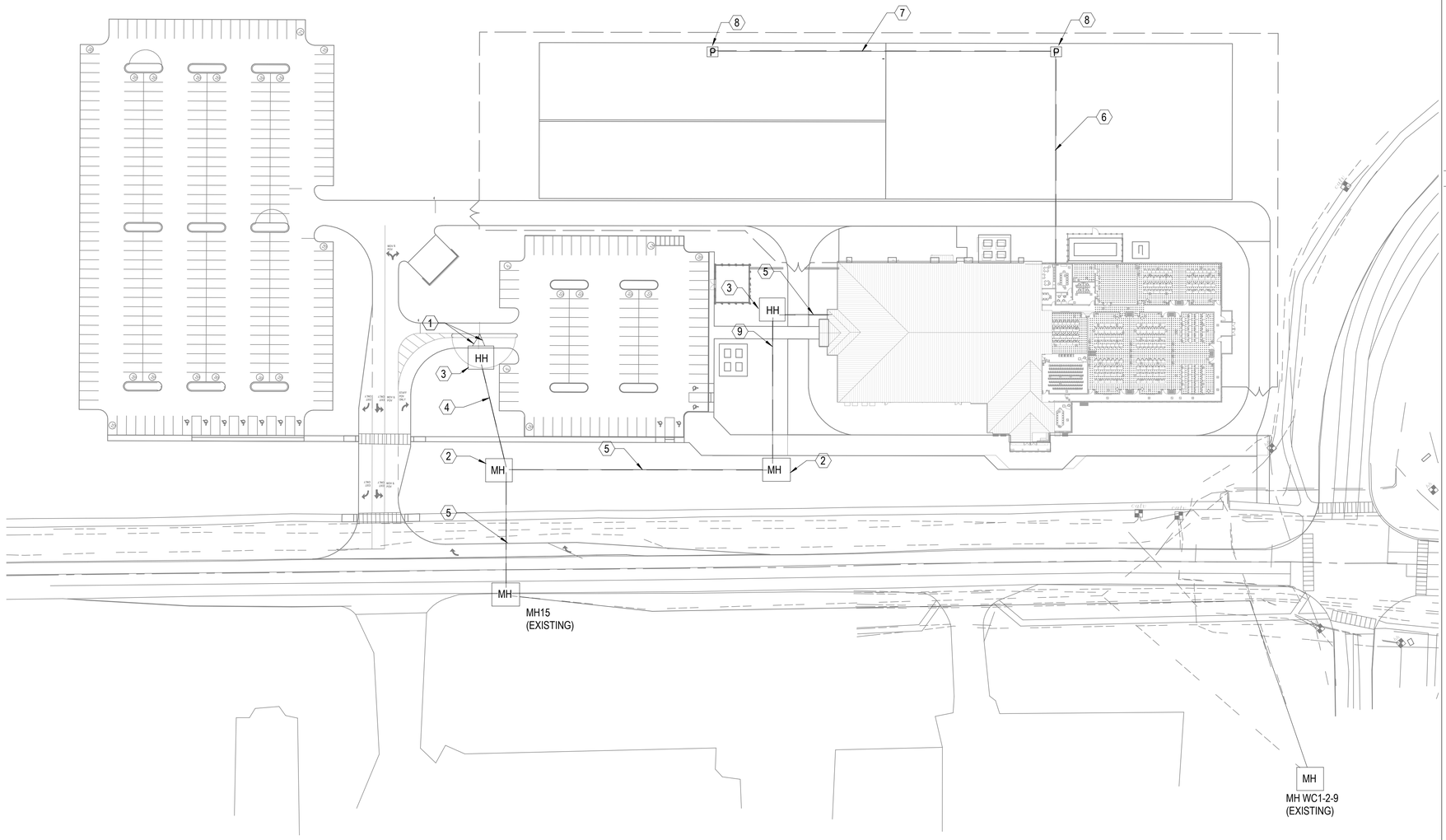

TELECOMMUNICATIONS - SITE UTILITY PLAN

SCALE: 1" = 60'-0"

GENERAL NOTES

1 SEE SHEET E-001 FOR ELECTRICAL NOTES, SYMBOLS, AND ABBREVIATIONS.
2 DEPTH OF DUCTBANKS MUST BE COORDINATED WITH OTHER UTILITIES.
3 COORDINATE DUCTBANK RUNS WITH OTHER TRADES, REFER TO CIVIL PLANS. ADJUST DEPTH AT CROSSINGS TO AVOID CONFLICTS.

KEYNOTES

1 NEW 2-WAY 2" CONDUIT DUCTBANK FROM NEW SITE MANHOLE TO ROADWAY MEDIAN LOCATION; COORDINATE EXACT CONDUIT STUB UP LOCATION WITH PROPOSED CARD READER LOCATION.
2 NEW 4'x4'x4' PRECAST CONCRETE COMMUNICATION VAULT
3 NEW 2'x3' CONCRETE POLYMER HANDHOLE
4 NEW 2-WAY 4" CONDUIT DUCTBANK FROM NEW SITE MANHOLE TO NEW HANDHOLE
5 NEW 6-WAY 4" CONDUIT DUCTBANK FROM MH15 TO NEW SITE MANHOLE, WITH THREE (3) 3" 3-DUCT FABRIC INNERDUCT INSTALLED IN THREE CONDUITS; PROVIDE AND INSTALL ONE (1) NEW 24-STRAND SINGLEMODE OSP OPTICAL FIBER CABLE FROM MH15 TO NEW FACILITY EF VIA NEW DUCTBANK SYSTEM, AND ONE (1) 300-PAIR OSP PE39 COPPER CABLE FROM EXISTING MH WC1-2-9 TO NEW FACILITY EF VIA NEW DUCTBANK SYSTEM. COORDINATE WITH GOVERNMENT FOR PLACING, SPLICING, TERMINATION, AND CUTOVER REQUIREMENTS.
6 NEW 2-WAY 2" CONDUIT DUCTBANK FROM BUILDING TELECOM ROOM TR208 TO PEDESTAL LOCATION; ONE CONDUIT WITH ONE (1) 3" 3-DUCT FABRIC INNERDUCT INSTALLED IN ONE CONDUIT; PROVIDE AND INSTALL ONE (1) NEW 24-STRAND SINGLEMODE OSP OPTICAL FIBER CABLE FROM SIM SECURE SERVER COMM ROOM 304B, AND ONE (1) 100-PAIR PE-39 OSP COPPER CABLE FROM SIM CONTROL SERVER ROOM 304A TO NEW PEDESTAL LOCATIONS AT BUILDING EXTERIOR; COORDINATE TERMINATION LOCATIONS WITH BASE COMMUNICATIONS.
7 NEW 2-WAY 2" CONDUIT DUCTBANK BETWEEN NEW PEDESTAL LOCATIONS; ONE CONDUIT WITH ONE (1) 1" 3-DUCT FABRIC INNERDUCT INSTALLED IN ONE CONDUIT
8 NEW TELECOMMUNICATIONS PEDESTAL LOCATION
9 NEW 3-WAY 4" CONDUIT DUCTBANK FROM MH15 TO NEW SITE MANHOLE, WITH THREE (3) 3" 3-DUCT FABRIC INNERDUCT INSTALLED IN ONE CONDUIT

0 30'-0" 60'-0" 120'-0"
SCALE: 0'-1" = 60'-0"

N

SYM	DESCRIPTION	DATE	APPR

NAVFAC

REGISTERED COMMUNICATIONS DISTRIBUTION DESIGNER
Bicsi
JAMES T EHLERS
BICSI ID# 142190
EXPIRES 12-31-22
RCDD
SEAL

RQ W.M. Jordan COMPANY
~A JOINT VENTURE~

Michael Baker INTERNATIONAL
100 AIRSIDE DRIVE
MOON TOWNSHIP, PA 15108
A/E INFO

APPROVED
FOR COMMANDER NAVFAC
ACTIVITY CONCURRED BY MCB-CL AMB VIA EMAIL
SATISFACTORY TO DATE 12/16/21
DES /TE | DRW ETH | CHK /MG
PM / DM TOWLER / ROOT
BRANCH HEAD SEK
DESIGN DIRECTOR PAUL K. SHREM
FIRE PROTECTION DPS

DEPARTMENT OF THE NAVY
NAVAL FACILITIES ENGINEERING SYSTEMS COMMAND
ATLANTIC DESIGN AND CONSTRUCTION
NAVAL FACILITIES ENGINEERING SYSTEMS COMMAND ATLANTIC
NORFOLK, VA
MCB CAMP LEJEUNE
JACKSONVILLE, NC
P1338 II MEF SIMULATION/TRAINING CENTER
REPLACEMENT
TELECOMMUNICATIONS - SITE PLAN

SCALE: AS NOTED
EPROJECT NO.: 1590892
CONSTR. CONTR. NO. N40085-20-C-0059
NAVFAC DRAWING NO. 14098608
SHEET 374 OF 456

TS101

DRAWFORM REVISION: 25 AUGUST 2020

ISSUED FOR CONSTRUCTION - 16 DEC 21

PLOTTED: 11/18/2021 12:18:03 PM

FILE NAME: BIM 360://HF PACKAGE 3/P1338 MEF SIM CTR-1590892-E.rvt

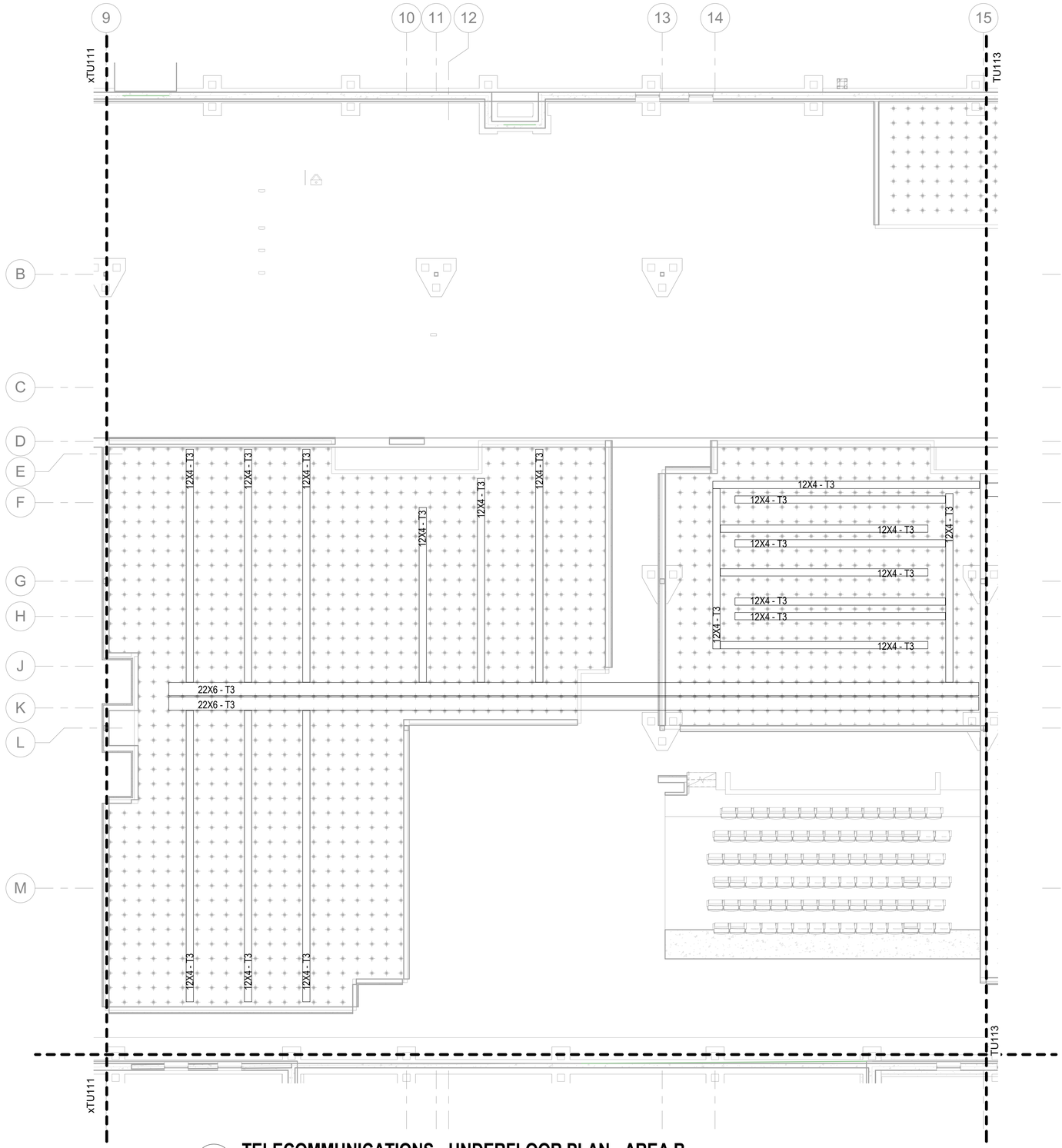

A1 TELECOMMUNICATIONS - UNDERFLOOR PLAN - AREA B

SCALE: 1/8" = 1'-0"

GENERAL NOTES

1. SEE SHEET T-001 FOR TELECOMMUNICATIONS NOTES, SYMBOLS, AND ABBREVIATIONS.
2. CONTRACTOR TO PROVIDE ALL PA SYSTEM REQUIREMENTS, TO INCLUDE PATHWAYS, CONDUITS, JUNCTION BOXES, WIRING, CABLING, SPEAKERS, AND SYSTEM COMPONENTS.

KEYPLAN

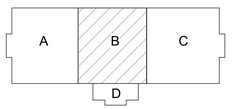

0 4'-0" 8'-0" 16'-0"

SCALE: 0'-0 1/8" = 1'-0"

N

SYM	DESCRIPTION	DATE	APPR

NAVFAC

REGISTERED COMMUNICATIONS DISTRIBUTION DESIGNER
Bicsi
JAMES T EHLERS
BICSI ID# 142190
EXPIRES 12-31-22
RCDD
SEAL

RQ W.M. Jordan COMPANY – A JOINT VENTURE –

Michael Baker INTERNATIONAL
100 AIRSIDE DRIVE
MOON TOWNSHIP, PA 15108
A/E INFO

APPROVED

FOR COMMANDER NAVFAC

ACTIVITY: CONCURRED BY MCB-CL AMB VIA EMAIL

SATISFACTORY TO DATE 12/16/21

DES /TE | DRW ETH | CHK /MG

PM / DM: TOWLER / ROOT

BRANCH HEAD: SEK

DESIGN DIRECTOR: PAUL K. SHREM

FIRE PROTECTION: DPS

DEPARTMENT OF THE NAVY
NAVAL FACILITIES ENGINEERING SYSTEMS COMMAND
ATLANTIC DESIGN AND CONSTRUCTION
NAVAL FACILITIES ENGINEERING SYSTEMS COMMAND ATLANTIC
NORFOLK, VA
MCB CAMP LEJEUNE
JACKSONVILLE, NC

P1338 II MEF SIMULATION/TRAINING CENTER
REPLACEMENT

TELECOMMUNICATIONS - FIRST FLOOR PLAN - AREA B UNDERSLAB

SCALE: AS NOTED

EPROJECT NO.: 1590892

CONSTR. CONTR. NO. N40085-20-C-0059

NAVFAC DRAWING NO. 14098614

SHEET 380 OF 456

TU112

DRAWFORM REVISION: 25 AUGUST 2020

ISSUED FOR CONSTRUCTION - 16 DEC 21

PLOTTED: 11/18/2021 12:18:08 PM

FILE NAME: BIM 360://HF PACKAGE 3/P1338 MEF SIM CTR-1590892-E.rvt

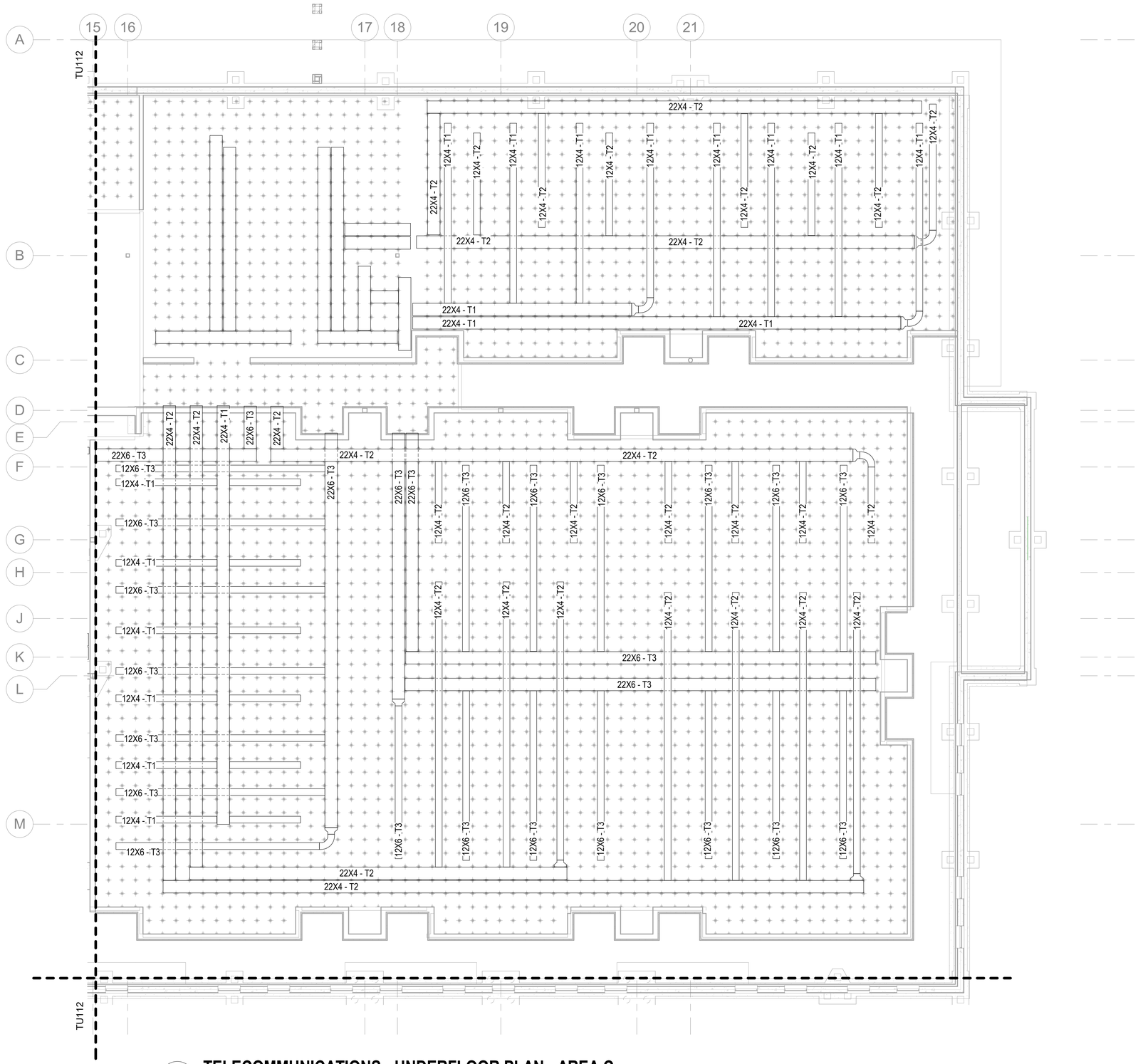

A1 TELECOMMUNICATIONS - UNDERFLOOR PLAN - AREA C

SCALE: 1/8" = 1'-0"

GENERAL NOTES

1. SEE SHEET T-001 FOR TELECOMMUNICATIONS NOTES, SYMBOLS, AND ABBREVIATIONS.
2. CONTRACTOR TO PROVIDE ALL PA SYSTEM REQUIREMENTS, TO INCLUDE PATHWAYS, CONDUITS, JUNCTION BOXES, WIRING, CABLING, SPEAKERS, AND SYSTEM COMPONENTS.
3. SEE DETAIL A4 SHEET T-503 FOR ADDITIONAL INFORMATION REGARDING UNDERFLOOR CABLE TRAY TIERING.

SYM	DESCRIPTION	DATE	APPR

NAVFAC

REGISTERED COMMUNICATIONS DISTRIBUTION DESIGNER
Bicsi
JAMES T EHLERS
BICSI ID# 142190
EXPIRES 12-31-22
RCDD
SEAL

RQ W.M. Jordan COMPANY
~ A JOINT VENTURE ~

Michael Baker INTERNATIONAL
100 AIRSIDE DRIVE
MOON TOWNSHIP, PA 15108
A/E INFO

APPROVED

FOR COMMANDER NAVFAC

ACTIVITY: CONCURRED BY MCB-CL AMB VIA EMAIL

SATISFACTORY TO DATE 12/16/21

DES JTE | DRW ETH | CHK JWG

PM / DM: TOWLER / ROOT

BRANCH HEAD: SEK

DESIGN DIRECTOR: PAUL K. SHREM

FIRE PROTECTION: DPS

DEPARTMENT OF THE NAVY
NAVAL FACILITIES ENGINEERING SYSTEMS COMMAND
ATLANTIC DESIGN AND CONSTRUCTION
MCB CAMP LEJEUNE

NAVAL FACILITIES ENGINEERING SYSTEMS COMMAND ATLANTIC
NORFOLK, VA

JACKSONVILLE, NC

P1338 II MEF SIMULATION/TRAINING CENTER
REPLACEMENT

TELECOMMUNICATIONS - FIRST FLOOR PLAN - AREA C UNDERSLAB

SCALE: AS NOTED

EPROJECT NO.: 1590892

CONSTR. CONTR. NO. N40085-20-C-0059

NAVFAC DRAWING NO. 14098615

SHEET 381 OF 456

TU113

DRAWFORM REVISION: 25 AUGUST 2020

ISSUED FOR CONSTRUCTION - 16 DEC 21

KEYPLAN

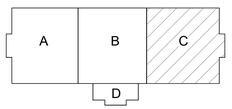

0 4'-0" 8'-0" 16'-0"

SCALE: 0'-0 1/8" = 1'-0"

N

PLOTTED: 11/18/2021 12:18:15 PM

FILE NAME: BIM 360://HF PACKAGE 3/P1338 MEF SIM CTR-1590892-E.rvt