ABBREVIATIONS

A/E	ARCHITECT/ENGINEER
AAP	ALARM ANNUNCIATOR PANEL
ADA	AMERICANS WITH DISABILITIES ACT
AFC	ABOVE FINISHED CEILING
AFF	ABOVE FINISHED FLOOR
AFG	ABOVE FINISHED GRADE
AHJ	AUTHORITY HAVING JURISDICTION
ARCH	ARCHITECT
AV	AUDIOVISUAL
AVC	AUDIOVISUAL CONTRACTOR
AWG	AMERICAN WIRE GAUGE
BCT	BONDING CONDUCTOR FOR TELECOMMUNICATIONS
BFF	BELOW FINISH FLOOR
BICSI	BUILDING INDUSTRY CONSULTING SERVICE INTERNATIONAL
C	CAMERA
CAT	CATEGORY
CATV	CABLE TELEVISION
CCTV	CLOSED CIRCUIT TELEVISION
CD	CONSTRUCTION DOCUMENTS
CLG	CEILING
CONTR	CONTRACTOR
CT	CABLE TRAY
DEMO	DEMOLITION
DIA	DIAGRAM
EC	ELECTRICAL CONTRACTOR
EQ	EQUIPMENT GROUND
ELEC	ELECTRICAL
EMER	EMERGENCY
ENCL	ENCLOSURE
FT	FEET
FP	FIRE PROTECTION
GND	GROUND
GC	GENERAL CONTRACTOR
HT	HEIGHT
IN	INCHES
J-BOX	JUNCTION BOX
LAN	LOCAL AREA NETWORK
LV	LOW VOLTAGE
M	MICROPHONE
MECH	MECHANICAL
MIN	MINIMUM
NEC	NATIONAL ELECTRICAL CODE
NTS	NOT TO SCALE
PS	PROJECTION SCREEN
PT	POKE THRU
PTZ	PAN / TILT / ZOOM
PWR	POWER
QTY	QUANTITY
RCDD	REGISTERED COMMUNICATIONS DISTRIBUTION DESIGNER
RCP	REFLECTED CEILING PLAN
RECPT	RECEPTACLE
REQD	REQUIRED
RM	ROOM
RS	ROOM SCHEDULER
RU	RACK UNIT
S	SPEAKER
SB	SPECIALTY BACK BOX
TB	TELECOMMUNICATIONS BACKBOARD
TBB	TELECOMMUNICATIONS BONDING BACKBONE
TE	TELECOMMUNICATIONS ENCLOSURE
TC	TELECOMMUNICATIONS CONTRACTOR
TGB	TELECOMMUNICATIONS GROUNDING BUSBAR
TMGB	TELECOMMUNICATIONS MAIN GROUNDING BUSBAR
TV	TELEVISION
TP	TOUCH PANEL
UL	UNDERWRITERS LABORATORY
UON	UNLESS OTHERWISE NOTED
UPS	UNINTERRUPTIBLE POWER SUPPLY
UTIL	UTILITY

AUDIOVISUAL SYMBOLS

CEILING MOUNTED DEVICES

- CEILING CONDUIT PENETRATION
- AV X — CEILING MOUNTED AUDIOVISUAL PULL BOX. MOUNT 18" AFC, UNLESS OTHERWISE NOTED. "X" INDICATES NUMBER OF GANGS.
- CEILING MOUNTED DUPLEX AC POWER RECEPTACLE. 120V, 20A, UNLESS OTHERWISE NOTED
- P — CEILING MOUNTED AC POWER PULL BOX
- HORIZONTAL CONDUIT
- CABLE TRAY
- AV X — CEILING MOUNTED BACK BOX FOR POWER, DATA AND AUDIOVISUAL. "X" INDICATES TYPE OF BOX, SEE MANUFACTURER LIST FOR DETAILS
- C — CEILING MOUNTED CAMERA. PROVIDED BY AVC.
- S — CEILING MOUNTED SPEAKER. PROVIDED BY AVC.
- M — CEILING MOUNTED MICROPHONE. PROVIDED BY AVC.

FLOOR MOUNTED DEVICES

- FLOOR CONDUIT PENETRATION
- AV X — FLOOR BOX FOR POWER, DATA AND AUDIOVISUAL. SEE SYMBOL NOTES FOR BOX TYPE
- AV PT X — POKE-THRU FOR POWER, DATA AND AUDIOVISUAL. SEE SYMBOL NOTES FOR BOX TYPE
- AUDIOVISUAL EQUIPMENT RACK
- FLOOR BOX/POKE-THRU DUPLEX AC POWER RECEPTACLE 120V, 20A, UNLESS OTHERWISE NOTED
- FLOOR BOX/POKE-THRU DOUBLE DUPLEX AC POWER RECEPTACLE 120V, 20A, UNLESS OTHERWISE NOTED

MISCELLANEOUS ITEMS

- X / TA-XXX — SINGLE WALL ELEVATION MARKER
- X / X TA-XXX X / X — MULTI WALL ELEVATION MARKER
- X / TA-XXX — ROOM SECTION MARKER
- X / TA-XXX — ROOM RISER MARKER

AUDIOVISUAL SYMBOLS CONTINUED

WALL MOUNTED DEVICES

- WALL MOUNTED DUPLEX AC POWER RECEPTACLE 120V, 20A, UNLESS OTHERWISE NOTED.
- WALL MOUNTED DOUBLE DUPLEX AC POWER RECEPTACLE 120V, 20A, UNLESS OTHERWISE NOTED.
- P — WALL MOUNTED AC POWER PULL BOX
- WALL MOUNTED CLOCK AC POWER RECEPTACLE 120V, 20A, UNLESS OTHERWISE NOTED.
- C — WALL MOUNTED CAMERA. PROVIDED BY AVC.
- S — WALL MOUNTED SPEAKER. PROVIDED BY AVC.
- AV X — WALL MOUNTED FLAT PANEL DISPLAY BACK BOX FOR POWER, DATA AND AUDIOVISUAL. "X" INDICATES TYPE OF BOX, SEE MANUFACTURER LIST FOR DETAILS.
- AV X — WALL MOUNTED AUDIOVISUAL DEVICE. "X" INDICATES NUMBER OF GANGS.

GENERAL NOTES

1. ALL WALL MOUNTED OUTLETS ARE TO BE MOUNTED AT 18" AFF UNLESS OTHERWISE NOTED.
2. INSTANCE BELOW IS TYPICAL OF TWO BOXES ON THE SAME VERTICAL PLANE.

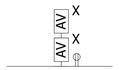

3. ALL POWER RECEPTACLES AND TELECOMMUNICATIONS OUTLETS ARE FOR AV REFERENCE ONLY. REFER TO ELECTRICAL AND TELECOMMUNICATIONS DRAWINGS FOR FINAL LOCATIONS.
4. THE AUDIOVISUAL CONTRACTOR SHALL BE RESPONSIBLE FOR CONSTRUCTION SAFETY. THE ARCHITECT AND/OR ENGINEER WILL ASSUME NO RESPONSIBILITY FOR WORKMAN'S OR PEDESTRIAN'S SAFETY.
5. NOTHING CONTAINED IN THE CONTRACT DOCUMENTS SHALL BE CONSTRUCTED TO CONFLICT WITH ANY NATIONAL, STATE, MUNICIPAL, OR LOCAL LAW OR REGULATIONS.
6. THE WORK UNDER THIS CONTRACT SHALL INCLUDE THE FURNISHING OF ALL NECESSARY MATERIALS, TOOLS, AND LABOR FOR A COMPLETE AND WORKING INSTALLATION AS DEFINED BY THE PLANS AND SPECIFICATIONS.
7. THE AUDIOVISUAL CONTRACTOR AT THE SITE SHALL VERIFY ALL DIMENSIONS AND EXISTING CONDITIONS PERTAINING TO THE INSTALLATION OF THE AUDIOVISUAL SYSTEMS. WHEN THE CONTRACTOR UNCOVERS CONDITIONS NOT INDICATED ON THE PLANS OR IN THE SPECIFICATIONS, THEY SHALL NOTIFY THE ARCHITECT AND/OR ENGINEER PRIOR TO PROCEEDING WITH ANY WORK. FAILURE TO NOTIFY WILL MAKE THE CONTRACTOR RESPONSIBLE FOR ALL COSTS AND CONSEQUENCES OF SUCH FAILURE.
8. CONTRACTOR SHALL CLEAN UP ALL DEBRIS AT THE END OF EACH WORK DAY.
9. ALL CONDUITS RUN IN EXPOSED AREAS SHALL BE MOUNTED TIGHT TO THE UNDERSIDE OF THE STRUCTURAL STEEL.
10. COORDINATE EXACT LOCATIONS OF EQUIPMENT WITH OTHER CONSTRUCTION TRADES
11. EXACT LOCATIONS OF FLOOR BOXES, SHALL BE COORDINATED WITH FURNITURE AND EQUIPMENT PLANS.
12. ALL DEVICES SHOWN ON THE EXTERIOR OF THE BUILDING SHALL BE WEATHERPROOF TYPE.

AUDIOVISUAL SPECIALTY INFRASTRUCTURE SYMBOL NOTES

FLOOR BOX CONFIGURATION

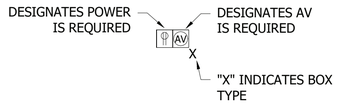

POKE-THRU CONFIGURATION

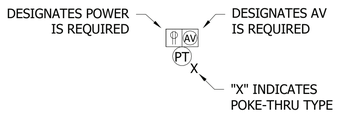

FLAT PANEL DISPLAY BACK BOX CONFIGURATION

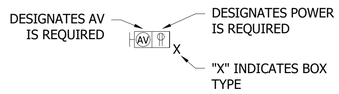

MANUFACTURERS LIST

TYPE	MANUFACTURER	MODEL	DETAIL
A	FSR	PWB-100	A3/TA502
B	CHIEF	PAC526	A2/TA501
C	FLOOR BOX	REFER TO ELECTRICAL	-

INDUSTRY STANDARDS

AUDIOVISUAL INSTALLATION SHALL COMPLY WITH THE MOST CURRENT VERSION OF THE FOLLOWING STANDARDS:

AMERICANS WITH DISABILITIES ACT, 2010

ANSI/ASA S12.60; ACOUSTICAL PERFORMANCE CRITERIA, DESIGN REQUIREMENTS, AND GUIDELINES FOR SCHOOLS

ANSI/INFOCOMM 2M-2010, STANDARD GUIDE FOR AUDIOVISUAL SYSTEMS DESIGN AND COORDINATION PROCESS (PROJECT MANAGEMENT PROCESS)

ANSI/INFOCOMM 3M-2011 PROJECTED IMAGE SYSTEM CONTRAST RATIO

ANSI/INFOCOMM 4: 2012 AUDIOVISUAL SYSTEMS ENERGY MANAGEMENT

ANSI/INFOCOMM V202.01:2016, DISPLAY IMAGE SIZE FOR 2D CONTENT IN AUDIOVISUAL SYSTEMS

AV DESIGN REFERENCE MANUAL, FROM INFOCOMM INTERNATIONAL

AV 9000:2012 QUALITY MANAGEMENT SYSTEM CONDUIT, PATHWAY, AND DEDICATED EQUIPMENT ROOM CONSIDERATIONS

AUDIOVISUAL SYSTEM DESIGN AND COORDINATION COMPONENTS, FROM INFOCOMM INTERNATIONAL

ANSI/TIA-568.0-D - GENERIC TELECOMMUNICATIONS CABLING FOR CUSTOMER PREMISES, 2015

ANSI/TIA-568.1-D - COMMERCIAL BUILDING TELECOMMUNICATIONS CABLING STANDARD, 2015

ANSI/TIA-568-C.2 - BALANCED TWISTED-PAIR TELECOMMUNICATIONS CABLING AND COMPONENTS STANDARD, 2009

ANSI/TIA-568.3-D - OPTICAL FIBER CABLING COMPONENTS STANDARD, 2016

ANSI/TIA-568.4-D - BROADBAND COAXIAL CABLING AND COMPONENTS STANDARD, 2017

ANSI/TIA-569-D - TELECOMMUNICATIONS PATHWAYS AND SPACES, 2015

ANSI/TIA/EIA-598-D - OPTICAL FIBER CABLE COLOR CODING, 2014

ANSI/TIA-606-B - ADMINISTRATION STANDARD FOR COMMERCIAL TELECOMMUNICATIONS INFRASTRUCTURE, 2012

ANSI/TIA-607-C - COMMERCIAL BUILDING GROUNDING (EARTHING) AND BONDING REQUIREMENTS FOR TELECOMMUNICATIONS, 2015

DAVIS AND DAVIS, 1987 "SOUND SYSTEM ENGINEERING"

GIDDINGS, 1990, " AUDIO SYSTEMS DESIGN AND INSTALLATION

INFOCOMM, AV/IT INFRASTRUCTURE GUIDELINES FOR HIGHER EDUCATION

NFPA 70 - NATIONAL ELECTRICAL CODE (NEC)

NFPA 72 - NATIONAL FIRE ALARM AND SIGNALING CODE

NFPA 75 - STANDARD FOR THE PROTECTION OF INFORMATION TECHNOLOGY EQUIPMENT

NFPA 76 - STANDARD FOR THE FIRE PROTECTION OF TELECOMMUNICATIONS FACILITIES

SYM	DESCRIPTION	DATE	APPR.

NAVFAC

PRELIMINARY NOT FOR CONSTRUCTION

SEAL

RQ Jordan COMPANY ~ A JOINT VENTURE ~

Michael Baker INTERNATIONAL
100 AIRSIDE DRIVE
MOON TOWNSHIP, PA 15108
A/E INFO

APPROVED

FOR COMMANDER NAVFAC

ACTIVITY
MARINE CORPS BASE CAMP LEJEUNE

SATISFACTORY TO DATE

DES AS | DRW AV | CHK BM

PM

BRANCH MANAGER

CHIEF ENG/ARCH

FIRE PROTECTION

DEPARTMENT OF THE NAVY
NAVAL FACILITIES ENGINEERING COMMAND ~ MID-ATLANTIC
ROICC FLORENCE CAMP LEJEUNE
NAVAL FACILITIES ENGINEERING COMMAND
JACKSONVILLE, NC
MCB CAMP LEJEUNE
JACKSONVILLE, NC
P1338F II MEF SIMULATION/TRAINING CENTER REPLACEMENT
AUDIOVISUAL - SYMBOLS AND NOTES

SCALE: AS NOTED

EPROJECT NO.:

CONSTR. CONTR. NO.
N40085-20-C-0059

NAVFAC DRAWING NO.

SHEET OF

TA001

DP2 SUBMISSION – P1338 BUILDING PRE-FINAL SUBMISSION

PLOTTED: 6/9/2021 6:52:10 AM

FILE NAME: BIM 360://HF PACKAGE 3/P1338_MEF SIM CTR-1590892-T.rvt

FLAT PANEL TYPE SCHEDULE

TYPE	DIAGONAL SIZE	MAKE	MODEL	ORIENTATION	POWER CONSUMPTION	DISPLAY WIDTH	DISPLAY HEIGHT	DISPLAY DEPTH	WEIGHT	BACKING	INTERACTIVE	NOTES
FPD-A	55"	PANASONIC	TH-55CQE1	LANDSCAPE	135 W	48 3/4"	28"	3 3/16"	36 LBS	36"H X 48"W	NO	FURNISHED & INSTALLED BY AVC
FPD-B	75"	PANASONIC	TH-75CQE1	LANDSCAPE	250 W	66 5/16"	38 1/16"	3 15/16"	82 LBS	48"H X 72"W	NO	FURNISHED & INSTALLED BY AVC
FPD-C	98"	PANASONIC	TH-98CQE1	LANDSCAPE	650 W	87 1/4"	50"	3 9/16"	220 LBS	48"H X 86"W	NO	FURNISHED & INSTALLED BY AVC

FLAT PANEL ROOM SCHEDULE

ROOM NUMBER	TYPE	QUANITY
101	FPD-C	1
102	FPD-C	1
200A	FPD-C	1
200B	FPD-C	1
200C	FPD-C	1
202	FPD-B	2
207	FPD-B	2
209	FPD-B	1
300A	FPD-C	1
300B	FPD-C	1
300C	FPD-C	1
300X	FPD-C	1
300Y	FPD-C	1
300Z	FPD-C	1
301A	FPD-C	1
301B	FPD-C	1
303B	FPD-B	2
L010	FPD-A	1

SYM	DESCRIPTION	DATE	APPR.

NAVFAC

PRELIMINARY NOT FOR CONSTRUCTION

SEAL

RQ W.M. Jordan COMPANY ~A JOINT VENTURE~

Michael Baker INTERNATIONAL

100 AIRSIDE DRIVE
MOON TOWNSHIP, PA 15108

A/E INFO

APPROVED

FOR COMMANDER NAVFAC

ACTIVITY
MARINE CORPS BASE
CAMP LEJEUNE

SATISFACTORY TO DATE

DES AS | DRW AV | CHK BM

PM

BRANCH MANAGER

CHIEF ENG/ARCH

FIRE PROTECTION

DEPARTMENT OF THE NAVY
NAVAL FACILITIES ENGINEERING COMMAND
ROICC FLORENCE CAMP LEJEUNE

NAVAL FACILITIES ENGINEERING COMMAND ~ MID-ATLANTIC
JACKSONVILLE, NC

MCB CAMP LEJEUNE

JACKSONVILLE, NC

P1338F II MEF SIMULATION/TRAINING CENTER REPLACEMENT

AUDIOVISUAL - SCHEDULES

SCALE: AS NOTED

EPROJECT NO.:

CONSTR. CONTR. NO.
N40085-20-C-0059

NAVFAC DRAWING NO.

SHEET OF

TA002

DP2 SUBMISSION – P1338 BUILDING PRE-FINAL SUBMISSION

PLOTTED: 6/9/2021 6:52:10 AM

FILE NAME: BIM 360://HF PACKAGE 3/P1338_MEF SIM CTR-1590892-T.rvt

AUDIOVISUAL - FLOOR PLAN - AREA A

SCALE: 1/8" = 1'-0"

A4

KEYNOTE LEGEND

1	PROVIDE FSR PWB-100-WHT-C USED TO COVER FSR PWB-100-B.

KEYPLAN

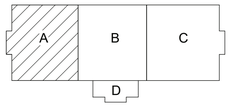

0 48" 96" 192"

SCALE: 1/8" = 12"

N

SYM	DESCRIPTION	DATE	APPR

NAVFAC

PRELIMINARY
NOT FOR CONSTRUCTION

SEAL

RQ W.M. Jordan COMPANY ~ A JOINT VENTURE ~

Michael Baker INTERNATIONAL
100 AIRSIDE DRIVE
MOON TOWNSHIP, PA 15108
A/E INFO

APPROVED

FOR COMMANDER NAVFAC

ACTIVITY
MARINE CORPS BASE
CAMP LEJEUNE

SATISFACTORY TO DATE

DES AS DRW AV CHK BM

PM

BRANCH MANAGER

CHIEF ENG/ARCH

FIRE PROTECTION

DEPARTMENT OF THE NAVY
NAVAL FACILITIES ENGINEERING COMMAND
RO/CC FLORENCE CAMP LEJEUNE

NAVAL FACILITIES ENGINEERING COMMAND ~ MID-ATLANTIC
JACKSONVILLE, NC

MCB CAMP LEJEUNE
JACKSONVILLE, NC
P1338F II MEF SIMULATION/TRAINING CENTER
REPLACEMENT

AUDIOVISUAL - FLOOR PLAN - AREA A

SCALE: AS NOTED

EPROJECT NO.:

CONSTR. CONTR. NO.
N40085-20-C-0059

NAVFAC DRAWING NO.

SHEET OF

TA111

DP2 SUBMISSION – P1338 BUILDING PRE-FINAL SUBMISSION

PLOTTED: 6/9/2021 6:52:12 AM

FILE NAME: BIM 360://HF PACKAGE 3/P1338_MEF SIM CTR-1590892-T.rvt

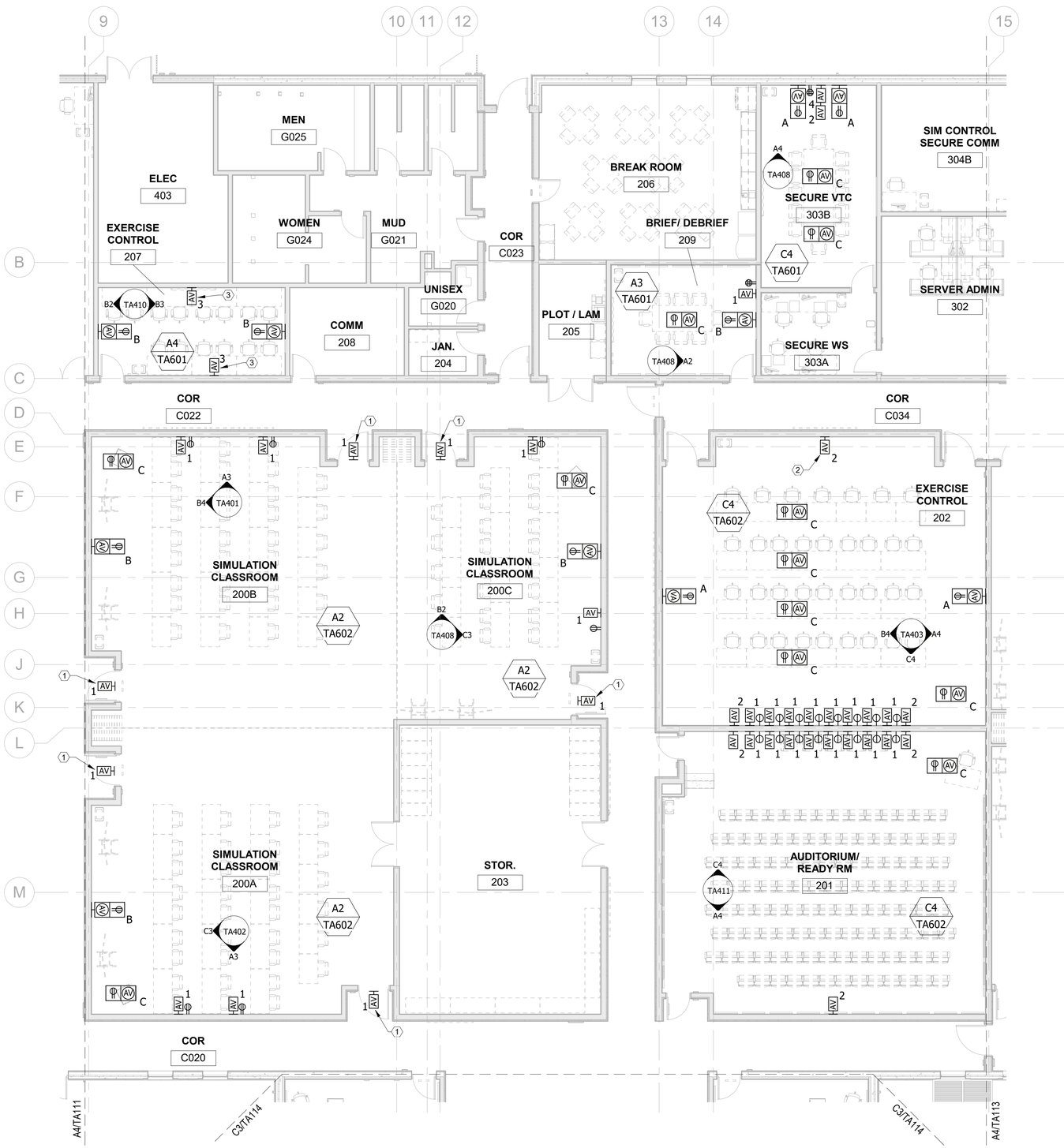

AUDIOVISUAL - FLOOR PLAN - AREA B

SCALE: 1/8" = 1'-0"

A3

KEYNOTE LEGEND

1	ONE GANG AV BACK BOX FOR ROOM AVAILABILITY SIGNAGE. MOUNT CENTERED ON DOOR, AT 92" AFF.
2	114" AFF
3	18" AFF, COORDINATE FINAL LOCATION WITH ELECTRICAL AND TELECOM PRIOR TO INSTALLATION.

KEYPLAN

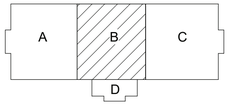

0 48" 96" 192"

SCALE: 1/8" = 12"

N

SYM	DESCRIPTION	DATE	APPR

NAVFAC

PRELIMINARY NOT FOR CONSTRUCTION

SEAL

RQ W.M. Jordan COMPANY ~ A JOINT VENTURE ~

Michael Baker INTERNATIONAL

100 AIRSIDE DRIVE
MOON TOWNSHIP, PA 15108

A/E INFO

APPROVED

FOR COMMANDER NAVFAC

ACTIVITY
MARINE CORPS BASE CAMP LEJEUNE

SATISFACTORY TO DATE

DES AS | DRW AV | CHK BM

PM

BRANCH MANAGER

CHIEF ENG/ARCH

FIRE PROTECTION

DEPARTMENT OF THE NAVY
NAVAL FACILITIES ENGINEERING COMMAND ~ MID-ATLANTIC
ROICC FLORENCE CAMP LEJEUNE

NAVAL FACILITIES ENGINEERING COMMAND
JACKSONVILLE, NC

MCB CAMP LEJEUNE
JACKSONVILLE, NC

P1338F II MEF SIMULATION/TRAINING CENTER REPLACEMENT

AUDIOVISUAL - FLOOR PLAN - AREA B

SCALE: AS NOTED

EPROJECT NO.:

CONSTR. CONTR. NO.
N40085-20-C-0059

NAVFAC DRAWING NO.

SHEET OF

TA112

DP2 SUBMISSION – P1338 BUILDING PRE-FINAL SUBMISSION

PLOTTED: 6/9/2021 6:52:15 AM

FILE NAME: BIM 360://HF PACKAGE 3/P1338_MEF SIM CTR-1590892-T.rvt

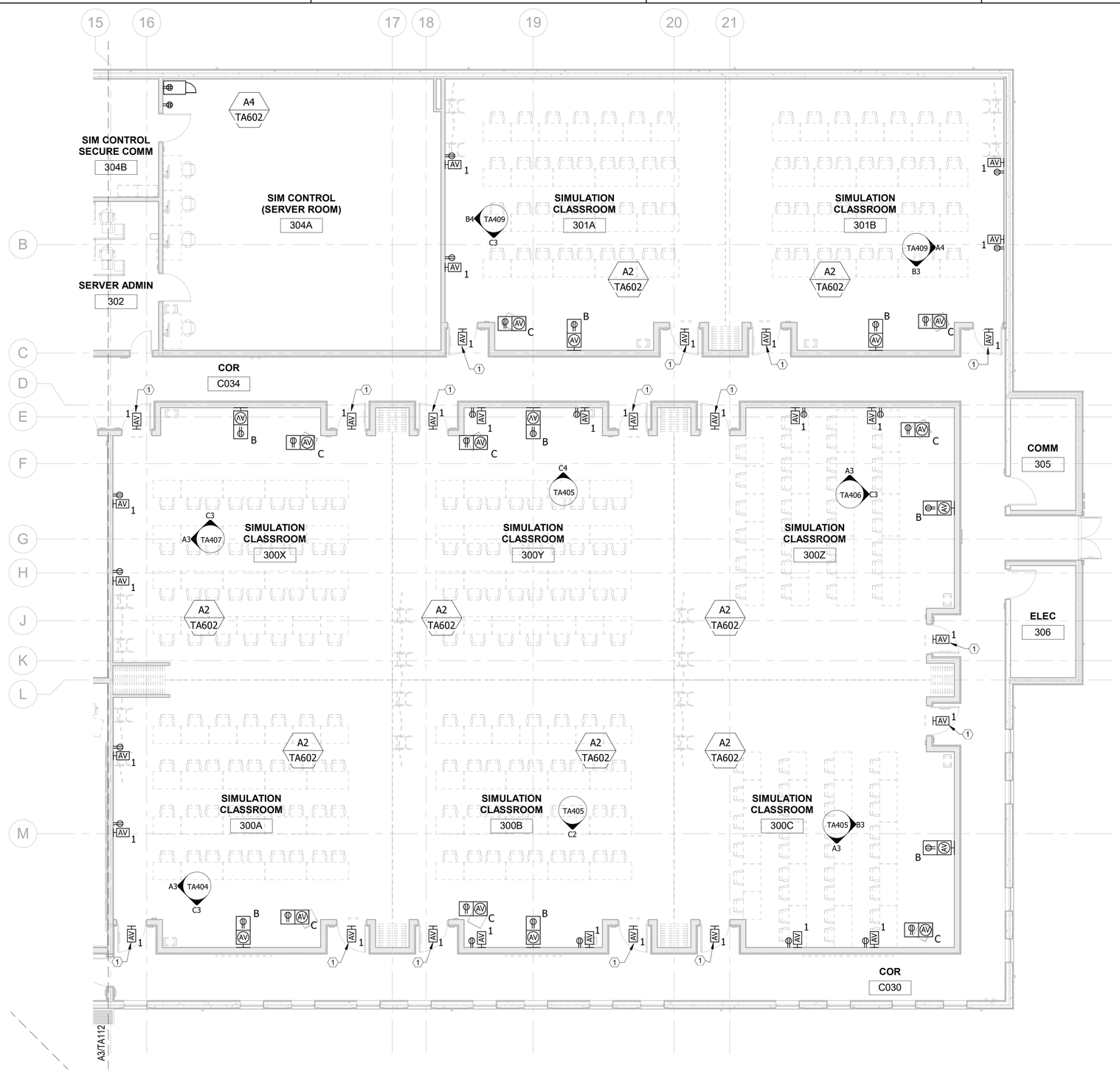

AUDIOVISUAL - FLOOR PLAN - AREA C

SCALE: 1/8" = 1'-0"

A4

KEYNOTE LEGEND

1	ONE GANG AV BACK BOX FOR ROOM AVAILABILITY SIGNAGE. MOUNT CENTERED ON DOOR, AT 92" AFF.

KEYPLAN

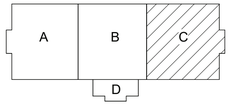

0 48" 96" 192"

SCALE: 1/8" = 12"

SYM	DESCRIPTION	DATE	APPR.

NAVFAC

PRELIMINARY NOT FOR CONSTRUCTION

SEAL

RQ W.M. Jordan COMPANY ~ A JOINT VENTURE ~

Michael Baker INTERNATIONAL

100 AIRSIDE DRIVE
MOON TOWNSHIP, PA 15108

A/E INFO

APPROVED

FOR COMMANDER NAVFAC

ACTIVITY
MARINE CORPS BASE CAMP LEJEUNE

SATISFACTORY TO DATE

DES AS | DRW AV | CHK BM

PM

BRANCH MANAGER

CHIEF ENG/ARCH

FIRE PROTECTION

DEPARTMENT OF THE NAVY
NAVAL FACILITIES ENGINEERING COMMAND
ROICC FLORENCE CAMP LEJEUNE

NAVAL FACILITIES ENGINEERING COMMAND ~ MID-ATLANTIC
JACKSONVILLE, NC

MCB CAMP LEJEUNE

JACKSONVILLE, NC

P1338F II MEF SIMULATION/TRAINING CENTER REPLACEMENT

AUDIOVISUAL - FLOOR PLAN - AREA C

SCALE: AS NOTED

EPROJECT NO.:

CONSTR. CONTR. NO.
N40085-20-C-0059

NAVFAC DRAWING NO.

SHEET OF

TA113

DP2 SUBMISSION – P1338 BUILDING PRE-FINAL SUBMISSION

PLOTTED: 6/9/2021 6:52:17 AM

FILE NAME: BIM 360://HF PACKAGE 3\P1338_MEF SIM CTR-1590892-T.rvt

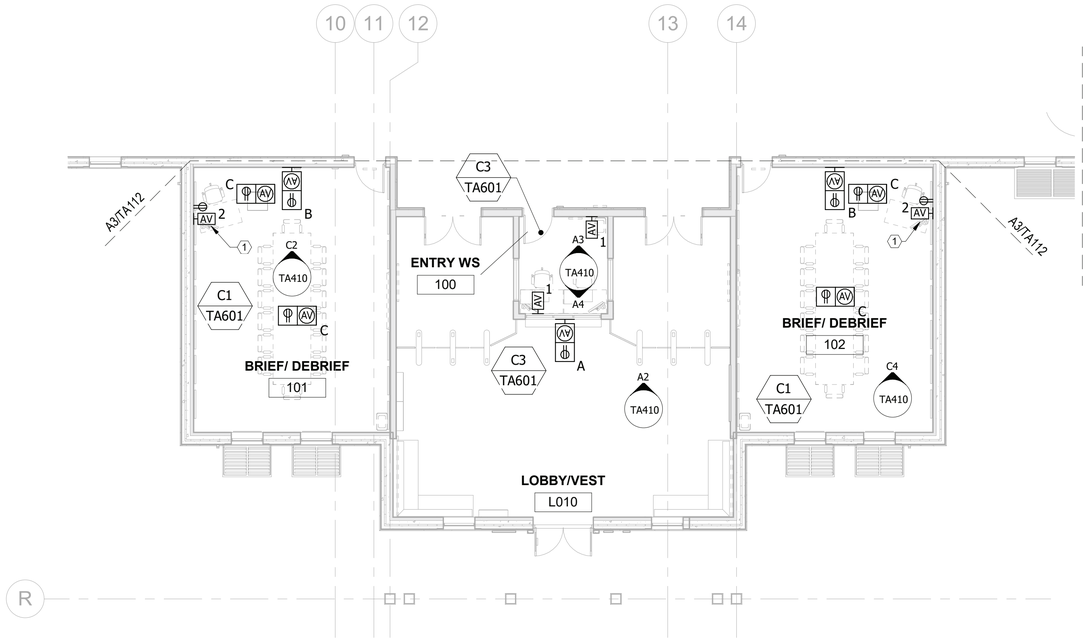

AUDIOVISUAL - FLOOR PLAN - AREA D

SCALE: 1/8" = 1'-0"

C3

KEYNOTE LEGEND

1	18" AFF, COORDINATE FINAL LOCATION WITH ELECTRICAL AND TELECOM PRIOR TO INSTALLATION.

KEYPLAN

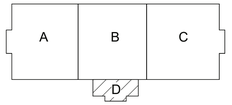

0 48" 96" 192"

SCALE: 1/8" = 12"

N

SYM	DESCRIPTION	DATE	APPR

NAVFAC

PRELIMINARY NOT FOR CONSTRUCTION

SEAL

RQ W.M. Jordan COMPANY ~ A JOINT VENTURE ~

Michael Baker INTERNATIONAL

100 AIRSIDE DRIVE
MOON TOWNSHIP, PA 15108

A/E INFO

APPROVED

FOR COMMANDER NAVFAC

ACTIVITY
MARINE CORPS BASE CAMP LEJEUNE

SATISFACTORY TO DATE

DES AS | DRW AV | CHK BM

PM

BRANCH MANAGER

CHIEF ENG/ARCH

FIRE PROTECTION

DEPARTMENT OF THE NAVY
NAVAL FACILITIES ENGINEERING COMMAND
ROICC FLORENCE CAMP LEJEUNE

NAVAL FACILITIES ENGINEERING COMMAND ~ MID-ATLANTIC
JACKSONVILLE, NC

MCB CAMP LEJEUNE
JACKSONVILLE, NC
P1338F II MEF SIMULATION/TRAINING CENTER REPLACEMENT

AUDIOVISUAL - FLOOR PLAN - AREA D

SCALE: AS NOTED

EPROJECT NO.:

CONSTR. CONTR. NO.
N40085-20-C-0059

NAVFAC DRAWING NO.

SHEET OF

TA114

DP2 SUBMISSION – P1338 BUILDING PRE-FINAL SUBMISSION

PLOTTED: 6/9/2021 6:52:18 AM

FILE NAME: BIM 360://HF PACKAGE 3/P1338_MEF SIM CTR-1590892-T.rvt

AUDIOVISUAL - REFLECTED CEILING PLAN - AREA B

SCALE: 1/8" = 1'-0"

A3

KEYPLAN

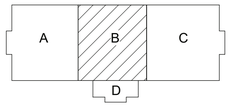

0 48" 96" 192"

SCALE: 1/8" = 12"

N

SYM	DESCRIPTION	DATE	APPR.

NAVFAC

PRELIMINARY NOT FOR CONSTRUCTION

SEAL

RQ W.M. Jordan COMPANY ~A JOINT VENTURE~

Michael Baker INTERNATIONAL

100 AIRSIDE DRIVE
MOON TOWNSHIP, PA 15108

A/E INFO

APPROVED

FOR COMMANDER NAVFAC

ACTIVITY
MARINE CORPS BASE
CAMP LEJEUNE

SATISFACTORY TO DATE

DES AS | DRW AV | CHK BM

PM

BRANCH MANAGER

CHIEF ENG/ARCH

FIRE PROTECTION

DEPARTMENT OF THE NAVY
NAVAL FACILITIES ENGINEERING COMMAND
NAVAL FACILITIES ENGINEERING COMMAND ~ MID-ATLANTIC
ROICC FLORENCE CAMP LEJEUNE
JACKSONVILLE, NC
MCB CAMP LEJEUNE
JACKSONVILLE, NC
P1338F II MEF SIMULATION/TRAINING CENTER
REPLACEMENT

AUDIOVISUAL - REFLECTED CEILING PLAN - AREA B

SCALE: AS NOTED

EPROJECT NO.:

CONSTR. CONTR. NO.
N40085-20-C-0059

NAVFAC DRAWING NO.

SHEET OF

TR112

DP2 SUBMISSION – P1338 BUILDING PRE-FINAL SUBMISSION

PLOTTED: 6/9/2021 6:52:38 AM

FILE NAME: BIM 360://HF PACKAGE 3/P1338_MEF SIM CTR-1590892-T.rvt

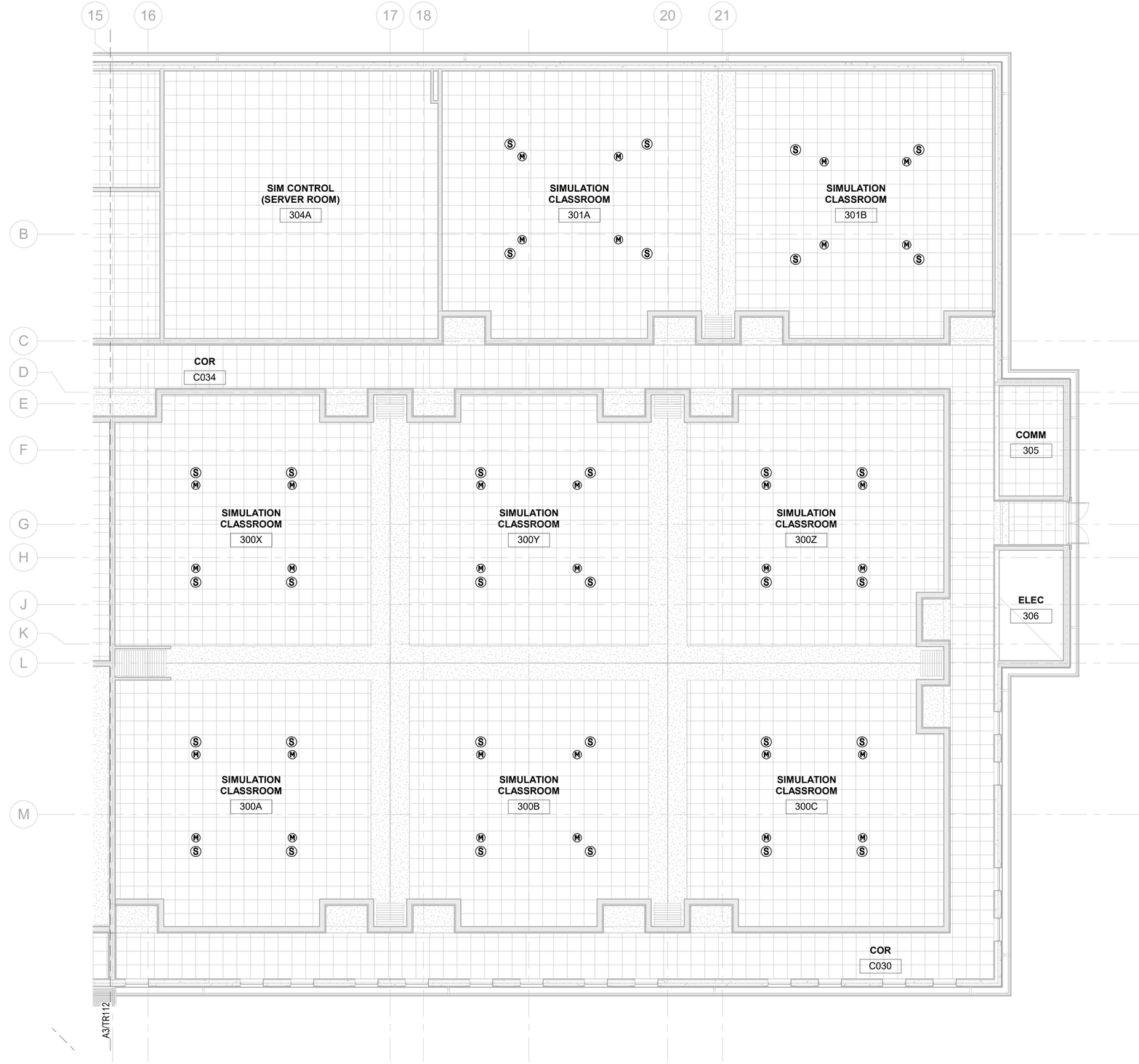

AUDIOVISUAL - REFLECTED CEILING PLAN - AREA C

SCALE: 1/8" = 1'-0"

A4

KEYPLAN

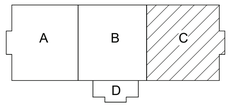

0 48" 96" 192"

SCALE: 1/8" = 12"

N

STM	DESCRIPTION	DATE	APPR

NAVFAC

PRELIMINARY NOT FOR CONSTRUCTION

SEAL

RQ W.M. Jordan COMPANY ~A JOINT VENTURE~

Michael Baker INTERNATIONAL

100 AIRSIDE DRIVE
MOON TOWNSHIP, PA 15108

A/E INFO

APPROVED

FOR COMMANDER NAVFAC

ACTIVITY
MARINE CORPS BASE
CAMP LEJEUNE

SATISFACTORY TO DATE

DES AS | DRW AV | CHK BM

PM

BRANCH MANAGER

CHIEF ENG/ARCH

FIRE PROTECTION

DEPARTMENT OF THE NAVY
NAVAL FACILITIES ENGINEERING COMMAND
ROICC FLORENCE CAMP LEJEUNE

NAVAL FACILITIES ENGINEERING COMMAND ~ MID-ATLANTIC
JACKSONVILLE, NC

MCB CAMP LEJEUNE
JACKSONVILLE, NC

P1338F II MEF SIMULATION/TRAINING CENTER
REPLACEMENT

AUDIOVISUAL - REFLECTED CEILING PLAN - AREA C

SCALE: AS NOTED

EPROJECT NO.:

CONSTR. CONTR. NO.
N40085-20-C-0059

NAVFAC DRAWING NO.

SHEET OF

TR113

DP2 SUBMISSION – P1338 BUILDING PRE-FINAL SUBMISSION

PLOTTED: 6/9/2021 6:52:40 AM

FILE NAME: BIM 360://HF PACKAGE 3/P1338_MEF SIM CTR-15908/92-T.rvt

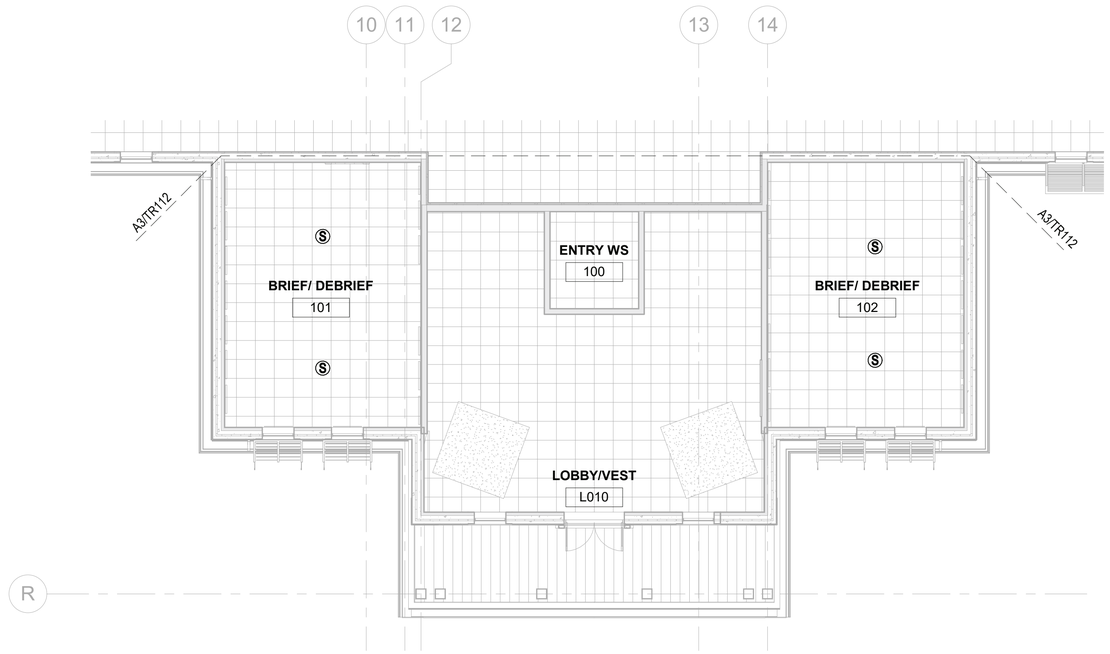

AUDIOVISUAL - REFLECTED CEILING PLAN - AREA D

SCALE: 1/8" = 1'-0"

C3

KEYPLAN

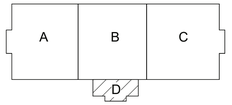

0 48" 96" 192"

SCALE: 1/8" = 12"

N

SYM	DESCRIPTION	DATE	APPR

NAVFAC

PRELIMINARY NOT FOR CONSTRUCTION

SEAL

RQ W.M. Jordan COMPANY ~ A JOINT VENTURE ~

Michael Baker INTERNATIONAL

100 AIRSIDE DRIVE
MOON TOWNSHIP, PA 15108

A/E INFO

APPROVED

FOR COMMANDER NAVFAC

ACTIVITY
MARINE CORPS BASE CAMP LEJEUNE

SATISFACTORY TO DATE

DES AS | DRW AV | CHK BM

PM

BRANCH MANAGER

CHIEF ENG/ARCH

FIRE PROTECTION

DEPARTMENT OF THE NAVY
NAVAL FACILITIES ENGINEERING COMMAND
ROICC FLORENCE CAMP LEJEUNE

NAVAL FACILITIES ENGINEERING COMMAND ~ MID-ATLANTIC
JACKSONVILLE, NC

MCB CAMP LEJEUNE
JACKSONVILLE, NC
P1338F II MEF SIMULATION/TRAINING CENTER REPLACEMENT

AUDIOVISUAL - REFLECTED CEILING PLAN - AREA D

SCALE: AS NOTED

EPROJECT NO.:

CONSTR. CONTR. NO.
N40085-20-C-0059

NAVFAC DRAWING NO.

SHEET OF

TR114

DP2 SUBMISSION – P1338 BUILDING PRE-FINAL SUBMISSION

PLOTTED: 6/9/2021 6:52:40 AM

FILE NAME: BIM 360://HF PACKAGE 3/P1338_MEF SIM CTR-1590892-T.rvt

EQUIPMENT - FLOOR PLAN - AREA A

SCALE: 1/8" = 1'-0"

A4

KEYPLAN

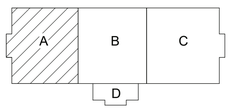

0 48" 96" 192"

SCALE: 1/8" = 12"

N

STM	DESCRIPTION	DATE	APPR

PRELIMINARY
NOT FOR CONSTRUCTION

SEAL

RQ W.M. Jordan COMPANY ~ A JOINT VENTURE ~

Michael Baker INTERNATIONAL
100 AIRSIDE DRIVE
MOON TOWNSHIP, PA 15108

A/E INFO

APPROVED

FOR COMMANDER NAVFAC

ACTIVITY
MARINE CORPS BASE
CAMP LEJEUNE

SATISFACTORY TO DATE

DES AS | DRW AV | CHK BM

PM

BRANCH MANAGER

CHIEF ENG/ARCH

FIRE PROTECTION

DEPARTMENT OF THE NAVY
NAVAL FACILITIES ENGINEERING COMMAND
ROICC FLORENCE CAMP LEJEUNE

NAVAL FACILITIES ENGINEERING COMMAND ~ MID-ATLANTIC
JACKSONVILLE, NC

MCB CAMP LEJEUNE
JACKSONVILLE, NC

P1338F II MEF SIMULATION/TRAINING CENTER
REPLACEMENT

EQUIPMENT - FLOOR PLAN - AREA A

SCALE: AS NOTED

EPROJECT NO.:

CONSTR. CONTR. NO.
N40085-20-C-0059

NAVFAC DRAWING NO.

SHEET OF

TA311

DP2 SUBMISSION – P1338 BUILDING PRE-FINAL SUBMISSION

PLOTTED: 6/8/2021 6:52:19 AM

FILE NAME: BIM 360://HF PACKAGE 3/P1338_MEF SIM CTR-1590892-T.rvt

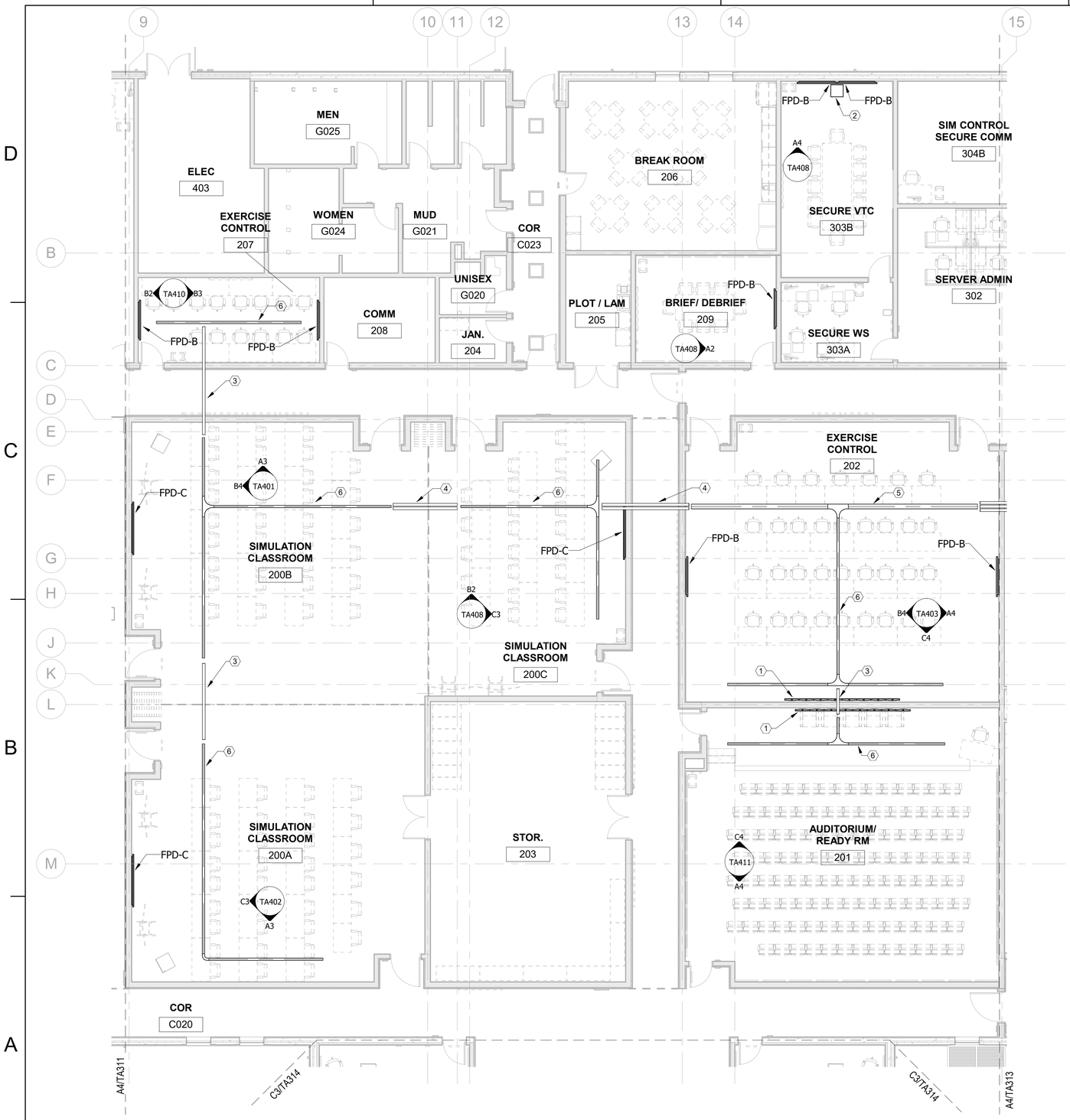

EQUIPMENT - FLOOR PLAN - AREA B

SCALE: 1/8" = 1'-0"

A3

KEYNOTE LEGEND

1	LED VIDEO WALL, PROVIDED BY AVC.
2	AUDIOVISUAL EQUIPMENT RACK, PROVIDED BY AVC.
3	PROVIDE ONE (1) 4" CONDUIT SLEEVES FOR HORIZONTAL CABLE DISTRIBUTION, REFER TO TELECOM DRAWINGS FOR INSTALLATION DETAILS.
4	PROVIDE TWO (2) 4" CONDUIT SLEEVES FOR HORIZONTAL CABLE DISTRIBUTION, REFER TO TELECOM DRAWINGS FOR INSTALLATION DETAILS.
5	PROVIDE 8" X 4" WIRE-BASKET TYPE CABLE TRAY MOUNTED ABOVE ACCESSIBLE CEILING; COORDINATE TRAY PLACEMENT WITH OTHER TRADES.
6	PROVIDE 4" X 4" WIRE-BASKET TYPE CABLE TRAY MOUNTED ABOVE ACCESSIBLE CEILING; COORDINATE TRAY PLACEMENT WITH OTHER TRADES.

KEYPLAN

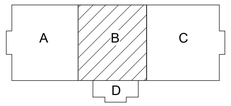

0 48" 96" 192"

SCALE: 1/8" = 12"

N

SYM	DESCRIPTION	DATE	APPR

NAVFAC

PRELIMINARY NOT FOR CONSTRUCTION

SEAL

RQ W.M. Jordan COMPANY ~A JOINT VENTURE~

Michael Baker INTERNATIONAL

100 AIRSIDE DRIVE
MOON TOWNSHIP, PA 15108

A/E INFO

APPROVED

FOR COMMANDER NAVFAC

ACTIVITY
MARINE CORPS BASE CAMP LEJEUNE

SATISFACTORY TO DATE

DES AS | DRW AV | CHK BM

PM

BRANCH MANAGER

CHIEF ENG/ARCH

FIRE PROTECTION

DEPARTMENT OF THE NAVY
NAVAL FACILITIES ENGINEERING COMMAND
RO/CC FLORENCE CAMP LEJEUNE

NAVAL FACILITIES ENGINEERING COMMAND ~ MID-ATLANTIC
JACKSONVILLE, NC

MCB CAMP LEJEUNE
JACKSONVILLE, NC

P1338F II MEF SIMULATION/TRAINING CENTER REPLACEMENT

EQUIPMENT - FLOOR PLAN - AREA B

SCALE: AS NOTED

EPROJECT NO.:

CONSTR. CONTR. NO.
N40085-20-C-0059

NAVFAC DRAWING NO.

SHEET OF

TA312

DP2 SUBMISSION – P1338 BUILDING PRE-FINAL SUBMISSION

PLOTTED: 6/9/2021 6:52:22 AM

FILE NAME: BIM 360://HF PACKAGE 3/P1338_MEF SIM CTR-1590892-T.rvt

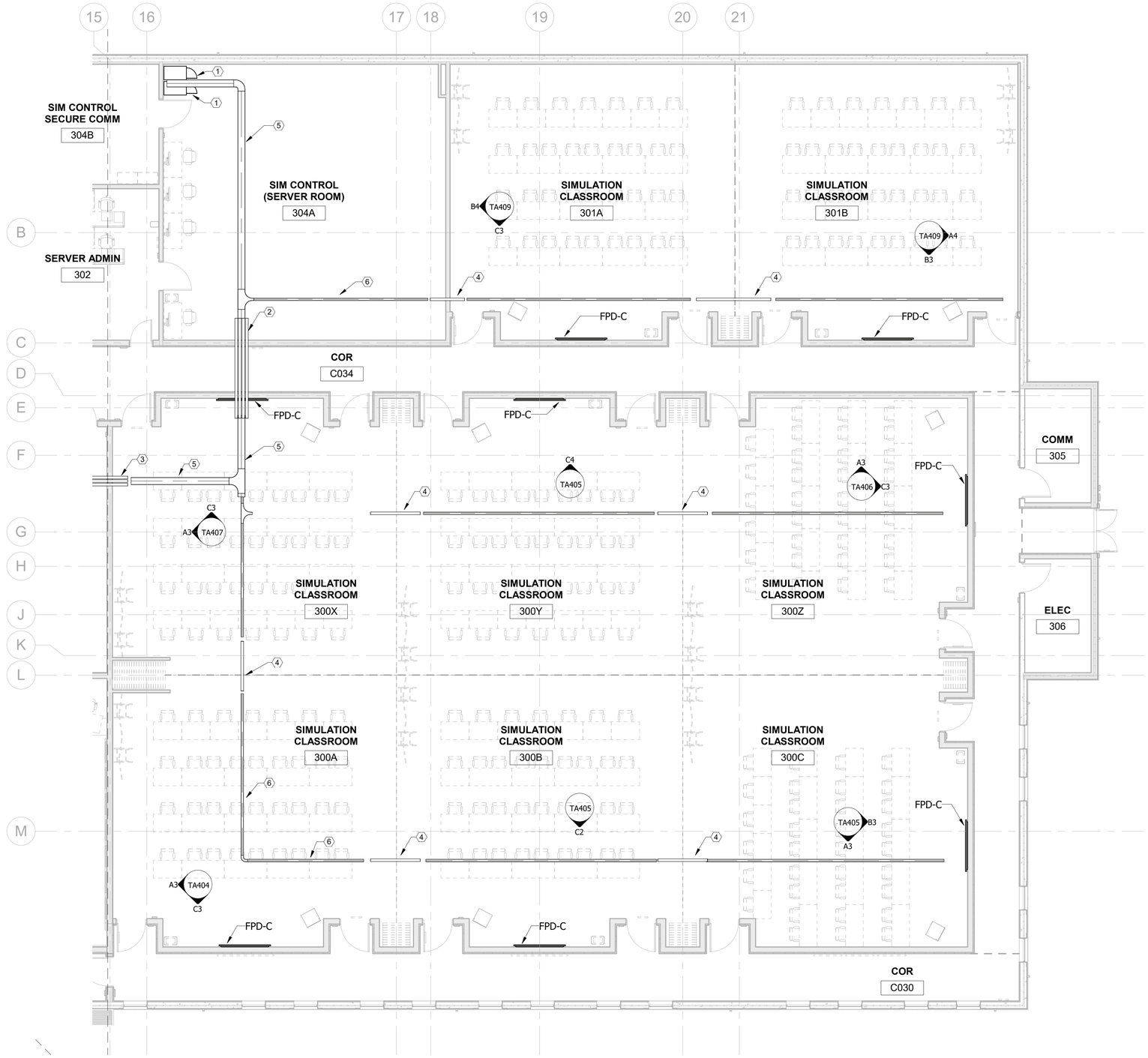

KEYNOTE LEGEND

1	AUDIOVISUAL EQUIPMENT RACK, PROVIDED BY AVC.
2	PROVIDE FOUR (4) 4" CONDUIT SLEEVES FOR HORIZONTAL CABLE DISTRIBUTION, REFER TO TELECOM DRAWINGS FOR INSTALLATION DETAILS.
3	PROVIDE THREE (3) 4" CONDUIT SLEEVES FOR HORIZONTAL CABLE DISTRIBUTION, REFER TO TELECOM DRAWINGS FOR INSTALLATION DETAILS.
4	PROVIDE ONE (1) 4" CONDUIT SLEEVES FOR HORIZONTAL CABLE DISTRIBUTION, REFER TO TELECOM DRAWINGS FOR INSTALLATION DETAILS.
5	PROVIDE 12" X 4" WIRE-BASKET TYPE CABLE TRAY MOUNTED ABOVE ACCESSIBLE CEILING; COORDINATE TRAY PLACEMENT WITH OTHER TRADES.
6	PROVIDE 4" X 4" WIRE-BASKET TYPE CABLE TRAY MOUNTED ABOVE ACCESSIBLE CEILING; COORDINATE TRAY PLACEMENT WITH OTHER TRADES.

SYM	DESCRIPTION	DATE	APPR

NAVFAC

PRELIMINARY NOT FOR CONSTRUCTION

SEAL

RQ W.M. Jordan COMPANY ~A JOINT VENTURE~

Michael Baker INTERNATIONAL

100 AIRSIDE DRIVE
MOON TOWNSHIP, PA 15108

A/E INFO

APPROVED

FOR COMMANDER NAVFAC

ACTIVITY
MARINE CORPS BASE
CAMP LEJEUNE

SATISFACTORY TO DATE

DES AS | DRW AV | CHK BM

PM

BRANCH MANAGER

CHIEF ENG/ARCH

FIRE PROTECTION

DEPARTMENT OF THE NAVY
NAVAL FACILITIES ENGINEERING COMMAND
ROICC FLORENCE CAMP LEJEUNE

NAVAL FACILITIES ENGINEERING COMMAND ~ MID-ATLANTIC
JACKSONVILLE, NC

MCB CAMP LEJEUNE
JACKSONVILLE, NC

P1338F II MEF SIMULATION/TRAINING CENTER
REPLACEMENT

EQUIPMENT - FLOOR PLAN - AREA C

SCALE: AS NOTED

EPROJECT NO.:

CONSTR. CONTR. NO.
N40085-20-C-0059

NAVFAC DRAWING NO.

SHEET OF

TA313

KEYPLAN

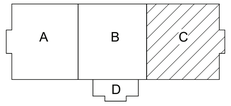

0 48" 96" 192"
SCALE: 1/8" = 12"

N

EQUIPMENT - FLOOR PLAN - AREA C

SCALE: 1/8" = 1'-0"

A4

DP2 SUBMISSION – P1338 BUILDING PRE-FINAL SUBMISSION

PLOTTED: 6/9/2021 6:52:24 AM

FILE NAME: BIM 360://HF PACKAGE 3/P1338_MEF SIM CTR-1590892-T.rvt

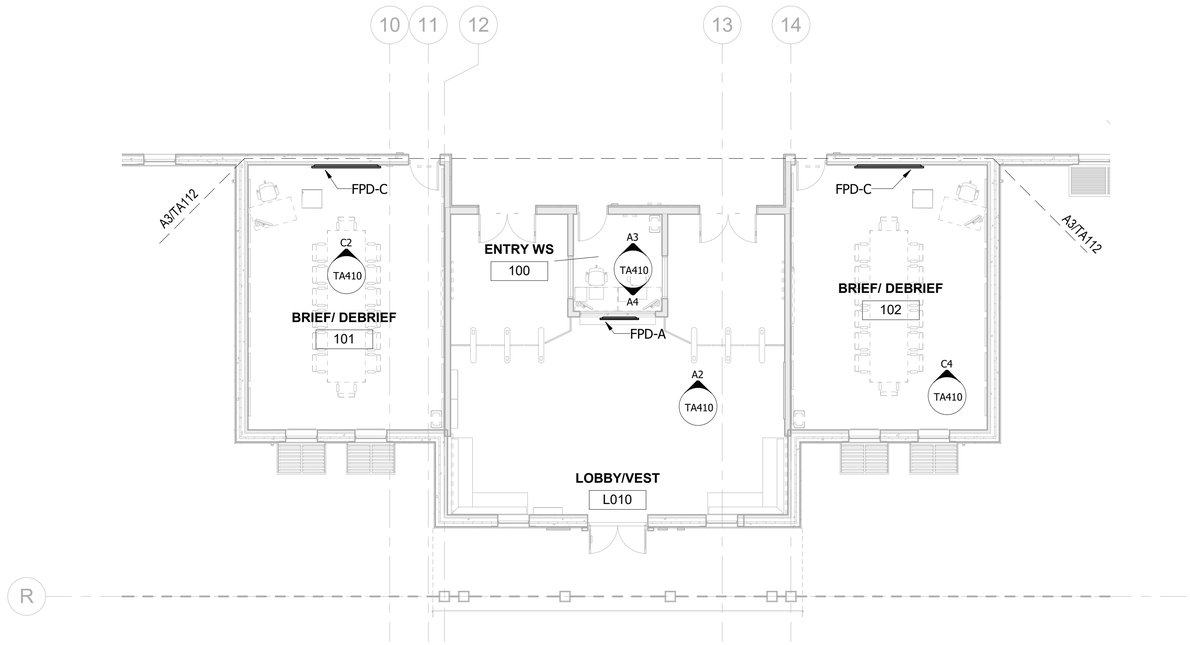

EQUIPMENT - FLOOR PLAN - AREA D

SCALE: 1/8" = 1'-0"

C3

KEYPLAN

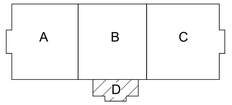

0 48" 96" 192"

SCALE: 1/8" = 12"

N

SYM	DESCRIPTION	DATE	APPR

NAVFAC

PRELIMINARY NOT FOR CONSTRUCTION

SEAL

RQ W.M. Jordan COMPANY ~ A JOINT VENTURE ~

Michael Baker INTERNATIONAL

100 AIRSIDE DRIVE
MOON TOWNSHIP, PA 15108

A/E INFO

APPROVED

FOR COMMANDER NAVFAC

ACTIVITY
MARINE CORPS BASE CAMP LEJEUNE

SATISFACTORY TO DATE

DES AS | DRW AV | CHK BM

PM

BRANCH MANAGER

CHIEF ENG/ARCH

FIRE PROTECTION

DEPARTMENT OF THE NAVY
NAVAL FACILITIES ENGINEERING COMMAND
ROICC FLORENCE CAMP LEJEUNE

NAVAL FACILITIES ENGINEERING COMMAND ~ MID-ATLANTIC
JACKSONVILLE, NC

MCB CAMP LEJEUNE

JACKSONVILLE, NC

P1338F II MEF SIMULATION/TRAINING CENTER REPLACEMENT

EQUIPMENT - FLOOR PLAN - AREA D

SCALE: AS NOTED

EPROJECT NO.:

CONSTR. CONTR. NO.
N40085-20-C-0059

NAVFAC DRAWING NO.

SHEET OF

TA314

DP2 SUBMISSION – P1338 BUILDING PRE-FINAL SUBMISSION

PLOTTED: 6/9/2021 6:52:24 AM

FILE NAME: BIM 360://HF PACKAGE 3/P1338_MEF SIM CTR-1590892-T.rvt

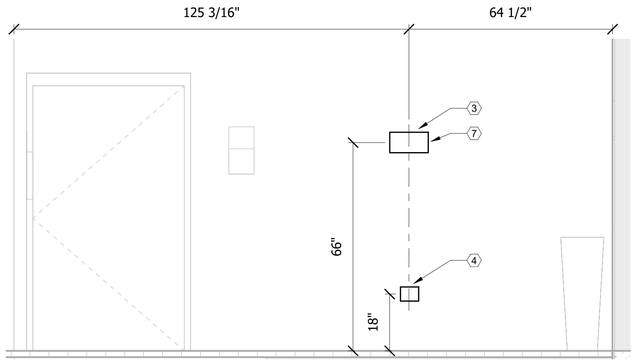

FIRE ROOM 104B
SCALE: 1/2" = 1'-0"
C2

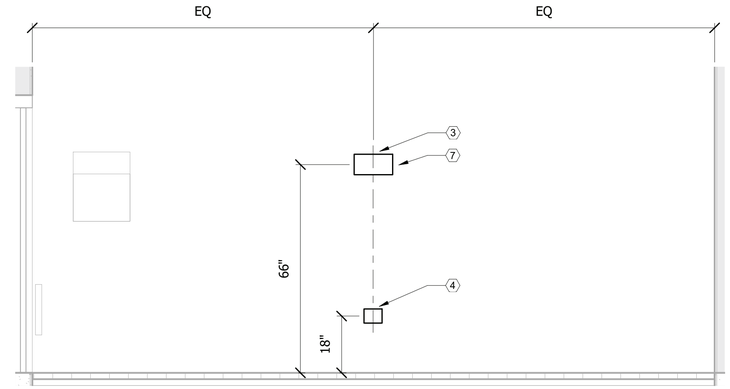

FIRE ROOM 104C
SCALE: 1/2" = 1'-0"
C4

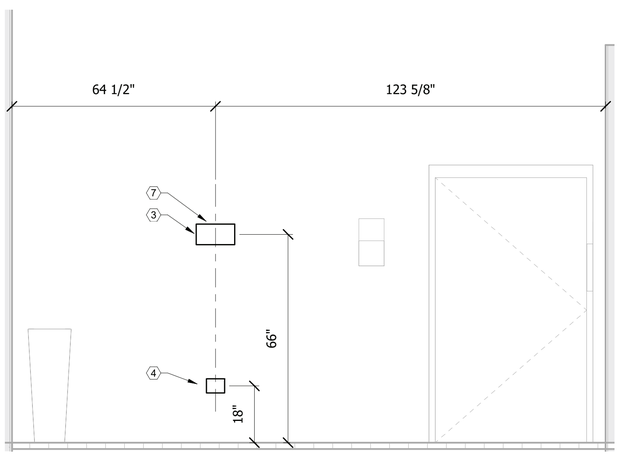

FIRE ROOM 104A
SCALE: 1/2" = 1'-0"
B2

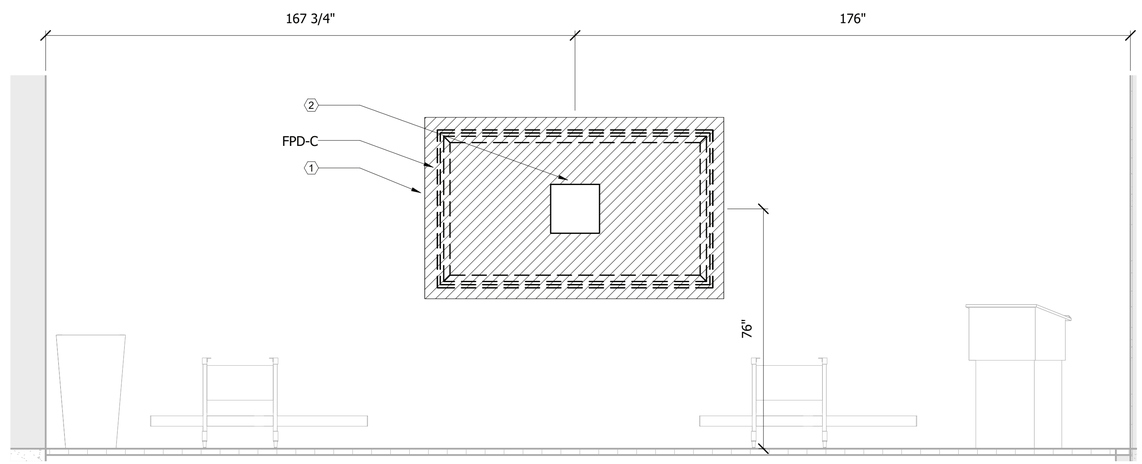

SIMULATION CLASSROOM 200B
SCALE: 1/2" = 1'-0"
TA112
B4

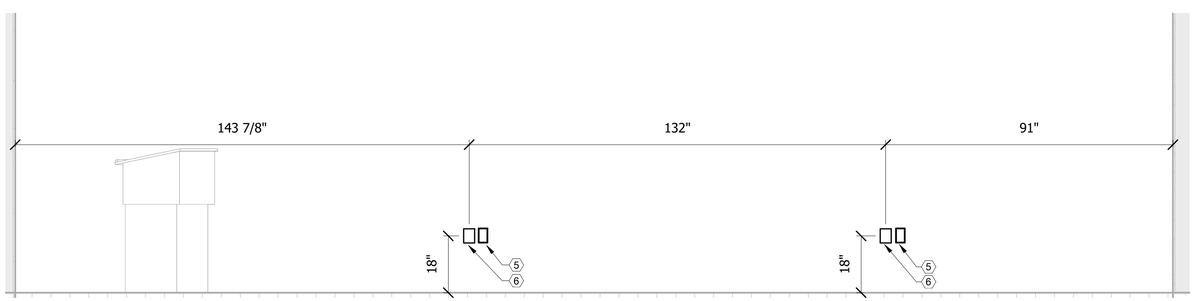

SIMULATION CLASSROOM 200B
SCALE: 1/2" = 1'-0"
A3

KEYNOTE LEGEND

1	BACKING TO SUPPORT FIVE TIMES WEIGHT OF DISPLAY AND MOUNT
2	CHIEF PAC 526 (DUPLEX, 2D) SEE DETAIL A2/TA501
3	FSR PWB-100 (DUPLEX, 2D) SEE DETAIL A3/TA502
4	TWO GANG AV BACK BOX
5	DUPLEX RECEPTACLE
6	ONE GANG AV BACK BOX
7	PROVIDE FSR PWB-100-WHT-C USED TO COVER FSR PWB-100-B.

0 12" 24" 48"
SCALE: 1/2" = 12"

SYM	DESCRIPTION	DATE	APPR.

PRELIMINARY NOT FOR CONSTRUCTION
SEAL

RQ W.M. Jordan COMPANY ~A JOINT VENTURE~

Michael Baker INTERNATIONAL
100 AIRSIDE DRIVE
MOON TOWNSHIP, PA 15108
A/E INFO

APPROVED
FOR COMMANDER NAVFAC
ACTIVITY
MARINE CORPS BASE CAMP LEJEUNE
SATISFACTORY TO DATE
DES AS DRW AV CHK BM
PM
BRANCH MANAGER
CHIEF ENG/ARCH
FIRE PROTECTION

DEPARTMENT OF THE NAVY
NAVAL FACILITIES ENGINEERING COMMAND
ROICC FLORENCE CAMP LEJEUNE
NAVAL FACILITIES ENGINEERING COMMAND ~ MID-ATLANTIC
JACKSONVILLE, NC
MCB CAMP LEJEUNE
JACKSONVILLE, NC
P1338F II MEF SIMULATION/TRAINING CENTER REPLACEMENT
AUDIOVISUAL - ELEVATIONS

SCALE: AS NOTED
EPROJECT NO.:
CONSTR. CONTR. NO.
N40085-20-C-0059
NAVFAC DRAWING NO.
SHEET OF
TA401

DP2 SUBMISSION – P1338 BUILDING PRE-FINAL SUBMISSION

PLOTTED: 6/9/2021 6:52:26 AM
FILE NAME: BIM 360://HF PACKAGE 3/P1338_MEF SIM CTR-1590892-T.rvt

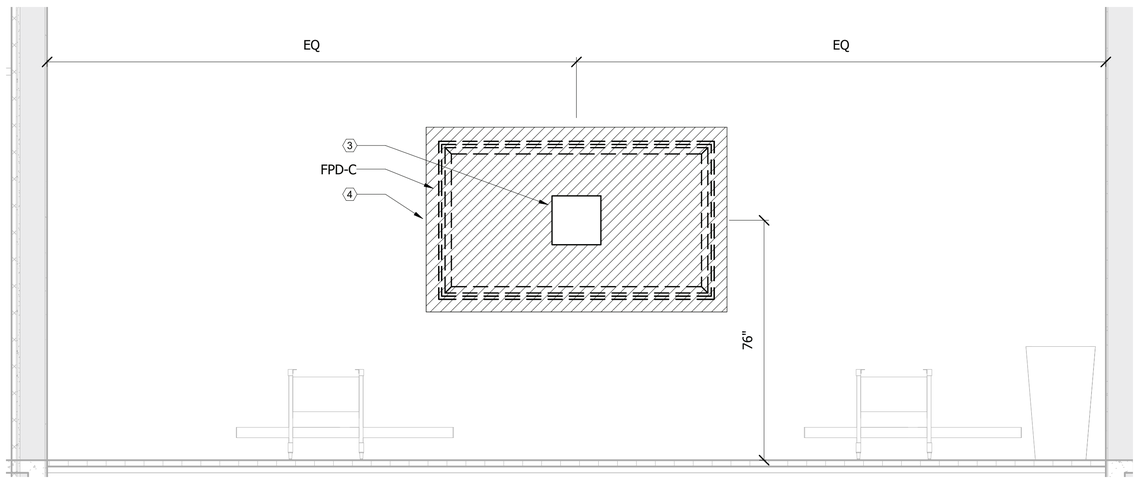

SIMULATION CLASSROOM 200A
SCALE: 1/2" = 1'-0"
C3

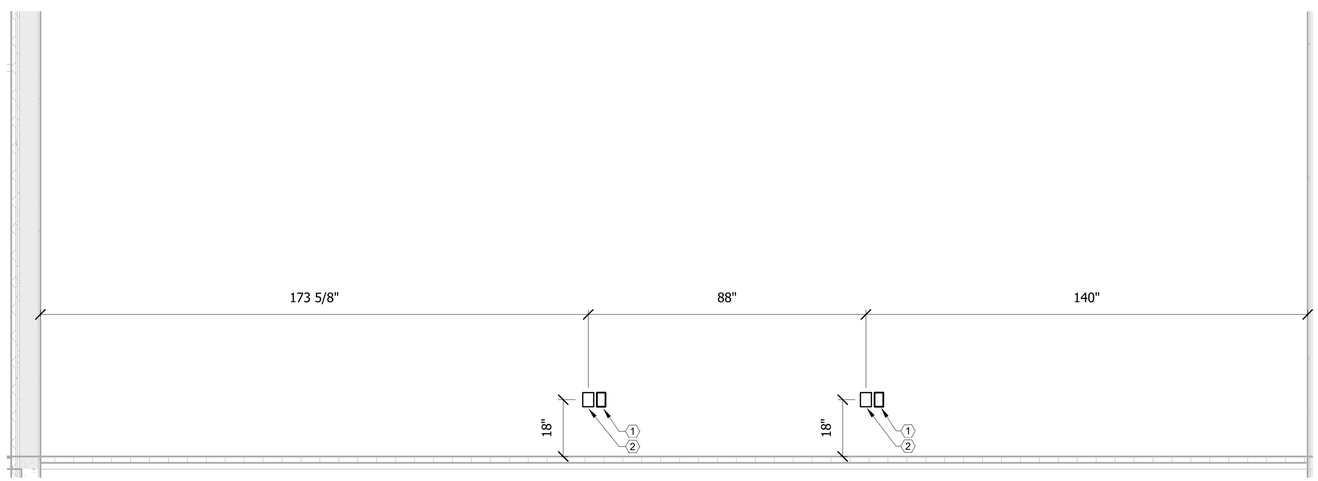

SIMULATION CLASSROOM 200A
SCALE: 1/2" = 1'-0"
A3

KEYNOTE LEGEND

1	DUPLEX RECEPTACLE
2	ONE GANG AV BACK BOX
3	CHIEF PAC 526 (DUPLEX, 2D) SEE DETAIL A2/TA501
4	BACKING TO SUPPORT FIVE TIMES WEIGHT OF DISPLAY AND MOUNT

0 12" 24" 48"
SCALE: 1/2" = 12"

SYM	DESCRIPTION	DATE	APPR

NAVFAC

PRELIMINARY NOT FOR CONSTRUCTION
SEAL

RQ W.M. Jordan COMPANY ~ A JOINT VENTURE ~

Michael Baker INTERNATIONAL
100 AIRSIDE DRIVE
MOON TOWNSHIP, PA 15108
A/E INFO

APPROVED
FOR COMMANDER NAVFAC
ACTIVITY
MARINE CORPS BASE CAMP LEJEUNE
SATISFACTORY TO DATE
DES AS DRW AV CHK BM
PM
BRANCH MANAGER
CHIEF ENG/ARCH
FIRE PROTECTION

DEPARTMENT OF THE NAVY
NAVAL FACILITIES ENGINEERING COMMAND
ROICC FLORENCE CAMP LEJEUNE
NAVAL FACILITIES ENGINEERING COMMAND ~ MID-ATLANTIC
JACKSONVILLE, NC
MCB CAMP LEJEUNE
P1338F II MEF SIMULATION/TRAINING CENTER REPLACEMENT
AUDIOVISUAL - ELEVATIONS

SCALE: AS NOTED
EPROJECT NO.:
CONSTR. CONTR. NO.
N40085-20-C-0059
NAVFAC DRAWING NO.
SHEET OF
TA402

DP2 SUBMISSION – P1338 BUILDING PRE-FINAL SUBMISSION

PLOTTED: 6/9/2021 6:52:26 AM
FILE NAME: BIM 360://HF PACKAGE 3/P1338_MEF SIM CTR-1590892-T.rvt

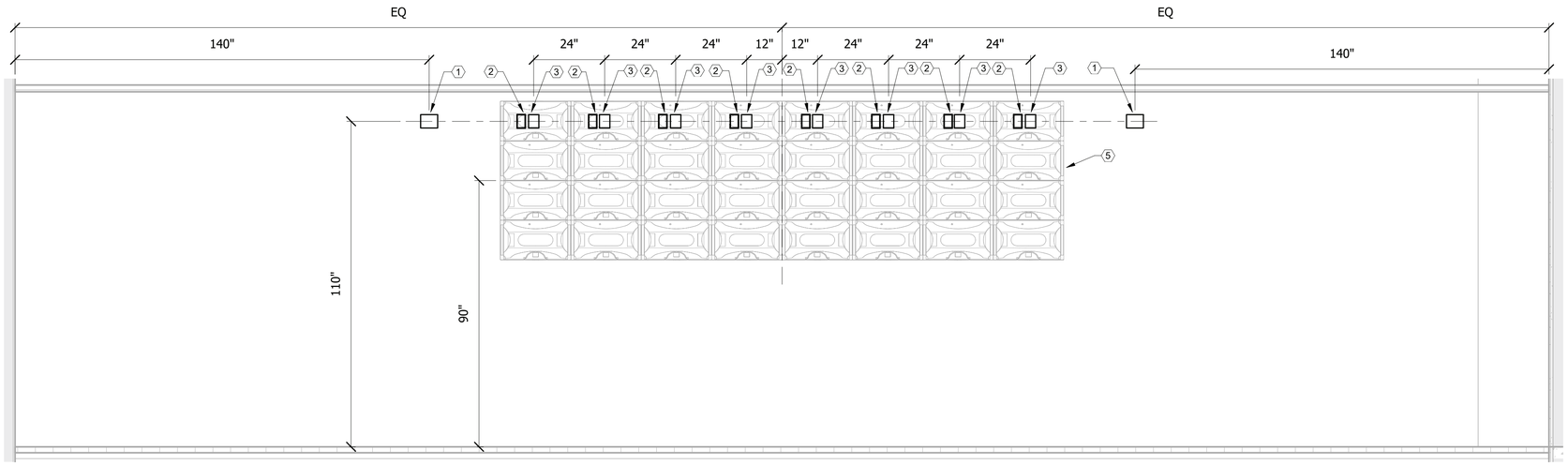

EXERCISE CONTROL 202

SCALE: 1/2" = 1'-0"

C4

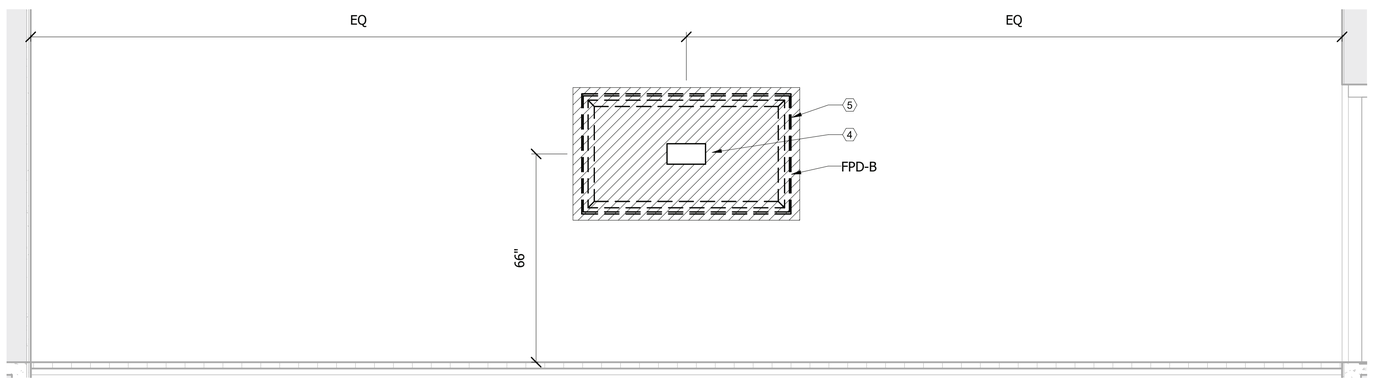

EXERCISE CONTROL 202

SCALE: 1/2" = 1'-0"

B4

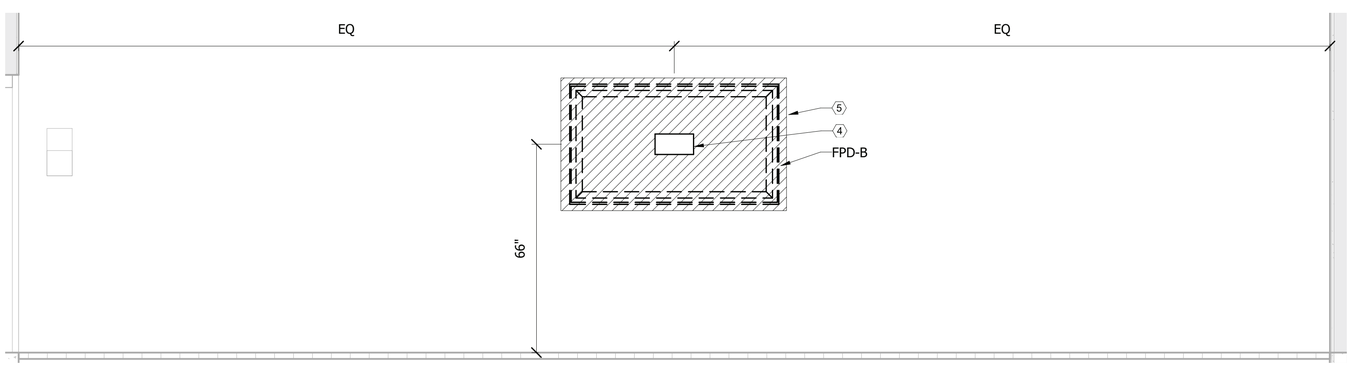

EXERCISE CONTROL 202

SCALE: 1/2" = 1'-0"

A4

KEYNOTE LEGEND

1	TWO GANG AV BACK BOX FOR WALL MOUNTED CAMERAS
2	RECESSED CLOCK RECEPTACLE
3	ONE GANG AV BACK BOX
4	FSR PWB-100 (DUPLEX, 2D) SEE DETAIL A3/TA502
5	BACKING TO SUPPORT FIVE TIMES WEIGHT OF DISPLAY AND MOUNT

SYM	DESCRIPTION	DATE	APPR

PRELIMINARY NOT FOR CONSTRUCTION

SEAL

RQ W.M. Jordan COMPANY ~A JOINT VENTURE~

Michael Baker INTERNATIONAL

100 AIRSIDE DRIVE
MOON TOWNSHIP, PA 15108

A/E INFO

APPROVED

FOR COMMANDER NAVFAC

ACTIVITY
MARINE CORPS BASE
CAMP LEJEUNE

SATISFACTORY TO DATE

DES AS | DRW AV | CHK BM

PM

BRANCH MANAGER

CHIEF ENG/ARCH

FIRE PROTECTION

DEPARTMENT OF THE NAVY
NAVAL FACILITIES ENGINEERING COMMAND
ROICC FLORENCE CAMP LEJEUNE

NAVAL FACILITIES ENGINEERING COMMAND ~ MID-ATLANTIC
JACKSONVILLE, NC

MCB CAMP LEJEUNE

JACKSONVILLE, NC

P1338F II MEF SIMULATION/TRAINING CENTER
REPLACEMENT

AUDIOVISUAL - ELEVATIONS

SCALE: AS NOTED

EPROJECT NO.:

CONSTR. CONTR. NO.
N40085-20-C-0059

NAVFAC DRAWING NO.

SHEET OF

TA403

0 12" 24" 48"
SCALE: 1/2" = 12"

PLOTTED: 6/9/2021 6:52:27 AM

FILE NAME: BIM 360://HF PACKAGE 3/P1338_MEF SIM CTR-1590692-T.rvt

DP2 SUBMISSION – P1338 BUILDING PRE-FINAL SUBMISSION

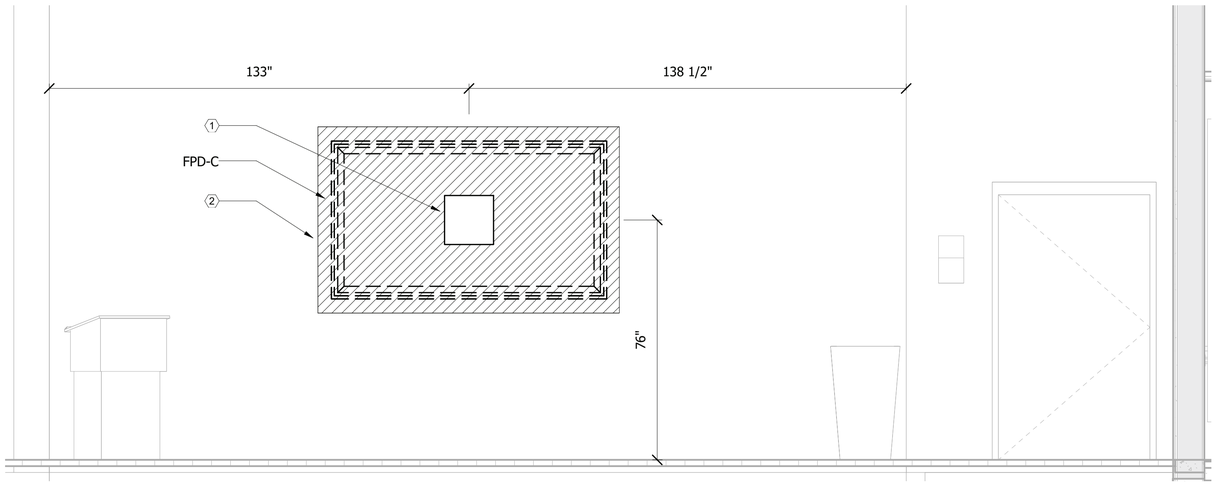

SIMULATION CLASSROOM 300A

SCALE: 1/2" = 1'-0"

C3

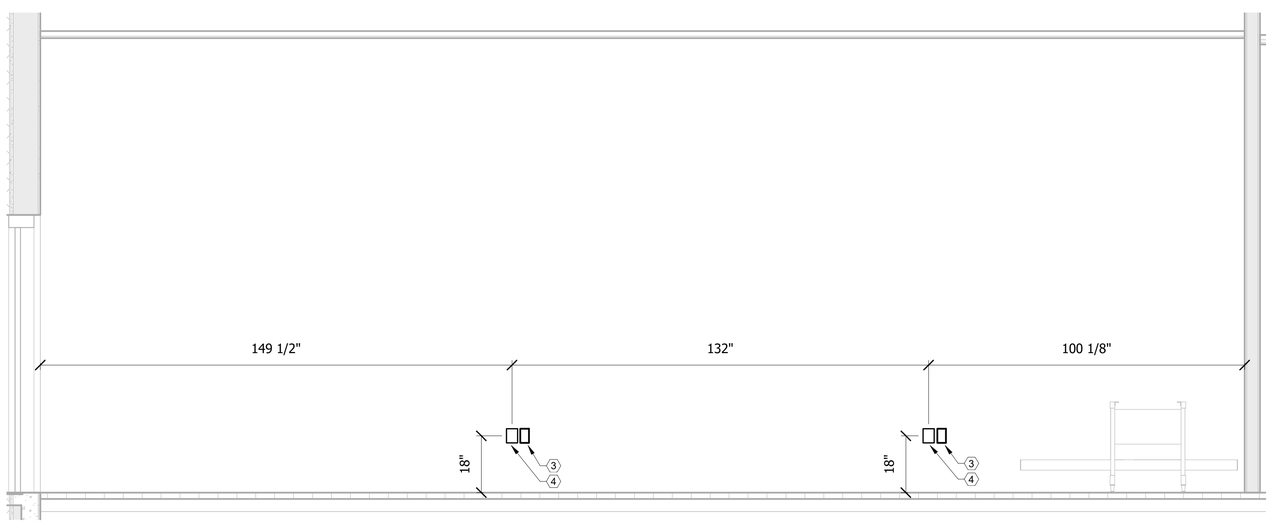

SIMULATION CLASSROOM 300A

SCALE: 1/2" = 1'-0"

A3

KEYNOTE LEGEND

1	CHIEF PAC 526 (DUPLEX, 2D) SEE DETAIL A2/TA501
2	BACKING TO SUPPORT FIVE TIMES WEIGHT OF DISPLAY AND MOUNT
3	DUPLEX RECEPTACLE
4	ONE GANG AV BACK BOX

0 12" 24" 48"

SCALE: 1/2" = 12"

SYM	DESCRIPTION	DATE	APPR

NAVFAC

PRELIMINARY NOT FOR CONSTRUCTION

SEAL

RQ W.M. Jordan COMPANY ~ A JOINT VENTURE ~

Michael Baker INTERNATIONAL

100 AIRSIDE DRIVE
MOON TOWNSHIP, PA 15108

A/E INFO

APPROVED

FOR COMMANDER NAVFAC

ACTIVITY
MARINE CORPS BASE
CAMP LEJEUNE

SATISFACTORY TO DATE

DES AS | DRW AV | CHK BM

PM

BRANCH MANAGER

CHIEF ENG/ARCH

FIRE PROTECTION

DEPARTMENT OF THE NAVY
NAVAL FACILITIES ENGINEERING COMMAND
RO/CC FLORENCE CAMP LEJEUNE

NAVAL FACILITIES ENGINEERING COMMAND ~ MID-ATLANTIC
JACKSONVILLE, NC

MCB CAMP LEJEUNE
JACKSONVILLE, NC

P1338F II MEF SIMULATION/TRAINING CENTER
REPLACEMENT

AUDIOVISUAL - ELEVATIONS

SCALE: AS NOTED

EPROJECT NO.:

CONSTR. CONTR. NO.
N40085-20-C-0059

NAVFAC DRAWING NO.

SHEET OF

TA404

DP2 SUBMISSION – P1338 BUILDING PRE-FINAL SUBMISSION

PLOTTED: 6/9/2021 6:52:28 AM

FILE NAME: BIM 360://HF PACKAGE 3/P1338_MEF SIM CTR-1590892-T.rvt

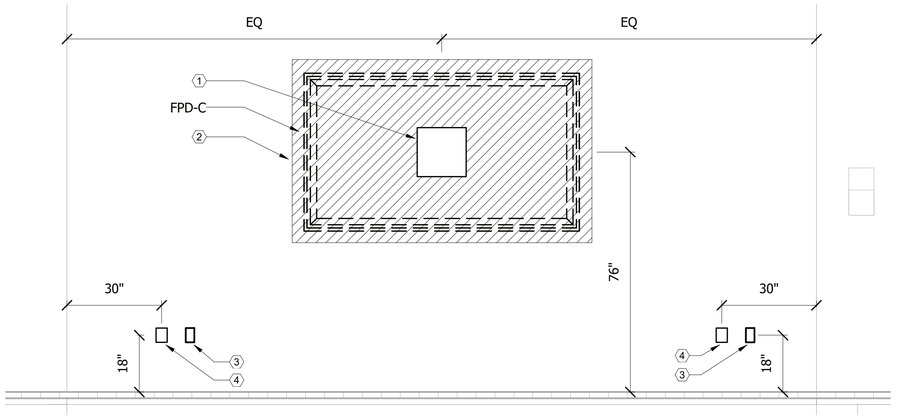

SIMULATION CLASSROOM 300B (C2)
SCALE: 1/2" = 1'-0"

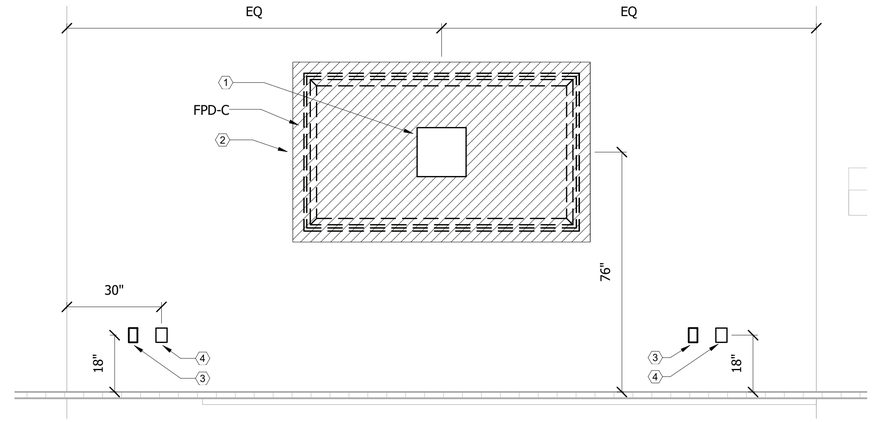

SIMULATION CLASSROOM 300Y (C4)
SCALE: 1/2" = 1'-0"

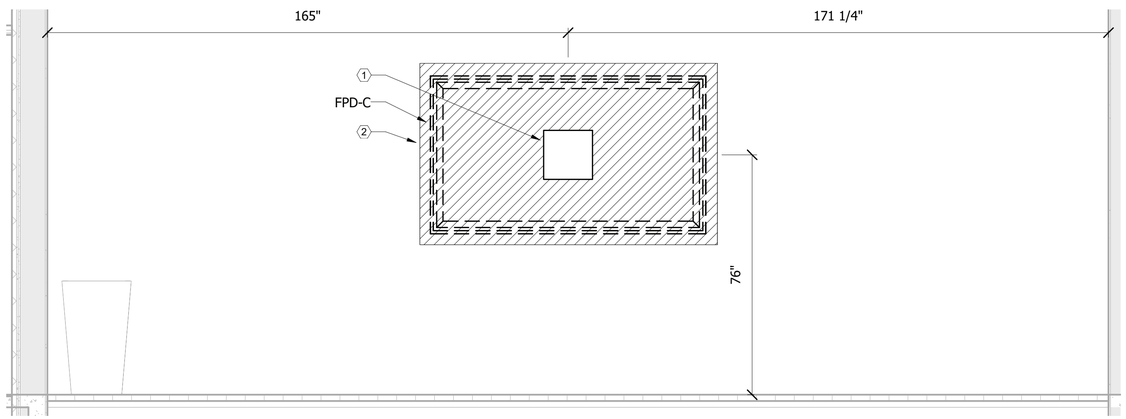

SIMULATION CLASSROOM 300C (B3)
SCALE: 1/2" = 1'-0"

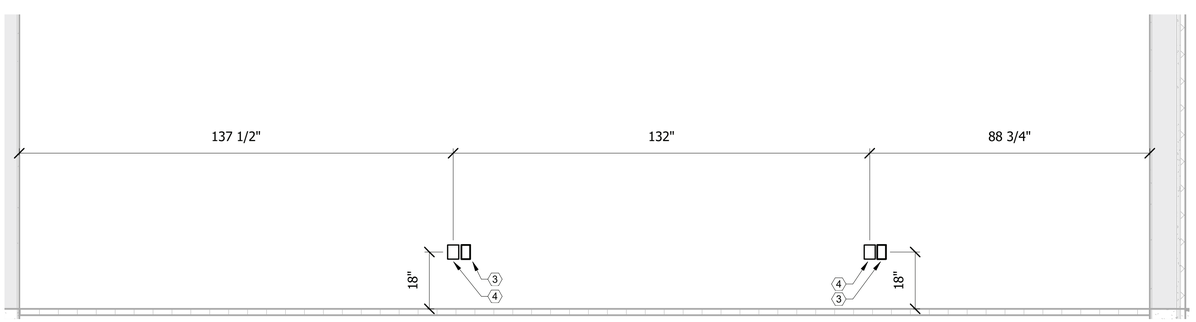

SIMULATION CLASSROOM 300C (A3)
SCALE: 1/2" = 1'-0"

KEYNOTE LEGEND

1	CHIEF PAC 526 (DUPLEX, 2D) SEE DETAIL A2/TA501
2	BACKING TO SUPPORT FIVE TIMES WEIGHT OF DISPLAY AND MOUNT
3	DUPLEX RECEPTACLE
4	ONE GANG AV BACK BOX

0 12" 24" 48"
SCALE: 1/2" = 12"

SYM	DESCRIPTION	DATE	APPR.

NAVFAC

PRELIMINARY NOT FOR CONSTRUCTION

SEAL

RQ W.M. Jordan COMPANY ~ A JOINT VENTURE ~

Michael Baker INTERNATIONAL
100 AIRSIDE DRIVE
MOON TOWNSHIP, PA 15108
A/E INFO

APPROVED
FOR COMMANDER NAVFAC

ACTIVITY
MARINE CORPS BASE
CAMP LEJEUNE

SATISFACTORY TO DATE
DES AS | DRW AV | CHK BM
PM
BRANCH MANAGER
CHIEF ENG/ARCH
FIRE PROTECTION

DEPARTMENT OF THE NAVY
NAVAL FACILITIES ENGINEERING COMMAND
ROICC FLORENCE CAMP LEJEUNE
MCB CAMP LEJEUNE

NAVAL FACILITIES ENGINEERING COMMAND ~ MID-ATLANTIC
JACKSONVILLE, NC

JACKSONVILLE, NC
P1338F II MEF SIMULATION/TRAINING CENTER
REPLACEMENT

AUDIOVISUAL - ELEVATIONS

SCALE: AS NOTED
EPROJECT NO.:
CONSTR. CONTR. NO.
N40085-20-C-0059
NAVFAC DRAWING NO.
SHEET OF
TA405

DP2 SUBMISSION – P1338 BUILDING PRE-FINAL SUBMISSION

PLOTTED: 6/8/2021 6:52:29 AM

FILE NAME: BIM 360://HF PACKAGE 3/P1338_MEF SIM CTR-1590892-T.rvt

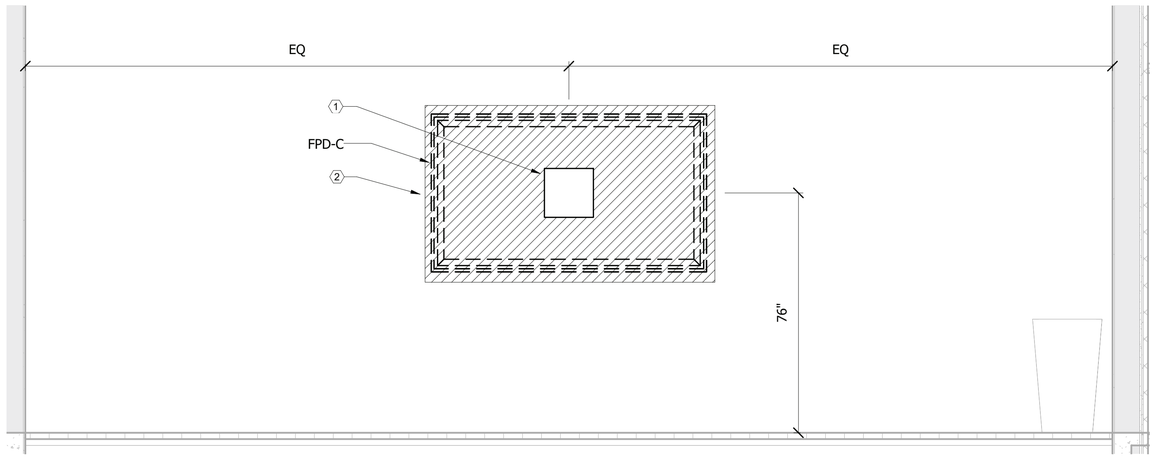

SIMULATION CLASSROOM 300Z

SCALE: 1/2" = 1'-0"

C3

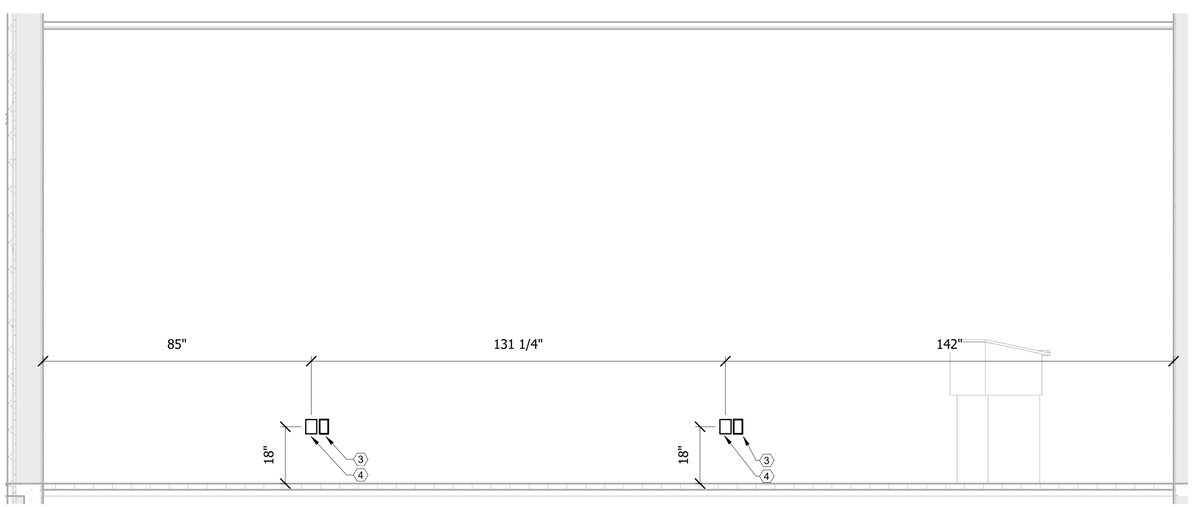

SIMULATION CLASSROOM 300Z

SCALE: 1/2" = 1'-0"

A3

KEYNOTE LEGEND

1	CHIEF PAC 526 (DUPLEX, 2D) SEE DETAIL A2/TA501
2	BACKING TO SUPPORT FIVE TIMES WEIGHT OF DISPLAY AND MOUNT
3	DUPLEX RECEPTACLE
4	ONE GANG AV BACK BOX

0 12" 24" 48"

SCALE: 1/2" = 12"

SYM	DESCRIPTION	DATE	APPR

NAVFAC

PRELIMINARY NOT FOR CONSTRUCTION

SEAL

RQ W.M. Jordan COMPANY ~ A JOINT VENTURE ~

Michael Baker INTERNATIONAL

100 AIRSIDE DRIVE
MOON TOWNSHIP, PA 15108

A/E INFO

APPROVED

FOR COMMANDER NAVFAC

ACTIVITY
MARINE CORPS BASE
CAMP LEJEUNE

SATISFACTORY TO DATE

DES AS | DRW AV | CHK BM

PM

BRANCH MANAGER

CHIEF ENG/ARCH

FIRE PROTECTION

DEPARTMENT OF THE NAVY
NAVAL FACILITIES ENGINEERING COMMAND
RO/CC FLORENCE CAMP LEJEUNE

NAVAL FACILITIES ENGINEERING COMMAND ~ MID-ATLANTIC
JACKSONVILLE, NC

MCB CAMP LEJEUNE
JACKSONVILLE, NC

P1338F II MEF SIMULATION/TRAINING CENTER
REPLACEMENT

AUDIOVISUAL - ELEVATIONS

SCALE: AS NOTED

EPROJECT NO.:

CONSTR. CONTR. NO.
N40085-20-C-0059

NAVFAC DRAWING NO.

SHEET OF

TA406

DP2 SUBMISSION – P1338 BUILDING PRE-FINAL SUBMISSION

PLOTTED: 6/9/2021 6:52:30 AM

FILE NAME: BIM 360://HF PACKAGE 3/P1338_MEF SIM CTR-1590892-T.rvt

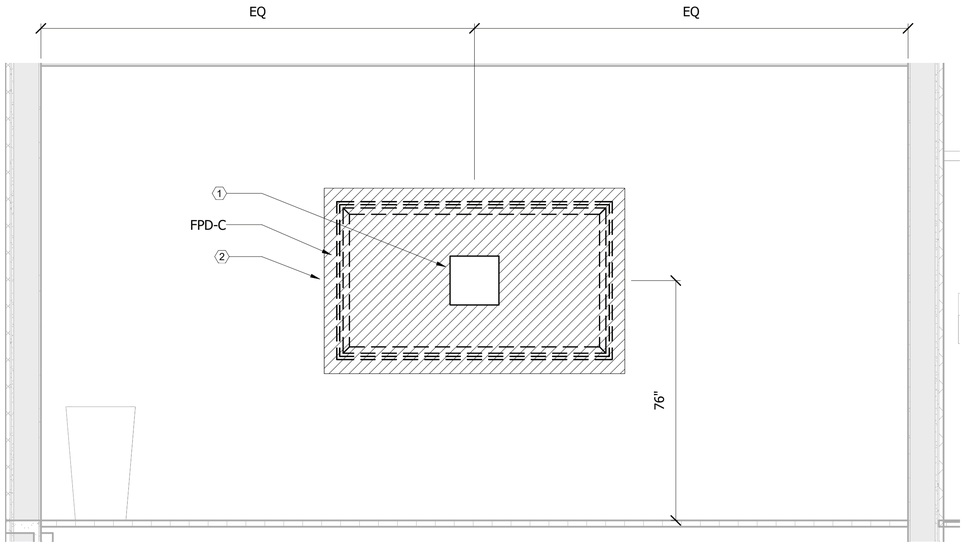

SIMULATION CLASSROOM 300X

SCALE: 1/2" = 1'-0"

TA113 C3

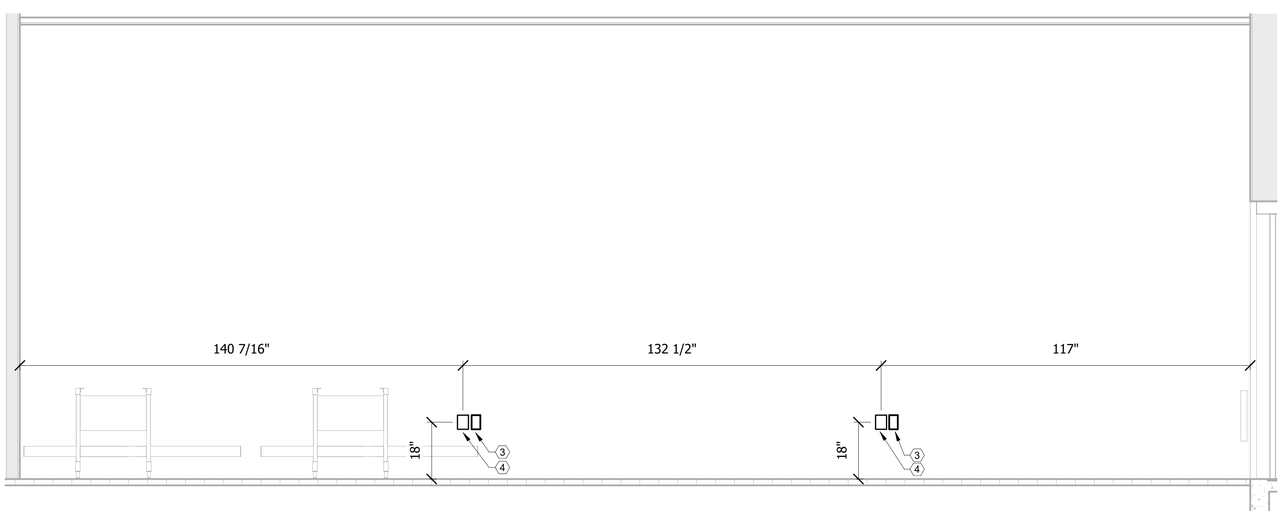

SIMULATION CLASSROOM 300X

SCALE: 1/2" = 1'-0"

A3

KEYNOTE LEGEND

1	CHIEF PAC 526 (DUPLEX, 2D) SEE DETAIL A2/TA501
2	BACKING TO SUPPORT FIVE TIMES WEIGHT OF DISPLAY AND MOUNT
3	DUPLEX RECEPTACLE
4	ONE GANG AV BACK BOX

0 12" 24" 48"

SCALE: 1/2" = 12"

SYM	DESCRIPTION	DATE	APPR

NAVFAC

PRELIMINARY NOT FOR CONSTRUCTION

SEAL

RQ W.M. Jordan COMPANY ~ A JOINT VENTURE ~

Michael Baker INTERNATIONAL

100 AIRSIDE DRIVE
MOON TOWNSHIP, PA 15108

A/E INFO

APPROVED

FOR COMMANDER NAVFAC

ACTIVITY
MARINE CORPS BASE
CAMP LEJEUNE

SATISFACTORY TO DATE

DES AS | DRW AV | CHK BM

PM

BRANCH MANAGER

CHIEF ENG/ARCH

FIRE PROTECTION

DEPARTMENT OF THE NAVY
NAVAL FACILITIES ENGINEERING COMMAND
RO/CC FLORENCE CAMP LEJEUNE

NAVAL FACILITIES ENGINEERING COMMAND ~ MID-ATLANTIC
JACKSONVILLE, NC

MCB CAMP LEJEUNE
JACKSONVILLE, NC

P1338F II MEF SIMULATION/TRAINING CENTER
REPLACEMENT

AUDIOVISUAL - ELEVATIONS

SCALE: AS NOTED

EPROJECT NO.:

CONSTR. CONTR. NO.
N40085-20-C-0059

NAVFAC DRAWING NO.

SHEET OF

TA407

DP2 SUBMISSION – P1338 BUILDING PRE-FINAL SUBMISSION

PLOTTED: 6/9/2021 6:52:30 AM

FILE NAME: BIM 360://HF PACKAGE 3/P1338_MEF SIM CTR-1590892-T.rvt

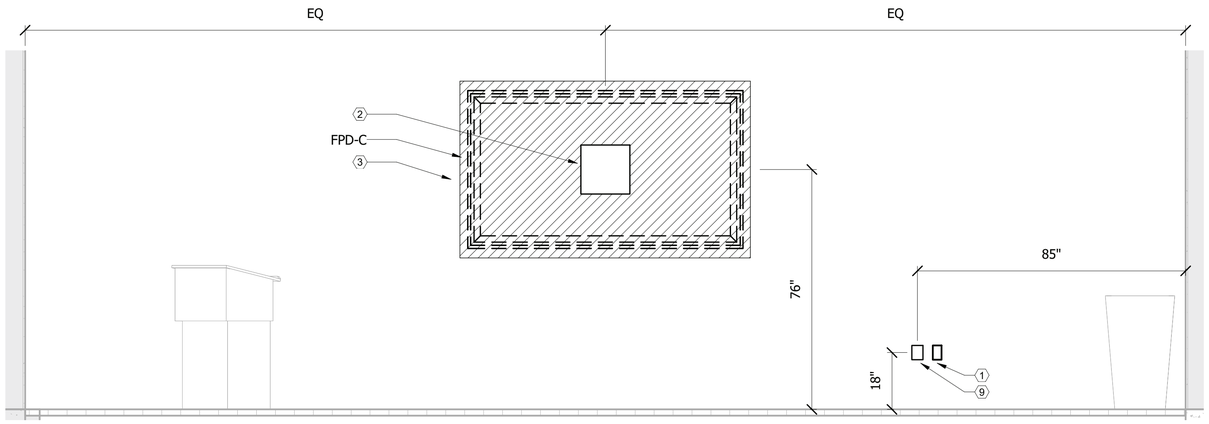

SIMULATION CLASSROOM 200C

SCALE: 1/2" = 1'-0"

C3

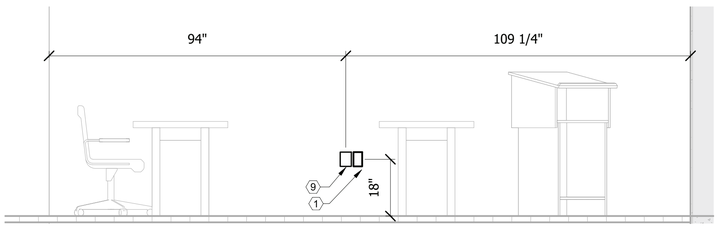

SIMULATION CLASSROOM 200C

SCALE: 1/2" = 1'-0"

B2

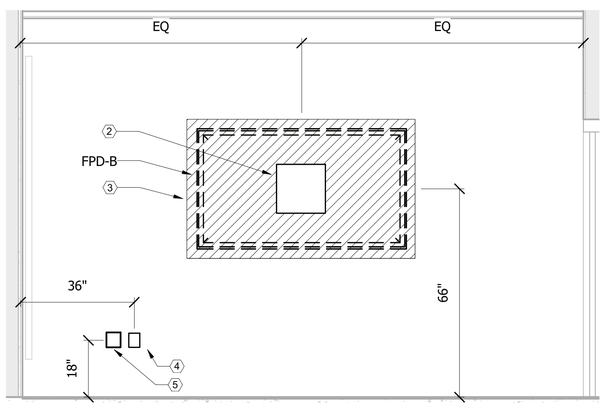

BRIEF/DEBRIEF 209

SCALE: 1/2" = 1'-0"

A2

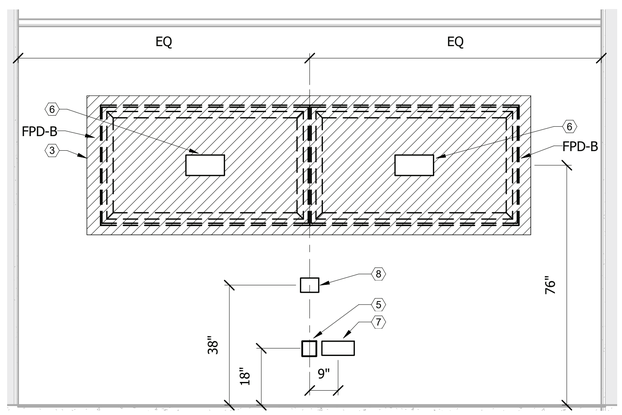

SECURE VTC 303B

SCALE: 1/2" = 1'-0"

A4

KEYNOTE LEGEND

1	DUPLEX RECEPTACLE
2	CHIEF PAC 526 (DUPLEX, 2D) SEE DETAIL A2/TA501
3	BACKING TO SUPPORT FIVE TIMES WEIGHT OF DISPLAY AND MOUNT
4	ONE GANG AV BACK BOX
5	QUAD RECEPTACLE
6	FSR PWB-100 (DUPLEX, 2D) SEE DETAIL A3/TA502
7	FOUR GANG AV BACK BOX
8	TWO GANG AV BACK BOX FOR WALL MOUNTED CAMERAS
9	ONE GANG AV BACK BOX

0 12" 24" 48"

SCALE: 1/2" = 12"

SYM	DESCRIPTION	DATE	APPR.

NAVFAC

PRELIMINARY NOT FOR CONSTRUCTION

SEAL

RQ W.M. Jordan COMPANY ~A JOINT VENTURE~

Michael Baker INTERNATIONAL

100 AIRSIDE DRIVE
MOON TOWNSHIP, PA 15108

A/E INFO

APPROVED

FOR COMMANDER NAVFAC

ACTIVITY
MARINE CORPS BASE CAMP LEJEUNE

SATISFACTORY TO DATE

DES AS | DRW AV | CHK BM

PM

BRANCH MANAGER

CHIEF ENG/ARCH

FIRE PROTECTION

DEPARTMENT OF THE NAVY
NAVAL FACILITIES ENGINEERING COMMAND
ROICC FLORENCE CAMP LEJEUNE

NAVAL FACILITIES ENGINEERING COMMAND ~ MID-ATLANTIC
JACKSONVILLE, NC

MCB CAMP LEJEUNE

JACKSONVILLE, NC

P1338F II MEF SIMULATION/TRAINING CENTER REPLACEMENT

AUDIOVISUAL - ELEVATIONS

SCALE: AS NOTED

EPROJECT NO.:

CONSTR. CONTR. NO.
N40085-20-C-0059

NAVFAC DRAWING NO.

SHEET OF

TA408

DP2 SUBMISSION – P1338 BUILDING PRE-FINAL SUBMISSION

UNCLASSIFIED

PLOTTED: 6/9/2021 6:52:31 AM

FILE NAME: BIM 360://HF PACKAGE 3/P1338_MEF SIM CTR-1590892-T.rvt

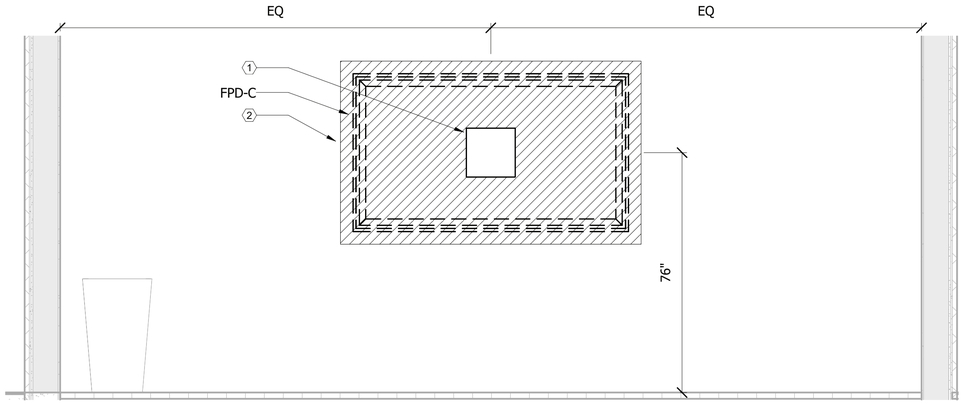

SIMULATION CLASSROOM 301A
SCALE: 1/2" = 1'-0"
TA113 C3

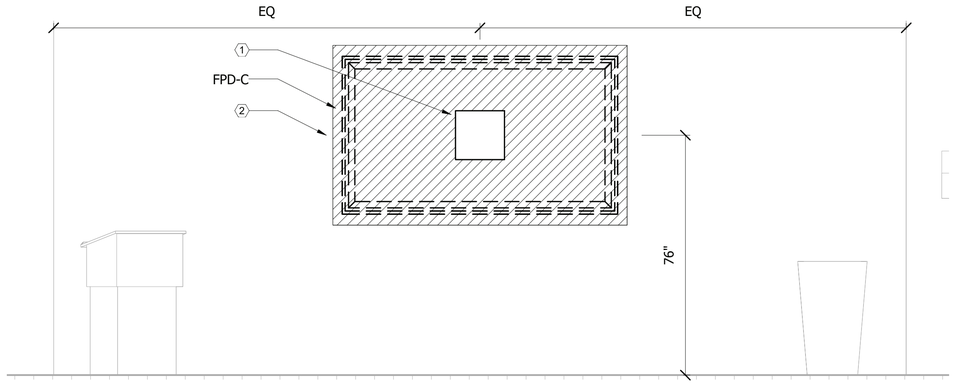

SIMULATION CLASSROOM 301B
SCALE: 1/2" = 1'-0"
TA113 B3

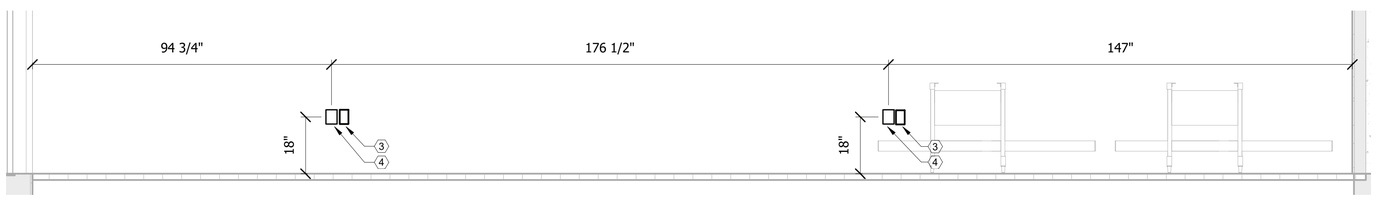

SIMULATION CLASSROOM 301A
SCALE: 1/2" = 1'-0"
B4

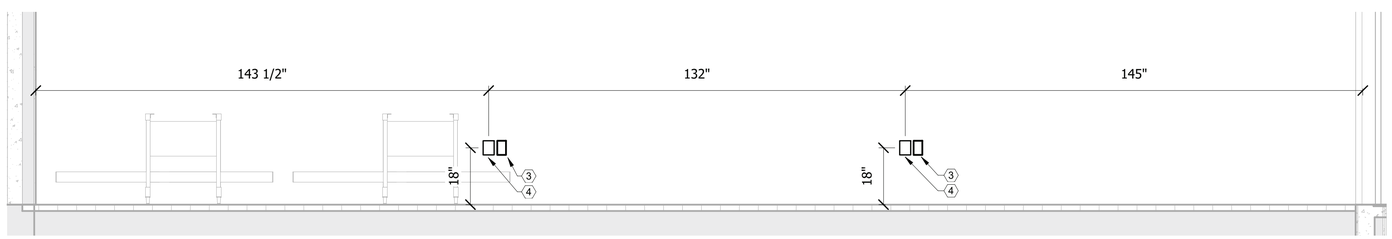

SIMULATION CLASSROOM 301B
SCALE: 1/2" = 1'-0"
A4

KEYNOTE LEGEND

1	CHIEF PAC 526 (DUPLEX, 2D) SEE DETAIL A2/TA501
2	BACKING TO SUPPORT FIVE TIMES WEIGHT OF DISPLAY AND MOUNT
3	DUPLEX RECEPTACLE
4	ONE GANG AV BACK BOX

0 12" 24" 48"
SCALE: 1/2" = 12"

SYM	DESCRIPTION	DATE	APPR

NAVFAC

PRELIMINARY NOT FOR CONSTRUCTION
SEAL

RQ W.M. Jordan COMPANY ~A JOINT VENTURE~

Michael Baker INTERNATIONAL
100 AIRSIDE DRIVE
MOON TOWNSHIP, PA 15108
A/E INFO

APPROVED
FOR COMMANDER NAVFAC
ACTIVITY
MARINE CORPS BASE CAMP LEJEUNE
SATISFACTORY TO DATE
DES AS DRW AV CHK BM
PM
BRANCH MANAGER
CHIEF ENG/ARCH
FIRE PROTECTION

DEPARTMENT OF THE NAVY
NAVAL FACILITIES ENGINEERING COMMAND
ROICC FLORENCE CAMP LEJEUNE
NAVAL FACILITIES ENGINEERING COMMAND ~ MID-ATLANTIC
JACKSONVILLE, NC
MCB CAMP LEJEUNE
JACKSONVILLE, NC
P1338F II MEF SIMULATION/TRAINING CENTER REPLACEMENT
AUDIOVISUAL - ELEVATIONS

SCALE: AS NOTED
EPROJECT NO.:
CONSTR. CONTR. NO.
N40085-20-C-0059
NAVFAC DRAWING NO.
SHEET OF
TA409

DP2 SUBMISSION – P1338 BUILDING PRE-FINAL SUBMISSION

PLOTTED: 6/9/2021 6:52:32 AM
FILE NAME: BIM 360://HF PACKAGE 3\P1338_MEF SIM CTR-1590892-T.rvt

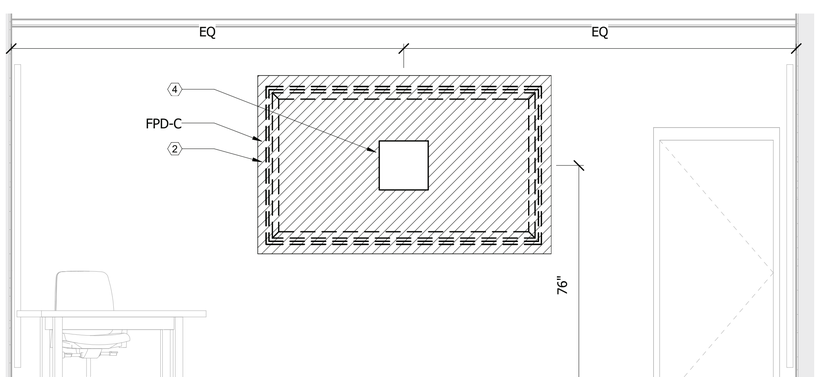

BRIEF/DEBRIEF 101
SCALE: 1/2" = 1'-0"
TA114 C2

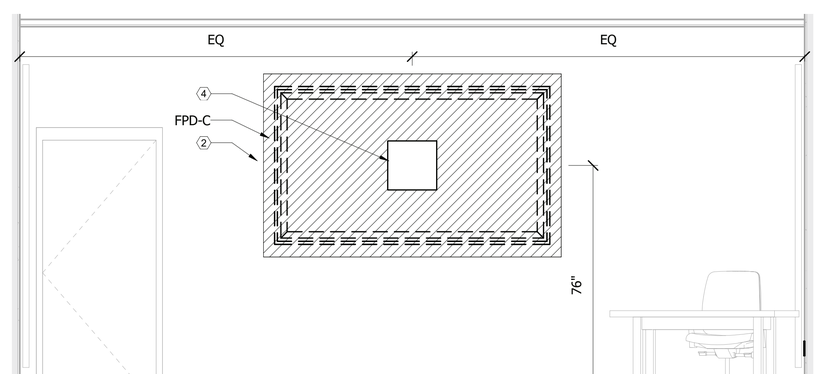

BRIEF/DEBRIEF 102
SCALE: 1/2" = 1'-0"
TA114 C4

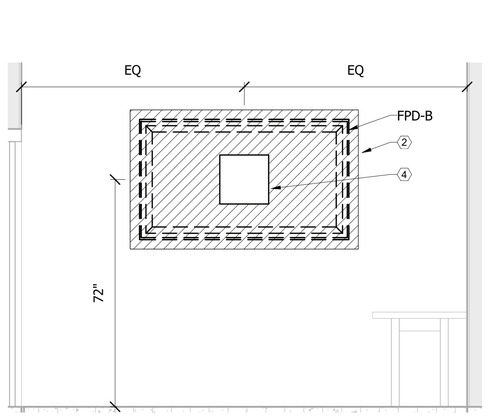

EXERCISE CONTROL 207
SCALE: 1/2" = 1'-0"
TA112 B2

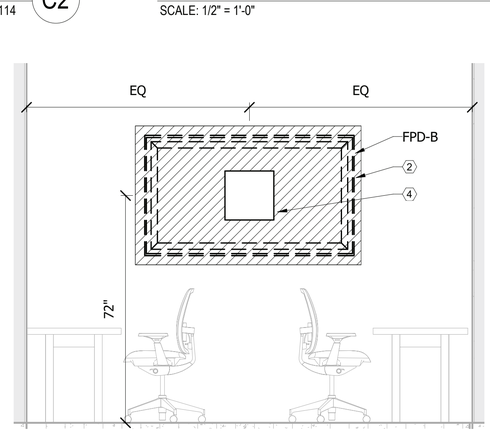

EXERCISE CONTROL 207
SCALE: 1/2" = 1'-0"
TA112 B3

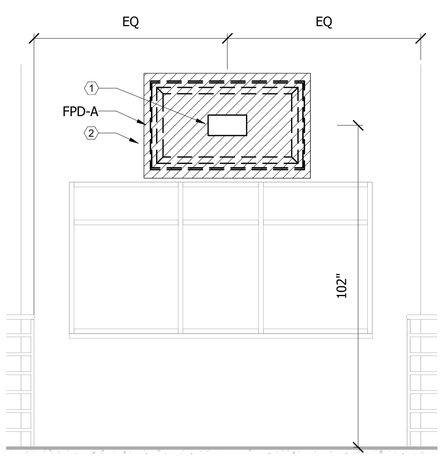

LOBBY/VEST L010
SCALE: 1/2" = 1'-0"
TA114 A2

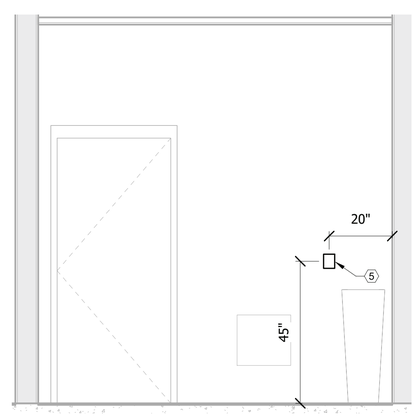

ENTRY WS 100
SCALE: 1/2" = 1'-0"
TA114 A3

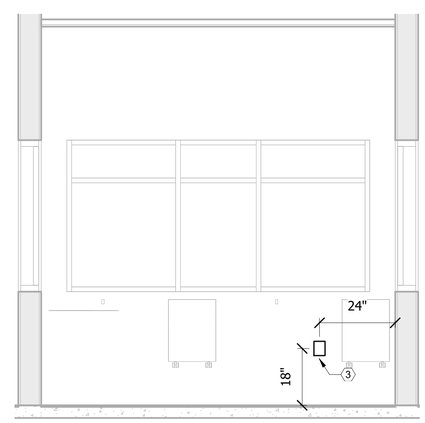

ENTRY WS 100
SCALE: 1/2" = 1'-0"
TA114 A4

0 12" 24" 48"
SCALE: 1/2" = 12"

KEYNOTE LEGEND

1	FSR PWB-100 (DUPLEX, 2D) SEE DETAIL A3/TA502
2	BACKING TO SUPPORT FIVE TIMES WEIGHT OF DISPLAY AND MOUNT
3	ONE GANG AV BACK BOX
4	CHIEF PAC 526 (DUPLEX, 2D) SEE DETAIL A2/TA501
5	ONE GANG AV BACK BOX FOR AV KEYPAD

SYM	DESCRIPTION	DATE	APPR

NAVFAC

PRELIMINARY NOT FOR CONSTRUCTION

SEAL

RQ W.M. Jordan COMPANY ~ A JOINT VENTURE ~

Michael Baker INTERNATIONAL
100 AIRSIDE DRIVE
MOON TOWNSHIP, PA 15108
A/E INFO

APPROVED

FOR COMMANDER NAVFAC

ACTIVITY
MARINE CORPS BASE
CAMP LEJEUNE

SATISFACTORY TO DATE

DES AS DRW AV CHK BM

PM

BRANCH MANAGER

CHIEF ENG/ARCH

FIRE PROTECTION

DEPARTMENT OF THE NAVY
NAVAL FACILITIES ENGINEERING COMMAND
RO/CC FLORENCE CAMP LEJEUNE
MCB CAMP LEJEUNE

NAVAL FACILITIES ENGINEERING COMMAND ~ MID-ATLANTIC
JACKSONVILLE, NC

JACKSONVILLE, NC
P1338F II MEF SIMULATION/TRAINING CENTER
REPLACEMENT

AUDIOVISUAL - ELEVATIONS

SCALE: AS NOTED
EPROJECT NO.:
CONSTR. CONTR. NO.
N40085-20-C-0059
NAVFAC DRAWING NO.
SHEET OF
TA410

DP2 SUBMISSION – P1338 BUILDING PRE-FINAL SUBMISSION

PLOTTED: 6/9/2021 6:52:34 AM

FILE NAME: BIM 360://HF PACKAGE 3/P1338_MEF SIM CTR-1590892-T.rvt

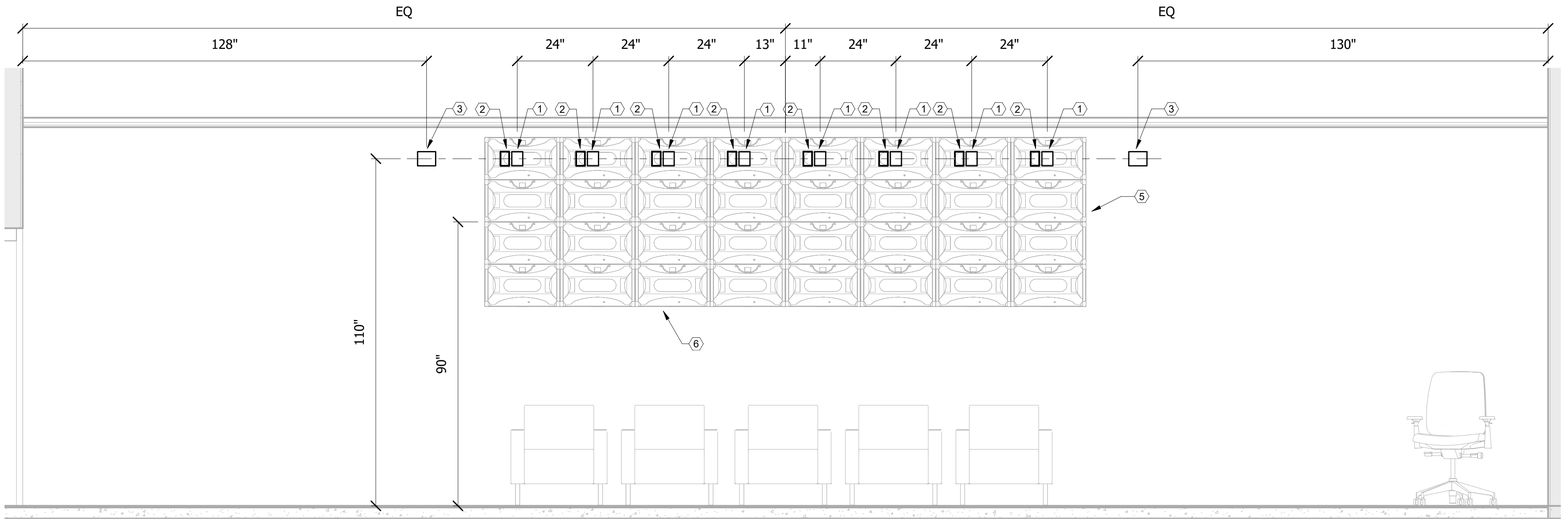

AUDITORIUM/READY ROOM 201

SCALE: 1/2" = 1'-0"

C4

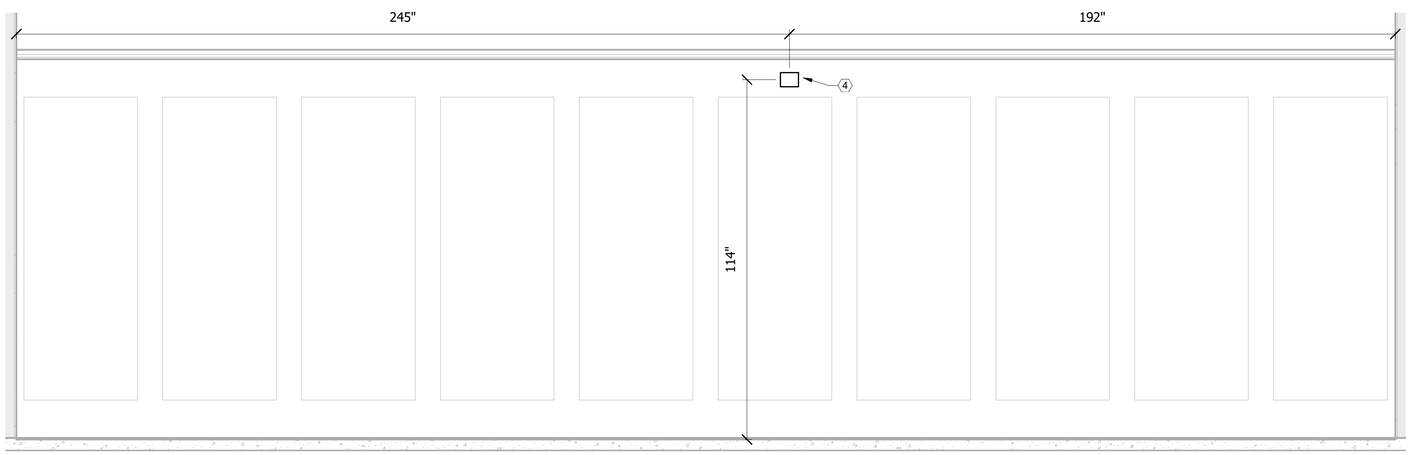

AUDITORIUM/READY ROOM 201

SCALE: 1/2" = 1'-0"

A4

KEYNOTE LEGEND

1	ONE GANG AV BACK BOX
2	RECESSED CLOCK RECEPTACLE
3	TWO GANG AV BACK BOX FOR WALL MOUNTED CAMERAS
4	TWO GANG AV BACK BOX
5	BACKING TO SUPPORT FIVE TIMES WEIGHT OF DISPLAY AND MOUNT
6	COORDINATE FINAL LOCATION WITH INTERIORS PRIOR TO INSTALLATION

SCALE: 1/2" = 12"

SYM	DESCRIPTION	DATE	APPR

SEAL

RQ W.M. Jordan COMPANY ~A JOINT VENTURE~

Michael Baker INTERNATIONAL
100 AIRSIDE DRIVE
MOON TOWNSHIP, PA 15108
A/E INFO

APPROVED

FOR COMMANDER NAVFAC

ACTIVITY
MARINE CORPS BASE
CAMP LEJEUNE

SATISFACTORY TO DATE

DES | DRW | CHK

PM

BRANCH MANAGER

CHIEF ENG/ARCH

FIRE PROTECTION

DEPARTMENT OF THE NAVY
NAVAL FACILITIES ENGINEERING COMMAND
RO/CC FLORENCE CAMP LEJEUNE
MCB CAMP LEJEUNE

NAVAL FACILITIES ENGINEERING COMMAND ~ MID-ATLANTIC
JACKSONVILLE, NC

JACKSONVILLE, NC
P1338F II MEF SIMULATION/TRAINING CENTER
REPLACEMENT

AUDIOVISUAL - ELEVATIONS

SCALE: AS NOTED

EPROJECT NO.: 1590892

CONSTR. CONTR. NO.
N40085-20-C-0059

NAVFAC DRAWING NO.

SHEET OF

TA411

DP2 SUBMISSION – P1338 BUILDING - PRE-FINAL SUBMISSION

PLOTTED: 6/9/2021 6:52:35 AM

FILE NAME: BIM 360://HF PACKAGE 3/P1338_MEF SIM CTR-1590892-T.rvt

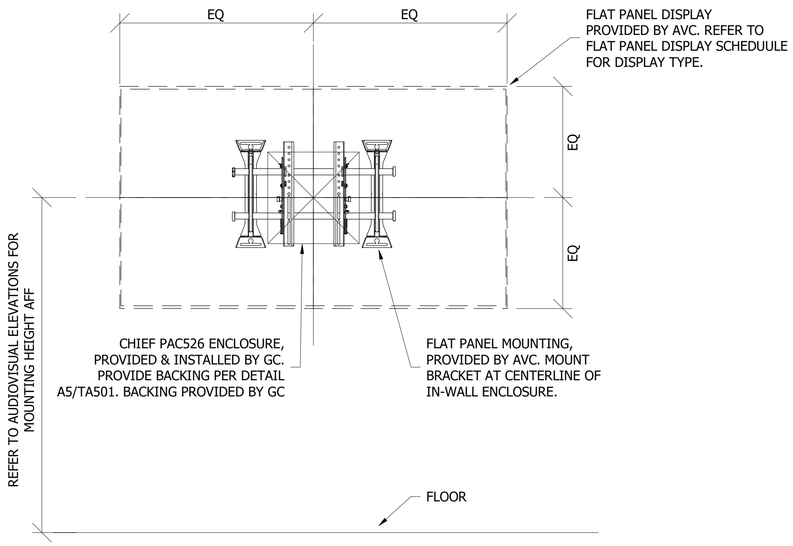

CHIEF PAC 526 FLAT PANEL DISPLAY BRACKET DETAIL

SCALE: NTS

C2

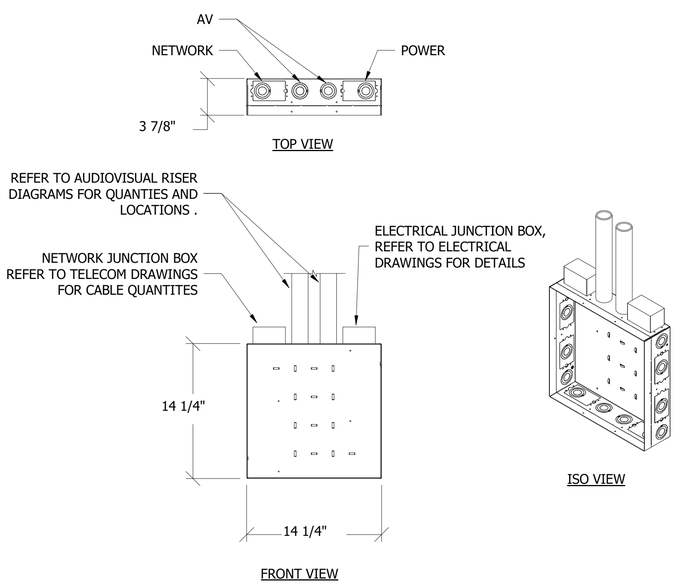

CHIEF PAC 526 AV WALL BOX

SCALE: NTS

A2

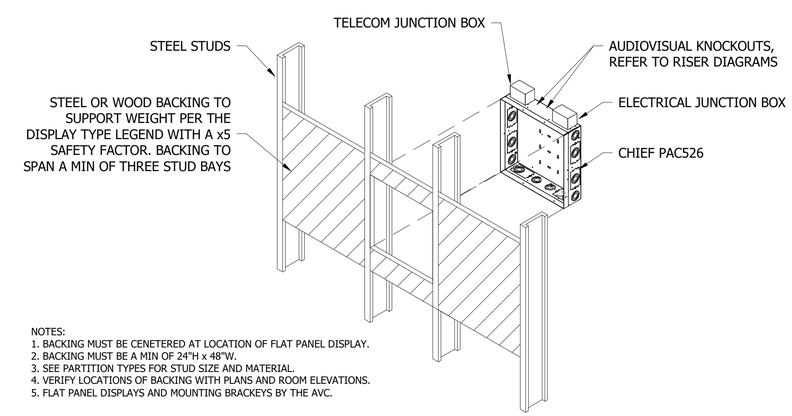

NOTES:
1. BACKING MUST BE CENETERED AT LOCATION OF FLAT PANEL DISPLAY.
2. BACKING MUST BE A MIN OF 24"H x 48"W.
3. SEE PARTITION TYPES FOR STUD SIZE AND MATERIAL.
4. VERIFY LOCATIONS OF BACKING WITH PLANS AND ROOM ELEVATIONS.
5. FLAT PANEL DISPLAYS AND MOUNTING BRACKEYS BY THE AVC.

CHIEF PAC 526 BACKING DETAIL

SCALE: NTS

A5

SYM	DESCRIPTION	DATE	APPR

NAVFAC

PRELIMINARY NOT FOR CONSTRUCTION

SEAL

RQ W.M. Jordan COMPANY ~ A JOINT VENTURE ~

Michael Baker INTERNATIONAL

100 AIRSIDE DRIVE
MOON TOWNSHIP, PA 15108

A/E INFO

APPROVED

FOR COMMANDER NAVFAC

ACTIVITY
MARINE CORPS BASE CAMP LEJEUNE

SATISFACTORY TO DATE

DES AS | DRW AV | CHK BM

PM

BRANCH MANAGER

CHIEF ENG/ARCH

FIRE PROTECTION

DEPARTMENT OF THE NAVY
NAVAL FACILITIES ENGINEERING COMMAND
ROICC FLORENCE CAMP LEJEUNE

NAVAL FACILITIES ENGINEERING COMMAND ~ MID-ATLANTIC
JACKSONVILLE, NC

MCB CAMP LEJEUNE
JACKSONVILLE, NC

P1338F II MEF SIMULATION/TRAINING CENTER REPLACEMENT

AUDIOVISUAL - DETAILS

SCALE: AS NOTED

EPROJECT NO.:

CONSTR. CONTR. NO.
N40085-20-C-0059

NAVFAC DRAWING NO.

SHEET OF

TA501

DP2 SUBMISSION – P1338 BUILDING PRE-FINAL SUBMISSION

PLOTTED: 6/9/2021 6:52:35 AM

FILE NAME: BIM 360://HF PACKAGE 3/P1338_MEF SIM CTR-1590892-T.rvt

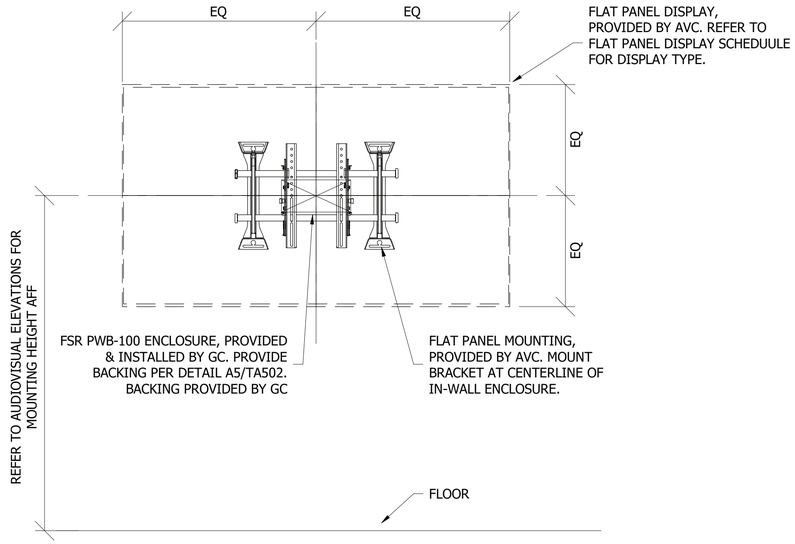

FSR PWB-100 FLAT PANEL DISPLAY BRACKET DETAIL

SCALE: NTS

C3

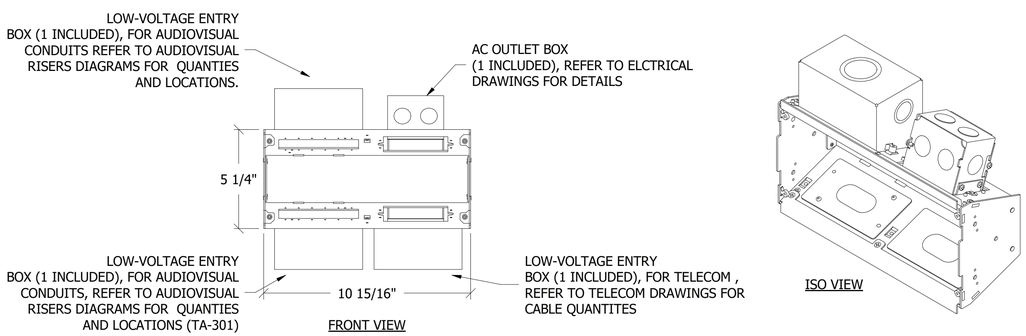

FSR PWB-100 DETAIL

SCALE: NTS

A3

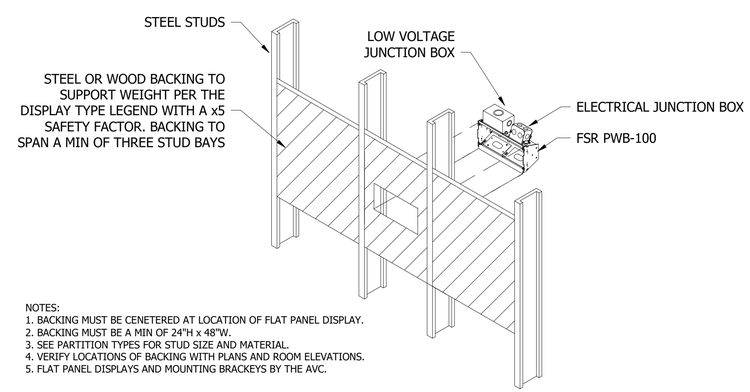

NOTES:
1. BACKING MUST BE CENETERED AT LOCATION OF FLAT PANEL DISPLAY.
2. BACKING MUST BE A MIN OF 24"H x 48"W.
3. SEE PARTITION TYPES FOR STUD SIZE AND MATERIAL.
4. VERIFY LOCATIONS OF BACKING WITH PLANS AND ROOM ELEVATIONS.
5. FLAT PANEL DISPLAYS AND MOUNTING BRACKEYS BY THE AVC.

FSR PWB-100 BACKING DETAIL

SCALE: NTS

A5

SYM	DESCRIPTION	DATE	APPR

NAVFAC

SEAL

RQ W.M. Jordan COMPANY ~A JOINT VENTURE~

Michael Baker INTERNATIONAL
100 AIRSIDE DRIVE
MOON TOWNSHIP, PA 15108
A/E INFO

APPROVED

FOR COMMANDER NAVFAC

ACTIVITY
MARINE CORPS BASE CAMP LEJEUNE

SATISFACTORY TO DATE

DES | DRW | CHK

PM

BRANCH MANAGER

CHIEF ENG/ARCH

FIRE PROTECTION

DEPARTMENT OF THE NAVY
NAVAL FACILITIES ENGINEERING COMMAND
RO/CC FLORENCE CAMP LEJEUNE
MCB CAMP LEJEUNE

NAVAL FACILITIES ENGINEERING COMMAND ~ MID-ATLANTIC
JACKSONVILLE, NC

JACKSONVILLE, NC
P1338F II MEF SIMULATION/TRAINING CENTER REPLACEMENT

AUDIOVISUAL - DETAILS

SCALE: AS NOTED

EPROJECT NO.: 1590892

CONSTR. CONTR. NO.
N40085-20-C-0059

NAVFAC DRAWING NO.

SHEET OF

TA502

DP2 SUBMISSION – P1338 BUILDING - PRE-FINAL SUBMISSION

PLOTTED: 6/9/2021 6:52:36 AM

FILE NAME: BIM 360://HF PACKAGE 3/P1338_MEF SIM CTR-1590892-T.rvt

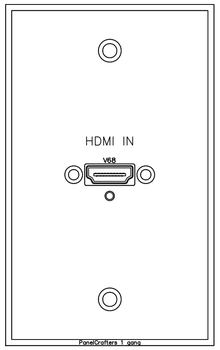

1 ONE GANG FACE PLATE
Scale: NTS

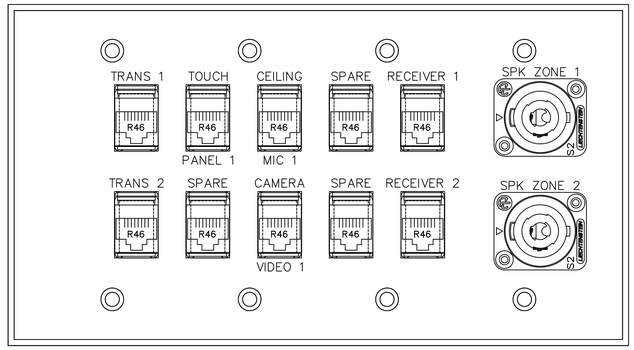

2 SECURE VTC 303B FACE PLATE
Scale: NTS

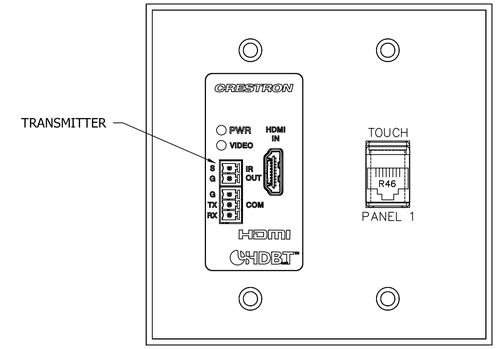

3 TWO GANG FACE PLATE
Scale: NTS

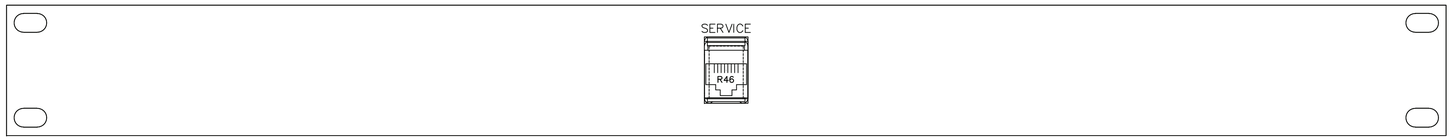

4 SERVICE PLATE
Scale: NTS

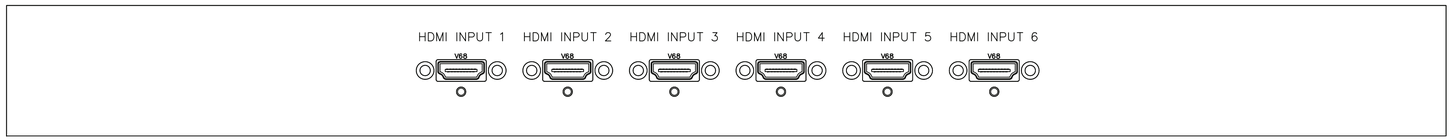

5 HDMI RACK PANEL
Scale: NTS

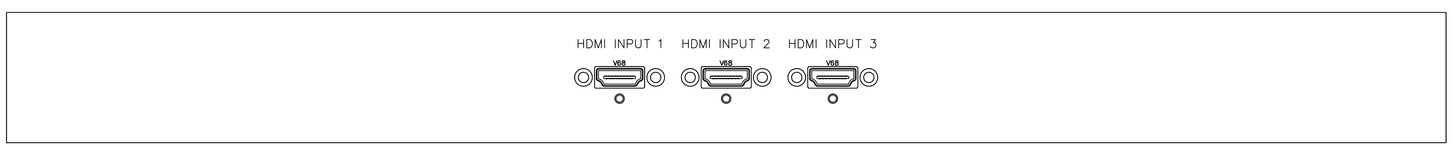

6 HDMI RACK PANEL
Scale: NTS

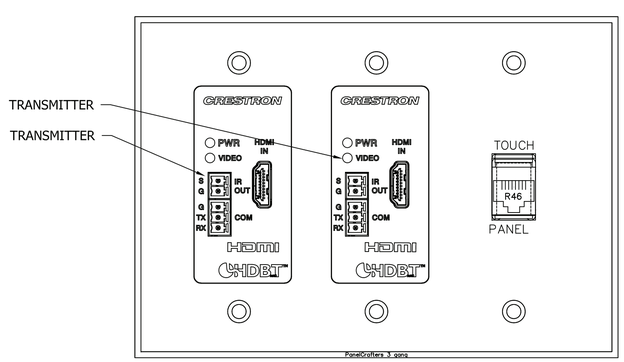

7 EXERCISE CONTROL 207 (QTY 2)
Scale: NTS

STM	DESCRIPTION	DATE	APPR

NAVFAC

PRELIMINARY NOT FOR CONSTRUCTION

SEAL

RQ Jordan COMPANY – A JOINT VENTURE –

Michael Baker INTERNATIONAL
100 AIRSIDE DRIVE
MOON TOWNSHIP, PA 15108
A/E INFO

APPROVED

FOR COMMANDER NAVFAC

ACTIVITY
MARINE CORPS BASE
CAMP LEJEUNE

SATISFACTORY TO DATE DD/MM/YY

DES AS	DRW AV	CHK BM	
PM		XXX	
BRANCH MANAGER		XXX	
CHIEF ENG/ARCH		XXX	
FIRE PROTECTION		XXX	

DEPARTMENT OF THE NAVY
NAVAL FACILITIES ENGINEERING COMMAND
ROICC FLORENCE CAMP LEJEUNE
MCB CAMP LEJEUNE

NAVAL FACILITIES ENGINEERING COMMAND – MID-ATLANTIC
JACKSONVILLE, NC

JACKSONVILLE, NC
P1338F II MEF SIMULATION/TRAINING CENTER
REPLACEMENT

AUDIOVISUAL - DETAILS

SCALE: NTS
EPROJECT NO.:
CONSTR. CONTR. NO.
N40085-20-C-0059
NAVFAC DRAWING NO.
SHEET OF

TA503

DP2 SUBMISSION – P1338 BUILDING RE-FINAL SUBMISSION

PLOTTED: 5/19/2021 3:28:30 PM

FILE NAME: BIM 360://HF PACKAGE 3/P1338_MEF SIM CTR-1590892-Tx4

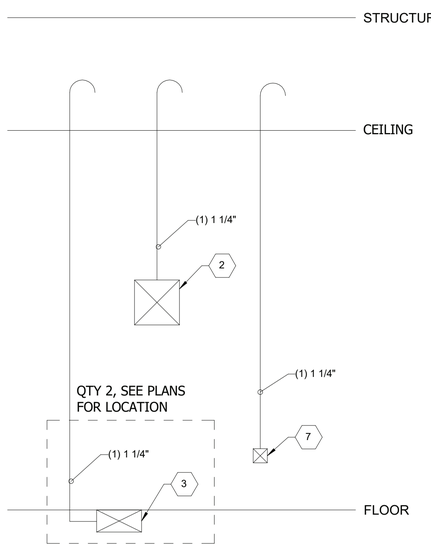

BRIEF/DEBRIEF 101 & 102 — C1

SCALE: NTS

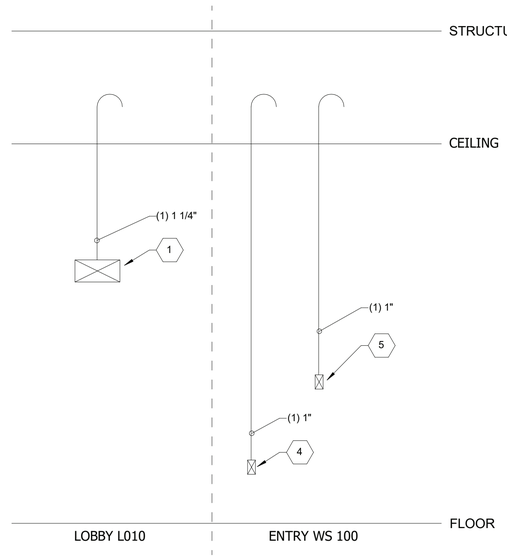

LOBBY L010 & ENTRY WS 100 — C3

SCALE: NTS

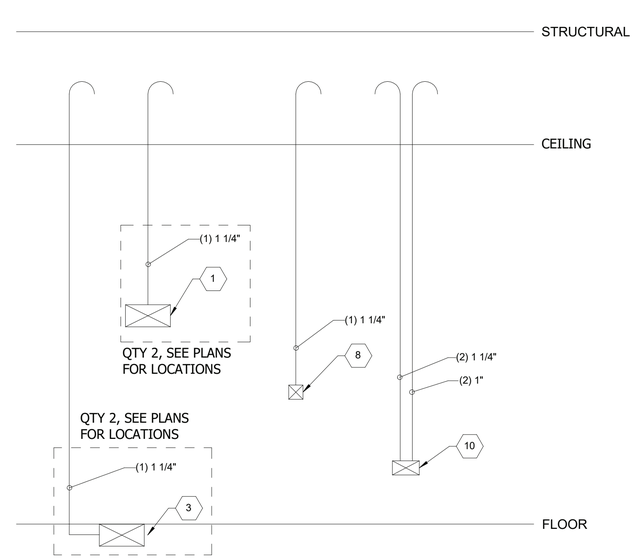

SECURE VTC 303B — C4

SCALE: NTS

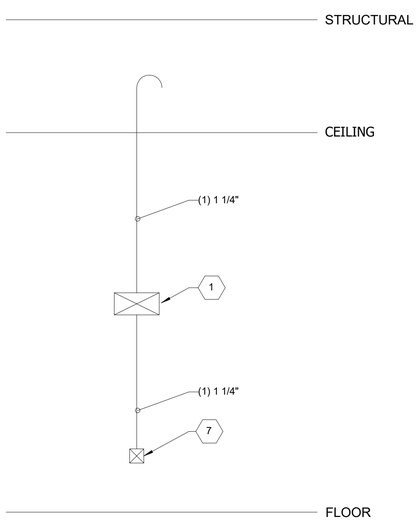

FIRE ROOM 104 A,B,C — A2

SCALE: NTS

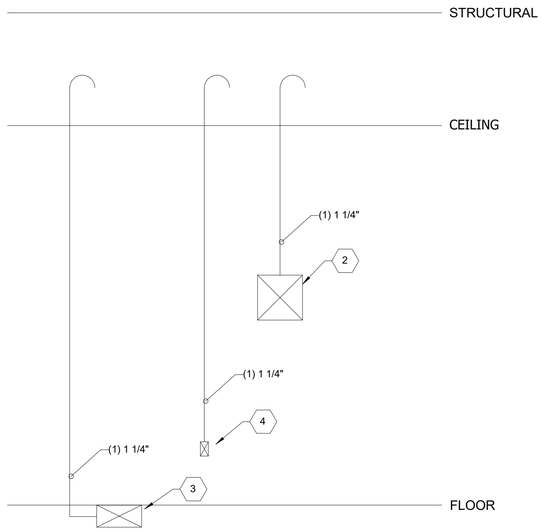

BRIEF/DEBRIEF 209 — A3

SCALE: NTS

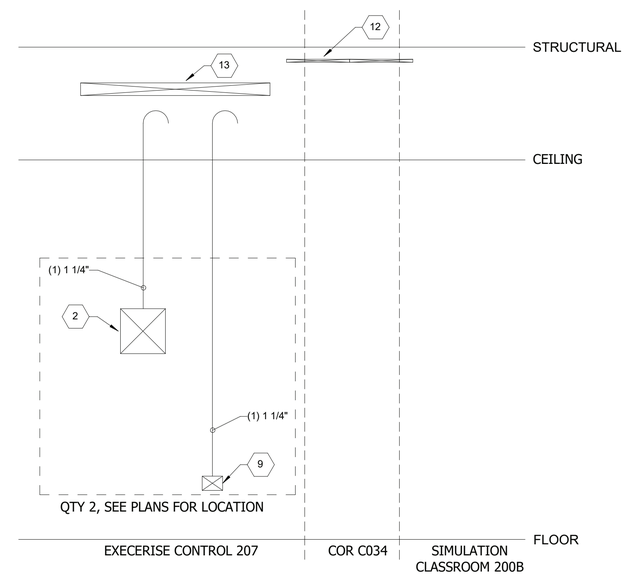

EXECERISE CONTROL 207 — A4

SCALE: NTS

DEVICE SCHEDULE

TAG	DESCRIPTION
1	FSR PWB-100
2	CHIEF PAC BOX 526
3	FLOOR BOX, REFER TO ELECTRICAL
4	ONE GANG AV BACK BOX
5	ONE GANG AV BACK BOX FOR AV KEYPAD
6	ONE GANG AV BACK BOX FOR ROOM AVAILABILITY SIGN
7	TWO GANG AV BACK BOX
8	TWO GANG AV BACK BOX FOR WALL MOUNTED CAMERA
9	THREE GANG AV BACK BOX
10	FOUR GANG AV BACK BOX
11	AV EQUIPMENT RACK PROVIDED BY AVC
12	CONDUIT, REFER TO EQUIPMENT PLANS FOR SIZE AND LOCATION
13	WIRE-BASKET, REFER TO EQUIPMENT PLANS FOR SIZE AND LOCATION

SYM	DESCRIPTION	DATE	APPR

NAVFAC

PRELIMINARY NOT FOR CONSTRUCTION

SEAL

RQ W.M. Jordan COMPANY ~ A JOINT VENTURE ~

Michael Baker INTERNATIONAL

100 AIRSIDE DRIVE
MOON TOWNSHIP, PA 15108

A/E INFO

APPROVED

FOR COMMANDER NAVFAC

ACTIVITY
MARINE CORPS BASE
CAMP LEJEUNE

SATISFACTORY TO DATE

DES AS | DRW AV | CHK BM

PM

BRANCH MANAGER

CHIEF ENG/ARCH

FIRE PROTECTION

DEPARTMENT OF THE NAVY
NAVAL FACILITIES ENGINEERING COMMAND
RO/CC FLORENCE CAMP LEJEUNE

NAVAL FACILITIES ENGINEERING COMMAND ~ MID-ATLANTIC
JACKSONVILLE, NC

MCB CAMP LEJEUNE
JACKSONVILLE, NC

P1338F II MEF SIMULATION/TRAINING CENTER
REPLACEMENT

AUDIOVISUAL - RISER DIAGRAMS

SCALE: AS NOTED

EPROJECT NO.:

CONSTR. CONTR. NO.
N40085-20-C-0059

NAVFAC DRAWING NO.

SHEET OF

TA601

DP2 SUBMISSION – P1338 BUILDING PRE-FINAL SUBMISSION

PLOTTED: 6/9/2021 6:52:37 AM

FILE NAME: BIM 360://HF PACKAGE 3/P1338_MEF SIM CTR-1590892-T.rvt

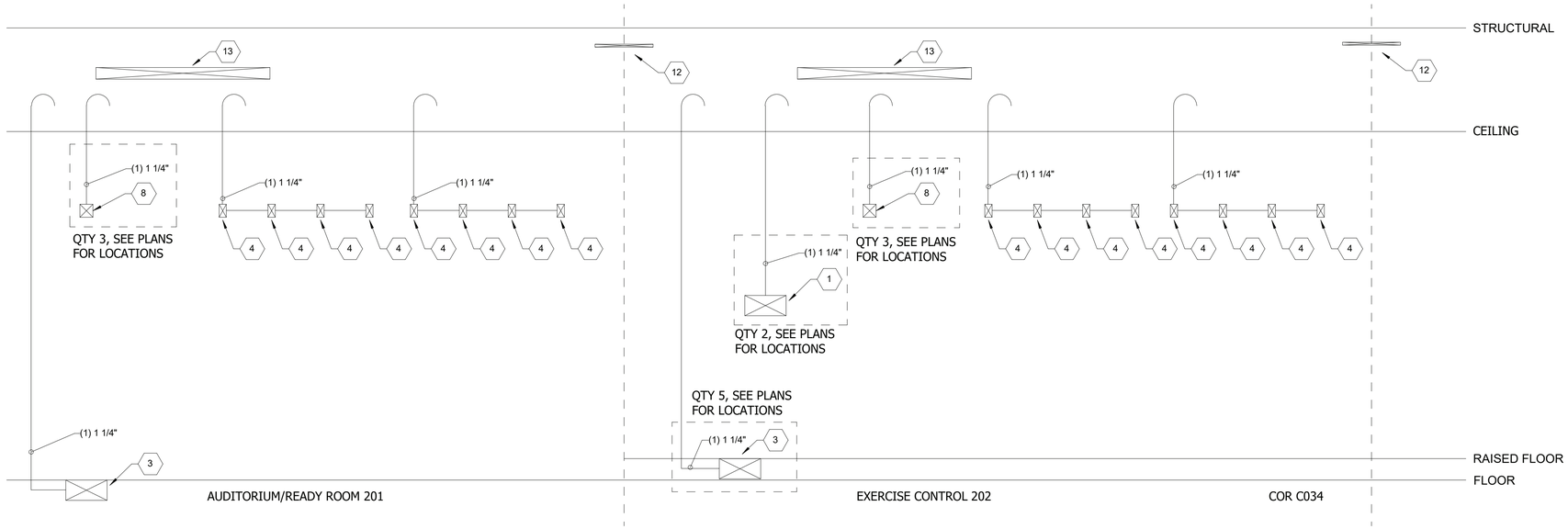

AUDITORIUM/READY ROOM 201 AND EXERCISE CONTROL 202

SCALE: NTS

C4

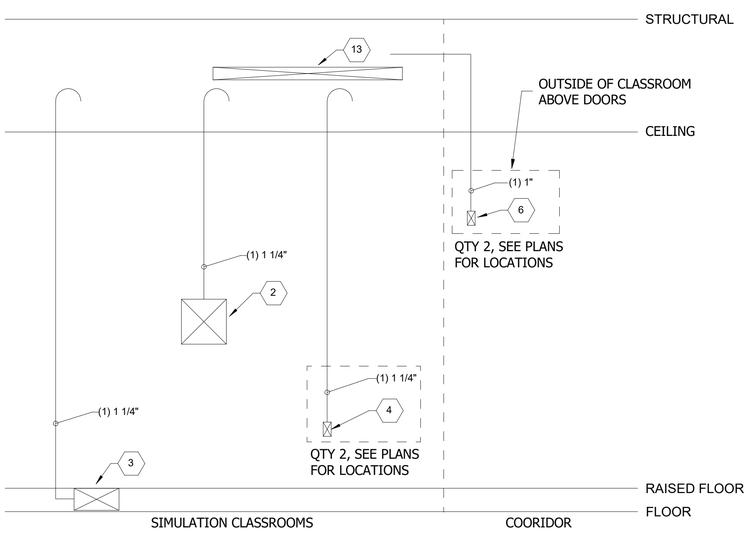

SIMULATION CLASSROOMS

SCALE: NTS

A2

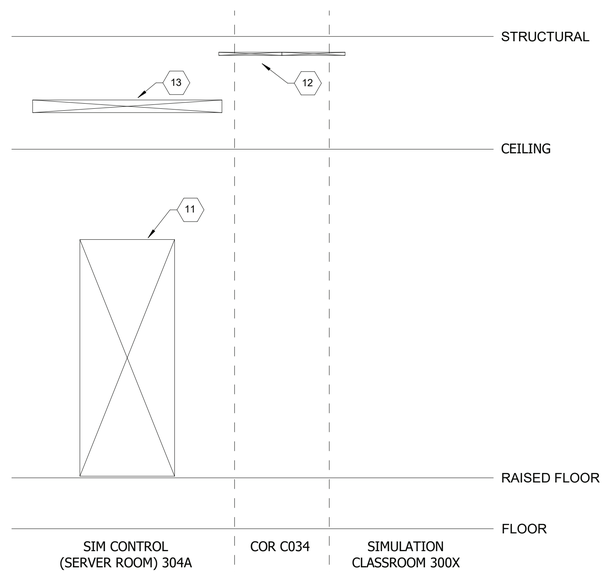

SIM CONTROL (SERVER ROOM) 304A

SCALE: NTS

A4

DEVICE SCHEDULE

TAG	DESCRIPTION
1	FSR PWB-100
2	CHIEF PAC BOX 526
3	FLOOR BOX, REFER TO ELECTRICAL
4	ONE GANG AV BACK BOX
5	ONE GANG AV BACK BOX FOR AV KEYPAD
6	ONE GANG AV BACK BOX FOR ROOM AVAILABILITY SIGN
7	TWO GANG AV BACK BOX
8	TWO GANG AV BACK BOX FOR WALL MOUNTED CAMERA
9	THREE GANG AV BACK BOX
10	FOUR GANG AV BACK BOX
11	AV EQUIPMENT RACK PROVIDED BY AVC
12	CONDUIT, REFER TO EQUIPMENT PLANS FOR SIZE AND LOCATION
13	WIRE-BASKET, REFER TO EQUIPMENT PLANS FOR SIZE AND LOCATION

SYM	DESCRIPTION	DATE	APPR

NAVFAC

PRELIMINARY NOT FOR CONSTRUCTION

SEAL

RQ W.M. Jordan COMPANY ~A JOINT VENTURE~

Michael Baker INTERNATIONAL

100 AIRSIDE DRIVE
MOON TOWNSHIP, PA 15108

A/E INFO

APPROVED

FOR COMMANDER NAVFAC

ACTIVITY
MARINE CORPS BASE CAMP LEJEUNE

SATISFACTORY TO DATE

DES AS | DRW AV | CHK BM

PM

BRANCH MANAGER

CHIEF ENG/ARCH

FIRE PROTECTION

DEPARTMENT OF THE NAVY
NAVAL FACILITIES ENGINEERING COMMAND
RO/CC FLORENCE CAMP LEJEUNE

NAVAL FACILITIES ENGINEERING COMMAND ~ MID-ATLANTIC
JACKSONVILLE, NC

MCB CAMP LEJEUNE

JACKSONVILLE, NC

P1338F II MEF SIMULATION/TRAINING CENTER REPLACEMENT

AUDIOVISUAL - RISER DIAGRAMS

SCALE: AS NOTED

EPROJECT NO.:

CONSTR. CONTR. NO.
N40085-20-C-0059

NAVFAC DRAWING NO.

SHEET OF

TA602

DP2 SUBMISSION – P1338 BUILDING PRE-FINAL SUBMISSION

PLOTTED: 6/8/2021 6:52:37 AM

FILE NAME: BIM 360://HF PACKAGE 3/P1338_MEF SIM CTR-1590892-T.rvt

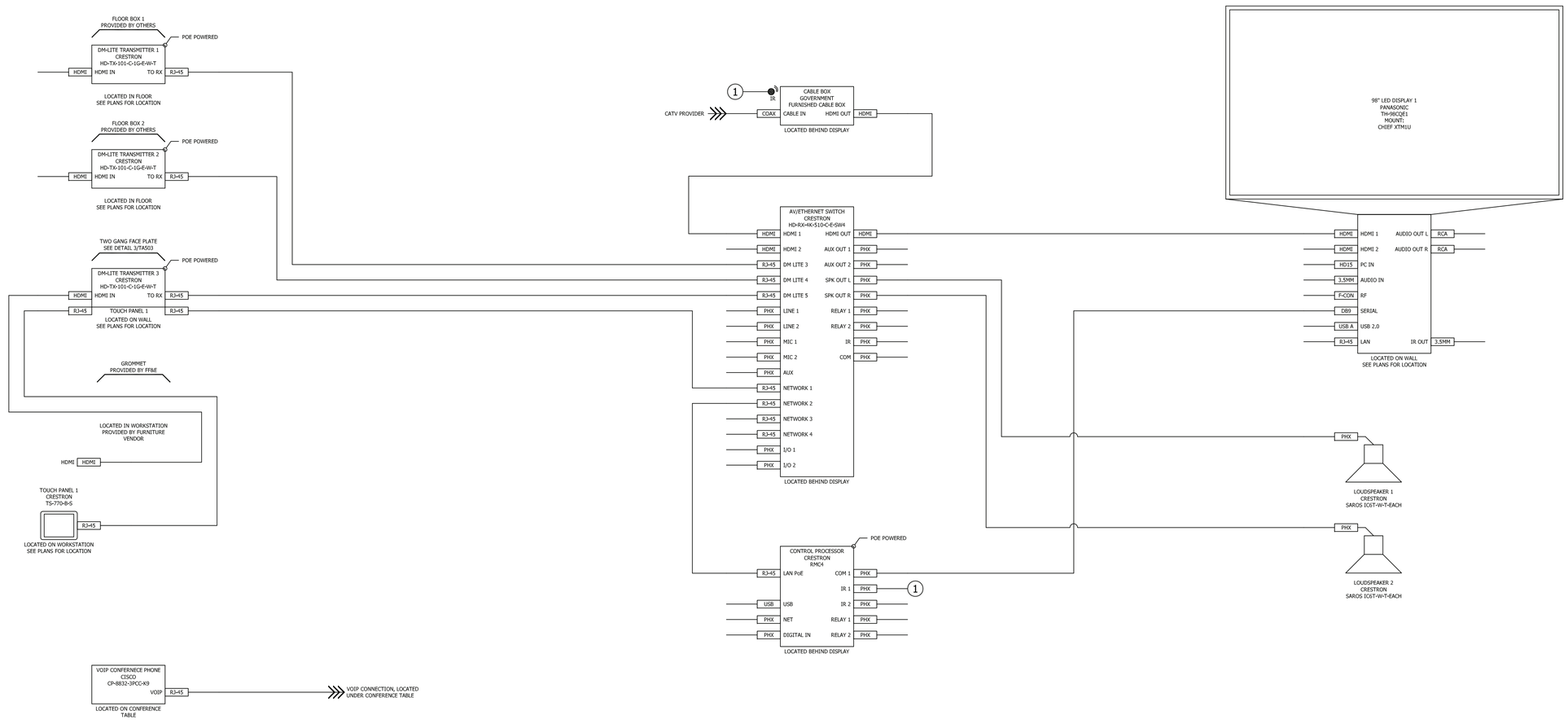

STM	DESCRIPTION	DATE	APPR

NAVFAC

PRELIMINARY
NOT FOR CONSTRUCTION

SEAL

RQ Jordan COMPANY ~ A JOINT VENTURE ~

Michael Baker
INTERNATIONAL

100 AIRSIDE DRIVE
MOON TOWNSHIP, PA 15108
A/E INFO

APPROVED

FOR COMMANDER NAVFAC

ACTIVITY
MARINE CORPS BASE
CAMP LEJEUNE

SATISFACTORY TO DATE DD/MM/YY

DES AS | DRW AV | CHK BM

PM	XXX
BRANCH MANAGER	XXX
CHIEF ENG/ARCH	XXX
FIRE PROTECTION	XXX

DEPARTMENT OF THE NAVY
NAVAL FACILITIES ENGINEERING COMMAND
ROICC FLORENCE CAMP LEJEUNE

NAVAL FACILITIES ENGINEERING COMMAND ~ MID-ATLANTIC
JACKSONVILLE, NC

MCB CAMP LEJEUNE
JACKSONVILLE, NC
P1338F II MEF SIMULATION/TRAINING CENTER
REPLACEMENT

BRIEF/DEBRIEF 101 SYSTEM DRAWING

SCALE: NTS

EPROJECT NO.:

CONSTR. CONTR. NO.
N40085-20-C-0059

NAVFAC DRAWING NO.

SHEET OF

TA801

DP2 SUBMISSION – P1338 BUILDING PRE-FINAL SUBMISSION

PLOTTED: 5/19/2021 3:28:30 PM

FILE NAME: BIM 360://NF PACKAGE 3/P1338_MEF SIM CTR-1590892-T.rvt

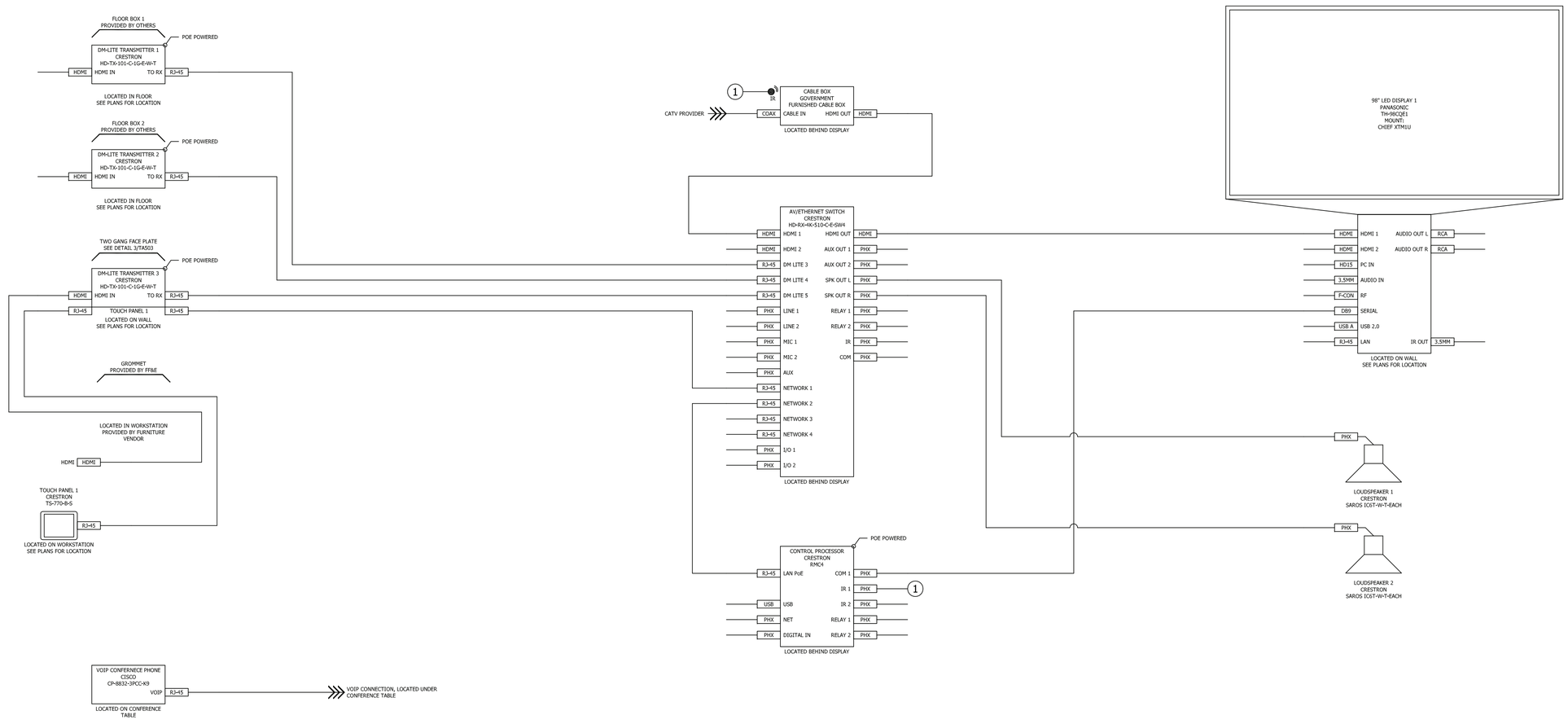

STM	DESCRIPTION	DATE	APPR

NAVFAC

PRELIMINARY
NOT FOR CONSTRUCTION

SEAL

RQ Jordan COMPANY
A JOINT VENTURE

Michael Baker
INTERNATIONAL
100 AIRSIDE DRIVE
MOON TOWNSHIP, PA 15108
A/E INFO

APPROVED

FOR COMMANDER NAVFAC

ACTIVITY
MARINE CORPS BASE
CAMP LEJEUNE

SATISFACTORY TO DATE DD/MM/YY

DES AS | DRW AV | CHK BM

PM	XXX
BRANCH MANAGER	XXX
CHIEF ENG/ARCH	XXX
FIRE PROTECTION	XXX

DEPARTMENT OF THE NAVY
NAVAL FACILITIES ENGINEERING COMMAND
ROICC FLORENCE CAMP LEJEUNE

NAVAL FACILITIES ENGINEERING COMMAND ~ MID-ATLANTIC
JACKSONVILLE, NC

MCB CAMP LEJEUNE
JACKSONVILLE, NC
P1338F II MEF SIMULATION/TRAINING CENTER
REPLACEMENT

BRIEF/DEBRIEF 102 SYSTEM DRAWING

SCALE: NTS

EPROJECT NO.:

CONSTR. CONTR. NO.
N40085-20-C-0059

NAVFAC DRAWING NO.

SHEET OF

TA802

DP2 SUBMISSION – P1338 BUILDING RE-FINAL SUBMISSION

PLOTTED: 5/19/2021 3:28:30 PM

FILE NAME: BIM 360://MF PACKAGE 3/P1338_MEF SIM CTR-1590892-T.rvt

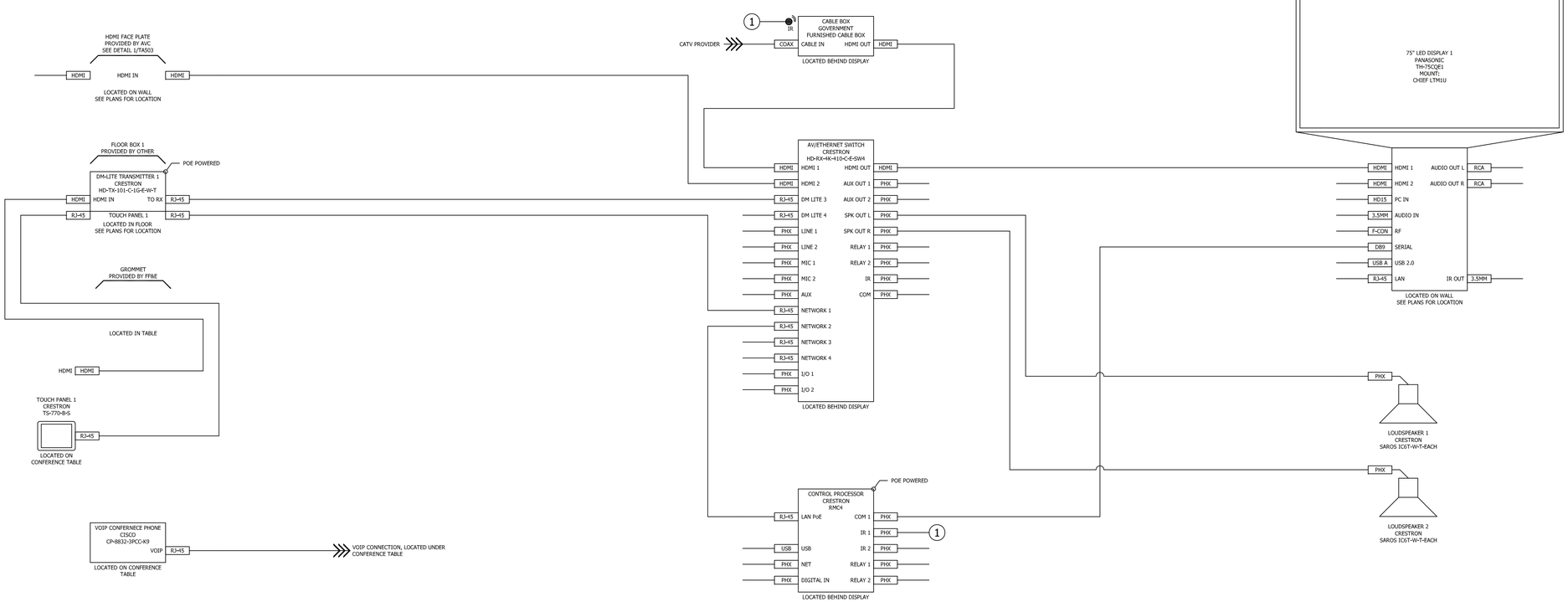

STM	DESCRIPTION	DATE	APPR

NAVFAC

PRELIMINARY
NOT FOR CONSTRUCTION

SEAL

RQ Jordan COMPANY
A JOINT VENTURE

Michael Baker
INTERNATIONAL
100 AIRSIDE DRIVE
MOON TOWNSHIP, PA 15108
A/E INFO

APPROVED

FOR COMMANDER NAVFAC

ACTIVITY
MARINE CORPS BASE
CAMP LEJEUNE

SATISFACTORY TO DATE DD/MM/YY

DES	AS	DRW AV	CHK BM
PM	XXX		
BRANCH MANAGER	XXX		
CHIEF ENG/ARCH	XXX		
FIRE PROTECTION	XXX		

DEPARTMENT OF THE NAVY
NAVAL FACILITIES ENGINEERING COMMAND
ROICC FLORENCE CAMP LEJEUNE

NAVAL FACILITIES ENGINEERING COMMAND ~ MID-ATLANTIC
JACKSONVILLE, NC

MCB CAMP LEJEUNE
JACKSONVILLE, NC

P1338F II MEF SIMULATION/TRAINING CENTER
REPLACEMENT

BRIEF/DEBRIEF 209 SYSTEM DRAWING

SCALE: NTS
EPROJECT NO.:
CONSTR. CONTR. NO.
N40085-20-C-0059
NAVFAC DRAWING NO.
SHEET OF

TA803

DP2 SUBMISSION – P1338 BUILDING RE-FINAL SUBMISSION

PLOTTED: 5/19/2021 3:26:30 PM

FILE NAME: BIM 360://HF PACKAGE 3/P1338_MEF SIM CTR-1590892-T.rvt

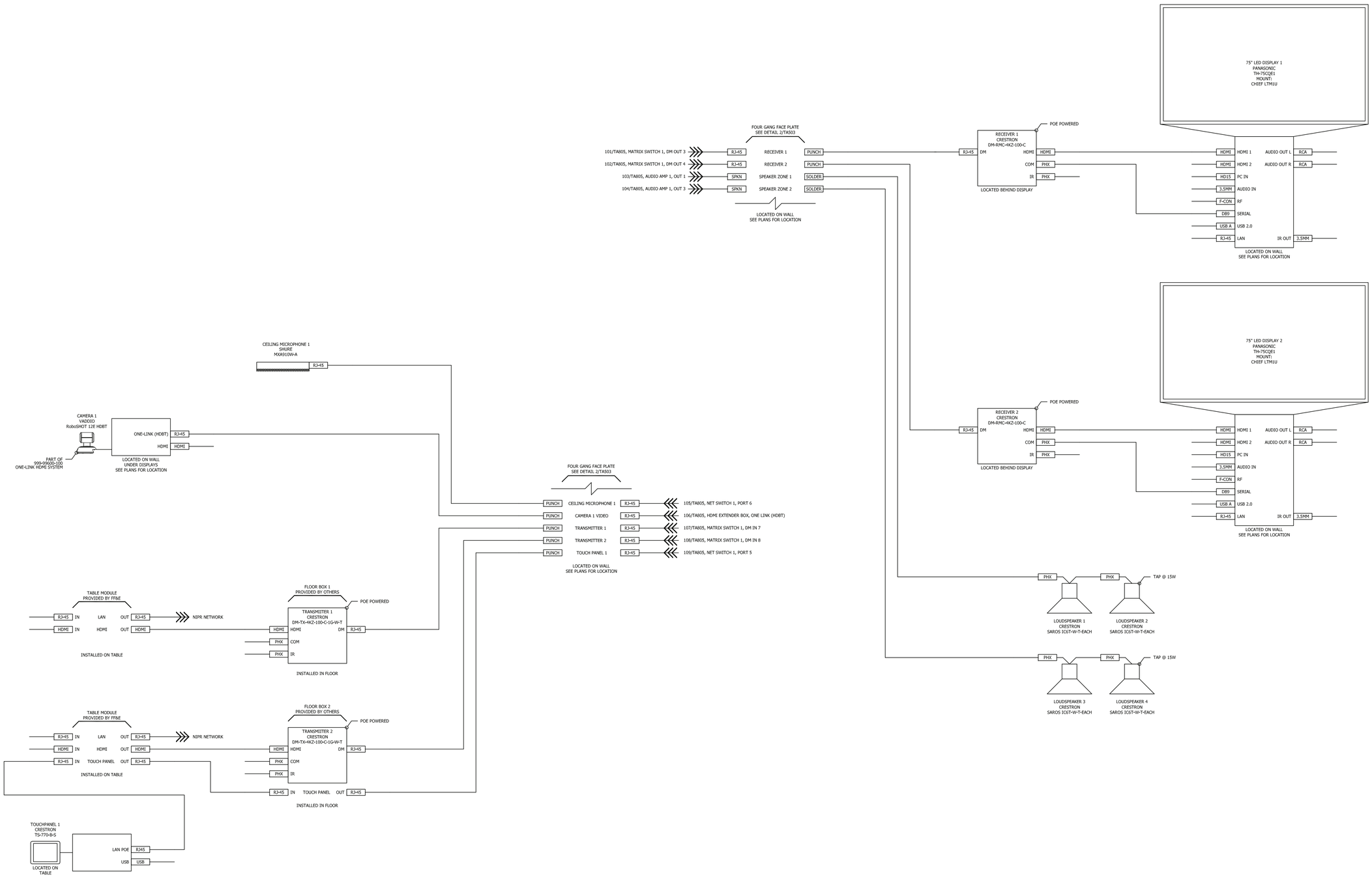

STM	DESCRIPTION	DATE	APPR

NAVFAC

PRELIMINARY
NOT FOR CONSTRUCTION

SEAL

RQ Jordan COMPANY – A JOINT VENTURE –

Michael Baker
INTERNATIONAL
100 AIRSIDE DRIVE
MOON TOWNSHIP, PA 15108
A/E INFO

APPROVED

FOR COMMANDER NAVFAC

ACTIVITY
MARINE CORPS BASE
CAMP LEJEUNE

SATISFACTORY TO DATE DD/MM/YY

DES AS | DRW AV | CHK BM

PM	XXX
BRANCH MANAGER	XXX
CHIEF ENG/ARCH	XXX
FIRE PROTECTION	XXX

DEPARTMENT OF THE NAVY
NAVAL FACILITIES ENGINEERING COMMAND
ROICC FLORENCE CAMP LEJEUNE

NAVAL FACILITIES ENGINEERING COMMAND ~ MID-ATLANTIC
JACKSONVILLE, NC

MCB CAMP LEJEUNE
JACKSONVILLE, NC

P1338F II MEF SIMULATION/TRAINING CENTER
REPLACEMENT

SECURE VTC 303B SYSTEM DRAWING

SCALE: NTS

EPROJECT NO.:

CONSTR. CONTR. NO.
N40085-20-C-0059

NAVFAC DRAWING NO.

SHEET OF

TA804

DP2 SUBMISSION – P1338 BUILDING RE-FINAL SUBMISSION

PLOTTED: 5/19/2021 3:28:30 PM

FILE NAME: BIM 360://NF PACKAGE 3/P1338_MEF SIM CTR-1590892-T.rvt

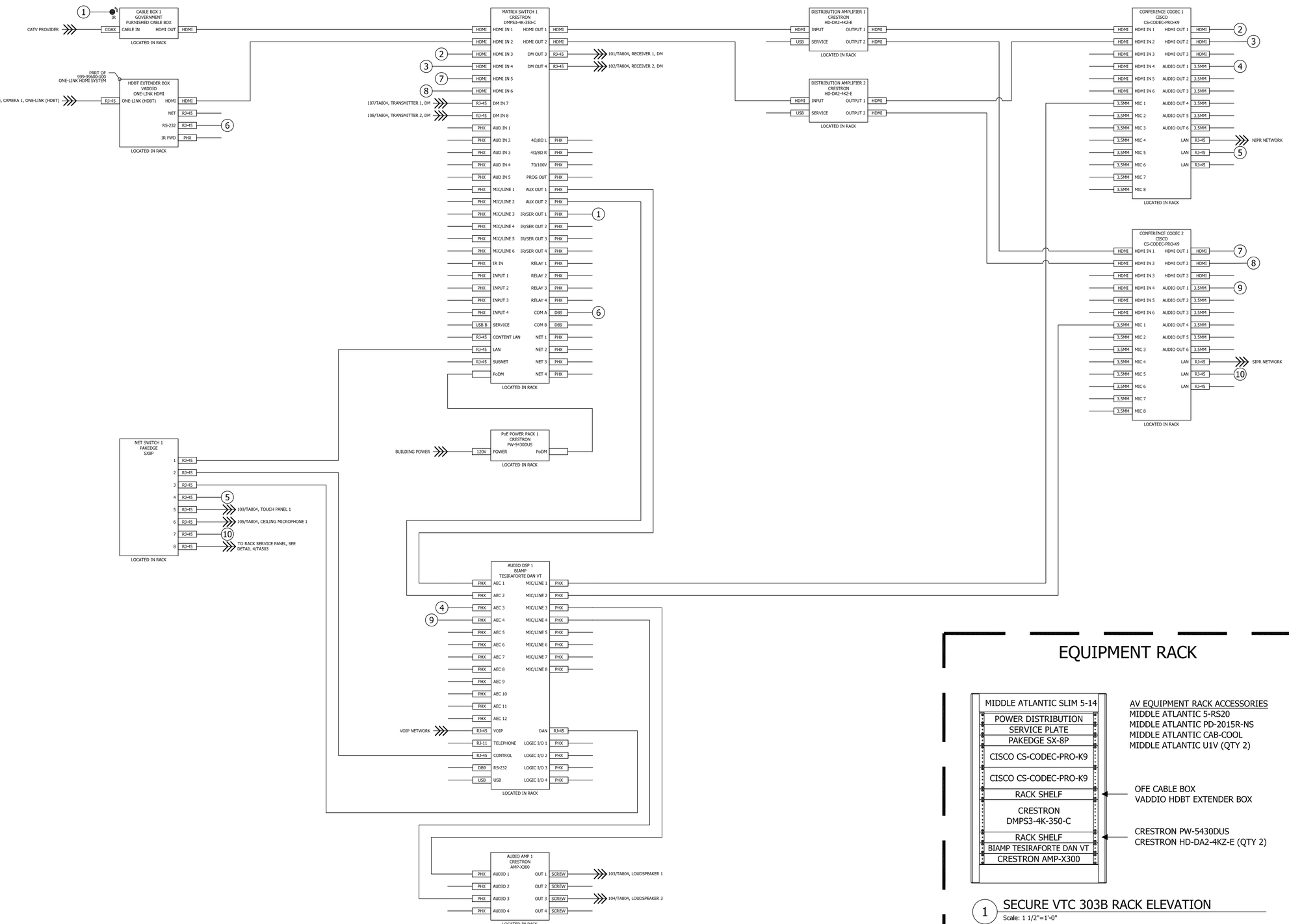

EQUIPMENT RACK

AV EQUIPMENT RACK ACCESSORIES
MIDDLE ATLANTIC 5-RS20
MIDDLE ATLANTIC PD-2015R-NS
MIDDLE ATLANTIC CAB-COOL
MIDDLE ATLANTIC U1V (QTY 2)

OFE CABLE BOX
VADDIO HDBT EXTENDER BOX

CRESTRON PW-5430DUS
CRESTRON HD-DA2-4KZ-E (QTY 2)

1 SECURE VTC 303B RACK ELEVATION
Scale: 1 1/2"=1'-0"

STM	DESCRIPTION	DATE	APPR

NAVFAC

PRELIMINARY
NOT FOR CONSTRUCTION

SEAL

RQ Jordan COMPANY – A JOINT VENTURE –

Michael Baker INTERNATIONAL
100 AIRSIDE DRIVE
MOON TOWNSHIP, PA 15108
A/E INFO

APPROVED

FOR COMMANDER NAVFAC

ACTIVITY
MARINE CORPS BASE
CAMP LEJEUNE

SATISFACTORY TO DATE DD/MM/YY

DES AS	DRW AV	CHK BM
PM	XXX	
BRANCH MANAGER	XXX	
CHIEF ENG/ARCH	XXX	
FIRE PROTECTION	XXX	

DEPARTMENT OF THE NAVY
NAVAL FACILITIES ENGINEERING COMMAND
ROICC FLORENCE CAMP LEJEUNE
NAVAL FACILITIES ENGINEERING COMMAND ~ MID-ATLANTIC
JACKSONVILLE, NC
MCB CAMP LEJEUNE
JACKSONVILLE, NC
P1338F II MEF SIMULATION/TRAINING CENTER
REPLACEMENT
SECURE VTC 303B SYSTEM DRAWING

SCALE: NTS
EPROJECT NO.:
CONSTR. CONTR. NO.
N40085-20-C-0059
NAVFAC DRAWING NO.
SHEET OF

TA805

DP2 SUBMISSION – P1338 BUILDING RE-FINAL SUBMISSION

PLOTTED: 5/19/2021 3:26:30 PM

FILE NAME: BIM 360://MIF PACKAGE 3/P1338_MEF SIM CTR-1590892-T.rvt

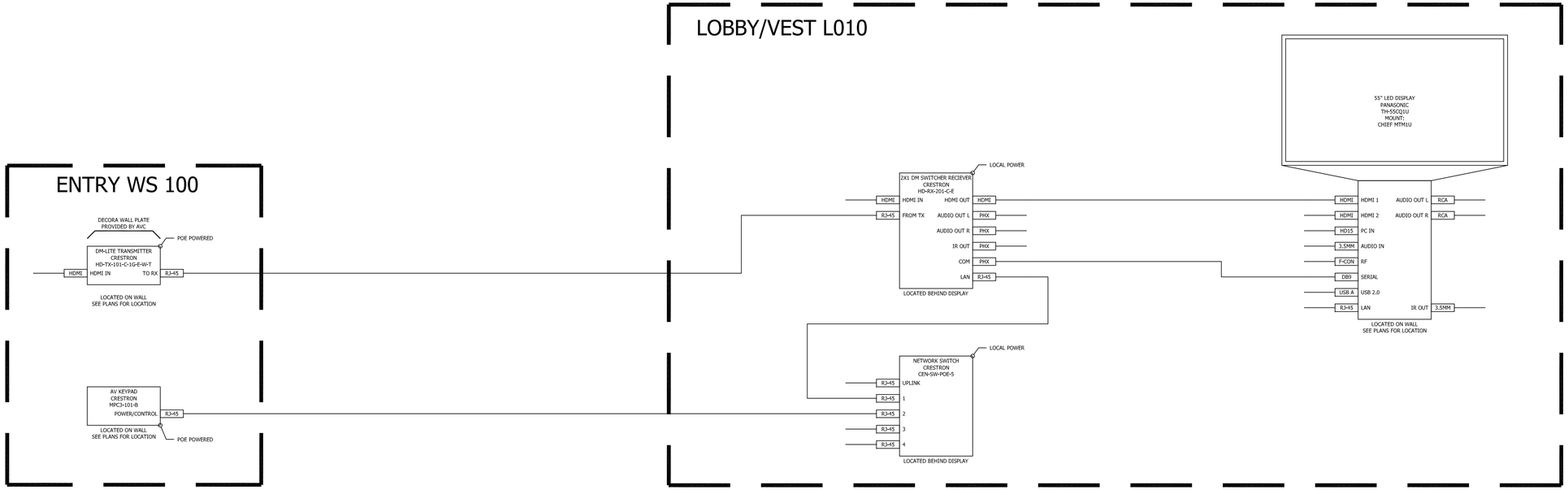

STM	DESCRIPTION	DATE	APPR

NAVFAC

PRELIMINARY
NOT FOR CONSTRUCTION

SEAL

RQ Jordan COMPANY
- A JOINT VENTURE -

Michael Baker
INTERNATIONAL
100 AIRSIDE DRIVE
MOON TOWNSHIP, PA 15108
A/E INFO

APPROVED

FOR COMMANDER NAVFAC

ACTIVITY
MARINE CORPS BASE
CAMP LEJEUNE

SATISFACTORY TO DATE DD/MM/YY

DES AS	DRW AV	CHK BM
PM	XXX	
BRANCH MANAGER	XXX	
CHIEF ENG/ARCH	XXX	
FIRE PROTECTION	XXX	

DEPARTMENT OF THE NAVY
NAVAL FACILITIES ENGINEERING COMMAND
NAVAL FACILITIES ENGINEERING COMMAND ~ MID-ATLANTIC
ROICC FLORENCE CAMP LEJEUNE
JACKSONVILLE, NC
MCB CAMP LEJEUNE
JACKSONVILLE, NC
P1338F II MEF SIMULATION/TRAINING CENTER
REPLACEMENT
LOBBY/VEST L010 SYSTEM DRAWING

SCALE: NTS
EPROJECT NO.:
CONSTR. CONTR. NO.
N40085-20-C-0059
NAVFAC DRAWING NO.
SHEET OF

TA806

DP2 SUBMISSION – P1338 BUILDING RE-FINAL SUBMISSION

PLOTTED: 5/19/2021 3:26:30 PM

FILE NAME: BIM 360://HF PACKAGE 3/P1338_MEF SIM CTR-1590892-T.rvt

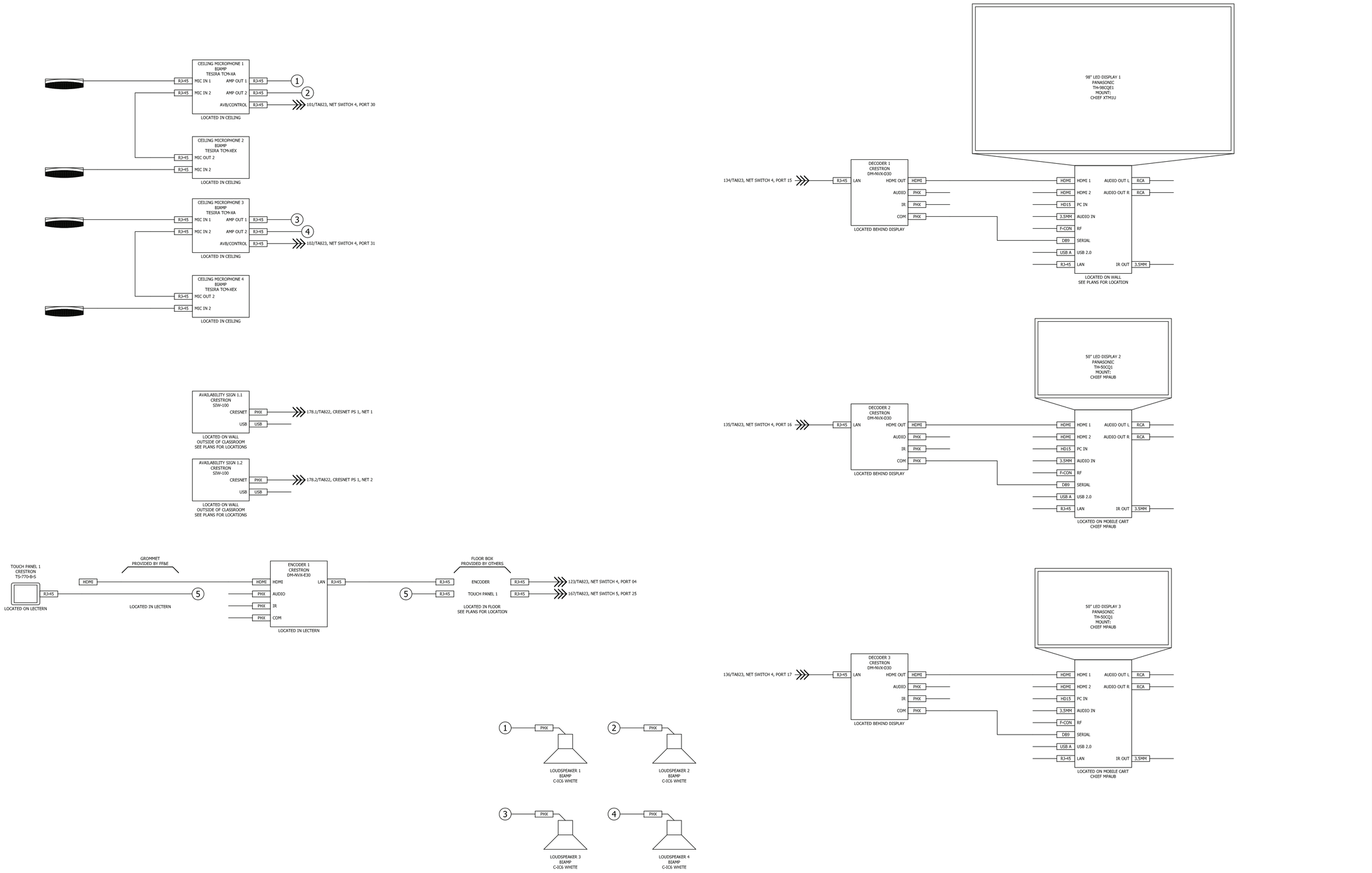

STM	DESCRIPTION	DATE	APPR

NAVFAC

PRELIMINARY
NOT FOR CONSTRUCTION

SEAL

RQ Jordan COMPANY ~ A JOINT VENTURE ~

Michael Baker INTERNATIONAL

100 AIRSIDE DRIVE
MOON TOWNSHIP, PA 15108

A/E INFO

APPROVED

FOR COMMANDER NAVFAC

ACTIVITY
MARINE CORPS BASE
CAMP LEJEUNE

SATISFACTORY TO DATE DD/MM/YY

DES AS | DRW AV | CHK BM

PM	XXX
BRANCH MANAGER	XXX
CHIEF ENG/ARCH	XXX
FIRE PROTECTION	XXX

DEPARTMENT OF THE NAVY
NAVAL FACILITIES ENGINEERING COMMAND
ROICC FLORENCE CAMP LEJEUNE
MCB CAMP LEJEUNE

NAVAL FACILITIES ENGINEERING COMMAND ~ MID-ATLANTIC
JACKSONVILLE, NC

JACKSONVILLE, NC
P1338F II MEF SIMULATION/TRAINING CENTER
REPLACEMENT

SIMULATION CLASSROOM 200A SYSTEM DRAWING

SCALE: NTS

EPROJECT NO.:

CONSTR. CONTR. NO.
N40085-20-C-0059

NAVFAC DRAWING NO.

SHEET OF

TA807

DP2 SUBMISSION – P1338 BUILDING PRE-FINAL SUBMISSION

PLOTTED: 5/19/2021 3:26:30 PM

FILE NAME: BIM 360://HF PACKAGE 3/P1338_MEF SIM CTR-1590/892-T.rvt

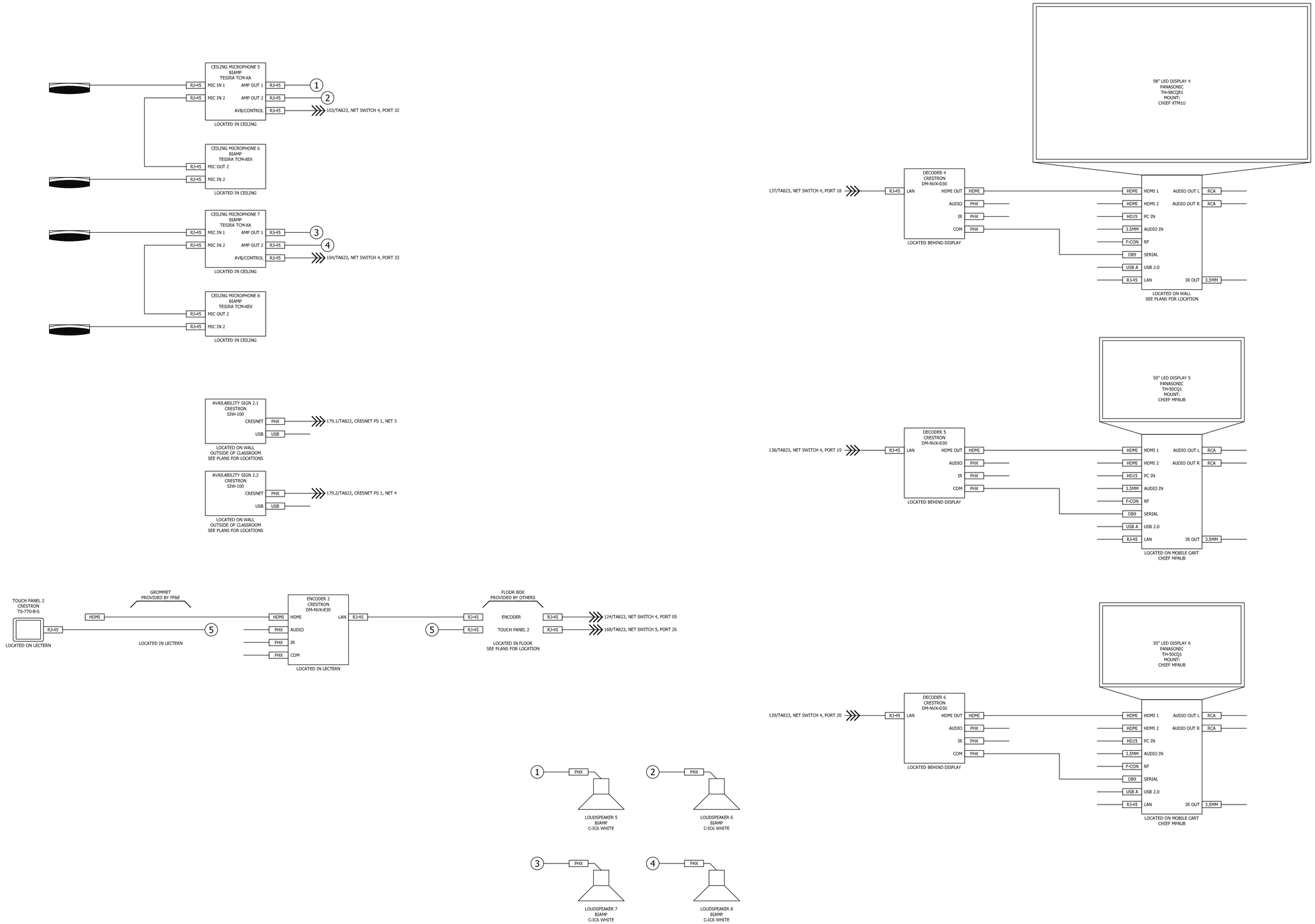

STM	DESCRIPTION	DATE	APPR

NAVFAC

PRELIMINARY
NOT FOR CONSTRUCTION

SEAL

RQ | W.M. Jordan COMPANY — A JOINT VENTURE —

Michael Baker INTERNATIONAL
100 AIRSIDE DRIVE
MOON TOWNSHIP, PA 15108

A/E INFO

APPROVED

FOR COMMANDER NAVFAC

ACTIVITY
MARINE CORPS BASE
CAMP LEJEUNE

SATISFACTORY TO DATE DD/MM/YY

DES AS	DRW AV	CHK BM	
PM	XXX		
BRANCH MANAGER	XXX		
CHIEF ENG/ARCH	XXX		
FIRE PROTECTION	XXX		

DEPARTMENT OF THE NAVY
NAVAL FACILITIES ENGINEERING COMMAND
NAVAL FACILITIES ENGINEERING COMMAND – MID-ATLANTIC
RO/CC FLORENCE CAMP LEJEUNE
JACKSONVILLE, NC
MCB CAMP LEJEUNE
JACKSONVILLE, NC
P1338F II MEF SIMULATION/TRAINING CENTER REPLACEMENT
SIMULATION CLASSROOM 200B SYSTEM DRAWING

SCALE: NTS
EPROJECT NO.:
CONSTR. CONTR. NO.
N40085-20-C-0059
NAVFAC DRAWING NO.
SHEET OF

TA808

DP2 SUBMISSION – P1338 BUILDING RE-FINAL SUBMISSION

PLOTTED: 5/19/2021 3:26:30 PM

FILE NAME: BIM 360://HF PACKAGE 3/P1338_MEF SIM CTR-1590892-T.rvt

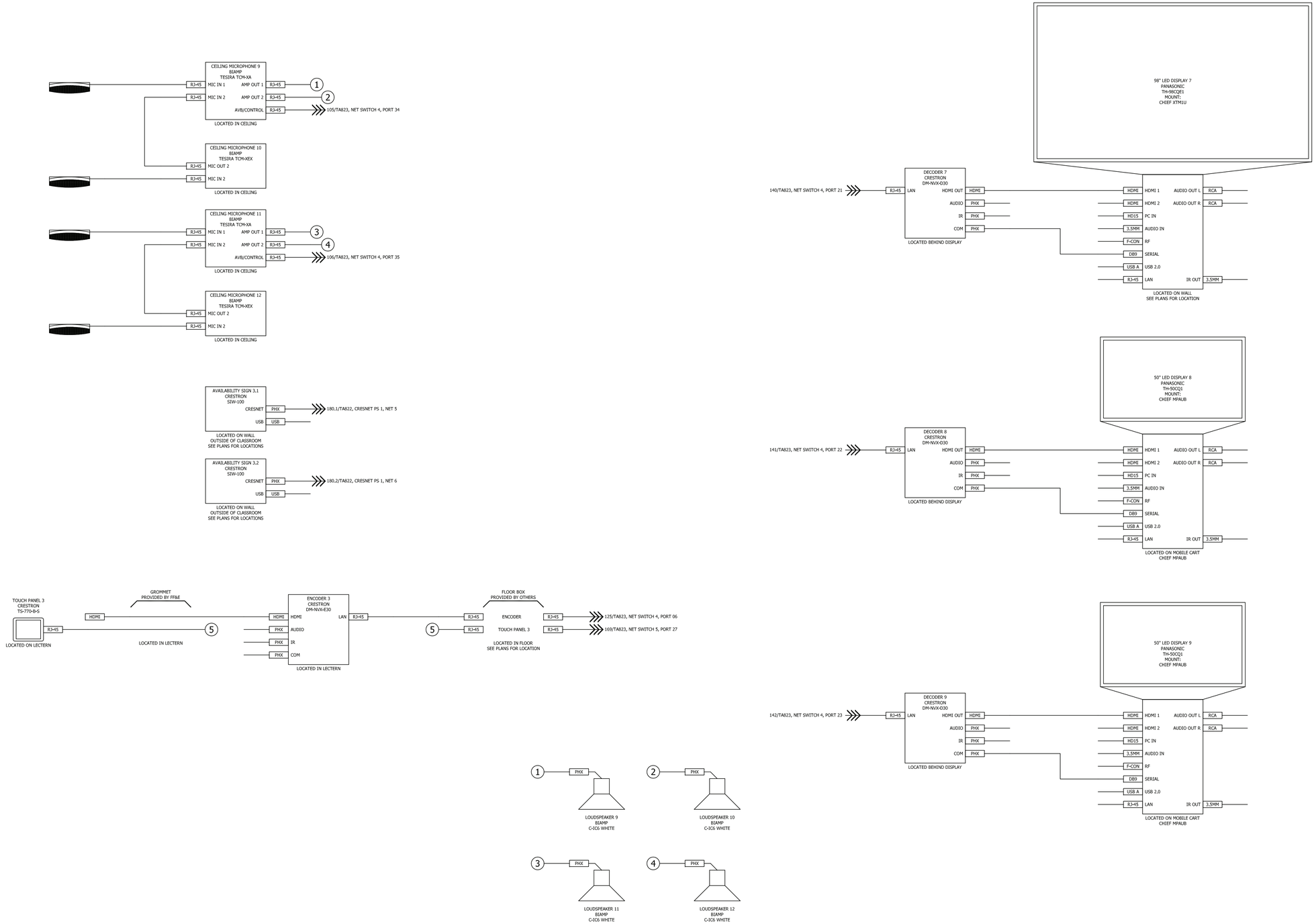

STM	DESCRIPTION	DATE	APPR

NAVFAC

PRELIMINARY
NOT FOR CONSTRUCTION

SEAL

RQ — W.M. Jordan COMPANY — A JOINT VENTURE —

Michael Baker INTERNATIONAL
100 AIRSIDE DRIVE
MOON TOWNSHIP, PA 15108
A/E INFO

APPROVED

FOR COMMANDER NAVFAC

ACTIVITY
MARINE CORPS BASE
CAMP LEJEUNE

SATISFACTORY TO DATE DD/MM/YY

DES AS | DRW AV | CHK BM

PM	XXX
BRANCH MANAGER	XXX
CHIEF ENG/ARCH	XXX
FIRE PROTECTION	XXX

DEPARTMENT OF THE NAVY
NAVAL FACILITIES ENGINEERING COMMAND
ROICC FLORENCE CAMP LEJEUNE
MCB CAMP LEJEUNE

NAVAL FACILITIES ENGINEERING COMMAND ~ MID-ATLANTIC
JACKSONVILLE, NC

JACKSONVILLE, NC

P1338F II MEF SIMULATION/TRAINING CENTER
REPLACEMENT

SIMULATION CLASSROOM 200C SYSTEM DRAWING

SCALE: NTS
EPROJECT NO.:
CONSTR. CONTR. NO.
N40085-20-C-0059
NAVFAC DRAWING NO.
SHEET OF

TA809

DP2 SUBMISSION – P1338 BUILDING PRE-FINAL SUBMISSION

PLOTTED: 5/19/2021 3:26:30 PM

FILE NAME: BIM 360://HF PACKAGE 3/P1338_MEF SIM CTR-1590892-T.rvt

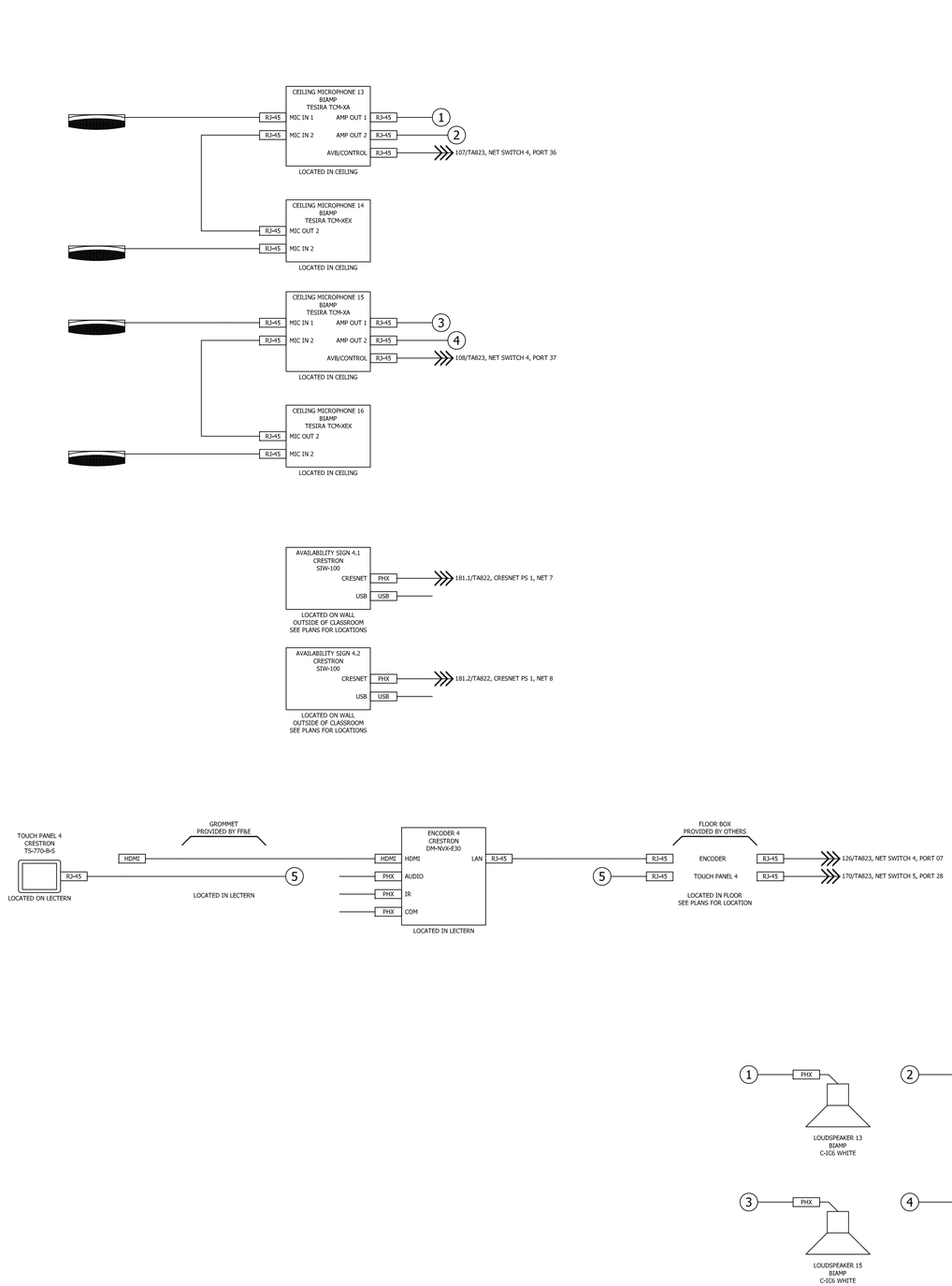

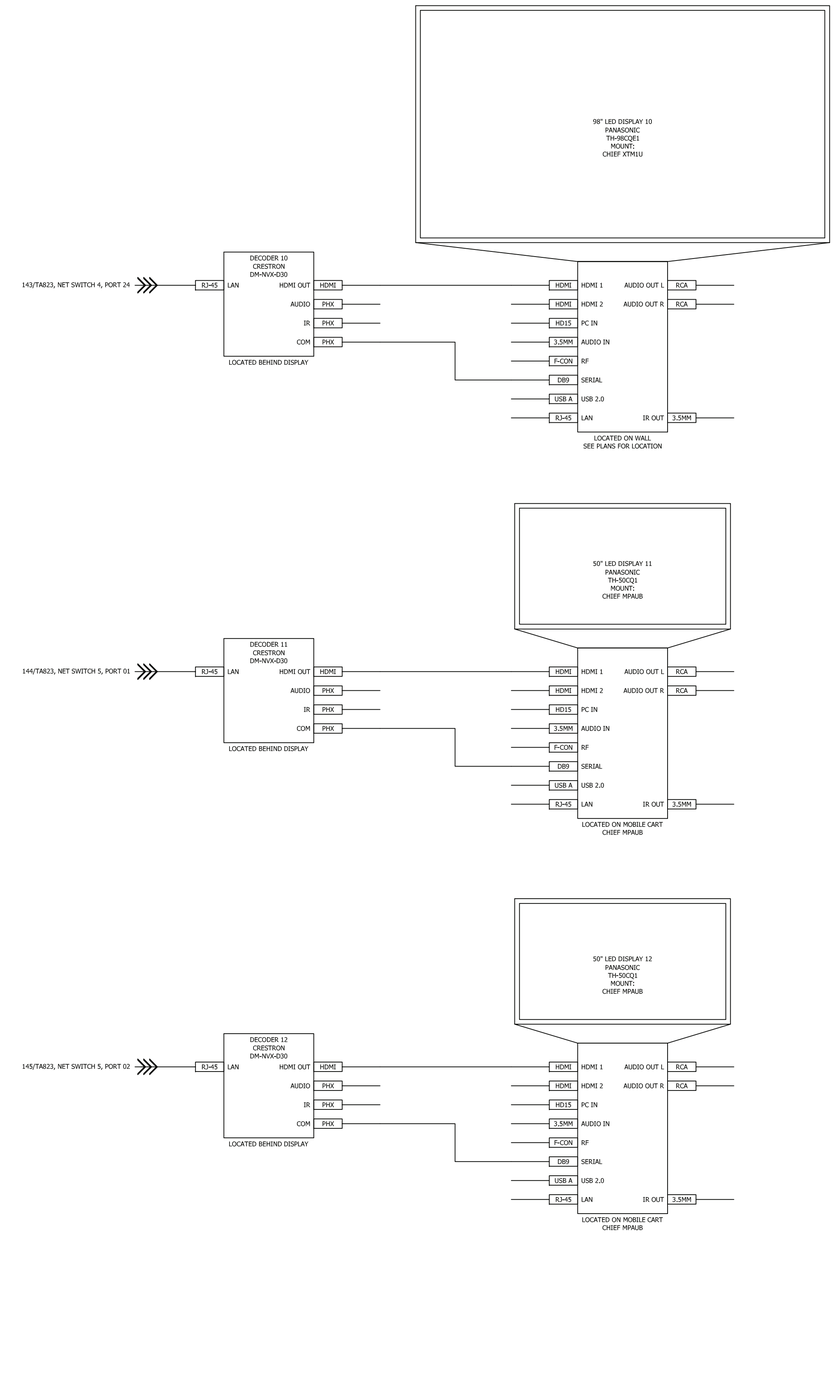

STM	DESCRIPTION	DATE	APPR

NAVFAC

PRELIMINARY
NOT FOR CONSTRUCTION

SEAL

RQ Jordan COMPANY — A JOINT VENTURE —

Michael Baker INTERNATIONAL
100 AIRSIDE DRIVE
MOON TOWNSHIP, PA 15108
A/E INFO

APPROVED

FOR COMMANDER NAVFAC

ACTIVITY
MARINE CORPS BASE
CAMP LEJEUNE

SATISFACTORY TO DATE DD/MM/YY

DES AS DRW AV CHK BM
PM XXX
BRANCH MANAGER XXX
CHIEF ENG/ARCH XXX
FIRE PROTECTION XXX

DEPARTMENT OF THE NAVY
NAVAL FACILITIES ENGINEERING COMMAND
ROICC FLORENCE CAMP LEJEUNE
MCB CAMP LEJEUNE

NAVAL FACILITIES ENGINEERING COMMAND ~ MID-ATLANTIC
JACKSONVILLE, NC

JACKSONVILLE, NC
P1338F II MEF SIMULATION/TRAINING CENTER
REPLACEMENT

SIMULATION CLASSROOM 300A SYSTEM DRAWING

SCALE: NTS
EPROJECT NO.:
CONSTR. CONTR. NO.
N40085-20-C-0059
NAVFAC DRAWING NO.
SHEET OF

TA810

DP2 SUBMISSION – P1338 BUILDING PRE-FINAL SUBMISSION

PLOTTED: 5/19/2021 3:26:30 PM

FILE NAME: BIM 360:/HF PACKAGE 3/P1338_MEF SIM CTR-1590892-T.rvt

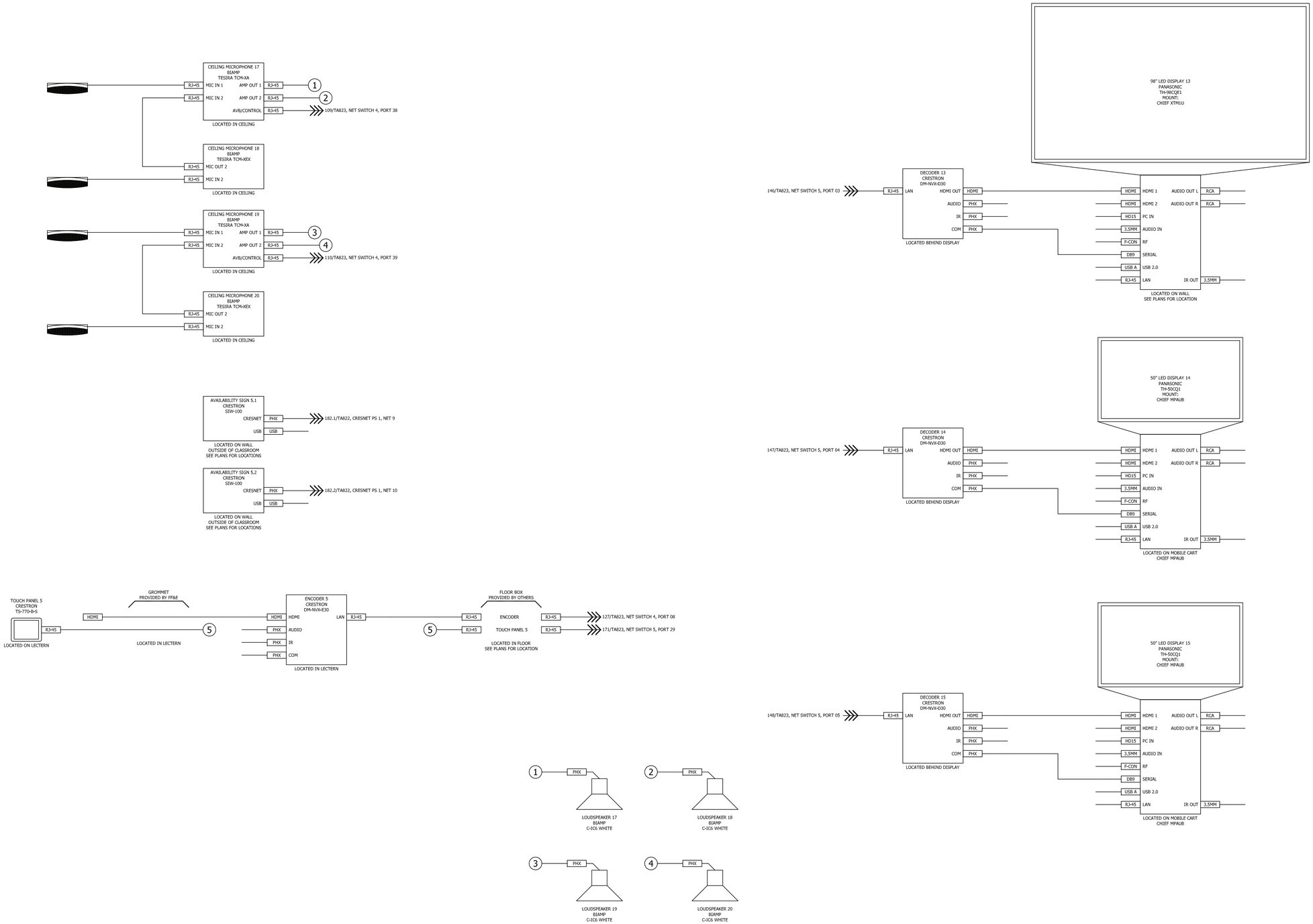

STM	DESCRIPTION	DATE	APPR

NAVFAC

PRELIMINARY
NOT FOR CONSTRUCTION

SEAL

RQ Jordan COMPANY
- A JOINT VENTURE -

Michael Baker
INTERNATIONAL
100 AIRSIDE DRIVE
MOON TOWNSHIP, PA 15108

A/E INFO

APPROVED

FOR COMMANDER NAVFAC

ACTIVITY
MARINE CORPS BASE
CAMP LEJEUNE

SATISFACTORY TO DATE DD/MM/YY

DES AS	DRW AV	CHK BM	
PM	XXX		
BRANCH MANAGER	XXX		
CHIEF ENG/ARCH	XXX		
FIRE PROTECTION	XXX		

DEPARTMENT OF THE NAVY
NAVAL FACILITIES ENGINEERING COMMAND
NAVAL FACILITIES ENGINEERING COMMAND – MID-ATLANTIC
RO/CC FLORENCE CAMP LEJEUNE
JACKSONVILLE, NC
MCB CAMP LEJEUNE
JACKSONVILLE, NC
P1338F II MEF SIMULATION/TRAINING CENTER REPLACEMENT
SIMULATION CLASSROOM 300B SYSTEM DRAWING

SCALE: NTS
EPROJECT NO.:
CONSTR. CONTR. NO.
N40085-20-C-0059
NAVFAC DRAWING NO.
SHEET OF

TA811

DP2 SUBMISSION – P1338 BUILDING RE-FINAL SUBMISSION

PLOTTED: 5/19/2021 3:26:30 PM

FILE NAME: BIM 360://HF PACKAGE 3/P1338_MEF SIM CTR-1590892-T.rvt

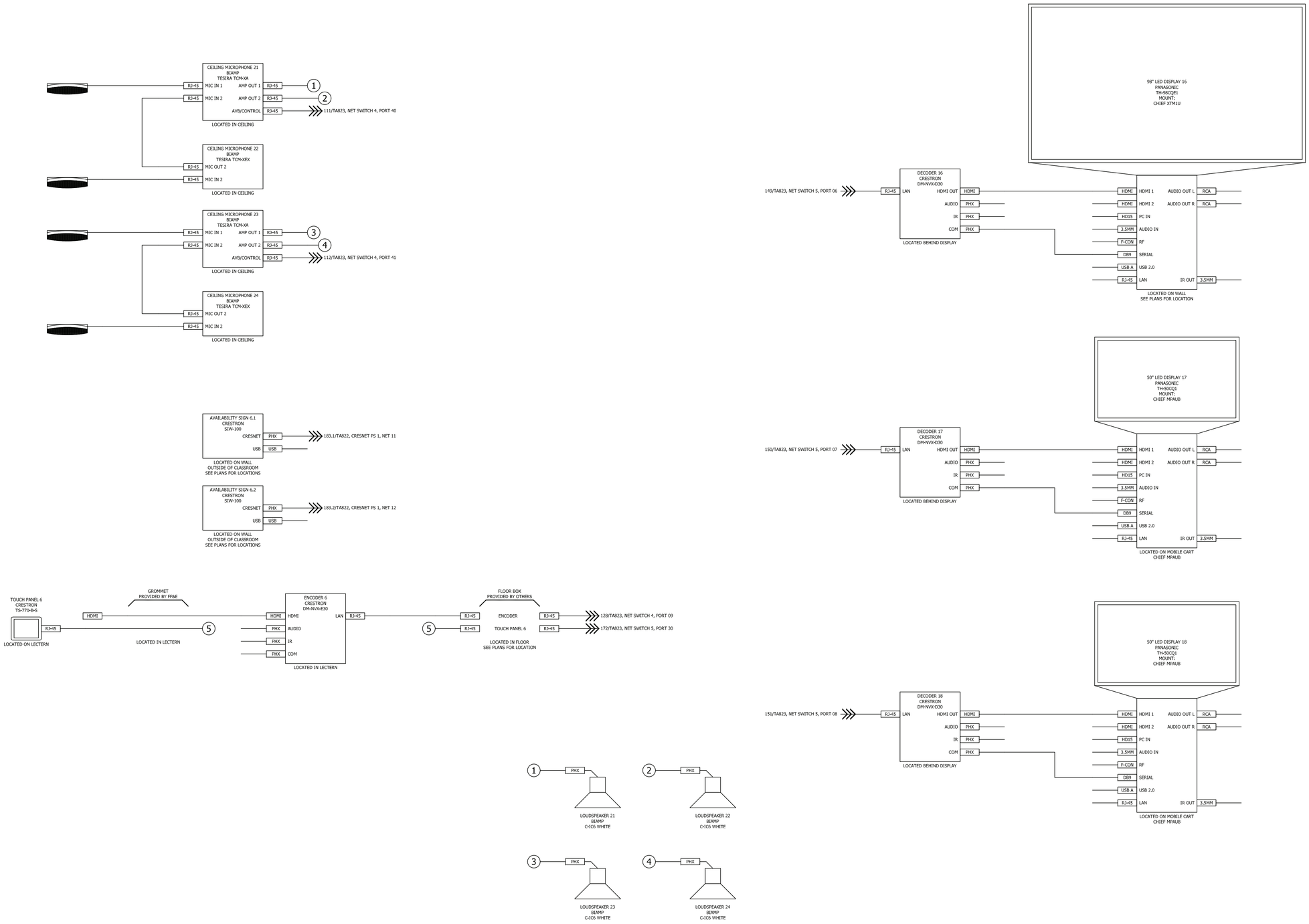

SYM	DESCRIPTION	DATE	APPR

NAVFAC

PRELIMINARY
NOT FOR CONSTRUCTION

SEAL

RQ — W.M. Jordan COMPANY — A JOINT VENTURE —

Michael Baker INTERNATIONAL
100 AIRSIDE DRIVE
MOON TOWNSHIP, PA 15108
A/E INFO

APPROVED

FOR COMMANDER NAVFAC

ACTIVITY
MARINE CORPS BASE
CAMP LEJEUNE

SATISFACTORY TO DATE DD/MM/YY

DES AS | DRW AV | CHK BM

PM	XXX
BRANCH MANAGER	XXX
CHIEF ENG/ARCH	XXX
FIRE PROTECTION	XXX

DEPARTMENT OF THE NAVY
NAVAL FACILITIES ENGINEERING COMMAND
ROICC FLORENCE CAMP LEJEUNE
MCB CAMP LEJEUNE

NAVAL FACILITIES ENGINEERING COMMAND ~ MID-ATLANTIC
JACKSONVILLE, NC

JACKSONVILLE, NC
P1338F II MEF SIMULATION/TRAINING CENTER
REPLACEMENT

SIMULATION CLASSROOM 300C SYSTEM DRAWING

SCALE: NTS

EPROJECT NO.:

CONSTR. CONTR. NO.
N40085-20-C-0059

NAVFAC DRAWING NO.

SHEET OF

TA812

DP2 SUBMISSION – P1338 BUILDING PRE-FINAL SUBMISSION

PLOTTED: 5/19/2021 3:26:30 PM

FILE NAME: BIM 360://HF PACKAGE 3/P1338_MEF SIM CTR-1590/892-T.rvt

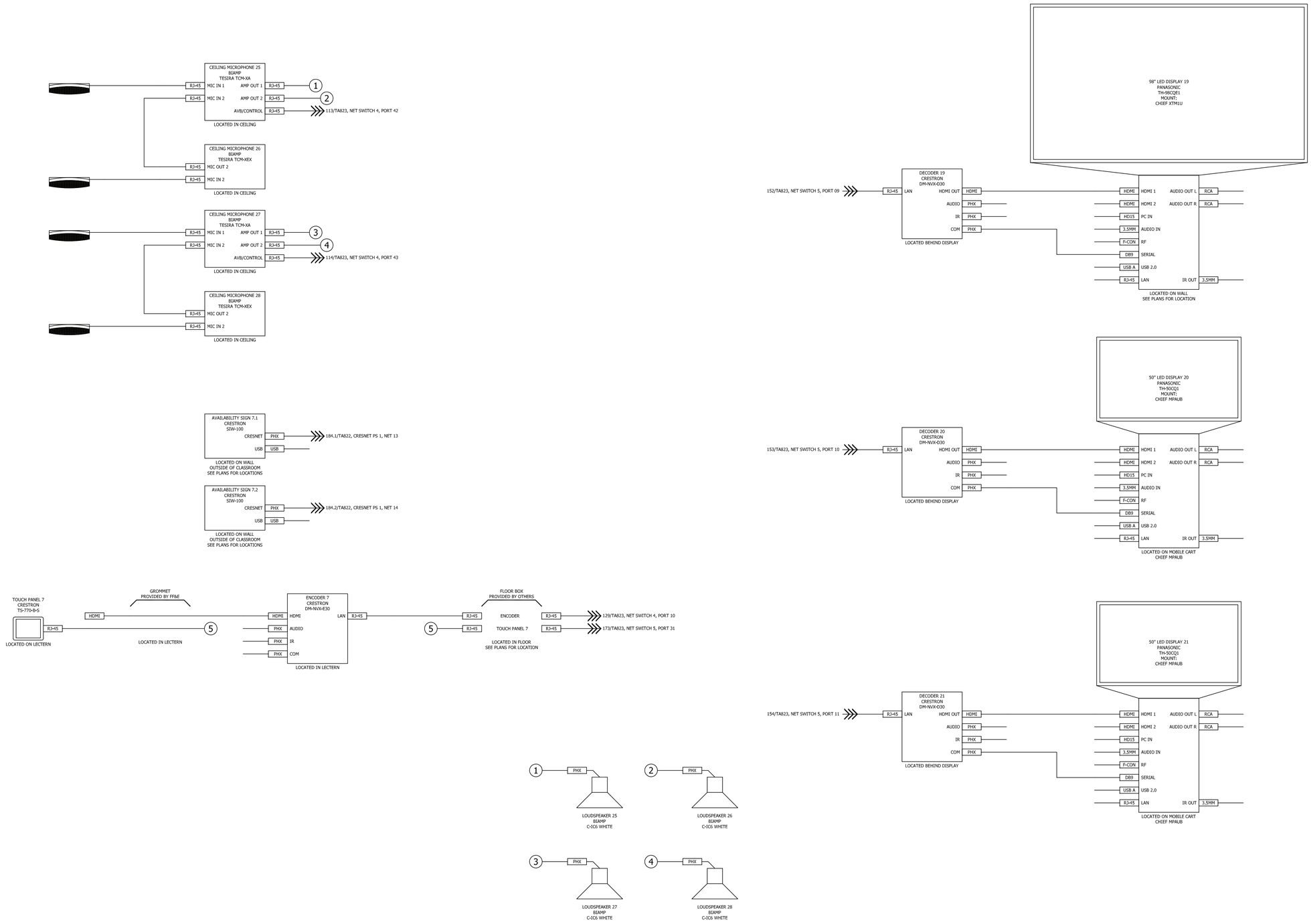

STM	DESCRIPTION	DATE	APPR

NAVFAC

PRELIMINARY
NOT FOR CONSTRUCTION

SEAL

RQ — Jordan Company — A JOINT VENTURE

Michael Baker INTERNATIONAL
100 AIRSIDE DRIVE
MOON TOWNSHIP, PA 15108
A/E INFO

APPROVED

FOR COMMANDER NAVFAC

ACTIVITY
MARINE CORPS BASE
CAMP LEJEUNE

SATISFACTORY TO DATE DD/MM/YY

DES AS	DRW AV	CHK BM	
PM	XXX		
BRANCH MANAGER	XXX		
CHIEF ENG/ARCH	XXX		
FIRE PROTECTION	XXX		

DEPARTMENT OF THE NAVY
NAVAL FACILITIES ENGINEERING COMMAND
ROICC FLORENCE CAMP LEJEUNE

NAVAL FACILITIES ENGINEERING COMMAND ~ MID-ATLANTIC
JACKSONVILLE, NC

MCB CAMP LEJEUNE
JACKSONVILLE, NC

P1338F II MEF SIMULATION/TRAINING CENTER REPLACEMENT

SIMULATION CLASSROOM 300X SYSTEM DRAWING

SCALE: NTS
EPROJECT NO.:
CONSTR. CONTR. NO.
N40085-20-C-0059
NAVFAC DRAWING NO.
SHEET OF

TA813

DP2 SUBMISSION – P1338 BUILDING PRE-FINAL SUBMISSION

PLOTTED: 5/19/2021 3:26:30 PM

FILE NAME: BIM 360://HF PACKAGE 3/P1338_MEF SIM CTR-1590/892-T.rvt

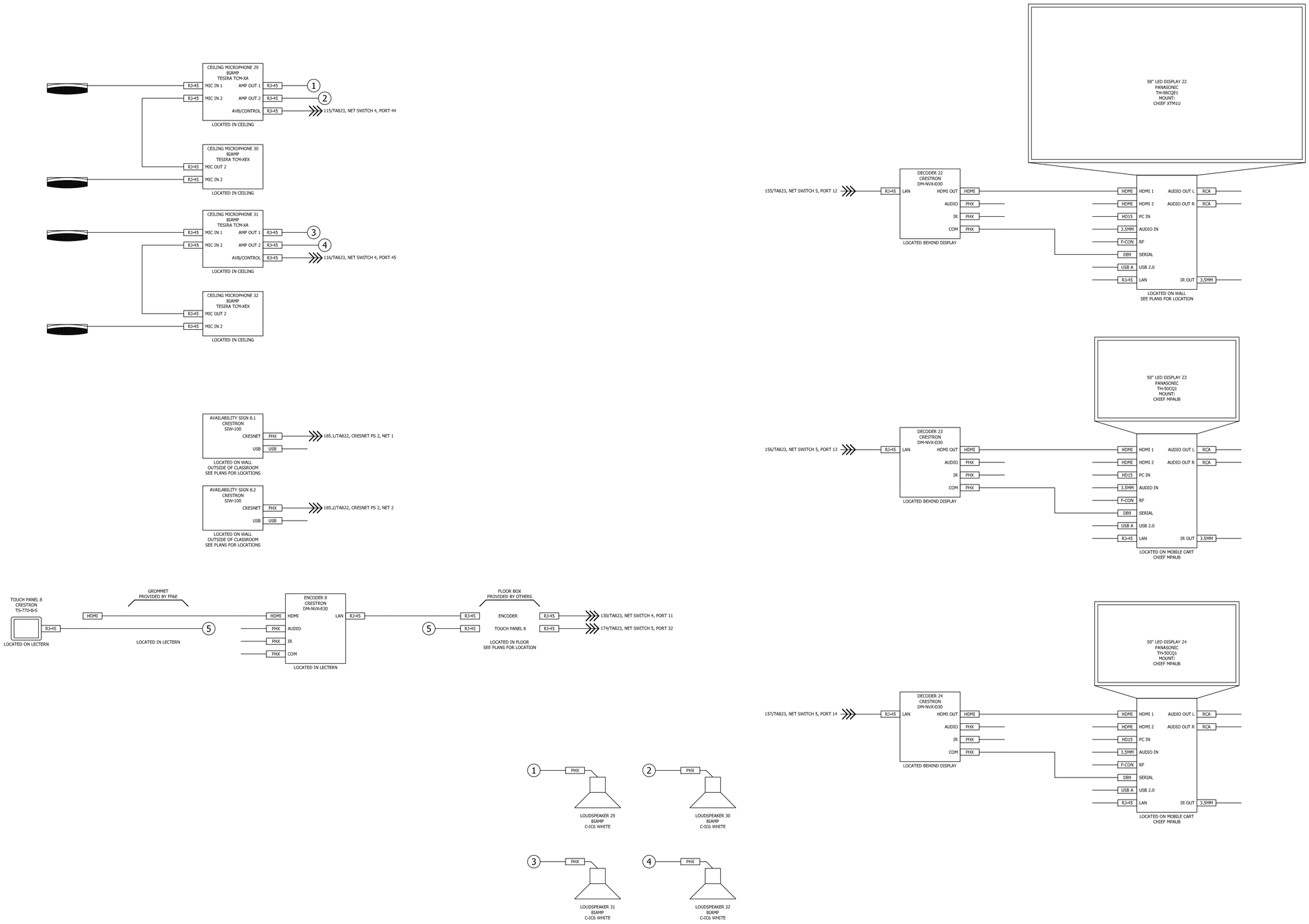

STM	DESCRIPTION	DATE	APPR

NAVFAC

PRELIMINARY
NOT FOR CONSTRUCTION

SEAL

RQ Jordan COMPANY
- A JOINT VENTURE -

Michael Baker
INTERNATIONAL
100 AIRSIDE DRIVE
MOON TOWNSHIP, PA 15108
A/E INFO

APPROVED

FOR COMMANDER NAVFAC

ACTIVITY
MARINE CORPS BASE
CAMP LEJEUNE

SATISFACTORY TO DATE DD/MM/YY

DES AS	DRW AV	CHK BM
PM		XXX
BRANCH MANAGER		XXX
CHIEF ENG/ARCH		XXX
FIRE PROTECTION		XXX

DEPARTMENT OF THE NAVY
NAVAL FACILITIES ENGINEERING COMMAND
ROICC FLORENCE CAMP LEJEUNE

NAVAL FACILITIES ENGINEERING COMMAND ~ MID-ATLANTIC
JACKSONVILLE, NC

MCB CAMP LEJEUNE
JACKSONVILLE, NC

P1338F II MEF SIMULATION/TRAINING CENTER
REPLACEMENT

SIMULATION CLASSROOM 300Y SYSTEM DRAWING

SCALE: NTS
EPROJECT NO.:
CONSTR. CONTR. NO.
N40085-20-C-0059
NAVFAC DRAWING NO.
SHEET OF

TA814

DP2 SUBMISSION – P1338 BUILDING PRE-FINAL SUBMISSION

PLOTTED: 5/19/2021 3:26:30 PM

FILE NAME: BIM 360://HF PACKAGE 3/P1338_MEF SIM CTR-1590/892-T.rvt

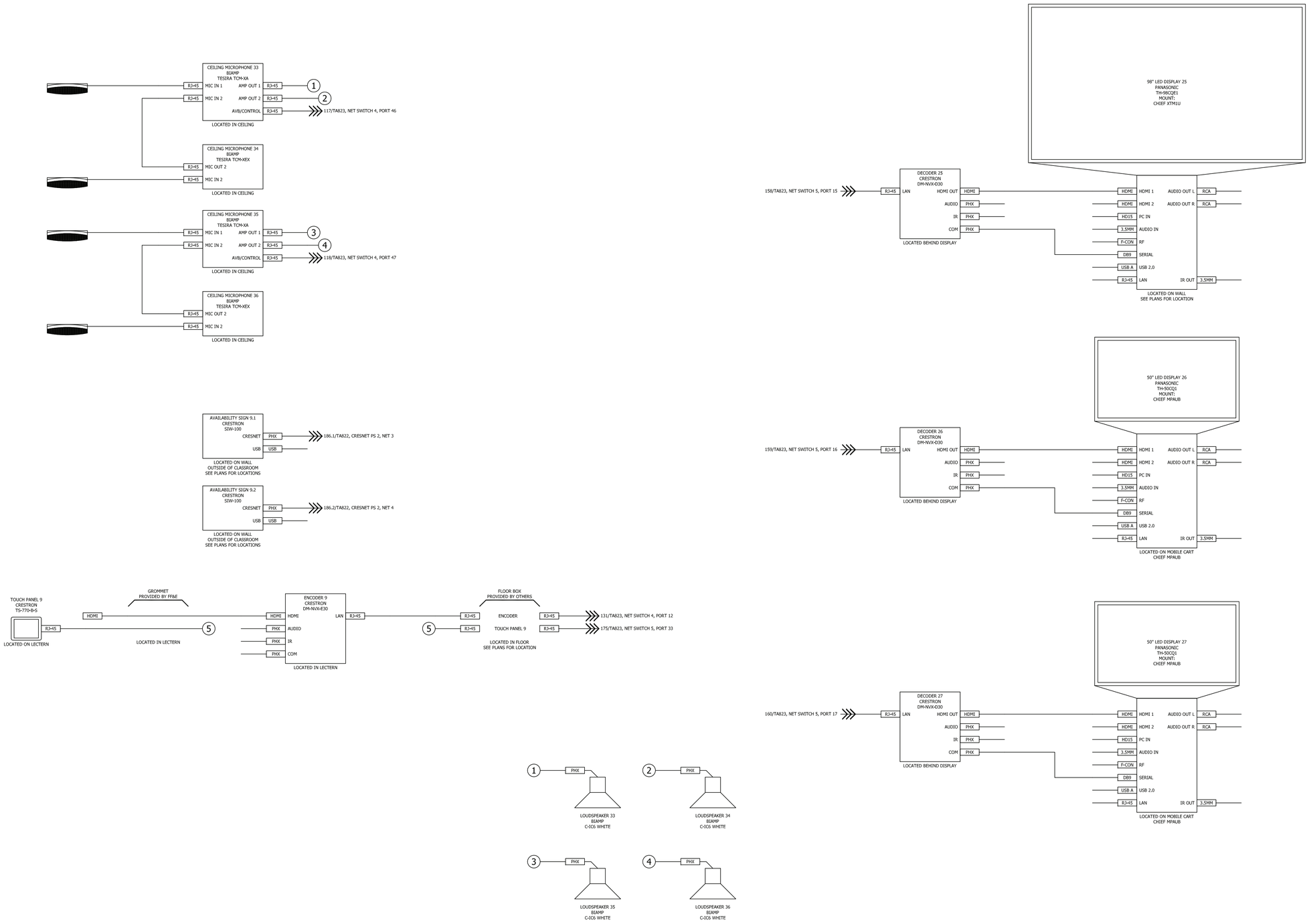

SYM	DESCRIPTION	DATE	APPR

NAVFAC

PRELIMINARY
NOT FOR CONSTRUCTION

SEAL

RQ — W.M. Jordan COMPANY — A JOINT VENTURE —

Michael Baker INTERNATIONAL
100 AIRSIDE DRIVE
MOON TOWNSHIP, PA 15108
A/E INFO

APPROVED

FOR COMMANDER NAVFAC

ACTIVITY
MARINE CORPS BASE
CAMP LEJEUNE

SATISFACTORY TO DATE DD/MM/YY

DES AS DRW AV CHK BM
PM XXX
BRANCH MANAGER XXX
CHIEF ENG/ARCH XXX
FIRE PROTECTION XXX

DEPARTMENT OF THE NAVY
NAVAL FACILITIES ENGINEERING COMMAND
ROICC FLORENCE CAMP LEJEUNE
MCB CAMP LEJEUNE

NAVAL FACILITIES ENGINEERING COMMAND ~ MID-ATLANTIC
JACKSONVILLE, NC

JACKSONVILLE, NC
P1338F II MEF SIMULATION/TRAINING CENTER
REPLACEMENT

SIMULATION CLASSROOM 300Z SYSTEM DRAWING

SCALE: NTS
EPROJECT NO.:
CONSTR. CONTR. NO.
N40085-20-C-0059
NAVFAC DRAWING NO.
SHEET OF

TA815

DP2 SUBMISSION – P1338 BUILDING PRE-FINAL SUBMISSION

PLOTTED: 5/19/2021 3:26:30 PM

FILE NAME: BIM 360://HF PACKAGE 3/P1338_MEF SIM CTR-1590/892-T.rvt

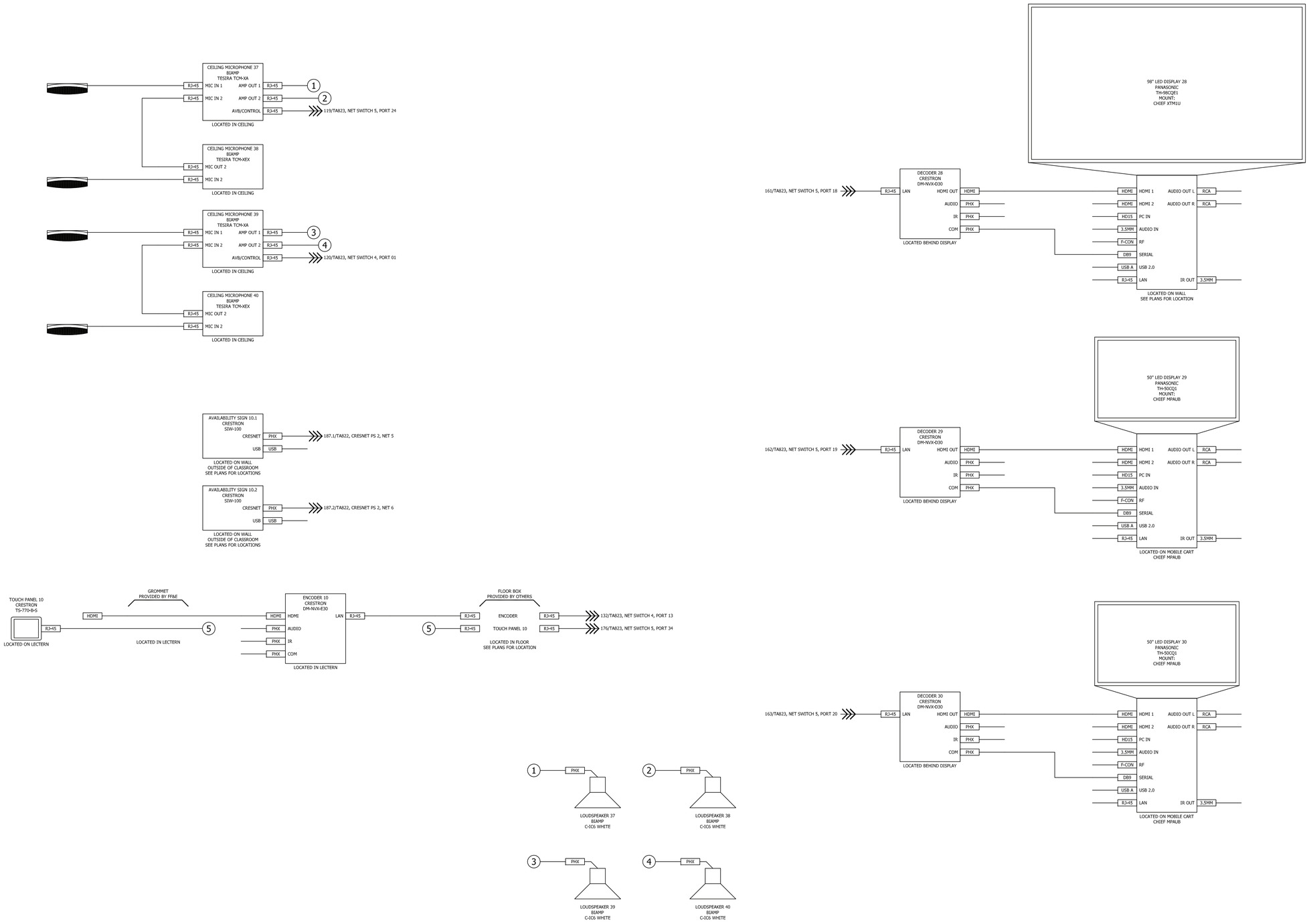

STM	DESCRIPTION	DATE	APPR

NAVFAC

PRELIMINARY
NOT FOR CONSTRUCTION

SEAL

RQ Jordan COMPANY – A JOINT VENTURE –

Michael Baker INTERNATIONAL

100 AIRSIDE DRIVE
MOON TOWNSHIP, PA 15108

A/E INFO

APPROVED

FOR COMMANDER NAVFAC

ACTIVITY
MARINE CORPS BASE
CAMP LEJEUNE

SATISFACTORY TO DATE DD/MM/YY

DES AS | DRW AV | CHK BM

PM	XXX
BRANCH MANAGER	XXX
CHIEF ENG/ARCH	XXX
FIRE PROTECTION	XXX

DEPARTMENT OF THE NAVY
NAVAL FACILITIES ENGINEERING COMMAND
ROICC FLORENCE CAMP LEJEUNE

NAVAL FACILITIES ENGINEERING COMMAND ~ MID-ATLANTIC
JACKSONVILLE, NC

MCB CAMP LEJEUNE
JACKSONVILLE, NC
P1338F II MEF SIMULATION/TRAINING CENTER REPLACEMENT

SIMULATION CLASSROOM 301A SYSTEM DRAWING

SCALE: NTS

EPROJECT NO.:

CONSTR. CONTR. NO.
N40085-20-C-0059

NAVFAC DRAWING NO.

SHEET OF

TA816

DP2 SUBMISSION – P1338 BUILDING PRE-FINAL SUBMISSION

PLOTTED: 5/19/2021 3:26:30 PM

FILE NAME: BIM 360://HF PACKAGE 3/P1338_MEF SIM CTR-1590/892-T.rvt

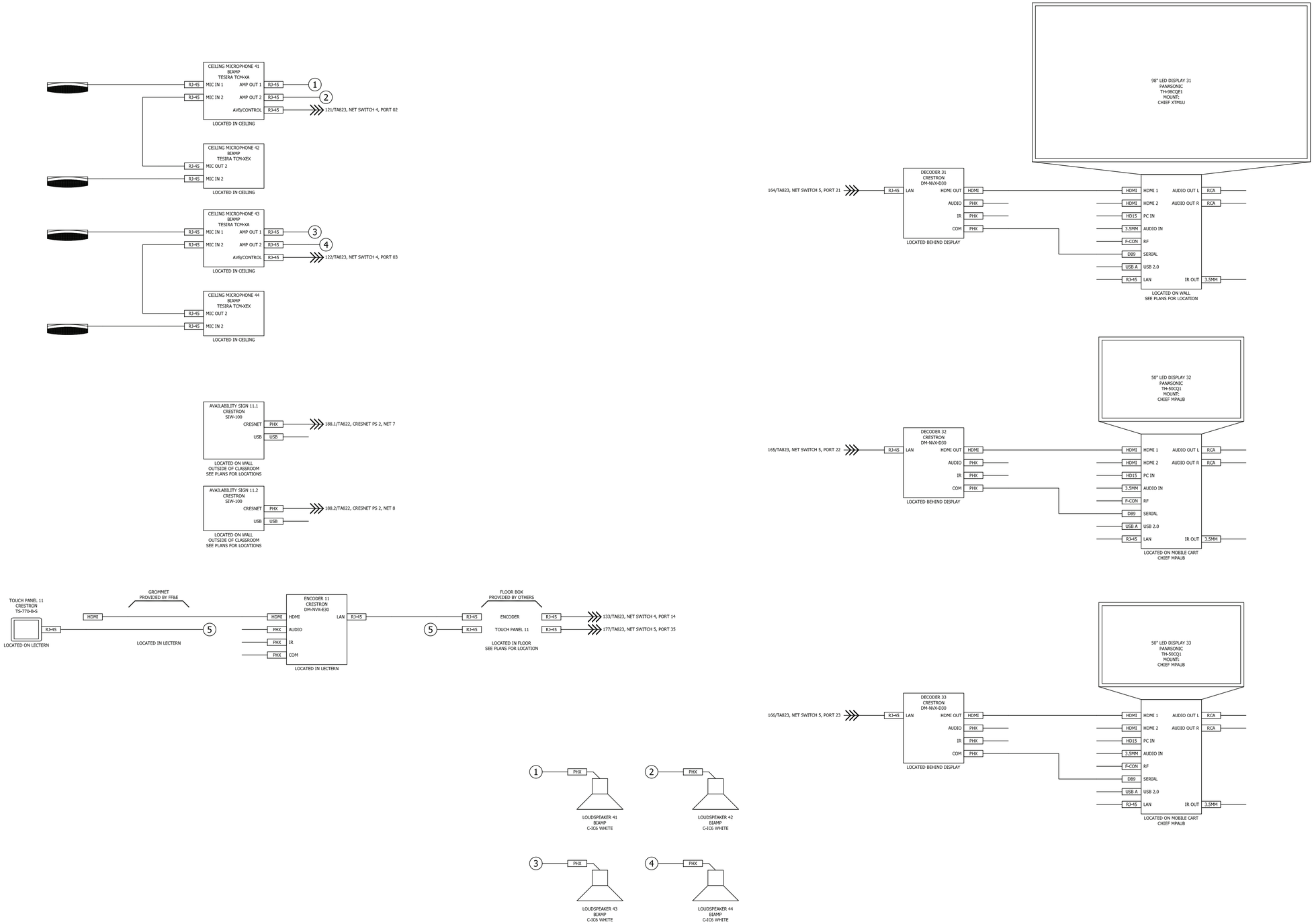

STM	DESCRIPTION	DATE	APPR

NAVFAC

PRELIMINARY
NOT FOR CONSTRUCTION

SEAL

RQ Jordan COMPANY — A JOINT VENTURE —

Michael Baker
INTERNATIONAL
100 AIRSIDE DRIVE
MOON TOWNSHIP, PA 15108
A/E INFO

APPROVED

FOR COMMANDER NAVFAC

ACTIVITY:
MARINE CORPS BASE
CAMP LEJEUNE

SATISFACTORY TO DATE DD/MM/YY

DES AS	DRW AV	CHK BM	
PM	XXX		
BRANCH MANAGER	XXX		
CHIEF ENG/ARCH	XXX		
FIRE PROTECTION	XXX		

DEPARTMENT OF THE NAVY
NAVAL FACILITIES ENGINEERING COMMAND
ROICC FLORENCE CAMP LEJEUNE
MCB CAMP LEJEUNE

NAVAL FACILITIES ENGINEERING COMMAND ~ MID-ATLANTIC
JACKSONVILLE, NC

JACKSONVILLE, NC
P1338F II MEF SIMULATION/TRAINING CENTER
REPLACEMENT

SIMULATION CLASSROOM 301B SYSTEM DRAWING

SCALE: NTS
EPROJECT NO.:
CONSTR. CONTR. NO.
N40085-20-C-0059
NAVFAC DRAWING NO.
SHEET OF

TA817

DP2 SUBMISSION – P1338 BUILDING PRE-FINAL SUBMISSION

PLOTTED: 5/19/2021 3:26:30 PM

FILE NAME: BIM 360://HF PACKAGE 3/P1338_MEF SIM CTR-1590892-T.rvt

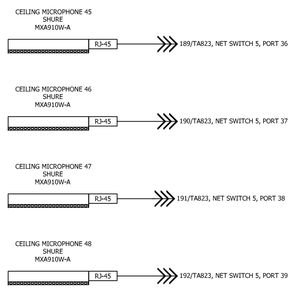

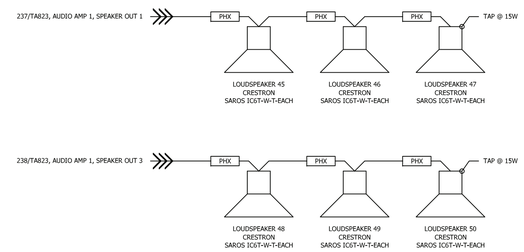

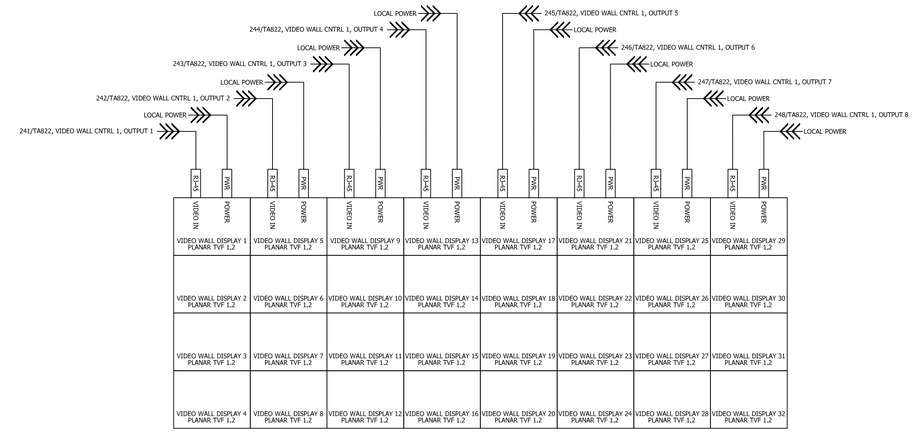

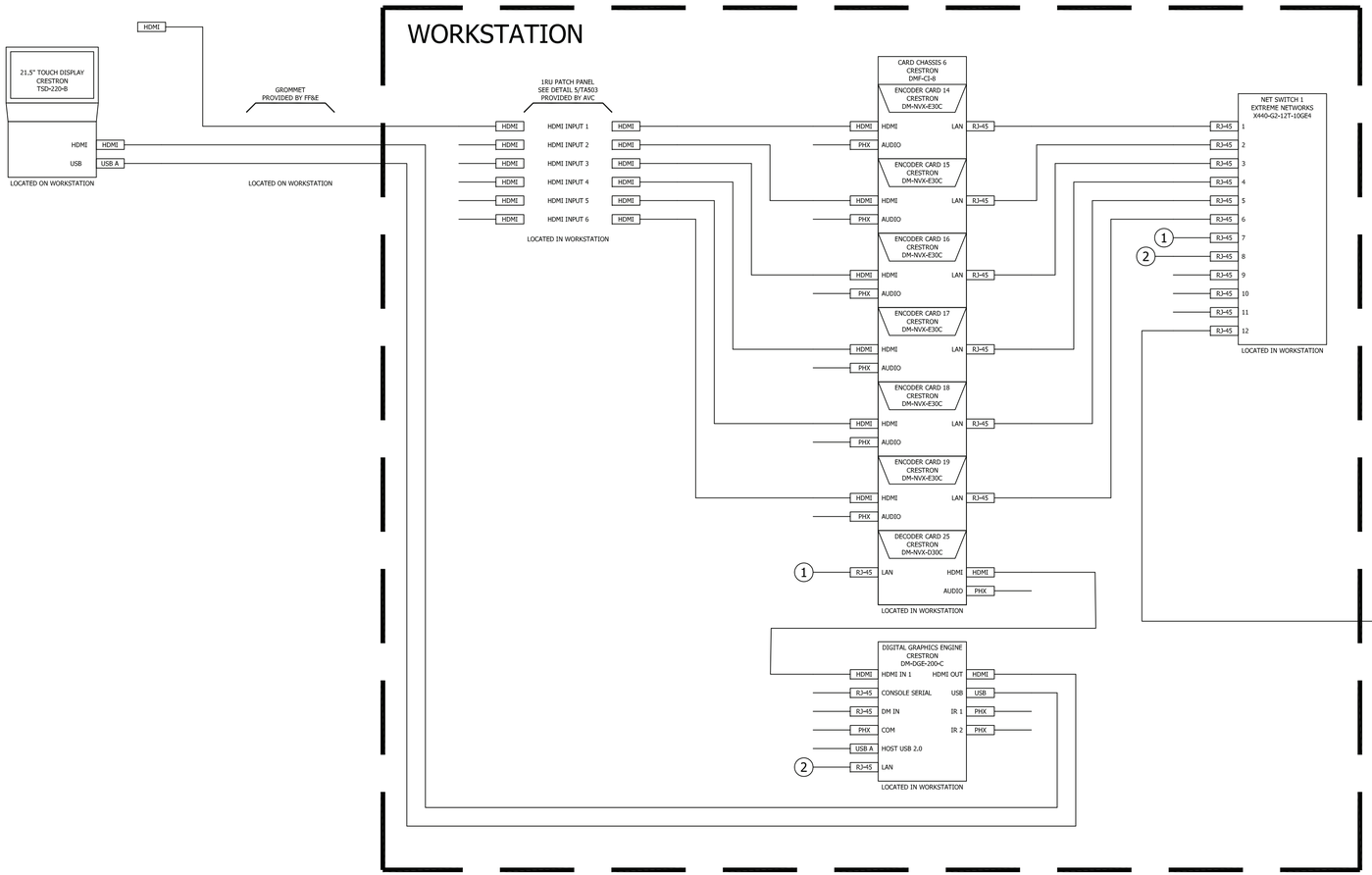

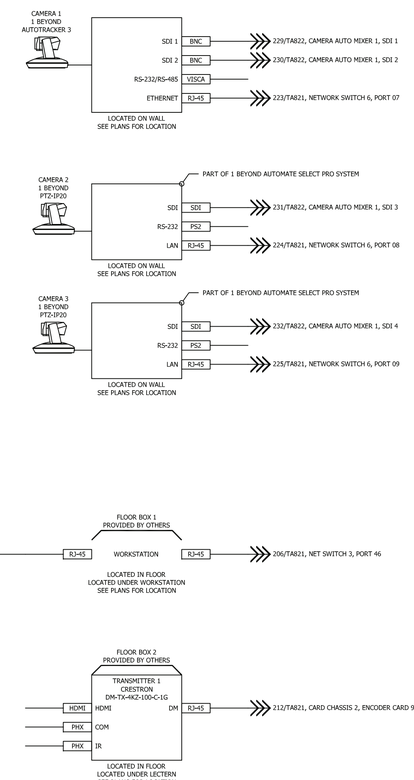

SYM	DESCRIPTION	DATE	APPR

NAVFAC

PRELIMINARY
NOT FOR CONSTRUCTION

SEAL

RQ Jordan COMPANY
A JOINT VENTURE

Michael Baker
INTERNATIONAL
100 AIRSIDE DRIVE
MOON TOWNSHIP, PA 15108
A/E INFO

APPROVED

FOR COMMANDER NAVFAC

ACTIVITY
MARINE CORPS BASE
CAMP LEJEUNE

SATISFACTORY TO DATE	DD/MM/YY		
DES AS	DRW AV	CHK BM	
PM	XXX		
BRANCH MANAGER	XXX		
CHIEF ENG/ARCH	XXX		
FIRE PROTECTION	XXX		

DEPARTMENT OF THE NAVY
NAVAL FACILITIES ENGINEERING COMMAND
ROICC FLORENCE CAMP LEJEUNE
NAVAL FACILITIES ENGINEERING COMMAND – MID-ATLANTIC
JACKSONVILLE, NC
MCB CAMP LEJEUNE
JACKSONVILLE, NC
P1338F II MEF SIMULATION/TRAINING CENTER REPLACEMENT
AUDITORIUM/ READY ROOM 201 SYSTEM DRAWING

SCALE: NTS
EPROJECT NO.:
CONSTR. CONTR. NO.
N40085-20-C-0059
NAVFAC DRAWING NO.
SHEET OF

TA818

DP2 SUBMISSION – P1338 BUILDING RE-FINAL SUBMISSION

PLOTTED: 5/19/2021 3:26:30 PM

FILE NAME: BIM 360://HF PACKAGE 3/P1338_MEF SIM CTR-1590892-Tr4

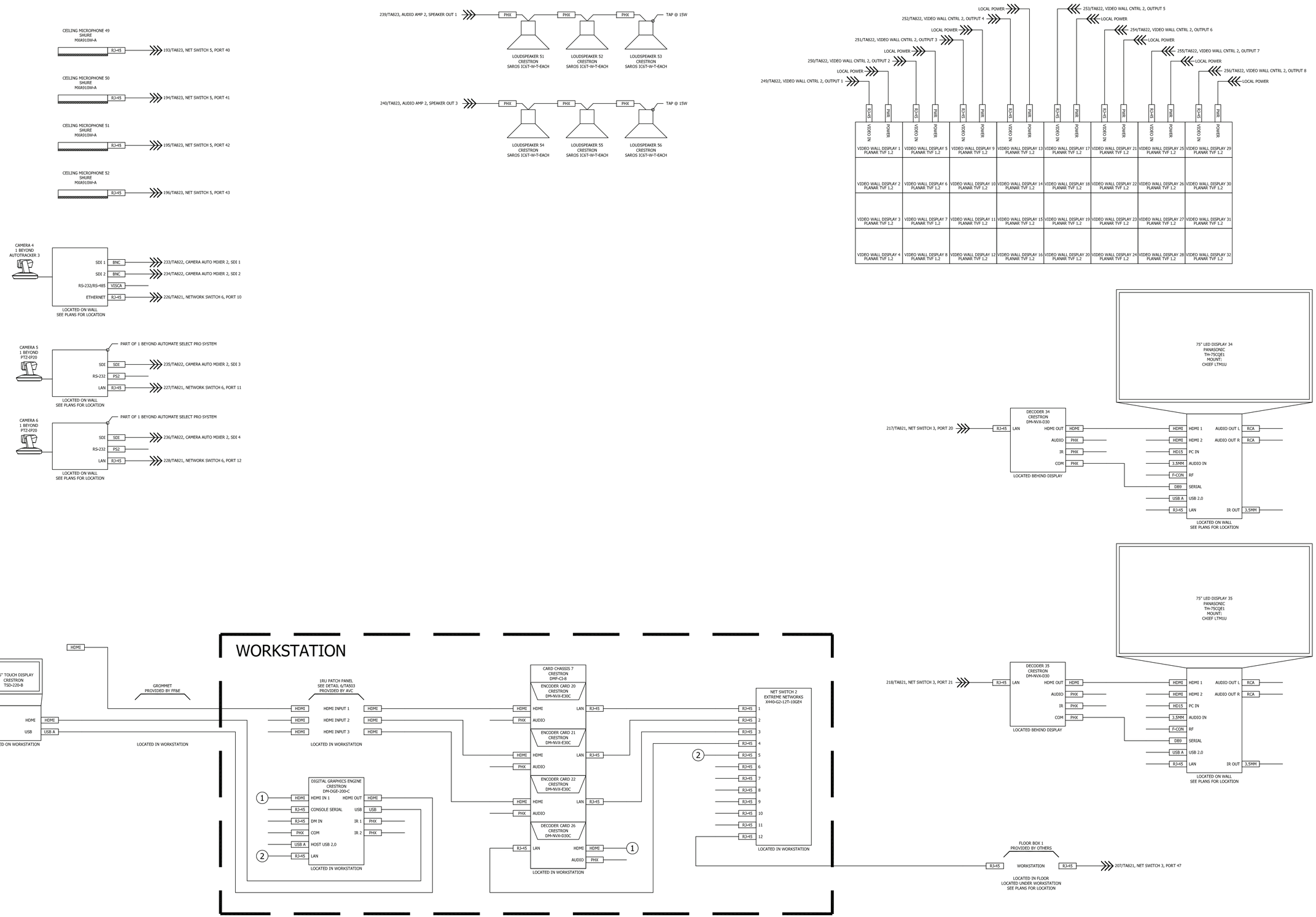

STM	DESCRIPTION	DATE	APPR

NAVFAC

PRELIMINARY
NOT FOR CONSTRUCTION

SEAL

RQ Jordan COMPANY — A JOINT VENTURE —

Michael Baker
INTERNATIONAL
100 AIRSIDE DRIVE
MOON TOWNSHIP, PA 15108
A/E INFO

APPROVED

FOR COMMANDER NAVFAC

ACTIVITY
MARINE CORPS BASE
CAMP LEJEUNE

SATISFACTORY TO DATE		DD/MM/YY
DES AS	DRW AV	CHK BM
PM		XXX
BRANCH MANAGER		XXX
CHIEF ENG/ARCH		XXX
FIRE PROTECTION		XXX

DEPARTMENT OF THE NAVY
NAVAL FACILITIES ENGINEERING COMMAND
ROICC FLORENCE CAMP LEJEUNE

NAVAL FACILITIES ENGINEERING COMMAND ~ MID-ATLANTIC
JACKSONVILLE, NC

MCB CAMP LEJEUNE
P1338F II MEF SIMULATION/TRAINING CENTER
REPLACEMENT

JACKSONVILLE, NC

EXERCISE CONTROL 202 SYSTEM DRAWING

SCALE: NTS
EPROJECT NO.:
CONSTR. CONTR. NO.
N40085-20-C-0059
NAVFAC DRAWING NO.
SHEET OF

TA819

DP2 SUBMISSION – P1338 BUILDING RE-FINAL SUBMISSION

PLOTTED: 5/19/2021 3:26:30 PM

FILE NAME: BIM 360://MF PACKAGE 3/P1338_MEF SIM CTR-1590892-T.rvt

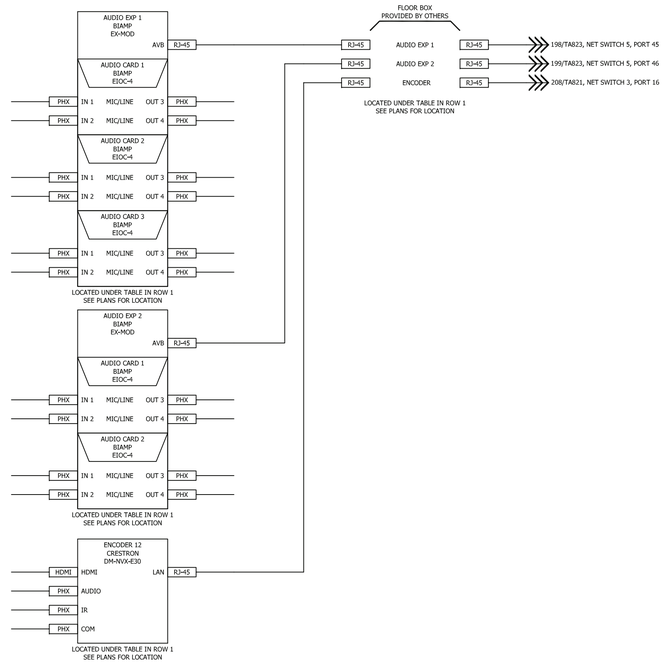

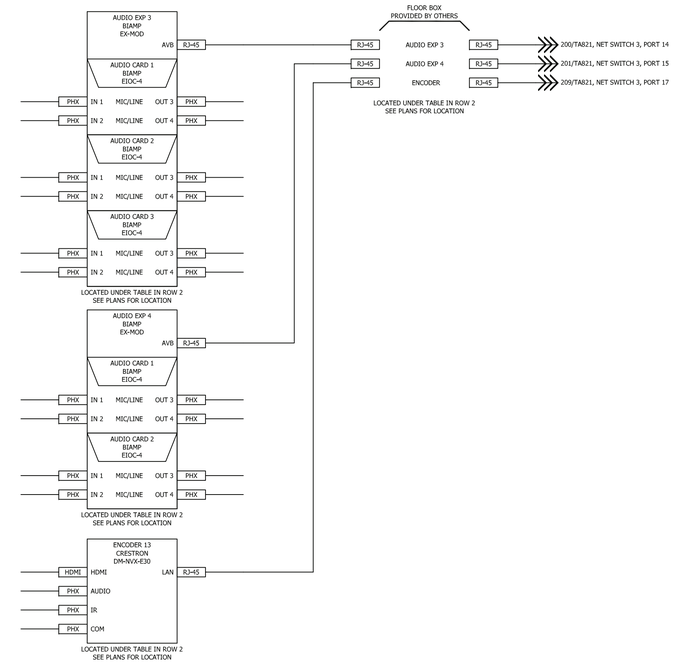

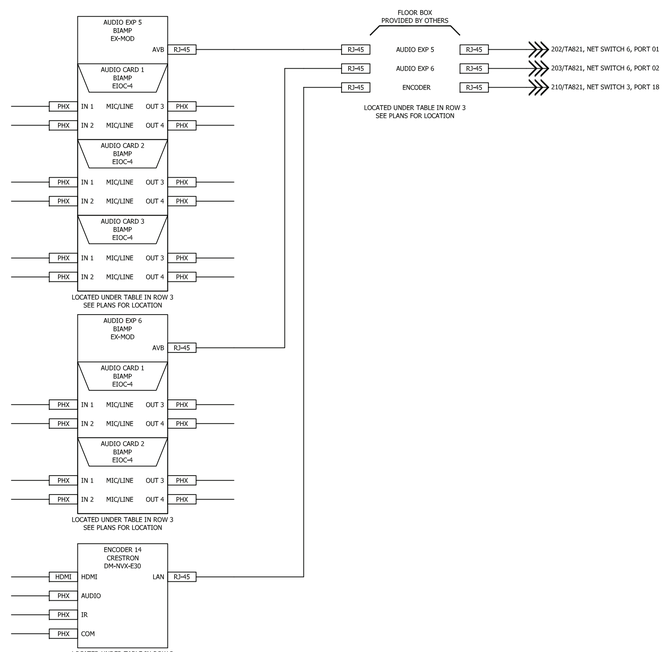

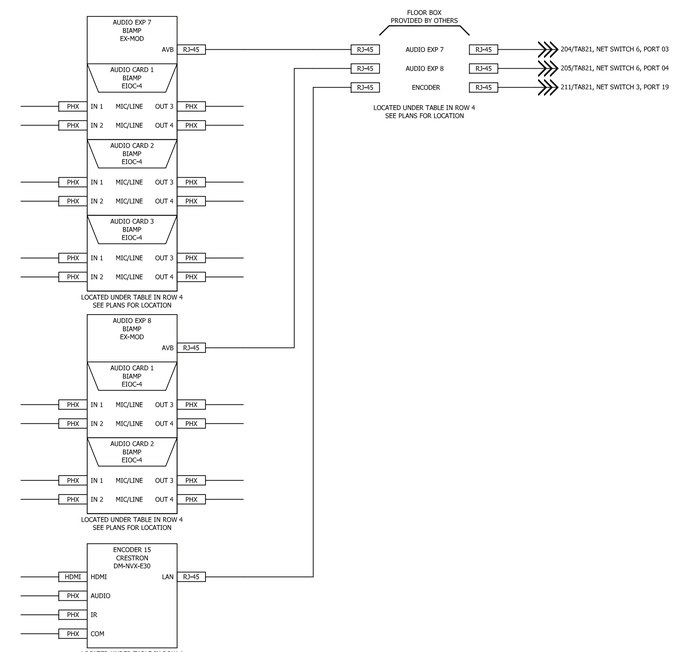

STM	DESCRIPTION	DATE	APPR

NAVFAC

PRELIMINARY
NOT FOR CONSTRUCTION

SEAL

RQ WNJ Jordan COMPANY
~ A JOINT VENTURE ~

Michael Baker
INTERNATIONAL
100 AIRSIDE DRIVE
MOON TOWNSHIP, PA 15108
A/E INFO

APPROVED

FOR COMMANDER NAVFAC

ACTIVITY
MARINE CORPS BASE
CAMP LEJEUNE

SATISFACTORY TO DATE DD/MM/YY

DES AS	DRW AV	CHK BM	
PM	XXX		
BRANCH MANAGER	XXX		
CHIEF ENG/ARCH	XXX		
FIRE PROTECTION	XXX		

DEPARTMENT OF THE NAVY
NAVAL FACILITIES ENGINEERING COMMAND
NAVAL FACILITIES ENGINEERING COMMAND ~ MID-ATLANTIC
ROICC FLORENCE CAMP LEJEUNE JACKSONVILLE, NC
MCB CAMP LEJEUNE
JACKSONVILLE, NC
P1338F II MEF SIMULATION/TRAINING CENTER
REPLACEMENT
EXERCISE CONTROL 202 SYSTEM DRAWING

SCALE: NTS
EPROJECT NO.:
CONSTR. CONTR. NO.
N40085-20-C-0059
NAVFAC DRAWING NO.
SHEET OF
TA820

DP2 SUBMISSION – P1338 BUILDING RE-FINAL SUBMISSION

PLOTTED: 5/19/2021 3:26:30 PM

FILE NAME: BIM 360://HF PACKAGE 3/P1338_MEF SIM CTR-1590892-T.rvt

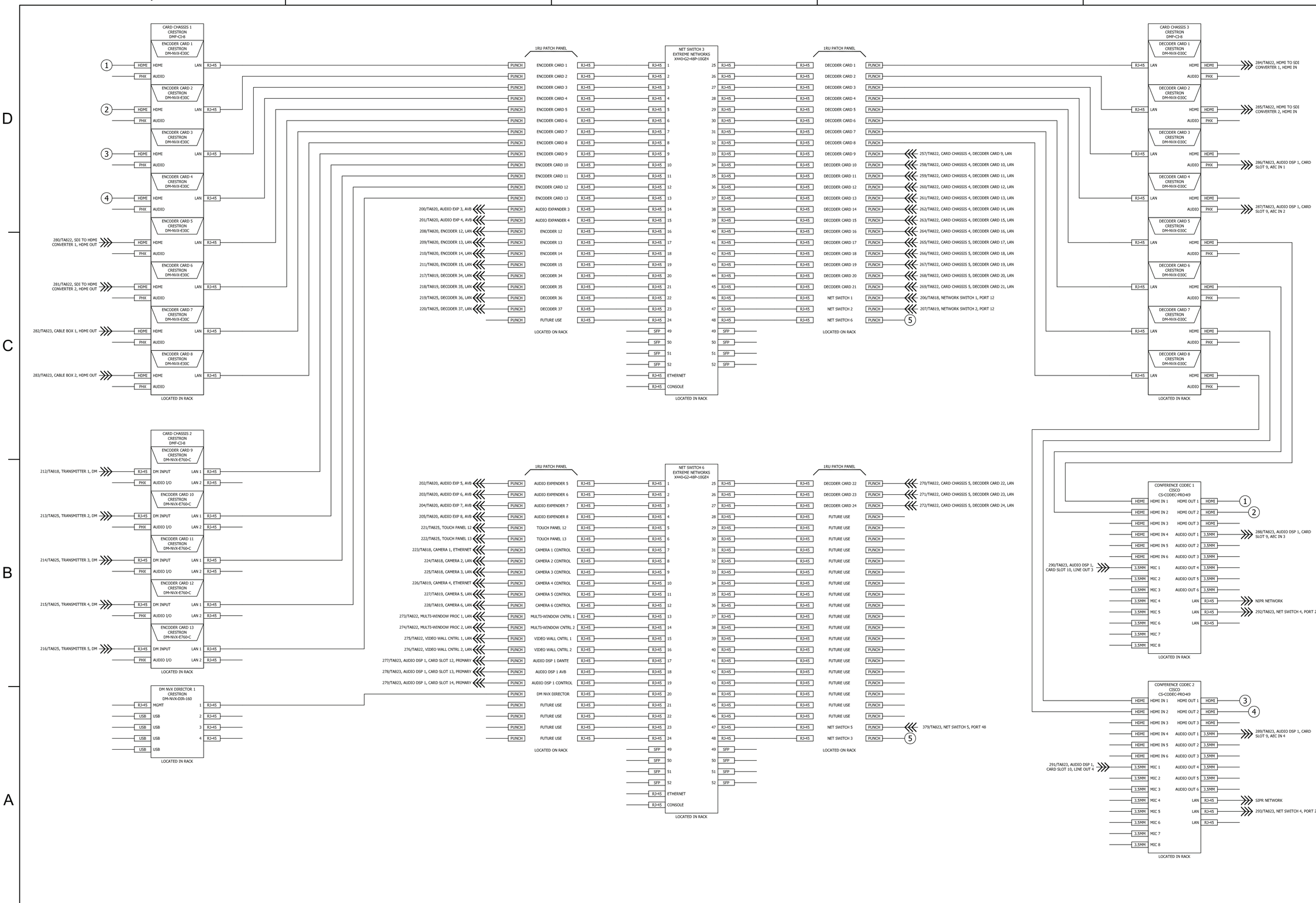

APPR	DATE	DESCRIPTION	STM

NAVFAC

PRELIMINARY NOT FOR CONSTRUCTION

SEAL

RQ Jordan COMPANY – A JOINT VENTURE –

Michael Baker INTERNATIONAL

100 AIRSIDE DRIVE MOON TOWNSHIP, PA 15108 — A/E INFO

APPROVED

FOR COMMANDER NAVFAC

ACTIVITY: MARINE CORPS BASE CAMP LEJEUNE

SATISFACTORY TO DATE DD/MM/YY

DES AS | DRW AV | CHK BM

PM XXX

BRANCH MANAGER XXX

CHIEF ENG/ARCH XXX

FIRE PROTECTION XXX

DEPARTMENT OF THE NAVY
NAVAL FACILITIES ENGINEERING COMMAND
ROICC FLORENCE CAMP LEJEUNE

NAVAL FACILITIES ENGINEERING COMMAND ~ MID-ATLANTIC
JACKSONVILLE, NC

MCB CAMP LEJEUNE
JACKSONVILLE, NC
P1338F II MEF SIMULATION/TRAINING CENTER REPLACEMENT

SIM CONTROL 304A SYSTEM DRAWING

SCALE: NTS

EPROJECT NO.:

CONSTR. CONTR. NO. N40085-20-C-0059

NAVFAC DRAWING NO.

SHEET OF

TA821

DP2 SUBMISSION – P1338 BUILDING PRE-FINAL SUBMISSION

PLOTTED: 5/19/2021 3:26:30 PM

FILE NAME: BIM 360://HF PACKAGE 3/P1338_MEF SIM CTR-1590892-T.rvt

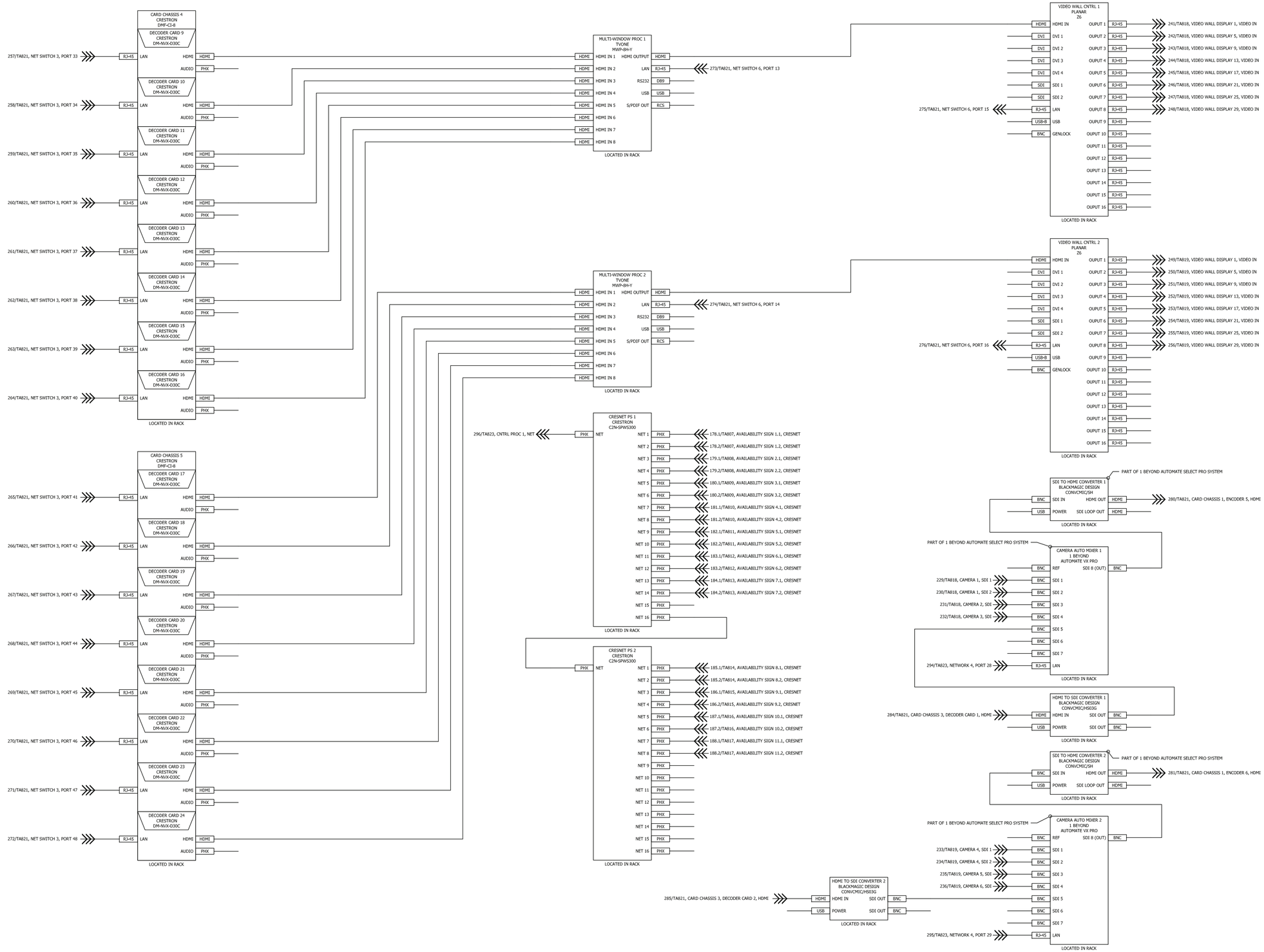

STM	DESCRIPTION	DATE	APPR

NAVFAC

PRELIMINARY NOT FOR CONSTRUCTION

SEAL

RQ | Jordan COMPANY | A JOINT VENTURE

Michael Baker INTERNATIONAL
100 AIRSIDE DRIVE
MOON TOWNSHIP, PA 15108
A/E INFO

APPROVED

FOR COMMANDER NAVFAC

ACTIVITY
MARINE CORPS BASE
CAMP LEJEUNE

SATISFACTORY TO DATE DD/MM/YY

DES AS	DRW AV	CHK BM
PM	XXX	
BRANCH MANAGER	XXX	
CHIEF ENG/ARCH	XXX	
FIRE PROTECTION	XXX	

DEPARTMENT OF THE NAVY
NAVAL FACILITIES ENGINEERING COMMAND
NAVAL FACILITIES ENGINEERING COMMAND – MID-ATLANTIC
ROICC FLORENCE CAMP LEJEUNE
JACKSONVILLE, NC
MCB CAMP LEJEUNE
JACKSONVILLE, NC
P1338F II MEF SIMULATION/TRAINING CENTER
REPLACEMENT
SIM CONTROL 304A SYSTEM DRAWING

SCALE: NTS
EPROJECT NO.:
CONSTR. CONTR. NO.
N40085-20-C-0059
NAVFAC DRAWING NO.
SHEET OF

TA822

DP2 SUBMISSION – P1338 BUILDING RE-FINAL SUBMISSION

PLOTTED: 5/19/2021 3:26:30 PM

FILE NAME: BIM 360://HF PACKAGE 3/P1338_MEF SIM CTR-1590892-T.rvt

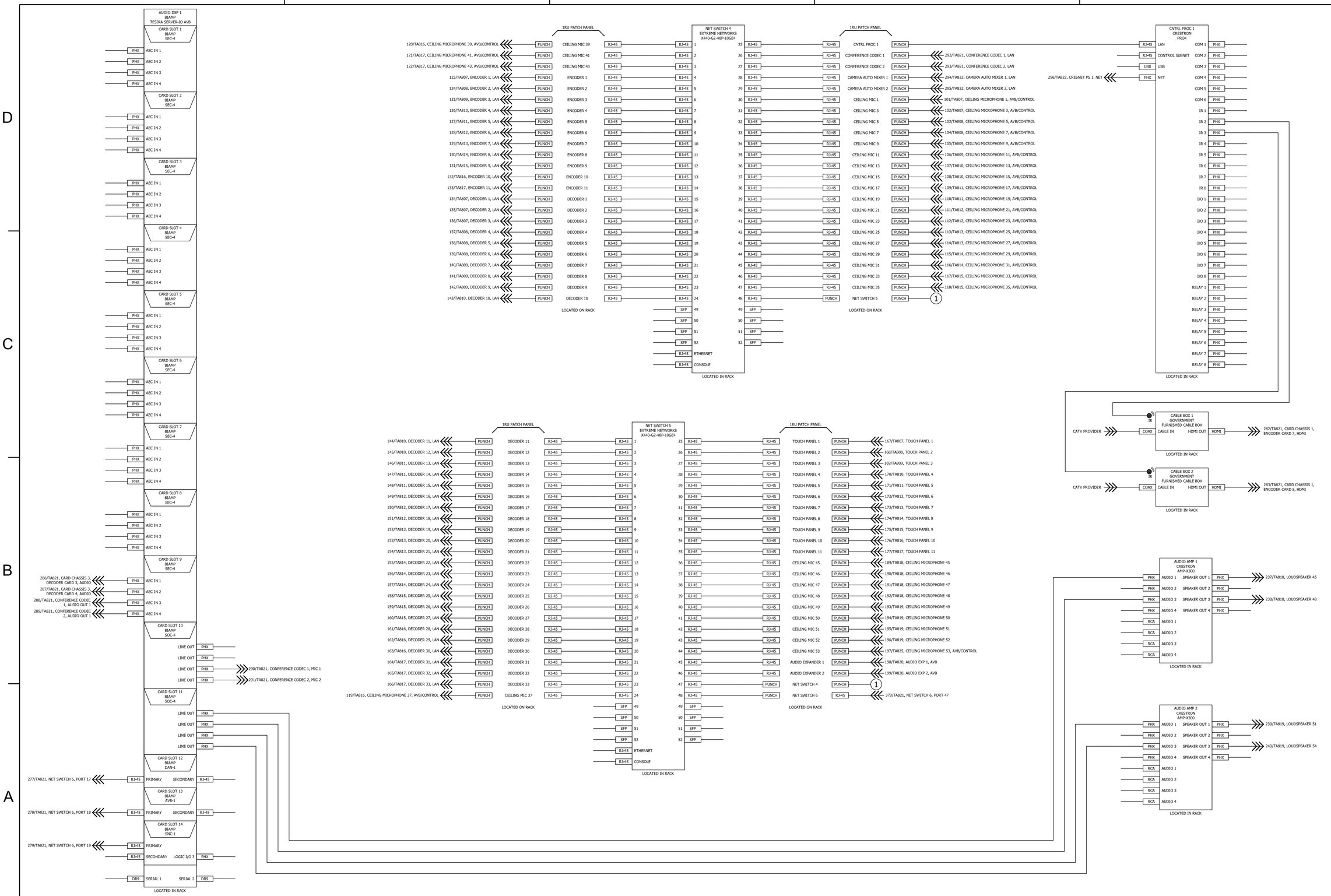

SYM	DESCRIPTION	DATE	APPR

NAVFAC

PRELIMINARY NOT FOR CONSTRUCTION

SEAL

RQ Jordan COMPANY – A JOINT VENTURE –

Michael Baker INTERNATIONAL

100 AIRSIDE DRIVE
MOON TOWNSHIP, PA 15108

A/E INFO

APPROVED

FOR COMMANDER NAVFAC

ACTIVITY
MARINE CORPS BASE
CAMP LEJEUNE

SATISFACTORY TO DATE DD/MM/YY

DES AS	DRW AV	CHK BM	
PM		XXX	
BRANCH MANAGER		XXX	
CHIEF ENG/ARCH		XXX	
FIRE PROTECTION		XXX	

DEPARTMENT OF THE NAVY
NAVAL FACILITIES ENGINEERING COMMAND
NAVAL FACILITIES ENGINEERING COMMAND – MID-ATLANTIC
ROICC FLORENCE CAMP LEJEUNE
JACKSONVILLE, NC
MCB CAMP LEJEUNE
JACKSONVILLE, NC
P1338F II MEF SIMULATION/TRAINING CENTER REPLACEMENT
SIM CONTROL 304A SYSTEM DRAWING

SCALE: NTS
EPROJECT NO.:
CONSTR. CONTR. NO. N40085-20-C-0059
NAVFAC DRAWING NO.
SHEET OF

TA823

DP2 SUBMISSION – P1338 BUILDING PRE-FINAL SUBMISSION

PLOTTED: 5/19/2021 3:26:30 PM

FILE NAME: BIM 360://HF PACKAGE 3/P1338_MEF SIM CTR-1590892-Tx4

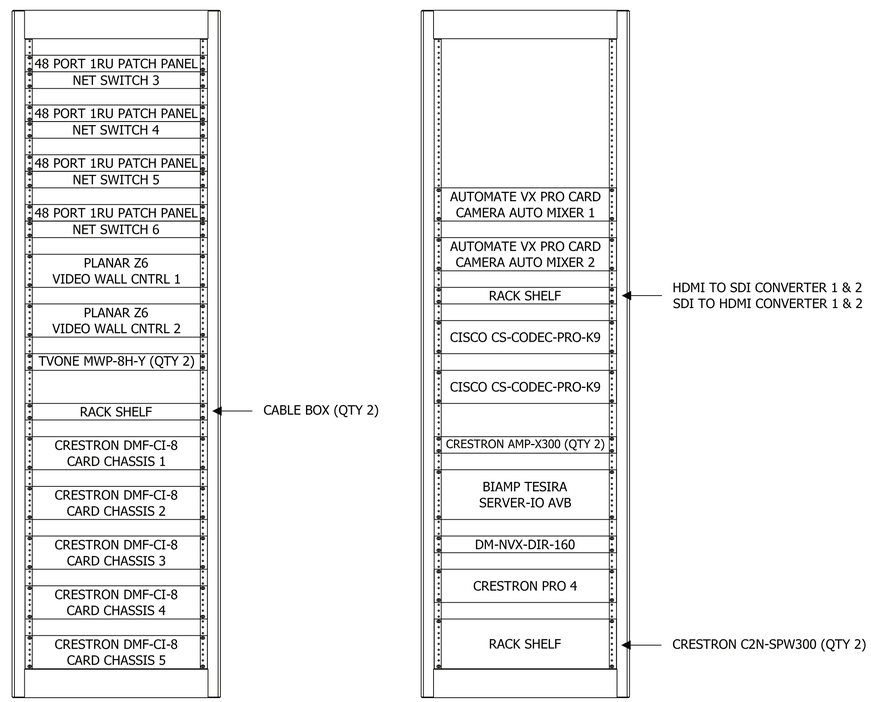

1 SIM CONTROL 304A
Scale: 1 1/2"=1'-0"

SYM	DESCRIPTION	DATE	APPR

NAVFAC

PRELIMINARY
NOT FOR CONSTRUCTION

SEAL

RQ Jordan COMPANY
- A JOINT VENTURE -

Michael Baker
INTERNATIONAL
100 AIRSIDE DRIVE
MOON TOWNSHIP, PA 15108
A/E INFO

APPROVED

FOR COMMANDER NAVFAC

ACTIVITY
MARINE CORPS BASE
CAMP LEJEUNE

SATISFACTORY TO DATE DD/MM/YY

DES AS	DRW AV	CHK BM
PM	XXX	
BRANCH MANAGER	XXX	
CHIEF ENG/ARCH	XXX	
FIRE PROTECTION	XXX	

DEPARTMENT OF THE NAVY
NAVAL FACILITIES ENGINEERING COMMAND
ROICC FLORENCE CAMP LEJEUNE

NAVAL FACILITIES ENGINEERING COMMAND ~ MID-ATLANTIC
JACKSONVILLE, NC

MCB CAMP LEJEUNE
JACKSONVILLE, NC

P1338F II MEF SIMULATION/TRAINING CENTER
REPLACEMENT

SIM CONTROL 304A SYSTEM DRAWING

SCALE: NTS
EPROJECT NO.:
CONSTR. CONTR. NO.
N40085-20-C-0059
NAVFAC DRAWING NO.
SHEET OF

TA824

DP2 SUBMISSION – P1338 BUILDING RE-FINAL SUBMISSION

PLOTTED: 5/19/2021 3:26:30 PM

FILE NAME: BIM 360://NF PACKAGE 3/P1338_MEF SIM CTR-1590892-T.rvt

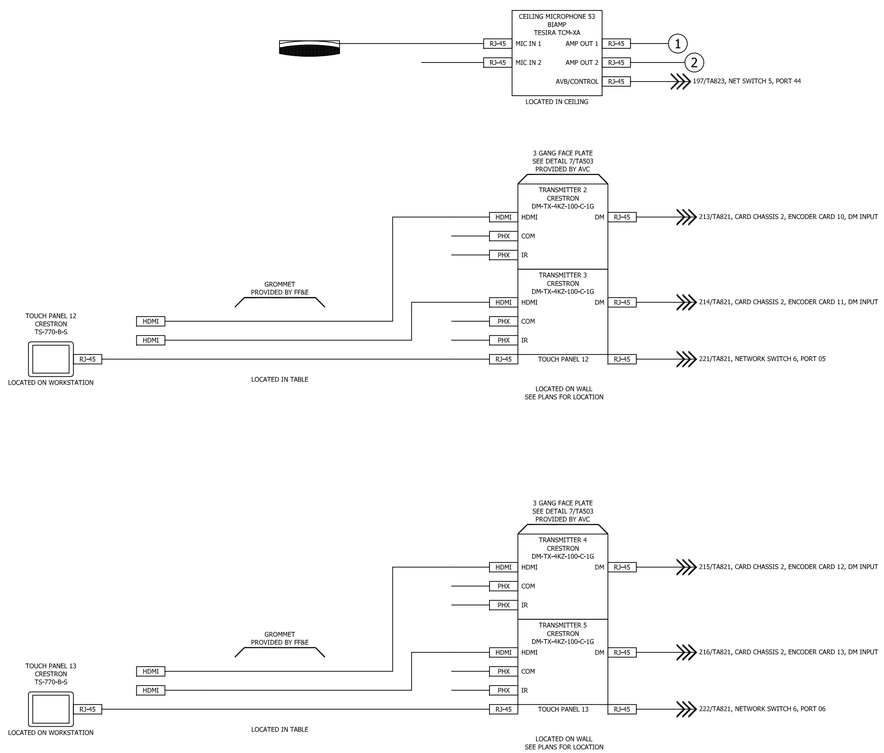

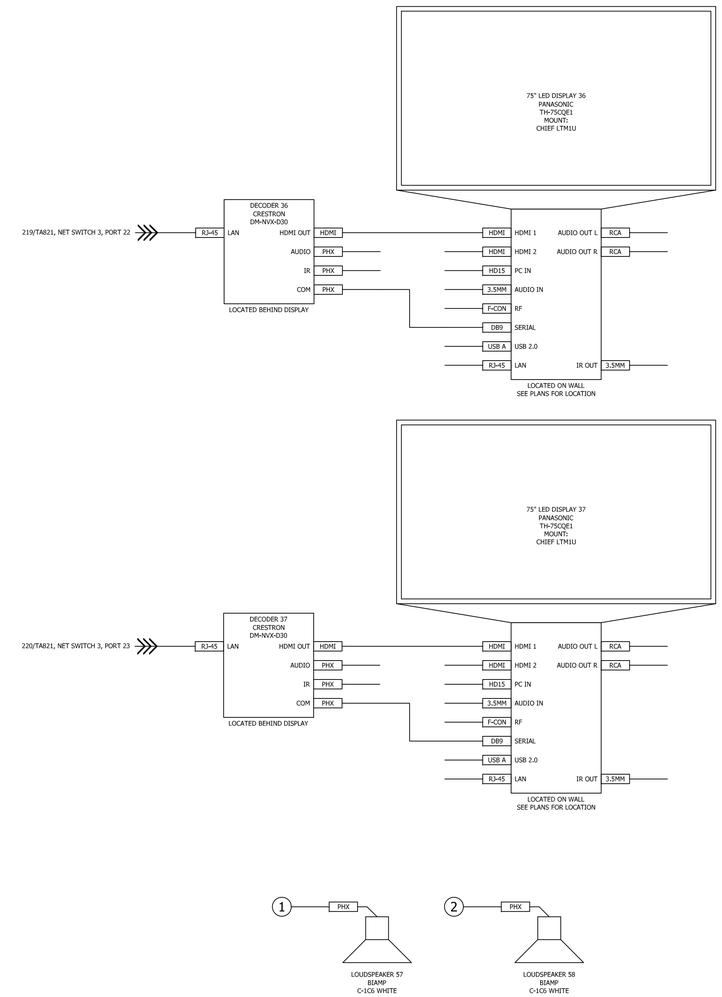

STM	DESCRIPTION	DATE	APPR

NAVFAC

PRELIMINARY
NOT FOR CONSTRUCTION

SEAL

RQ WNJ Jordan COMPANY – A JOINT VENTURE –

Michael Baker INTERNATIONAL
100 AIRSIDE DRIVE
MOON TOWNSHIP, PA 15108
A/E INFO

APPROVED

FOR COMMANDER NAVFAC

ACTIVITY
MARINE CORPS BASE
CAMP LEJEUNE

SATISFACTORY TO DATE DD/MM/YY

DES AS	DRW AV	CHK BM
PM	XXX	
BRANCH MANAGER	XXX	
CHIEF ENG/ARCH	XXX	
FIRE PROTECTION	XXX	

DEPARTMENT OF THE NAVY
NAVAL FACILITIES ENGINEERING COMMAND
NAVAL FACILITIES ENGINEERING COMMAND ~ MID-ATLANTIC
ROICC FLORENCE CAMP LEJEUNE
JACKSONVILLE, NC
MCB CAMP LEJEUNE
JACKSONVILLE, NC
P1338F II MEF SIMULATION/TRAINING CENTER
REPLACEMENT
EXERCISE CONTROL 207 SYSTEM DRAWING

SCALE: NTS
EPROJECT NO.:
CONSTR. CONTR. NO.
N40085-20-C-0059
NAVFAC DRAWING NO.
SHEET OF

TA825

DP2 SUBMISSION – P1338 BUILDING RE-FINAL SUBMISSION

PLOTTED: 5/19/2021 3:26:30 PM

FILE NAME: BIM 360://MF PACKAGE 3/P1338_MEF SIM CTR-1590892-T.rvt