DESIGN-BUILD HURRICANE FLORENCE RECOVERY MILCON

PACKAGE 3 TRAINING AND STORAGE FACILITIES

CONSTRUCTION CONTRACT NO: N40085-20-C-0059

P1338F II MEF SIMULATION/TRAINING CENTER REPLACEMENT

McHUGH BOULEVARD
MARINE CORPS BASE CAMP LEJEUNE, NC



VICINITY MAP



LOCATION MAP



DP2
PRE FINAL SUBMISSION
06-08-21

PLOTTED: 6/11/2021 8:08:26 AM

FILE NAME: BIM 360://HF PACKAGE 3/P1338 MEF SIM CTR-1590892-A.rvt

SYM	DESCRIPTION	DATE	APPR

NAVFAC

PRELIMINARY FOR REFERENCE ONLY

SEAL

RQ WM Jordan COMPANY — A JOINT VENTURE —

Michael Baker INTERNATIONAL

100 AIRSIDE DRIVE
MOON TOWNSHIP, PA 15108 A/E INFO

APPROVED

FOR COMMANDER NAVFAC

ACTIVITY
MARINE CORPS BASE CAMP LEJEUNE

SATISFACTORY TO DATE

DES Designer DRW Author CHK Checker

PM

BRANCH MANAGER

CHIEF ENG/ARCH

FIRE PROTECTION

DEPARTMENT OF THE NAVY
NAVAL FACILITIES ENGINEERING COMMAND ~ MID-ATLANTIC
ROICC FLORENCE CAMP LEJEUNE
MCB CAMP LEJEUNE
JACKSONVILLE, NC

P1338F II MEF SIMULATION/TRAINING CENTER REPLACEMENT

COVER SHEET

NAVAL FACILITIES ENGINEERING COMMAND
JACKSONVILLE, NC

SCALE: AS NOTED

EPROJECT NO.: 1590892

CONSTR. CONTR. NO.
N40085-20-C-0059

NAVFAC DRAWING NO.

SHEET OF

G-001

DP2 SUBMISSION – P1338 BUILDING - PRE-FINAL SUBMISSION

SHEET INDEX

SHEET INDEX DP2	
GENERAL	
G-001	COVER SHEET
G-002	DRAWING INDEX
G-100	LIFE SAFETY - CODE ANALYSIS
G-110	LIFE SAFETY - OVERALL - FIRST FLOOR PLAN
G-111	LIFE SAFETY - FIRST FLOOR PLAN - AREA A
G-112	LIFE SAFETY - FIRST FLOOR PLAN - AREA B
G-113	LIFE SAFETY - FIRST FLOOR PLAN - AREA C
G-114	LIFE SAFETY - FIRST FLOOR PLAN - AREA D
LANDSCAPE	
L-101	LANDSCAPE SITE PLAN
L-401	PLANTING ENLARGEMENTS
L-402	PLANTING ENLARGEMENTS
L-403	PLANTING ENLARGEMENTS
L-404	SITE FURNISHING ENLARGEMENTS
L-501	LANDSCAPE DETAILS
L-502	SITE FURNISHING DETAILS
L-503	SHADE STRUCTURE
STRUCTURAL	
S-001	STRUCTURAL NOTES
S-002	STRUCTURAL NOTES
S-003	STRUCTURAL NOTES AND ABBREVIATIONS
S-131	TILT-UP CONCRETE WALL PANEL LOADING PLAN - AREA A
S-132	TILT-UP CONCRETE WALL PANEL LOADING PLAN - AREA B
S-133	TILT-UP CONCRETE WALL PANEL LOADING PLAN - AREA C
S-134	TILT-UP CONCRETE WALL PANEL LOADING PLAN - AREA D
S-141	ROOF FRAMING PLAN - AREA A
S-142	ROOF FRAMING PLAN - AREA B
S-143	ROOF FRAMING PLAN - AREA C
S-144	ROOF FRAMING PLAN - AREA D
S-201	TRUSS ELEVATIONS
S-202	TRUSS ELEVATIONS
S-203	TRUSS DETAILS
S-311	FRAMING SECTIONS
S-312	FRAMING SECTIONS
S-511	TYPICAL DETAILS
S-600	TILT-UP PANEL PLAN - OVERALL
S-601	TILT-UP PANEL PLAN - AREA A
S-602	TILT-UP PANEL PLAN - AREA B
S-603	TILT-UP PANEL PLAN - AREA C
S-604	TILT-UP PANEL PLAN - AREA D
S-701	TILT-UP PANEL REINFORCEMENT - AREA A
S-702	TILT-UP PANEL REINFORCEMENT - AREA B
S-703	TILT-UP PANEL REINFORCEMENT - AREA C
S-704	TILT-UP PANEL REINFORCEMENT - AREA D
ARCHITECTURE	
A-001	ARCHITECTURAL GENERAL NOTES, MATERIAL AND ANNOTATION LEGEND
A-002	TYPICAL ADA DETAILS
AS101	ARCHITECTURAL - SITE PLAN
AS102	ARCHITECTURAL - SITE PLAN DETAILS
AS103	EQUIPMENT ENCLOSURE
A-110	COMPREHENSIVE - FLOOR PLAN
A-111	FLOOR PLAN - AREA A
A-112	FLOOR PLAN - AREA B
A-113	FLOOR PLAN - AREA C
A-114	FLOOR PLAN - AREA D
AR110	COMPREHENSIVE - REFLECTED CEILING PLAN
AR111	REFLECTED CEILING PLAN - AREA A
AR112	REFLECTED CEILING PLAN - AREA B
AR113	REFLECTED CEILING PLAN - AREA C
AR114	REFLECTED CEILING PLAN - AREA D
A-130	ROOF PLAN
A-201	EXTERIOR ELEVATIONS
A-301	BUILDING SECTIONS
A-311	WALL SECTIONS
A-312	WALL SECTIONS
A-313	WALL SECTIONS
A-314	WALL SECTIONS
A-401	ENLARGED PLAN RESTROOMS & INTERIOR ELEVATIONS
A-402	INTERIOR ELEVATIONS
A-403	ENLARGED PLAN RESTROOMS & INTERIOR ELEVATIONS
A-404	INTERIOR ELEVATIONS
A-501	PLAN DETAILS
A-502	ROOF DETAILS
A-503	RAISED ACCESS FLOORING DETAILS
A-504	CEILING DETAILS
A-505	EXTERIOR DETAILS

SHEET INDEX DP2	
A-506	PARTITION DETAILS
A-507	PARTITION DETAILS
A-508	WALL PENETRATION DETAILS
A-509	DOOR AND JAMB DETAILS
A-510	MISCELLANEOUS DETAILS
A-601	PARTITION TYPES
A-611	DOOR SCHEDULE, DOOR AND WINDOW ELEVATIONS
A-801	AIR BARRIER FLOOR PLAN
A-802	AIR BARRIER ROOF PLAN
A-803	AIR BARRIER SECTIONS
A-804	AIR BARRIER SECTIONS
INTERIORS	
IN001	INTERIOR FINISH - BASIS OF DESIGN AND DETAILED NOTES
IN110	INTERIOR FINISH - OVERALL FLOOR PLAN
IN111	INTERIOR FINISH - FLOOR PLAN - AREA A
IN112	INTERIOR FINISH - FLOOR PLAN - AREA B
IN113	INTERIOR FINISH - FLOOR PLAN - AREA C
IN114	INTERIOR FINISH - FLOOR PLAN - AREA D
IN201	INTERIOR FINISH - ELEVATIONS - TYPICAL AND LOBBY/VEST L010
IN202	INTERIOR FINISH - ELEVATIONS - AUDITORIUM/READY RM 201
IN203	INTERIOR FINISH - ELEVATIONS - BREAK ROOM AND TYPICAL BRIEF/DEBRIEF
IN501	INTERIOR FINISH - DETAILS
IN601	INTERIOR FINISH - ROOM SCHEDULE
IG111	SIGNAGE - FLOOR PLAN - AREA A
IG112	SIGNAGE - FLOOR PLAN - AREA B
IG113	SIGNAGE - FLOOR PLAN - AREA C
IG114	SIGNAGE - FLOOR PLAN - AREA D
IG501	SIGNAGE DETAILS - INSTALLATION MOUNTING HEIGHTS, BASIS OF DESIGN AND DETAILS (TYPES A - F)
IG502	SIGNAGE - DETAILS (TYPES J - W)
IG503	SIGNAGE - DETAILS (TYPES X - Z AND REFERENCE ONLY)
IG504	SIGNAGE - DETAILS - EVACUATION MAPS TYPES Y.1 & Y.3
IG505	SIGNAGE - DETAILS - EVACUATION MAP TYPE Y.2
IG506	SIGNAGE - DETAILS - EVACUATION MAP TYPE Y.4
IG507	SIGNAGE - DETAILS - EVACUATION MAP TYPE Y.5
IG508	SIGNAGE - DETAILS - EVACUATION MAP TYPE Y.6
IG509	SIGNAGE - DETAILS - EVACUATION MAPS TYPES Y.7 & Y.8
IG601	SIGNAGE - SCHEDULE (TAG 1 - 77) AND DETAILED NOTES
IG602	SIGNAGE - SCHEDULE (TAG 78+)
IF110	INTERIOR FURNITURE, FIXTURES AND EQUIPMENT (FF&E) - OVERALL FLOOR PLAN
IF111	INTERIOR FF&E - FLOOR PLAN - AREA A
IF112	INTERIOR FF&E - FLOOR PLAN - AREA B
IF113	INTERIOR FF&E - FLOOR PLAN - AREA C
IF114	INTERIOR FF&E - FLOOR PLAN - AREA D
IF201	INTERIOR FFF&E ELEVATIONS - BREAK ROOM EQUIPMENT
IF501	FF&E - DETAILS
FIRE PROTECTION	
FA001	FIRE ALARM - GENERAL NOTES, ABBREVIATIONS, & SYMBOLS
FA002	FIRE ALARM - SEQUENCE OF OPERATIONS
FA110	FIRE ALARM - OVERALL - FIRST FLOOR PLAN
FA111	FIRE ALARM - FIRST FLOOR PLAN - AREA A
FA112	FIRE ALARM - FIRST FLOOR PLAN - AREA B
FA113	FIRE ALARM - FIRST FLOOR PLAN - AREA C
FA114	FIRE ALARM - FIRST FLOOR PLAN - AREA D
FA501	FIRE ALARM - DETAILS
FA701	FIRE ALARM - RISER DIAGRAM
FX001	FIRE PROTECTION GENERAL NOTES, ABBREVIATIONS, & SYMBOLS
FX110	FIRE PROTECTION - OVERALL - FIRST FLOOR PLAN
FX111	FIRE PROTECTION -FIRST FLOOR PLAN - AREA A
FX112	FIRE PROTECTION - FIRST FLOOR PLAN - AREA B
FX113	FIRE PROTECTION - FIRST FLOOR PLAN - AREA C
FX114	FIRE PROTECTION - FIRST FLOOR PLAN - AREA D
FX501	FIRE PROTECTION - DETAILS
PLUMBING	
P-001	PLUMBING - GENERAL NOTES, ABBREVIATIONS & SYMBOLS
PU110	PLUMBING - OVERALL - UNDERGROUND PLAN
PU111	PLUMBING - UNDERGROUND PLAN - AREA A
PU112	PLUMBING - UNDERGROUND PLAN - AREA B
PU113	PLUMBING - UNDERGROUND PLAN - AREA C
PU114	PLUMBING - UNDERGROUND PLAN - AREA D
P-110	PLUMBING - OVERALL - FIRST FLOOR PLAN
P-111	PLUMBING - FIRST FLOOR PLAN - AREA A
P-112	PLUMBING - FIRST FLOOR PLAN - AREA B
P-113	PLUMBING - FIRST FLOOR PLAN - AREA C
P-114	PLUMBING - FIRST FLOOR PLAN - AREA D
P-150	PLUMBING - OVERALL - ROOF PLAN
P-401	PLUMBING - ENLARGED PLANS

SHEET INDEX DP2	
P-402	PLUMBING - ENLARGED PLANS
P-403	PLUMBING - ENLARGED PLANS
P-501	PLUMBING - DETAILS
P-502	PLUMBING - DETAILS
P-601	PLUMBING - SCHEDULES
P-602	PLUMBING - SCHEDULES
P-701	PLUMBING - RISER DIAGRAMS
P-702	PLUMBING - RISER DIAGRAMS
P-703	PLUMBING - RISER DIAGRAMS
P-704	PLUMBING - RISER DIAGRAMS
MECHANICAL	
M-001	MECHANICAL - SYMBOLS AND ABBREVIATIONS
M-002	MECHANICAL - GENERAL NOTES
MS101	MECHANICAL - SITE PLAN
MH110	HVAC - OVERALL 1ST FLOOR PLAN
MH111	HVAC - 1ST FLOOR PLAN - AREA A
MH112	HAVC - 1ST FLOOR PLAN - AREA B
MH113	HVAC - 1ST FLOOR PLAN - AREA C
MH114	HVAC - 1ST FLOOR PLAN - AREA D
MP110	PIPING - OVERALL 1ST FLOOR PLAN
MP111	PIPING - 1ST FLOOR PLAN - AREA A
MP112	PIPING - 1ST FLOOR PLAN - AREA B
MP113	PIPING - 1ST FLOOR PLAN - AREA C
MP114	PIPING - 1ST FLOOR PLAN - AREA D
M-301	MECHANICAL - SECTIONS
M-401	MECHANICAL - ENLARGED PLANS
M-402	MECHANICAL - ENLARGED PLANS
M-403	MECHANICAL - ENLARGED PLANS
M-501	MECHANICAL - DETAILS
M-502	MECHANICAL - DETAILS
M-503	MECHANICAL - DETAILS
M-504	MECHANICAL - DETAILS
M-505	MECHANICAL - DETAILS
M-506	MECHANICAL - DETAILS
M-507	MECHANICAL - DETAILS
M-601	MECHANICAL - SCHEDULES
M-602	MECHANICAL - SCHEDULES
M-603	MECHANICAL - SCHEDULES
M-604	MECHANICAL - SCHEDULES
M-605	MECHANICAL - SCHEDULES
M-606	MECHANICAL - SCHEDULES
M-701	MECHANICAL - DIAGRAMS
M-702	MECHANICAL - DIAGRAMS
M-703	MECHANICAL - DIAGRAMS
M-801	MECHANICAL - CONTROLS
M-802	MECHANICAL - CONTROLS
M-803	MECHANICAL - CONTROLS
M-804	MECHANICAL - CONTROLS
M-805	MECHANICAL - CONTROLS
M-806	MECHANICAL - CONTROLS
M-807	MECHANICAL - CONTROLS
M-808	MECHANICAL - CONTROLS
M-809	MECHANICAL - CONTROLS
M-810	MECHANICAL - CONTROLS
M-811	MECHANICAL - CONTROLS
M-812	MECHANICAL - CONTROLS
M-813	MECHANICAL - CONTROLS
M-814	MECHANICAL - CONTROLS
M-901	MECHANICAL ISOMETRIC VIEWS
M-902	MECHANICAL ISOMETRIC VIEWS
M-903	MECHANICAL ISOMETRIC VIEWS
ELECTRICAL	
E-001	ELECTRICAL - NOTES, SYMBOLS, AND ABBREVIATIONS
ES101	ELECTRICAL - SITE UTILITY PLAN
ES102	ELECTRICAL - SITE LIGHTING PLAN
ES501	ELECTRICAL - SITE DETAILS
ES502	ELECTRICAL - SITE DETAILS
ES503	ELECTRICAL - SITE DETAILS
ES504	ELECTRICAL - SITE DETAILS
ES505	ELECTRICAL - SITE DETAILS
ES506	ELECTRICAL - SITE DETAILS
EG101	ELECTRICAL - GROUNDING PLAN
EG102	ELECTRICAL - GROUNDING PLAN
EG103	ELECTRICAL - LIGHTNING PROTECTION PLAN
EG104	ELECTRICAL - LIGHTNING PROTECTION PLAN

SHEET INDEX DP2	
EG501	ELECTRICAL - GROUNDING DETAILS
EG502	ELECTRICAL - GROUNDING DETAILS
EL110	LIGHTING - FIRST FLOOR PLAN - OVERALL
EL111	LIGHTING - FIRST FLOOR PLAN - AREA A
EL112	LIGHTING - FIRST FLOOR PLAN - AREA B
EL113	LIGHTING - FIRST FLOOR PLAN - AREA C
EL114	LIGHTING - FIRST FLOOR PLAN - AREA D
EP110	POWER - FIRST FLOOR PLAN - OVERALL
EP111	POWER - FIRST FLOOR PLAN - AREA A
EP112	POWER - FIRST FLOOR PLAN - AREA B
EP113	POWER - FIRST FLOOR PLAN - AREA C
EP114	POWER - FIRST FLOOR PLAN - AREA D
EP115	POWER - UNDERFLOOR PLAN - AREA A
EP116	POWER - UNDERFLOOR PLAN - AREA B
EP117	POWER - UNDERFLOOR PLAN - AREA C
EP118	POWER - UNDERFLOOR PLAN - AREA D
E-401	ELECTRICAL - ENLARGED PLANS
E-402	ELECTRICAL - ENLARGED PLANS
E-501	ELECTRICAL - DETAILS
E-502	ELECTRICAL - DETAILS
E-503	ELECTRICAL - DETAILS
E-504	ELECTRICAL - DETAILS
E-505	ELECTRICAL - DETAILS
E-506	ELECTRICAL - LIGHTING CONTROL DIAGRAMS
E-601	ELECTRICAL - LIGHTING FIXTURE SCHEDULE
E-602	ELECTRICAL - SINGLE LINE DIAGRAM
E-603	ELECTRICAL - SINGLE LINE DIAGRAM
E-604	ELECTRICAL - PANEL SCHEDULES
E-605	ELECTRICAL - PANEL SCHEDULES
E-606	ELECTRICAL - PANEL SCHEDULES
E-607	ELECTRICAL - PANEL SCHEDULES
E-608	ELECTRICAL - PANEL SCHEDULES
E-609	ELECTRICAL - PANEL SCHEDULES
E-610	ELECTRICAL - PANEL SCHEDULES
E-611	ELECTRICAL - PANEL SCHEDULES
E-612	ELECTRICAL - PANEL SCHEDULES
E-613	ELECTRICAL - PANEL SCHEDULES
TELECOMMUNICATIONS	
T-001	TELECOMMUNICATIONS SYMBOLS, SCHEDULES, & NOTES
TS101	TELECOMMUNICATIONS - SITE PLAN
T-100	TELECOMMUNICATIONS - FLOOR PLAN OVERALL
T-111	TELECOMMUNICATIONS - FIRST FLOOR PLAN - AREA A
T-112	TELECOMMUNICATIONS - FIRST FLOOR PLAN - AREA B
T-113	TELECOMMUNICATIONS - FIRST FLOOR PLAN - AREA C
T-114	TELECOMMUNICATIONS - FIRST FLOOR PLAN - AREA D
TU111	TELECOMMUNICATIONS - FIRST FLOOR PLAN - AREA A UNDERSLAB
TU112	TELECOMMUNICATIONS - FIRST FLOOR PLAN - AREA B UNDERSLAB
TU113	TELECOMMUNICATIONS - FIRST FLOOR PLAN - AREA C UNDERSLAB
T-401	TELECOMMUNICATIONS - ENLARGED PLANS
T-402	TELECOMMUNICATIONS - ENLARGED PLANS
T-403	TELECOMMUNICATIONS - ENLARGED PLANS
T-501	TELECOMMUNICATIONS - DETAILS
T-502	TELECOMMUNICATIONS - DETAILS
T-503	TELECOMMUNICATIONS - DETAILS
T-504	TELECOMMUNICATIONS - DETAILS
T-505	TELECOMMUNICATIONS - DETAILS
T-506	TELECOMMUNICATIONS - DETAILS
T-507	TELECOMMUNICATIONS - DETAILS
T-508	TELECOMMUNICATIONS - DETAILS
T-509	TELECOMMUNICATIONS - DETAILS

SHEET INDEX DP2	
T-510	TELECOMMUNICATIONS - DETAILS
T-601	TELECOMMUNICATIONS - DIAGRAMS
TY111	SECURITY - FIRST FLOOR PLAN - AREA A
TY112	SECURITY - FIRST FLOOR PLAN - AREA B
TY113	SECURITY - FIRST FLOOR PLAN - AREA C
TY114	SECURITY - FIRST FLOOR PLAN - AREA D
TY501	SECURITY - DETAILS
AUDIOVISUAL	
TA001	AUDIOVISUAL - SYMBOLS AND NOTES
TA002	AUDIOVISUAL - SCHEDULES
TA111	AUDIOVISUAL - FLOOR PLAN - AREA A
TA112	AUDIOVISUAL - FLOOR PLAN - AREA B
TA113	AUDIOVISUAL - FLOOR PLAN - AREA C
TA114	AUDIOVISUAL - FLOOR PLAN - AREA D
TR112	AUDIOVISUAL - REFLECTED CEILING PLAN - AREA B
TR113	AUDIOVISUAL - REFLECTED CEILING PLAN - AREA C
TR114	AUDIOVISUAL - REFLECTED CEILING PLAN - AREA D
TA311	EQUIPMENT - FLOOR PLAN - AREA A
TA312	EQUIPMENT - FLOOR PLAN - AREA B
TA313	EQUIPMENT - FLOOR PLAN - AREA C
TA314	EQUIPMENT - FLOOR PLAN - AREA D
TA401	AUDIOVISUAL - ELEVATIONS
TA402	AUDIOVISUAL - ELEVATIONS
TA403	AUDIOVISUAL - ELEVATIONS
TA404	AUDIOVISUAL - ELEVATIONS
TA405	AUDIOVISUAL - ELEVATIONS
TA406	AUDIOVISUAL - ELEVATIONS
TA407	AUDIOVISUAL - ELEVATIONS
TA408	AUDIOVISUAL - ELEVATIONS
TA409	AUDIOVISUAL - ELEVATIONS
TA410	AUDIOVISUAL - ELEVATIONS
TA411	AUDIOVISUAL - ELEVATIONS
TA501	AUDIOVISUAL - DETAILS
TA502	AUDIOVISUAL - DETAILS
TA503	AUDIOVISUAL - DETAILS
TA601	AUDIOVISUAL - RISER DIAGRAMS
TA602	AUDIOVISUAL - RISER DIAGRAMS
TA801	BRIEF/DEBRIEF 101 SYSTEM DRAWING
TA802	BRIEF/DEBRIEF 102 SYSTEM DRAWING
TA803	BRIEF/DEBRIEF 209 SYSTEM DRAWING
TA804	SECURE VTC 303B SYSTEM DRAWING
TA805	SECURE VTC 303B SYSTEM DRAWING
TA806	LOBBY/VEST L010 SYSTEM DRAWING
TA807	SIMULATION CLASSROOM 200A SYSTEM DRAWING
TA808	SIMULATION CLASSROOM 200B SYSTEM DRAWING
TA809	SIMULATION CLASSROOM 200C SYSTEM DRAWING
TA810	SIMULATION CLASSROOM 300A SYSTEM DRAWING
TA811	SIMULATION CLASSROOM 300B SYSTEM DRAWING
TA812	SIMULATION CLASSROOM 300C SYSTEM DRAWING
TA813	SIMULATION CLASSROOM 300X SYSTEM DRAWING
TA814	SIMULATION CLASSROOM 300Y SYSTEM DRAWING
TA815	SIMULATION CLASSROOM 300Z SYSTEM DRAWING
TA816	SIMULATION CLASSROOM 301A SYSTEM DRAWING
TA817	SIMULATION CLASSROOM 301B SYSTEM DRAWING
TA818	AUDITORIUM/READY ROOM 201 SYSTEM DRAWING
TA819	EXERCISE CONTROL 202 SYSTEM DRAWING
TA820	EXERCISE CONTROL 202 SYSTEM DRAWING
TA821	SIM CONTROL 304A SYSTEM DRAWING
TA822	SIM CONTROL 304A SYSTEM DRAWING
TA823	SIM CONTROL 304A SYSTEM DRAWING
TA824	SIM CONTROL 304A SYSTEM DRAWING
TA825	EXERCISE CONTROL 207 SYSTEM DRAWING

APPR	DATE	DESCRIPTION	SYM

NAVFAC

PRELIMINARY FOR REFERENCE ONLY

SEAL

RQ W.M. Jordan COMPANY – A JOINT VENTURE –

Michael Baker INTERNATIONAL

100 AIRSIDE DRIVE
MOON TOWNSHIP, PA 15108 — A/E INFO

APPROVED

FOR COMMANDER NAVFAC

ACTIVITY
MARINE CORPS BASE CAMP LEJEUNE

SATISFACTORY TO DATE

DES XXX	DRW XXX	CHK XXX

PM

BRANCH MANAGER

CHIEF ENG/ARCH

FIRE PROTECTION

DEPARTMENT OF THE NAVY
NAVAL FACILITIES ENGINEERING COMMAND
ROICC FLORENCE CAMP LEJEUNE

NAVAL FACILITIES ENGINEERING COMMAND – MID-ATLANTIC
JACKSONVILLE, NC

MCB CAMP LEJEUNE
JACKSONVILLE, NC

P1338F II MEF SIMULATION/TRAINING CENTER REPLACEMENT

DRAWING INDEX

SCALE: AS NOTED

EPROJECT NO.: 1590892

CONSTR. CONTR. NO.
N40085-20-C-0059

NAVFAC DRAWING NO.

SHEET OF

G-002

DP2 SUBMISSION – P1338 BUILDING - PRE-FINAL SUBMISSION

PLOTTED: 6/11/2021 8:08:26 AM

FILE NAME: BIM 360://HF PACKAGE 3/P1338 MEF SIM CTR-1590892-A.rvt

1. **PROJECT NAME**
P1338 MEF SIMULATION TRAINING BUILDING, MARINE CORPS BASE CAMP LEJEUNE, NORTH CAROLINA.

2. **PROJECT DESCRIPTION**
THE MEF SIMULATION TRAINING BUILDING CONSISTS TRAINING AREAS, ADMINISTRATIVE OFFICES AND SUPPORTING MECHANICAL, ELECTRICAL AND COMMUNICATION SPACES.

THE FACILITY HAS BEEN ANALYZED FOR LIFE SAFETY AND FIRE PROTECTION REQUIREMENTS USING THE CODES AND STANDARDS LISTED BELOW. THE UNIFIED FACILITIES CRITERIA (UFC) APPLIES TO THE MILITARY DEPARTMENTS, THE DEFENSE AGENCIES, AND THE DOD FIELD ACTIVITIES WHICH PROVIDES TECHNICAL CRITERIA FOR NEW MILITARY CONSTRUCTION. BASED ON UFC 1-200-01 CHAPTER 2 - MODIFICATIONS TO THE INTERNATIONAL BUILDING CODE (IBC) AND UFC 3-600-01, THE IBC WILL BE USED FOR FIRE RESISTANCE REQUIREMENTS, ALLOWABLE FLOOR AREA, BUILDING HEIGHT LIMITATIONS, BUILDING SEPARATION DISTANCE REQUIREMENTS, BUILDING CONSTRUCTION TYPE, AND OCCUPANCY SEPARATION REQUIREMENTS EXCEPT AS MODIFIED BY UFC 3-600-01. NFPA 101 WILL BE USED FOR BUILDING CONSTRUCTION RELATED TO EGRESS AND SAFETY TO LIFE AS WELL AS FIRE RESISTANCE RATINGS OF NON-BEARING PARTITIONS. IF ANY CONFLICTS OCCUR BETWEEN NFPA 101 AND IBC, RELATED TO FIRE RESISTANCE RATING, NFPA 101 WILL TAKE PRECEDENCE AND APPLICABLE CRITERIA CONTAINED IN UFC 3-600-01. OCCUPANCY DEFINITIONS OF NFPA 101 WILL BE USED TO DETERMINE MEANS OF EGRESS REQUIREMENTS.

3. **APPLICABLE CODES AND STANDARDS**
- IBC – 2018 EDITION – INTERNATIONAL BUILDING CODE
- NFPA 10 – 2018 EDITION – STANDARD FOR PORTABLE FIRE EXTINGUISHERS
- NFPA 13 – 2019 EDITION – STANDARD FOR INSTALLATION OF SPRINKLER SYSTEMS
- NFPA 70 – 2020 EDITION – NATIONAL ELECTRICAL CODE
- NFPA 72 – 2019 EDITION – NATIONAL FIRE ALARM AND SIGNALING CODE
- NFPA 90A – 2018 EDITION – STANDARD FOR THE INSTALLATION OF AIR-CONDITIONING & VENTILATING SYSTEMS
- NFPA 101 – 2018 EDITION – LIFE SAFETY CODE
- UFC 1-200-01 – GENERAL BUILDING REQUIREMENTS, 8 OCTOBER 2019
- UFC 3-600-01 – FIRE PROTECTION ENGINEERING FOR FACILITIES, 8 AUGUST 2016 WITH CHANGE 4, 7 FEBRUARY 2020
- UFC 4-021-01 – DESIGN AND O&M: MASS NOTIFICATION SYSTEMS, 9 APRIL 2008 WITH CHANGE 1, JANUARY 2010
- FC 1-300-09N – NAVY AND MARINE CORPS DESIGN PROCEDURES, 1 MAY 2014 WITH CHANGE 4, 14 JUNE 2018

4. **OCCUPANCY CLASSIFICATION**
IBC BUSINESS B (IBC – SECTION 304) NFPA CHAPTER 38: BUSINESS
IBC FACTORY, A-3 (IBC -SECTION 303) NFPA CHAPTER 12: NEW ASSEMBLY OCCUPANCIES

5. **CONSTRUCTION TYPE**
IBC 602.2, TABLE 503 TYPE IIB

6. **AREA AND HEIGHT LIMITATIONS (IBC TABLE 504.3, TABLE 504.4, AND TABLE 506.2, AND SECTION 508.4.2)**

ALLOWABLE AREA CALCULATIONS CONSTRUCTION TYPE IIB		
OCCUPANCY	ALLOWABLE AREA FOR SINGLE STORY SPRINKLERED BUILDING (SQ. FT) WITH AREA INCREASE	ACTUAL FIRST FLOOR TOTAL AREA (SQ. FT)
BUSINESS	109,250	16,622
ASSSEMBLY	45,125	38,819

THE BUILDING SHALL BE CLASSIFIED AS SEPARATED, MIXED USE OCCUPANCY.
THE SUM OF THE RATIO OF THE ACTUAL AREA DIVIDED BY THE ALLOWABLE AREA IS 0.98.

ALLOWABLE BUILDING HEIGHT: 75 FT., 3 STORIES
ACTUAL BUILDING HEIGHT: 32 FT., 1 STORIES

7. **FIRE RESISTIVE REQUIREMENTS (IBC TABLES 601 AND 602)**

PRIMARY STRUCTURAL FRAME	0 HOUR RATING
EXTERIOR BEARING WALLS*	0 HOUR RATING
INTERIOR BEARING WALLS	0 HOUR RATING
EXTERIOR NON-BEARING WALLS AND PARTITIONS	0 HOUR RATING
INTERIOR NON-BEARING WALLS AND PARTITIONS	0 HOUR RATING
FLOOR CONSTRUCTION AND SECONDARY MEMBERS	0 HOUR RATING
ROOF CONSTRUCTION AND SECONDARY MEMBERS	0 HOUR RATING

*TAKES INTO ACCOUNT THE FIRE SEPARATION DISTANCE REQUIREMENT OF IBC TABLE 602. THE FIRE SEPARATION DISTANCE IS GREATER THAN 30 FEET. WHERE DISTANCES ARE LESS THAN 30 FEET, TABLE 602 REQUIREMENTS SHALL APPLY.

8. **PROTECTION FROM HAZARDS (NFPA 101 AND UFC 3-600-01)**
PROTECTION FROM ANY AREA HAVING A DEGREE OF HAZARD GREATER THAN THAT NORMAL TO THE GENERAL OCCUPANCY OF THE BUILDING, SUCH AS AREAS USED FOR GENERAL STORAGE, BOILER OR FURNACE ROOMS, OR MAINTENANCE SHOPS SHALL BE PROTECTED IN ACCORDANCE WITH NFPA 101 SECTION 8.7.

9. **OPENING PROTECTION AND PENETRATION REQUIREMENTS (NFPA 101 CHAPTER 8)**
JOINTS MADE WITHIN OR AT THE PERIMETER OF FIRE BARRIERS SHALL BE PROTECTED WITH A JOINT SYSTEM THAT IS CAPABLE OF LIMITING THE TRANSFER OF FIRE. JOINTS MADE WITHIN OR BETWEEN FIRE BARRIERS SHALL BE PROTECTED WITH A FIRE-TIGHT JOINT SYSTEM THAT IS CAPABLE OF LIMITING THE TRANSFER OF FIRE. JOINTS MADE WITHIN OR BETWEEN FIRE RESISTANCE-RATED ASSEMBLIES SHALL BE PROTECTED WITH A JOINT SYSTEM TESTED IN ACCORDANCE WITH ASTM E1966 OR ANSI / UL 2079.

PENETRATIONS AND JOINTS THROUGH SMOKE PARTITIONS SHALL BE PROTECTED BY A SYSTEM THAT IS CAPABLE OF LIMITING THE TRANSFER OF SMOKE.

NFPA 101 TABLE 8.3.3.2.2

COMPONENTS	WALLS AND PARTITIONS (HOUR)	FIRE DOOR ASSEMBLIES (HOUR)
FIRE BARRIERS	1	3/4

FIREBLOCKING AND DRAFTSTOPPING ARE NOT REQUIRED IN NON-COMBUSTIBLE CONSTRUCTION (IBC 718.2, 718.3, AND 718.4)

10. **STRUCTURAL ELEMENTS SUPPORTING FIRE BARRIERS (NFPA 101, CHAPTER 8)**
STRUCTURAL ELEMENTS THAT SUPPORT FIRE BARRIERS WILL BE PERMITTED TO HAVE ONLY THE FIRE RESISTANCE RATING REQUIRED FOR THE CONSTRUCTION CLASSIFICATION OF THE BUILDING, PROVIDED THAT BOTH OF THE FOLLOWING CRITERIA ARE MET:
- SUCH STRUCTURAL ELEMENTS SUPPORT NON-BEARING WALL OR PARTITION ASSEMBLIES THAT HAVE A REQUIRED 1-HOUR FIRE RESISTANCE RATING OR LESS.
- SUCH STRUCTURAL ELEMENTS DO NOT SERVE AS EXIT ENCLOSURES OR PROTECTION FOR VERTICAL OPENINGS.

11. **MARKING AND IDENTIFICATION OF FIRE BARRIER AND SMOKE PARTITION (IBC 703.7)**
FIRE BARRIERS AND SMOKE PARTITIONS SHALL BE EFFECTIVELY AND PERMANENTLY IDENTIFIED WITH SIGNS OF STENCILING. SUCH IDENTIFICATION SHALL:
- BE LOCATED IN ACCESSIBLE CONCEALED FLOOR, CEILING, OR ATTIC SPACE.
- BE LOCATED WITHIN 15 FEET OF THE END OF EACH WALL AND AT INTERVALS NOT EXCEEDING 10 FEET MEASURED HORIZONTALLY ALONG THE WALL OR PARTITIONS.
- INCLUDE LETTERING NOT LESS THAN 3 INCHES IN HEIGHT WITH A MINIMUM 3/8 INCH STROKE IN A CONTRASTING COLOR INCORPORATING THE SUGGESTED WORDING "FIRE BARRIER AND/OR SMOKE PARTITION – PROTECT ALL OPENINGS" OR OTHER WORDING.

12. **INTERIOR FINISHES CLASSIFICATION LIMITS**
NFPA 101, TABLE A.10.2.2

INTERIOR FINISH CLASSIFICATION, SPRINKLERED			
OCCUPANCY	EXIT ENCLOSURES AND EXIT PASSAGEWAYS	CORRIDORS	ROOMS AND ENCLOSED SPACES
NEW BUSINESS	CLASS A, B, OR C	CLASS A OR B	CLASS A, B, OR C
	CLASS I OR II	CLASS I OR II	N/A
NEW ASSEMBLY	CLASS A OR B	CLASS A OR B	CLASS A OR B
	CLASS I OR II	CLASS I OR II	N/A
CLASS A INTERIOR WALL AND CEILING FINISH- FLAME SPREAD INDEX 0-25, SMOKE DEVELOPED 0-450 CLASS B INTERIOR WALL AND CEILING FINISH- FLAME SPREAD INDEX 26-75, SMOKE DEVELOPED 0-450 CLASS C INTERIOR WALL AND CEILING FINISH- FLAME SPREAD INDEX 76-200, SMOKE DEVELOPED 0-450 CLASS I INTERIOR FLOOR FINISH- CRITICAL RADIANT FLUX NOT LESS THAN 0.45 W/CM2 CLASS II INTERIOR FLOOR FINISH- CRITICAL RADIANT FLUX NOT MORE THAN 0.22 W/CM^2 BUT LESS THAN 0.45 W/CM2			

13. **INSULATION REQUIREMENTS (UFC 3-600-01, CHAPTER 8)**
THERMAL AND ACOUSTICAL INSULATION WITH A FLAME SPREAD (FS) RATING NOT HIGHER THAN 75, AND A SMOKE DEVELOPED (SD) RATING NOT HIGHER THAN 150 SHALL BE USED WHEN TESTED IN ACCORDANCE WITH ASTM E84 UNLESS EXCEPTIONS OF SECTION 8-1 ARE MET.

15. **MEANS OF EGRESS**
THE FLOOR PLAN LAYOUT AND CORRIDORS ARE BE DESIGNED TO MEET NFPA 101 REQUIREMENTS FOR FIRE AND LIFE SAFETY AND OCCUPANT EGRESS.

ALL DOORS AND CORRIDORS ARE TO BE SIZED AT 0.2 INCHES PER OCCUPANT, NOT LESS THAN 32 INCHES, USING THE EXIT. TURNSITLES HAVE A CAPACITY OF 50 OCCUPANTS EACH (NFPA 101 SECTION 7.4.1.2).

EGRESS LIMITATIONS - SPRINKLERED FACILITY NFPA 101, TABLE A.7.6			
OCCUPANCY	DEAD END (FT)	COMMON PATH (FT)	TRAVEL DISTANCE (FT)
NEW BUSINESS	50	100	300
ASSEMBLY	20/75	20	250

16. **OCCUPANT LOAD AND EGRESS CAPACITY CALCULATION**

OCCUPANT LOAD - BUSINESS USE

USE	OCCUPANT LOAD FACTOR (SQ. FT/PERSON)	AREA (SQ. FT.)	OCCUPANT LOAD
MECHANICAL 400,401	500	2,962	6
STORAGE/SHIPPING 402	500	2,034	5
COMM 115	300	149	1
ELEC 137	500	138	1
BREAK 108	15	357	24
FIRE STORAGE 103A	500	769	2
LIBRARY STORAGE	500	897	2
BUSINESS	150	5,878	40
TOTAL OCCUPANT LOAD		13,184	81
EXITS REQUIRED: 2		EXITS PROVIDED: 2	

OCCUPANT LOAD - ASSEMBLY OCCUPANCY

USE	OCCUPANT LOAD FACTOR (SQ. FT/PERSON)	AREA (SQ. FT.)	OCCUPANT LOAD
ELEC 403, 306	500	592	2
COMM 208, 305	300	330	2
BREAK	30	676	23
SECURE VTC	30	417	14
BRIEF 209, 101, 102	30	1,426	49
SERVER 304A, 304B	300	1,900	8
CLASSROOMS	20	17,330	868
AUDITORIUM	FIXED	1,591	123
STORAGE 203	500	1,042	3
BUSINESS	150	9,180	62
TOTAL OCCUPANT LOAD		4,020	1154
EXITS REQUIRED: 4		EXITS PROVIDED: 4	

EXIT CAPACITY - FIRST FLOOR (NFPA 101, 7.2.1.2.3)			
EXITS	ACTUAL CLEAR WIDTH (INCHES)	CALCULATED CAPACITY	ACTUAL USE
INDIVIDUAL ROOM EXIT			
IRE-1	34	170	4
IRE-2	68	340	2
IRE-3	34	170	5
IRE-4	68	340	1
EXIT NUMBER			
E-1	46	230	230
E-2	68	340	340
E-3	68	340	300
E-4	68	340	340
E-5	68	170	35

17. **DISCHARGE FROM EXITS (NFPA 101, 7.7)**
BUILDING EXITS SHALL TERMINATE DIRECTLY AT A PUBLIC WAY IN ACCORDANCE WITH NFPA 101, SECTION 7.7. STAIRS STB-1 ARE PERMITTED TO DISCHARGE TO THE INTERIOR IN ACCORDANCE WITH NFPA 101 SECTION 7.7.2.

18. **ILLUMINATION OF MEANS OF EGRESS (NFPA 101, 7.8)**
MEANS OF EGRESS SHALL BE ILLUMINATED IN ACCORDANCE WITH NFPA 101 SECTION 7.8.

19. **EMERGENCY LIGHTING (NFPA 101, 7.9)**
EMERGENCY LIGHTING SHALL BE PROVIDED IN ACCORDANCE WITH SECTION 7.9.

20. **MARKINGS OF MEANS OF EGRESS (NFPA 101, 7.10)**
MEANS OF EGRESS SHALL HAVE SIGNS IN ACCORDANCE WITH SECTION 7.10.

21. **PORTABLE FIRE EXTINGUISHERS (NFPA 10)**
FIRE EXTINGUISHER AND CABINETS SHALL BE LOCATED IN ACCORDANCE WITH NFPA 10. IN FINISHED AREAS, THE FIRE EXTINGUISHER CABINETS SHALL BE FLUSH MOUNT CABINETS.

22. **FIRE DEPARTMENT ACCESS (UFC 3-600-01)**
FIRE DEPARTMENT ACCESS SHALL BE PROVIDED IN ACCORDANCE WITH UFC 3-600-01 SECTION 9-1. FIRE DEPARTMENT ACCESS ROADS SHALL BE NO LESS THAN 20 FEET UNOBSTRUCTED AND DESIGNED FOR THE WEIGHT OF APPARATUS.

23. **AUTOMATIC SPRINKLERS AND OTHER EXTINGUISHING EQUIPMENT (UFC 3-600-01 AND NFPA 13)**
THE ENTIRE BUILDING SHALL BE PROTECTED THROUGHOUT WITH A HYDRAULICALLY CALCULATED AUTOMATIC WET-PIPE SPRINKLER SYSTEM. DESIGN DENSITIES SHALL BE IN ACCORDANCE WITH UFC 3-600-01 AND NFPA 13.

24. **FIRE ALARM AND MASS NOTIFICATION SYSTEMS (UFC 3-600-01, UFC 4-021-01, AND NFPA 72)**
FIRE ALARM AND MASS NOTIFICATION WILL BE PROVIDED IN ACCORDANCE WITH UFC 3-600-01, UFC 4-021-01 AND NFPA 72. THE SYSTEM SHALL CONSIST OF MANUAL PULL STATIONS, STROBES, SPEAKERS, SPRINKLER FLOW AND VALVE TAMPER SUPERVISION, AND SMOKE DETECTORS WITHIN THE HVAC SYSTEMS AS REQUIRED BY NFPA 90A.

25. **ACCESSIBILITY REQUIREMENTS**
THE BUILDING SHALL BE ACCESSIBLE AND CONFORM TO *ABA ACCESSIBILITY STANDARD FOR DEPARTMENT OF DEFENSE FACILITIES* AS ADOPTED BY THE DEPUTY SECRETARY OF DEFENSE IN LIEU OF IBC CHAPTER 11 PER UFC 1-200-01.

26. **ANTI-TERRORISM AND FORCE PROTECTION REQUIREMENTS (AT/FP) (UFC 4-010-01 SECTION B-4.3)**
AN EMERGENCY SHUTOFF SWITCH IN THE HVAC CONTROL SYSTEM CAPABLE OF IMMEDIATE SHUT DOWN OF THE AIR DISTRIBUTION SYSTEM THROUGHOUT THE BUILDING.

APPR
DATE
DESCRIPTION
SYM

NAVFAC

PRELIMINARY FOR REFERENCE ONLY

SEAL

W.M. Jordan COMPANY – A JOINT VENTURE –

Michael Baker INTERNATIONAL
100 AIRSIDE DRIVE
MOON TOWNSHIP, PA 15108 A/E INFO

APPROVED

FOR COMMANDER NAVFAC

ACTIVITY
MARINE CORPS BASE CAMP LEJEUNE

SATISFACTORY TO DATE

DES JAM DRW ADH CHK DJW

PM

BRANCH MANAGER

CHIEF ENG/ARCH

FIRE PROTECTION

DEPARTMENT OF THE NAVY
NAVAL FACILITIES ENGINEERING COMMAND ~ MID-ATLANTIC
ROICC FLORENCE CAMP LEJEUNE
MCB CAMP LEJEUNE
NAVAL FACILITIES ENGINEERING COMMAND ~ MID-ATLANTIC JACKSONVILLE, NC
JACKSONVILLE, NC
P1338F II MEF SIMULATION/TRAINING CENTER REPLACEMENT
LIFE SAFETY - CODE ANALYSIS

SCALE: AS NOTED
EPROJECT NO.: 1590892
CONSTR. CONTR. NO.
N40085-20-C-0059
NAVFAC DRAWING NO.
SHEET OF

G-100

DP2 SUBMISSION – P1338 BUILDING –PRE-FINAL SUBMISSION

PLOTTED: 6/11/2021 7:33:21 AM

FILE NAME: BIM 360://HF PACKAGE 3/P1338 MEF SIM CTR-1590892-F.rvt

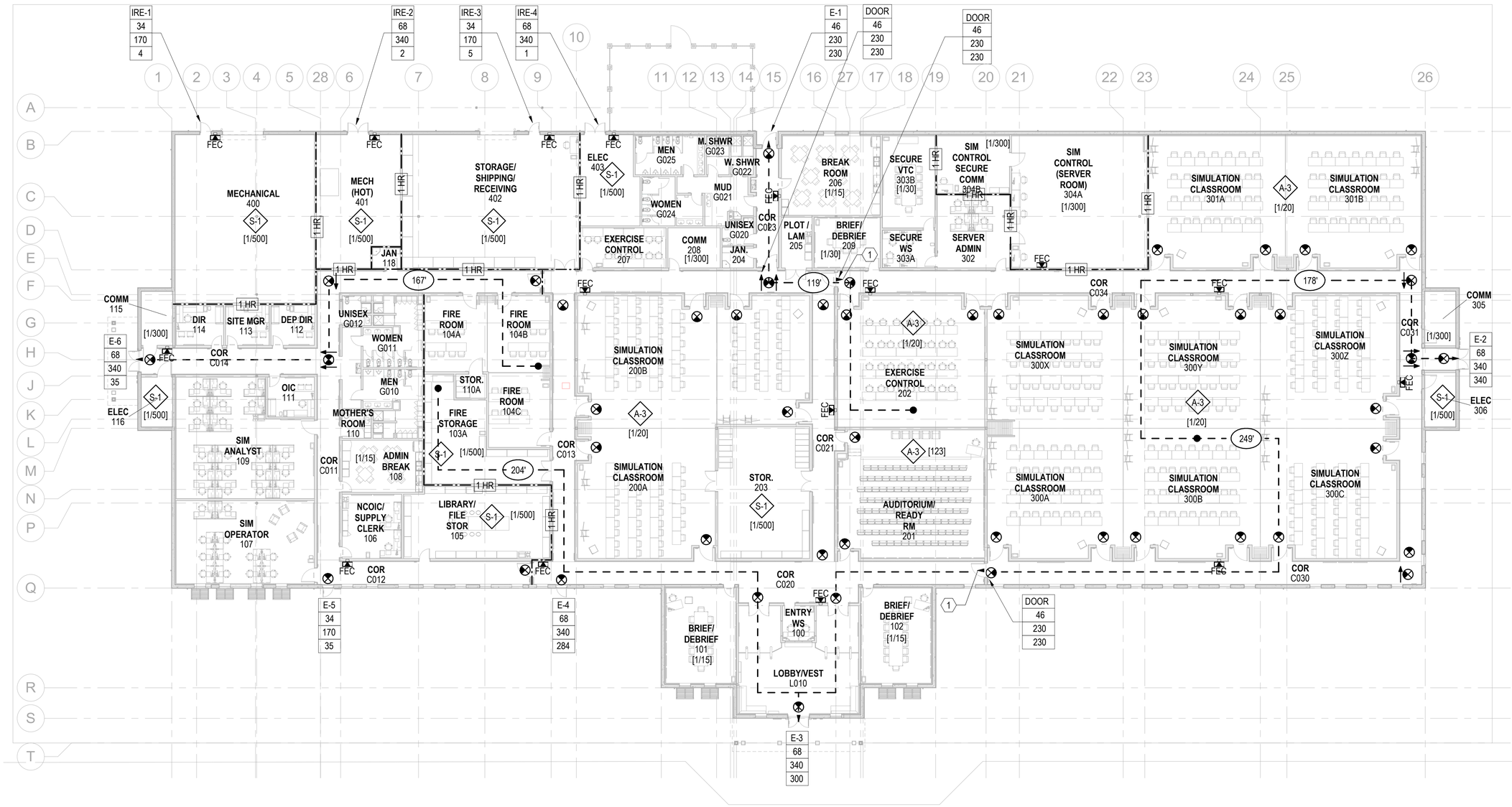

LIFE SAFETY - OVERALL - FIRST FLOOR PLAN

SCALE: 1/16" = 1'-0"

KEYPLAN

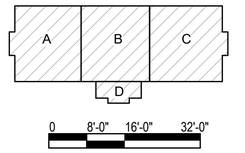

APPR | DATE | DESCRIPTION | SYM

NAVFAC

PRELIMINARY FOR REFERENCE ONLY

SEAL

RQ W.M. Jordan COMPANY ~ A JOINT VENTURE ~

Michael Baker INTERNATIONAL

100 AIRSIDE DRIVE
MOON TOWNSHIP, PA 15108 A/E INFO

APPROVED

FOR COMMANDER NAVFAC

ACTIVITY
MARINE CORPS BASE CAMP LEJEUNE

SATISFACTORY TO DATE

DES JAM | DRW ADH | CHK DJW

PM

BRANCH MANAGER

CHIEF ENG/ARCH

FIRE PROTECTION

DEPARTMENT OF THE NAVY
NAVAL FACILITIES ENGINEERING COMMAND ~ MID-ATLANTIC
ROICC FLORENCE CAMP LEJEUNE
MCB CAMP LEJEUNE
JACKSONVILLE, NC

P1338F II MEF SIMULATION/TRAINING CENTER REPLACEMENT
JACKSONVILLE, NC

LIFE SAFETY - OVERALL - FIRST FLOOR PLAN

SCALE: AS NOTED

EPROJECT NO.: 1590892

CONSTR. CONTR. NO.
N40085-20-C-0059

NAVFAC DRAWING NO.

SHEET OF

G-110

DP2 SUBMISSION – P1338 BUILDING -_PRE-FINAL SUBMISSION

PLOTTED: 6/11/2021 7:33:23 AM

FILE NAME: BIM 360:/HF PACKAGE 3/P1338 MEF SIM CTR-1590892-F.rvt

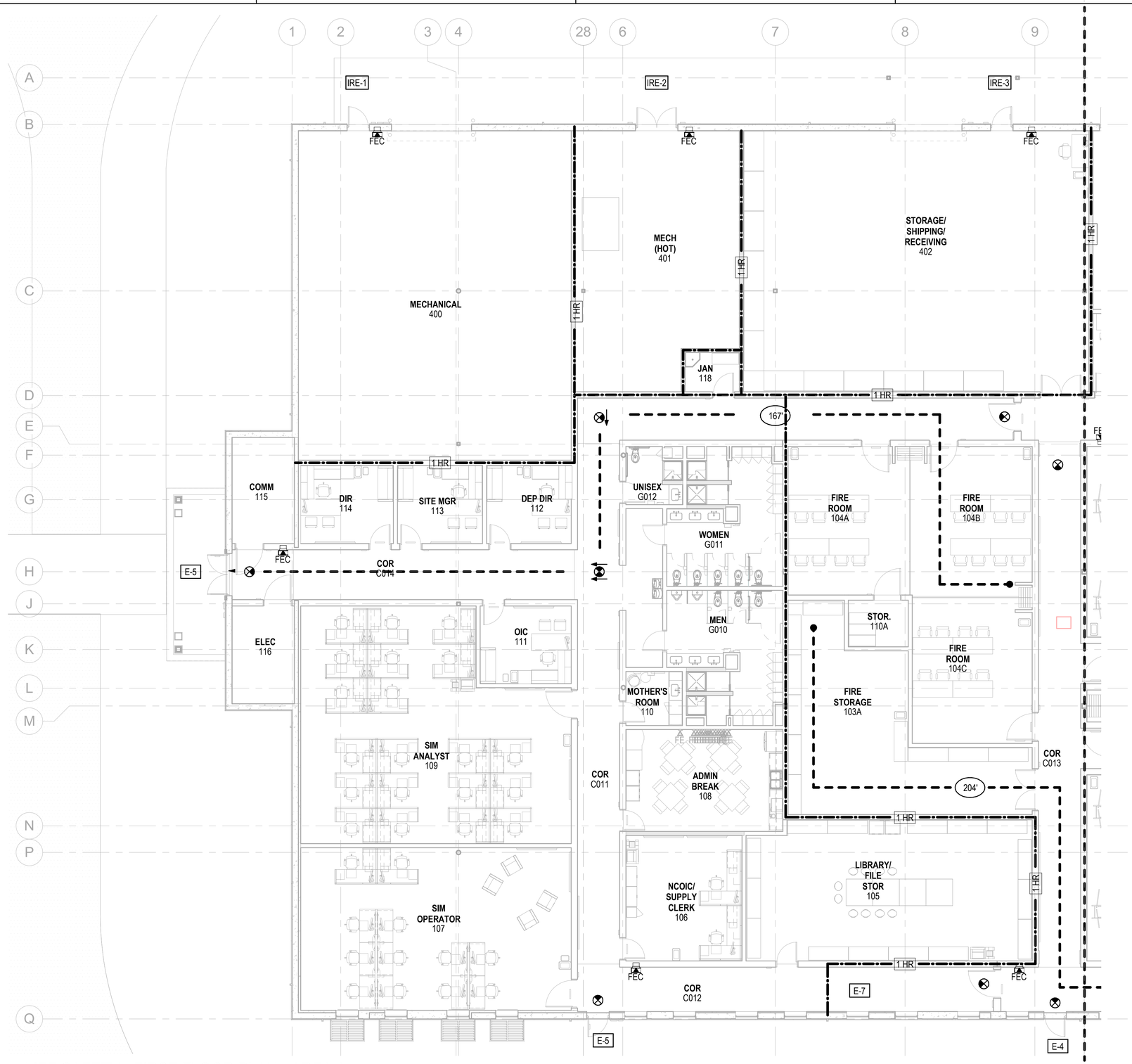

A1 LIFE SAFETY - FIRST FLOOR PLAN - AREA A
SCALE: 1/8" = 1'-0"

GENERAL NOTES

1. SEE SHEET G-100 FOR LIFE SAFETY CODE ANALYSIS.
2. ALL OCCUPANCIES ARE BUSINESS UNLESS NOTED OTHERWISE.

LEGEND

DESCRIPTION	SYMBOL
SMOKE PARTITION	SP
1 HOUR FIRE BARRIER	1 HR
OCCUPANCY LOAD	0
FIRE EXTINGUISHER	FE
FIRE EXTINGUISHER CABINET	FEC
EXIT SIGN	
TRAVEL DISTANCE	0'
COMMON PATH OF TRAVEL	0'
DEAD END	0'
OCCUPANT LOAD FACTOR	[X/Y] PERSONS/SQUARE FOOT

EXIT LEGEND

E-X	EXIT COMPONENT
X	DOOR WIDTH
X	CALCULATED CAPACITY
X	ACTUAL USE

KEYPLAN

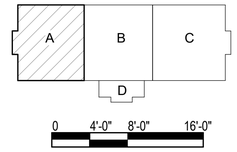

SCALE: 1/8" = 1'-0"

N

SYM	DESCRIPTION	DATE	APPR

NAVFAC

PRELIMINARY FOR REFERENCE ONLY

SEAL

RQ W.M. Jordan COMPANY - A JOINT VENTURE -

Michael Baker INTERNATIONAL
100 AIRSIDE DRIVE
MOON TOWNSHIP, PA 15108
A/E INFO

APPROVED

FOR COMMANDER NAVFAC

ACTIVITY
MARINE CORPS BASE CAMP LEJEUNE

SATISFACTORY TO DATE

DES JAM | DRW ADH | CHK DJW

PM

BRANCH MANAGER

CHIEF ENG/ARCH

FIRE PROTECTION

DEPARTMENT OF THE NAVY
NAVAL FACILITIES ENGINEERING COMMAND
ROICC FLORENCE CAMP LEJEUNE
NAVAL FACILITIES ENGINEERING COMMAND ~ MID-ATLANTIC
JACKSONVILLE, NC
MCB CAMP LEJEUNE
JACKSONVILLE, NC

P1338F II MEF SIMULATION/TRAINING CENTER REPLACEMENT

LIFE SAFETY - FIRST FLOOR PLAN - AREA A

SCALE: AS NOTED
EPROJECT NO.: 1590892
CONSTR. CONTR. NO. N40085-20-C-0059
NAVFAC DRAWING NO.
SHEET OF

G-111

DP2 SUBMISSION – P1338 BUILDING - PRE-FINAL SUBMISSION

PLOTTED: 6/11/2021 7:33:25 AM

FILE NAME: BIM 360://HF PACKAGE 3/P1338 MEF SIM CTR-1590892-F.rvt

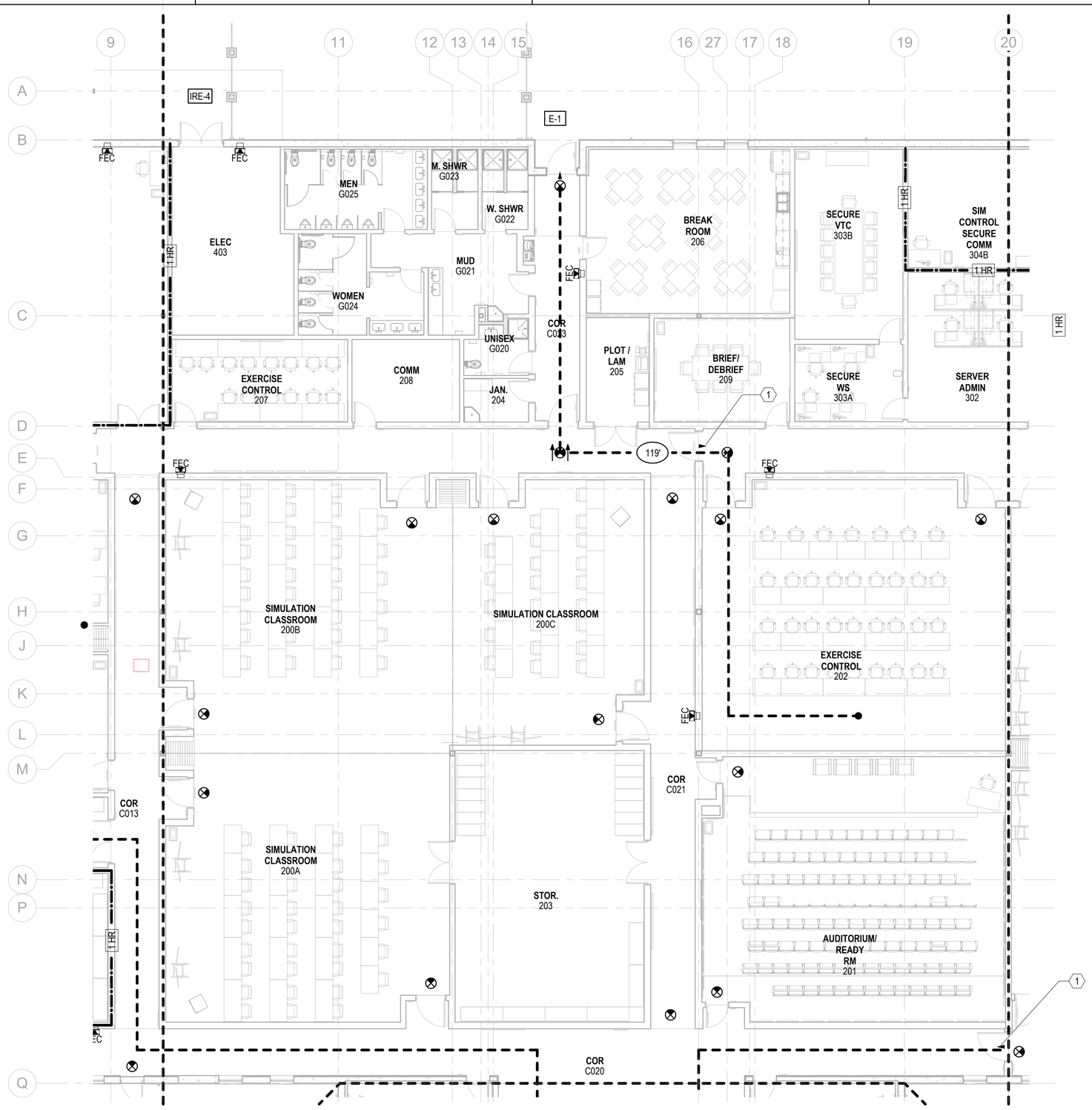

A1 LIFE SAFETY - FIRST FLOOR PLAN - AREA B
SCALE: 1/8" = 1'-0"

GENERAL NOTES

1. SEE SHEET G-100 FOR LIFE SAFETY CODE ANALYSIS.
2. ALL OCCUPANCIES ARE BUSINESS UNLESS NOTED OTHERWISE.

KEYNOTES

1 DIRECTION OF EGRESS.

LEGEND

DESCRIPTION	SYMBOL
SMOKE PARTITION	SP
1 HOUR FIRE BARRIER	1 HR
OCCUPANCY LOAD	0
FIRE EXTINGUISHER	FE
FIRE EXTINGUISHER CABINET	FEC
EXIT SIGN	
TRAVEL DISTANCE	0'
COMMON PATH OF TRAVEL	0'
DEAD END	0'
OCCUPANT LOAD FACTOR	[X/Y] PERSONS/SQUARE FOOT

KEYPLAN

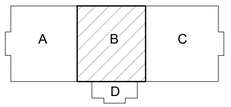

0 4'-0" 8'-0" 16'-0"
SCALE: 1/8" = 1'-0"

N

APPR	DATE	DESCRIPTION	SYM

NAVFAC

PRELIMINARY FOR REFERENCE ONLY
SEAL

RQ W.M. Jordan COMPANY – A JOINT VENTURE –

Michael Baker INTERNATIONAL
100 AIRSIDE DRIVE
MOON TOWNSHIP, PA 15108
A/E INFO

APPROVED

FOR COMMANDER NAVFAC

ACTIVITY
MARINE CORPS BASE
CAMP LEJEUNE

SATISFACTORY TO DATE

DES	JAM	DRW	ADH	CHK	DJW

PM
BRANCH MANAGER
CHIEF ENG/ARCH
FIRE PROTECTION

DEPARTMENT OF THE NAVY
NAVAL FACILITIES ENGINEERING COMMAND
ROICC FLORENCE CAMP LEJEUNE
MCB CAMP LEJEUNE

NAVAL FACILITIES ENGINEERING COMMAND – MID-ATLANTIC
JACKSONVILLE, NC

JACKSONVILLE, NC
P1338F II MEF SIMULATION/TRAINING CENTER REPLACEMENT
LIFE SAFETY - FIRST FLOOR PLAN - AREA B

SCALE: AS NOTED
EPROJECT NO.: 1590892
CONSTR. CONTR. NO.
N40085-20-C-0059
NAVFAC DRAWING NO.
SHEET OF

G-112

DP2 SUBMISSION – P1338 BUILDING - PRE-FINAL SUBMISSION

PLOTTED: 6/11/2021 7:33:27 AM
FILE NAME: BIM 360://HF PACKAGE 3/P1338 MEF SIM CTR-1590892-F.rvt

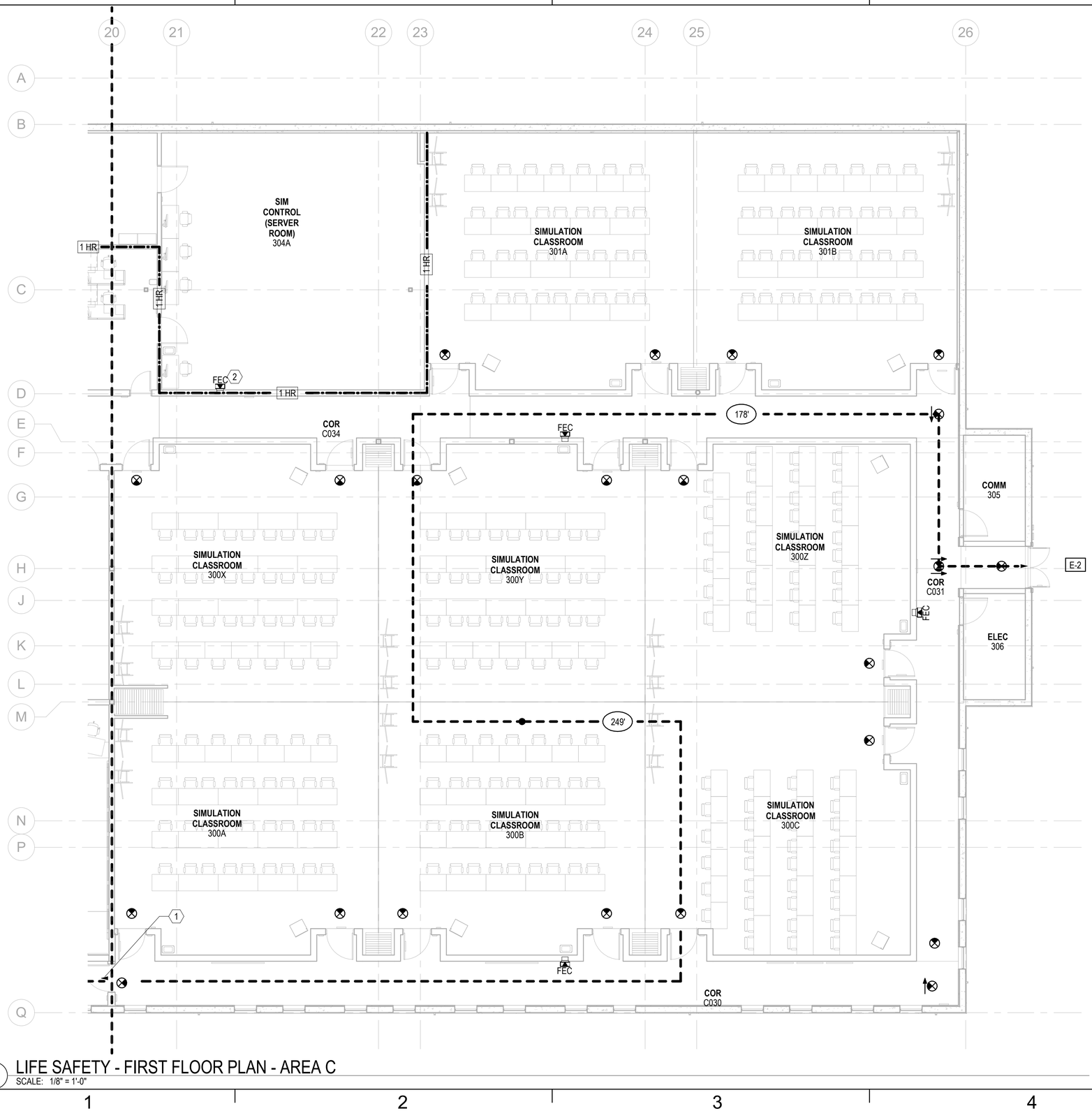

A1 LIFE SAFETY - FIRST FLOOR PLAN - AREA C
SCALE: 1/8" = 1'-0"

GENERAL NOTES

1. SEE SHEET G-100 FOR LIFE SAFETY CODE ANALYSIS.
2. ALL OCCUPANCIES ARE BUSINESS UNLESS NOTED OTHERWISE.

KEYNOTES

1	DIRECTION OF EGRESS.
2	PROVIDE CLEAN AGENT FE13 EXTINUGISHER.

LEGEND

DESCRIPTION	SYMBOL
SMOKE PARTITION	SP
1 HOUR FIRE BARRIER	1 HR
OCCUPANCY LOAD	0
FIRE EXTINGUISHER	FE
FIRE EXTINGUISHER CABINET	FEC
EXIT SIGN	
TRAVEL DISTANCE	0'
COMMON PATH OF TRAVEL	0'
DEAD END	0'
OCCUPANT LOAD FACTOR	[X/Y] PERSONS/SQUARE FOOT

KEYPLAN

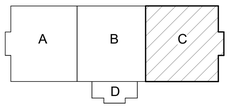

0 4'-0" 8'-0" 16'-0"
SCALE: 1/8" = 1'-0"

N

NO.	DESCRIPTION	DATE	APPR

NAVFAC

PRELIMINARY FOR REFERENCE ONLY

SEAL

IRQ W.M. Jordan COMPANY – A JOINT VENTURE –

Michael Baker INTERNATIONAL
100 AIRSIDE DRIVE
MOON TOWNSHIP, PA 15108
A/E INFO

APPROVED

FOR COMMANDER NAVFAC

ACTIVITY
MARINE CORPS BASE CAMP LEJEUNE

SATISFACTORY TO DATE

DES	JAM	DRW	ADH	CHK	DJW

PM

BRANCH MANAGER

CHIEF ENG/ARCH

FIRE PROTECTION

DEPARTMENT OF THE NAVY
NAVAL FACILITIES ENGINEERING COMMAND
ROICC FLORENCE CAMP LEJEUNE
MCB CAMP LEJEUNE

NAVAL FACILITIES ENGINEERING COMMAND – MID-ATLANTIC
JACKSONVILLE, NC

JACKSONVILLE, NC
P1338F II MEF SIMULATION/TRAINING CENTER REPLACEMENT

LIFE SAFETY - FIRST FLOOR PLAN - AREA C

SCALE: AS NOTED
EPROJECT NO.: 1590892
CONSTR. CONTR. NO.
N40085-20-C-0059
NAVFAC DRAWING NO.
SHEET OF

G-113

DP2 SUBMISSION – P1338 BUILDING -PRE-FINAL SUBMISSION

PLOTTED: 6/11/2021 7:33:28 AM
FILE NAME: BIM 360://HF PACKAGE 3/P1338 MEF SIM CTR-1590892-F.rvt

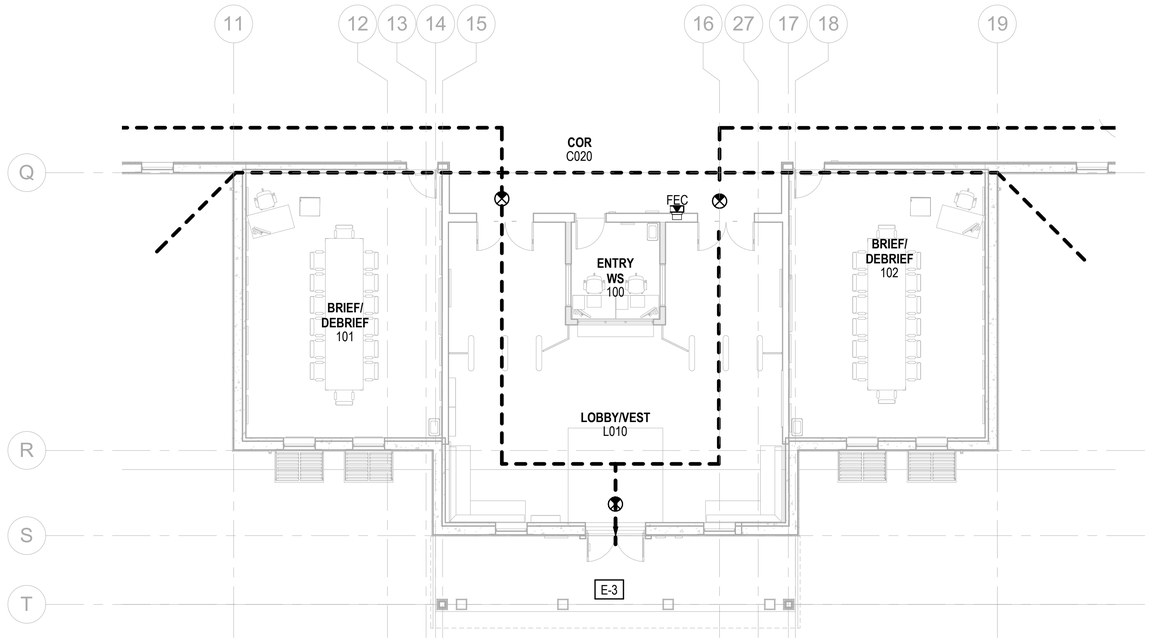

A1 LIFE SAFETY - FIRST FLOOR PLAN - AREA D
SCALE: 1/8" = 1'-0"

GENERAL NOTES

1. SEE SHEET G-100 FOR LIFE SAFETY CODE ANALYSIS.
2. ALL OCCUPANCIES ARE BUSINESS UNLESS NOTED OTHERWISE.

LEGEND

DESCRIPTION	SYMBOL
SMOKE PARTITION	SP
1 HOUR FIRE BARRIER	1 HR
OCCUPANCY LOAD	0
FIRE EXTINGUISHER	FE
FIRE EXTINGUISHER CABINET	FEC
EXIT SIGN	
TRAVEL DISTANCE	0'
COMMON PATH OF TRAVEL	0'
DEAD END	0'
OCCUPANT LOAD FACTOR	[X/Y] PERSONS/SQUARE FOOT

KEYPLAN

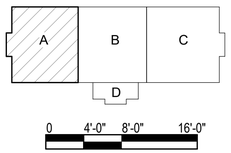

SCALE: 1/8" = 1'-0"

SYM	DESCRIPTION	DATE	APPR

NAVFAC

PRELIMINARY FOR REFERENCE ONLY

SEAL

IRQ W.M. Jordan COMPANY ~ A JOINT VENTURE ~

Michael Baker INTERNATIONAL
100 AIRSIDE DRIVE
MOON TOWNSHIP, PA 15108
A/E INFO

APPROVED

FOR COMMANDER NAVFAC

ACTIVITY
MARINE CORPS BASE
CAMP LEJEUNE

SATISFACTORY TO DATE

DES JAM | DRW ADH | CHK DJW

PM

BRANCH MANAGER

CHIEF ENG/ARCH

FIRE PROTECTION

DEPARTMENT OF THE NAVY
NAVAL FACILITIES ENGINEERING COMMAND
ROICC FLORENCE CAMP LEJEUNE

NAVAL FACILITIES ENGINEERING COMMAND ~ MID-ATLANTIC
JACKSONVILLE, NC

MCB CAMP LEJEUNE
JACKSONVILLE, NC

P1338F II MEF SIMULATION/TRAINING CENTER REPLACEMENT

LIFE SAFETY - FIRST FLOOR PLAN - AREA D

SCALE: AS NOTED
EPROJECT NO.: 1590892
CONSTR. CONTR. NO.
N40085-20-C-0059
NAVFAC DRAWING NO.
SHEET OF

G-114

DP2 SUBMISSION – P1338 BUILDING - PRE-FINAL SUBMISSION

PLOTTED: 6/11/2021 7:33:29 AM

FILE NAME: BIM 360://HF PACKAGE 3/P1338 MEF SIM CTR-1590892-F.rvt

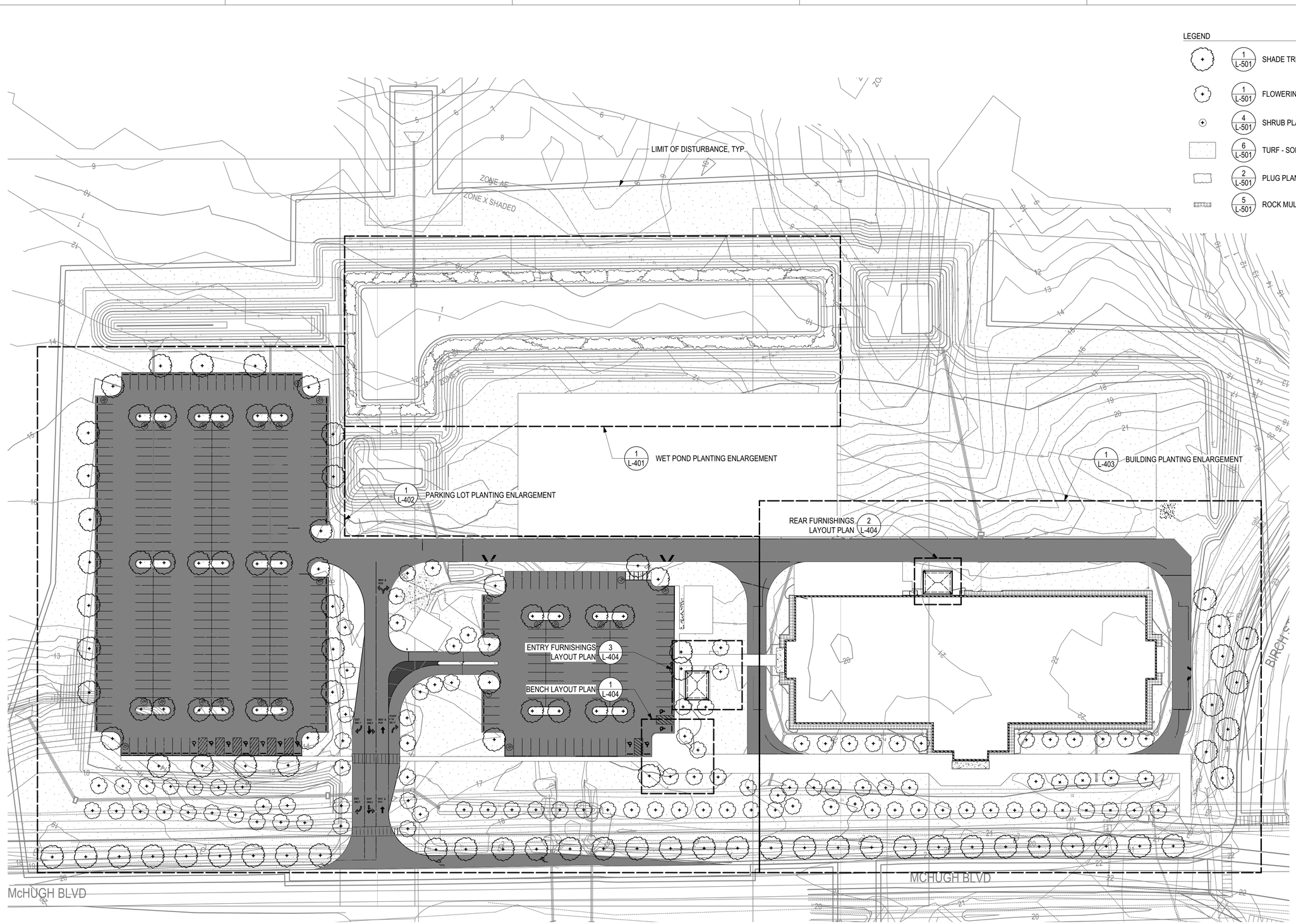

APPR	DATE	DESCRIPTION	SYM

NAVFAC

PRELIMINARY NOT FOR CONSTRUCTION

SEAL

RQ WM Jordan COMPANY

Michael Baker INTERNATIONAL

100 AIRSIDE DRIVE
MOON TOWNSHIP, PA 15108 A/E INFO

APPROVED

FOR COMMANDER NAVFAC

ACTIVITY
MARINE CORPS BASE
CAMP LEJEUNE

SATISFACTORY TO DATE	DD/MM/YY
DES ERW DRW ERW CHK JCF	
PM	XXX
BRANCH MANAGER	XXX
CHIEF ENG/ARCH	XXX
FIRE PROTECTION	XXX

DEPARTMENT OF THE NAVY
NAVAL FACILITIES ENGINEERING COMMAND ~ MID-ATLANTIC
ROICC FLORENCE CAMP LEJEUNE JACKSONVILLE, NC
MCB CAMP LEJEUNE JACKSONVILLE, NC
P1338F II MEF SIMULATION/TRAINING CENTER REPLACEMENT
LANDSCAPE SITE PLAN

SCALE:	AS NOTED
EPROJECT NO.:	
CONSTR. CONTR. NO.	N40085-20-C-0059
NAVFAC DRAWING NO.	
SHEET ### OF	L-101

DP2 SUBMISSION - P1338 BUILDING DESIGN DEVELOPMENT

LEGEND

- 6 / L-501 — TURF - SODDING
- 2 / L-501 — PLUG PLANTING

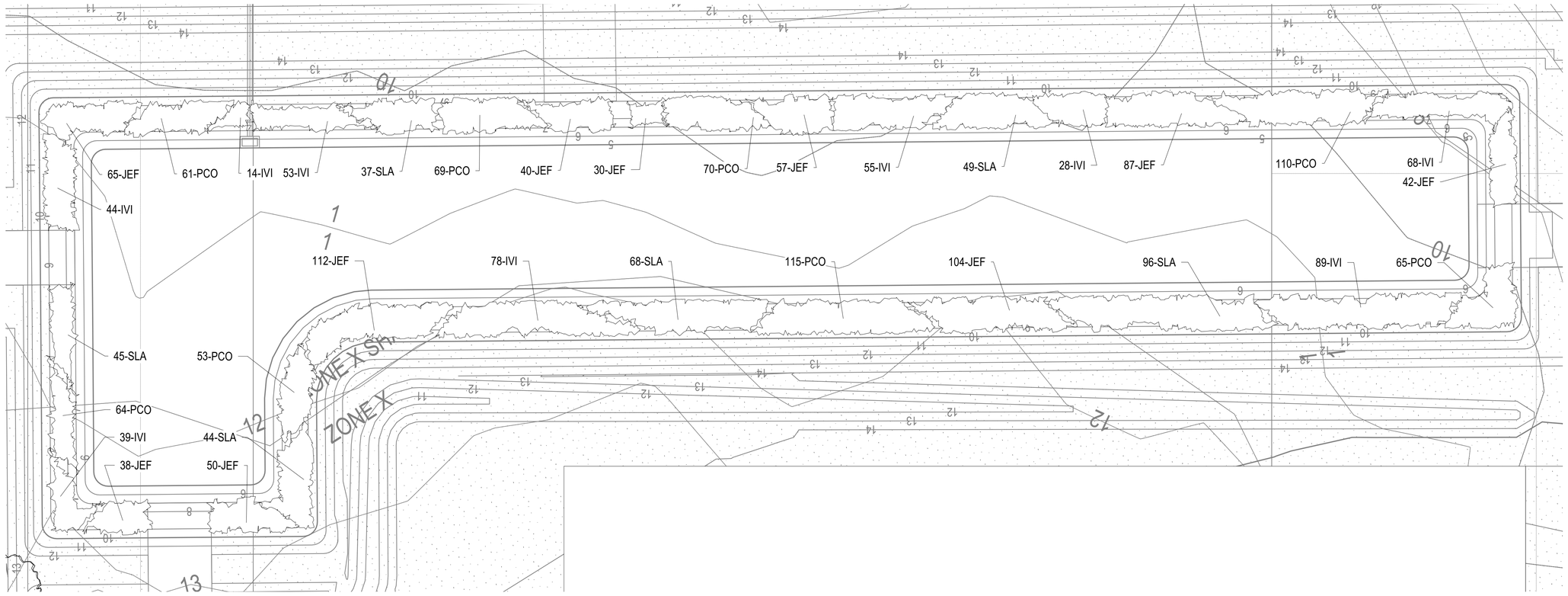

1 WET POND PLANTING ENLARGEMENT
Scale: 1" = 20'-0"

0 20 50 FT

N

APPR	DATE	DESCRIPTION	SYM

NAVFAC

PRELIMINARY
NOT FOR CONSTRUCTION

SEAL

RQ WM Jordan COMPANY

Michael Baker INTERNATIONAL
100 AIRSIDE DRIVE
MOON TOWNSHIP, PA 15108
A/E INFO

APPROVED

FOR COMMANDER NAVFAC

ACTIVITY
MARINE CORPS BASE
CAMP LEJEUNE

SATISFACTORY TO DATE	DD/MM/YY
DES ERW / DRW ERW / CHK JCF	
PM	XXX
BRANCH MANAGER	XXX
CHIEF ENG/ARCH	XXX
FIRE PROTECTION	XXX

DEPARTMENT OF THE NAVY
NAVAL FACILITIES ENGINEERING COMMAND
ROICC FLORENCE CAMP LEJEUNE

NAVAL FACILITIES ENGINEERING COMMAND ~ MID-ATLANTIC
JACKSONVILLE, NC

MCB CAMP LEJEUNE
P1338F II MEF SIMULATION/TRAINING CENTER REPLACEMENT
JACKSONVILLE, NC

PLANTING ENLARGEMENTS

SCALE:	AS NOTED
EPROJECT NO.:	
CONSTR. CONTR. NO.	N40085-20-C-0059
NAVFAC DRAWING NO.	
SHEET ### OF	L-401

DP2 SUBMISSION - P1338 BUILDING DESIGN DEVELOPMENT

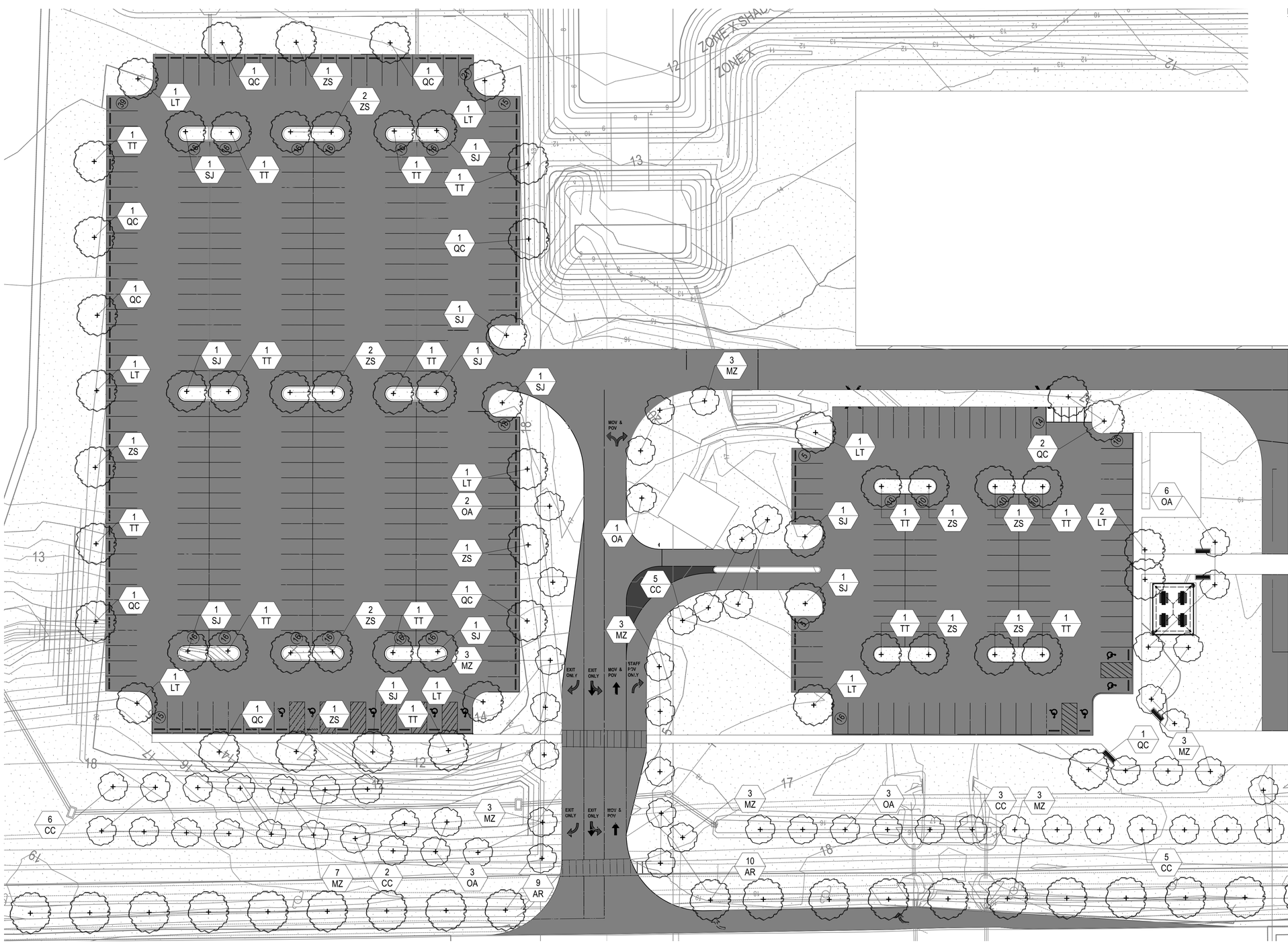

1 PARKING LOT PLANTING ENLARGEMENT
Scale: 1" = 30'-0"

APPR	DATE	DESCRIPTION	SYM

NAVFAC

PRELIMINARY NOT FOR CONSTRUCTION

SEAL

RQ WMJ Jordan COMPANY

Michael Baker INTERNATIONAL

100 AIRSIDE DRIVE
MOON TOWNSHIP, PA 15108 A/E INFO

APPROVED

FOR COMMANDER NAVFAC

ACTIVITY
MARINE CORPS BASE
CAMP LEJEUNE

SATISFACTORY TO DATE DD/MM/YY

DES	ERW	DRW	ERW	CHK	JCF

PM	XXX
BRANCH MANAGER	XXX
CHIEF ENG/ARCH	XXX
FIRE PROTECTION	XXX

DEPARTMENT OF THE NAVY
NAVAL FACILITIES ENGINEERING COMMAND ~ MID-ATLANTIC
ROICC FLORENCE CAMP LEJEUNE JACKSONVILLE, NC
MCB CAMP LEJEUNE JACKSONVILLE, NC
P1338F II MEF SIMULATION/TRAINING CENTER REPLACEMENT
PLANTING ENLARGEMENTS

SCALE: AS NOTED
EPROJECT NO.:
CONSTR. CONTR. NO. N40085-20-C-0059
NAVFAC DRAWING NO.
SHEET ### OF
L-402

DP2 SUBMISSION - P1338 BUILDING DESIGN DEVELOPMENT

LEGEND

1 / L-501	SHADE TREE PLANTING
1 / L-501	FLOWERING TREE PLANTING
4 / L-501	SHRUB PLANTING
6 / L-501	TURF - SODDING
5 / L-501	ROCK MULCH MOW STRIP

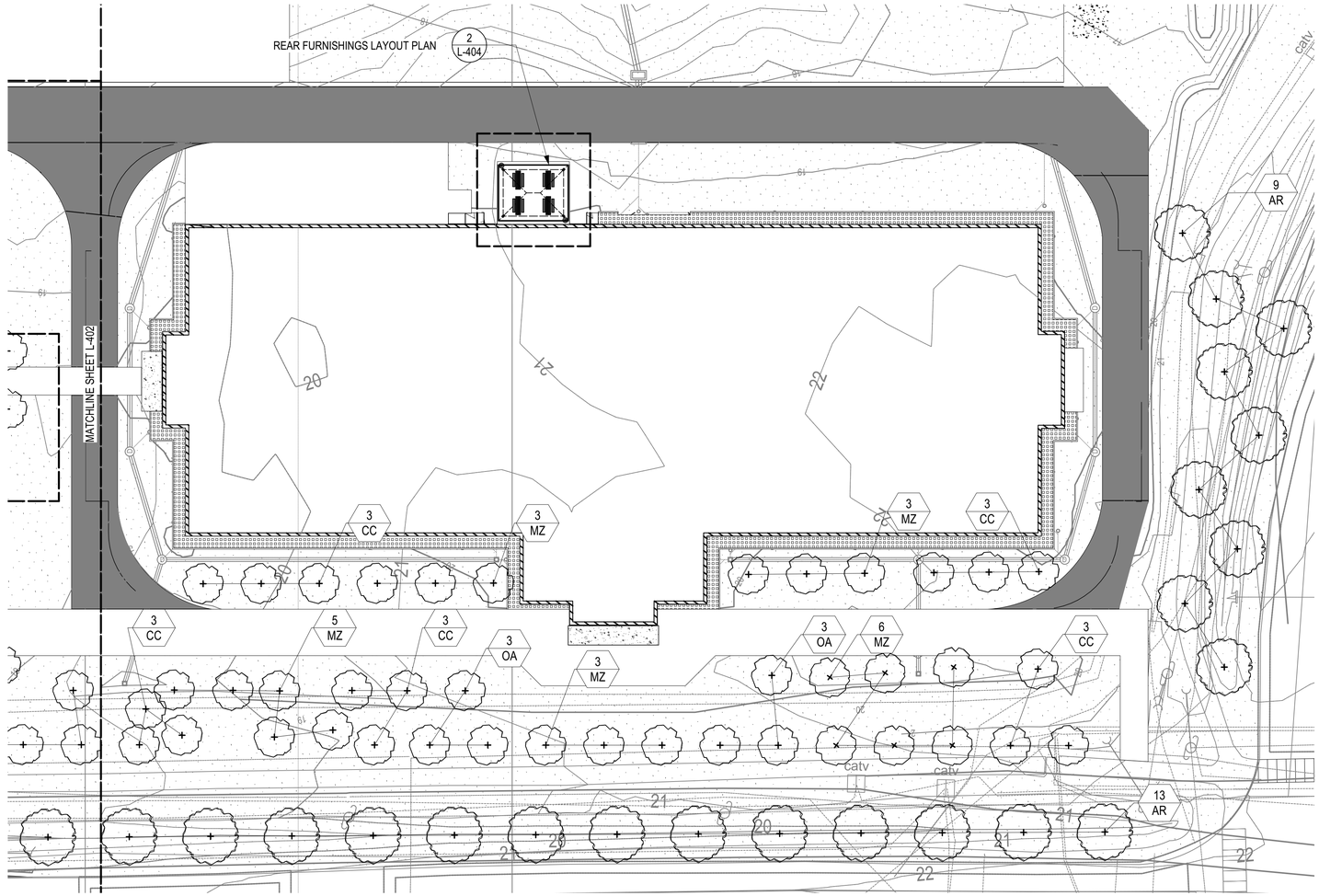

1 BUILDING PLANTING ENLARGEMENT
Scale: 1" = 30'-0"

0 50 100 FT

N

APPR	
DATE	
DESCRIPTION	
SYM	

NAVFAC

PRELIMINARY NOT FOR CONSTRUCTION

SEAL

RQ JWM Jordan COMPANY

Michael Baker INTERNATIONAL
100 AIRSIDE DRIVE
MOON TOWNSHIP, PA 15108 A/E INFO

APPROVED

FOR COMMANDER NAVFAC

ACTIVITY
MARINE CORPS BASE
CAMP LEJEUNE

SATISFACTORY TO DATE DD/MM/YY

DES	DRW	CHK
ERW	ERW	JCF

PM	XXX
BRANCH MANAGER	XXX
CHIEF ENG/ARCH	XXX
FIRE PROTECTION	XXX

DEPARTMENT OF THE NAVY
NAVAL FACILITIES ENGINEERING COMMAND
ROICC FLORENCE CAMP LEJEUNE
MCB CAMP LEJEUNE

NAVAL FACILITIES ENGINEERING COMMAND ~ MID-ATLANTIC
JACKSONVILLE, NC

JACKSONVILLE, NC
P1338F II MEF SIMULATION/TRAINING CENTER REPLACEMENT

PLANTING ENLARGEMENTS

SCALE:	AS NOTED
EPROJECT NO.:	
CONSTR. CONTR. NO.	N40085-20-C-0059
NAVFAC DRAWING NO.	
SHEET	### OF

L-403

DP2 SUBMISSION - P1338 BUILDING DESIGN DEVELOPMENT

LEGEND

- 1 / L-502 — TRASH RECEPTACLE
- 3 / L-502 — PICNIC TABLE
- 2 / L-502 — BENCH

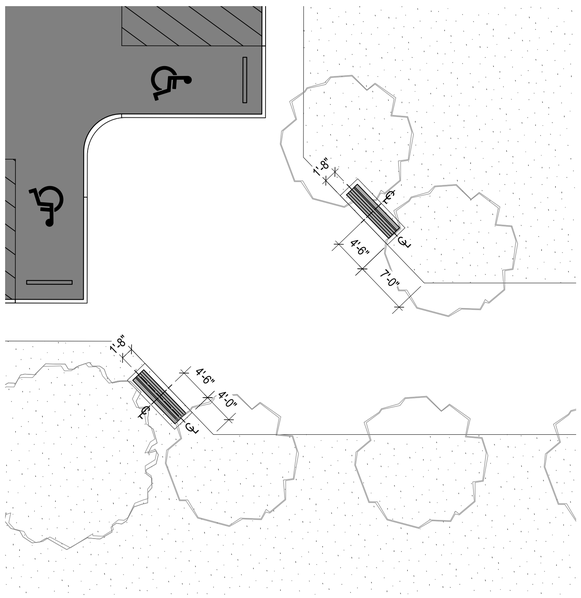

1 BENCH LAYOUT PLAN
Scale: 1" = 10'-0"

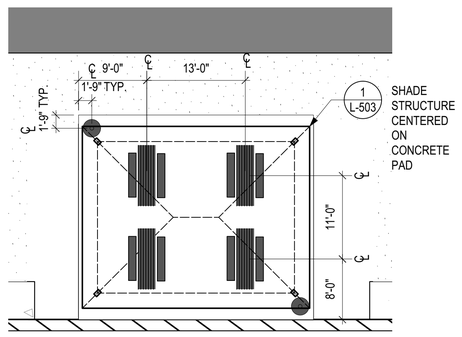

2 REAR SITE FURNISHINGS LAYOUT PLAN
Scale: 1" = 10'-0"

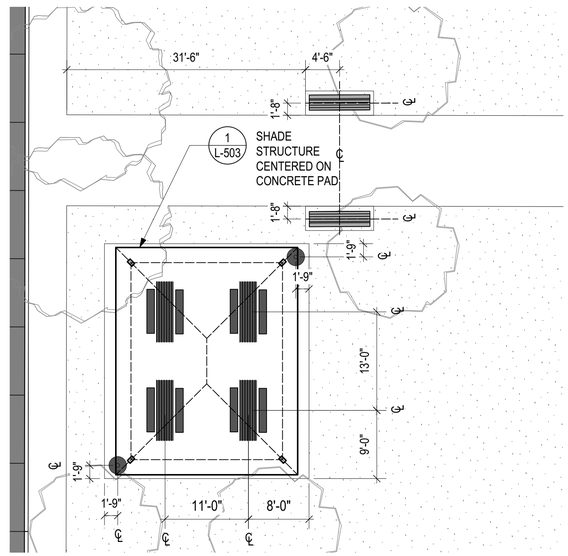

3 ENTRY SITE FURNISHINGS LAYOUT PLAN
Scale: 1" = 10'-0"

0 10 20 FT

N

APPR | DATE | DESCRIPTION | SYM

NAVFAC

PRELIMINARY NOT FOR CONSTRUCTION

SEAL

RQ WM Jordan COMPANY

Michael Baker INTERNATIONAL
100 AIRSIDE DRIVE
MOON TOWNSHIP, PA 15108 — A/E INFO

APPROVED

FOR COMMANDER NAVFAC

ACTIVITY
MARINE CORPS BASE CAMP LEJEUNE

SATISFACTORY TO DATE DD/MM/YY

DES	ERW	DRW	ERW	CHK	JCF
PM			XXX		
BRANCH MANAGER			XXX		
CHIEF ENG/ARCH			XXX		
FIRE PROTECTION			XXX		

DEPARTMENT OF THE NAVY
NAVAL FACILITIES ENGINEERING COMMAND ~ MID-ATLANTIC
ROICC FLORENCE CAMP LEJEUNE — JACKSONVILLE, NC
MCB CAMP LEJEUNE — JACKSONVILLE, NC
P1338F II MEF SIMULATION/TRAINING CENTER REPLACEMENT
SITE FURNISHING ENLARGEMENTS

SCALE: AS NOTED
EPROJECT NO.:
CONSTR. CONTR. NO. N40085-20-C-0059
NAVFAC DRAWING NO.
SHEET ### OF
L-404

DP2 SUBMISSION - P1338 BUILDING DESIGN DEVELOPMENT

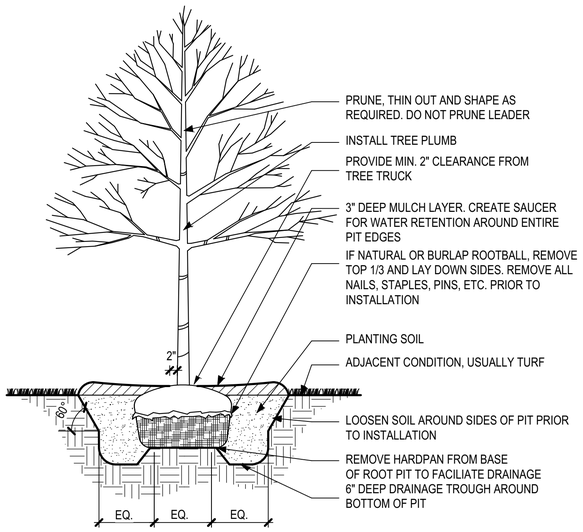

1 DECIDUOUS TREE PLANTING
Scale: 1/2" = 1'-0"

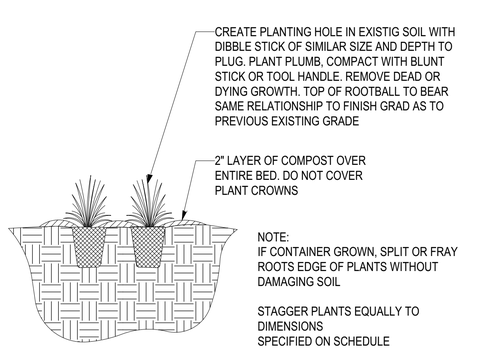

2 PLUG PLANTING
Scale: 1/2" = 1'-0"

(SEE PLANT LIST -SPACING COLUMN)

SPACING "A"	ROW "B"	NUMBER OF PLANTS PER SQUARE FOOT
6" o.c.	5.20"	4.00
8" o.c.	6.93"	2.60
12" o.c.	10.40"	1.00
18" o.c.	15.60"	0.45
24" o.c.	20.80"	0.25
30" o.c.	25.40"	0.16
36" o.c.	29.70"	0.11
48" o.c.	39.60"	0.0625

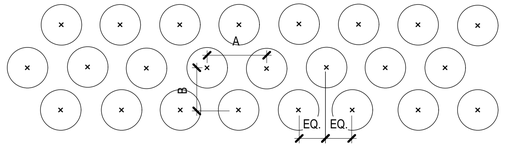

3 SPACING CHART
Scale: 3/4" = 1'-0"

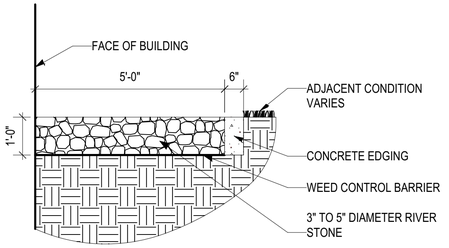

5 ROCK MULCH MOW STRIP
Scale: 1/2" = 1'-0"

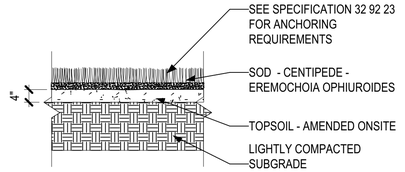

6 TURF SODDING
Scale: 1/2" = 1'-0"

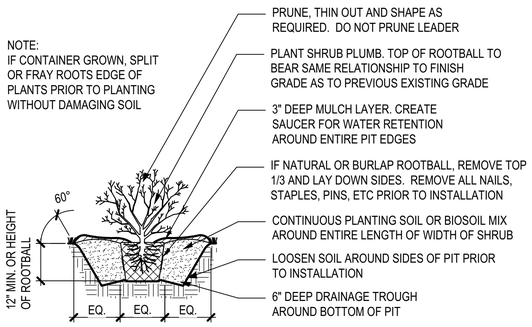

4 SHRUB PLANTING
Scale: 1/2" = 1'-0"

SHADE TREES						
SYMBOL	QTY	BOTANICAL NAME	COMMON NAME	SIZE	SPACING	NOTES
AR	41	*Acer rubrum*	Red Maple	3" CAL.	AS SHOWN	SPECIMEN QUALITY, FULL, B&B
LT	10	*Liriodendron tulipifera*	Tulip Tree	3" CAL.	AS SHOWN	SPECIMEN QUALITY, FULL, B&B
QC	11	*Quercus coccinea*	Scarlet Oak	3" CAL.	AS SHOWN	SPECIMEN QUALITY, FULL, B&B
SJ	11	*Styphnolobium japonicum*	Japanese Scholar Tree	3" CAL.	AS SHOWN	SPECIMEN QUALITY, FULL, B&B
TT	14	*Tilia tomentosa*	Silver Linden	3" CAL.	AS SHOWN	SPECIMEN QUALITY, FULL, B&B
ZS	14	*Zelkova serrata*	Japanese Zelkova	3" CAL.	AS SHOWN	SPECIMEN QUALITY, FULL, B&B
FLOWERING TREES						
SYMBOL	QTY	BOTANICAL NAME	COMMON NAME	SIZE	SPACING	NOTES
CC	36	*Cercis canadensis*	Eastern Redbud	2" CAL.	AS SHOWN	SPECIMEN QUALITY, FULL, B&B
MZ	48	*Malus x zumi*	Zumi Crabapple	2" CAL.	AS SHOWN	SPECIMEN QUALITY, FULL, B&B
OA	21	*Oxydendrum arboreum*	Sourwood	2" CAL.	AS SHOWN	SPECIMEN QUALITY, FULL, B&B
	0					
AQUATIC SHELF PERENNIALS						
SYMBOL	QTY	BOTANICAL NAME	COMMON NAME	SIZE	SPACING	NOTES
IVI	468	*Iris virginica*	Southern Blue Flag	PLUG	30" O.C.	SPECIMEN QUALITY
JEF	625	*Juncus effusus*	Common Rush	PLUG	24" O.C.	SPECIMEN QUALITY
PCO	607	*Pontederia cordata*	Pickerelweed	PLUG	24" O.C.	SPECIMEN QUALITY
SLA	339	*Sagitteria latifolia*	Broadleaf Arrowhead	PLUG	30" O.C.	SPECIMEN QUALITY
	0					

7 PLANT SCHEDULE
Scale: NTS

APPR	DATE	DESCRIPTION	SYM

NAVFAC

PRELIMINARY NOT FOR CONSTRUCTION

SEAL

RQ WM Jordan COMPANY

Michael Baker INTERNATIONAL
100 AIRSIDE DRIVE
MOON TOWNSHIP, PA 15108
A/E INFO

APPROVED

FOR COMMANDER NAVFAC

ACTIVITY
MARINE CORPS BASE CAMP LEJEUNE

SATISFACTORY TO DATE DD/MM/YY

DES	ERW	DRW	ERW	CHK	JCF
PM			XXX		
BRANCH MANAGER			XXX		
CHIEF ENG/ARCH			XXX		
FIRE PROTECTION			XXX		

DEPARTMENT OF THE NAVY
NAVAL FACILITIES ENGINEERING COMMAND ~ MID-ATLANTIC
ROICC FLORENCE CAMP LEJEUNE
NAVAL FACILITIES ENGINEERING COMMAND
JACKSONVILLE, NC
MCB CAMP LEJEUNE
JACKSONVILLE, NC
P1338F II MEF SIMULATION/TRAINING CENTER REPLACEMENT
LANDSCAPE DETAILS

SCALE: AS NOTED
EPROJECT NO.:
CONSTR. CONTR. NO. N40085-20-C-0059
NAVFAC DRAWING NO.
SHEET ### OF
L-501

DP2 SUBMISSION - P1338 BUILDING DESIGN DEVELOPMENT

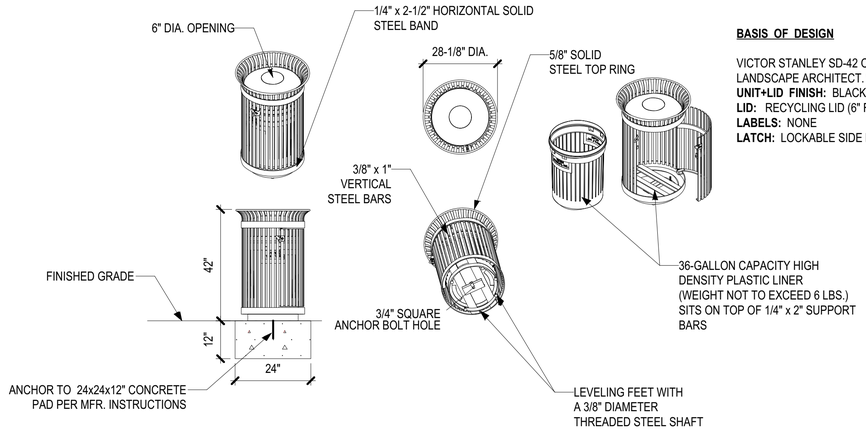

BASIS OF DESIGN

VICTOR STANLEY SD-42 OR APPROVED EQUAL BY LANDSCAPE ARCHITECT. WWW.VICTORSTANLEY.COM
UNIT+LID FINISH: BLACK POWDERCOAT
LID: RECYCLING LID (6" FIXED OPENING)
LABELS: NONE
LATCH: LOCKABLE SIDE LATCH

1 TRASH RECEPTACLE - AT/FP COMPLIANT
Scale: 1/2" = 1'-0"

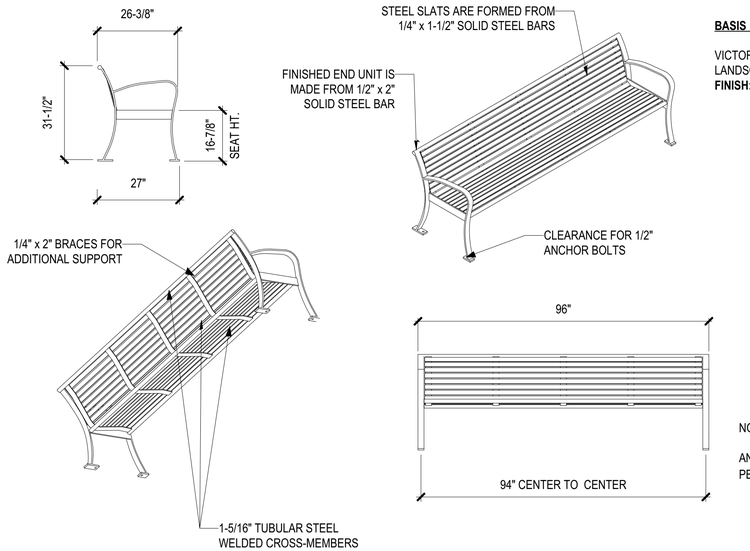

BASIS OF DESIGN

VICTOR STANLEY RB-28 OR APPROVED EQUAL BY LANDSCAPE ARCHITECT. WWW.VICTORSTANLEY.COM
FINISH: BLACK POWDERCOAT

NOTE:

ANCHOR FURNISHINGS TO CONCRETE BASE AS PER MANUFACTURER INSTRUCTIONS.

2 BENCH
Scale: 1/2" = 1'-0"

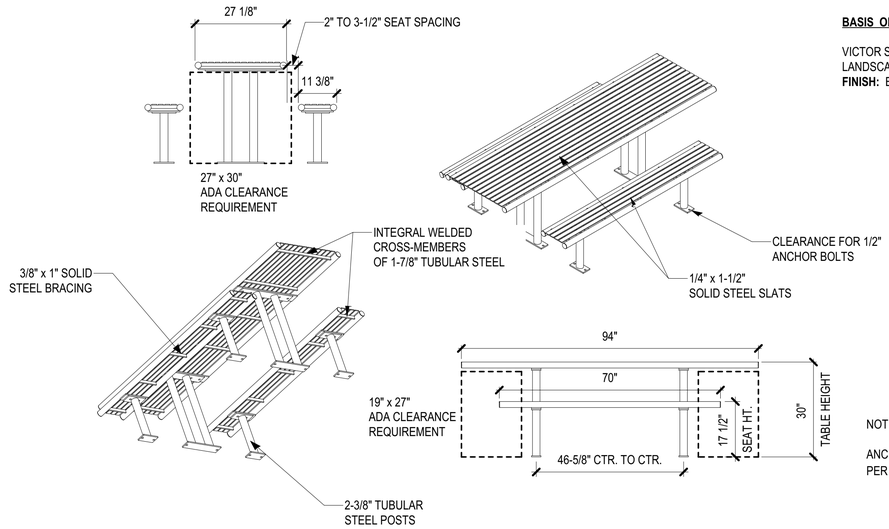

BASIS OF DESIGN

VICTOR STANLEY FBF-56 OR APPROVED EQUAL BY LANDSCAPE ARCHITECT. WWW.VICTORSTANLEY.COM
FINISH: BLACK POWDERCOAT

NOTE:

ANCHOR FURNISHINGS TO CONCRETE BASE AS PER MANUFACTURER INSTRUCTIONS.

3 PICNIC TABLE
Scale: 1/2" = 1'-0"

APPR	DATE	DESCRIPTION	SYM

NAVFAC

PRELIMINARY NOT FOR CONSTRUCTION

SEAL

RQ WM Jordan COMPANY

Michael Baker INTERNATIONAL
100 AIRSIDE DRIVE
MOON TOWNSHIP, PA 15108 A/E INFO

APPROVED

FOR COMMANDER NAVFAC

ACTIVITY
MARINE CORPS BASE CAMP LEJEUNE

SATISFACTORY TO DATE	DD/MM/YY
DES ERW DRW ERW CHK JCF	
PM	XXX
BRANCH MANAGER	XXX
CHIEF ENG/ARCH	XXX
FIRE PROTECTION	XXX

DEPARTMENT OF THE NAVY
NAVAL FACILITIES ENGINEERING COMMAND
ROICC FLORENCE CAMP LEJEUNE
NAVAL FACILITIES ENGINEERING COMMAND ~ MID-ATLANTIC
JACKSONVILLE, NC
MCB CAMP LEJEUNE
JACKSONVILLE, NC
P1338F II MEF SIMULATION/TRAINING CENTER REPLACEMENT
SITE FURNISHING DETAILS

SCALE: AS NOTED
EPROJECT NO.:
CONSTR. CONTR. NO. N40085-20-C-0059
NAVFAC DRAWING NO.
SHEET ### OF
L-502

DP2 SUBMISSION - P1338 BUILDING DESIGN DEVELOPMENT

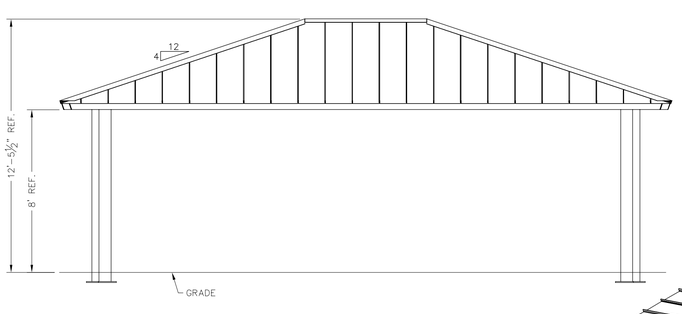

ICON
Shelter Systems Inc
DISTINCTIVE STEEL SHELTERS
WWW.ICONSHELTERS.COM
COPYRIGHT 2004, ICON SHELTER SYSTEMS, INC.
7900 LOGISTICS DR.
SUITE C
ZEELAND MI. 49464
616.748.0985
800.748.0985
616.748.0995 FX

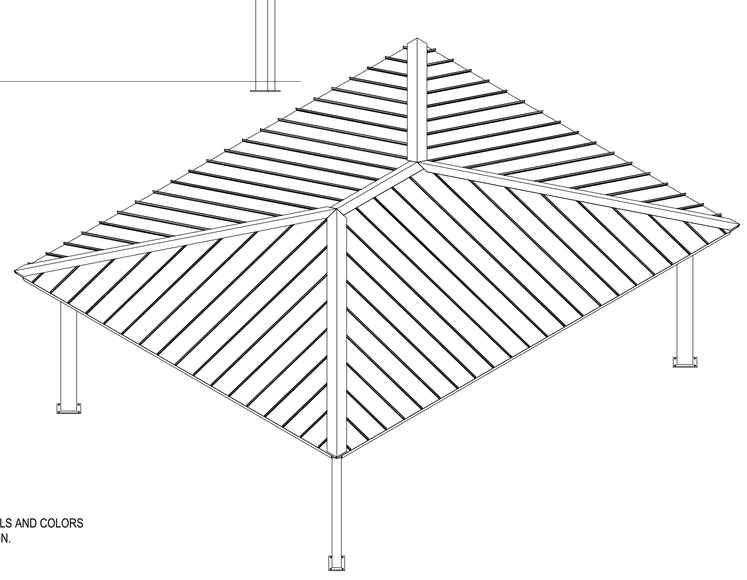

BASIS OF DESIGN:
ICON SHELTER MODEL RH24X30S-P4
https://www.iconshelters.com/

ROOF FINISH: POWDER COAT TO MATCH
BEAP COLOR: TAUPE
(MATCHING MANUFACTURER METAL
ROOFING SYSTEMS, COLOR BUCSKIN)

STRUCTURE FINISH: POWER COAT
TO MATCH MANUFACTURER
KAWNEER COLOR: BONE WHITE

PROVIDE SHOP DRAWINGS AND SUBMITTALS FOR MATERIALS AND COLORS
FOR APPROVAL BY GOVERNMENT PRIOR TO CONSTRUCTION.

1 SHADE STRUCTURE: ELEVATION AND AXON
Scale: N/A

Z (INSIDE OF BUILDING)
Y

THESE FOUNDATION LOADS ARE FOR ESTIMATING PURPOSE ONLY.
THE ACTUAL LOADS WILL BE DETERMINED IN THE FINAL ENGINEERING

CL1

LOADS TO FOUNDATION (KIPS, IN-KIPS)	FOUNDATION LOADS				
LOAD COMBINATION	AXIAL (F_x)	SHEAR (F_y)	SHEAR (F_z)	MOMENT (M_y)	MOMENT (M_z)
DL	1.74	−0.06	0.28	−11.26	−2.13
SL	3.80	−0.18	0.84	−32.25	−6.57
W−UPLIFT	−2.88	−0.20	−0.30	−13.82	4.38
W−FY	1.13	−1.55	−0.18	38.31	−70.29
W−FZ	−0.51	−1.37	−0.55	46.63	−60.96
E−FY	0.04	−0.07	0.15	−11.25	−5.59
E−Z	−0.06	0.07	−0.15	10.69	5.27

NOTES:
- TABLE SHOWS UNFACTORED SERVICE LOADS.
- A FOUNDATION DESIGN HAS NOT BEEN PERFORMED BY ICON SHELTER SYSTEMS INC.
- A LICENSED ENGINEER FAMILIAR WITH SOIL CONDITIONS AT CONSTRUCTION SITE MUST PERFORM A FOUNDATION DESIGN.
- THE STRUCTURE HAS BEEN ENGINEERED AS AN OPEN STRUCTURE.
- CONSULT ICON SHELTER SYSTEMS INC. IF THE STRUCTURE IS TO BE ENCLOSED.
- COORDINATES ARE LOCAL TO THE COLUMN

DEFINITIONS:
DL = SERVICE LEVEL DEAD LOAD REACTION WITH THE GREATEST AXIAL LOAD
SL = SERVICE LEVEL SNOW LOAD REACTION WITH THE GREATEST AXIAL LOAD
W−UL = SERVICE LEVEL WIND LOAD REACTION WITH THE GREATEST UPLIFT LOAD
W−Y = SERVICE LEVEL WIND LOAD REACTION WITH THE GREATEST MAGNITUDE OF SHEAR IN THE LOCAL Y DIRECTION
W−Z = SERVICE LEVEL WIND LOAD REACTION WITH THE GREATEST SHEAR VALUE ACTING IN THE SAME DIRECTION AS THE DL SHEAR LOAD
E−Y = SERVICE LEVEL SEISMIC LOAD REACTION WITH THE GREATEST MAGNITUDE OF SHEAR IN THE LOCAL Y DIRECTION
E−Z = SERVICE LEVEL SEISMIC LOAD REACTION WITH THE GREATEST MAGNITUDE OF SHEAR IN THE LOCAL Z DIRECTION

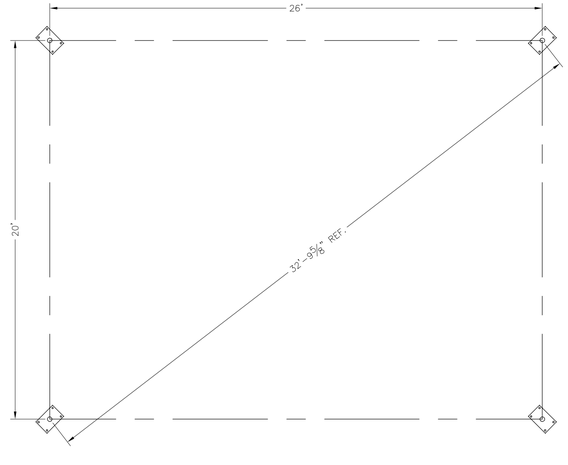

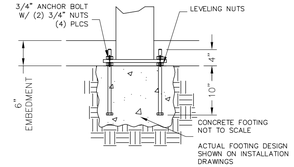

PRELIMINARY DRAWINGS SHOWN AS 6" BURIED
STANDARD BASE CONNECTION
COLUMN TYPE: A (6" BURIED)

2 PLAN LAYOUT AND FOOTING
Scale: N/A

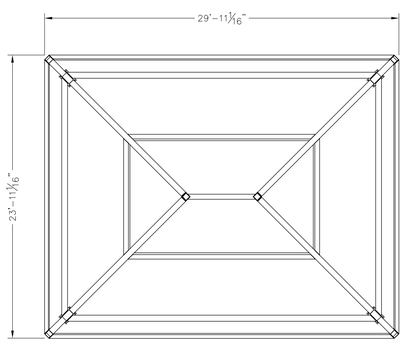

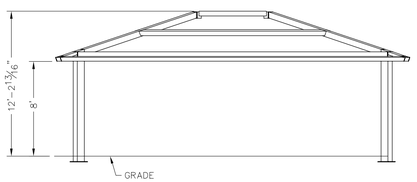

ALL STRUCTURAL COMPONETS WILL BE:
TUBE: ASTM A500 GRADE B
PLATE: ASTM A36
BOLTS: ASTM A325
NUTS: ASTM A563
WELDING: GMAW

NOTE:
COLUMN SIZE: HSS 10x6x3/16

3 SHADE STRUCTURE PLAN AND ELEVATION
Scale: Actual Size

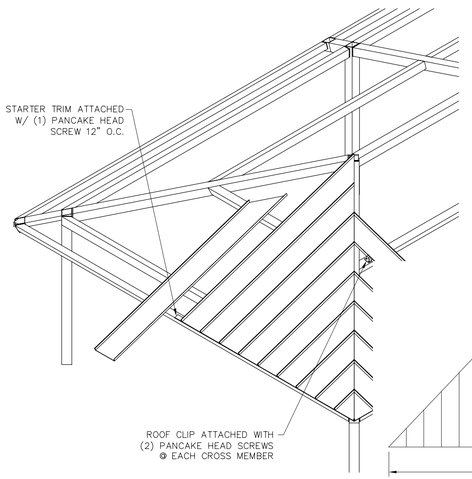

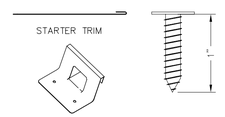

NOTE: STANDARD DETAILS SHOWN
ACTUAL BUILDING MAY VARY

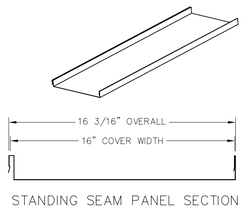

STANDING SEAM PANEL SECTION

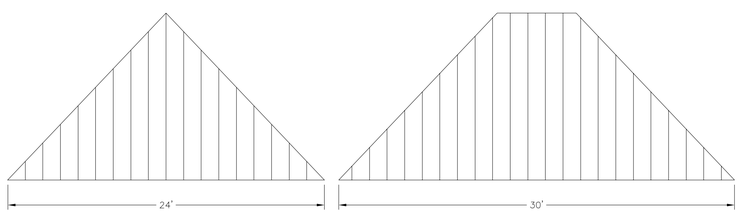

4 SHADE STRUCTURE DETAILS
Scale: N/A

NO.	DESCRIPTION	DATE	APPR
SYM			

NAVFAC

PRELIMINARY
NOT FOR CONSTRUCTION
SEAL

RQ WM Jordan COMPANY

Michael Baker
INTERNATIONAL
100 AIRSIDE DRIVE
MOON TOWNSHIP, PA 15108
A/E INFO

APPROVED
FOR COMMANDER NAVFAC

ACTIVITY
MARINE CORPS BASE
CAMP LEJEUNE

SATISFACTORY TO DATE	DD/MM/YY
DES ERW / DRW ERW / CHK JCF	
PM	XXX
BRANCH MANAGER	XXX
CHIEF ENG/ARCH	XXX
FIRE PROTECTION	XXX

DEPARTMENT OF THE NAVY
NAVAL FACILITIES ENGINEERING COMMAND
ROICC FLORENCE CAMP LEJEUNE

NAVAL FACILITIES ENGINEERING COMMAND ~ MID-ATLANTIC
JACKSONVILLE, NC

MCB CAMP LEJEUNE
JACKSONVILLE, NC
P1338F II MEF SIMULATION/TRAINING CENTER REPLACEMENT

SHADE STRUCTURE

SCALE:	AS NOTED
EPROJECT NO.:	
CONSTR. CONTR. NO.	N40085-20-C-0059
NAVFAC DRAWING NO.	
SHEET ### OF	

L-503

DP2 SUBMISSION - P1338 BUILDING DESIGN DEVELOPMENT

GENERAL NOTES:

1. THE STRUCTURAL DRAWINGS MUST BE USED IN CONJUNCTION WITH THE ARCHITECTURAL, CIVIL, MECHANICAL, PLUMBING, AND ELECTRICAL DRAWINGS AND THE SPECIFICATIONS. THE CONTRACTOR MUST VERIFY THE REQUIREMENTS OF OTHER TRADES FOR ITEMS TO BE PLACED OR SET IN THE STRUCTURAL WORK.

2. THIS STRUCTURE HAS BEEN DESIGNED IN ACCORDANCE WITH THE PROVISIONS OF THE INTERNATIONAL BUILDING CODE, 2018 EDITION, AS ADOPTED BY THE UNIFIED FACILITIES CRITERIA, AND AS FOLLOWS:
   - A. UFC 1-200-01 — DoD BUILDING CODE, WITH CHANGE 1 DATED 10-08-2019
   - B. UFC 3-301-01 — STRUCTURAL ENGINEERING DATED 10-01-2019
   - C. UFC 4-010-01 — DoD MINIMUM ANTITERRORISM STANDARDS FOR BUILDINGS WITH CHANGE 1 DATED 12-12-2018

3. THE WORK UNDER THE FOLLOWING SPECIFICATION SECTIONS IS SUBJECT TO SPECIAL INSPECTIONS AND TESTS AS DESCRIBED IN SECTION 1704 OF THE INTERNATIONAL BUILDING CODE, 2018 EDITION:
   - A. 312000 - EARTHWORK
   - B. 316219 - TIMBER PILES
   - C. 033000 - CAST-IN-PLACE CONCRETE
   - D. 034713 - TILT-UP CONCRETE
   - E. 051200 - STRUCTURAL STEEL
   - F. 053100 - STEEL DECK

4. THE CONTRACTOR MUST BE RESPONSIBLE FOR TEMPORARY SHORING AND BRACING REQUIRED TO ERECT AND HOLD THE STRUCTURE IN PROPER ALIGNMENT UNTIL PERMANENT SUPPORTS AND LATERAL BRACING ARE IN PLACE.

5. THE CONTRACTOR MUST FIELD VERIFY THE DIMENSIONS, ELEVATIONS AND OTHER REQUIREMENTS NECESSARY FOR THE PROPER CONSTRUCTION AND ALIGNMENT OF THE NEW PORTIONS OF THE STRUCTURE TO THE EXISTING. THE CONTRACTOR MUST MAKE ALL MEASUREMENTS NECESSARY FOR FABRICATION AND ERECTION OF STRUCTURAL MEMBERS.

6. THE PROJECT SPECIFICATIONS ARE NOT SUPERSEDED BY THE STRUCTURAL NOTES BUT ARE INTENDED TO BE COMPLEMENTARY TO THEM. REFER TO THE SPECIFICATIONS FOR ADDITIONAL REQUIREMENTS IN EACH SECTION.

7. SPECIFIC NOTES AND DETAILS ON THE DRAWINGS MUST TAKE PRECEDENCE OVER STRUCTURAL NOTES AND TYPICAL DETAILS.

8. CONSULTANTS' DRAWINGS, INCLUDING STRUCTURAL DRAWINGS, ARE CONSIDERED SUPPLEMENTARY TO THE ARCHITECTURAL DRAWINGS. ANY OMISSIONS OR CONFLICTS, INCLUDING DIMENSIONS, BETWEEN VARIOUS ELEMENTS OF THE CONSULTANTS' DRAWINGS AND/OR SPECIFICATIONS MUST BE BROUGHT TO THE ATTENTION OF THE ARCHITECT PRIOR TO PROCEEDING WITH THE WORK.

9. THE DOCUMENTS DEFINING THE STRUCTURE ARE INSTRUMENTS OF SERVICE PREPARED BY SPEIGHT, MARSHALL AND FRANCIS, P.C. FOR ONE USE ONLY. THE STRUCTURAL DOCUMENTS MUST NOT BE REPRODUCED, OR COPIED IN WHOLE OR IN PART BY THE CONTRACTOR OR SUBCONTRACTORS FOR PREPARATION OF SHOP DRAWINGS OR OTHER SUBMITTALS WITHOUT WRITTEN PERMISSION FROM THE ARCHITECT.

10. LOADS USED IN THE DESIGN OF THIS STRUCTURE ARE AS FOLLOWS:
    - A. LIVE LOADS:
      - 1. SLAB-ON-GRADE — 100 PSF
      - 2. RAISED ACCESS FLOORING — 100 PSF
      - 3. STORAGE (LIGHT) — 125 PSF
      - 4. MECHANICAL ROOM — 125 PSF
      - 5. ROOF — 20 PSF
    - B. SNOW DESIGN DATA:
      - 1. GROUND SNOW LOAD — 10 PSF

GENERAL NOTES (CONTINUED):

C. WIND DESIGN DATA:
   - 1. ULTIMATE DESIGN WIND SPEED — 151 MPH
   - 2. NOMINAL DESIGN WIND SPEED — 117 MPH
   - 3. RISK CATEGORY — III
   - 4. WIND EXPOSURE — C
   - 5. INTERNAL PRESSURE COEFFICIENT — +/-0.18
   - 6. ULTIMATE DESIGN MAIN FRAME WIND FORCE (N/S) DIRECTION — 186 KIPS
   - 7. ULITMATE DESIGN MAIN FRAME WIND FORCE (E/W) DIRECTION — 68 KIPS

COMPONENTS AND CLADDING DESIGN PRESSURES (PSF)

ROOF ZONE	TRIBUTARY AREA (SQ. FT.)					
	10		50		250	
1	+40	-68	+27	-60	+22	-54
2	+40	-117	+27	-91	+22	-68
3	+40	-90	+27	-73	+22	-58
WALL ZONE	**TRIBUTARY AREA (SQ. FT.)**					
	10		50		250	
4	+54	-58	+48	-53	+43	-47
5	+54	-72	+48	-61	+43	-50

NOTES:
1. PLUS AND MINUS SIGNS SIGNIFY PRESSURES ACTING TOWARD OR AWAY FROM THE SURFACES, RESPECTIVELY.
2. WIDTH OF COEFFICIENT PRESSURE ZONE, a = 5 FEET. SEE ASCE 7 FOR PRESSURE ZONE LOCATIONS.
3. WIND PRESSURE SHOWN ABOVE ARE ULTIMATE VALUES. MULTIPLY BY 0.6 TO OBTAIN EQUIVALENT ASD VALUES.

D. SEISMIC DESIGN DATA:
   - 1. RISK CATEGORY — III
   - 2. SEISMIC IMPORTANCE FACTOR — 1.25
   - 3. SS — 0.115g
   - 4. S1 — 0.055g
   - 5. SITE CLASS — D
   - 6. SDS — 0.123g
   - 7. SD1 — 0.088g
   - 8. SEISMIC DESIGN CATEGORY — B
   - 9. DESIGN BASE SHEAR — 102 KIPS
   - 10. SEISMIC RESPONSE COEFFICIENT — 0.051
   - 11. RESPONSE MODIFICATION FACTOR — 3
   - 12. ANALYSIS PROCEDURE — ELF
   - 13. BASIC SEISMIC-FORCE-RESISTING SYSTEM IS ORDINARY REINFORCED CONCRETE SHEAR WALLS AND PER SECTION 2205.2.1 AND STEEL STRUCTURES ASSIGNED TO SEISMIC DESIGN CATEGORIES A, B, OR C, ARE NOT REQUIRED TO BE DESIGNED AND DETAILED IN ACCORDANCE WITH THE AISC SEISMIC PROVISIONS. INDICATING A 'STEEL SYSTEM NOT SPECIFICALLY DETAILED FOR SEISMIC RESISTANCE.

DRIVEN PILE NOTES:

1. PILING MUST COMPLY WITH ASTM D25 AND SECTIONS 1809 AND 1810 OF THE 2018 INTERNATIONAL BUILDING CODE. PILING MUST BE SOUTHERN PINE OR DOUGLAS FIR WITH 8 INCH MINIMUM TIP DIAMETER AND A PRESSURE PRESERVATIVE TREATMENT IN ACCORDANCE WITH AWPA C3.

2. PILE FOUNDATIONS FOR THIS STRUCTURE HAVE BE DESIGNED IN ACCORDANCE WITH THE RECOMMENDATIONS IN THE GEOTECHNICAL EXPLORATION REPORT PREPARED BY GET SOLUTIONS INC. DATED JANUARY 15, 2021. SEE THE GEOTECHNICAL REPORT FOR PILE INSTALLATION PROCEDURES AND OTHER DETAILS.

3. PILE DESIGN CAPACITIES ARE AS FOLLOWS:
   - A) COMPRESSION — 20 TONS
   - B) LATERAL — 2 TONS

4. BASE BID LENGTH MUST BE 50'-0" FEET FOR ALL PILES OTHER THAN TEST PILES.

5. THE CONTRACTOR MUST DRIVE 6 TEST PILES IN THE LOCATIONS SHOWN ON THE FOUNDATION PLAN. PILES MUST BE 5 FEET LONGER THAN BASE BID LENGTH.

6. BASED UPON THE DRIVING RESULTS OF THE TEST PILES THE GEOTECHNICAL ENGINEER WILL SELECT THE 6 TEST PILES TO BE SUBJECTED TO A LOAD TEST. SEE SPECIFICATIONS FOR COMPLETE REQUIREMENTS. ALL PILING MUST BE DRIVEN TO A RESISTANCE EQUAL TO OR GREATER THAN THE SUCCESSFULLY LOADED TEST PILE.

7. THE GENERAL CONTRACTOR MUST PROVIDE AN AS-INSTALLED PILE LAYOUT WITH ANY PILE LOCATION DISCREPANCIES NOTED ON THE DRAWING.

8 PILING MUST BE INSTALLED TO A MAXIMUM TOLERANCE IN ANY DIRECTION OF 4 INCHES PER PILE. WHERE AN INDIVIDUAL PILE IS INSTALLED OUT OF POSITION MORE THAN 4 INCHES IN ANY DIRECTION AND/OR WHERE THE CENTER OF GRAVITY OF A PILE GROUP IS OUT OF POSITION MORE THAN 2 INCHES, THE CONTRACTOR MAY BE REQUIRED TO INSTALL AN ADDITIONAL PILE OR PILES TO COMPENSATE FOR THE ECCENTRICITY OF THE PILE AND/OR PILE GROUP.

CAST-IN-PLACE CONCRETE NOTES:

1. CAST-IN-PLACE CONCRETE HAS BEEN DESIGNED IN ACCORDANCE WITH THE AMERICAN CONCRETE INSTITUTE (ACI) "BUILDING CODE REQUIREMENTS FOR STRUCTURAL CONCRETE (ACI 318-14) AND COMMENTARY (ACI 318R-14)".

2. CONCRETE MUST BE NORMAL WEIGHT AND MUST OBTAIN 28 DAY COMPRESSIVE STRENGTHS AS FOLLOWS:
   - A. TILT-UP CONCRETE PANELS — 4,000 PSI
   - B. SLAB-ON-GRADE — 3,500 PSI
   - C. CONCRETE NOT OTHERWISE NOTED — 3,000 PSI

3. REINFORCING MATERIALS MUST BE AS FOLLOWS:
   - A. REINFORCING BARS - ASTM A615, GRADE 60, DEFORMED
   - B. WELDED WIRE FABRIC - ASTM A1064, WELDED STEEL WIRE FABRIC SHEET TYPE - ROLLED TYPE NOT ACCEPTABLE

4. ALL REINFORCING STEEL AND EMBEDDED ITEMS MUST BE ACCURATELY PLACED IN THE POSITIONS SHOWN AND ADEQUATELY TIED AND SUPPORTED BEFORE CONCRETE IS PLACED TO PREVENT DISPLACEMENT BEYOND PERMITTED TOLERANCES.

5. MINIMUM CONCRETE COVER FOR REINFORCING STEEL AS INDICATED ON THE DRAWINGS. SEE SPECIFICATIONS FOR COVER NOT INDICATED.

STRUCTURAL TILT-UP CONCRETE NOTES:

1. TILT-UP CONCRETE WALL PANELS, CONNECTIONS AND DETAILS MUST BE DESIGNED BY A STRUCTURAL ENGINEER LICENSED TO PRACTICE IN THE STATE OF NORTH CAROLINA. DESIGNS MUST BE SEALED AND SIGNED, AND SUBMITTED TO THE ARCHITECT FOR APPROVAL. THE GENERAL CONTRACTOR IS RESPONSIBLE FOR ALL TEMPORARY BRACING, LIFTING AND ERECTION PROCEDURES.

2. ALL TILT-UP WALL PANEL CONCRETE MUST BE NORMAL WEIGHT AND MUST HAVE A MINIMUM 28 DAY COMPRESSIVE STRENGTH OF 4,000 PSI. TILT-UP WALL PANEL CONCRETE PERMANENTLY EXPOSED TO EXTERIOR AIR MUST ALSO INCLUDE 5% AIR ENTRAINMENT.

3. WALL PANEL CONSTRUCTION IS TO CONFORM TO ACI 117-06, "STANDARD TOLERANCE FOR CONCRETE CONSTRUCTION AND MATERIALS".

4. REINFORCING STEEL MUST CONFORM TO ASTM A615 GRADE 60. REINFORCING STEEL DETAILING, FABRICATION AND PLACEMENT MUST CONFORM TO TEH LATEST EDITION OF CRSI'S "MANUAL OF STANDARD PRACTICE". MINIMUM CONCRETE COVER MUST BE 1-1/2" MEASURED FROM FACE OF CONCRETE.

5. SUBMIT SHOP DRAWINGS SHOWING ALL WORK RELATED TO TILT-UP WALL PANELS, INCLUDING TEMPORARY BRACING AND ERECTION PROCEDURES. WITH SHOP DRAWINGS SUBMIT CALCULATIONS AND DESCRIPTION COVERING ERECTION PROCEDURES, ADDITIONAL REINFORCEMENT, LIFTING HARDWARE, AND BRACING. SHOP DRAWINGS MUST BE PREPARED AND SEALED BY A REGISTERED PROFESSIONAL ENGINEER LICENSED IN THE STATE OF NORTH CAROLINA RETAINED BY THE GENERAL CONTRACTOR.

6. GRAVITY AND LATERAL LOADS TO PANELS ARE INDICATED ON THE STRUCTURAL DRAWINGS. ENGINEER OF RECORD HAS DESIGNED ALL FOUNDATION AND DIAPHRAGM CONNECTIONS AS THE LATERAL LOAD LOAD RESISTING SYSTEM. ALL EMBEDMENT PLATES AND OTHER CONNECTIONS REQUIRED FOR OTHER COMPONENTS MUST BE DESIGNED BY THE GENERAL CONTRACTOR. THESE CONNECTIONS MUST BE DESIGNED MUST BE PERFORMED BY A PROFESSIONAL ENGINEERING REGISTERED IN THE STATE OF NORTH CAROLINA.

7. GENERAL CONTRACTOR MUST CONTINUOUSLY GROUT BASE OF WALL PANELS WITH NON-SHRINK METALLIC GROUT.

8. SHIMS MUST BE PLACED AT ENDS OF PANELS AND INTERMEDIATE AS REQUIRED FOR SUPPORT OF THE PANEL DURING ERECTION.

9. SUBMIT SHOP DRAWINGS SHOWING ALL PANELS EMBED PLATES AND LOCATIONS. GENERAL CONTRACTOR MUST COORDINATE.

10. SEE THE ARCHITECTURAL DRAWINGS AND DETAILS FOR PANEL JOINT AND REVEAL JOINT DETAILS NOT SHOWN ON THE STRUCTURAL DRAWINGS.

11. PANELS ARE TO BE CAST OUTSIDE FACE DOWN. CASTING SLAB MUST BE CURED. SAW CUTS, CRACKS AND JOINTS IN THE CASTING SLAB MUST BE FILLED AND LEVELED WITH A SEALANT SO AS TO MINIMIZE TRANSFER OF THE JOINT LINE TO THE PANEL FACE.

12. TILT-UP CONTRACTOR MUST BE RESPONSIBLE FOR THE COMPATIBILITY OF CURING AGENTS, SEALANTS AND RELEASING AGENTS UTILIZED IN THE WORK. IF PANELS ARE TO BE STACKED, THE TROWEL SURFACE MUST BE CONSIDERED THE CASTING SLAB AND TREATED AS SUCH. BOND BREAKER MUST BE APPLIED IN ACCORDANCE WITH THE MANUFACTURER'S REQUIREMENTS.

13. TILT-UP CONCRETE WALL PANELS MUST BE A MINIMUM OF 7 1/4" THICK UNLESS NOTED OTHERWISE. DESIGN TILT-UP CONCRETE WALL PANELS FOR A 3/4" MAXIMUM REVEAL.

14. PANEL JOINTS ARE TO BE CAULKED BOTH SIDES USING A HIGH PERFORMANCE POLYURETHANE SEALANT SYSTEM. SEALANT SYSTEM MUST BE INSTALLED PER MANUFACTURER'S SPECIFICATIONS.

15. CRACKS IN PANELS DUE TO LIFTING ARE TO BE REPAIRED BY THE GENERAL CONTRACTOR. PANELS THAT HAVE YIELDED AND CRACKED DURING LIFTING ARE TO BE REPLACED BY THE GENERAL CONTRACTOR.

16. GENERAL CONTRACTOR IS NOT TO DAMAGE FLOOR SLAB DURING PANEL ERECTION DUE TO CRANE LOADING. CONTRACTOR TO SUPPLY DESIGN ENGINEER WITH MAXIMUM CRANE LOADING ON SLAB FOR FLOOR STRENGTH EVALUATION PRIOR TO PANEL ERECTION. ANY DAMAGE TO THE FLOOR SLAB INCLUDING STRESS CRACK RESULTING FROM LOADS EXCEEDING THOSE PROVIDED TO THE STRUCTURAL ENGINEER ARE TO BE REPAIRED BY THE GENERAL CONTRACTOR. REPLACEMENT OF THE SLAB WILL BE REQUIRED IN AREAS SEVERELY DAMAGED DURING LIFTED.

SPEIGHT·MARSHALL·FRANCIS
STRUCTURAL ENGINEERS
1228 PERIMETER PARKWAY, SUITE 201
VIRGINIA BEACH, VIRGINIA 23454
P: 757.427.1020
2821 EMORYWOOD PARKWAY SUITE 300
RICHMOND, VIRGINIA 23294
P: 804.464.4111
WWW.SMANDF.COM
SM&F Job No. 20.241-B

APPR | DATE | DESCRIPTION | SYM

NAVFAC

SEAL

W.M. Jordan COMPANY – A JOINT VENTURE –

Michael Baker INTERNATIONAL
100 AIRSIDE DRIVE
MOON TOWNSHIP, PA 15108 — A/E INFO

APPROVED

FOR COMMANDER NAVFAC

ACTIVITY: MARINE CORPS BASE CAMP LEJEUNE

SATISFACTORY TO DATE

DES	DRW	CHK
PM		
BRANCH MANAGER		
CHIEF ENG/ARCH		
FIRE PROTECTION		

DEPARTMENT OF THE NAVY
NAVAL FACILITIES ENGINEERING COMMAND
ROICC FLORENCE CAMP LEJEUNE

NAVAL FACILITIES ENGINEERING COMMAND ~ MID-ATLANTIC
JACKSONVILLE, NC

MCB CAMP LEJEUNE
JACKSONVILLE, NC

P1338F II MEF SIMULATION/TRAINING CENTER REPLACEMENT

STRUCTURAL NOTES

SCALE: AS NOTED
EPROJECT NO.: 1590892
CONSTR. CONTR. NO.: N40085-20-C-0059
NAVFAC DRAWING NO.:
SHEET OF

S-001

DP2 SUBMISSION – P1338 BUILDING - PRE-FINAL SUBMISSION

PLOTTED: 6/9/2021 5:23:46 PM

FILE NAME: BIM 360://NF PACKAGE 3/P1338 MEF SIM CTR-1590892-S.rvt

STRUCTURAL STEEL NOTES:

1. STRUCTURAL STEEL HAS BEEN DESIGNED IN ACCORDANCE WITH THE FIFTEENTH EDITION OF THE AMERICAN INSTITUTE OF STEEL CONSTRUCTION (AISC 360-16) "STEEL CONSTRUCTION MANUAL" - ALLOWABLE STRESS DESIGN.

2. STRUCTURAL STEEL MUST COMPLY WITH THE FOLLOWING SPECIFICATIONS:
   - A. STRUCTURAL STEEL W- AND WT-SHAPES - ASTM A992, Fy=50 KSI
   - B. RECTANGULAR AND SQUARE HSS - ASTM A500, GRADE B, Fy=46 KSI
   - C. ANCHOR RODS - ASTM F1554, GRADE 36 (WELDABLE)
   - D. HEADED STUDS - ASTM A 108, GRADES 1015 THROUGH 1020, TYPE B, Fu=65 KSI
   - E. ALL OTHER STRUCTURAL STEEL SHAPES, PLATES AND BARS - ASTM A36, Fy=36 KSI (UNLESS OTHERWISE NOTED)

3. UNLESS OTHERWISE NOTED, ALL BEAM CONNECTIONS MUST BE ACCORDING TO "TYPICAL BOLTED WEB PLATE CONNECTION DETAILS" ON SHEET S-511 USING ASTM A325 BOLTS.

4. HIGH STRENGTH BOLTS MUST BE TIGHTENED TO THE "SNUG TIGHT" CONDITION.

5. WELDING MUST BE IN ACCORDANCE WITH AWS D1.1, "STRUCTURAL WELDING CODE - STEEL". WELD ELECTRODES MUST BE E70XX. CONTINUOUS 3/16" FILLET WELDS ARE REQUIRED UNLESS OTHERWISE NOTED.

6. SEE THE ARCHITECTURAL, CIVIL, MECHANICAL, PLUMBING AND ELECTRICAL DRAWINGS FOR ADDITIONAL STEEL (IF ANY) NOT SHOWN ON THE STRUCTURAL DRAWINGS.

7. UNLESS OTHERWISE NOTED, THE TOP OF ALL STEEL COLUMNS MUST HAVE A STEEL CAP PLATE. UNLESS OTHERWISE DETAILED OR NOTED, MINIMUM CAP PLATE DIMENSIONS MUST MATCH COLUMN WIDTH AND DEPTH AND MINIMUM THICKNESS OF CAP PLATE MUST EQUAL COLUMN WEB THICKNESS (1/2" MIN).

8. STRUCTURAL STEEL NOTED TO BE GALVANIZED MUST CONFORM TO ASTM A123 OR ASTM A153. GALVANIZE STRUCTURAL STEEL AFTER FABRICATION WHERE PRACTICAL. REPAIR DAMAGED GALVANIZED COATING USING ASTM A780 ZINC-RICH PAINT.

STEEL DECK NOTES:

1. STEEL DECK MUST CONFORM TO THE LATEST EDITION OF THE AMERICAN IRON AND STEEL INSTITUTE (AISI), "SPECIFICATION FOR THE DESIGN OF COLD-FORMED STEEL STRUCTURAL MEMBERS" AND THE STEEL DECK INSTITUTE (SDI), "DESIGN MANUAL FOR COMPOSITE DECKS, FORM DECKS, AND ROOF DECKS."

2. STEEL DECK UNITS MUST COMPLY WITH THE FOLLOWING:
   - A. 3" ROOF DECK MUST BE 20 GAGE PRIMED TYPE B RIB DECK SPANNING PERPENDICULAR TO SUPPORTS UNLESS OTHERWISE NOTED. ATTACH DECK TO STRUCTURAL STEEL SUPPORTS WITH 5/8" DIAMETER PUDDLE WELDS AT EVERY RIB, INCLUDING RIBS WHERE SIDELAPS OCCUR. FASTEN ADJACENT DECK UNITS WITH #10 SELF-TAPPING HEX HEAD SCREWS AT 10" ON CENTER BETWEEN SUPPORTS ALONG SIDELAPS AND FASTEN EDGEMOST DECK PANEL TO STEEL FRAMING WITH 5/8" DIAMETER PUDDLE WELDS AT SAME SPACING AS SIDELAP FASTENERS.

3. WELDING MUST BE IN ACCORDANCE WITH AWS D1.3 "STRUCTURAL WELDING CODE - SHEET STEEL". FIELD WELDS MUST BE WIRE BRUSHED AND PRIMED PAINTED IN ACCORDANCE WITH THE SPECIFICATIONS.

4. DECK OPENINGS MEASURING GREATER THAN 12" ON ANY SIDE MUST HAVE SUPPORTS ON ALL SIDES OF OPENING. SUPPORTS MUST SPAN BETWEEN ADJACENT BEAMS OR JOISTS ON TWO SIDES. UNLESS OTHERWISE NOTED OR DETAILED ON THE DRAWINGS, USE 5x5x5/16" ANGLES FOR SPANS EXCEEDING 6'-0" AND 3x3x1/4" ANGLES FOR SPANS LESS THAN 6'-0". COORDINATE OPENING SIZES, LOCATIONS AND DETAILS WITH THE ARCHITECTURAL, MECHANICAL, PLUMBING AND ELECTRICAL DRAWINGS.

5. PERMANENT SUSPENDED LOADS SUCH AS SUSPENDED CEILINGS, LIGHT FIXTURES, DUCTS, OR OTHER UTILITIES MUST NOT BE SUPPORTED BY STEEL ROOF DECK.

6. PREPARE AND SUBMIT SHOP DRAWINGS FOR REVIEW SHOWING THE LAYOUT AND TYPES OF DECK UNITS, ANCHORAGE DETAILS AND CONDITIONS REQUIRING CLOSURE STRIPS, SUPPLEMENTARY FRAMING AND OTHER ACCESSORIES.

7. TOUCH-UP ALL SCARRED, ABRADED AND RUST AREAS IN STEEL DECK WITH ZINC-RICH PAINT IN ACCORDANCE WITH THE SPECIFICATIONS.

SPECIAL INSPECTIONS:

1. SPECIAL INSPECTIONS MUST BE COMPLETED FOR THE FOLLOWING ELEMENTS ACCORDING TO IBC SECTIONS 1704.

2. EARTHWORK MUST BE SPECIAL INSPECTED AS FOLLOWS:
   - A. PRIOR TO PLACEMENT OF PREPARED FILL, QUALITY ASSURANCE AGENT MUST DETERMINE THE SITE HAS BEEN PREPARED ACCORDING TO THE GEOTECHNICAL REPORT
   - B. QUALITY ASSURANCE AGENT MUST DETERMINE FILL MATERIAL AND LIFT THICKNESSES COMPLY WITH GEOTECHNICAL REPORT

3. DEEP FOUNDATION SYSTEMS MUST BE CONTINUOUSLY INSPECTED DURING INSTALLATION AND TESTING. QUALITY ASSURANCE AGENT MUST SUBMIT RECORDS OF INSTALLATION FOR EACH DEEP FOUNDATION AND RESULTS OF LOAD TESTS. RECORDS MUST INCLUDE CUTOFF AND TIP ELEVATION.

4. CONCRETE AND ELEMENTS EMBEDDED IN CONCRETE MUST BE SPECIAL INSPECTED PRIOR TO AND DURING PLACEMENT OF CONCRETE. SPECIAL INSPECTIONS MUST INCLUDE THE FOLLOWING:
   - A. PERIODIC INSPECTION:
     1. REINFORCING STEEL SIZE AND PLACEMENT
     2. VERIFY USE OF APPROVED MIX DESIGN
     3. AFTER PLACEMENT TO ENSURE ADEQUATE CURING AND WEATHER PROTECTION PROCEDURES
     4. SURFACE PREPARATION AND DETAILS AT COLD JOINTS, INCLUDING PLACEMENT OF KEYWAYS
   - B. CONTINUOUS INSPECTION:
     1. BOLTS TO BE INSTALLED IN CONCRETE PRIOR TO AND DURING PLACEMENT OF CONCRETE
     2. DURING PLACEMENT OF CONCRETE

5. STRUCTURAL STEEL FABRICATION AND ERECTION MUST BE SPECIAL INSPECTED AS FOLLOWS:
   - A. PERIODIC INSPECTION:
     1. HIGH-STRENGTH BOLTS, NUTS AND WASHERS ACCORDING TO AISC 360-10
     2. SINGLE-PASS FILLET WELDS LESS THAN OR EQUAL TO 5/16"
     3. FLOOR AND ROOF DECK WELDS
     4. STEEL FRAME JOINT DETAILS FOR COMPLIANCE WITH CONSTRUCTION DOCUMENTS INCLUDING MEMBER LOCATIONS, CONNECTION DETAILS AND ANY OTHER BRACING AND STIFFENING DETAILS
     5. HEADED STUD WELDING, QUANTITY AND LOCATIONS

STRUCTURAL TESTING:

1. THE FOLLOWING MATERIALS MUST BE TESTED ACCORDING TO IBC SECTIONS 1705 ANY ITEMS FOUND TO BE DEFICIENT MUST BE CORRECTED AND RE-TESTED AT NO ADDITIONAL COST TO THE OWNER.

2. EARTHWORK: THE IN-PLACE DRY DENSITY OF COMPACTED FILL MUST BE TESTED FOR COMPLIANCE WITH THE GEOTECHNICAL REPORT. SEE THE GEOTECHNICAL REPORT AND SPECIFICATIONS FOR THE FREQUENCY OF TESTING.

3. CONCRETE STRENGTH VERIFICATION AND TESTING: ALL CONCRETE MUST BE TESTED TO VERIFY STRENGTH, SLUMP, UNIT WEIGHT, AIR CONTENT AND TEMPERATURE. SEE THE SPECIFICATIONS FOR TESTING CRITERIA, FREQUENCY AND ACCEPTABILITY CRITERIA.

SYM	DESCRIPTION	DATE	APPR

NAVFAC

SEAL

RQ W.M. Jordan COMPANY – A JOINT VENTURE –

Michael Baker INTERNATIONAL
100 AIRSIDE DRIVE
MOON TOWNSHIP, PA 15108 A/E INFO

APPROVED

FOR COMMANDER NAVFAC

ACTIVITY
MARINE CORPS BASE
CAMP LEJEUNE

SATISFACTORY TO DATE

DES	DRW	CHK

PM

BRANCH MANAGER

CHIEF ENG/ARCH

FIRE PROTECTION

SPEIGHT·MARSHALL·FRANCIS
STRUCTURAL ENGINEERS
1228 PERIMETER PARKWAY, SUITE 201
VIRGINIA BEACH, VIRGINIA 23454
P: 757.427.1020
2821 EMORYWOOD PARKWAY SUITE 300
RICHMOND, VIRGINIA 23294
P: 804.464.4111
WWW.SMANDF.COM SM&F Job No: 20241-B

DEPARTMENT OF THE NAVY
NAVAL FACILITIES ENGINEERING COMMAND
ROICC FLORENCE CAMP LEJEUNE

NAVAL FACILITIES ENGINEERING COMMAND ~ MID-ATLANTIC
JACKSONVILLE, NC

MCB CAMP LEJEUNE

JACKSONVILLE, NC

P1338F II MEF SIMULATION/TRAINING CENTER
REPLACEMENT

STRUCTURAL NOTES

SCALE: AS NOTED

EPROJECT NO.: 1590892

CONSTR. CONTR. NO.
N40085-20-C-0059

NAVFAC DRAWING NO.

SHEET OF

S-002

DP2 SUBMISSION – P1338 BUILDING - PRE-FINAL SUBMISSION

PLOTTED: 6/9/2021 5:23:46 PM

FILE NAME: BIM 360:/HF PACKAGE 3/P1338 MEF SIM CTR-1590892-S.rvt

CAST-IN-PLACE CONCRETE REINFORCING BAR LAP SPLICE SCHEDULE

BAR SIZE Fy = 60 KSI	TENSION BARS												COMPRESSION BARS
	f'c = 3,000 PSI				f'c = 3,500 PSI				f'c = 4,000 PSI				f'c = ALL
	REGULAR		TOP		REGULAR		TOP		REGULAR		TOP		
	CLASS		CLASS		CLASS		CLASS		CLASS		CLASS		
	A	B	A	B	A	B	A	B	A	B	A	B	
#3	17"	22"	22"	28"	16"	21"	21"	26"	15"	19"	19"	25"	12"
#4	22"	29"	29"	38"	21"	27"	27"	36"	19"	25"	25"	33"	15"
#5	28"	36"	36"	47"	26"	34"	34"	44"	24"	31"	31"	41"	19"
#6	33"	43"	43"	56"	31"	40"	40"	52"	29"	37"	37"	49"	23"
#7	48"	63"	63"	81"	45"	59"	59"	75"	42"	54"	54"	71"	27"
#8	55"	72"	72"	93"	51"	67"	67"	87"	48"	62"	62"	81"	30"
#9	62"	81"	81"	105"	58"	75"	75"	98"	54"	70"	70"	91"	34"
#10	70"	91"	91"	118"	65"	85"	85"	110"	61"	79"	79"	102"	39"
#11	78"	101"	101"	131"	73"	94"	94"	122"	67"	87"	87"	114"	43"

NOTES (THESE NOTES MUST BE USED FOR ALL SPLICES UNLESS NOTED OTHERWISE ON DRAWINGS):

1. TOP BARS ARE HORIZONTAL BARS, SPLICED SO THAT 12" OR MORE OF FRESH CONCRETE IS CAST IN THE MEMBER BELOW THE REINFORCING BAR.
2. CLASS A SPLICES MAY BE USED ONLY WHEN 50% OR LESS OF THE BARS ARE SPLICED WITHIN THE LAP SPLICE LENGTH.
3. CLASS B SPLICES SHALL BE USED FOR ALL SPLICES IN SLABS, BEAMS, JOISTS, WALLS, MOMENT RESISTING COLUMNS, AND JAMB COLUMNS, UNLESS THEY MEET THE REQUIREMENTS OF NOTE #2 ABOVE.
4. TIES AND STIRRUPS SHALL NOT BE SPLICED UNLESS APPROVED BY THE ENGINEER OF RECORD. ROUND COLUMN TIES MAY BE SPLICED USING CLASS A LAPS.
5. THE BAR LAP SPLICE LENGTHS SHALL BE MULTIPLIED BY 1.5 WHEN EITHER OF THE FOLLOWING IS TRUE:
   A. CLEAR SPACING OF BARS BEING DEVELOPED IS LESS THAN ONE BAR DIAMETER, CLEAR COVER IS LESS THAN ONE BAR DIAMETER AND STIRRUPS OR TIES ALONG THE LENGTH OF THE SPLICE ARE LESS THAN THE CODE MINIMUM.
   B. CLEAR SPACING OF BARS BEING DEVELOPED IS LESS THAN 2 BAR DIAMETERS AND CLEAR COVER IS LESS THAN ONE BAR DIAMETER.

STRUCTURAL ABBREVIATION LIST:

w/	WITH	J.B.E.	JOIST BEARING ELEVATION
±	PLUS/MINUS	JT.	JOINT
CL	CENTERLINE		
o/c	ON CENTER	K	KIPS
		K.S.F.	KIPS PER SQUARE FOOT
A.B.	ANCHOR BOLT	K.S.I.	KIPS PER SQUARE INCH
AESS	ARCHITECTURALLY EXPOSED STRUCTURAL STEEL	LG.	LONG
ACI	AMERICAN CONCRETE INSTITUTE	LLH	LONG LEG HORIZONTAL
AISC	AMERICAN INSTITUTE OF STEEL CONSTRUCTION	LLO	LONG LEG OUTSTANDING
		LLV	LONG LEG VERTICAL
A.R.	ANCHOR ROD	LSH	LONG SIDE HORIZONTAL
ASTM	AMERICAN SOCIETY FOR TESTING AND MATERIALS	LSV	LONG SIDE VERTICAL
ADJ.	ADJACENT	M.O.S.	MIDDLE OF SLAB
ARCH.	ARCHITECT or ARCHITECTURAL	M.O.W.	MIDDLE OF WALL
		MANUF.	MANUFACTURER or MANUFACTURER'S
B.	BOTTOM		
B.E.J.	BUILDING EXPANSION JOINT	MAS.	MASONRY
B.D.	BAR DIAMETER	MATL.	MATERIAL
BLDG.	BUILDING	MAX.	MAXIMUM
BM.	BEAM	MECH.	MECHANICAL
BRCG.	BRACING	MIN.	MINIMUM
BRDG.	BRIDGING	MTL.	METAL
BRG.	BEARING		
BTWN.	BETWEEN	N.T.S.	NOT TO SCALE
C.G.	CENTER OF GRAVITY	OPP.	OPPOSITE
C.I.P.	CAST IN PLACE		
C.J.P.	COMPLETE JOINT PENETRATION	P/T	POST-TENSIONED
CANT.	CANTILEVER	PAF	POWDER ACTUATED FASTENER
CLR.	CLEAR	P.C.	PRECAST
CMU	CONCRETE MASONRY UNIT	P.E.B.	PRE-ENGINEERED BUILDING
COL.	COLUMN	P.S.	PRE-STRESSED
CONC.	CONCRETE	PSF	POUNDS PER SQUARE FOOT
CONN.	CONNECT or CONNECTION	PSI	POUNDS PER SQUARE INCH
CONT.	CONTINUOUS	P.T.	PRESSURE TREATED
COORD.	COORDINATE	Pc	PIECE
		PLUMB.	PLUMBING
D.	DEEP or DEPTH	PROJ.	PROJECTION
DBL.	DOUBLE		
DET.	DETAIL	R.	RADIUS
DIA.	DIAMETER	REF.	REFERENCE
DIAG.	DIAGONAL	REINF.	REINFORCED or REINFORCING
DWG.	DRAWING	REQD.	REQUIRED
DWL.	DOWEL	REV.	REVISION
E.F.	EACH FACE	SLO	SHORT LEG OUTSTANDING
E.O.	EDGE OF	S.D.I.	STEEL DECK INSTITUTE
E.W.	EACH WAY	S.E.J.	SEISMIC EXPANSION JOINT
EA.	EACH	S.J.I.	STEEL JOIST INSTITUTE
EL.	ELEVATION	S.O.G.	SLAB ON GRADE
ELEC.	ELECTRICAL	S.F.	STEPPED FOOTING
ELEV.	ELEVATOR or ELEVATION	SCHED.	SCHEDULE
EMB.	EMBED or EMBEDMENT	SECT.	SECTION
ENG.	ENGINEER	SHT.	SHEET
EQ.	EQUAL	SIM.	SIMILAR
EQUIV.	EQUIVALENT	S.I.R.D.A.	SLOPED INTEGRAL ROOF DECK ASSEMBLY
EXIST.	EXISTING		
EXP.	EXPANSION	SL.	SLOPE
		SPA.	SPACE
F.L.	FULL LENGTH	STD.	STANDARD
F.O.	FACE OF	STIFF.	STIFFENER
F.R.	FIRST RISER	STIR.	STIRRUP
FIN.	FINISH or FINISHED	STL.	STEEL
FLR.	FLOOR	STRUCT.	STRUCTURAL
FTG.	FOOTING		
		T.	TOP
G.C.	GENERAL CONTRACTOR	T.O.S.	TOP OF STEEL
ga	GAGE	TEMP.	TEMPERATURE
GALV.	GALVANIZED	TYP.	TYPICAL
GD.	GRADE		
		U.O.N.	UNLESS OTHERWISE NOTED
H.C.	HOLLOW CORE		
HK.	HOOK	VERT.	VERTICAL
HORIZ.	HORIZONTAL		
		W.	WIDE or WIDTH
ICF	INSULATED CONCRETE FORM	W.P.	WORKING POINT
		W.W.F.	WELDED WIRE FABRIC

SPEIGHT·MARSHALL·FRANCIS
STRUCTURAL ENGINEERS
1228 PERIMETER PARKWAY, SUITE 201
VIRGINIA BEACH, VIRGINIA 23454
P: 757.427.1020
2821 EMORYWOOD PARKWAY SUITE 300
RICHMOND, VIRGINIA 23294
P: 804.464.4111
WWW.SMANDF.COM
SM&F Job No: 20.241-B

APPR	DATE	DESCRIPTION	SYM

NAVFAC

SEAL

RQ W.M. Jordan COMPANY – A JOINT VENTURE –

Michael Baker INTERNATIONAL
100 AIRSIDE DRIVE
MOON TOWNSHIP, PA 15108 A/E INFO

APPROVED

FOR COMMANDER NAVFAC

ACTIVITY
MARINE CORPS BASE CAMP LEJEUNE

SATISFACTORY TO DATE

DES	DRW	CHK

PM

BRANCH MANAGER

CHIEF ENG/ARCH

FIRE PROTECTION

DEPARTMENT OF THE NAVY
NAVAL FACILITIES ENGINEERING COMMAND
ROIOC FLORENCE CAMP LEJEUNE
NAVAL FACILITIES ENGINEERING COMMAND ~ MID-ATLANTIC
JACKSONVILLE, NC
MCB CAMP LEJEUNE
P1338F II MEF SIMULATION/TRAINING CENTER REPLACEMENT
JACKSONVILLE, NC
STRUCTURAL NOTES AND ABBREVIATIONS

SCALE: AS NOTED
EPROJECT NO.: 1590892
CONSTR. CONTR. NO.
N40085-20-C-0059
NAVFAC DRAWING NO.
SHEET OF
S-003

DP2 SUBMISSION – P1338 BUILDING - PRE-FINAL SUBMISSION

PLOTTED: 6/9/2021 5:23:47 PM
FILE NAME: BIM 360://HF PACKAGE 3/P1338 MEF SIM CTR-1590892-S.rvt

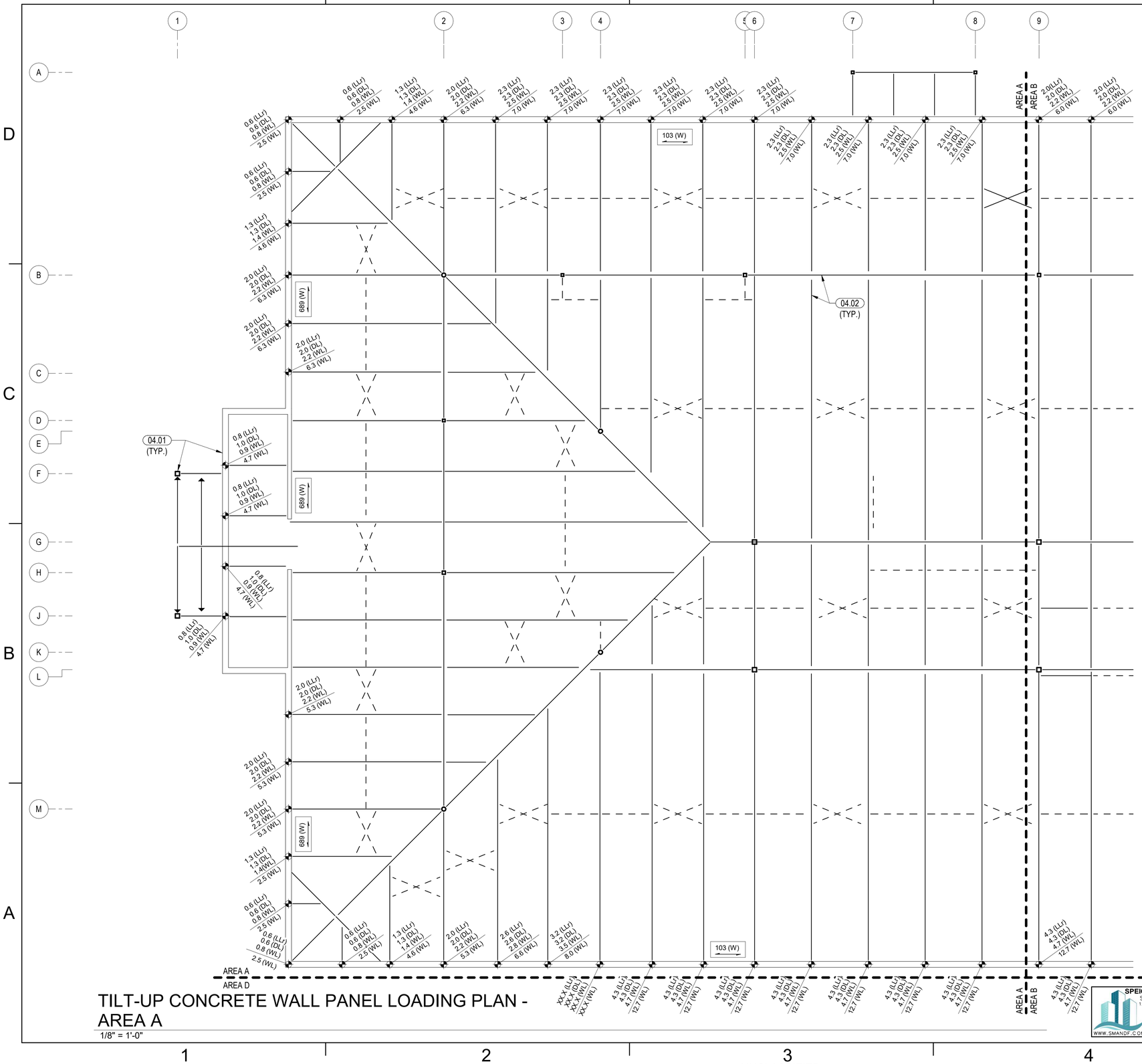

TILT-UP CONCRETE WALL PANEL LOADING PLAN - AREA A

1/8" = 1'-0"

GENERAL TILT-UP CONCRETE WALL PANEL LOADING PLAN NOTES

1. SEE THE DIMENSION PLANS ON SHEETS S-101, S-102, S-103, S-104 AND THE ARCHITECTURAL DRAWINGS FOR DIMENSIONS NOT SHOWN.
2. FOR THE STRUCTURAL NOTES AND ABBREVIATIONS SEE SHEETS S-001, S-002 AND S-003.

TILT-UP CONCRETE WALL PANEL LOADING KEY PLAN NOTES

04.01 FOR COLUMN AND WALL SIZES SEE THE FOUNDATION PLANS ON SHEETS S-111, S-112, S-113 AND S-114.

04.02 FOR FRAMING MEMBER SIZES SEE THE ROOF FRAMING PLANS ON SHEETS S-121, S-122, S-123 AND S-124.

TILT-UP CONCRETE WALL PANEL LOADING PLAN LEGEND :

XX.X (LLr) / XX.X (DL) / XX.X (WL) / XX.X (WL) = POINT LOAD ON PRECAST CONCRETE FROM JOIST / BEAMS IN KIPS (LL = LIVE LOAD, LLr = ROOF LIVE LOAD, DL = DEAD LOAD, WL = ULTIMATE WIND UPLIFT OR DOWNWARD LOAD)

XXX (W) = LATERAL LOAD ON PRECAST CONCRETE FROM ROOF DECK IN POUNDS PER LINEAR FOOT

[XXX (LLr), XXX (DL), XXX (W)] = DISTRIBUTED LOAD ON PRECAST CONCRETE FROM THE ROOF DECK IN POUNDS PER LINEAR (LL = LIVE LOAD, LLr = ROOF LIVE LOAD, DL = DEAD LOAD, WL = ULTIMATE WIND UPLIFT LOAD)

X.XK (+X.X'-XX") = LATERAL POINT LOAD ON PRECAST CONCRETE FROM GIRTS (IN KIPS) AND ELEVATION WHERE THE LOAD OCCURS

KEYPLAN

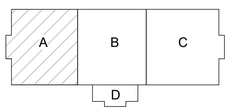

0 4' - 0" 8' - 0" 16' - 0"

SCALE: 1/8" = 1' - 0"

N

SPEIGHT·MARSHALL·FRANCIS
STRUCTURAL ENGINEERS
1228 PERIMETER PARKWAY, SUITE 201
VIRGINIA BEACH, VIRGINIA 23454
P: 757.427.1020
2821 EMORYWOOD PARKWAY SUITE 300
RICHMOND, VIRGINIA 23294
P: 804.464.4111
WWW.SMANDF.COM SM&F Job No: 20.241-B

APPR | DATE | DESCRIPTION | SYM

NAVFAC

SEAL

RQ W.M. Jordan COMPANY — A JOINT VENTURE —

Michael Baker INTERNATIONAL
100 AIRSIDE DRIVE
MOON TOWNSHIP, PA 15108 A/E INFO

APPROVED

FOR COMMANDER NAVFAC

ACTIVITY
MARINE CORPS BASE CAMP LEJEUNE

SATISFACTORY TO DATE

DES	DRW	CHK
PM		
BRANCH MANAGER		
CHIEF ENG/ARCH		
FIRE PROTECTION		

DEPARTMENT OF THE NAVY
NAVAL FACILITIES ENGINEERING COMMAND
ROICC FLORENCE CAMP LEJEUNE
MCB CAMP LEJEUNE

NAVAL FACILITIES ENGINEERING COMMAND ~ MID-ATLANTIC
JACKSONVILLE, NC

JACKSONVILLE, NC
P1338F II MEF SIMULATION/TRAINING CENTER REPLACEMENT

TILT-UP CONCRETE WALL PANEL LOADING PLAN - AREA A

SCALE: AS NOTED
EPROJECT NO.: 1590892
CONSTR. CONTR. NO. N40085-20-C-0059
NAVFAC DRAWING NO.
SHEET OF
S-131

DP2 SUBMISSION – P1338 BUILDING -PRE-FINAL SUBMISSION

PLOTTED: 6/9/2021 5:24:14 PM

FILE NAME: BIM 360:/IHF PACKAGE 3/P1338 MEF SIM CTR-1590892-S.rvt

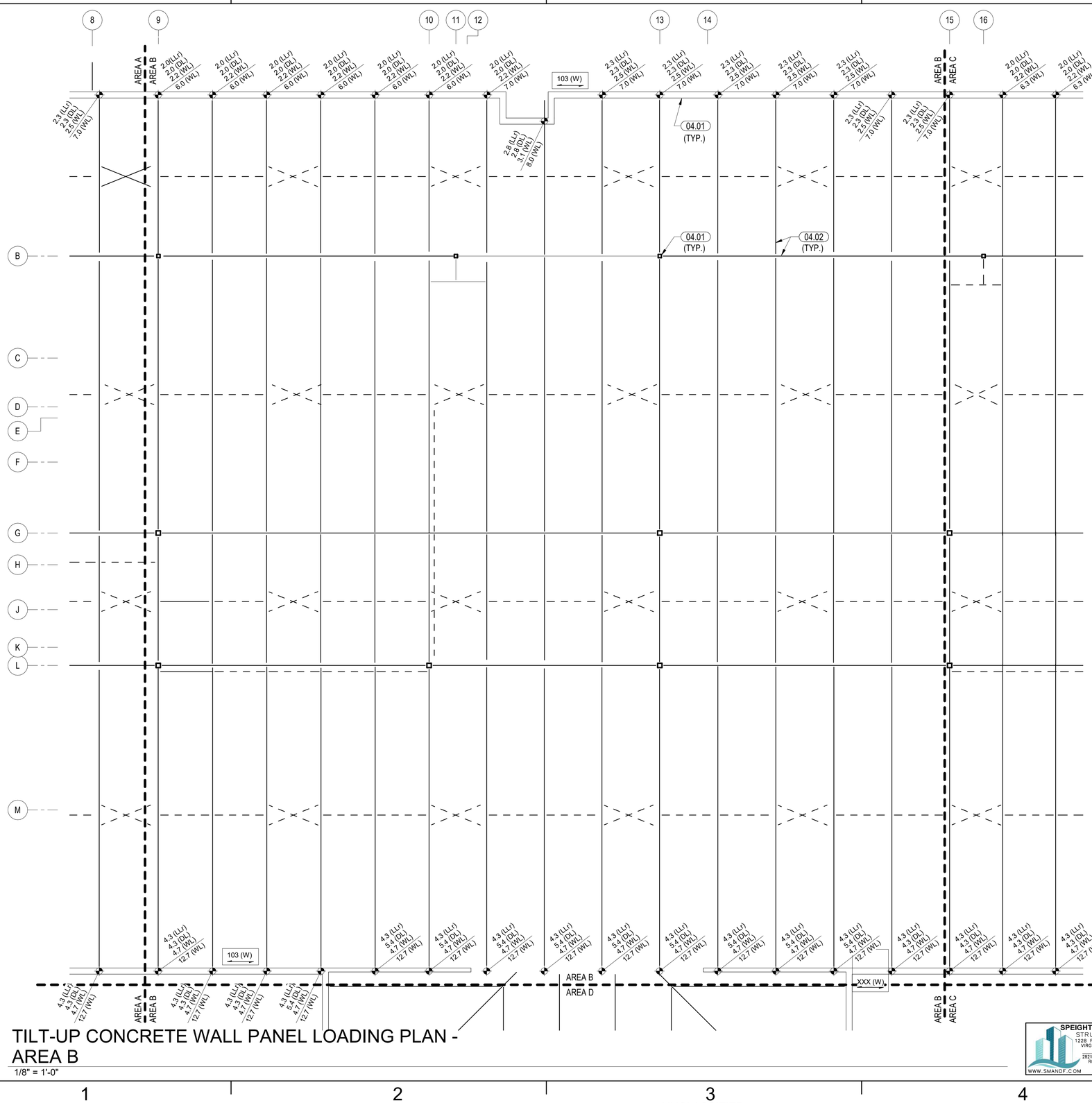

TILT-UP CONCRETE WALL PANEL LOADING PLAN - AREA B

1/8" = 1'-0"

GENERAL TILT-UP CONCRETE WALL PANEL LOADING PLAN NOTES :

1. SEE THE DIMENSION PLANS ON SHEETS S-101, S-102, S-103, S-104 AND THE ARCHITECTURAL DRAWINGS FOR DIMENSIONS NOT SHOWN.
2. FOR THE STRUCTURAL NOTES AND ABBREVIATIONS SEE SHEETS S-001, S-002 AND S-003.
3. FOR TILT-UP CONCRETE WALL PANEL LOADING PLAN NOTES AND LEGEND SEE SHEET S-131.

KEYPLAN

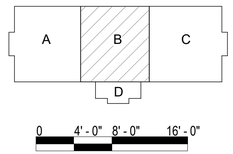

SPEIGHT·MARSHALL·FRANCIS
STRUCTURAL ENGINEERS
1228 PERIMETER PARKWAY, SUITE 201
VIRGINIA BEACH, VIRGINIA 23454
P: 757.427.1020
2821 EMORYWOOD PARKWAY, SUITE 300
RICHMOND, VIRGINIA 23294
P: 804.464.4111
WWW.SMANDF.COM
SM&F Job No: 20241-B

APPR	DATE	DESCRIPTION	SYM

SEAL

RQ W.M. Jordan COMPANY – A JOINT VENTURE –

Michael Baker INTERNATIONAL
100 AIRSIDE DRIVE
MOON TOWNSHIP, PA 15108
A/E INFO

APPROVED

FOR COMMANDER NAVFAC

ACTIVITY
MARINE CORPS BASE
CAMP LEJEUNE

SATISFACTORY TO DATE

DES	DRW	CHK

PM

BRANCH MANAGER

CHIEF ENG/ARCH

FIRE PROTECTION

DEPARTMENT OF THE NAVY
NAVAL FACILITIES ENGINEERING COMMAND – MID-ATLANTIC
ROICC FLORENCE CAMP LEJEUNE
MCB CAMP LEJEUNE

NAVAL FACILITIES ENGINEERING COMMAND
JACKSONVILLE, NC

JACKSONVILLE, NC
P1338F II MEF SIMULATION/TRAINING CENTER REPLACEMENT

TILT-UP CONCRETE WALL PANEL LOADING PLAN - AREA B

SCALE: AS NOTED
EPROJECT NO.: 1590892
CONSTR. CONTR. NO.
N40085-20-C-0059
NAVFAC DRAWING NO.
SHEET OF

S-132

DP2 SUBMISSION – P1338 BUILDING -PRE-FINAL SUBMISSION

PLOTTED: 6/9/2021 5:24:17 PM

FILE NAME: BIM 360://NF PACKAGE 3/P1338 MEF SIM CTR-1590892-S.rvt

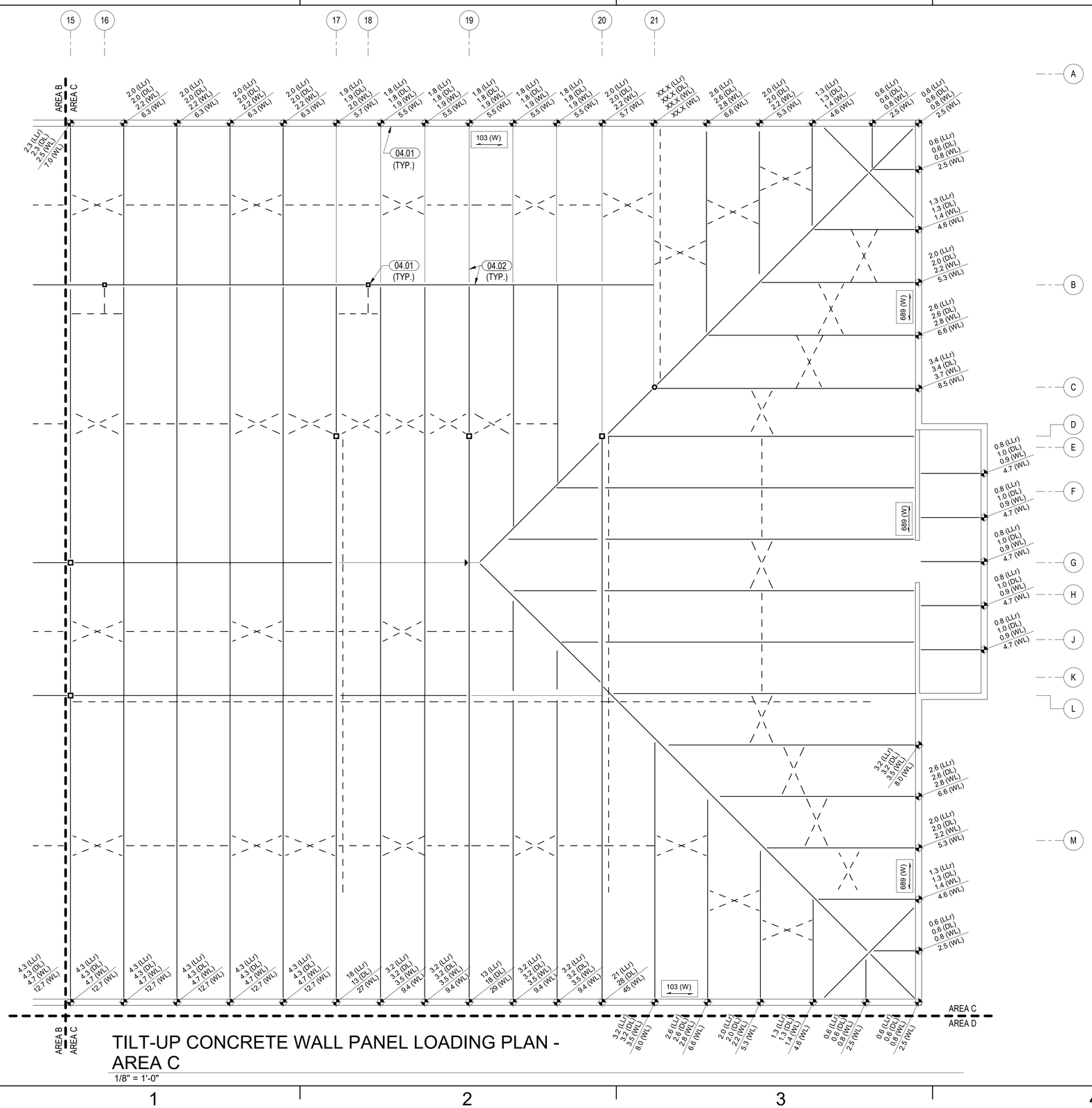

TILT-UP CONCRETE WALL PANEL LOADING PLAN - AREA C

1/8" = 1'-0"

GENERAL TILT-UP CONCRETE WALL PANEL LOADING PLAN NOTES :

1. SEE THE DIMENSION PLANS ON SHEETS S-101, S-102, S-103, S-104 AND THE ARCHITECTURAL DRAWINGS FOR DIMENSIONS NOT SHOWN.
2. FOR THE STRUCTURAL NOTES AND ABBREVIATIONS SEE SHEETS S-001, S-002 AND S-003.
3. FOR TILT-UP CONCRETE WALL PANEL LOADING PLAN NOTES AND LEGEND SEE SHEET S-131.

KEYPLAN

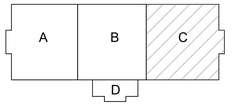

0 4' - 0" 8' - 0" 16' - 0"

SCALE: 1/8" = 1' - 0"

SPEIGHT·MARSHALL·FRANCIS
STRUCTURAL ENGINEERS
1228 PERIMETER PARKWAY, SUITE 201
VIRGINIA BEACH, VIRGINIA 23454
P: 757.427.1020
2821 EMORYWOOD PARKWAY SUITE 300
RICHMOND, VIRGINIA 23294
P: 804.464.4111
SMAF Job No: 20241-8
WWW.SMANDF.COM

SYM	DESCRIPTION	DATE	APPR

NAVFAC

SEAL

RQ W.M. Jordan COMPANY – A JOINT VENTURE –

Michael Baker INTERNATIONAL
100 AIRSIDE DRIVE
MOON TOWNSHIP, PA 15108
A/E INFO

APPROVED

FOR COMMANDER NAVFAC

ACTIVITY
MARINE CORPS BASE CAMP LEJEUNE

SATISFACTORY TO DATE

DES	DRW	CHK
PM		
BRANCH MANAGER		
CHIEF ENG/ARCH		
FIRE PROTECTION		

DEPARTMENT OF THE NAVY
NAVAL FACILITIES ENGINEERING COMMAND
NAVAL FACILITIES ENGINEERING COMMAND ~ MID-ATLANTIC
ROICC FLORENCE CAMP LEJEUNE
JACKSONVILLE, NC
MCB CAMP LEJEUNE
JACKSONVILLE, NC

P1338F II MEF SIMULATION/TRAINING CENTER REPLACEMENT

TILT-UP CONCRETE WALL PANEL LOADING PLAN - AREA C

SCALE: AS NOTED
EPROJECT NO.: 1590892
CONSTR. CONTR. NO. N40085-20-C-0059
NAVFAC DRAWING NO.
SHEET OF

S-133

DP2 SUBMISSION – P1338 BUILDING - PRE-FINAL SUBMISSION

PLOTTED: 6/9/2021 5:24:19 PM

FILE NAME: BIM 360://HF PACKAGE 3/P1338 MEF SIM CTR-1590892-S.rvt

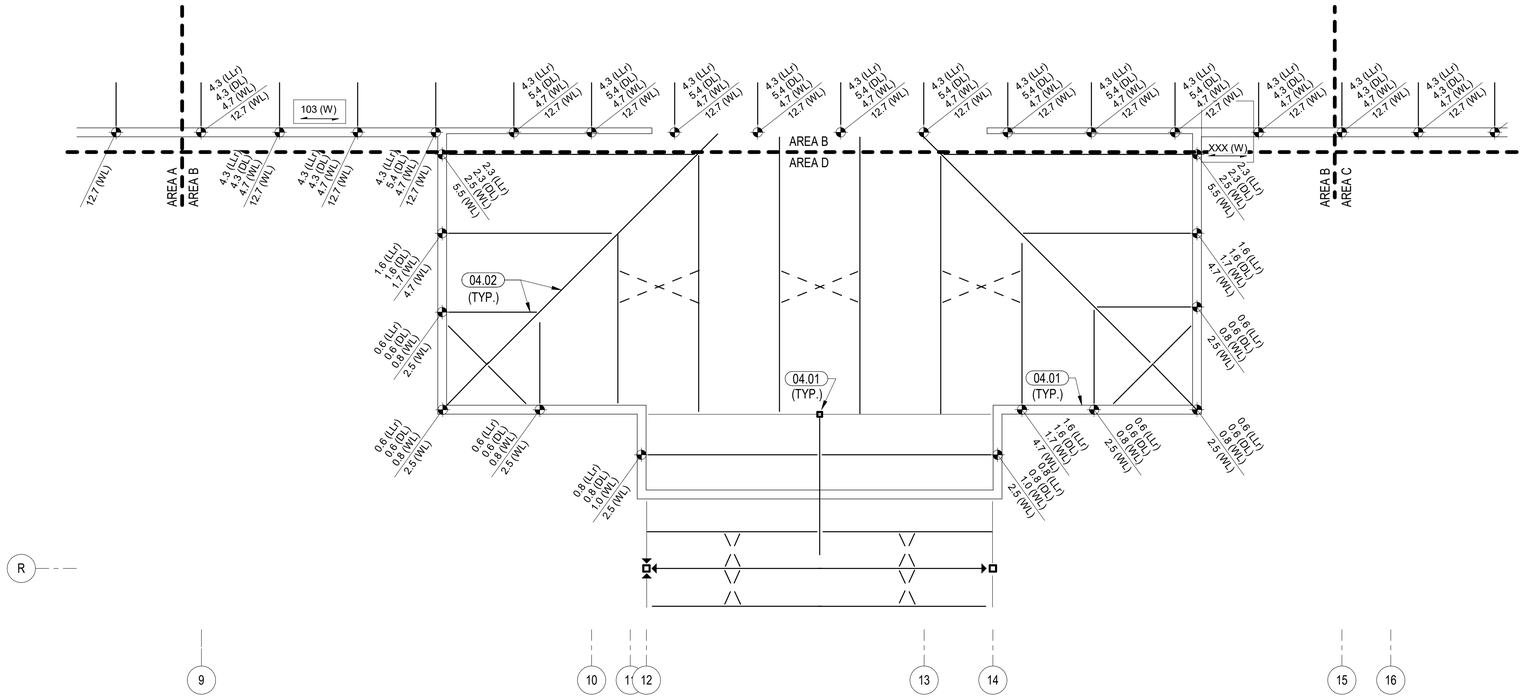

TILT-UP CONCRETE WALL PANEL LOADING PLAN - AREA D

1/8" = 1'-0"

GENERAL TILT-UP CONCRETE WALL PANEL LOADING PLAN NOTES :

1. SEE THE DIMENSION PLANS ON SHEETS S-101, S-102, S-103, S-104 AND THE ARCHITECTURAL DRAWINGS FOR DIMENSIONS NOT SHOWN.
2. FOR THE STRUCTURAL NOTES AND ABBREVIATIONS SEE SHEETS S-001, S-002 AND S-003.
3. FOR TILT-UP CONCRETE WALL PANEL LOADING PLAN NOTES AND LEGEND SEE SHEET S-131.

KEYPLAN

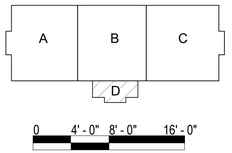

SPEIGHT·MARSHALL-FRANCIS
STRUCTURAL ENGINEERS
1228 PERIMETER PARKWAY, SUITE 201
VIRGINIA BEACH, VIRGINIA 23454
P: 757.427.1020
2821 EMERYWOOD PARKWAY, SUITE 300
RICHMOND, VIRGINIA 23294
P: 804.464.1111
WWW.SMANDF.COM
SM&F Job No: 20241-B

NO.	DESCRIPTION	DATE	APPR

NAVFAC

SEAL

W.M. Jordan COMPANY – A JOINT VENTURE –

Michael Baker INTERNATIONAL
100 AIRSIDE DRIVE
MOON TOWNSHIP, PA 15108
A/E INFO

APPROVED

FOR COMMANDER NAVFAC

ACTIVITY
MARINE CORPS BASE
CAMP LEJEUNE

SATISFACTORY TO DATE

DES	DRW	CHK

PM

BRANCH MANAGER

CHIEF ENG/ARCH

FIRE PROTECTION

DEPARTMENT OF THE NAVY
NAVAL FACILITIES ENGINEERING COMMAND
ROICC FLORENCE CAMP LEJEUNE
MCB CAMP LEJEUNE

NAVAL FACILITIES ENGINEERING COMMAND ~ MID-ATLANTIC
JACKSONVILLE, NC

JACKSONVILLE, NC
P1338F II MEF SIMULATION/TRAINING CENTER
REPLACEMENT

TILT-UP CONCRETE WALL PANEL LOADING PLAN - AREA D

SCALE: AS NOTED

EPROJECT NO.: 1590892

CONSTR. CONTR. NO.
N40085-20-C-0059

NAVFAC DRAWING NO.

SHEET OF

S-134

DP2 SUBMISSION – P1338 BUILDING -PRE-FINAL SUBMISSION

PLOTTED: 6/9/2021 5:24:22 PM

FILE NAME: BIM 360://HF PACKAGE 3/P1338 MEF SIM CTR-1590892-S.rvt

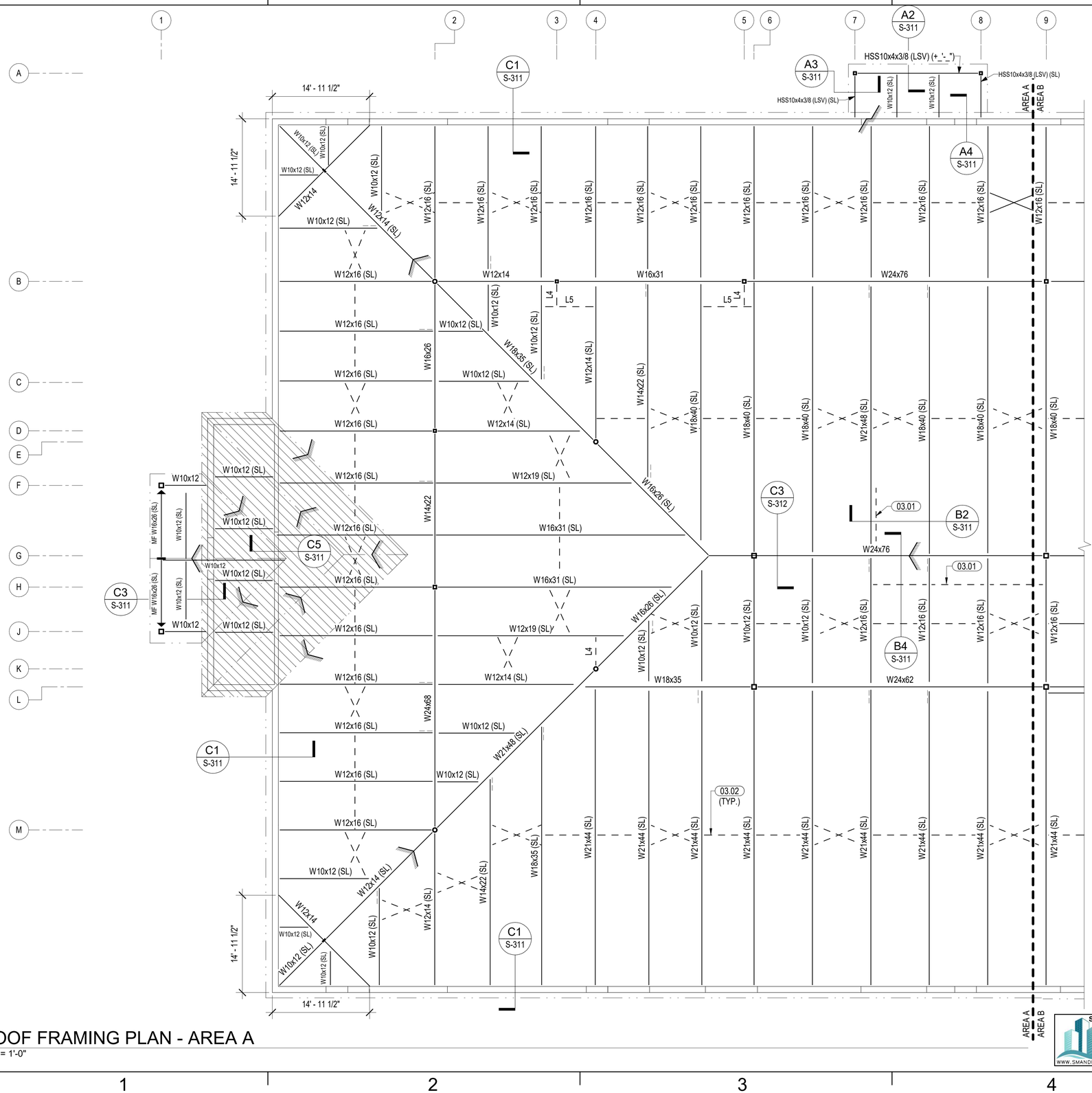

ROOF FRAMING PLAN - AREA A

1/8" = 1'-0"

GENERAL FRAMING PLAN NOTES :

1. SEE THE DIMENSION PLANS ON SHEET S-101, S-102, S-103, S-104 AND THE ARCHITECTURAL DRAWINGS FOR DIMENSIONS NOT SHOWN.
2. FOR THE STRUCTURAL NOTES AND ABBREVIATIONS SEE SHEETS S-001, S-002, AND S-003.
3. ROOF JOISTS AND OTHER ROOF DECK SUPPORTS MUST BE EQUALLY SPACED BETWEEN GIVEN LOCATIONS WITH A MAXIMUM SPACING OF 5'-0"o/c , UNLESS OTHERWISE NOTED.
4. FOR JOIST BEARING ELEVATIONS NOT SHOWN ON PLAN INTERPOLATE LINERALLY BETWEEN GIVEN ELEVATIONS.

FRAMING KEY PLAN NOTES :

03.01 FOLDING PARTITION BELOW - SEE THE ARCHITECTURAL DRAWINGS FOR LOCATION AND DETAILS.

03.02 CONT. L3x3x1/4 BRIDGING. SEE RELEVANT SECTION.

FRAMING PLAN LEGEND :

(+XX'-XX") = TOP OF STEEL (T.O.S.) ELEVATION - MEASURED FROM REFERENCE ELEVATION 0'-0" (HI = HIGH; LO = LOW; SL = SLOPE)

= BEAM TO COLUMN MOMENT CONNECTION - SEE TYPICAL DETAILS ON SHEET S-511

= KNUCKLED BEAM - SEE TYPICAL DETAIL ON SHEET S-511

= DIAGONAL BRACE TO BEAM BOTTOM FLANGE - SEE TYPICAL DETAIL ON SHEET S-511

= L3x3x1/4 CROSS BRACING (TYP.)

X = COLUMN GRID MARK

MF = MOMENT FRAME

T-X = TRUSS MARK - SEE DIAGRAMS AND DETAILS ON SHEETS S-201 AND S-202

= ROOF RIDGE, HIP OR VALLEY LINE - SEE THE ARCHITECTURAL DRAWINGS

= CHANGE IN ROOF ELEVATION - SEE THE ARCHITECTURAL DRAWINGS

= BUILT-UP ROOF FRAMING OVER MAIN ROOF FRAMING - SEE RELEVANT FRAMING SECTIONS

L4 = L4x4x1/4

L5 = L5x5x1/4

KEYPLAN

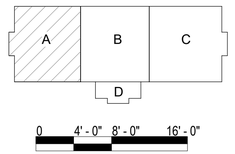

N

SPEIGHT·MARSHALL·FRANCIS
STRUCTURAL ENGINEERS
1228 PERIMETER PARKWAY, SUITE 201
VIRGINIA BEACH, VIRGINIA 23454
P: 757.427.1020
2821 EMORYWOOD PARKWAY SUITE 300
RICHMOND, VIRGINIA 23294
P: 804.464.4111
WWW.SMANDF.COM
SM&F Job No.: 20.241-B

APPR	DATE	DESCRIPTION	SYM

SEAL

RQ W.M. Jordan COMPANY — A JOINT VENTURE —

Michael Baker INTERNATIONAL
100 AIRSIDE DRIVE
MOON TOWNSHIP, PA 15108 A/E INFO

APPROVED

FOR COMMANDER NAVFAC

ACTIVITY
MARINE CORPS BASE CAMP LEJEUNE

SATISFACTORY TO DATE

DES	DRW	CHK
PM		
BRANCH MANAGER		
CHIEF ENG/ARCH		
FIRE PROTECTION		

DEPARTMENT OF THE NAVY
NAVAL FACILITIES ENGINEERING COMMAND
ROICC FLORENCE CAMP LEJEUNE
MCB CAMP LEJEUNE

NAVAL FACILITIES ENGINEERING COMMAND – MID-ATLANTIC
JACKSONVILLE, NC

JACKSONVILLE, NC
P1338F II MEF SIMULATION/TRAINING CENTER REPLACEMENT
ROOF FRAMING PLAN - AREA A

SCALE: AS NOTED
EPROJECT NO.: 1590892
CONSTR. CONTR. NO. N40085-20-C-0059
NAVFAC DRAWING NO.
SHEET OF
S-141

DP2 SUBMISSION – P1338 BUILDING -,PRE-FINAL SUBMISSION

PLOTTED: 6/10/2021 6:36:31 AM

FILE NAME: BIM 360:/IHF PACKAGE 3/P1338 MEF SIM CTR-1590892-S.rvt

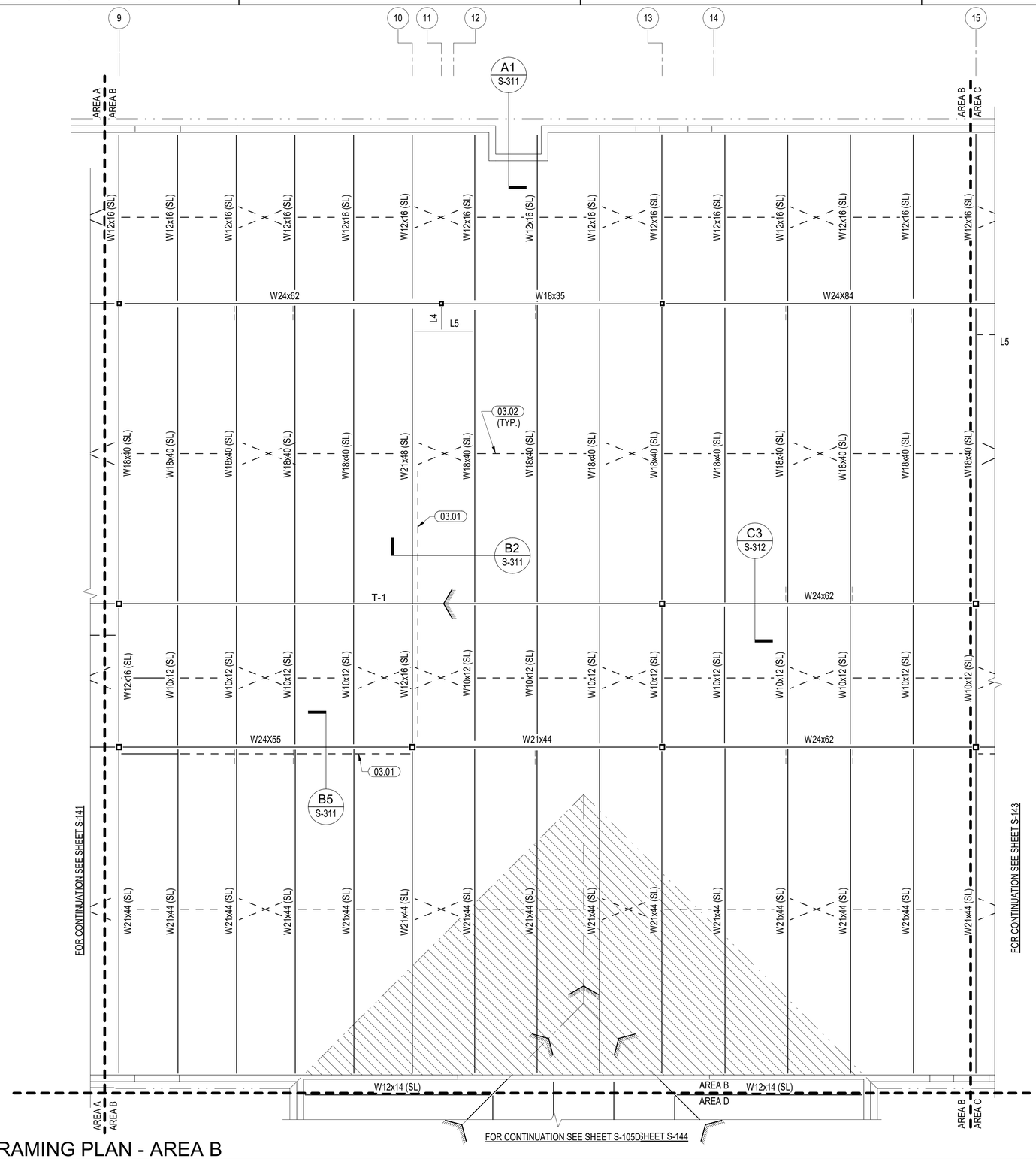

ROOF FRAMING PLAN - AREA B

1/8" = 1'-0"

GENERAL FRAMING PLAN NOTES :

1. FOR THE GENERAL NOTES AND LEGEND SEE SHEET S-141.

FRAMING KEY PLAN NOTES :

1. FOR PLAN NOTES SEE SHEET S-141.

KEYPLAN

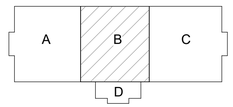

0 4' - 0" 8' - 0" 16' - 0"

SCALE: 1/8" = 1' - 0"

N

SPEIGHT·MARSHALL·FRANCIS
STRUCTURAL ENGINEERS
1228 PERIMETER PARKWAY, SUITE 201
VIRGINIA BEACH, VIRGINIA 23454
P: 757.427.1020
2821 EMORYWOOD PARKWAY SUITE 300
RICHMOND, VIRGINIA 23294
P: 804.464.4111
WWW.SMANDF.COM SM&F Job No: 20.241-B

APPR | DATE | DESCRIPTION | SYM

SEAL

RQ W.M. Jordan COMPANY – A JOINT VENTURE –

Michael Baker INTERNATIONAL
100 AIRSIDE DRIVE
MOON TOWNSHIP, PA 15108 A/E INFO

APPROVED

FOR COMMANDER NAVFAC

ACTIVITY
MARINE CORPS BASE
CAMP LEJEUNE

SATISFACTORY TO DATE

DES	DRW	CHK

PM

BRANCH MANAGER

CHIEF ENG/ARCH

FIRE PROTECTION

DEPARTMENT OF THE NAVY
NAVAL FACILITIES ENGINEERING COMMAND
ROICC FLORENCE CAMP LEJEUNE
MCB CAMP LEJEUNE

NAVAL FACILITIES ENGINEERING COMMAND ~ MID-ATLANTIC
JACKSONVILLE, NC

JACKSONVILLE, NC
P1338F II MEF SIMULATION/TRAINING CENTER
REPLACEMENT

ROOF FRAMING PLAN - AREA B

SCALE: AS NOTED

EPROJECT NO.: 1590892

CONSTR. CONTR. NO.
N40085-20-C-0059

NAVFAC DRAWING NO.

SHEET OF

S-142

DP2 SUBMISSION – P1338 BUILDING - PRE-FINAL SUBMISSION

PLOTTED: 6/10/2021 6:36:32 AM

FILE NAME: BIM 360://HF PACKAGE 3/P1338 MEF SIM CTR-1590892-S.rvt

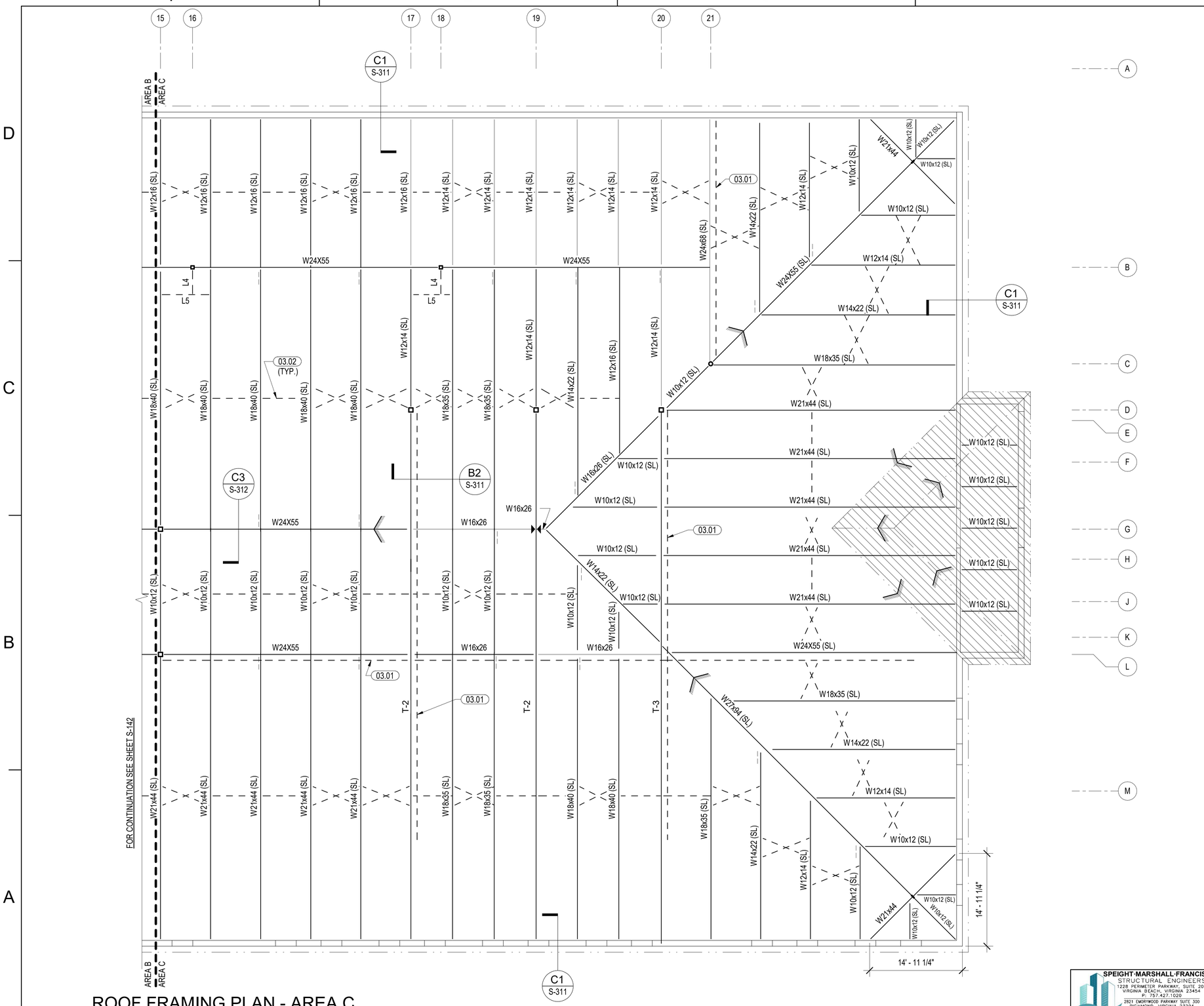

ROOF FRAMING PLAN - AREA C

1/8" = 1'-0"

GENERAL FRAMING PLAN NOTES :

1. FOR THE GENERAL NOTES AND LEGEND SEE SEE SHEET S-141.

FRAMING KEY PLAN NOTES :

1. FOR PLAN NOTES SEE SHEET S-141.

KEYPLAN

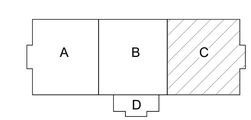

0 4' - 0" 8' - 0" 16' - 0"

SCALE: 1/8" = 1' - 0"

SPEIGHT·MARSHALL·FRANCIS
STRUCTURAL ENGINEERS
1228 PERIMETER PARKWAY, SUITE 201
VIRGINIA BEACH, VIRGINIA 23454
P: 757.427.1020
2821 EMORYWOOD PARKWAY SUITE 300
RICHMOND, VIRGINIA 23294
P: 804.464.4111
WWW.SMANDF.COM
SM&F Job No: 20.241-8

SYM	DESCRIPTION	DATE	APPR

NAVFAC

SEAL

RQ W.M. Jordan COMPANY – A JOINT VENTURE –

Michael Baker INTERNATIONAL
100 AIRSIDE DRIVE
MOON TOWNSHIP, PA 15108
A/E INFO

APPROVED

FOR COMMANDER NAVFAC

ACTIVITY
MARINE CORPS BASE CAMP LEJEUNE

SATISFACTORY TO DATE

DES	DRW	CHK
PM		
BRANCH MANAGER		
CHIEF ENG/ARCH		
FIRE PROTECTION		

DEPARTMENT OF THE NAVY
NAVAL FACILITIES ENGINEERING COMMAND
NAVAL FACILITIES ENGINEERING COMMAND ~ MID-ATLANTIC
ROICC FLORENCE CAMP LEJEUNE
JACKSONVILLE, NC
MCB CAMP LEJEUNE
JACKSONVILLE, NC

P1338F II MEF SIMULATION/TRAINING CENTER REPLACEMENT

ROOF FRAMING PLAN - AREA C

SCALE: AS NOTED
EPROJECT NO.: 1590892
CONSTR. CONTR. NO. N40085-20-C-0059
NAVFAC DRAWING NO.
SHEET OF

S-143

DP2 SUBMISSION – P1338 BUILDING - PRE-FINAL SUBMISSION

FILE NAME: BIM 360://HF PACKAGE 3/P1338 MEF SIM CTR-1590892-S.rvt
PLOTTED: 6/10/2021 6:36:33 AM

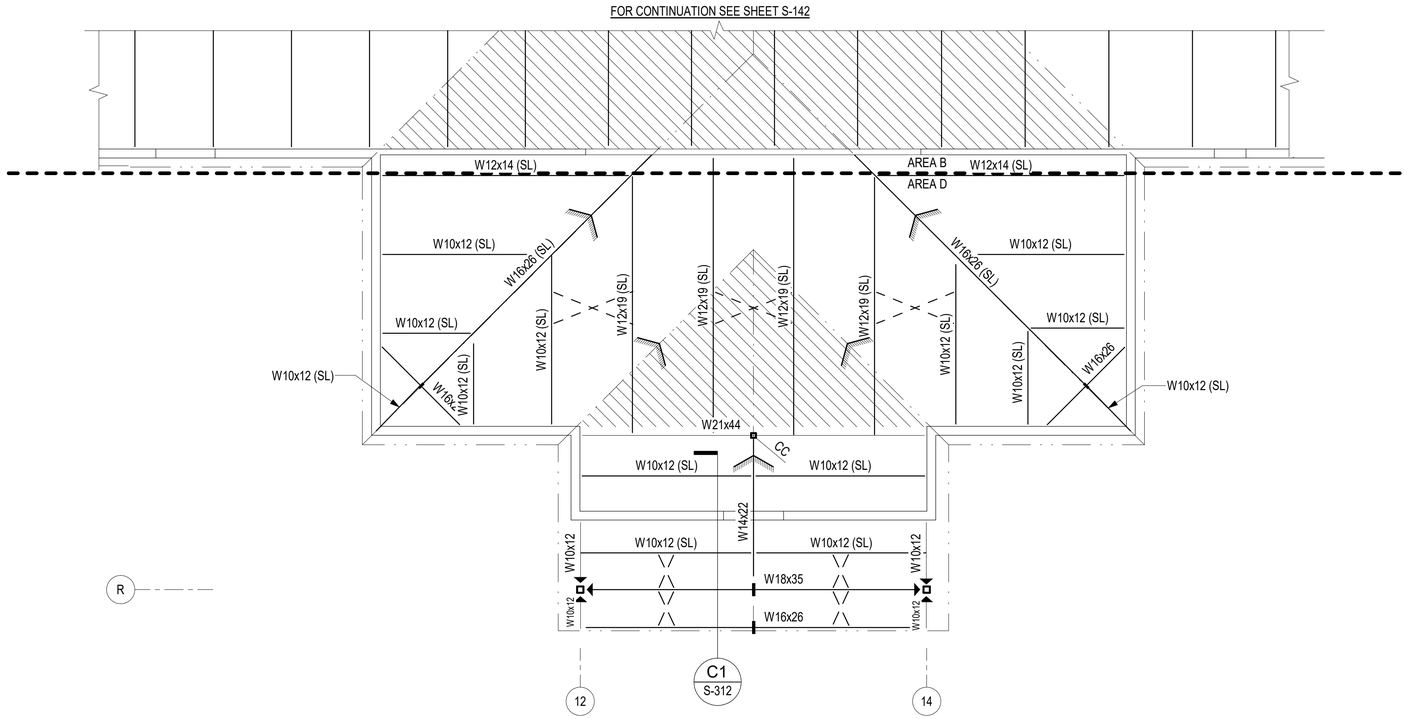

ROOF FRAMING PLAN - AREA D

1/8" = 1'-0"

GENERAL FRAMING PLAN NOTES :

1. FOR THE GENERAL NOTES AND LEGEND SEE SEE SHEET S-141.

FRAMING KEY PLAN NOTES :

1. FOR PLAN NOTES SEE SHEET S-141.

KEYPLAN

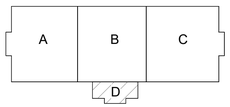

0 4' - 0" 8' - 0" 16' - 0"

SCALE: 1/8" = 1' - 0"

SPEIGHT·MARSHALL·FRANCIS
STRUCTURAL ENGINEERS
1228 PERIMETER PARKWAY, SUITE 201
VIRGINIA BEACH, VIRGINIA 23454
P: 757.427.1020
2821 EMORYWOOD PARKWAY SUITE 300
RICHMOND, VIRGINIA 23294
P: 804.464.4111
WWW.SMANDF.COM
SM&F Job. No.: 20.241-B

NO.	SYM	DESCRIPTION	DATE	APPR

SEAL

W.M. Jordan COMPANY – A JOINT VENTURE –

Michael Baker INTERNATIONAL

100 AIRSIDE DRIVE
MOON TOWNSHIP, PA 15108 A/E INFO

APPROVED

FOR COMMANDER NAVFAC

ACTIVITY
MARINE CORPS BASE CAMP LEJEUNE

SATISFACTORY TO DATE

DES	DRW	CHK

PM

BRANCH MANAGER

CHIEF ENG/ARCH

FIRE PROTECTION

DEPARTMENT OF THE NAVY
NAVAL FACILITIES ENGINEERING COMMAND ~ MID-ATLANTIC
ROICC FLORENCE CAMP LEJEUNE
NAVAL FACILITIES ENGINEERING COMMAND
JACKSONVILLE, NC
MCB CAMP LEJEUNE
JACKSONVILLE, NC
P1338F II MEF SIMULATION/TRAINING CENTER REPLACEMENT
ROOF FRAMING PLAN - AREA D

SCALE: AS NOTED
EPROJECT NO.: 1590892
CONSTR. CONTR. NO.
N40085-20-C-0059
NAVFAC DRAWING NO.
SHEET OF

S-144

DP2 SUBMISSION – P1338 BUILDING - PRE-FINAL SUBMISSION

PLOTTED: 6/10/2021 6:36:34 AM

FILE NAME: BIM 360:/IHF PACKAGE 3/P1338 MEF SIM CTR-1590892-S.rvt

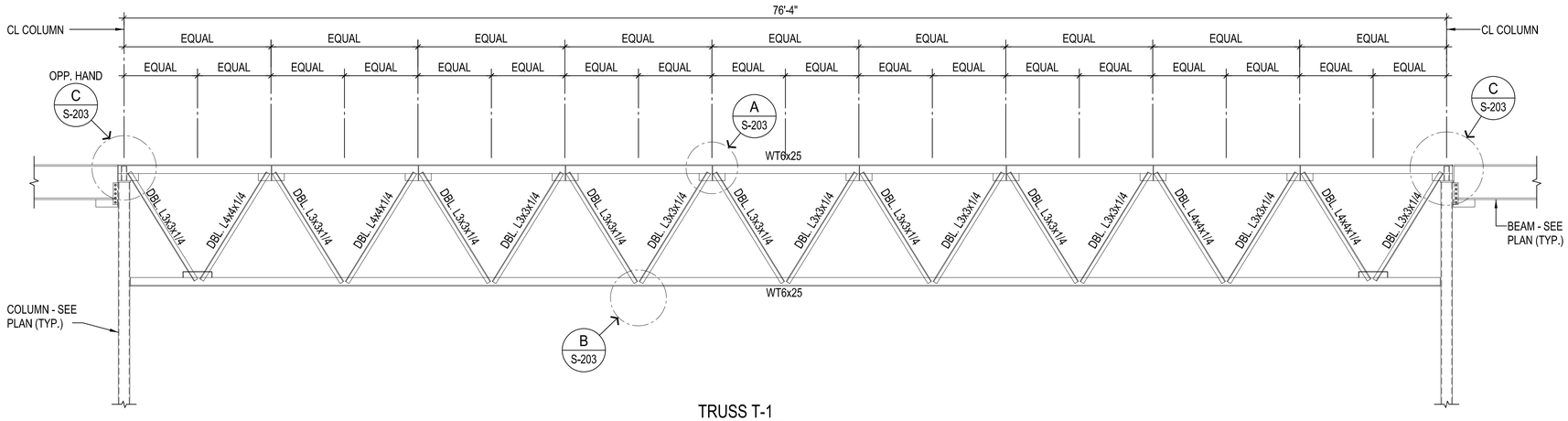

TRUSS T-1

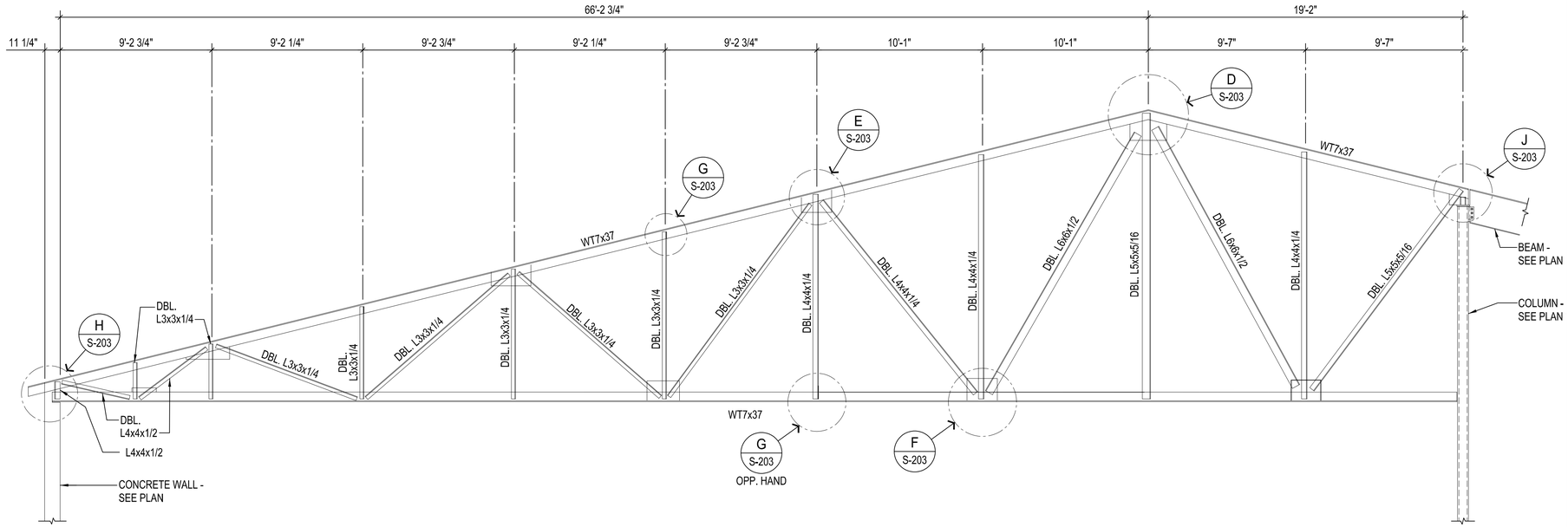

TRUSS T-2

TRUSS ELEVATIONS

1/4" = 1'-0"

GENERAL TRUSS ELEVATION NOTES :

1. FOR THE STRUCTURAL NOTES AND ABBREVIATIONS SEE SHEETS S-001, S-002, AND S-003.

SYM	DESCRIPTION	DATE	APPR

NAVFAC

SEAL

RQ W.M. Jordan COMPANY – A JOINT VENTURE –

Michael Baker INTERNATIONAL

100 AIRSIDE DRIVE
MOON TOWNSHIP, PA 15108 A/E INFO

APPROVED

FOR COMMANDER NAVFAC

ACTIVITY
MARINE CORPS BASE CAMP LEJEUNE

SATISFACTORY TO DATE

DES	DRW	CHK

PM

BRANCH MANAGER

CHIEF ENG/ARCH

FIRE PROTECTION

DEPARTMENT OF THE NAVY
NAVAL FACILITIES ENGINEERING COMMAND
ROICC FLORENCE CAMP LEJEUNE

NAVAL FACILITIES ENGINEERING COMMAND ~ MID-ATLANTIC
JACKSONVILLE, NC

MCB CAMP LEJEUNE
JACKSONVILLE, NC
P1338F II MEF SIMULATION/TRAINING CENTER REPLACEMENT
TRUSS ELEVATIONS

SCALE: AS NOTED

EPROJECT NO.: 1590892

CONSTR. CONTR. NO.
N40085-20-C-0059

NAVFAC DRAWING NO.

SHEET OF

S-201

DP2 SUBMISSION – P1338 BUILDING - PRE-FINAL SUBMISSION

PLOTTED: 6/9/2021 5:24:29 PM

FILE NAME: BIM 360://HF PACKAGE 3/P1338 MEF SIM CTR-1590892-S.rvt

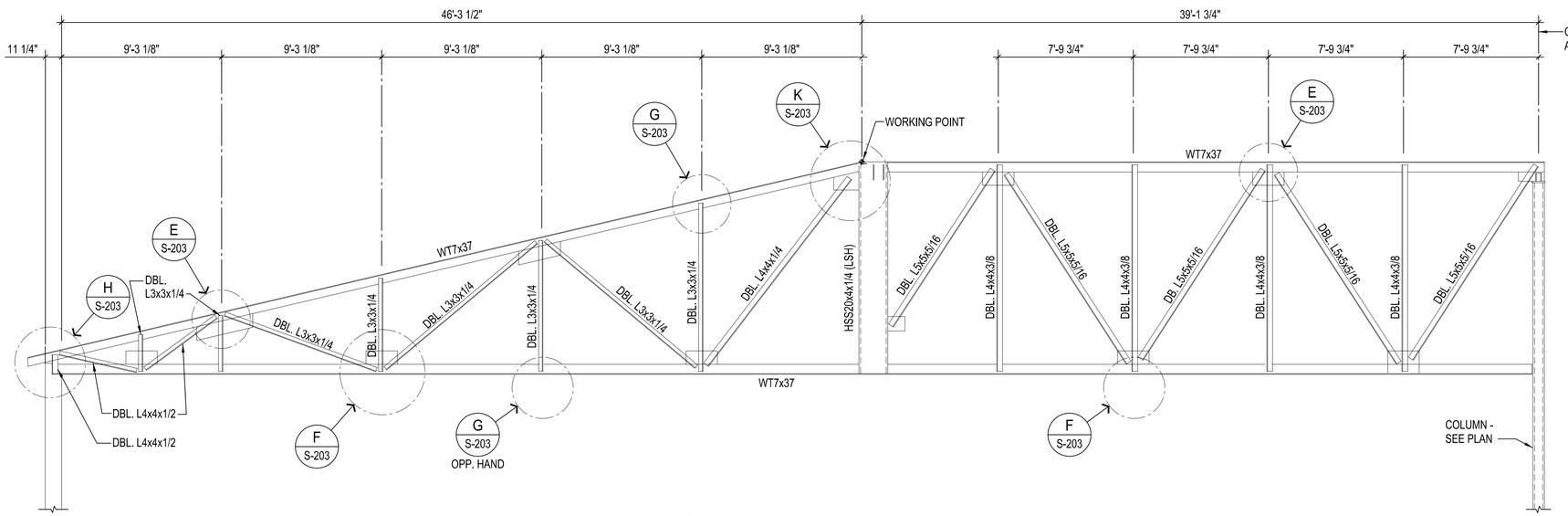

TRUSS T-3

TRUSS ELEVATION

1/4" = 1'-0"

GENERAL TRUSS ELEVATION NOTES :

1. FOR THE STRUCTURAL NOTES AND ABBREVIATIONS SEE SHEETS S-001, S-002, AND S-003.

SYM	DESCRIPTION	DATE	APPR

NAVFAC

SEAL

RQ W.M. Jordan COMPANY – A JOINT VENTURE –

Michael Baker INTERNATIONAL

100 AIRSIDE DRIVE
MOON TOWNSHIP, PA 15108 A/E INFO

APPROVED

FOR COMMANDER NAVFAC

ACTIVITY
MARINE CORPS BASE
CAMP LEJEUNE

SATISFACTORY TO DATE

DES	DRW	CHK

PM

BRANCH MANAGER

CHIEF ENG/ARCH

FIRE PROTECTION

DEPARTMENT OF THE NAVY
NAVAL FACILITIES ENGINEERING COMMAND
ROICC FLORENCE CAMP LEJEUNE
MCB CAMP LEJEUNE

NAVAL FACILITIES ENGINEERING COMMAND – MID-ATLANTIC
JACKSONVILLE, NC

JACKSONVILLE, NC
P1338F II MEF SIMULATION/TRAINING CENTER
REPLACEMENT
TRUSS ELEVATIONS

SCALE: AS NOTED

EPROJECT NO.: 1590892

CONSTR. CONTR. NO.
N40085-20-C-0059

NAVFAC DRAWING NO.

SHEET OF

S-202

DP2 SUBMISSION – P1338 BUILDING - PRE-FINAL SUBMISSION

PLOTTED: 6/9/2021 5:24:30 PM

FILE NAME: BIM 360://HF PACKAGE 3/P1338 MEF SIM CTR-1590892-S.rvt

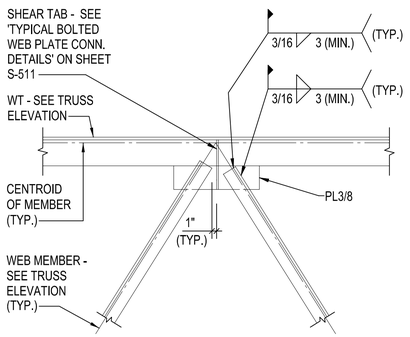

A S-203 SECTION
3/4" = 1'-0"

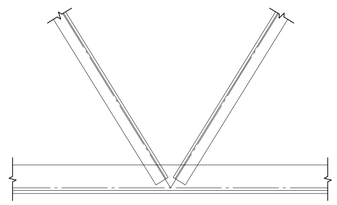

B S-203 SECTION
3/4" = 1'-0"

FOR DETAILS NOT NOTED SEE DETAIL A/S-203

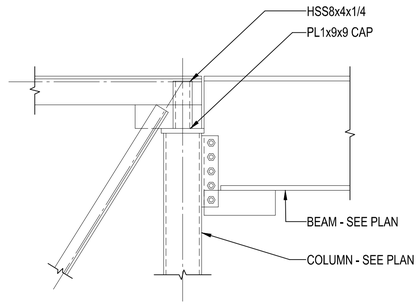

C S-203 SECTION
3/4" = 1'-0"

FOR DETAILS NOT NOTED SEE DETAIL A/S-203

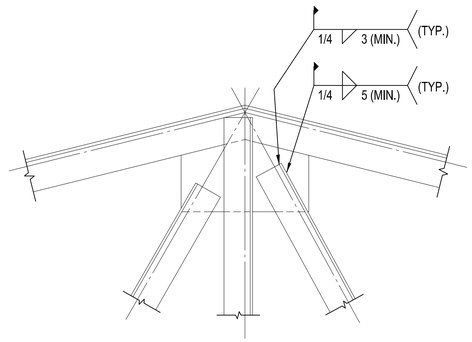

D S-203 SECTION
3/4" = 1'-0"

FOR DETAILS NOT NOTED SEE DETAIL A/S-203

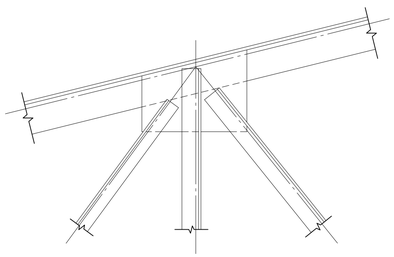

E S-203 SECTION
3/4" = 1'-0"

FOR DETAILS NOT NOTED SEE DETAIL A/S-203

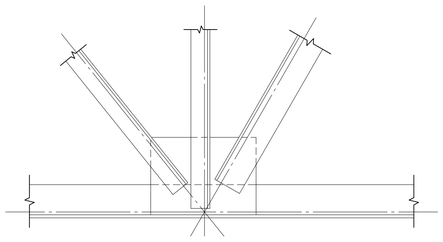

F S-203 SECTION
3/4" = 1'-0"

FOR DETAILS NOT NOTED SEE DETAIL D/S-203

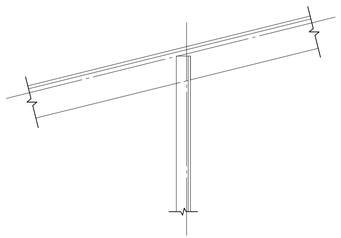

G S-203 SECTION
3/4" = 1'-0"

FOR DETAILS NOT NOTED SEE DETAIL A/S-203

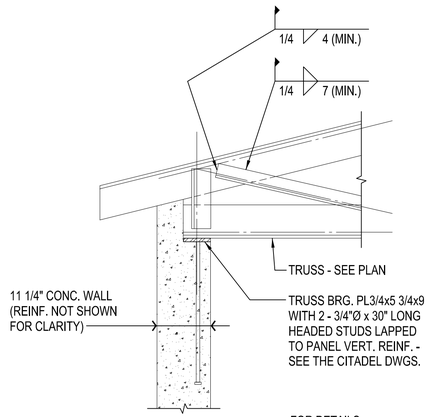

H S-203 SECTION
3/4" = 1'-0"

FOR DETAILS NOT NOTED SEE DETAIL C/S-203

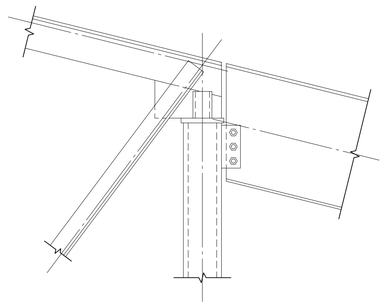

J S-203 SECTION
3/4" = 1'-0"

FOR DETAILS NOT NOTED SEE DETAIL H/S-203

APPR	DATE	DESCRIPTION	SYM

NAVFAC

SEAL

RQ W.M. Jordan COMPANY – A JOINT VENTURE –

Michael Baker INTERNATIONAL
100 AIRSIDE DRIVE
MOON TOWNSHIP, PA 15108
A/E INFO

APPROVED

FOR COMMANDER NAVFAC

ACTIVITY
MARINE CORPS BASE
CAMP LEJEUNE

SATISFACTORY TO DATE

DES	DRW	CHK

PM

BRANCH MANAGER

CHIEF ENG/ARCH

FIRE PROTECTION

DEPARTMENT OF THE NAVY
NAVAL FACILITIES ENGINEERING COMMAND
ROICC FLORENCE CAMP LEJEUNE
MCB CAMP LEJEUNE

NAVAL FACILITIES ENGINEERING COMMAND – MID-ATLANTIC
JACKSONVILLE, NC

JACKSONVILLE, NC
P1338F II MEF SIMULATION/TRAINING CENTER REPLACEMENT
TRUSS DETAILS

SCALE: AS NOTED
EPROJECT NO.: 1590892
CONSTR. CONTR. NO.
N40085-20-C-0059
NAVFAC DRAWING NO.
SHEET OF

S-203

DP2 SUBMISSION – P1338 BUILDING - PRE-FINAL SUBMISSION

PLOTTED: 6/9/2021 5:24:30 PM

FILE NAME: BIM 360://HF PACKAGE 3/P1338 MEF SIM CTR-1590892-S.rvt

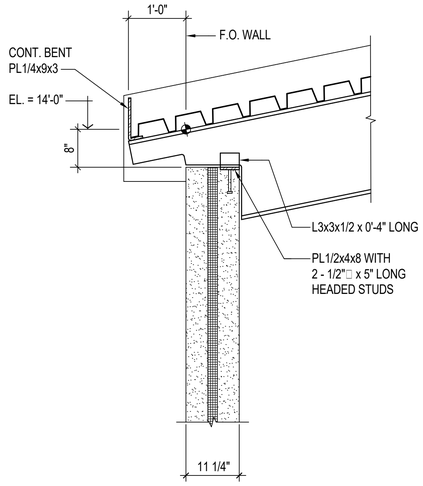

'AT BEAM'

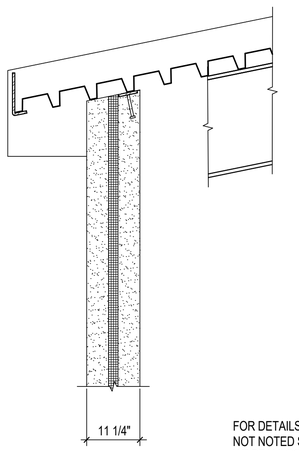

'BETWEEN BEAM'

FOR DETAILS
NOT NOTED SEE
'AT BEAM' CONDITION

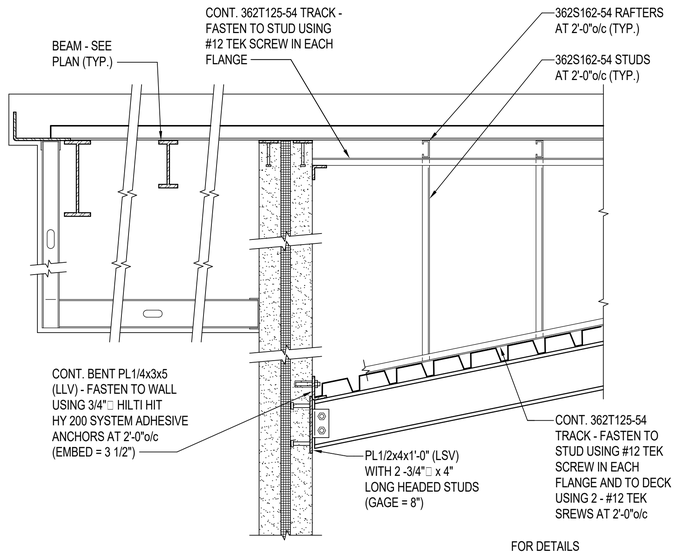

FOR DETAILS
NOT NOTED SEE
SECTION C1/S-311

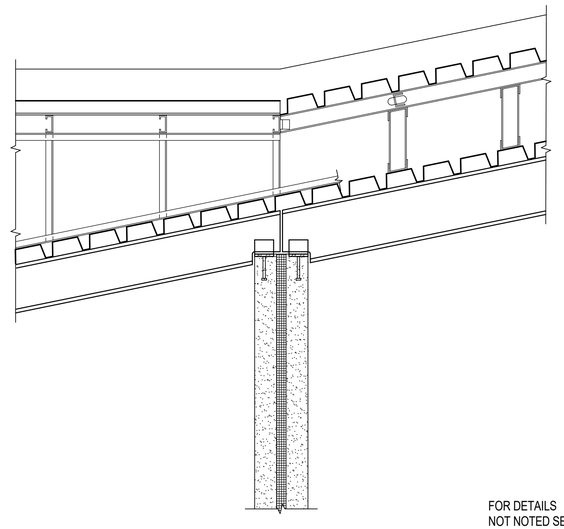

FOR DETAILS
NOT NOTED SEE
SECTIONS C1/S-301
AND C3/S-311

C1 / S-311 SECTION
3/4" = 1'-0"

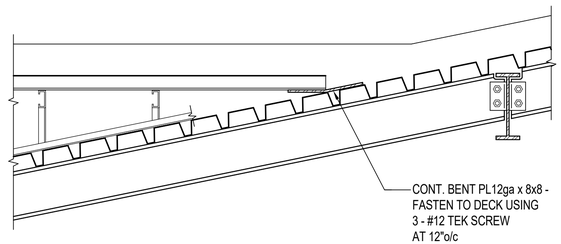

C3 / S-311 SECTION
3/4" = 1'-0"

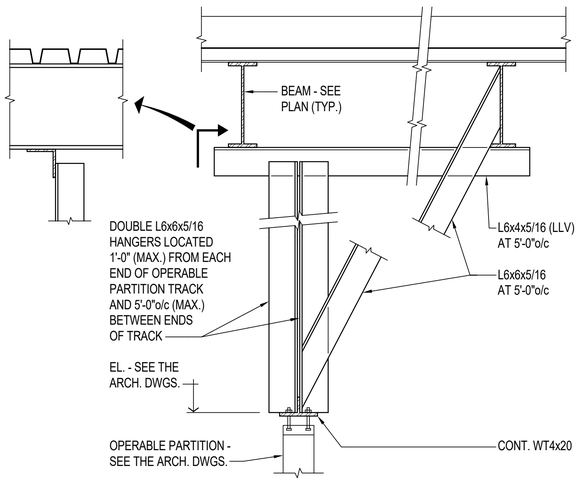

C5 / S-311 SECTION
3/4" = 1'-0"

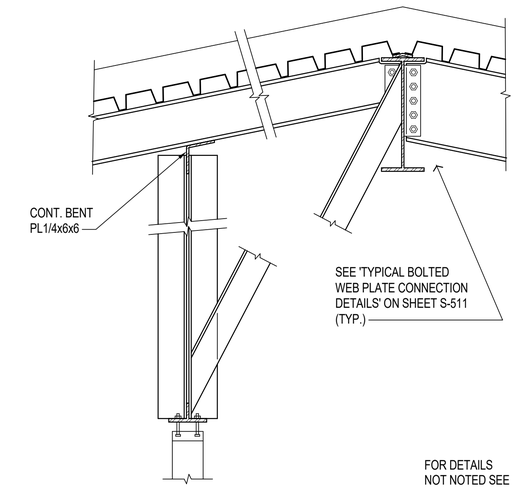

FOR DETAILS
NOT NOTED SEE
SECTION B2/S-311

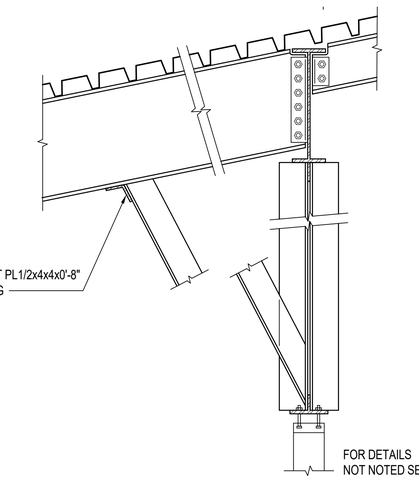

FOR DETAILS
NOT NOTED SEE
SECTIONS B2/S-301
AND B4/S-311

B1 / S-311 SECTION
3/4" = 1'-0"

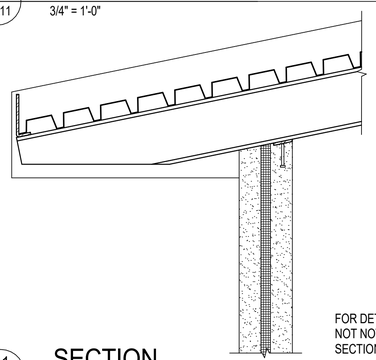

FOR DETAILS
NOT NOTED SEE
SECTION C3/S-311

B2 / S-311 SECTION
3/4" = 1'-0"

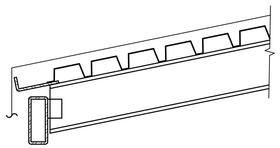

B4 / S-311 SECTION
3/4" = 1'-0"

FOR DETAILS
NOT NOTED SEE
SECTION C1/S-311

B5 / S-311 SECTION
3/4" = 1'-0"

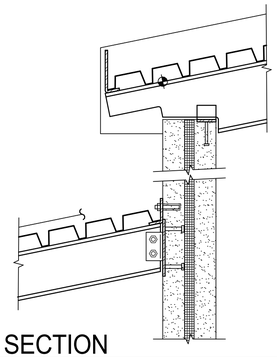

FOR DETAILS
NOT NOTED SEE
SECTIONS C1/S-311
AND C3/S-311

A1 / S-311 SECTION
3/4" = 1'-0"

A2 / S-311 SECTION
3/4" = 1'-0"

A3 / S-311 SECTION
3/4" = 1'-0"

A4 / S-311 SECTION
3/4" = 1'-0"

SPEIGHT·MARSHALL·FRANCIS
STRUCTURAL ENGINEERS
1228 PERIMETER PARKWAY, SUITE 201
VIRGINIA BEACH, VIRGINIA 23454
P: 757.427.1020
2821 EMORYWOOD PARKWAY SUITE 300
RICHMOND, VIRGINIA 23294
P: 804.464.4111
SMF Job No. 20241-3
WWW.SMANDF.COM

APPR	DATE	DESCRIPTION	SYM

NAVFAC

SEAL

W.M. Jordan COMPANY – A JOINT VENTURE –

Michael Baker INTERNATIONAL
100 AIRSIDE DRIVE
MOON TOWNSHIP, PA 15108 A/E INFO

APPROVED

FOR COMMANDER NAVFAC

ACTIVITY
MARINE CORPS BASE
CAMP LEJEUNE

SATISFACTORY TO DATE

DES	DRW	CHK

PM

BRANCH MANAGER

CHIEF ENG/ARCH

FIRE PROTECTION

DEPARTMENT OF THE NAVY
NAVAL FACILITIES ENGINEERING COMMAND ~ MID-ATLANTIC
ROICC FLORENCE CAMP LEJEUNE
MCB CAMP LEJEUNE

NAVAL FACILITIES ENGINEERING COMMAND
JACKSONVILLE, NC

JACKSONVILLE, NC
P1338F II MEF SIMULATION/TRAINING CENTER
REPLACEMENT
FRAMING SECTIONS

SCALE: AS NOTED

EPROJECT NO.: 1590892

CONSTR. CONTR. NO.
N40085-20-C-0059

NAVFAC DRAWING NO.

SHEET OF

S-311

DP2 SUBMISSION – P1338 BUILDING - PRE-FINAL SUBMISSION

PLOTTED: 6/9/2021 5:24:35 PM

FILE NAME: BIM 360://HF PACKAGE 3/P1338 MEF SIM CTR-1590892-S.rvt

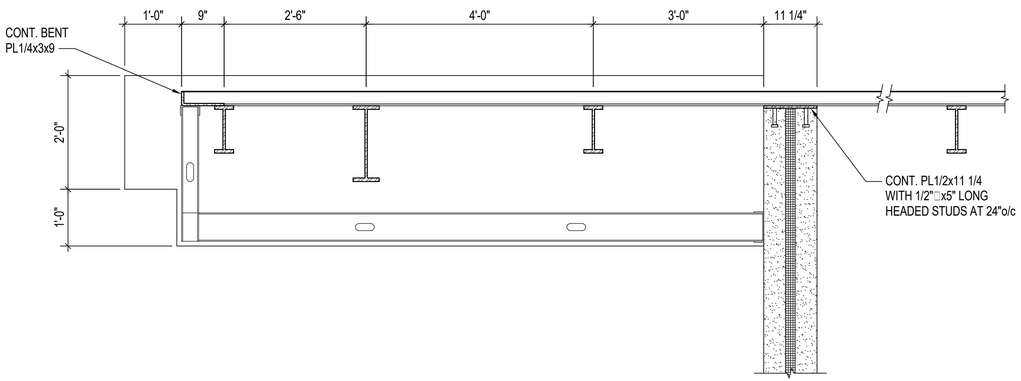

C1 / S-312 **SECTION**
3/4" = 1'-0"

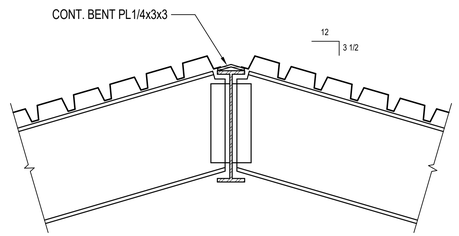

C3 / S-312 **SECTION**
3/4" = 1'-0"

NO.	DESCRIPTION	DATE	APPR

SEAL

RQ W.M. Jordan COMPANY — A JOINT VENTURE —

Michael Baker INTERNATIONAL
100 AIRSIDE DRIVE
MOON TOWNSHIP, PA 15108
A/E INFO

APPROVED

FOR COMMANDER NAVFAC

ACTIVITY
MARINE CORPS BASE
CAMP LEJEUNE

SATISFACTORY TO DATE

DES	DRW	CHK

PM

BRANCH MANAGER

CHIEF ENG/ARCH

FIRE PROTECTION

DEPARTMENT OF THE NAVY
NAVAL FACILITIES ENGINEERING COMMAND
ROICC FLORENCE CAMP LEJEUNE
MCB CAMP LEJEUNE

NAVAL FACILITIES ENGINEERING COMMAND ~ MID-ATLANTIC
JACKSONVILLE, INC.

JACKSONVILLE, NC

P1338F II MEF SIMULATION/TRAINING CENTER
REPLACEMENT

FRAMING SECTIONS

SCALE: AS NOTED

EPROJECT NO.: 1590892

CONSTR. CONTR. NO.
N40085-20-C-0059

NAVFAC DRAWING NO.

SHEET OF

S-312

SPEIGHT·MARSHALL·FRANCIS
STRUCTURAL ENGINEERS
1228 PERIMETER PARKWAY, SUITE 201
VIRGINIA BEACH, VIRGINIA 23454
P: 757.427.1020
2821 EMORYWOOD PARKWAY SUITE 300
RICHMOND, VIRGINIA 23294
P: 804.464.4111
WWW.SMANDF.COM
SMAF Job No: 20241-B

DP2 SUBMISSION – P1338 BUILDING -PRE-FINAL SUBMISSION

PLOTTED: 6/9/2021 5:24:35 PM

FILE NAME: BIM 360:/IHF PACKAGE 3/P1338 MEF SIM CTR-1590892-S.rvt

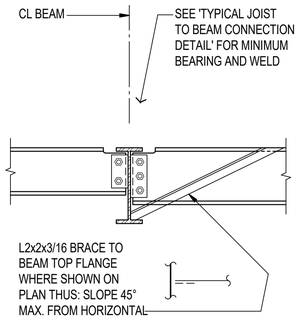

TYPICAL BEAM BOTTOM FLANGE BRACE DETAIL

NOT TO SCALE

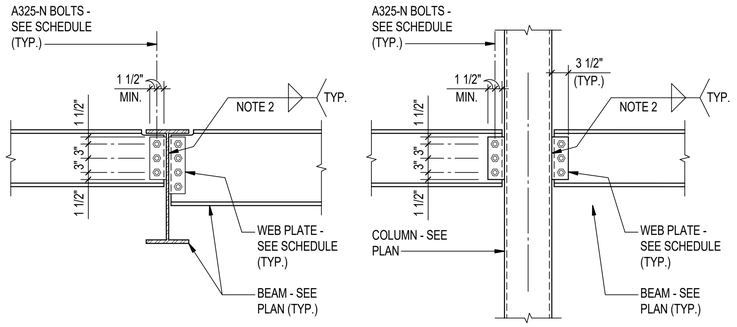

WEB PLATE CONNECTION SCHEDULE			
MAXIMUM BEAM SIZE IN EACH BEAM DEPTH GROUP	WEB PLATE THICKNESS	A325-N BOLTS	
		QUANTITY	SIZE
W8	3/8"	2	3/4"Ø
W10	3/8"	2	3/4"Ø
W12	3/8"	3	3/4"Ø
W14	3/8"	3	3/4"Ø
W16	3/8"	4	3/4"Ø
W18	3/8"	5	3/4"Ø
W24	3/8"	7	3/4"Ø
W27	1/2"	8	3/4"Ø
W30	1/2"	8	3/4"Ø

WEB PLATE CONNECTION NOTES:

1. BOLT EDGE DISTANCE MUST BE 1 1/2" MIN. AT ALL EDGES. BOLT SPACING SHALL BE 3" MIN.
2. FILLET WELDS MUST BE 3/4 OF THE PLATE THICKNESS (1/4" MIN.) EACH SIDE.
3. THICKNESS EQUALS FLANGE THICKNESS OF BEAM FRAMING INTO COLUMN WEB (3/8" MIN.).

TYPICAL BOLTED WEB PLATE CONNECTION DETAILS

NOT TO SCALE

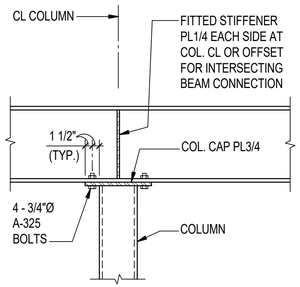

TYPICAL CANTILEVER BEAM TO COLUMN CONNECTION DETAIL

NOT TO SCALE

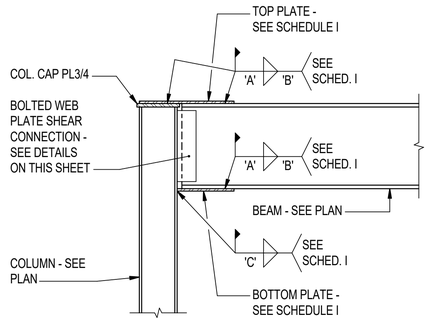

SCHEDULE I						
BEAM SIZE	TOP PLATE	BOTTOM PLATE	WELD 'A'	LENGTH 'B'	WELD 'C'	REMARKS
W10	PL1/4x4x1'-0"	PL1/4x6x6	3/16	4	3/16	---
W16	PL1/4x4x1'-0"	PL1/4x6x6	3/16	4	3/16	---

SCHEDULE I REMARKS:

1. SEE FRAMING PLANS FOR BEAM SIZES, LOCATIONS AND MOMENT CONNECTION DESIGNATIONS. SEE THE STRUCTURAL STEEL NOTES ON SHEET S-002 AND THE SPECIFICATIONS FOR OTHER INFORMATION.

TYPICAL BEAM TO WIDE FLANGE COLUMN MOMENT CONNECTION DETAIL

NOT TO SCALE

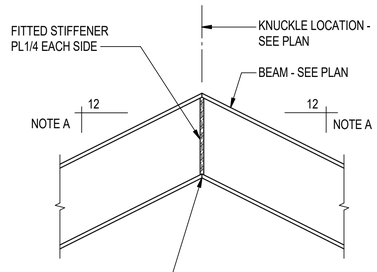

NOTE A:
FOR REQUIRED SLOPE(S) SEE PLAN AND OTHER DETAILS

FULL PENETRATION WELD AT WEB JOINT AND BOTH FLANGE JOINTS TO DEVELOP FULL MOMENT CAPACITY OF BEAM

TYPICAL KNUCKLED BEAM DETAIL

NOT TO SCALE STKNKBM1

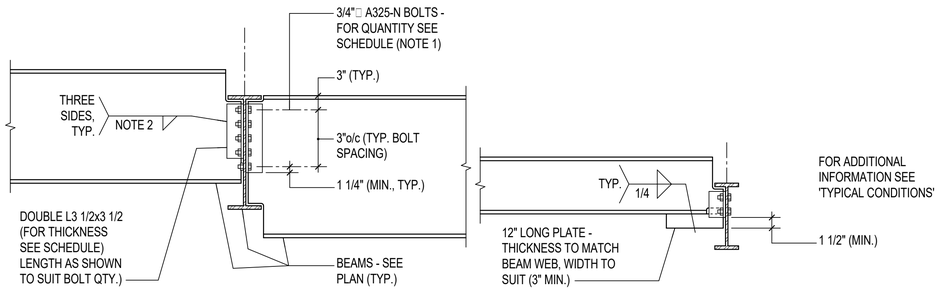

BOLTED DOUBLE ANGLE CONNECTION SCHEDULE		
BEAM SIZE	MIN. ANGLE THICKNESS	MIN. BOLT QUANTITY
W10	5/16"	2
W12	5/16"	2
W14	5/16"	2
W16	5/16"	3
W18	3/8"	4
W21	3/8"	4
W24	3/8"	5
W27	3/8"	6

DOUBLE ANGLE CONNECTION NOTES :

1. BOLT QUANTITY SHOWN IS MINIMUM NUMBER REQUIRED ON EACH SIDE OF BEAM WEB.
2. FILLET WELDS SHALL BE 3/4 OF THE ANGLE THICKNESS (1/4" MIN.).

THESE DETAILS ARE APPLICABLE AT CONNECTIONS WHERE THERE IS INSUFFICIENT DEPTH AT THE BEAM TO BEAM CONNECTION TO ALLOW USE OF A BOLTED WEB PLATE CONNECTION AS SHOWN IN THE DETAILS ON THIS SHEET AND NO OTHER CONNECTION IS SPECIFIED.

TYPICAL BOLTED DOUBLE ANGLE BEAM TO BEAM CONNECTION DETAILS

NOT TO SCALE

SPEIGHT·MARSHALL·FRANCIS
STRUCTURAL ENGINEERS
1228 PERIMETER PARKWAY, SUITE 201
VIRGINIA BEACH, VIRGINIA 23454
P: 757.427.1020
2821 EMORYWOOD PARKWAY SUITE 300
RICHMOND, VIRGINIA 23294
P: 804.464.4111
SMF Job No. 20-241-3
WWW.SMANDF.COM

APPR | DATE | DESCRIPTION | STA#

NAVFAC

SEAL

W.M. Jordan COMPANY – A JOINT VENTURE –

Michael Baker INTERNATIONAL
100 AIRSIDE DRIVE
MOON TOWNSHIP, PA 15108
A/E INFO

APPROVED
FOR COMMANDER NAVFAC

ACTIVITY
MARINE CORPS BASE CAMP LEJEUNE

SATISFACTORY TO DATE

DES	DRW	CHK
PM		
BRANCH MANAGER		
CHIEF ENG/ARCH		
FIRE PROTECTION		

DEPARTMENT OF THE NAVY
NAVAL FACILITIES ENGINEERING COMMAND ~ MID-ATLANTIC
ROIOC FLORENCE CAMP LEJEUNE
JACKSONVILLE, NC
MCB CAMP LEJEUNE
JACKSONVILLE, NC
P1338F II MEF SIMULATION/TRAINING CENTER REPLACEMENT
TYPICAL DETAILS

SCALE: AS NOTED
EPROJECT NO.: 1590892
CONSTR. CONTR. NO.
N40085-20-C-0059
NAVFAC DRAWING NO.
SHEET OF
S-511

DP2 SUBMISSION – P1338 BUILDING - PRE-FINAL SUBMISSION

PLOTTED: 6/9/2021 5:24:37 PM
FILE NAME: BIM 360://HF PACKAGE 3/P1338 MEF SIM CTR-1590892-S.rvt

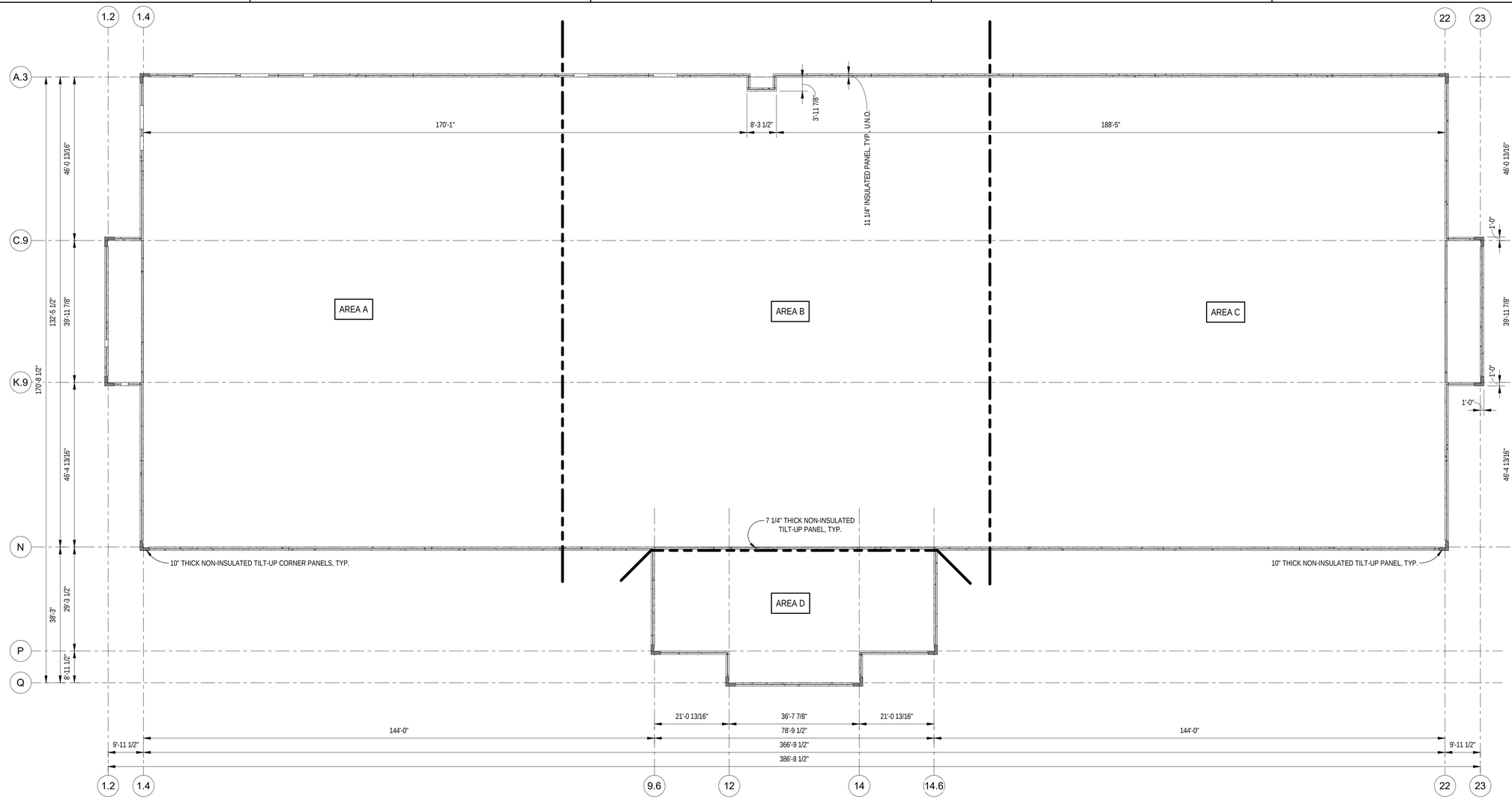

1 TILT-UP PANEL PLAN - OVERALL
1/16" = 1'-0"

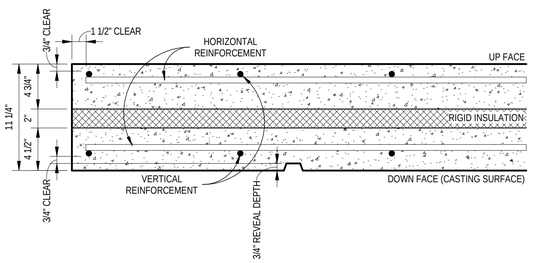

2 TILT-UP PANEL REINFORCEMENT - INSULATED COMPOSITE PANEL
1 1/2" = 1'-0"

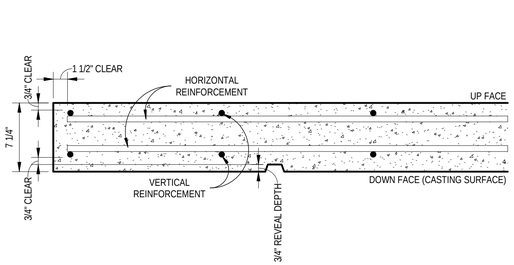

3 TILT-UP PANEL REINFORCEMENT LOCATION - 7 1/4" SOLID PANELS
1 1/2" = 1'-0"

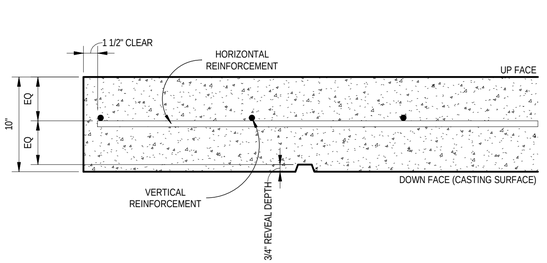

4 TILT-UP PANEL REINFORCEMENT LOCATION - 10" SOLID PANELS
1 1/2" = 1'-0"

CITADEL CONTRACTORS INC.
3405 APEX PEAKWAY
APEX, N.C. 27502
TEL 1-919-362-5122
FAX 1-919-362-6910

This drawing and the design shown are the property of Citadel Contractors, Inc. The reproduction, copying or other use of this drawings without their written consent is prohibited and any infringement will be subject to legal action.

KEYPLAN

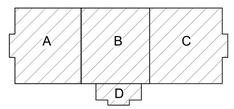

N

APPR | DATE | DESCRIPTION | SYM

SEAL

RQ W.M. Jordan COMPANY — A JOINT VENTURE —

Michael Baker INTERNATIONAL
100 AIRSIDE DRIVE
MOON TOWNSHIP, PA 15108
A/E INFO

APPROVED

FOR COMMANDER NAVFAC

ACTIVITY
MARINE CORPS BASE
CAMP LEJEUNE

SATISFACTORY TO DATE

DES CEJ	DRW CEJ	CHK CEJ

PM

BRANCH MANAGER

CHIEF ENG/ARCH

FIRE PROTECTION

DEPARTMENT OF THE NAVY
NAVAL FACILITIES ENGINEERING COMMAND ~ MID-ATLANTIC
ROICC FLORENCE CAMP LEJEUNE
MCB CAMP LEJEUNE

NAVAL FACILITIES ENGINEERING COMMAND ~ MID-ATLANTIC
JACKSONVILLE, NC

JACKSONVILLE, NC
P1338F II MEF SIMULATION/TRAINING CENTER
REPLACEMENT

TILT-UP PANEL PLAN - OVERALL

SCALE: AS NOTED
EPROJECT NO.: 1590892
CONSTR. CONTR. NO.
N40085-20-C-0059
NAVFAC DRAWING NO.
SHEET OF

S-600

DP2 SUBMISSION – P1338 BUILDING - PRE-FINAL SUBMISSION

PLOTTED: 6/8/2021 9:44:22 AM

FILE NAME: BIM 360://HF PACKAGE 3/P1338F MEF SIM CTR-1590892-TR-Up.rvt

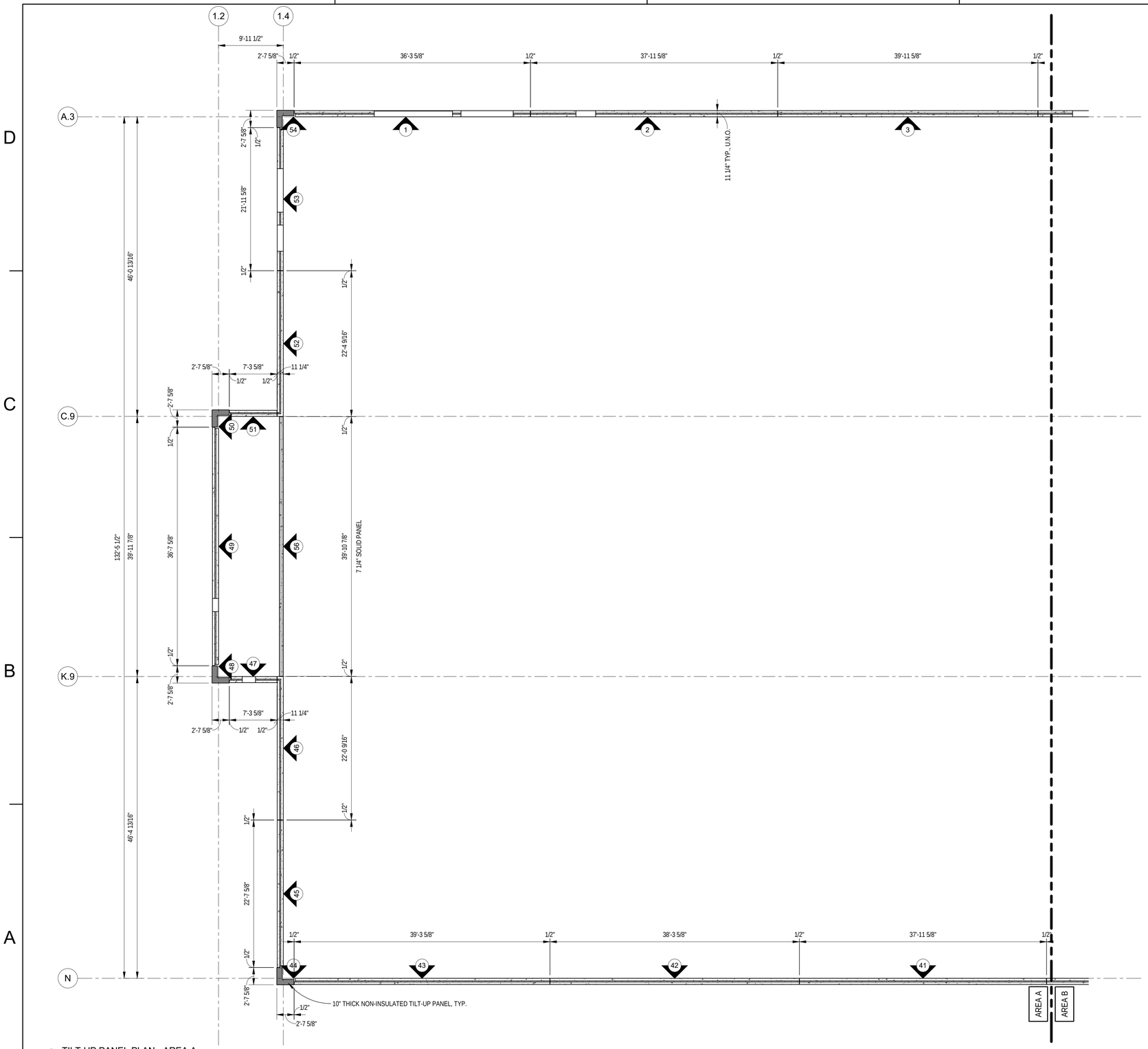

1 TILT-UP PANEL PLAN - AREA A
1/8" = 1'-0"

GENERAL NOTES:

1. FOR THE STRUCTURAL NOTES AND ABBREVIATIONS SEE SHEETS S-001, S-002 AND S-003
2. FOR DIMENSIONS NOT SHOWN SEE THE ARCHITECTURAL DRAWINGS
3. THE TILT-UP PANEL DRAWINGS MUST BE USED IN CONJUNCTION WITH THE ARCHITECTURAL, STRUCTURAL, CIVIL, MECHANICAL, ELECTRICAL, AND PLUMBING DRAWINGS. GENERAL CONTRACTOR SHALL BE RESPOSIBLE FOR COORDINATION OF TILT-UP PANELS WITH OTHER TRADES.

TILT-UP PANEL DESIGN NOTES:

1. TILT-UP PANELS SHALL BE REINFORCED PER TYPICAL REINFORCEMENT LISTED BELOW, U.O.N. ON ELEVATIONS
   - A. TYPICAL REINFORCING FOR 11 1/4" INSULATED TILT-UP PANELS SHALL BE AS FOLLOWS:
     - a. #5 VERTICAL BARS @ 12" o.c. EACH FACE
     - b. #4 HORIZONTAL BARS @ 12" o.c. EACH FACE
   - B. TYPICAL REINFORCING FOR 10" SOLID TILT-UP PANELS SHALL BE AS FOLLOWS:
     - a. #5 VERTICAL BARS @ 10" o.c. CENTERED
     - b. #5 HORIZONTAL BARS @ 12" o.c CENTERED
       - HORIZONTAL BARS TO BE CONTINUOUS HOOK BARS AROUND CORNER
   - C. TYPICAL REINFORCING FOR 7 1/4" SOLID TILT-UP PANELS SHALL BE AS FOLLOWS:
     - a. #5 VERTICAL BARS @ 16" o.c. EACH FACE
     - b. #4 HORIZONTAL BARS @ 16" o.c. EACH FACE
2. TILT-UP PANEL CONCRETE SHALL HAVE NORMAL WEIGHT AGGREGATES WITH A NOMINAL MAXIMUM AGGREGATE SIZE OF 3/4" AND A MAXIMUM WATER/CEMENT RATIO OF 0.50.
3. MIN. CONCRETE COVER FOR TILT-UP PANEL REINFORCEMENT SHALL BE 3/4", U.O.N.
4. SEE S-001 FOR ADDITIONAL TILT-UP CONCRETE NOTES
5. PROVIDE #4 x 4'-0" DIAGONAL BARS AT ALL RE-ENTRANT CORNER LOCATIONS
6. WHERE CALLED FOR, CLOSED TIES MAY BE MADE FROM A SINGLE, CLOSED LOOP REINFORCING BAR OR FROM INDIVIDUAL STIRRUPS AND CROSS TIES
7. SEE S-600 FOR BAR PLACEMENT DIAGRAMS
8. INSULATED TILT-UP PANELS SHALL BE INSULATED USING THERMOMASS SYSTEM SC INSULATION SYSTEM w/ THERMOMASS CC SERIES FIBER-COMPOSITE CONNECTORS. CC SERIES CONNECTORS SHALL BE PLACED AT 16" o.c. IN EACH DIRECTION, U.O.N. THERMOMASS X SERIES FIBER-COMPOSITE CONNECTORS ONLY REQUIRED WHERE SHOWN ON DRAWINGS
9. MILL TEST REPORTS FOR REINFORCEMENT AND DOCUMENTATION OF CONCRETE MIXTURE CHARACTERISTICS SHALL BE SUBMITTED FOR REVIEW
10. THE FOLLOWING ASTM STANDARDS MUST BE CONFORMED TO AS APPLICABLE:

A.	PORTLAND CEMENT, TYPE I OR III:	ASTM C150
B.	REINFORCING STEEL, GRADE 60:	ASTM 615
C.	NORMAL WEIGHT AGGREGATES:	ASTM C33
D.	FLY ASH:	ASTM C618
E.	MIXING WATER:	ASTM C1602
F.	ADMIXTURES:	
a.	WATER REDUCTION:	ASTM C494
b.	SETTING TIME MODIF.:	ASTM C494
c.	AIR ENTRAINMENT:	ASTM C260
G.	CONCRETE BATCH/MIX/DELIV.:	ASTM C94 or C685

KEYPLAN

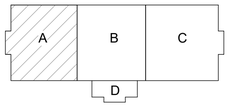

CITADEL CONTRACTORS INC.
3405 APEX PEAKWAY
APEX, N.C. 27502
TEL. 1-919-362-5122
FAX 1-919-362-6910

This drawing and the design shown are the property of Citadel Contractors, Inc. The reproduction, copying or other use of this drawings without their written consent is prohibited and any infringement will be subject to legal action.

N

APPR | DATE | DESCRIPTION | SYM

NAVFAC

SEAL

IRQ Jordan COMPANY A JOINT VENTURE

Michael Baker INTERNATIONAL
100 AIRSIDE DRIVE
MOON TOWNSHIP, PA 15108 A/E INFO

APPROVED

FOR COMMANDER NAVFAC

ACTIVITY
MARINE CORPS BASE CAMP LEJEUNE

SATISFACTORY TO DATE

DES CEJ | DRW CEJ | CHK CEJ

PM

BRANCH MANAGER

CHIEF ENG/ARCH

FIRE PROTECTION

DEPARTMENT OF THE NAVY
NAVAL FACILITIES ENGINEERING COMMAND ~ MID-ATLANTIC
ROICC FLORENCE CAMP LEJEUNE
MCB CAMP LEJEUNE

JACKSONVILLE, NC

P1338F II MEF SIMULATION/TRAINING CENTER REPLACEMENT

TILT-UP PANEL PLAN - AREA A

SCALE: AS NOTED

EPROJECT NO.: 1590892

CONSTR. CONTR. NO.
N40085-20-C-0059

NAVFAC DRAWING NO.

SHEET OF

S-601

DP2 SUBMISSION – P1338 BUILDING - PRE-FINAL SUBMISSION

PLOTTED: 6/8/2021 9:44:24 AM

FILE NAME: BIM 360://HF PACKAGE 3/P1338F MEF SIM CTR-1590892-TILt-Up.rvt

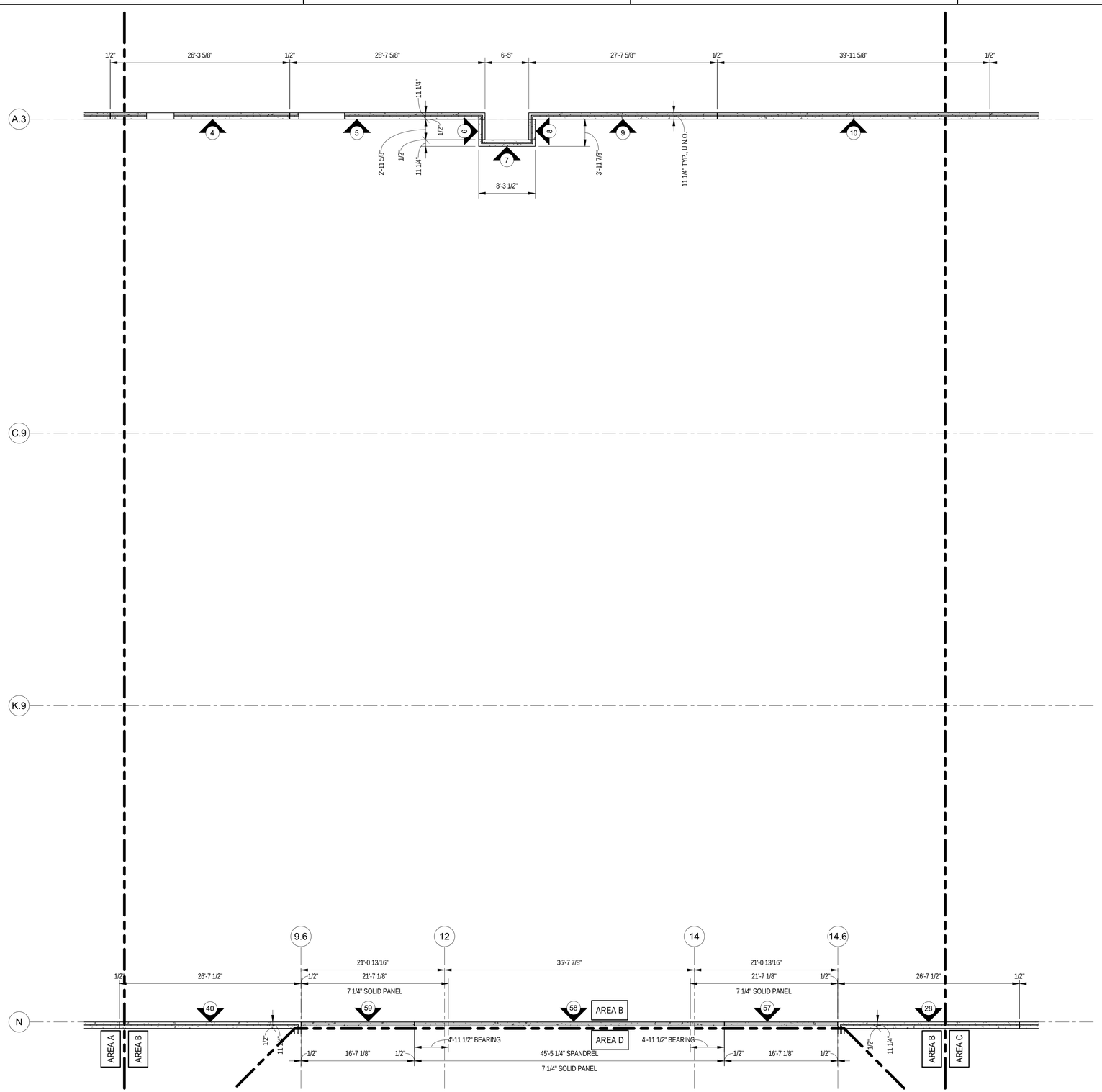

1 TILT-UP PANEL PLAN - AREA B
1/8" = 1'-0"

GENERAL NOTES:

1. FOR THE STRUCTURAL NOTES AND ABBREVIATIONS SEE SHEETS S-001, S-002 AND S-003
2. FOR DIMENSIONS NOT SHOWN SEE THE ARCHITECTURAL DRAWINGS
3. THE TILT-UP PANEL DRAWINGS MUST BE USED IN CONJUNCTION WITH THE ARCHITECTURAL, STRUCTURAL, CIVIL, MECHANICAL, ELECTRICAL, AND PLUMBING DRAWINGS. GENERAL CONTRACTOR SHALL BE RESPOSIBLE FOR COORDINATION OF TILT-UP PANELS WITH OTHER TRADES.

TILT-UP PANEL DESIGN NOTES:

1. TILT-UP PANELS SHALL BE REINFORCED PER TYPICAL REINFORCEMENT LISTED BELOW, U.O.N. ON ELEVATIONS
   - A. TYPICAL REINFORCING FOR 11 1/4" INSULATED TILT-UP PANELS SHALL BE AS FOLLOWS:
     - a. #5 VERTICAL BARS @ 12" o.c. EACH FACE
     - b. #4 HORIZONTAL BARS @ 12" o.c. EACH FACE
   - B. TYPICAL REINFORCING FOR 10" SOLID TILT-UP PANELS SHALL BE AS FOLLOWS:
     - a. #5 VERTICAL BARS @ 10" o.c. CENTERED
     - b. #5 HORIZONTAL BARS @ 12" o.c CENTERED
       - HORIZONTAL BARS TO BE CONTINUOUS HOOK BARS AROUND CORNER
   - C. TYPICAL REINFORCING FOR 7 1/4" SOLID TILT-UP PANELS SHALL BE AS FOLLOWS:
     - a. #5 VERTICAL BARS @ 16" o.c. EACH FACE
     - b. #4 HORIZONTAL BARS @ 16" o.c. EACH FACE
2. TILT-UP PANEL CONCRETE SHALL HAVE NORMAL WEIGHT AGGREGATES WITH A NOMINAL MAXIMUM AGGREGATE SIZE OF 3/4" AND A MAXIMUM WATER/CEMENT RATIO OF 0.50.
3. MIN. CONCRETE COVER FOR TILT-UP PANEL REINFORCEMENT SHALL BE 3/4", U.O.N.
4. SEE S-001 FOR ADDITIONAL TILT-UP CONCRETE NOTES
5. PROVIDE #4 x 4'-0" DIAGONAL BARS AT ALL RE-ENTRANT CORNER LOCATIONS
6. WHERE CALLED FOR, CLOSED TIES MAY BE MADE FROM A SINGLE, CLOSED LOOP REINFORCING BAR OR FROM INDIVIDUAL STIRRUPS AND CROSS TIES
7. SEE S-600 FOR BAR PLACEMENT DIAGRAMS
8. INSULATED TILT-UP PANELS SHALL BE INSULATED USING THERMOMASS SYSTEM SC INSULATION SYSTEM w/ THERMOMASS CC SERIES FIBER-COMPOSITE CONNECTORS. CC SERIES CONNECTORS SHALL BE PLACED AT 16" o.c. IN EACH DIRECTION, U.O.N. THERMOMASS X SERIES FIBER-COMPOSITE CONNECTORS ONLY REQUIRED WHERE SHOWN ON DRAWINGS
9. MILL TEST REPORTS FOR REINFORCEMENT AND DOCUMENTATION OF CONCRETE MIXTURE CHARACTERISTICS SHALL BE SUBMITTED FOR REVIEW
10. THE FOLLOWING ASTM STANDARDS MUST BE CONFORMED TO AS APPLICABLE:
    - A. PORTLAND CEMENT, TYPE I OR III: ASTM C150
    - B. REINFORCING STEEL, GRADE 60: ASTM 615
    - C. NORMAL WEIGHT AGGREGATES: ASTM C33
    - D. FLY ASH: ASTM C618
    - E. MIXING WATER: ASTM C1602
    - F. ADMIXTURES:
      - a. WATER REDUCTION: ASTM C494
      - b. SETTING TIME MODIF.: ASTM C494
      - c. AIR ENTRAINMENT: ASTM C260
    - G. CONCRETE BATCH/MIX/DELIV.: ASTM C94 or C685

KEYPLAN

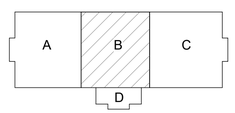

CITADEL CONTRACTORS INC.
3405 APEX PEAKWAY
APEX, N.C. 27502
TEL 1-919-362-5122
FAX 1-919-362-6910

This drawing and the design shown are the property of Citadel Contractors, Inc. The reproduction, copying or other use of this drawings without their written consent is prohibited and any infringement will be subject to legal action.

N

APPR	DATE	DESCRIPTION	SYM

NAVFAC

SEAL

W.M. Jordan COMPANY — A JOBY VENTURE

Michael Baker INTERNATIONAL
100 AIRSIDE DRIVE
MOON TOWNSHIP, PA 15108 A/E INFO

APPROVED

FOR COMMANDER NAVFAC

ACTIVITY
MARINE CORPS BASE CAMP LEJEUNE

SATISFACTORY TO DATE

DES CEJ	DRW CEJ	CHK CEJ

PM

BRANCH MANAGER

CHIEF ENG/ARCH

FIRE PROTECTION

DEPARTMENT OF THE NAVY
NAVAL FACILITIES ENGINEERING COMMAND
ROICC FLORENCE CAMP LEJEUNE
MCB CAMP LEJEUNE

NAVAL FACILITIES ENGINEERING COMMAND ~ MID-ATLANTIC
JACKSONVILLE, NC

JACKSONVILLE, NC
P1338F II MEF SIMULATION/TRAINING CENTER
REPLACEMENT
TILT-UP PANEL PLAN - AREA B

SCALE: AS NOTED
EPROJECT NO.: 1590892
CONSTR. CONTR. NO.
N40085-20-C-0059
NAVFAC DRAWING NO.
SHEET OF

S-602

DP2 SUBMISSION – P1338 BUILDING - PRE-FINAL SUBMISSION

PLOTTED: 6/8/2021 9:44:26 AM

FILE NAME: BIM 360:/IHF PACKAGE 3/P1338F MEF SIM CTR-1590892-TiltUp.rvt

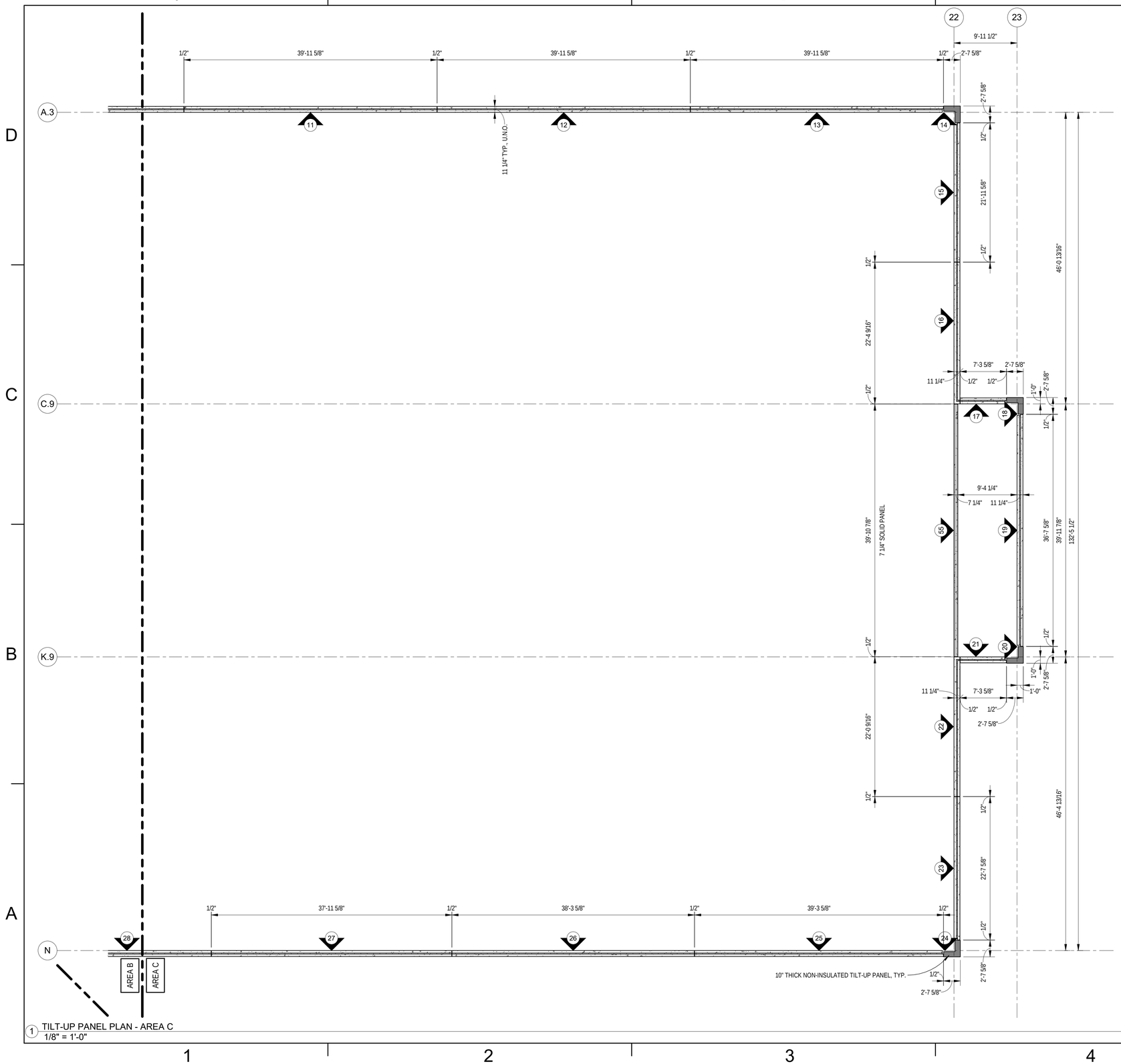

1 TILT-UP PANEL PLAN - AREA C
1/8" = 1'-0"

GENERAL NOTES:

1. FOR THE STRUCTURAL NOTES AND ABBREVIATIONS SEE SHEETS S-001, S-002 AND S-003
2. FOR DIMENSIONS NOT SHOWN SEE THE ARCHITECTURAL DRAWINGS
3. THE TILT-UP PANEL DRAWINGS MUST BE USED IN CONJUNCTION WITH THE ARCHITECTURAL, STRUCTURAL, CIVIL, MECHANICAL, ELECTRICAL, AND PLUMBING DRAWINGS. GENERAL CONTRACTOR SHALL BE RESPOSIBLE FOR COORDINATION OF TILT-UP PANELS WITH OTHER TRADES.

TILT-UP PANEL DESIGN NOTES:

1. TILT-UP PANELS SHALL BE REINFORCED PER TYPICAL REINFORCEMENT LISTED BELOW, U.O.N. ON ELEVATIONS
   - A. TYPICAL REINFORCING FOR 11 1/4" INSULATED TILT-UP PANELS SHALL BE AS FOLLOWS:
     - a. #5 VERTICAL BARS @ 12" o.c. EACH FACE
     - b. #4 HORIZONTAL BARS @ 12" o.c. EACH FACE
   - B. TYPICAL REINFORCING FOR 10" SOLID TILT-UP PANELS SHALL BE AS FOLLOWS:
     - a. #5 VERTICAL BARS @ 10" o.c. CENTERED
     - b. #5 HORIZONTAL BARS @ 12" o.c CENTERED
       - HORIZONTAL BARS TO BE CONTINUOUS HOOK BARS AROUND CORNER
   - C. TYPICAL REINFORCING FOR 7 1/4" SOLID TILT-UP PANELS SHALL BE AS FOLLOWS:
     - a. #5 VERTICAL BARS @ 16" o.c. EACH FACE
     - b. #4 HORIZONTAL BARS @ 16" o.c. EACH FACE
2. TILT-UP PANEL CONCRETE SHALL HAVE NORMAL WEIGHT AGGREGATES WITH A NOMINAL MAXIMUM AGGREGATE SIZE OF 3/4" AND A MAXIMUM WATER/CEMENT RATIO OF 0.50.
3. MIN. CONCRETE COVER FOR TILT-UP PANEL REINFORCEMENT SHALL BE 3/4", U.O.N.
4. SEE S-001 FOR ADDITIONAL TILT-UP CONCRETE NOTES
5. PROVIDE #4 x 4'-0" DIAGONAL BARS AT ALL RE-ENTRANT CORNER LOCATIONS
6. WHERE CALLED FOR, CLOSED TIES MAY BE MADE FROM A SINGLE, CLOSED LOOP REINFORCING BAR OR FROM INDIVIDUAL STIRRUPS AND CROSS TIES
7. SEE S-600 FOR BAR PLACEMENT DIAGRAMS
8. INSULATED TILT-UP PANELS SHALL BE INSULATED USING THERMOMASS SYSTEM SC INSULATION SYSTEM w/ THERMOMASS CC SERIES FIBER-COMPOSITE CONNECTORS. CC SERIES CONNECTORS SHALL BE PLACED AT 16" o.c. IN EACH DIRECTION, U.O.N. THERMOMASS X SERIES FIBER-COMPOSITE CONNECTORS ONLY REQUIRED WHERE SHOWN ON DRAWINGS
9. MILL TEST REPORTS FOR REINFORCEMENT AND DOCUMENTATION OF CONCRETE MIXTURE CHARACTERISTICS SHALL BE SUBMITTED FOR REVIEW
10. THE FOLLOWING ASTM STANDARDS MUST BE CONFORMED TO AS APPLICABLE:

A.	PORTLAND CEMENT, TYPE I OR III:	ASTM C150
B.	REINFORCING STEEL, GRADE 60:	ASTM 615
C.	NORMAL WEIGHT AGGREGATES:	ASTM C33
D.	FLY ASH:	ASTM C618
E.	MIXING WATER:	ASTM C1602
F.	ADMIXTURES:	
a.	WATER REDUCTION:	ASTM C494
b.	SETTING TIME MODIF.:	ASTM C494
c.	AIR ENTRAINMENT:	ASTM C260
G.	CONCRETE BATCH/MIX/DELIV.:	ASTM C94 or C685

KEYPLAN

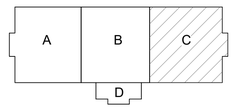

CITADEL CONTRACTORS INC
3405 APEX PEAKWAY
APEX, N.C. 27502
TEL. 1-919-362-5122
FAX 1-919-362-6910

This drawing and the design shown are the property of Citadel Contractors, Inc. The reproduction, copying or other use of this drawings without their written consent is prohibited and any infringement will be subject to legal action.

N

NO.	DESCRIPTION	DATE	APPR

SEAL

RQ W.M. Jordan COMPANY — A JOINT VENTURE —

Michael Baker INTERNATIONAL
100 AIRSIDE DRIVE
MOON TOWNSHIP, PA 15108 A/E INFO

APPROVED

FOR COMMANDER NAVFAC

ACTIVITY
MARINE CORPS BASE CAMP LEJEUNE

SATISFACTORY TO DATE

DES	DRW	CHK
CEJ	CEJ	CEJ

PM
BRANCH MANAGER
CHIEF ENG/ARCH
FIRE PROTECTION

DEPARTMENT OF THE NAVY
NAVAL FACILITIES ENGINEERING COMMAND
ROICC FLORENCE CAMP LEJEUNE
MCB CAMP LEJEUNE

NAVAL FACILITIES ENGINEERING COMMAND – MID-ATLANTIC
JACKSONVILLE, NC

JACKSONVILLE, NC
P1338F II MEF SIMULATION/TRAINING CENTER REPLACEMENT
TILT-UP PANEL PLAN - AREA C

SCALE: AS NOTED
EPROJECT NO.: 1590892
CONSTR. CONTR. NO.
N40085-20-C-0059
NAVFAC DRAWING NO.
SHEET OF

S-603

DP2 SUBMISSION – P1338 BUILDING - PRE-FINAL SUBMISSION

PLOTTED: 6/8/2021 9:44:27 AM
FILE NAME: BIM 360://HF PACKAGE 3/P1338F MEF SIM CTR-1590892-Tilt-Up.rvt

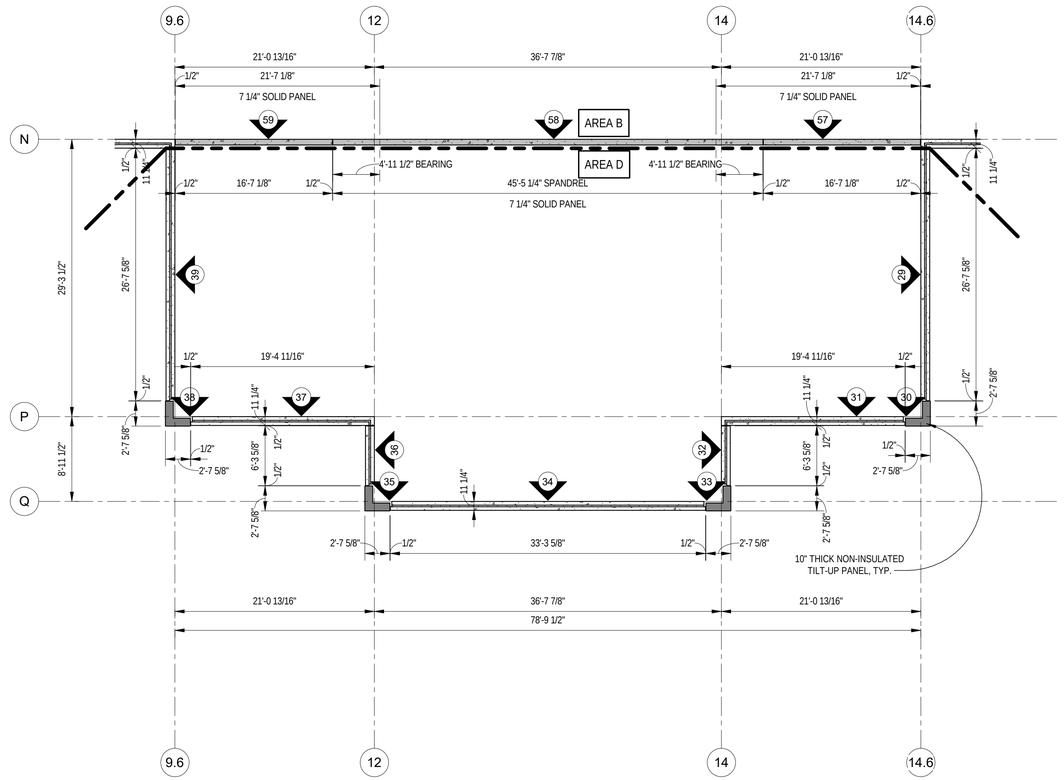

1 TILT-UP PANEL PLAN - AREA D
1/8" = 1'-0"

GENERAL NOTES:

1. FOR THE STRUCTURAL NOTES AND ABBREVIATIONS SEE SHEETS S-001, S-002 AND S-003
2. FOR DIMENSIONS NOT SHOWN SEE THE ARCHITECTURAL DRAWINGS
3. THE TILT-UP PANEL DRAWINGS MUST BE USED IN CONJUNCTION WITH THE ARCHITECTURAL, STRUCTURAL, CIVIL, MECHANICAL, ELECTRICAL, AND PLUMBING DRAWINGS. GENERAL CONTRACTOR SHALL BE RESPOSIBLE FOR COORDINATION OF TILT-UP PANELS WITH OTHER TRADES.

TILT-UP PANEL DESIGN NOTES:

1. TILT-UP PANELS SHALL BE REINFORCED PER TYPICAL REINFORCEMENT LISTED BELOW, U.O.N. ON ELEVATIONS
   - A. TYPICAL REINFORCING FOR 11 1/4" INSULATED TILT-UP PANELS SHALL BE AS FOLLOWS:
     - a. #5 VERTICAL BARS @ 12" o.c. EACH FACE
     - b. #4 HORIZONTAL BARS @ 12" o.c. EACH FACE
   - B. TYPICAL REINFORCING FOR 10" SOLID TILT-UP PANELS SHALL BE AS FOLLOWS:
     - a. #5 VERTICAL BARS @ 10" o.c. CENTERED
     - b. #5 HORIZONTAL BARS @ 12" o.c CENTERED
       - HORIZONTAL BARS TO BE CONTINUOUS HOOK BARS AROUND CORNER
   - C. TYPICAL REINFORCING FOR 7 1/4" SOLID TILT-UP PANELS SHALL BE AS FOLLOWS:
     - a. #5 VERTICAL BARS @ 16" o.c. EACH FACE
     - b. #4 HORIZONTAL BARS @ 16" o.c. EACH FACE
2. TILT-UP PANEL CONCRETE SHALL HAVE NORMAL WEIGHT AGGREGATES WITH A NOMINAL MAXIMUM AGGREGATE SIZE OF 3/4" AND A MAXIMUM WATER/CEMENT RATIO OF 0.50.
3. MIN. CONCRETE COVER FOR TILT-UP PANEL REINFORCEMENT SHALL BE 3/4", U.O.N.
4. SEE S-001 FOR ADDITIONAL TILT-UP CONCRETE NOTES
5. PROVIDE #4 x 4'-0" DIAGONAL BARS AT ALL RE-ENTRANT CORNER LOCATIONS
6. WHERE CALLED FOR, CLOSED TIES MAY BE MADE FROM A SINGLE, CLOSED LOOP REINFORCING BAR OR FROM INDIVIDUAL STIRRUPS AND CROSS TIES
7. SEE S-600 FOR BAR PLACEMENT DIAGRAMS
8. INSULATED TILT-UP PANELS SHALL BE INSULATED USING THERMOMASS SYSTEM SC INSULATION SYSTEM w/ THERMOMASS CC SERIES FIBER-COMPOSITE CONNECTORS. CC SERIES CONNECTORS SHALL BE PLACED AT 16" o.c. IN EACH DIRECTION, U.O.N. THERMOMASS X SERIES FIBER-COMPOSITE CONNECTORS ONLY REQUIRED WHERE SHOWN ON DRAWINGS
9. MILL TEST REPORTS FOR REINFORCEMENT AND DOCUMENTATION OF CONCRETE MIXTURE CHARACTERISTICS SHALL BE SUBMITTED FOR REVIEW
10. THE FOLLOWING ASTM STANDARDS MUST BE CONFORMED TO AS APPLICABLE:

A.	PORTLAND CEMENT, TYPE I OR III:	ASTM C150
B.	REINFORCING STEEL, GRADE 60:	ASTM 615
C.	NORMAL WEIGHT AGGREGATES:	ASTM C33
D.	FLY ASH:	ASTM C618
E.	MIXING WATER:	ASTM C1602
F.	ADMIXTURES:	
a.	WATER REDUCTION:	ASTM C494
b.	SETTING TIME MODIF.:	ASTM C494
c.	AIR ENTRAINMENT:	ASTM C260
G.	CONCRETE BATCH/MIX/DELIV.:	ASTM C94 or C685

KEYPLAN

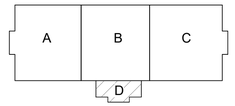

This drawing and the design shown are the property of Citadel Contractors, Inc. The reproduction, copying or other use of this drawings without their written consent is prohibited and any infringement will be subject to legal action.

CITADEL CONTRACTORS INC
3405 APEX PEAKWAY
APEX, N.C. 27502
TEL 1-919-362-5122
FAX 1-919-362-6910

APPR	
DATE	
DESCRIPTION	
SYM	

NAVFAC

SEAL

RQ WM Jordan COMPANY – A JOINT VENTURE –

Michael Baker INTERNATIONAL
100 AIRSIDE DRIVE
MOON TOWNSHIP, PA 15108 A/E INFO

APPROVED

FOR COMMANDER NAVFAC

ACTIVITY
MARINE CORPS BASE CAMP LEJEUNE

SATISFACTORY TO DATE

DES	DRW	CHK
CEJ	CEJ	CEJ

PM
BRANCH MANAGER
CHIEF ENG/ARCH
FIRE PROTECTION

DEPARTMENT OF THE NAVY
NAVAL FACILITIES ENGINEERING COMMAND
ROICC FLORENCE CAMP LEJEUNE
MCB CAMP LEJEUNE

NAVAL FACILITIES ENGINEERING COMMAND – MID-ATLANTIC
JACKSONVILLE, NC

JACKSONVILLE, NC
P1338F II MEF SIMULATION/TRAINING CENTER REPLACEMENT
TILT-UP PANEL PLAN - AREA D

SCALE: AS NOTED
EPROJECT NO.: 1590892
CONSTR. CONTR. NO.
N40085-20-C-0059
NAVFAC DRAWING NO.
SHEET OF

S-604

DP2 SUBMISSION – P1338 BUILDING - PRE-FINAL SUBMISSION

PLOTTED: 6/8/2021 9:44:28 AM
FILE NAME: BIM 360://HF PACKAGE 3/P1338F MEF SIM CTR-1590892-TiltUp.rvt

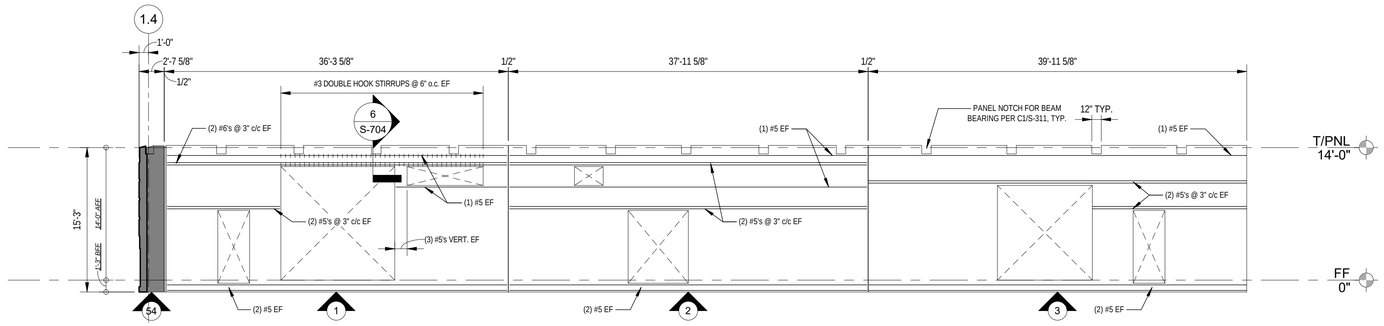

1 GRIDLINE A.3 PANELS - AREA A
1/8" = 1'-0"

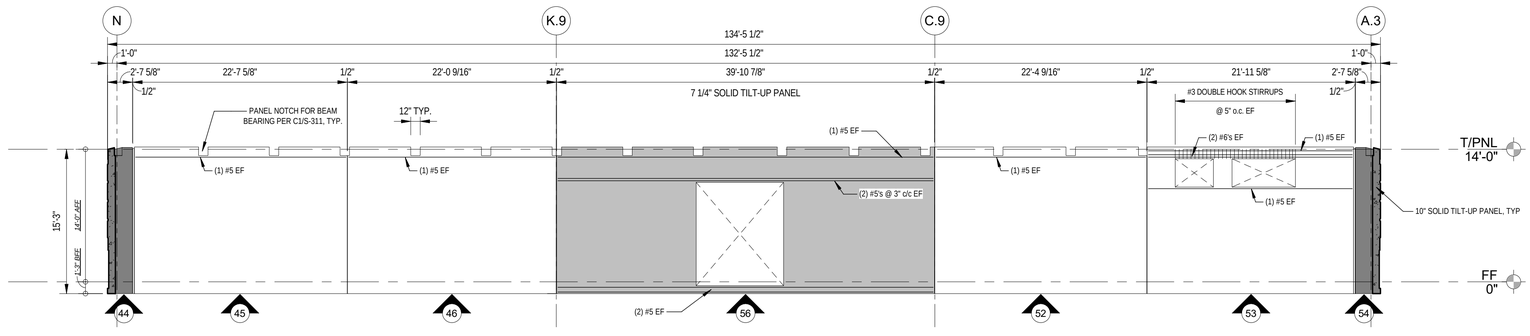

2 GRIDLINE 1.4 PANELS
1/8" = 1'-0"

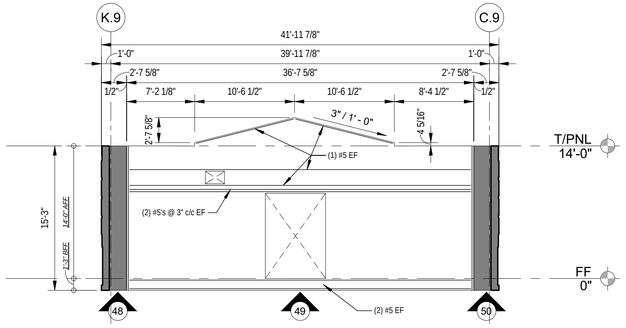

NOTE: PROVIDE FLAT PANEL TOPS THIS ELEVATION

3 GRIDLINE 1.2 PANELS
1/8" = 1'-0"

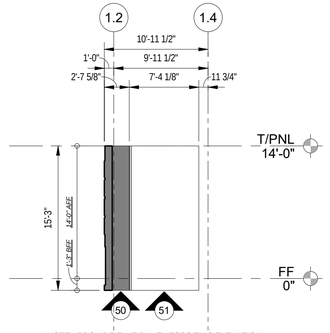

NOTE: PROVIDE FLAT PANEL TOPS THIS ELEVATION

4 GRIDLINE C.9 PANELS - AREA A
1/8" = 1'-0"

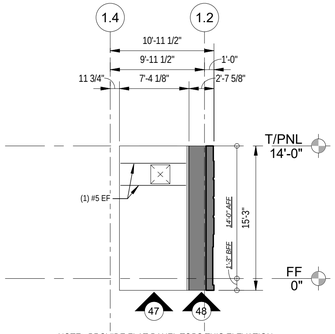

NOTE: PROVIDE FLAT PANEL TOPS THIS ELEVATION

5 GRIDLINE K.9 PANELS - AREA A
1/8" = 1'-0"

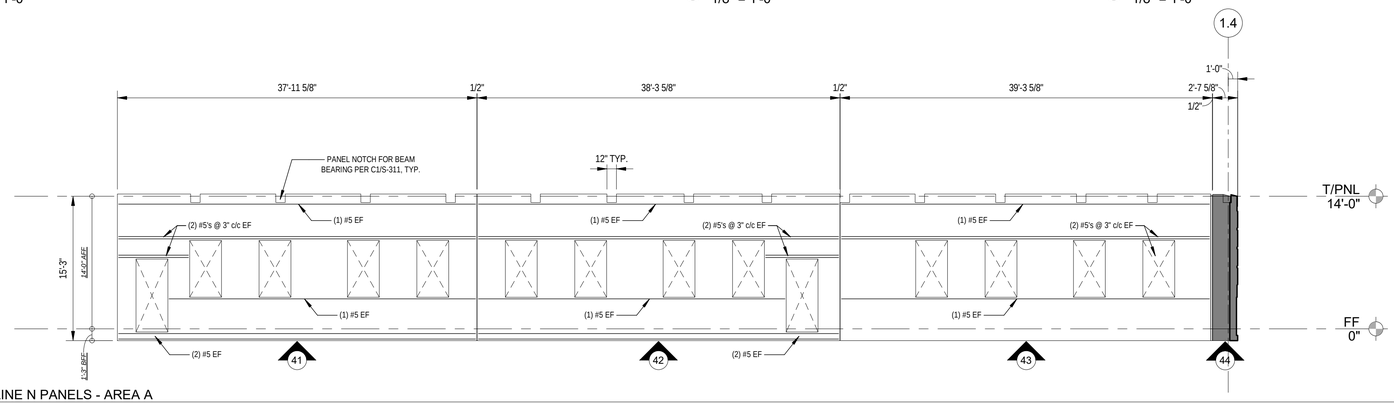

6 GRIDLINE N PANELS - AREA A
1/8" = 1'-0"

GENERAL NOTES:

1. FOR THE STRUCTURAL NOTES AND ABBREVIATIONS SEE SHEETS S-001, S-002 AND S-003
2. FOR DIMENSIONS NOT SHOWN SEE THE ARCHITECTURAL DRAWINGS
3. THE TILT-UP PANEL DRAWINGS MUST BE USED IN CONJUNCTION WITH THE ARCHITECTURAL, STRUCTURAL, C/VIL, MECHANICAL, ELECTRICAL, AND PLUMBING DRAWINGS. GENERAL CONTRACTOR SHALL BE RESPOSIBLE FOR COORDINATION OF TILT-UP PANELS WITH OTHER TRADES.

TILT-UP PANEL DESIGN NOTES:

1. TILT-UP PANELS SHALL BE REINFORCED PER TYPICAL REINFORCEMENT LISTED BELOW, U.O.N. ON ELEVATIONS
   - A. TYPICAL REINFORCING FOR 11 1/4" INSULATED TILT-UP PANELS SHALL BE AS FOLLOWS:
     - a. #5 VERTICAL BARS @ 12" o.c. EACH FACE
     - b. #4 HORIZONTAL BARS @ 12" o.c. EACH FACE
   - B. TYPICAL REINFORCING FOR 10" SOLID TILT-UP PANELS SHALL BE AS FOLLOWS:
     - a. #5 VERTICAL BARS @ 10" o.c. CENTERED
     - b. #5 HORIZONTAL BARS @ 12" o.c CENTERED
       - HORIZONTAL BARS TO BE CONTINUOUS HOOK BARS AROUND CORNER
   - C. TYPICAL REINFORCING FOR 7 1/4" SOLID TILT-UP PANELS SHALL BE AS FOLLOWS:
     - a. #5 VERTICAL BARS @ 16" o.c. EACH FACE
     - b. #4 HORIZONTAL BARS @ 16" o.c. EACH FACE
2. TILT-UP PANEL CONCRETE SHALL HAVE NORMAL WEIGHT AGGREGATES WITH A NOMINAL MAXIMUM AGGREGATE SIZE OF 3/4" AND A MAXIMUM WATER/CEMENT RATIO OF 0.50.
3. MIN. CONCRETE COVER FOR TILT-UP PANEL REINFORCEMENT SHALL BE 3/4", U.O.N.
4. SEE S-001 FOR ADDITIONAL TILT-UP CONCRETE NOTES
5. PROVIDE #4 x 4'-0" DIAGONAL BARS AT ALL RE-ENTRANT CORNER LOCATIONS
6. WHERE CALLED FOR, CLOSED TIES MAY BE MADE FROM A SINGLE, CLOSED LOOP REINFORCING BAR OR FROM INDIVIDUAL STIRRUPS AND CROSS TIES
7. SEE S-600 FOR BAR PLACEMENT DIAGRAMS
8. INSULATED TILT-UP PANELS SHALL BE INSULATED USING THERMOMASS SYSTEM SC INSULATION SYSTEM w/ THERMOMASS CC SERIES FIBER-COMPOSITE CONNECTORS. CC SERIES CONNECTORS SHALL BE PLACED AT 16" o.c. IN EACH DIRECTION, U.O.N. THERMOMASS X SERIES FIBER-COMPOSITE CONNECTORS ONLY REQUIRED WHERE SHOWN ON DRAWINGS
9. MILL TEST REPORTS FOR REINFORCEMENT AND DOCUMENTATION OF CONCRETE MIXTURE CHARACTERISTICS SHALL BE SUBMITTED FOR REVIEW
10. THE FOLLOWING ASTM STANDARDS MUST BE CONFORMED TO AS APPLICABLE:

A.	PORTLAND CEMENT, TYPE I OR III:	ASTM C150
B.	REINFORCING STEEL, GRADE 60:	ASTM 615
C.	NORMAL WEIGHT AGGREGATES:	ASTM C33
D.	FLY ASH:	ASTM C618
E.	MIXING WATER:	ASTM C1602
F.	ADMIXTURES:	
a.	WATER REDUCTION:	ASTM C494
b.	SETTING TIME MODIF.:	ASTM C494
c.	AIR ENTRAINMENT:	ASTM C260
G.	CONCRETE BATCH/MIX/DELIV.:	ASTM C94 or C685

KEYPLAN

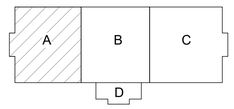

CITADEL CONTRACTORS INC
3405 APEX PEAKWAY
APEX, N.C. 27502
TEL. 1-919-362-5122
FAX 1-919-362-6910

This drawing and the design shown are the property of Citadel Contractors, Inc. The reproduction, copying or other use of this drawings without their written consent is prohibited and any infringement will be subject to legal action.

N

NO.	DESCRIPTION	DATE	APPR

NAVFAC

SEAL

W.M. Jordan COMPANY
A JOINT VENTURE
Michael Baker INTERNATIONAL
100 AIRSIDE DRIVE
MOON TOWNSHIP, PA 15108
A/E INFO

APPROVED

FOR COMMANDER NAVFAC

ACTIVITY
MARINE CORPS BASE CAMP LEJEUNE

SATISFACTORY TO DATE

DES	CEJ	DRW	CEJ	CHK	CEJ

PM

BRANCH MANAGER

CHIEF ENG/ARCH

FIRE PROTECTION

DEPARTMENT OF THE NAVY
NAVAL FACILITIES ENGINEERING COMMAND ~ MID-ATLANTIC
ROICC FLORENCE CAMP LEJEUNE
MCB CAMP LEJEUNE
NAVAL FACILITIES ENGINEERING COMMAND ~ MID-ATLANTIC
JACKSONVILLE, NC

P1338F II MEF SIMULATION/TRAINING CENTER REPLACEMENT

TILT-UP PANEL REINFORCEMENT - AREA A

SCALE: AS NOTED
EPROJECT NO.: 1590892
CONSTR. CONTR. NO.
N40085-20-C-0059
NAVFAC DRAWING NO.
SHEET OF

S-701

DP2 SUBMISSION – P1338 BUILDING - PRE-FINAL SUBMISSION

PLOTTED: 6/8/2021 9:44:31 AM

FILE NAME: BIM 360://HF PACKAGE 3/P1338F MEF SIM CTR-1590892-TiltUp.rvt

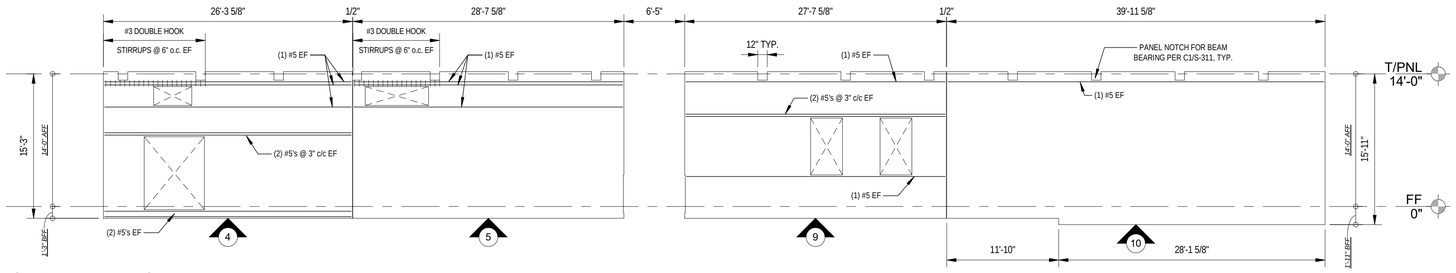

1 GRIDLINE A.3 PANELS - AREA B
1/8" = 1'-0"

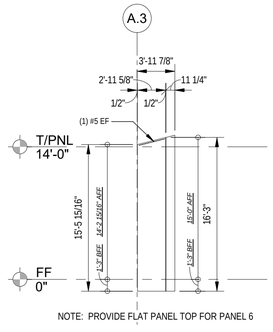

NOTE: PROVIDE FLAT PANEL TOP FOR PANEL 6

2 PANEL 6
1/8" = 1'-0"

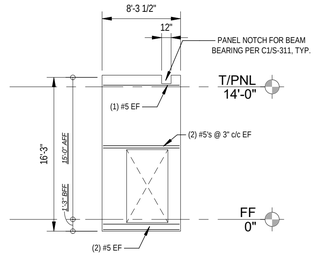

3 PANEL 7
1/8" = 1'-0"

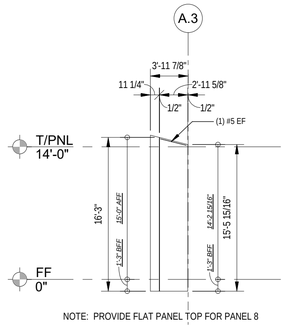

NOTE: PROVIDE FLAT PANEL TOP FOR PANEL 8

4 PANEL 8
1/8" = 1'-0"

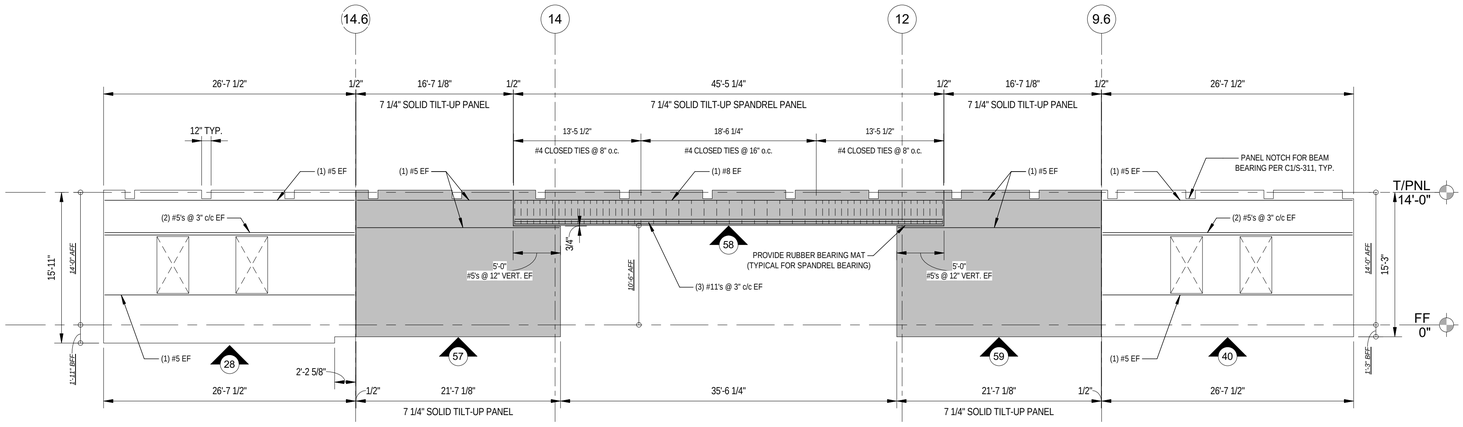

5 GRIDLINE N PANELS - AREA B
1/8" = 1'-0"

GENERAL NOTES:

1. FOR THE STRUCTURAL NOTES AND ABBREVIATIONS SEE SHEETS S-001, S-002 AND S-003
2. FOR DIMENSIONS NOT SHOWN SEE THE ARCHITECTURAL DRAWINGS
3. THE TILT-UP PANEL DRAWINGS MUST BE USED IN CONJUNCTION WITH THE ARCHITECTURAL, STRUCTURAL, C/VIL, MECHANICAL, ELECTRICAL, AND PLUMBING DRAWINGS. GENERAL CONTRACTOR SHALL BE RESPOSIBLE FOR COORDINATION OF TILT-UP PANELS WITH OTHER TRADES.

TILT-UP PANEL DESIGN NOTES:

1. TILT-UP PANELS SHALL BE REINFORCED PER TYPICAL REINFORCEMENT LISTED BELOW, U.O.N. ON ELEVATIONS
   - A. TYPICAL REINFORCING FOR 11 1/4" INSULATED TILT-UP PANELS SHALL BE AS FOLLOWS:
     - a. #5 VERTICAL BARS @ 12" o.c. EACH FACE
     - b. #4 HORIZONTAL BARS @ 12" o.c. EACH FACE
   - B. TYPICAL REINFORCING FOR 10" SOLID TILT-UP PANELS SHALL BE AS FOLLOWS:
     - a. #5 VERTICAL BARS @ 10" o.c. CENTERED
     - b. #5 HORIZONTAL BARS @ 12" o.c CENTERED
       - HORIZONTAL BARS TO BE CONTINUOUS HOOK BARS AROUND CORNER
   - C. TYPICAL REINFORCING FOR 7 1/4" SOLID TILT-UP PANELS SHALL BE AS FOLLOWS:
     - a. #5 VERTICAL BARS @ 16" o.c. EACH FACE
     - b. #4 HORIZONTAL BARS @ 16" o.c. EACH FACE
2. TILT-UP PANEL CONCRETE SHALL HAVE NORMAL WEIGHT AGGREGATES WITH A NOMINAL MAXIMUM AGGREGATE SIZE OF 3/4" AND A MAXIMUM WATER/CEMENT RATIO OF 0.50.
3. MIN. CONCRETE COVER FOR TILT-UP PANEL REINFORCEMENT SHALL BE 3/4", U.O.N.
4. SEE S-001 FOR ADDITIONAL TILT-UP CONCRETE NOTES
5. PROVIDE #4 x 4'-0" DIAGONAL BARS AT ALL RE-ENTRANT CORNER LOCATIONS
6. WHERE CALLED FOR, CLOSED TIES MAY BE MADE FROM A SINGLE, CLOSED LOOP REINFORCING BAR OR FROM INDIVIDUAL STIRRUPS AND CROSS TIES
7. SEE S-600 FOR BAR PLACEMENT DIAGRAMS
8. INSULATED TILT-UP PANELS SHALL BE INSULATED USING THERMOMASS SYSTEM SC INSULATION SYSTEM w/ THERMOMASS CC SERIES FIBER-COMPOSITE CONNECTORS. CC SERIES CONNECTORS SHALL BE PLACED AT 16" o.c. IN EACH DIRECTION, U.O.N. THERMOMASS X SERIES FIBER-COMPOSITE CONNECTORS ONLY REQUIRED WHERE SHOWN ON DRAWINGS
9. MILL TEST REPORTS FOR REINFORCEMENT AND DOCUMENTATION OF CONCRETE MIXTURE CHARACTERISTICS SHALL BE SUBMITTED FOR REVIEW
10. THE FOLLOWING ASTM STANDARDS MUST BE CONFORMED TO AS APPLICABLE:

A.	PORTLAND CEMENT, TYPE I OR III:	ASTM C150
B.	REINFORCING STEEL, GRADE 60:	ASTM 615
C.	NORMAL WEIGHT AGGREGATES:	ASTM C33
D.	FLY ASH:	ASTM C618
E.	MIXING WATER:	ASTM C1602
F.	ADMIXTURES:	
a.	WATER REDUCTION:	ASTM C494
b.	SETTING TIME MODIF.:	ASTM C494
c.	AIR ENTRAINMENT:	ASTM C260
G.	CONCRETE BATCH/MIX/DELIV.:	ASTM C94 or C685

KEYPLAN

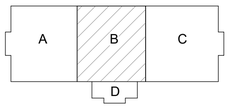

CITADEL CONTRACTORS INC
3405 APEX PEAKWAY
APEX, N.C. 27502
TEL. 1-919-362-5122
FAX 1-919-362-6910

This drawing and the design shown are the property of Citadel Contractors, Inc. The reproduction, copying or other use of this drawings without their written consent is prohibited and any infringement will be subject to legal action.

N

APPR | DATE | DESCRIPTION | SYM

NAVFAC

SEAL

RQ Wm. Jordan COMPANY – A JOBY VENTURE –

Michael Baker INTERNATIONAL
100 AIRSIDE DRIVE
MOON TOWNSHIP, PA 15108
A/E INFO

APPROVED

FOR COMMANDER NAVFAC

ACTIVITY
MARINE CORPS BASE CAMP LEJEUNE

SATISFACTORY TO DATE

DES	DRW	CHK
CEJ	CEJ	CEJ

PM
BRANCH MANAGER
CHIEF ENG/ARCH
FIRE PROTECTION

DEPARTMENT OF THE NAVY
NAVAL FACILITIES ENGINEERING COMMAND
ROICC FLORENCE CAMP LEJEUNE
MCB CAMP LEJEUNE

NAVAL FACILITIES ENGINEERING COMMAND – MID-ATLANTIC
JACKSONVILLE, NC

JACKSONVILLE, NC
P1338F II MEF SIMULATION/TRAINING CENTER
REPLACEMENT
TILT-UP PANEL REINFORCEMENT - AREA B

SCALE: AS NOTED
EPROJECT NO.: 1590892
CONSTR. CONTR. NO.
N40085-20-C-0059
NAVFAC DRAWING NO.
SHEET OF
S-702

DP2 SUBMISSION – P1338 BUILDING –PRE-FINAL SUBMISSION

PLOTTED: 6/8/2021 9:44:33 AM
FILE NAME: BIM 360://HF PACKAGE 3/P1338F MEF SIM CTR-1590892-TILtUp.rvt

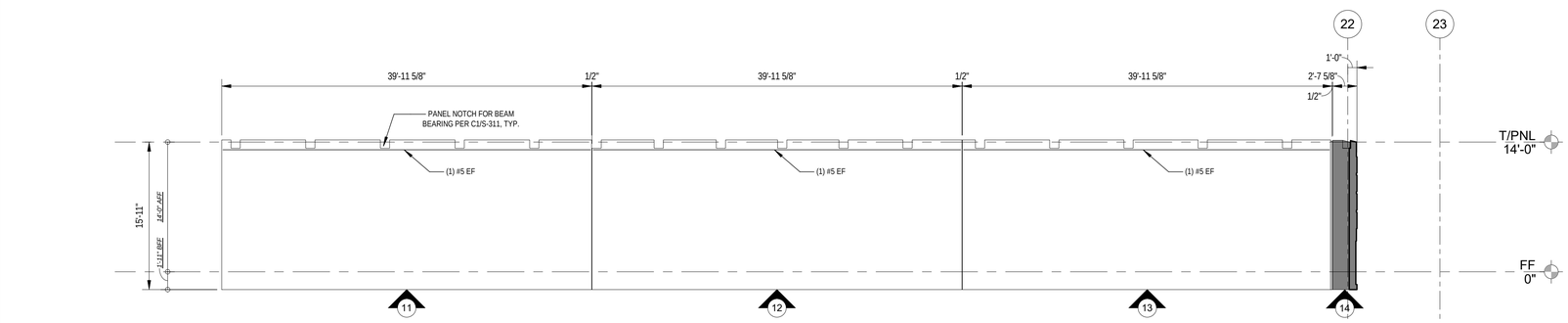

1 GRIDLINE A.3 PANELS - AREA C
1/8" = 1'-0"

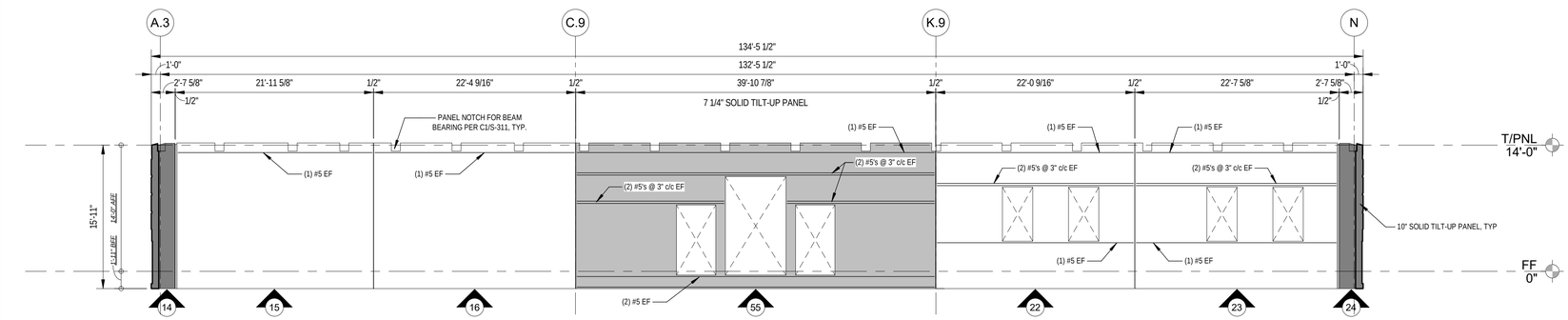

2 GRIDLINE 22 PANELS
1/8" = 1'-0"

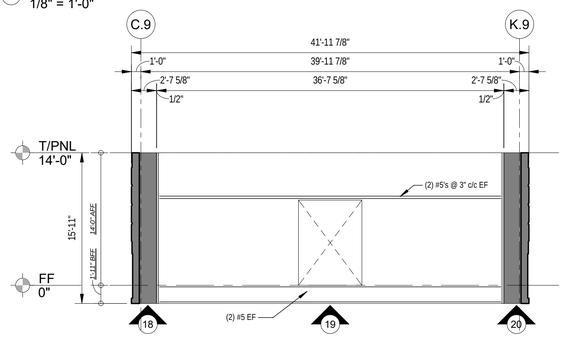

NOTE: PROVIDE FLAT PANEL TOPS THIS ELEVATION

3 GRIDLINE 23 PANELS
1/8" = 1'-0"

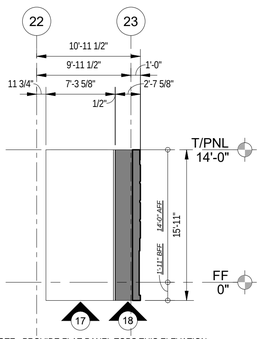

NOTE: PROVIDE FLAT PANEL TOPS THIS ELEVATION

4 GRIDLINE C.9 PANELS - AREA C
1/8" = 1'-0"

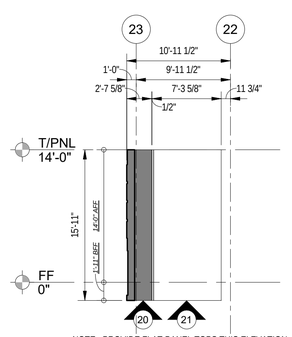

NOTE: PROVIDE FLAT PANEL TOPS THIS ELEVATION

5 GRIDLINE K.9 PANELS - AREA C
1/8" = 1'-0"

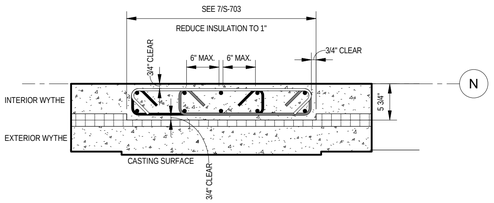

6 PANEL COLUMN AT TRUSSES
1" = 1'-0"

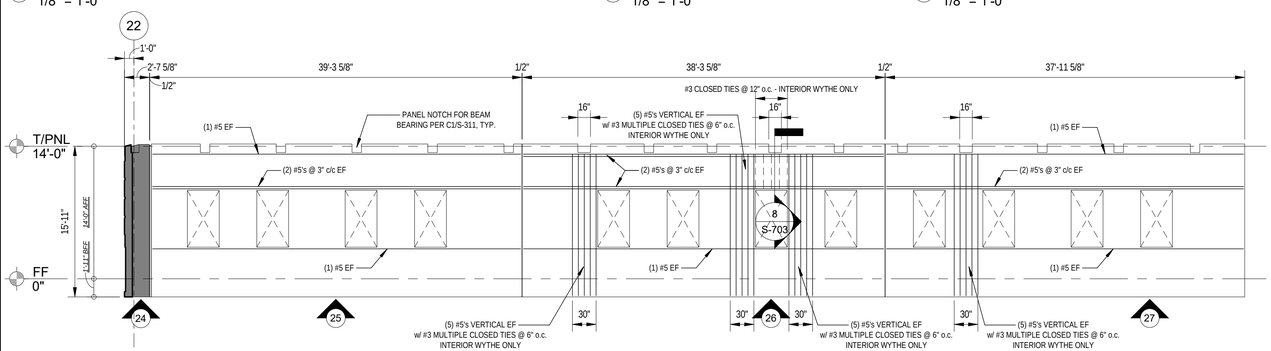

7 GRIDLINE N PANELS - AREA C
1/8" = 1'-0"

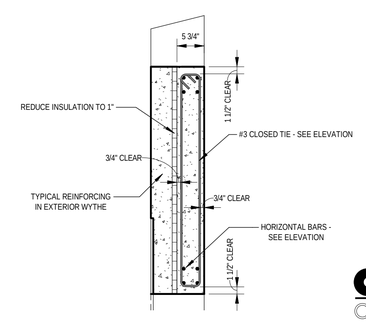

8 PANEL GIRDER OVER WINDOW AT TRUSS
3/4" = 1'-0"

GENERAL NOTES:

1. FOR THE STRUCTURAL NOTES AND ABBREVIATIONS SEE SHEETS S-001, S-002 AND S-003
2. FOR DIMENSIONS NOT SHOWN SEE THE ARCHITECTURAL DRAWINGS
3. THE TILT-UP PANEL DRAWINGS MUST BE USED IN CONJUNCTION WITH THE ARCHITECTURAL, STRUCTURAL, CIVIL, MECHANICAL, ELECTRICAL, AND PLUMBING DRAWINGS. GENERAL CONTRACTOR SHALL BE RESPOSIBLE FOR COORDINATION OF TILT-UP PANELS WITH OTHER TRADES.

TILT-UP PANEL DESIGN NOTES:

1. TILT-UP PANELS SHALL BE REINFORCED PER TYPICAL REINFORCEMENT LISTED BELOW, U.O.N. ON ELEVATIONS
   - A. TYPICAL REINFORCING FOR 11 1/4" INSULATED TILT-UP PANELS SHALL BE AS FOLLOWS:
     - a. #5 VERTICAL BARS @ 12" o.c. EACH FACE
     - b. #4 HORIZONTAL BARS @ 12" o.c. EACH FACE
   - B. TYPICAL REINFORCING FOR 10" SOLID TILT-UP PANELS SHALL BE AS FOLLOWS:
     - a. #5 VERTICAL BARS @ 10" o.c. CENTERED
     - b. #5 HORIZONTAL BARS @ 12" o.c CENTERED
       - HORIZONTAL BARS TO BE CONTINUOUS HOOK BARS AROUND CORNER
   - C. TYPICAL REINFORCING FOR 7 1/4" SOLID TILT-UP PANELS SHALL BE AS FOLLOWS:
     - a. #5 VERTICAL BARS @ 16" o.c. EACH FACE
     - b. #4 HORIZONTAL BARS @ 16" o.c. EACH FACE
2. TILT-UP PANEL CONCRETE SHALL HAVE NORMAL WEIGHT AGGREGATES WITH A NOMINAL MAXIMUM AGGREGATE SIZE OF 3/4" AND A MAXIMUM WATER/CEMENT RATIO OF 0.50.
3. MIN. CONCRETE COVER FOR TILT-UP PANEL REINFORCEMENT SHALL BE 3/4", U.O.N.
4. SEE S-001 FOR ADDITIONAL TILT-UP CONCRETE NOTES
5. PROVIDE #4 x 4'-0" DIAGONAL BARS AT ALL RE-ENTRANT CORNER LOCATIONS
6. WHERE CALLED FOR, CLOSED TIES MAY BE MADE FROM A SINGLE, CLOSED LOOP REINFORCING BAR OR FROM INDIVIDUAL STIRRUPS AND CROSS TIES
7. SEE S-600 FOR BAR PLACEMENT DIAGRAMS
8. INSULATED TILT-UP PANELS SHALL BE INSULATED USING THERMOMASS SYSTEM SC INSULATION SYSTEM w/ THERMOMASS CC SERIES FIBER-COMPOSITE CONNECTORS. CC SERIES CONNECTORS SHALL BE PLACED AT 16" o.c. IN EACH DIRECTION, U.O.N. THERMOMASS X SERIES FIBER-COMPOSITE CONNECTORS ONLY REQUIRED WHERE SHOWN ON DRAWINGS
9. MILL TEST REPORTS FOR REINFORCEMENT AND DOCUMENTATION OF CONCRETE MIXTURE CHARACTERISTICS SHALL BE SUBMITTED FOR REVIEW
10. THE FOLLOWING ASTM STANDARDS MUST BE CONFORMED TO AS APPLICABLE:

A.	PORTLAND CEMENT, TYPE I OR III:	ASTM C150
B.	REINFORCING STEEL, GRADE 60:	ASTM 615
C.	NORMAL WEIGHT AGGREGATES:	ASTM C33
D.	FLY ASH:	ASTM C618
E.	MIXING WATER:	ASTM C1602
F.	ADMIXTURES:	
a.	WATER REDUCTION:	ASTM C494
b.	SETTING TIME MODIF.:	ASTM C494
c.	AIR ENTRAINMENT:	ASTM C260
G.	CONCRETE BATCH/MIX/DELIV.:	ASTM C94 or C685

KEYPLAN

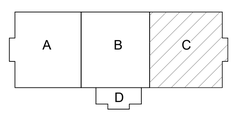

CITADEL CONTRACTORS INC
3405 APEX PEAKWAY
APEX, N.C. 27502
TEL 1-919-362-5122
FAX 1-919-362-6910

This drawing and the design shown are the property of Citadel Contractors, Inc. The reproduction, copying or other use of this drawings without their written consent is prohibited and any infringement will be subject to legal action.

N

NO.	DESCRIPTION	DATE	APPR

NAVFAC

SEAL

IRQ Wm. Jordan COMPANY
A JOINT VENTURE
Michael Baker INTERNATIONAL
100 AIRSIDE DRIVE
MOON TOWNSHIP, PA 15108
A/E INFO

APPROVED

FOR COMMANDER NAVFAC

ACTIVITY
MARINE CORPS BASE
CAMP LEJEUNE

SATISFACTORY TO DATE

DES	CEJ	DRW	CEJ	CHK	CEJ

PM

BRANCH MANAGER

CHIEF ENG/ARCH

FIRE PROTECTION

DEPARTMENT OF THE NAVY
NAVAL FACILITIES ENGINEERING COMMAND – MID-ATLANTIC
ROICC FLORENCE CAMP LEJEUNE
MCB CAMP LEJEUNE

NAVAL FACILITIES ENGINEERING COMMAND
JACKSONVILLE, NC

JACKSONVILLE, NC

P1338F II MEF SIMULATION/TRAINING CENTER
REPLACEMENT
TILT-UP PANEL REINFORCEMENT - AREA C

SCALE: AS NOTED
EPROJECT NO.: 1590892
CONSTR. CONTR. NO.
N40085-20-C-0059
NAVFAC DRAWING NO.
SHEET OF
S-703

DP2 SUBMISSION – P1338 BUILDING – PRE-FINAL SUBMISSION

PLOTTED: 6/8/2021 9:44:36 AM

FILE NAME: BIM 360:/IHF PACKAGE 3/P1338F MEF SIM CTR-1590892-TiltUp.rvt

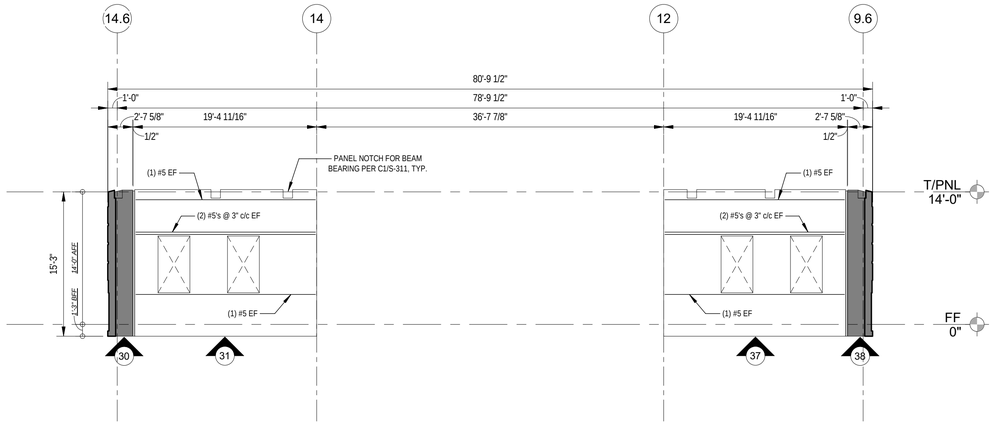

1 GRIDLINE P PANELS
1/8" = 1'-0"

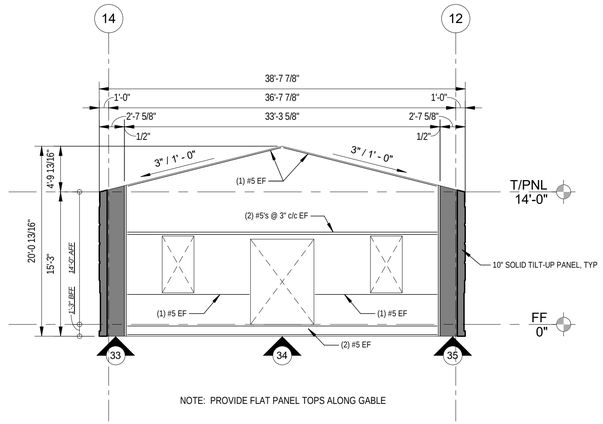

NOTE: PROVIDE FLAT PANEL TOPS ALONG GABLE

2 GRIDLINE Q PANELS
1/8" = 1'-0"

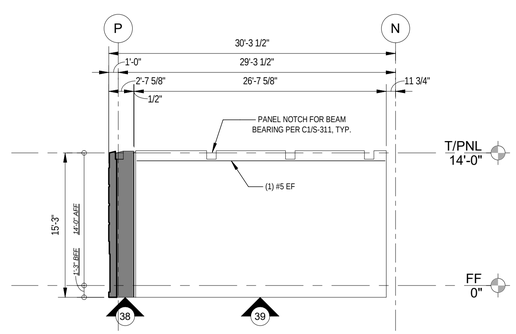

3 GRIDLINE 9.6 PANELS
1/8" = 1'-0"

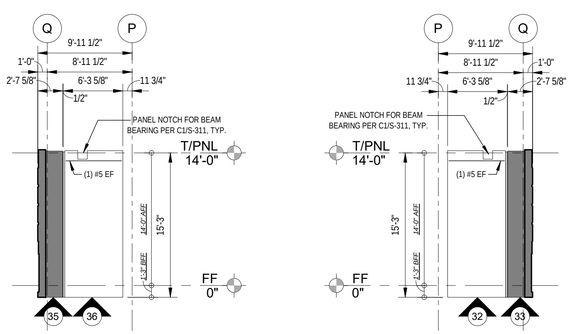

4 GRIDLINE 12 PANELS
1/8" = 1'-0"

5 GRIDLINE 14 PANELS
1/8" = 1'-0"

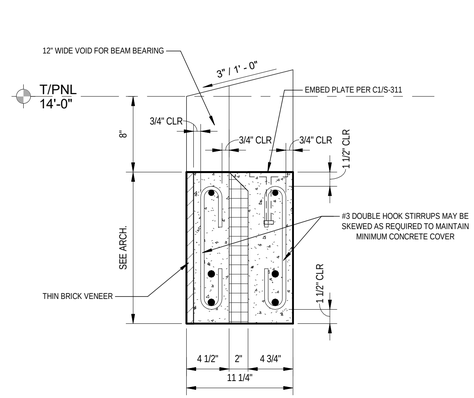

6 #3 DOUBLE HOOK STIRRUP DETAILS
1 1/2" = 1'-0"

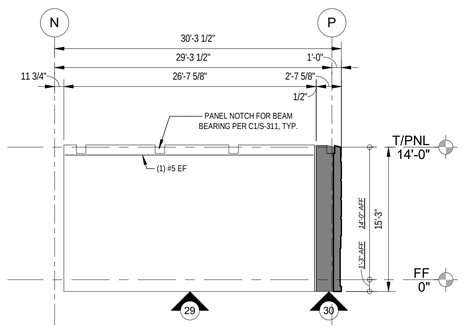

7 GRIDLINE 14.6 PANELS
1/8" = 1'-0"

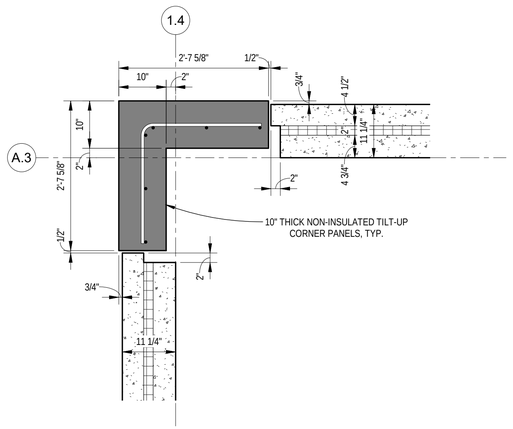

8 TYPICAL CORNER DETAIL
3/4" = 1'-0"

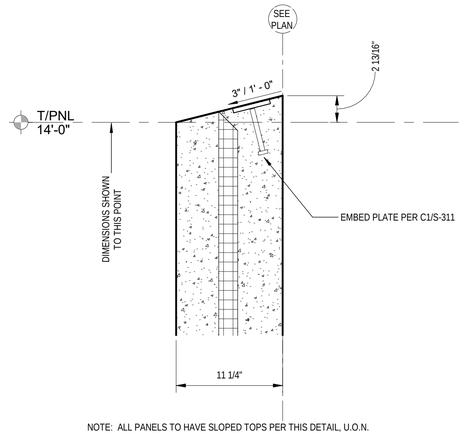

NOTE: ALL PANELS TO HAVE SLOPED TOPS PER THIS DETAIL, U.O.N.

9 SLOPED TOP OF PANEL DETAIL
1 1/2" = 1'-0"

GENERAL NOTES:

1. FOR THE STRUCTURAL NOTES AND ABBREVIATIONS SEE SHEETS S-001, S-002 AND S-003
2. FOR DIMENSIONS NOT SHOWN SEE THE ARCHITECTURAL DRAWINGS
3. THE TILT-UP PANEL DRAWINGS MUST BE USED IN CONJUNCTION WITH THE ARCHITECTURAL, STRUCTURAL, CIVIL, MECHANICAL, ELECTRICAL, AND PLUMBING DRAWINGS. GENERAL CONTRACTOR SHALL BE RESPOSIBLE FOR COORDINATION OF TILT-UP PANELS WITH OTHER TRADES.

TILT-UP PANEL DESIGN NOTES:

1. TILT-UP PANELS SHALL BE REINFORCED PER TYPICAL REINFORCEMENT LISTED BELOW, U.O.N. ON ELEVATIONS
   - A. TYPICAL REINFORCING FOR 11 1/4" INSULATED TILT-UP PANELS SHALL BE AS FOLLOWS:
     - a. #5 VERTICAL BARS @ 12" o.c. EACH FACE
     - b. #4 HORIZONTAL BARS @ 12" o.c. EACH FACE
   - B. TYPICAL REINFORCING FOR 10" SOLID TILT-UP PANELS SHALL BE AS FOLLOWS:
     - a. #5 VERTICAL BARS @ 10" o.c. CENTERED
     - b. #5 HORIZONTAL BARS @ 12" o.c CENTERED
       - HORIZONTAL BARS TO BE CONTINUOUS HOOK BARS AROUND CORNER
   - C. TYPICAL REINFORCING FOR 7 1/4" SOLID TILT-UP PANELS SHALL BE AS FOLLOWS:
     - a. #5 VERTICAL BARS @ 16" o.c. EACH FACE
     - b. #4 HORIZONTAL BARS @ 16" o.c. EACH FACE
2. TILT-UP PANEL CONCRETE SHALL HAVE NORMAL WEIGHT AGGREGATES WITH A NOMINAL MAXIMUM AGGREGATE SIZE OF 3/4" AND A MAXIMUM WATER/CEMENT RATIO OF 0.50.
3. MIN. CONCRETE COVER FOR TILT-UP PANEL REINFORCEMENT SHALL BE 3/4", U.O.N.
4. SEE S-001 FOR ADDITIONAL TILT-UP CONCRETE NOTES
5. PROVIDE #4 x 4'-0" DIAGONAL BARS AT ALL RE-ENTRANT CORNER LOCATIONS
6. WHERE CALLED FOR, CLOSED TIES MAY BE MADE FROM A SINGLE, CLOSED LOOP REINFORCING BAR OR FROM INDIVIDUAL STIRRUPS AND CROSS TIES
7. SEE S-600 FOR BAR PLACEMENT DIAGRAMS
8. INSULATED TILT-UP PANELS SHALL BE INSULATED USING THERMOMASS SYSTEM SC INSULATION SYSTEM w/ THERMOMASS CC SERIES FIBER-COMPOSITE CONNECTORS. CC SERIES CONNECTORS SHALL BE PLACED AT 16" o.c. IN EACH DIRECTION, U.O.N. THERMOMASS X SERIES FIBER-COMPOSITE CONNECTORS ONLY REQUIRED WHERE SHOWN ON DRAWINGS
9. MILL TEST REPORTS FOR REINFORCEMENT AND DOCUMENTATION OF CONCRETE MIXTURE CHARACTERISTICS SHALL BE SUBMITTED FOR REVIEW
10. THE FOLLOWING ASTM STANDARDS MUST BE CONFORMED TO AS APPLICABLE:
    - A. PORTLAND CEMENT, TYPE I OR III: ASTM C150
    - B. REINFORCING STEEL, GRADE 60: ASTM 615
    - C. NORMAL WEIGHT AGGREGATES: ASTM C33
    - D. FLY ASH: ASTM C618
    - E. MIXING WATER: ASTM C1602
    - F. ADMIXTURES:
      - a. WATER REDUCTION: ASTM C494
      - b. SETTING TIME MODIF.: ASTM C494
      - c. AIR ENTRAINMENT: ASTM C260
    - G. CONCRETE BATCH/MIX/DELIV.: ASTM C94 or C685

KEYPLAN

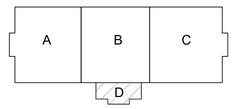

CITADEL CONTRACTORS INC.
3405 APEX PEAKWAY
APEX, N.C. 27502
TEL. 1-919-362-5122
FAX 1-919-362-6910

This drawing and the design shown are the property of Citadel Contractors, Inc. The reproduction, copying or other use of this drawings without their written consent is prohibited and any infringement will be subject to legal action.

N

NO.	DESCRIPTION	DATE	APPR

NAVFAC

SEAL

RQ Jordan COMPANY – A JOINT VENTURE –

Michael Baker INTERNATIONAL
100 AIRSIDE DRIVE
MOON TOWNSHIP, PA 15108
A/E INFO

APPROVED

FOR COMMANDER NAVFAC

ACTIVITY
MARINE CORPS BASE
CAMP LEJEUNE

SATISFACTORY TO DATE

DES	CEJ	DRW	CEJ	CHK	CEJ

PM
BRANCH MANAGER
CHIEF ENG/ARCH
FIRE PROTECTION

DEPARTMENT OF THE NAVY
NAVAL FACILITIES ENGINEERING COMMAND
ROICC FLORENCE CAMP LEJEUNE
MCB CAMP LEJEUNE

NAVAL FACILITIES ENGINEERING COMMAND ~ MID-ATLANTIC
JACKSONVILLE, NC

JACKSONVILLE, NC
P1338F II MEF SIMULATION/TRAINING CENTER
REPLACEMENT
TILT-UP PANEL REINFORCEMENT - AREA D

SCALE:	AS NOTED
EPROJECT NO.:	1590892
CONSTR. CONTR. NO.	N40085-20-C-0059
NAVFAC DRAWING NO.	
SHEET	OF

S-704

DP2 SUBMISSION – P1338 BUILDING - PRE-FINAL SUBMISSION

PLOTTED: 6/8/2021 9:44:39 AM

FILE NAME: BIM 360://HF PACKAGE 3/P1338F MEF SIM CTR-1590892-TILT-Up.rvt

ABB	DESCRIPTION
	A
&	AND
<	ANGLE
@	AT
A/	ABOVE
ACP	ACOUSTIC CEILING PANEL
ADJ	ADJACENT, ADJUSTABLE
AED	AUTOMATED EXTERNAL DEFIBRILLATOR
AFF	ABOVE FINISHED FLOOR
AP	ACCESS PANEL
APPROX	APPROXIMATE(LY)
ARCH	ARCHITECT OR ARCHITECTURAL
ASTM	AMERICAN SOCIETY FOR TESTING MATERIAL
ATTEN	ATTENUATE, ATTENUATION
AVG	AVERAGE
	B
B/	BOTTOM OF
B/C	BOTTOM OF CURB
BC	BASE CABINET
BD	BOARD
BIT	BITUMINOUS
BLDG	BUILDING
BSMT	BASEMENT
	C
[	CHANNEL
C/	CENTER OF
CAB	CABINET
CC	CENTER TO CENTER
CG	CORNER GUARD
CJ	CORNER JOINT
CL	CENTER LINE
CLG	CEILING
CLG HT	CEILING HEIGHT
CLO	CLOSET
CLR	CLEAR
CMU	CONCRETE MASONRY UNIT
CO	CLEAN OUT
COL	COLUMN
CONC	CONCRETE
CONT	CONTINUOUS
CORR	CORRIDOR
CP	COPIER
CT	CERAMIC TILE
CY	CUBIC YARD
	D
DF	DRINKING FOUNTAIN
DIA	DIAMETER
DIM	DIMENSION
DN	DOWN
DW	DISHWASHER
DWG	DRAWING
	E
E	EAST
EA	EACH
EB	EDGE BANDING
EIFS	EXTERIOR INSULATION FINISH SYSTEM
EJ	EXPANSION JOINT
ELEC	ELECTRICAL
ELEV	ELEVATOR
EMER	EMERGENCY
ENCL	ENCLOSE(URE)
EP	ELECTRICAL PANEL
EQ	EQUAL
EQUIP	EQUIPMENT
EWC	ELECTRIC WATER COOLER
EXIST	EXISTING
EXP BLT	EXPANSION BOLT
EXT	EXTERIOR
	F
<	FABRIC
F/F	FACE TO FACE
FAX	FACSIMILE
FE	FIRE EXTINGUISHER
FEC	FIRE EXTINGUISHER CABINET
FHC	FIRE HOSE CABINET
FL	FLOOR
FL CO	FLOOR CLEANOUT
FP	FIRE PROTECTION
FPRF	FIREPROOF(ING)
FR	FIRE RATED OR FRAME
FT	FOOT/FEET

ABB	DESCRIPTION
	G
GA	GAUGE
GL	GLASS OR GLAZING
GRD	GROUND
GWB	GYPSUM WALL BOARD
	H
HB	HOSE BIBB
HC	HANDICAP(PED)
HDW	HARDWARE
HM	HOLLOW METAL
HOR	HORIZONTAL
HP	HIGH POINT
HTR	HEATER
	I
ID	INSIDE DIAMETER
IN	INCH(ES)
INT	INTERIOR
	J
JB	JAMB
JST	JOIST
JT	JOINT
	L
LAM	LAMINATE
LAN	LOCAL AREA NETWORK CONNECTION
LAV	LAVATORY
LB	POUND
LF	LINEAL FOOT
LP	LOW POINT
LTL	LINTEL
	M
m	METERS
MAS	MASONRY
MAX	MAXIMUM
MDF	MEDIUM DENSITY FIBERBOARD
MECH	MECHANICAL
MEZZ	MEZZANINE
MFR	MANUFACTURE
MH	MANHOLE
MICRO	MICROWAVE
MIN	MINIMUM
MISC	MISCELLANEOUS
mm	MILLIMETERS
MO	MASONRY OPENING
MTD	MOUNTED EL
MTL	METAL
	N
N	NORTH
NFPA	NATIONAL FIRE PROTECTION ASSOCIATION
NIC	NOT IN CONTRACT
NOM	NOMINAL
NTS	NOT TO SCALE
	O
OC	ON CENTER
OD	OUTSIDE DIAMETER
OFF	OFFICE
OPNG	OPENING
OPP	OPPOSITE
	P
PART	PARTITION
PL	PLATE
PLAM	PLASTIC LAMINATE
PLAS	PLASTER
PLYWD	PLYWOOD
PNL	PANEL
POS	POINT OF SALE
PR	PAIR
PRCST	PRECAST
PREFAB	PREFABRICATED
PROP	PROPERTY
PSI	POUNDS PER SQUARE INCH
PSIG	POUNDS PER SQUARE INCH GAUGE
PT	POINT
PTD	PAINTED
	Q
QTY	QUANTITY
	R
R	RISER OR RADIUS
RCP	REFLECTED CEILING PLAN
RD	ROOF DRAIN
REF	REFER / REFERENCE

ABB	DESCRIPTION
REG	REGISTER
REINF	REINFORCING
REQ'D	REQUIRED
RFG	REFRIGERATOR
RG	RANGE
RM	ROOM
RO	ROUGH OPENING
RTS	RUBBER TRANSITION STRIP
RWC	RAIN WATER CONDUCTOR
	S
S	SOUTH
SAN	SANITARY
SCHD	SCHEDULE
SEC	SECTION
SF	SQUARE FOOT
SIM	SIMILAR
SPKLR	SPRINKLER
SQ	SQUARE
SQ FT	SQUARE FOOT
SS	STAINLESS STEEL
STD	STANDARD
STL	STEEL
STN	STAINED
STOR	STORAGE
SUSP	SUSPEND, SUSPENDED, OR SUSPENSION
SYS	SYSTEM
	T
"T"	TEE (BAR OR W)
T	TREAD
T/	TOP OF
T/C	TOP OF CURB
TB	TACKBOARD
TC	TERRA COTTA
TEL	TELEPHONE
TEMP	TEMPERED OR TEMPERATURE
TERM	TERMINATE / TERMINAL
THRESH	THRESHOLD
TLT	TOILET
TV	TELEVISION
TYP	TYPICAL
	U
UH	UNIT HEATER
UL	UNDERWRITER'S LABORATORY
UMCT	UNGLAZED MOSAIC CERAMIC TILE
UNO	UNLESS NOTED OTHERWISE
	V
VEST	VESTIBULE
VIF	VERIFY IN FIELD
	W
W	WEST
W/	WITH
W/O	WITHOUT
WC	WATER CLOSET
WIN	WINDOW
WP	WATERPROOF(ING)
WSCT	WAINSCOT
WT	WEIGHT
WWF	WELDED WIRE REINFORCEMENT

SYMBOLS

- # / VIEW TITLE / SCALE: — VIEW CALLOUT
- INTERIOR / EXTERIOR — ELEVATIONS
- BUILDING SECTION
- WALL SECTION
- INTERIOR SECTION
- DETAIL SECTION
- CALLOUT PLAN, SECTION OR DETAIL
- COLUMN GRID LABEL - NEW
- COLUMN GRID LABEL - EXISTING
- REVISION
- ROOM NAME / ### — ROOM TAG
- #X#.# — PARTITION TYPE
- DOOR TAG - SEE SCHEDULE
- ##.## — KEYNOTE
- WINDOW TYPE
- TOILET ROOM ACCESSORIES
- ELEVATION MARK
- DENOTES ABOVE, BELOW, OR BEHIND
- ACCESSIBLE TOILET STALL
- RECYCLING COLLECTION AREA
- PLAN NORTH — NORTH ARROW
- CENTER LINE
- FLOOR TRANSITION
- SLOPE — ROOF SLOPE ARROW
- LEVEL LINE
- SPOT ELEVATION

SECTIONS/ SECTIONAL DETAILS

- CONCRETE BLOCK
- CAST-IN-PLACE-CONCRETE
- STRUCTURAL/MISCELLANEOUS STEEL
- EARTH
- GRAVEL/ENGINEERED FILL
- STONE, OR NATURAL BUILDING STONE
- PLASTER OR GYPSUM BOARD, OR EXTERIOR SHEATHING
- BATT INSULATION
- ROOF, TAPERED, CAVITY OR RIGID INSULATION
- FINISHED WOOD TRIM
- PLYWOOD
- CAVITY DRAINAGE MATERIAL

PLANS/ PLAN FIRE RATED GRAPHICS

- SMOKE
- 1/2 HOUR
- 1 HOUR
- 2 HOUR
- 3 HOUR
- 4 HOUR

PLANS / PLAN DETAIL GRAPHICS

- BRICK WALLS
- CONCRETE BLOCK WALLS
- CAST-IN-PLACE-CONCRETE WALLS
- STUD WALLS
- CONCRETE SLABS AND/OR CONCRETE SIDEWALKS
- EXISTING WALLS

DOOR DESIGNATIONS

- EXISTING DOOR AND/OR FRAME TO REMAIN - SEE DOOR SCHEDULE FOR ANY ADDITIONAL WORK
- NEW DOOR AND/OR FRAME TO BE PROVIDED - SEE DOOR SCHEDULE
- EXISTING DOOR AND/OR FRAME TO BE REMOVED - SEE DEMO PLAN/NOTES

ARCHITECTURAL GENERAL NOTES

1. ALL DIMENSIONS ARE IN FEET / INCHES UNLESS NOTED OTHERWISE
2. REFER TO SPECIFICATIONS FOR REQUIREMENTS IN ADDITION TO GENERAL NOTES
3. ROOM AREAS AND PERIMETERS ARE APPROXIMATE AND FOR REFERENCE ONLY. VERIFY QUANTITIES AND DIMENSIONS IN FIELD.
4. NO DEVIATIONS FROM THESE CONTRACT DOCUMENTS SHALL BE MADE WITHOUT THE PRIOR WRITTEN APPROVAL OF THE ARCHITECT
5. DO NOT SCALE DIMENSIONS FROM DRAWINGS - THE CONTRACTOR SHALL REQUEST NECESSARY DIMENSIONS NOT SHOWN ON THE DRAWINGS FROM THE ARCHITECT
6. ALL EXTERIOR DIMENSIONS ARE TO EXTERIOR FACE OF STRUCTURAL ELEMENTS U.N.O., EXTERIOR OPENINGS ARE ROUGH OPENING DIMENSIONS, SEE DOOR AND WINDOW SCHEDULES FOR ACTUAL OPENING SIZES.
7. ALL DIMENSIONS ARE TO FACE OF STUDS OF PARTITION OR CENTER OF DOORS, WINDOWS AND OPENINGS UNLESS NOTED OTHERWISE - ALL NON-DIMENSIONED DOOR LOCATIONS SHALL BE OFFSET 4" FROM THE ADJACENT WALL TO THE HINGE SIDE OF THE DOOR OPENING.
8. DETAILS SHOWN ON DRAWINGS ARE TYPICAL FOR ALL SIMILAR CONDITIONS.
9. DRAWING NOTES AND SPECIFICATIONS ARE INSTRUCTIONS TO THE CONTRACTOR AND APPLY TO ALL THE WORK UNLESS MORE SPECIFIC INFORMATION IS SHOWN ELSEWHERE ON THE DRAWINGS OR WRITTEN IN THE SPECIFICATIONS - IN THE EVENT OF CONFLICTING INSTRUCTIONS, THE ARCHITECT SHALL DETERMINE WHAT CONTROLS
10. VERIFY ALL DIMENSIONS IN THE FIELD AND COORDINATE DIMENSIONS SHOWN ON THE CONTRACT DRAWINGS WITH FABRICATION AND FIELD CONDITIONS AND REPORT ANY INCONSISTENCIES TO THE ARCHITECT BEFORE PROCEEDING WITH WORK
11. PRINCIPAL OPENINGS IN THE STRUCTURE ARE SHOWN ON THESE DRAWINGS - THE GENERAL CONTRACTOR SHALL EXAMINE THE ARCHITECTURAL, MECHANICAL, ELECTRICAL, AND PLUMBING DRAWINGS FOR REQUIRED OPENINGS GENERAL CONTRACTOR SHALL VERIFY SIZE AND LOCATION OF ALL OPENINGS WITH ALL SUB-CONTRACTORS PRIOR TO CONSTRUCTION
12. STRUCTURAL DRAWINGS AND SPECIFICATIONS REPRESENT THE FINISHED STRUCTURE, AND, EXCEPT WHERE SPECIFICALLY SHOWN, DO NOT INDICATE THE METHOD OR MEANS OF CONSTRUCTION - THE CONTRACTOR SHALL SUPERVISE CONSTRUCTION MEANS, METHODS, PROCEDURES, TECHNIQUES, SEQUENCE, AND APPLICABLE SAFETY REGULATIONS TO BE FOLLOWED
13. MECHANICAL, PLUMBING AND ELECTRICAL WORK RELATED TO DEMOLITION AND NEW INSTALLATION OF COMPONENTS SHALL COMPLY WITH ALL APPLICABLE CODES
14. ALL MATERIALS, FABRICATION AND INSTALLATION SHALL COMPLY WITH THE APPLICABLE REQUIREMENTS AND SPECIFICATIONS FOR EACH DIVISION OF WORK
15. CONSTRUCTION MUST COMPLY WITH APPLICABLE CODES AND ORDINANCES, LAWS AND SAFETY ORDERS AS DIRECTED BY LOCAL JURISDICTION
16. CONTRACTOR SHALL PREPARE ALL WALLS AND PARTITIONS AS REQUIRED BY THE FINISH MANUFACTURER TO RECEIVE THE FINISHES SPECIFIED
17. PROVIDE BLOCKING FOR ALL WALL MOUNTED FF&E ITEMS AS REQUIRED BY MANUFACTURERS. CONFIRM SIZES AND LOCATIONS WITH CONTRACTING OFFICER
18. CONTRACTOR TO PROVIDE PORTABLE FIRE EXTINGUISHERS IN ACCORDANCE WITH LOCAL JURISDICTION AND NFPA 10. MAXIMUM TRAVEL DISTANCE TO NEAREST FIRE EXTINGUISHER FROM ANY POINT IN THE BUILDING SHALL NOT EXCEED 50 FEET. EXISTING FIRE EXTINGUISHERS SHALL BE TESTED AND RE-USED IF FULLY OPERATIONAL. FIRE EXTINGUISHERS SHALL BE SIZED FOR NO LESS THAN ORDINARY HAZARD.
19. CONTRACTOR SHALL COORDINATE PLUMBING/ ELECTRICAL/ DATA REQUIREMENTS AND STRUCTURAL BLOCKING FOR ITEMS PROVIDED BY USERS AS APPROVED BY THE CONTRACTING OFFICER

APPR | DATE | DESCRIPTION | SYM

NAVFAC

PRELIMINARY FOR REFERENCE ONLY

SEAL

W.M. Jordan Company – A JOINT VENTURE –

Michael Baker INTERNATIONAL
100 AIRSIDE DRIVE
MOON TOWNSHIP, PA 15108 A/E INFO

APPROVED

FOR COMMANDER NAVFAC

ACTIVITY
MARINE CORPS BASE CAMP LEJEUNE

SATISFACTORY TO DATE

DES XXX | DRW XXX | CHK XXX

PM

BRANCH MANAGER

CHIEF ENG/ARCH

FIRE PROTECTION

DEPARTMENT OF THE NAVY
NAVAL FACILITIES ENGINEERING COMMAND ~ MID-ATLANTIC
ROIOC FLORENCE CAMP LEJEUNE | JACKSONVILLE, NC
MCB CAMP LEJEUNE

JACKSONVILLE, NC
P1338F II MEF SIMULATION/TRAINING CENTER REPLACEMENT
ARCHITECTURAL GENERAL NOTES, MATERIAL AND ANNOTATION LEGEND

SCALE: AS NOTED

EPROJECT NO.: 1590892

CONSTR. CONTR. NO.
N40085-20-C-0059

NAVFAC DRAWING NO.

SHEET OF

A-001

PLOTTED: 6/10/2021 12:45:51 AM

FILE NAME: BIM 360://HF PACKAGE 3/P1338 MEF SIM CTR-1590892-A.rvt

DP2 SUBMISSION – P1338 BUILDING - PRE-FINAL SUBMISSION

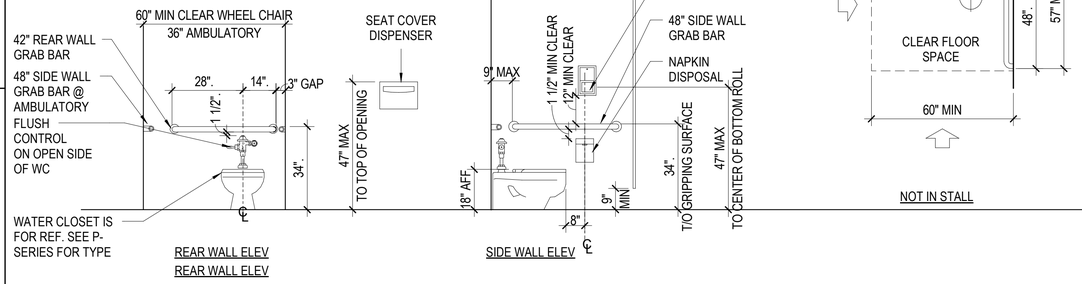

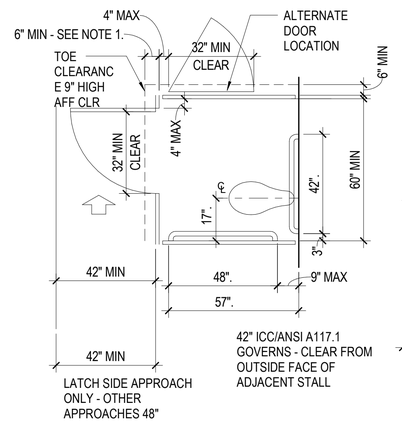

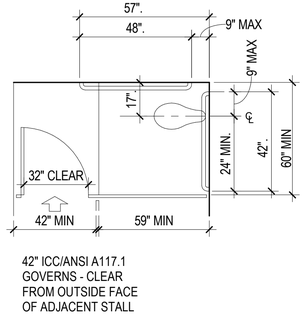

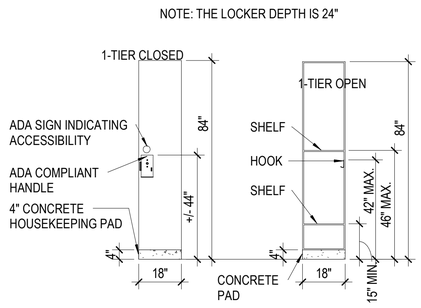

1. TOE CLEARANCE AT THE FRONT OF THE PARTITION IS NOT REQUIRED IN A COMPARTMENT GREATER THAN 62" DEEP WITH A WALL-HUNG WATER CLOSET OR 65" DEEP WITH A FLOOR-MOUNTED WATER CLOSET. TOE CLEARANCE AT THE SIDE IS NOT REQUIRED IN A COMPARTMENT GREATER THAN 66" WIDE.
2. WHERE 6 OR MORE STALLS ARE PROVIDED, IN ADDITION TO STANDARD STALL, PROVIDE AT LEAST 1 AMBULATORY STALL 36" WIDE WITH A DOOR THAT SWINGS OUT AND THE DEPTH OF THE STALL AS REQUIRED TO ACCOMMODATE LENGTH OF GRAB BAR. STALL SHALL BE IN ACCORDANCE TO APPLICABLE PLUMBING CODE.

TOILET STALLS

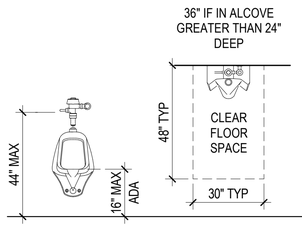

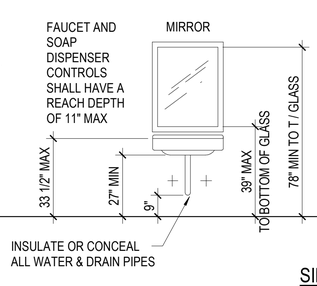

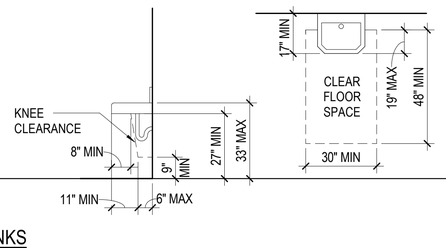

TOILET ROOMS WITH STALLS

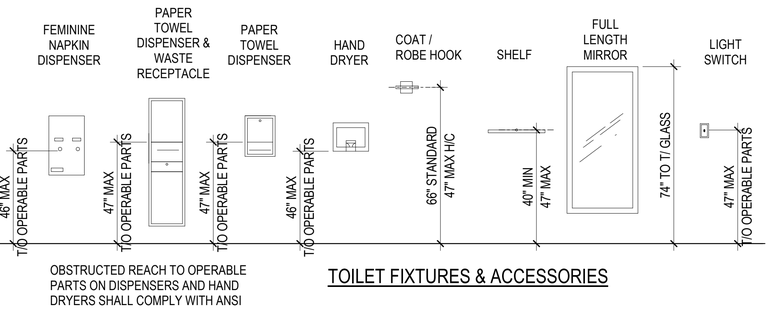

LOCKERS

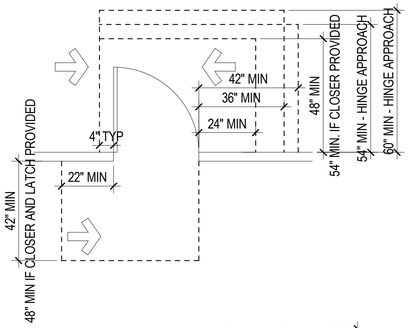

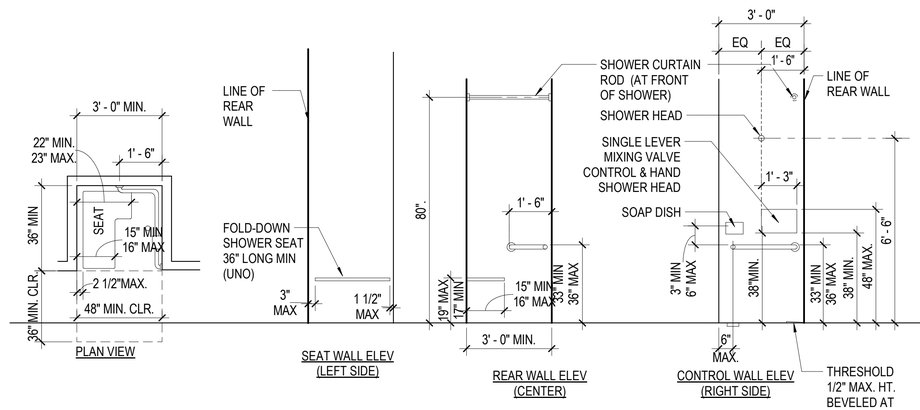

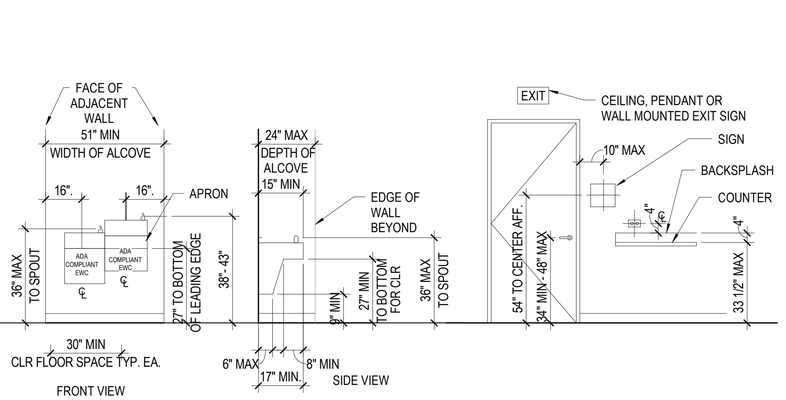

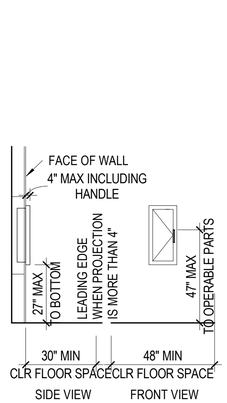

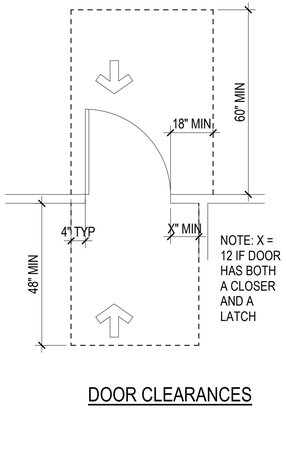

PLOTTED: 6/10/2021 12:45:53 AM
FILE NAME: BIM 360://HF PACKAGE 3/P1338 MEF SIM CTR-1590892-A.rvt

APPR
DATE
SYM DESCRIPTION
NAVFAC
PRELIMINARY FOR REFERENCE ONLY
SEAL
WJM Jordan COMPANY – A JOINT VENTURE –
Michael Baker INTERNATIONAL
100 AIRSIDE DRIVE MOON TOWNSHIP, PA 15108
A/E INFO
APPROVED
FOR COMMANDER NAVFAC
ACTIVITY
MARINE CORPS BASE CAMP LEJEUNE
SATISFACTORY TO DATE
DES XXX DRW XXX CHK XXX
PM
BRANCH MANAGER
CHIEF ENG/ARCH
FIRE PROTECTION
DEPARTMENT OF THE NAVY
NAVAL FACILITIES ENGINEERING COMMAND ~ MID-ATLANTIC
ROICC FLORENCE CAMP LEJEUNE
NAVAL FACILITIES ENGINEERING COMMAND ~ MID-ATLANTIC JACKSONVILLE, NC
MCB CAMP LEJEUNE
JACKSONVILLE, NC
P1338F II MEF SIMULATION/TRAINING CENTER REPLACEMENT
TYPICAL ADA DETAILS
SCALE: AS NOTED
EPROJECT NO.: 1590892
CONSTR. CONTR. NO. N40085-20-C-0059
NAVFAC DRAWING NO.
SHEET OF
A-002
DP2 SUBMISSION – P1338 BUILDING –PRE-FINAL SUBMISSION

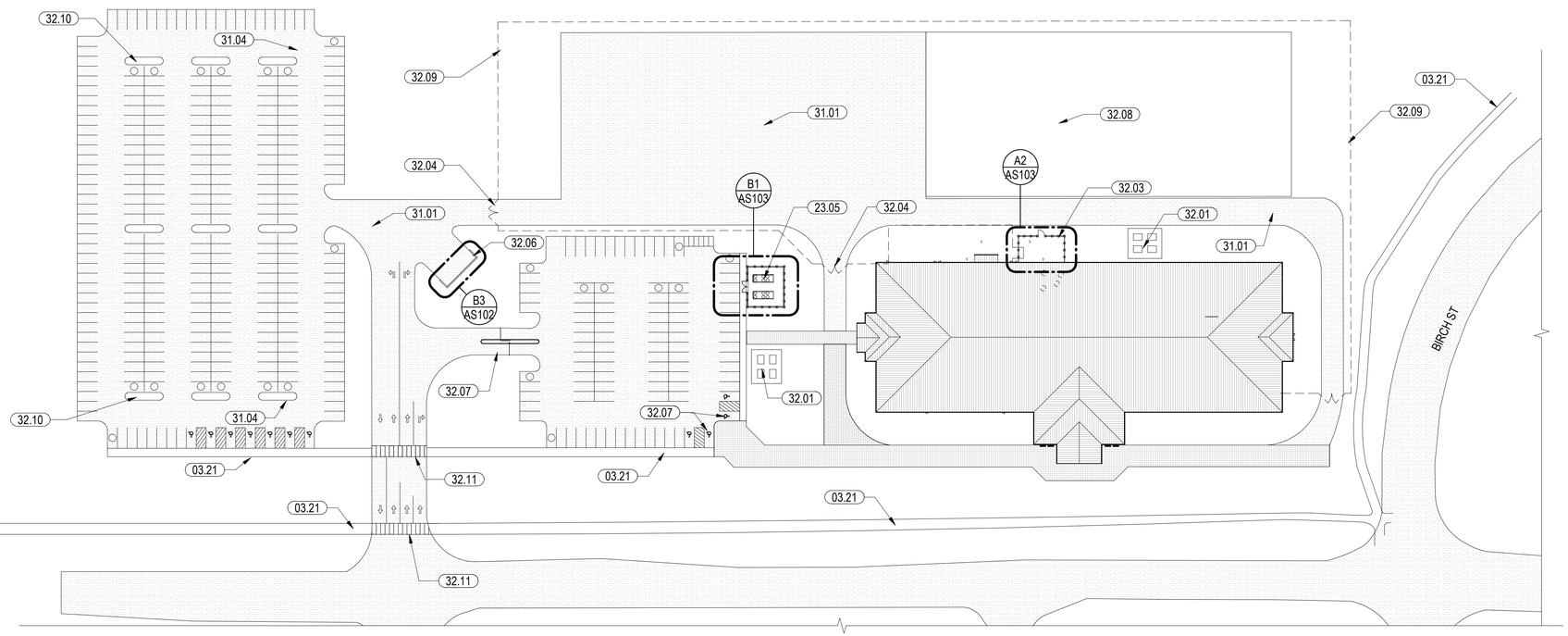

SITE PLAN

SCALE: 1/64" = 1'-0"

KEYNOTES

03.21	4" CONCRETE SIDEWALK - SEE CIVIL
23.04	MECHANICAL DUCTS & SYSTEMS, SEE MECHANICAL
23.05	HVAC EQUIPMENT, SEE MECHANICAL
31.01	ASPHALT PARKING - SEE CIVIL
31.04	COMPACTED SUBGRADE, SEE CIVIL
32.01	COVERED PICNIC AREA AND TABLES, SEE LANDSCAPE PLANS.
32.03	GENERATOR YARD ENCLOSURE
32.04	SITE ACCESS GATE, SEE CIVIL
32.06	TRASH ENCLOSURE WALL
32.07	HANDICAPPED PARKING STALL, SEE CIVIL
32.08	GRASS TRAINING AREA, SEE LANDSCAPING
32.09	SITE ENCLOSURE FENCE, SEE CIVIL
32.10	LANDSCAPE ISLAND, SEE LANDSCAPING
32.11	CROSSWALK, SEE CIVIL

PLAN LEGEND

- CONCRETE
- ASPHALT
- ASPHALT
- ROOFING

N

APPR	DATE	DESCRIPTION	SYM

NAVFAC

PRELIMINARY FOR REFERENCE ONLY

SEAL

IRQ W.M. Jordan COMPANY – A JOINT VENTURE –

Michael Baker INTERNATIONAL

100 AIRSIDE DRIVE
MOON TOWNSHIP, PA 15108

A/E INFO

APPROVED

FOR COMMANDER NAVFAC

ACTIVITY
MARINE CORPS BASE
CAMP LEJEUNE

SATISFACTORY TO DATE

DES XXX	DRW XXX	CHK XXX

PM

BRANCH MANAGER

CHIEF ENG/ARCH

FIRE PROTECTION

DEPARTMENT OF THE NAVY
NAVAL FACILITIES ENGINEERING COMMAND
ROICC FLORENCE CAMP LEJEUNE
MCB CAMP LEJEUNE

NAVAL FACILITIES ENGINEERING COMMAND – MID-ATLANTIC
JACKSONVILLE, NC

P1338F II MEF SIMULATION/TRAINING CENTER REPLACEMENT

ARCHITECTURAL - SITE PLAN

SCALE: AS NOTED

EPROJECT NO.: 1590892

CONSTR. CONTR. NO.
N40085-20-C-0059

NAVFAC DRAWING NO.

SHEET OF

AS101

DP2 SUBMISSION – P1338 BUILDING - PRE-FINAL SUBMISSION

PLOTTED: 6/10/2021 12:49:23 AM

FILE NAME: BIM 360://HF PACKAGE 3/P1338 MEF SIM CTR-1590892-A.rvt

KEYNOTES

04.01	BRICK VENEER - FIELD
04.18	PRECAST WALL CAP [04 20 00]
04.20	BRICK EXPANSION JOINT AT MAX. 20' OC [04 20 00]
05 12	PAINTED STEEL BOLLARDS - SEE S-SERIES

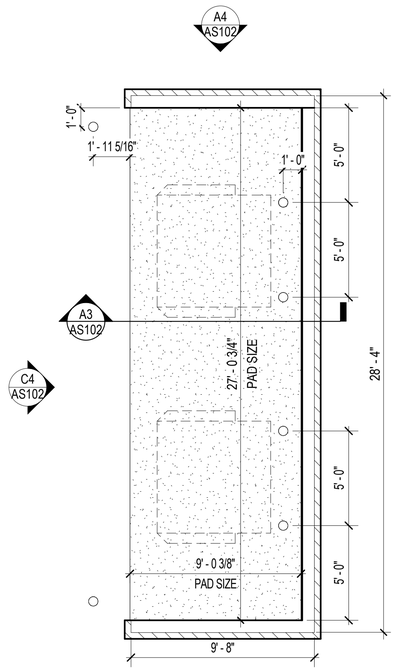

DUMPSTER SITE PLAN

SCALE: 1/4" = 1'-0" A-201 B3

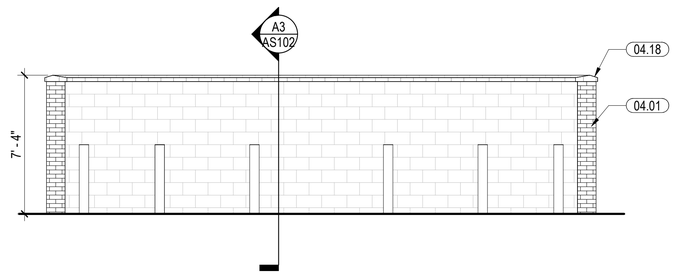

ELEVATION - DUMPSTER ENCLOSURE I

SCALE: 1/4" = 1'-0" AS102 C4

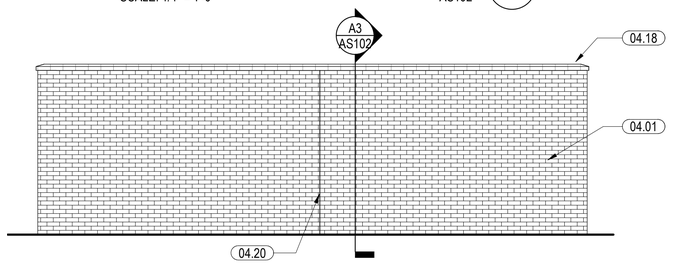

ELEVATION - DUMPSTER ENCLOSURE II

SCALE: 1/4" = 1'-0" AS102 B4

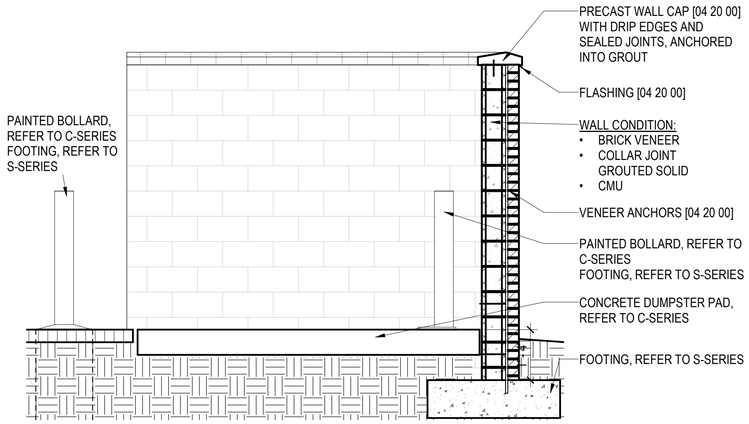

SECTION - DUMPSTER ENCLOSURE

SCALE: 1/2" = 1'-0" AS102 A3

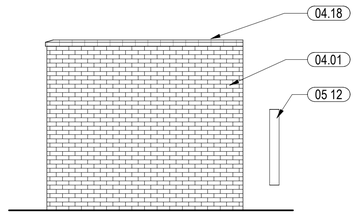

ELEVATION - DUMPSTER ENCLOSURE III

SCALE: 1/4" = 1'-0" AS102 A4

KEYPLAN

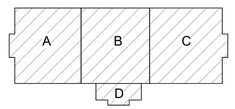

N

APPR	
DATE	
DESCRIPTION	
SYM	

SEAL

PRELIMINARY FOR REFERENCE ONLY

IRQ W.M. Jordan COMPANY – A JOINT VENTURE –

Michael Baker INTERNATIONAL

100 AIRSIDE DRIVE
MOON TOWNSHIP, PA 15108 A/E INFO

APPROVED

FOR COMMANDER NAVFAC

ACTIVITY
MARINE CORPS BASE CAMP LEJEUNE

SATISFACTORY TO DATE

DES Designer DRW Author CHK Checker

PM

BRANCH MANAGER

CHIEF ENG/ARCH

FIRE PROTECTION

DEPARTMENT OF THE NAVY
NAVAL FACILITIES ENGINEERING COMMAND
ROICC FLORENCE CAMP LEJEUNE

NAVAL FACILITIES ENGINEERING COMMAND ~ MID-ATLANTIC
JACKSONVILLE, NC

MCB CAMP LEJEUNE
JACKSONVILLE, NC

P1338F II MEF SIMULATION/TRAINING CENTER REPLACEMENT

ARCHITECTURAL - SITE PLAN DETAILS

SCALE: AS NOTED

EPROJECT NO.: 1590892

CONSTR. CONTR. NO.
N40085-20-C-0059

NAVFAC DRAWING NO.

SHEET OF

AS102

DP2 SUBMISSION – P1338 BUILDING - PRE-FINAL SUBMISSION

PLOTTED: 6/10/2021 12:49:26 AM

FILE NAME: BIM 360://HF PACKAGE 3/P1338 MEF SIM CTR-1590892-A.rvt

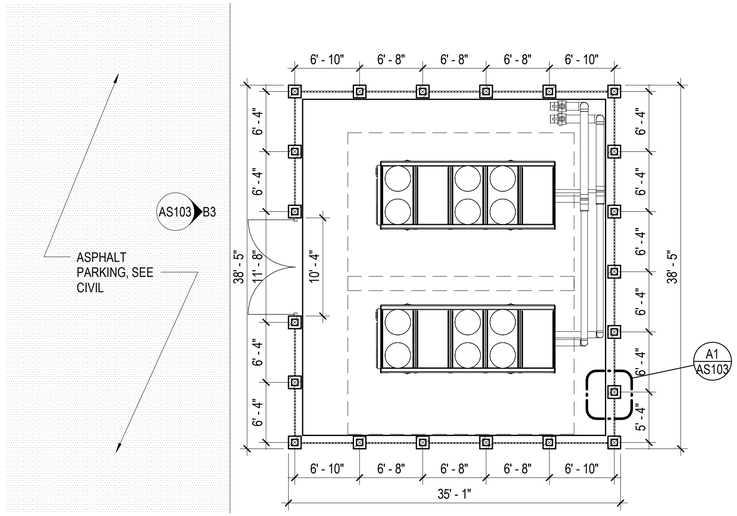

CHILLER ENCLOSURE

SCALE: 1/8" = 1'-0" — AS101 — B1

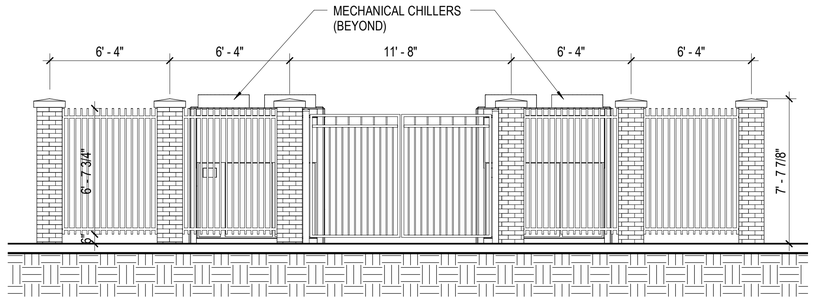

CHILLER ENCLOSURE ELEVATION

SCALE: 1/4" = 1'-0" — AS103 — B3

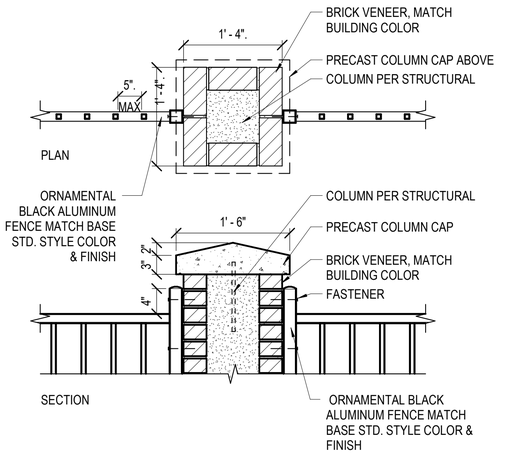

PIER - ENLARGED PLAN

SCALE: 1" = 1'-0" — AS103 — A1

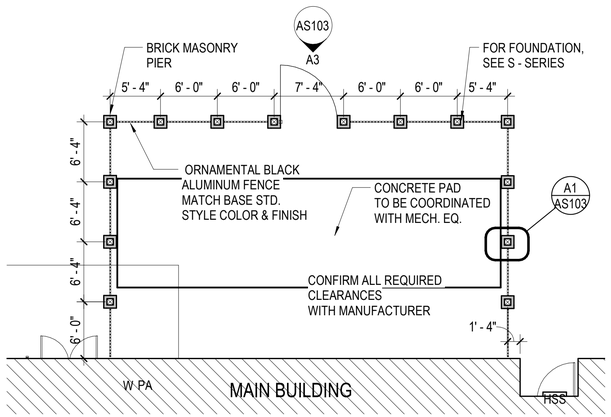

ENCLOSURE FENCE - PLAN

SCALE: 1/8" = 1'-0" — A-201 — A2

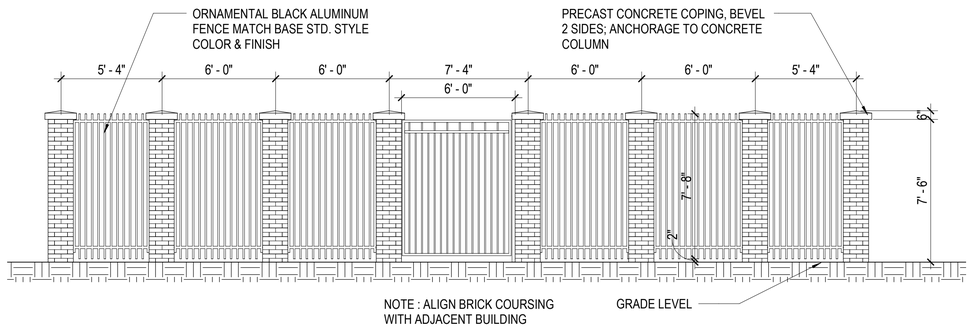

MECHANICAL YARD FENCE - ELEVATION

SCALE: 1/4" = 1'-0" — AS103 — A3

N

APPR	
DATE	
DESCRIPTION	
SYM	

PRELIMINARY FOR REFERENCE ONLY

SEAL

W.M. Jordan COMPANY – A JOINT VENTURE –

Michael Baker INTERNATIONAL

100 AIRSIDE DRIVE
MOON TOWNSHIP, PA 15108 — A/E INFO

APPROVED

FOR COMMANDER NAVFAC

ACTIVITY
MARINE CORPS BASE CAMP LEJEUNE

SATISFACTORY TO DATE

DES Designer DRW Author CHK Checker

PM

BRANCH MANAGER

CHIEF ENG/ARCH

FIRE PROTECTION

DEPARTMENT OF THE NAVY
NAVAL FACILITIES ENGINEERING COMMAND ~ MID-ATLANTIC
ROICC FLORENCE CAMP LEJEUNE — JACKSONVILLE, NC
MCB CAMP LEJEUNE

P1338F II MEF SIMULATION/TRAINING CENTER REPLACEMENT

EQUIPMENT ENCLOSURE

SCALE: AS NOTED

EPROJECT NO.: 1590892

CONSTR. CONTR. NO.
N40085-20-C-0059

NAVFAC DRAWING NO.

SHEET OF

AS103

DP2 SUBMISSION – P1338 BUILDING - PRE-FINAL SUBMISSION

PLOTTED: 6/10/2021 12:49:30 AM

FILE NAME: BIM 360://HF PACKAGE 3/P1338 MEF SIM CTR-1590892-A.rvt

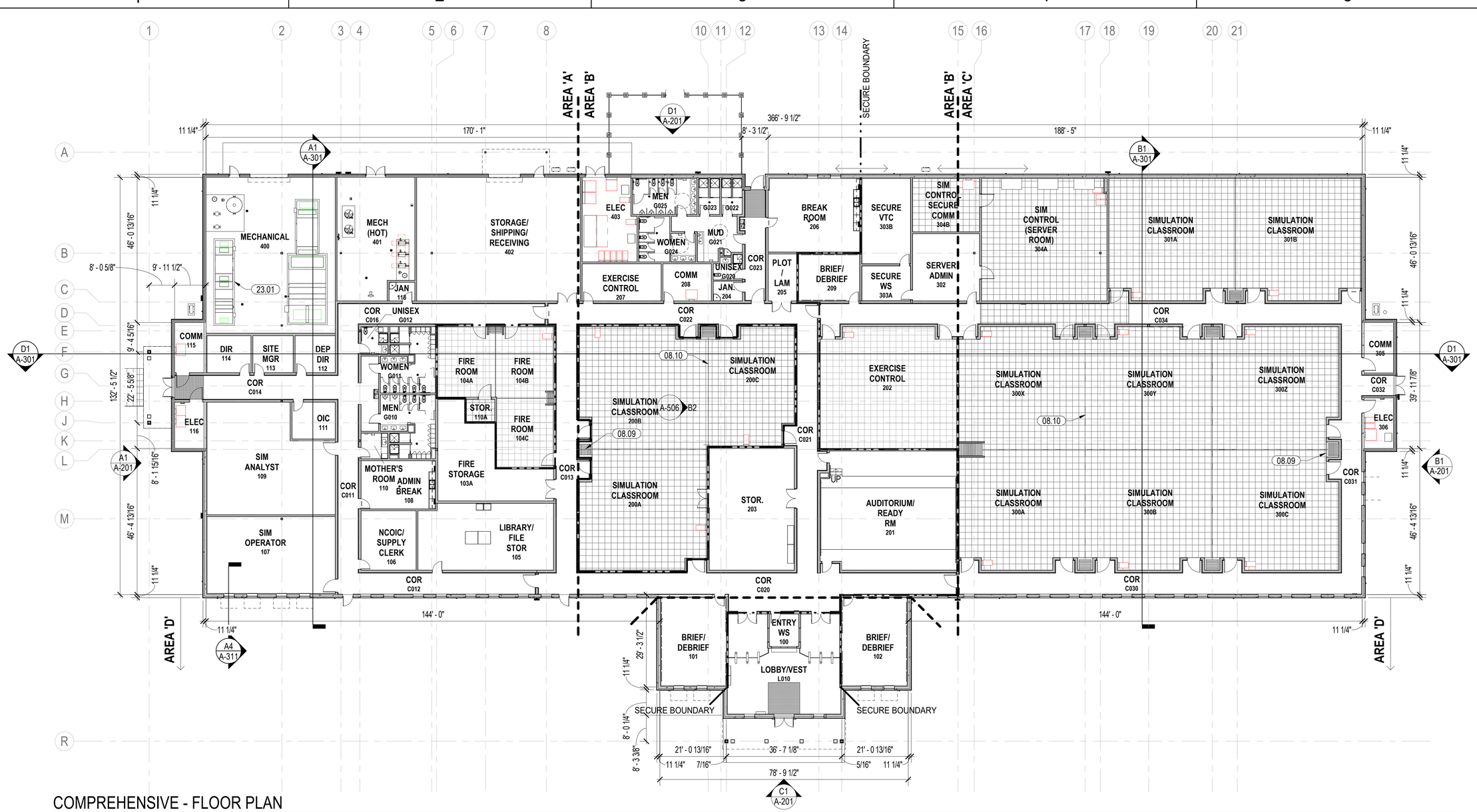

COMPREHENSIVE - FLOOR PLAN

SCALE: 1/16" = 1'-0"

PLAN LEGEND

- PATTERN INDICATES LOCATIONS OF 24" RAISED ACCESS FLOORING OVER RECESSED SLAB
- RECESSED ENTRANCE MAT
- SECURE WALL INDICATION

NOTES - FLOOR PLAN

1. REFER TO SHEET A-001 FOR ARCHITECTURAL GENERAL NOTES, & ANNOTATION LEGEND
2. REFER TO A-600 SERIES FOR PARTITION TYPES
3. REFER TO ENLARGED PLANS AND INTERIOR ELEVATIONS FOR ADDITIONAL INFORMATION
4. REFER TO MECHANICAL, ELECTRICAL, AND TELECOMM SHEETS FOR EQUIPMENT LOCATIONS AND REQUIREMENTS.
5. ALL EXTERIOR DIMENSIONS ARE TO EXTERIOR FACE OF STRUCTURAL ELEMENTS U.N.O., EXTERIOR OPENINGS ARE ROUGH OPENING DIMENSIONS, SEE DOOR AND WINDOW SCHEDULES FOR ACTUAL OPENING SIZES. - TYPICAL UNLESS NOTED OTHERWISE
6. ALL INTERIOR DIMENSIONS ARE TO FACE OF STUDS OR CENTER OF OPENINGS UNLESS NOTED OTHERWISE - ALL NON-DIMENSIONED DOORS SHALL BE OFFSET 4" FROM THE ADJACENT WALL TO THE HINGE SIDE OF THE DOOR OPENING. - TYPICAL U.N.O.
7. DIMENSIONS MARKED AS "CLEAR" DICTATES THE CLEAR DIMENSION FROM FINISH TO FINISH
8. WHERE FIRE RATED PARTITIONS INTERSECT WITH LESSER RATED PARTITIONS OR NON-RATED PARTITIONS, THE HIGHER RATED PARTITION IS TO CONTINUE THROUGH THE INTERSECTION TO MAINTAIN THE HIGHER RATING

NOTES - FLOOR PLAN

9. FIRE EXTINGUISHERS SHALL BE PROVIDED AND LOCATED IN ACCORDANCE WITH NFPA 10. THE MAXIMUM TRAVEL DISTANCE TO THE NEAREST FIRE EXTINGUISHER FROM ANY POINT IN THE BUILDING SHALL NOT EXCEED 75 FEET.
10. PROVIDE STC 45 GYPSUM BOARD WALL ABOVE CEILING AND BELOW RAISED ACCESS FLOORING AT ALL FOLDING PARTITIONS FOR CONTINUITY OF ACCOUSTICAL SEPARATION.
11. PROVIDE MOISTURE RESISTANT GYPSUM BOARD ABOVE CEILING ON ALL WALLS THAT CONTINUE TO ROOF DECK, TYPICAL U.N.O.
12. PROVIDE SOUND SEALANT AT ALL JOINTS, INTERSECTIONS, OPENINGS, AND PENETRATIONS IN SOUND RATED WALLS.
13. REFER TO 500 SERIES SHEETS FOR PARTITION PLAN/SECTION DETAILS
14. REFER TO A-503 FOR RAISED ACCESS FLOORING DETAILS
15. REFER TO A-508 FOR WALL PENETRATION DETAILS
16. PROVIDE IMPACT RESISTANT GYP. BOARD ON WALLS UP TO 8' A.F.F. IN ALL HIGH TRAFFIC AREAS, TO INCLUDE LOBBY, BREAK ROOM, AND CORRIDORS WITHOUT CMU VENEER FINISH.

KEYNOTES

08.09	OPERABLE PANEL PARTITION, TYP.
08.10	OPERABLE PARTITION TRACK IN CEILING, TYP.
23.01	AIR HANDLING UNIT, SEE MECHANICAL

KEYPLAN

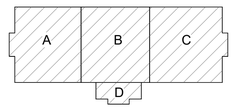

0 8' - 0" 16' - 0" 32' - 0"

SCALE: 1/16" = 1' - 0"

N

APPR	DATE	SYM	DESCRIPTION

NAVFAC

PRELIMINARY FOR REFERENCE ONLY

SEAL

RQ W.M. Jordan COMPANY – A JOINT VENTURE –

Michael Baker INTERNATIONAL

100 AIRSIDE DRIVE
MOON TOWNSHIP, PA 15108 A/E INFO

APPROVED

FOR COMMANDER NAVFAC

ACTIVITY
MARINE CORPS BASE CAMP LEJEUNE

SATISFACTORY TO DATE

DES XXX	DRW XXX	CHK XXX

PM

BRANCH MANAGER

CHIEF ENG/ARCH

FIRE PROTECTION

DEPARTMENT OF THE NAVY
NAVAL FACILITIES ENGINEERING COMMAND
ROICC FLORENCE CAMP LEJEUNE
MCB CAMP LEJEUNE

NAVAL FACILITIES ENGINEERING COMMAND – MID-ATLANTIC
JACKSONVILLE, NC

JACKSONVILLE, NC
P1338F II MEF SIMULATION/TRAINING CENTER REPLACEMENT
COMPREHENSIVE - FLOOR PLAN

SCALE:	AS NOTED
EPROJECT NO.:	1590892
CONSTR. CONTR. NO.	N40085-20-C-0059
NAVFAC DRAWING NO.	
SHEET	XX OF XX

A-110

DP2 SUBMISSION – P1338 BUILDING - PRE-FINAL SUBMISSION

PLOTTED: 6/10/2021 12:46:00 AM

FILE NAME: BIM 360://HF PACKAGE 3/P1338 MEF SIM CTR-1590892-A.rvt

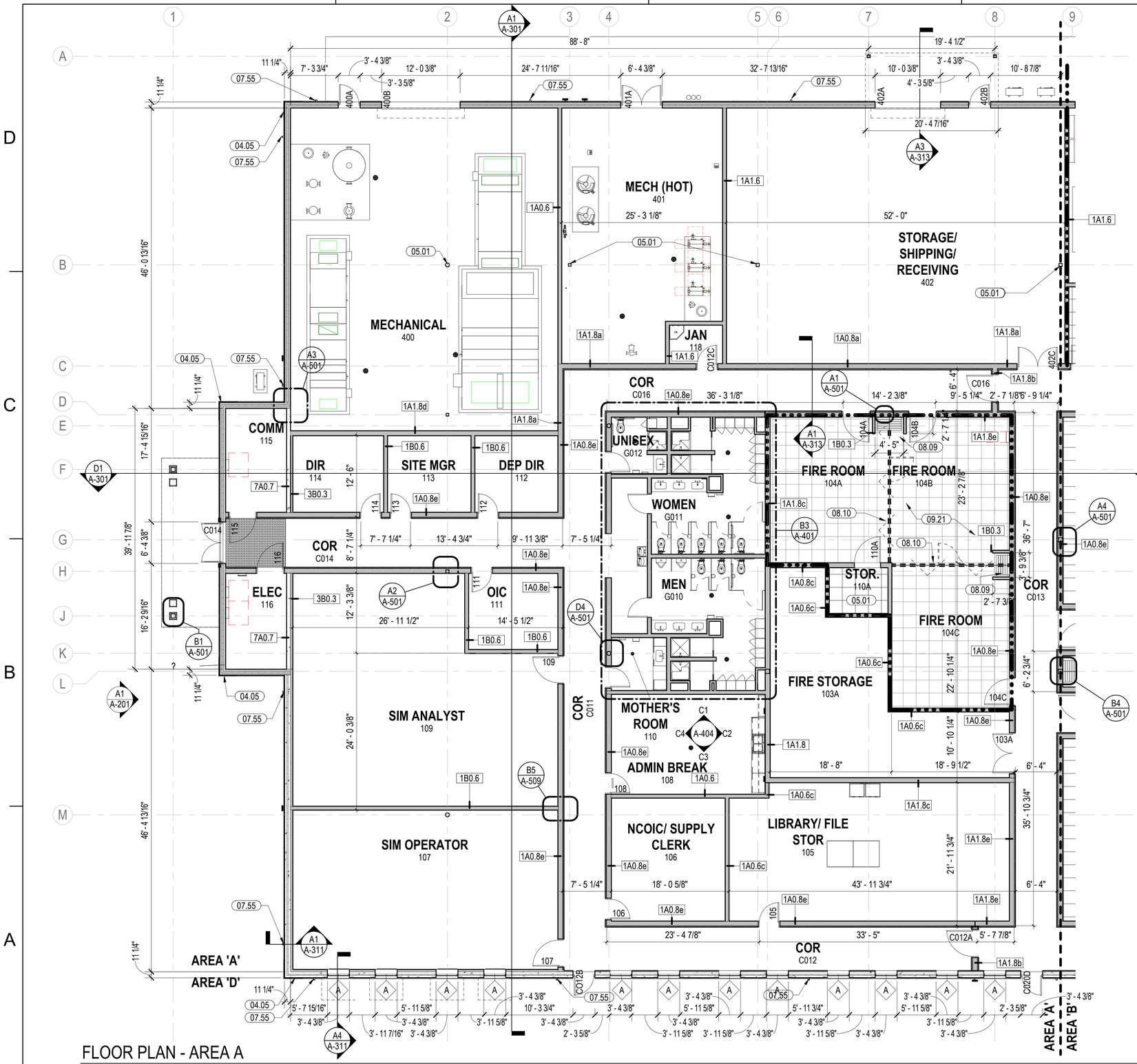

NOTES - FLOOR PLANS

1. REFER TO SHEET A-001 FOR ARCHITECTURAL GENERAL NOTES, & ANNOTATION LEGEND
2. REFER TO A-600 SERIES FOR PARTITION TYPES
3. REFER TO ENLARGED PLANS AND INTERIOR ELEVATIONS FOR ADDITIONAL INFORMATION
4. REFER TO MECHANICAL, ELECTRICAL, AND TELECOMM SHEETS FOR EQUIPMENT LOCATIONS AND REQUIREMENTS.
5. ALL EXTERIOR DIMENSIONS ARE TO EXTERIOR FACE OF STRUCTURAL ELEMENTS U.N.O., EXTERIOR OPENINGS ARE ROUGH OPENING DIMENSIONS, SEE DOOR AND WINDOW SCHEDULES FOR ACTUAL OPENING SIZES. - TYPICAL UNLESS NOTED OTHERWISE
6. ALL INTERIOR DIMENSIONS ARE TO FACE OF STUDS OR CENTER OF OPENINGS UNLESS NOTED OTHERWISE - ALL NON-DIMENSIONED DOORS SHALL BE OFFSET 4" FROM THE ADJACENT WALL TO THE HINGE SIDE OF THE DOOR OPENING. - TYPICAL U.N.O.
7. DIMENSIONS MARKED AS "CLEAR" DICTATES THE CLEAR DIMENSION FROM FINISH TO FINISH
8. WHERE FIRE RATED PARTITIONS INTERSECT WITH LESSER RATED PARTITIONS OR NON-RATED PARTITIONS, THE HIGHER RATED PARTITION IS TO CONTINUE THROUGH THE INTERSECTION TO MAINTAIN THE HIGHER RATING
9. FIRE EXTINGUISHERS SHALL BE PROVIDED AND LOCATED IN ACCORDANCE WITH NFPA 10. THE MAXIMUM TRAVEL DISTANCE TO THE NEAREST FIRE EXTINGUISHER FROM ANY POINT IN THE BUILDING SHALL NOT EXCEED 75 FEET.
10. PROVIDE STC 45 GYPSUM BOARD WALL ABOVE CEILING AND BELOW RAISED ACCESS FLOORING AT ALL FOLDING PARTITIONS FOR CONTINUITY OF ACCOUSTICAL SEPARATION.
11. PROVIDE MOISTURE RESISTANT GYPSUM BOARD ABOVE CEILING ON ALL WALLS THAT CONTINUE TO ROOF DECK, TYPICAL U.N.O.
12. PROVIDE SOUND SEALANT AT ALL JOINTS, INTERSECTIONS, OPENINGS, AND PENETRATIONS IN SOUND RATED WALLS.
13. REFER TO 500 SERIES SHEETS FOR PARTITION PLAN/SECTION DETAILS
14. REFER TO A-503 FOR RAISED ACCESS FLOORING DETAILS
15. REFER TO A-508 FOR WALL PENETRATION DETAILS
16. PROVIDE IMPACT RESISTANT GYP. BOARD ON WALLS UP TO 8' A.F.F. IN ALL HIGH TRAFFIC AREAS, TO INCLUDE LOBBY, BREAK ROOM, AND CORRIDORS WITHOUT CMU VENEER FINISH.

KEYNOTES

04.05	BRICK QUOIN - SEE DETAIL
05.01	STRUCTURAL STEEL OR COLUMN, SEE S-SERIES
07.55	PREFINISHED METAL DOWNSPOUT - 6"X4" MIN SIZE, ATTACH TO BUILDING STRUCTURE - DRAIN TO STORM SEWER
08.08	10' OVERHEAD COILING DOORS - SEE DOOR SCHEDULE AND DETAIL A2/A-612
08.09	OPERABLE PANEL PARTITION, TYP.
08.10	OPERABLE PARTITION TRACK IN CEILING, TYP.
09.21	24"x 24"x 24" RAISED ACCESS FLOORING W/ INTERCHANGEABLE SQUARE MODULE PANELS

PLAN LEGEND

- PATTERN INDICATES LOCATIONS OF 24" RAISED ACCESS FLOORING OVER RECESSED SLAB
- RECESSED ENTRANCE MAT
- SECURE WALL INDICATION

KEYPLAN

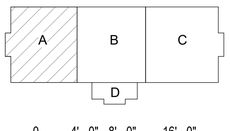

0 4' - 0" 8' - 0" 16' - 0"

SCALE: 1/8" = 1' - 0"

N

APPR	DATE	SYM	DESCRIPTION

NAVFAC

PRELIMINARY FOR REFERENCE ONLY

SEAL

WNM Jordan COMPANY – A JOINT VENTURE –

IRQ

Michael Baker INTERNATIONAL

100 AIRSIDE DRIVE
MOON TOWNSHIP, PA 15108 A/E INFO

APPROVED

FOR COMMANDER NAVFAC

ACTIVITY
MARINE CORPS BASE
CAMP LEJEUNE

SATISFACTORY TO DATE

DES XXX	DRW XXX	CHK XXX

PM

BRANCH MANAGER

CHIEF ENG/ARCH

FIRE PROTECTION

DEPARTMENT OF THE NAVY
NAVAL FACILITIES ENGINEERING COMMAND
ROICC FLORENCE CAMP LEJEUNE

NAVAL FACILITIES ENGINEERING COMMAND ~ MID-ATLANTIC
JACKSONVILLE, NC

MCB CAMP LEJEUNE
JACKSONVILLE, NC

P1338F II MEF SIMULATION/TRAINING CENTER REPLACEMENT

FLOOR PLAN - AREA A

SCALE: AS NOTED

EPROJECT NO.: 1590892

CONSTR. CONTR. NO.
N40085-20-C-0059

NAVFAC DRAWING NO.

SHEET OF

A-111

DP2 SUBMISSION – P1338 BUILDING - PRE-FINAL SUBMISSION

PLOTTED: 6/10/2021 12:46:06 AM

FILE NAME: BIM 360://HF PACKAGE 3/P1338 MEF SIM CTR-1590892-A.rvt

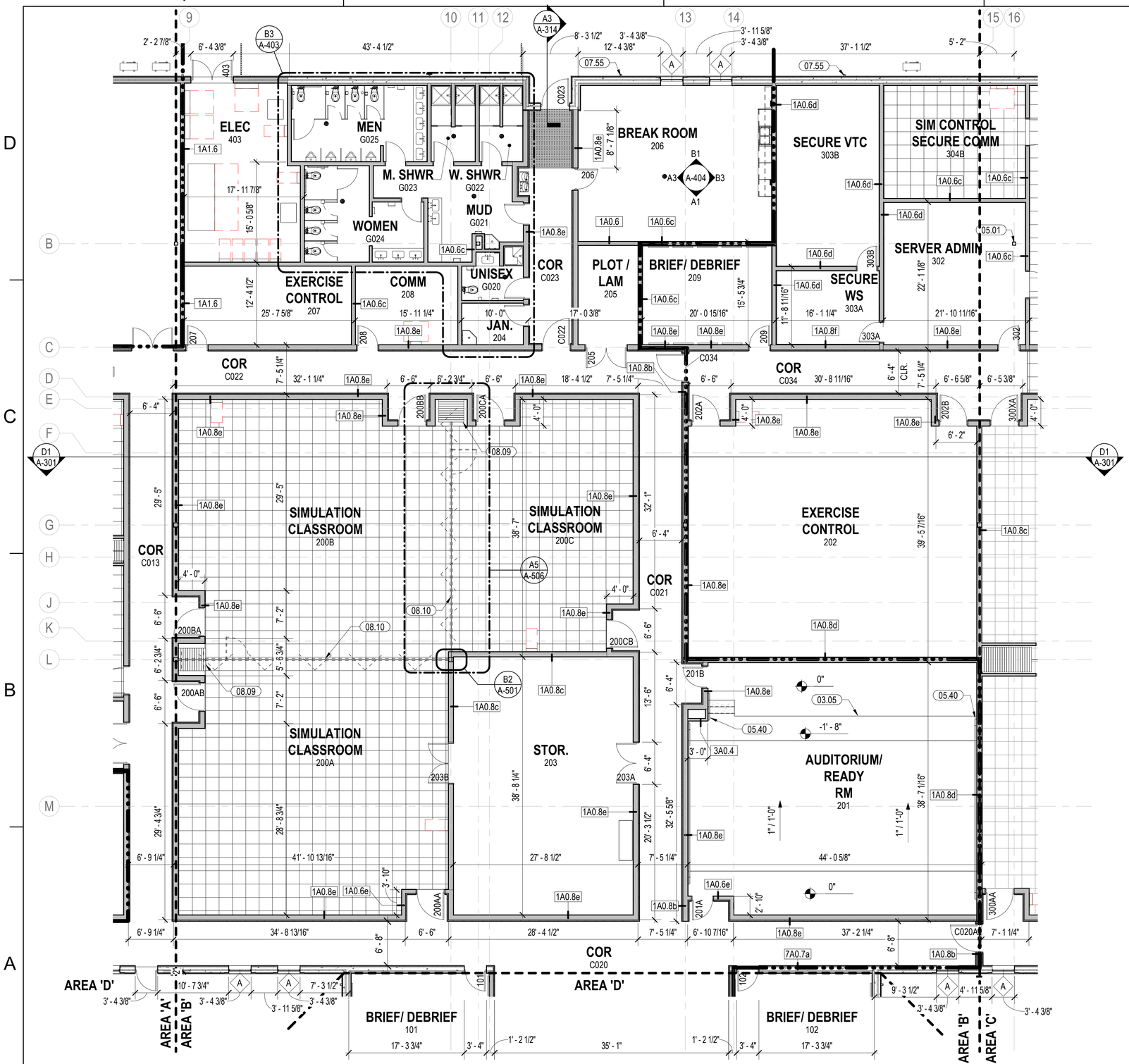

FLOOR PLAN - AREA B

SCALE: 1/8" = 1'-0"

NOTES - FLOOR PLANS

1 REFER TO SHEET A-001 FOR ARCHITECTURAL GENERAL NOTES, & ANNOTATION LEGEND
2 REFER TO A-600 SERIES FOR PARTITION TYPES
3 REFER TO ENLARGED PLANS AND INTERIOR ELEVATIONS FOR ADDITIONAL INFORMATION
4 REFER TO MECHANICAL, ELECTRICAL, AND TELECOMM SHEETS FOR EQUIPMENT LOCATIONS AND REQUIREMENTS.
5 ALL EXTERIOR DIMENSIONS ARE TO EXTERIOR FACE OF STRUCTURAL ELEMENTS U.N.O., EXTERIOR OPENINGS ARE ROUGH OPENING DIMENSIONS, SEE DOOR AND WINDOW SCHEDULES FOR ACTUAL OPENING SIZES. - TYPICAL UNLESS NOTED OTHERWISE
6 ALL INTERIOR DIMENSIONS ARE TO FACE OF STUDS OR CENTER OF OPENINGS UNLESS NOTED OTHERWISE - ALL NON-DIMENSIONED DOORS SHALL BE OFFSET 4" FROM THE ADJACENT WALL TO THE HINGE SIDE OF THE DOOR OPENING. - TYPICAL U.N.O.
7 DIMENSIONS MARKED AS "CLEAR" DICTATES THE CLEAR DIMENSION FROM FINISH TO FINISH
8 WHERE FIRE RATED PARTITIONS INTERSECT WITH LESSER RATED PARTITIONS OR NON-RATED PARTITIONS, THE HIGHER RATED PARTITION IS TO CONTINUE THROUGH THE INTERSECTION TO MAINTAIN THE HIGHER RATING
9 FIRE EXTINGUISHERS SHALL BE PROVIDED AND LOCATED IN ACCORDANCE WITH NFPA 10. THE MAXIMUM TRAVEL DISTANCE TO THE NEAREST FIRE EXTINGUISHER FROM ANY POINT IN THE BUILDING SHALL NOT EXCEED 75 FEET.
10 PROVIDE STC 45 GYPSUM BOARD WALL ABOVE CEILING AND BELOW RAISED ACCESS FLOORING AT ALL FOLDING PARTITIONS FOR CONTINUITY OF ACCOUSTICAL SEPARATION.
11 PROVIDE MOISTURE RESISTANT GYPSUM BOARD ABOVE CEILING ON ALL WALLS THAT CONTINUE TO ROOF DECK, TYPICAL U.N.O.
12 PROVIDE SOUND SEALANT AT ALL JOINTS, INTERSECTIONS, OPENINGS, AND PENETRATIONS IN SOUND RATED WALLS.
13 REFER TO 500 SERIES SHEETS FOR PARTITION PLAN/SECTION DETAILS
14 REFER TO A-503 FOR RAISED ACCESS FLOORING DETAILS
15 REFER TO A-508 FOR WALL PENETRATION DETAILS
16 PROVIDE IMPACT RESISTANT GYP. BOARD ON WALLS UP TO 8' A.F.F. IN ALL HIGH TRAFFIC AREAS, TO INCLUDE LOBBY, BREAK ROOM, AND CORRIDORS WITHOUT CMU VENEER FINISH.

KEYNOTES

03.05	CONCRETE PLATFORM EDGE
05.01	STRUCTURAL STEEL OR COLUMN, SEE S-SERIES
05.40	36" H. WALL MOUNTED HANDRAIL
07.55	PREFINISHED METAL DOWNSPOUT - 6"X4" MIN SIZE, ATTACH TO BUILDING STRUCTURE - DRAIN TO STORM SEWER
08.09	OPERABLE PANEL PARTITION, TYP.
08.10	OPERABLE PARTITION TRACK IN CEILING, TYP.

PLAN LEGEND

PATTERN INDICATES LOCATIONS OF 24" RAISED ACCESS FLOORING OVER RECESSED SLAB

RECESSED ENTRANCE MAT

SECURE WALL INDICATION

KEYPLAN

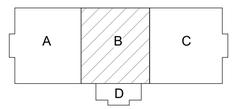

0 4' - 0" 8' - 0" 16' - 0"

SCALE: 1/8" = 1' - 0"

N

APPR | DATE | DESCRIPTION | SYM

NAVFAC

PRELIMINARY FOR REFERENCE ONLY

SEAL

IRQ W.M. Jordan COMPANY – A JOINT VENTURE –

Michael Baker INTERNATIONAL
100 AIRSIDE DRIVE
MOON TOWNSHIP, PA 15108
A/E INFO

APPROVED

FOR COMMANDER NAVFAC

ACTIVITY
MARINE CORPS BASE
CAMP LEJEUNE

SATISFACTORY TO DATE

DES XXX | DRW XXX | CHK XXX

PM

BRANCH MANAGER

CHIEF ENG/ARCH

FIRE PROTECTION

NAVAL FACILITIES ENGINEERING COMMAND ~ MID-ATLANTIC
JACKSONVILLE, NC

DEPARTMENT OF THE NAVY
NAVAL FACILITIES ENGINEERING COMMAND ~ MID-ATLANTIC
ROICC FLORENCE CAMP LEJEUNE
MCB CAMP LEJEUNE

JACKSONVILLE, NC
P1338F II MEF SIMULATION/TRAINING CENTER REPLACEMENT
FLOOR PLAN - AREA B

SCALE: AS NOTED
EPROJECT NO.: 1590892
CONSTR. CONTR. NO.
N40085-20-C-0059
NAVFAC DRAWING NO.
SHEET OF

A-112

DP2 SUBMISSION – P1338 BUILDING - PRE-FINAL SUBMISSION

PLOTTED: 6/10/2021 12:46:11 AM

FILE NAME: BIM 360://HF PACKAGE 3/P1338 MEF SIM CTR-1590892-A.rvt

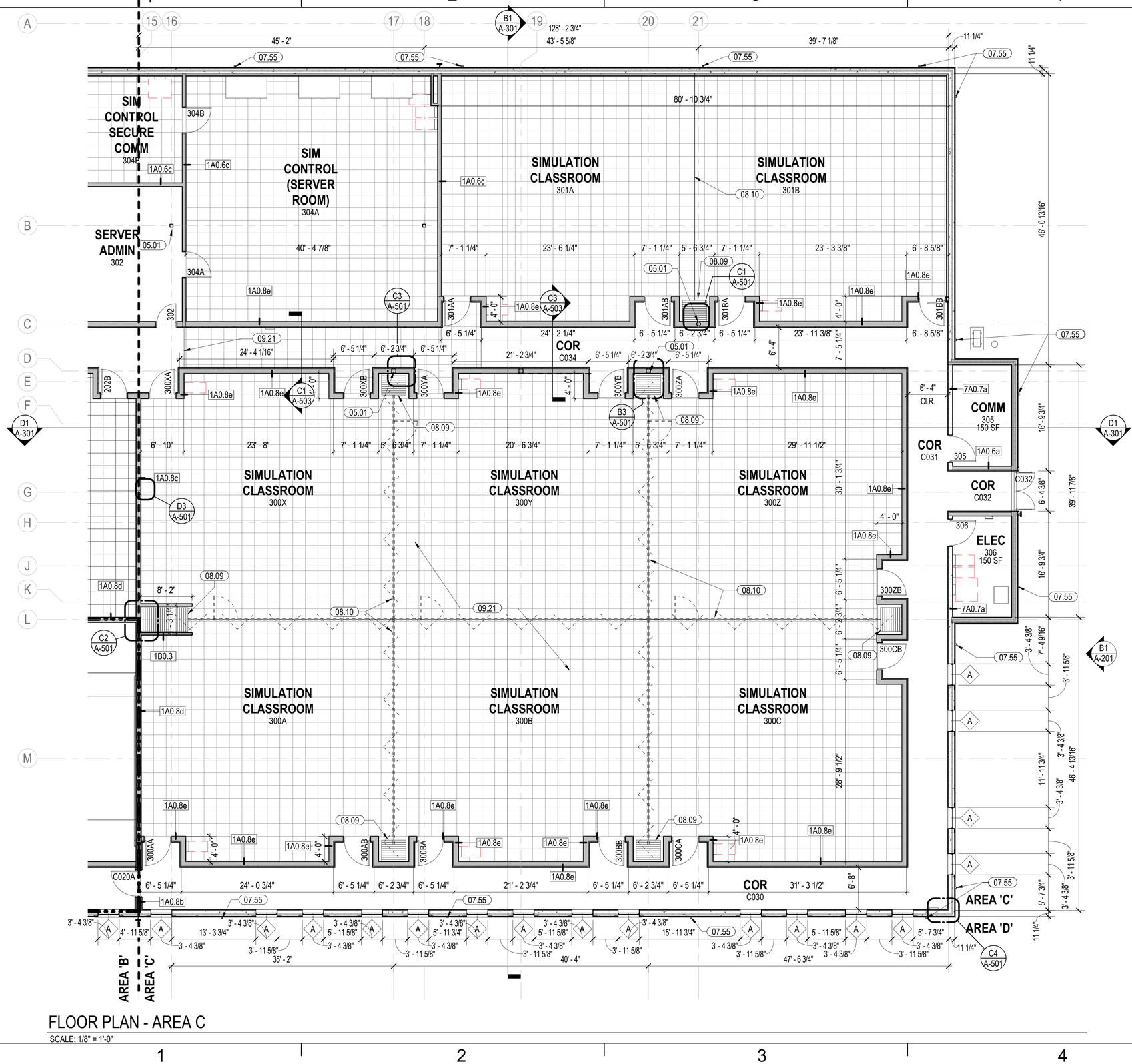

NOTES - FLOOR PLANS

1. REFER TO SHEET A-001 FOR ARCHITECTURAL GENERAL NOTES, & ANNOTATION LEGEND
2. REFER TO A-600 SERIES FOR PARTITION TYPES
3. REFER TO ENLARGED PLANS AND INTERIOR ELEVATIONS FOR ADDITIONAL INFORMATION
4. REFER TO MECHANICAL, ELECTRICAL, AND TELECOMM SHEETS FOR EQUIPMENT LOCATIONS AND REQUIREMENTS.
5. ALL EXTERIOR DIMENSIONS ARE TO EXTERIOR FACE OF STRUCTURAL ELEMENTS U.N.O., EXTERIOR OPENINGS ARE ROUGH OPENING DIMENSIONS, SEE DOOR AND WINDOW SCHEDULES FOR ACTUAL OPENING SIZES. - TYPICAL UNLESS NOTED OTHERWISE
6. ALL INTERIOR DIMENSIONS ARE TO FACE OF STUDS OR CENTER OF OPENINGS UNLESS NOTED OTHERWISE - ALL NON-DIMENSIONED DOORS SHALL BE OFFSET 4" FROM THE ADJACENT WALL TO THE HINGE SIDE OF THE DOOR OPENING. - TYPICAL U.N.O.
7. DIMENSIONS MARKED AS "CLEAR" DICTATES THE CLEAR DIMENSION FROM FINISH TO FINISH
8. WHERE FIRE RATED PARTITIONS INTERSECT WITH LESSER RATED PARTITIONS OR NON-RATED PARTITIONS, THE HIGHER RATED PARTITION IS TO CONTINUE THROUGH THE INTERSECTION TO MAINTAIN THE HIGHER RATING
9. FIRE EXTINGUISHERS SHALL BE PROVIDED AND LOCATED IN ACCORDANCE WITH NFPA 10. THE MAXIMUM TRAVEL DISTANCE TO THE NEAREST FIRE EXTINGUISHER FROM ANY POINT IN THE BUILDING SHALL NOT EXCEED 75 FEET.
10. PROVIDE STC 45 GYPSUM BOARD WALL ABOVE CEILING AND BELOW RAISED ACCESS FLOORING AT ALL FOLDING PARTITIONS FOR CONTINUITY OF ACCOUSTICAL SEPARATION.
11. PROVIDE MOISTURE RESISTANT GYPSUM BOARD ABOVE CEILING ON ALL WALLS THAT CONTINUE TO ROOF DECK, TYPICAL U.N.O.
12. PROVIDE SOUND SEALANT AT ALL JOINTS, INTERSECTIONS, OPENINGS, AND PENETRATIONS IN SOUND RATED WALLS.
13. REFER TO 500 SERIES SHEETS FOR PARTITION PLAN/SECTION DETAILS
14. REFER TO A-503 FOR RAISED ACCESS FLOORING DETAILS
15. REFER TO A-508 FOR WALL PENETRATION DETAILS
16. PROVIDE IMPACT RESISTANT GYP. BOARD ON WALLS UP TO 8' A.F.F. IN ALL HIGH TRAFFIC AREAS, TO INCLUDE LOBBY, BREAK ROOM, AND CORRIDORS WITHOUT CMU VENEER FINISH.

KEYNOTES

05.01	STRUCTURAL STEEL OR COLUMN, SEE S-SERIES
07.55	PREFINISHED METAL DOWNSPOUT - 6"X4" MIN SIZE, ATTACH TO BUILDING STRUCTURE - DRAIN TO STORM SEWER
08.09	OPERABLE PANEL PARTITION, TYP.
08.10	OPERABLE PARTITION TRACK IN CEILING, TYP.
09.21	24"x 24"x 24" RAISED ACCESS FLOORING W/ INTERCHANGEABLE SQUARE MODULE PANELS

PLAN LEGEND

- PATTERN INDICATES LOCATIONS OF 24" RAISED ACCESS FLOORING OVER RECESSED SLAB
- RECESSED ENTRANCE MAT
- SECURE WALL INDICATION

KEYPLAN

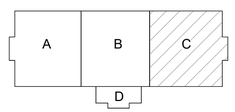

0 4' - 0" 8' - 0" 16' - 0"

SCALE: 1/8" = 1' - 0"

N

FLOOR PLAN - AREA C

SCALE: 1/8" = 1'-0"

APPR | DATE | SYM | DESCRIPTION

NAVFAC

PRELIMINARY FOR REFERENCE ONLY

SEAL

W.M. Jordan COMPANY – A JOINT VENTURE –

Michael Baker INTERNATIONAL

100 AIRSIDE DRIVE
MOON TOWNSHIP, PA 15108 A/E INFO

APPROVED

FOR COMMANDER NAVFAC

ACTIVITY
MARINE CORPS BASE CAMP LEJEUNE

SATISFACTORY TO DATE

DES Designer DRW Author CHK Checker

PM

BRANCH MANAGER

CHIEF ENG/ARCH

FIRE PROTECTION

NAVAL FACILITIES ENGINEERING COMMAND – MID-ATLANTIC
JACKSONVILLE, NC

DEPARTMENT OF THE NAVY
NAVAL FACILITIES ENGINEERING COMMAND
ROICC FLORENCE CAMP LEJEUNE
MCB CAMP LEJEUNE
JACKSONVILLE, NC

P1338F II MEF SIMULATION/TRAINING CENTER REPLACEMENT

FLOOR PLAN - AREA C

SCALE: AS NOTED

EPROJECT NO.: 1590892

CONSTR. CONTR. NO.
N40085-20-C-0059

NAVFAC DRAWING NO.

SHEET OF

A-113

DP2 SUBMISSION – P1338 BUILDING - PRE-FINAL SUBMISSION

PLOTTED: 6/10/2021 12:46:17 AM

FILE NAME: BIM 360://HF PACKAGE 3/P1338 MEF SIM CTR-1590892-A.rvt

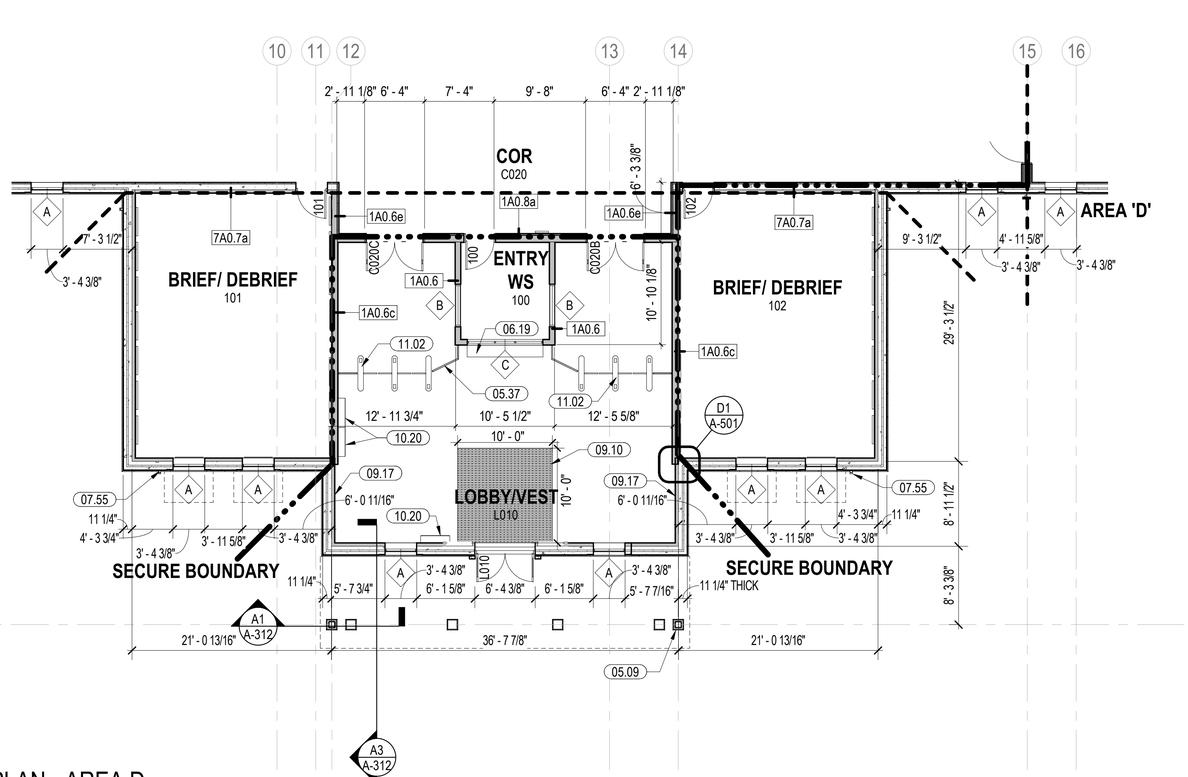

FLOOR PLAN - AREA D

SCALE: 1/8" = 1'-0"

NOTES - FLOOR PLANS

1. REFER TO SHEET A-001 FOR ARCHITECTURAL GENERAL NOTES, & ANNOTATION LEGEND
2. REFER TO A-600 SERIES FOR PARTITION TYPES
3. REFER TO ENLARGED PLANS AND INTERIOR ELEVATIONS FOR ADDITIONAL INFORMATION
4. REFER TO MECHANICAL, ELECTRICAL, AND TELECOMM SHEETS FOR EQUIPMENT LOCATIONS AND REQUIREMENTS.
5. ALL EXTERIOR DIMENSIONS ARE TO EXTERIOR FACE OF STRUCTURAL ELEMENTS U.N.O., EXTERIOR OPENINGS ARE ROUGH OPENING DIMENSIONS, SEE DOOR AND WINDOW SCHEDULES FOR ACTUAL OPENING SIZES. - TYPICAL UNLESS NOTED OTHERWISE
6. ALL INTERIOR DIMENSIONS ARE TO FACE OF STUDS OR CENTER OF OPENINGS UNLESS NOTED OTHERWISE - ALL NON-DIMENSIONED DOORS SHALL BE OFFSET 4" FROM THE ADJACENT WALL TO THE HINGE SIDE OF THE DOOR OPENING. - TYPICAL U.N.O.
7. DIMENSIONS MARKED AS "CLEAR" DICTATES THE CLEAR DIMENSION FROM FINISH TO FINISH
8. WHERE FIRE RATED PARTITIONS INTERSECT WITH LESSER RATED PARTITIONS OR NON-RATED PARTITIONS, THE HIGHER RATED PARTITION IS TO CONTINUE THROUGH THE INTERSECTION TO MAINTAIN THE HIGHER RATING
9. FIRE EXTINGUISHERS SHALL BE PROVIDED AND LOCATED IN ACCORDANCE WITH NFPA 10. THE MAXIMUM TRAVEL DISTANCE TO THE NEAREST FIRE EXTINGUISHER FROM ANY POINT IN THE BUILDING SHALL NOT EXCEED 75 FEET.
10. PROVIDE STC 45 GYPSUM BOARD WALL ABOVE CEILING AND BELOW RAISED ACCESS FLOORING AT ALL FOLDING PARTITIONS FOR CONTINUITY OF ACCOUSTICAL SEPARATION.
11. PROVIDE MOISTURE RESISTANT GYPSUM BOARD ABOVE CEILING ON ALL WALLS THAT CONTINUE TO ROOF DECK, TYPICAL U.N.O.
12. PROVIDE SOUND SEALANT AT ALL JOINTS, INTERSECTIONS, OPENINGS, AND PENETRATIONS IN SOUND RATED WALLS.
13. REFER TO 500 SERIES SHEETS FOR PARTITION PLAN/SECTION DETAILS
14. REFER TO A-503 FOR RAISED ACCESS FLOORING DETAILS
15. REFER TO A-508 FOR WALL PENETRATION DETAILS
16. PROVIDE IMPACT RESISTANT GYP. BOARD ON WALLS UP TO 8' A.F.F. IN ALL HIGH TRAFFIC AREAS, TO INCLUDE LOBBY, BREAK ROOM, AND CORRIDORS WITHOUT CMU VENEER FINISH.

KEYNOTES

05.09	STRUCTURAL STEEL OR COLUMN W/ DECORATIVE SURROUND, SEE S-SERIES FOR COLUMN AND ARCH FOR SURROUND
05.37	42" H. GUARDRAIL
06.19	SOLID SURFACE COUNTERTOP
07.55	PREFINISHED METAL DOWNSPOUT - 6"X4" MIN SIZE, ATTACH TO BUILDING STRUCTURE - DRAIN TO STORM SEWER
09.10	RECESSED WALK-OFF MAT
09.17	PROVIDE LEVEL 5 FINISH FOR GYP. BD., COORDINATE WITH WC1 AND WC2 WALLCOVERING, SEE INTERIORS
10.20	8" DEEP WALL-MOUNTED CELL PHONE LOCKERS (200 REQUIRED)
11.02	ACCESS CONTROL SWING ARM BARRIER, COORDINATE WITH ELECTRICAL AND DOOR HARDWARE

PLAN LEGEND

- PATTERN INDICATES LOCATIONS OF 24" RAISED ACCESS FLOORING OVER RECESSED SLAB
- RECESSED ENTRANCE MAT
- SECURE WALL INDICATION

KEYPLAN

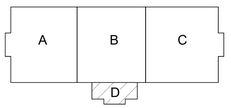

0 4' - 0" 8' - 0" 16' - 0"

SCALE: 1/8" = 1' - 0"

STM	DESCRIPTION	DATE	APPR

SEAL

PRELIMINARY FOR REFERENCE ONLY

IRQ WM Jordan COMPANY ~ A JOINT VENTURE ~

Michael Baker INTERNATIONAL

100 AIRSIDE DRIVE
MOON TOWNSHIP, PA 15108 A/E INFO

APPROVED

FOR COMMANDER NAVFAC

ACTIVITY
MARINE CORPS BASE CAMP LEJEUNE

SATISFACTORY TO DATE

DES Designer DRW Author CHK Checker

PM

BRANCH MANAGER

CHIEF ENG/ARCH

FIRE PROTECTION

DEPARTMENT OF THE NAVY
NAVAL FACILITIES ENGINEERING COMMAND ~ MID-ATLANTIC
ROICC FLORENCE CAMP LEJEUNE
NAVAL FACILITIES ENGINEERING COMMAND ~ MID-ATLANTIC JACKSONVILLE, NC
MCB CAMP LEJEUNE

JACKSONVILLE, NC
P1338F II MEF SIMULATION/TRAINING CENTER REPLACEMENT
FLOOR PLAN - AREA D

SCALE: AS NOTED

EPROJECT NO.: 1590892

CONSTR. CONTR. NO.
N40085-20-C-0059

NAVFAC DRAWING NO.

SHEET OF

A-114

DP2 SUBMISSION – P1338 BUILDING - PRE-FINAL SUBMISSION

PLOTTED: 6/10/2021 12:46:20 AM

FILE NAME: BIM 360://HF PACKAGE 3/P1338 MEF SIM CTR-1590892-A.rvt



COMPREHENSIVE - REFLECTED CEILING PLAN

SCALE: 1/16" = 1'-0"

RCP LEGEND

NOTE: NOT ALL ELEMENTS ARE SHOWN ON COMPREHENSIVE REFLECTED CEILING PLAN. SEE ENLARGED CEILING PLANS FOR COMPLETE INFORMATION

- 2' x 2' SECOND LOOK ACOUSTICAL CEILING PANEL
- PAINTED GYPSUM WALLBOARD CEILING
- MECHANICAL DIFFUSER SEE M-SERIES
- LIGHTING FIXTURES SEE E-SERIES
- ILLUMINATED EXIT SIGN SEE E-SERIES
- SPRINKLER HEAD SEE F-SERIES
- AUDIO/VISUAL FIXTURES SEE T-SERIES

NOTES - RCP Comprehensive

1. ALL ELEVATIONS ARE ABOVE FINISHED FLOOR.
2. REFER TO ELECTRICAL DRAWINGS FOR POWER AND LIGHTING INFORMATION
3. REFER TO MECHANICAL DRAWINGS FOR VENTILATION AND HEATING VENTILATION AND AIR CONDITIONING INFORMATION
4. ALL CEILING GRIDS TO BE CENTERED IN ROOMS - TYPICAL UNLESS NOTED OR DIMENSIONED OTHERWISE
5. LIGHT FIXTURES IN PLASTER CEILINGS SHALL BE CENTERED IN ROOMS - TYPICAL UNLESS NOTED OTHERWISE
6. ALL EXPOSED DUCTWORK, PIPES, CONDUIT AND STRUCTURE SHALL BE CLEAN AND FREE OF ANY MANUFACTURER OR CONSTRUCTION DEFECTS
7. THE SUSPENDED CEILING SYSTEM, MECHANICAL DUCTWORK AND LIGHTING FIXTURES SHALL BE POSITIVELY ATTACHED TO THE STRUCTURE ABOVE
8. CONTRACTOR TO COORDINATE SIZE AND LOCATIONS REQUIRED FOR ACCESS PANELS AT ALL VAV BOXES, PIPING CONTROL VALVES, SWITCHES, ETC
9. COMPLETELY FILL VOIDS AROUND ALL CEILING PENETRATIONS WITH SOUND BATT INSULATION AND ACOUSTICAL SEALANT TO AVOID SOUND TRANSFER
10. ALL SPRINKLER HEADS IN TILE CEILINGS TO BE CENTERED WITHIN TILE, ALL SPRINKLER HEADS IN GYPSUM BOARD CEILINGS ARE TO BE CENTERED IN ROOMS OR SPACES AND CORRDINATED WITH CEILING ELEMENTS.
11. REFER TO A-504 FOR CEILING DETAILS

KEYPLAN

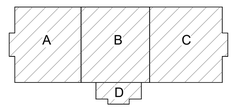

0 8' - 0" 16' - 0" 32' - 0"

SCALE: 1/16" = 1' - 0"

N

APPR | DATE | SYM | DESCRIPTION

SEAL

WNJ Jordan COMPANY – A JOINT VENTURE –

Michael Baker INTERNATIONAL
100 AIRSIDE DRIVE
MOON TOWNSHIP, PA 15108
A/E INFO

APPROVED

FOR COMMANDER NAVFAC

ACTIVITY
MARINE CORPS BASE
CAMP LEJEUNE

SATISFACTORY TO DATE

DES XXX | DRW XXX | CHK XXX

PM

BRANCH MANAGER

CHIEF ENG/ARCH

FIRE PROTECTION

DEPARTMENT OF THE NAVY
NAVAL FACILITIES ENGINEERING COMMAND ~ MID-ATLANTIC
ROICC FLORENCE CAMP LEJEUNE
MCB CAMP LEJEUNE
JACKSONVILLE, NC

JACKSONVILLE, NC
P1338F II MEF SIMULATION/TRAINING CENTER
REPLACEMENT
COMPREHENSIVE - REFLECTED CEILING PLAN

SCALE: AS NOTED
EPROJECT NO.: 1590892
CONSTR. CONTR. NO.
N40085-20-C-0059
NAVFAC DRAWING NO.
SHEET OF

AR110

DP2 SUBMISSION – P1338 BUILDING - PRE-FINAL SUBMISSION

PLOTTED: 6/10/2021 12:48:51 AM

FILE NAME: BIM 360://HF PACKAGE 3/P1338 MEF SIM CTR-1590892-A.rvt



REFLECTED CEILING PLAN - AREA A

SCALE: 1/8" = 1'-0"

NOTES - RCP

1. ALL ELEVATIONS ARE ABOVE FINISHED FLOOR.
2. REFER TO ELECTRICAL DRAWINGS FOR POWER AND LIGHTING INFORMATION
3. REFER TO MECHANICAL DRAWINGS FOR VENTILATION AND HEATING VENTILATION AND AIR CONDITIONING INFORMATION
4. ALL CEILING GRIDS TO BE CENTERED IN ROOMS - TYPICAL UNLESS NOTED OR DIMENSIONED OTHERWISE
5. LIGHT FIXTURES IN PLASTER CEILINGS SHALL BE CENTERED IN ROOMS - TYPICAL UNLESS NOTED OTHERWISE
6. ALL EXPOSED DUCTWORK, PIPES, CONDUIT AND STRUCTURE SHALL BE CLEAN AND FREE OF ANY MANUFACTURER OR CONSTRUCTION DEFECTS
7. THE SUSPENDED CEILING SYSTEM, MECHANICAL DUCTWORK AND LIGHTING FIXTURES SHALL BE POSITIVELY ATTACHED TO THE STRUCTURE ABOVE
8. CONTRACTOR TO COORDINATE SIZE AND LOCATIONS REQUIRED FOR ACCESS PANELS AT ALL VAV BOXES, PIPING CONTROL VALVES, SWITCHES, ETC
9. COMPLETELY FILL VOIDS AROUND ALL CEILING PENETRATIONS WITH SOUND BATT INSULATION AND ACOUSTICAL SEALANT TO AVOID SOUND TRANSFER
10. ALL SPRINKLER HEADS IN TILE CEILINGS TO BE CENTERED WITHIN TILE, ALL SPRINKLER HEADS IN GYPSUM BOARD CEILINGS ARE TO BE CENTERED IN ROOMS OR SPACES AND CORRDINATED WITH CEILING ELEMENTS.
11. REFER TO A-504 FOR CEILING DETAILS

KEYNOTES

07.06	PRE-FINISHED METAL EXTERIOR SOFFIT SYSTEM TO MATCH ROOF SYSTEM
07.21	METAL SOFFIT SYSTEM
07.54	PREFINISHED GEORGIAN STYLE PROFILED ROOF GUTTER - 6"X6" MIN SIZE
07.55	PREFINISHED METAL DOWNSPOUT - 6"X4" MIN SIZE, ATTACH TO BUILDING STRUCTURE - DRAIN TO STORM SEWER
08.08	10' OVERHEAD COILING DOORS - SEE DOOR SCHEDULE AND DETAIL A2/A-612
10.24	OPERABLE PARTITION
10.25	ALUMINUM LOUVERED SUNSHADE - ATTACHED TO FRAME

RCP LEGEND

- 2' x 2' ACOUSTICAL CEILING PANEL
- PAINTED GYPSUM WALLBOARD CEILING
- MECHANICAL DIFFUSER SEE M-SERIES
- LIGHTING FIXTURES SEE E-SERIES
- ILLUMINATED EXIT SIGN SEE E-SERIES
- SPRINKLER HEAD SEE F-SERIES
- AUDIO/VISUAL FIXTURES SEE T-SERIES

KEYPLAN

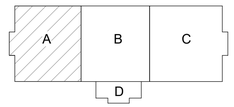

SCALE: 1/8" = 1' - 0"

APPR	DATE	SYM	DESCRIPTION

NAVFAC

PRELIMINARY FOR REFERENCE ONLY

SEAL

IRQ W.M. Jordan COMPANY – A JOINT VENTURE –

Michael Baker INTERNATIONAL
100 AIRSIDE DRIVE
MOON TOWNSHIP, PA 15108
A/E INFO

APPROVED

FOR COMMANDER NAVFAC

ACTIVITY
MARINE CORPS BASE CAMP LEJEUNE

SATISFACTORY TO DATE

DES XXX | DRW XXX | CHK XXX

PM

BRANCH MANAGER

CHIEF ENG/ARCH

FIRE PROTECTION

DEPARTMENT OF THE NAVY
NAVAL FACILITIES ENGINEERING COMMAND ~ MID-ATLANTIC
ROICC FLORENCE CAMP LEJEUNE
MCB CAMP LEJEUNE

NAVAL FACILITIES ENGINEERING COMMAND ~ MID-ATLANTIC
JACKSONVILLE, NC

JACKSONVILLE, NC

P1338F II MEF SIMULATION/TRAINING CENTER REPLACEMENT

REFLECTED CEILING PLAN - AREA A

SCALE: AS NOTED
EPROJECT NO.: 1590892
CONSTR. CONTR. NO. N40085-20-C-0059
NAVFAC DRAWING NO.
SHEET OF

AR111

DP2 SUBMISSION – P1338 BUILDING - PRE-FINAL SUBMISSION

PLOTTED: 6/10/2021 12:48:59 AM

FILE NAME: BIM 360://HF PACKAGE 3/P1338 MEF SIM CTR-1590892-A.rvt



REFLECTED CEILING PLAN - AREA B

SCALE: 1/8" = 1'-0"

NOTES - RCP

1. ALL ELEVATIONS ARE ABOVE FINISHED FLOOR.
2. REFER TO ELECTRICAL DRAWINGS FOR POWER AND LIGHTING INFORMATION
3. REFER TO MECHANICAL DRAWINGS FOR VENTILATION AND HEATING VENTILATION AND AIR CONDITIONING INFORMATION
4. ALL CEILING GRIDS TO BE CENTERED IN ROOMS - TYPICAL UNLESS NOTED OR DIMENSIONED OTHERWISE
5. LIGHT FIXTURES IN PLASTER CEILINGS SHALL BE CENTERED IN ROOMS - TYPICAL UNLESS NOTED OTHERWISE
6. ALL EXPOSED DUCTWORK, PIPES, CONDUIT AND STRUCTURE SHALL BE CLEAN AND FREE OF ANY MANUFACTURER OR CONSTRUCTION DEFECTS
7. THE SUSPENDED CEILING SYSTEM, MECHANICAL DUCTWORK AND LIGHTING FIXTURES SHALL BE POSITIVELY ATTACHED TO THE STRUCTURE ABOVE
8. CONTRACTOR TO COORDINATE SIZE AND LOCATIONS REQUIRED FOR ACCESS PANELS AT ALL VAV BOXES, PIPING CONTROL VALVES, SWITCHES, ETC
9. COMPLETELY FILL VOIDS AROUND ALL CEILING PENETRATIONS WITH SOUND BATT INSULATION AND ACOUSTICAL SEALANT TO AVOID SOUND TRANSFER
10. ALL SPRINKLER HEADS IN TILE CEILINGS TO BE CENTERED WITHIN TILE, ALL SPRINKLER HEADS IN GYPSUM BOARD CEILINGS ARE TO BE CENTERED IN ROOMS OR SPACES AND CORRDINATED WITH CEILING ELEMENTS.
11. REFER TO A-504 FOR CEILING DETAILS

KEYNOTES

07.21	METAL SOFFIT SYSTEM
07.54	PREFINISHED GEORGIAN STYLE PROFILED ROOF GUTTER - 6"X6" MIN SIZE
07.55	PREFINISHED METAL DOWNSPOUT - 6"X4" MIN SIZE, ATTACH TO BUILDING STRUCTURE - DRAIN TO STORM SEWER
10.24	OPERABLE PARTITION
26.02	EXTERIOR WALL LIGHT, PER ELECTRICAL DRAWINGS

RCP LEGEND

- 2' x 2' ACOUSTICAL CEILING PANEL
- PAINTED GYPSUM WALLBOARD CEILING
- MECHANICAL DIFFUSER SEE M-SERIES
- LIGHTING FIXTURES SEE E-SERIES
- ILLUMINATED EXIT SIGN SEE E-SERIES
- SPRINKLER HEAD SEE F-SERIES
- AUDIO/VISUAL FIXTURES SEE T-SERIES

KEYPLAN

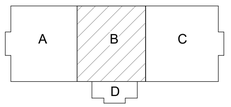

0 4' - 0" 8' - 0" 16' - 0"

SCALE: 1/8" = 1' - 0"

N

APPR	DATE	DESCRIPTION	SYM

NAVFAC

PRELIMINARY FOR REFERENCE ONLY

SEAL

IRQ W.M. Jordan COMPANY ~ A JOINT VENTURE ~

Michael Baker INTERNATIONAL

100 AIRSIDE DRIVE
MOON TOWNSHIP, PA 15108 A/E INFO

APPROVED

FOR COMMANDER NAVFAC

ACTIVITY
MARINE CORPS BASE CAMP LEJEUNE

SATISFACTORY TO DATE

DES XXX	DRW XXX	CHK XXX

PM

BRANCH MANAGER

CHIEF ENG/ARCH

FIRE PROTECTION

NAVAL FACILITIES ENGINEERING COMMAND ~ MID-ATLANTIC
JACKSONVILLE, NC

DEPARTMENT OF THE NAVY
NAVAL FACILITIES ENGINEERING COMMAND
ROICC FLORENCE CAMP LEJEUNE
MCB CAMP LEJEUNE

JACKSONVILLE, NC
P1338F II MEF SIMULATION/TRAINING CENTER REPLACEMENT
REFLECTED CEILING PLAN - AREA B

SCALE:	AS NOTED
EPROJECT NO.:	1590892
CONSTR. CONTR. NO.	N40085-20-C-0059
NAVFAC DRAWING NO.	
SHEET	OF

AR112

DP2 SUBMISSION – P1338 BUILDING - PRE-FINAL SUBMISSION

PLOTTED: 6/10/2021 12:49:07 AM

FILE NAME: BIM 360://HF PACKAGE 3/P1338 MEF SIM CTR-1590892-A.rvt



REFLECTED CEILING PLAN - AREA C

SCALE: 1/8" = 1'-0"

NOTES - RCP

1. ALL ELEVATIONS ARE ABOVE FINISHED FLOOR.
2. REFER TO ELECTRICAL DRAWINGS FOR POWER AND LIGHTING INFORMATION
3. REFER TO MECHANICAL DRAWINGS FOR VENTILATION AND HEATING VENTILATION AND AIR CONDITIONING INFORMATION
4. ALL CEILING GRIDS TO BE CENTERED IN ROOMS - TYPICAL UNLESS NOTED OR DIMENSIONED OTHERWISE
5. LIGHT FIXTURES IN PLASTER CEILINGS SHALL BE CENTERED IN ROOMS - TYPICAL UNLESS NOTED OTHERWISE
6. ALL EXPOSED DUCTWORK, PIPES, CONDUIT AND STRUCTURE SHALL BE CLEAN AND FREE OF ANY MANUFACTURER OR CONSTRUCTION DEFECTS
7. THE SUSPENDED CEILING SYSTEM, MECHANICAL DUCTWORK AND LIGHTING FIXTURES SHALL BE POSITIVELY ATTACHED TO THE STRUCTURE ABOVE
8. CONTRACTOR TO COORDINATE SIZE AND LOCATIONS REQUIRED FOR ACCESS PANELS AT ALL VAV BOXES, PIPING CONTROL VALVES, SWITCHES, ETC
9. COMPLETELY FILL VOIDS AROUND ALL CEILING PENETRATIONS WITH SOUND BATT INSULATION AND ACOUSTICAL SEALANT TO AVOID SOUND TRANSFER
10. ALL SPRINKLER HEADS IN TILE CEILINGS TO BE CENTERED WITHIN TILE, ALL SPRINKLER HEADS IN GYPSUM BOARD CEILINGS ARE TO BE CENTERED IN ROOMS OR SPACES AND CORRDINATED WITH CEILING ELEMENTS.
11. REFER TO A-504 FOR CEILING DETAILS

KEYNOTES

07.21	METAL SOFFIT SYSTEM
07.54	PREFINISHED GEORGIAN STYLE PROFILED ROOF GUTTER - 6"X6" MIN SIZE
07.55	PREFINISHED METAL DOWNSPOUT - 6"X4" MIN SIZE, ATTACH TO BUILDING STRUCTURE - DRAIN TO STORM SEWER
10.24	OPERABLE PARTITION
26.02	EXTERIOR WALL LIGHT, PER ELECTRICAL DRAWINGS

RCP LEGEND

- 2' x 2' ACOUSTICAL CEILING PANEL
- PAINTED GYPSUM WALLBOARD CEILING
- MECHANICAL DIFFUSER SEE M-SERIES
- LIGHTING FIXTURES SEE E-SERIES
- ILLUMINATED EXIT SIGN SEE E-SERIES
- SPRINKLER HEAD SEE F-SERIES
- AUDIO/VISUAL FIXTURES SEE T-SERIES

KEYPLAN

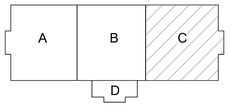

0 4' - 0" 8' - 0" 16' - 0"

SCALE: 1/8" = 1' - 0"

N

APPR	
DATE	
DESCRIPTION	
SYM	

NAVFAC

PRELIMINARY FOR REFERENCE ONLY

SEAL

IRQ W.M. Jordan COMPANY – A JOINT VENTURE –

Michael Baker INTERNATIONAL

100 AIRSIDE DRIVE
MOON TOWNSHIP, PA 15108 A/E INFO

APPROVED

FOR COMMANDER NAVFAC

ACTIVITY
MARINE CORPS BASE
CAMP LEJEUNE

SATISFACTORY TO DATE

DES XXX | DRW XXX | CHK XXX

PM

BRANCH MANAGER

CHIEF ENG/ARCH

FIRE PROTECTION

DEPARTMENT OF THE NAVY
NAVAL FACILITIES ENGINEERING COMMAND
ROICC FLORENCE CAMP LEJEUNE

NAVAL FACILITIES ENGINEERING COMMAND ~ MID-ATLANTIC
JACKSONVILLE, NC

MCB CAMP LEJEUNE
JACKSONVILLE, NC

P1338F II MEF SIMULATION/TRAINING CENTER
REPLACEMENT

REFLECTED CEILING PLAN - AREA C

SCALE: AS NOTED

EPROJECT NO.: 1590892

CONSTR. CONTR. NO.
N40085-20-C-0059

NAVFAC DRAWING NO.

SHEET OF

AR113

DP2 SUBMISSION – P1338 BUILDING - PRE-FINAL SUBMISSION

PLOTTED: 6/10/2021 12:49:14 AM

FILE NAME: BIM 360://HF PACKAGE 3/P1338 MEF SIM CTR-1590892-A.rvt

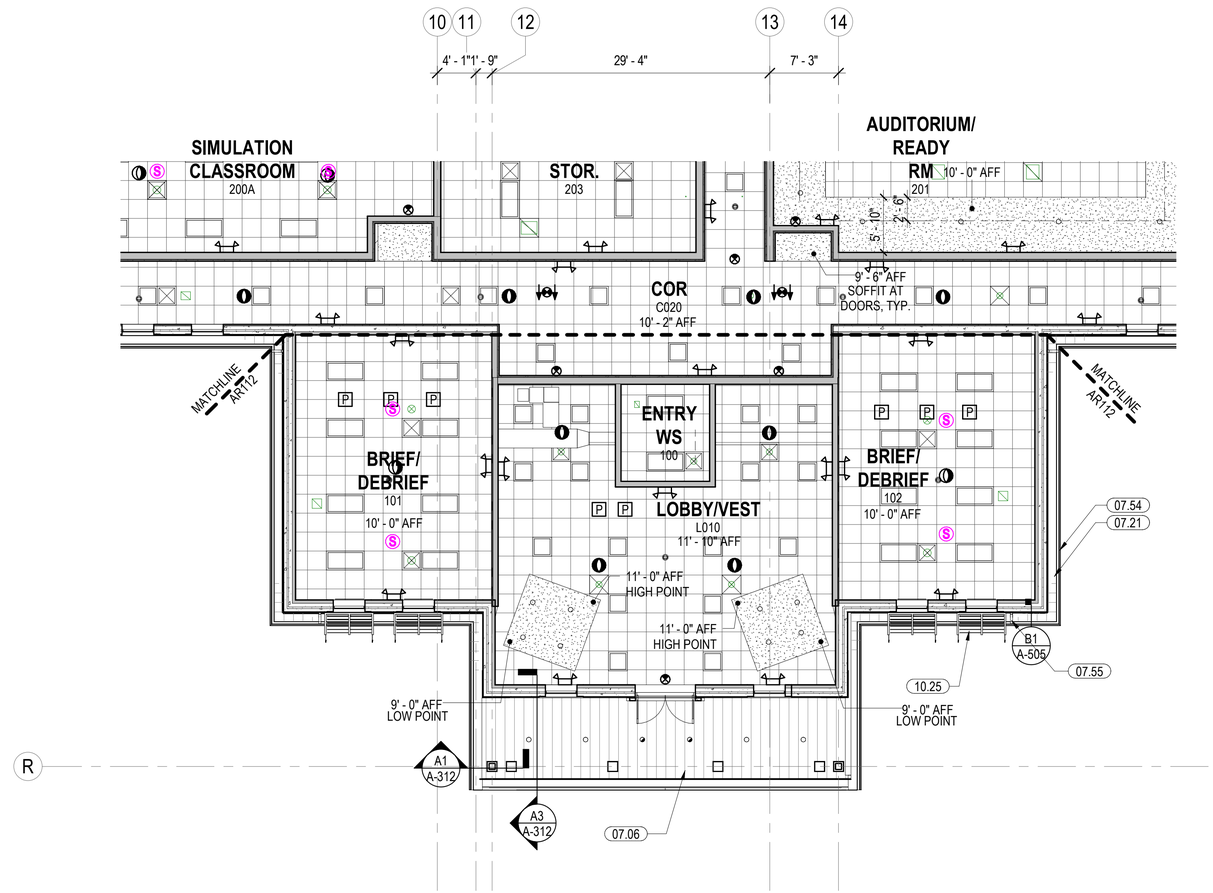

REFLECTED CEILING PLAN - AREA D

SCALE: 1/8" = 1'-0"

NOTES - RCP

1. ALL ELEVATIONS ARE ABOVE FINISHED FLOOR.
2. REFER TO ELECTRICAL DRAWINGS FOR POWER AND LIGHTING INFORMATION
3. REFER TO MECHANICAL DRAWINGS FOR VENTILATION AND HEATING VENTILATION AND AIR CONDITIONING INFORMATION
4. ALL CEILING GRIDS TO BE CENTERED IN ROOMS - TYPICAL UNLESS NOTED OR DIMENSIONED OTHERWISE
5. LIGHT FIXTURES IN PLASTER CEILINGS SHALL BE CENTERED IN ROOMS - TYPICAL UNLESS NOTED OTHERWISE
6. ALL EXPOSED DUCTWORK, PIPES, CONDUIT AND STRUCTURE SHALL BE CLEAN AND FREE OF ANY MANUFACTURER OR CONSTRUCTION DEFECTS
7. THE SUSPENDED CEILING SYSTEM, MECHANICAL DUCTWORK AND LIGHTING FIXTURES SHALL BE POSITIVELY ATTACHED TO THE STRUCTURE ABOVE
8. CONTRACTOR TO COORDINATE SIZE AND LOCATIONS REQUIRED FOR ACCESS PANELS AT ALL VAV BOXES, PIPING CONTROL VALVES, SWITCHES, ETC
9. COMPLETELY FILL VOIDS AROUND ALL CEILING PENETRATIONS WITH SOUND BATT INSULATION AND ACOUSTICAL SEALANT TO AVOID SOUND TRANSFER
10. ALL SPRINKLER HEADS IN TILE CEILINGS TO BE CENTERED WITHIN TILE, ALL SPRINKLER HEADS IN GYPSUM BOARD CEILINGS ARE TO BE CENTERED IN ROOMS OR SPACES AND CORRDINATED WITH CEILING ELEMENTS.
11. REFER TO A-504 FOR CEILING DETAILS

KEYNOTES

07.06	PRE-FINISHED METAL EXTERIOR SOFFIT SYSTEM TO MATCH ROOF SYSTEM
07.21	METAL SOFFIT SYSTEM
07.54	PREFINISHED GEORGIAN STYLE PROFILED ROOF GUTTER - 6"X6" MIN SIZE
07.55	PREFINISHED METAL DOWNSPOUT - 6"X4" MIN SIZE, ATTACH TO BUILDING STRUCTURE - DRAIN TO STORM SEWER
10.25	ALUMINUM LOUVERED SUNSHADE - ATTACHED TO FRAME

RCP LEGEND

- 2' x 2' ACOUSTICAL CEILING PANEL
- PAINTED GYPSUM WALLBOARD CEILING
- MECHANICAL DIFFUSER SEE M-SERIES
- LIGHTING FIXTURES SEE E-SERIES
- ILLUMINATED EXIT SIGN SEE E-SERIES
- SPRINKLER HEAD SEE F-SERIES
- AUDIO/VISUAL FIXTURES SEE T-SERIES

KEYPLAN

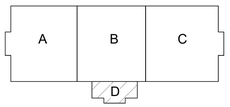

0 4' - 0" 8' - 0" 16' - 0"

SCALE: 1/8" = 1' - 0"

N

APPR	
DATE	
DESCRIPTION	
SYM	

NAVFAC

PRELIMINARY FOR REFERENCE ONLY

SEAL

RQ W.M. Jordan COMPANY – A JOINT VENTURE –

Michael Baker INTERNATIONAL
100 AIRSIDE DRIVE
MOON TOWNSHIP, PA 15108
A/E INFO

APPROVED

FOR COMMANDER NAVFAC

ACTIVITY
MARINE CORPS BASE CAMP LEJEUNE

SATISFACTORY TO DATE

DES Designer DRW Author CHK Checker

PM

BRANCH MANAGER

CHIEF ENG/ARCH

FIRE PROTECTION

DEPARTMENT OF THE NAVY
NAVAL FACILITIES ENGINEERING COMMAND
ROICC FLORENCE CAMP LEJEUNE
MCB CAMP LEJEUNE

NAVAL FACILITIES ENGINEERING COMMAND ~ MID-ATLANTIC
JACKSONVILLE, NC

JACKSONVILLE, NC
P1338F II MEF SIMULATION/TRAINING CENTER REPLACEMENT

REFLECTED CEILING PLAN - AREA D

SCALE: AS NOTED

EPROJECT NO.: 1590892

CONSTR. CONTR. NO.
N40085-20-C-0059

NAVFAC DRAWING NO.

SHEET OF

AR114

DP2 SUBMISSION – P1338 BUILDING -_PRE-FINAL SUBMISSION

PLOTTED: 6/10/2021 12:49:19 AM

FILE NAME: BIM 360://HF PACKAGE 3/P1338 MEF SIM CTR-1590892-A.rvt

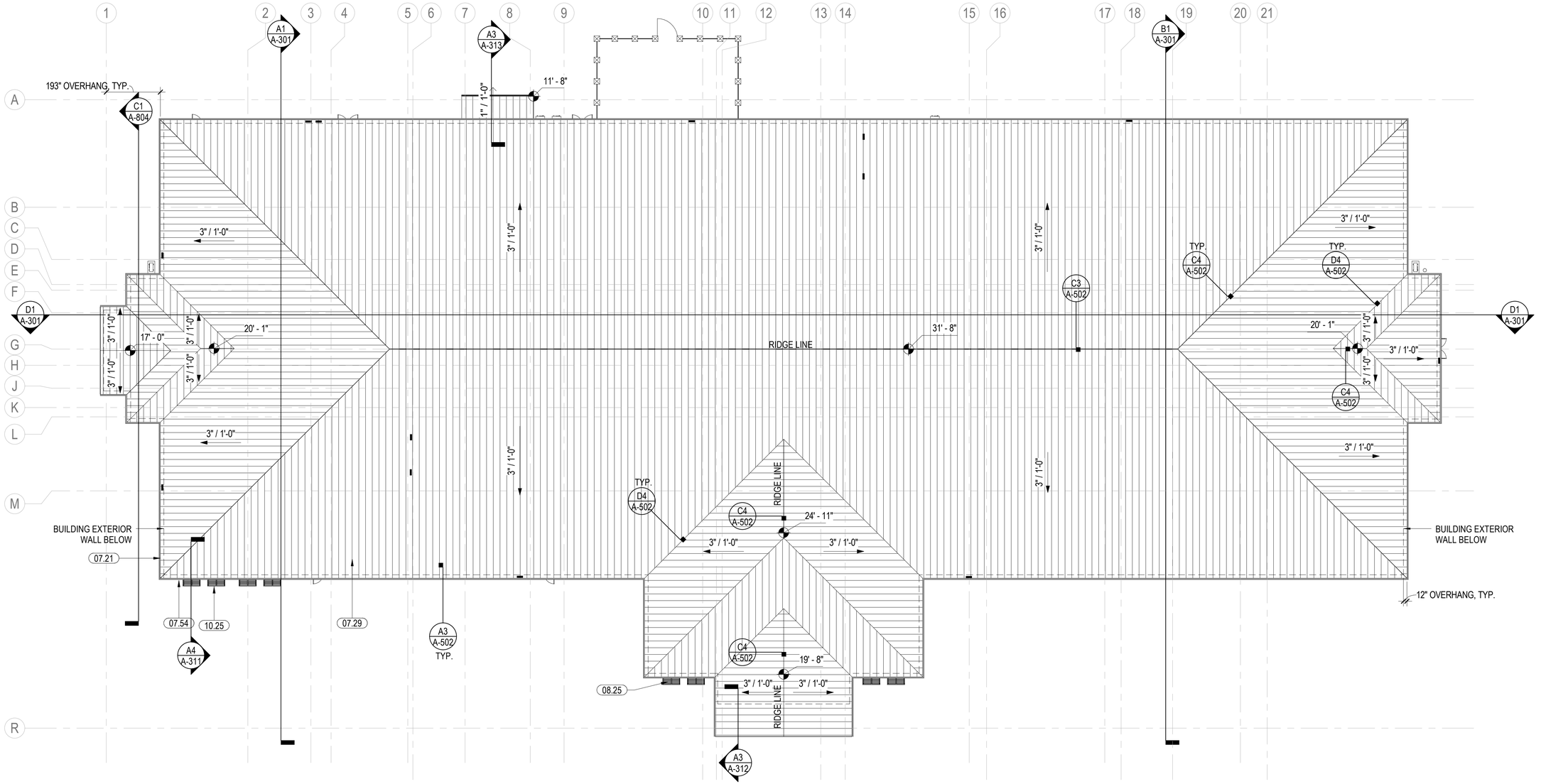

ROOF PLAN

SCALE: 1/16" = 1'-0"

KEYNOTES

07.21	METAL SOFFIT SYSTEM
07.29	STANDING SEAM METAL ROOF OVER AIR/ VAPOR BARRIER AND SHEATHING WITH 6" RIGID INSULATION OVER 3" METAL ROOF DECK, TYPICAL
07.54	PREFINISHED GEORGIAN STYLE PROFILED ROOF GUTTER - 6"X6" MIN SIZE
08.25	ALUMINUM WINDOW SUNSHADE - SEE DETAIL A3/ARB-501
10.25	ALUMINUM LOUVERED SUNSHADE - ATTACHED TO FRAME

NOTES - ROOF PLANS

1. REFER TO MECHANICAL, PLUMBING AND ELECTRICAL DRAWINGS FOR ADDITIONAL ROOF ELEMENT INFORMATION
2. CONTRACTOR SHALL COORDINATE EXACT LOCATION OF ROOF DRAINING TO MAKE SURE NOT TO INTERFERE WITH ANY STRUCTURAL MEMBERS - LEADERS SHALL BE LOCATED TO CLEAR AND SLOPE AS REQUIRED BY APPLICABLE CODES
3. CONTRACTOR TO VERIFY AND COORDINATE EXACT LOCATIONS OF PENETRATIONS SO AS NOT TO INTERFERE WITH MAJOR STRUCTURAL MEMBERS
4. COORDINATE ALL ROOFING DETAILS WITH AIR BARRIER PLANS AND DETAILS SEE A-800 SHEETS
5. ALL SHEET METAL FLASHING AND TRIM SHALL CONFORM WITH THE LATEST EDITION OF SMACNA MANUAL (SHEET METAL AND AIR CONDITIONING CONTRACTORS NATIONAL ASSOCIATION INCORPORATED)

KEYPLAN

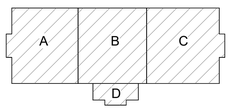

0 8' - 0" 16' - 0" 32' - 0"

SCALE: 1/16" = 1' - 0"

N

APPR	
DATE	
SYM	DESCRIPTION

PRELIMINARY FOR REFERENCE ONLY

SEAL

Michael Baker INTERNATIONAL
100 AIRSIDE DRIVE
MOON TOWNSHIP, PA 15108
A/E INFO

APPROVED

FOR COMMANDER NAVFAC

ACTIVITY
MARINE CORPS BASE CAMP LEJEUNE

SATISFACTORY TO DATE

DES XXX | DRW XXX | CHK XXX

PM

BRANCH MANAGER

CHIEF ENG/ARCH

FIRE PROTECTION

DEPARTMENT OF THE NAVY
NAVAL FACILITIES ENGINEERING COMMAND
ROICC FLORENCE CAMP LEJEUNE

NAVAL FACILITIES ENGINEERING COMMAND ~ MID-ATLANTIC
JACKSONVILLE, NC

MCB CAMP LEJEUNE
JACKSONVILLE, NC

P1338F II MEF SIMULATION/TRAINING CENTER REPLACEMENT

ROOF PLAN

SCALE: AS NOTED

EPROJECT NO.: 1590892

CONSTR. CONTR. NO.
N40085-20-C-0059

NAVFAC DRAWING NO.

SHEET OF

A-130

DP2 SUBMISSION – P1338 BUILDING - PRE-FINAL SUBMISSION

PLOTTED: 6/10/2021 12:46:25 AM

FILE NAME: BIM 360://HF PACKAGE 3/P1338 MEF SIM CTR-1590892-A.rvt

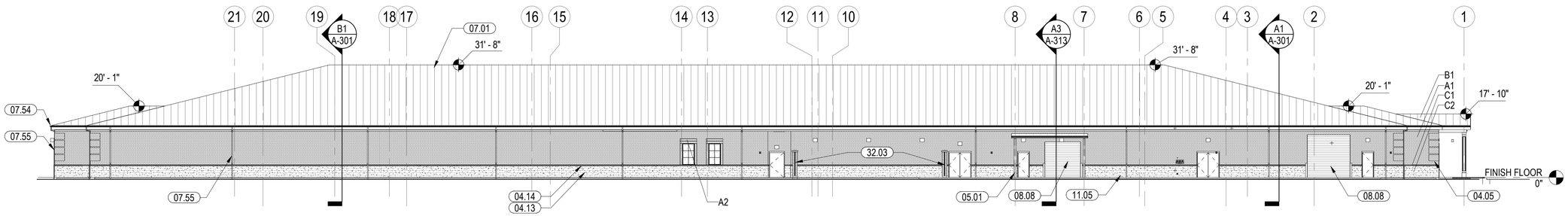

NORTH ELEVATION

SCALE: 1/16" = 1'-0"

D1

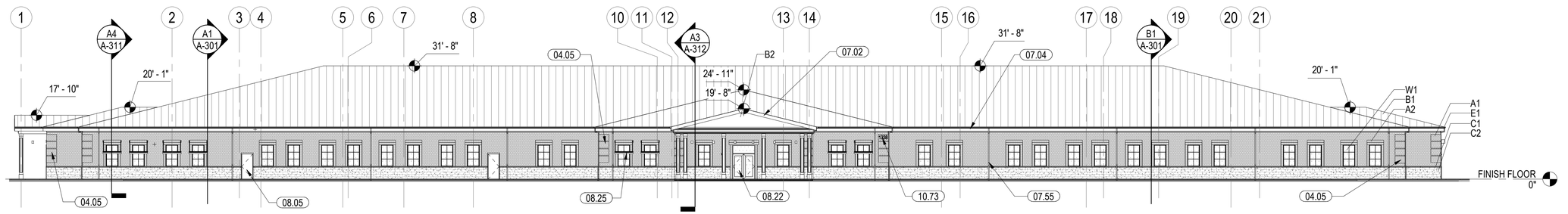

SOUTH ELEVATION

SCALE: 1/16" = 1'-0"

C1

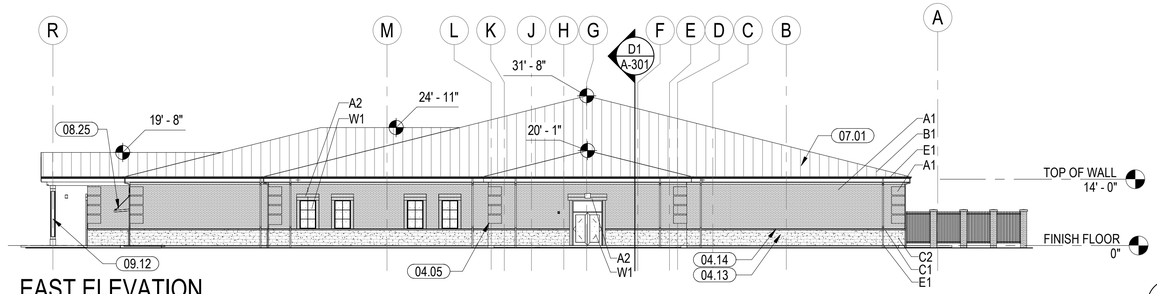

EAST ELEVATION

SCALE: 1/16" = 1'-0"

B1

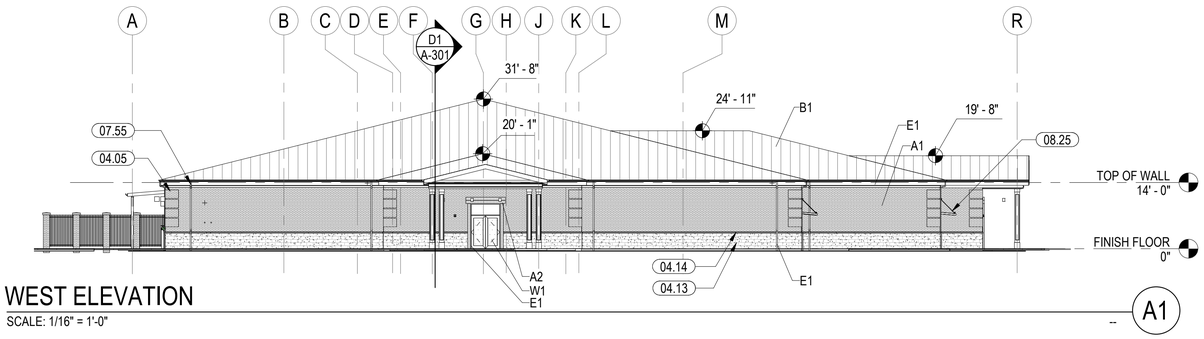

WEST ELEVATION

SCALE: 1/16" = 1'-0"

A1

NOTES - EXTERIOR ELEVATIONS

1	REFER TO SHEET A-611 FOR DOOR SCHEDULE AND ELEVATIONS.
2	REFER TO SHEET A-611 FOR WINDOW ELEVATIONS.
3	REFER TO MATERIAL FINISH KEY ON THIS SHEET FOR EXTERIOR FINISHES.
4	REFER TO A-505 FOR EXTERIOR DETAILS.

KEYNOTES

04.05	BRICK QUOIN - SEE DETAIL
04.13	1 1/2" SPLIT-FACE CMU VENEER WITH WHITE MORTAR
04.14	PRECAST STONE ACCENT (SILL AT WINDOWS)
05.01	STRUCTURAL STEEL OR COLUMN, SEE S-SERIES
07.01	STANDING SEAM METAL ROOF SYSTEM, OVER RIGID INSULATION, AIR BARRIER, AND METAL DECK
07.02	PRE-FINISHED DECORATIVE METAL FASCIA
07.04	PRE-FINISHED DECORATIVE 6" DIA. GUTTER SYSTEM, SLOPE TO DOWNSPOUT
07.54	PREFINISHED GEORGIAN STYLE PROFILED ROOF GUTTER - 6"X6" MIN SIZE
07.55	PREFINISHED METAL DOWNSPOUT - 6"X4" MIN SIZE, ATTACH TO BUILDING STRUCTURE - DRAIN TO STORM SEWER
08.05	INSULATED HOLLOW METAL DOOR AND FRAME - SEE DOOR SCHEDULE
08.08	10' OVERHEAD COILING DOORS - SEE DOOR SCHEDULE AND DETAIL A2/A-612
08.22	ALUMINUM STOREFRONT DOORS AND FRAMES
08.25	ALUMINUM WINDOW SUNSHADE - SEE DETAIL A3/ARB-501
09.12	DECORATIVE PREFAB COLUMN SURROUND, TYP.
10.73	ANODIZED ALUMINUM EXTERIOR BUILDING SIGNAGE, 12" HIGH
11.05	BOLLARDS
32.03	GENERATOR YARD ENCLOSURE

SCHEDULE - EXTERIOR MATERIAL & COLOR BASIS OF DESIGN

FINISH	DESCRIPTION	COLOR	MANUFACTURER	COMMENTS
A1	BRICK VENEER	OLDCASTLE	OLDCASTLE	FIELD
A2	SOLDIER COURSE WINDOW SURROUND	TBD	TBD	
B1	STANDING SEAM METAL ROOF	THIN BRICK #10 RED	METAL ROOFING SYSTEMS, INC.	ROOF
C1	PRECAST CONCRETE	SUPER WHITE	CUSTOM CAST STONE	ACCENT/SILL
C2	SPLIT FACE CMU	4302	SUMMITVILLE	WATERTABLE
E1	PREFINISHED ALUMINUM	BONE WHITE	TBD	GUTTERS/DOWNSPOUTS
E2	PREFINISHED ALUMINUM	BONE WHITE	KAWNEER/VARIES	WINDOW/DOOR TRIM
W1	WINDOW GLAZING	SOLARBAN 70 on OPTIGRAY	VITRO ARCHITECTURAL GLASS	

0 8' - 0" 16' - 0" 32' - 0"

SCALE:1/16" = 1' - 0"

APPR | DATE | DESCRIPTION | SYM

NAVFAC

PRELIMINARY FOR REFERENCE ONLY

SEAL

IRQ WNJ Jordan COMPANY – A JOINT VENTURE –

Michael Baker INTERNATIONAL

100 AIRSIDE DRIVE
MOON TOWNSHIP, PA 15108 A/E INFO

APPROVED

FOR COMMANDER NAVFAC

ACTIVITY
MARINE CORPS BASE CAMP LEJEUNE

SATISFACTORY TO DATE

DES Designer DRW Author CHK Checker

PM

BRANCH MANAGER

CHIEF ENG/ARCH

FIRE PROTECTION

DEPARTMENT OF THE NAVY
NAVAL FACILITIES ENGINEERING COMMAND
ROICC FLORENCE CAMP LEJEUNE

NAVAL FACILITIES ENGINEERING COMMAND ~ MID-ATLANTIC
JACKSONVILLE, NC

MCB CAMP LEJEUNE

JACKSONVILLE, NC

P1338F II MEF SIMULATION/TRAINING CENTER REPLACEMENT

EXTERIOR ELEVATIONS

SCALE: AS NOTED

EPROJECT NO.: 1590892

CONSTR. CONTR. NO.
N40085-20-C-0059

NAVFAC DRAWING NO.

SHEET 32 OF 123

A-201

DP2 SUBMISSION – P1338 BUILDING - PRE-FINAL SUBMISSION

PLOTTED: 6/10/2021 12:46:35 AM

FILE NAME: BIM 360://HF PACKAGE 3P1338 MEF SIM CTR-1590892-A.rvt

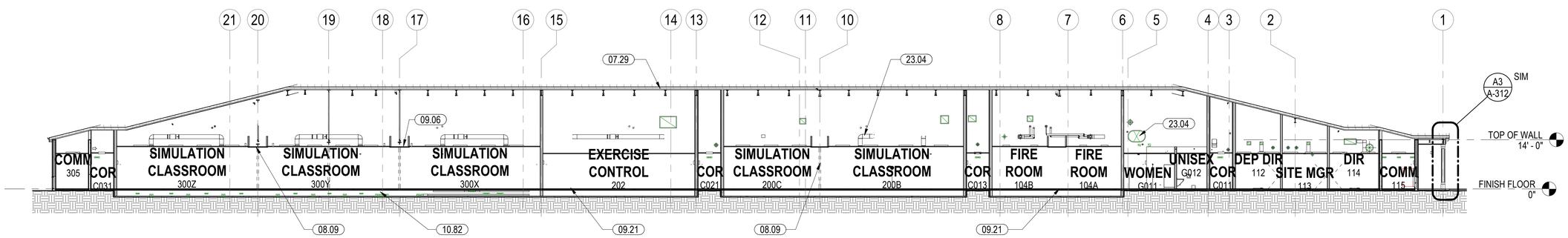

EAST-WEST BUILDING SECTION

SCALE: 1/16" = 1'-0"

A-110 D1

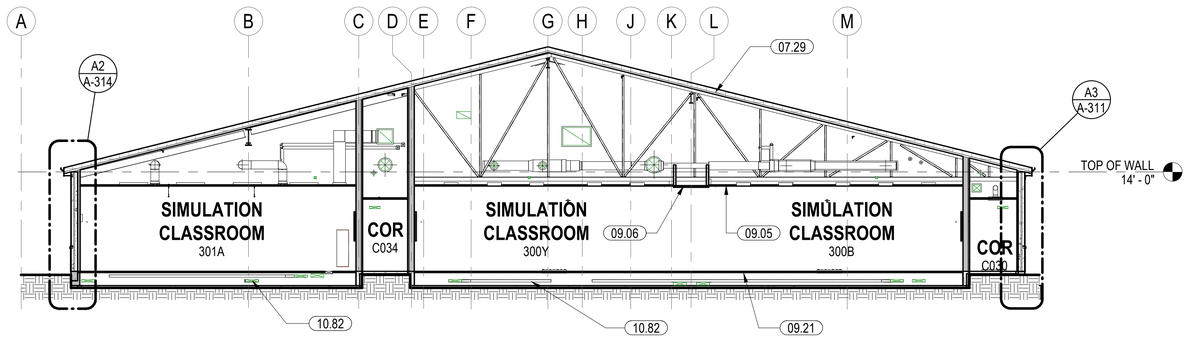

NORTH-SOUTH SECTION - CLASSIFIED

SCALE: 3/32" = 1'-0"

A-110 B1

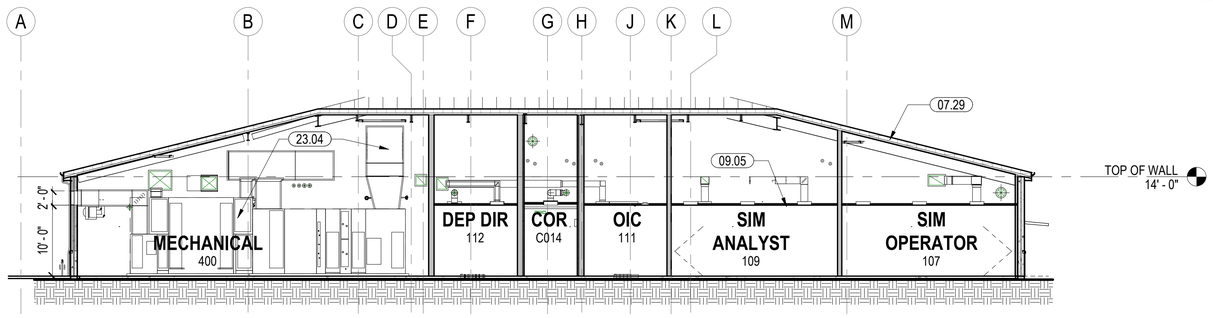

NORTH-SOUTH SECTION - UNCLASSIFIED

SCALE: 3/32" = 1'-0"

A-110 A1

KEYNOTES

07.29	STANDING SEAM METAL ROOF OVER AIR/ VAPOR BARRIER AND SHEATHING WITH 6" RIGID INSULATION OVER 3" METAL ROOF DECK, TYPICAL
08.09	OPERABLE PANEL PARTITION, TYP.
09.05	SUSPENDED ACOUSTICAL CEILING.
09.06	GYPSUM BOARD CEILING/SOFFIT.
09.21	24"x 24"x 24" RAISED ACCESS FLOORING W/ INTERCHANGEABLE SQUARE MODULE PANELS
10.82	TYP THRU SIM CLASS ROOMS: RAISED ACCESS FLOORING 24" X 24"- OVER RECESSED SLAB 24" BELOW - SEE DETAIL C3/A-506
23.04	MECHANICAL DUCTS & SYSTEMS, SEE MECHANICAL

0 8' - 0" 16' - 0" 32' - 0"

SCALE: 1/16" = 1' - 0"

0 8' - 0" 16' - 0" 32' - 0"

SCALE: 3/32" = 1' - 0"

APPR | DATE | DESCRIPTION | SYM

NAVFAC

PRELIMINARY FOR REFERENCE ONLY

SEAL

RQ W.M. Jordan COMPANY – A JOINT VENTURE –

Michael Baker INTERNATIONAL

100 AIRSIDE DRIVE
MOON TOWNSHIP, PA 15108 A/E INFO

APPROVED

FOR COMMANDER NAVFAC

ACTIVITY
MARINE CORPS BASE CAMP LEJEUNE

SATISFACTORY TO DATE

DES XXX | DRW XXX | CHK XXX

PM

BRANCH MANAGER

CHIEF ENG/ARCH

FIRE PROTECTION

DEPARTMENT OF THE NAVY
NAVAL FACILITIES ENGINEERING COMMAND
ROICC FLORENCE CAMP LEJEUNE
MCB CAMP LEJEUNE

NAVAL FACILITIES ENGINEERING COMMAND – MID-ATLANTIC
JACKSONVILLE, NC

JACKSONVILLE, NC
P1338F II MEF SIMULATION/TRAINING CENTER REPLACEMENT

BUILDING SECTIONS

SCALE: AS NOTED

EPROJECT NO.: 1590892

CONSTR. CONTR. NO.
N40085-20-C-0059

NAVFAC DRAWING NO.

SHEET OF

A-301

DP2 SUBMISSION – P1338 BUILDING - PRE-FINAL SUBMISSION

PLOTTED: 6/10/2021 12:46:41 AM

FILE NAME: BIM 360://HF PACKAGE 3/P1338 MEF SIM CTR-1590892-A.rvt

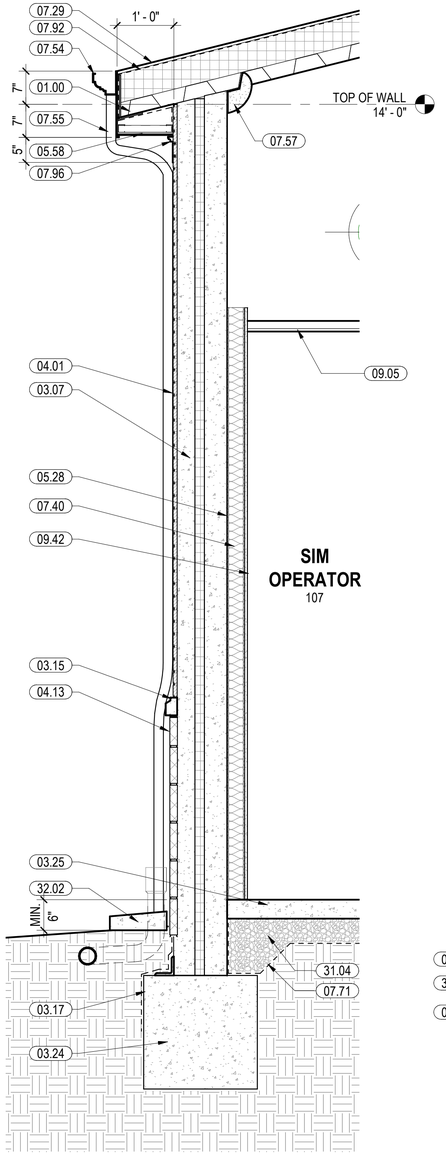

EXTERIOR WALL SECTION

SCALE: 3/4" = 1'-0" A-111 (A1)

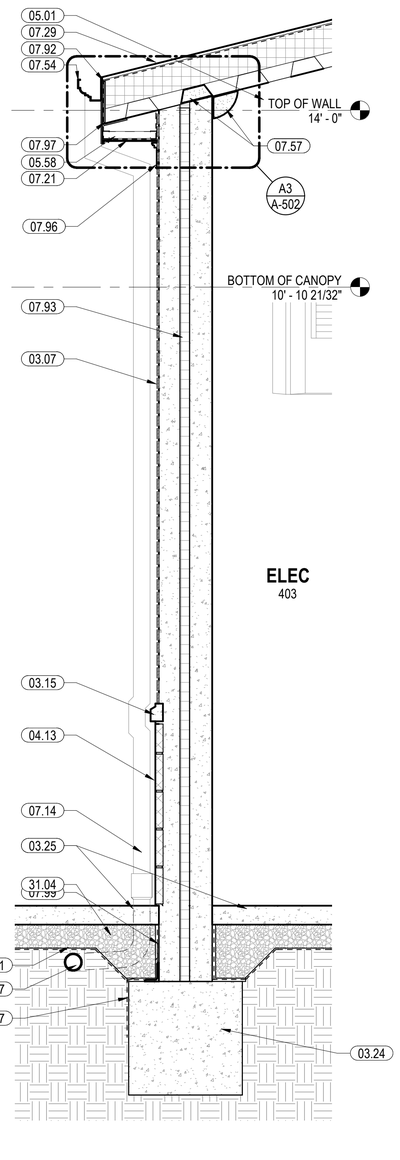

EXTERIOR SANDWICH WALL

SCALE: 3/4" = 1'-0" A-111 (A2)

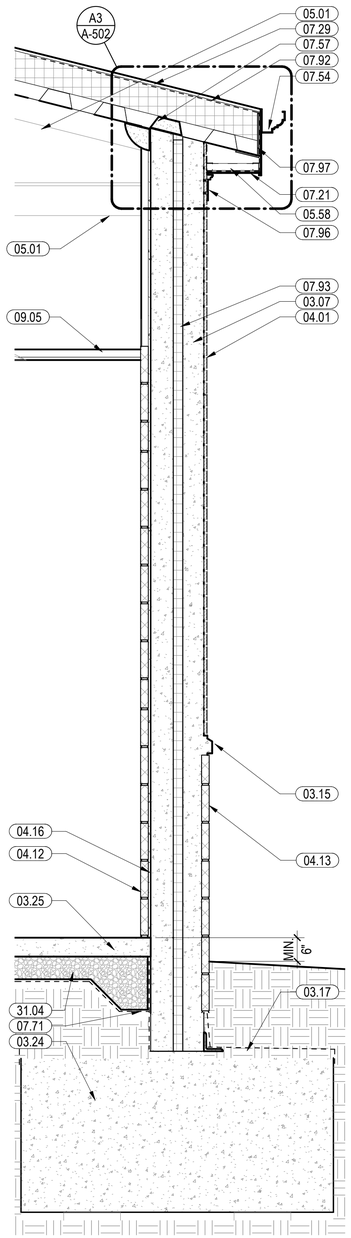

SECURE CORRIDOR

SCALE: 3/4" = 1'-0" A-301 (A3)

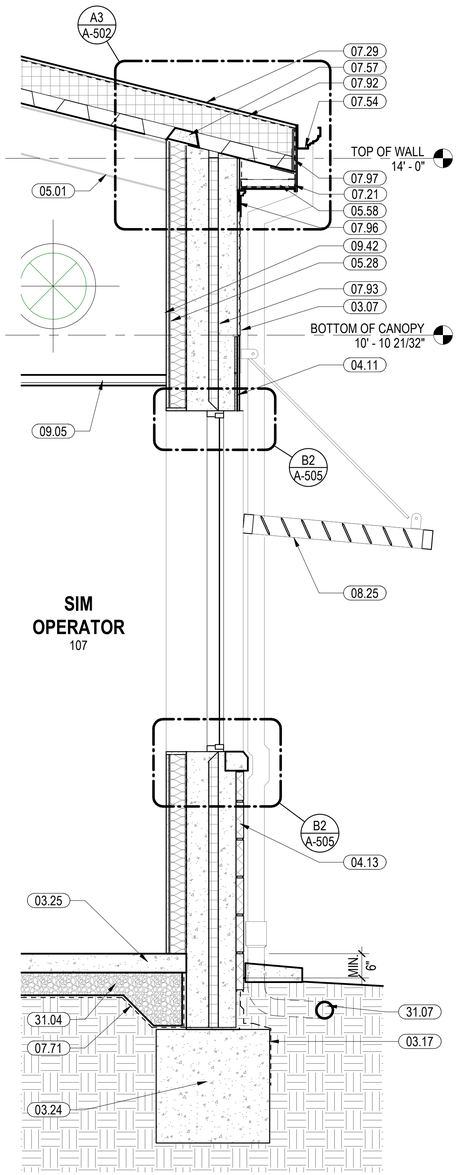

WINDOW AND SHADE

SCALE: 3/4" = 1'-0" A-110 (A4)

0 1' - 0" 2' - 0" 4' - 0"

SCALE: 3/4" = 1' - 0"

KEYNOTES

01.00	Division 01 - GENERAL REQUIREMENTS
03.07	INSULATED TILT-UP CONCRETE WALL WITH CAST-IN BRICK VENEER
03.15	PRECAST STONE WALL SWEEP AND SILL ACCENT
03.17	BITUTHENE LIQUID MEMBRANE, CONTINUOUS OVER FOOTING, TYP.
03.24	FOUNDATION. REFER TO STRUCTURAL
03.25	CONCRETE SLAB ON GRADE - SEE STRUCTURAL
04.01	BRICK VENEER - FIELD
04.11	DOUBLE SOLDIER COURSE BRICK LINTEL
04.12	1 1/2" CMU VENEER OVER THIN SET MORTAR
04.13	1 1/2" SPLIT-FACE CMU VENEER WITH WHITE MORTAR
04.16	THIN SET LAYER
05.01	STRUCTURAL STEEL OR COLUMN, SEE S-SERIES
05.28	3 5/8" METAL STUD AT 16" O.C.
05.58	1 1/2" HAT CHANNEL SPACED TO MATCH SOFFIT PANEL SPACING
07.14	PREFINISHED DOWNSPOUT PIPED TO STORM DRAIN, SEE CIVIL
07.21	METAL SOFFIT SYSTEM
07.29	STANDING SEAM METAL ROOF OVER AIR/ VAPOR BARRIER AND SHEATHING WITH 6" RIGID INSULATION OVER 3" METAL ROOF DECK, TYPICAL
07.40	R-19 BATT INSULATION AT EXTERIOR WALLS
07.54	PREFINISHED GEORGIAN STYLE PROFILED ROOF GUTTER - 6"X6" MIN SIZE
07.55	PREFINISHED METAL DOWNSPOUT - 6"X4" MIN SIZE, ATTACH TO BUILDING STRUCTURE - DRAIN TO STORM SEWER
07.57	CLOSED CELL SPRAY FOAM AIR BARRIER SEALANT, CONTINUOUS AT TOP OF EXTERIOR WALL
07.71	VAPOR BARRIER - SEE STRUCTURAL
07.92	AIR / VAPOR BARRIER
07.93	RIGID INSULATION
07.96	GEORGIAN STYLE CORNICE AND FASCIA BELOW EAVE SOFFIT
07.97	METAL FLASHING BEHIND FASCIA AND SOFFIT
07.99	VAPOR BARRIER WRAPS STRUCTURAL
08.25	ALUMINUM WINDOW SUNSHADE - SEE DETAIL A3/ARB-501
09.05	SUSPENDED ACOUSTICAL CEILING.
09.42	5/8" GYPSUM BOARD
31.04	COMPACTED SUBGRADE, SEE CIVIL
31.07	ROOF DRAINAGE PIPE TO STORM DRAIN, SEE CIVIL
32.02	12" WIDE MOW STRIP, SEE LANDSCAPING.

APPR | DATE | DESCRIPTION | SYM

NAVFAC

PRELIMINARY FOR REFERENCE ONLY

SEAL

WNM Jordan COMPANY – A JOINT VENTURE –

Michael Baker INTERNATIONAL

100 AIRSIDE DRIVE
MOON TOWNSHIP, PA 15108 A/E INFO

APPROVED

FOR COMMANDER NAVFAC

ACTIVITY
MARINE CORPS BASE
CAMP LEJEUNE

SATISFACTORY TO DATE

DES XXX | DRW XXX | CHK XXX

PM

BRANCH MANAGER

CHIEF ENG/ARCH

FIRE PROTECTION

DEPARTMENT OF THE NAVY
NAVAL FACILITIES ENGINEERING COMMAND
ROICC FLORENCE CAMP LEJEUNE
MCB CAMP LEJEUNE

NAVAL FACILITIES ENGINEERING COMMAND – MID-ATLANTIC
JACKSONVILLE, NC

JACKSONVILLE, NC
P1338F II MEF SIMULATION/TRAINING CENTER
REPLACEMENT
WALL SECTIONS

SCALE: AS NOTED
EPROJECT NO.: 1590892
CONSTR. CONTR. NO.
N40085-20-C-0059
NAVFAC DRAWING NO.
SHEET OF

A-311

DP2 SUBMISSION – P1338 BUILDING –PRE-FINAL SUBMISSION

PLOTTED: 6/10/2021 12:46:45 AM

FILE NAME: BIM 360:/HF PACKAGE 3/P1338 MEF SIM CTR-1590892-A.rvt

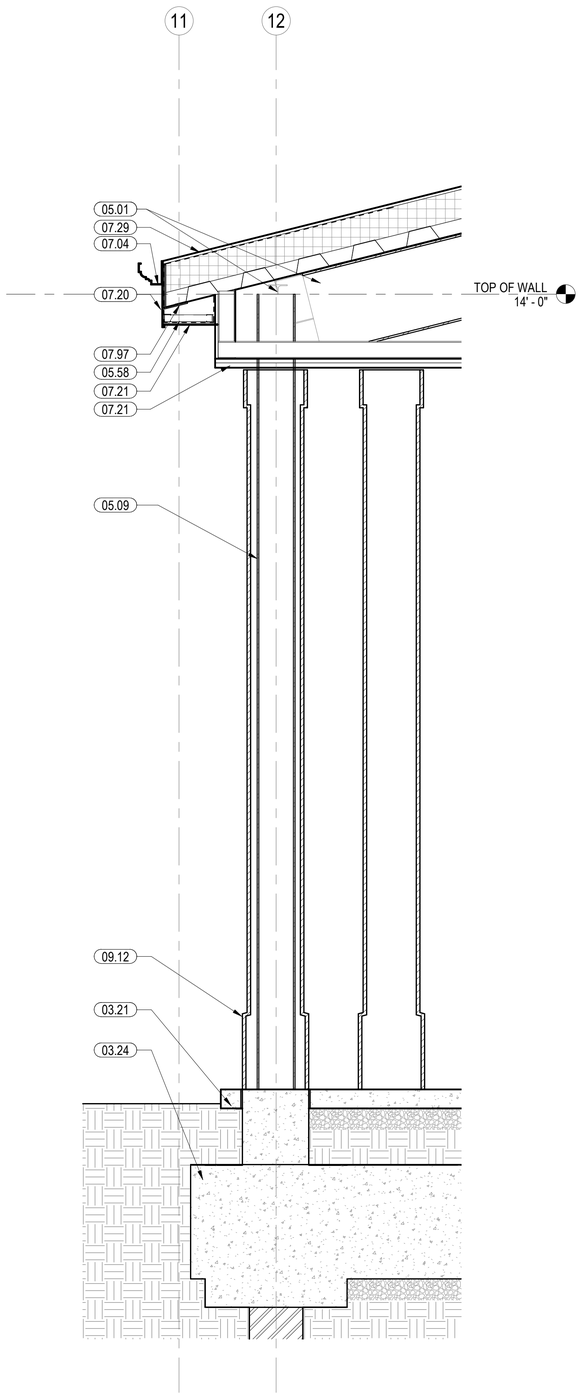

ENTRY CANOPY SIDE
SCALE: 3/4" = 1'-0"
A-114 A1

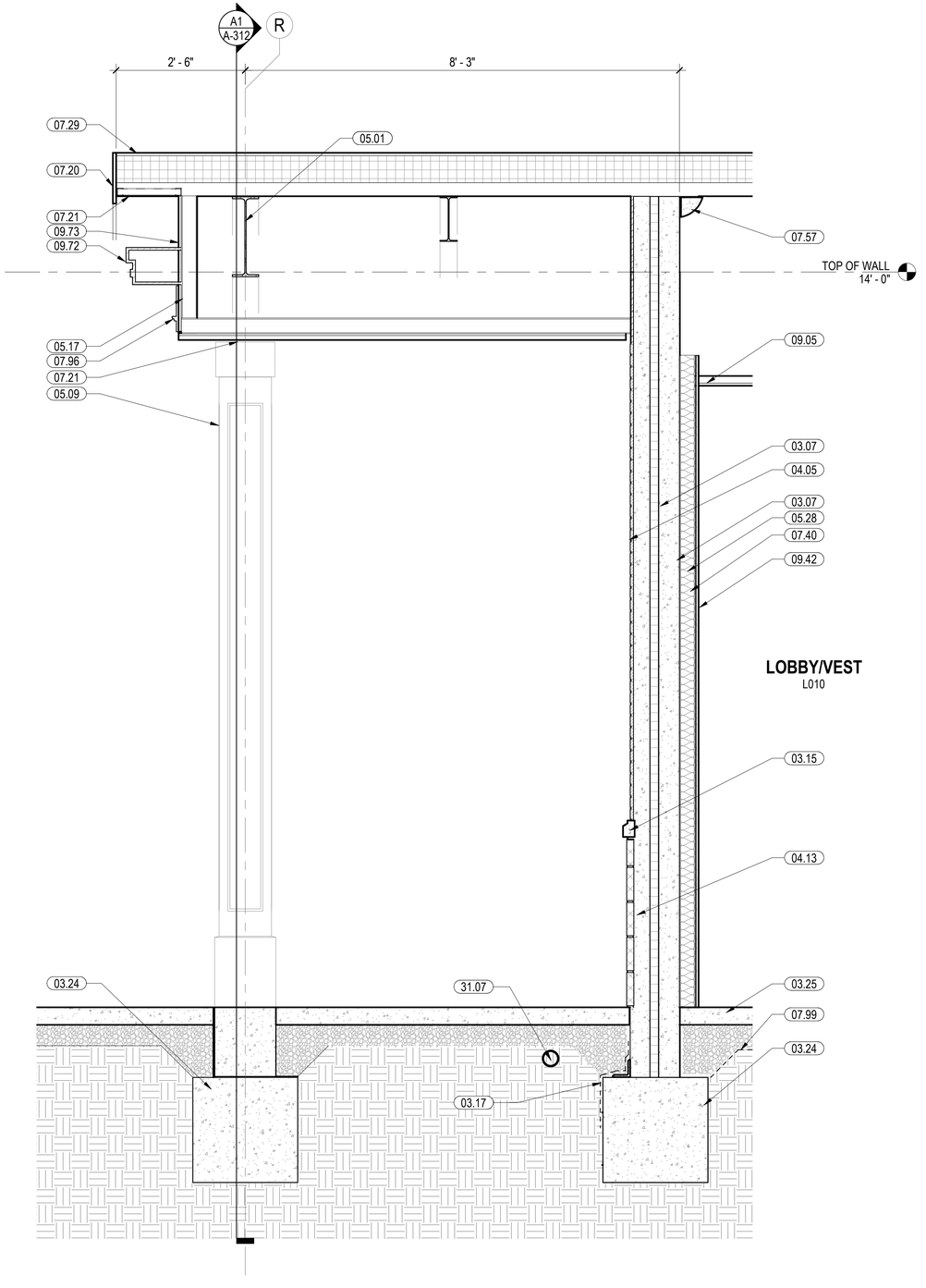

LOBBY/VEST
L010

MAIN ENTRANCE CANOPY
SCALE: 3/4" = 1'-0"
A-114 A3

KEYNOTES

03.07	INSULATED TILT-UP CONCRETE WALL WITH CAST-IN BRICK VENEER
03.15	PRECAST STONE WALL SWEEP AND SILL ACCENT
03.17	BITUTHENE LIQUID MEMBRANE, CONTINUOUS OVER FOOTING, TYP.
03.21	4" CONCRETE SIDEWALK - SEE CIVIL
03.24	FOUNDATION. REFER TO STRUCTURAL
03.25	CONCRETE SLAB ON GRADE - SEE STRUCTURAL
04.05	BRICK QUOIN - SEE DETAIL
04.13	1 1/2" SPLIT-FACE CMU VENEER WITH WHITE MORTAR
05.01	STRUCTURAL STEEL OR COLUMN, SEE S-SERIES
05.09	STRUCTURAL STEEL OR COLUMN W/ DECORATIVE SURROUND, SEE S-SERIES FOR COLUMN AND ARCH FOR SURROUND
05.17	COLD-FORMED METAL FRAMING
05.28	3 5/8" METAL STUD AT 16" O.C.
05.58	1 1/2" HAT CHANNEL SPACED TO MATCH SOFFIT PANEL SPACING
07.04	PRE-FINISHED DECORATIVE 6" DIA. GUTTER SYSTEM, SLOPE TO DOWNSPOUT
07.20	PREFINISHED METAL FASCIA
07.21	METAL SOFFIT SYSTEM
07.29	STANDING SEAM METAL ROOF OVER AIR/ VAPOR BARRIER AND SHEATHING WITH 6" RIGID INSULATION OVER 3" METAL ROOF DECK, TYPICAL
07.40	R-19 BATT INSULATION AT EXTERIOR WALLS
07.57	CLOSED CELL SPRAY FOAM AIR BARRIER SEALANT, CONTINUOUS AT TOP OF EXTERIOR WALL
07.96	GEORGIAN STYLE CORNICE AND FASCIA BELOW EAVE SOFFIT
07.97	METAL FLASHING BEHIND FASCIA AND SOFFIT
07.99	VAPOR BARRIER WRAPS STRUCTURAL
09.05	SUSPENDED ACOUSTICAL CEILING.
09.12	DECORATIVE PREFAB COLUMN SURROUND, TYP.
09.42	5/8" GYPSUM BOARD
09.72	FIBERGLASS DECORATIVE GEORGIAN STYLE FRIESE COMPONENT
09.73	METAL PANEL OVER METAL STUD FRAMING
31.07	ROOF DRAINAGE PIPE TO STORM DRAIN, SEE CIVIL

0 1' - 0" 2' - 0" 4' - 0"
SCALE: 3/4" = 1' - 0"

APPR	DATE	DESCRIPTION	SYM

NAVFAC

PRELIMINARY FOR REFERENCE ONLY

SEAL

RQ W.M. Jordan COMPANY ~ A JOINT VENTURE ~

Michael Baker INTERNATIONAL
100 AIRSIDE DRIVE
MOON TOWNSHIP, PA 15108 A/E INFO

APPROVED

FOR COMMANDER NAVFAC

ACTIVITY
MARINE CORPS BASE CAMP LEJEUNE

SATISFACTORY TO DATE

DES Designer DRW Author CHK Checker

PM

BRANCH MANAGER

CHIEF ENG/ARCH

FIRE PROTECTION

DEPARTMENT OF THE NAVY
NAVAL FACILITIES ENGINEERING COMMAND
ROICC FLORENCE CAMP LEJEUNE
MCB CAMP LEJEUNE

NAVAL FACILITIES ENGINEERING COMMAND ~ MID-ATLANTIC
JACKSONVILLE, NC

JACKSONVILLE, NC
P1338F II MEF SIMULATION/TRAINING CENTER REPLACEMENT
WALL SECTIONS

SCALE: AS NOTED
EPROJECT NO.: 1590892
CONSTR. CONTR. NO.
N40085-20-C-0059
NAVFAC DRAWING NO.
SHEET OF

A-312

DP2 SUBMISSION – P1338 BUILDING - PRE-FINAL SUBMISSION

PLOTTED: 6/10/2021 12:46:48 AM

FILE NAME: BIM 360://HF PACKAGE 3/P1338 MEF SIM CTR-1590892-A.rvt

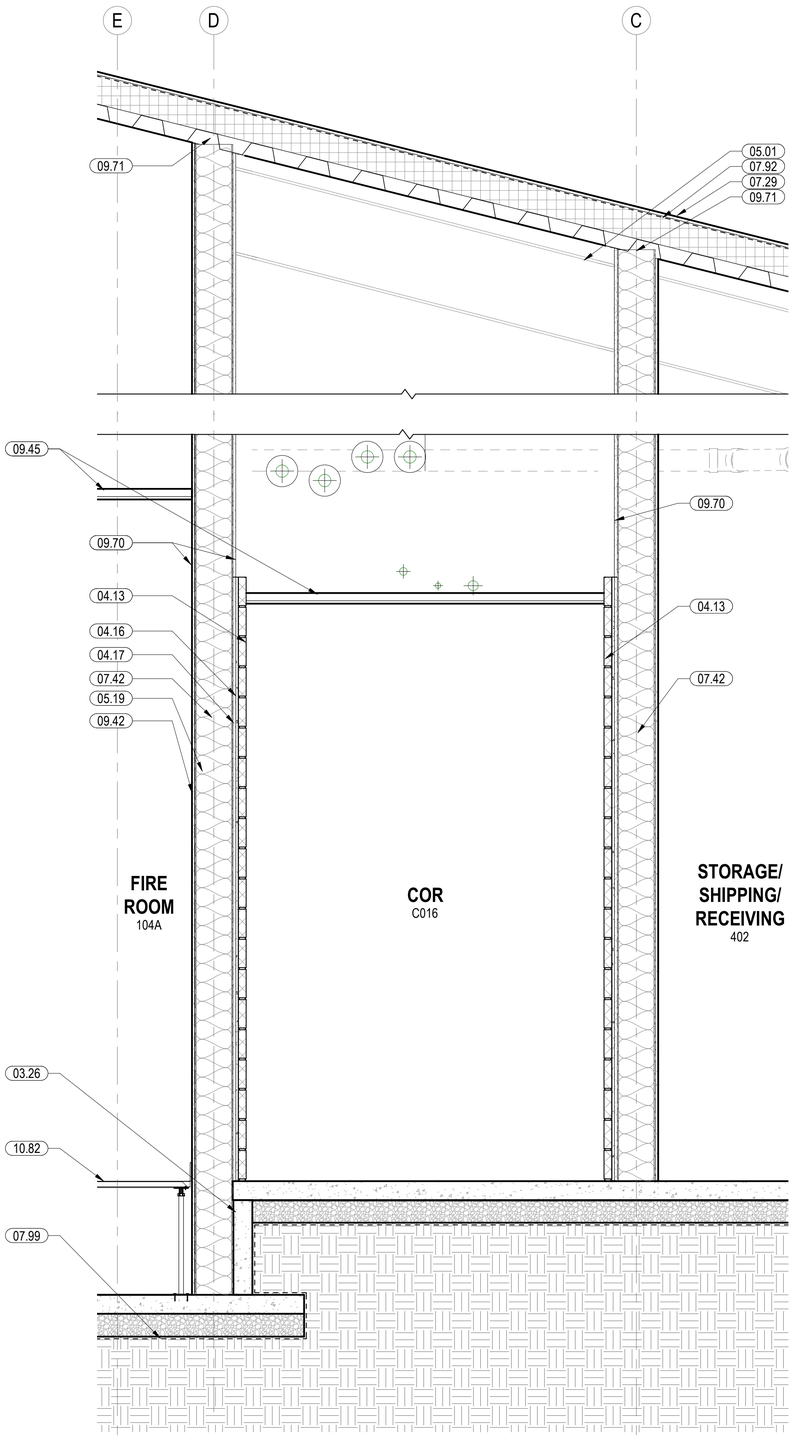

INTERIOR CORRIDOR SECTION

SCALE: 3/4" = 1'-0"

A-111 (A1)

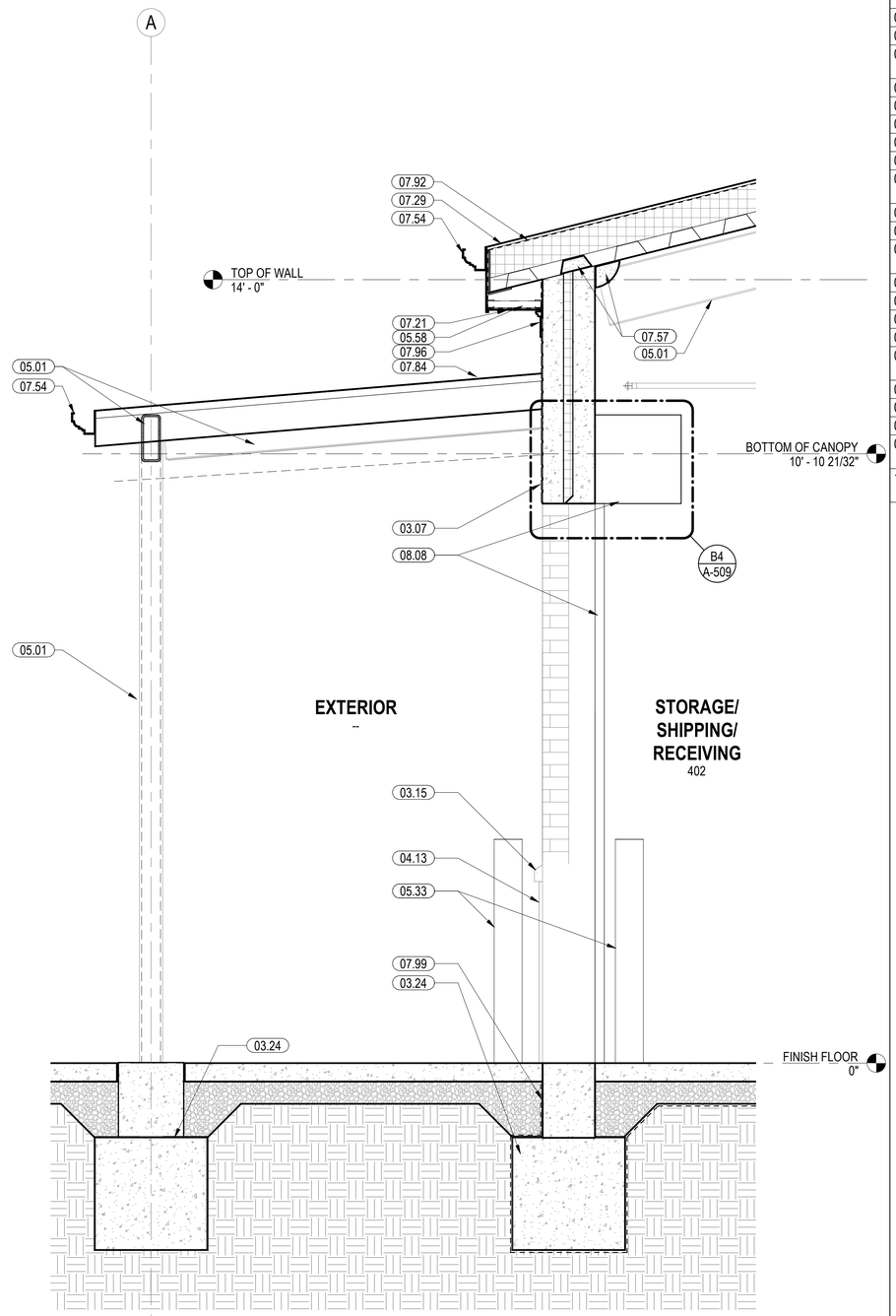

CANOPY AT SHIPPING/RECEIVING ENTRANCE

SCALE: 3/4" = 1'-0"

A-111 (A3)

KEYNOTES	
03.07	INSULATED TILT-UP CONCRETE WALL WITH CAST-IN BRICK VENEER
03.15	PRECAST STONE WALL SWEEP AND SILL ACCENT
03.24	FOUNDATION. REFER TO STRUCTURAL
03.26	CONCRETE STEM WALL - TOP OF RECESSED SLAB TO BOTTOM OF FINISHED FLOOR - SEE STRUCTURAL
04.13	1 1/2" SPLIT-FACE CMU VENEER WITH WHITE MORTAR
04.16	THIN SET LAYER
04.17	5/8" CEMENT BOARD ON METAL STUD WALL BEHIND CMU VENEER AND THIN SET
05.01	STRUCTURAL STEEL OR COLUMN, SEE S-SERIES
05.19	METAL STUD, SEE PARTITION TYPES
05.33	6" DIA., 48" HEIGHT BOLLARD, PAINTED SAFETY YELLOW
05.58	1 1/2" HAT CHANNEL SPACED TO MATCH SOFFIT PANEL SPACING
07.21	METAL SOFFIT SYSTEM
07.29	STANDING SEAM METAL ROOF OVER AIR/ VAPOR BARRIER AND SHEATHING WITH 6" RIGID INSULATION OVER 3" METAL ROOF DECK, TYPICAL
07.42	R-19 BATT INSULATION
07.54	PREFINISHED GEORGIAN STYLE PROFILED ROOF GUTTER - 6"X6" MIN SIZE
07.57	CLOSED CELL SPRAY FOAM AIR BARRIER SEALANT, CONTINUOUS AT TOP OF EXTERIOR WALL
07.84	STANDING SEAM METAL ROOF, OVER METAL DECK
07.92	AIR / VAPOR BARRIER
07.96	GEORGIAN STYLE CORNICE AND FASCIA BELOW EAVE SOFFIT
07.99	VAPOR BARRIER WRAPS STRUCTURAL
08.08	10' OVERHEAD COILING DOORS - SEE DOOR SCHEDULE AND DETAIL A2/A-612
09.42	5/8" GYPSUM BOARD
09.45	ACOUSTICAL CEILING TILE - SEE REFLECTED CEILING PLAN
09.70	5/8" M.R. GYP. BOARD ABOVE CEILING, TYPICAL
09.71	FIRE AND SOUND SEALANT CONTINUOUS, BOTH SIDES AT TOP OF WALL AS REQUIRED, SEE PARTITION TYPES SHEET XXXX
10.82	TYP THRU SIM CLASS ROOMS: RAISED ACCESS FLOORING 24" X 24"- OVER RECESSED SLAB 24" BELOW - SEE DETAIL C3/A-506

0 1' - 0" 2' - 0" 4' - 0"

SCALE: 3/4" = 1' - 0"

APPR | DATE | DESCRIPTION | SYM

NAVFAC

PRELIMINARY FOR REFERENCE ONLY

SEAL

IRQ W.M. Jordan COMPANY – A JOINT VENTURE –

Michael Baker INTERNATIONAL

100 AIRSIDE DRIVE
MOON TOWNSHIP, PA 15108

A/E INFO

APPROVED

FOR COMMANDER NAVFAC

ACTIVITY
MARINE CORPS BASE
CAMP LEJEUNE

SATISFACTORY TO DATE

DES Designer DRW Author CHK Checker

PM

BRANCH MANAGER

CHIEF ENG/ARCH

FIRE PROTECTION

DEPARTMENT OF THE NAVY
NAVAL FACILITIES ENGINEERING COMMAND
ROICC FLORENCE CAMP LEJEUNE
MCB CAMP LEJEUNE

NAVAL FACILITIES ENGINEERING COMMAND ~ MID-ATLANTIC
JACKSONVILLE, NC

JACKSONVILLE, NC
P1338F II MEF SIMULATION/TRAINING CENTER REPLACEMENT
WALL SECTIONS

SCALE: AS NOTED

EPROJECT NO.: 1590892

CONSTR. CONTR. NO.
N40085-20-C-0059

NAVFAC DRAWING NO.

SHEET OF

A-313

DP2 SUBMISSION – P1338 BUILDING - PRE-FINAL SUBMISSION

PLOTTED: 6/10/2021 12:46:52 AM

FILE NAME: BIM 360://HF PACKAGE 3/P1338 MEF SIM CTR-1590892-A.rvt

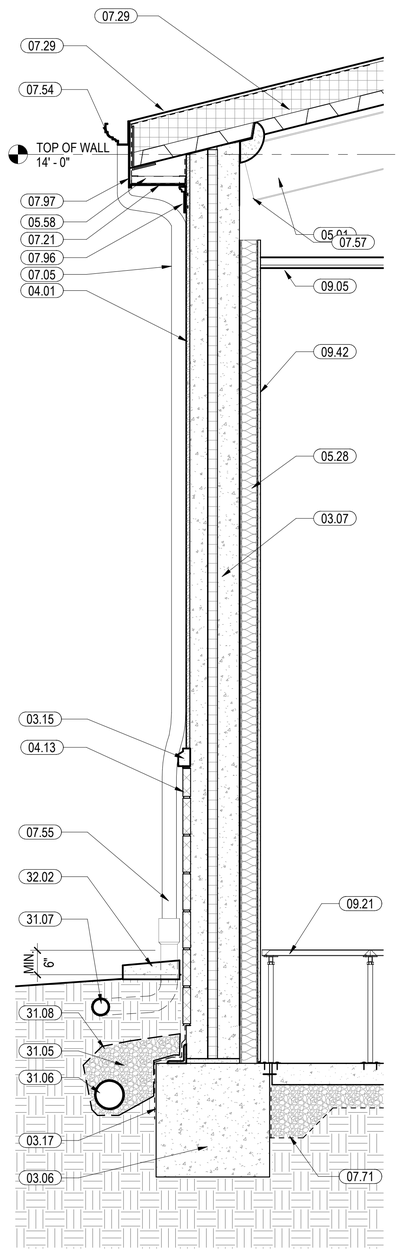

EXT. WALL @ LOWER FLOOR — A2

SCALE: 3/4" = 1'-0" — A-301

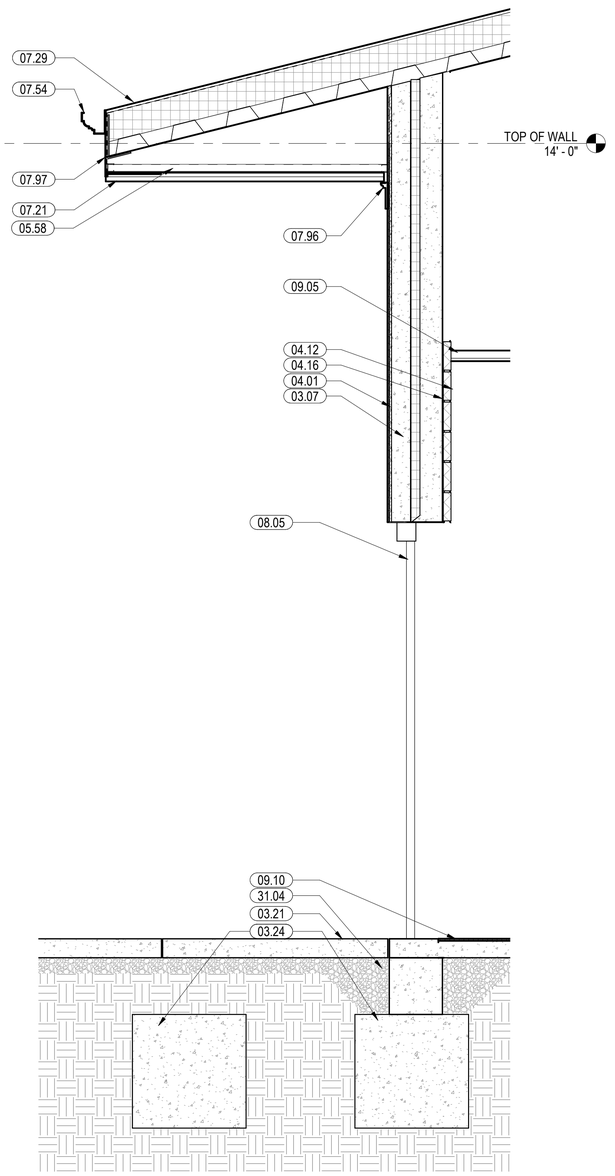

NORTH ENTRY ALCOVE — A3

SCALE: 3/4" = 1'-0" — A-112

0 1' - 0" 2' - 0" 4' - 0"

SCALE: 3/4" = 1' - 0"

KEYNOTES

03.06	CONCRETE FOUNDATION - SEE S-SERIES
03.07	INSULATED TILT-UP CONCRETE WALL WITH CAST-IN BRICK VENEER
03.15	PRECAST STONE WALL SWEEP AND SILL ACCENT
03.17	BITUTHENE LIQUID MEMBRANE, CONTINUOUS OVER FOOTING, TYP.
03.21	4" CONCRETE SIDEWALK - SEE CIVIL
03.24	FOUNDATION. REFER TO STRUCTURAL
04.01	BRICK VENEER - FIELD
04.12	1 1/2" CMU VENEER OVER THIN SET MORTAR
04.13	1 1/2" SPLIT-FACE CMU VENEER WITH WHITE MORTAR
04.16	THIN SET LAYER
05.01	STRUCTURAL STEEL OR COLUMN, SEE S-SERIES
05.28	3 5/8" METAL STUD AT 16" O.C.
05.58	1 1/2" HAT CHANNEL SPACED TO MATCH SOFFIT PANEL SPACING
07.05	PRE-FINISHED 5" DIA. DOWNSPOUTS TO MATCH ROOF SYSTEM
07.21	METAL SOFFIT SYSTEM
07.29	STANDING SEAM METAL ROOF OVER AIR/ VAPOR BARRIER AND SHEATHING WITH 6" RIGID INSULATION OVER 3" METAL ROOF DECK, TYPICAL
07.54	PREFINISHED GEORGIAN STYLE PROFILED ROOF GUTTER - 6"X6" MIN SIZE
07.55	PREFINISHED METAL DOWNSPOUT - 6"X4" MIN SIZE, ATTACH TO BUILDING STRUCTURE - DRAIN TO STORM SEWER
07.57	CLOSED CELL SPRAY FOAM AIR BARRIER SEALANT, CONTINUOUS AT TOP OF EXTERIOR WALL
07.71	VAPOR BARRIER - SEE STRUCTURAL
07.96	GEORGIAN STYLE CORNICE AND FASCIA BELOW EAVE SOFFIT
07.97	METAL FLASHING BEHIND FASCIA AND SOFFIT
08.05	INSULATED HOLLOW METAL DOOR AND FRAME - SEE DOOR SCHEDULE
09.05	SUSPENDED ACOUSTICAL CEILING.
09.10	RECESSED WALK-OFF MAT
09.21	24"x 24"x 24" RAISED ACCESS FLOORING W/ INTERCHANGEABLE SQUARE MODULE PANELS
09.42	5/8" GYPSUM BOARD
31.04	COMPACTED SUBGRADE, SEE CIVIL
31.05	GRAVEL FILLED FRENCH DRAIN SYSTEM
31.06	PERFORATED PVC DRAINAGE PIPE, SEE CIVIL
31.07	ROOF DRAINAGE PIPE TO STORM DRAIN, SEE CIVIL
31.08	PERMEABLE FILTER FABRIC
32.02	12" WIDE MOW STRIP, SEE LANDSCAPING.

SYM	DESCRIPTION	DATE	APPR

PRELIMINARY FOR REFERENCE ONLY

SEAL

RQ W.M. Jordan COMPANY — A JOINT VENTURE —

Michael Baker INTERNATIONAL

100 AIRSIDE DRIVE
MOON TOWNSHIP, PA 15108 — A/E INFO

APPROVED

FOR COMMANDER NAVFAC

ACTIVITY
MARINE CORPS BASE
CAMP LEJEUNE

SATISFACTORY TO DATE

DES Designer DRW Author CHK Checker

PM

BRANCH MANAGER

CHIEF ENG/ARCH

FIRE PROTECTION

DEPARTMENT OF THE NAVY
NAVAL FACILITIES ENGINEERING COMMAND
ROICC FLORENCE CAMP LEJEUNE

NAVAL FACILITIES ENGINEERING COMMAND ~ MID-ATLANTIC
JACKSONVILLE, NC

MCB CAMP LEJEUNE
JACKSONVILLE, NC
P1338F II MEF SIMULATION/TRAINING CENTER REPLACEMENT
WALL SECTIONS

SCALE: AS NOTED

EPROJECT NO.: 1590892

CONSTR. CONTR. NO.
N40085-20-C-0059

NAVFAC DRAWING NO.

SHEET OF

A-314

DP2 SUBMISSION – P1338 BUILDING - PRE-FINAL SUBMISSION

PLOTTED: 6/10/2021 12:46:55 AM

FILE NAME: BIM 360://HF PACKAGE 3/P1338 MEF SIM CTR-1590892-A.rvt

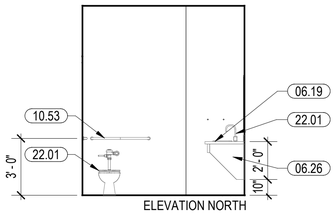

ELEVATION NORTH

UNISEX G012 (NORTH) — D1

SCALE: 1/4" = 1'-0"

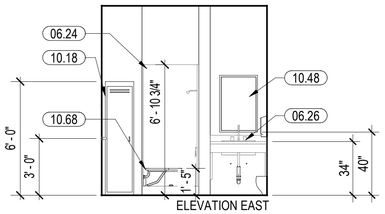

ELEVATION EAST

UNISEX G012 (EAST) — D2

SCALE: 1/4" = 1'-0"

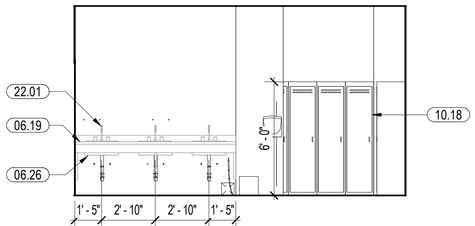

WOMEN'S RESTROOM G011 (NORTH) — C1

SCALE: 1/4" = 1'-0"

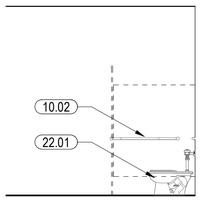

WOMEN'S RESTROOM G011 (EAST) — C2

SCALE: 1/4" = 1'-0"

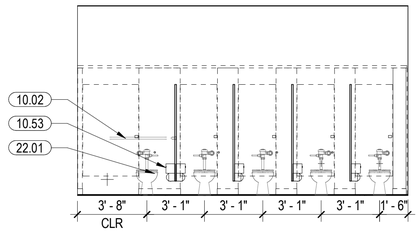

WOMEN'S RESTROOM G011 (SOUTH) — B1

SCALE: 1/4" = 1'-0"

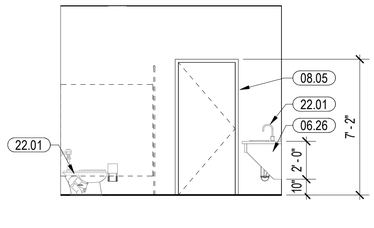

WOMEN'S RESTROOM G011 (WEST) — B2

SCALE: 1/4" = 1'-0"

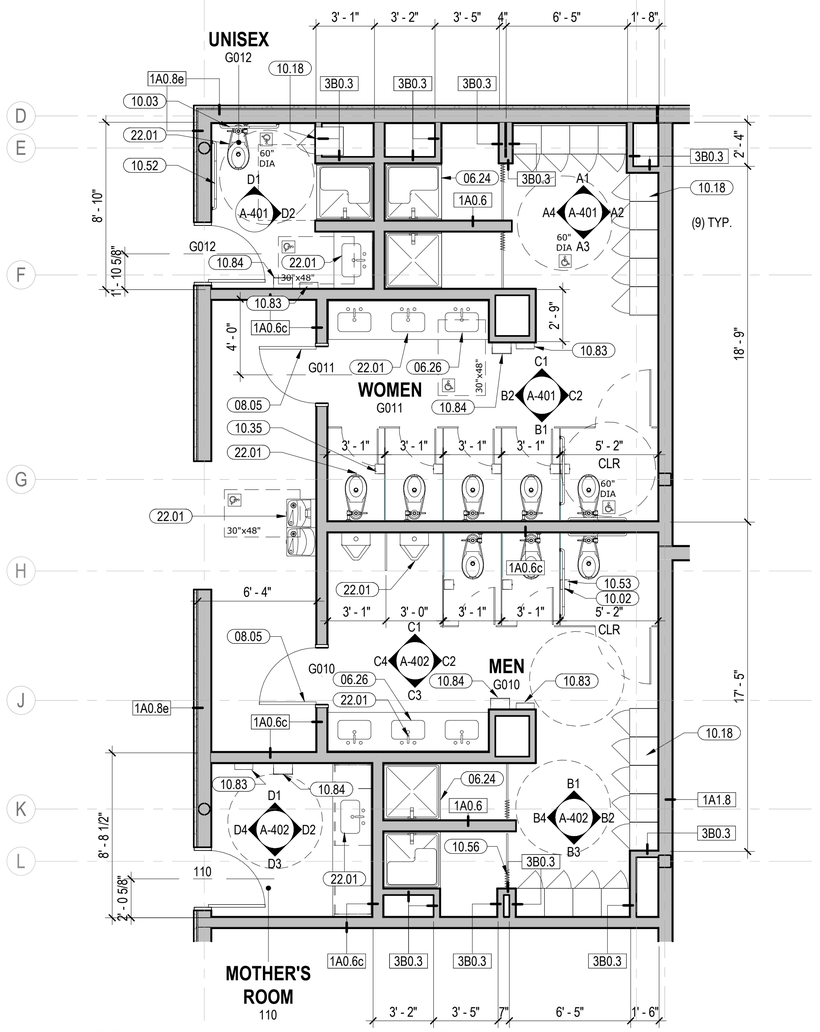

FLOOR PLAN AREA A - LOCKER ROOMS — B3

SCALE: 1/4" = 1'-0" A-111

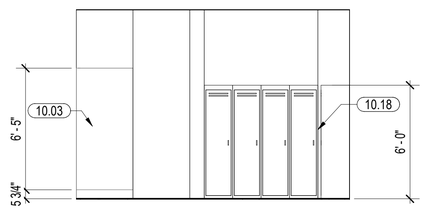

WOMEN'S SHOWER G011 (NORTH) — A1

SCALE: 1/4" = 1'-0"

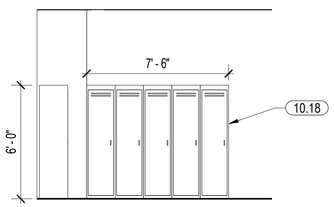

WOMEN'S SHOWER G011 (EAST) — A2

SCALE: 1/4" = 1'-0"

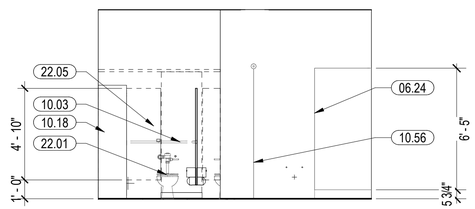

WOMEN'S SHOWER G011 (SOUTH) — A3

SCALE: 1/4" = 1'-0"

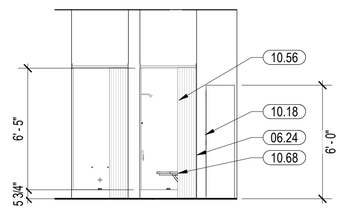

WOMEN'S SHOWER G011 (WEST) — A4

SCALE: 1/4" = 1'-0"

0 2' - 0" 4' - 0" 8' - 0"

SCALE: 1/4" = 1' - 0"

N

KEYNOTES

06.19	SOLID SURFACE COUNTERTOP
06.24	SOLID SURFACE SHOWER SURROUND
06.26	
08.05	INSULATED HOLLOW METAL DOOR AND FRAME - SEE DOOR SCHEDULE
10.02	TOILET & BATH ACCESSORIES (BRUSHED STAINLESS STEEL FINISH): DOUBLE-ROLL TOILET TISSUE DISPENSER, PAPER TOWEL DISPENSER, WASTE RECEPTACLE, FEMININE NAPKIN DISPOSAL RECEPTACLE, WALL MOUNTED SOAP DISPENSERS
10.03	SHOWER ACCESSORIES: (2) INTEGRAL CORNER SHELVES + SS GRAB BAR, SHOWER CURTAIN RODS, FULL LENGTH MIRROR, SHELF, (2) ROBE HOOKS + (1) BENCH AT EACH SHOWER STALL
10.18	18"W x 18"D FIXED METAL CONSTRUCTION WITH ENAMEL FINISH LOCKERS, SLOPED TOPS, FULLY ENCLOSED BASE
10.35	SURFACE MOUNTED TOILET PAPER DISPENSER - DOUBLE ROLL, VERTICAL MOUNTED
10.48	36" X 24" MIRROR
10.52	ABA S.S. GRAB BAR - TWO WALL TOILET COMPARTMENT
10.53	ABA S.S. SHOWER GRAB BAR
10.56	SHOWER CURTAIN AND ROD
10.68	ABA FOLDING SHOWER BENCH - WALL MOUNTED
10.83	HAND DRYER BRADLEY CORP AERIX-223-ADA
10.84	DISPENSER, PAPER TOWEL, SENSOR HANDS FREE A5082
22.01	PLUMBING FIXTURES (TYPICAL).
22.05	ACCESSIBLE TOILET

APPR	DATE	DESCRIPTION	SYM

NAVFAC

PRELIMINARY FOR REFERENCE ONLY

SEAL

IRQ W.M. Jordan COMPANY – A JOINT VENTURE –

Michael Baker INTERNATIONAL

100 AIRSIDE DRIVE
MOON TOWNSHIP, PA 15108 A/E INFO

APPROVED

FOR COMMANDER NAVFAC

ACTIVITY
MARINE CORPS BASE
CAMP LEJEUNE

SATISFACTORY TO DATE

DES XXX	DRW XXX	CHK XXX

PM

BRANCH MANAGER

CHIEF ENG/ARCH

FIRE PROTECTION

DEPARTMENT OF THE NAVY
NAVAL FACILITIES ENGINEERING COMMAND
ROICC FLORENCE CAMP LEJEUNE
MCB CAMP LEJEUNE

NAVAL FACILITIES ENGINEERING COMMAND – MID-ATLANTIC
JACKSONVILLE, NC

JACKSONVILLE, NC

P1338F II MEF SIMULATION/TRAINING CENTER REPLACEMENT

ENLARGED PLAN RESTROOMS & INTERIOR ELEVATIONS

SCALE: AS NOTED

EPROJECT NO.: 1590892

CONSTR. CONTR. NO.
N40085-20-C-0059

NAVFAC DRAWING NO.

SHEET OF

A-401

DP2 SUBMISSION – P1338 BUILDING –PRE-FINAL SUBMISSION

PLOTTED: 6/10/2021 12:47:02 AM

FILE NAME: BIM 360://HF PACKAGE 3/P1338 MEF SIM CTR-1590892-A.rvt

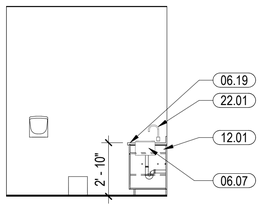

MOTHER'S ROOM 110 (NORTH)

SCALE: 1/4" = 1'-0" -- D1

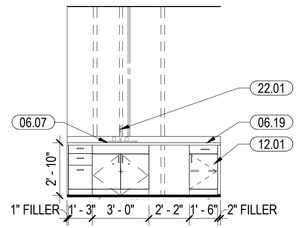

MOTHER'S ROOM 110 (EAST)

SCALE: 1/4" = 1'-0" -- D2

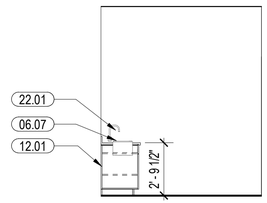

MOTHER'S ROOM 110 (SOUTH)

SCALE: 1/4" = 1'-0" -- D3

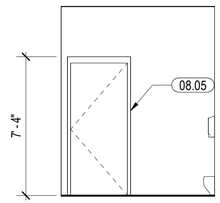

MOTHER'S ROOM 110 (WEST)

SCALE: 1/4" = 1'-0" -- D4

KEYNOTES	
06.07	SOLID SURFACE COUNTERTOP + INTEGRAL SOLID SURFACE LAVATORY SINK
06.19	SOLID SURFACE COUNTERTOP
06.24	SOLID SURFACE SHOWER SURROUND
08.05	INSULATED HOLLOW METAL DOOR AND FRAME - SEE DOOR SCHEDULE
10.01	HDPE FLOOR-SUPPORTED, OVERHEAD BRACED AND WALL MOUNTED PARTITIONS (WITH HOOK/BUMPER PER WC) AT EACH WATER CLOSET / URINAL
10.02	TOILET & BATH ACCESSORIES (BRUSHED STAINLESS STEEL FINISH): DOUBLE-ROLL TOILET TISSUE DISPENSER, PAPER TOWEL DISPENSER, WASTE RECEPTACLE, FEMININE NAPKIN DISPOSAL RECEPTACLE, WALL MOUNTED SOAP DISPENSERS
10.18	18"W x 18"D FIXED METAL CONSTRUCTION WITH ENAMEL FINISH LOCKERS, SLOPED TOPS, FULLY ENCLOSED BASE
10.28	SURFACE MOUNTED PAPER-TOWEL DISPENSER/WASTE RECEPTACLE
10.29	SURFACE MOUNTED PAPER-TOWEL DISPENSER
10.53	ABA S.S. SHOWER GRAB BAR
10.56	SHOWER CURTAIN AND ROD
12.01	CABINETS/ISLAND/VANITIES WITH QUARTZ COUNTERTOPS.
22.01	PLUMBING FIXTURES (TYPICAL).

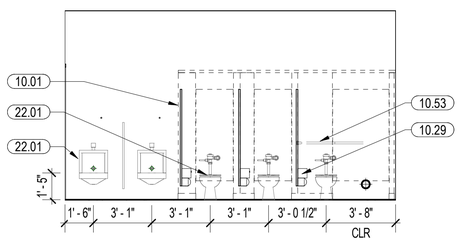

MEN'S RESTROOM G010 (NORTH)

SCALE: 1/4" = 1'-0" -- C1

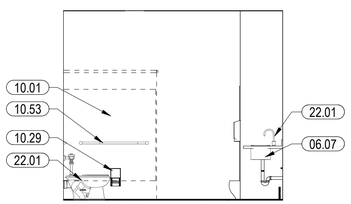

MEN'S RESTROOM G010 (EAST)

SCALE: 1/4" = 1'-0" -- C2

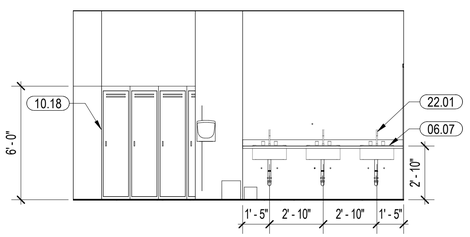

MEN'S RESTROOM G010 (SOUTH)

SCALE: 1/4" = 1'-0" -- C3

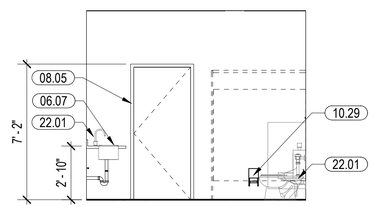

MEN'S RESTROOM G010 (WEST)

SCALE: 1/4" = 1'-0" -- C4

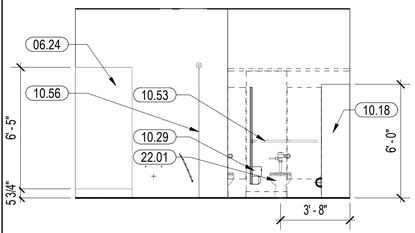

MEN'S SHOWER G010 (NORTH)

SCALE: 1/4" = 1'-0" -- B1

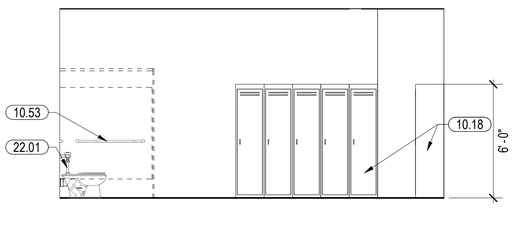

MEN'S SHOWER G010 (EAST)

SCALE: 1/4" = 1'-0" -- B2

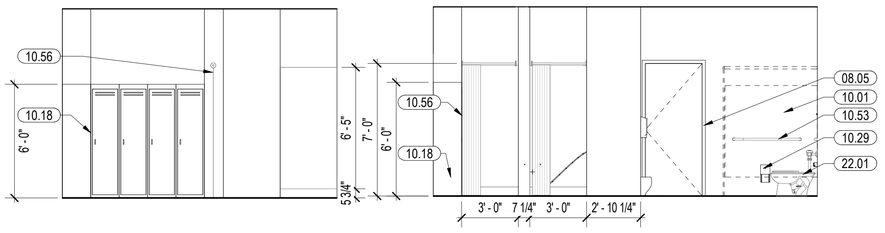

MEN'S SHOWER G010 (SOUTH)

SCALE: 1/4" = 1'-0" -- B3

MEN'S SHOWER G010 (WEST)

SCALE: 1/4" = 1'-0" -- B4

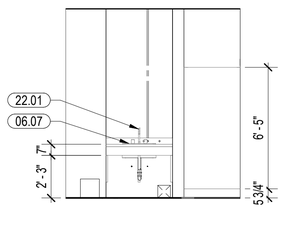

UNISEX G020 (NORTH)

SCALE: 1/4" = 1'-0" -- B5

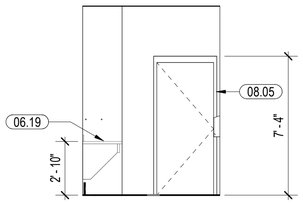

UNISEX G020 (EAST)

SCALE: 1/4" = 1'-0" -- A1

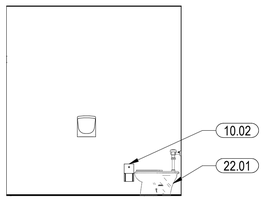

UNISEX G020 (SOUTH)

SCALE: 1/4" = 1'-0" -- A2

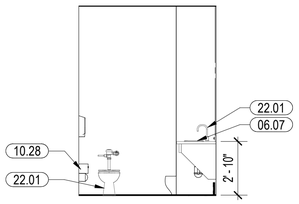

UNISEX G020 (WEST)

SCALE: 1/4" = 1'-0" -- A3

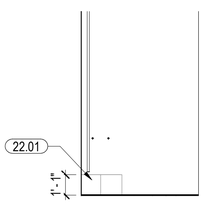

JAN. 204

SCALE: 1/4" = 1'-0" -- A4

0 2' - 0" 4' - 0" 8' - 0"

SCALE: 1/4" = 1' - 0"

APPR | DATE | SYM | DESCRIPTION

NAVFAC

PRELIMINARY FOR REFERENCE ONLY

SEAL

W.M. Jordan COMPANY – A JOINT VENTURE –

Michael Baker INTERNATIONAL

100 AIRSIDE DRIVE
MOON TOWNSHIP, PA 15108 A/E INFO

APPROVED

FOR COMMANDER NAVFAC

ACTIVITY
MARINE CORPS BASE CAMP LEJEUNE

SATISFACTORY TO DATE

DES Designer DRW Author CHK Checker

PM

BRANCH MANAGER

CHIEF ENG/ARCH

FIRE PROTECTION

DEPARTMENT OF THE NAVY
NAVAL FACILITIES ENGINEERING COMMAND
ROICC FLORENCE CAMP LEJEUNE

NAVAL FACILITIES ENGINEERING COMMAND ~ MID-ATLANTIC
JACKSONVILLE, NC

MCB CAMP LEJEUNE
JACKSONVILLE, NC
P1338F II MEF SIMULATION/TRAINING CENTER REPLACEMENT
INTERIOR ELEVATIONS

SCALE: AS NOTED

EPROJECT NO.: 1590892

CONSTR. CONTR. NO.
N40085-20-C-0059

NAVFAC DRAWING NO.

SHEET OF

A-402

DP2 SUBMISSION – P1338 BUILDING - PRE-FINAL SUBMISSION

PLOTTED: 6/10/2021 12:47:10 AM

FILE NAME: BIM 360://HF PACKAGE 3/P1338 MEF SIM CTR-1590892-A.rvt

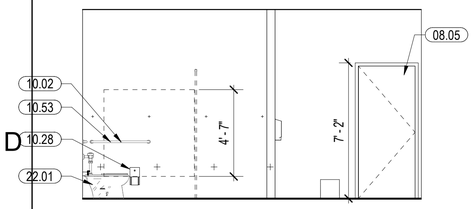

WOMEN'S RESTROOM G024 (NORTH)

SCALE: 1/4" = 1'-0" -- D1

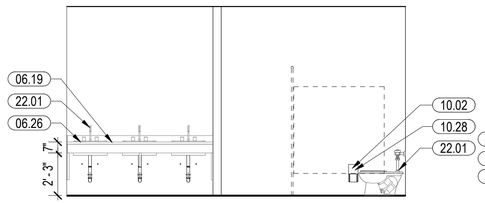

WOMEN'S RESTROOM G024 (SOUTH)

SCALE: 1/4" = 1'-0" -- D2

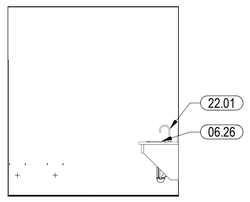

WOMEN'S RESTROOM G024 (EAST A)

SCALE: 1/4" = 1'-0" -- C1

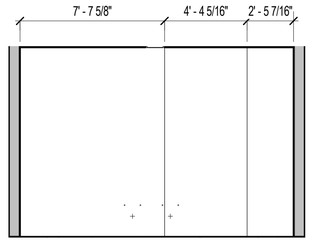

WOMEN'S RESTROOM G024 (EAST B)

SCALE: 1/4" = 1'-0" -- C2

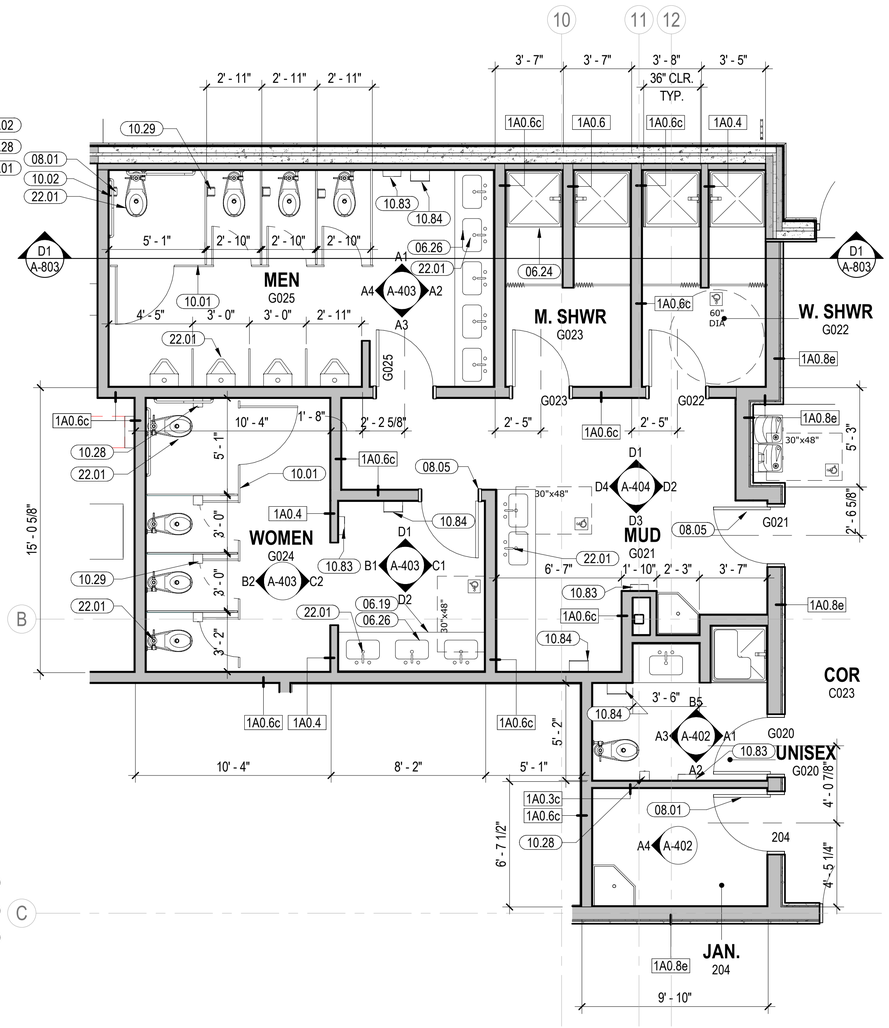

FLOOR PLAN - AREA B SECURE AREA RESTROOMS

SCALE: 1/4" = 1'-0" A-112 B3

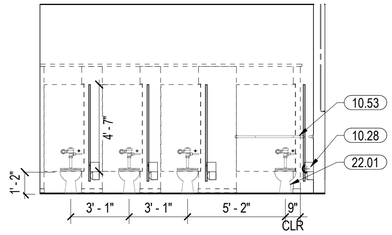

WOMEN'S RESTROOM G024 (WEST A)

SCALE: 1/4" = 1'-0" -- B1

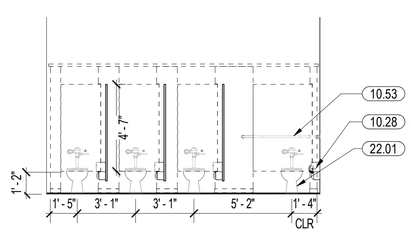

WOMEN'S RESTROOM G024 (WEST B)

SCALE: 1/4" = 1'-0" -- B2

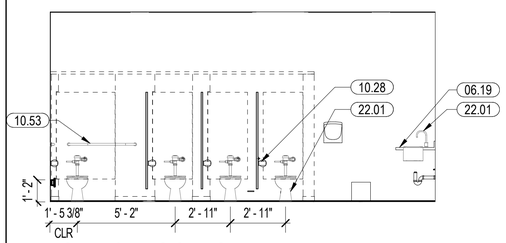

MEN'S RESTROOM G025 (NORTH)

SCALE: 1/4" = 1'-0" -- A1

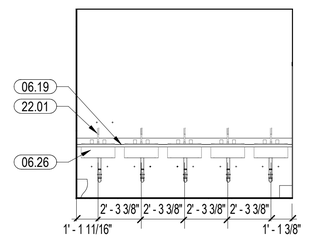

MEN'S RESTROOM G025 (EAST)

SCALE: 1/4" = 1'-0" -- A2

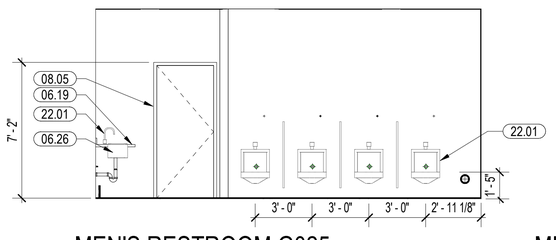

MEN'S RESTROOM G025 (SOUTH)

SCALE: 1/4" = 1'-0" -- A3

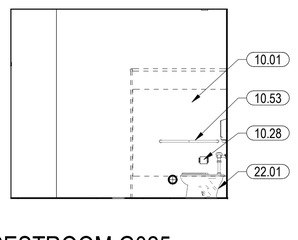

MEN'S RESTROOM G025 (WEST)

SCALE: 1/4" = 1'-0" -- A4

KEYNOTES	
06.19	SOLID SURFACE COUNTERTOP
06.24	SOLID SURFACE SHOWER SURROUND
06.26	
08.01	STEEL DOORS AND FRAMES
08.05	INSULATED HOLLOW METAL DOOR AND FRAME - SEE DOOR SCHEDULE
10.01	HDPE FLOOR-SUPPORTED, OVERHEAD BRACED AND WALL MOUNTED PARTITIONS (WITH HOOK/BUMPER PER WC) AT EACH WATER CLOSET / URINAL
10.02	TOILET & BATH ACCESSORIES (BRUSHED STAINLESS STEEL FINISH): DOUBLE-ROLL TOILET TISSUE DISPENSER, PAPER TOWEL DISPENSER, WASTE RECEPTACLE, FEMININE NAPKIN DISPOSAL RECEPTACLE, WALL MOUNTED SOAP DISPENSERS
10.28	SURFACE MOUNTED PAPER-TOWEL DISPENSER/WASTE RECEPTACLE
10.29	SURFACE MOUNTED PAPER-TOWEL DISPENSER
10.53	ABA S.S. SHOWER GRAB BAR
10.83	HAND DRYER BRADLEY CORP AERIX-223-ADA
10.84	DISPENSER, PAPER TOWEL, SENSOR HANDS FREE A5082
22.01	PLUMBING FIXTURES (TYPICAL).

APPR | DATE | DESCRIPTION | SYM

NAVFAC

PRELIMINARY FOR REFERENCE ONLY

SEAL

RQ W.M. Jordan COMPANY – A JOINT VENTURE –

Michael Baker INTERNATIONAL

100 AIRSIDE DRIVE MOON TOWNSHIP, PA 15108 A/E INFO

APPROVED

FOR COMMANDER NAVFAC

ACTIVITY
MARINE CORPS BASE CAMP LEJEUNE

SATISFACTORY TO DATE

DES Designer DRW Author CHK Checker

PM

BRANCH MANAGER

CHIEF ENG/ARCH

FIRE PROTECTION

DEPARTMENT OF THE NAVY
NAVAL FACILITIES ENGINEERING COMMAND ~ MID-ATLANTIC
ROICC FLORENCE CAMP LEJEUNE

NAVAL FACILITIES ENGINEERING COMMAND ~ MID-ATLANTIC
JACKSONVILLE, NC

MCB CAMP LEJEUNE
JACKSONVILLE, NC
P1338F II MEF SIMULATION/TRAINING CENTER REPLACEMENT

ENLARGED PLAN RESTROOMS & INTERIOR ELEVATIONS

SCALE: AS NOTED

EPROJECT NO.: 1590892

CONSTR. CONTR. NO.
N40085-20-C-0059

NAVFAC DRAWING NO.

SHEET OF

A-403

0 2' - 0" 4' - 0" 8' - 0"
SCALE: 1/4" = 1' - 0"

N

DP2 SUBMISSION – P1338 BUILDING - PRE-FINAL SUBMISSION

PLOTTED: 6/10/2021 12:47:18 AM

FILE NAME: BIM 360://HF PACKAGE 3/P1338 MEF SIM CTR-1590892-A.rvt

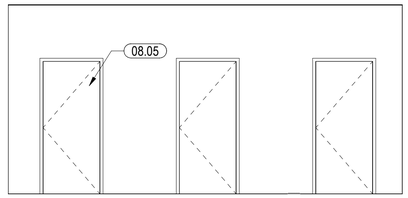

MUD 164 (NORTH) — D1
SCALE: 1/4" = 1'-0"

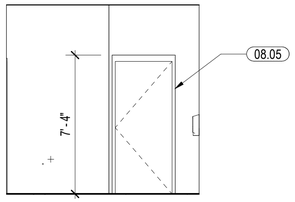

MUD 164 (EAST) — D2
SCALE: 1/4" = 1'-0"

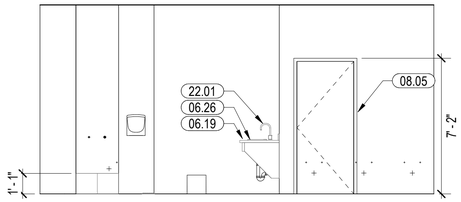

MUD 164 (SOUTH) — D3
SCALE: 1/4" = 1'-0"

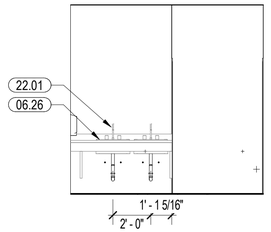

MUD 164 (WEST) — D4
SCALE: 1/4" = 1'-0"

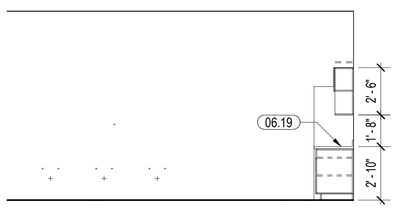

ADMIN BREAK ROOM 108 (NORTH) — C1
SCALE: 1/4" = 1'-0"

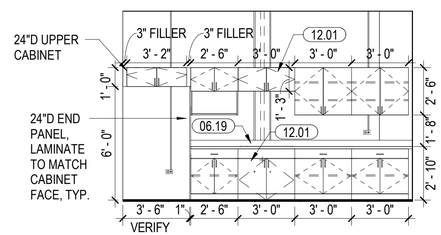

ADMIN BREAK ROOM 108 (EAST) — C2
SCALE: 1/4" = 1'-0"

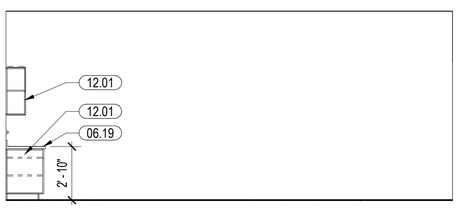

ADMIN BREAK ROOM 108 (SOUTH) — C3
SCALE: 1/4" = 1'-0"

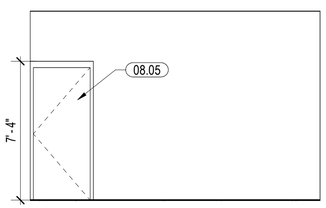

ADMIN BREAK ROOM 108 (WEST) — C4
SCALE: 1/4" = 1'-0"

BREAK ROOM 206 (NORTH) — B1
SCALE: 1/4" = 1'-0"

BREAK ROOM 206 (EAST) — B3
SCALE: 1/4" = 1'-0"

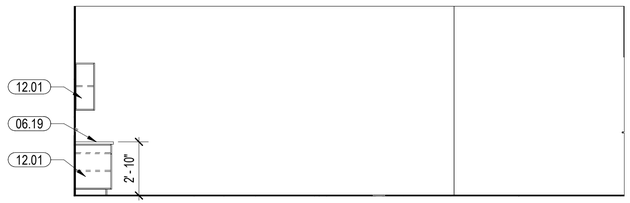

BREAK ROOM 206 (SOUTH) — A1
SCALE: 1/4" = 1'-0"

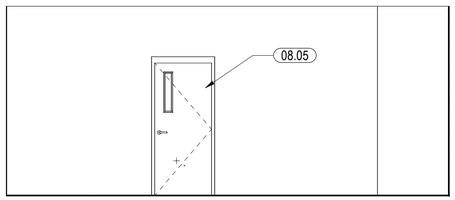

BREAK ROOM 206 (WEST) — A3
SCALE: 1/4" = 1'-0"

0 2' - 0" 4' - 0" 8' - 0"
SCALE: 1/4" = 1' - 0"

KEYNOTES

06.19	SOLID SURFACE COUNTERTOP
06.26	
08.05	INSULATED HOLLOW METAL DOOR AND FRAME - SEE DOOR SCHEDULE
08.24	FIXED ALUMINUM WINDOW, TYP. - SEE WINDOW TYPES
12.01	CABINETS/ISLAND/VANITIES WITH QUARTZ COUNTERTOPS.
22.01	PLUMBING FIXTURES (TYPICAL).

APPR | DATE | DESCRIPTION | SYM

NAVFAC

PRELIMINARY FOR REFERENCE ONLY

SEAL

IRQ W.M. Jordan COMPANY – A JOINT VENTURE –

Michael Baker INTERNATIONAL
100 AIRSIDE DRIVE
MOON TOWNSHIP, PA 15108
A/E INFO

APPROVED

FOR COMMANDER NAVFAC

ACTIVITY
MARINE CORPS BASE CAMP LEJEUNE

SATISFACTORY TO DATE

DES Designer DRW Author CHK Checker

PM

BRANCH MANAGER

CHIEF ENG/ARCH

FIRE PROTECTION

DEPARTMENT OF THE NAVY
NAVAL FACILITIES ENGINEERING COMMAND
ROIOC FLORENCE CAMP LEJEUNE

NAVAL FACILITIES ENGINEERING COMMAND ~ MID-ATLANTIC
JACKSONVILLE, NC

MCB CAMP LEJEUNE
JACKSONVILLE, NC
P1338F II MEF SIMULATION/TRAINING CENTER REPLACEMENT
INTERIOR ELEVATIONS

SCALE: AS NOTED
EPROJECT NO.: 1590892
CONSTR. CONTR. NO.
N40085-20-C-0059
NAVFAC DRAWING NO.
SHEET OF

A-404

DP2 SUBMISSION – P1338 BUILDING - PRE-FINAL SUBMISSION

PLOTTED: 6/10/2021 12:47:24 AM

FILE NAME: BIM 360://HF PACKAGE 3/P1338 MEF SIM CTR-1590892-A.rvt

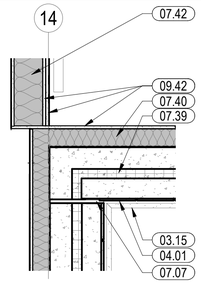

EXT. WALLS. AND INT. PARTITION

SCALE: 3/4" = 1'-0" A-114 D1

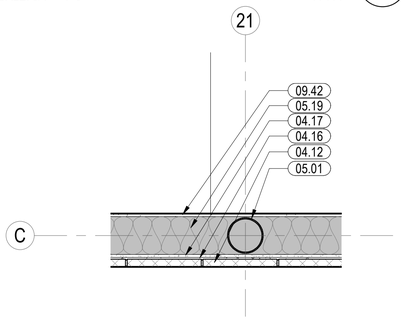

COLUMN C21

SCALE: 3/4" = 1'-0" A-113 C1

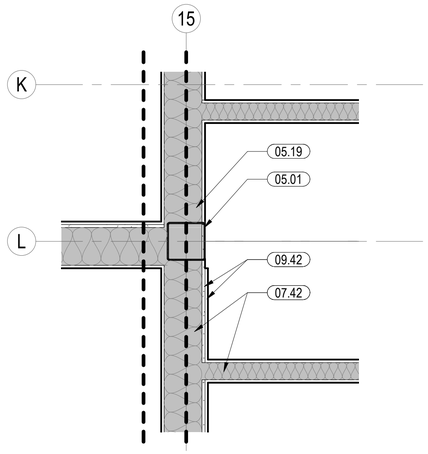

COLUMN L15

SCALE: 3/4" = 1'-0" A-113 C2

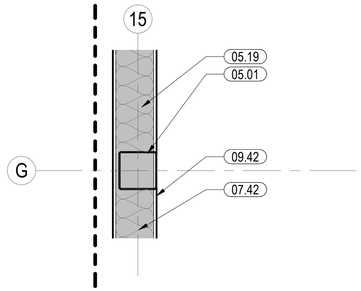

COLUMN G15

SCALE: 3/4" = 1'-0" A-113 D3

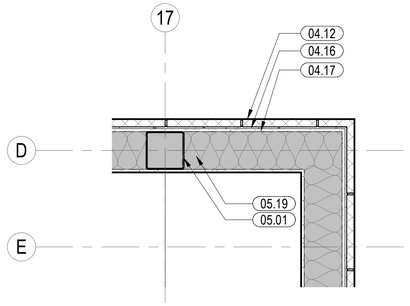

COLUMN D17

SCALE: 3/4" = 1'-0" A-113 C3

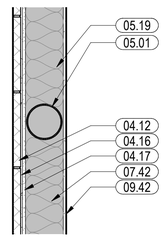

COLUMN K4

SCALE: 3/4" = 1'-0" A-111 D4

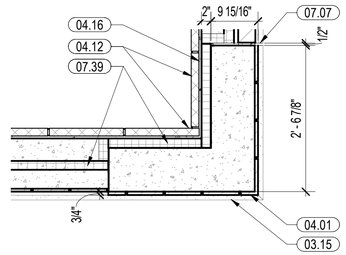

EXTERIOR WALL CORNER AT QUOIN

SCALE: 3/4" = 1'-0" A-113 C4

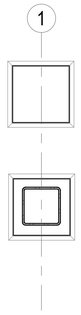

WRAPPED COLUMN J1

SCALE: 3/4" = 1'-0" A-111 B1

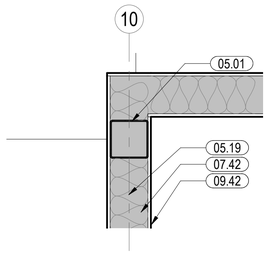

COLUMN L10

SCALE: 3/4" = 1'-0" A-112 B2

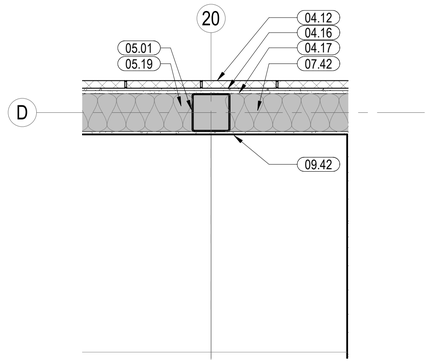

COLUMN D20

SCALE: 3/4" = 1'-0" A-113 B3

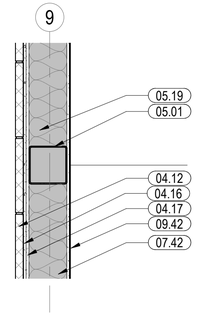

COLUMN L9

SCALE: 3/4" = 1'-0" A-111 B4

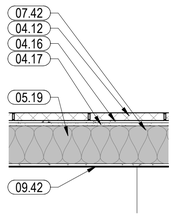

CORRIDOR VENEER WALL

SCALE: 3/4" = 1'-0" A-111 A1

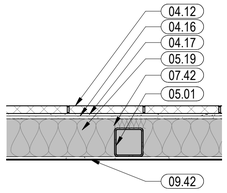

COLUMN H2

SCALE: 3/4" = 1'-0" A-111 A2

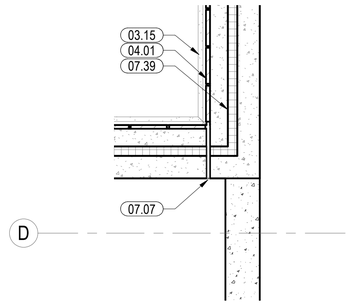

EXTERIOR / COMM. WALLS

SCALE: 3/4" = 1'-0" A-111 A3

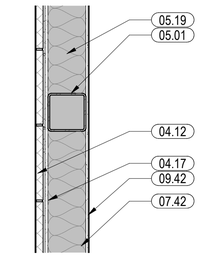

COLUMN G9

SCALE: 3/4" = 1'-0" A-111 A4

KEYNOTES

03.15	PRECAST STONE WALL SWEEP AND SILL ACCENT
04.01	BRICK VENEER - FIELD
04.12	1 1/2" CMU VENEER OVER THIN SET MORTAR
04.16	THIN SET LAYER
04.17	5/8" CEMENT BOARD ON METAL STUD WALL BEHIND CMU VENEER AND THIN SET
05.01	STRUCTURAL STEEL OR COLUMN, SEE S-SERIES
05.19	METAL STUD, SEE PARTITION TYPES
07.07	EXPANSION JOINT
07.39	2" CONTINUOUS RIGID INSULATION - R-13
07.40	R-19 BATT INSULATION AT EXTERIOR WALLS
07.42	R-19 BATT INSULATION
09.42	5/8" GYPSUM BOARD

0 1' - 0" 2' - 0" 4' - 0"

SCALE: 3/4" = 1' - 0"

APPR | DATE | DESCRIPTION | SYM

NAVFAC

PRELIMINARY FOR REFERENCE ONLY

SEAL

W.M. Jordan COMPANY – A JOINT VENTURE –

Michael Baker INTERNATIONAL

100 AIRSIDE DRIVE
MOON TOWNSHIP, PA 15108 A/E INFO

APPROVED

FOR COMMANDER NAVFAC

ACTIVITY
MARINE CORPS BASE CAMP LEJEUNE

SATISFACTORY TO DATE

DES Designer DRW Author CHK Checker

PM

BRANCH MANAGER

CHIEF ENG/ARCH

FIRE PROTECTION

DEPARTMENT OF THE NAVY
NAVAL FACILITIES ENGINEERING COMMAND
ROIOC FLORENCE CAMP LEJEUNE

NAVAL FACILITIES ENGINEERING COMMAND ~ MID-ATLANTIC
JACKSONVILLE, NC

MCB CAMP LEJEUNE

JACKSONVILLE, NC
P1338F II MEF SIMULATION/TRAINING CENTER REPLACEMENT
PLAN DETAILS

SCALE: AS NOTED

EPROJECT NO.: 1590892

CONSTR. CONTR. NO.
N40085-20-C-0059

NAVFAC DRAWING NO.

SHEET OF

A-501

DP2 SUBMISSION – P1338 BUILDING - PRE-FINAL SUBMISSION

PLOTTED: 6/10/2021 12:47:30 AM

FILE NAME: BIM 360://HF PACKAGE 3/P1338 MEF SIM CTR-1590892-A.rvt

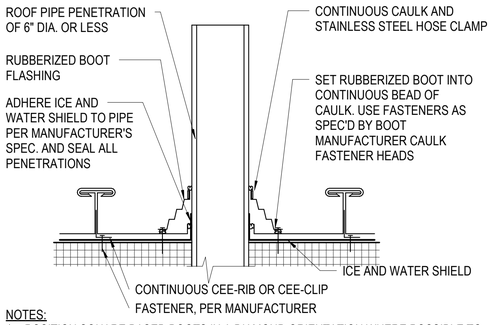

NOTES:
1. POSITION SQUARE BASED BOOTS IN A DIAMOND ORIENTATION WHERE POSSIBLE TO AID IN DIVERTING WATER
2. PIPE PENETRATION TO BE IN PAN OF METAL ROOF PANEL ONLY
3. FIELD CUT HOLE IN PANEL 1" LESS THAN DIA. OF STACK. BACK CUT HOLE AND BEND PANEL UP AROUND STACK. CAULK CONTINUOUS.
4. IF PANELS ARE 30' OR LONGER, CUT HOLE TO ALLOW FOR THERMAL MOVEMENT.
5. IF PIPE IS MADE OF METAL IT MUST BE PAINTED TO PREVENT RUST RUN-OFF FROM STAINING PANELS

ROOF PENETRATION
SCALE: 3" = 1'-0" — C1

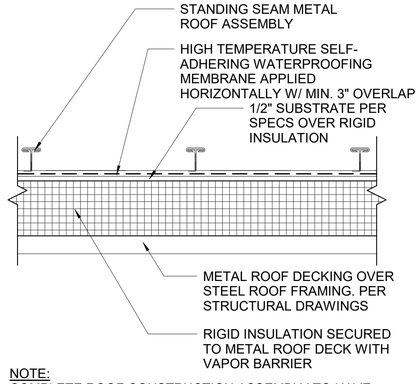

NOTE:
COMPLETE ROOF CONSTRUCTION ASSEMBLY TO HAVE MINIMUM THERMAL VALUE PER INSULATION SCHEDULE. COMPLETE ROOF COVERING ASSEMBLY TO BE FIRE-CLASSIFIED CLASS A IN ACCORDANCE WITH ASTM E 108

ROOF CONSTRUCTION ASSEMBLY
SCALE: 1 1/2" = 1'-0" — C2

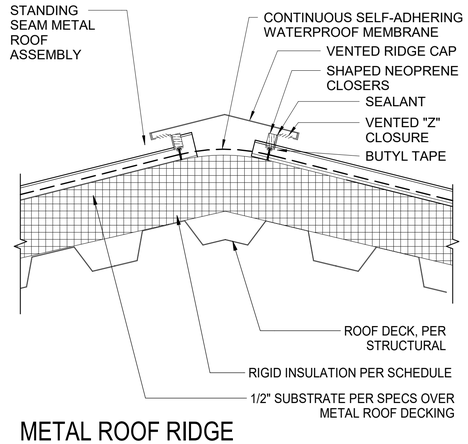

METAL ROOF RIDGE (VENTED)
SCALE: 1 1/2" = 1'-0" A-130 — C3

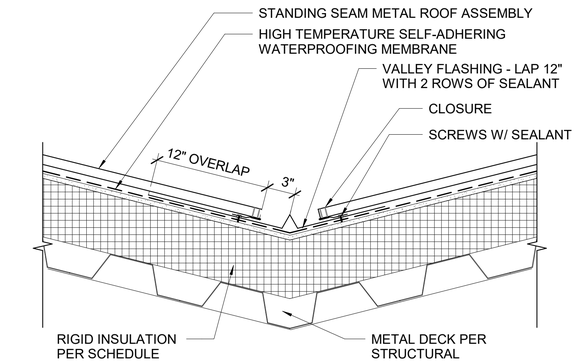

METAL ROOF VALLEY
SCALE: 1 1/2" = 1'-0" A-130 — D4

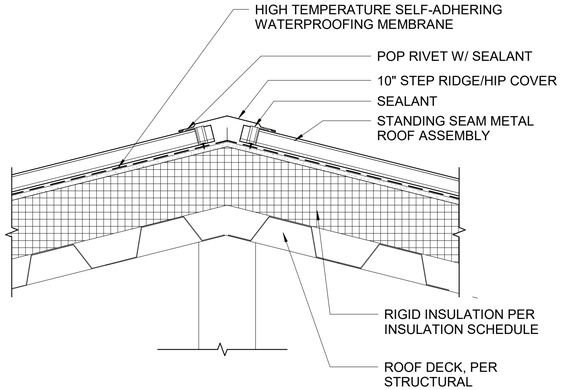

METAL ROOF RIDGE
SCALE: 1 1/2" = 1'-0" A-130 — C4

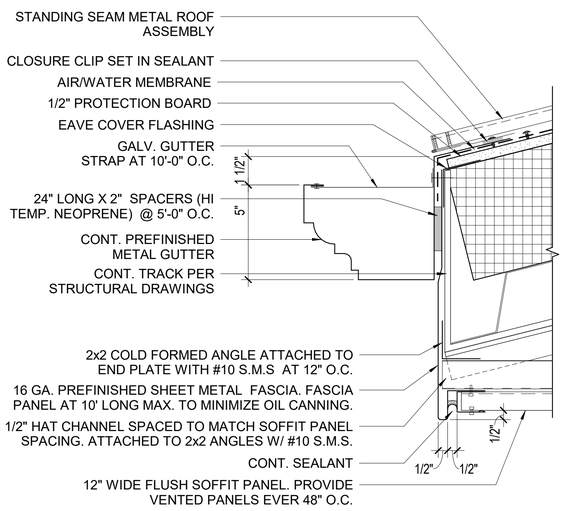

TYPICAL ROOF GUTTER
SCALE: 3" = 1'-0" A-502 — A2

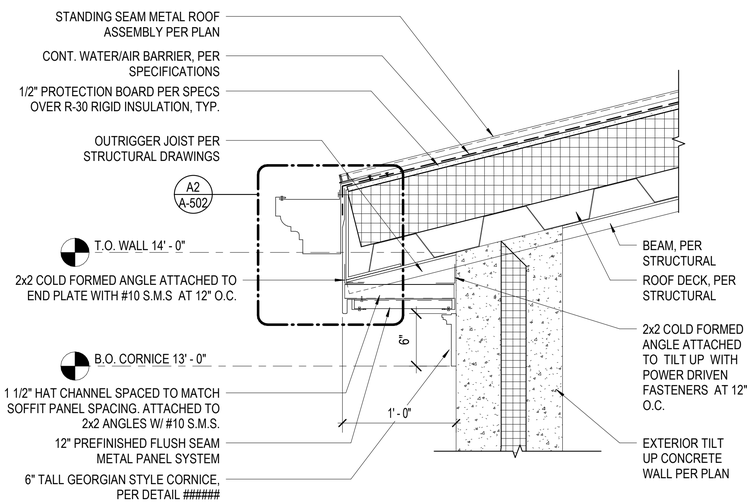

TYPICAL ROOF OVERHANG
SCALE: 1 1/2" = 1'-0" A-130 — A3

0 6" 1' - 0" 2' - 0"
SCALE: 1 1/2" = 1' - 0"

0 3" 6" 1' - 0"
SCALE: 3" = 1' - 0"

	DATE	DESCRIPTION	APPR

NAVFAC

PRELIMINARY FOR REFERENCE ONLY

SEAL

IRQ Jordan COMPANY — A JOINT VENTURE —

Michael Baker INTERNATIONAL
100 AIRSIDE DRIVE
MOON TOWNSHIP, PA 15108 A/E INFO

APPROVED

FOR COMMANDER NAVFAC

ACTIVITY
MARINE CORPS BASE
CAMP LEJEUNE

SATISFACTORY TO DATE

DES Designer DRW Author CHK Checker
PM
BRANCH MANAGER
CHIEF ENG/ARCH
FIRE PROTECTION

DEPARTMENT OF THE NAVY
NAVAL FACILITIES ENGINEERING COMMAND ~ MID-ATLANTIC
ROICC FLORENCE CAMP LEJEUNE
MCB CAMP LEJEUNE
NAVAL FACILITIES ENGINEERING COMMAND
JACKSONVILLE, NC
JACKSONVILLE, NC

P1338F II MEF SIMULATION/TRAINING CENTER REPLACEMENT

ROOF DETAILS

SCALE: AS NOTED
EPROJECT NO.: 1590892
CONSTR. CONTR. NO.
N40085-20-C-0059
NAVFAC DRAWING NO.
SHEET OF

A-502

DP2 SUBMISSION – P1338 BUILDING - PRE-FINAL SUBMISSION

PLOTTED: 6/10/2021 12:47:32 AM

FILE NAME: BIM 360/IHF PACKAGE 3/P1338 MEF SIM CTR-1590892-A.rvt

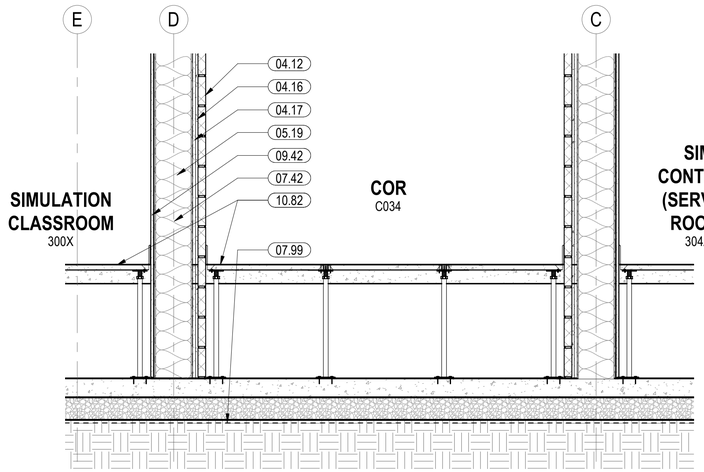

RAISED ACCESS FLOOR IN CORRIDOR

SCALE: 3/4" = 1'-0" — A-113 — C1

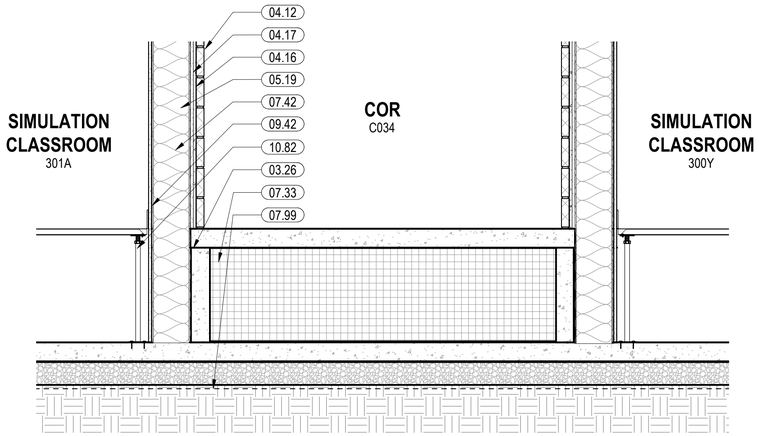

RAISED ACCESS FLOOR W/ INFILL CORRIDOR

SCALE: 3/4" = 1'-0" — A-113 — C3

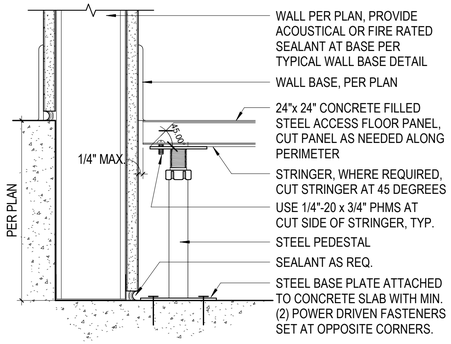

RAISED ACCESS FLOOR (PERIMETER 1)

SCALE: 3" = 1'-0" — B1

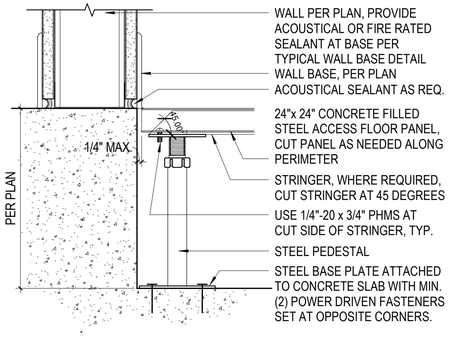

RAISED ACCESS FLOOR (PERIMETER 2)

SCALE: 3" = 1'-0" — B2

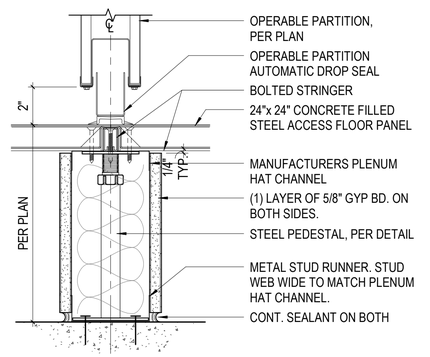

RAISED ACCESS FLOOR (AT OPERABLE PARTITION)

SCALE: 3" = 1'-0" — B3

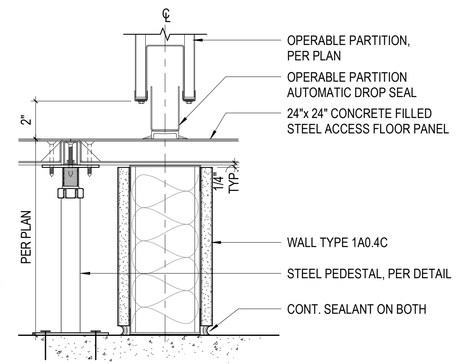

RAISED ACCESS FLOOR (AT PARTION)

SCALE: 3" = 1'-0" — B4

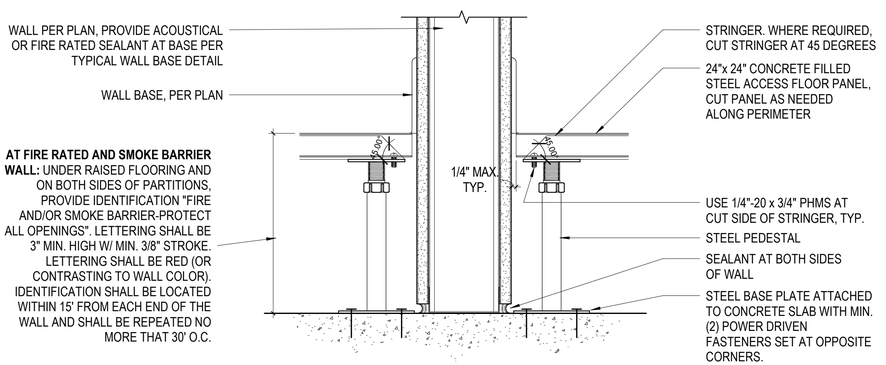

RAISED ACCESS FLOOR (INTERSECTING WALL)

SCALE: 3" = 1'-0" — A1

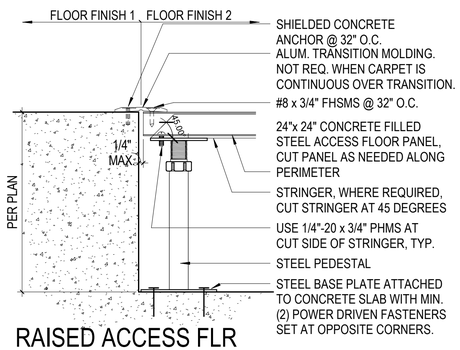

RAISED ACCESS FLR (THRESHOLD)

SCALE: 3" = 1'-0" — A3

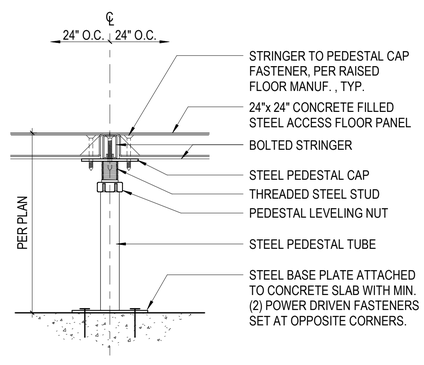

RAISED ACCESS FLR (FIELD)

SCALE: 3" = 1'-0" — A4

KEYNOTES

03.26	CONCRETE STEM WALL - TOP OF RECESSED SLAB TO BOTTOM OF FINISHED FLOOR - SEE STRUCTURAL
04.12	1 1/2" CMU VENEER OVER THIN SET MORTAR
04.16	THIN SET LAYER
04.17	5/8" CEMENT BOARD ON METAL STUD WALL BEHIND CMU VENEER AND THIN SET
05.19	METAL STUD, SEE PARTITION TYPES
07.33	EPS FOAM IN-FILL UNDER CONCRETE SLAB
07.42	R-19 BATT INSULATION
07.99	VAPOR BARRIER WRAPS STRUCTURAL
09.42	5/8" GYPSUM BOARD
10.82	TYP THRU SIM CLASS ROOMS: RAISED ACCESS FLOORING 24" X 24"- OVER RECESSED SLAB 24" BELOW - SEE DETAIL C3/A-506

0 1' - 0" 2' - 0" 4' - 0"
SCALE: 3/4" = 1' - 0"

0 3" 6" 1' - 0"
SCALE: 3" = 1' - 0"

APPR | DATE | DESCRIPTION | SYM

NAVFAC

PRELIMINARY FOR REFERENCE ONLY

SEAL

RQ W.M. Jordan COMPANY – A JOINT VENTURE –

Michael Baker INTERNATIONAL
100 AIRSIDE DRIVE
MOON TOWNSHIP, PA 15108
A/E INFO

APPROVED

FOR COMMANDER NAVFAC

ACTIVITY
MARINE CORPS BASE CAMP LEJEUNE

SATISFACTORY TO DATE

DES XXX | DRW XXX | CHK XXX

PM

BRANCH MANAGER

CHIEF ENG/ARCH

FIRE PROTECTION

DEPARTMENT OF THE NAVY
NAVAL FACILITIES ENGINEERING COMMAND
ROICC FLORENCE CAMP LEJEUNE
NAVAL FACILITIES ENGINEERING COMMAND ~ MID-ATLANTIC
JACKSONVILLE, NC
MCB CAMP LEJEUNE
JACKSONVILLE, NC
P1338F II MEF SIMULATION/TRAINING CENTER REPLACEMENT
RAISED ACCESS FLOORING DETAILS

SCALE: AS NOTED
EPROJECT NO.: 1590892
CONSTR. CONTR. NO.
N40085-20-C-0059
NAVFAC DRAWING NO.
SHEET OF
A-503

DP2 SUBMISSION – P1338 BUILDING - PRE-FINAL SUBMISSION

PLOTTED: 6/10/2021 12:47:36 AM
FILE NAME: BIM 360://HF PACKAGE 3/P1338 MEF SIM CTR-1590892-A.rvt

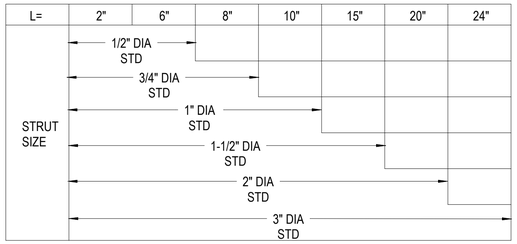

NOTES:

1. CONTINUOUS WALL TRIM ANGLE
2. 8 GA. LATERAL BRACING WIRES 2 " MAX FROM MAIN RUNNER AND CROSS RUNNER INTERSECTION EACH DIRECTION AT APPROXIMATELY 45° LOCATE LATERAL BRACING AT 4'-0" FROM WALLS AND 12'-0" O.C. MAX EACH WAY (TYP.)
3. COMPRESSION STRUT AT ALL BRACING(S) - REFER TO #2 - REFER TO SCHEDULE FOR SIZE
4. 8 GA. HANGERS AT 4'-0" PERIMETER, SUPPORTING MAIN RUNNERS AND CROSS RUNNERS' 8" FROM WALL MAX. TYP.
5. 1-1/2" COLD-ROLLED CHANNELS AT 48" O.C.
6. 5/8" GYPSUM BOARD
7. 7/8" FURRING CHANNELS AT 16" O.C. MAX.

GYP. BD. CEILING BRACING

SCALE: 1 1/2" = 1'-0"

C2

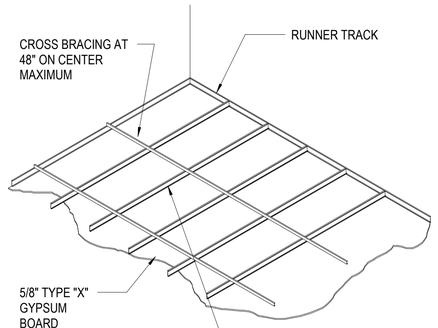

NOTES:

1. SEE DETAIL FOR CONTROL JOINT
2. FOR GYPSUM BOARD CEILING BRACING SEE DETAIL

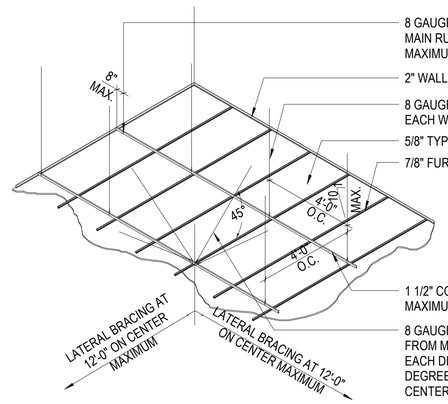

SUSPENDED GYPSUM BOARD

GYPSUM BOARD CEILING DETAIL

SCALE: 1 1/2" = 1'-0"

C3

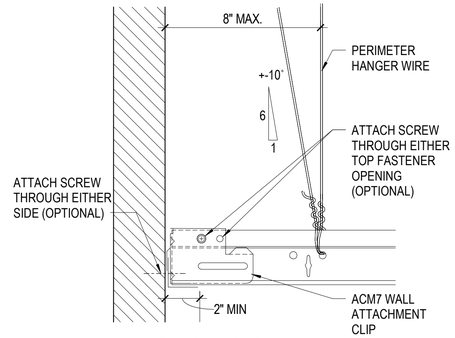

PERIMETER SEISMIC CLIP

SCALE: 12" = 1'-0"

B4

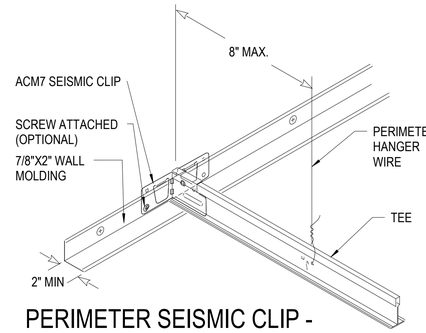

PERIMETER SEISMIC CLIP - ISO

SCALE: 12" = 1'-0"

B5

L=	2"	6"	8"	10"	15"	20"	24"
STRUT SIZE	1/2" DIA STD						
	3/4" DIA STD						
	1" DIA STD						
	1-1/2" STD						
	2" DIA STD						
	3" DIA STD						

NOTES:

1. 12 GA HANGER AT EACH CORNER OF ALL LIGHT FIXTURES AND EQUIPMENT WHICH ADD ANY WEIGHT TO CEILING.
2. ACOUSTICAL PANEL 24" X 48" OR 24" X 24" (REFER TO REFLECTED CEILING PLAN).
3. POP RIVET ALL TEES TO WALL ANGLE.
4. CONTINUOUS WALL TRIM ANGLE.
5. RECESSED LIGHT FIXTURE.
6. MAIN RUNNER TEES.
7. 12 GA LATERAL BRACING WIRES 2" MAX. FROM MAIN RUNNER AND CROSS RUNNER INTERSECTION EACH DIRECTION AT APPROXIMATELY 45°. LOCATE LATERAL BRACING AT 4'-0" FROM WALLS AND 12'-0" O.C. MAX. EACH WAY (TYP.)
8. CROSS RUNNER TEE
9. 12 GA HANGERS AT 4'-0" O.C. EACH WAY (TYP.)
10. 12 GA HANGERS AT 4'-0" PERIMETER. SUPPORTING MAIN RUNNERS AND CROSS RUNNERS 8" FROM WALL MAX. (TYP.)
11. COMPRESSION STRUT AT ALL BRACING(S) REFER TO #7 REFER TO SCHEDULE FOR SIZE.

ACOUSTICAL PANEL CLNG. BRACING CHART

SCALE: 1 1/2" = 1'-0"

A1

NOTES

1. GRID CEILING INSTALLATION TO MEET THE SEISMIC DESIGN CATEGORY REQUIREMENT OF LOCAL JURISDICTION
2. FIXTURES 56 LBS. OR MORE SHALL BE INDEPENDENTLY SUPPORTED FROM THE STRUCTURE ABOVE.

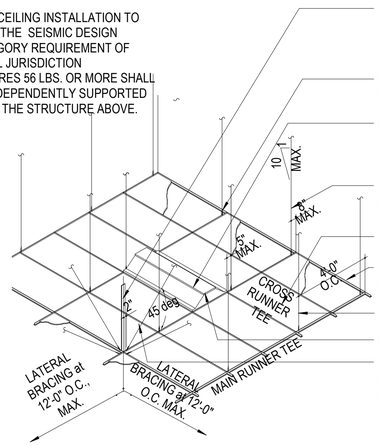

3 5/8" 20 GAUGE METAL STUD COMPRESSION STRUT - LATERAL BRACING AT 12'-0" ON CENTER MAXIMUM AND WITHIN 6'-0" OF EACH WALL ATTACHED TO STRUCTURAL MEMBER ABOVE

POP RIVET ALL TEES TO WALL ANGLE TYPICAL WITH HEAVY DUTY GRID SYSTEM; LIGHT FIXTURES AND OTHER

EQUIPMENT WEIGHING LESS THAN 56 LBS. TO BE SUPPORTED BY GRID SYSTEM AND TWO 12 GA. HANGERS AT OPPOSITE CORNERS (WIRES MAY BE SLACK)

8 GAUGE HANGER AT PERIMETER SUPPORTING MAIN RUNNERS AND CROSS RUNNERS 8" MAXIMUM FROM WALL - TYP.

ACOUSTICAL TILE PANEL - REFER TO FINISH SCHEDULE

2" WIDE WALL ANGLE TRIM (HORIZONTAL LEG) TYPICAL AT PERIMETER IN GRIDS LARGER THAN 144 SQ. FT.

8 GAUGE HANGERS AT 48" ON CENTER EACH WAY - TYPICAL

RECESSED LIGHT FIXTURE

8 GAUGE LATERAL BRACING WIRES 2" MAXIMUM FROM MAIN AND CROSS RUNNER INTERSECTION EACH DIRECTION AT APPROX. 45 DEGREES - LOCATE LATERAL BRACING AT 6'-0" O.C. FROM WALL AND 12'-0" O.C. EACH WAY

SUSPENDED CEILING TILE

SCALE: 1 1/2" = 1'-0"

A3

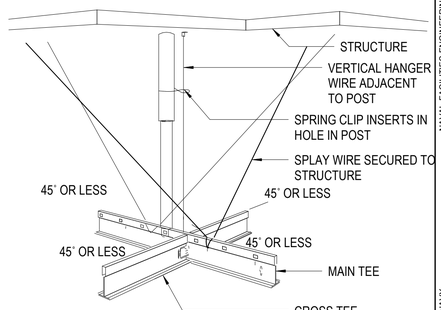

CEILING LATERAL BRACING

SCALE: 12" = 1'-0"

A5

0 3/4" 1 1/2" 3"

SCALE: 1' - 0" = 1' - 0"

0 6" 1' - 0" 2' - 0"

SCALE: 1 1/2" = 1' - 0"

NO.	DESCRIPTION	DATE	APPR

NAVFAC

PRELIMINARY FOR REFERENCE ONLY

SEAL

IRQ W.M. Jordan COMPANY ~ A JOINT VENTURE ~

Michael Baker INTERNATIONAL

100 AIRSIDE DRIVE
MOON TOWNSHIP, PA 15108 A/E INFO

APPROVED

FOR COMMANDER NAVFAC

ACTIVITY
MARINE CORPS BASE CAMP LEJEUNE

SATISFACTORY TO DATE

DES AL/WF DRW AL CHK WF/JV

PM

BRANCH MANAGER

CHIEF ENG/ARCH

FIRE PROTECTION

DEPARTMENT OF THE NAVY
NAVAL FACILITIES ENGINEERING COMMAND ~ MID-ATLANTIC
ROICC FLORENCE CAMP LEJEUNE
MCB CAMP LEJEUNE

NAVAL FACILITIES ENGINEERING COMMAND
JACKSONVILLE, NC

JACKSONVILLE, NC
P1338F II MEF SIMULATION/TRAINING CENTER REPLACEMENT
CEILING DETAILS

SCALE: AS NOTED
EPROJECT NO.: 1590892
CONSTR. CONTR. NO.
N40085-20-C-0059
NAVFAC DRAWING NO.
SHEET OF

A-504

DP2 SUBMISSION – P1338 BUILDING - PRE-FINAL SUBMISSION

PLOTTED: 6/10/2021 12:47:39 AM

FILE NAME: BIM 360://MF PACKAGE 3/P1338 MEF SIM CTR-1590892-A.rvt

KEYNOTES

03.07	INSULATED TILT-UP CONCRETE WALL WITH CAST-IN BRICK VENEER
04.03	BRICK VENEER - SOLDIER COURSE INSET 1/2" - ACCENT
04.05	BRICK QUOIN - SEE DETAIL
04.11	DOUBLE SOLDIER COURSE BRICK LINTEL
04.13	1 1/2" SPLIT-FACE CMU VENEER WITH WHITE MORTAR
04.14	PRECAST STONE ACCENT (SILL AT WINDOWS)
05.11	PAINTED METAL SUNSHADE WITH METAL FIN LOUVERS AND CABLE TIE-BACK SUPPORTS
05.15	CONCEALED HEAD MASONRY ANCHORS
05.32	ALUMINUM BUILDING NUMBERS
07.93	RIGID INSULATION
08.43	PREFINISHED ALUM. WINDOW. TO MATCH BASE STANDARDS
08.44	SOLDIER COURSE BRICK WINDOW FRAME

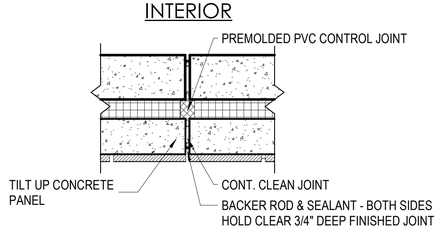

TILT UP CONTROL JOINT — C1

SCALE: 1 1/2" = 1'-0"

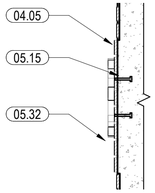

BUILDING SIGNAGE SECTION — B1

SCALE: 1" = 1'-0" A-505

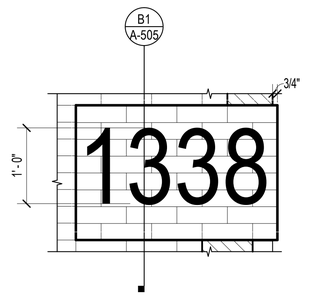

NOTES:
1. SEE BUILDING ELEVATIONS FOR LOCATIONS. CONFIRM LOCATIONS WITH CONTRACTING OFFICER PRIOR TO INSTALLATION.
2. MOUNT SIGNS AT MINIMUM OF 8'0" ABOVE GROUND.
3. CONFIRM ACTUAL BUILDING NUMBER WITH CONTRACTING OFFICER.
4. FONT STYLE TO BE HELVETICA MEDIUM.

BUILDING SIGNAGE ELEV. — A1

SCALE: 1" = 1'-0"

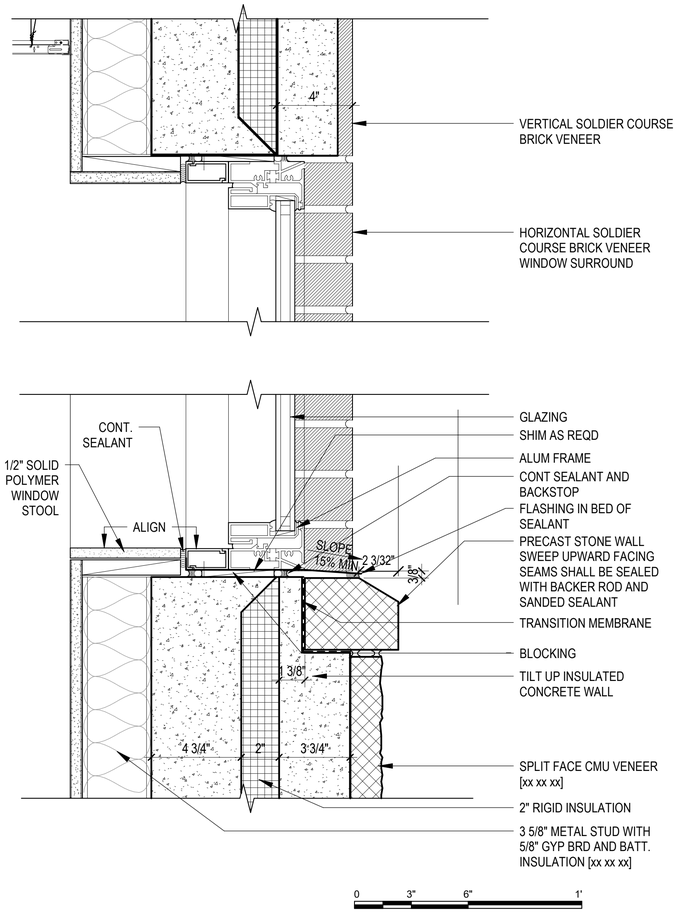

EXTERIOR WINDOW SILL & HEADER — B2

SCALE: 3" = 1'-0" A-311

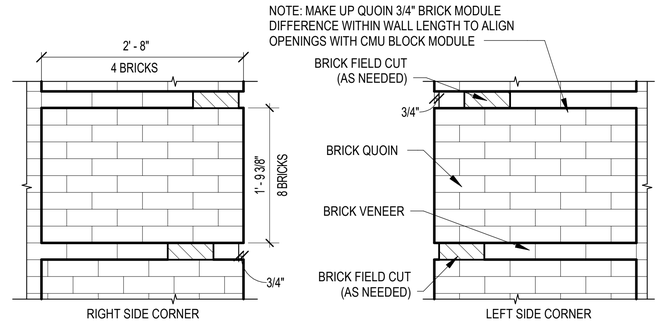

QUOIN ELEVATION — A2

SCALE: 1" = 1'-0"

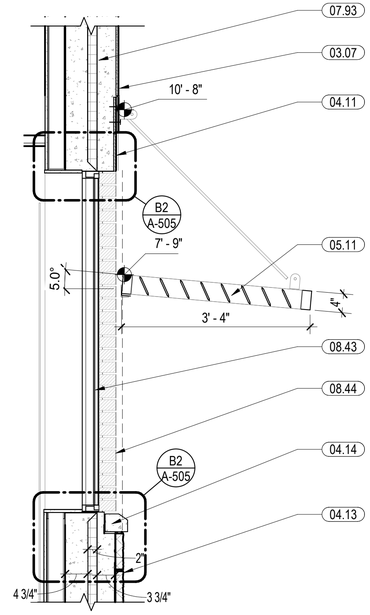

WINDOW SECTION DETAIL — C4

SCALE: 3/4" = 1'-0"

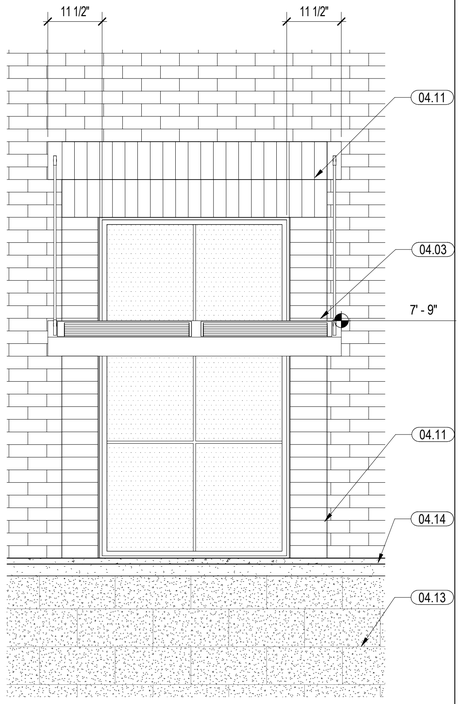

WINDOW ELEVATION DETAIL — A4

SCALE: 3/4" = 1'-0"

0 6" 1'-0" 2'-0"
SCALE: 1" = 1'-0"

0 1'-0" 2'-0" 4'-0"
SCALE: 3/4" = 1'-0"

APPR			
DATE			
DESCRIPTION			
SYM			

NAVFAC

PRELIMINARY FOR REFERENCE ONLY

SEAL

RQ W.M. Jordan COMPANY – A JOINT VENTURE –

Michael Baker INTERNATIONAL
100 AIRSIDE DRIVE
MOON TOWNSHIP, PA 15108
A/E INFO

APPROVED

FOR COMMANDER NAVFAC

ACTIVITY
MARINE CORPS BASE CAMP LEJEUNE

SATISFACTORY TO DATE

DES	DRW	CHK
WF	CP	MH

PM

BRANCH MANAGER

CHIEF ENG/ARCH

FIRE PROTECTION

DEPARTMENT OF THE NAVY
NAVAL FACILITIES ENGINEERING COMMAND
ROICC FLORENCE CAMP LEJEUNE
MCB CAMP LEJEUNE

NAVAL FACILITIES ENGINEERING COMMAND – MID-ATLANTIC
JACKSONVILLE, NC

JACKSONVILLE, NC
P1338F II MEF SIMULATION/TRAINING CENTER REPLACEMENT
EXTERIOR DETAILS

SCALE: AS NOTED
EPROJECT NO.: 1590892
CONSTR. CONTR. NO.
N40085-20-C-0059
NAVFAC DRAWING NO.
SHEET OF
A-505

DP2 SUBMISSION – P1338 BUILDING - PRE-FINAL SUBMISSION

PLOTTED: 6/10/2021 12:47:43 AM

FILE NAME: BIM 360://HF PACKAGE 3/P1338 MEF SIM CTR-1590892-A.rvt

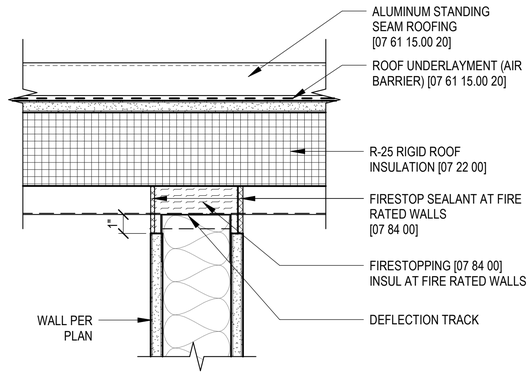

HEAD PER TO MTL DECK 1HR — C1

SCALE: 3" = 1'-0"

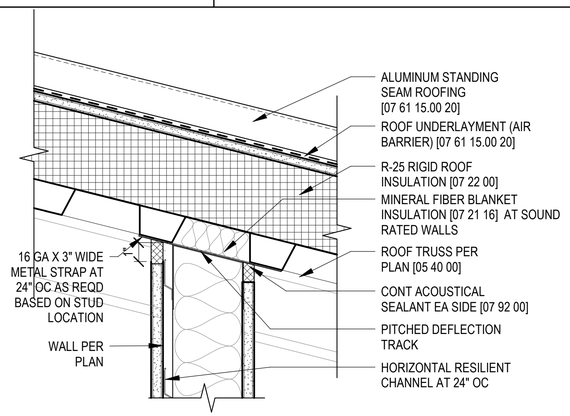

HEAD PAR TO MTL DECK STC — C2

SCALE: 3" = 1'-0"

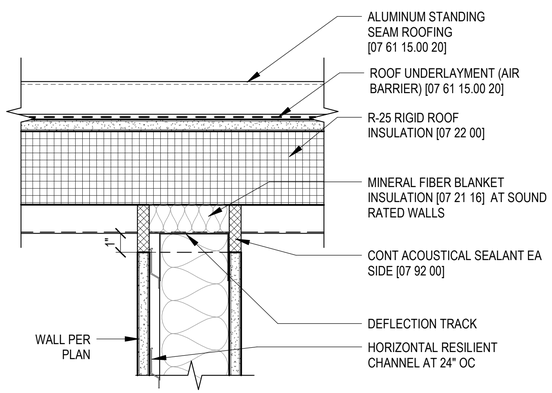

HEAD PER TO MTL DECK STC — B1

SCALE: 3" = 1'-0"

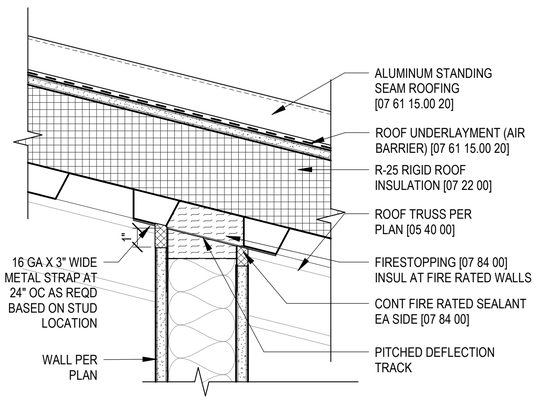

HEAD PAR TO MTL DECK 1HR — A1

SCALE: 3" = 1'-0"

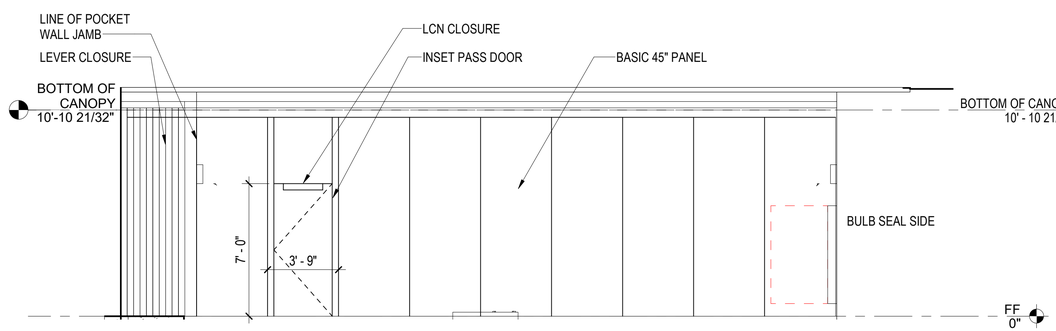

OPERABLE PARTITION - ELEVATION — B2

SCALE: 1/4" = 1'-0"

NOTES:
1. APPLY CAULK AT OPERABLE PARTITION ASSEMBLY JOINTS, PENETRATIONS AND DECK FLUTES TO INSURE COMPLETE SEAL.
2. OPERABLE PARTITION ASSEMBLY TO ACHIEVE A MINIMUM ACOUSTICAL ISOLATION RATING OF STC-45.
3. CONTINUE GYPSUM BOARD AND ACOUSTICAL INSULATION TO UNDERSIDE OF DECK. COORDINATE PLENUM OPENINGS AND REQUIREMENTS WITH MECHANICAL.

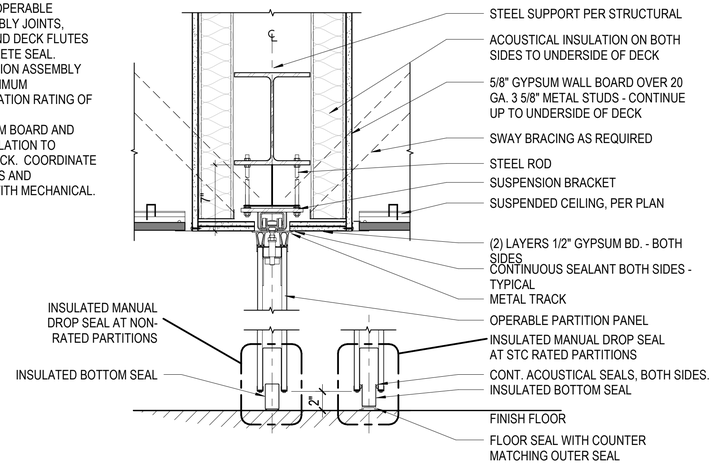

OPERABLE PARTITION HEAD — A2

SCALE: 1 1/2" = 1'-0"

AR111

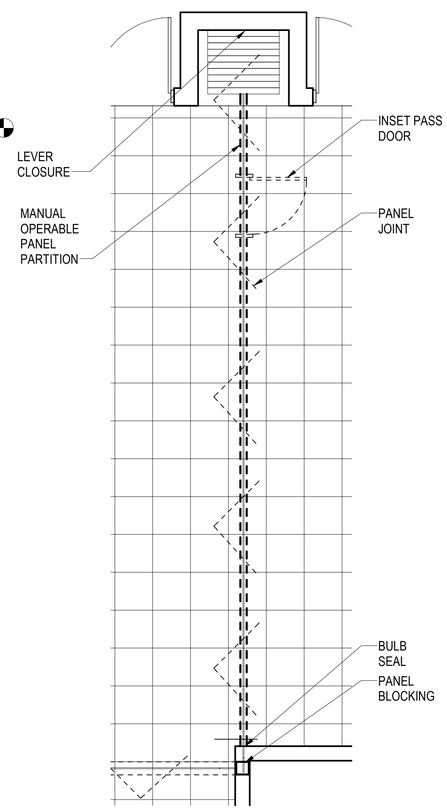

OPERABLE PARTITION - PLAN — A5

SCALE: 1/4" = 1'-0"

A-112

0 3" 6" 1' - 0"

SCALE: 3" = 1' - 0"

0 2' - 0" 4' - 0" 8' - 0"

SCALE: 1/4" = 1' - 0"

APPR | DATE | DESCRIPTION | SYM

NAVFAC

PRELIMINARY FOR REFERENCE ONLY

SEAL

W.M. Jordan COMPANY – A JOINT VENTURE –

Michael Baker INTERNATIONAL

100 AIRSIDE DRIVE
MOON TOWNSHIP, PA 15108 A/E INFO

APPROVED

FOR COMMANDER NAVFAC

ACTIVITY
MARINE CORPS BASE CAMP LEJEUNE

SATISFACTORY TO DATE

DES Designer DRW Author CHK Checker

PM

BRANCH MANAGER

CHIEF ENG/ARCH

FIRE PROTECTION

DEPARTMENT OF THE NAVY
NAVAL FACILITIES ENGINEERING COMMAND ~ MID-ATLANTIC
ROIOC FLORENCE CAMP LEJEUNE
MCB CAMP LEJEUNE

NAVAL FACILITIES ENGINEERING COMMAND
JACKSONVILLE, NC

JACKSONVILLE, NC
P1338F II MEF SIMULATION/TRAINING CENTER REPLACEMENT

PARTITION DETAILS

SCALE: AS NOTED

EPROJECT NO.: 1590892

CONSTR. CONTR. NO.
N40085-20-C-0059

NAVFAC DRAWING NO.

SHEET OF

A-506

DP2 SUBMISSION – P1338 BUILDING - PRE-FINAL SUBMISSION

PLOTTED: 6/10/2021 12:47:46 AM

FILE NAME: BIM 360://HF PACKAGE 3/P1338 MEF SIM CTR-1590892-A.rvt

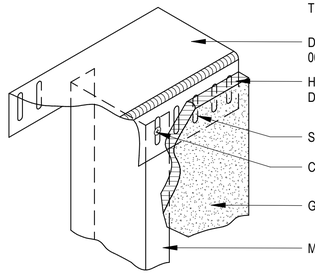

C4 DEFLECTION TRACK
SCALE: 3" = 1'-0"

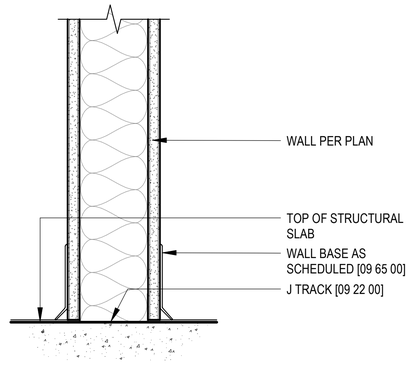

-- A-601 C1 WALL AT FLOOR
SCALE: 3" = 1'-0"

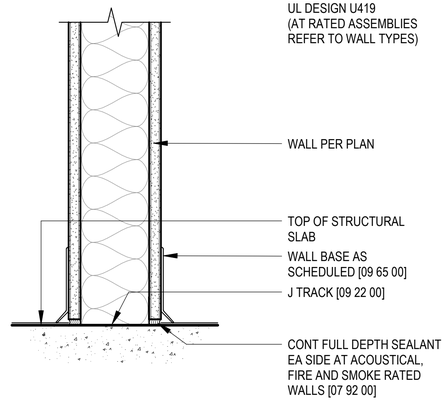

-- A-601 C2 RATED WALL AT FLOOR
SCALE: 3" = 1'-0"

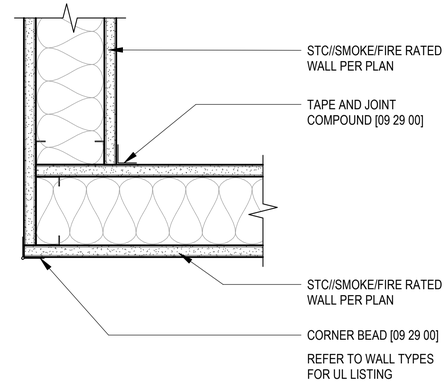

A1 CORNER FR/STC
SCALE: 3" = 1'-0"

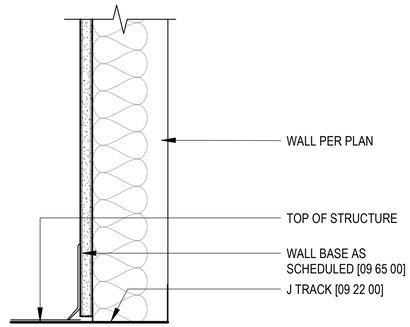

-- A-602 B1 CHASE WALL AT FLOOR
SCALE: 3" = 1'-0"

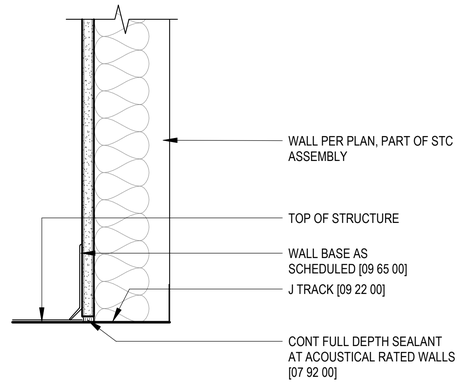

-- A-602 B2 RATED CHASE WALL AT FLOOR
SCALE: 3" = 1'-0"

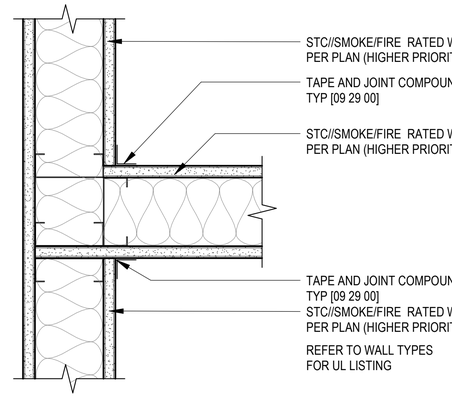

A4 INTERSECTION FR/STC
SCALE: 3" = 1'-0"

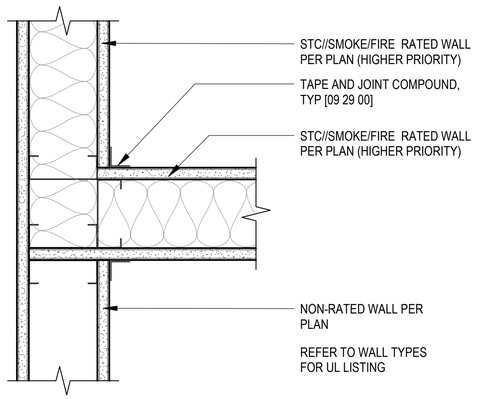

A2 CORNER INTERSECTION FR/STC
SCALE: 3" = 1'-0"

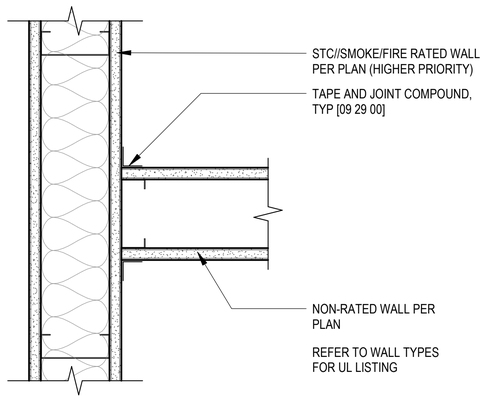

A3 INTERSECTION FR/STC
SCALE: 3" = 1'-0"

APPR | DATE | NO | DESCRIPTION

NAVFAC

PRELIMINARY FOR REFERENCE ONLY

SEAL

RQ W.M. Jordan COMPANY – A JOINT VENTURE –

Michael Baker INTERNATIONAL
100 AIRSIDE DRIVE
MOON TOWNSHIP, PA 15108
A/E INFO

APPROVED

FOR COMMANDER NAVFAC

ACTIVITY
MARINE CORPS BASE CAMP LEJEUNE

SATISFACTORY TO DATE

DES	DRW	CHK
SH	RQ	SS

PM
BRANCH MANAGER
CHIEF ENG/ARCH
FIRE PROTECTION

DEPARTMENT OF THE NAVY
NAVAL FACILITIES ENGINEERING COMMAND ~ MID-ATLANTIC
ROICC FLORENCE CAMP LEJEUNE
MCB CAMP LEJEUNE
NAVAL FACILITIES ENGINEERING COMMAND ~ MID-ATLANTIC
JACKSONVILLE, NC
JACKSONVILLE, NC
P1338F II MEF SIMULATION/TRAINING CENTER REPLACEMENT
PARTITION DETAILS

SCALE: AS NOTED
EPROJECT NO.: 1590892
CONSTR. CONTR. NO.
N40085-20-C-0059
NAVFAC DRAWING NO.
SHEET OF

A-507

DP2 SUBMISSION – P1338 BUILDING - PRE-FINAL SUBMISSION

PLOTTED: 6/10/2021 12:47:48 AM
FILE NAME: BIM 360://HF PACKAGE 3/P1338 MEF SIM CTR-1590892-A.rvt

INSULATED SHEET METAL DUCT THRU GYPSUM WALL ASSEMBLY

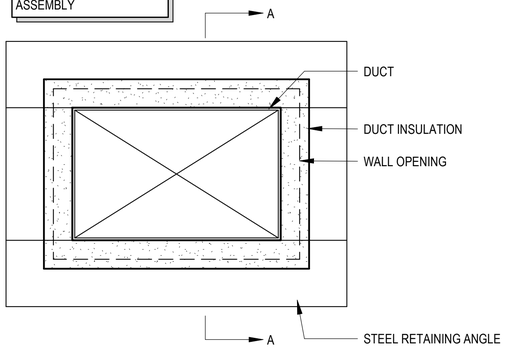

FRONT VIEW

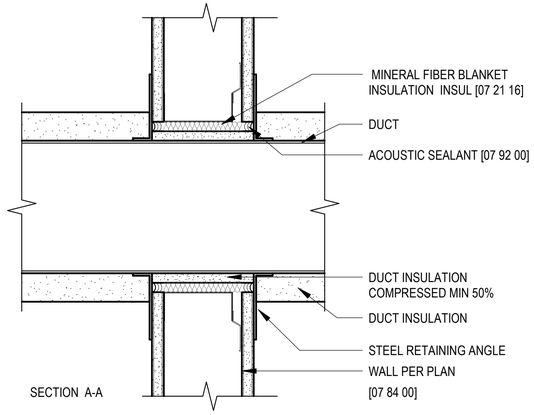

SECTION A-A

STC THRU PENETRATION

SCALE: 3" = 1'-0"

C1

METAL PIPE THRU GYPSUM WALL ASSEMBLY

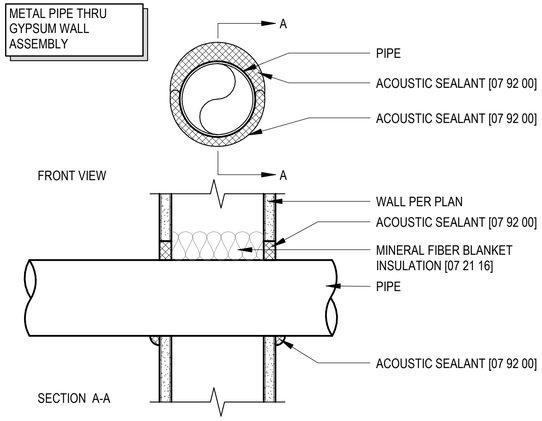

FRONT VIEW

SECTION A-A

STC THRU PENETRATION

SCALE: 3" = 1'-0"

C3

INSULATED METAL PIPE THRU GYPSUM WALL ASSEMBLY

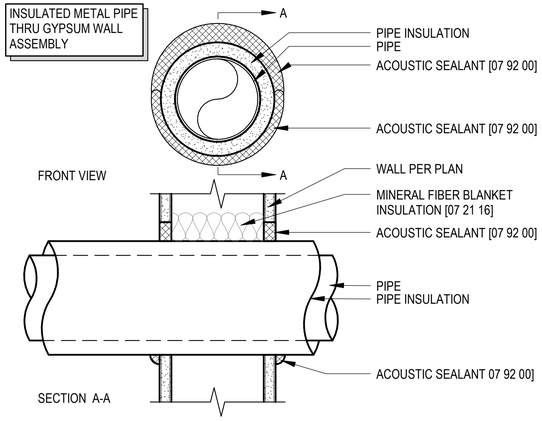

FRONT VIEW

SECTION A-A

STC THRU PENETRATION

SCALE: 3" = 1'-0"

C4

SHEET METAL DUCT THRU GYPSUM WALL ASSEMBLY

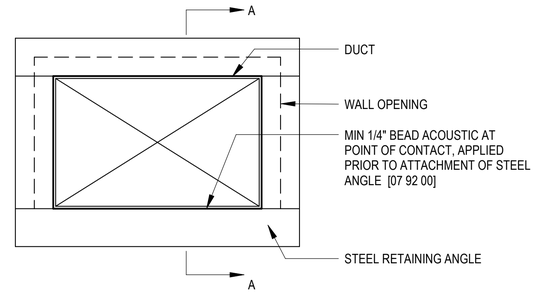

FRONT VIEW

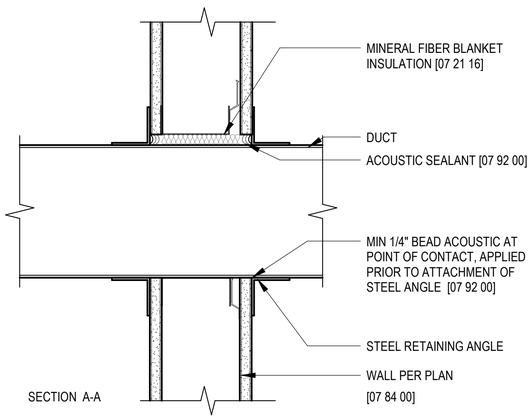

SECTION A-A

STC THRU PENETRATION

SCALE: 3" = 1'-0"

A1

CABLE TRAY THRU GYPSUM WALL ASSEMBLY

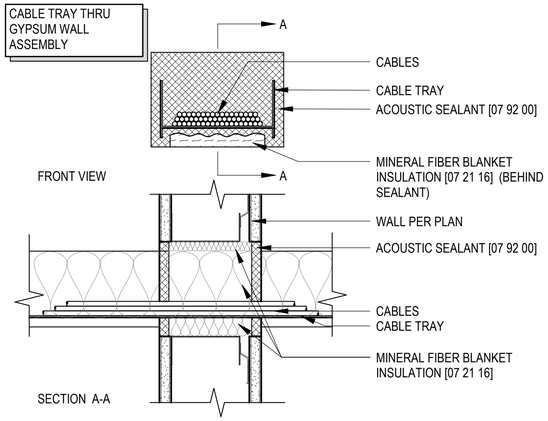

FRONT VIEW

SECTION A-A

STC THRU PENETRATION

SCALE: 3" = 1'-0"

A3

INSULATED METAL PIPE THRU GYPSUM WALL ASSEMBLY

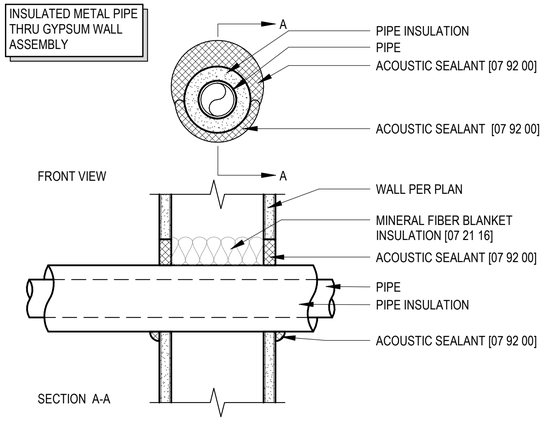

FRONT VIEW

SECTION A-A

STC THRU PENETRATION

SCALE: 3" = 1'-0"

A4

0 3" 6" 1' - 0"

SCALE: 3" = 1' - 0"

APPR | DATE | SYM | DESCRIPTION

NAVFAC

PRELIMINARY FOR REFERENCE ONLY

SEAL

W.M. Jordan COMPANY – A JOINT VENTURE –

Michael Baker INTERNATIONAL

100 AIRSIDE DRIVE
MOON TOWNSHIP, PA 15108

A/E INFO

APPROVED

FOR COMMANDER NAVFAC

ACTIVITY
MARINE CORPS BASE CAMP LEJEUNE

SATISFACTORY TO DATE

DES Designer DRW Author CHK Checker

PM

BRANCH MANAGER

CHIEF ENG/ARCH

FIRE PROTECTION

DEPARTMENT OF THE NAVY
NAVAL FACILITIES ENGINEERING COMMAND
ROICC FLORENCE CAMP LEJEUNE
MCB CAMP LEJEUNE

NAVAL FACILITIES ENGINEERING COMMAND ~ MID-ATLANTIC
JACKSONVILLE, NC

JACKSONVILLE, NC

P1338F II MEF SIMULATION/TRAINING CENTER REPLACEMENT

WALL PENETRATION DETAILS

SCALE: AS NOTED

EPROJECT NO.: 1590892

CONSTR. CONTR. NO.
N40085-20-C-0059

NAVFAC DRAWING NO.

SHEET OF

A-508

DP2 SUBMISSION – P1338 BUILDING - PRE-FINAL SUBMISSION

PLOTTED: 6/10/2021 12:47:50 AM

FILE NAME: BIM 360://HF PACKAGE 3/P1338 MEF SIM CTR-1590892-A.rvt

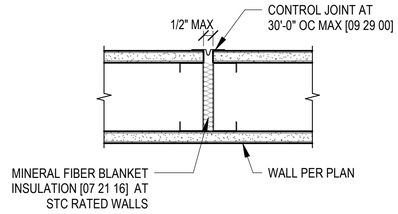

CONTROL JOINT
SCALE: 3" = 1'-0" — D3

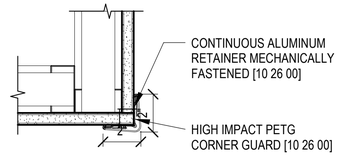

IMPACT CORNER WITH COVER
SCALE: 3" = 1'-0" — C3

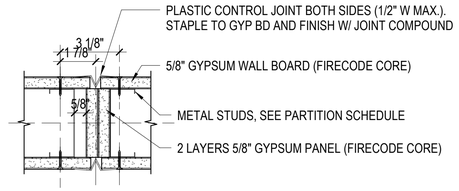

NOTE:
1. PROVIDE ACOUSTICAL SEALANT AT JOINT FOR SOUND RATED WALLS
2. SEE SPECIFICATION FOR SPACING RECOMMENDATIONS
3. MAXIMIZE LOCATION OF CONTROL JOINTS AT TOP CORNER OF DOOR FRAMES

GYP WALL FIRE RATED CONTROL JOINT (1 HR)
SCALE: 3" = 1'-0" — B3

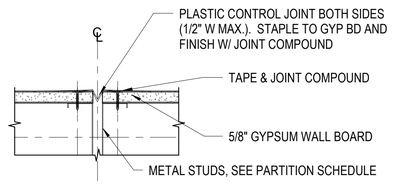

NOTE:
1. PROVIDE ACOUSTICAL SEALANT AT JOINT FOR SOUND RATED WALLS
2. SEE SPECIFICATION FOR SPACING RECOMMENDATIONS
3. MAXIMIZE LOCATION OF CONTROL JOINTS AT TOP CORNER OF DOOR FRAMES

GYP WALL CONTROL JOINT (TYPICAL)
SCALE: 3" = 1'-0" — A3

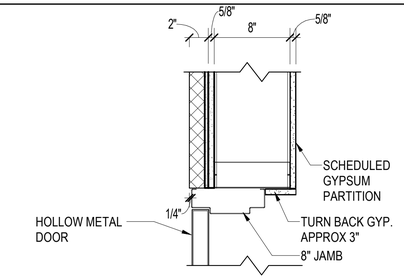

TYP JAMB @ CORRIDOR
SCALE: 1 1/2" = 1'-0" — D4

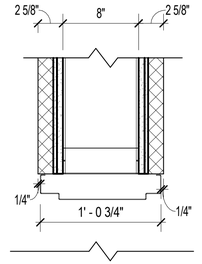

DOUBLE CMU JAMB
SCALE: 1 1/2" = 1'-0" — C4

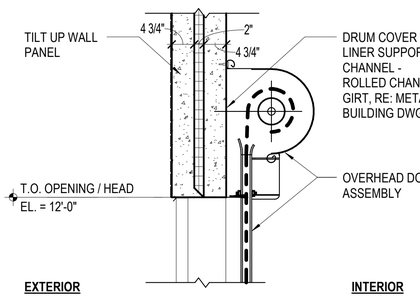

EXTERIOR COILING DOOR HEAD
SCALE: 3/4" = 1'-0" — A-313 — B4

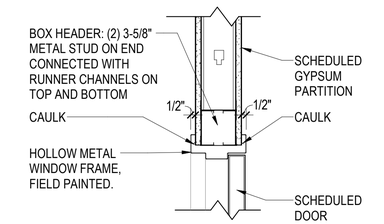

H1 - HOLLOW METAL FRAME HEAD DETAIL
SCALE: 1 1/2" = 1'-0" — A4

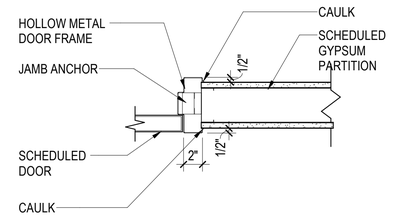

J1 - HOLLOW METAL FRAME JAMB DETAIL (INTERIOR)
SCALE: 1 1/2" = 1'-0" — D5

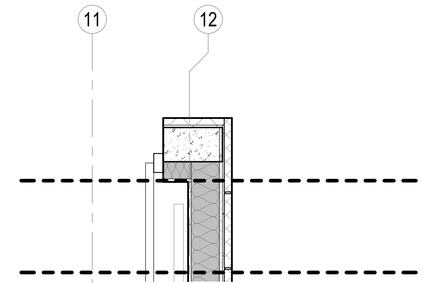

DOOR AT STRUCTURAL WALL
SCALE: 3/4" = 1'-0" — C5

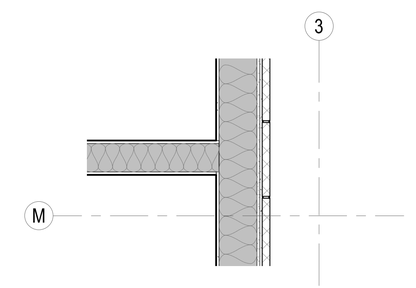

DOOR JAM IN VENEER WALL
SCALE: 3/4" = 1'-0" — A-111 — B5

0 1' - 0" 2' - 0" 4' - 0"
SCALE: 3/4" = 1' - 0"

0 6" 1' - 0" 2' - 0"
SCALE: 1 1/2" = 1' - 0"

0 3" 6" 1' - 0"
SCALE: 3" = 1' - 0"

APPR | DATE | SYM | DESCRIPTION

NAVFAC

PRELIMINARY FOR REFERENCE ONLY

SEAL

IRQ W.M. Jordan COMPANY ~ A JOINT VENTURE ~

Michael Baker INTERNATIONAL
100 AIRSIDE DRIVE
MOON TOWNSHIP, PA 15108
A/E INFO

APPROVED

FOR COMMANDER NAVFAC

ACTIVITY
MARINE CORPS BASE
CAMP LEJEUNE

SATISFACTORY TO DATE

DES XXX | DRW XXX | CHK XXX

PM

BRANCH MANAGER

CHIEF ENG/ARCH

FIRE PROTECTION

DEPARTMENT OF THE NAVY
NAVAL FACILITIES ENGINEERING COMMAND ~ MID-ATLANTIC
JACKSONVILLE, NC
ROICC FLORENCE CAMP LEJEUNE
MCB CAMP LEJEUNE
JACKSONVILLE, NC
P1338F II MEF SIMULATION/TRAINING CENTER
REPLACEMENT
DOOR AND JAMB DETAILS

SCALE: AS NOTED

EPROJECT NO.: 1590892

CONSTR. CONTR. NO.
N40085-20-C-0059

NAVFAC DRAWING NO.

SHEET OF
A-509

DP2 SUBMISSION – P1338 BUILDING -_PRE-FINAL SUBMISSION

PLOTTED: 6/10/2021 12:47:53 AM

FILE NAME: BIM 360://HF PACKAGE 3/P1338 MEF SIM CTR-1590892-A.rvt

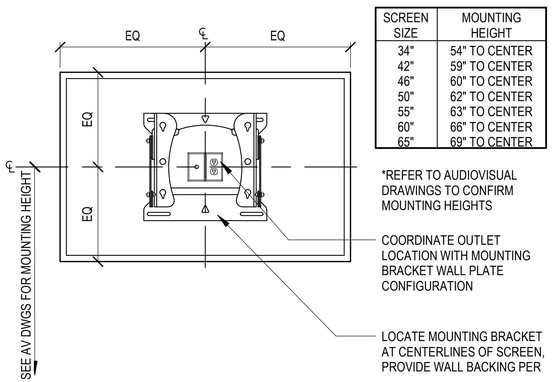

SCREEN SIZE	MOUNTING HEIGHT
34"	54" TO CENTER
42"	59" TO CENTER
46"	60" TO CENTER
50"	62" TO CENTER
55"	63" TO CENTER
60"	66" TO CENTER
65"	69" TO CENTER

TV WALL MOUNT BRACKET C2
SCALE: 1" = 1'-0"

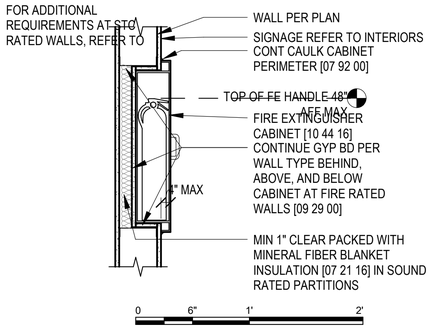

SEMI RECESSED FEC C3
SCALE: 1" = 1'-0"

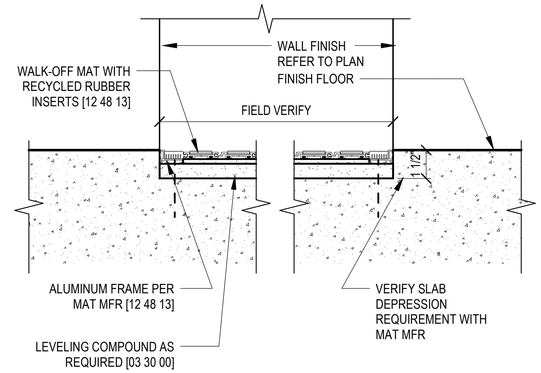

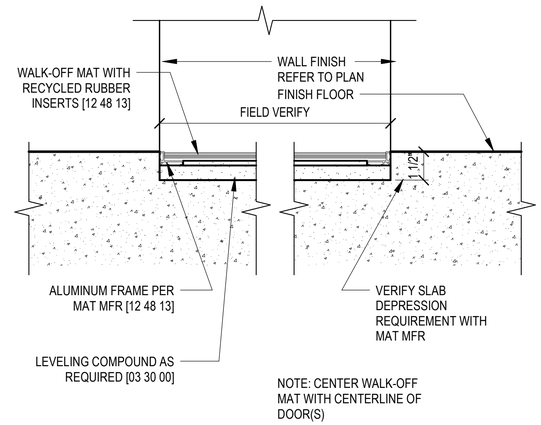

NOTE: CENTER WALK-OFF MAT WITH CENTERLINE OF DOOR(S)

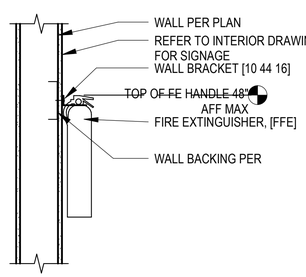

WALL MOUNTED FE B2
SCALE: 1" = 1'-0"

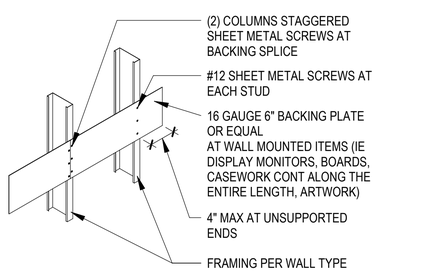

WALL BACKING B3
SCALE: 1" = 1'-0"

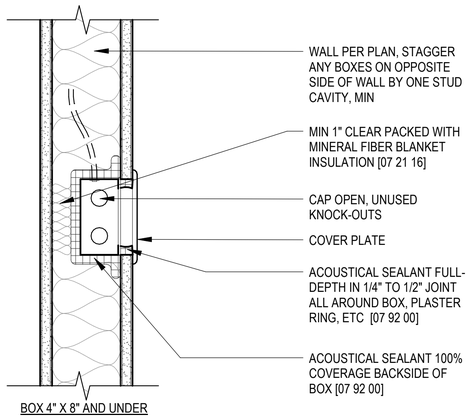

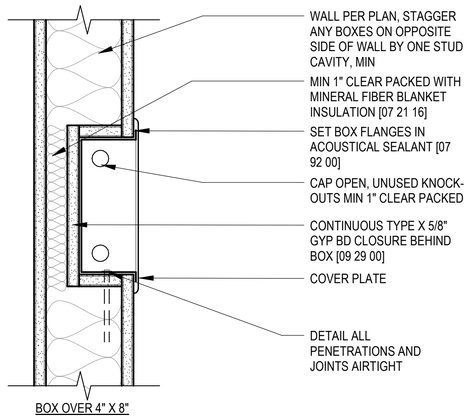

RECESSED BOXES IN SOUND PARTITION A2
SCALE: 3" = 1'-0"

RECESSED FLOOR MAT B4
SCALE: 3" = 1'-0"

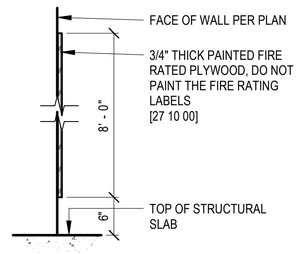

TELECOMM BACKBOARD A4
SCALE: 1" = 1'-0"

0 6" 1' - 0" 2' - 0"
SCALE: 1" = 1' - 0"

0 3" 6" 1' - 0"
SCALE: 3" = 1' - 0"

APPR	DATE	DESCRIPTION	SYM

NAVFAC

PRELIMINARY FOR REFERENCE ONLY

SEAL

RQ W.M. Jordan COMPANY ~A JOINT VENTURE~

Michael Baker INTERNATIONAL
100 AIRSIDE DRIVE
MOON TOWNSHIP, PA 15108 A/E INFO

APPROVED

FOR COMMANDER NAVFAC

ACTIVITY
MARINE CORPS BASE CAMP LEJEUNE

SATISFACTORY TO DATE

DES Designer DRW Author CHK Checker

PM

BRANCH MANAGER

CHIEF ENG/ARCH

FIRE PROTECTION

DEPARTMENT OF THE NAVY
NAVAL FACILITIES ENGINEERING COMMAND
ROICC FLORENCE CAMP LEJEUNE
MCB CAMP LEJEUNE

NAVAL FACILITIES ENGINEERING COMMAND ~ MID-ATLANTIC
JACKSONVILLE, NC

JACKSONVILLE, NC
P1338F II MEF SIMULATION/TRAINING CENTER REPLACEMENT

MISCELLANEOUS DETAILS

SCALE: AS NOTED
EPROJECT NO.: 1590892
CONSTR. CONTR. NO. N40085-20-C-0059
NAVFAC DRAWING NO.
SHEET OF

A-510

DP2 SUBMISSION – P1338 BUILDING - PRE-FINAL SUBMISSION

PLOTTED: 6/10/2021 12:47:54 AM

FILE NAME: BIM 360://HF PACKAGE 3/P1338 MEF SIM CTR-1590892-A.rvt

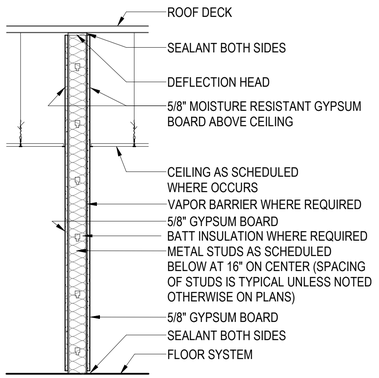

TYPE 1A0 NON-RATED

SCALE: 3/4" = 1'-0"

TYPE	FIRE RATED	CORE WIDTH	OVERALL WIDTH	STC RATED	UL LISTING	STC TEST
1A0.3c	NON-RATED	3 5/8"	4 7/8"	45	N/A	NGC 2391
1A0.4	NON-RATED	4"	5 1/4"	NON-RATED	N/A	N/A
1A0.6	NON-RATED	6"	7 1/4"	NON-RATED	N/A	N/A
1A0.6c	NON-RATED	6"		45	N/A	NGC 2391
1A0.6d	NON-RATED	6"	8 1/2"	50	N/A	NGC 2391
1A0.8c	NON-RATED	8"	9 1/4"	45	N/A	NGC 2391
1A0.8d	NON-RATED	8"	9 7/8"	50	N/A	NGC 2391

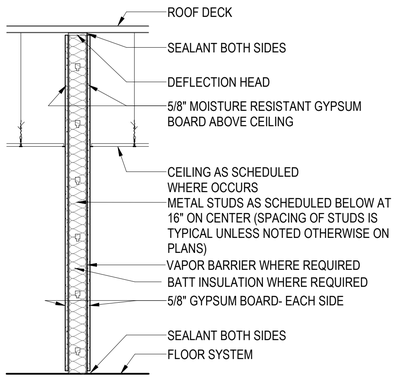

TYPE 1A1 - ONE HOUR

SCALE: 3/4" = 1'-0"

TYPE	FIRE RATED	CORE WIDTH	OVERALL WIDTH	STC RATED	UL LISTING	STC TEST
1A1.6	1 HOUR	6"	7 1/4"	NON-RATED	N/A	N/A
1A1.8	1 HOUR	8"	9 1/4"	NON-RATED	N/A	N/A
1A1.8c	1 HOUR	8"	9 1/4"	45	N/A	NGC 2391
1A1.8d	1 HOUR	8"	9 1/4"	50	N/A	NGC 2391

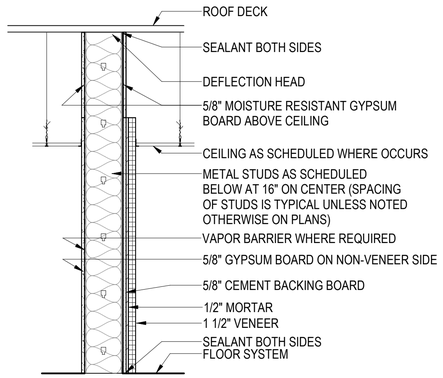

TYPE 1A_._a - CMU VENEER 1-SIDE

SCALE: 3/4" = 1'-0"

TYPE	FIRE RATED	CORE WIDTH	OVERALL WIDTH	STC RATED	UL LISTING	STC TEST
1A0.6a	NON-RATED	8"	9 1/4"	NON-RATED	N/A	N/A
1A0.6e	NON-RATED	8"	9 1/4"	45	N/A	N/A
1A0.8a	NON-RATED	8"	11 1/4"	NON-RATED	N/A	N/A
1A0.8e	NON-RATED	8"		45	N/A	N/A
1A0.8f	NON-RATED	8"	11 7/8"	50	N/A	N/A
1A1.8a	1 HOUR	8"	11 1/4"	NON-RATED	N/A	N/A
1A1.8e	1 HOUR	8"	11 1/4"	NON-RATED	N/A	N/A

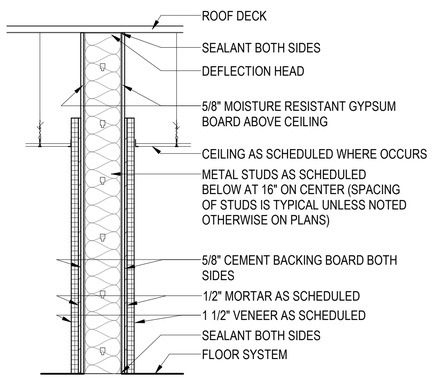

TYPE 1A_._b - CMU BOTH SIDES

SCALE: 3/4" = 1'-0"

TYPE	FIRE RATED	CORE WIDTH	OVERALL WIDTH	STC RATED	UL LISTING	STC TEST
1A0.8b	NON-RATED	8"	1' - 1 1/4"	NON-RATED	N/A	N/A
1A1.8b	1 HOUR	8"	1' - 1 1/4"	NON-RATED	N/A	N/A

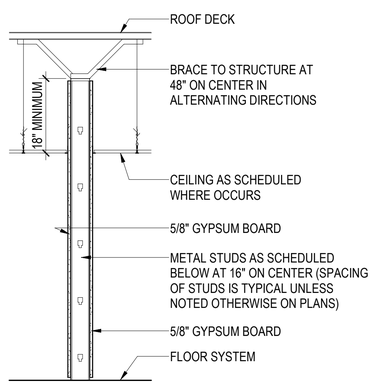

Partition Type 1B0

SCALE: 3/4" = 1'-0"

TYPE	FIRE RATING	CORE WIDTH	OVERALL WIDTH	STC RATED	UL LISTING	STC TEST
1B0.3	NON-RATED	3 5/8"	4 7/8"	NON-RATED	N/A	N/A
1B0.6	NON-RATED	6"	7 1/4"	NON-RATED	N/A	N/A

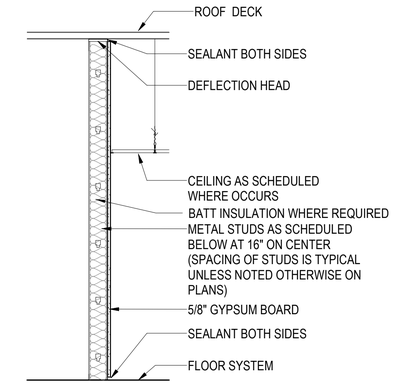

Partition Type 3A0

SCALE: 3/4" = 1'-0"

TYPE	FIRE RATING	CORE WIDTH	OVERALL WIDTH	STC RATING	UL LISTING	STC TEST
3A0.4	NON-RATED	4"	4 5/8"	NON-RATED	N/A	

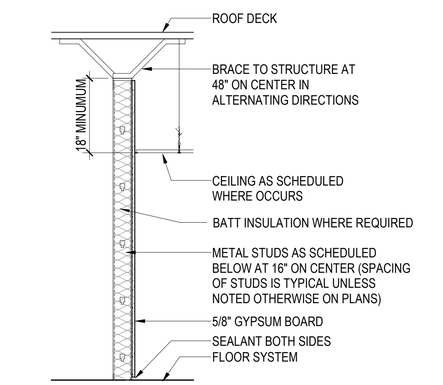

Partition Type 3B0

SCALE: 3/4" = 1'-0"

TYPE	FIRE RATING	CORE WIDTH	OVERALL WIDTH	STC RATING	UL LISTING	STC TEST
3B0.3	NON-RATED	3 5/8"	4 1/4"	NON-RATED	N/A	N/A

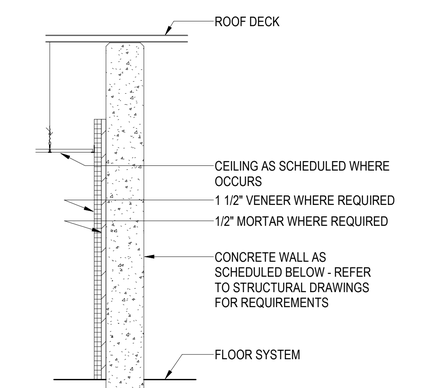

Partition Type 7A0

SCALE: 3/4" = 1'-0"

TYPE	FIRE RATING	CORE WIDTH	OVERALL WIDTH	STC RATING	UL LISTING	STC Test
7A0.7a	NON-RATED	7"	9 1/4"	NON-RATED	N/A	N/A
7A0.8	NON-RATED	8"	8"	NON-RATED	N/A	N/A

NOTES - PARTITION

1. ALL PARTITIONS IN RESTROOMS TO RECEIVE MOISTURE RESISTANT GYPSUM BOARD IN PLACE OF GYPSUM WALL BOARD.
2. ALL PARTITIONS AT SHOWER ENCLOSURES TO RECEIVE 5/8" CEMENT BOARD IN PLACE OF GYPSUM WALL BOARD.
3. WHERE WALLS ARE TO RECEIVE TILE OR STONE CLADDING, 5/8" CEMENT BOARD IS TO BE USED IN PLACE OF GYPSUM WALL BOARD.
4. ALL PERIMETER WALLS AROUND RESTROOMS THAT ARE NOT ALREADY REQUIRED TO RECEIVE AND STC RATING WILL RECEIVE SOUND ATTENUATING BATT INSULATION AND ACOUSTICAL SEALANT AT THE TOP AND BOTTOM OF THE WALL. THE SOUND ATTENUATING BATT INSULATION WILL BE CONTINUOUS THEN ENTIRE HEIGHT OF THE WALL.
5. FILL VOIDS AROUND WALL PENETRATIONS WITH FIRE STOPPING TO AVOID REDUCTION OF FIRE RATING.
6. ALL FIRE RATED PARTITIONS TO RECEIVE TYPE "X" GYPSUM BOARD.
7. PROVIDE IMPACT RESISTANT GYP. BOARD ON WALLS UP TO 8' A.F.F. IN ALL HIGH TRAFFIC AREAS, TO INCLUDE LOBBY, BREAK ROOM, AND CORRIDORS WITHOUT CMU VENEER FINISH.

LEGEND - PARTITION TYPES

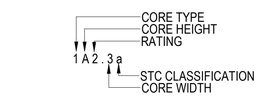

CORE TYPE
- 1 METAL STUD WALL
- 2 METAL STUD SHAFT WALL
- 3 METAL STUD (1 SIDED GYP BD)
- 7 CONCRETE
- 8 FURRING

CORE HEIGHT
- A FULL HEIGHT (TO UNDERSIDE OF STRUCTURE)
- B 6" ABOVE HIGHEST ADJACENT CEILING
- C TO CEILING
- X SECURE TO CEILING

RATING
- 0 NON-RATED
- 1 1 HOUR
- 2 2 HOUR
- H 1/2 HOUR
- S SMOKE RATED

CORE WIDTH
- .1 METAL STUD (1 5/8")
- .2 METAL STUD (2 1/2")
- .3 METAL STUD (3 5/8")
- .4 METAL STUD (4"
- .6 METAL STUD (6")
- .8 METAL STUD (8")

SPECIAL CONSTRUCTION
- .a CMU VENEER SINGLE SIDE
- .b CMU VENEER BOTH SIDES
- .c STC 45
- .d STC 50
- .e STC 45 CMU VENEER SINGLE SIDE
- .e STC 45 CMU VENEER SINGLE SIDE
- .e STC 45 CMU VENEER SINGLE SIDE

APPR	DATE	DESCRIPTION	SYM

NAVFAC

PRELIMINARY FOR REFERENCE ONLY

SEAL

IRQ Jordan COMPANY – A JOINT VENTURE –

Michael Baker INTERNATIONAL
100 AIRSIDE DRIVE
MOON TOWNSHIP, PA 15108
A/E INFO

APPROVED

FOR COMMANDER NAVFAC

ACTIVITY
MARINE CORPS BASE CAMP LEJEUNE

SATISFACTORY TO DATE

DES XXX | DRW XXX | CHK XXX

PM

BRANCH MANAGER

CHIEF ENG/ARCH

FIRE PROTECTION

DEPARTMENT OF THE NAVY
NAVAL FACILITIES ENGINEERING COMMAND
ROICC FLORENCE CAMP LEJEUNE
MCB CAMP LEJEUNE

NAVAL FACILITIES ENGINEERING COMMAND ~ MID-ATLANTIC
JACKSONVILLE, NC

JACKSONVILLE, NC
P1338F II MEF SIMULATION/TRAINING CENTER REPLACEMENT
PARTITION TYPES

SCALE: AS NOTED

EPROJECT NO.: 1590892

CONSTR. CONTR. NO.
N40085-20-C-0059

NAVFAC DRAWING NO.

SHEET OF

A-601

DP2 SUBMISSION – P1338 BUILDING - PRE-FINAL SUBMISSION

PLOTTED: 6/10/2021 12:48:01 AM

FILE NAME: BIM 360://HF PACKAGE 3/P1338 MEF SIM CTR-1590892-A.rvt

SCHEDULE - DOOR - ALL

DOOR NUMBER	TYPE	SIZE			DOOR LEAF		FRAME		DETAILS		RATING		COMMENTS
		HEIGHT	WIDTH	THICKNESS	TYPE	DOOR FINISH	TYPE	FRAME FINISH	HEAD	JAMB	FIRE	STC	
100	L	7' - 0"	3' - 0"	1 3/4"	(none)		(none)						
101	A	7' - 0"	3' - 0"	1 3/4"	WDSC		HM					45	
102	A	7' - 0"	3' - 0"	1 3/4"	WDSC		HM					45	
103A	O	7' - 0"	6' - 0"	1 3/4"	WDSC		HM						
104A	K	7' - 0"	4' - 0"	1 3/4"	WDSC		HM		4"			45	
104B	K	7' - 0"	4' - 0"	1 3/4"	WDSC		HM		4"			45	
104C	K	7' - 0"	4' - 0"	1 3/4"	(none)		(none)		4"				
105	L	7' - 0"	3' - 0"	1 3/4"	WDSC		HM						
106	L	7' - 0"	3' - 0"	1 3/4"	WDSC		HM						
107	K	7' - 0"	4' - 0"	1 3/4"	WDSC		HM		4"				
108	L	7' - 0"	3' - 0"	1 3/4"	WDSC		HM						
109	K	7' - 0"	4' - 0"	1 3/4"	WDSC		HM		4"				
110	L	7' - 0"	3' - 0"	1 3/4"	WDSC		HM						
110A	A	7' - 0"	4' - 0"	1 3/4"	(none)		(none)						
111	L	7' - 0"	3' - 0"	1 3/4"	WDSC		HM						
112	L	7' - 0"	3' - 0"	1 3/4"	(none)		(none)						
113	L	7' - 0"	3' - 0"	1 3/4"	WDSC		HM						
114	L	7' - 0"	3' - 0"	1 3/4"	WDSC		HM						
115	K	7' - 0"	4' - 0"	1 3/4"	(none)		(none)		4"				
116	K	7' - 0"	4' - 0"	1 3/4"	HM		HM		4"				
200AA	M	7' - 0"	4' - 0"	1 3/4"	(none)		(none)		4"				
200AB	M	7' - 0"	4' - 0"	1 3/4"	WDSC		HM		4"			45	
200BA	M	7' - 0"	4' - 0"	1 3/4"	WDSC		HM		4"			45	
200BB	M	7' - 0"	4' - 0"	1 3/4"	WDSC		HM		4"			45	
200CA	M	7' - 0"	4' - 0"	1 3/4"	WDSC		HM		4"			45	
200CB	M	7' - 0"	4' - 0"	1 3/4"	WDSC		HM		4"			45	
201A	N	7' - 0"	3' - 0"	1 3/4"	WDSC		HM					45	
201B	N	7' - 0"	3' - 0"	1 3/4"	WDSC		HM					45	
202A	M	7' - 0"	4' - 0"	1 3/4"	WDSC		HM		4"			45	
202B	M	7' - 0"	4' - 0"	1 3/4"	WDSC		HM		4"			45	
203A	O	7' - 0"	6' - 0"	1 3/4"	(none)		(none)						
203B	B	7' - 0"	6' - 0"	1 3/4"	(none)		(none)						
204	L	7' - 0"	3' - 0"	1 3/4"	WDSC		HM						
205	O	7' - 0"	6' - 0"	1 3/4"	WDSC		HM		4"				
206	EE	7' - 0"	3' - 0"	1 3/4"	WDSC		HM		4"				WITH SINGLE VISION GLASS
207	L	7' - 0"	3' - 0"	1 3/4"	WDSC		HM						
208	L	7' - 0"	3' - 0"	1 3/4"	WDSC		HM						
209	L	7' - 0"	3' - 0"	1 3/4"	WDSC		HM					45	
300AA	M	7' - 0"	4' - 0"	1 3/4"	WDSC		HM		4"			45	X10 LOCK REQUIRED
300AB	M	7' - 0"	4' - 0"	1 3/4"	WDSC		HM		4"			45	X10 LOCK REQUIRED
300BA	M	7' - 0"	4' - 0"	1 3/4"	WDSC		HM		4"			45	X10 LOCK REQUIRED
300BB	M	7' - 0"	4' - 0"	1 3/4"	WDSC		HM		4"			45	X10 LOCK REQUIRED
300CA	M	7' - 0"	4' - 0"	1 3/4"	WDSC		HM		4"			45	X10 LOCK REQUIRED
300CB	M	7' - 0"	4' - 0"	1 3/4"	WDSC		HM		4"			45	X10 LOCK REQUIRED
300XA	M	7' - 0"	4' - 0"	1 3/4"	WDSC		HM		4"				X10 LOCK REQUIRED
300XB	M	7' - 0"	4' - 0"	1 3/4"	WDSC		HM		4"				X10 LOCK REQUIRED
300YA	M	7' - 0"	4' - 0"	1 3/4"	WDSC		HM		4"				X10 LOCK REQUIRED
300YB	M	7' - 0"	4' - 0"	1 3/4"	WDSC		HM		4"			45	X10 LOCK REQUIRED
300ZA	M	7' - 0"	4' - 0"	1 3/4"	WDSC		HM		4"			45	X10 LOCK REQUIRED
300ZB	M	7' - 0"	4' - 0"	1 3/4"	WDSC		HM		4"			45	X10 LOCK REQUIRED
301AA	M	7' - 0"	4' - 0"	1 3/4"	WDSC		HM		4"			45	X10 LOCK REQUIRED
301AB	M	7' - 0"	4' - 0"	1 3/4"	WDSC		HM		4"			45	X10 LOCK REQUIRED
301BA	M	7' - 0"	4' - 0"	1 3/4"	WDSC		HM		4"			45	X10 LOCK REQUIRED
301BB	M	7' - 0"	4' - 0"	1 3/4"	WDSC		HM		4"			45	X10 LOCK REQUIRED
302	L	7' - 0"	3' - 0"	1 3/4"	WDSC		HM		4"			45	X10 LOCK REQUIRED
303A	A	7' - 0"	3' - 0"	1 3/4"	WDSC		HM					50	X10 LOCK REQUIRED
303B	A	7' - 0"	3' - 0"	1 3/4"	(none)		(none)						
304A	A	7' - 0"	4' - 0"	1 3/4"	(none)		(none)						
304B	A	7' - 0"	4' - 0"	1 3/4"	(none)		(none)						
305	A	7' - 0"	4' - 0"	1 3/4"	HM		HM						
306	A	7' - 0"	4' - 0"	1 3/4"	HM		HM						
400A	W	7' - 0"	3' - 0"	1 3/4"	HMI		HM						WEATHER STRIPPING FOR AIR BARRIER

SCHEDULE - DOOR - ALL

DOOR NUMBER	TYPE	SIZE			DOOR LEAF		FRAME		DETAILS		RATING		COMMENTS
		HEIGHT	WIDTH	THICKNESS	TYPE	DOOR FINISH	TYPE	FRAME FINISH	HEAD	JAMB	FIRE	STC	
400B	Y	12' - 0"	12' - 0"	2"	OCI		-						WEATHER STRIPPING FOR AIR BARRIER
401A	Z	7' - 0"	6' - 0"	1 3/4"	HMI		HM						WEATHER STRIPPING FOR AIR BARRIER
402A	X	10' - 0"	10' - 0"	2"	(none)		(none)						WEATHER STRIPPING FOR AIR BARRIER
402B	W	7' - 0"	3' - 0"	1 3/4"	(none)		(none)						WEATHER STRIPPING FOR AIR BARRIER
402C	O	7' - 0"	6' - 0"	1 3/4"	WDSC		HM					45	WEATHER STRIPPING FOR AIR BARRIER
403	Z	7' - 0"	6' - 0"	1 3/4"	HMI		HM						WEATHER STRIPPING FOR AIR BARRIER
C012A	J	7' - 0"	4' - 0"	1 3/4"	WDSC		HM		4"			45	CARD READER REQUIRED
C012C	L	7' - 0"	3' - 0"	1 3/4"	(none)		(none)						WEATHER STRIPPING FOR AIR BARRIER
C014	C	7' - 0"	6' - 0"	1 3/4"	HMI		HM						WEATHER STRIPPING FOR AIR BARRIER
C016	J	7' - 0"	4' - 0"	1 3/4"	WDSC		HM		4"			45	CARD READER REQUIRED
C020A	J	7' - 0"	4' - 0"	1 3/4"	(none)		(none)		4"				CARD READER REQUIRED
C020B	I	7' - 0"	6' - 0"	1 3/4"	WDSC		HM						CARD READER REQUIRED
C020C	I	7' - 0"	6' - 0"	1 3/4"	WDSC		HM						
C020D	W	7' - 0"	3' - 0"	1 3/4"	(none)		(none)						WEATHER STRIPPING FOR AIR BARRIER
C022	J	7' - 0"	4' - 0"	1 3/4"	(none)		(none)		4"				
C023	Q	7' - 0"	4' - 0"	1 3/4"	HMI		HM						WEATHER STRIPPING FOR AIR BARRIER
C032	P	7' - 0"	6' - 0"	1 3/4"	HMI		HM						WEATHER STRIPPING FOR AIR BARRIER
C034	J	7' - 0"	4' - 0"	1 3/4"	(none)		(none)		4"				CARD READER REQUIRED
CO12B	W	7' - 0"	3' - 0"	1 3/4"	(none)		(none)						
G010	A	7' - 0"	3' - 0"	1 3/4"	WDSC		HM						
G011	A	7' - 0"	3' - 0"	1 3/4"	WDSC		HM						
G012	L	7' - 0"	3' - 0"	1 3/4"	WDSC		HM						
G020	L	7' - 0"	3' - 0"	1 3/4"	WDSC		HM						
G021	L	7' - 0"	3' - 0"	1 3/4"	WDSC		HM						
G022	A	7' - 0"	3' - 0"	1 3/4"	(none)		(none)						
G023	A	7' - 0"	3' - 0"	1 3/4"	(none)		(none)						
G024	A	7' - 0"	3' - 0"	1 3/4"	(none)		(none)						
G025	A	7' - 0"	3' - 0"	1 3/4"	(none)		(none)						
L010	C	7' - 0"	6' - 0"	1 3/4"	HMI		HM						WEATHER STRIPPING FOR AIR BARRIER

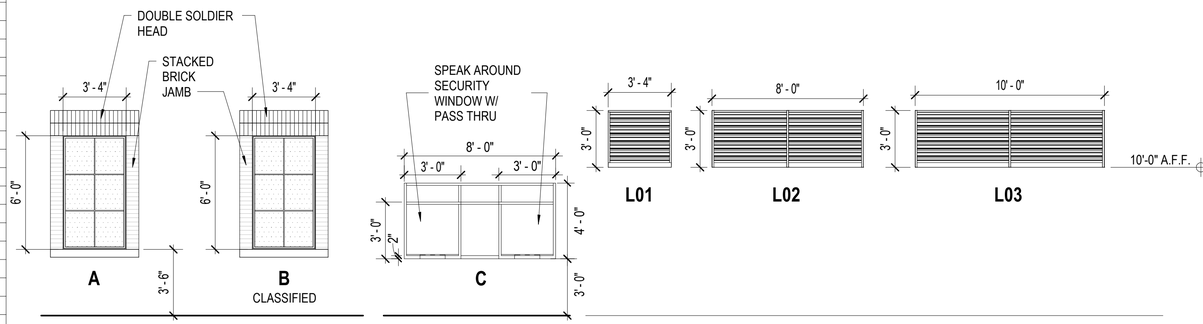

WINDOW AND LOUVER TYPES

SCALE: 1/4" = 1'-0"

LEGEND - DOOR LEAF

TYPE	DESCRIPTION
AC	ACCESS
AE	AUTOMATIC ENTRANCE
AFE	ALUMINUM-FRAMED ENTRANCE
CL	CHAIN LINK
HM	HOLLOW METAL
HMI	HOLLOW METAL (INSULATED)
MSS	METAL SCREEN AND STORM
OCI	OVERHEAD COILING (INSULATED)
OSS	OVERHEAD SECTIONAL STEEL
OSSI	OVERHEAD SECTIONAL STEEL (INSULATED)
SS	STANDARD STEEL
WDHC	WOOD FLUSH (HOLLOW CORE)
WDSC	WOOD FLUSH (SOLID CORE)

LEGEND - DOOR FRAME

TYPE	DESCRIPTION
-	NONE
AC	ACCESS
AL	ALUMINUM
CS	CUSTOM STEEL
HM	HOLLOW METAL
HMG	HOLLOW METAL (GALVANIZED)
MSS	METAL SCREEN AND STORM
PAM	PRE-ASSEMBLED METAL
SS	STANDARD STEEL
WD	WOOD

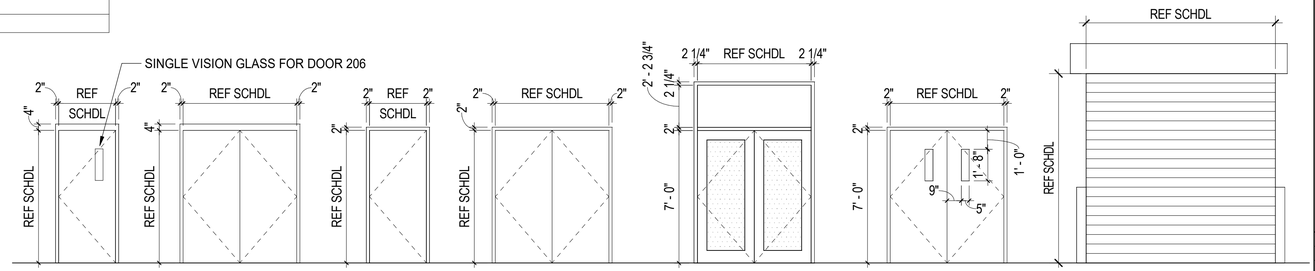

DOOR ELEVATIONS

SCALE: 1/4" = 1'-0"

APPR	
DATE	
DESCRIPTION	
SYM	

NAVFAC

PRELIMINARY FOR REFERENCE ONLY

SEAL

RQ W.M. Jordan COMPANY – A JOINT VENTURE –

Michael Baker INTERNATIONAL

100 AIRSIDE DRIVE
MOON TOWNSHIP, PA 15108 A/E INFO

APPROVED

FOR COMMANDER NAVFAC

ACTIVITY
MARINE CORPS BASE
CAMP LEJEUNE

SATISFACTORY TO DATE

DES XXX | DRW XXX | CHK XXX

PM

BRANCH MANAGER

CHIEF ENG/ARCH

FIRE PROTECTION

DEPARTMENT OF THE NAVY
NAVAL FACILITIES ENGINEERING COMMAND ~ MID-ATLANTIC
ROIICC FLORENCE CAMP LEJEUNE
NAVAL FACILITIES ENGINEERING COMMAND
JACKSONVILLE, NC
MCB CAMP LEJEUNE
JACKSONVILLE, NC
P1338F II MEF SIMULATION/TRAINING CENTER REPLACEMENT
DOOR SCHEDULE, DOOR AND WINDOW ELEVATIONS

SCALE: AS NOTED

EPROJECT NO.: 1590892

CONSTR. CONTR. NO.
N40085-20-C-0059

NAVFAC DRAWING NO.

SHEET OF

A-611

DP2 SUBMISSION – P1338 BUILDING - PRE-FINAL SUBMISSION

PLOTTED: 6/10/2021 12:48:05 AM

FILE NAME: BIM 360://HF PACKAGE 3/P1338 MEF SIM CTR-1590892-A.rvt

UNCLASSIFIED

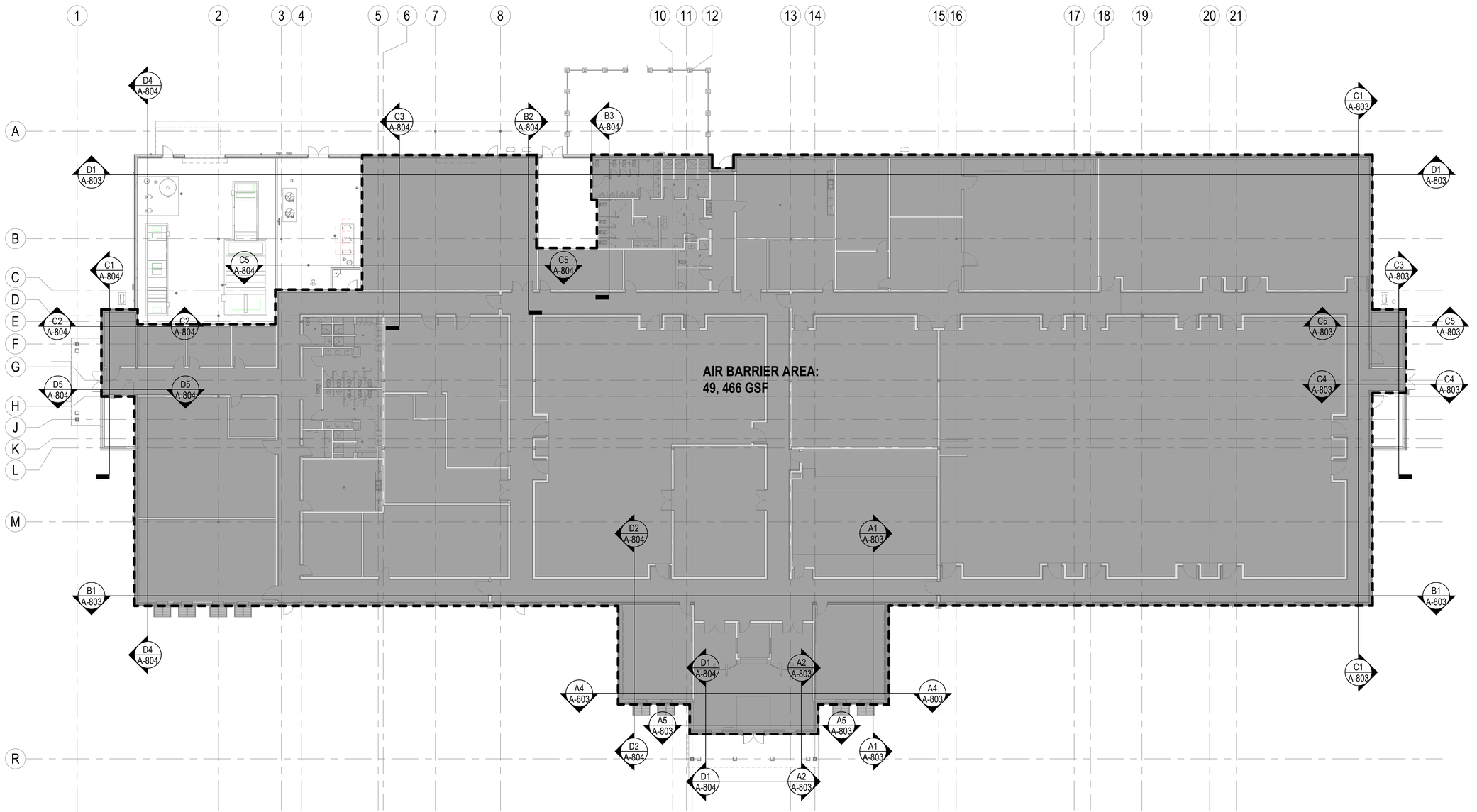

AIR BARRIER FLOOR PLAN

SCALE: 1/16" = 1'-0"

KEYPLAN

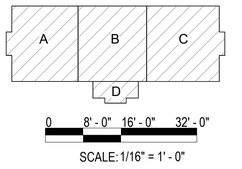

SCALE: 1/16" = 1' - 0"

N

APPR	
DATE	
SYM DESCRIPTION	

NAVFAC

PRELIMINARY FOR REFERENCE ONLY

SEAL

IRQ WM Jordan COMPANY – A JOINT VENTURE –

Michael Baker INTERNATIONAL

100 AIRSIDE DRIVE
MOON TOWNSHIP, PA 15108 A/E INFO

APPROVED

FOR COMMANDER NAVFAC

ACTIVITY
MARINE CORPS BASE
CAMP LEJEUNE

SATISFACTORY TO DATE

DES Designer DRW Author CHK Checker

PM

BRANCH MANAGER

CHIEF ENG/ARCH

FIRE PROTECTION

DEPARTMENT OF THE NAVY
NAVAL FACILITIES ENGINEERING COMMAND
ROICC FLORENCE CAMP LEJEUNE
MCB CAMP LEJEUNE

NAVAL FACILITIES ENGINEERING COMMAND ~ MID-ATLANTIC
JACKSONVILLE, NC

JACKSONVILLE, NC

P1338F II MEF SIMULATION/TRAINING CENTER
REPLACEMENT

AIR BARRIER FLOOR PLAN

SCALE:	AS NOTED
EPROJECT NO.:	1590892
CONSTR. CONTR. NO.	N40085-20-C-0059
NAVFAC DRAWING NO.	
SHEET	OF

A-801

DP2 SUBMISSION – P1338 BUILDING - PRE-FINAL SUBMISSION

PLOTTED: 6/10/2021 12:48:15 AM

FILE NAME: BIM 360://HF PACKAGE 3/P1338 MEF SIM CTR-1590892-A.rvt

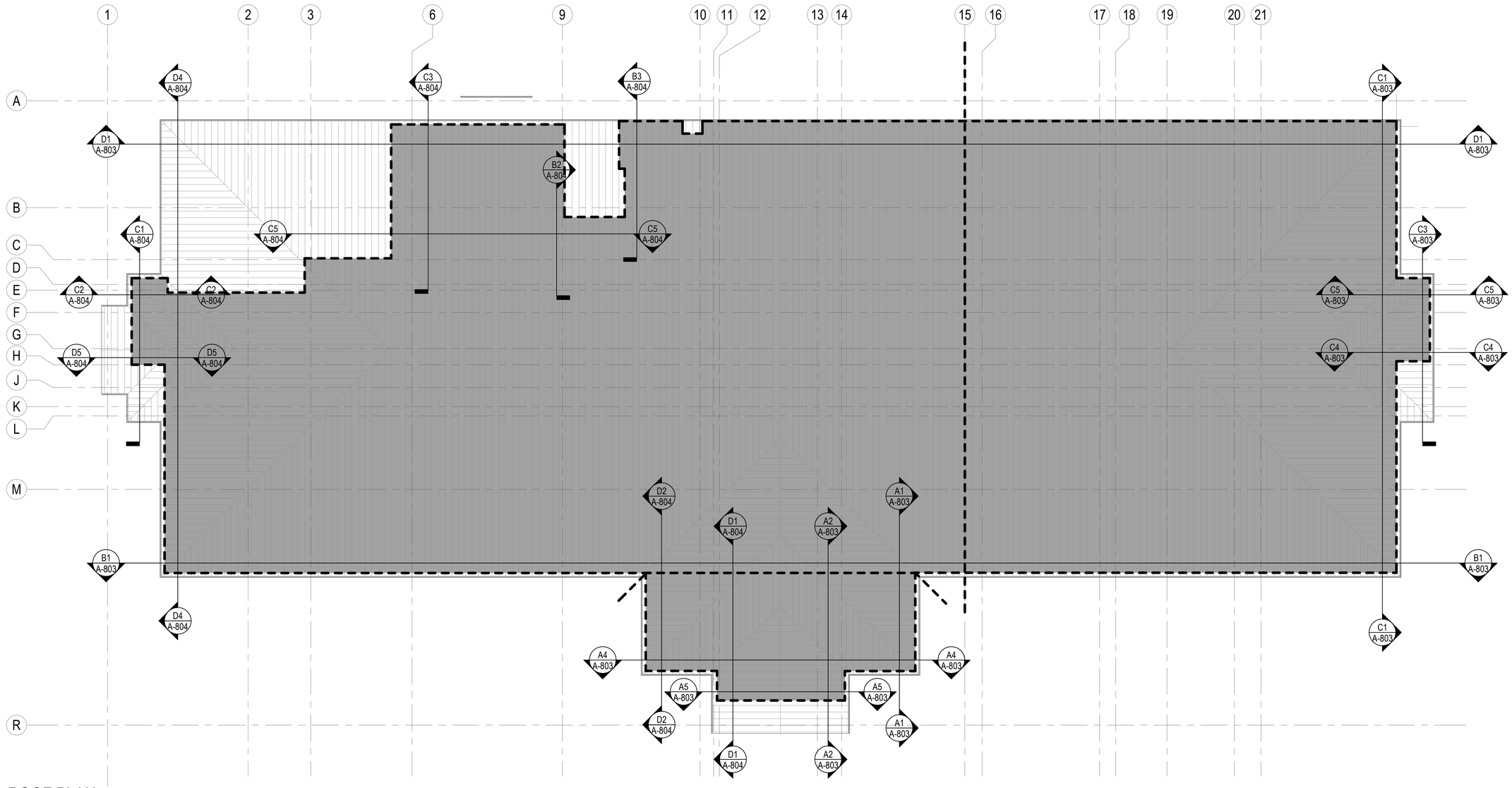

ROOF PLAN

SCALE: 1/16" = 1'-0"

KEYPLAN

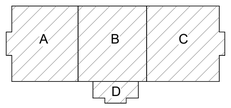

N

DEPARTMENT OF THE NAVY	NAVAL FACILITIES ENGINEERING COMMAND ~ MID-ATLANTIC
ROICC FLORENCE CAMP LEJEUNE	JACKSONVILLE, NC
MCB CAMP LEJEUNE	JACKSONVILLE, NC
P1338F II MEF SIMULATION/TRAINING CENTER REPLACEMENT	
AIR BARRIER ROOF PLAN	
SCALE:	AS NOTED
EPROJECT NO.:	1590892
CONSTR. CONTR. NO.	N40085-20-C-0059
NAVFAC DRAWING NO.	
SHEET	OF
	A-802

NAVFAC

PRELIMINARY FOR REFERENCE ONLY

SEAL

RQ W.M. Jordan COMPANY ~A JOINT VENTURE~

Michael Baker INTERNATIONAL

100 AIRSIDE DRIVE
MOON TOWNSHIP, PA 15108

A/E INFO

APPROVED

FOR COMMANDER NAVFAC

ACTIVITY
MARINE CORPS BASE
CAMP LEJEUNE

SATISFACTORY TO DATE

DES Designer DRW Author CHK Checker

PM

BRANCH MANAGER

CHIEF ENG/ARCH

FIRE PROTECTION

SYM	DESCRIPTION	DATE	APPR

DP2 SUBMISSION – P1338 BUILDING - PRE-FINAL SUBMISSION

PLOTTED: 6/10/2021 12:48:17 AM

FILE NAME: BIM 360://HF PACKAGE 3/P1338 MEF SIM CTR-1590892-A.rvt

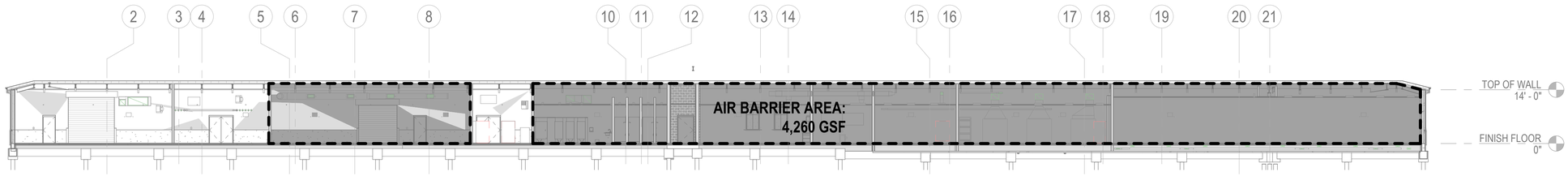

AIR BARRIER BUILDING SECTION - NORTH FACADE
SCALE: 1/16" = 1'-0" A-403 D1

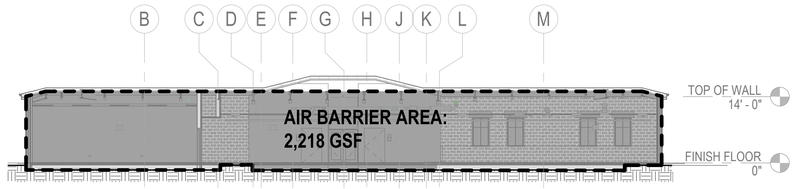

AIR BARRIER BUILDING SECTION - EAST FACADE
SCALE: 1/16" = 1'-0" A-801 C1

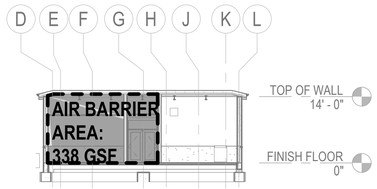

AIR BARRIER SECTION -
EAST ENTRY - E
SCALE: 1/16" = 1'-0" A-801 C3



AIR BARRIER SECTION -
EAST ENTRY - S
SCALE: 1/16" = 1'-0" A-801 C4

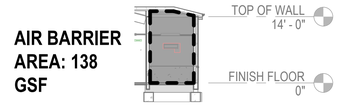

AIR BARRIER SECTION -
EAST ENTRY - N
SCALE: 1/16" = 1'-0" A-801 C5

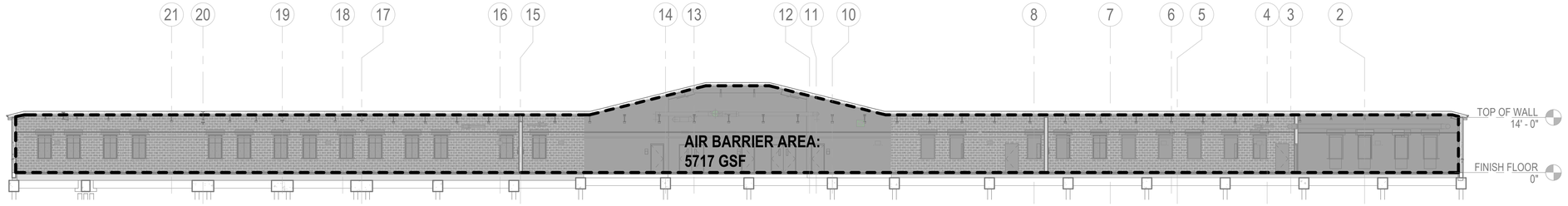

AIR BARRIER BUILDING SECTION - SOUTH FACADE
SCALE: 1/16" = 1'-0" A-801 B1

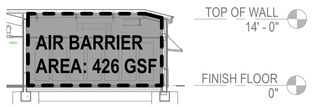

AIR BARRIER SECTION -
SOUTH ENTRY - E
SCALE: 1/16" = 1'-0" A-801 A1

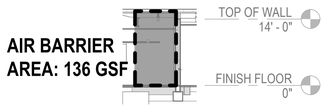

AIR BARRIER SECTION -
SOUTH ENTRY - E2
SCALE: 1/16" = 1'-0" A-801 A2

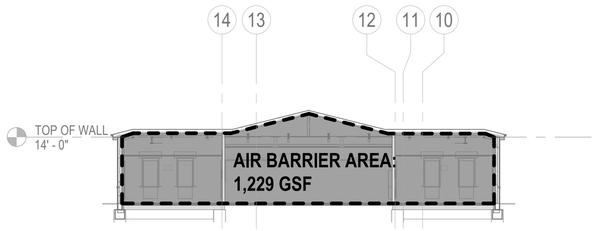

AIR BARRIER SECTION - SOUTH ENTRY - S
SCALE: 1/16" = 1'-0" A-801 A4

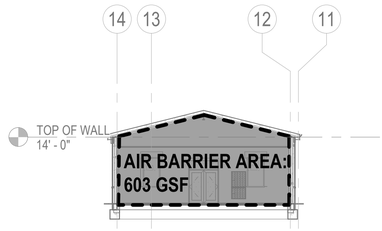

AIR BARRIER SECTION -
SOUTH ENTRY - S2
SCALE: 1/16" = 1'-0" A-801 A5

PLOTTED: 6/10/2021 12:48:28 AM
FILE NAME: BIM 360/IHF PACKAGE 3/P1338 MEF SIM CTR-1590892-A.rvt

APPR | DATE | DESCRIPTION | SYM

NAVFAC

PRELIMINARY FOR REFERENCE ONLY
SEAL

IRQ W.M. Jordan COMPANY – A JOINT VENTURE –

Michael Baker INTERNATIONAL
100 AIRSIDE DRIVE
MOON TOWNSHIP, PA 15108 A/E INFO

APPROVED
FOR COMMANDER NAVFAC
ACTIVITY
MARINE CORPS BASE
CAMP LEJEUNE
SATISFACTORY TO DATE
DES Designer DRW Author CHK Checker
PM
BRANCH MANAGER
CHIEF ENG/ARCH
FIRE PROTECTION

DEPARTMENT OF THE NAVY
NAVAL FACILITIES ENGINEERING COMMAND ~ MID-ATLANTIC
ROICC FLORENCE CAMP LEJEUNE
MCB CAMP LEJEUNE
JACKSONVILLE, NC

NAVAL FACILITIES ENGINEERING COMMAND
JACKSONVILLE, NC
JACKSONVILLE, NC
P1338F II MEF SIMULATION/TRAINING CENTER
REPLACEMENT
AIR BARRIER SECTIONS

SCALE: AS NOTED
EPROJECT NO.: 1590892
CONSTR. CONTR. NO.
N40085-20-C-0059
NAVFAC DRAWING NO.
SHEET OF
A-803

DP2 SUBMISSION – P1338 BUILDING - PRE-FINAL SUBMISSION

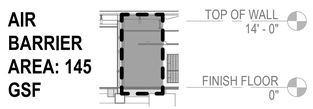

AIR BARRIER SECTION - SOUTH ENTRY - W2 (D1)
SCALE: 1/16" = 1'-0" A-801

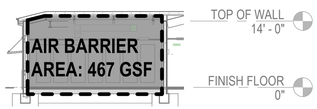

AIR BARRIER SECTION - SOUTH ENTRY - W (D2)
SCALE: 1/16" = 1'-0" A-801

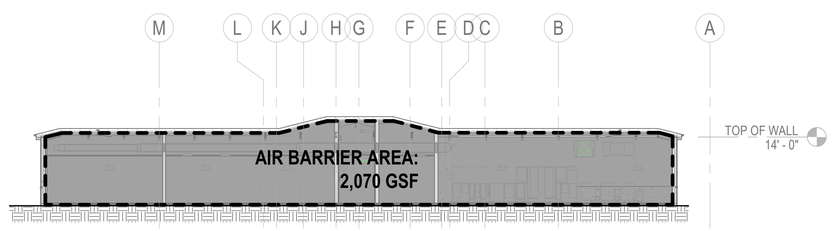

AIR BARRIER BUILDING SECTION - WEST FACADE (D4)
SCALE: 1/16" = 1'-0" A-801

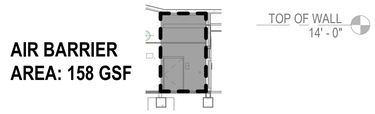

AIR BARRIER SECTION - WEST ENTRY - S (D5)
SCALE: 1/16" = 1'-0" A-801

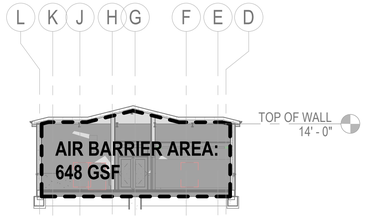

AIR BARRIER SECTION - WEST ENRTY - W (C1)
SCALE: 1/16" = 1'-0" A-130



AIR BARRIER SECTION - WEST ENTRY - N (C2)
SCALE: 1/16" = 1'-0" A-801

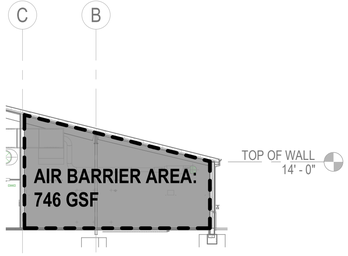

AIR BARRIER SECTION - MECH ROOM - W (C3)
SCALE: 1/16" = 1'-0" A-801

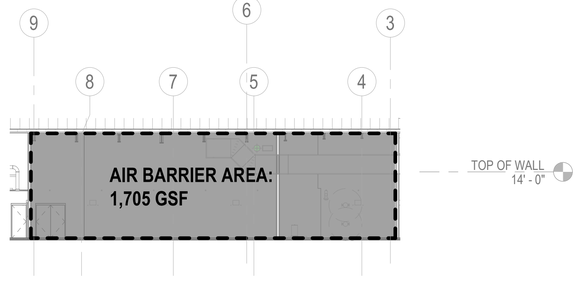

AIR BARRIER SECTION - MECH ROOM - S (C5)
SCALE: 1/16" = 1'-0" A-801

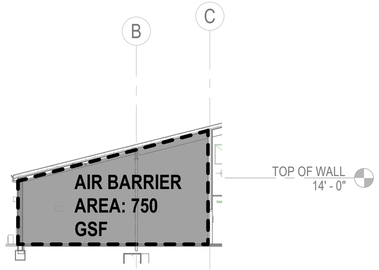

AIR BARRIER SECTION - MECH ROOM - E2 (B2)
SCALE: 1/16" = 1'-0" A-801

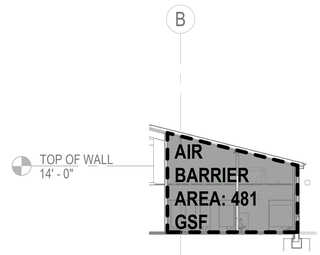

AIR BARRIER SECTION - MECH ROOM - E (B3)
SCALE: 1/16" = 1'-0" A-801

0 8' - 0" 16' - 0" 32' - 0"
SCALE: 1/16" = 1' - 0"

SYM	DESCRIPTION	DATE	APPR

NAVFAC

PRELIMINARY FOR REFERENCE ONLY

SEAL

RQ W.M. Jordan COMPANY - A JOINT VENTURE -

Michael Baker INTERNATIONAL
100 AIRSIDE DRIVE
MOON TOWNSHIP, PA 15108
A/E INFO

APPROVED

FOR COMMANDER NAVFAC

ACTIVITY
MARINE CORPS BASE CAMP LEJEUNE

SATISFACTORY TO DATE

DES Designer FRW Author CHK Checker

PM

BRANCH MANAGER

CHIEF ENG/ARCH

FIRE PROTECTION

DEPARTMENT OF THE NAVY
NAVAL FACILITIES ENGINEERING COMMAND
NAVAL FACILITIES ENGINEERING COMMAND ~ MID-ATLANTIC
ROICC FLORENCE CAMP LEJEUNE
JACKSONVILLE, NC
MCB CAMP LEJEUNE
JACKSONVILLE, NC
P1338F II MEF SIMULATION/TRAINING CENTER REPLACEMENT
AIR BARRIER SECTIONS

SCALE: AS NOTED
EPROJECT NO.: 1590892
CONSTR. CONTR. NO. N40085-20-C-0059
NAVFAC DRAWING NO.
SHEET OF
A-804

DP2 SUBMISSION – P1338 BUILDING - PRE-FINAL SUBMISSION

PLOTTED: 6/10/2021 12:48:37 AM

FILE NAME: BIM 360://HF PACKAGE 3/P1338 MEF SIM CTR-1590892-A.rvt

SCHEDULE - INTERIOR MATERIAL & COLOR BASIS OF DESIGN

FINISH	DESCRIPTION	MANUFACTURER	STYLE	COLOR	SIZE	COMMENTS
ACP1	ACOUSTICAL CEILING PANEL	ARMSTRONG	OPTIMA, SQUARE EDGE	WHITE	24" X 24", 15/16" GRID	
ACP2	ACOUSTICAL CEILING PANEL	ARMSTRONG	CALLA, SQUARE EDGE	BLACK TILE, BLACK GRID	24" X 24", 15/16" GRID	
ACP3	ACOUSTICAL CEILING PANEL - CLOUD	ARMSTRONG	FORMATIONS DRYWALL	AIRCRAFT HANGERS	SEE AR114	
AFP1	ACOUSTICAL FABRIC PANEL	MDC	WRAPPED PANEL, FIBERGLASS CORE: PS80 VINYL	TIRESIAS - CINDERBLOCK	1" THICK	
CG1	CORNER GUARD	CONSTRUCTION SPECIALTIES	VINYL COVER W/ ALUMINUM RETAINER	265 FOG	FULL HEIGHT, 3" LEGS	10'-0"H IN AREAS WITH OPEN CEILINGS
CPT1	CARPET TILE	MANNINGTON COMMERCIAL	EQUALIZER	11836 FADE	24" X 24"	TILE INSTALL - QUARTER TURN
CPT2	CARPET TILE	MANNINGTON COMMERCIAL	NASHVILLE	14330 FIRST HILL	18" X 36"	TILE INSTALL - BRICK ASHLAR
CPT3	CARPET TILE	MOHAWK GROUP	BT443 FIRST ONE UP II	959 PREFERENCE	24" X 24"	TILE INSTALL - QUARTER TURN
G1	GROUT	LATICRETE	SPECTRALOCK EPOXY	60 DUSTY GREY	-	USED IN CONJUNCTION WITH PT1
G2	GROUT	LATICRETE	SPECTRALOCK EPOXY	78 STERLING SILVER	-	USED IN CONJUNCTION WITH PT2, PT3
LVT1	LUXURY VINYL TILE	MANNINGTON COMMERCIAL	CITY GRID	ANT107 STRUCTURE	18" X 18"	TILE INSTALL - RUNNING BOND
MAP1	MODULAR ARCHITECTURAL PANEL	MODULAR ARTS	BURLE - RAILROAD PANEL DIRECTION FOR WAVES TO RUN VERTICALLY, 10'H	SANDED AND PRIMED, FIELD PAINT P9 (FRONT AND EXPOSED SIDES)	SEE IN202 ELEVATION	SUBMIT PANEL LAYOUT TO ACHIEVE PANEL MATCH AT SEAMS. CAULK/SEAL ALL SEAMS PER MANUFACTURER INSTRUCTIONS PRIOR TO PAINT
N/A	PAINT - TRIM	SHERWIN WILLIAMS	SEMI-GLOSS FINISH	SW7076 CYBERSPACE	-	DOOR FRAMES AND DOORS WHERE APPLICABLE
N/A	SIGNAGE	2/90	SLIDE	TOP INSERT: COLOR: BLACK / COPY: 708 SOFT WHITE; BOTTOM INSERT: COLOR: 708 SOFT WHITE / COPY: BLACK, END CAP: ANODIZED – 101 SATIN NATURAL	-	SEE IG-SERIES FOR SIGNAGE PLANS, DETAILS AND SCHEDULES
N/A	WOOD DOOR FINISH	MASONITE	ASPIRO SERIES PLAIN SLICED WALNUT	COCOA BEAN	-	WDMA 1.5.1-A CUSTOM 'A'
N/A	LOCKERS	SCRANTON	SOLID PLASTIC HDPE	BLUEBERRY		
P1	PAINT - CEILING	SHERWIN WILLIAMS	FLAT FINISH	SW7757 HIGH REFLECTIVE WHITE	-	
P2	PAINT - CEILING	SHERWIN WILLIAMS	EPOXY SEMI-GLOSS FINISH	SW7757 HIGH REFLECTIVE WHITE	-	
P3	PAINT - FIELD	SHERWIN WILLIAMS	EGGSHELL FINISH	SW7647 CRUSHED ICE	-	
P4	PAINT - FIELD	SHERWIN WILLIAMS	EPOXY MOISTURE RESISTANT SEMI-GLOSS FINISH	SW7647 CRUSHED ICE	-	
P5	PAINT - ACCENT	SHERWIN WILLIAMS	EGGSHELL FINISH	SW7650 ELLIE GRAY	-	
P6	PAINT - ACCENT	SHERWIN WILLIAMS	FLAT FINISH	SW9176 DRESS BLUE	-	
P7	PAINT - CEILING ACCENT / BULKHEAD	SHERWIN WILLIAMS	FLAT FINISH	SW7650 ELLIE GRAY		
P8	PAINT - ACCENT	SHERWIN WILLIAMS	FLAT FINISH	SW7076 CYBERSPACE		
P9	PAINT - ACCENT	SHERWIN WILLIAMS	HIGH GLOSS FINISH	SW7650 ELLIE GRAY		
PCMU1	POLISHED CONCRETE MASONRY UNIT	ADAMS PRODUCTS	OLDCASTLE APG	4302		
PL1	PLASTIC LAMINATE - CASEWORK	WILSONART	GLOSS LINE FINISH	D92K-28 DOVE GREY	-	
PL2	PLASTIC LAMINATE - VANITY APRON	WILSONART	MATTE FINISH	D92-60 DOVE GREY		
PT1	PORCELAIN TILE - FLOOR	DALTILE	IRONCRAFT	IC13 CHARCOAL GREY	12" X 24"	SEE FINISH PLAN NOTES FOR FLOOR DRAIN COORDINATION
PT2	PORCELAIN TILE - WALL	DALTILE	IRONCRAFT	IC12 CASPER GREY	12" X 24"	SEE TYPICAL WALL TILE ELEVATION
PT3	PORCELAIN TILE - WALL ACCENT	DALTILE	COASTAL KEYSTONES - BRICK JOINT	CK88 TROPICAL THUNDER	2" X 1" TILES, 6"H	SEE TYPICAL WALL TILE ELEVATION
RAF1	RAISED ACCESS FLOORING	TATE ACCESS FLOORS	CONCORE 1500 TYPE 3B PEDESTAL - CPT POSITILE SYSTEM	USE CPT1	FACTORY CUT TO FIT ACCESS FLOOR SYSTEM	COORDINATE DEPRESSED SLAB DEPTHS WITH STRUCTURAL DRAWINGS
RAF2	RAISED ACCESS FLOORING	TATE ACCESS FLOORS	CONCORE 1500 TYPE 3B PEDESTAL - ESD LAMINATE	NEVAMAR ESD ST6025 GRAY	FACTORY CUT TO FIT ACCESS FLOOR SYSTEM	COORDINATE DEPRESSED SLAB DEPTHS WITH STRUCTURAL DRAWINGS
RAF3	RAISED ACCESS FLOORING	TATE ACCESS FLOORS	CONCORE 1500 TYPE 3B PEDESTAL - TERRAZZO	MIX TO MATCH TZ1 / TZ2, LOCATIONS AS INDICATED ON IN113	FACTORY CUT TO FIT ACCESS FLOOR SYSTEM	COORDINATE DEPRESSED SLAB DEPTHS WITH STRUCTURAL DRAWINGS
RAF4	RAISED ACCESS FLOORING	TATE ACCESS FLOORS	CONCORE 1500 TYPE 3B PEDESTAL - CPT POSITILE SYSTEM	USE CPT3	FACTORY CUT TO FIT ACCESS FLOOR SYSTEM	COORDINATE DEPRESSED SLAB DEPTHS WITH STRUCTURAL DRAWINGS
RB1	RESILIENT BASE	TARKETT	BASEWORKS, CONTINUOUS ROLL	TA6 BEDROCK	6"H	COVE AT HARD FLOORS, STRAIGHT AT CARPET
SC1	SEALED CONCRETE	SHERWIN WILLIAMS	MINIMUM 3-COATS	TINT TO MATCH SW7650 ELLIE GRAY		
SS1	SOLID SURFACE - COUNTERS + SPLASHES AND SHOWER SURROUND	CORIAN	EASED EDGE (WHERE APPLICABLE)	ARROWROOT	1/2" TH. / 4"H UNLESS NOTED OTHERWISE	SEE IN203 - BREAK ROOM ELEVATIONS, BACKSPLASH, SIDE SPLASHES
SS2	SOLID SURFACE - INTEGRAL SINK AND WINDOW STOOLS	CORIAN	EASED EDGE (WHERE APPLICABLE)	GLACIER WHITE	-	EXTERIOR WINDOWS
SS3	SOLID SURFACE - SHOWER BASIN	CORIAN	PRE-FABRICATED BASIN	CARBON CONCRETE		
TP1	TOILET PARTITIONS	SCRANTON - ECLIPSE	FLOOR MOUNTED, OVERHEAD BRACED, SOLID PLASTIC HDPE	GREY	72"H	RESTROOMS, SEE ARCHITECTURAL SERIES
TZ1	TERRAZZO	TERRAZZCO	RESINOUS TERRAZZO - VENETIAN	CUSTOM - 1649	3/8"TH	REVEALS BETWEEN COLORS TO BE BRUSHED NICKEL FINISH
TZ2	TERRAZZO	TERRAZZCO	RESINOUS TERRAZZO - STANDARD	CUSTOM - 52	3/8"TH	REVEALS BETWEEN COLORS TO BE BRUSHED NICKEL FINISH
TZB1	TERRAZZO BASE	TERRAZZCO	RESINOUS TERRAZZO INTERGRAL BASE	MATCH TZ1	6"H	SEPARATE, TOP SET, PRECAST FLAT TILE BASE
WC1	WALLCOVERING	GRAVITY DIGITAL	DIGITAL PRINT - TYPE 2 WHITE TEXTURED SUBSTRATE	IMAGE PROVIDED BY NAVFAC	FULL WIDTH AND HEIGHT OF WALL	
WC2	WALLCOVERING	GRAVITY DIGITAL	DIGITAL PRINT - TYPE 2 WHITE TEXTURED SUBSTRATE	IMAGE PROVIDED BY NAVFAC	FULL WIDTH AND HEIGHT OF WALL	
WM1	WALK-OFF MAT SYSTEM	JL INDUSTRIES	JL-800 SERIES - CARPET INSERT	06 SAPPHIRE	-	SEE A-SERIES FOR SIZE AND LOCATION, RUBBER EDGE INSERT TO MATCH CARPET INSERT COLOR
WP1	WALL PROTECTION	WALLGUARD	STAINLESS STEEL	BRUSHED STAINLESS		BEHIND JANITOR CLOSET MOP SINK WALLS; PROVIDE MATCHING STAINLESS STEEL TRIM AS REQUIRED
WT1	WINDOW TREATMENT - ROLLER	MECHO SHADES	MANUAL DOUBLE ROLLER, 3% OPEN, 1600 SOHO	1601 WHITE	-	EXTERIOR WINDOWS UNLESS OTHERWISE NOTED ON IN-SERIES AREA PLANS
WT2	WINDOW TREATMENT - ROLLER	MECHO SHADES	MANUAL DOUBLE ROLLER, BLACKOUT, CHELSEA, ROOM DARKENING CHANNEL	0271 CHALK	-	SEE IN-SERIES AREA PLANS FOR LOCATIONS

NOTES - INTERIOR FINISH

1. FLOORING TRANSITIONS ARE COORDINATED WITH SELECTED PRODUCTS AND INSTALLED PER MANUFACTURER'S RECOMMENDATIONS. PROVIDE BARRIER FREE TRANSITIONS AT FLOOR CHANGES. SEE TRANSITION DETAILS FOR MORE INFORMATION.
2. REFER TO A-SERIES FOR STANDARD MOUNTING HEIGHTS OF BATHROOM ACCESSORIES AND FIXTURING, DIMENSIONS AND CONSTRUCTION INFORMATION.
3. FLOORING EXTENDS BELOW BUILT IN CASEWORK AND UNDER VENDING MACHINES. SEE ARCHITECTURAL DETAIL DRAWINGS FOR INTERIOR CASEWORK AND ADDITIONAL FINISH CONSTRUCTION DETAILS.
4. REFER TO ARCHITECTURAL REFLECTED CEILING PLANS, AR-SERIES FOR CEILING HEIGHTS.
5. METAL TRANSITIONS, END CAPS, ETC ARE BRUSHED NICKEL FINISH UNLESS NOTED OTHERWISE.
6. EXTERIOR WINDOWS RECEIVE WT1.
7. RESTROOM VANITIES HAVE SOLID SURFACE COUNTERTOPS WITH INTEGRAL SOLID SURFACE SINK, TYPICAL, UNO. SEE PLUMBING DRAWINGS FOR FIXTURES.
8. WALK-OFF ENTRANCE MATS SHOWN ON PLAN ARE VERIFIED WITH ARCHITECTURAL AND STRUCTURAL FOUNDATION AND SLAB DRAWINGS AND FIELD VERIFIED.
9. REFER TO INTERIOR FINISH DRAWINGS FOR ACCENT WALL LOCATIONS / EXTENTS. BULKHEADS THROUGHOUT RECEIVE P7 ACCENT CEILING PAINT. REFER TO AR-SERIES FOR LOCATIONS.
10. REFER TO INTERIOR FINISH DRAWINGS FOR CG1 LOCATIONS.
11. APPROPRIATE PAINT FOR SUBSTRATE TO BE USED.
12. PAINT INTERIOR ELECTRICAL PANEL FACE, ACCESS PANELS, METAL GRILLS, DIFFUSERS, PANEL BOXES AND REGISTERS TO MATCH ADJACENT FINISH.
13. EXPOSED CEILINGS ARE PAINTED ENTIRELY; INCLUDING EXPOSED STRUCTURE, DECK, DUCTWORK, CONDUIT, PIPING, ETC. GYPSUM BOARD CEILINGS AND SOFFITS.
14. CAULK BOTTOM OF WALLS THAT DO NOT RECEIVE WALL BASE. CAULK MATCHES FLOOR COLOR.
15. PROVIDE LEVEL 5 FINISH AT DRYWALL PRIOR TO WC1 AND WC2 WALLCOVERING INSTALLATION.

APPR | DATE | DESCRIPTION | SYM

NAVFAC

PRELIMINARY FOR REFERENCE ONLY

SEAL

IRQ W.M. Jordan COMPANY – A JOINT VENTURE –

Michael Baker INTERNATIONAL

100 AIRSIDE DRIVE
MOON TOWNSHIP, PA 15108 A/E INFO

APPROVED

FOR COMMANDER NAVFAC

ACTIVITY
MARINE CORPS BASE
CAMP LEJEUNE

SATISFACTORY TO DATE

DES SJK | DRW AND | CHK NCW

PM

BRANCH MANAGER

CHIEF ENG/ARCH

FIRE PROTECTION

DEPARTMENT OF THE NAVY
NAVAL FACILITIES ENGINEERING COMMAND
ROICC FLORENCE CAMP LEJEUNE
MCB CAMP LEJEUNE

NAVAL FACILITIES ENGINEERING COMMAND – MID-ATLANTIC
JACKSONVILLE, NC

JACKSONVILLE, NC
P1338F II MEF SIMULATION/TRAINING CENTER REPLACEMENT

INTERIOR FINISH - BASIS OF DESIGN AND DETAILED NOTES

SCALE: AS NOTED

EPROJECT NO.: 1590892

CONSTR. CONTR. NO.
N40085-20-C-0059

NAVFAC DRAWING NO.

SHEET OF

IN001

DP2 SUBMISSION – P1338 BUILDING -PRE-FINAL SUBMISSION

PLOTTED: 6/8/2021 3:02:18 PM

FILE NAME: BIM 360://HF PACKAGE 3/P1338 MEF SIM CTR-1590892-A.rvt

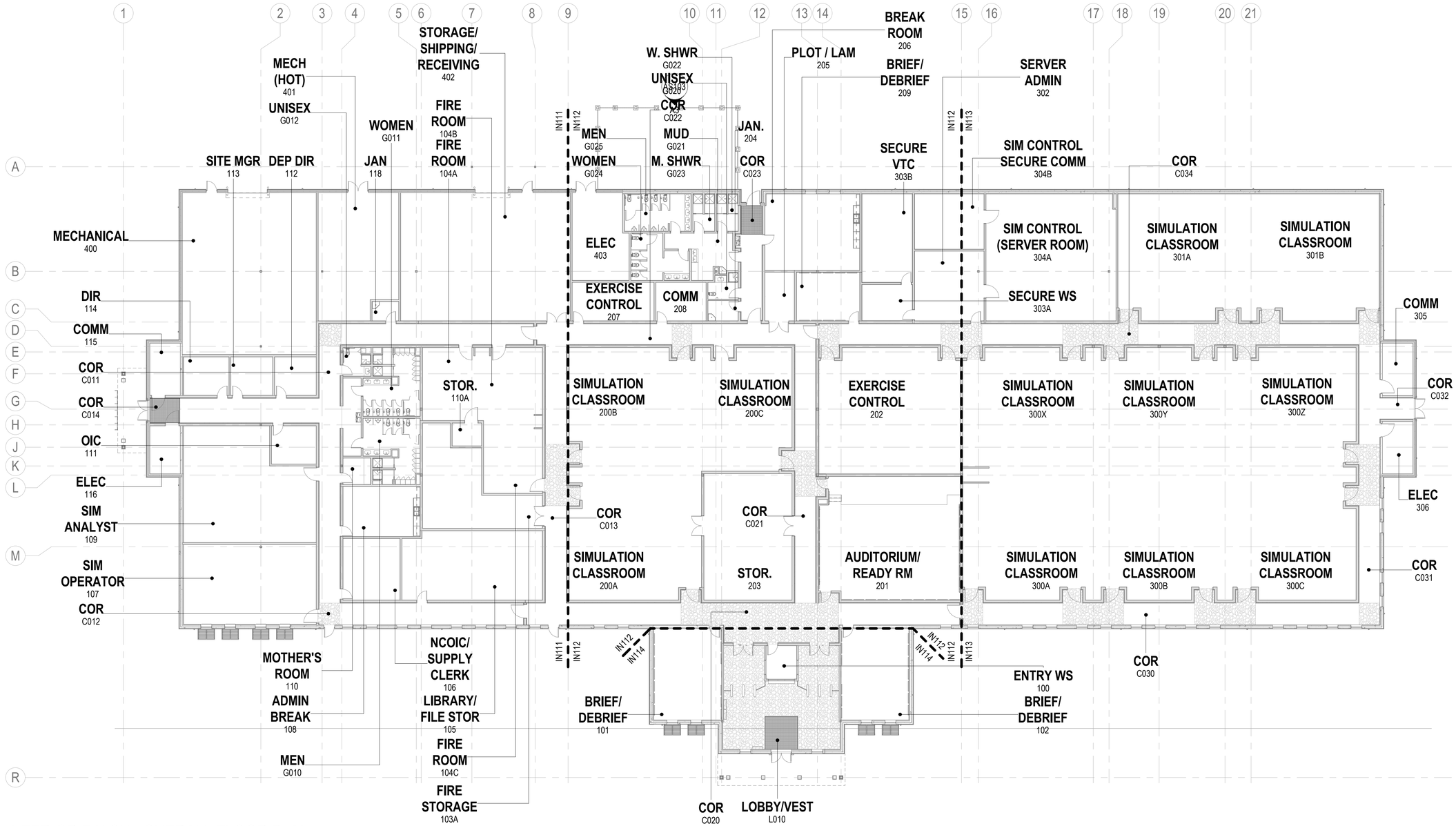

INTERIOR FINISH - OVERALL FLOOR PLAN

SCALE: 1/16" = 1'-0"

LEGEND - INTERIOR FINISH (FLOOR PATTERN)

TZ1 TZ2 WM1

KEYPLAN

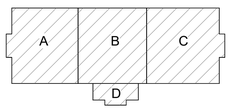

0 8' - 0" 16' - 0" 32' - 0"

SCALE: 1/16" = 1' - 0"

N

APPR | DATE | DESCRIPTION | SYM

NAVFAC

PRELIMINARY FOR REFERENCE ONLY

SEAL

RQ W.M. Jordan COMPANY – A JOINT VENTURE –

Michael Baker INTERNATIONAL

100 AIRSIDE DRIVE MOON TOWNSHIP, PA 15108 A/E INFO

APPROVED

FOR COMMANDER NAVFAC

ACTIVITY: MARINE CORPS BASE CAMP LEJEUNE

SATISFACTORY TO DATE

DES SJK | DRW AND | CHK NCW

PM

BRANCH MANAGER

CHIEF ENG/ARCH

FIRE PROTECTION

DEPARTMENT OF THE NAVY
NAVAL FACILITIES ENGINEERING COMMAND
ROICC FLORENCE CAMP LEJEUNE

NAVAL FACILITIES ENGINEERING COMMAND ~ MID-ATLANTIC
JACKSONVILLE, NC

MCB CAMP LEJEUNE
JACKSONVILLE, NC

P1338F II MEF SIMULATION/TRAINING CENTER REPLACEMENT

INTERIOR FINISH - OVERALL FLOOR PLAN

SCALE: AS NOTED

EPROJECT NO.: 1590892

CONSTR. CONTR. NO. N40085-20-C-0059

NAVFAC DRAWING NO.

SHEET OF

IN110

DP2 SUBMISSION – P1338 BUILDING - PRE-FINAL SUBMISSION

PLOTTED: 6/8/2021 3:02:31 PM

FILE NAME: BIM 360://HF PACKAGE 3/P1338 MEF SIM CTR-1590892-A.rvt

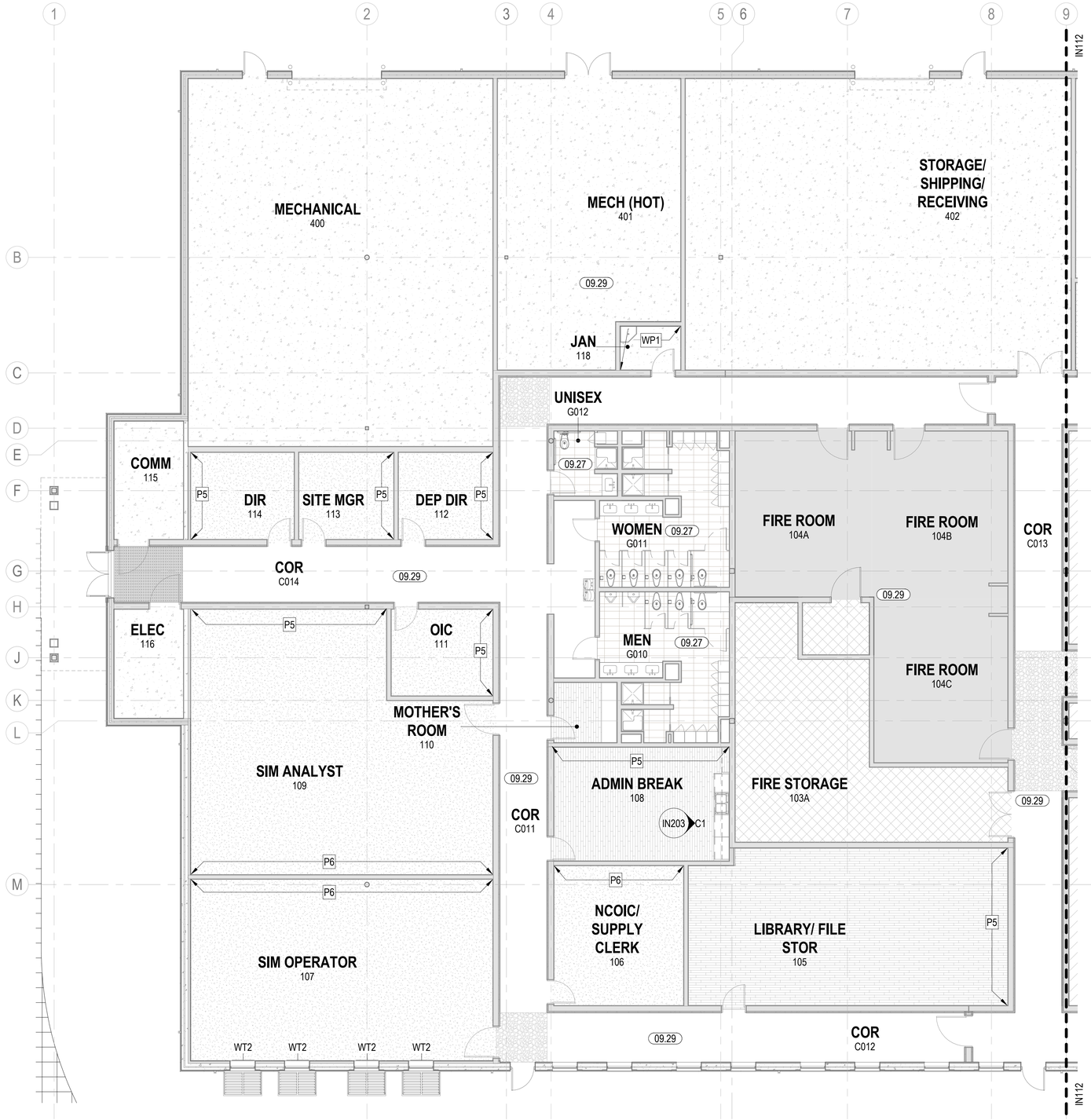

INTERIOR FINISH - FLOOR PLAN - AREA A

SCALE: 1/8" = 1'-0"

KEYNOTES

09.27 TILE TO START AT FLOOR DRAIN. PROVIDE TRIANGLE SLOPE INSTALLATION PROPERLY SLOPED TO FLOOR DRAIN. COORDINATE SLOPE WITH PLUMBING DRAWINGS.

09.29 PROVIDE CG1 AT OUTSIDE CORNERS OF THIS ROOM / CORRIDOR (INCLUDING DOOR WHERE APPLICABLE).

LEGEND - INTERIOR FINISH (TYPE)

ACP	ACOUSTICAL CEILING PANEL
AFP	ACOUSTICAL FABRIC PANEL
CG	CORNER GUARD
CPT	CARPET TILE
G	GROUT
L	LOCKERS
LVT	LUXURY VINYL TILE
MAP	MODULAR ARCHITECTURAL PANEL
P	PAINT
PCMU	POLISHED CONCRETE MASONRY UNIT
PL	PLASTIC LAMINATE
PT	PORCELAIN TILE
RAF	RAISED ACCESS FLOOR
RB	RESILIENT BASE
SC	SEALED CONCRETE
SS	SOLID SURFACE
TP	TOILET PARTITIONS
TZ	TERRZAZZO
TZB	TERRAZZO BASE
WC	WALLCOVERING
WM	WALK-OFF MAT SYSTEM
WP	WALL PROTECTION
WT	WINDOW TREATMENT

LEGEND - INTERIOR FINISH (FLOOR PATTERN)

CPT1, CPT2, LVT1, PT1, RAF1, RAF2, RAF3, RAF4, SC1, TZ1, TZ2, WM1

LEGEND - INTERIOR PAINT (TAG)

XX — PAINT TYPE

KEYPLAN

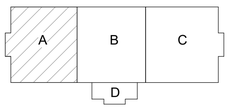

0 4' - 0" 8' - 0" 16' - 0"

SCALE: 1/8" = 1' - 0"

N

SYM	DESCRIPTION	DATE	APPR

NAVFAC

PRELIMINARY FOR REFERENCE ONLY

SEAL

RQ W.M. Jordan COMPANY - A JOINT VENTURE -

Michael Baker INTERNATIONAL
100 AIRSIDE DRIVE
MOON TOWNSHIP, PA 15108
A/E INFO

APPROVED

FOR COMMANDER NAVFAC

ACTIVITY
MARINE CORPS BASE CAMP LEJEUNE

SATISFACTORY TO DATE

DES SJK | DRW AND | CHK NCW

PM

BRANCH MANAGER

CHIEF ENG/ARCH

FIRE PROTECTION

DEPARTMENT OF THE NAVY
NAVAL FACILITIES ENGINEERING COMMAND
NAVAL FACILITIES ENGINEERING COMMAND ~ MID-ATLANTIC
ROICC FLORENCE CAMP LEJEUNE
JACKSONVILLE, NC
MCB CAMP LEJEUNE
JACKSONVILLE, NC

P1338F II MEF SIMULATION/TRAINING CENTER REPLACEMENT

INTERIOR FINISH - FLOOR PLAN - AREA A

SCALE: AS NOTED

EPROJECT NO.: 1590892

CONSTR. CONTR. NO.
N40085-20-C-0059

NAVFAC DRAWING NO.

SHEET OF

IN111

DP2 SUBMISSION – P1338 BUILDING - PRE-FINAL SUBMISSION

PLOTTED: 6/8/2021 3:02:43 PM

FILE NAME: BIM 360://HF PACKAGE 3/P1338 MEF SIM CTR-1590892-A.rvt

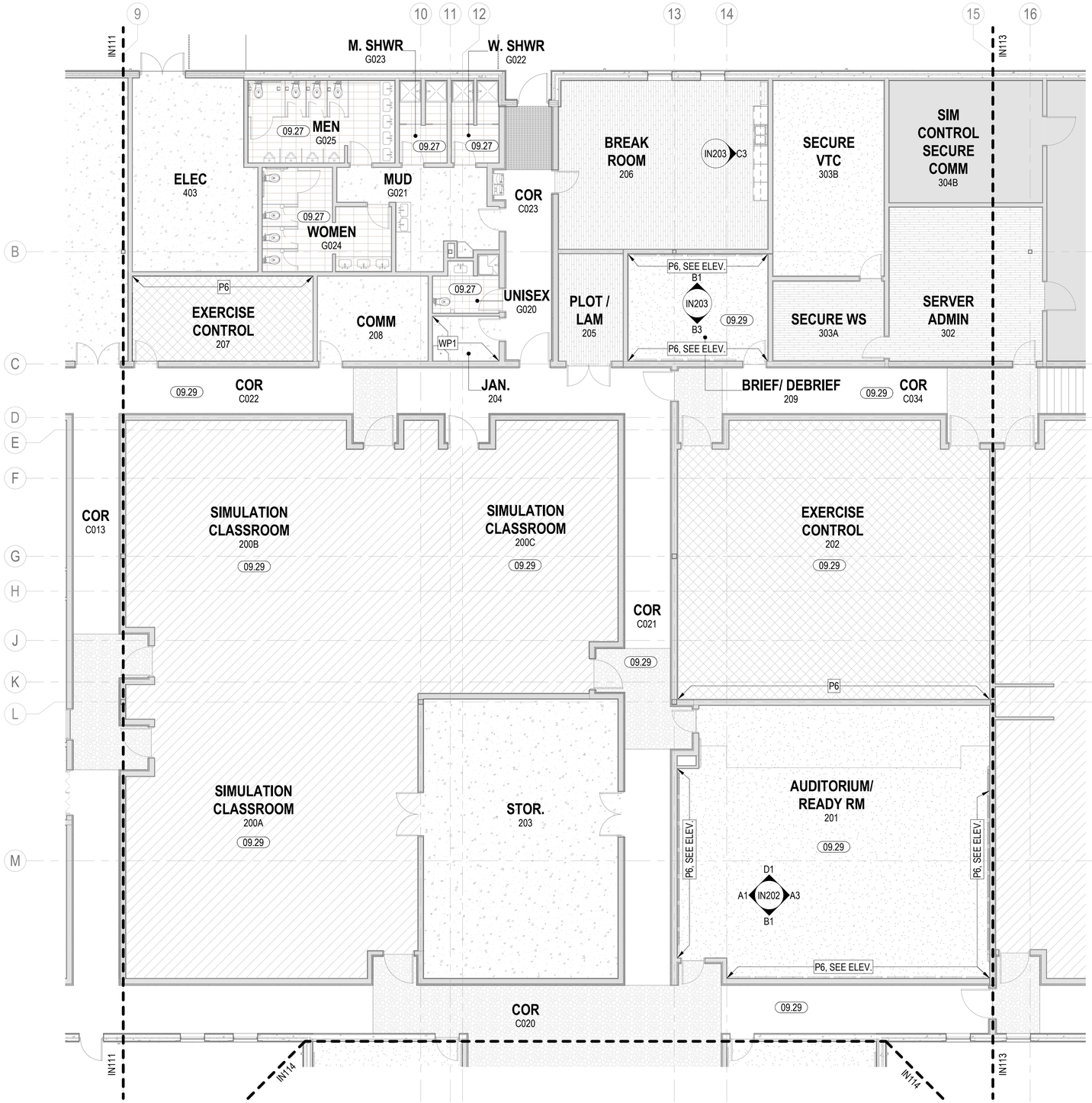

INTERIOR FINISH - FLOOR PLAN - AREA B

SCALE: 1/8" = 1'-0"

KEYNOTES

09.27 TILE TO START AT FLOOR DRAIN. PROVIDE TRIANGLE SLOPE INSTALLATION PROPERLY SLOPED TO FLOOR DRAIN. COORDINATE SLOPE WITH PLUMBING DRAWINGS.

09.29 PROVIDE CG1 AT OUTSIDE CORNERS OF THIS ROOM / CORRIDOR (INCLUDING DOOR WHERE APPLICABLE).

LEGEND - INTERIOR FINISH (TYPE)

ACP	ACOUSTICAL CEILING PANEL
AFP	ACOUSTICAL FABRIC PANEL
CG	CORNER GUARD
CPT	CARPET TILE
G	GROUT
L	LOCKERS
LVT	LUXURY VINYL TILE
MAP	MODULAR ARCHITECTURAL PANEL
P	PAINT
PCMU	POLISHED CONCRETE MASONRY UNIT
PL	PLASTIC LAMINATE
PT	PORCELAIN TILE
RAF	RAISED ACCESS FLOOR
RB	RESILIENT BASE
SC	SEALED CONCRETE
SS	SOLID SURFACE
TP	TOILET PARTITIONS
TZ	TERRZAZZO
TZB	TERRAZZO BASE
WC	WALLCOVERING
WM	WALK-OFF MAT SYSTEM
WP	WALL PROTECTION
WT	WINDOW TREATMENT

LEGEND - INTERIOR FINISH (FLOOR PATTERN)

CPT1, RAF1, SC1
CPT2, RAF2, TZ1
LVT1, RAF3, TZ2
PT1, RAF4, WM1

LEGEND - INTERIOR PAINT (TAG)

XX — PAINT TYPE

KEYPLAN

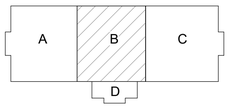

0 4' - 0" 8' - 0" 16' - 0"

SCALE: 1/8" = 1' - 0"

N

APPR | DATE | DESCRIPTION | SYM

NAVFAC

PRELIMINARY FOR REFERENCE ONLY

SEAL

RQ W.M. Jordan COMPANY – A JOINT VENTURE –

Michael Baker INTERNATIONAL
100 AIRSIDE DRIVE
MOON TOWNSHIP, PA 15108
A/E INFO

APPROVED

FOR COMMANDER NAVFAC

ACTIVITY
MARINE CORPS BASE
CAMP LEJEUNE

SATISFACTORY TO DATE

DES SJK | DRW AND | CHK NCW

PM

BRANCH MANAGER

CHIEF ENG/ARCH

FIRE PROTECTION

DEPARTMENT OF THE NAVY
NAVAL FACILITIES ENGINEERING COMMAND
ROICC FLORENCE CAMP LEJEUNE
MCB CAMP LEJEUNE

NAVAL FACILITIES ENGINEERING COMMAND ~ MID-ATLANTIC
JACKSONVILLE, NC

JACKSONVILLE, NC
P1338F II MEF SIMULATION/TRAINING CENTER REPLACEMENT

INTERIOR FINISH - FLOOR PLAN - AREA B

SCALE: AS NOTED

EPROJECT NO.: 1590892

CONSTR. CONTR. NO.
N40085-20-C-0059

NAVFAC DRAWING NO.

SHEET OF

IN112

DP2 SUBMISSION – P1338 BUILDING - PRE-FINAL SUBMISSION

PLOTTED: 6/8/2021 3:02:52 PM

FILE NAME: BIM 360://HF PACKAGE 3/P1338 MEF SIM CTR-1590892-A.rvt

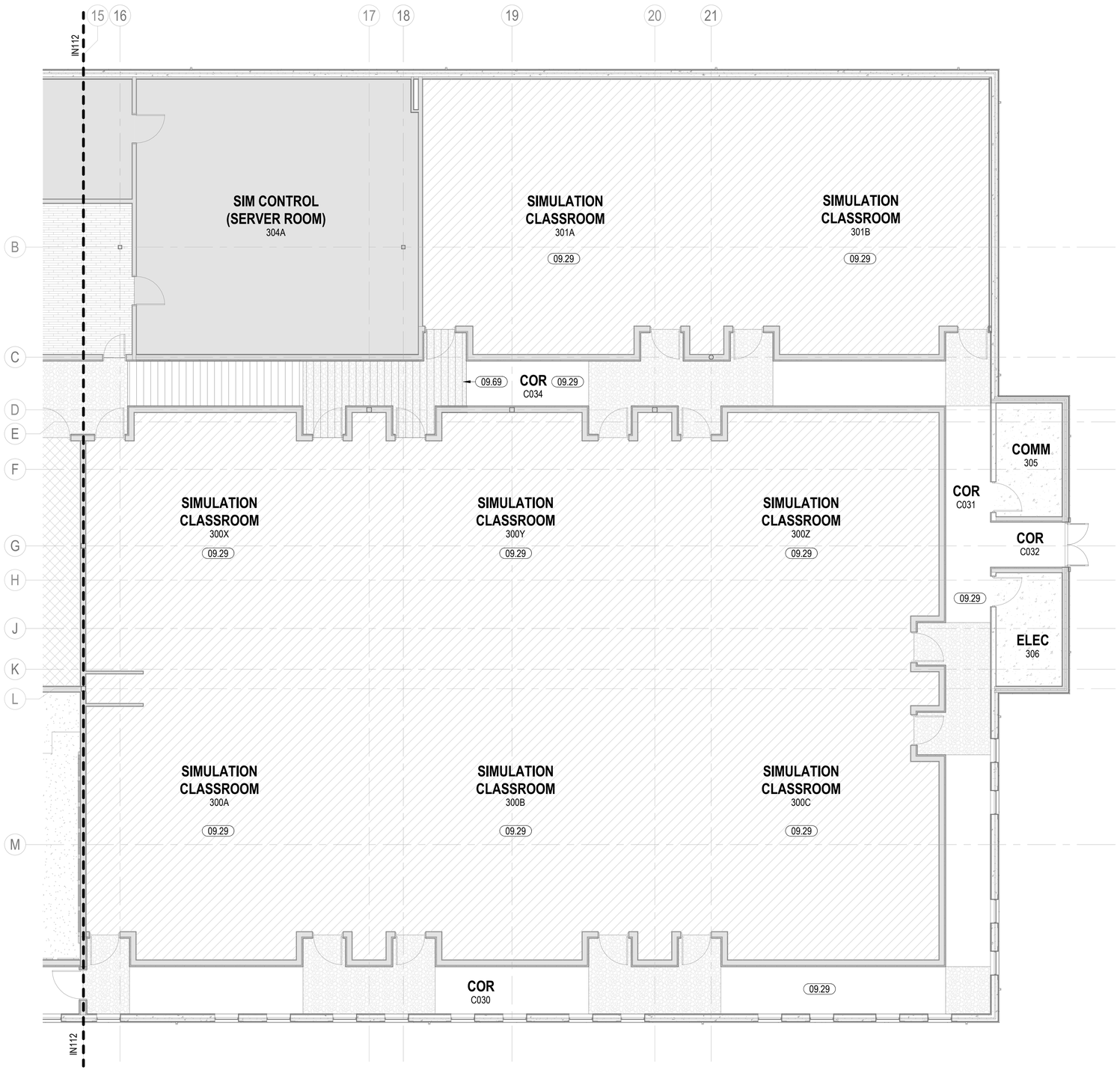

INTERIOR FINISH - FLOOR PLAN - AREA C

SCALE: 1/8" = 1'-0"

KEYNOTES

09.29	PROVIDE CG1 AT OUTSIDE CORNERS OF THIS ROOM / CORRIDOR (INCLUDING DOOR WHERE APPLICABLE).
09.69	LOCATION OF RAF3. PROVIDE TZ1 / TZ2 COLORS AT LOCATIONS INDICATED ON PLAN

LEGEND - INTERIOR FINISH (TYPE)

ACP	ACOUSTICAL CEILING PANEL
AFP	ACOUSTICAL FABRIC PANEL
CG	CORNER GUARD
CPT	CARPET TILE
G	GROUT
L	LOCKERS
LVT	LUXURY VINYL TILE
MAP	MODULAR ARCHITECTURAL PANEL
P	PAINT
PCMU	POLISHED CONCRETE MASONRY UNIT
PL	PLASTIC LAMINATE
PT	PORCELAIN TILE
RAF	RAISED ACCESS FLOOR
RB	RESILIENT BASE
SC	SEALED CONCRETE
SS	SOLID SURFACE
TP	TOILET PARTITIONS
TZ	TERRAZZO
TZB	TERRAZZO BASE
WC	WALLCOVERING
WM	WALK-OFF MAT SYSTEM
WP	WALL PROTECTION
WT	WINDOW TREATMENT

LEGEND - INTERIOR FINISH (FLOOR PATTERN)

CPT1	RAF1	SC1
CPT2	RAF2	TZ1
LVT1	RAF3	TZ2
PT1	RAF4	WM1

LEGEND - INTERIOR PAINT (TAG)

XX — PAINT TYPE

KEYPLAN

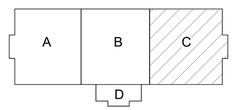

0 4' - 0" 8' - 0" 16' - 0"

SCALE: 1/8" = 1' - 0"

N

APPR	
DATE	
DESCRIPTION	
SYM	

NAVFAC

PRELIMINARY FOR REFERENCE ONLY

SEAL

IRQ WM Jordan COMPANY — A JOINT VENTURE —

Michael Baker INTERNATIONAL

100 AIRSIDE DRIVE
MOON TOWNSHIP, PA 15108 A/E INFO

APPROVED

FOR COMMANDER NAVFAC

ACTIVITY
MARINE CORPS BASE
CAMP LEJEUNE

SATISFACTORY TO DATE

DES SJK | DRW AND | CHK NCW

PM

BRANCH MANAGER

CHIEF ENG/ARCH

FIRE PROTECTION

DEPARTMENT OF THE NAVY
NAVAL FACILITIES ENGINEERING COMMAND
ROICC FLORENCE CAMP LEJEUNE
MCB CAMP LEJEUNE

NAVAL FACILITIES ENGINEERING COMMAND – MID-ATLANTIC
JACKSONVILLE, NC

JACKSONVILLE, NC
P1338F II MEF SIMULATION/TRAINING CENTER
REPLACEMENT

INTERIOR FINISH - FLOOR PLAN - AREA C

SCALE: AS NOTED

EPROJECT NO.: 1590892

CONSTR. CONTR. NO.
N40085-20-C-0059

NAVFAC DRAWING NO.

SHEET OF

IN113

DP2 SUBMISSION – P1338 BUILDING -,PRE-FINAL SUBMISSION

PLOTTED: 6/8/2021 3:02:59 PM

FILE NAME: BIM 360://HF PACKAGE 3/P1338 MEF SIM CTR-1590892-A.rvt

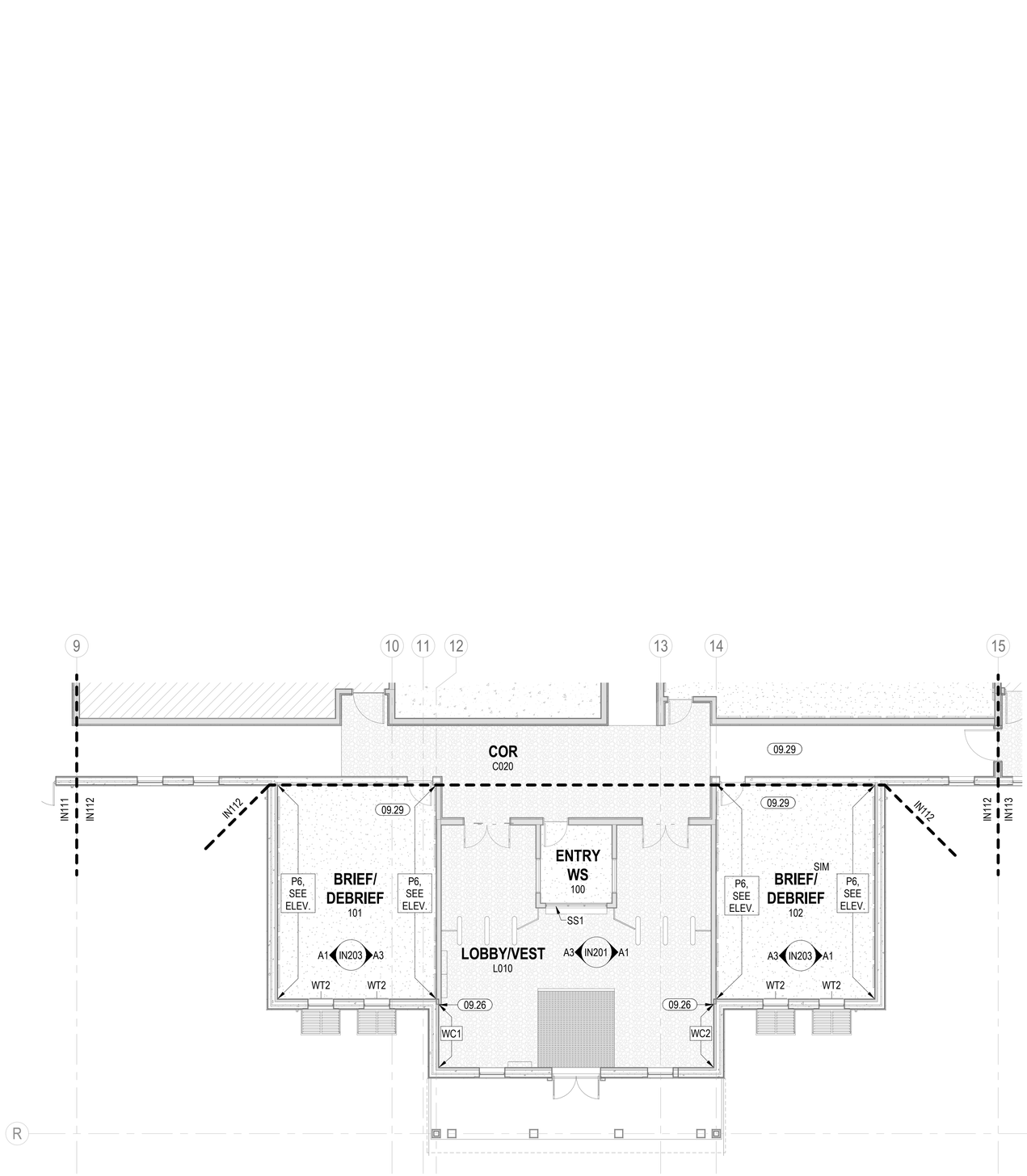

INTERIOR FINISH - FLOOR PLAN - AREA D

SCALE: 1/8" = 1'-0"

KEYNOTES

09.26 FINISH EDGE OF WALL AND RUN WALLCOVERING UP TO CORNER.

09.29 PROVIDE CG1 AT OUTSIDE CORNERS OF THIS ROOM / CORRIDOR (INCLUDING DOOR WHERE APPLICABLE).

LEGEND - INTERIOR FINISH (TYPE)

ACP	ACOUSTICAL CEILING PANEL
AFP	ACOUSTICAL FABRIC PANEL
CG	CORNER GUARD
CPT	CARPET TILE
G	GROUT
L	LOCKERS
LVT	LUXURY VINYL TILE
MAP	MODULAR ARCHITECTURAL PANEL
P	PAINT
PCMU	POLISHED CONCRETE MASONRY UNIT
PL	PLASTIC LAMINATE
PT	PORCELAIN TILE
RAF	RAISED ACCESS FLOOR
RB	RESILIENT BASE
SC	SEALED CONCRETE
SS	SOLID SURFACE
TP	TOILET PARTITIONS
TZ	TERRAZZO
TZB	TERRAZZO BASE
WC	WALLCOVERING
WM	WALK-OFF MAT SYSTEM
WP	WALL PROTECTION
WT	WINDOW TREATMENT

LEGEND - INTERIOR FINISH (FLOOR PATTERN)

CPT1, CPT2, LVT1, PT1, RAF1, RAF2, RAF3, RAF4, SC1, TZ1, TZ2, WM1

LEGEND - INTERIOR PAINT (TAG)

XX — PAINT TYPE

KEYPLAN

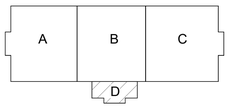

0 4' - 0" 8' - 0" 16' - 0"

SCALE: 1/8" = 1' - 0"

N

APPR	DATE	DESCRIPTION	SYM

NAVFAC

PRELIMINARY FOR REFERENCE ONLY

SEAL

IRQ Wm. Jordan COMPANY – A JOINT VENTURE –

Michael Baker INTERNATIONAL

100 AIRSIDE DRIVE
MOON TOWNSHIP, PA 15108

A/E INFO

APPROVED

FOR COMMANDER NAVFAC

ACTIVITY: MARINE CORPS BASE CAMP LEJEUNE

SATISFACTORY TO DATE

DES SJK | DRW AND | CHK NCW

PM

BRANCH MANAGER

CHIEF ENG/ARCH

FIRE PROTECTION

DEPARTMENT OF THE NAVY
NAVAL FACILITIES ENGINEERING COMMAND
NAVAL FACILITIES ENGINEERING COMMAND ~ MID-ATLANTIC
JACKSONVILLE, NC
ROICC FLORENCE CAMP LEJEUNE
MCB CAMP LEJEUNE

JACKSONVILLE, NC

P1338F II MEF SIMULATION/TRAINING CENTER REPLACEMENT

INTERIOR FINISH - FLOOR PLAN - AREA D

SCALE: AS NOTED

EPROJECT NO.: 1590892

CONSTR. CONTR. NO.
N40085-20-C-0059

NAVFAC DRAWING NO.

SHEET OF

IN114

DP2 SUBMISSION – P1338 BUILDING - PRE-FINAL SUBMISSION

PLOTTED: 6/8/2021 3:03:07 PM

FILE NAME: BIM 360://HF PACKAGE 3/P1338 MEF SIM CTR-1590892-A.rvt

LEGEND - INTERIOR FINISH (TYPE)

ACP	ACOUSTICAL CEILING PANEL
AFP	ACOUSTICAL FABRIC PANEL
CG	CORNER GUARD
CPT	CARPET TILE
G	GROUT
L	LOCKERS
LVT	LUXURY VINYL TILE
MAP	MODULAR ARCHITECTURAL PANEL
P	PAINT
PCMU	POLISHED CONCRETE MASONRY UNIT
PL	PLASTIC LAMINATE
PT	PORCELAIN TILE
RAF	RAISED ACCESS FLOOR
RB	RESILIENT BASE
SC	SEALED CONCRETE
SS	SOLID SURFACE
TP	TOILET PARTITIONS
TZ	TERRAZZO
TZB	TERRAZZO BASE
WC	WALLCOVERING
WM	WALK-OFF MAT SYSTEM
WP	WALL PROTECTION
WT	WINDOW TREATMENT

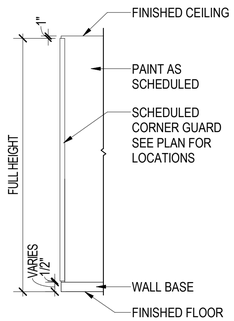

INT. FINISH ELEVATION - TYP. CORNER GUARDS (CG1) — B3

SCALE: 3/8" = 1'-0"

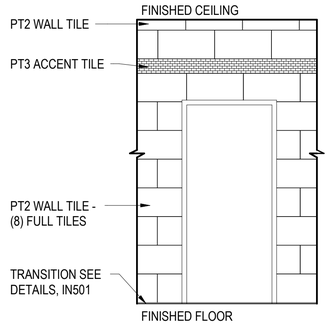

INT. FINISH ELEVATION - TYP. WALL TILE AT WET AREAS — B4

SCALE: 3/8" = 1'-0"

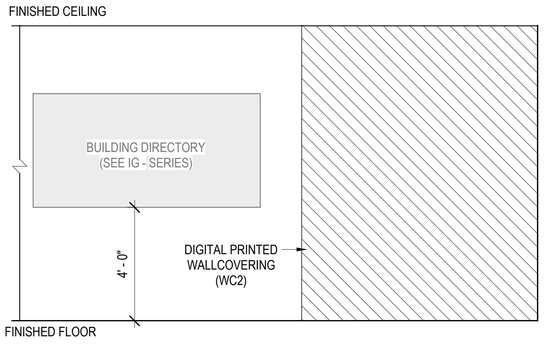

INTERIOR FINISH ELEVATION - LOBBY/VEST L010 - DIGITAL WALLCOVERING (EAST) — A1

SCALE: 3/8" = 1'-0"

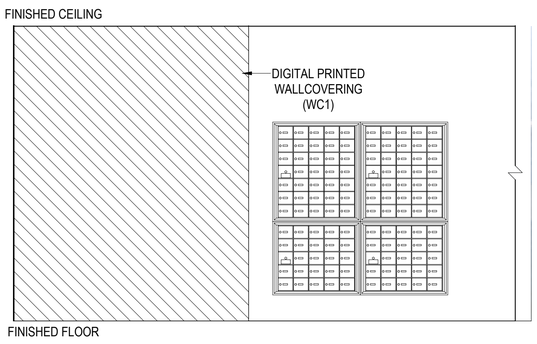

INTERIOR FINISH ELEVATION - LOBBY/VEST L010 - DIGITAL WALLCOVERING (WEST) — A3

SCALE: 3/8" = 1'-0"

0 2' - 0" 4' - 0" 8' - 0"

SCALE: 3/8" = 1' - 0"

SYM	DESCRIPTION	DATE	APPR

NAVFAC

PRELIMINARY FOR REFERENCE ONLY

SEAL

IRQ W.M. Jordan COMPANY ~ A JOINT VENTURE ~

Michael Baker INTERNATIONAL

100 AIRSIDE DRIVE
MOON TOWNSHIP, PA 15108 A/E INFO

APPROVED

FOR COMMANDER NAVFAC

ACTIVITY
MARINE CORPS BASE
CAMP LEJEUNE

SATISFACTORY TO DATE

DES SJK | DRW AND | CHK NCW

PM

BRANCH MANAGER

CHIEF ENG/ARCH

FIRE PROTECTION

DEPARTMENT OF THE NAVY
NAVAL FACILITIES ENGINEERING COMMAND ~ MID-ATLANTIC
ROICC FLORENCE CAMP LEJEUNE
MCB CAMP LEJEUNE

JACKSONVILLE, NC

P1338F II MEF SIMULATION/TRAINING CENTER REPLACEMENT

INTERIOR FINISH - ELEVATIONS - TYPICAL AND LOBBY/VEST L010

SCALE: AS NOTED

EPROJECT NO.: 1590892

CONSTR. CONTR. NO.
N40085-20-C-0059

NAVFAC DRAWING NO.

SHEET OF

IN201

DP2 SUBMISSION – P1338 BUILDING –PRE-FINAL SUBMISSION

PLOTTED: 6/8/2021 3:03:08 PM

FILE NAME: BIM 360://HF PACKAGE 3/P1338 MEF SIM CTR-1590892-A.rvt

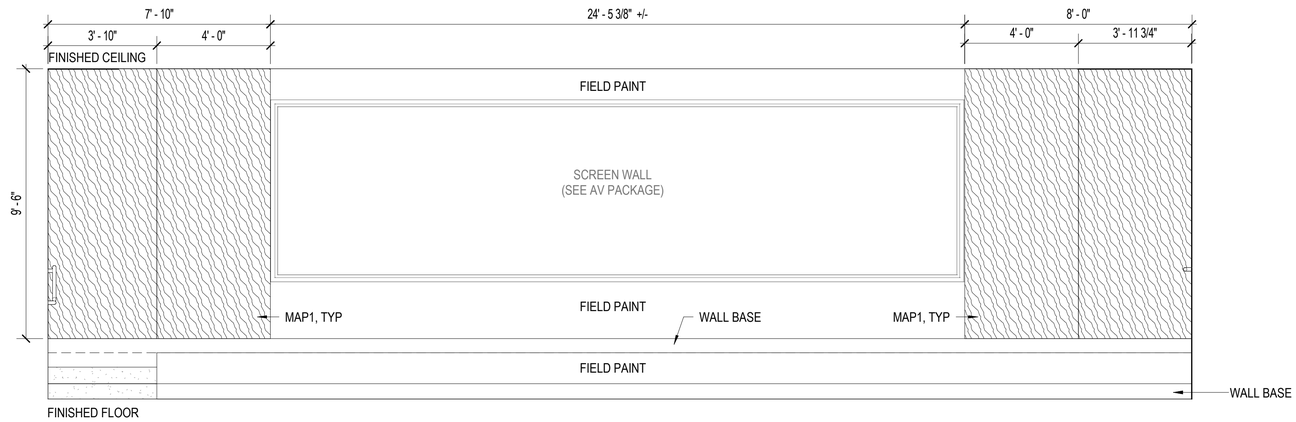

INTERIOR FINISH ELEVATION - AUDITORIUM/READY RM 201 - ACOUSTICAL FABRIC PANELS (NORTH)

SCALE: 3/8" = 1'-0"

D1

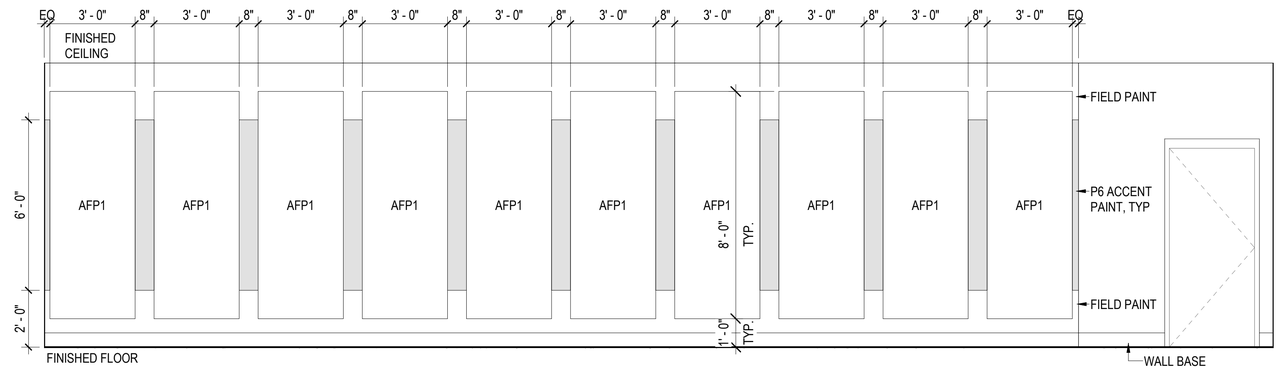

INTERIOR FINISH ELEVATION - AUDITORIUM/READY RM 201 - ACOUSTICAL FABRIC PANELS (SOUTH)

SCALE: 3/8" = 1'-0"

B1

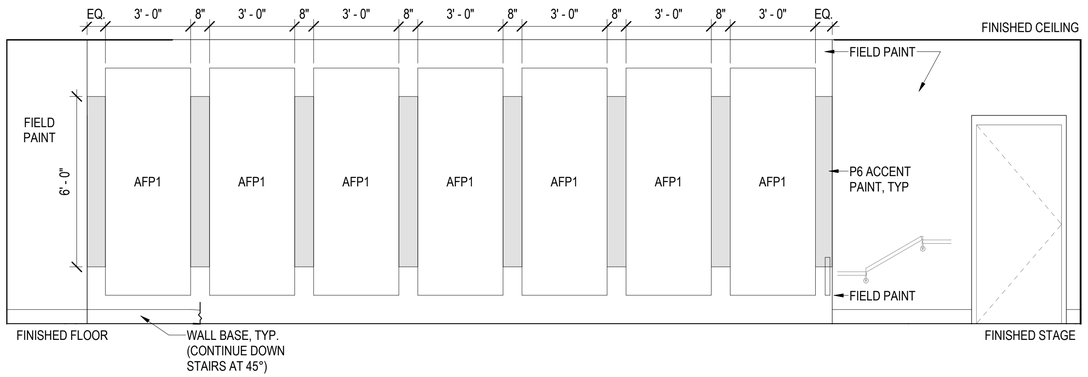

INTERIOR FINISH ELEVATION - AUDITORIUM/READY RM 201 - ACOUSTICAL FABRIC PANELS (WEST)

SCALE: 3/8" = 1'-0"

A1

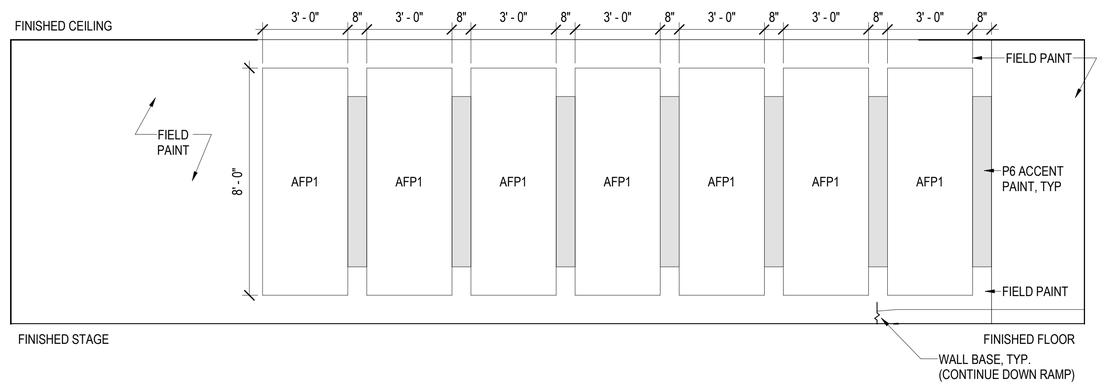

INTERIOR FINISH ELEVATION - AUDITORIUM/READY RM 201 - ACOUSTICAL FABRIC PANELS (EAST)

SCALE: 3/8" = 1'-0"

A3

0 2' - 0" 4' - 0" 8' - 0"

SCALE: 3/8" = 1' - 0"

LEGEND - INTERIOR FINISH (TYPE)

ACP	ACOUSTICAL CEILING PANEL
AFP	ACOUSTICAL FABRIC PANEL
CG	CORNER GUARD
CPT	CARPET TILE
G	GROUT
L	LOCKERS
LVT	LUXURY VINYL TILE
MAP	MODULAR ARCHITECTURAL PANEL
P	PAINT
PCMU	POLISHED CONCRETE MASONRY UNIT
PL	PLASTIC LAMINATE
PT	PORCELAIN TILE
RAF	RAISED ACCESS FLOOR
RB	RESILIENT BASE
SC	SEALED CONCRETE
SS	SOLID SURFACE
TP	TOILET PARTITIONS
TZ	TERRAZZO
TZB	TERRAZZO BASE
WC	WALLCOVERING
WM	WALK-OFF MAT SYSTEM
WP	WALL PROTECTION
WT	WINDOW TREATMENT

LEGEND - INTERIOR FINISH (AFP)

TAG	DESCRIPTION	COUNT
		10
AFP1	ACOUSTICAL FABRIC PANEL - SEE BASIS OF DESIGN	59
WT2	WINDOW TREATMENT - SEE BASIS OF DESIGN	8

NO.	DESCRIPTION	DATE	APPR

PRELIMINARY FOR REFERENCE ONLY

SEAL

RQ W.M. Jordan COMPANY – A JOINT VENTURE –

Michael Baker INTERNATIONAL

100 AIRSIDE DRIVE
MOON TOWNSHIP, PA 15108 A/E INFO

APPROVED

FOR COMMANDER NAVFAC

ACTIVITY
MARINE CORPS BASE
CAMP LEJEUNE

SATISFACTORY TO DATE

DES SJK | DRW AND | CHK NCW

PM

BRANCH MANAGER

CHIEF ENG/ARCH

FIRE PROTECTION

DEPARTMENT OF THE NAVY
NAVAL FACILITIES ENGINEERING COMMAND – MID-ATLANTIC
ROICC FLORENCE CAMP LEJEUNE
MCB CAMP LEJEUNE

NAVAL FACILITIES ENGINEERING COMMAND – MID-ATLANTIC
JACKSONVILLE, NC

JACKSONVILLE, NC

P1338F II MEF SIMULATION/TRAINING CENTER REPLACEMENT

INTERIOR FINISH - ELEVATIONS - AUDITORIUM/READY RM 201

SCALE: AS NOTED

EPROJECT NO.: 1590892

CONSTR. CONTR. NO.
N40085-20-C-0059

NAVFAC DRAWING NO.

SHEET OF

IN202

DP2 SUBMISSION – P1338 BUILDING - PRE-FINAL SUBMISSION

PLOTTED: 6/8/2021 3:03:15 PM

FILE NAME: BIM 360://HF PACKAGE 3/P1338 MEF SIM CTR-1590892-A.rvt

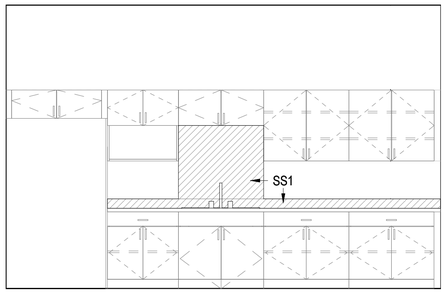

INTERIOR FINISH ELEVATION - ADMIN BREAK 108

SCALE: 3/8" = 1'-0" — C1

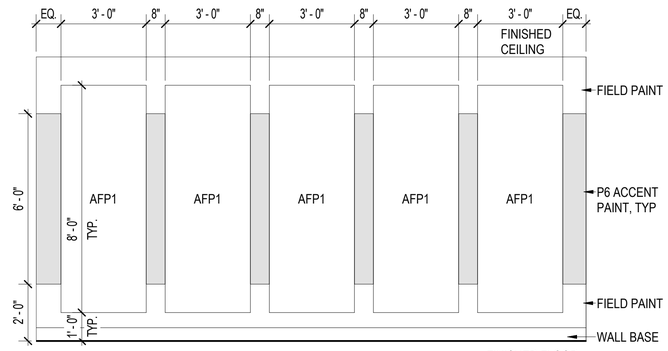

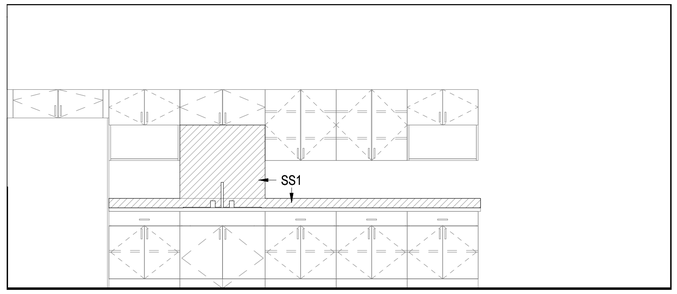

INTERIOR FINISH ELEVATION - BREAK ROOM 206

SCALE: 3/8" = 1'-0" — C3

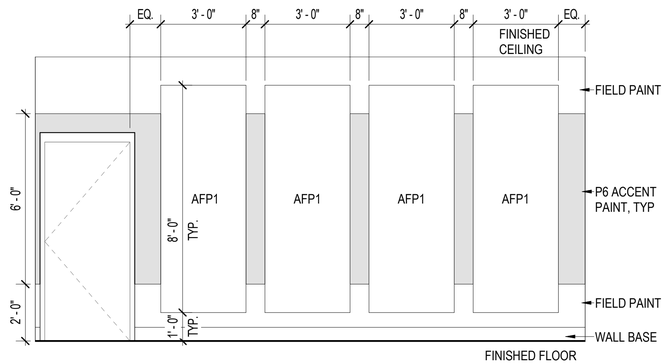

INTERIOR FINISH ELEVATION - BRIEF / DEBRIEF 209 - ACOUSTICAL FABRIC PANELS (NORTH)

SCALE: 3/8" = 1'-0" — B1

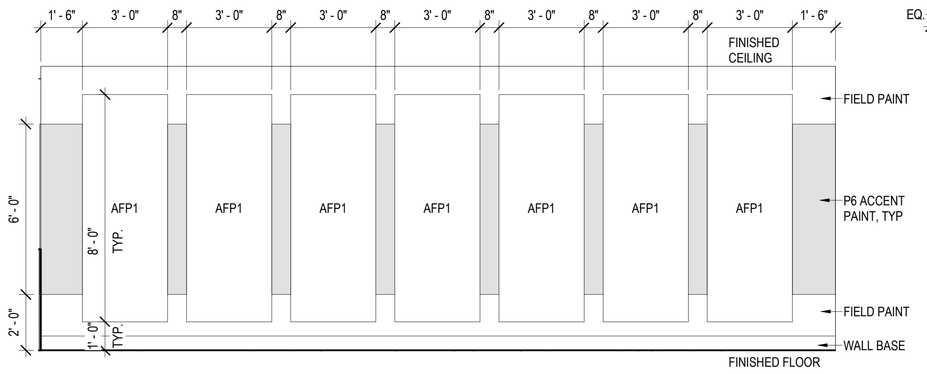

INTERIOR FINISH ELEVATION - BRIEF / DEBRIEF 209 - ACOUSTICAL FABRIC PANELS (SOUTH)

SCALE: 3/8" = 1'-0" — B3

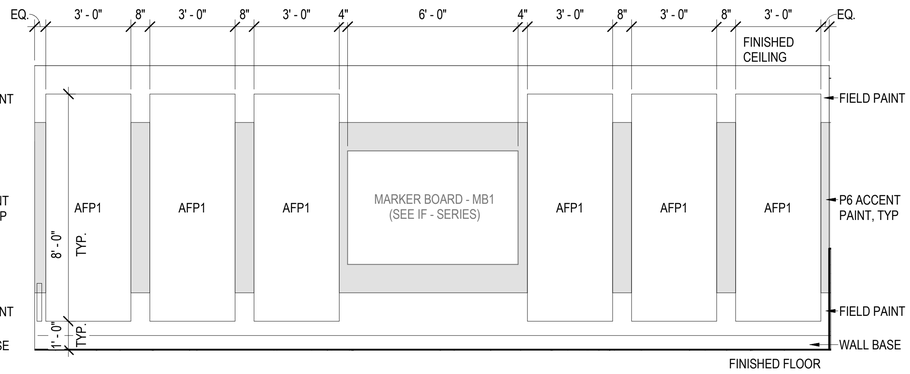

INTERIOR FINISH ELEVATION - TYPICAL BRIEF / DEBRIEF - ACOUSTICAL FABRIC PANELS (101 WEST / 102 EAST)

SCALE: 3/8" = 1'-0" — A1

INTERIOR FINISH ELEVATION - TYPICAL BRIEF / DEBRIEF - ACOUSTICAL FABRIC PANELS (101 EAST / 102 WEST)

SCALE: 3/8" = 1'-0" — A3

LEGEND - INTERIOR FINISH (TYPE)

ACP	ACOUSTICAL CEILING PANEL
AFP	ACOUSTICAL FABRIC PANEL
CG	CORNER GUARD
CPT	CARPET TILE
G	GROUT
L	LOCKERS
LVT	LUXURY VINYL TILE
MAP	MODULAR ARCHITECTURAL PANEL
P	PAINT
PCMU	POLISHED CONCRETE MASONRY UNIT
PL	PLASTIC LAMINATE
PT	PORCELAIN TILE
RAF	RAISED ACCESS FLOOR
RB	RESILIENT BASE
SC	SEALED CONCRETE
SS	SOLID SURFACE
TP	TOILET PARTITIONS
TZ	TERRAZZO
TZB	TERRAZZO BASE
WC	WALLCOVERING
WM	WALK-OFF MAT SYSTEM
WP	WALL PROTECTION
WT	WINDOW TREATMENT

LEGEND - INTERIOR FINISH (AFP)

TAG	DESCRIPTION	COUNT
		10
AFP1	ACOUSTICAL FABRIC PANEL - SEE BASIS OF DESIGN	59
WT2	WINDOW TREATMENT - SEE BASIS OF DESIGN	8

SCALE: 3/8" = 1' - 0"

SYM	DESCRIPTION	DATE	APPR

PRELIMINARY FOR REFERENCE ONLY

SEAL

W.M. Jordan COMPANY – A JOINT VENTURE –

Michael Baker INTERNATIONAL

100 AIRSIDE DRIVE
MOON TOWNSHIP, PA 15108 — A/E INFO

APPROVED

FOR COMMANDER NAVFAC

ACTIVITY
MARINE CORPS BASE
CAMP LEJEUNE

SATISFACTORY TO DATE

DES SJK | DRW AND | CHK NCW

PM

BRANCH MANAGER

CHIEF ENG/ARCH

FIRE PROTECTION

DEPARTMENT OF THE NAVY
NAVAL FACILITIES ENGINEERING COMMAND ~ MID-ATLANTIC
ROIOC FLORENCE CAMP LEJEUNE

NAVAL FACILITIES ENGINEERING COMMAND
JACKSONVILLE, NC

MCB CAMP LEJEUNE
JACKSONVILLE, NC
P1338F II MEF SIMULATION/TRAINING CENTER REPLACEMENT

INTERIOR FINISH - ELEVATIONS - BREAK ROOM AND TYPICAL BRIEF/DEBRIEF

SCALE: AS NOTED

EPROJECT NO.: 1590892

CONSTR. CONTR. NO.
N40085-20-C-0059

NAVFAC DRAWING NO.

SHEET — OF

IN203

DP2 SUBMISSION – P1338 BUILDING -PRE-FINAL SUBMISSION

PLOTTED: 6/8/2021 3:03:18 PM

FILE NAME: BIM 360://HF PACKAGE 3/P1338 MEF SIM CTR-1590892-A.rvt

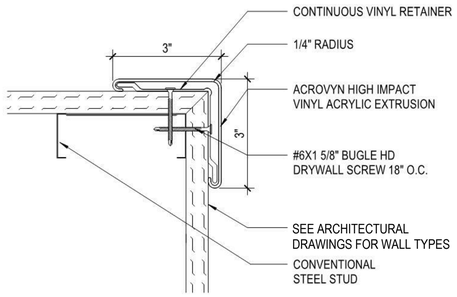

INTERIOR FINISH DETAIL - CORNER GUARD (CG1)

D1

SCALE: N.T.S.

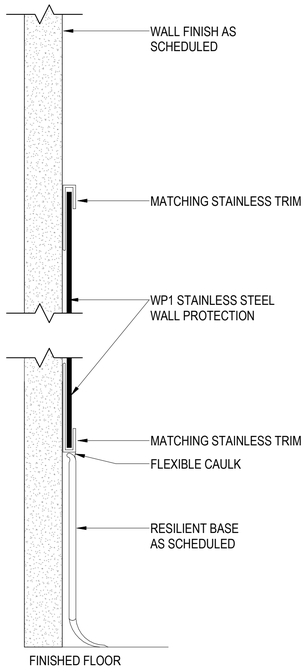

INTERIOR FINISH DETAIL - WAINSCOT AND WALL BASE

C2

SCALE:1'-0" = 1'-0"

EPOXY WALL BASE TO TILED WALL

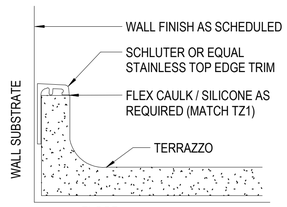

TILE FLOOR TO TILE WALL TRANSITION

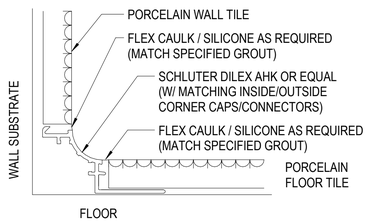

INSIDE CORNER TRANSITION - COUNTER TO B/S

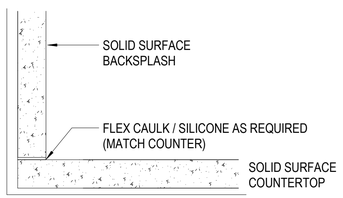

INSIDE CORNER TRANSITION- TILED WALLS

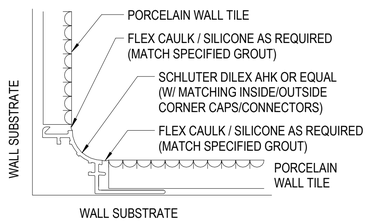

OUTSIDE CORNER TRANSITION- TILED WALLS

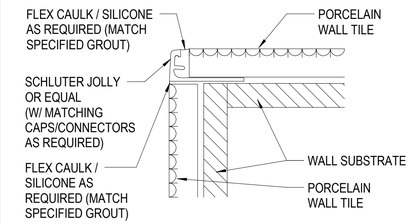

INTERIOR FINISH DETAIL - TYPICAL CORNER TRANSITIONS

A1

SCALE: N.T.S.

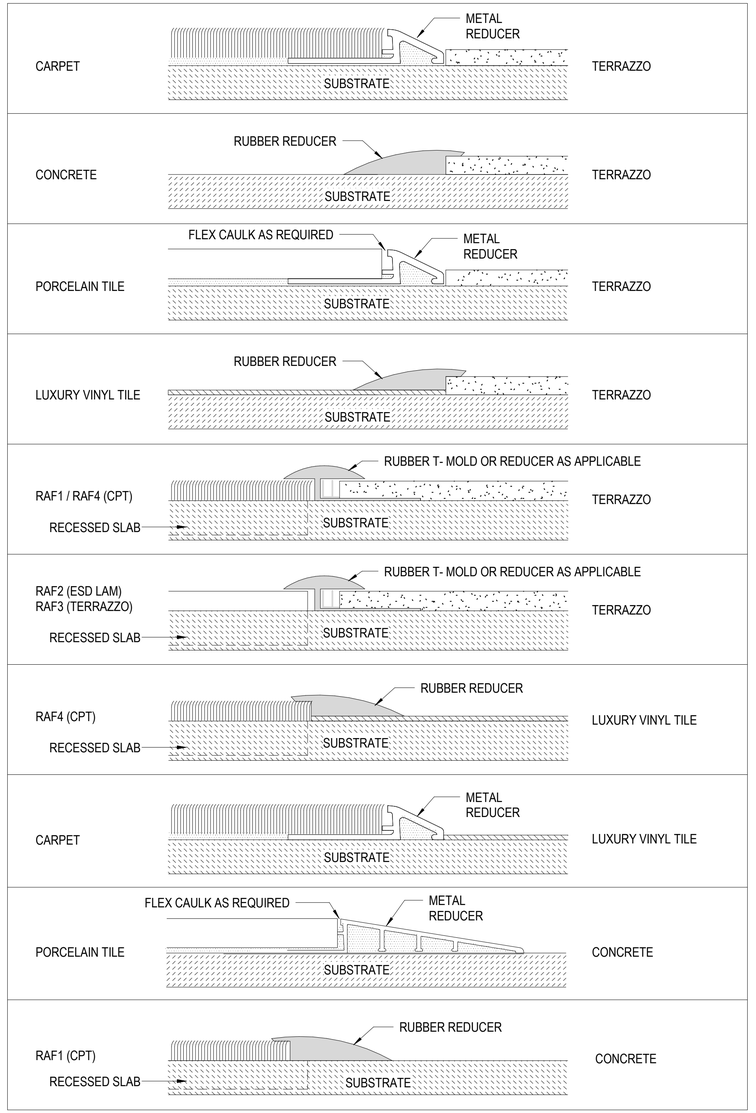

INTERIOR FINISH DETAIL - TYPICAL FLOOR TRANSITIONS

B3

SCALE: N.T.S.

NOTE:
RECESS DEPTH AND INSTALLATION METHOD IS COORDINATED WITH FINAL APPROVED WALK-OFF MANUFACTURER'S INSTALLATION DRAWINGS AND STRUCTURAL SLAB.

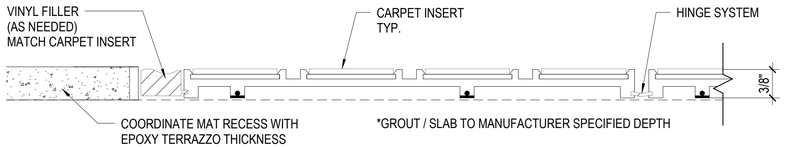

INTERIOR FINISH DETAIL - ENTRANCE FLOOR MAT RECESS

A3

SCALE: N.T.S.

LEGEND - INTERIOR FINISH (TYPE)

ACP	ACOUSTICAL CEILING PANEL
AFP	ACOUSTICAL FABRIC PANEL
CG	CORNER GUARD
CPT	CARPET TILE
G	GROUT
L	LOCKERS
LVT	LUXURY VINYL TILE
MAP	MODULAR ARCHITECTURAL PANEL
P	PAINT
PCMU	POLISHED CONCRETE MASONRY UNIT
PL	PLASTIC LAMINATE
PT	PORCELAIN TILE
RAF	RAISED ACCESS FLOOR
RB	RESILIENT BASE
SC	SEALED CONCRETE
SS	SOLID SURFACE
TP	TOILET PARTITIONS
TZ	TERRAZZO
TZB	TERRAZZO BASE
WC	WALLCOVERING
WM	WALK-OFF MAT SYSTEM
WP	WALL PROTECTION
WT	WINDOW TREATMENT

APPR | DATE | DESCRIPTION | SYM

NAVFAC

PRELIMINARY FOR REFERENCE ONLY

SEAL

IRQ W.M. Jordan COMPANY – A JOINT VENTURE –

Michael Baker INTERNATIONAL
100 AIRSIDE DRIVE
MOON TOWNSHIP, PA 15108
A/E INFO

APPROVED

FOR COMMANDER NAVFAC

ACTIVITY
MARINE CORPS BASE
CAMP LEJEUNE

SATISFACTORY TO DATE

DES SJK | DRW AND | CHK NCW

PM

BRANCH MANAGER

CHIEF ENG/ARCH

FIRE PROTECTION

DEPARTMENT OF THE NAVY
NAVAL FACILITIES ENGINEERING COMMAND
ROICC FLORENCE CAMP LEJEUNE
MCB CAMP LEJEUNE

NAVAL FACILITIES ENGINEERING COMMAND – MID-ATLANTIC
JACKSONVILLE, NC

JACKSONVILLE, NC
P1338F II MEF SIMULATION/TRAINING CENTER
REPLACEMENT

INTERIOR FINISH - DETAILS

SCALE: AS NOTED

EPROJECT NO.: 1590892

CONSTR. CONTR. NO.
N40085-20-C-0059

NAVFAC DRAWING NO.

SHEET OF

IN501

DP2 SUBMISSION – P1338 BUILDING -PRE-FINAL SUBMISSION

PLOTTED: 6/8/2021 3:03:19 PM

FILE NAME: BIM 360://HF PACKAGE 3/P1338 MEF SIM CTR-1590892-A.rvt

SCHEDULE - INTERIOR FINISH (ROOMS)

ROOM			FLOORS	WALLS	CEILINGS	
NUMBER	NAME	BASE FINISH	FINISH	FINISH	FINISH	CASEWORK
--	EXTERIOR					
100	ENTRY WS	RB1	CPT1	P3	ACP1	SS1
101	BRIEF/ DEBRIEF	RB1	CPT1	P3, P6, AFP1	ACP1	
102	BRIEF/ DEBRIEF	RB1	CPT1	P3, P6, AFP1	ACP1	
103A	FIRE STORAGE	RB1	RAF2	P3	ACP1	
104A	FIRE ROOM	RB1	RAF4	P5	ACP2, P7	
104B	FIRE ROOM	RB1	RAF4	P5	ACP2, P7	
104C	FIRE ROOM	RB1	RAF4	P5	ACP2, P7	
105	LIBRARY/ FILE STOR	RB1	LVT1	P3, P5	ACP1	
106	NCOIC/ SUPPLY CLERK	RB1	CPT2	P3, P6	ACP1	
107	SIM OPERATOR	RB1	CPT2	P3, P6	ACP1	
108	ADMIN BREAK	RB1	LVT1	P3, P5	ACP1	SS1, PL1
109	SIM ANALYST	RB1	CPT2	P3, P5, P6	ACP1	
110	MOTHER'S ROOM	RB1	LVT1	P3	P1	SS1, PL1
110A	STOR.	RB1	RAF2	P3	ACP1	
111	OIC	RB1	CPT2	P3, P5	ACP1	
112	DEP DIR	RB1	CPT2	P3, P5	ACP1	
113	SITE MGR	RB1	CPT2	P3, P5	ACP1	
114	DIR	RB1	CPT2	P3, P5	ACP1	
115	COMM	RB1	SC1	P3	ACP1	
116	ELEC	RB1	SC1	P3	P1	
118	JAN	RB1	SC1	P4, WP1	P2	
200A	SIMULATION CLASSROOM	RB1	RAF1	P5	ACP1, P7	
200B	SIMULATION CLASSROOM	RB1	RAF1	P5	ACP1, P7	
200C	SIMULATION CLASSROOM	RB1	RAF1	P5	ACP1, P7	
201	AUDITORIUM/ READY RM	RB1	CPT1	P3, P6, AFP1, MAP	ACP1, P7	
202	EXERCISE CONTROL	RB1	RAF2	P3, P6	ACP1	
203	STOR.	RB1	SC1	P3	ACP1	
204	JAN.	RB1	SC1	P4, WP1	P2	
205	PLOT / LAM	RB1	LVT1	P3	ACP1	
206	BREAK ROOM	RB1	LVT1	P3, P5	ACP1	SS1, PL1
207	EXERCISE CONTROL	RB1	RAF2	P3, P6	ACP1	
208	COMM	RB1	SC1	P3	ACP1	
209	BRIEF/ DEBRIEF	RB1	CPT1	P3, P6, AFP1	ACP1	
300A	SIMULATION CLASSROOM	RB1	RAF1	P5	ACP1, P7	
300B	SIMULATION CLASSROOM	RB1	RAF1	P5	ACP1, P7	
300C	SIMULATION CLASSROOM	RB1	RAF1	P5	ACP1, P7	
300X	SIMULATION CLASSROOM	RB1	RAF1	P5	ACP1, P7	
300Y	SIMULATION CLASSROOM	RB1	RAF1	P5	ACP1, P7	
300Z	SIMULATION CLASSROOM	RB1	RAF1	P5	ACP1, P7	
301A	SIMULATION CLASSROOM	RB1	RAF1	P5	ACP1, P7	
301B	SIMULATION CLASSROOM	RB1	RAF1	P5	ACP1, P7	
302	SERVER ADMIN	RB1	LVT1	P3	ACP1	
303A	SECURE WS	RB1	LVT1	P3	ACP1	
303B	SECURE VTC	RB1	CPT1	P3	ACP1	
304A	SIM CONTROL (SERVER ROOM)	RB1	RAF4	P3	ACP1	
304B	SIM CONTROL SECURE COMM	RB1	RAF4	P3	P1	
305	COMM	RB1	SC1	P3	ACP1	
306	ELEC	RB1	SC1	P3	P1	
400	MECHANICAL	RB1	SC1	P3	P1	
401	MECH (HOT)	RB1	SC1	P4	P2	
402	STORAGE/ SHIPPING/ RECEIVING	RB1	SC1	P4	P2	
403	ELEC	RB1	SC1	P3	P1	
C010	COR	TZB1	TZ1, TZ2	PCMU1	ACP1	
C011	COR	TZB1	TZ1, TZ2	PCMU1	ACP1	
C012	COR	TZB1	TZ1, TZ2	PCMU1	ACP1	
C013	COR	TZB1	TZ1, TZ2	PCMU1	ACP1, P7	
C014	COR	TZB1	TZ1	PCMU1	ACP1, P7	
C016	COR	TZB1	TZ1, TZ2	PCMU1	ACP1	
C018	COR	TZB1	TZ1, TZ2	PCMU1	ACP1	
C020	COR	TZB1	TZ1, TZ2	PCMU1	ACP1, P7	
C021	COR	TZB1	TZ1, TZ2	PCMU1	ACP1, P7	
C022	COR	TZB1	TZ1, TZ2	PCMU1	ACP1, P7	
C023	COR	TZB1	TZ1	PCMU1	ACP1	
C030	COR	TZB1	TZ1, TZ2	PCMU1	ACP1, P7	
C031	COR	TZB1	TZ1, TZ2	PCMU1	ACP1, P7	
C032	COR	TZB1	TZ1	PCMU1	ACP1	
C034	COR	TZB1	TZ1, TZ2	PCMU1	ACP1, P7	
G010	MEN	N/A	PT1	PT2, PT3	P2	SS1, SS2, SS3, SS4, PL1
G011	WOMEN	N/A	PT1	PT2, PT3	P2	SS1, SS2, SS3, SS4, PL1
G012	UNISEX	N/A	PT1	PT2, PT3	P2	SS1, SS2, PL1
G020	UNISEX	N/A	PT1	PT2, PT3	P2	SS1, SS2, PL1
G021	MUD	RB1	SC1	P4	P2	SS1, SS2, PL1
G022	W. SHWR	N/A	PT1	PT2, PT3	P2	SS3, SS4
G023	M. SHWR	N/A	PT1	PT2, PT3	P2	SS3, SS4
G024	WOMEN	N/A	PT1	PT2, PT3	P2	SS1, SS2, PL1
G025	MEN	N/A	PT1	PT2, PT3	P2	SS1, SS2, PL1
L010	LOBBY/VEST	TZB1	TZ2, WM1	PCMU1, WC1, WC2	ACP1, ACP3, P7	

LEGEND - INTERIOR FINISH (TYPE)

ACP	ACOUSTICAL CEILING PANEL
AFP	ACOUSTICAL FABRIC PANEL
CG	CORNER GUARD
CPT	CARPET TILE
G	GROUT
L	LOCKERS
LVT	LUXURY VINYL TILE
MAP	MODULAR ARCHITECTURAL PANEL
P	PAINT
PCMU	POLISHED CONCRETE MASONRY UNIT
PL	PLASTIC LAMINATE
PT	PORCELAIN TILE
RAF	RAISED ACCESS FLOOR
RB	RESILIENT BASE
SC	SEALED CONCRETE
SS	SOLID SURFACE
TP	TOILET PARTITIONS
TZ	TERRAZZO
TZB	TERRAZZO BASE
WC	WALLCOVERING
WM	WALK-OFF MAT SYSTEM
WP	WALL PROTECTION
WT	WINDOW TREATMENT

NOTES - SCHEDULE - INTERIOR FINISH (ROOMS)

1. SEE A-SERIES FOR EXTERIOR FINISHES.
2. SEE IN100 PLAN SERIES FOR FLOOR AND WALL ACCENT LOCATIONS.
3. SEE IN200 ELEVATION SERIES FOR ADDITIONAL WALL ACCENT LOCATIONS.

SYM	DESCRIPTION	DATE	APPR

PRELIMINARY FOR REFERENCE ONLY

SEAL

W.M. Jordan COMPANY – A JOINT VENTURE –

Michael Baker INTERNATIONAL

100 AIRSIDE DRIVE
MOON TOWNSHIP, PA 15108

A/E INFO

APPROVED

FOR COMMANDER NAVFAC

ACTIVITY
MARINE CORPS BASE
CAMP LEJEUNE

SATISFACTORY TO DATE

DES SJK | DRW AND | CHK NCW

PM

BRANCH MANAGER

CHIEF ENG/ARCH

FIRE PROTECTION

DEPARTMENT OF THE NAVY
NAVAL FACILITIES ENGINEERING COMMAND
ROICC FLORENCE CAMP LEJEUNE
MCB CAMP LEJEUNE

NAVAL FACILITIES ENGINEERING COMMAND – MID-ATLANTIC
JACKSONVILLE, NC

JACKSONVILLE, NC
P1338F II MEF SIMULATION/TRAINING CENTER
REPLACEMENT
INTERIOR FINISH - ROOM SCHEDULE

SCALE: AS NOTED

EPROJECT NO.: 1590892

CONSTR. CONTR. NO.
N40085-20-C-0059

NAVFAC DRAWING NO.

SHEET OF

IN601

DP2 SUBMISSION – P1338 BUILDING -PRE-FINAL SUBMISSION

PLOTTED: 6/8/2021 3:03:23 PM

FILE NAME: BIM 360://HF PACKAGE 3/P1338 MEF SIM CTR-1590892-A.rvt

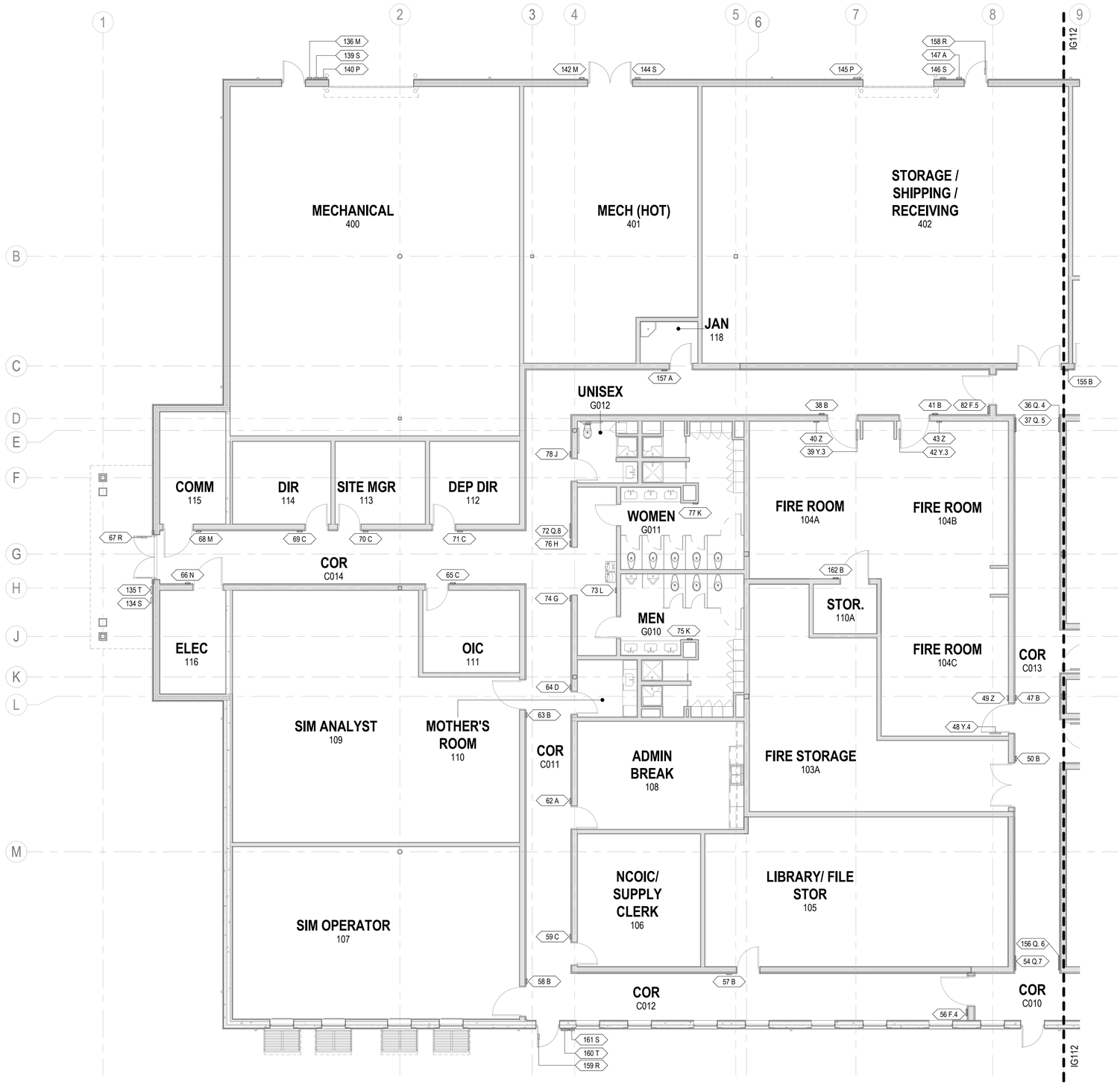

SIGNAGE - FLOOR PLAN - AREA A

SCALE: 1/8" = 1'-0"

LEGEND - SIGNAGE (TYPE)

TYPE	DESCRIPTION	QTY
A	ROOM ID	9
B	ROOM ID WITH DEPARTMENT	16
C	ROOM ID WITH OCCUPANT	5
D	ROOM ID WITH SLIDER	27
F.1	ROOM ID WITH MULTIPLE LOCATIONS	1
F.2	ROOM ID WITH MULTIPLE LOCATIONS	1
F.3	ROOM ID WITH MULTIPLE LOCATIONS	1
F.4	ROOM ID WITH MULTIPLE LOCATIONS	1
F.5	ROOM ID WITH MULTIPLE LOCATIONS	1
F.6	ROOM ID WITH MULTIPLE LOCATIONS	1
F.7	ROOM ID WITH MULTIPLE LOCATIONS	1
F.8	ROOM ID WITH MULTIPLE LOCATIONS	1
G	MENS	2
H	WOMENS	2
J	UNISEX	2
K	SHOWERS	4
L	DRINKING FOUNTAIN	2
M	MECHANICAL SPACE/S	6
N	ELECTRICAL ROOM	3
P	OVERHEAD DOOR ID	5
Q.7	DIRECTIONAL	1
Q.8	DIRECTIONAL	1
Q.9	DIRECTIONAL	1
Q. 1	DIRECTIONAL	1
Q. 2	DIRECTIONAL	1
Q. 3	DIRECTIONAL	1
Q. 4	DIRECTIONAL	1
Q. 5	DIRECTIONAL	1
Q. 6	DIRECTIONAL	1
R	EXIT	7
S	NO SMOKING	9
T	BUILDING ID	2
W	BUILDING DIRECTORY	1
X	FACILITY RECOGNITION PLAQUE	1
Y.1	EVACUATION PLAN	1
Y.2	EVACUATION PLAN	2
Y.3	EVACUATION PLAN	2
Y.4	EVACUATION PLAN	1
Y.5	EVACUATION PLAN	3
Y.6	EVACUATION PLAN	2
Y.7	EVACUATION PLAN	3
Y.8	EVACUATION PLAN	2
Z	MANDATORY / INSTRUCTIONAL	16

LEGEND - SIGNAGE (TAG)

XX — SIGNAGE TAG
SIGNAGE TYPE
SIGNAGE NUMBER

KEYPLAN

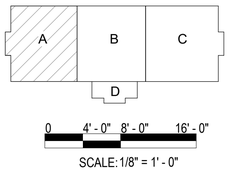

APPR	DATE	DESCRIPTION	SYM

NAVFAC

PRELIMINARY FOR REFERENCE ONLY

SEAL

W.M. Jordan COMPANY ~ A JOINT VENTURE ~

Michael Baker INTERNATIONAL
100 AIRSIDE DRIVE
MOON TOWNSHIP, PA 15108
A/E INFO

APPROVED

FOR COMMANDER NAVFAC

ACTIVITY
MARINE CORPS BASE CAMP LEJEUNE

SATISFACTORY TO DATE

DES SJK	DRW AND	CHK NCW

PM
BRANCH MANAGER
CHIEF ENG/ARCH
FIRE PROTECTION

DEPARTMENT OF THE NAVY
NAVAL FACILITIES ENGINEERING COMMAND ~ MID-ATLANTIC
ROICC FLORENCE CAMP LEJEUNE
NAVAL FACILITIES ENGINEERING COMMAND
JACKSONVILLE, NC
MCB CAMP LEJEUNE
JACKSONVILLE, NC
P1338F II MEF SIMULATION/TRAINING CENTER REPLACEMENT
SIGNAGE - FLOOR PLAN - AREA A

SCALE: AS NOTED
EPROJECT NO.: 1590892
CONSTR. CONTR. NO.
N40085-20-C-0059
NAVFAC DRAWING NO.
SHEET OF

IG111

DP2 SUBMISSION – P1338 BUILDING - PRE-FINAL SUBMISSION

PLOTTED: 6/3/2021 4:50:16 PM

FILE NAME: BIM 360://HF PACKAGE 3/P1338 MEF SIM CTR-1590892-A.rvt

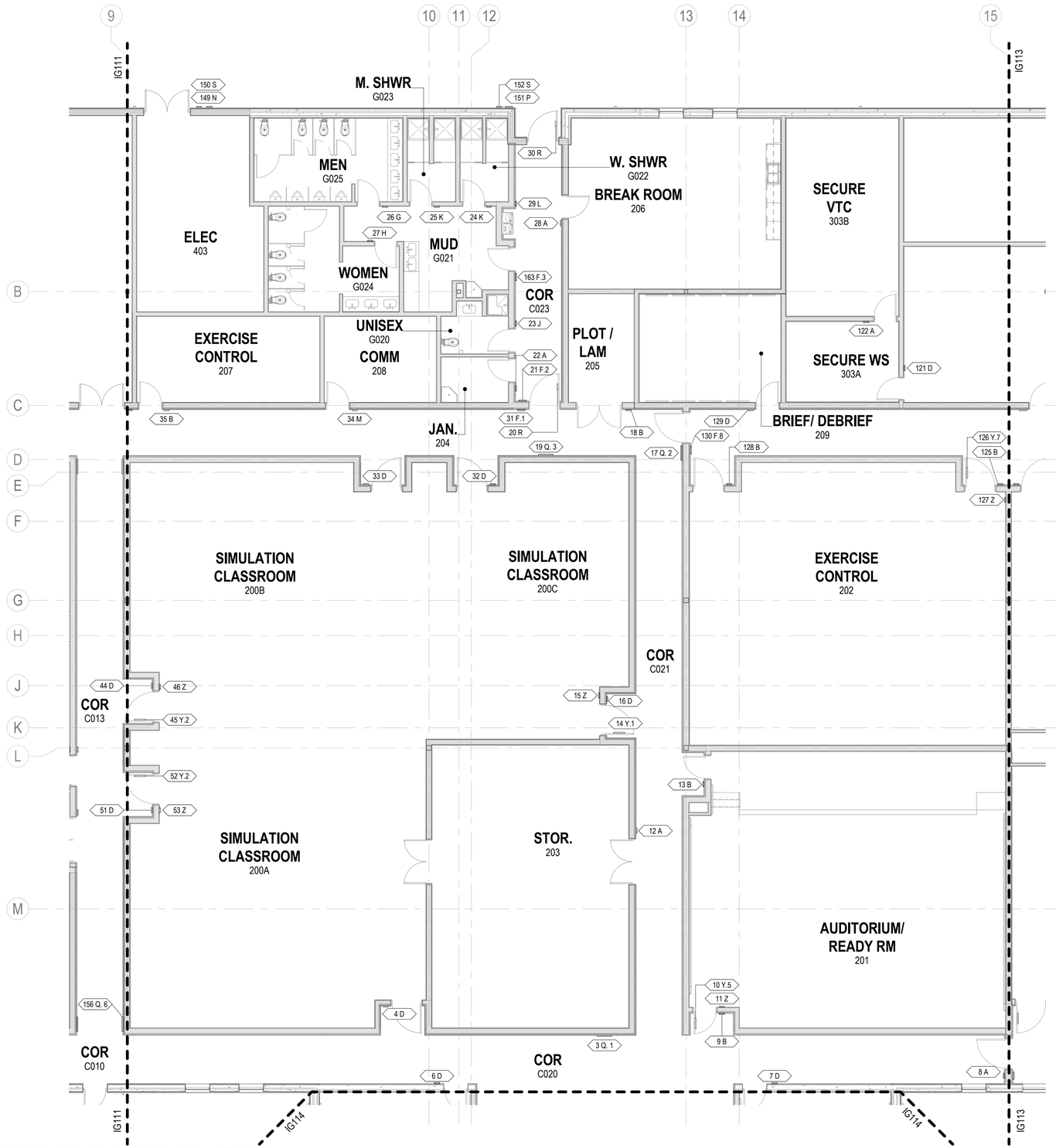

SIGNAGE - FLOOR PLAN - AREA B

SCALE: 1/8" = 1'-0"

LEGEND - SIGNAGE (TYPE)

TYPE	DESCRIPTION	QTY
A	ROOM ID	9
B	ROOM ID WITH DEPARTMENT	16
C	ROOM ID WITH OCCUPANT	5
D	ROOM ID WITH SLIDER	27
F.1	ROOM ID WITH MULTIPLE LOCATIONS	1
F.2	ROOM ID WITH MULTIPLE LOCATIONS	1
F.3	ROOM ID WITH MULTIPLE LOCATIONS	1
F.4	ROOM ID WITH MULTIPLE LOCATIONS	1
F.5	ROOM ID WITH MULTIPLE LOCATIONS	1
F.6	ROOM ID WITH MULTIPLE LOCATIONS	1
F.7	ROOM ID WITH MULTIPLE LOCATIONS	1
F.8	ROOM ID WITH MULTIPLE LOCATIONS	1
G	MENS	2
H	WOMENS	2
J	UNISEX	2
K	SHOWERS	4
L	DRINKING FOUNTAIN	2
M	MECHANICAL SPACE/S	6
N	ELECTRICAL ROOM	3
P	OVERHEAD DOOR ID	5
Q.7	DIRECTIONAL	1
Q.8	DIRECTIONAL	1
Q.9	DIRECTIONAL	1
Q. 1	DIRECTIONAL	1
Q. 2	DIRECTIONAL	1
Q. 3	DIRECTIONAL	1
Q. 4	DIRECTIONAL	1
Q. 5	DIRECTIONAL	1
Q. 6	DIRECTIONAL	1
R	EXIT	7
S	NO SMOKING	9
T	BUILDING ID	2
W	BUILDING DIRECTORY	1
X	FACILITY RECOGNITION PLAQUE	1
Y.1	EVACUATION PLAN	1
Y.2	EVACUATION PLAN	2
Y.3	EVACUATION PLAN	2
Y.4	EVACUATION PLAN	1
Y.5	EVACUATION PLAN	3
Y.6	EVACUATION PLAN	2
Y.7	EVACUATION PLAN	3
Y.8	EVACUATION PLAN	2
Z	MANDATORY / INSTRUCTIONAL	16

LEGEND - SIGNAGE (TAG)

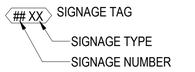

KEYPLAN

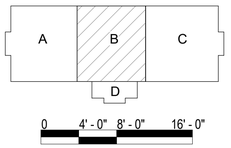

SCALE: 1/8" = 1' - 0"

APPR	
DATE	
DESCRIPTION	
SYM	

NAVFAC

PRELIMINARY FOR REFERENCE ONLY

SEAL

W.M. Jordan COMPANY – A JOINT VENTURE –

Michael Baker INTERNATIONAL

100 AIRSIDE DRIVE
MOON TOWNSHIP, PA 15108

A/E INFO

APPROVED

FOR COMMANDER NAVFAC

ACTIVITY
MARINE CORPS BASE
CAMP LEJEUNE

SATISFACTORY TO DATE

DES	DRW	CHK
SJK	AND	NCW

PM

BRANCH MANAGER

CHIEF ENG/ARCH

FIRE PROTECTION

DEPARTMENT OF THE NAVY
NAVAL FACILITIES ENGINEERING COMMAND
ROICC FLORENCE CAMP LEJEUNE

NAVAL FACILITIES ENGINEERING COMMAND – MID-ATLANTIC
JACKSONVILLE, NC

MCB CAMP LEJEUNE
JACKSONVILLE, NC
P1338F II MEF SIMULATION/TRAINING CENTER
REPLACEMENT
SIGNAGE - FLOOR PLAN - AREA B

SCALE:	AS NOTED
EPROJECT NO.:	1590892
CONSTR. CONTR. NO.	N40085-20-C-0059
NAVFAC DRAWING NO.	
SHEET	OF

IG112

DP2 SUBMISSION – P1338 BUILDING - PRE-FINAL SUBMISSION

PLOTTED: 6/3/2021 4:50:21 PM

FILE NAME: BIM 360://HF PACKAGE 3/P1338 MEF SIM CTR-1590892-A.rvt

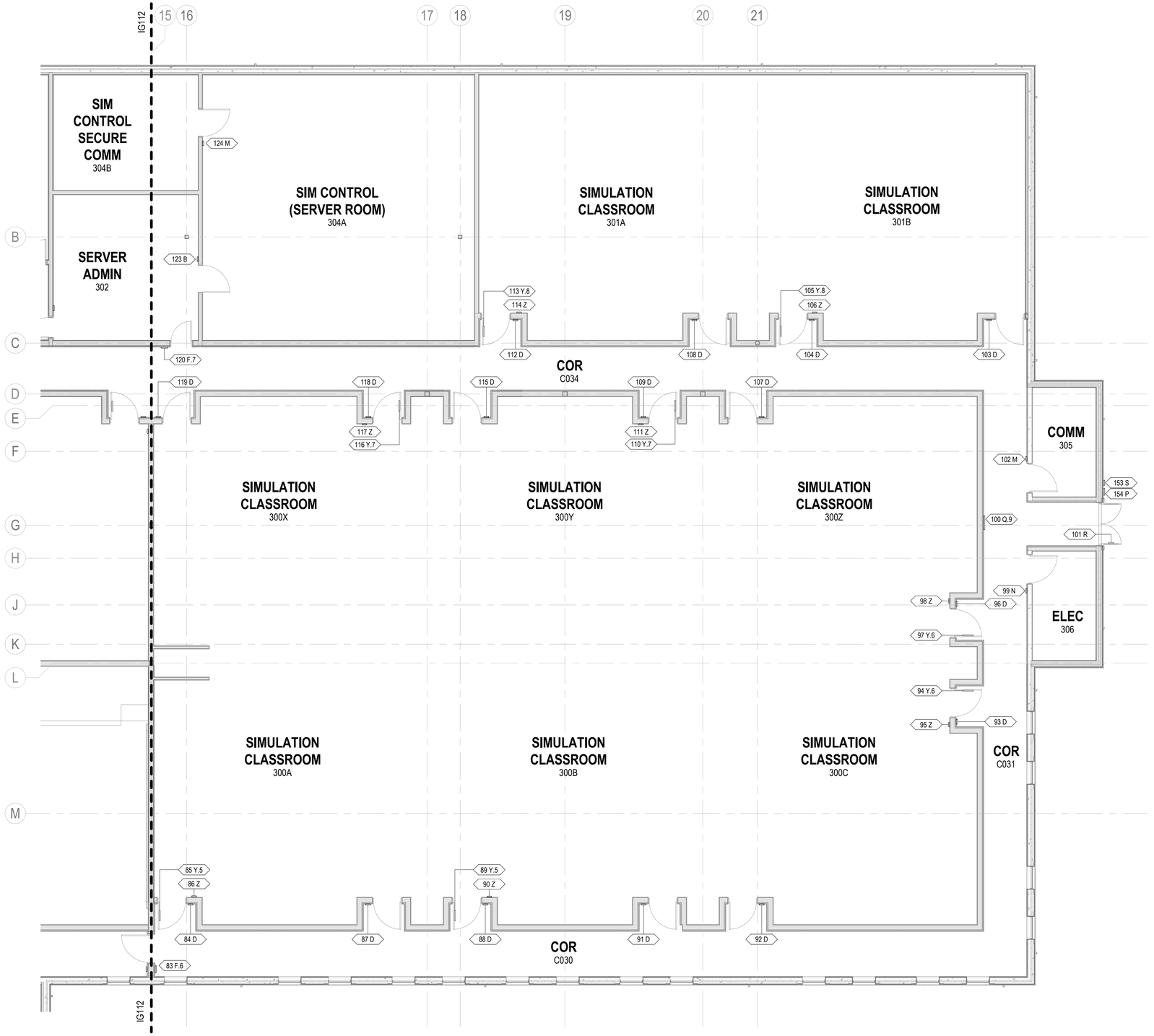

SIGNAGE - FLOOR PLAN - AREA C

SCALE: 1/8" = 1'-0"

LEGEND - SIGNAGE (TYPE)

TYPE	DESCRIPTION	QTY
A	ROOM ID	9
B	ROOM ID WITH DEPARTMENT	16
C	ROOM ID WITH OCCUPANT	5
D	ROOM ID WITH SLIDER	27
F.1	ROOM ID WITH MULTIPLE LOCATIONS	1
F.2	ROOM ID WITH MULTIPLE LOCATIONS	1
F.3	ROOM ID WITH MULTIPLE LOCATIONS	1
F.4	ROOM ID WITH MULTIPLE LOCATIONS	1
F.5	ROOM ID WITH MULTIPLE LOCATIONS	1
F.6	ROOM ID WITH MULTIPLE LOCATIONS	1
F.7	ROOM ID WITH MULTIPLE LOCATIONS	1
F.8	ROOM ID WITH MULTIPLE LOCATIONS	1
G	MENS	2
H	WOMENS	2
J	UNISEX	2
K	SHOWERS	4
L	DRINKING FOUNTAIN	2
M	MECHANICAL SPACE/S	6
N	ELECTRICAL ROOM	3
P	OVERHEAD DOOR ID	5
Q.7	DIRECTIONAL	1
Q.8	DIRECTIONAL	1
Q.9	DIRECTIONAL	1
Q. 1	DIRECTIONAL	1
Q. 2	DIRECTIONAL	1
Q. 3	DIRECTIONAL	1
Q. 4	DIRECTIONAL	1
Q. 5	DIRECTIONAL	1
Q. 6	DIRECTIONAL	1
R	EXIT	7
S	NO SMOKING	9
T	BUILDING ID	2
W	BUILDING DIRECTORY	1
X	FACILITY RECOGNITION PLAQUE	1
Y.1	EVACUATION PLAN	1
Y.2	EVACUATION PLAN	2
Y.3	EVACUATION PLAN	2
Y.4	EVACUATION PLAN	1
Y.5	EVACUATION PLAN	3
Y.6	EVACUATION PLAN	2
Y.7	EVACUATION PLAN	3
Y.8	EVACUATION PLAN	2
Z	MANDATORY / INSTRUCTIONAL	16

LEGEND - SIGNAGE (TAG)

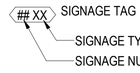

KEYPLAN

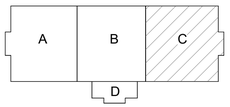

0 4' - 0" 8' - 0" 16' - 0"

SCALE: 1/8" = 1' - 0"

N

APPR | DATE | DESCRIPTION | SYM

NAVFAC

PRELIMINARY FOR REFERENCE ONLY

SEAL

W.M. Jordan COMPANY – A JOINT VENTURE –

Michael Baker INTERNATIONAL

100 AIRSIDE DRIVE
MOON TOWNSHIP, PA 15108 A/E INFO

APPROVED

FOR COMMANDER NAVFAC

ACTIVITY
MARINE CORPS BASE
CAMP LEJEUNE

SATISFACTORY TO DATE

DES SJK	DRW AND	CHK NCW

PM

BRANCH MANAGER

CHIEF ENG/ARCH

FIRE PROTECTION

DEPARTMENT OF THE NAVY
NAVAL FACILITIES ENGINEERING COMMAND
ROICC FLORENCE CAMP LEJEUNE
MCB CAMP LEJEUNE

NAVAL FACILITIES ENGINEERING COMMAND – MID-ATLANTIC
JACKSONVILLE, NC

JACKSONVILLE, NC
P1338F II MEF SIMULATION/TRAINING CENTER REPLACEMENT

SIGNAGE - FLOOR PLAN - AREA C

SCALE:	AS NOTED
EPROJECT NO.:	1590892
CONSTR. CONTR. NO.	N40085-20-C-0059
NAVFAC DRAWING NO.	
SHEET	OF

IG113

DP2 SUBMISSION – P1338 BUILDING - PRE-FINAL SUBMISSION

PLOTTED: 6/3/2021 4:50:26 PM

FILE NAME: BIM 360://HF PACKAGE 3/P1338 MEF SIM CTR-1590892-A.rvt

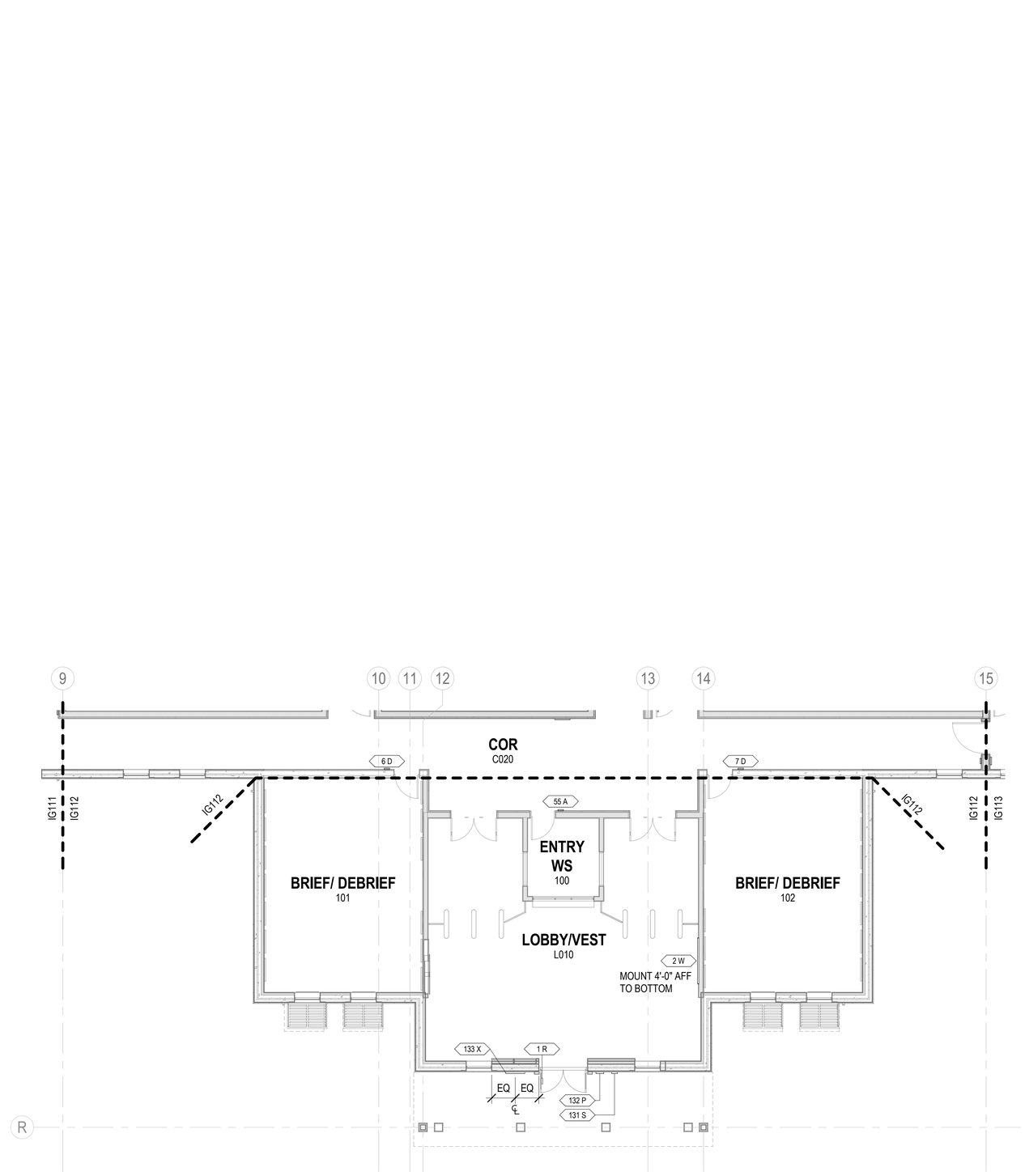

SIGNAGE - FLOOR PLAN - AREA D

SCALE: 1/8" = 1'-0"

LEGEND - SIGNAGE (TYPE)

TYPE	DESCRIPTION	QTY
A	ROOM ID	9
B	ROOM ID WITH DEPARTMENT	16
C	ROOM ID WITH OCCUPANT	5
D	ROOM ID WITH SLIDER	27
F.1	ROOM ID WITH MULTIPLE LOCATIONS	1
F.2	ROOM ID WITH MULTIPLE LOCATIONS	1
F.3	ROOM ID WITH MULTIPLE LOCATIONS	1
F.4	ROOM ID WITH MULTIPLE LOCATIONS	1
F.5	ROOM ID WITH MULTIPLE LOCATIONS	1
F.6	ROOM ID WITH MULTIPLE LOCATIONS	1
F.7	ROOM ID WITH MULTIPLE LOCATIONS	1
F.8	ROOM ID WITH MULTIPLE LOCATIONS	1
G	MENS	2
H	WOMENS	2
J	UNISEX	2
K	SHOWERS	4
L	DRINKING FOUNTAIN	2
M	MECHANICAL SPACE/S	6
N	ELECTRICAL ROOM	3
P	OVERHEAD DOOR ID	5
Q.7	DIRECTIONAL	1
Q.8	DIRECTIONAL	1
Q.9	DIRECTIONAL	1
Q. 1	DIRECTIONAL	1
Q. 2	DIRECTIONAL	1
Q. 3	DIRECTIONAL	1
Q. 4	DIRECTIONAL	1
Q. 5	DIRECTIONAL	1
Q. 6	DIRECTIONAL	1
R	EXIT	7
S	NO SMOKING	9
T	BUILDING ID	2
W	BUILDING DIRECTORY	1
X	FACILITY RECOGNITION PLAQUE	1
Y.1	EVACUATION PLAN	1
Y.2	EVACUATION PLAN	2
Y.3	EVACUATION PLAN	2
Y.4	EVACUATION PLAN	1
Y.5	EVACUATION PLAN	3
Y.6	EVACUATION PLAN	2
Y.7	EVACUATION PLAN	3
Y.8	EVACUATION PLAN	2
Z	MANDATORY / INSTRUCTIONAL	16

LEGEND - SIGNAGE (TAG)



KEYPLAN

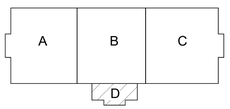

0 4' - 0" 8' - 0" 16' - 0"

SCALE: 1/8" = 1' - 0"

N

APPR	DATE	DESCRIPTION	SYM

PRELIMINARY FOR REFERENCE ONLY

SEAL

W.M. Jordan COMPANY – A JOINT VENTURE –

Michael Baker INTERNATIONAL

100 AIRSIDE DRIVE
MOON TOWNSHIP, PA 15108

A/E INFO

APPROVED

FOR COMMANDER NAVFAC

ACTIVITY
MARINE CORPS BASE
CAMP LEJEUNE

SATISFACTORY TO DATE

DES SJK | DRW AND | CHK NCW

PM

BRANCH MANAGER

CHIEF ENG/ARCH

FIRE PROTECTION

DEPARTMENT OF THE NAVY
NAVAL FACILITIES ENGINEERING COMMAND
ROICC FLORENCE CAMP LEJEUNE

NAVAL FACILITIES ENGINEERING COMMAND ~ MID-ATLANTIC
JACKSONVILLE, NC

MCB CAMP LEJEUNE

JACKSONVILLE, NC

P1338F II MEF SIMULATION/TRAINING CENTER
REPLACEMENT

SIGNAGE - FLOOR PLAN - AREA D

SCALE: AS NOTED

EPROJECT NO.: 1590892

CONSTR. CONTR. NO.
N40085-20-C-0059

NAVFAC DRAWING NO.

SHEET OF

IG114

DP2 SUBMISSION – P1338 BUILDING - PRE-FINAL SUBMISSION

PLOTTED: 6/3/2021 4:59:28 PM

FILE NAME: BIM 360://HF PACKAGE 3/P1338 MEF SIM CTR-1590892-A.rvt

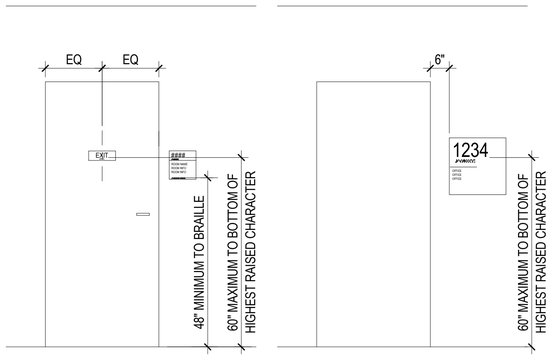

INSTALLATION NOTES:

1. MOUNTING OPTIONS VARY PER SIGN TYPE. MOST INTERIOR SIGNS CAN BE EASILY INSTALLED USING A COMBINATION OF CLEAR SILICONE ADHESIVE AND DOUBLE SIDED FOAM TAPE OR CONCEALED MECHANICAL FASTENERS, SEE SPECIFICATIONS FOR FURTHER INFORMATION.
2. WHERE THERE IS LESS THAN 18" CLEAR SPACE ON THE LATCH SIDE OF A SINGLE DOOR, OR ON THE RIGHT SIDE OF DOUBLE DOORS, SIGNS SHALL BE LOCATED ON THE NEAREST ADJACENT WALL.
3. WHERE THERE IS A SIDE LIGHT WINDOW LOCATED ADJACENT TO THE DOOR, MOUNT THE SIGN TO THE GLASS AND PROVIDE A MATCHING BACKER PLATE OF THE SAME SHAPE AS THE SIGN ON THE GLASS TO CONCEAL MOUNTING DEVICE.
4. TEXT SHOWN ON SIGN DETAILS ARE EXAMPLES AND ARE NOT INTENDED FOR DESIGN PURPOSES. SEE SIGNAGE SCHEDULES, IG600 SERIES, FOR SUGGESTED SIGN VERBIAGE. FINAL NUMBERS AND VERBIAGE TO BE COORDINATED WITH OWNER PRIOR TO ORDERING AND INSTALLATION.

TYPICAL ELEVATION OF SIGN INSTALLATION

SCALE: 1/2" = 1'-0"

C1

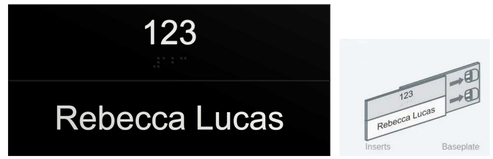

UNFRAMED SIGN SPECIFICATIONS:
BASIS OF DESIGN: 2/90 SYSTEMS KLIK
INSERT A FINISH: PRISMS BLACK 704
INSERT B FINISH: PRISMS BLACK 704
INSERT A COPY FINISH: PRISMS SOFT WHITE 708
INSERT B COPY FINISH: PRISMS SOFT WHITE 708
COPY STYLE: ARIAL

FRAMED SIGN SPECIFICATIONS:
BASIS OF DESIGN: 2/90 SYSTEMS SLIDE
INSERT A FINISH: PRISMS BLACK 704
INSERT B FINISH: PRISMS BLACK 704
INSERT A COPY FINISH: PRISMS SOFT WHITE 708
INSERT B COPY FINISH: PRISMS SOFT WHITE 708
COPY STYLE: ARIAL
END CAP / EDGE RAIL FINISH: ANODIZED - 101 SATIN NATURAL

SIGNAGE DETAIL - BASIS OF DESIGN

SCALE:NTS

C3

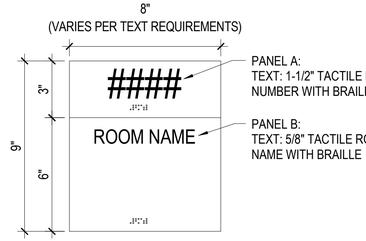

NOTE: EXTERIOR GRADE FINISH

NOTES:

1. INTERIOR GRADE FINISH.
2. SUPPY ELECTRICAL EQUIPMENT CALL OUT PER IFC 605.3.1. ADD AND ADJUST BRAILLE LOCATION AS REQUIRED. SEE SIGNAGE SCHEDULE FOR LOCATIONS.
3. COORDINATE FINAL ELECTRICAL EQUIPMENT LOCATIONS IN FIELD PRIOR TO ORDERING AND INSTALLATION.

ROOM ID - TYPE A

SCALE:NTS

C4

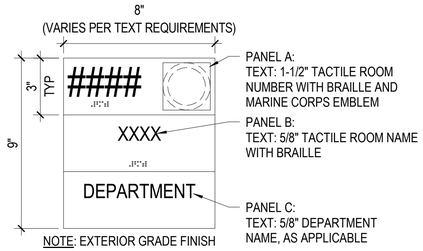

NOTE: EXTERIOR GRADE FINISH

NOTE: INTERIOR GRADE FINISH

ROOM ID WITH DEPARTMENT - TYPE B

SCALE:NTS

C5

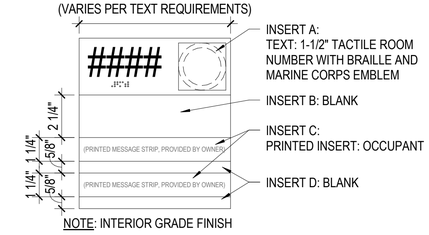

NOTE: INTERIOR GRADE FINISH

ROOM ID WITH OCCUPANT - TYPE C

SCALE:NTS

B1

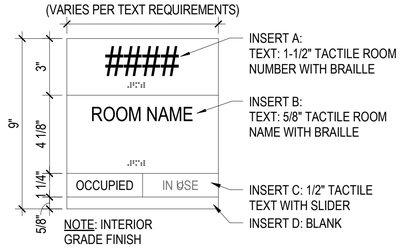

NOTE: INTERIOR GRADE FINISH

ROOM ID WITH SLIDER - TYPE D

SCALE:NTS

B2

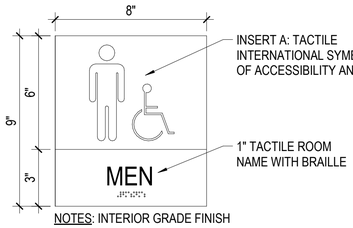

NOTES: INTERIOR GRADE FINISH

MENS - TYPE G

SCALE:NTS

B3

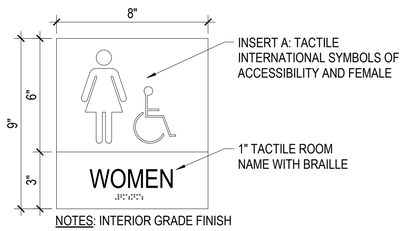

NOTES: INTERIOR GRADE FINISH

WOMENS - TYPE H

SCALE:NTS

B4

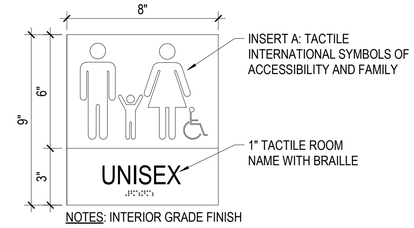

NOTES: INTERIOR GRADE FINISH

UNISEX - TYPE J

SCALE:NTS

B5

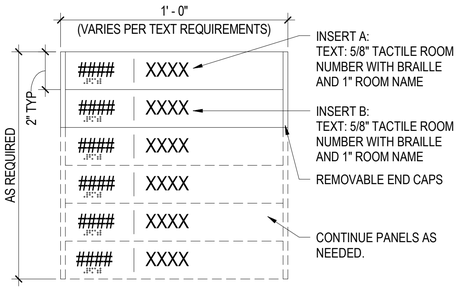

NOTE: INTERIOR GRADE FINISH

TYPE F.1: INSERT A: _ | MUD ROOM (TOILETS AND SHOWERS)
INSERT B: 206 | BREAK ROOM

TYPE F.2: INSERT A: _ | LOBBY
INSERT B: 201 | AUDITORIUM / READY ROOM
INSERT C: _ | ADMINISTRATION
INSERT D: _ | SIMULATION CLASSROOMS
INSERT E: _ | FIREROOMS
INSERT F: _ | BRIEF / DEBRIEFS

TYPE F.3: INSERT A: _ | MUD ROOM
INSERT B: _ | WOMENS
INSERT C: _ | MENS
INSERT D: _ | SHOWERS

TYPE F.4: INSERT A: _ | LOBBY
INSERT B: _ | AUDITORIUM / READY ROOM
INSERT C: _ | SIMULATION CLASSROOMS
INSERT D: _ | FIREROOMS
INSERT E: _ | BRIEF / DEBRIEFS

TYPE F.5: INSERT A: _ | LOBBY
INSERT B: _ | AUDITORIUM / READY ROOM
INSERT C: _ | SIMULATION CLASSROOMS
INSERT D: _ | FIREROOMS
INSERT E: _ | BRIEF / DEBRIEFS

TYPE F.6: INSERT A: _ | LOBBY
INSERT B: _ | AUDITORIUM / READY ROOM
INSERT C: _ | ADMINISTRATION
INSERT D: _ | FIREROOMS
INSERT E: 101 | BRIEF / DEBRIEF
INSERT F: 102 | BRIEF / DEBRIEF
INSERT G: _ | MUD ROOM (TOILETS AND SHOWERS)

TYPE F.7: INSERT A: 302 | SERVER ADMINISTRATION
INSERT B: _ | 303 SECURE WS
INSERT C: 304 | SIMULATION CONTROL

TYPE F.8: INSERT A: 302 | SERVER ADMINISTRATION
INSERT B: _ | 303 SECURE WS
INSERT C: 304 | SIMULATION CONTROL

ROOM ID WITH MULTIPLE LOCATIONS - TYPE F

SCALE: N.T.S.

A1

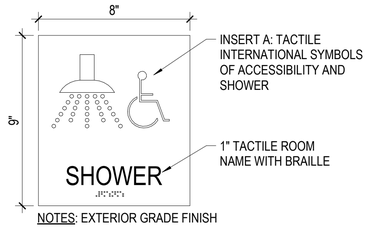

NOTES: EXTERIOR GRADE FINISH

SHOWERS - TYPE K

SCALE:NTS

A4

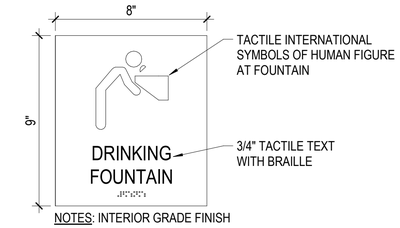

NOTES: INTERIOR GRADE FINISH

DRINKING FOUNTAIN - TYPE L

SCALE:NTS

A5

0 1' - 0" 2' - 0" 4' - 0"

SCALE: 1/2" = 1' - 0"

			APPR
			DATE
			DESCRIPTION
			SYM

NAVFAC

PRELIMINARY FOR REFERENCE ONLY

SEAL

RQ W.M. Jordan COMPANY – A JOINT VENTURE –

Michael Baker INTERNATIONAL

100 AIRSIDE DRIVE
MOON TOWNSHIP, PA 15108

A/E INFO

APPROVED

FOR COMMANDER NAVFAC

ACTIVITY
MARINE CORPS BASE CAMP LEJEUNE

SATISFACTORY TO DATE

DES SJK | DRW AND | CHK NCW

PM

BRANCH MANAGER

CHIEF ENG/ARCH

FIRE PROTECTION

NAVAL FACILITIES ENGINEERING COMMAND
NAVAL FACILITIES ENGINEERING COMMAND ~ MID-ATLANTIC
ROICC FLORENCE CAMP LEJEUNE
DEPARTMENT OF THE NAVY
MCB CAMP LEJEUNE
JACKSONVILLE, NC
JACKSONVILLE, NC
P1338F II MEF SIMULATION/TRAINING CENTER REPLACEMENT
SIGNAGE DETAILS - INSTALLATION MOUNTING HEIGHTS, BASIS OF DESIGN AND DETAILS (TYPES A - F)

SCALE: AS NOTED
EPROJECT NO.: 1590892
CONSTR. CONTR. NO.
N40085-20-C-0059
NAVFAC DRAWING NO.
SHEET OF

IG501

DP2 SUBMISSION – P1338 BUILDING - PRE-FINAL SUBMISSION

PLOTTED: 6/3/2021 4:50:31 PM

FILE NAME: BIM 360://HF PACKAGE 3/P1338 MEF SIM CTR-1590892-A.rvt

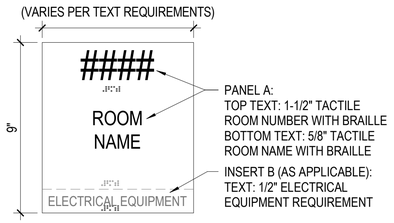

NOTES:
1. INTERIOR AND EXTERIOR GRADE FINISHES AS APPLICABLE.
2. SUPPY ELECTRICAL EQUIPMENT CALL OUT PER IFC 605.3.1. ADD AND ADJUST BRAILLE LOCATION AS REQUIRED. SEE SIGNAGE SCHEDULE FOR LOCATIONS.
3. COORDINATE FINAL ELECTRICAL EQUIPMENT LOCATIONS IN FIELD PRIOR TO ORDERING AND INSTALLATION.

MECHANICAL SPACE/S - TYPE M

SCALE: N.T.S. — D1

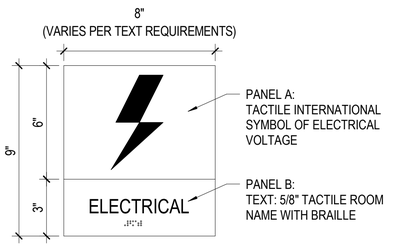

NOTE: INTERIOR AND EXTERIOR GRADE FINISHES AS APPLICABLE

ELECTRICAL ROOM - TYPE N

SCALE: N.T.S. — D2

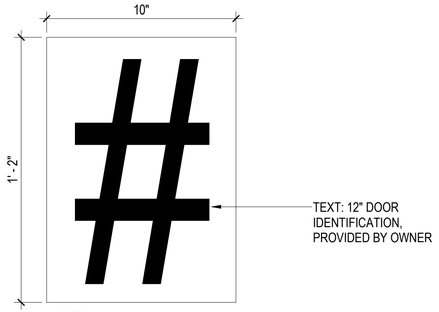

NOTES:
1. COORDINATE FINAL LOCATIONS AND ID VERBIAGE WITH GENERAL CONTRACTOR AND OWNER PRIOR TO ORDERING AND INSTALLATION.
2. EXTERIOR GRADE FINISH.

OVERHEAD DOOR ID - TYPE P

SCALE:NTS — D3

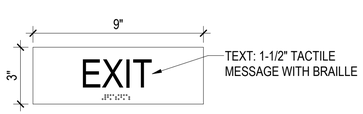

NOTES:
1. MOUNT SIGN ON INTERIOR DOOR LEADING TO EXIT.
2. EXTERIOR GRADE FINISH.

EXIT - TYPE R

SCALE:NTS — D4

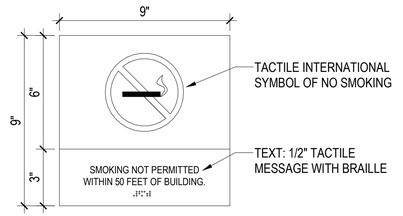

NO SMOKING - TYPE S

SCALE:NTS — D5

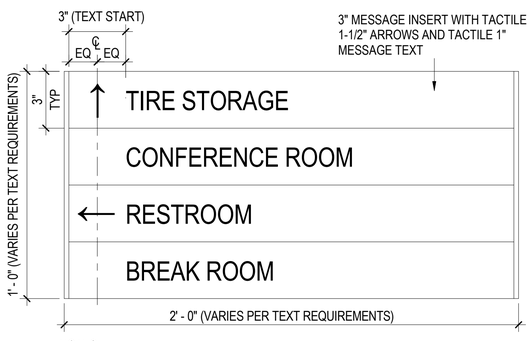

NOTES:
1. DIRECTIONAL SIGNS SHOWN ARE DESIGN SUGGESTIONS ONLY AND WILL VARY PER TEXT REQUIREMENTS. ALL INFORMATION INCLUDING ROOM NAMES AND NUMBERS, DIRECTIONS, ETC. MUST BE COORDINATED IN FIELD WITH OWNER PRIOR TO ORDERING AND INSTALLATION.
2. ADD AND REMOVE PANELS AS NEEDED TO FIT EACH DIRECTIONAL.
3. INTERIOR GRADE FINISH.
4. NOTIFY ARCHITECT / INTERIOR DESIGNER OF RECORD OF ANY IN FIELD IDENTIFICATION AND NUMERICAL CHANGES.

TYPE Q.1:
↑ BREAKROOM 206
BRIEF / DEBRIEF 209
EXERCISE CONTROL 207
SERVER ADMINISTRATION AND CONTROLS
MUD ROOM (TOILETS AND SHOWERS)
← ADMINISTRATION
SIMULATION CLASSROOM 200
FIRE ROOM 104
BRIEF / DEBRIEF 101
→ AUDITORIUM / READY ROOM 201
BRIEF / DEBRIEF 102

TYPE Q.2:
↑ SIMULATION CLASSROOM 301
BRIEF / DEBRIEF 202
EXERCISE CONTROL 202
SERVER ADMINISTRATION AND CONTROLS
→ LOBBY
AUDITORIUM / READY ROOM 201
SIMULATION CLASSROOM 300
BRIEF / DEBRIEF 101 - 102

TYPE Q.3:
← LOBBY
AUDITORIUM / READY ROOM 201
SIMULATION CLASSROOM 300
BRIEF / DEBRIEF 101 - 102, 109
EXERCISE CONTROL 202
SERVER ADMINISTRATION AND CONTROLS
→ ADMINISTRATION
SIMULATION CLASSROOM 200
FIRE ROOM 104
EXERCISE CONTROL 207

TYPE Q.4:
↑ BREAKROOM 206
SIMULATION CLASSROOMS 200B - 200C, 300
BRIEF / DEBRIEF 209
EXERCISE CONTROLS
SERVER ADMINISTRATION AND CONTROLS
MUD ROOM (TOILETS AND SHOWERS)
→ LOBBY
AUDITORIUM / READY ROOM 201
SIMULATION CLASSROOM 200A
BRIEF / DEBRIEF 101 - 102

TYPE Q.5:
↑ ADMINISTRATION
← LOBBY
AUDITORIUM / READY ROOM 201
SIMULATION CLASSROOM 200A
FIREROOM 104
BRIEF / DEBRIEF 101 - 102

TYPE Q.6:
↑ LOBBY
AUDITORIUM / READY ROOM 201
SIMULATION CLASSROOM 300
BRIEF / DEBRIEF 101 - 102
← BREAKROOM 206
SIMULATION CLASSROOM 200
FIRE ROOM 104
BRIEF / DEBRIEF 209
EXERCISE CONTROL 207
SERVER ADMINISTRATION AND CONTROLS
MUD ROOM (TOILETS AND SHOWERS)

TYPE Q.7:
↑ ADMINISTRATION
→ BREAKROOM 206
SIMULATION CLASSROOM 200
FIREROOM 104
BRIEF / DEBRIEF 209
EXERCISE CONTROL 207
SERVER ADMINISTRATION AND CONTROLS
MUD ROOM (TOILETS AND SHOWERS)

TYPE Q.8:
← BREAKROOM 206
SIMULATION CLASSROOM 300 - 301
BRIEF / DEBRIEF 209
FIREROOM 104
EXERCISE CONTROL 207
SERVER ADMINISTRATION AND CONTROLS
MUD ROOM (TOILETS AND SHOWERS)
→ LOBBY
AUDITORIUM / READY ROOM 201
SIMULATION CLASSROOM 200
BRIEF / DEBRIEF 101 - 102

TYPE Q.9:
← LOBBY
AUDITORIUM / READY ROOM 201
SIMULATION CLASSROOM 200, 300A - 300C
BRIEF / DEBRIEF 101 - 102
→ BREAKROOM 206
SIMULATION CLASSROOM 300X - 300Z, 301
FIRE ROOM 104
BRIEF / DEBRIEF 209
EXERCISE CONTROL 207
SERVER ADMINISTRATION AND CONTROLS
MUD ROOM (TOILETS AND SHOWERS)

DIRECTIONAL - TYPE Q

SCALE:NTS — B1

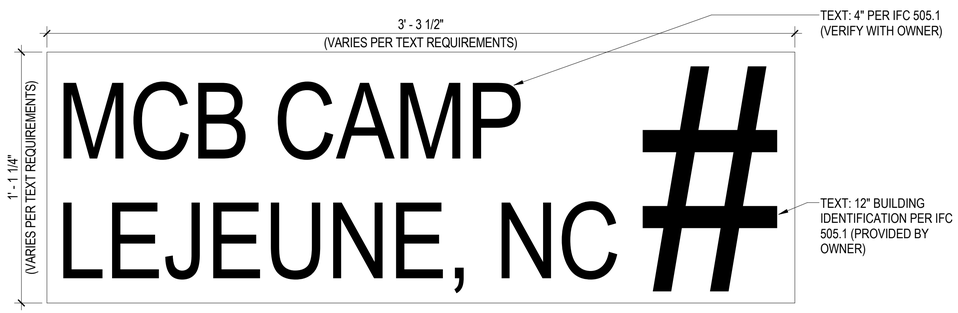

NOTES:
1. PROVIDE BUILDING ID SIGNS AS APPLICABLE.
2. COORDINATE FINAL QUANTITIES, STREET ADDRESS, LOCATIONS AND ID VERBIAGE WITH GENERAL CONTRACTOR, LOCAL AUTHORITY AND OWNER PRIOR TO ORDERING AND INSTALLATION.
3. EXTERIOR GRADE FINISH.

BUILDING ID - TYPE T

SCALE:NTS — A1

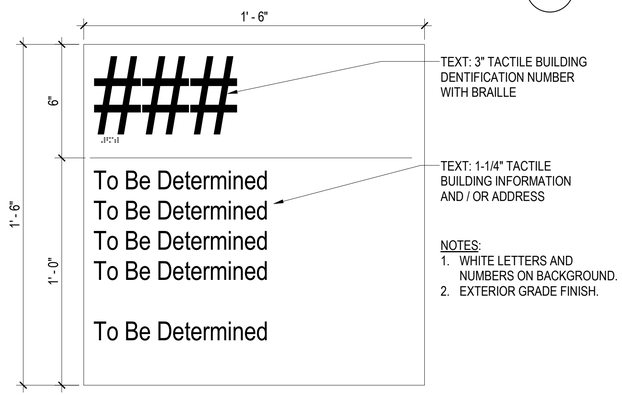

NOTES:
1. WHITE LETTERS AND NUMBERS ON BACKGROUND.
2. EXTERIOR GRADE FINISH.

BUILDING ENTRANCE - TYPE U

SCALE:NTS — A3

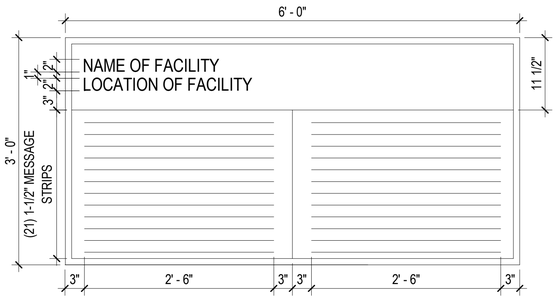

NOTES:
1. PROVIDE LOGO/S AND ARTWORK AS REQUIRED.
2. VERIFY BUILDING DIRECTORY VERBIAGE AND INFORMATION WITH GENERAL CONTRACTOR AND OWNER.
3. FINAL DESIGN, QUANTITIES AND LOCATIONS TO BE COORDINATED IN FIELD WITH GENERAL CONTRACTOR AND OWNER PRIOR TO ORDERING AND INSTALLATION.

BUILDING DIRECTORY - TYPE W

SCALE:NTS — A5

APPR | DATE | DESCRIPTION | SYM

NAVFAC

PRELIMINARY FOR REFERENCE ONLY

SEAL

IRQ W.M. Jordan COMPANY – A JOINT VENTURE –

Michael Baker INTERNATIONAL
100 AIRSIDE DRIVE
MOON TOWNSHIP, PA 15108
A/E INFO

APPROVED

FOR COMMANDER NAVFAC

ACTIVITY
MARINE CORPS BASE
CAMP LEJEUNE

SATISFACTORY TO DATE

DES	SJK	DRW	AND	CHK	NCW

PM
BRANCH MANAGER
CHIEF ENG/ARCH
FIRE PROTECTION

DEPARTMENT OF THE NAVY
NAVAL FACILITIES ENGINEERING COMMAND ~ MID-ATLANTIC
JACKSONVILLE, NC
ROICC FLORENCE CAMP LEJEUNE
MCB CAMP LEJEUNE
JACKSONVILLE, NC
P1338F II MEF SIMULATION/TRAINING CENTER REPLACEMENT
SIGNAGE - DETAILS (TYPES J - W)

SCALE: AS NOTED
EPROJECT NO.: 1590892
CONSTR. CONTR. NO.
N40085-20-C-0059
NAVFAC DRAWING NO.
SHEET OF
IG502

DP2 SUBMISSION – P1338 BUILDING - PRE-FINAL SUBMISSION

PLOTTED: 6/3/2021 4:50:34 PM
FILE NAME: BIM 360://HF PACKAGE 3/P1338 MEF SIM CTR-1590892-A.rvt

WORKSTATION SIGN DETAIL?

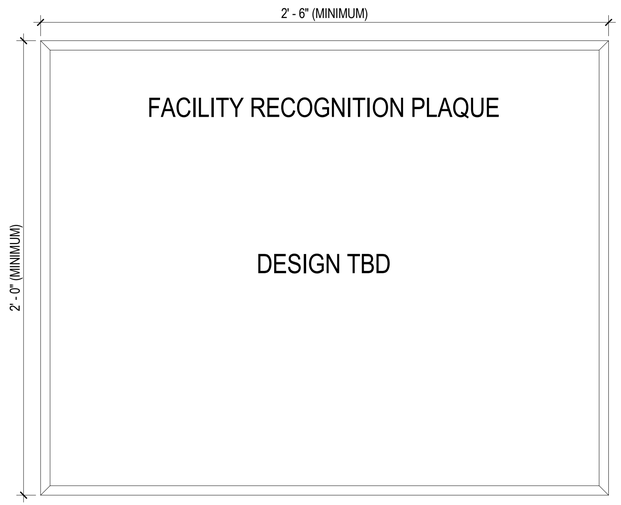

RECOGNITION PLAQUE NOTES:

1. PLAQUE MUST BE PERMANENT INSTALLATION, NOT REQUIRING MAINTENANCE FOR THE LIFE OF THE FACILITY.
2. PLAQUE IS CAST ALUMINUM. SEE SPECIFICATIONS FOR MORE INFORMATION.
3. MESSAGE FIGURES MUST BE PERMANENTLY RAISED, CAST OR CUT INTO FACE OF PLAQUE.
4. PLAQUE SIZE AS DIMENSIONED, HOWEVER, ENSURE THAT THE PLAQUE IS LARGE ENOUGH FOR THE NAMES ON THE PLAQUE TO BE LEDGABLE AT A DISTANCE OF 5'-0".
5. THE PLAQUE DESIGN SHALL BE ACCOMPLISHED AT THE END OF THE PROJECT DURATION TO ASSURE THAT CURRENT PARTICIPANTS CAN BE IDENTIFIED AND RECOGNIZED ON THE PLAQUE.
6. SEE FC 1-300-09N SECTION 16-11 FOR FURTHER INFORMATION.
7. CONFIRM THE NAME AND ORGANIZATION OF EACH PERSON RECOGNIZED WITH THE CONTRACTING OFFICER AND INCLUDE THE FOLLOWING INFORMATION ITEMS AND LEADERSHIP PARTICIPANTS AS A MINIMUM:
   - FACILITY NAME
   - IDENTIFY ANY RECOGNITION APPLIED TO THE FACILITY OR PERSON FOR WHICH THE FACILITY HAS BEEN DEDICATED
   - DATE OF OCCUPANCY (MONTH/YEAR)
   - THIRD PARTY CERTIFICATION/S ACHIEVED (IF APPLICABLE)
   - USING ACTIVITY COMMANDER / COMMANDING OFFICER/S
   - BASE COMMANDER / COMMANDING OFFICER/S
   - NAVFAC COMPONENT COMMANDER / FACILITY ENGINEERING COMPONENT COMMANDING OFFICER/S
   - PRIME CONTRACTOR/S
   - MAIN FACILITY ARCHITECT/S
   - MAIN FACILITY INTERIOR DESIGNER/S
   - MAIN FACILITY ENGINEER/S

FACILITY RECOGNITION PLAQUE - TYPE X

SCALE:NTS

C1

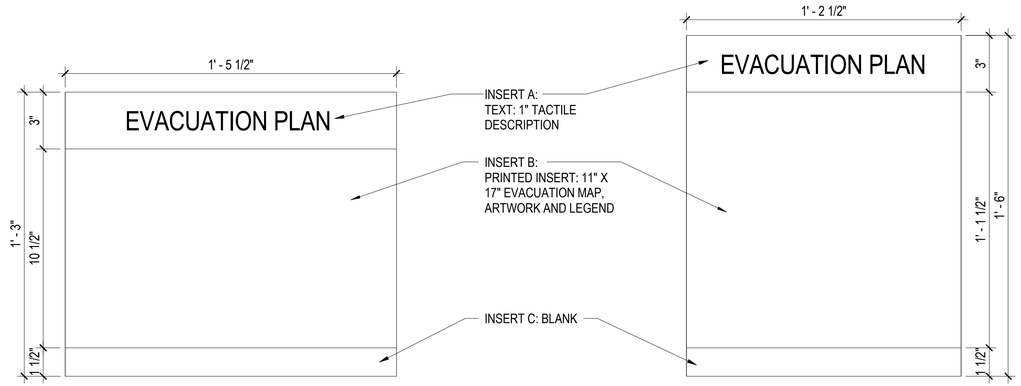

NOTES:

1. CONTRACTOR TO COORDINATE FINAL LOCATION/S OF FIRE EXTINGUISHERS AND PLACE APPROPRIATE SYMBOLS ON EVACUTATION MAPS PER LOCAL FIRE CODE.
2. CONTRACTOR TO COORDINATE AND PLACE "YOU ARE HERE" SYMBOL ON EVACUATION MAPS PER EACH ROOM / LOCATION.
3. CONTRACTOR TO COORDINATE ALL ROOM NAMES AND NUMBERS IN FIELD, WITH FINAL BUILDING LAYOUT AND CORRECT ANY CHANGES THAT MAY OCCUR THROUGH CONSTRUCTION.
4. CONTRACTOR TO COORDINATE ANY OTHER ARTWORK OR SYMBOLS THAT MAY BE REQUIRED PER LOCAL CODE.
5. FINAL PLACEMENT AND ARTWORK OF ALL EVACUATION MAPS TO BE COORDINATED IN FIELD WITH OWNER AND LOCAL AUTHORITY HAVING JURISDICTION.
6. CONTRACTOR TO PROVIDE VERTICAL OR HORIZONATAL SIGN AS REQUIRED PER SIGN EVACUATION MAP ROTATION.

EVACUATION PLAN - TYPE Y

SCALE:NTS

A1

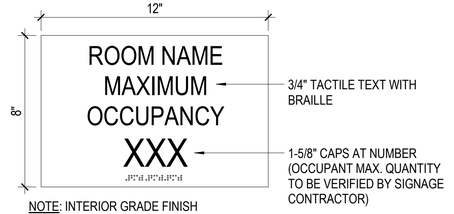

NOTE: INTERIOR GRADE FINISH

NOTES:

1. 1" HELVETICA REGULAR TEXT, WHITE LETTERS AND NUMBERS ON BACKGROUND. ROOM LETTERS AND NUMBERS SHALL BE RAISED 1/32" MIN. GRADE TWO BRAILLE TO BE BACKGROUND COLOR.
2. INTERIOR GRADE FINISH.

MAXIMUM OCCUPANCY - TYPE Z

SCALE: N.T.S.

A3

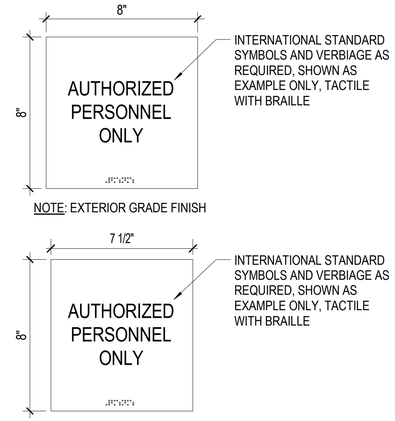

NOTE: EXTERIOR GRADE FINISH

NOTE: INTERIOR GRADE FINISH

NOTES:

1. PROVIDE VARYING LIFE SAFETY AND INSTRUCTIONAL INSERT/S AS APPLICABLE PER ABAAS AND LIFE SAFETY REQUIREMENTS.
2. PROVIDE VARYING BUILDING ENGINEERING INSERT/S AS APPLICABLE PER MANDATORY BUILDING CODES.
3. COORDINATE FINAL REQUIREMENTS, MAXIUMUM OCCUPANCY LOADS, LOCATIONS, QUANTITIES, PICTORALS AND VERBIAGE IN FIELD WITH CONSTRUCTION DOCUMENTS, SPECIFICATIONS, GENERAL CONTRACTOR, LOCAL AUTHORITY HAVING JURISDICTION AND OWNER PRIOR TO ORDERING AND INSTALLATION.

MANDATORY / INSTRUCTIONAL (FOR REFERENCE ONLY)

SCALE: N.T.S.

A5

APPR	DATE	DESCRIPTION	SYM

PRELIMINARY FOR REFERENCE ONLY

SEAL

W.M. Jordan COMPANY – A JOINT VENTURE –

Michael Baker INTERNATIONAL

100 AIRSIDE DRIVE
MOON TOWNSHIP, PA 15108 A/E INFO

APPROVED

FOR COMMANDER NAVFAC

ACTIVITY
MARINE CORPS BASE
CAMP LEJEUNE

SATISFACTORY TO DATE

DES SJK	DRW AND	CHK NCW

PM

BRANCH MANAGER

CHIEF ENG/ARCH

FIRE PROTECTION

DEPARTMENT OF THE NAVY
NAVAL FACILITIES ENGINEERING COMMAND
ROICC FLORENCE CAMP LEJEUNE

NAVAL FACILITIES ENGINEERING COMMAND ~ MID-ATLANTIC
JACKSONVILLE, NC

MCB CAMP LEJEUNE
JACKSONVILLE, NC

P1338F II MEF SIMULATION/TRAINING CENTER REPLACEMENT

SIGNAGE - DETAILS (TYPES X - Z AND REFERENCE ONLY)

SCALE:	AS NOTED
EPROJECT NO.: 1590892	
CONSTR. CONTR. NO.	N40085-20-C-0059
NAVFAC DRAWING NO.	
SHEET	OF

IG503

DP2 SUBMISSION – P1338 BUILDING - PRE-FINAL SUBMISSION

PLOTTED: 6/3/2021 4:50:36 PM

FILE NAME: BIM 360://HF PACKAGE 3/P1338 MEF SIM CTR-1590892-A.rvt

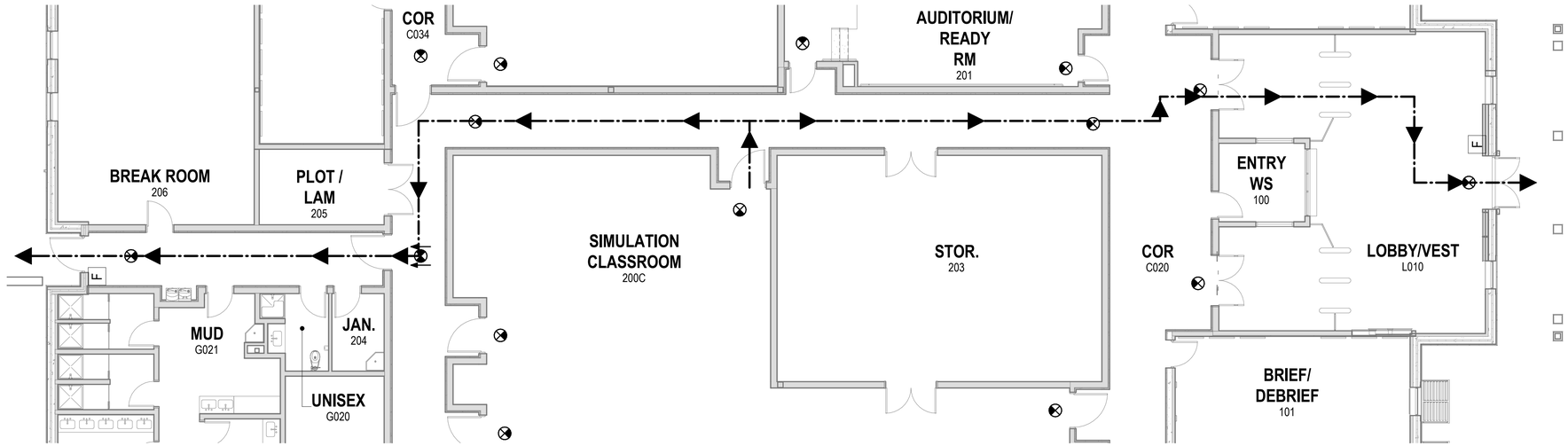

TYPE Y.1 - EVACUATION MAP

SCALE:NTS

A-201 C1

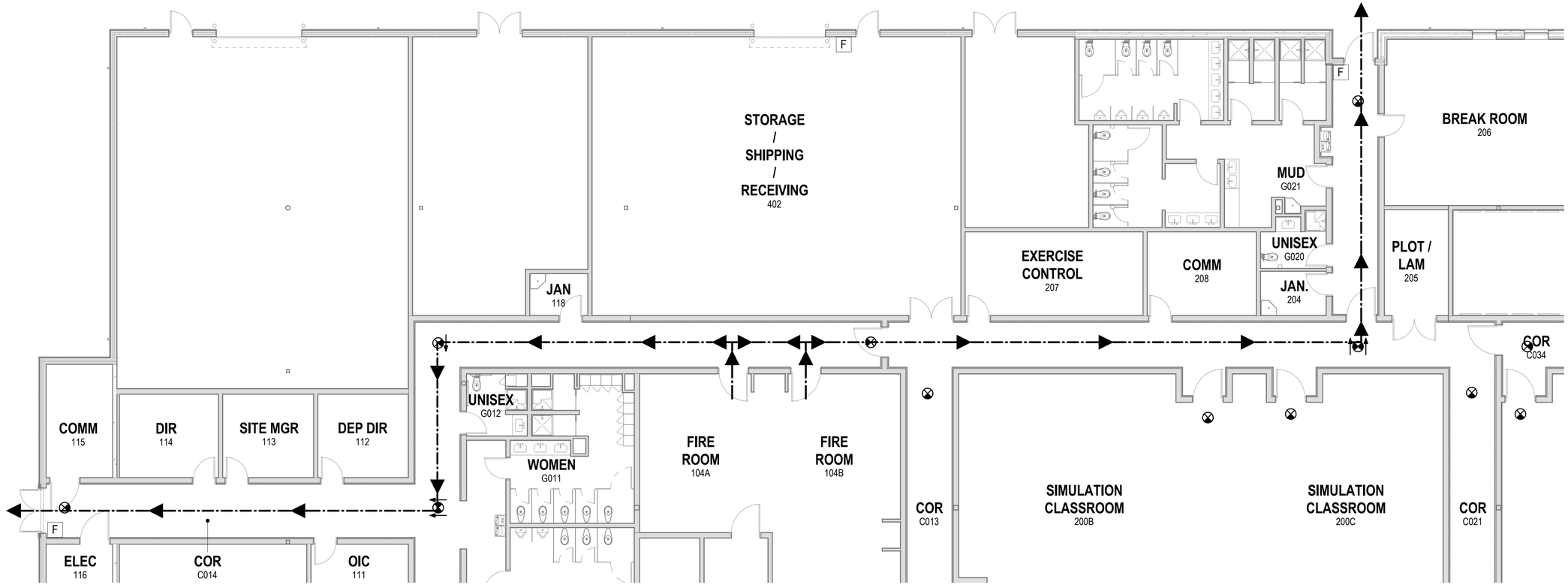

TYPE Y.3 - EVACUATION MAP

SCALE:NTS

A-201 A1

APPR	DATE	DESCRIPTION	SYM

NAVFAC

PRELIMINARY
FOR REFERENCE ONLY

SEAL

IRQ WM Jordan COMPANY – A JOINT VENTURE –

Michael Baker
INTERNATIONAL

100 AIRSIDE DRIVE
MOON TOWNSHIP, PA 15108 A/E INFO

APPROVED

FOR COMMANDER NAVFAC

ACTIVITY
MARINE CORPS BASE
CAMP LEJEUNE

SATISFACTORY TO DATE

DES SJK | DRW AND | CHK NCW

PM

BRANCH MANAGER

CHIEF ENG/ARCH

FIRE PROTECTION

DEPARTMENT OF THE NAVY
NAVAL FACILITIES ENGINEERING COMMAND
ROICC FLORENCE CAMP LEJEUNE

NAVAL FACILITIES ENGINEERING COMMAND ~ MID-ATLANTIC
JACKSONVILLE, NC

MCB CAMP LEJEUNE
JACKSONVILLE, NC
P1338F II MEF SIMULATION/TRAINING CENTER
REPLACEMENT

SIGNAGE - DETAILS - EVACUATION MAPS TYPES Y.1 & Y.3

SCALE: AS NOTED

EPROJECT NO.: 1590892

CONSTR. CONTR. NO.
N40085-20-C-0059

NAVFAC DRAWING NO.

SHEET OF

IG504

DP2 SUBMISSION – P1338 BUILDING - PRE-FINAL SUBMISSION

PLOTTED: 6/3/2021 4:50:41 PM

FILE NAME: BIM 360://HF PACKAGE 3/P1338 MEF SIM CTR-1590892-A.rvt

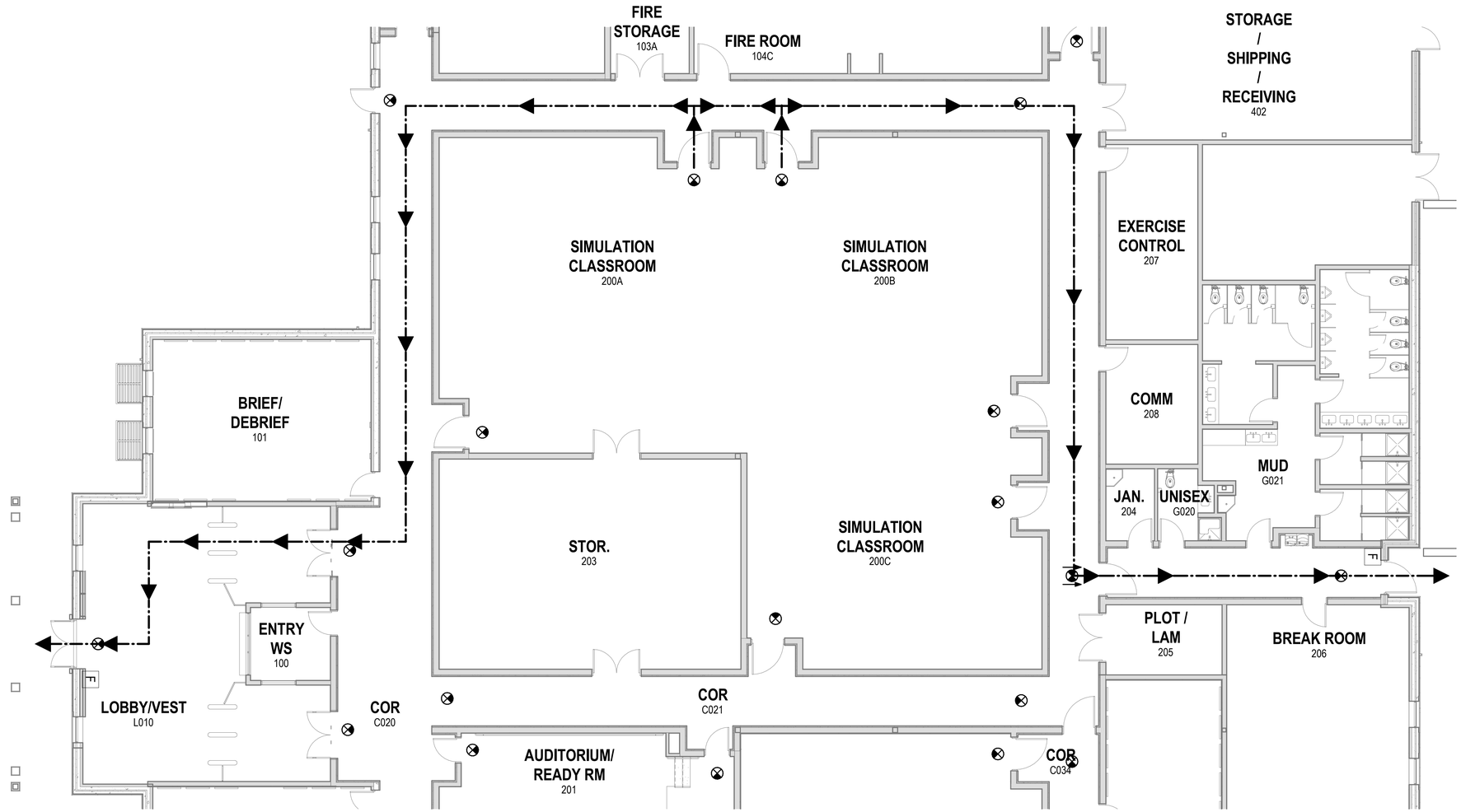

TYPE Y.2 - EVACUATION MAP

SCALE:NTS

A-201 (A1)

PLOTTED: 6/3/2021 4:50:45 PM

FILE NAME: BIM 360://HF PACKAGE 3/P1338 MEF SIM CTR-1590892-A.rvt

NO.	DESCRIPTION	DATE	APPR

NAVFAC

PRELIMINARY FOR REFERENCE ONLY

SEAL

RQ W.M. Jordan COMPANY – A JOINT VENTURE –

Michael Baker INTERNATIONAL

100 AIRSIDE DRIVE
MOON TOWNSHIP, PA 15108 A/E INFO

APPROVED

FOR COMMANDER NAVFAC

ACTIVITY
MARINE CORPS BASE CAMP LEJEUNE

SATISFACTORY TO DATE

DES SJK | DRW AND | CHK NCW

PM

BRANCH MANAGER

CHIEF ENG/ARCH

FIRE PROTECTION

DEPARTMENT OF THE NAVY
NAVAL FACILITIES ENGINEERING COMMAND
ROICC FLORENCE CAMP LEJEUNE

NAVAL FACILITIES ENGINEERING COMMAND ~ MID-ATLANTIC
JACKSONVILLE, NC

MCB CAMP LEJEUNE
JACKSONVILLE, NC

P1338F II MEF SIMULATION/TRAINING CENTER REPLACEMENT

SIGNAGE - DETAILS - EVACUATION MAP TYPE Y.2

SCALE: AS NOTED

EPROJECT NO.: 1590892

CONSTR. CONTR. NO.
N40085-20-C-0059

NAVFAC DRAWING NO.

SHEET OF

IG505

DP2 SUBMISSION – P1338 BUILDING –PRE-FINAL SUBMISSION

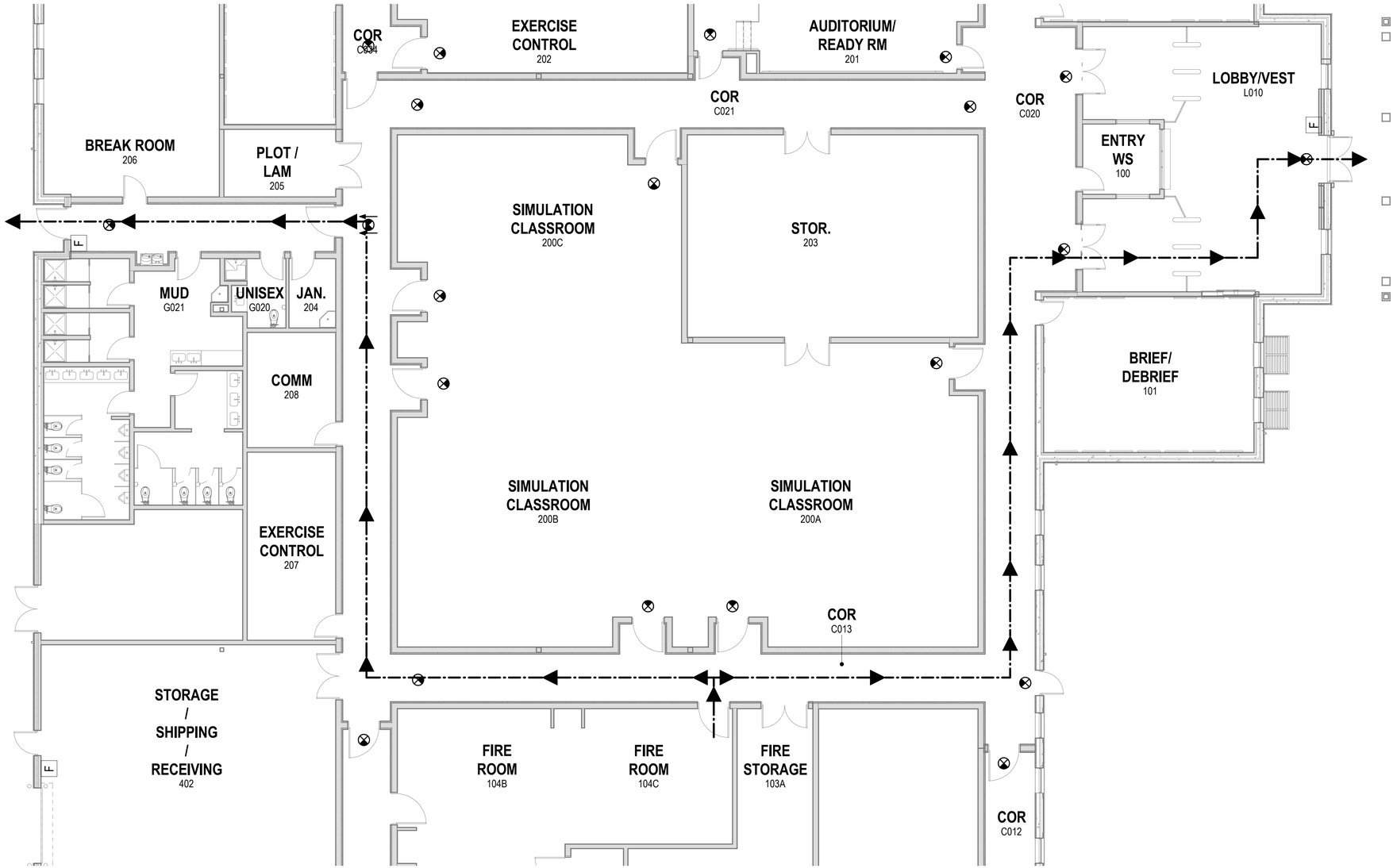

TYPE Y.4 - EVACUATION MAP

SCALE:NTS

A-201 A1

APPR	DATE	DESCRIPTION	SYM

NAVFAC

PRELIMINARY FOR REFERENCE ONLY

SEAL

RQ W.M. Jordan COMPANY – A JOINT VENTURE –

Michael Baker INTERNATIONAL

100 AIRSIDE DRIVE
MOON TOWNSHIP, PA 15108 A/E INFO

APPROVED

FOR COMMANDER NAVFAC

ACTIVITY
MARINE CORPS BASE
CAMP LEJEUNE

SATISFACTORY TO DATE

DES SJK | DRW AND | CHK NCW

PM

BRANCH MANAGER

CHIEF ENG/ARCH

FIRE PROTECTION

DEPARTMENT OF THE NAVY
NAVAL FACILITIES ENGINEERING COMMAND
ROICC FLORENCE CAMP LEJEUNE
MCB CAMP LEJEUNE

NAVAL FACILITIES ENGINEERING COMMAND – MID-ATLANTIC
JACKSONVILLE, NC

JACKSONVILLE, NC
P1338F II MEF SIMULATION/TRAINING CENTER
REPLACEMENT

SIGNAGE - DETAILS - EVACUATION MAP TYPE Y.4

SCALE: AS NOTED

EPROJECT NO.: 1590892

CONSTR. CONTR. NO.
N40085-20-C-0059

NAVFAC DRAWING NO.

SHEET OF

IG506

DP2 SUBMISSION – P1338 BUILDING -_PRE-FINAL SUBMISSION

PLOTTED: 6/3/2021 4:50:49 PM

FILE NAME: BIM 360://HF PACKAGE 3/P1338 MEF SIM CTR-1590892-A.rvt

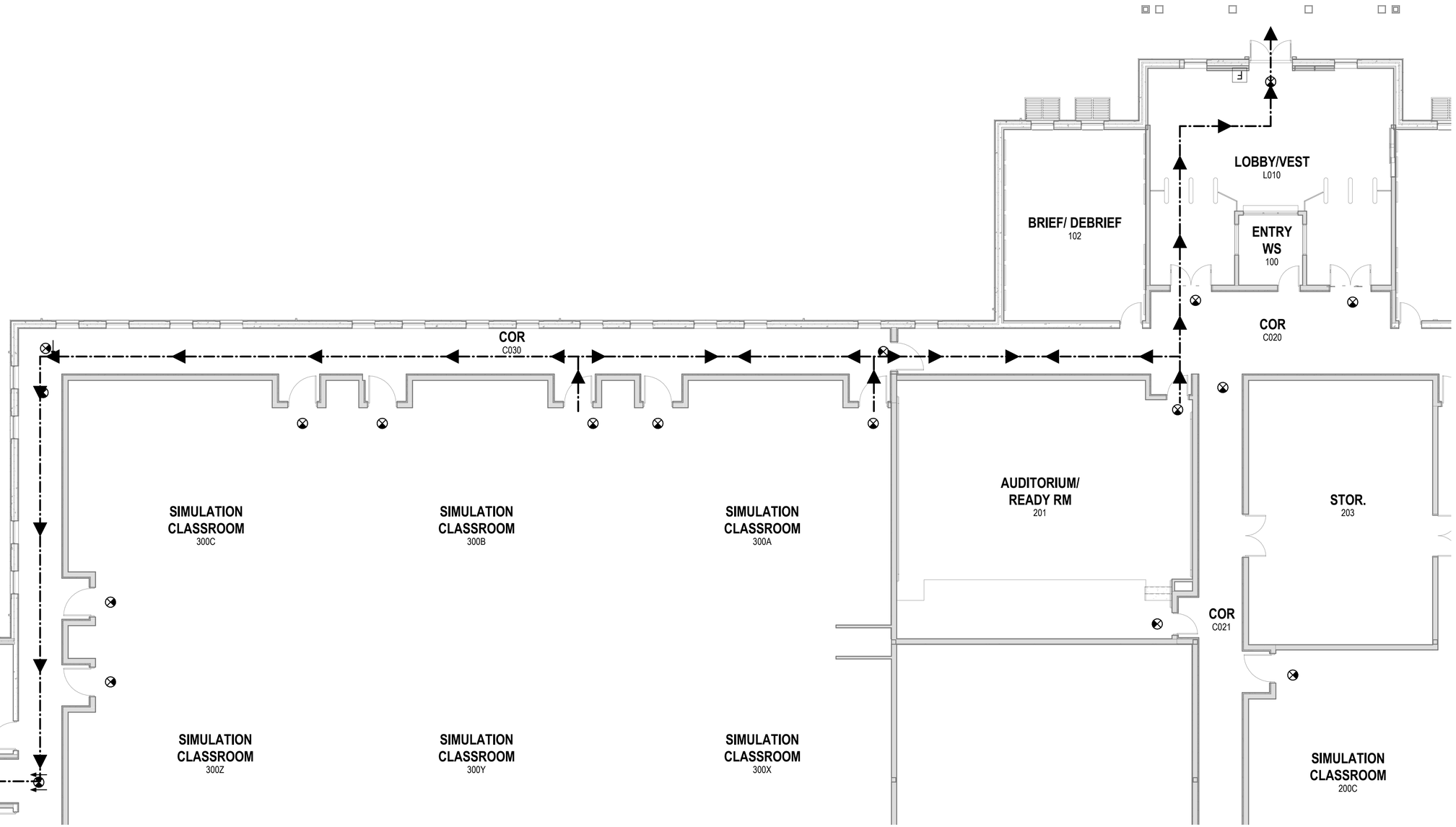

TYPE Y.5 - EVACUATION MAP

SCALE:NTS

A-201 (A1)

PLOTTED: 6/3/2021 4:50:53 PM

FILE NAME: BIM 360://HF PACKAGE 3/P1338 MEF SIM CTR-1590892-A-v1

APPR | DATE | SYM | DESCRIPTION

NAVFAC

PRELIMINARY FOR REFERENCE ONLY

SEAL

IRQ WM Jordan COMPANY – A JOINT VENTURE –

Michael Baker INTERNATIONAL

100 AIRSIDE DRIVE
MOON TOWNSHIP, PA 15108 A/E INFO

APPROVED

FOR COMMANDER NAVFAC

ACTIVITY
MARINE CORPS BASE
CAMP LEJEUNE

SATISFACTORY TO DATE

DES SJK | DRW AND | CHK NCW

PM

BRANCH MANAGER

CHIEF ENG/ARCH

FIRE PROTECTION

DEPARTMENT OF THE NAVY
NAVAL FACILITIES ENGINEERING COMMAND
ROICC FLORENCE CAMP LEJEUNE
MCB CAMP LEJEUNE

NAVAL FACILITIES ENGINEERING COMMAND – MID-ATLANTIC
JACKSONVILLE, NC

JACKSONVILLE, NC
P1338F II MEF SIMULATION/TRAINING CENTER
REPLACEMENT

SIGNAGE - DETAILS - EVACUATION MAP TYPE Y.5

SCALE: AS NOTED

EPROJECT NO.: 1590892

CONSTR. CONTR. NO.
N40085-20-C-0059

NAVFAC DRAWING NO.

SHEET OF

IG507

DP2 SUBMISSION – P1338 BUILDING - PRE-FINAL SUBMISSION

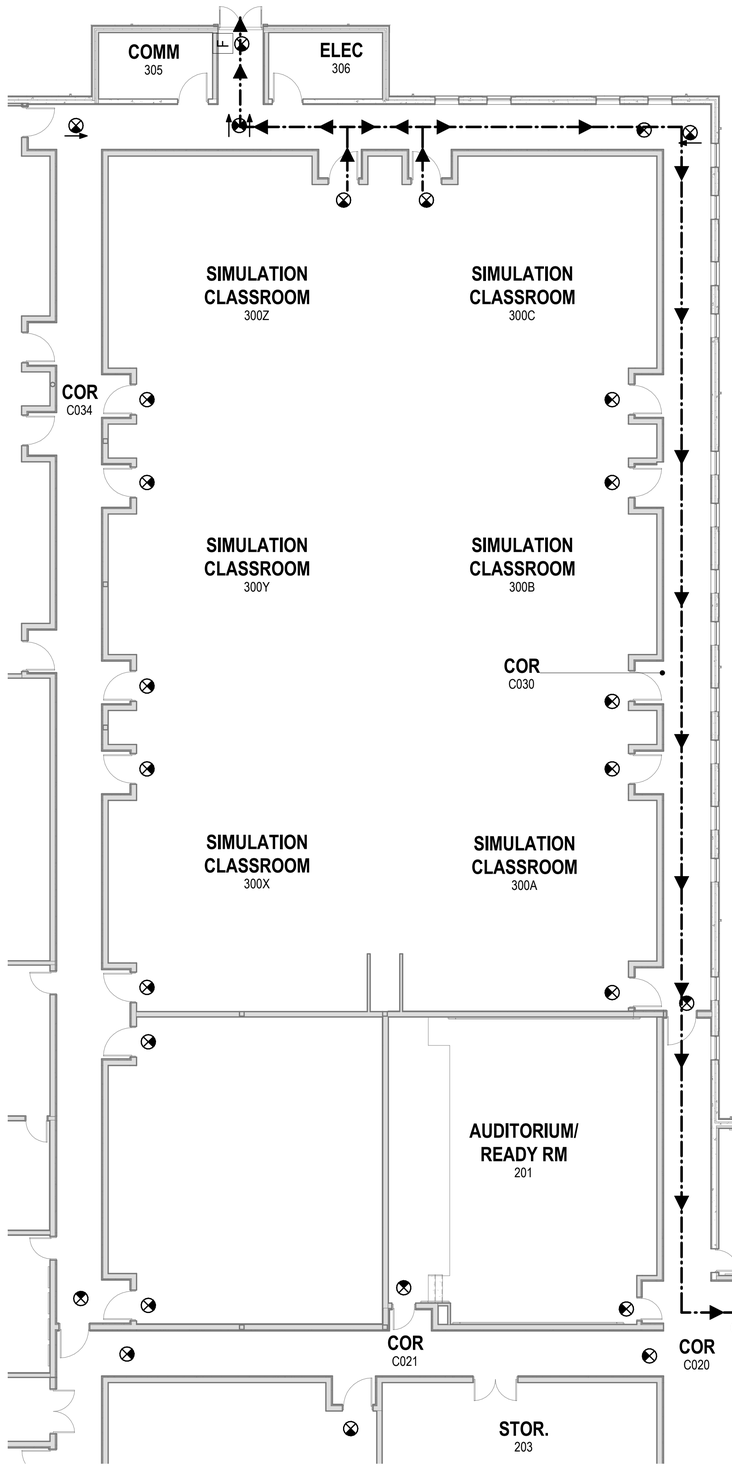

TYPE Y.6 - EVACUATION MAP

SCALE:NTS

A-201 (A2)

APPR	DATE	DESCRIPTION	SYM

NAVFAC

PRELIMINARY FOR REFERENCE ONLY

SEAL

IRQ W.M. Jordan COMPANY – A JOINT VENTURE –

Michael Baker INTERNATIONAL

100 AIRSIDE DRIVE
MOON TOWNSHIP, PA 15108

A/E INFO

APPROVED

FOR COMMANDER NAVFAC

ACTIVITY
MARINE CORPS BASE CAMP LEJEUNE

SATISFACTORY TO DATE

DES SJK | DRW AND | CHK NCW

PM

BRANCH MANAGER

CHIEF ENG/ARCH

FIRE PROTECTION

DEPARTMENT OF THE NAVY
NAVAL FACILITIES ENGINEERING COMMAND
ROICC FLORENCE CAMP LEJEUNE
MCB CAMP LEJEUNE

NAVAL FACILITIES ENGINEERING COMMAND ~ MID-ATLANTIC
JACKSONVILLE, NC

JACKSONVILLE, NC
P1338F II MEF SIMULATION/TRAINING CENTER REPLACEMENT

SIGNAGE - DETAILS - EVACUATION MAP TYPE Y.6

SCALE: AS NOTED

EPROJECT NO.: 1590892

CONSTR. CONTR. NO.
N40085-20-C-0059

NAVFAC DRAWING NO.

SHEET OF

IG508

DP2 SUBMISSION – P1338 BUILDING - PRE-FINAL SUBMISSION

PLOTTED: 6/3/2021 4:50:56 PM

FILE NAME: BIM 360://HF PACKAGE 3/P1338 MEF SIM CTR-1590892-A.rvt

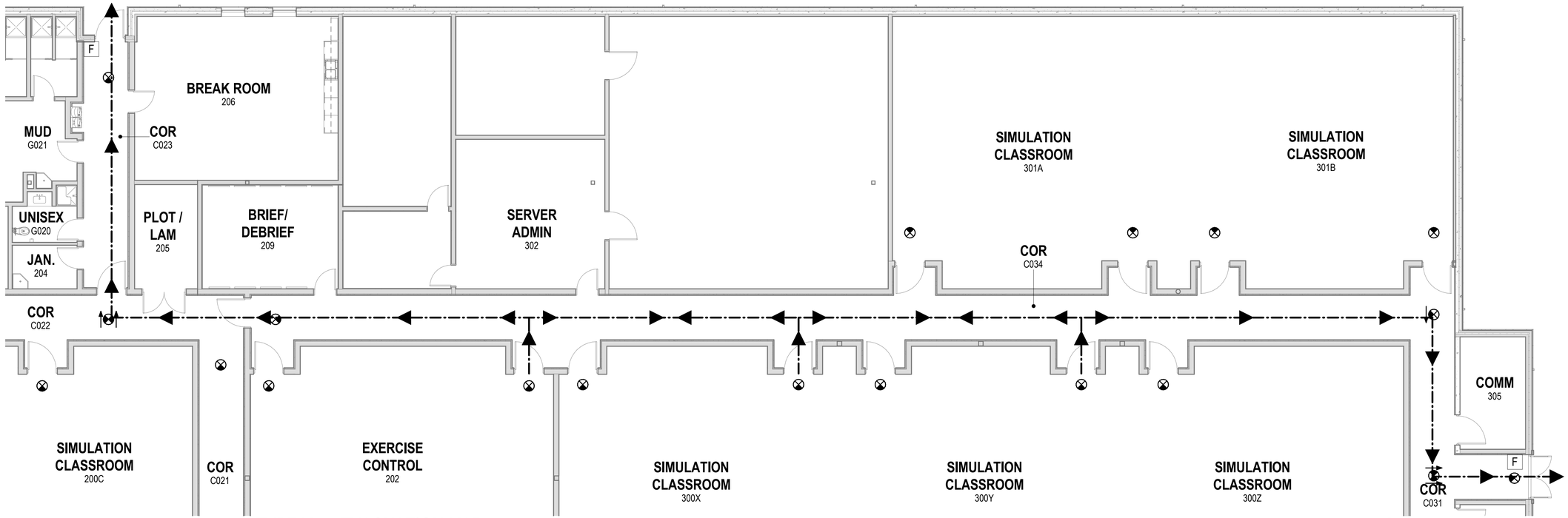

TYPE Y.7 - EVACUATION MAP

SCALE:NTS

A-201 C1

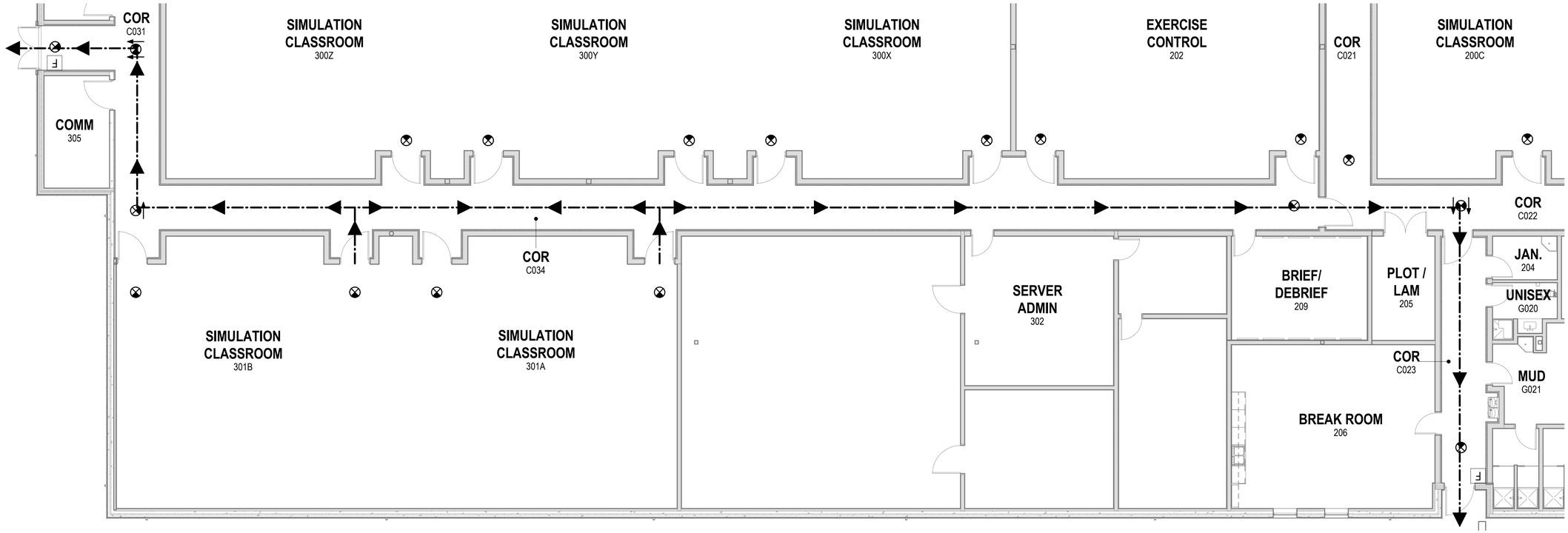

TYPE Y.8 - EVACUATION MAP

SCALE:NTS

A-201 A1

PLOTTED: 6/3/2021 4:51:01 PM

FILE NAME: BIM 360://HF PACKAGE 3/P1338 MEF SIM CTR-1590892-A.rvt

APPR | DATE | SYM | DESCRIPTION

NAVFAC

PRELIMINARY FOR REFERENCE ONLY

SEAL

IRQ WM Jordan COMPANY – A JOINT VENTURE –

Michael Baker INTERNATIONAL

100 AIRSIDE DRIVE
MOON TOWNSHIP, PA 15108 A/E INFO

APPROVED

FOR COMMANDER NAVFAC

ACTIVITY
MARINE CORPS BASE CAMP LEJEUNE

SATISFACTORY TO DATE

DES SJK | DRW AND | CHK NCW

PM

BRANCH MANAGER

CHIEF ENG/ARCH

FIRE PROTECTION

DEPARTMENT OF THE NAVY
NAVAL FACILITIES ENGINEERING COMMAND
ROICC FLORENCE CAMP LEJEUNE
MCB CAMP LEJEUNE

NAVAL FACILITIES ENGINEERING COMMAND – MID-ATLANTIC
JACKSONVILLE, NC

JACKSONVILLE, NC

P1338F II MEF SIMULATION/TRAINING CENTER REPLACEMENT

SIGNAGE - DETAILS - EVACUATION MAPS TYPES Y.7 & Y.8

SCALE: AS NOTED

EPROJECT NO.: 1590892

CONSTR. CONTR. NO.
N40085-20-C-0059

NAVFAC DRAWING NO.

SHEET OF

IG509

DP2 SUBMISSION – P1338 BUILDING - PRE-FINAL SUBMISSION

1 2 3 4 5

SCHEDULE - SIGNAGE (TAG 1 - 77)

SIGN			ROOM			
TAG	TYPE	DESCRIPTION	NUMBER	NAME	SIGN MESSAGE	COMMENTS
1	R	EXIT	L010	LOBBY/VEST	SEE SIGNAGE DETAILS, IG500 SERIES	
2	W	BUILDING DIRECTORY	L010	LOBBY/VEST	SEE SIGNAGE DETAILS, IG500 SERIES	
3	Q. 1	DIRECTIONAL	C020	COR	SEE SIGNAGE DETAILS, IG500 SERIES	
4	D	ROOM ID WITH SLIDER	C020	COR	200A | SIMULATION CLASSROOM	ADD ELECTRICAL EQUIPMENT INSERT
6	D	ROOM ID WITH SLIDER	C020	COR	101 | BRIEF / DEBRIEF	
7	D	ROOM ID WITH SLIDER	C020	COR	102 | BRIEF / DEBRIEF	
8	A	ROOM ID	C020	COR	300 | SIMULATION CLASSROOMS	
9	B	ROOM ID WITH DEPARTMENT	C020	COR	201 | AUDITORIUM / READY ROOM	
10	Y.5	EVACUATION PLAN	201	AUDITORIUM/ READY RM	SEE SIGNAGE DETAILS, IG500 SERIES	
11	Z	MANDATORY / INSTRUCTIONAL	201	AUDITORIUM/ READY RM	SEE SIGNAGE DETAILS, IG500 SERIES	
12	A	ROOM ID	C021	COR	203 | STORAGE	
13	B	ROOM ID WITH DEPARTMENT	C021	COR	201 | AUDITORIUM / READY ROOM	
14	Y.1	EVACUATION PLAN	200C	SIMULATION CLASSROOM	SEE SIGNAGE DETAILS, IG500 SERIES	
15	Z	MANDATORY / INSTRUCTIONAL	200C	SIMULATION CLASSROOM	SEE SIGNAGE DETAILS, IG500 SERIES	
16	D	ROOM ID WITH SLIDER	C021	COR	200C | SIMULATION CLASSROOM	ADD ELECTRICAL EQUIPMENT INSERT
17	Q. 2	DIRECTIONAL	C022	COR	SEE SIGNAGE DETAILS, IG500 SERIES	
18	B	ROOM ID WITH DEPARTMENT	C022	COR	205 | PLOT / LAMINATION | DEPARTMENT INSERT (DETERMINED BY OWNER)	
19	Q. 3	DIRECTIONAL	C022	COR	SEE SIGNAGE DETAILS, IG500 SERIES	
20	R	EXIT	C022	COR	SEE SIGNAGE DETAILS, IG500 SERIES	
21	F.2	ROOM ID WITH MULTIPLE LOCATIONS	C023	COR	SEE SIGNAGE DETAILS, IG500 SERIES	
22	A	ROOM ID	C023	COR	204 | JANITOR	
23	J	UNISEX	C023	COR	SEE SIGNAGE DETAILS, IG500 SERIES	
24	K	SHOWERS	G021	MUD	SEE SIGNAGE DETAILS, IG500 SERIES	
25	K	SHOWERS	G021	MUD	SEE SIGNAGE DETAILS, IG500 SERIES	
26	G	MENS	G021	MUD	SEE SIGNAGE DETAILS, IG500 SERIES	
27	H	WOMENS	G021	MUD	SEE SIGNAGE DETAILS, IG500 SERIES	
28	A	ROOM ID	C023	COR	206 | BREAK ROOM	
29	L	DRINKING FOUNTAIN	C023	COR	SEE SIGNAGE DETAILS, IG500 SERIES	
30	R	EXIT	C023	COR	SEE SIGNAGE DETAILS, IG500 SERIES	
31	F.1	ROOM ID WITH MULTIPLE LOCATIONS	C022	COR	SEE SIGNAGE DETAILS, IG500 SERIES	
32	D	ROOM ID WITH SLIDER	C022	COR	200C | SIMULATION CLASSROOM	ADD ELECTRICAL EQUIPMENT INSERT
33	D	ROOM ID WITH SLIDER	C022	COR	200B | SIMULATION CLASSROOM	ADD ELECTRICAL EQUIPMENT INSERT
34	M	MECHANICAL SPACE/S	C022	COR	208 | COMMUNICATIONS	ADD ELECTRICAL EQUIPMENT INSERT
35	B	ROOM ID WITH DEPARTMENT	C022	COR	207 | EXERCISE CONTROL	
36	Q. 4	DIRECTIONAL	C013	COR	SEE SIGNAGE DETAILS, IG500 SERIES	
37	Q. 5	DIRECTIONAL	C013	COR	SEE SIGNAGE DETAILS, IG500 SERIES	
38	B	ROOM ID WITH DEPARTMENT	C016	COR	104A | FIRE ROOM	ADD ELECTRICAL EQUIPMENT INSERT
39	Y.3	EVACUATION PLAN	104A	FIRE ROOM	SEE SIGNAGE DETAILS, IG500 SERIES	
40	Z	MANDATORY / INSTRUCTIONAL	104A	FIRE ROOM	SEE SIGNAGE DETAILS, IG500 SERIES	
41	B	ROOM ID WITH DEPARTMENT	C016	COR	104B | FIRE ROOM	ADD ELECTRICAL EQUIPMENT INSERT
42	Y.3	EVACUATION PLAN	104B	FIRE ROOM	SEE SIGNAGE DETAILS, IG500 SERIES	
43	Z	MANDATORY / INSTRUCTIONAL	104B	FIRE ROOM	SEE SIGNAGE DETAILS, IG500 SERIES	
44	D	ROOM ID WITH SLIDER	C013	COR	200B | SIMULATION CLASSROOM	ADD ELECTRICAL EQUIPMENT INSERT
45	Y.2	EVACUATION PLAN	200B	SIMULATION CLASSROOM	SEE SIGNAGE DETAILS, IG500 SERIES	
46	Z	MANDATORY / INSTRUCTIONAL	200B	SIMULATION CLASSROOM	SEE SIGNAGE DETAILS, IG500 SERIES	
47	B	ROOM ID WITH DEPARTMENT	C013	COR	104C | FIRE STORAGE	ADD ELECTRICAL EQUIPMENT INSERT
48	Y.4	EVACUATION PLAN	104C	FIRE ROOM	SEE SIGNAGE DETAILS, IG500 SERIES	
49	Z	MANDATORY / INSTRUCTIONAL	104C	FIRE ROOM	SEE SIGNAGE DETAILS, IG500 SERIES	
50	B	ROOM ID WITH DEPARTMENT	C013	COR	103A | FIRE STORAGE | DEPARTMENT INSERT (DETERMINED BY OWNER)	
51	D	ROOM ID WITH SLIDER	C013	COR	200A | SIMULATION CLASSROOM	ADD ELECTRICAL EQUIPMENT INSERT
52	Y.2	EVACUATION PLAN	200A	SIMULATION CLASSROOM	SEE SIGNAGE DETAILS, IG500 SERIES	
53	Z	MANDATORY / INSTRUCTIONAL	200A	SIMULATION CLASSROOM	SEE SIGNAGE DETAILS, IG500 SERIES	
54	Q.7	DIRECTIONAL	C013	COR	SEE SIGNAGE DETAILS, IG500 SERIES	
55	A	ROOM ID	C020	COR	100 | ENTRY WORKSTATION	
56	F.4	ROOM ID WITH MULTIPLE LOCATIONS	C012	COR	SEE SIGNAGE DETAILS, IG500 SERIES	
57	B	ROOM ID WITH DEPARTMENT	C012	COR	105 | LIBRARY / FILE STORAGE | DEPARTMENT INSERT (DETERMINED BY OWNER)	
58	B	ROOM ID WITH DEPARTMENT	C012	COR	107 | SIMULATION OPERATOR | DEPARTMENT INSERT (DETERMINED BY OWNER)	
59	C	ROOM ID WITH OCCUPANT	C011	COR	106 | NCOIC / SUPPLY CLERK | OCCUPANT INSERT (DETERMINED BY OWNER)	
62	A	ROOM ID	C011	COR	108 | ADMINISTRATION BREAK ROOM	
63	B	ROOM ID WITH DEPARTMENT	C011	COR	109 | SIMULATION ANALYST | DEPARTMENT INSERT (DETERMINED BY OWNER)	
64	D	ROOM ID WITH SLIDER	C011	COR	110 | MOTHER'S ROOM	
65	C	ROOM ID WITH OCCUPANT	C014	COR	111 | OIC | OCCUPANT INSERT (DETERMINED BY OWNER)	
66	N	ELECTRICAL ROOM	C014	COR	SEE SIGNAGE DETAILS, IG500 SERIES	
67	R	EXIT	C014	COR	SEE SIGNAGE DETAILS, IG500 SERIES	
68	M	MECHANICAL SPACE/S	C014	COR	115 | COMMUNICATIONS	ADD ELECTRICAL EQUIPMENT INSERT
69	C	ROOM ID WITH OCCUPANT	C014	COR	114 | DIRECTOR | OCCUPANT INSERT (DETERMINED BY OWNER)	
70	C	ROOM ID WITH OCCUPANT	C014	COR	113 | SITE MANAGER | OCCUPANT INSERT (DETERMINED BY OWNER)	
71	C	ROOM ID WITH OCCUPANT	C014	COR	112 | DEPARTMENT DIRECTOR | OCCUPANT INSERT (DETERMINED BY OWNER)	
72	Q.8	DIRECTIONAL	C011	COR	SEE SIGNAGE DETAILS, IG500 SERIES	
73	L	DRINKING FOUNTAIN	C011	COR	SEE SIGNAGE DETAILS, IG500 SERIES	
74	G	MENS	C011	COR	SEE SIGNAGE DETAILS, IG500 SERIES	
75	K	SHOWERS	G010	MEN	SEE SIGNAGE DETAILS, IG500 SERIES	
76	H	WOMENS	C011	COR	SEE SIGNAGE DETAILS, IG500 SERIES	
77	K	SHOWERS	G011	WOMEN	SEE SIGNAGE DETAILS, IG500 SERIES	

NOTES - SIGNAGE

1 REFER TO ABAAS REQUIREMENTS REGARDING SIGN MOUNTING HEIGHT, USE OF PICTOGRAMS, FINISH AND CONTRAST.
2 FINAL SIGN FINISHES, STYLES AND COLORS ARE COORDINATE WITH OWNER PROR TO ORDERING.
3 SIGNS ARE MOUNTED AS SHOWN ON THE SIGNAGE DETAILS SHEETS IN THE IG-SERIES.
4 SIGNS MOUNTED ON GLASS HAVE MATCHING VINYL BACKING OF THE SAME SHAPE AS THE SIGN AND MATCH THE COLOR OF THE SIGN INSERT.
5 SIGNS MOUNTED ON THE EXTERIOR ARE CONSTRUCTED OF DURABLE FACTORY-FINISHED BAKED ENAMEL WITH REFLECTIVE SHEETING. FASTENERS ARE CONCEALED AND RUST PROOF.
6 PROVIDE REQUIRED MOUNTINGS / HANGING MECHANISMS FOR SPECIFIED SIGNS PER MANUFACTURERS RECOMMENDATIONS FOR LOAD.
7 SURFACE APPLIED VINYL LETTERS OR GRAPHICS THAT RUB OFF OR DAMAGED AND EXPOSED PAPER INSERTS ARE PROHIBITED.
8 CONTRACTOR TO PROVIDE SOFTWARE, ADDITIONAL MESSAGE SLOTS FOR FUTURE INSERTS AND ATTIC STOCK FOR SIGNS; COORDINATE WITH OWNER.
9 INTERIOR MODULAR SIGNS HAVE A STRUCTURAL RAIL WITH COORDINATING RAIL JOINERS TO INCREASE SIGN HEIGHT IN FIELD, REMOVABLE COPY INSERTS, INTERLOCKING END CAPS OR FRAME AND TRIM.
10 FINAL ROOM NUMBERS AND NAMES ARE COORDINATED WITH CONTRACTING OFFICER IN FIELD.
11 EXTERIOR SIGNS CONFORM TO MANUFACTURER RECOMMENDATIONS FOR APPLICATION AND ARE APPROVED BY CONTRACTING OFFICER.
12 CONTRACTOR PROVIDES FLAG SIGNS INDICATING DEFIBRILLATOR LOCATION, MOUNTED ABOVE EACH DEFIBRILLATOR.
13 CONTRACTOR PROVIDES FLAG SIGNS INDICATING FIRE EXTINGUISHER LOCATION, MOUNTED ABOVE EACH EXTINGUISHER.
14 CONTRACTOR PROVIDES WORKSTATION / DESK ID SIGNS AS REQUIRED BY OWNER.
15 CONTRACTOR PROVIDES EXTERIOR BUILDING NUMBER IDENTIFICATION SIGNS, FOR EMERGENCY VEHICLES, ARE LOCATED ON SITE FOR VISIBILITY BY SECURITY AND FIRE PERSONNEL. COORDINATE LOCATION AND QUANTITIES WITH CONTRACTING OFFICER AND CONTRACTOR.
16 SEE OTHER DISCIPLINE DRAWINGS AND SPECIFICATIONS FOR DEVICE RELATED SIGNAGE. CONFIRM REQUIREMENTS WITH BASE AND LOCAL JURISDICTION PRIOR TO PROCUREMENT.
17 SIGNS ARE DESIGN SUGGESTIONS. INFORMATION, INCLUDING ROOM NAMES AND NUMBERS, DIRECTIONS, ETC; ARE COORDINATED IN FIELD WITH OWNER PRIOR TO ORDERING AND INSTALLATION. NOTIFY ARCHITECT OF RECORD OF IN FIELD IDENTIFICATION & NUMERICAL CHANGES.
18 THE BUILDING ID SIGN, WILL INCLUDE SERVICE SPECIFIC APPROPRIATE BRANDING STYLES AND LOGOS. COORDINATE FINAL SIGN WITH OWNER PRIOR TO ORDERING.

SYM	DESCRIPTION	DATE	APPR

NAVFAC

PRELIMINARY
FOR REFERENCE ONLY
SEAL

RQ | W.M. Jordan Company – A JOINT VENTURE –

Michael Baker INTERNATIONAL
100 AIRSIDE DRIVE
MOON TOWNSHIP, PA 15108
A/E INFO

APPROVED

FOR COMMANDER NAVFAC

ACTIVITY
MARINE CORPS BASE
CAMP LEJEUNE

SATISFACTORY TO DATE

DES SJK | DRW AND | CHK NCW

PM

BRANCH MANAGER

CHIEF ENG/ARCH

FIRE PROTECTION

DEPARTMENT OF THE NAVY
NAVAL FACILITIES ENGINEERING COMMAND
NAVAL FACILITIES ENGINEERING COMMAND ~ MID-ATLANTIC
ROICC FLORENCE CAMP LEJEUNE
JACKSONVILLE, NC
MCB CAMP LEJEUNE
JACKSONVILLE, NC
P1338F II MEF SIMULATION/TRAINING CENTER REPLACEMENT
SIGNAGE - SCHEDULE (TAG 1 - 77) AND DETAILED NOTES

SCALE: AS NOTED
EPROJECT NO.: 1590892
CONSTR. CONTR. NO. N40085-20-C-0059
NAVFAC DRAWING NO.
SHEET OF
IG601

DP2 SUBMISSION – P1338 BUILDING - PRE-FINAL SUBMISSION

PLOTTED: 6/3/2021 4:51:04 PM
FILE NAME: BIM 360://HF PACKAGE 3/P1338 MEF SIM CTR-1590892-A.rvt

SCHEDULE - SIGNAGE (TAG 78+)

SIGN			ROOM			
TAG	TYPE	DESCRIPTION	NUMBER	NAME	SIGN MESSAGE	COMMENTS
78	J	UNISEX	C011	COR	SEE SIGNAGE DETAILS, IG500 SERIES	
82	F.5	ROOM ID WITH MULTIPLE LOCATIONS	C016	COR	SEE SIGNAGE DETAILS, IG500 SERIES	
83	F.6	ROOM ID WITH MULTIPLE LOCATIONS	C030	COR	SEE SIGNAGE DETAILS, IG500 SERIES	
84	D	ROOM ID WITH SLIDER	C030	COR	300A | SIMULATION CLASSROOM	
85	Y.5	EVACUATION PLAN	300A	SIMULATION CLASSROOM	SEE SIGNAGE DETAILS, IG500 SERIES	
86	Z	MANDATORY / INSTRUCTIONAL	300A	SIMULATION CLASSROOM	SEE SIGNAGE DETAILS, IG500 SERIES	
87	D	ROOM ID WITH SLIDER	C030	COR	300A | SIMULATION CLASSROOM	
88	D	ROOM ID WITH SLIDER	C030	COR	300B | SIMULATION CLASSROOM	
89	Y.5	EVACUATION PLAN	300B	SIMULATION CLASSROOM	SEE SIGNAGE DETAILS, IG500 SERIES	
90	Z	MANDATORY / INSTRUCTIONAL	300B	SIMULATION CLASSROOM	SEE SIGNAGE DETAILS, IG500 SERIES	
91	D	ROOM ID WITH SLIDER	C030	COR	300B | SIMULATION CLASSROOM	
92	D	ROOM ID WITH SLIDER	C030	COR	300C | SIMULATION CLASSROOM	
93	D	ROOM ID WITH SLIDER	C031	COR	300C | SIMULATION CLASSROOM	
94	Y.6	EVACUATION PLAN	300C	SIMULATION CLASSROOM	SEE SIGNAGE DETAILS, IG500 SERIES	
95	Z	MANDATORY / INSTRUCTIONAL	300C	SIMULATION CLASSROOM	SEE SIGNAGE DETAILS, IG500 SERIES	
96	D	ROOM ID WITH SLIDER	C031	COR	300Z | SIMULATION CLASSROOM	
97	Y.6	EVACUATION PLAN	300Z	SIMULATION CLASSROOM	SEE SIGNAGE DETAILS, IG500 SERIES	
98	Z	MANDATORY / INSTRUCTIONAL	300Z	SIMULATION CLASSROOM	SEE SIGNAGE DETAILS, IG500 SERIES	
99	N	ELECTRICAL ROOM	C031	COR	SEE SIGNAGE DETAILS, IG500 SERIES	
100	Q.9	DIRECTIONAL	C031	COR	SEE SIGNAGE DETAILS, IG500 SERIES	
101	R	EXIT	C032	COR	SEE SIGNAGE DETAILS, IG500 SERIES	
102	M	MECHANICAL SPACE/S	C031	COR	305 | COMMUNICATIONS	
103	D	ROOM ID WITH SLIDER	C034	COR	130B | SIMULATION CLASSROOM	
104	D	ROOM ID WITH SLIDER	C034	COR	130B | SIMULATION CLASSROOM	
105	Y.8	EVACUATION PLAN	301B	SIMULATION CLASSROOM	SEE SIGNAGE DETAILS, IG500 SERIES	
106	Z	MANDATORY / INSTRUCTIONAL	301B	SIMULATION CLASSROOM	SEE SIGNAGE DETAILS, IG500 SERIES	
107	D	ROOM ID WITH SLIDER	C034	COR	127D | SIMULATION CLASSROOM	
108	D	ROOM ID WITH SLIDER	C034	COR	130A | SIMULATION CLASSROOM	
109	D	ROOM ID WITH SLIDER	C034	COR	300Y | SIMULATION CLASSROOM	
110	Y.7	EVACUATION PLAN	300Y	SIMULATION CLASSROOM	SEE SIGNAGE DETAILS, IG500 SERIES	
111	Z	MANDATORY / INSTRUCTIONAL	300Y	SIMULATION CLASSROOM	SEE SIGNAGE DETAILS, IG500 SERIES	
112	D	ROOM ID WITH SLIDER	C034	COR	130A | SIMULATION CLASSROOM	
113	Y.8	EVACUATION PLAN	301A	SIMULATION CLASSROOM	SEE SIGNAGE DETAILS, IG500 SERIES	
114	Z	MANDATORY / INSTRUCTIONAL	301A	SIMULATION CLASSROOM	SEE SIGNAGE DETAILS, IG500 SERIES	
115	D	ROOM ID WITH SLIDER	C034	COR	300Y | SIMULATION CLASSROOM	
116	Y.7	EVACUATION PLAN	300X	SIMULATION CLASSROOM	SEE SIGNAGE DETAILS, IG500 SERIES	
117	Z	MANDATORY / INSTRUCTIONAL	300X	SIMULATION CLASSROOM	SEE SIGNAGE DETAILS, IG500 SERIES	
118	D	ROOM ID WITH SLIDER	C034	COR	300X | SIMULATION CLASSROOM	
119	D	ROOM ID WITH SLIDER	C034	COR	300X | SIMULATION CLASSROOM	
120	F.7	ROOM ID WITH MULTIPLE LOCATIONS	C034	COR	302 | SERVER ADMINISTRATION | DEPARTMENT INSERT (DETERMINED BY OWNER)	
121	D	ROOM ID WITH SLIDER	302	SERVER ADMIN	303A | SECURE WORKSTATIONS | DEPARTMENT INSERT (DETERMINED BY OWNER)	
122	A	ROOM ID	303A	SECURE WS	303B | SECURE VTC	
123	B	ROOM ID WITH DEPARTMENT	302	SERVER ADMIN	304A | SIMULATION CONTROL (SERVER ROOM)	ADD ELECTRICAL EQUIPMENT INSERT
124	M	MECHANICAL SPACE/S	304A	SIM CONTROL (SERVER ROOM)	304B | SIMULATION CONTROL SECURE COMMUNICATIONS (VAULT)	ADD ELECTRICAL EQUIPMENT INSERT
125	B	ROOM ID WITH DEPARTMENT	C034	COR	202 | EXERCISE CONTROL	
126	Y.7	EVACUATION PLAN	202	EXERCISE CONTROL	SEE SIGNAGE DETAILS, IG500 SERIES	
127	Z	MANDATORY / INSTRUCTIONAL	202	EXERCISE CONTROL	SEE SIGNAGE DETAILS, IG500 SERIES	
128	B	ROOM ID WITH DEPARTMENT	C034	COR	202 | EXERCISE CONTROL	
129	D	ROOM ID WITH SLIDER	C034	COR	209 | BRIEF / DEBRIEF	
130	F.8	ROOM ID WITH MULTIPLE LOCATIONS	C034	COR	SEE SIGNAGE DETAILS, IG500 SERIES	
131	S	NO SMOKING	--	EXTERIOR	SEE SIGNAGE DETAILS, IG500 SERIES	
132	P	OVERHEAD DOOR ID	--	EXTERIOR	SEE SIGNAGE DETAILS, IG500 SERIES	
133	X	FACILITY RECOGNITION PLAQUE	--	EXTERIOR	SEE SIGNAGE DETAILS, IG500 SERIES	
134	S	NO SMOKING	--	EXTERIOR	SEE SIGNAGE DETAILS, IG500 SERIES	
135	T	BUILDING ID	--	EXTERIOR	SEE SIGNAGE DETAILS, IG500 SERIES	
136	M	MECHANICAL SPACE/S	--	EXTERIOR	400 | MECHANICAL	
139	S	NO SMOKING	--	EXTERIOR	SEE SIGNAGE DETAILS, IG500 SERIES	
140	P	OVERHEAD DOOR ID	--	EXTERIOR	SEE SIGNAGE DETAILS, IG500 SERIES	
142	M	MECHANICAL SPACE/S	--	EXTERIOR	401 | MECHANICAL (HOT)	
144	S	NO SMOKING	--	EXTERIOR	SEE SIGNAGE DETAILS, IG500 SERIES	
145	P	OVERHEAD DOOR ID	--	EXTERIOR	SEE SIGNAGE DETAILS, IG500 SERIES	
146	S	NO SMOKING	--	EXTERIOR	SEE SIGNAGE DETAILS, IG500 SERIES	
147	A	ROOM ID	--	EXTERIOR	402 | STORAGE / SHIPPING / RECEIVING	
149	N	ELECTRICAL ROOM	--	EXTERIOR	SEE SIGNAGE DETAILS, IG500 SERIES	
150	S	NO SMOKING	--	EXTERIOR	SEE SIGNAGE DETAILS, IG500 SERIES	
151	P	OVERHEAD DOOR ID	--	EXTERIOR	SEE SIGNAGE DETAILS, IG500 SERIES	
152	S	NO SMOKING	--	EXTERIOR	SEE SIGNAGE DETAILS, IG500 SERIES	
153	S	NO SMOKING	--	EXTERIOR	SEE SIGNAGE DETAILS, IG500 SERIES	
154	P	OVERHEAD DOOR ID	--	EXTERIOR	SEE SIGNAGE DETAILS, IG500 SERIES	
155	B	ROOM ID WITH DEPARTMENT	C022	COR	205 | PLOT / LAMINATION | DEPARTMENT INSERT (DETERMINED BY OWNER)	
156	Q. 6	DIRECTIONAL	C013	COR	SEE SIGNAGE DETAILS, IG500 SERIES	
157	A	ROOM ID	C016	COR	118 | JANITOR	
158	R	EXIT	402	STORAGE / SHIPPING / RECEIVING	SEE SIGNAGE DETAILS, IG500 SERIES	
159	R	EXIT	C012	COR	SEE SIGNAGE DETAILS, IG500 SERIES	
160	T	BUILDING ID	--	EXTERIOR	SEE SIGNAGE DETAILS, IG500 SERIES	
161	S	NO SMOKING	--	EXTERIOR	SEE SIGNAGE DETAILS, IG500 SERIES	
162	B	ROOM ID WITH DEPARTMENT	104A	FIRE ROOM	110A | STORAGE	
163	F.3	ROOM ID WITH MULTIPLE LOCATIONS	C023	COR	SEE SIGNAGE DETAILS, IG500 SERIES	

APPR | DATE | DESCRIPTION | SYM

NAVFAC

PRELIMINARY FOR REFERENCE ONLY

SEAL

RQ W.M. Jordan COMPANY – A JOINT VENTURE –

Michael Baker INTERNATIONAL

100 AIRSIDE DRIVE
MOON TOWNSHIP, PA 15108 A/E INFO

APPROVED

FOR COMMANDER NAVFAC

ACTIVITY
MARINE CORPS BASE
CAMP LEJEUNE

SATISFACTORY TO DATE

DES SJK | DRW AND | CHK NCW

PM

BRANCH MANAGER

CHIEF ENG/ARCH

FIRE PROTECTION

DEPARTMENT OF THE NAVY
NAVAL FACILITIES ENGINEERING COMMAND
ROICC FLORENCE CAMP LEJEUNE
MCB CAMP LEJEUNE

NAVAL FACILITIES ENGINEERING COMMAND – MID-ATLANTIC
JACKSONVILLE, NC

JACKSONVILLE, NC
P1338F II MEF SIMULATION/TRAINING CENTER REPLACEMENT

SIGNAGE - SCHEDULE (TAG 78+)

SCALE: AS NOTED

EPROJECT NO.: 1590892

CONSTR. CONTR. NO.
N40085-20-C-0059

NAVFAC DRAWING NO.

SHEET OF

IG602

DP2 SUBMISSION – P1338 BUILDING –PRE-FINAL SUBMISSION

PLOTTED: 6/3/2021 4:51:08 PM

FILE NAME: BIM 360://HF PACKAGE 3/P1338 MEF SIM CTR-1590892-A.rvt

UNCLASSIFIED

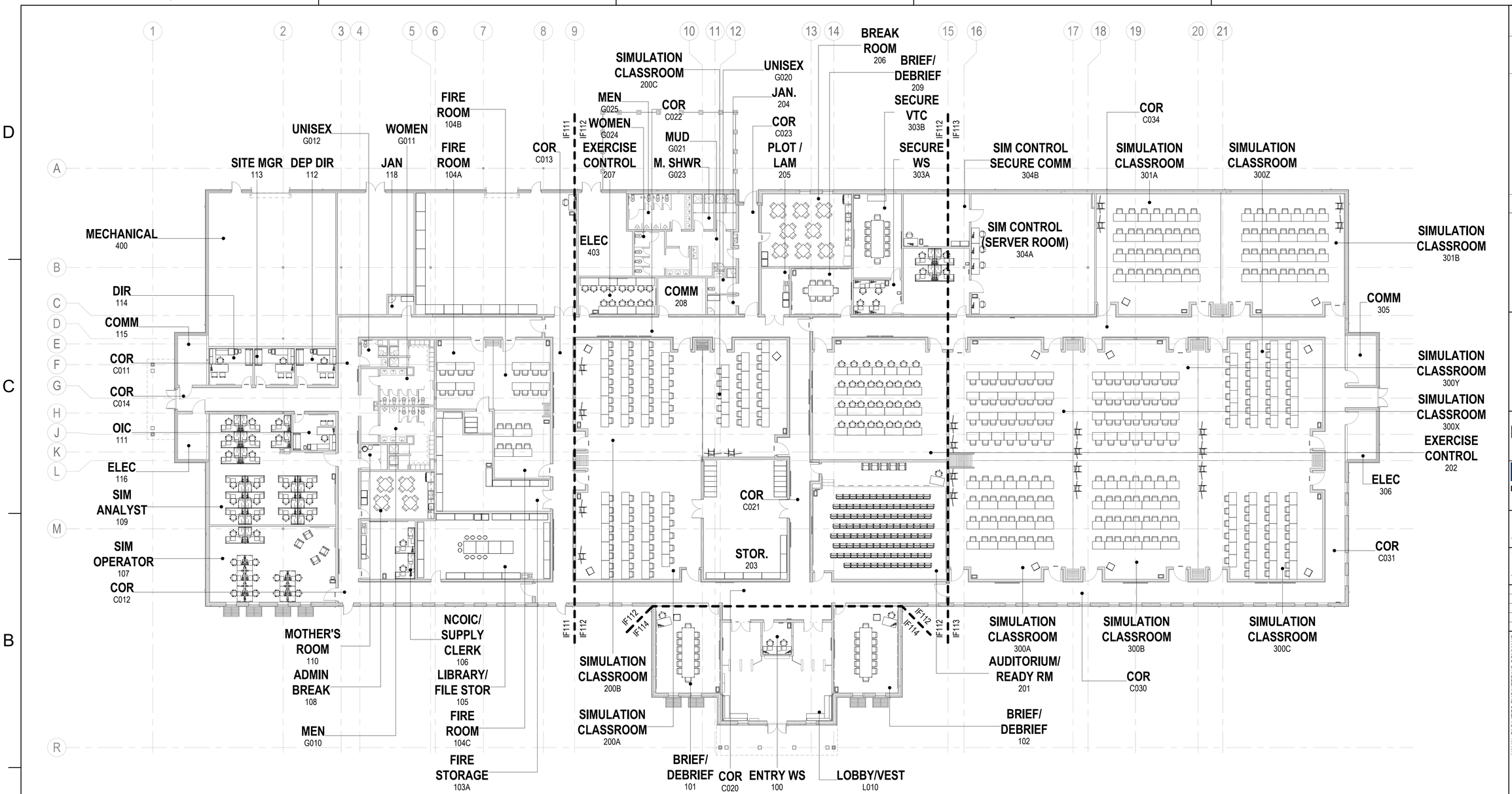

INTERIOR FURNITURE, FIXTURES AND EQUIPMENT (FF&E) - OVERALL FIRST FLOOR PLAN

SCALE: 1/16" = 1'-0"

KEYPLAN

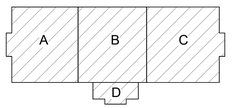

0 8' - 0" 16' - 0" 32' - 0"

SCALE: 1/16" = 1' - 0"

N

APPR | DATE | SYM | DESCRIPTION

NAVFAC

PRELIMINARY FOR REFERENCE ONLY

SEAL

IRQ W.M. Jordan COMPANY – A JOINT VENTURE –

Michael Baker INTERNATIONAL
100 AIRSIDE DRIVE
MOON TOWNSHIP, PA 15108
A/E INFO

APPROVED

FOR COMMANDER NAVFAC

ACTIVITY
MARINE CORPS BASE CAMP LEJEUNE

SATISFACTORY TO DATE

DES SJK | DRW AND | CHK NCW

PM

BRANCH MANAGER

CHIEF ENG/ARCH

FIRE PROTECTION

NAVAL FACILITIES ENGINEERING COMMAND ~ MID-ATLANTIC
JACKSONVILLE, NC

DEPARTMENT OF THE NAVY
NAVAL FACILITIES ENGINEERING COMMAND
ROICC FLORENCE CAMP LEJEUNE

MCB CAMP LEJEUNE

JACKSONVILLE, NC
P1338F II MEF SIMULATION/TRAINING CENTER REPLACEMENT

INTERIOR FURNITURE, FIXTURES AND EQUIPMENT (FF&E) - OVERALL FLOOR PLAN

SCALE: AS NOTED

EPROJECT NO.: 1590892

CONSTR. CONTR. NO.
N40085-20-C-0059

NAVFAC DRAWING NO.

SHEET OF

IF110

DP2 SUBMISSION – P1338 BUILDING -PRE-FINAL SUBMISSION

PLOTTED: 6/8/2021 3:06:31 PM

FILE NAME: BIM 360://HF PACKAGE 3/P1338 MEF SIM CTR-1590892-A.rvt

UNCLASSIFIED

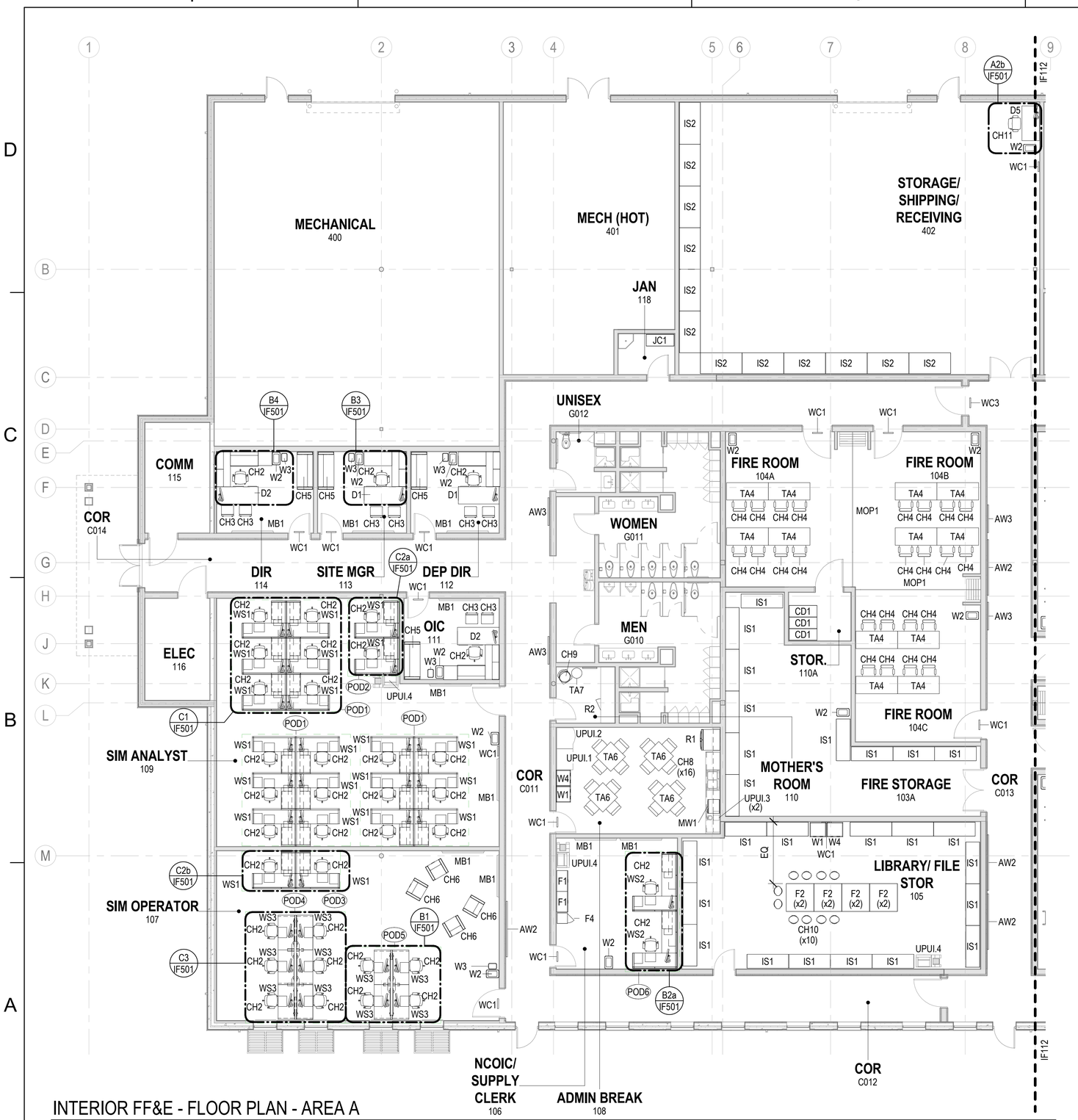

LEGEND - INTERIOR FF&E (GFGI)

TAG	DESCRIPTION	QTY
AW1	COMMAND BOARD - 6'W X 4'H	1
AW2	ART COLLAGE - 8'W X 6'H	10
AW3	ARTWORK - 4'W X 2'-6"H	17
CD1	CHAIR DOLLY	17
CH1	CONFERENCE CHAIR	48
CH2	ARMLESS TASK CHAIR	99
CH3	SIDE CHAIR	8
CH4	TRAINING CHAIR	382
CH5	LOVESEAT WITH ARMS	4
CH6	LOUNGE CHAIR	9
CH7	L-SHAPED BENCH	2
CH8	DINING CHAIR - REGULAR HEIGHT	48
CH9	LOUNGE CHAIR - NURSING	1
CH10	STOOL - COUNTER HEIGHT	10
CH11	ARMLESS WORK STOOL	6
CR1	MEDIA CREDENZA	1
D1	DESK - U-SHAPED	2
D2	DESK - U-SHAPED	2
D3	DESK - SINGLE	3
D4	DESK - SINGLE	4
D5	WORK TABLE	1
D6	CONTROL DESK	3
D7	DESK WITH STORAGE ABOVE - SINGLE	4
F1	LATERAL FILE CABINET - 4-HIGH	2
F2	FLAT FILE CABINET	8
F3	COMBINATION TOOL CABINET	4
F4	KEYED LOCKER	1
FE1	10LB ABC FIRE EXTINGUISHER	16
FE2	13.25LB FE13 CLEANGUARD EXTINGUISHER	1
IS1	INDUSTRIAL SHELVING - 5 SHELF	31
IS2	INDUSTRIAL SHELVING - 5 SHELF	12
JC1	JANITOR CART	2
L01	AV LECTERN - 24" X 24"	13
MOP1	OPERABLE PARTITION	11
MSC1	MOBILE SCREEN CART - DUAL	22
MW1	COUNTER TOP MICROWAVE	4
R1	REFRIGERATOR - FRENCH DOOR WITH ICE	2
R2	U.C. REFRIGERATOR - CP351WADA	1
TA1	CONFERENCE TABLE WITH POWER	2
TA2	CONFERENCE TABLE	1
TA3	CONFERENCE TABLE	1
TA4	TRAINING TABLE - DOUBLE	159
TA5	TRAINING TABLE - SINGLE	112
TA6	DINING TABLE - 36"SQ.- REGULAR HEIGHT	12
TA7	SIDE TABLE - NURSING	1
W1	WASTE UNIT	4
W2	WASTE BIN - 7-GAL SMALL DESK SIZE	34
W3	WASTE BIN (RECYCLING) - 7-GAL SMALL DESK SIZE	7
W4	WASTE UNIT (RECYCLING)	4
WC1	WALL CLOCK - BATTERY OPERATED	21
WC2	WALL CLOCK - TIME ZONE - CACCTUS	11
WC3	WALL CLOCK - TIME ZONE - MTWS	2
WS1	WORKSTATION - 66"H - 6' X 5'	26
WS2	WORKSTATION - 66"H - 6' X 8'	2
WS3	WORKSTATION - BENCHING - 5' X 2'-6"	10

NOTES - INTERIOR FF&E

1 ITEMS LISTED AS 'FF&E PACKAGE' ARE PART OF THE FF&E PACKAGE THAT IS PART OF A PLANNED CONTRACT MODIFICATION AND ARE SHOWN FOR COORDINATION PURPOSES ONLY.

2 ITEMS LISTED AS 'CFCI' ARE ITEMS THAT ARE PROVIDED BY THE CONTRACTOR UNDER THE CURRENT CONSTRUCTION CONTRACT.

3 ITEMS LISTED AS 'UPUI' ARE USER FURNISHED AND USER INSTALLED. SHOWN FOR COORDINATION.

4 SEE TELECOM DRAWINGS FOR TV SIZE AND MOUNT INFORMATION.

5 PROVIDE BLOCKING FOR WALL MOUNTED FF&E ITEMS AS REQUIRED. CONFIRM SIZES AND LOCATIONS WITH CONTRACTING OFFICER. PRIOR TO INSTALL.

6 REFER TO IF501 FOR FURNITURE DETAILS.

7 MOUNT WALL CLOCKS (WC1, WC2, WC3) AT 7'-6" A.F.F. TO BOTTOM OF FIXTURE. CENTER WHERE POSSIBLE AT DOORS.

8 MAKERBOARDS TO HAVE ANODIZED ALUMINUM TRIM. MOUNT MARKERBOARDS AT 42" AFF TO BOTTOM EDGE. MARKER BOARDS INCLUDE (1) SET OF TOOL TRAYS PER ROOM.

LEGEND - INTERIOR FF&E (WORKSTATION) TAG

XX — POD IDENTIFIER

LEGEND - INTERIOR FF&E (CFCI)

TAG	DESCRIPTION	QTY
CH13	SEDIA SYSTEMS G20 AUDITORIUM CHAIR - 26"W	121
MB1	MARKER BOARD - 8' X 4'	16

LEGEND - USER PROVIDED EQUIPMENT (UPUI)

TAG	DESCRIPTION	QTY
UPUI.1	VENDING - CANDY	2
UPUI.2	VENDING - BEVERAGE	2
UPUI.3	COFFEE MAKER - NON PLUMBED	2
UPUI.4	FLOOR COPIER/PRINTER	4

KEYPLAN

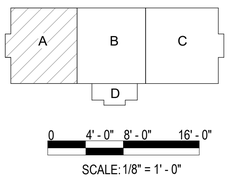

SCALE: 1/8" = 1' - 0"

INTERIOR FF&E - FLOOR PLAN - AREA A

SCALE: 1/8" = 1'-0"

APPR | DATE | DESCRIPTION | SYM

NAVFAC

PRELIMINARY FOR REFERENCE ONLY

SEAL

W.M. Jordan COMPANY – A JOINT VENTURE –

Michael Baker INTERNATIONAL

100 AIRSIDE DRIVE
MOON TOWNSHIP, PA 15108 A/E INFO

APPROVED

FOR COMMANDER NAVFAC

ACTIVITY
MARINE CORPS BASE
CAMP LEJEUNE

SATISFACTORY TO DATE

DES SJK | DRW AND | CHK NCW

PM

BRANCH MANAGER

CHIEF ENG/ARCH

FIRE PROTECTION

DEPARTMENT OF THE NAVY
NAVAL FACILITIES ENGINEERING COMMAND ~ MID-ATLANTIC
ROICC FLORENCE CAMP LEJEUNE
MCB CAMP LEJEUNE

NAVAL FACILITIES ENGINEERING COMMAND ~ MID-ATLANTIC
JACKSONVILLE, NC

JACKSONVILLE, NC
P1338F II MEF SIMULATION/TRAINING CENTER
REPLACEMENT
INTERIOR FF&E - FLOOR PLAN - AREA A

SCALE: AS NOTED
EPROJECT NO.: 1590892
CONSTR. CONTR. NO.: N40085-20-C-0059
NAVFAC DRAWING NO.
SHEET OF

IF111

DP2 SUBMISSION – P1338 BUILDING - PRE-FINAL SUBMISSION

PLOTTED: 6/8/2021 3:06:33 PM

FILE NAME: BIM 360:/HF PACKAGE 3/P1338 MEF SIM CTR-1590892-A.rvt

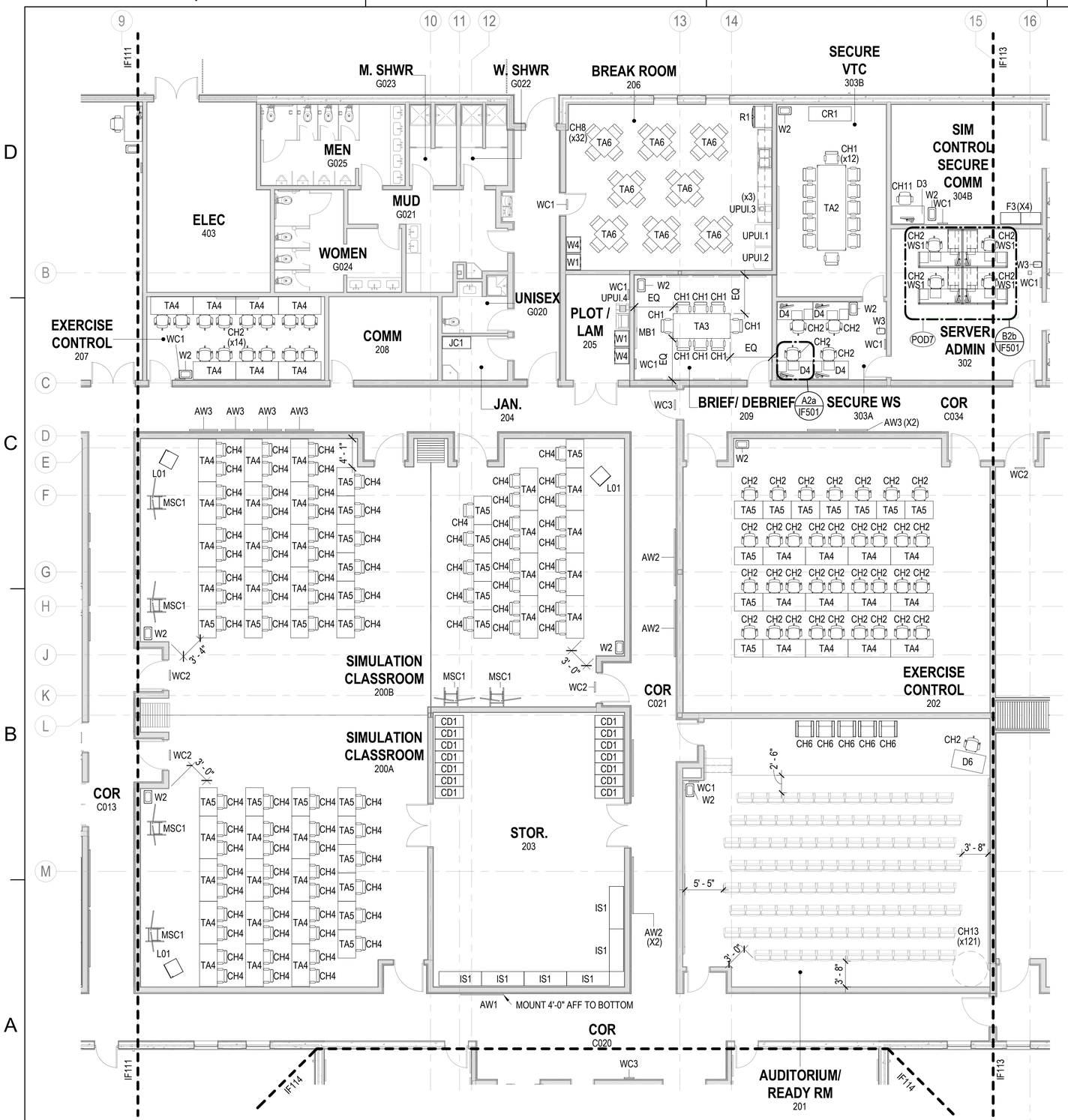

INTERIOR FF&E - FLOOR PLAN - AREA B

SCALE: 1/8" = 1'-0"

LEGEND - INTERIOR FF&E (GFGI)

TAG	DESCRIPTION	QTY
AW1	COMMAND BOARD - 6'W X 4'H	1
AW2	ART COLLAGE - 8'W X 6'H	10
AW3	ARTWORK - 4'W X 2'-6"H	17
CD1	CHAIR DOLLY	17
CH1	CONFERENCE CHAIR	48
CH2	ARMLESS TASK CHAIR	99
CH3	SIDE CHAIR	8
CH4	TRAINING CHAIR	382
CH5	LOVESEAT WITH ARMS	4
CH6	LOUNGE CHAIR	9
CH7	L-SHAPED BENCH	2
CH8	DINING CHAIR - REGULAR HEIGHT	48
CH9	LOUNGE CHAIR - NURSING	1
CH10	STOOL - COUNTER HEIGHT	10
CH11	ARMLESS WORK STOOL	6
CR1	MEDIA CREDENZA	1
D1	DESK - U-SHAPED	2
D2	DESK - U-SHAPED	2
D3	DESK - SINGLE	3
D4	DESK - SINGLE	4
D5	WORK TABLE	1
D6	CONTROL DESK	3
D7	DESK WITH STORAGE ABOVE - SINGLE	4
F1	LATERAL FILE CABINET - 4-HIGH	2
F2	FLAT FILE CABINET	8
F3	COMBINATION TOOL CABINET	4
F4	KEYED LOCKER	1
FE1	10LB ABC FIRE EXTINGUISHER	16
FE2	13.25LB FE13 CLEANGUARD EXTINGUISHER	1
IS1	INDUSTRIAL SHELVING - 5 SHELF	31
IS2	INDUSTRIAL SHELVING - 5 SHELF	12
JC1	JANITOR CART	2
L01	AV LECTERN - 24" X 24"	13
MOP1	OPERABLE PARTITION	11
MSC1	MOBILE SCREEN CART - DUAL	22
MW1	COUNTER TOP MICROWAVE	4
R1	REFRIGERATOR - FRENCH DOOR WITH ICE	2
R2	U.C. REFRIGERATOR - CP351WADA	1
TA1	CONFERENCE TABLE WITH POWER	2
TA2	CONFERENCE TABLE	1
TA3	CONFERENCE TABLE	1
TA4	TRAINING TABLE - DOUBLE	159
TA5	TRAINING TABLE - SINGLE	112
TA6	DINING TABLE - 36"SQ.- REGULAR HEIGHT	12
TA7	SIDE TABLE - NURSING	1
W1	WASTE UNIT	4
W2	WASTE BIN - 7-GAL SMALL DESK SIZE	34
W3	WASTE BIN (RECYCLING) - 7-GAL SMALL DESK SIZE	7
W4	WASTE UNIT (RECYCLING)	4
WC1	WALL CLOCK - BATTERY OPERATED	21
WC2	WALL CLOCK - TIME ZONE - CACCTUS	11
WC3	WALL CLOCK - TIME ZONE - MTWS	2
WS1	WORKSTATION - 66"H - 6' X 5'	26
WS2	WORKSTATION - 66"H - 6' X 8'	2
WS3	WORKSTATION - BENCHING - 5' X 2'-6"	10

NOTES - INTERIOR FF&E

1 ITEMS LISTED AS 'FF&E PACKAGE' ARE PART OF THE FF&E PACKAGE THAT IS PART OF A PLANNED CONTRACT MODIFICATION AND ARE SHOWN FOR COORDINATION PURPOSES ONLY.
2 ITEMS LISTED AS 'CFCI' ARE ITEMS THAT ARE PROVIDED BY THE CONTRACTOR UNDER THE CURRENT CONSTRUCTION CONTRACT.
3 ITEMS LISTED AS 'UPUI' ARE USER FURNISHED AND USER INSTALLED. SHOWN FOR COORDINATION.
4 SEE TELECOM DRAWINGS FOR TV SIZE AND MOUNT INFORMATION.
5 PROVIDE BLOCKING FOR WALL MOUNTED FF&E ITEMS AS REQUIRED. CONFIRM SIZES AND LOCATIONS WITH CONTRACTING OFFICER. PRIOR TO INSTALL.
6 REFER TO IF501 FOR FURNITURE DETAILS.
7 MOUNT WALL CLOCKS (WC1, WC2, WC3) AT 7'-6" A.F.F. TO BOTTOM OF FIXTURE. CENTER WHERE POSSIBLE AT DOORS.
8 MAKERBOARDS TO HAVE ANODIZED ALUMINUM TRIM. MOUNT MARKERBOARDS AT 42" AFF TO BOTTOM EDGE. MARKER BOARDS INCLUDE (1) SET OF TOOL TRAYS PER ROOM.

LEGEND - INTERIOR FF&E (WORKSTATION) TAG

XX — POD IDENTIFIER

LEGEND - INTERIOR FF&E (CFCI)

TAG	DESCRIPTION	QTY
CH13	SEDIA SYSTEMS G20 AUDITORIUM CHAIR - 26"W	121
MB1	MARKER BOARD - 8' X 4'	16

LEGEND - USER PROVIDED EQUIPMENT (UPUI)

TAG	DESCRIPTION	QTY
UPUI.1	VENDING - CANDY	2
UPUI.2	VENDING - BEVERAGE	2
UPUI.3	COFFEE MAKER - NON PLUMBED	2
UPUI.4	FLOOR COPIER/PRINTER	4

KEYPLAN

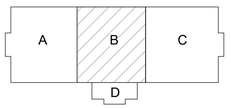

0 4' - 0" 8' - 0" 16' - 0"

SCALE: 1/8" = 1' - 0"

N

APPR | DATE | DESCRIPTION | SYM

NAVFAC

PRELIMINARY FOR REFERENCE ONLY

SEAL

W.M. Jordan COMPANY – A JOINT VENTURE –

Michael Baker INTERNATIONAL
100 AIRSIDE DRIVE
MOON TOWNSHIP, PA 15108
A/E INFO

APPROVED

FOR COMMANDER NAVFAC

ACTIVITY
MARINE CORPS BASE CAMP LEJEUNE

SATISFACTORY TO DATE

DES SJK | DRW AND | CHK NCW

PM

BRANCH MANAGER

CHIEF ENG/ARCH

FIRE PROTECTION

NAVAL FACILITIES ENGINEERING COMMAND – MID-ATLANTIC
JACKSONVILLE, NC
DEPARTMENT OF THE NAVY
NAVAL FACILITIES ENGINEERING COMMAND
ROICC FLORENCE CAMP LEJEUNE
MCB CAMP LEJEUNE
JACKSONVILLE, NC
P1338F II MEF SIMULATION/TRAINING CENTER REPLACEMENT
INTERIOR FF&E - FLOOR PLAN - AREA B

SCALE: AS NOTED
EPROJECT NO.: 1590892
CONSTR. CONTR. NO.
N40085-20-C-0059
NAVFAC DRAWING NO.
SHEET OF
IF112

DP2 SUBMISSION – P1338 BUILDING - PRE-FINAL SUBMISSION

PLOTTED: 6/8/2021 3:06:35 PM

FILE NAME: BIM 360://HF PACKAGE 3/P1338 MEF SIM CTR-1590892-A.rvt

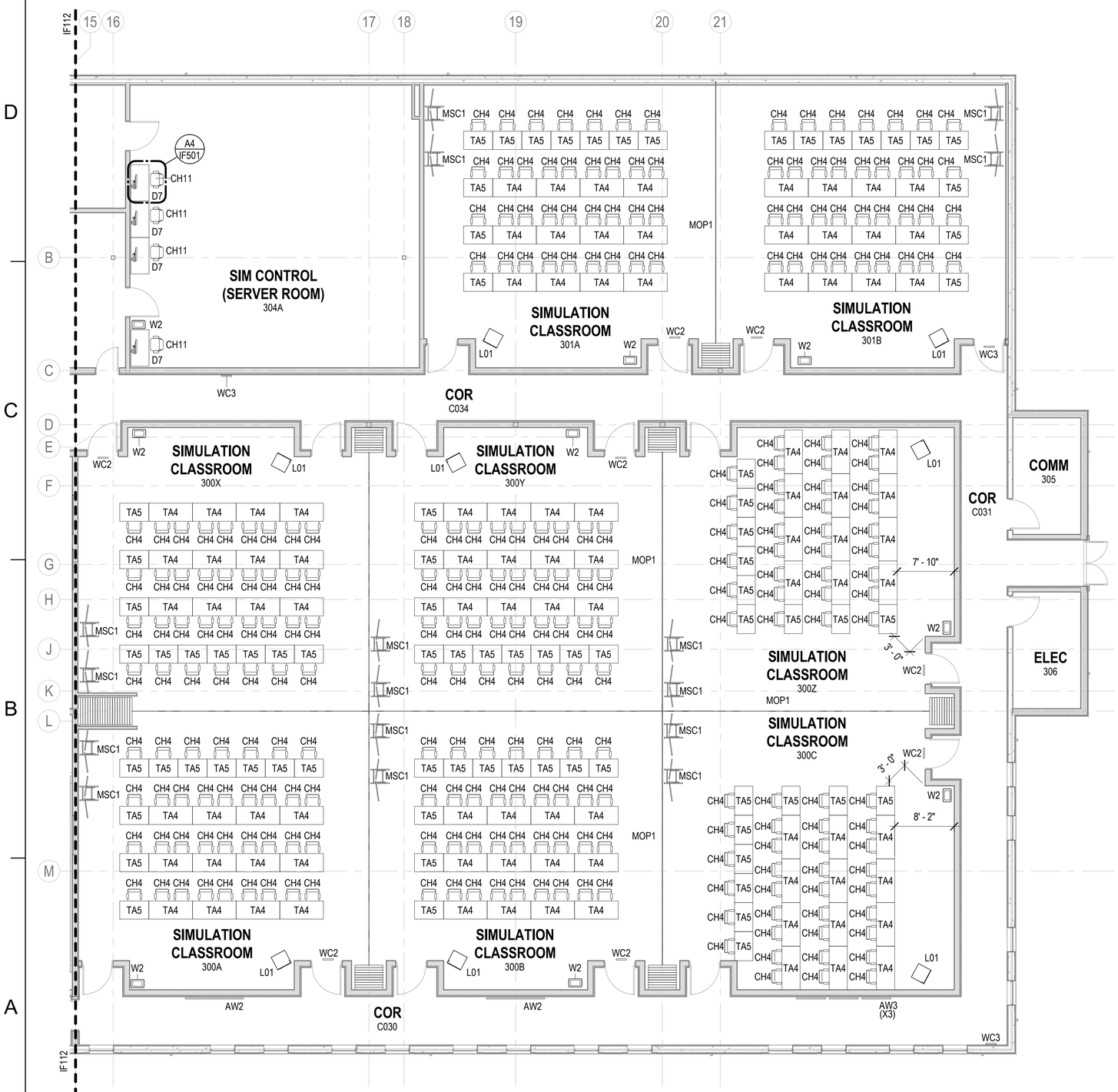

INTERIOR FF&E - FLOOR PLAN - AREA C

SCALE: 1/8" = 1'-0"

LEGEND - INTERIOR FF&E (GFGI)

TAG	DESCRIPTION	QTY
AW1	COMMAND BOARD - 6'W X 4'H	1
AW2	ART COLLAGE - 8'W X 6'H	10
AW3	ARTWORK - 4'W X 2'-6"H	17
CD1	CHAIR DOLLY	17
CH1	CONFERENCE CHAIR	48
CH2	ARMLESS TASK CHAIR	99
CH3	SIDE CHAIR	8
CH4	TRAINING CHAIR	382
CH5	LOVESEAT WITH ARMS	4
CH6	LOUNGE CHAIR	9
CH7	L-SHAPED BENCH	2
CH8	DINING CHAIR - REGULAR HEIGHT	48
CH9	LOUNGE CHAIR - NURSING	1
CH10	STOOL - COUNTER HEIGHT	10
CH11	ARMLESS WORK STOOL	6
CR1	MEDIA CREDENZA	1
D1	DESK - U-SHAPED	2
D2	DESK - U-SHAPED	2
D3	DESK - SINGLE	3
D4	DESK - SINGLE	4
D5	WORK TABLE	1
D6	CONTROL DESK	3
D7	DESK WITH STORAGE ABOVE - SINGLE	4
F1	LATERAL FILE CABINET - 4-HIGH	2
F2	FLAT FILE CABINET	8
F3	COMBINATION TOOL CABINET	4
F4	KEYED LOCKER	1
FE1	10LB ABC FIRE EXTINGUISHER	16
FE2	13.25LB FE13 CLEANGUARD EXTINGUISHER	1
IS1	INDUSTRIAL SHELVING - 5 SHELF	31
IS2	INDUSTRIAL SHELVING - 5 SHELF	12
JC1	JANITOR CART	2
L01	AV LECTERN - 24" X 24"	13
MOP1	OPERABLE PARTITION	11
MSC1	MOBILE SCREEN CART - DUAL	22
MW1	COUNTER TOP MICROWAVE	4
R1	REFRIGERATOR - FRENCH DOOR WITH ICE	2
R2	U.C. REFRIGERATOR - CP351WADA	1
TA1	CONFERENCE TABLE WITH POWER	2
TA2	CONFERENCE TABLE	1
TA3	CONFERENCE TABLE	1
TA4	TRAINING TABLE - DOUBLE	159
TA5	TRAINING TABLE - SINGLE	112
TA6	DINING TABLE - 36"SQ.- REGULAR HEIGHT	12
TA7	SIDE TABLE - NURSING	1
W1	WASTE UNIT	4
W2	WASTE BIN - 7-GAL SMALL DESK SIZE	34
W3	WASTE BIN (RECYCLING) - 7-GAL SMALL DESK SIZE	7
W4	WASTE UNIT (RECYCLING)	4
WC1	WALL CLOCK - BATTERY OPERATED	21
WC2	WALL CLOCK - TIME ZONE - CACCTUS	11
WC3	WALL CLOCK - TIME ZONE - MTWS	2
WS1	WORKSTATION - 66"H - 6' X 5'	26
WS2	WORKSTATION - 66"H - 6' X 8'	2
WS3	WORKSTATION - BENCHING - 5' X 2'-6"	10

NOTES - INTERIOR FF&E

1 ITEMS LISTED AS 'FF&E PACKAGE' ARE PART OF THE FF&E PACKAGE THAT IS PART OF A PLANNED CONTRACT MODIFICATION AND ARE SHOWN FOR COORDINATION PURPOSES ONLY.
2 ITEMS LISTED AS 'CFCI' ARE ITEMS THAT ARE PROVIDED BY THE CONTRACTOR UNDER THE CURRENT CONSTRUCTION CONTRACT.
3 ITEMS LISTED AS 'UPUI' ARE USER FURNISHED AND USER INSTALLED. SHOWN FOR COORDINATION.
4 SEE TELECOM DRAWINGS FOR TV SIZE AND MOUNT INFORMATION.
5 PROVIDE BLOCKING FOR WALL MOUNTED FF&E ITEMS AS REQUIRED. CONFIRM SIZES AND LOCATIONS WITH CONTRACTING OFFICER. PRIOR TO INSTALL.
6 REFER TO IF501 FOR FURNITURE DETAILS.
7 MOUNT WALL CLOCKS (WC1, WC2, WC3) AT 7'-6" A.F.F. TO BOTTOM OF FIXTURE. CENTER WHERE POSSIBLE AT DOORS.
8 MAKERBOARDS TO HAVE ANODIZED ALUMINUM TRIM. MOUNT MARKERBOARDS AT 42" AFF TO BOTTOM EDGE. MARKER BOARDS INCLUDE (1) SET OF TOOL TRAYS PER ROOM.

LEGEND - INTERIOR FF&E (WORKSTATION) TAG

XX — POD IDENTIFIER

LEGEND - INTERIOR FF&E (CFCI)

TAG	DESCRIPTION	QTY
CH13	SEDIA SYSTEMS G20 AUDITORIUM CHAIR - 26"W	121
MB1	MARKER BOARD - 8' X 4'	16

LEGEND - USER PROVIDED EQUIPMENT (UPUI)

TAG	DESCRIPTION	QTY
UPUI.1	VENDING - CANDY	2
UPUI.2	VENDING - BEVERAGE	2
UPUI.3	COFFEE MAKER - NON PLUMBED	2
UPUI.4	FLOOR COPIER/PRINTER	4

KEYPLAN

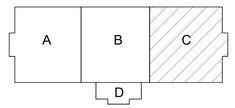

0 4' - 0" 8' - 0" 16' - 0"

SCALE: 1/8" = 1' - 0"

N

		APPR
		DATE
		DESCRIPTION
		SYM

NAVFAC

PRELIMINARY FOR REFERENCE ONLY

SEAL

IRQ Jordan JOINT VENTURE

Michael Baker INTERNATIONAL
100 AIRSIDE DRIVE
MOON TOWNSHIP, PA 15108
A/E INFO

APPROVED

FOR COMMANDER NAVFAC

ACTIVITY
MARINE CORPS BASE
CAMP LEJEUNE

SATISFACTORY TO DATE

DES	SJK	DRW	AND	CHK	NCW

PM

BRANCH MANAGER

CHIEF ENG/ARCH

FIRE PROTECTION

DEPARTMENT OF THE NAVY
NAVAL FACILITIES ENGINEERING COMMAND ~ MID-ATLANTIC
ROICC FLORENCE CAMP LEJEUNE
MCB CAMP LEJEUNE

NAVAL FACILITIES ENGINEERING COMMAND ~ MID-ATLANTIC
JACKSONVILLE, NC
JACKSONVILLE, NC

P1338F II MEF SIMULATION/TRAINING CENTER
REPLACEMENT
INTERIOR FF&E - FLOOR PLAN - AREA C

SCALE:	AS NOTED
EPROJECT NO.:	1590892
CONSTR. CONTR. NO.	N40085-20-C-0059
NAVFAC DRAWING NO.	
SHEET	OF

IF113

DP2 SUBMISSION – P1338 BUILDING - PRE-FINAL SUBMISSION

PLOTTED: 6/8/2021 3:06:37 PM

FILE NAME: BIM 360://HF PACKAGE 3/P1338 MEF SIM CTR-1590892-A.rvt

LEGEND - INTERIOR FF&E (GFGI)

TAG	DESCRIPTION	QTY
AW1	COMMAND BOARD - 6'W X 4'H	1
AW2	ART COLLAGE - 8'W X 6'H	10
AW3	ARTWORK - 4'W X 2'-6"H	17
CD1	CHAIR DOLLY	17
CH1	CONFERENCE CHAIR	48
CH2	ARMLESS TASK CHAIR	99
CH3	SIDE CHAIR	8
CH4	TRAINING CHAIR	382
CH5	LOVESEAT WITH ARMS	4
CH6	LOUNGE CHAIR	9
CH7	L-SHAPED BENCH	2
CH8	DINING CHAIR - REGULAR HEIGHT	48
CH9	LOUNGE CHAIR - NURSING	1
CH10	STOOL - COUNTER HEIGHT	10
CH11	ARMLESS WORK STOOL	6
CR1	MEDIA CREDENZA	1
D1	DESK - U-SHAPED	2
D2	DESK - U-SHAPED	2
D3	DESK - SINGLE	3
D4	DESK - SINGLE	4
D5	WORK TABLE	1
D6	CONTROL DESK	3
D7	DESK WITH STORAGE ABOVE - SINGLE	4
F1	LATERAL FILE CABINET - 4-HIGH	2
F2	FLAT FILE CABINET	8
F3	COMBINATION TOOL CABINET	4
F4	KEYED LOCKER	1
FE1	10LB ABC FIRE EXTINGUISHER	16
FE2	13.25LB FE13 CLEANGUARD EXTINGUISHER	1
IS1	INDUSTRIAL SHELVING - 5 SHELF	31
IS2	INDUSTRIAL SHELVING - 5 SHELF	12
JC1	JANITOR CART	2
L01	AV LECTERN - 24" X 24"	13
MOP1	OPERABLE PARTITION	11
MSC1	MOBILE SCREEN CART - DUAL	22
MW1	COUNTER TOP MICROWAVE	4
R1	REFRIGERATOR - FRENCH DOOR WITH ICE	2
R2	U.C. REFRIGERATOR - CP351WADA	1
TA1	CONFERENCE TABLE WITH POWER	2
TA2	CONFERENCE TABLE	1
TA3	CONFERENCE TABLE	1
TA4	TRAINING TABLE - DOUBLE	159
TA5	TRAINING TABLE - SINGLE	112
TA6	DINING TABLE - 36"SQ.- REGULAR HEIGHT	12
TA7	SIDE TABLE - NURSING	1
W1	WASTE UNIT	4
W2	WASTE BIN - 7-GAL SMALL DESK SIZE	34
W3	WASTE BIN (RECYCLING) - 7-GAL SMALL DESK SIZE	7
W4	WASTE UNIT (RECYCLING)	4
WC1	WALL CLOCK - BATTERY OPERATED	21
WC2	WALL CLOCK - TIME ZONE - CACCTUS	11
WC3	WALL CLOCK - TIME ZONE - MTWS	2
WS1	WORKSTATION - 66"H - 6' X 5'	26
WS2	WORKSTATION - 66"H - 6' X 8'	2
WS3	WORKSTATION - BENCHING - 5' X 2'-6"	10

NOTES - INTERIOR FF&E

1 ITEMS LISTED AS 'FF&E PACKAGE' ARE PART OF THE FF&E PACKAGE THAT IS PART OF A PLANNED CONTRACT MODIFICATION AND ARE SHOWN FOR COORDINATION PURPOSES ONLY.
2 ITEMS LISTED AS 'CFCI' ARE ITEMS THAT ARE PROVIDED BY THE CONTRACTOR UNDER THE CURRENT CONSTRUCTION CONTRACT.
3 ITEMS LISTED AS 'UPUI' ARE USER FURNISHED AND USER INSTALLED. SHOWN FOR COORDINATION.
4 SEE TELECOM DRAWINGS FOR TV SIZE AND MOUNT INFORMATION.
5 PROVIDE BLOCKING FOR WALL MOUNTED FF&E ITEMS AS REQUIRED. CONFIRM SIZES AND LOCATIONS WITH CONTRACTING OFFICER. PRIOR TO INSTALL.
6 REFER TO IF501 FOR FURNITURE DETAILS.
7 MOUNT WALL CLOCKS (WC1, WC2, WC3) AT 7'-6" A.F.F. TO BOTTOM OF FIXTURE. CENTER WHERE POSSIBLE AT DOORS.
8 MAKERBOARDS TO HAVE ANODIZED ALUMINUM TRIM. MOUNT MARKERBOARDS AT 42" AFF TO BOTTOM EDGE. MARKER BOARDS INCLUDE (1) SET OF TOOL TRAYS PER ROOM.

LEGEND - INTERIOR FF&E (WORKSTATION) TAG

XX — POD IDENTIFIER

LEGEND - INTERIOR FF&E (CFCI)

TAG	DESCRIPTION	QTY
CH13	SEDIA SYSTEMS G20 AUDITORIUM CHAIR - 26"W	121
MB1	MARKER BOARD - 8' X 4'	16

LEGEND - USER PROVIDED EQUIPMENT (UPUI)

TAG	DESCRIPTION	QTY
UPUI.1	VENDING - CANDY	2
UPUI.2	VENDING - BEVERAGE	2
UPUI.3	COFFEE MAKER - NON PLUMBED	2
UPUI.4	FLOOR COPIER/PRINTER	4

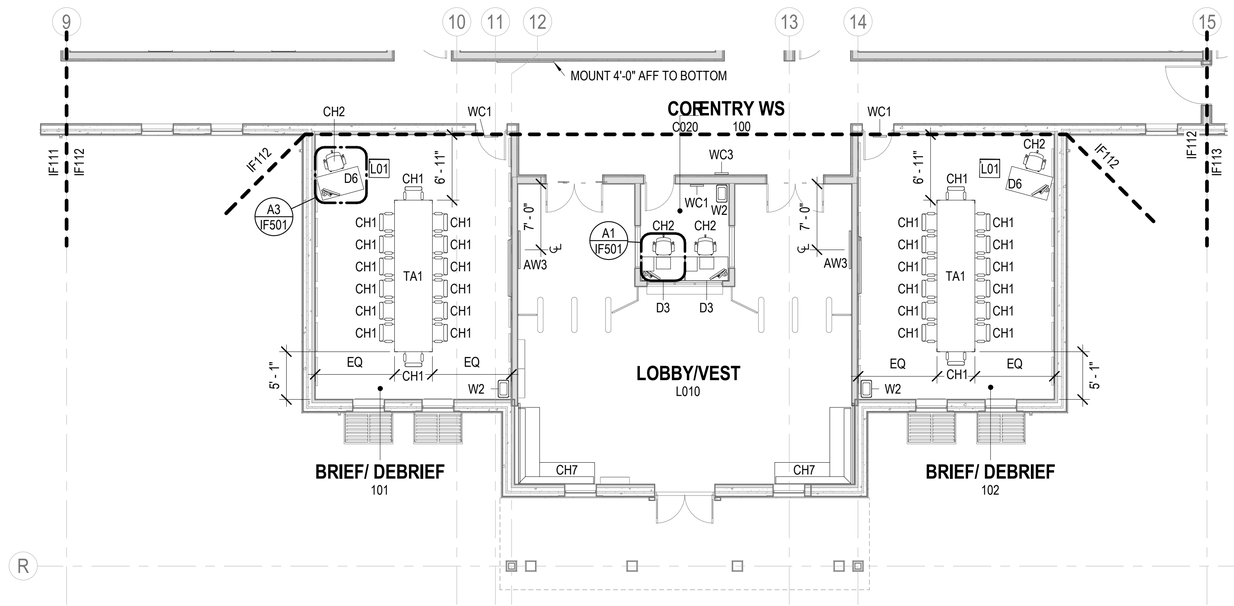

INTERIOR FF&E - FLOOR PLAN - AREA D

SCALE: 1/8" = 1'-0"

KEYPLAN

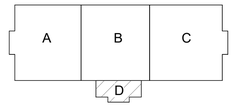

0 4' - 0" 8' - 0" 16' - 0"

SCALE: 1/8" = 1' - 0"

N

APPR	DATE	DESCRIPTION	SYM

NAVFAC

PRELIMINARY FOR REFERENCE ONLY

SEAL

W.M. Jordan COMPANY – A JOINT VENTURE –

Michael Baker INTERNATIONAL

100 AIRSIDE DRIVE
MOON TOWNSHIP, PA 15108 A/E INFO

APPROVED

FOR COMMANDER NAVFAC

ACTIVITY
MARINE CORPS BASE CAMP LEJEUNE

SATISFACTORY TO DATE

DES SJK | DRW AND | CHK NCW

PM

BRANCH MANAGER

CHIEF ENG/ARCH

FIRE PROTECTION

DEPARTMENT OF THE NAVY
NAVAL FACILITIES ENGINEERING COMMAND
ROICC FLORENCE CAMP LEJEUNE
MCB CAMP LEJEUNE

NAVAL FACILITIES ENGINEERING COMMAND – MID-ATLANTIC
JACKSONVILLE, NC

JACKSONVILLE, NC
P1338F II MEF SIMULATION/TRAINING CENTER
REPLACEMENT
INTERIOR FF&E - FLOOR PLAN - AREA D

SCALE: AS NOTED
EPROJECT NO.: 1590892
CONSTR. CONTR. NO.
N40085-20-C-0059
NAVFAC DRAWING NO.
SHEET OF

IF114

DP2 SUBMISSION – P1338 BUILDING - PRE-FINAL SUBMISSION

PLOTTED: 6/8/2021 3:06:38 PM

FILE NAME: BIM 360://HF PACKAGE 3/P1338 MEF SIM CTR-1590892-A.rvt

LEGEND - INTERIOR FF&E (GFGI)

TAG	DESCRIPTION	QTY
AW1	COMMAND BOARD - 6'W X 4'H	1
AW2	ART COLLAGE - 8'W X 6'H	10
AW3	ARTWORK - 4'W X 2'-6"H	17
CD1	CHAIR DOLLY	17
CH1	CONFERENCE CHAIR	48
CH2	ARMLESS TASK CHAIR	99
CH3	SIDE CHAIR	8
CH4	TRAINING CHAIR	382
CH5	LOVESEAT WITH ARMS	4
CH6	LOUNGE CHAIR	9
CH7	L-SHAPED BENCH	2
CH8	DINING CHAIR - REGULAR HEIGHT	48
CH9	LOUNGE CHAIR - NURSING	1
CH10	STOOL - COUNTER HEIGHT	10
CH11	ARMLESS WORK STOOL	6
CR1	MEDIA CREDENZA	1
D1	DESK - U-SHAPED	2
D2	DESK - U-SHAPED	2
D3	DESK - SINGLE	3
D4	DESK - SINGLE	4
D5	WORK TABLE	1
D6	CONTROL DESK	3
D7	DESK WITH STORAGE ABOVE - SINGLE	4
F1	LATERAL FILE CABINET - 4-HIGH	2
F2	FLAT FILE CABINET	8
F3	COMBINATION TOOL CABINET	4
F4	KEYED LOCKER	1
FE1	10LB ABC FIRE EXTINGUISHER	16
FE2	13.25LB FE13 CLEANGUARD EXTINGUISHER	1
IS1	INDUSTRIAL SHELVING - 5 SHELF	31
IS2	INDUSTRIAL SHELVING - 5 SHELF	12
JC1	JANITOR CART	2
L01	AV LECTERN - 24" X 24"	13
MOP1	OPERABLE PARTITION	11
MSC1	MOBILE SCREEN CART - DUAL	22
MW1	COUNTER TOP MICROWAVE	4
R1	REFRIGERATOR - FRENCH DOOR WITH ICE	2
R2	U.C. REFRIGERATOR - CP351WADA	1
TA1	CONFERENCE TABLE WITH POWER	2
TA2	CONFERENCE TABLE	1
TA3	CONFERENCE TABLE	1
TA4	TRAINING TABLE - DOUBLE	159
TA5	TRAINING TABLE - SINGLE	112
TA6	DINING TABLE - 36"SQ.- REGULAR HEIGHT	12
TA7	SIDE TABLE - NURSING	1
W1	WASTE UNIT	4
W2	WASTE BIN - 7-GAL SMALL DESK SIZE	34
W3	WASTE BIN (RECYCLING) - 7-GAL SMALL DESK SIZE	7
W4	WASTE UNIT (RECYCLING)	4
WC1	WALL CLOCK - BATTERY OPERATED	21
WC2	WALL CLOCK - TIME ZONE - CACCTUS	11
WC3	WALL CLOCK - TIME ZONE - MTWS	2
WS1	WORKSTATION - 66"H - 6' X 5'	26
WS2	WORKSTATION - 66"H - 6' X 8'	2
WS3	WORKSTATION - BENCHING - 5' X 2'-6"	10

NOTES - INTERIOR FF&E

1 ITEMS LISTED AS 'FF&E PACKAGE' ARE PART OF THE FF&E PACKAGE THAT IS PART OF A PLANNED CONTRACT MODIFICATION AND ARE SHOWN FOR COORDINATION PURPOSES ONLY.
2 ITEMS LISTED AS 'CFCI' ARE ITEMS THAT ARE PROVIDED BY THE CONTRACTOR UNDER THE CURRENT CONSTRUCTION CONTRACT.
3 ITEMS LISTED AS 'UPUI' ARE USER FURNISHED AND USER INSTALLED. SHOWN FOR COORDINATION.
4 SEE TELECOM DRAWINGS FOR TV SIZE AND MOUNT INFORMATION.
5 PROVIDE BLOCKING FOR WALL MOUNTED FF&E ITEMS AS REQUIRED. CONFIRM SIZES AND LOCATIONS WITH CONTRACTING OFFICER. PRIOR TO INSTALL.
6 REFER TO IF501 FOR FURNITURE DETAILS.
7 MOUNT WALL CLOCKS (WC1, WC2, WC3) AT 7'-6" A.F.F. TO BOTTOM OF FIXTURE. CENTER WHERE POSSIBLE AT DOORS.
8 MAKERBOARDS TO HAVE ANODIZED ALUMINUM TRIM. MOUNT MARKERBOARDS AT 42" AFF TO BOTTOM EDGE. MARKER BOARDS INCLUDE (1) SET OF TOOL TRAYS PER ROOM.

LEGEND - INTERIOR FF&E (WORKSTATION) TAG

XX — POD IDENTIFIER

LEGEND - INTERIOR FF&E (CFCI)

TAG	DESCRIPTION	QTY
CH13	SEDIA SYSTEMS G20 AUDITORIUM CHAIR - 26"W	121
MB1	MARKER BOARD - 8' X 4'	16

LEGEND - USER PROVIDED EQUIPMENT (UPUI)

TAG	DESCRIPTION	QTY
UPUI.1	VENDING - CANDY	2
UPUI.2	VENDING - BEVERAGE	2
UPUI.3	COFFEE MAKER - NON PLUMBED	2
UPUI.4	FLOOR COPIER/PRINTER	4

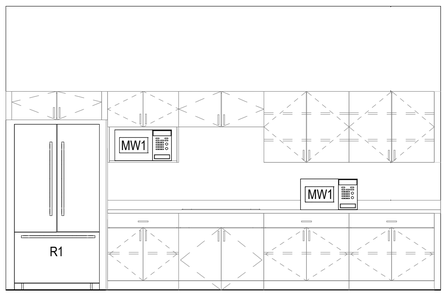

INTERIOR FINISH ELEVATION - ADMIN BREAK 108 EQUIPMENT
SCALE: 3/8" = 1'-0" — A2

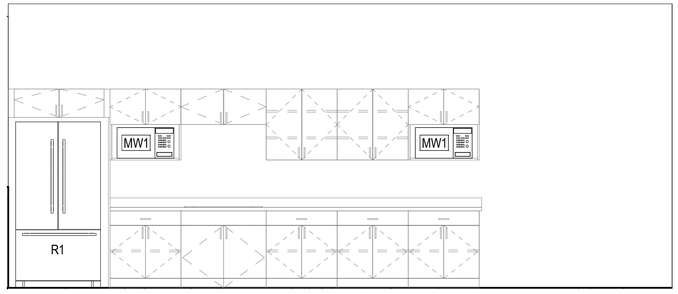

INTERIOR FINISH ELEVATION - BREAK ROOM 206 EQUIPMENT
SCALE: 3/8" = 1'-0" — A3

0 2' - 0" 4' - 0" 8' - 0"
SCALE: 3/8" = 1' - 0"

APPR	DATE	DESCRIPTION	SYM

NAVFAC

PRELIMINARY FOR REFERENCE ONLY
SEAL

IRQ WM Jordan COMPANY — A JOINT VENTURE —

Michael Baker INTERNATIONAL
100 AIRSIDE DRIVE
MOON TOWNSHIP, PA 15108 — A/E INFO

APPROVED
FOR COMMANDER NAVFAC

ACTIVITY
MARINE CORPS BASE CAMP LEJEUNE

SATISFACTORY TO DATE

DES	SJK	DRW	AND	CHK	NCW

PM
BRANCH MANAGER
CHIEF ENG/ARCH
FIRE PROTECTION

DEPARTMENT OF THE NAVY
NAVAL FACILITIES ENGINEERING COMMAND ~ MID-ATLANTIC
JACKSONVILLE, NC
ROICC FLORENCE CAMP LEJEUNE
MCB CAMP LEJEUNE
JACKSONVILLE, NC
P1338F II MEF SIMULATION/TRAINING CENTER REPLACEMENT
INTERIOR FFF&E ELEVATIONS - BREAK ROOM EQUIPMENT

SCALE: AS NOTED
EPROJECT NO.: 1590892
CONSTR. CONTR. NO.
N40085-20-C-0059
NAVFAC DRAWING NO.
SHEET OF
IF201

DP2 SUBMISSION – P1338 BUILDING - PRE-FINAL SUBMISSION

PLOTTED: 6/8/2021 3:06:39 PM
FILE NAME: BIM 360://HF PACKAGE 3/P1338 MEF SIM CTR-1590892-A.rvt

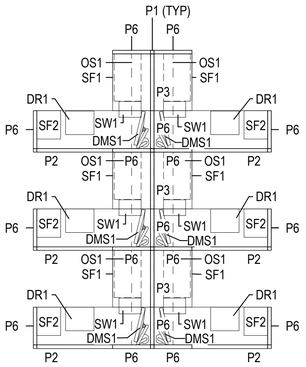

FURNITURE DETAIL - POD 1 (C1)

SCALE: 1/4" = 1'-0" IF111

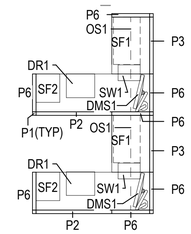

FURNITURE DETAIL - POD 2 (C2a)

SCALE: 1/4" = 1'-0" IF111

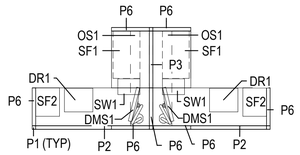

FURNITURE DETAIL - POD 3 (C2b)

SCALE: 1/4" = 1'-0" IF111

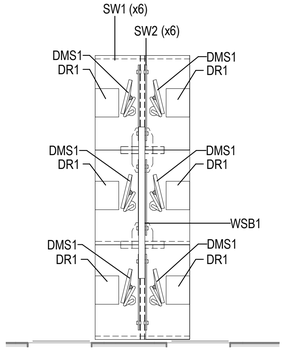

FURNITURE DETAIL - POD 4 (C3)

SCALE: 1/4" = 1'-0" IF111

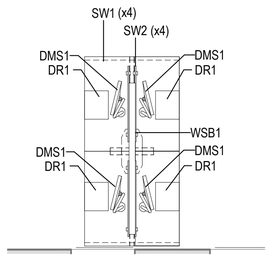

FURNITURE DETAIL - POD 5 (B1)

SCALE: 1/4" = 1'-0" IF111

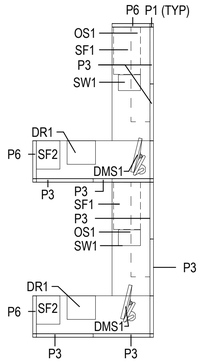

FURNITURE DETAIL - POD 6 (B2a)

SCALE: 1/4" = 1'-0" IF111

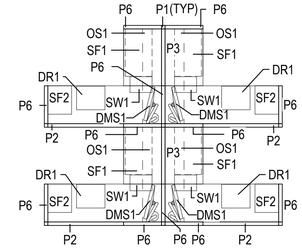

FURNITURE DETAIL - POD 7 (B2b)

SCALE: 1/4" = 1'-0" IF112

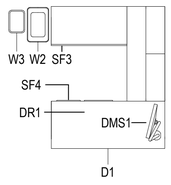

FURNITURE DETAIL - D1 (B3)

SCALE: 1/4" = 1'-0" IF111

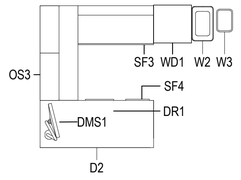

FURNITURE DETAIL - D2 (B4)

SCALE: 1/4" = 1'-0" IF111

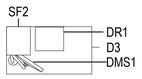

FURNITURE DETAIL - D3 (A1)

SCALE: 1/4" = 1'-0" IF114

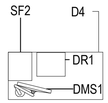

FURNITURE DETAIL - D4 (A2a)

SCALE: 1/4" = 1'-0" IF112

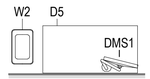

FURNITURE DETAIL - D5 (A2b)

SCALE: 1/4" = 1'-0" IF111

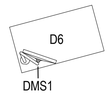

FURNITURE DETAIL - D6 (A3)

SCALE: 1/4" = 1'-0" IF114

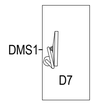

FURNITURE DETAIL - D7 (A4)

SCALE: 1/4" = 1'-0" IF113

NOTE: ROOM ORIENTATION VARIES. REFER TO IF100 SERIES.

NOTES - INTERIOR FF&E

1 ITEMS LISTED AS 'FF&E PACKAGE' ARE PART OF THE FF&E PACKAGE THAT IS PART OF A PLANNED CONTRACT MODIFICATION AND ARE SHOWN FOR COORDINATION PURPOSES ONLY.

2 ITEMS LISTED AS 'CFCI' ARE ITEMS THAT ARE PROVIDED BY THE CONTRACTOR UNDER THE CURRENT CONSTRUCTION CONTRACT.

3 ITEMS LISTED AS 'UPUI' ARE USER FURNISHED AND USER INSTALLED. SHOWN FOR COORDINATION.

4 SEE TELECOM DRAWINGS FOR TV SIZE AND MOUNT INFORMATION.

5 PROVIDE BLOCKING FOR WALL MOUNTED FF&E ITEMS AS REQUIRED. CONFIRM SIZES AND LOCATIONS WITH CONTRACTING OFFICER. PRIOR TO INSTALL.

6 REFER TO IF501 FOR FURNITURE DETAILS.

7 MOUNT WALL CLOCKS (WC1, WC2, WC3) AT 7'-6" A.F.F. TO BOTTOM OF FIXTURE. CENTER WHERE POSSIBLE AT DOORS.

8 MAKERBOARDS TO HAVE ANODIZED ALUMINUM TRIM. MOUNT MARKERBOARDS AT 42" AFF TO BOTTOM EDGE. MARKER BOARDS INCLUDE (1) SET OF TOOL TRAYS PER ROOM.

LEGEND - SYSTEMS FURNITURE (ACCESSORIES)

TAG	DESCRIPTION	QTY
DMS1	DUAL MONITOR STAND	56
DR1	PENCIL DRAWER	48
OS1	OVERHEAD STORAGE - 54"	28
OS3	HUTCH	4
SF1	LATERAL FILE - 30"	28
SF2	MOBILE PEDESTAL B/B/F - 18"	34
SF3	LATERAL FILE	4
SF4	PEDESTAL	4
SW1	SYSTEMS FURNITURE WASTE - 7-GAL SMALL DESK SIZE	38
SW2	SYSTEMS FURNITURE WORKSTATION SCREEN	10
WD1	WARDROBE	2
WSB1	POWERBAR	2

LEGEND - WORKSTATION (PANELS)

P1 - CONNECTOR
P2 - 42"W x 66"H PANEL
P3 - 36"W x 66"H PANEL
P4 - 54"W x 66"H PANEL
P5 - 48"W x 66"H PANEL
P6 - 24"W x 66"H PANEL

NO.	DESCRIPTION	DATE	APPR

NAVFAC

PRELIMINARY FOR REFERENCE ONLY

SEAL

IRQ Jordan COMPANY – A JOINT VENTURE –

Michael Baker INTERNATIONAL

100 AIRSIDE DRIVE
MOON TOWNSHIP, PA 15108 A/E INFO

APPROVED

FOR COMMANDER NAVFAC

ACTIVITY
MARINE CORPS BASE
CAMP LEJEUNE

SATISFACTORY TO DATE

DES SJK | DRW AND | CHK NCW

PM

BRANCH MANAGER

CHIEF ENG/ARCH

FIRE PROTECTION

DEPARTMENT OF THE NAVY
NAVAL FACILITIES ENGINEERING COMMAND
ROICC FLORENCE CAMP LEJEUNE
NAVAL FACILITIES ENGINEERING COMMAND ~ MID-ATLANTIC
JACKSONVILLE, NC
MCB CAMP LEJEUNE
JACKSONVILLE, NC
P1338F II MEF SIMULATION/TRAINING CENTER REPLACEMENT
FF&E - DETAILS

SCALE: AS NOTED
EPROJECT NO.: 1590892
CONSTR. CONTR. NO.
N40085-20-C-0059
NAVFAC DRAWING NO.
SHEET OF

IF501

DP2 SUBMISSION – P1338 BUILDING - PRE-FINAL SUBMISSION

0 2' - 0" 4' - 0" 8' - 0"
SCALE: 1/4" = 1' - 0"

PLOTTED: 6/8/2021 3:06:40 PM

FILE NAME: BIM 360://HF PACKAGE 3/P1338 MEF SIM CTR-1590892-A.rvt

FIRE ALARM LEGEND

SYMBOL	DESCRIPTION
FAAP	FIRE ALARM ANNUNCIATOR PANEL
FMCP	FIRE ALARM CONTROL PANEL
DOC	DOCUMENT CABINET
DACT	DIGITAL ALARM COMMUNICATOR PANEL
NAC	NOTIFICATION APPLIANCE CIRCUIT PANEL
LOC	LOCAL OPERATOR CONTROL
SPD	SURGE PROTECTION DEVICE
CM	CONTROL MODULE
MM	MONITOR MODULE
F	MANUAL PULL STATION
P	SMOKE DETECTOR / PHOTOELECTRIC
ID	SMOKE DETECTOR / IN DUCT
CO	CARBON MONOXIDE SENSOR
CD	COMBINATION SPEAKER / VISIBLE WALL MOUNTED. CD INDICATES CANDELA RATING.
C CD	COMBINATION SPEAKER / VISIBLE CEILING MOUNTED. CD INDICATES CANDELA RATING.
S	SPEAKER WALL MOUNTED.
C S	SPEAKER CEILING MOUNTED.
CD F	FIRE ALARM WALL MOUNTED VISUAL ONLY STROBE. CD INDICATES CANDELA RATING.
CD F C	FIRE ALARM CEILING MOUNTED VISUAL ONLY STROBE. CD INDICATES CANDELA RATING.
FS	FLOW SWITCH
TS	TAMPER SWITCH
V	BELL - VIBRATING

FIRE ALARM AND MASS NOTIFICATION GENERAL NOTES

1. PROVIDE A COMPLETE, ADDRESSABLE, FIRE ALARM AND MASS NOTIFICATION SYSTEM IN THE FACILITY. FIRE ALARM AND MASS NOTIFICATION SYSTEM MUST BE DESIGNED AND INSTALLED TO MEET THE REQUIREMENTS OF UFC 3-600-01, UFC 4-021-01, NFPA 70, NFPA 72, AND NFPA 101. SYSTEM SHALL BE SIMPLEX, NOTIFIER, OR FIRE-LITE.
2. IT IS THE INTENT OF THESE DOCUMENTS TO PROVIDE DESIGN, MATERIALS, AND EQUIPMENT FOR A TOTALLY FUNCTIONING AND OPERATING FIRE ALARM AND MASS NOTIFICATION SYSTEMS, INCLUDING THE PROPER INTERFACING AND COORDINATION WITH OTHER BUILDING SYSTEMS.
3. THE GENERAL CHARACTER AND SCOPE OF THE WORK IS ILLUSTRATED IN THE SPECIFICATIONS AND THE DRAWINGS. THE SPECIFICATIONS AND DRAWINGS ARE DIVIDED INTO SEVERAL SECTIONS FOR CONVENIENCE ONLY AND THE CONTRACT DOCUMENTS MUST BE CONSIDERED AS A WHOLE. THE CONTRACTOR MUST BE RESPONSIBLE FOR THE COORDINATION OF ALL TRADES, SUBCONTRACTORS, AND VENDORS ENGAGED IN THIS WORK.
4. THESE DRAWINGS DEPICT GENERAL LOCATIONS OF FIRE ALARM AND MASS NOTIFICATION SYSTEM EQUIPMENT AND FIELD DEVICES. FINAL LOCATIONS, QUANTITIES, APPLIANCE RATINGS, ETC. MUST BE PROVIDED BY THE INSTALLING CONTRACTOR IN ACCORDANCE WITH THE APPLICABLE CODES, STANDARDS, AND CONTRACT DOCUMENTS.
5. THE CONTRACTOR MUST OBTAIN REQUIRED PERMITS AND APPROVALS AS REQUIRED BY THE AUTHORITY HAVING JURISDICTION. THE CONTRACTOR MUST PAY FOR AND SECURE PERMITS AND FEES FOR FIRE PROTECTION SYSTEMS WORK.
6. PROVIDE FINAL SYSTEM LAYOUT DRAWINGS INCLUDING BATTERY CALCULATIONS AND VOLTAGE DROP CALCULATIONS AND OBTAIN APPROVAL OF THE FIRE MARSHAL AND ALL AUTHORITIES HAVING JURISDICTION. BATTERY CALCULATIONS MUST INCLUDE 20 PERCENT SAFETY MARGIN TO THE CALCULATED AMP-HOUR RATING PER NFPA 72. A BILL OF MATERIAL AND CONTACT ID POINT DESCRIPTION TABLE MUST BE INCLUDED IN THE FIRE ALARM AS-BUILT DRAWINGS.
7. PROVIDE FIRE ALARM AND MASS NOTIFICATION SPEAKERS AND STROBES THROUGHOUT THE PROJECT AREAS. PROVIDE ADDITIONAL NOTIFICATION APPLIANCE CIRCUIT (NAC) PANELS AS REQUIRED. EACH NAC LOADING MUST NOT EXCEED 75% OF ITS RATED OUTPUT.
8. PROVIDE DUCT SMOKE DETECTORS IN ALL SUPPLY DUCTS OF AIR HANDLING UNITS GREATER THAN 2,000 CFM . PROVIDE RELAYS FOR SHUT DOWN OF ASSOCIATED AIR HANDLING UNITS.
9. PROVIDE MONITOR MODULES, TAMPER AND FLOW SWITCHES FOR THE SPRINKLER RISER AND CONTROL VALVES.
10. WIRING FOR DEVICES MUST BE CLASS AS PROVIDE ALL FIRE ALARM CIRCUITS IN ELECTRICAL METALLIC TUBING (EMT) OR INTERMEDIATE METAL CONDUIT (IMC).
11. ALL RACEWAYS MUST BE FACTORY PAINTED RED. FLEXIBLE METALLIC OCNDUIT (FMC) SHALL NOT EXCEED 6 FEET AND MUST ONLY BE PERMITTED FOR CONNECTIONS TO JUNCTION BOXES TO FIELD DEVICES. PROVIDE A RACEWAY LISTED FOR THE INSTALLATION IN WET LOCATIONS, SUCH AS RIGID METALLIC CONDUIT (RMC) AND LIQUID TIGHT FLEXIBLE METAL CONDUIT (LFMC). WET LOCATIONS ARE CONSIDERED ANY LOCATION WITHIN A 5 FOOT RADIUS OF FIRE SUPPRESSION EQUIPMENT AS DEFINED BY NFPA 70.
12. DEVICES MUST BE FACTORY FINISHED WHITE.
13. PROVIDE RECHARGEABLE SEALED LEAD ACID TYPE BATTERIES TO OPERATE THE FIRE ALARM SYSTEM UNDER SUPERVISORY CONDITIONS FOR 48 HOURS AND AUDIBLE AND ALARM DEVICES FOR AN ADDITIONAL 15 MINUTES OR 60 MINUTES FOR THE MASS NOTIFICATION SYSTEM IMMEDIATELY UPON LOSS OF POWER, WHICHEVER IS GREATER.
14. INSTALLING CONTRACTOR MUST COORDINATE WITH MECHANICAL, ELECTRICAL AND OTHER TRADES TO FACILITATE INSTALLATION THAT IS COORDINATED AND CONSISTENT WITH BUILDING DESIGN, USE AND INTENT.
15. COORDINATE FINAL SYSTEM TESTING WITH OTHER CONTRACTORS TO PROVIDE FULL SYSTEM OPERATION AT TIME OF TESTING.
16. THE FIRE PROTECTION CONTRACTOR MUST BE RESPONSIBLE FOR SCHEDULING AND PERFORMING INSPECTIONS AND TESTS AS REQUIRED BY THE CONTRACTING OFFICER.
17. FLOOR AND WALL CONDUIT PENETRATIONS MUST BE SLEEVED AND SEALED AS REQUIRED.
18. PENETRATIONS OF THE BUILDING AIR BARRIER MUST BE SEALED TO MAINTAIN THE INTEGRITY OF THE AIR BARRIER.
19. CONDUIT SIZE AND PERCENTAGE OF FILL TO BE DETERMINED BY INSTALLING CONTRACTOR AND MUST COMPLY WITH APPLICABLE STANDARDS AND SYSTEM MANUFACTURER'S REQUIREMENTS.
20. CONDUIT AND WIRING MUST BE CONCEALED ABOVE CEILINGS IN FINISHED AREAS AND AREAS WITH DROPPED CEILINGS. CONDUIT AND WIRING INSTALLED ABOVE CEILINGS MUST NOT INTERFERE WITH THE REMOVAL OF THE CEILING TILES, AND HVAC UNIT AIR FILTERS. IN AREAS WITHOUT CEILING, CONDUIT AND WIRING MUST BE INSTALLED AS TIGHT AS POSSIBLE TO UNDERSIDE OF FLOOR SLAB, UNLESS OBSTRUCTIONS REQUIRE OTHERWISE.
20. FIRE ALARM WIRING MUST NOT BE INSTALLED IN THE SAME CONDUITS OR JUNCTION BOXES AS LIGHTING, POWER OR OTHER WIRING.
21. RUN WIRING TO CONTROL PANELS IN THE VERTICAL OR HORIZONTAL PLANE, MAKE TURNS AT 90 DEGREE ANGLES, AND TIGHTLY BUNDLE, WRAP, AND IDENTIFY CONDUCTORS INDIVIDUALLY WITH PERMANENT MARKINGS.
22. PULL CONDUCTORS SPLICE FREE. THE USE OF WIRE NUTS, CRIMPED CONNECTORS, OR TWISTING OF CONDUCTORS IS PROHIBITED.
23. TERMINATIONS MUST BE AT A TERMINAL STRIP. DEVICES MUST HAVE SCREW TERMINALS.
24. SIGNALING LINE AND INITIATING DEVICE CIRCUITS MUST BE MINIMUM 16 GAUGE WIRE.
25. WALL ADDRESSABLE CONTROL MODULES AND ADDRESSABLE MONITOR MODULES MUST BE LOCATED WITHIN 10 FEET OF THE DEVICES BEING MONITORED. DUCT SMOKE DETECTORS MUST BE WITHIN 3 FEET OF ADDRESSABLE RELAY.
26. CONTRACTOR MUST PROVIDE ADEQUATE AUDIBLE NOTIFICATION DEVICES TO MEET THE AUDIBILITY AND INTELLIGIBILITY REQUIREMENTS OF NFPA 72 AND UFC 4-021-01. THE MINIMUM REQUIRED COMMON INTELLIGIBILITY SCALE IS 0.7.
27. PROVIDE HORN SPEAKERS MOUNTED ON THE EXTERIOR OF THE BUILDING IN ADDITION TO PROVIDE NOTIFICATION OF ANY AREAS COMMONLY USED BY BUILDING OCCUPANTS. AREAS INCLUDE COURTYARDS, COVERED BREAK AREAS, DESIGNATED SMOKING AREAS, AND SIDEWALKS LEADING FROM THE BUILDING'S EXIT DOORS TO A PUBLIC STREET OR FROM PARKING AREAS FOR A DISTANCE UP TO 16 FEET FROM THE BUILDING.
28. PROVIDE VISIBLE NOTIFICATION APPLIANCES IN COMMON AND PUBLIC SPACES AS REQUIRED BY THE APPLICABLE CODES TO MEET VISIBLE SIGNALING INTENSITY REQUIREMENTS.
29. PROVIDE CLEAR STROBE MARKED "ALERT" FOR FIRE ALARM AND MASS NOTIFICATION SYSTEM NOTIFICATIONS.
30. COORDINATE DUCT SMOKE DETECTION WITH MECHANICAL DESIGN CONTRACTOR. DUCT SMOKE DETECTOR REMOTE LAMPS AND TEST STATION MUST BE WALL MOUNTED, ACCESSIBLE, VISIBLE, AND PERMANENTLY LABELED. THE DUCT DETECTORS MUST RECEIVE THEIR POWER AND RESET FROM THE FIRE ALARM CONTROL UNIT.
31. PROVIDE REMOTE TEST LAMPS FOR ANY INACCESSIBLE DEVICES.
32. PROVIDE SURGE PROTECTION FOR CIRCUITS THAT ENTER OR EXIT A BUILDING.
33. PROVIDE WEATHERPROOF DEVICES AS REQUIRED AND AS INDICATED.
34. DEVICES MOUNTED IN SUSPENDED CEILING MUST BE MOUNTED IN THE CENTER OF THE CEILING TILE.
35. PROVIDE A DOCUMENTATION CABINET ADJACENT TO FIRE ALARM CONTROL PANEL. CABINET MUST BE STEEL WITH LOCKING, HINGE MOUNTED DOOR PROMINENTLY LABELED "SYSTEM RECORD DOCUMENTS". CABINET MUST STORE LIFE SAFETY, FIRE ALARM, AND SPRINKLER AS-BUILT DRAWINGS AND NFPA 72 RECORD OF COMPLETION IN PAPER FORMAT. CD/DVD OF SITE-SPECIFIC SOFTWARE, FIRE ALARM AND SPRINKLER AS-BUILT DRAWINGS, NFPA 72 RECORD OF COMPLETION, AND OPERATIONS AND MAINTENANCE MANUALS MUST BE STORED IN A CD JEWEL CASE.
36. PROVIDE A PARTS BOX ADJACENT TO THE FMCP. CABINET MUST BE STEEL, LOCKING, WITH HINGE-MOUNTED DOOR, KEYED THE SAME AS THE FMCP. CABINET MUST INCLUDE SPARE PARTS AS DEFINED IN THE PROJECT SPECIFICATIONS, PLUS FOUR (4) FUSES FOR EACH FUSED CONDUIT.
37. DUAL-ACTION, MANUAL FIRE PULL STATIONS MUST BE PROVIDED WITHIN 5 FEET OF EVERY EXIT OF THE BUILDING. MANUAL PULL STATIONS MUST BE RESET WITH THE USE OF A KEY ONLY. USE OF A WRENCH, HEX KEY, ALLEN KEY, OR ALLEN WRENCH TO OPEN A MANUAL PULL STATION MUST NOT BE PERMITTED.
38. WATER FLOW ALARM AND VALVE TAMPER SWITCHES ATTACHED TO THE BUILDING WET-PIPE SPRINKLER SYSTEM TO PROVIDE REQUIRED SUPERVISION MUST BE CONNECTED TO THE FIRE ALARM SYSTEM.
39. INSTALL A POINT REPORTING DIGITAL ALARM COMMUNICATOR TRANSMITTER THAT IS COMPATIBLE WITH THE SUR-GARD SYSTEM III MULTI-PLATFORM DIGITAL TELEPHONE RECEIVER AND IS PROGRAMMED TO REPORT BY POINTS VIA CONTACT ID PROTOCOL. PROVIDE TWO (2) CAT 6 UTP CABLES INSIDE 1-INCH CONDUIT FROM THE FMCP TO THE TELEPHONE EQUIPMENT ROOM.
40. THE GOVERNMENT WILL INSTALL THE TRX-401 MASS NOTIFICATION TRANSCEIVER. THE CONTRACTOR MUST PROVIDE CONDUIT FOR MOUNTING THE MASS NOTIFICATION ANTENNA, CONDUIT FOR THE MASS NOTIFICATION ANTENNA CABLE, CONDUIT TO CONNECT THE TRANSCEIVER TO THE FIRE ALARM CONTROL PANEL, AND 120V POWER FOR THE TRANSCEIVER.
41. PROVIDE AND ATTACH A LEGIBLE, TYPED LABEL ON ALL ADDRESSABLE DEVICES TO INDICATE ITS ADDRESS. FOR ANY DEVICE LOCATED ABOVE A FALSE CEILING, CONTRACTOR MUST PROVIDE A LEGIBLE, TYPED LABEL ATTACHED TO THE CEILING GRID THE DEVICE NOMENCLATURE AND ADDRESS.

APPR | DATE | SYM | DESCRIPTION

NAVFAC

PRELIMINARY FOR REFERENCE ONLY

SEAL

WNM Jordan COMPANY – A JOINT VENTURE –

Michael Baker INTERNATIONAL

100 AIRSIDE DRIVE
MOON TOWNSHIP, PA 15108 A/E INFO

APPROVED

FOR COMMANDER NAVFAC

ACTIVITY
MARINE CORPS BASE
CAMP LEJEUNE

SATISFACTORY TO DATE

DES JAM | DRW ADH | CHK DJW

PM

BRANCH MANAGER

CHIEF ENG/ARCH

FIRE PROTECTION

DEPARTMENT OF THE NAVY
NAVAL FACILITIES ENGINEERING COMMAND ~ MID-ATLANTIC
ROIICC FLORENCE CAMP LEJEUNE
MCB CAMP LEJEUNE
JACKSONVILLE, NC

P1338F II MEF SIMULATION/TRAINING CENTER REPLACEMENT

FIRE ALARM - GENERAL NOTES, ABBREVIATIONS, & SYMBOLS

SCALE: AS NOTED

EPROJECT NO.: 1590892

CONSTR. CONTR. NO.
N40085-20-C-0059

NAVFAC DRAWING NO.

SHEET OF

FA001

DP2 SUBMISSION – P1338 BUILDING - PRE-FINAL SUBMISSION

PLOTTED: 6/11/2021 7:34:38 AM

FILE NAME: BIM 360://HF PACKAGE 3/P1338 MEF SIM CTR-1590892-F.rvt

			ANNUNCIATE ALARM SIGNAL AT CONTROL PANEL	ANNUNCIATE TROUBLE SIGNAL AT CONTROL PANEL	ANNUNCIATE SUPERVISORY SIGNAL AT CONTROL PANEL	ACTIVATE FIRE ALARM/MASS NOTIFICATION VISUAL AND AUDIBLE APPLIANCES	SEND ALARM SIGNAL TO SUPERVISING STATION	SEND TROUBLE SIGNAL TO SUPERVISING STATION	SEND SUPERVISORY SIGNAL TO SUPERVISING STATION	SHUTDOWN ASSOCIATED AIR HANDLING UNITS	ACTIVATE WATERFLOW ALARM ELECTRIC BELL	DEACTIVATE FIRE ALARM AUDIBLE SIGNALS	RETURN LIGHTING TO NORMAL LEVELS	SEND SIGNAL TO BASEWIDE MASS NOTIFICATION SYSTEM	SILENCE PA SYSTEM	INITIATE UNIQUE CARBON MONOXIDE MASS NOTIFICATION MESSAGE	RELEASE EGRESS TURNSILES
			A	B	C	D	E	F	G	H	I	J	K	L	M	N	P
ALARM CONDITIONS	ACTIVATION OF A MANUAL FIRE ALARM PULL STATION	1	X			X	X						X		X		X
	ACTIVATION OF AREA SMOKE DETECTOR	2	X			X	X						X		X		X
	ACTIVATION OF DUCT SMOKE DETECTOR	3			X				X	X							
	ACTIVATION OF AIR SAMPLING DETECTION				X				X	X					X		X
	ACTIVATION OF WATERFLOW SWITCH	4	X			X	X				X		X		X		X
	ACTIVATION OF A CARBON MONOXIDE DETECTOR	5	X			X	X						X		X	X	
TROUBLE CONDITIONS	COMMON TROUBLE	6		X				X									
	FIELD WIRING OR SYSTEM COMPONENT FAULT	7		X				X									
	LOSS OF PRIMARY AC POWER	8		X				X									
	OPEN CIRCUIT	9		X				X									
	NAC SHORT	10		X				X									
	LOW BATTERY	11		X				X									
	CIRCUIT DISCONNECT	12		X				X									
	GROUND FAULT	13		X				X									
SUPERVISORY CONDITIONS	COMMON SUPERVISORY	14			X				X								
	TAMPER SWITCH	15			X				X								
	ACTIVATION OF MASS NOTIFICATION SYSTEM	16			X	X			X				X	X	X		
	LOCAL MICROPHONE MNS OPERATION	17			X	X			X			X		X	X		
	LOC ACTIVATION OR PRE-RECORDED MNS MESSAGES	18			X	X			X			X		X	X		
	SIGNAL FROM WIDE AREA MASS NOTIFICATION SYSTEM	19			X	X			X			X			X		

SEQUENCE OF OPERATIONS

GENERAL NOTES

1. REFER TO SHEET FA001 FOR GENERAL NOTES AND SYMBOLS.

SYM	DESCRIPTION	DATE	APPR

NAVFAC

PRELIMINARY FOR REFERENCE ONLY

SEAL

IRQ W.M. Jordan COMPANY – A JOINT VENTURE –

Michael Baker INTERNATIONAL

100 AIRSIDE DRIVE
MOON TOWNSHIP, PA 15108 A/E INFO

APPROVED

FOR COMMANDER NAVFAC

ACTIVITY
MARINE CORPS BASE
CAMP LEJEUNE

SATISFACTORY TO DATE

DES JAM | DRW ADH | CHK DJW

PM

BRANCH MANAGER

CHIEF ENG/ARCH

FIRE PROTECTION

NAVAL FACILITIES ENGINEERING COMMAND
NAVAL FACILITIES ENGINEERING COMMAND – MID-ATLANTIC
JACKSONVILLE, NC

DEPARTMENT OF THE NAVY
NAVAL FACILITIES ENGINEERING COMMAND
ROICC FLORENCE CAMP LEJEUNE
MCB CAMP LEJEUNE

JACKSONVILLE, NC
P1338F II MEF SIMULATION/TRAINING CENTER
REPLACEMENT

FIRE ALARM - SEQUENCE OF OPERATIONS

SCALE: AS NOTED

EPROJECT NO.: 1590892

CONSTR. CONTR. NO.
N40085-20-C-0059

NAVFAC DRAWING NO.

SHEET OF

FA002

DP2 SUBMISSION – P1338 BUILDING - PRE-FINAL SUBMISSION

PLOTTED: 6/11/2021 7:34:39 AM

FILE NAME: BIM 360://HF PACKAGE 3/P1338 MEF SIM CTR-1590892-F.rvt

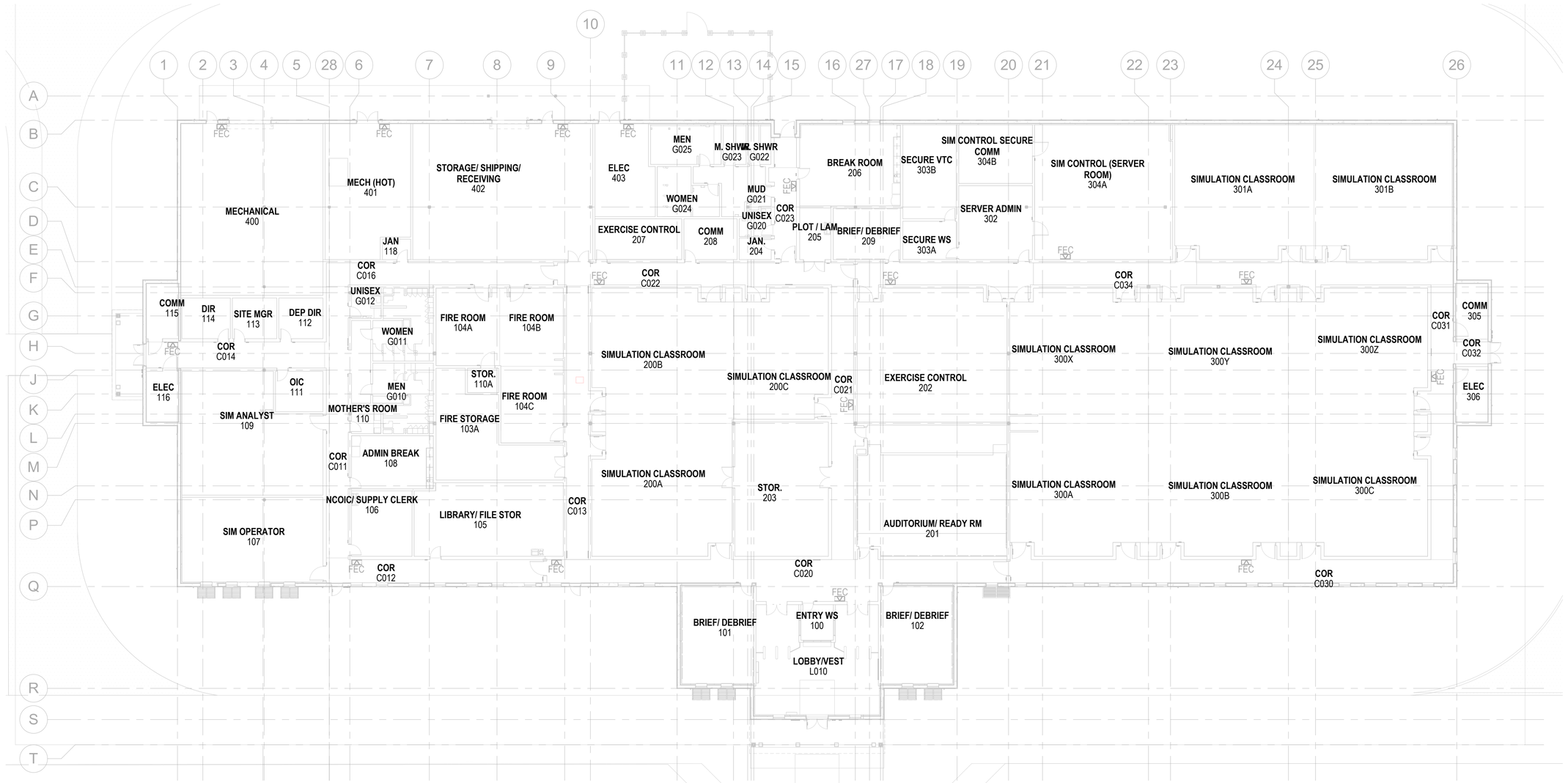

SEE FLOOR PLAN AREA SHEETS FOR INDIVIDUAL APPLIANCE PLACEMENT.

FIRE ALARM - OVERALL - FIRST FLOOR PLAN

SCALE: 1/16" = 1'-0"

GENERAL NOTES

1. REFER TO SHEET FA001 FOR GENERAL NOTES AND SYMBOLS.

KEYPLAN

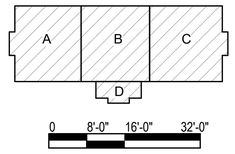

APPR | DATE | DESCRIPTION | SYM

NAVFAC

PRELIMINARY FOR REFERENCE ONLY

SEAL

IRQ W.M. Jordan COMPANY ~ A JOINT VENTURE ~

Michael Baker INTERNATIONAL

100 AIRSIDE DRIVE
MOON TOWNSHIP, PA 15108 A/E INFO

APPROVED

FOR COMMANDER NAVFAC

ACTIVITY
MARINE CORPS BASE CAMP LEJEUNE

SATISFACTORY TO DATE

DES JAM | DRW ADH | CHK DJW

PM

BRANCH MANAGER

CHIEF ENG/ARCH

FIRE PROTECTION

DEPARTMENT OF THE NAVY
NAVAL FACILITIES ENGINEERING COMMAND
ROICC FLORENCE CAMP LEJEUNE

NAVAL FACILITIES ENGINEERING COMMAND ~ MID-ATLANTIC
JACKSONVILLE, NC

MCB CAMP LEJEUNE

JACKSONVILLE, NC
P1338F II MEF SIMULATION/TRAINING CENTER REPLACEMENT

FIRE ALARM - OVERALL - FIRST FLOOR PLAN

SCALE: AS NOTED

EPROJECT NO.: 1590892

CONSTR. CONTR. NO.
N40085-20-C-0059

NAVFAC DRAWING NO.

SHEET OF

FA110

DP2 SUBMISSION – P1338 BUILDING - PRE-FINAL SUBMISSION

PLOTTED: 6/11/2021 7:34:39 AM

FILE NAME: BIM 360://HF PACKAGE 3/P1338 MEF SIM CTR-1590892-F.rvt

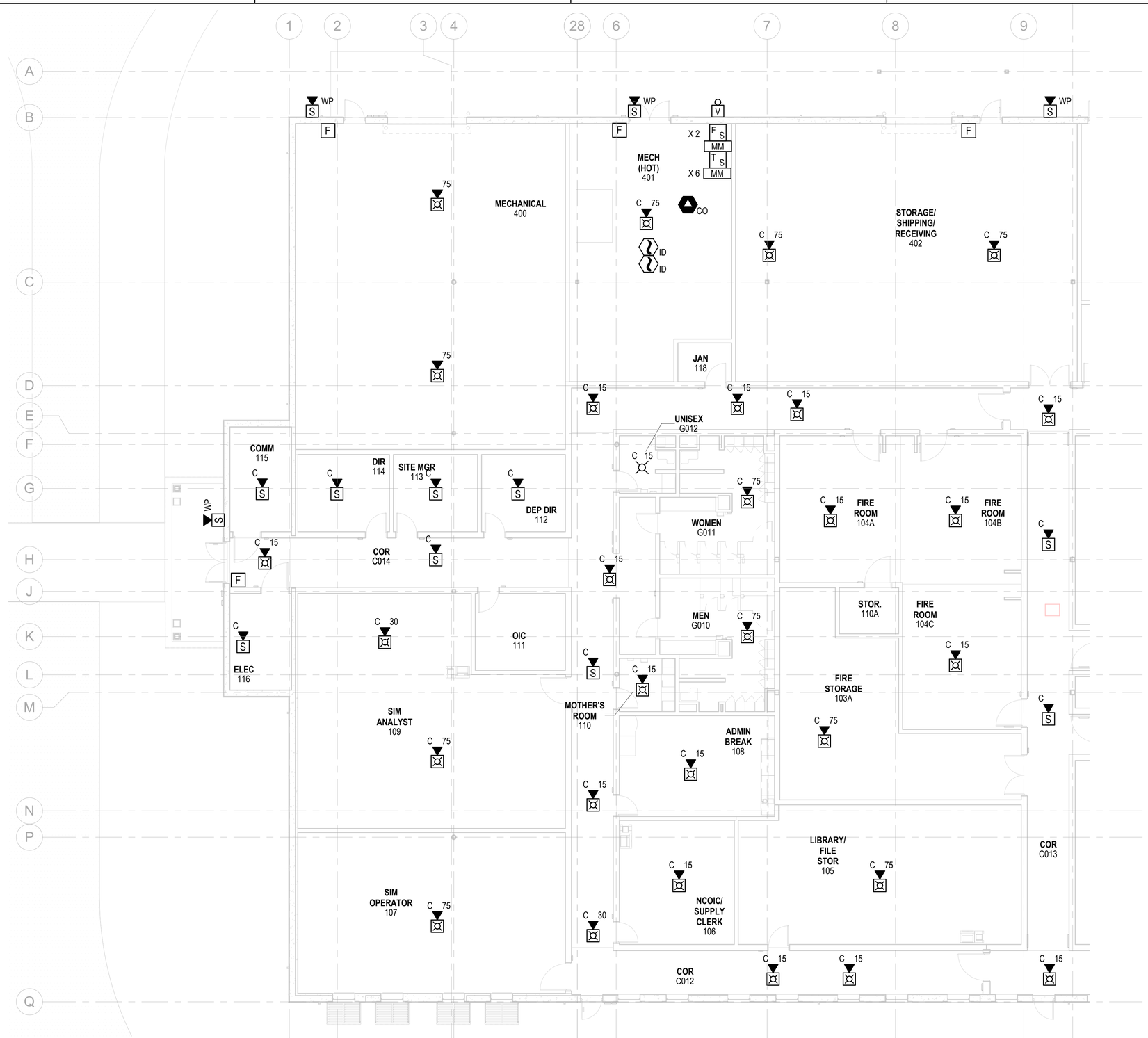

FIRE ALARM - FIRST FLOOR PLAN - AREA A

SCALE: 1/8" = 1'-0"

GENERAL NOTES

1. REFER TO SHEET FA001 FOR GENERAL NOTES AND SYMBOLS.

KEYPLAN

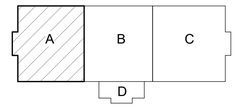

APPR | DATE | DESCRIPTION | SYM

NAVFAC

PRELIMINARY FOR REFERENCE ONLY

SEAL

IRQ W.M. Jordan COMPANY ~ A JOINT VENTURE ~

Michael Baker INTERNATIONAL

100 AIRSIDE DRIVE
MOON TOWNSHIP, PA 15108
A/E INFO

APPROVED

FOR COMMANDER NAVFAC

ACTIVITY
MARINE CORPS BASE
CAMP LEJEUNE

SATISFACTORY TO DATE

DES JAM | DRW ADH | CHK DJW

PM

BRANCH MANAGER

CHIEF ENG/ARCH

FIRE PROTECTION

DEPARTMENT OF THE NAVY
NAVAL FACILITIES ENGINEERING COMMAND ~ MID-ATLANTIC
ROICC FLORENCE CAMP LEJEUNE
MCB CAMP LEJEUNE

NAVAL FACILITIES ENGINEERING COMMAND
JACKSONVILLE, NC

JACKSONVILLE, NC

P1338F II MEF SIMULATION/TRAINING CENTER REPLACEMENT

FIRE ALARM - FIRST FLOOR PLAN - AREA A

SCALE: AS NOTED

EPROJECT NO.: 1590892

CONSTR. CONTR. NO.
N40085-20-C-0059

NAVFAC DRAWING NO.

SHEET OF

FA111

DP2 SUBMISSION – P1338 BUILDING - PRE-FINAL SUBMISSION

PLOTTED: 6/11/2021 7:34:41 AM

FILE NAME: BIM 360://HF PACKAGE 3/P1338 MEF SIM CTR-1590892-F.rvt

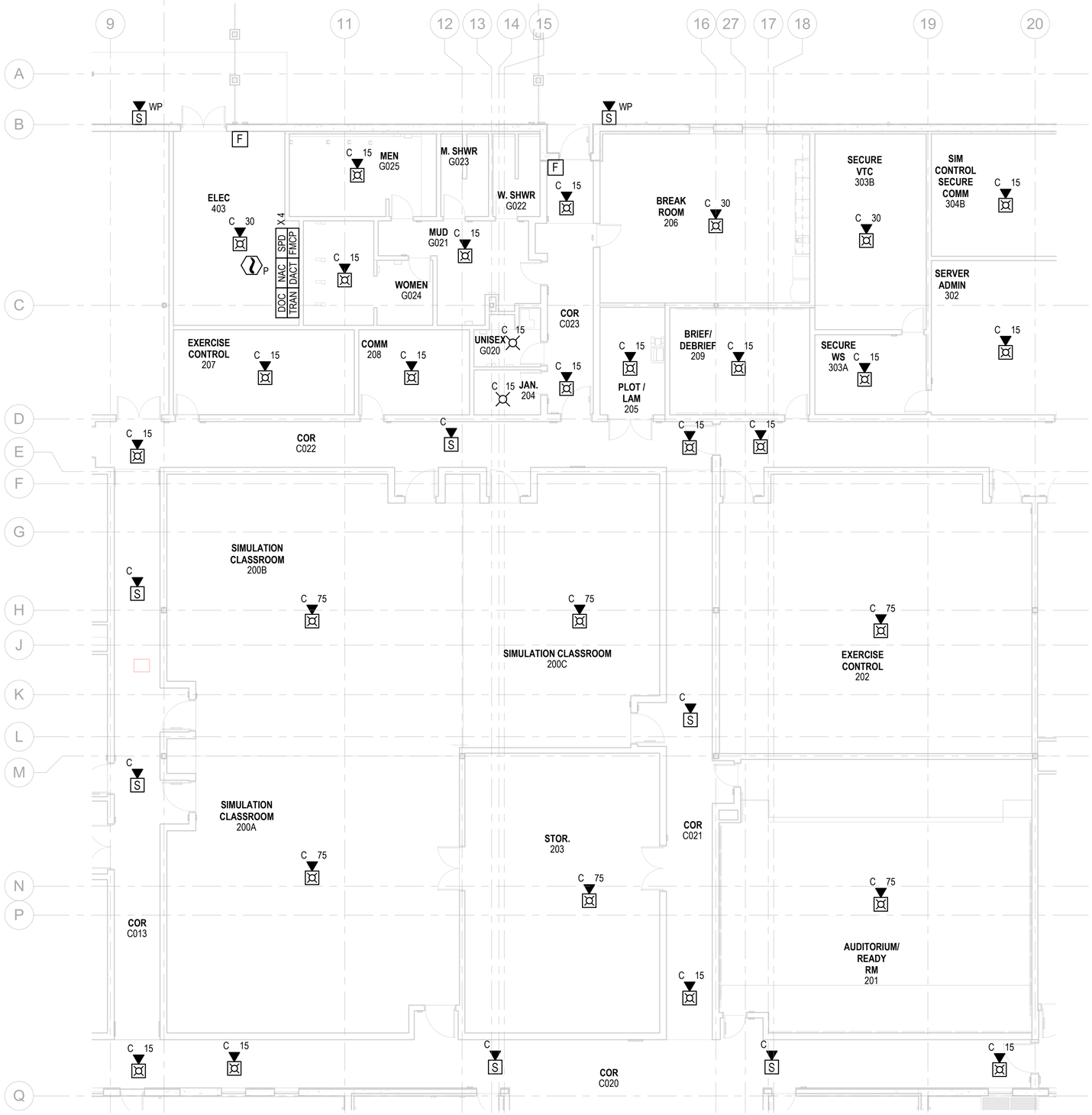

FIRE ALARM - FIRST FLOOR PLAN - AREA B

SCALE: 1/8" = 1'-0"

GENERAL NOTES

1. REFER TO SHEET FA001 FOR GENERAL NOTES AND SYMBOLS.

KEYPLAN

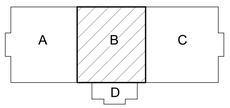

APPR | DATE | DESCRIPTION | SYM

NAVFAC

PRELIMINARY FOR REFERENCE ONLY

SEAL

RQ W.M. Jordan COMPANY – A JOINT VENTURE –

Michael Baker INTERNATIONAL

100 AIRSIDE DRIVE
MOON TOWNSHIP, PA 15108 A/E INFO

APPROVED

FOR COMMANDER NAVFAC

ACTIVITY
MARINE CORPS BASE
CAMP LEJEUNE

SATISFACTORY TO DATE

DES JAM | DRW ADH | CHK DJW

PM

BRANCH MANAGER

CHIEF ENG/ARCH

FIRE PROTECTION

DEPARTMENT OF THE NAVY
NAVAL FACILITIES ENGINEERING COMMAND
ROIOC FLORENCE CAMP LEJEUNE

NAVAL FACILITIES ENGINEERING COMMAND ~ MID-ATLANTIC
JACKSONVILLE, NC

MCB CAMP LEJEUNE

JACKSONVILLE, NC
P1338F II MEF SIMULATION/TRAINING CENTER REPLACEMENT

FIRE ALARM - FIRST FLOOR PLAN - AREA B

SCALE: AS NOTED

EPROJECT NO.: 1590892

CONSTR. CONTR. NO.
N40085-20-C-0059

NAVFAC DRAWING NO.

SHEET OF

FA112

DP2 SUBMISSION – P1338 BUILDING - PRE-FINAL SUBMISSION

PLOTTED: 6/11/2021 7:34:42 AM

FILE NAME: BIM 360://HF PACKAGE 3/P1338 MEF SIM CTR-1590892-F.rvt

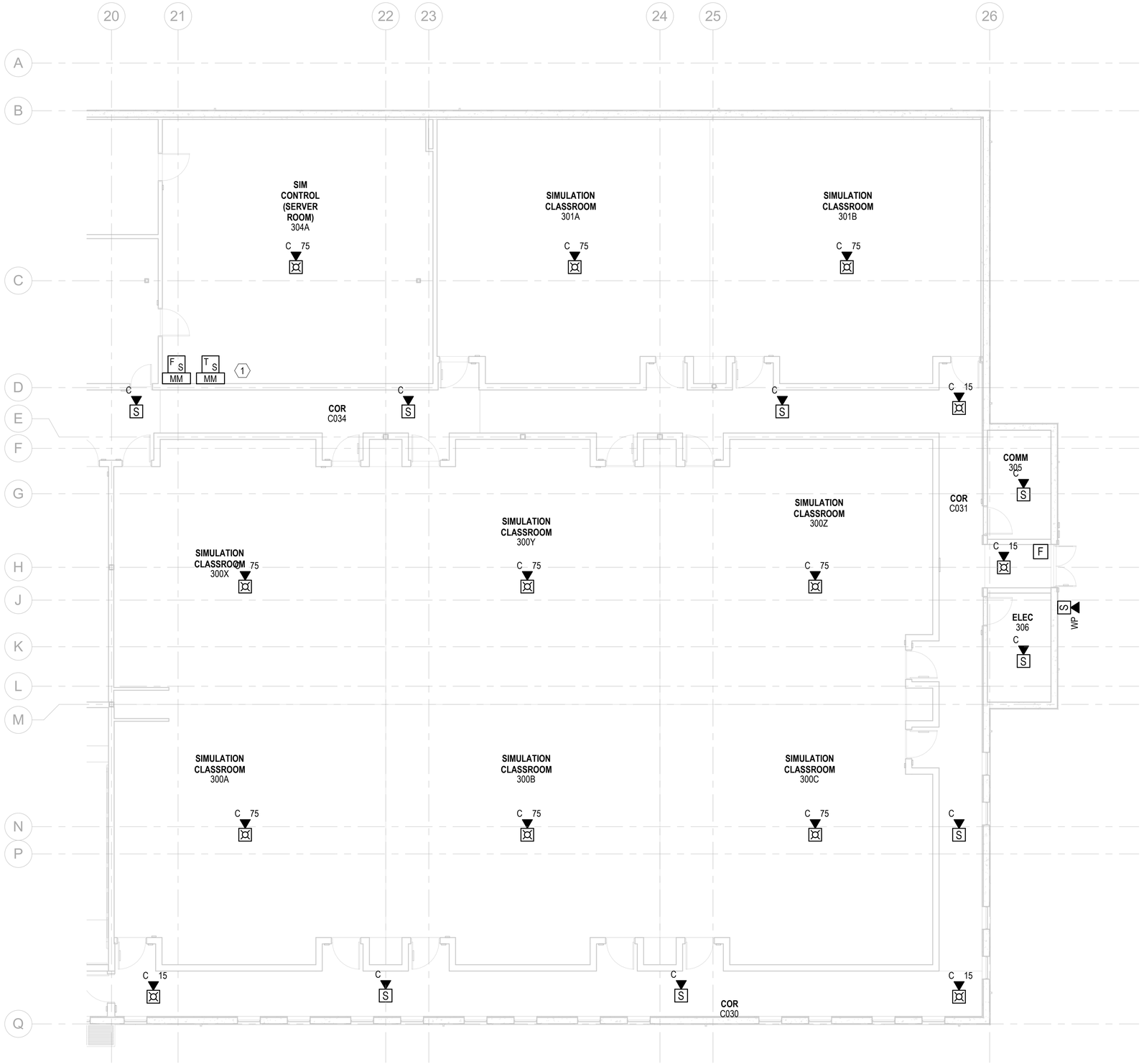

FIRE ALARM - FIRST FLOOR PLAN - AREA C

SCALE: 1/8" = 1'-0"

GENERAL NOTES

1. REFER TO SHEET FA001 FOR GENERAL NOTES AND SYMBOLS.

KEYNOTES

1 PROVIDE ASPIRATING SMOKE DETECTION SYSTEM IN ROOMS 304A AND 304B IN ACCORDANCE WITH SECTION 4-11.3 OF UFC 3-600-01.

KEYPLAN

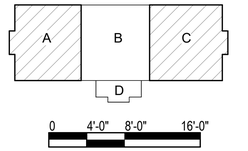

NO.	DESCRIPTION	DATE	APPR

NAVFAC

PRELIMINARY FOR REFERENCE ONLY

SEAL

IRQ WM Jordan COMPANY ~ A JOINT VENTURE ~

Michael Baker INTERNATIONAL

100 AIRSIDE DRIVE
MOON TOWNSHIP, PA 15108 A/E INFO

APPROVED

FOR COMMANDER NAVFAC

ACTIVITY
MARINE CORPS BASE
CAMP LEJEUNE

SATISFACTORY TO DATE

DES JAM | DRW ADH | CHK DJW

PM

BRANCH MANAGER

CHIEF ENG/ARCH

FIRE PROTECTION

DEPARTMENT OF THE NAVY
NAVAL FACILITIES ENGINEERING COMMAND
ROICC FLORENCE CAMP LEJEUNE

NAVAL FACILITIES ENGINEERING COMMAND ~ MID-ATLANTIC
JACKSONVILLE, NC

MCB CAMP LEJEUNE
JACKSONVILLE, NC
P1338F II MEF SIMULATION/TRAINING CENTER REPLACEMENT
FIRE ALARM - FIRST FLOOR PLAN - AREA C

SCALE: AS NOTED

EPROJECT NO.: 1590892

CONSTR. CONTR. NO.
N40085-20-C-0059

NAVFAC DRAWING NO.

SHEET OF

FA113

DP2 SUBMISSION – P1338 BUILDING - PRE-FINAL SUBMISSION

PLOTTED: 6/11/2021 7:34:43 AM

FILE NAME: BIM 360://HF PACKAGE 3/P1338 MEF SIM CTR-1590892-F.rvt

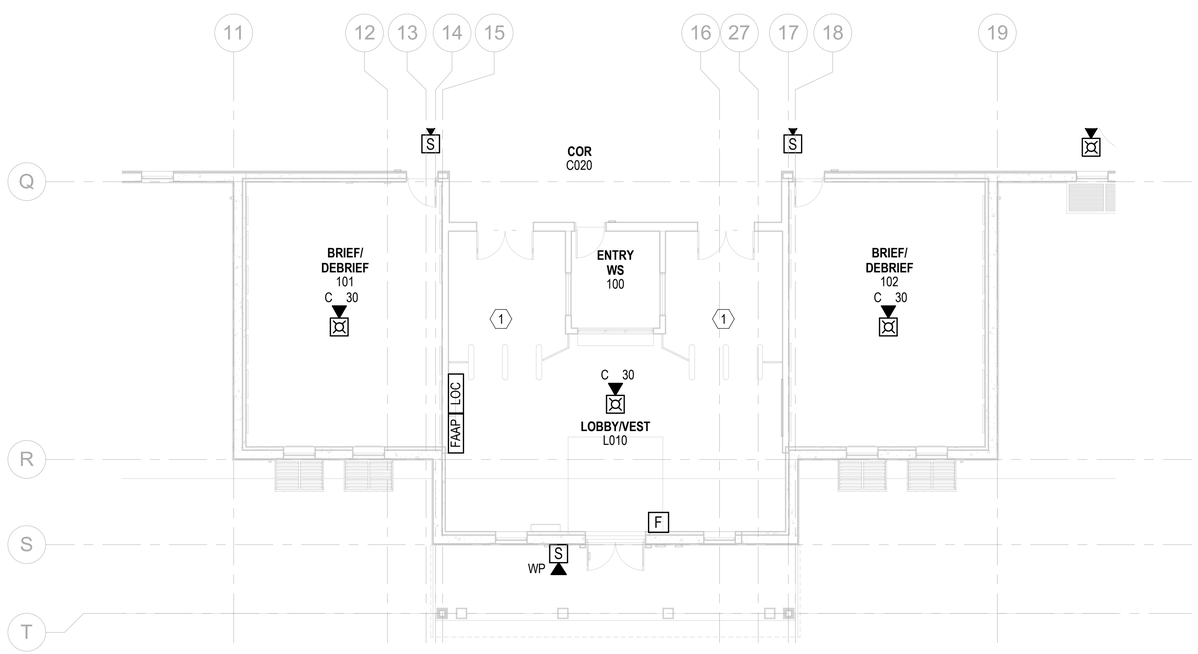

FIRE ALARM - FIRST FLOOR PLAN - AREA D

SCALE: 1/8" = 1'-0"

GENERAL NOTES

1. REFER TO SHEET FA001 FOR GENERAL NOTES AND SYMBOLS.

KEYNOTES

1 INTERFACE TURN STYLES TO RELEASE ON ALARM.

KEYPLAN

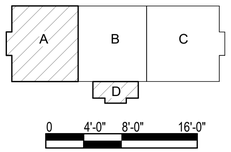

SYM	DESCRIPTION	DATE	APPR

SEAL

PRELIMINARY FOR REFERENCE ONLY

IRQ W.M. Jordan COMPANY – A JOINT VENTURE –

Michael Baker INTERNATIONAL

100 AIRSIDE DRIVE
MOON TOWNSHIP, PA 15108 A/E INFO

APPROVED

FOR COMMANDER NAVFAC

ACTIVITY
MARINE CORPS BASE
CAMP LEJEUNE

SATISFACTORY TO DATE

DES	DRW	CHK
JAM	ADH	DJW

PM

BRANCH MANAGER

CHIEF ENG/ARCH

FIRE PROTECTION

DEPARTMENT OF THE NAVY
NAVAL FACILITIES ENGINEERING COMMAND
ROICC FLORENCE CAMP LEJEUNE

NAVAL FACILITIES ENGINEERING COMMAND ~ MID-ATLANTIC
JACKSONVILLE, NC

MCB CAMP LEJEUNE

JACKSONVILLE, NC
P1338F II MEF SIMULATION/TRAINING CENTER
REPLACEMENT

FIRE ALARM - FIRST FLOOR PLAN - AREA D

SCALE:	AS NOTED
EPROJECT NO.:	1590892
CONSTR. CONTR. NO.	N40085-20-C-0059
NAVFAC DRAWING NO.	
SHEET	OF

FA114

DP2 SUBMISSION – P1338 BUILDING - PRE-FINAL SUBMISSION

PLOTTED: 6/11/2021 7:34:44 AM

FILE NAME: BIM 360://HF PACKAGE 3/P1338 MEF SIM CTR-1590892-F.rvt

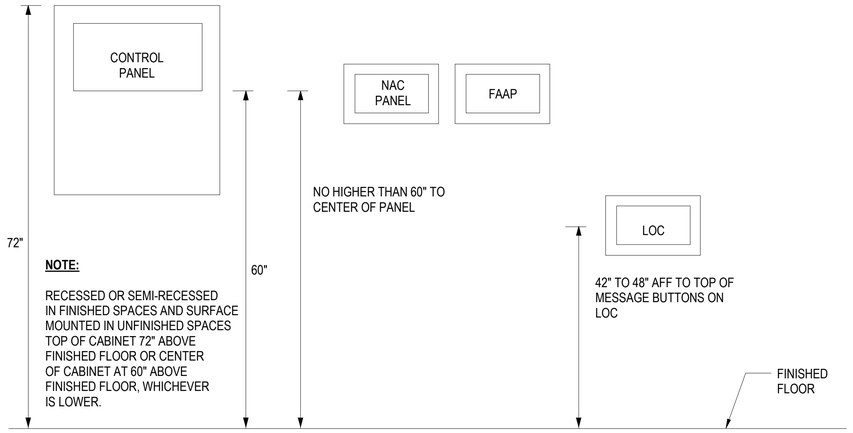

C1 FMCP, FAAP, NAC, AND LOC MOUNTING HEIGHTS
SCALE: NTS

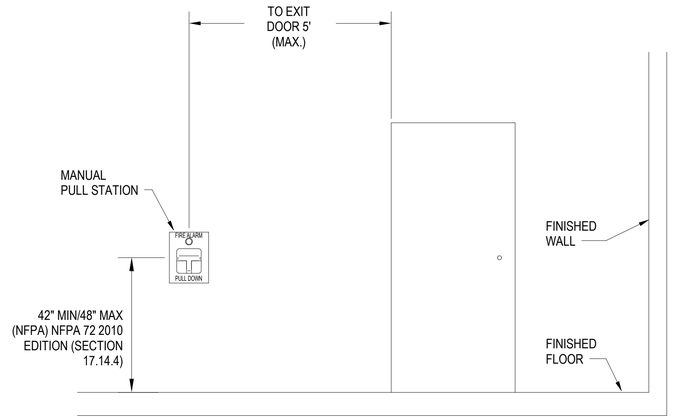

C3 PULL STATION INSTALLATION DETAIL
SCALE: NTS

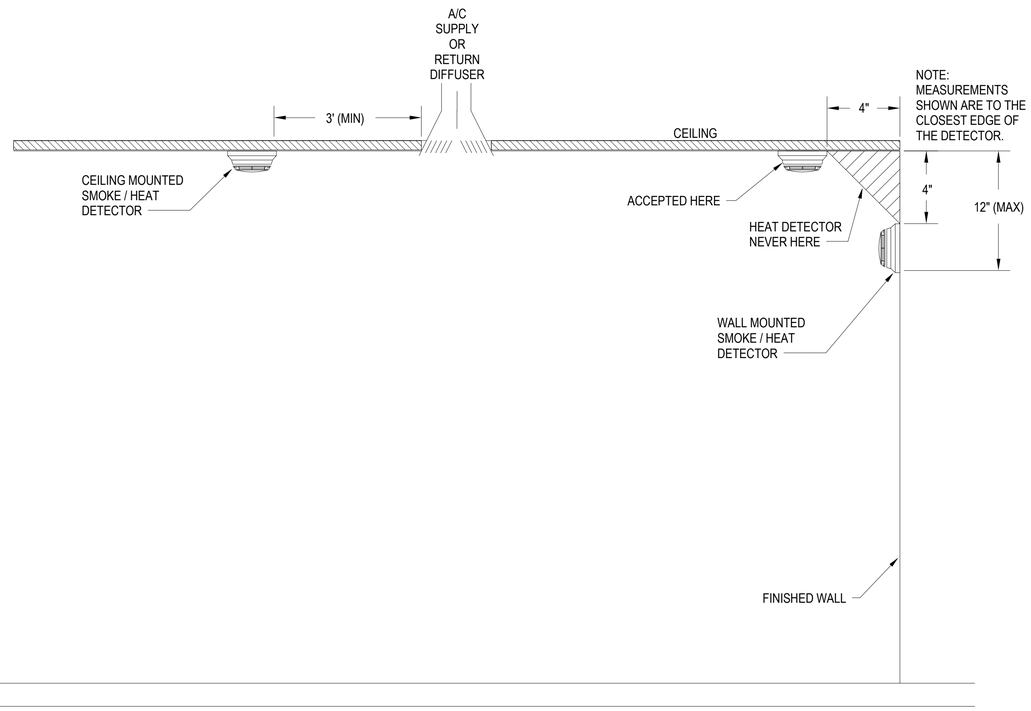

A1 SMOKE / HEAT DETECTOR INSTALLATION REQUIREMENTS
SCALE: NTS

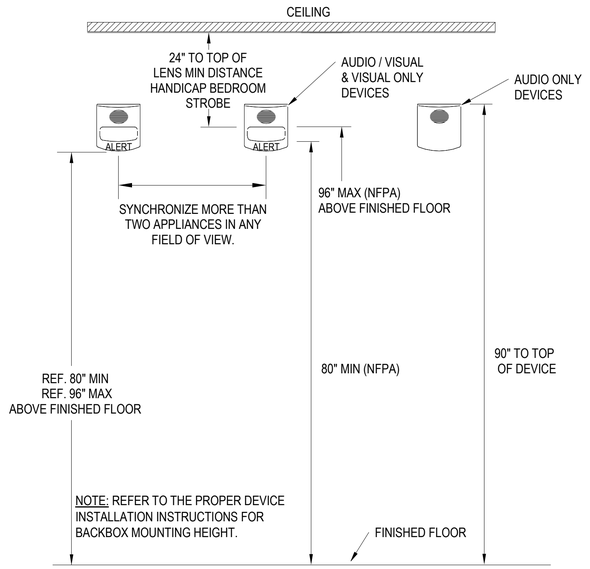

A3 AUDIO / VISUAL DEVICE INSTALLATION DETAIL
SCALE: NTS

GENERAL NOTES

1. REFER TO SHEET FA001 FOR GENERAL NOTES AND SYMBOLS.

SYM	DESCRIPTION	DATE	APPR

NAVFAC

PRELIMINARY FOR REFERENCE ONLY

SEAL

IRQ W.M. Jordan COMPANY ~ A JOINT VENTURE ~

Michael Baker INTERNATIONAL
100 AIRSIDE DRIVE
MOON TOWNSHIP, PA 15108
A/E INFO

APPROVED

FOR COMMANDER NAVFAC

ACTIVITY
MARINE CORPS BASE CAMP LEJEUNE

SATISFACTORY TO DATE

DES JAM | DRW ADH | CHK DJW

PM

BRANCH MANAGER

CHIEF ENG/ARCH

FIRE PROTECTION

DEPARTMENT OF THE NAVY
NAVAL FACILITIES ENGINEERING COMMAND
ROICC FLORENCE CAMP LEJEUNE
MCB CAMP LEJEUNE

NAVAL FACILITIES ENGINEERING COMMAND ~ MID-ATLANTIC
JACKSONVILLE, NC

JACKSONVILLE, NC
P1338F II MEF SIMULATION/TRAINING CENTER REPLACEMENT
FIRE ALARM - DETAILS

SCALE: AS NOTED
EPROJECT NO.: 1590892
CONSTR. CONTR. NO.
N40085-20-C-0059
NAVFAC DRAWING NO.
SHEET OF

FA501

DP2 SUBMISSION – P1338 BUILDING - PRE-FINAL SUBMISSION

PLOTTED: 6/11/2021 7:34:44 AM
FILE NAME: BIM 360://HF PACKAGE 3/P1338 MEF SIM CTR-1590892-F.rvt

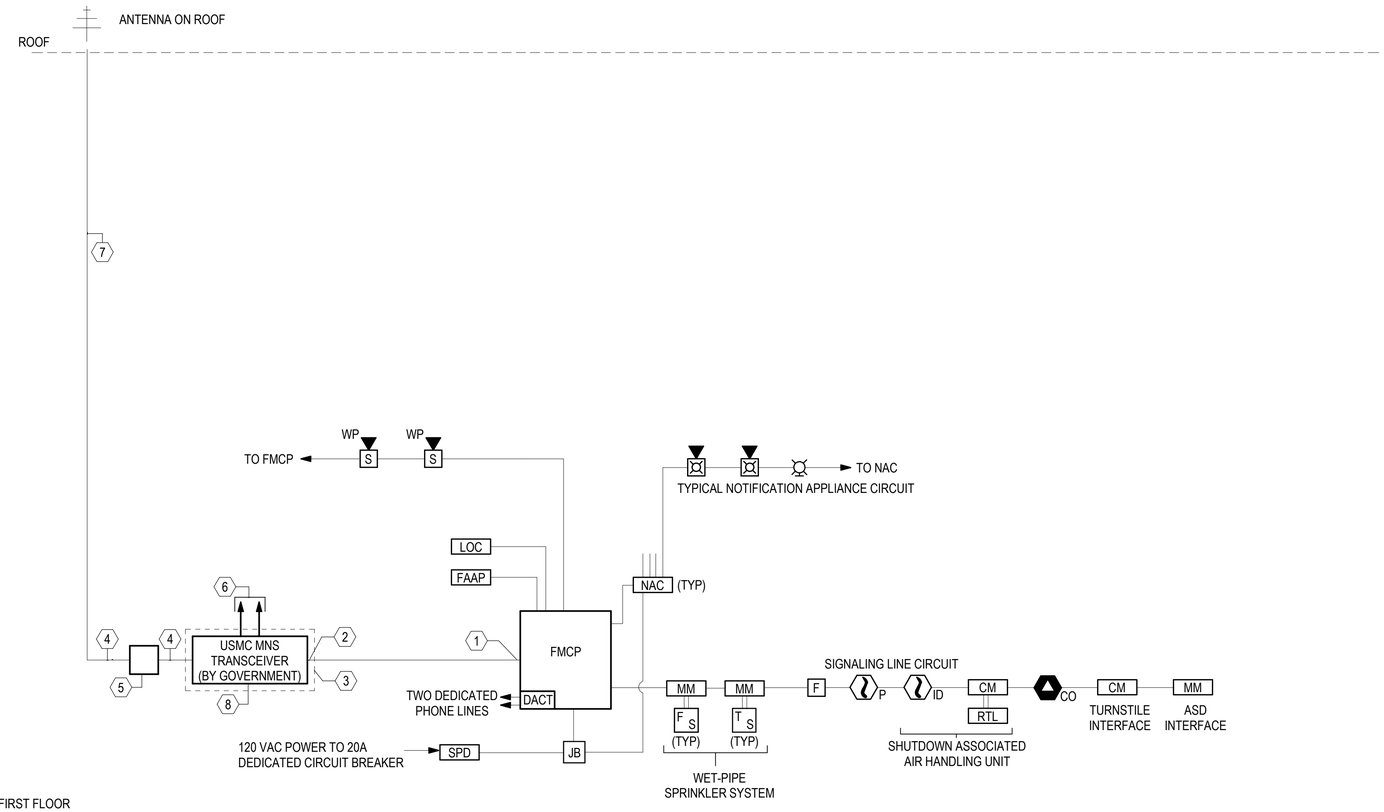

FIRE ALARM RISER DIAGRAM

SCALE:NTS

GENERAL NOTES

1. REFER TO SHEET FA001 FOR GENERAL NOTES AND SYMBOLS.

KEYNOTES

1 PROVIDE AUDIO INPUT AND CONTACT CLOSURE IN THE FMCP PANEL TO ACCEPT EXTERNAL SIGNAL FROM THE MNS TRANSCEIVER.

2 PROVIDE 3/4" RIGID METAL CONDUIT (RMC) BETWEEN THE FMCP PANEL AND MNS TRANSCEIVER PANEL.

3 PROVIDE DEDICATED WALL SPACE FOR 24"X24"X1" MOUNTING BOARD ADJACENT TO THE FMCP PANEL (WITHIN 15 FT MAX). ENSURE THE MOUNTING BOARD IS CLEARLY MARKED "FOR BASE-WIDE MNS USE".

4 PROVIDE 1-1/2" RIGID METAL CONDUIT.

5 PROVIDE 8"X8"X8" PULL BOX.

6 PROVIDE (2) 3/4-INCH ELECTRICAL METAL CONDUIT (EMT) WITH 18 AWG SHIELD AUDIO WIRE FROM THE NEMA-4 ENCLOSURE TO 2 DIFFERENT CENTRAL FACILITY LOCATIONS (DUTY ROOM, ADMINISTRATION AREA, CENTRAL HALLWAY -COORDINATE WITH THE BASE SECURITY FOR LOCATION). AT THESE LOCATIONS TERMINATE RMC IN A FLUSH MOUNTED 4"X4"X2" EMT BOX. ENSURE 2 CONDUIT RUNS AND THE EXIT FLUSH MOUNTED ENCLOSURES ARE LABELED "FOR MNS USE".

7 1-1/2" RMC FROM PULL BOX TO THE ROOF. MAXIMUM CONDUIT LENGTH TO THE ROOF TERMINATION IS 115 FT. TERMINATE THE TOP OF THE EXTERIOR RMC WITH UL LISTED WEATHERHEAD. PROVIDE 50 OHM, UMR-400 RF CABLE IN THE RMC. PROVIDE 3-FT CABLE LENGTH MAINTENANCE LOOP AT BOTH ENDS OF THE CABLE ROUTE AND TERMINATE ROOF CABLE WITH A STRAIGHT MALE N-TYPE CONNECTOR. DO NOT TERMINATE THE RF CABLE AT THE MNS MOUNTING AREA AND CLEARLY LABEL THE RF CABLE "FOR MNS". TEST RF CABLE FOR PROPER CONNECTIVITY. PROVIDE ONE 90DBI OMNI-DIRECTIONAL ANTENNA, COOPER ANT-109-OM OR, MOBILE MARK OD9-2400 OR EQUAL, ON TOP OF ROOFTOP ANTENNA MASS. DIRECTIONAL ANTENNA MAY BE MOUNTED ON FACILITY BELOW ROOFLINE IF PLACEMENT OF ANTENNA LOCATION IS PRE-APPROVED BY SPAWAR OR PHYSICAL SECURITY PERSONNEL. CONTACT

8 PROVIDE A NON-METALLIC 18" HEIGHT X 16" WIDTH X 10" DEPTH NEMA 4X ENCLOSURE WITH RAISED COVER AND PAD LOCKABLE LATCHES W/INTERIOR MOUNTING PLATE. MOUNT THE PANEL IN THE CENTER OF THE MNS MOUNTING BOARD, PROVIDE 3/4" RMC WITH 3 CONDUCTORS , 12 AWG ELECTRICAL WIRE FROM THE ENCLOSURE TO A DEDICATED 120VAC/15A ELECTRICAL CIRCUIT. PROVIDE A DEDICATED LOCKABLE BREAKER FROM THE SAME POWER PANEL FOR FIRE ALARM CONTROL PANEL. PROVIDE AC POWER SURGE SUPPRESSOR DEVICE INLINE WITH POWER CIRCUIT INSIDE THE LOWER RIGHT CORNER OF THE ENCLOSURE. PROVIDE A DUAL ELECTRICAL OUTLET MOUNTED INSIDE THE MNS ENCLOSURE ABOVE THE SURE SUPPRESSOR ON THE BOTTOM RIGHT OF THE MNS ENCLOSURE WIRE SURGE SUPPRESSOR IN SERIES WITH DUAL ELECTRICAL OUTLET. WIRING MUST BE IN ACCORDANCE WITH NFPA 70.

SYM	DESCRIPTION	DATE	APPR

NAVFAC

PRELIMINARY FOR REFERENCE ONLY

SEAL

IRQ WNM Jordan COMPANY ~ A JOINT VENTURE ~

Michael Baker INTERNATIONAL

100 AIRSIDE DRIVE
MOON TOWNSHIP, PA 15108 A/E INFO

APPROVED

FOR COMMANDER NAVFAC

ACTIVITY
MARINE CORPS BASE
CAMP LEJEUNE

SATISFACTORY TO DATE

DES JAM | DRW ADH | CHK DJW

PM

BRANCH MANAGER

CHIEF ENG/ARCH

FIRE PROTECTION

DEPARTMENT OF THE NAVY
NAVAL FACILITIES ENGINEERING COMMAND
ROICC FLORENCE CAMP LEJEUNE
MCB CAMP LEJEUNE

NAVAL FACILITIES ENGINEERING COMMAND ~ MID-ATLANTIC
JACKSONVILLE, NC

JACKSONVILLE, NC

P1338F II MEF SIMULATION/TRAINING CENTER
REPLACEMENT

FIRE ALARM - RISER DIAGRAM

SCALE: AS NOTED

EPROJECT NO.: 1590892

CONSTR. CONTR. NO.
N40085-20-C-0059

NAVFAC DRAWING NO.

SHEET OF

FA701

DP2 SUBMISSION – P1338 BUILDING - PRE-FINAL SUBMISSION

PLOTTED: 6/11/2021 7:34:44 AM

FILE NAME: BIM 360://HF PACKAGE 3/P1338 MEF SIM CTR-1590892-F.rvt

FIRE PROTECTION ABBREVIATIONS AND LEGEND		
SYMBOL	ABBREV	DESCRIPTION
UNLESS OTHERWISE NOTED		LIGHT HAZARD
(ORDINARY)	OH	ORDINARY HAZARD
[X / X]		SPRINKLER DESIGN DENSITY [GPM/SF / SF]

P1338 PROJECT SITE		
HYDRANT FLOW DATA		
TEST DATE:		03 DECEMBER 2020
TESTED BY:		JASON MILLER AND BASE PERSONNEL
FLOW HYDRANT:		MCHUGH BLVD AND BIRCH STREET
PRESSURE HYDRANT:		MCHUGH BLVD AND BIRCH STREET
STATIC PRESSURE:		72 PSI
RESIDUAL PRESSURE:		66 PSI
FLOW:		846 GPM
HAZARD CLASSIFICATION	ORDINARY HAZARD	UFC 3-600-01
DESIGN DENSITY	0.2 GPM/SF	UFC 3-600-01
DESIGN AREA	2,500 SF	UFC 3-600-01
SPRINKLER K-FACTOR	11.2 MINIMUM	UFC 3-600-01
EXTERIOR HOSE DEMAND	250 GPM	UFC 3-600-01
SPRINKLER DEMAND	(0.2 GPM/SF X 2,500 SF)	500 GPM
HYDRAULIC IMBALANCE	20%	100 GPM
TOTAL SPRINKLER DEMAND		600 GPM
EXTERIOR HOSE DEMAND	250 GPM	250 GPM
TOTAL FIRE WATER DEMAND		850 GPM
END HEAD PRESSURE	(130 SF X 0.2 GPM/SF / 11.2)^2	7.0 PSI
SPRINKLER ELEVATION	23 FT X 0.433 =	9.9 PSI
BACKFLOW PREVENTER	UFC 3-600-01	12.0 PSI
UNDERGROUND LOSS	8 INCH AT 600 GPM = 0.428 PSI/100 FT X 1,200 FT	5.2 PSI
TOTAL PRESSURE	NOT INCLUDING INTERIOR LOSSES	34.1 PSI

BASED ON HYDRANT FLOW TEST DATA, 65.8 PSI IS AVAILABLE AT 850 GPM. THIS LEAVES 31.7 PSI FOR AVAILABLE INTERIOR LOSSES.

FIRE PROTECTION NOTES

1. PROVIDE AN AUTOMATIC, SUPERVISED WET PIPE FIRE SPRINKLER SYSTEM THROUGHOUT THE FACILITY.
2. THE CONTRACTOR MUST PERFORM A FIRE HYDRANT FLOW TEST IN ACCORDANCE WITH NFPA 291.
3. THE FIRE PROTECTION SYSTEM MUST COMPLY WITH NFPA 13 (2019), UFC 3-600-01 (7 FEBRUARY 2020), AND WITH THESE CONTRACT DRAWINGS.
4. FIRE PROTECTION MATERIALS MUST BE UL LISTED AND/OR FM APPROVED.
5. INSTALLING CONTRACTOR MUST OBTAIN APPROVAL OF THE AUTHORITIES HAVING JURISDICTION.
6. IT IS THE INTENT OF THESE DOCUMENTS TO PROVIDE DESIGN, MATERIALS AND EQUIPMENT FOR A TOTALLY FUNCTIONING AND OPERATING FIRE PROTECTION SYSTEM, INCLUDING THE PROPER INTERFACING AND COORDINATING WITH ALL OTHER BUILDING SYSTEMS.
7. THE GENERAL CHARACTER AND SCOPE OF THE WORK IS ILLUSTRATED IN THE SPECIFICATIONS AND DRAWINGS. THE SPECIFICATIONS AND DRAWINGS ARE DIVIDED INTO SEVERAL SECTIONS FOR CONVENIENCE ONLY AND THE CONTRACT DOCUMENTS MUST BE CONSIDERED AS A WHOLE. THE CONTRACTOR MUST BE RESPONSIBLE FOR THE COORDINATION OF ALL TRADES, SUBCONTRACTORS, AND VENDORS ENGAGED IN WORK.
8. THE SPRINKLER SYSTEM DESIGNER MUST BE RESPONSIBLE FOR AVOIDING CONFLICTS BETWEEN FIRE PROTECTION SYSTEMS AND LIGHTING FIXTURES, DIFFUSERS, GRILLES, DUCTS, EQUIPMENT FIXTURES, STRUCTURAL MEMBERS, PIPES, CONDUITS, AND OTHER OBSTRUCTIONS ENCOUNTERED.
9. PIPING LAYOUTS, WHERE SHOWN, ARE DIAGRAMMATIC AND SHOW SYSTEM INTENT. PIPING MAY REQUIRE ADDITIONAL OFFSETS, DROPS, AND RISERS. CONTRACTOR MUST BE RESPONSIBLE FOR FINAL PIPING LAYOUT AND HYDRAULIC CALCULATIONS.
10. SPRINKLER PIPING MUST BE INSTALLED SO THAT ALL PORTIONS OF THE SYSTEM CAN BE DRAINED BACK THROUGH THE MAIN DRAIN VALVES. WHERE TRAPPED SECTIONS OF PIPING CANNOT BE AVOIDED, AUXILIARY DRAINS MUST BE PROVIDED. PROVIDE TEST AND DRAIN CONNECTIONS IN ACCORDANCE WITH SPECIFICATIONS AND NFPA 13.
11. THE INCOMING SPRINKLER SERVICE MUST BE PROVIDED WITH A REDUCED PRESSURE ZONE BACKFLOW PREVENTER. NEW BACKFLOW PREVENTER MUST INCLUDE A FORWARD FLOW TEST CONNECTION, WITH ONE 2 1/2 INCH HOSE CONNECTION FOR EVERY 250 GPM OF ANTICIPATED FLOW OF THE SPRINKLER SYSTEM. PROVIDE A MEANS OF DRAINING THE BACKFLOW PREVENTER PRESSURE RELIEF DISCHARGE. DRAIN TO OUTSIDE. SIZE DRAIN PIPE ACCORDING TO MANUFACTURER RECOMMENDATION.
12. DRAINS MUST TERMINATE TO THE EXTERIOR OF THE BUILDING AND BE PROVIDED WITH A SPLASH BLOCK. DRAINS MAY NOT TERMINATE AT JANITOR'S CLOSETS OR OTHER INTERNAL DRAINS.
13. LOCATE CONTROL VALVES, TEST VALVES, AND LOW POINT DRAIN VALVES IN READILY ACCESSIBLE AREAS WITHIN 5 FEET OF THE FLOOR. TEST VALVES MUST DISCHARGE TO THE OUTSIDE OF THE BUILDING ONTO A SPLASH BLOCK IF NOT DISCHARGING TO A PAVED SURFACE.
14. SPRINKLER HYDRAULIC DESIGN MUST BE BASED ON NEW HYDRANT FLOW TESTS PERFORMED BY THE CONTRACTOR. NEW FIRE HYDRANT FLOW TESTS MUST BE PERFORMED IN ACCORDANCE WITH NFPA 291.
15. HYDRAULIC CALCULATIONS MUST BE BASED ON AREA/DENSITY APPROACH ONLY. SPECIAL DESIGN APPROACHES, SUCH AS ROOM DESIGN MUST NOT BE USED.
16. PROVIDE AT LEAST ONE HYDRAULIC CALCULATION FOR EACH HAZARD CLASSIFICATION IN EACH OF THE FACILITIES. HYDRAULIC CALCULATIONS MUST INCLUDE A MINIMUM PRESSURE DROP ACROSS THE BACKFLOW PREVENTERS OF 12 PSI OR THE ACTUAL PRESSURE DROP WHICHEVER IS GREATER, REGARDLESS OF TYPE OR SIZE.
17. THE SPRINKLER SYSTEMS MUST BE DESIGNED HYDRAULICALLY FOR UNIFORM DISCHARGE DENSITIES ON THE FOLLOWING BASIS.

HAZARD CLASSIFICATION		WET-PIPE SPRINKLERS: (GPM/FT2)/FT2 [MINIMUM K-FACTOR]			
		CEILING HEIGHT UP TO 30 FEET	CEILING HEIGHT 30 TO 45 FEET	CEILING HEIGHT 45 TO 60 FEET	CEILING HEIGHT 60 TO 100 FEET
LIGHT	DESIGN	0.1/1,500	0.2/2,500	0.2/2,500	12 SPRINKLERS AT 7 PSI
	K-FACTOR	5.6	11.2	11.2	25.2
ORDINARY	DESIGN	0.2/2,500	0.2/2,500	0.2/2,500	12 SPRINKLERS AT 7 PSI

18. MAXIMUM SPRINKLER PROTECTION AREA MUST BE 225 SQUARE FEET PER SPRINKLER FOR LIGHT HAZARD AREAS, 130 SQUARE FEET PER SPRINKLER FOR ORDINARY HAZARD AREAS. EXTENDED COVERAGE SPRINKLERS ARE NOT PERMITTED.
19. PROVIDE PROTECTIVE CAGES ON SPRINKLERS LOCATED LESS THAN 7 FEET ABOVE THE FINISHED FLOOR AND IN AREAS SUBJECT TO MECHANICAL DAMAGE.
20. PROVIDE INTERMEDIATE AND HIGH TEMPERATURE HEADS AS NEEDED TO MEET NFPA 13, SECTION 8.3.2.5. THIS INCLUDES BUT IS NOT LIMITED TO UNIT HEATERS, HEATING DUCTS AND DIFFUSERS.
21. CENTER SPRINKLERS IN CENTER OF CEILING TILE.
22. WHERE FREEZE PROTECTION IS REQUIRED FOR A SPECIFIC SPACE, DRY-TYPE SPRINKLERS MAY BE USED.
23. SPRINKLER CONTROL VALVES MUST BE ELECTRICALLY SUPERVISED UNLESS OTHERWISE NOTED.
24. GALVANIZED PIPING IS NOT PERMITTED TO BE USED IN DRY PIPE, PREACTION, OR WET PIPE SPRINKLER SYSTEMS.
25. PIPING MUST BE INSTALLED TO MAINTAIN CEILING HEIGHTS OR CLEARANCES IN ACCORDANCE WITH NFPA 13, NFPA 101, AND THE CONTRACT DOCUMENTS.
26. PENETRATIONS OF THE BUILDING AIR BARRIER MUST BE SEALED TO MAINTAIN THE INTEGRITY OF THE AIR BARRIER. REFER TO ARCHITECTURE DRAWINGS FOR LOCATION AND DETAILS OF AIR BARRIERS.
27. DAMAGE TO WALLS, PARTITIONS, CEILINGS AND FLOORS FROM PENETRATIONS, INSTALLATION OR OTHER ACTIONS OF THE SPRINKLER INSTALLER MUST BE PATCHED, REPAIRED, PAINTED WITH NEW MATERIALS TO ORIGINAL CONDITION.
28. STRUCTURAL MEMBERS MUST NOT BE CUT, DRILLED OR BURNED UNLESS PREVIOUSLY APPROVED BY THE PROJECTS STRUCTURAL ENGINEER AND CONTRACTING OFFICER.
29. PROVIDE SPRINKLER PROTECTION UNDER OBSTRUCTIONS, INCLUDING DUCTS, THAT ARE GREATER THAN 4 FEET.
30. PAINT CONCEALED PIPING AND PIPING IN NORMALLY UNOCCUPIED SPACES WITH PRIMER AND TWO COATS OF RED OIL BASED PAINT.
31. PAINT EXPOSED PIPING IN OCCUPIED SPACES WITH PRIMER AND TWO COATS OF OIL BASE MATCHING THE CEILING PAINT IN THE SPACE.
32. PROVIDE SPRINKLER GAUGE INSTALLATION LABELS ON EACH SPRINKLER GAUGE SHOWING SPRINKLER GAUGES HAVE BEEN TEST OR REPLACED WITHIN FIVE YEARS.
33. PROVIDE A FIVE-INCH, 30 DEGREE ELBOW STORZ CONNECTION FOR THE FIRE DEPARTMENT CONNECTION. FIRE DEPARTMENT CONNECTIONS MUST BE THE FREESTANDING TYPE IN ACCORDANCE WITH DISCUSSION FROM THE BASE FIRE DEPARTMENT. FREESTANDING FIRE DEPARTMENT CONNECTIONS MUST BE LOCATED OUTSIDE OF THE COLLAPSE ZONE OF THE BUILDING.
34. POST INDICATOR VALVES SHALL BE INSTALLED NO CLOSER THAN 40 FEET FROM THE BUILDING.

APPR | DATE | SYM | DESCRIPTION

NAVFAC

PRELIMINARY FOR REFERENCE ONLY

SEAL

RQ | W.M. Jordan COMPANY – A JOINT VENTURE –

Michael Baker INTERNATIONAL
100 AIRSIDE DRIVE
MOON TOWNSHIP, PA 15108
A/E INFO

APPROVED

FOR COMMANDER NAVFAC

ACTIVITY
MARINE CORPS BASE CAMP LEJEUNE

SATISFACTORY TO DATE

DES JAM | DRW ADH | CHK DJW

PM

BRANCH MANAGER

CHIEF ENG/ARCH

FIRE PROTECTION

DEPARTMENT OF THE NAVY
NAVAL FACILITIES ENGINEERING COMMAND ~ MID-ATLANTIC
ROICC FLORENCE CAMP LEJEUNE
NAVAL FACILITIES ENGINEERING COMMAND ~ MID-ATLANTIC
JACKSONVILLE, NC
MCB CAMP LEJEUNE
JACKSONVILLE, NC
P1338F II MEF SIMULATION/TRAINING CENTER REPLACEMENT
FIRE PROTECTION GENERAL NOTES, ABBREVIATIONS, & SYMBOLS

SCALE: AS NOTED
EPROJECT NO.: 1590892
CONSTR. CONTR. NO.
N40085-20-C-0059
NAVFAC DRAWING NO.
SHEET OF

FX001

DP2 SUBMISSION – P1338 BUILDING - PRE-FINAL SUBMISSION

PLOTTED: 6/11/2021 7:36:09 AM

FILE NAME: BIM 360://HF PACKAGE 3/P1338 MEF SIM CTR-1590892-F.rvt

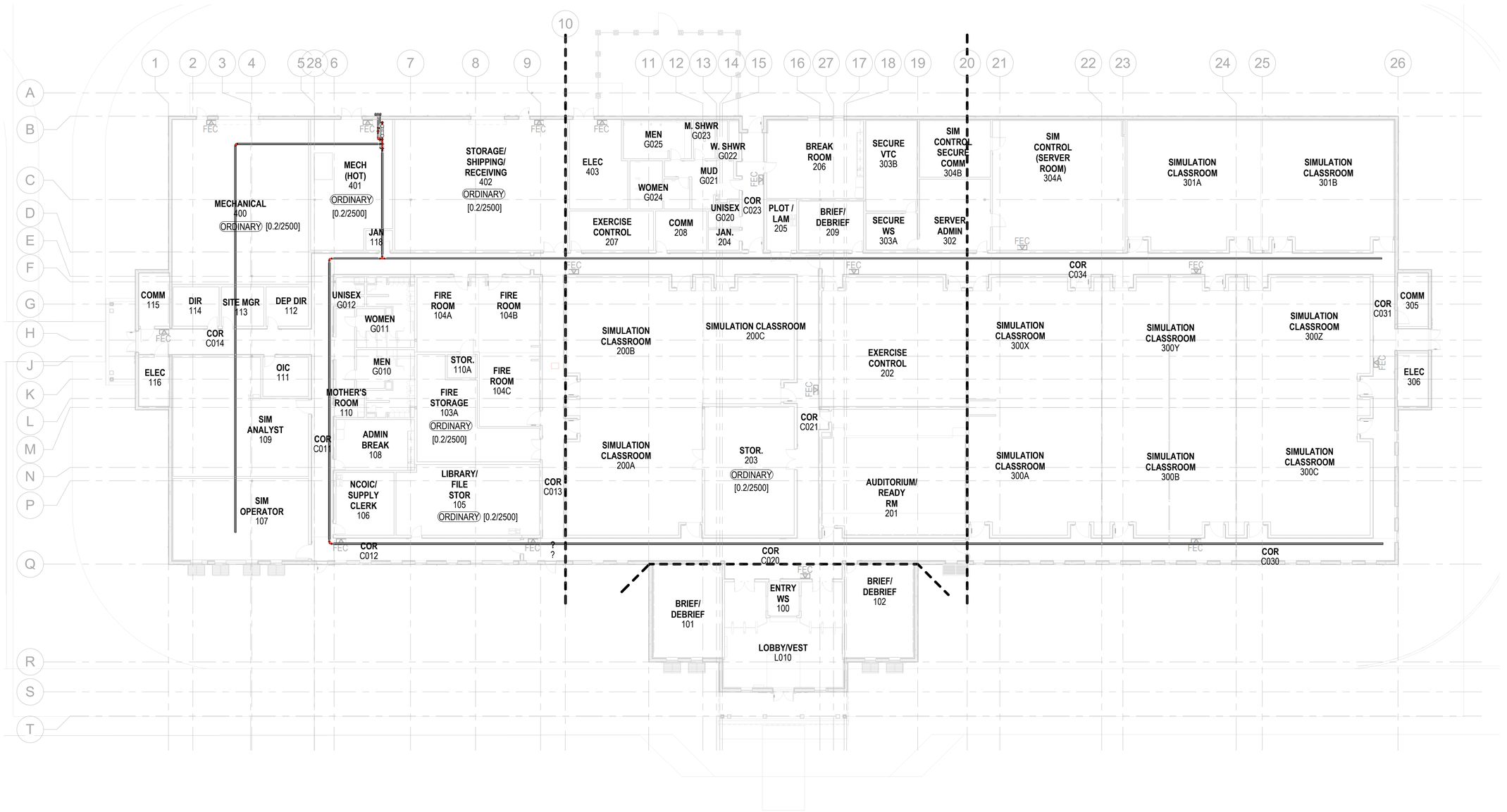

FIRE PROTECTION - OVERALL - FIRST FLOOR PLAN

SCALE: 1/16" = 1'-0"

GENERAL NOTES

1. REFER TO SHEET FX001 FOR GENERAL NOTES AND SYMBOLS.

KEYPLAN

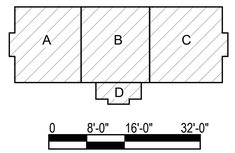

APPR | DATE | DESCRIPTION | SYM

NAVFAC

PRELIMINARY FOR REFERENCE ONLY

SEAL

IRQ WM Jordan COMPANY ~ A JOINT VENTURE ~

Michael Baker INTERNATIONAL

100 AIRSIDE DRIVE
MOON TOWNSHIP, PA 15108 A/E INFO

APPROVED

FOR COMMANDER NAVFAC

ACTIVITY
MARINE CORPS BASE CAMP LEJEUNE

SATISFACTORY TO DATE

DES JAM | DRW ADH | CHK DJW

PM

BRANCH MANAGER

CHIEF ENG/ARCH

FIRE PROTECTION

DEPARTMENT OF THE NAVY
NAVAL FACILITIES ENGINEERING COMMAND ~ MID-ATLANTIC
JACKSONVILLE, NC
ROICC FLORENCE CAMP LEJEUNE
MCB CAMP LEJEUNE

P1338F II MEF SIMULATION/TRAINING CENTER REPLACEMENT

FIRE PROTECTION - OVERALL - FIRST FLOOR PLAN

SCALE: AS NOTED

EPROJECT NO.: 1590892

CONSTR. CONTR. NO.
N40085-20-C-0059

NAVFAC DRAWING NO.

SHEET OF

FX110

DP2 SUBMISSION – P1338 BUILDING - PRE-FINAL SUBMISSION

PLOTTED: 6/11/2021 7:38:13 AM

FILE NAME: BIM 360://HF PACKAGE 3/P1338 MEF SIM CTR-1590892-F.rvt

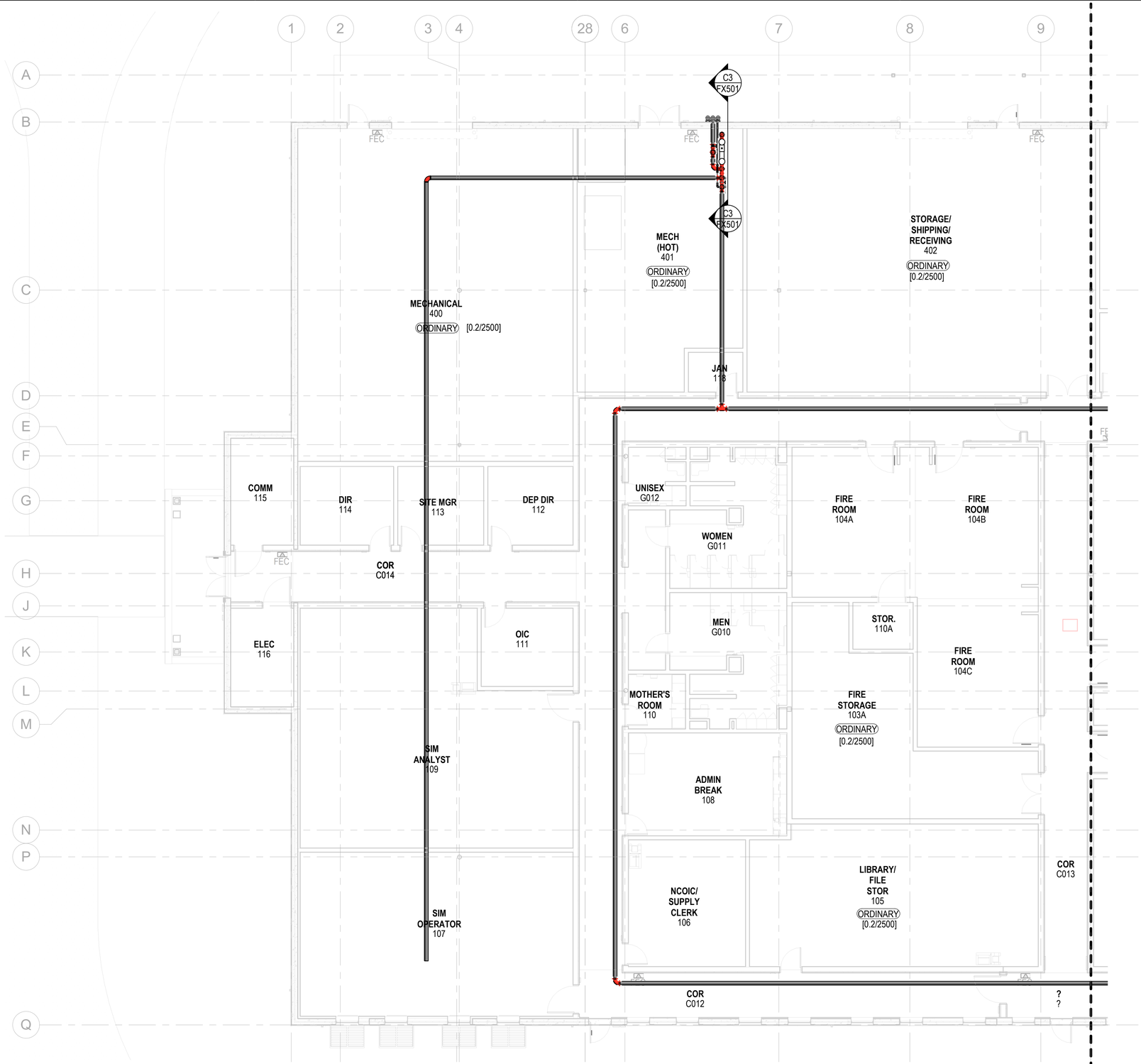

FIRE PROTECTION - FIRST FLOOR PLAN - AREA A

SCALE: 1/8" = 1'-0"

GENERAL NOTES

1. REFER TO SHEET FX001 FOR GENERAL NOTES AND SYMBOLS.

KEYPLAN

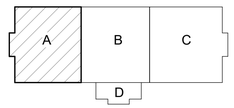

APPR	DATE	DESCRIPTION	SYM

NAVFAC

PRELIMINARY FOR REFERENCE ONLY

SEAL

IRQ W.M. Jordan COMPANY ~ A JOINT VENTURE ~

Michael Baker INTERNATIONAL

100 AIRSIDE DRIVE
MOON TOWNSHIP, PA 15108 A/E INFO

APPROVED

FOR COMMANDER NAVFAC

ACTIVITY
MARINE CORPS BASE
CAMP LEJEUNE

SATISFACTORY TO DATE

DES JAM	DRW ADH	CHK DJW

PM

BRANCH MANAGER

CHIEF ENG/ARCH

FIRE PROTECTION

DEPARTMENT OF THE NAVY
NAVAL FACILITIES ENGINEERING COMMAND ~ MID-ATLANTIC
ROICC FLORENCE CAMP LEJEUNE
NAVAL FACILITIES ENGINEERING COMMAND
JACKSONVILLE, NC
MCB CAMP LEJEUNE
JACKSONVILLE, NC
P1338F II MEF SIMULATION/TRAINING CENTER
REPLACEMENT
FIRE PROTECTION -FIRST FLOOR PLAN - AREA A

SCALE: AS NOTED
EPROJECT NO.: 1590892
CONSTR. CONTR. NO.
N40085-20-C-0059
NAVFAC DRAWING NO.
SHEET OF

FX111

PLOTTED: 6/11/2021 7:36:16 AM

FILE NAME: BIM 360://HF PACKAGE 3/P1338 MEF SIM CTR-1590892-F.rvt

DP2 SUBMISSION – P1338 BUILDING - PRE-FINAL SUBMISSION

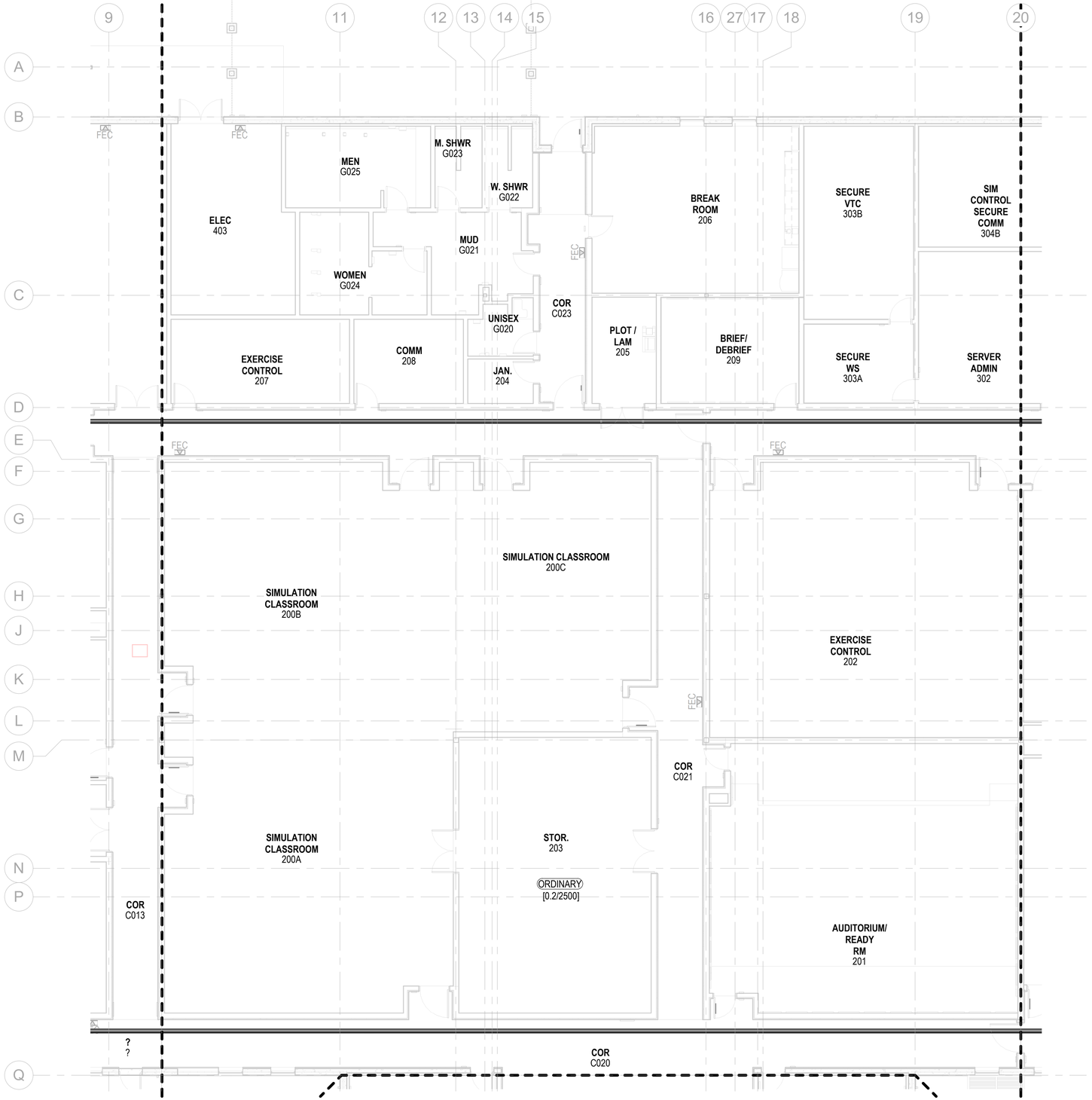

FIRE PROTECTION - FIRST FLOOR PLAN - AREA B

SCALE: 1/8" = 1'-0"

GENERAL NOTES

1. REFER TO SHEET FX001 FOR GENERAL NOTES AND SYMBOLS.

KEYPLAN

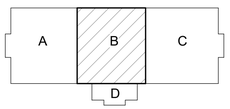

0 4'-0" 8'-0" 16'-0"

SCALE: 1/8" = 1'-0"

N

APPR	DATE	DESCRIPTION	SYM

NAVFAC

PRELIMINARY FOR REFERENCE ONLY

SEAL

IRQ W.M. Jordan COMPANY ~ A JOINT VENTURE ~

Michael Baker INTERNATIONAL

100 AIRSIDE DRIVE
MOON TOWNSHIP, PA 15108 A/E INFO

APPROVED

FOR COMMANDER NAVFAC

ACTIVITY
MARINE CORPS BASE
CAMP LEJEUNE

SATISFACTORY TO DATE

DES JAM | DRW ADH | CHK DJW

PM

BRANCH MANAGER

CHIEF ENG/ARCH

FIRE PROTECTION

DEPARTMENT OF THE NAVY
NAVAL FACILITIES ENGINEERING COMMAND
ROICC FLORENCE CAMP LEJEUNE
MCB CAMP LEJEUNE

NAVAL FACILITIES ENGINEERING COMMAND ~ MID-ATLANTIC
JACKSONVILLE, NC

JACKSONVILLE, NC
P1338F II MEF SIMULATION/TRAINING CENTER
REPLACEMENT

FIRE PROTECTION - FIRST FLOOR PLAN - AREA B

SCALE: AS NOTED

EPROJECT NO.: 1590892

CONSTR. CONTR. NO.
N40085-20-C-0059

NAVFAC DRAWING NO.

SHEET OF

FX112

DP2 SUBMISSION – P1338 BUILDING - PRE-FINAL SUBMISSION

PLOTTED: 6/11/2021 7:36:20 AM

FILE NAME: BIM 360://HF PACKAGE 3/P1338 MEF SIM CTR-1590892-F.rvt

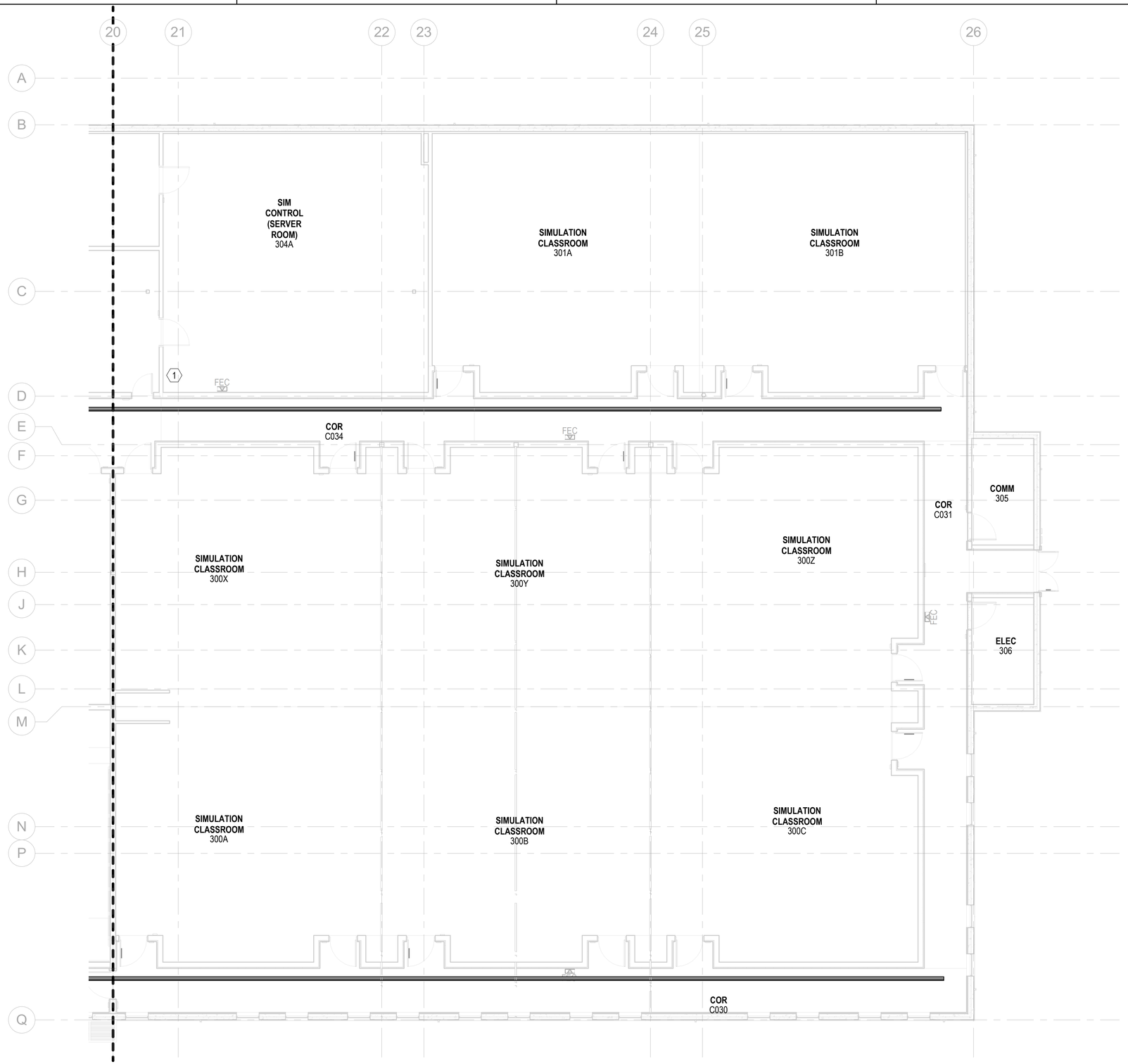

FIRE PROTECTION - FIRST FLOOR PLAN - AREA C

SCALE: 1/8" = 1'-0"

GENERAL NOTES

1. REFER TO SHEET FX001 FOR GENERAL NOTES AND SYMBOLS.

KEYNOTES

1 PROVIDE CONTROL VALVE, WATERFLOW SWITCH AND INSPECTORS TEST CONNECTION FOR WET PIPE SYSTEM SERVING THE SERVER ROOMS 304A AND 304B IN ACCORDANCE WITH UFC 4-11.4.3.

KEYPLAN

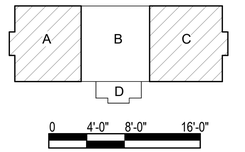

SCALE: 1/8" = 1'-0"

NO.	DESCRIPTION	DATE	APPR

NAVFAC

PRELIMINARY FOR REFERENCE ONLY

SEAL

IRQ WM Jordan COMPANY – A JOINT VENTURE –

Michael Baker INTERNATIONAL

100 AIRSIDE DRIVE
MOON TOWNSHIP, PA 15108 A/E INFO

APPROVED

FOR COMMANDER NAVFAC

ACTIVITY
MARINE CORPS BASE CAMP LEJEUNE

SATISFACTORY TO DATE

DES JAM | DRW ADH | CHK DJW

PM

BRANCH MANAGER

CHIEF ENG/ARCH

FIRE PROTECTION

DEPARTMENT OF THE NAVY
NAVAL FACILITIES ENGINEERING COMMAND
ROICC FLORENCE CAMP LEJEUNE

NAVAL FACILITIES ENGINEERING COMMAND ~ MID-ATLANTIC
JACKSONVILLE, NC

MCB CAMP LEJEUNE
JACKSONVILLE, NC

P1338F II MEF SIMULATION/TRAINING CENTER REPLACEMENT

FIRE PROTECTION - FIRST FLOOR PLAN - AREA C

SCALE: AS NOTED

EPROJECT NO.: 1590892

CONSTR. CONTR. NO.
N40085-20-C-0059

NAVFAC DRAWING NO.

SHEET OF

FX113

DP2 SUBMISSION – P1338 BUILDING - PRE-FINAL SUBMISSION

PLOTTED: 6/11/2021 7:36:23 AM

FILE NAME: BIM 360://HF PACKAGE 3/P1338 MEF SIM CTR-1590892-F.rvt

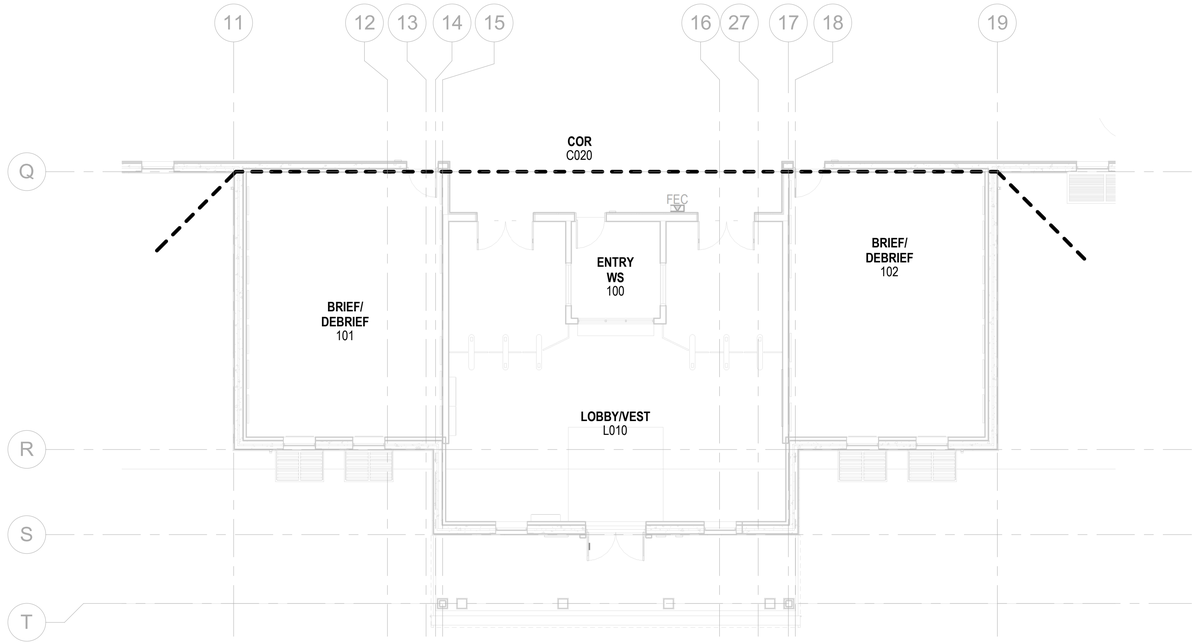

FIRE PROTECTION - FIRST FLOOR PLAN - AREA D

SCALE: 1/8" = 1'-0"

GENERAL NOTES

1. REFER TO SHEET FX001 FOR GENERAL NOTES AND SYMBOLS.

KEYPLAN

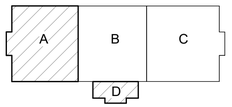

0 4'-0" 8'-0" 16'-0"

SCALE: 1/8" = 1'-0"

N

SYM	DESCRIPTION	DATE	APPR

PRELIMINARY FOR REFERENCE ONLY

SEAL

RQ W.M. Jordan COMPANY – A JOINT VENTURE –

Michael Baker INTERNATIONAL

100 AIRSIDE DRIVE
MOON TOWNSHIP, PA 15108 A/E INFO

APPROVED

FOR COMMANDER NAVFAC

ACTIVITY
MARINE CORPS BASE
CAMP LEJEUNE

SATISFACTORY TO DATE

DES JAM | DRW ADH | CHK DJW

PM

BRANCH MANAGER

CHIEF ENG/ARCH

FIRE PROTECTION

DEPARTMENT OF THE NAVY
NAVAL FACILITIES ENGINEERING COMMAND
ROICC FLORENCE CAMP LEJEUNE
MCB CAMP LEJEUNE

NAVAL FACILITIES ENGINEERING COMMAND – MID-ATLANTIC
JACKSONVILLE, NC

JACKSONVILLE, NC
P1338F II MEF SIMULATION/TRAINING CENTER
REPLACEMENT

FIRE PROTECTION - FIRST FLOOR PLAN - AREA D

SCALE: AS NOTED

EPROJECT NO.: 1590892

CONSTR. CONTR. NO.
N40085-20-C-0059

NAVFAC DRAWING NO.

SHEET OF

FX114

DP2 SUBMISSION – P1338 BUILDING - PRE-FINAL SUBMISSION

PLOTTED: 6/11/2021 7:36:25 AM

FILE NAME: BIM 360://HF PACKAGE 3/P1338 MEF SIM CTR-1590892-F.rvt

GENERAL NOTES

1. REFER TO SHEET FX001 FOR GENERAL NOTES AND SYMBOLS.

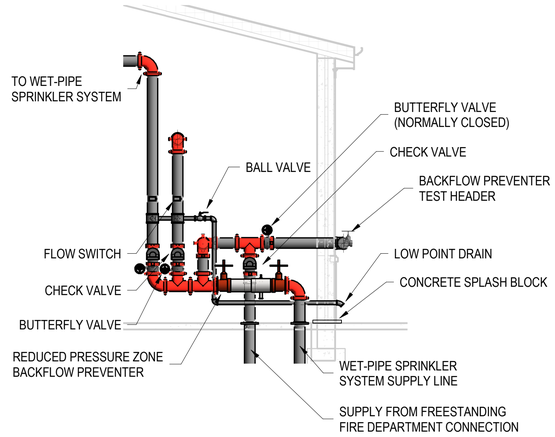

C3 FIRE PROTECTION - RISER DETAIL
SCALE: NTS

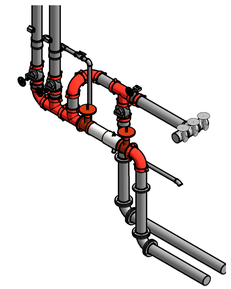

B1 FIRE PROTECTION - ISOMETRIC
SCALE: NTS

			APPR
			DATE
			DESCRIPTION
			SYM

NAVFAC

PRELIMINARY FOR REFERENCE ONLY

SEAL

W.M. Jordan COMPANY – A JOINT VENTURE –

Michael Baker INTERNATIONAL

100 AIRSIDE DRIVE
MOON TOWNSHIP, PA 15108 A/E INFO

APPROVED

FOR COMMANDER NAVFAC

ACTIVITY
MARINE CORPS BASE
CAMP LEJEUNE

SATISFACTORY TO DATE

DES JAM | DRW ADH | CHK DJW

PM

BRANCH MANAGER

CHIEF ENG/ARCH

FIRE PROTECTION

DEPARTMENT OF THE NAVY
NAVAL FACILITIES ENGINEERING COMMAND
ROICC FLORENCE CAMP LEJEUNE
MCB CAMP LEJEUNE

NAVAL FACILITIES ENGINEERING COMMAND ~ MID-ATLANTIC
JACKSONVILLE, NC

JACKSONVILLE, NC
P1338F II MEF SIMULATION/TRAINING CENTER
REPLACEMENT

FIRE PROTECTION - DETAILS

SCALE: AS NOTED

EPROJECT NO.: 1590892

CONSTR. CONTR. NO.
N40085-20-C-0059

NAVFAC DRAWING NO.

SHEET OF

FX501

DP2 SUBMISSION – P1338 BUILDING - PRE-FINAL SUBMISSION

PLOTTED: 6/11/2021 7:36:26 AM

FILE NAME: BIM 360://HF PACKAGE 3/P1338 MEF SIM CTR-1590892-F.rvt

PLUMBING SYMBOLS LEGEND

SYMBOL	DESCRIPTION	SYMBOL	DESCRIPTION	SYMBOL	DESCRIPTION	SYMBOL	DESCRIPTION	SYMBOL	DESCRIPTION
	ACCESS PANEL		DIRECTION OF WATER FLOW	FS	PIPING - FLOW SWITCH		PRESSURE REDUCING VALVE		TEE DOWN
ELEV PLAN	ANGLE GATE VALVE		DRAIN VALVE		GATE VALVE		PRESSURE REGULATOR		TEE UP
	ANGLE GLOBE VALVE		ELBOW 90° DOWN		GLOBE VALVE	T&P	PRESSURE RELIEF VALVE (TEMPERATURE & PRESSURE)	T	TEMPERATURE SENSOR
	BACKFLOW PREVENTER		ELBOW 90° UP		GAS REGULATOR	T	PRESSURE RELIEF VALVE (TEMPERATURE)		THERMOMETER
	BALL VALVE		ELBOW 90°		HOSE BIBB	P	PRESSURE RELIEF VALVE (PRESSURE)	T	THERMOSTAT (DASHED LINE RUNS TO CONTROLLED DEVICE)
	BUTTERFLY VALVE		ELBOW 45°		HOSE & QUICK COUPLERS		PT (PRESSURE & TEMPERATURE) TEST PORT		TRAP - ELEVATION
	CALIBRATED BALANCE VALVE	EJ	EXPANSION JOINT	#	KEYNOTE	P-#	PUMP (ARROW IS DIRECTION OF FLOW)		TRAP - PLAN
	CAP	FCO	FLOOR CLEAN-OUT		LUBRICATOR		QUICK DISCONNECT		UNION
	CHECK VALVE (SWING GATE)		FILTER	M	METER		REDUCER		VALVE IN RISE
	CONTROL VALVE (3-WAY)	F/R	FILTER/REGULATOR		MIXING VALVE	RD-#	ROOF DRAIN		VENT THROUGH ROOF
	CONNECT TO EXISTING	F/R/L	FILTER/REGULATOR/LUBRICATOR		PIPE ANCHOR		REMOVE EXISTING TO	WH-#	WALL HYDRANT
CO	CLEAN-OUT		FLEXIBLE CONNECTION		PIPE GUIDE	S	SOLENOID VALVE	WHA-X	WATER HAMMER ARRESTOR
CO	CLEAN-OUT IN VERTICAL	FD-# OR FD-#	FLOOR DRAIN W/ & W/O P-TRAP		PLUG VALVE		STRAINER		
	COMPRESSED AIR OUTLET	FS-# OR FS-#	FLOOR SINK W/ & W/O P-TRAP		PRESSURE GAUGE WITH GAUGE COCK		STRAINER WITH VALVED AND CAPPED BLOW DOWN		

NOTE:
LEGENDS ON THIS SHEET ARE ALL-INCLUSIVE. ALL SYMBOLS, ABBREVIATIONS, OR PIPE SYSTEMS MAY NOT BE PART OF THIS PROJECT.

PLUMBING GENERAL NOTES

1. PROVIDE ALL MATERIALS AND EQUIPMENT AND PERFORM ALL LABOR REQUIRED, TO INSTALL COMPLETE FOR AN OPERABLE PLUMBING SYSTEM AS INDICATED ON THE DRAWINGS, AS SPECIFIED, AND AS REQUIRED BY CODE. ALL MATERIAL SHALL BE NEW AND OF GOOD QUALITY. ALL WORK SHALL BE INSTALLED IN A NEAT AND WORKMAN LIKE MANNER.
2. CONTRACT DOCUMENT DRAWINGS FOR PLUMBING WORK ARE DIAGRAMMATIC AND ARE INTENDED TO CONVEY SCOPE AND GENERAL ARRANGEMENT ONLY. THE LOCATIONS OF ALL ITEMS SHOWN ON THE DRAWINGS OR CALLED FOR IN THE SPECIFICATIONS THAT ARE NOT DEFINITIVELY FIXED BY DRAWING DIMENSIONS ARE APPROXIMATE ONLY. THE EXACT LOCATION NECESSARY TO ACHIEVE THE BEST CONDITIONS AND RESULTS MUST BE DETERMINED BY THE PROJECT SITE CONDITIONS. DO NOT SCALE DRAWINGS. CERTAIN ITEMS SUCH AS RISES AND DROPS IN PIPING, ACCESS DOORS, ETC., ARE INDICATED ON THE CONTRACT DOCUMENT DRAWINGS FOR CLARITY NOT FOR A SPECIFIC LOCATION REQUIREMENT AND SHALL NOT BE INTERPRETED AS THE EXTENT OF THE REQUIREMENTS FOR THESE TYPES OF ITEMS.
3. INSTALL ALL PLUMBING EQUIPMENT AND APPURTENANCES IN ACCORDANCE WITH MANUFACTURER'S RECOMMENDATIONS, CONTRACT DOCUMENTS, AND APPLICABLE CODES AND REGULATIONS. COORDINATE ALL EQUIPMENT CONNECTIONS WITH MANUFACTURERS' CERTIFIED DRAWINGS. COORDINATE AND PROVIDE ALL TRANSITIONS REQUIRED FOR FINAL EQUIPMENT CONNECTIONS TO FURNISHED EQUIPMENT. FIELD VERIFY AND COORDINATE ALL PIPING DIMENSIONS BEFORE FABRICATION. LOCATE ALL PLUMBING EQUIPMENT FOR UNOBSTRUCTED ACCESS TO UNIT ACCESS PANELS, CONTROLS, VALVING, ETC.
4. COORDINATE CONSTRUCTION OF ALL PLUMBING WORK WITH ARCHITECTURAL, STRUCTURAL, CIVIL, SOILS, MECHANICAL, ELECTRICAL, COMMUNICATIONS WORK, ETC., AS SHOWN IN OTHER CONTRACT DOCUMENTS. PROPERLY CONSTRUCTED OFFSETS IN PIPING AROUND OBSTRUCTIONS SHALL BE PROVIDED AT NO ADDITIONAL COST. LOCATIONS AND SIZES OF ALL FLOOR, WALL AND ROOF OPENINGS SHALL BE COORDINATED WITH ALL OTHER TRADES INVOLVED.
5. MAINTAIN A MINIMUM OF 6'-8" CLEARANCE TO UNDERSIDE OF PIPES, CONDUITS, SUSPENDED EQUIPMENT, ETC., THROUGHOUT ACCESS ROUTES IN MECHANICAL ROOMS.
6. ALL TESTS SHALL BE COMPLETED BEFORE ANY EQUIPMENT OR PIPING INSULATION IS APPLIED, OR CONCEALED.
7. LOCATE ALL TEMPERATURE, PRESSURE AND FLOW MEASURING DEVICES IN ACCESSIBLE LOCATIONS WITH A STRAIGHT SECTION OF PIPE UPSTREAM AND DOWNSTREAM, AS RECOMMENDED BY THE DEVICE MANUFACTURER FOR ACCURACY. INSTALL THERMOMETER IN A VERTICAL AND TILTED POSITION TO ALLOW READING BY OBSERVER STANDING ON FLOOR.
8. WHERE TWO OR MORE PRODUCTS OF THE SAME TYPE OF EQUIPMENT ARE REQUIRED, THE PRODUCTS OF A SINGLE MANUFACTURER SHALL BE USED.
9. PROVIDE ACCESS PANELS FOR INSTALLATION IN WALLS AND CEILINGS, WHERE REQUIRED, TO SERVICE VALVES AND OTHER CONCEALED PLUMBING EQUIPMENT, DEVICES, ETC. ACCESS PANELS SHALL BE TURNED OVER TO THE GENERAL CONTRACTOR FOR INSTALLATION.
10. ALL OPENINGS IN FIRE RESISTANCE RATED WALLS DUE TO DUCTWORK, PIPING, CONDUIT, ETC., SHALL BE FIRE STOPPED IN ACCORDANCE WITH THE REQUIREMENTS OF ASTM E 814 & UL 1479. SIMILARLY, SEAL/FIRESTOP AS REQUIRED AT SMOKE RATED SURFACES AS WELL.
11. INSTALL PIPING SO THAT ALL VALVES, STRAINERS, UNIONS, TRAPS, FLANGES AND OTHER APPURTENANCES REQUIRING ACCESS ARE EASILY ACCESSIBLE. ALL VALVES SHALL BE INSTALLED SO THAT THE VALVE REMAINS IN SERVICE WHEN EQUIPMENT OR PIPING ON EQUIPMENT SIDE OF VALVE IS REMOVED. ALL BALANCING VALVES AND BUTTERFLY VALVES SHALL BE PROVIDED WITH POSITION INDICATORS AND MAXIMUM ADJUSTABLE STOPS (AKA MEMORY STOPS). ALL VALVES (EXCEPT CONTROL VALVES) AND STRAINERS SHALL BE FULL SIZE OF PIPE BEFORE REDUCING SIZE TO MAKE CONNECTIONS TO EQUIPMENT AND CONTROLS.
12. UNIONS AND/OR FLANGES SHALL BE INSTALLED AT EACH PIECE OF EQUIPMENT AND IN BYPASSES TO PERMIT DISASSEMBLY FOR ALTERATION AND REPAIRS. INSTALL ALL PIPING WITHOUT FORCING OR SPRINGING.
13. DRAIN PIPING IN MECHANICAL ROOMS SHALL BE ROUTED SO AS NOT TO CREATE TRIPPING HAZARDS.
14. PROVIDE HIGH POINT VENTS AND LOW POINT DRAINS. PROVIDE DIELECTRIC CONNECTIONS BETWEEN DISSIMILAR MATERIALS.
15. VENT FROM NATURAL GAS EQUIPMENT PRV'S TO BUILDING EXTERIOR. PIPE SHALL BE SAME SIZE AS VENT OPENING ON PRV'S. PROVIDE GOOSENECK WITH INSECT SCREEN AT EXTERIOR VENT TERMINATION.
16. REFER TO ARCHITECTURAL DRAWINGS FOR WALL, ROOF, AND FLOOR TYPES AT PENETRATIONS.
17. PROPERLY SEAL ALL PLUMBING SYSTEMS PIPING AND COMPONENT'S PENETRATIONS OF BUILDING AIR BARRIER.
18. SHUT-OFF VALVES SHALL BE INTEGRATED INTO THE PLUMBING DISTRIBUTION SYSTEMS TO PERMIT THE ISOLATION OF A FIXTURE OR EQUIPMENT TO PERMIT REPAIR OR MAINTENANCE, WITHOUT DISRUPTION OF OTHER FIXTURES OR EQUIPMENT.
19. WATER HAMMER ARRESTORS SHALL BE INSTALLED AT FLUSH VALVE-OPERATED FIXTURES, SOLENOID VALVES, AND ANY OTHER QUICK CLOSING VALVES TO MINIMIZE NOISE IN ACCORDANCE WITH THE INTERNATIONAL PLUMBING CODE AND PDI STANDARD WH201. ARRESTORS SHALL BE INSTALLED WITH PROPER ACCESS PANELS. AIR CHAMBERS SHALL NOT BE PERMITTED.
20. ALL FLOOR DRAINS AND FLOOR SINKS SHALL BE PROVIDED WITH A TRAP PRIMER CONNECTION SUPPLIED FROM A TRAP PRIMER VALVE, CONFORMING TO ASSE 1018, WITH APPROPRIATE DISTRIBUTION UNIT, TO REDUCE TRAP SEAL EVAPORATION.

PLUMBING ABBREVIATIONS

ABB	DESCRIPTION	ABB	DESCRIPTION	ABB	DESCRIPTION	ABB	DESCRIPTION
ABV	ABOVE	CU FT	CUBIC FEET	FRP	FIBERGLASS REINFORCED PLASTIC PIPING	PC	PLUMBING CONTRACTOR
AC	AIR COMPRESSOR	CUH	CABINET UNIT HEATER	FT	FOOT, FEET	PDI	PLUMBING & DRAINAGE INSTITUTE
AD	ACCESS DOOR, AIR DRYER	CWBT	CHILLED WATER BUFFER TANK	FTG	FOOTING	POL	PETROLEUM / OIL / LUBRICANT
AFF	ABOVE FINISHED FLOOR	CWR	CHILLED WATER RETURN	GA	GAUGE	PSI	POUNDS PER SQUARE INCH
AFG	ABOVE FINISHED GRADE	CWS	CHILLED WATER SUPPLY	GBD	GARBAGE DISPOSAL	QTY	QUANTITY
AFR	ABOVE FINISHED ROOF	DEG	DEGREE(S)	GC	GENERAL CONTRACTOR	REQ'D	REQUIRED
AHU	AIR HANDLING UNIT	DF	DRINKING FOUNTAIN	GPM	GALLONS PER MINUTE	RPM	REVOLUTIONS PER MINUTE
AP	ACCESS PANEL	DFU	DRAINAGE FIXTURE UNIT	GWH	GAS WATER HEATER	RWC	RAIN WATER CONDUCTOR
APPROX	APPROXIMATE(LY)	DIA	DIAMETER	HP	HORSE POWER	RWL	RAIN WATER LEADER
ARCH	ARCHITECT OR ARCHITECTURAL	DN	DOWN	HTG	HEATING	S	SINK
AST	ABOVE GROUND STORAGE TANK	DU	DISTRIBUTION UNIT	HV	HEATING AND VENTILATION	SF	SQUARE FEET
C	CELSIUS	DWG	DRAWING	HVAC	HEATING VENTILATION / AIR CONDITIONING	SFU	SUPPLY FIXTURE UNIT(S)
Kg	KILOGRAM(S)	EC	ELECTRICAL CONTRACTOR	IE	INVERT ELEVATION	SH	SHOWER
L/s	LITERS PER SECOND	EL	EXPANSION LOOP	IN	INCH(ES)	SRC	SECONDARY RAIN CONDUCTOR
m	METERS	ELEC	ELECTRIC(AL)	IRH	INFRARED RADIANT HEATER	SS	SERVICE SINK
m³	CUBIC METERS	ELEV	ELEVATION	KS	KITCHEN SINK	STRUC	STRUCTURAL
m²	SQUARE METERS	ESEW	EMERGENCY SHOWER & EYE WASH	KW	KILOWATTS	SWC	SAFE WASTE CONNECTION
m/s	METERS PER SECOND	ET	EXPANSION TANK	L	LAVATORY	TD	TRENCH DRAIN
mm	MILIMETERS	ETD	EXTEND TO DRAIN	LB(S)	POUND(S)	TE	TOP ELEVATION
Pa	PASCALS	ETR	EXISTING TO REMAIN	MAX	MAXIMUM	TEMP	TEMPERATURE
W	WATT(S)	EW, EEW	EMERGENCY EYE WASH	MC	MECHANICAL CONTRACTOR	TOF	TOP OF FOOTING
BLDG	BUILDING	EWC	ELECTRIC WATER COOLER	MECH	MECHANICAL	TOP	TOP OF PIPE
BLW	BELOW	EWH	ELECTRIC WATER HEATER	MFR, MFGR	MANUFACTURER	TP	TRAP PRIMER VALVE
BOF	BOTTOM OF FOOTING	EX, EXIST	EXISTING	MIN	MINIMUM	TYP	TYPICAL
BOT	BOTTOM	(F)	FUTURE	MISC	MISCELLANEOUS	U	URINAL
C	CELSIUS	F	FAHRENHEIT	MR	MOP RECEPTOR	UNO	UNLESS NOTED OTHERWISE
CB	CATCH BASIN	FCO	FLOOR CLEANOUT	NC	NORMALLY CLOSED	VOL	VOLUME
CFH	CUBIC FEET PER HOUR	FFE	FINISHED FLOOR ELEVATION	NIC	NOT IN CONTRACT	W	WASTE
CLG	CEILING	FIN	FINISHED	NO	NORMALLY OPEN	W/	WITH
CONC	CONCRETE	FLEX	FLEXIBLE	NTS	NOT TO SCALE	W/O	WITHOUT
COND	CONDENSATION	FLR	FLOOR	OB	OUTLET BOX	WB	WASHER BOX
CONN	CONNECTION	FPM	FEET PER MINUTE	P&T	PRESSURE & TEMPERATURE	WC	WATER CLOSET, WATER COLUMN
CONT	CONTINUOUS, CONTINUATION					WF	WASH FOUNTAIN
CONTR	CONTRACTOR					WH	WATER HEATER

PLUMBING PIPE LEGEND

SYMBOL	ABBREV	DESCRIPTION
ATF	ATF	AUTOMATIC TRANSMISSION FLUID
AW	AW	ACID RESISTANT WASTE
AV	AV	ACID RESISTANT VENT
CA	CA	COMPRESSED AIR
CG	CG	CHASSIS GREASE
CW	CW	DOMESTIC COLD WATER
HW	HW	DOMESTIC HOT WATER
HWR	HWR	DOMESTIC HOT WATER RETURN
-(140°)-	HW140	DOMESTIC HOT WATER (140°F)
-(140°)-	HWR140	DOMESTIC HOT WATER RETURN (140°F)
EC	EC	ENGINE COOLANT
EO	EO	ENGINE OIL
FP	FP	FIRE PROTECTION
G	G	NATURAL GAS
GO	GO	GEAR OIL
GW	GW	GREASE-LADEN WASTE
OW	OW	OIL-LADEN WASTE
PD	PD	PUMP DISCHARGE
SS	SS	SANITARY SEWER
ST	ST	STORM SEWER
TP	TP	TRAP PRIMER PIPING
TW	TW	TEMPERED WATER
-V-	V	SANITARY VENT
WEC	WEC	WASTE ENGINE COOLANT
WEO	WEO	WASTE ENGINE OIL

APPR | DATE | SYM | DESCRIPTION

NAVFAC

PRELIMINARY NOT FOR CONSTRUCTION

SEAL

IRQ WM Jordan COMPANY ~ A JOINT VENTURE ~

Michael Baker INTERNATIONAL
100 AIRSIDE DRIVE
MOON TOWNSHIP, PA 15108
A/E INFO

APPROVED

FOR COMMANDER NAVFAC

ACTIVITY
MARINE CORPS BASE
CAMP LEJEUNE

SATISFACTORY TO DATE

DES	DRW	CHK
PM		
BRANCH MANAGER		
CHIEF ENG/ARCH		
FIRE PROTECTION		

DEPARTMENT OF THE NAVY
NAVAL FACILITIES ENGINEERING COMMAND ~ MID-ATLANTIC
JACKSONVILLE, NC
ROICC FLORENCE CAMP LEJEUNE
MCB CAMP LEJEUNE
JACKSONVILLE, NC
P1338 II MEF SIMULATION/TRAINING CENTER REPLACEMENT
PLUMBING - GENERAL NOTES, ABBREVIATIONS & SYMBOLS

SCALE: AS NOTED
EPROJECT NO.: 1590892
CONSTR. CONTR. NO.
N40085-20-C-0059
NAVFAC DRAWING NO.
SHEET OF
P-001

DP2 SUBMISSION – P1338 BUILDING - PRE-FINAL SUBMISSION

PLOTTED: 6/10/2021 3:53:35 PM

FILE NAME: BIM 360://HF PACKAGE 3/P1338 MEF SIM CTR-1590892-M.rvt

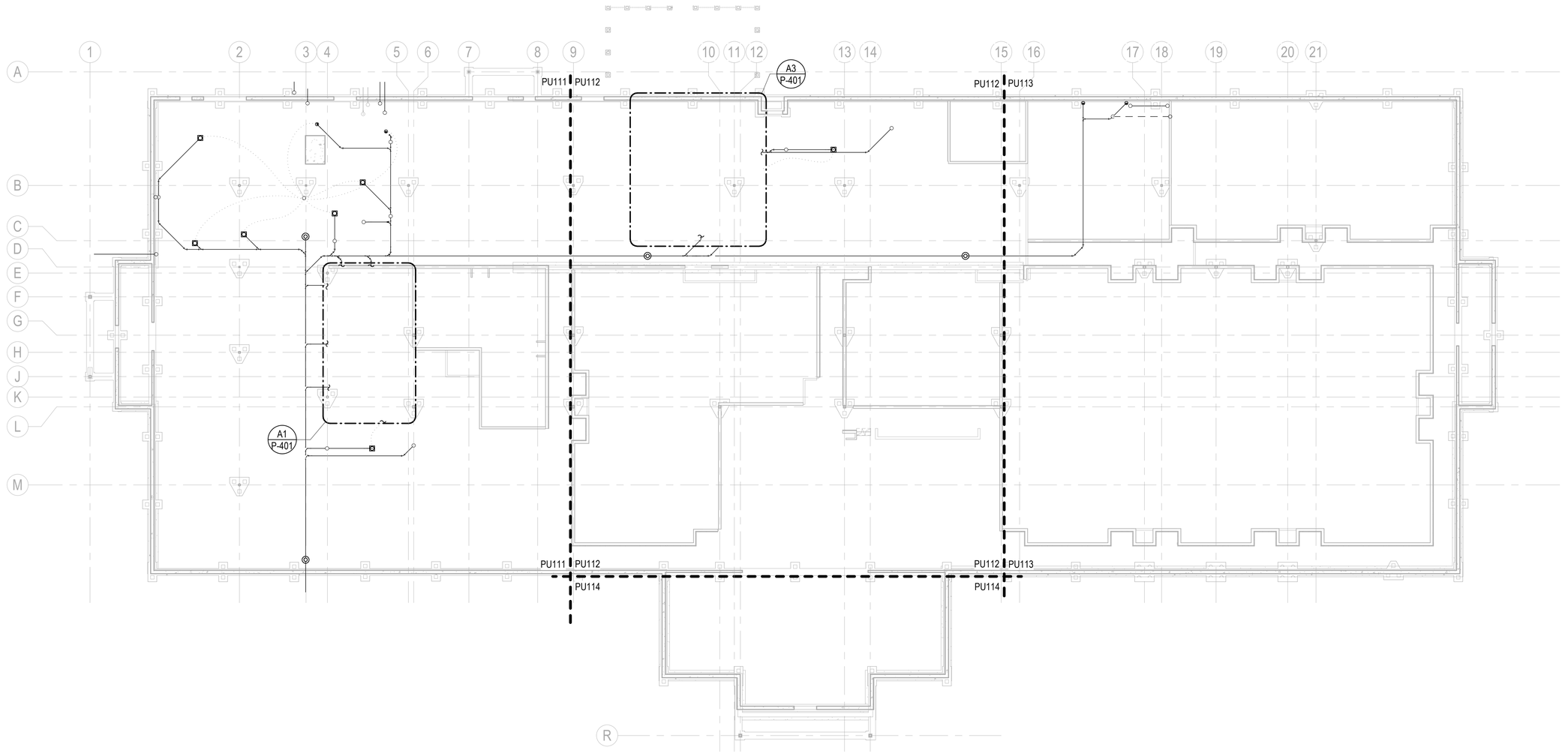

PLUMBING - OVERALL - UNDERGROUND PLAN

SCALE: 1/16" = 1'-0"

FFE: 0'-0"

GENERAL NOTES

1. SEE P-001 FOR GENERAL NOTES, ABBREVIATIONS & SYMBOLS.
2. REFER TO STRUCTURAL DRAWINGS FOR THE EXACT SIZE, LOCATION, AND ELEVATION OF FOUNDATIONS, FOOTINGS AND GRADE BEAMS.
3. REFER TO STRUCTURAL DRAWINGS FOR DETAILS OF PIPE CROSSINGS UNDER OR THROUGH THE STRUCTURAL FOUNDATIONS, FOOTINGS AND GRADE BEAMS.
4. ALL UNDERFLOOR SANITARY SEWERS SHALL BE INSTALLED AT A MINIMUM SLOPE OF 1/8"/1'-0", UNLESS NOTED OTHERWISE.
5. UNDERFLOOR VENTS SHALL CONNECT ABOVE CENTERLINE OF WASTE / SANITARY PIPE & SHALL RISE CONTINUOUSLY THROUGH FLOOR A MINIMUM 6" ABOVE FLOOD LEVEL OF FIXTURE. PROVIDE 45° CONNECTION TO WASTE / SANITARY LINE.
6. UNDERFLOOR SANITARY SEWER PIPING SHALL BE A MINIMUM OF 4" UNLESS NOTED OTHERWISE.
7. REFER TO P-700 SERIES FOR RISER DIAGRAMS.

KEYPLAN

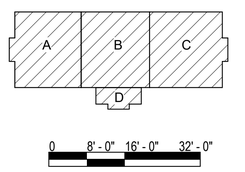

APPR	DATE	DESCRIPTION	SYM

NAVFAC

PRELIMINARY NOT FOR CONSTRUCTION

SEAL

RQ W.M. Jordan COMPANY – A JOINT VENTURE –

Michael Baker INTERNATIONAL

100 AIRSIDE DRIVE
MOON TOWNSHIP, PA 15108 A/E INFO

APPROVED

FOR COMMANDER NAVFAC

ACTIVITY
MARINE CORPS BASE
CAMP LEJEUNE

SATISFACTORY TO DATE

DES	DRW	CHK

PM

BRANCH MANAGER

CHIEF ENG/ARCH

FIRE PROTECTION

DEPARTMENT OF THE NAVY
NAVAL FACILITIES ENGINEERING COMMAND
ROICC FLORENCE CAMP LEJEUNE
MCB CAMP LEJEUNE

NAVAL FACILITIES ENGINEERING COMMAND ~ MID-ATLANTIC
JACKSONVILLE, NC

JACKSONVILLE, NC
P1338 II MEF SIMULATION/TRAINING CENTER
REPLACEMENT

PLUMBING - OVERALL - UNDERGROUND PLAN

SCALE: AS NOTED

EPROJECT NO.: 1590892

CONSTR. CONTR. NO.
N40085-20-C-0059

NAVFAC DRAWING NO.

SHEET OF

PU110

DP2 SUBMISSION – P1338 BUILDING - PRE-FINAL SUBMISSION

PLOTTED: 6/10/2021 3:55:15 PM

FILE NAME: BIM 360://HF PACKAGE 3/P1338 MEF SIM CTR-1590892-M.rvt

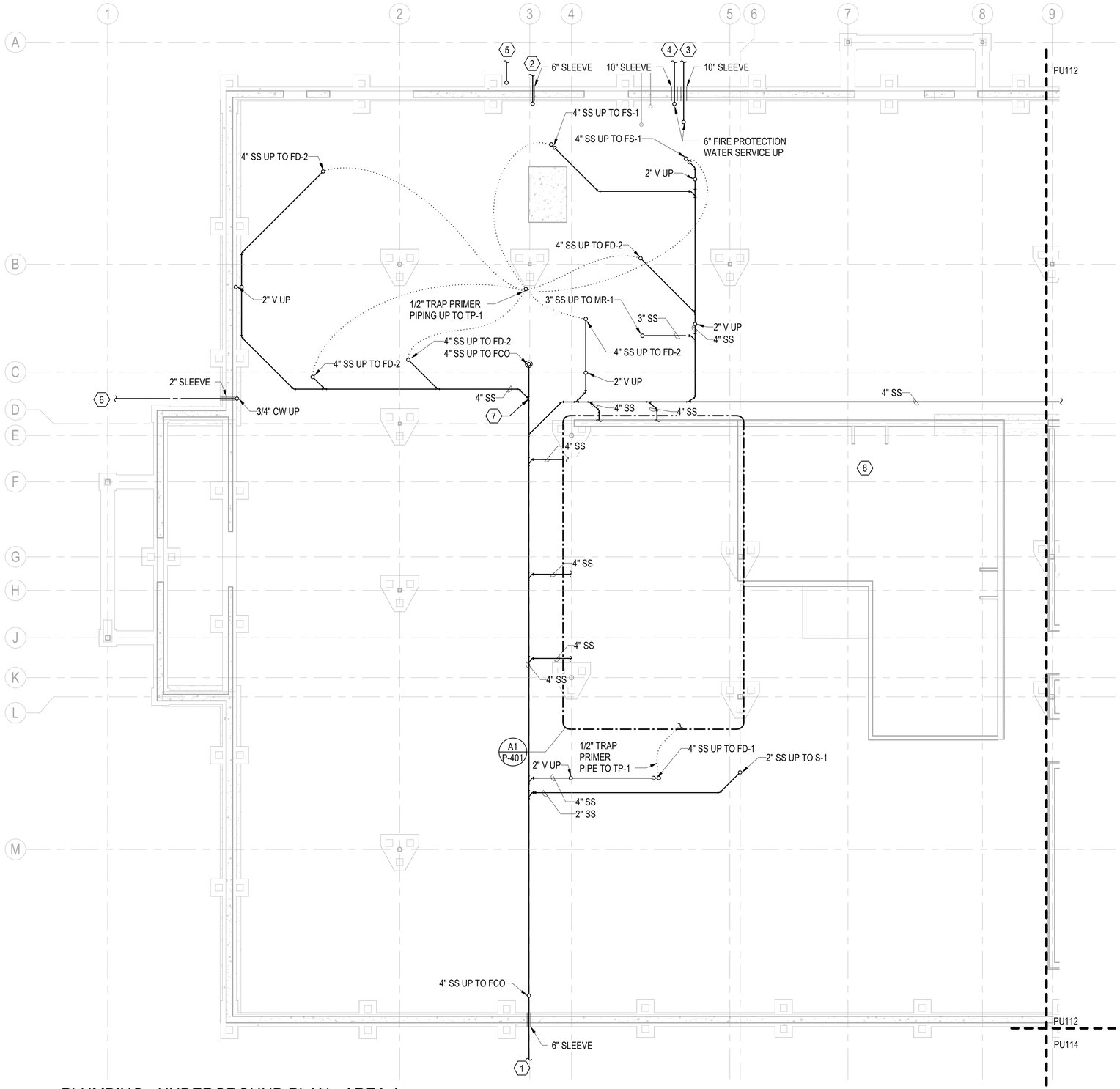

PLUMBING - UNDERGROUND PLAN - AREA A

SCALE: 1/8" = 1'-0"

GENERAL NOTES

1. SEE P-001 FOR GENERAL NOTES, ABBREVIATIONS & SYMBOLS.
2. REFER TO STRUCTURAL DRAWINGS FOR THE EXACT SIZE, LOCATION, AND ELEVATION OF FOUNDATIONS, FOOTINGS AND GRADE BEAMS.
3. REFER TO STRUCTURAL DRAWINGS FOR DETAILS OF PIPE CROSSINGS UNDER OR THROUGH THE STRUCTURAL FOUNDATIONS, FOOTINGS AND GRADE BEAMS.
4. ALL UNDERFLOOR SANITARY SEWERS SHALL BE INSTALLED AT A MINIMUM SLOPE OF 1/8"/1'-0", UNLESS NOTED OTHERWISE.
5. UNDERFLOOR VENTS SHALL CONNECT ABOVE CENTERLINE OF WASTE / SANITARY PIPE & SHALL RISE CONTINUOUSLY THROUGH FLOOR A MINIMUM 6" ABOVE FLOOD LEVEL OF FIXTURE. PROVIDE 45° CONNECTION TO WASTE / SANITARY LINE.
6. UNDERFLOOR SANITARY SEWER PIPING SHALL BE A MINIMUM OF 4" UNLESS NOTED OTHERWISE.
7. REFER TO P-700 SERIES FOR RISER DIAGRAMS.

KEYNOTES

1. 4" SS, INVERT ELEVATION -6'-8 3/4". TOP OF FOOTING ELEVATION -1'-4", BOTTOM OF FOOTING ELEVATION -3'-4". REFER TO CIVIL DRAWINGS FOR CONTINUATION.
2. 3" DOMESTIC WATER SERVICE. TOP OF FOOTING ELEVATION -1'-4", BOTTOM OF FOOTING ELEVATION -3'-4". REFER TO CIVIL DRAWINGS FOR CONTINUATION.
3. 6" FIRE PROTECTION WATER SERVICE. TOP OF FOOTING ELEVATION -1'-4", BOTTOM OF FOOTING ELEVATION -3'-4". REFER TO CIVIL DRAWINGS FOR CONTINUATION.
4. 6" FIRE PROTECTION WATER SERVICE. TOP OF FOOTING ELEVATION -1'-4", BOTTOM OF FOOTING ELEVATION -3'-4". REFER TO CIVIL DRAWINGS FOR CONTINUATION.
5. 1 1/4" NATURAL GAS SERVICE. REFER TO CIVIL DRAWINGS FOR CONTINUATION.
6. 3/4" CW TO YH-1 AT MECHANICAL YARD. TOP OF FOOTING ELEVATION -1'-4", BOTTOM OF FOOTING ELEVATION -3'-4". REFER TO CIVIL DRAWINGS FOR CONTINUATION, EXCAVATION, AND BACKFILL.
7. 4" SS INVERT ELEVATION -5'-8 3/4".
8. FFE -2'-0" AT RAISED ACCESS FLOORING AREA.

KEYPLAN

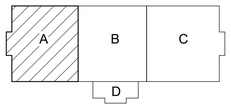

0 4' - 0" 8' - 0" 16' - 0"

SCALE: 1/8" = 1' - 0"

N

APPR | DATE | DESCRIPTION | SYM

NAVFAC

PRELIMINARY NOT FOR CONSTRUCTION

SEAL

W.M. Jordan COMPANY – A JOINT VENTURE –

Michael Baker INTERNATIONAL

100 AIRSIDE DRIVE
MOON TOWNSHIP, PA 15108 A/E INFO

APPROVED

FOR COMMANDER NAVFAC

ACTIVITY
MARINE CORPS BASE CAMP LEJEUNE

SATISFACTORY TO DATE

DES	DRW	CHK

PM

BRANCH MANAGER

CHIEF ENG/ARCH

FIRE PROTECTION

DEPARTMENT OF THE NAVY
NAVAL FACILITIES ENGINEERING COMMAND
ROICC FLORENCE CAMP LEJEUNE

NAVAL FACILITIES ENGINEERING COMMAND ~ MID-ATLANTIC
JACKSONVILLE, NC

MCB CAMP LEJEUNE
JACKSONVILLE, NC

P1338 II MEF SIMULATION/TRAINING CENTER REPLACEMENT

PLUMBING - UNDERGROUND PLAN - AREA A

SCALE:	AS NOTED
EPROJECT NO.:	1590892
CONSTR. CONTR. NO.	N40085-20-C-0059
NAVFAC DRAWING NO.	
SHEET	OF

PU111

DP2 SUBMISSION – P1338 BUILDING -PRE-FINAL SUBMISSION

PLOTTED: 6/10/2021 3:58:22 PM

FILE NAME: BIM 360://HF PACKAGE 3/P1338 MEF SIM CTR-1590892-M.rvt

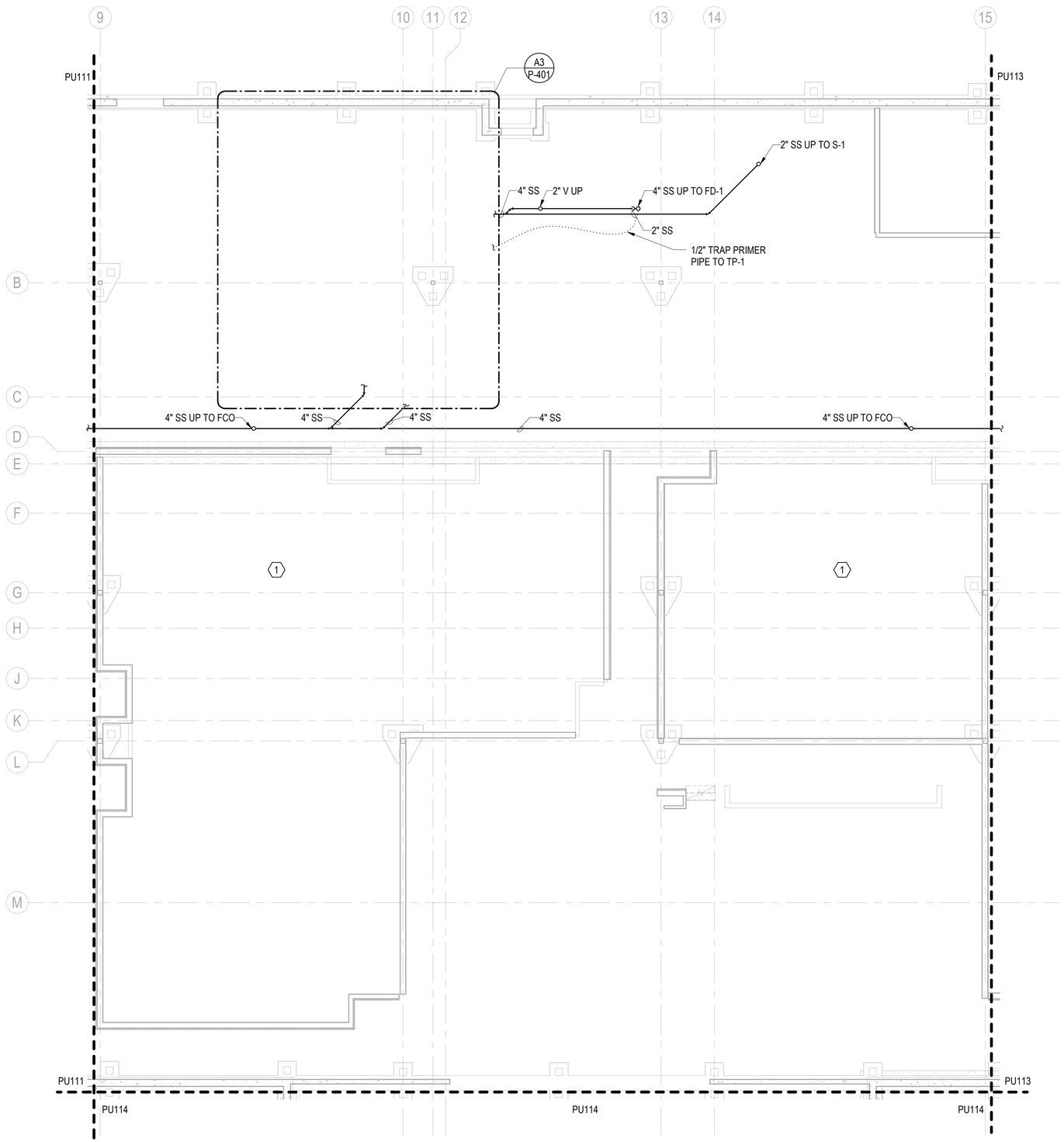

PLUMBING - UNDERGROUND PLAN - AREA B

SCALE: 1/8" = 1'-0"

FFE: 0'-0"

GENERAL NOTES

1. SEE P-001 FOR GENERAL NOTES, ABBREVIATIONS & SYMBOLS.
2. REFER TO STRUCTURAL DRAWINGS FOR THE EXACT SIZE, LOCATION, AND ELEVATION OF FOUNDATIONS, FOOTINGS AND GRADE BEAMS.
3. REFER TO STRUCTURAL DRAWINGS FOR DETAILS OF PIPE CROSSINGS UNDER OR THROUGH THE STRUCTURAL FOUNDATIONS, FOOTINGS AND GRADE BEAMS.
4. ALL UNDERFLOOR SANITARY SEWERS SHALL BE INSTALLED AT A MINIMUM SLOPE OF 1/8"/1'-0", UNLESS NOTED OTHERWISE.
5. UNDERFLOOR VENTS SHALL CONNECT ABOVE CENTERLINE OF WASTE / SANITARY PIPE & SHALL RISE CONTINUOUSLY THROUGH FLOOR A MINIMUM 6" ABOVE FLOOD LEVEL OF FIXTURE. PROVIDE 45° CONNECTION TO WASTE / SANITARY LINE.
6. UNDERFLOOR SANITARY SEWER PIPING SHALL BE A MINIMUM OF 4" UNLESS NOTED OTHERWISE.
7. REFER TO P-700 SERIES FOR RISER DIAGRAMS.

KEYNOTES

1. FFE -2'-0" AT RAISED ACCESS FLOORING AREA.

KEYPLAN

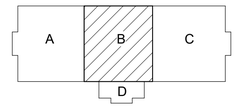

0 4' - 0" 8' - 0" 16' - 0"

SCALE: 1/8" = 1' - 0"

N

SYM	DESCRIPTION	DATE	APPR

PRELIMINARY
NOT FOR CONSTRUCTION

SEAL

W.M. Jordan COMPANY – A JOINT VENTURE –

Michael Baker INTERNATIONAL

100 AIRSIDE DRIVE
MOON TOWNSHIP, PA 15108 A/E INFO

APPROVED

FOR COMMANDER NAVFAC

ACTIVITY
MARINE CORPS BASE
CAMP LEJEUNE

SATISFACTORY TO DATE

DES	DRW	CHK

PM

BRANCH MANAGER

CHIEF ENG/ARCH

FIRE PROTECTION

DEPARTMENT OF THE NAVY
NAVAL FACILITIES ENGINEERING COMMAND
ROICC FLORENCE CAMP LEJEUNE
MCB CAMP LEJEUNE

NAVAL FACILITIES ENGINEERING COMMAND – MID-ATLANTIC
JACKSONVILLE, NC

JACKSONVILLE, NC
P1338 II MEF SIMULATION/TRAINING CENTER
REPLACEMENT

PLUMBING - UNDERGROUND PLAN - AREA B

SCALE: AS NOTED

EPROJECT NO.: 1590892

CONSTR. CONTR. NO.
N40085-20-C-0059

NAVFAC DRAWING NO.

SHEET OF

PU112

DP2 SUBMISSION – P1338 BUILDING -PRE-FINAL SUBMISSION

PLOTTED: 6/10/2021 3:55:24 PM

FILE NAME: BIM 360://HF PACKAGE 3/P1338 MEF SIM CTR-1590892-M.rvt

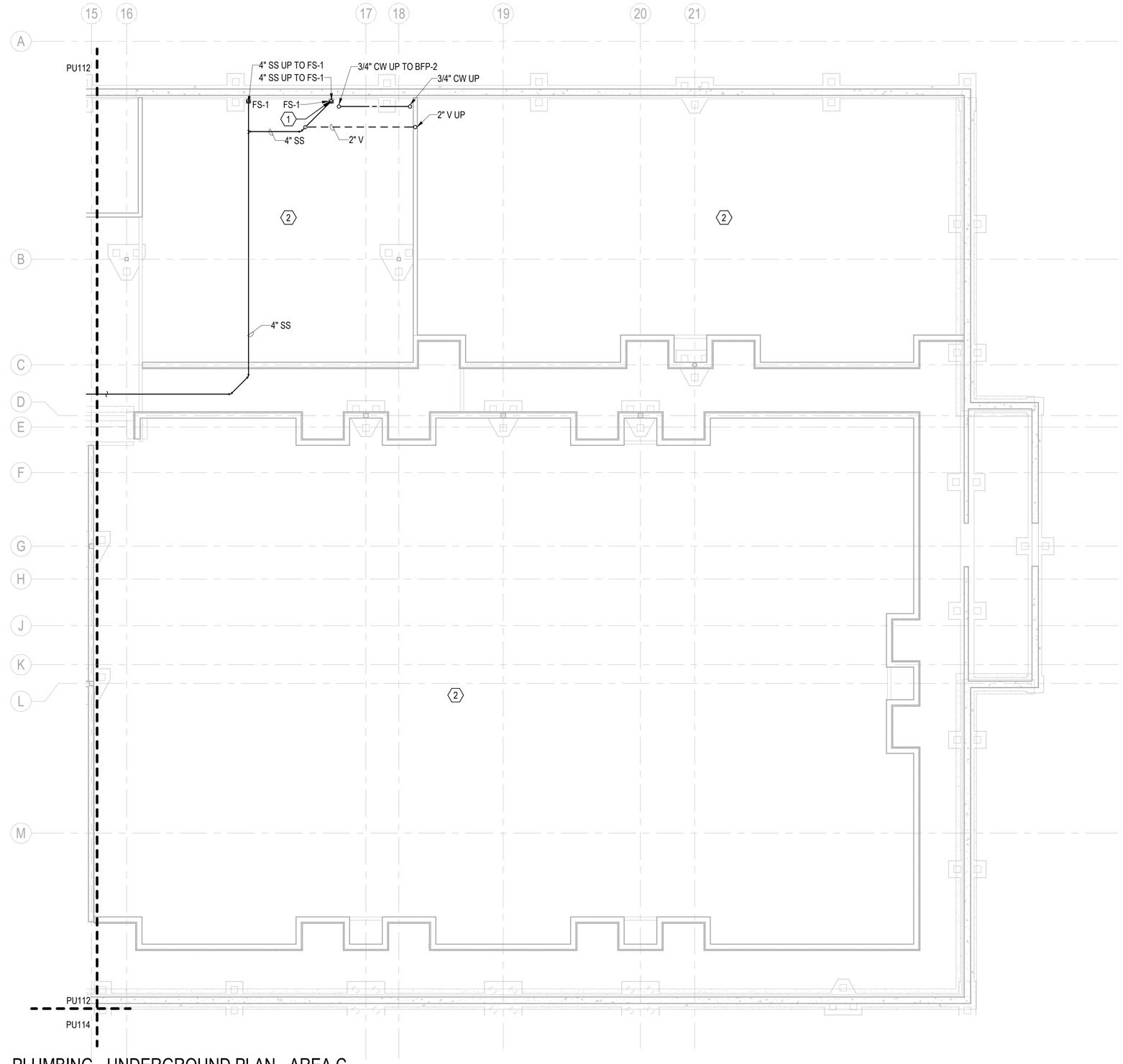

PLUMBING - UNDERGROUND PLAN - AREA C

SCALE: 1/8" = 1'-0"

FFE: 0'-0"

GENERAL NOTES

1. SEE P-001 FOR GENERAL NOTES, ABBREVIATIONS & SYMBOLS.
2. REFER TO STRUCTURAL DRAWINGS FOR THE EXACT SIZE, LOCATION, AND ELEVATION OF FOUNDATIONS, FOOTINGS AND GRADE BEAMS.
3. REFER TO STRUCTURAL DRAWINGS FOR DETAILS OF PIPE CROSSINGS UNDER OR THROUGH THE STRUCTURAL FOUNDATIONS, FOOTINGS AND GRADE BEAMS.
4. ALL UNDERFLOOR SANITARY SEWERS SHALL BE INSTALLED AT A MINIMUM SLOPE OF 1/8"/1'-0", UNLESS NOTED OTHERWISE.
5. UNDERFLOOR VENTS SHALL CONNECT ABOVE CENTERLINE OF WASTE / SANITARY PIPE & SHALL RISE CONTINUOUSLY THROUGH FLOOR A MINIMUM 6" ABOVE FLOOD LEVEL OF FIXTURE. PROVIDE 45° CONNECTION TO WASTE / SANITARY LINE.
6. UNDERFLOOR SANITARY SEWER PIPING SHALL BE A MINIMUM OF 4" UNLESS NOTED OTHERWISE.
7. REFER TO P-700 SERIES FOR RISER DIAGRAMS.

KEYNOTES

1. 4" SS INVERT ELEVATION -3'-0".
2. FFE -2'-0" AT RAISED ACCESS FLOORING AREA.

KEYPLAN

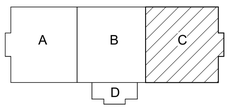

0 4' - 0" 8' - 0" 16' - 0"

SCALE: 1/8" = 1' - 0"

N

APPR	DATE	DESCRIPTION	SYM

PRELIMINARY NOT FOR CONSTRUCTION

SEAL

IRQ Joint Venture — W.M. Jordan Company

Michael Baker INTERNATIONAL

100 AIRSIDE DRIVE
MOON TOWNSHIP, PA 15108 A/E INFO

APPROVED

FOR COMMANDER NAVFAC

ACTIVITY
MARINE CORPS BASE
CAMP LEJEUNE

SATISFACTORY TO DATE

DES	DRW	CHK

PM

BRANCH MANAGER

CHIEF ENG/ARCH

FIRE PROTECTION

DEPARTMENT OF THE NAVY
NAVAL FACILITIES ENGINEERING COMMAND
ROICC FLORENCE CAMP LEJEUNE

NAVAL FACILITIES ENGINEERING COMMAND ~ MID-ATLANTIC
JACKSONVILLE, NC

MCB CAMP LEJEUNE
JACKSONVILLE, NC
P1338 II MEF SIMULATION/TRAINING CENTER REPLACEMENT

PLUMBING - UNDERGROUND PLAN - AREA C

SCALE: AS NOTED

EPROJECT NO.: 1590892

CONSTR. CONTR. NO.
N40085-20-C-0059

NAVFAC DRAWING NO.

SHEET OF

PU113

DP2 SUBMISSION – P1338 BUILDING - PRE-FINAL SUBMISSION

PLOTTED: 6/10/2021 3:55:28 PM

FILE NAME: BIM 360://HF PACKAGE 3/P1338 MEF SIM CTR-1590892-M.rvt

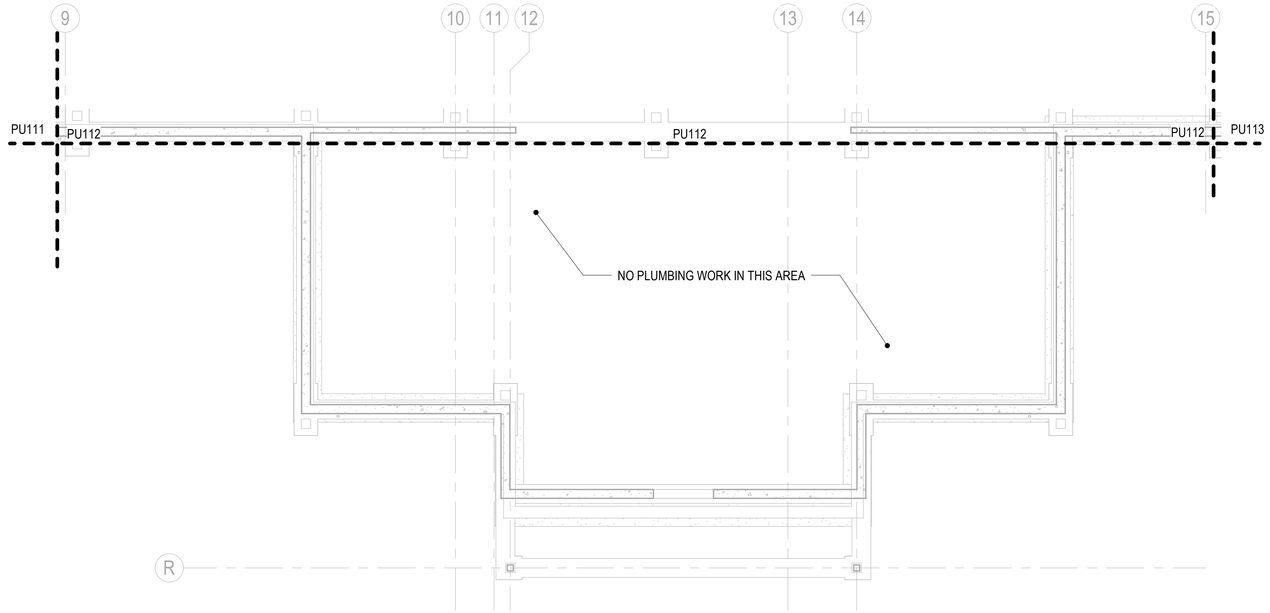

PLUMBING - UNDERGROUND PLAN - AREA D

SCALE: 1/8" = 1'-0"

FFE: 0'-0"

GENERAL NOTES

1. SEE P-001 FOR GENERAL NOTES, ABBREVIATIONS & SYMBOLS.
2. REFER TO STRUCTURAL DRAWINGS FOR THE EXACT SIZE, LOCATION, AND ELEVATION OF FOUNDATIONS, FOOTINGS AND GRADE BEAMS.
3. REFER TO STRUCTURAL DRAWINGS FOR DETAILS OF PIPE CROSSINGS UNDER OR THROUGH THE STRUCTURAL FOUNDATIONS, FOOTINGS AND GRADE BEAMS.
4. ALL UNDERFLOOR SANITARY SEWERS SHALL BE INSTALLED AT A MINIMUM SLOPE OF 1/8"/1'-0", UNLESS NOTED OTHERWISE.
5. UNDERFLOOR VENTS SHALL CONNECT ABOVE CENTERLINE OF WASTE / SANITARY PIPE & SHALL RISE CONTINUOUSLY THROUGH FLOOR A MINIMUM 6" ABOVE FLOOD LEVEL OF FIXTURE. PROVIDE 45° CONNECTION TO WASTE / SANITARY LINE.
6. UNDERFLOOR SANITARY SEWER PIPING SHALL BE A MINIMUM OF 4" UNLESS NOTED OTHERWISE.
7. REFER TO P-700 SERIES FOR RISER DIAGRAMS.

KEYPLAN

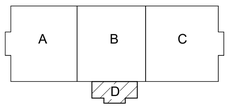

0 4' - 0" 8' - 0" 16' - 0"

SCALE: 1/8" = 1' - 0"

N

APPR	DATE	DESCRIPTION	SYM

PRELIMINARY NOT FOR CONSTRUCTION

SEAL

RQ W.M. Jordan COMPANY – A JOINT VENTURE –

Michael Baker INTERNATIONAL

100 AIRSIDE DRIVE
MOON TOWNSHIP, PA 15108 A/E INFO

APPROVED

FOR COMMANDER NAVFAC

ACTIVITY
MARINE CORPS BASE
CAMP LEJEUNE

SATISFACTORY TO DATE

DES	DRW	CHK
PM		
BRANCH MANAGER		
CHIEF ENG/ARCH		
FIRE PROTECTION		

DEPARTMENT OF THE NAVY
NAVAL FACILITIES ENGINEERING COMMAND
ROICC FLORENCE CAMP LEJEUNE
MCB CAMP LEJEUNE

NAVAL FACILITIES ENGINEERING COMMAND ~ MID-ATLANTIC
JACKSONVILLE, NC

JACKSONVILLE, NC
P1338 II MEF SIMULATION/TRAINING CENTER
REPLACEMENT

PLUMBING - UNDERGROUND PLAN - AREA D

SCALE:	AS NOTED
EPROJECT NO.:	1590892
CONSTR. CONTR. NO.	N40085-20-C-0059
NAVFAC DRAWING NO.	
SHEET	OF

PU114

DP2 SUBMISSION – P1338 BUILDING - PRE-FINAL SUBMISSION

PLOTTED: 6/10/2021 3:55:31 PM

FILE NAME: BIM 360://HF PACKAGE 3/P1338 MEF SIM CTR-1590892-M.rvt

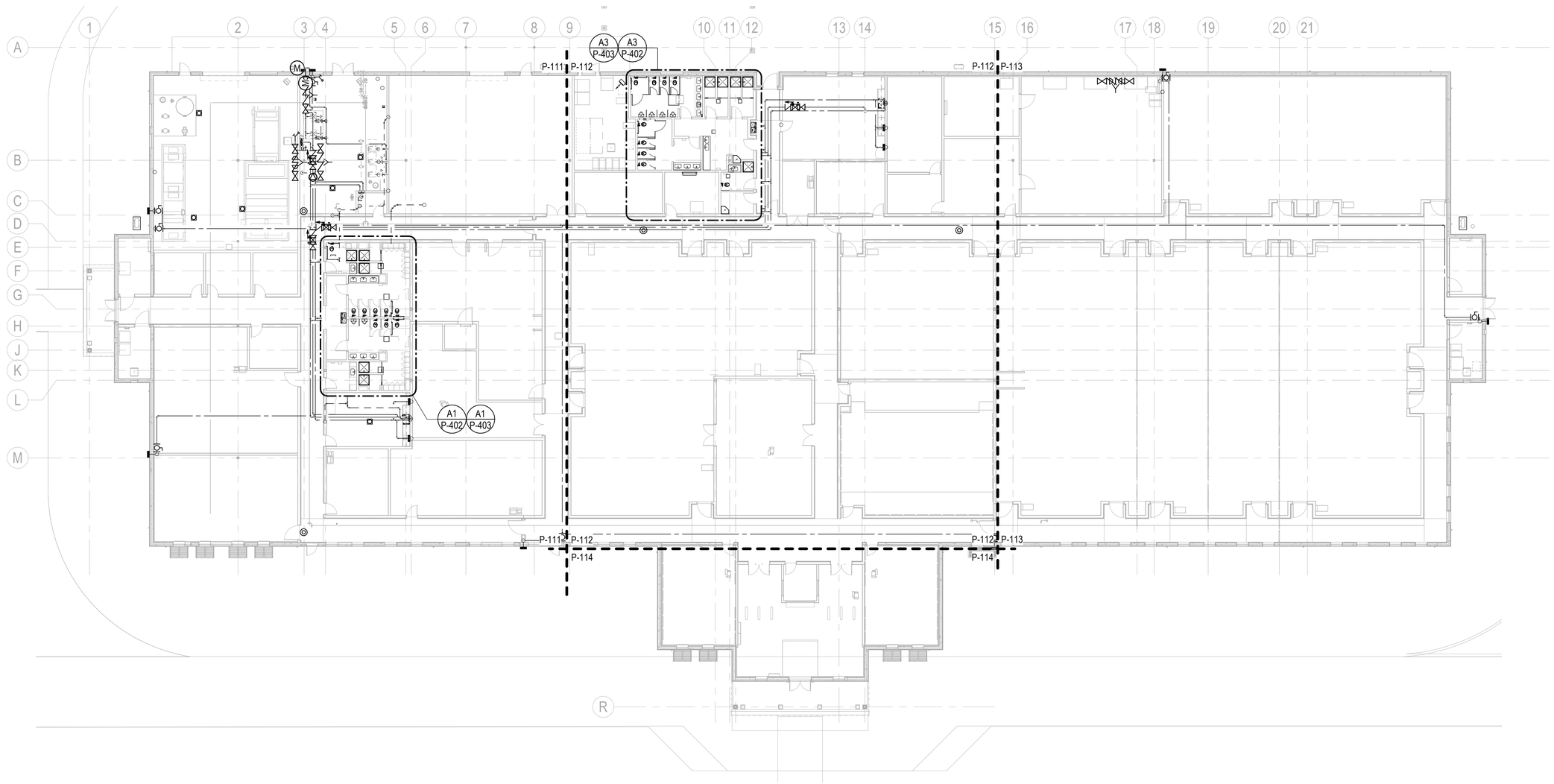

PLUMBING - OVERALL - FIRST FLOOR PLAN

SCALE: 1/16" = 1'-0"

GENERAL NOTES

1. SEE P-001 FOR GENERAL NOTES, ABBREVIATIONS & SYMBOLS.
2. ALL SANITARY SEWERS SHALL BE INSTALLED AT A MINIMUM SLOPE OF 1/8"/1'-0", UNLESS NOTED OTHERWISE.
3. VENTS SHALL CONNECT ABOVE CENTERLINE OF HORIZONTAL WASTE / SANITARY PIPE & SHALL RISE CONTINUOUSLY THROUGH FLOOR A MINIMUM 6" ABOVE FLOOD LEVEL OF FIXTURE. PROVIDE 45° CONNECTION TO WASTE / SANITARY LINE.
4. REFER TO P-700 SERIES FOR RISER DIAGRAMS.

KEYPLAN

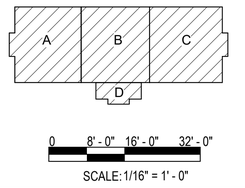

SCALE: 1/16" = 1' - 0"

APPR	
DATE	
SYM DESCRIPTION	

SEAL

PRELIMINARY
NOT FOR CONSTRUCTION

RQ W.M. Jordan COMPANY – A JOINT VENTURE –

Michael Baker INTERNATIONAL

100 AIRSIDE DRIVE
MOON TOWNSHIP, PA 15108 A/E INFO

APPROVED

FOR COMMANDER NAVFAC

ACTIVITY
MARINE CORPS BASE
CAMP LEJEUNE

SATISFACTORY TO DATE

DES	DRW	CHK
PM		
BRANCH MANAGER		
CHIEF ENG/ARCH		
FIRE PROTECTION		

DEPARTMENT OF THE NAVY
NAVAL FACILITIES ENGINEERING COMMAND
ROICC FLORENCE CAMP LEJEUNE
MCB CAMP LEJEUNE

NAVAL FACILITIES ENGINEERING COMMAND – MID-ATLANTIC
JACKSONVILLE, NC

JACKSONVILLE, NC
P1338 II MEF SIMULATION/TRAINING CENTER
REPLACEMENT

PLUMBING - OVERALL - FIRST FLOOR PLAN

SCALE:	AS NOTED
EPROJECT NO.:	1590892
CONSTR. CONTR. NO.	N40085-20-C-0059
NAVFAC DRAWING NO.	
SHEET	OF

P-110

DP2 SUBMISSION – P1338 BUILDING - PRE-FINAL SUBMISSION

PLOTTED: 6/10/2021 3:53:45 PM

FILE NAME: BIM 360://HF PACKAGE 3/P1338 MEF SIM CTR-1590892-M.rvt

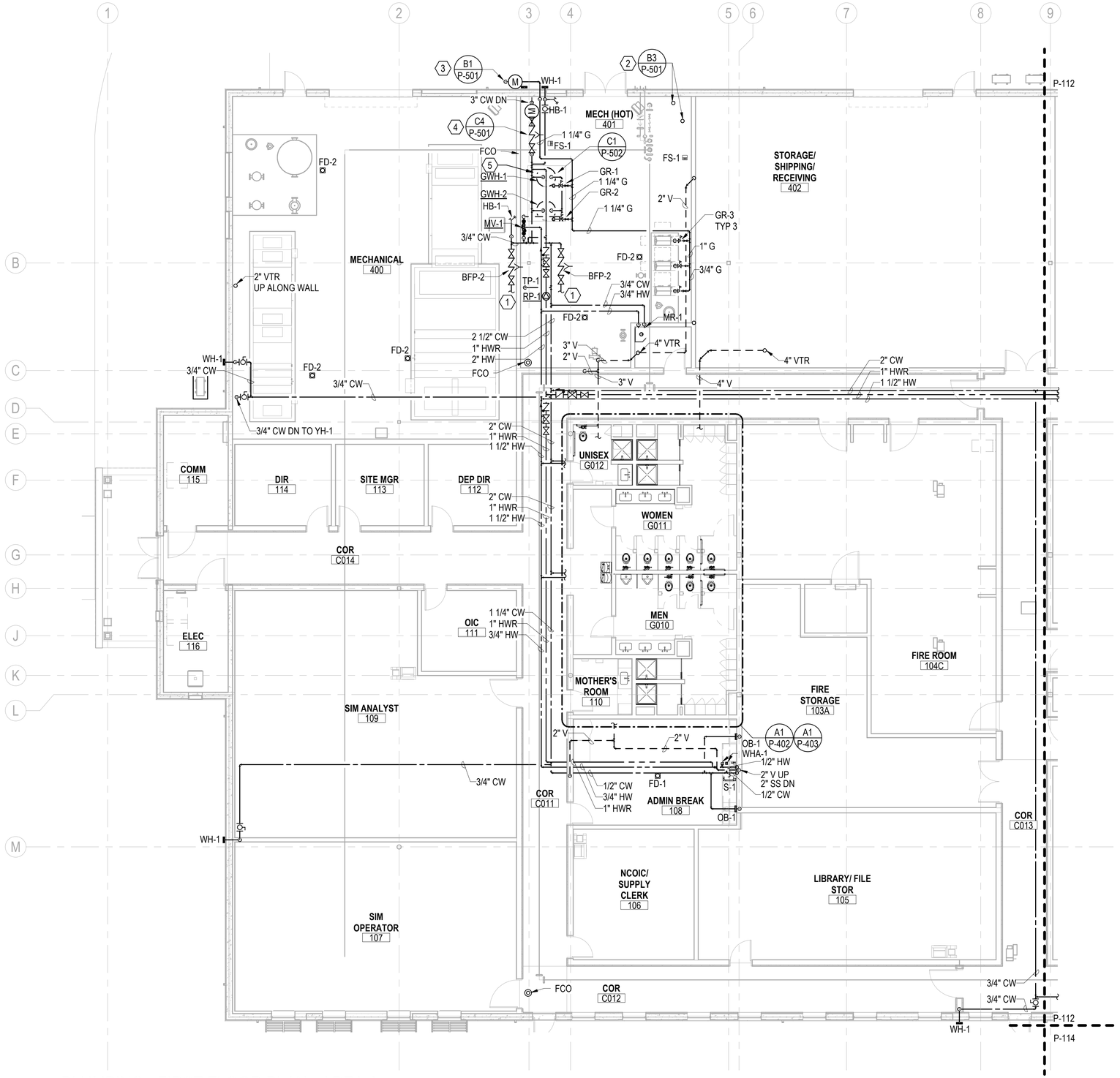

PLUMBING - FIRST FLOOR PLAN - AREA A

SCALE: 1/8" = 1'-0"

FFE: 0'-0"

GENERAL NOTES

1. SEE P-001 FOR GENERAL NOTES, ABBREVIATIONS & SYMBOLS.
2. ALL SANITARY SEWERS SHALL BE INSTALLED AT A MINIMUM SLOPE OF 1/8"/1'-0", UNLESS NOTED OTHERWISE.
3. VENTS SHALL CONNECT ABOVE CENTERLINE OF HORIZONTAL WASTE / SANITARY PIPE & SHALL RISE CONTINUOUSLY THROUGH FLOOR A MINIMUM 6" ABOVE FLOOD LEVEL OF FIXTURE. PROVIDE 45° CONNECTION TO WASTE / SANITARY LINE.
4. REFER TO P-700 SERIES FOR RISER DIAGRAMS.

KEYNOTES

1. 3/4" MAKE-UP WATER TO MECHANICAL EQUIPMENT. PROVIDE 3/4" BACKFLOW PREVENTER, BFP-2. REFER TO MECHANICAL PLANS FOR EQUIPMENT LOCATIONS AND CONNECTIONS.
2. 6" FIRE PROTECTION WATER SERVICE ENTRANCE.
3. 1 1/4" NATURAL GAS METER.
4. 3" DOMESTIC WATER SERVICE ENTRANCE.
5. 4' X 10' X 4" HOUSE KEEPING PAD FOR WATER HEATERS

KEYPLAN

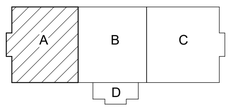

0 4' - 0" 8' - 0" 16' - 0"

SCALE: 1/8" = 1' - 0"

N

SYM	DESCRIPTION	DATE	APPR

NAVFAC

PRELIMINARY
NOT FOR CONSTRUCTION

SEAL

RQ W.M. Jordan COMPANY
- A JOINT VENTURE -

Michael Baker
INTERNATIONAL
100 AIRSIDE DRIVE
MOON TOWNSHIP, PA 15108
A/E INFO

APPROVED

FOR COMMANDER NAVFAC

ACTIVITY
MARINE CORPS BASE
CAMP LEJEUNE

SATISFACTORY TO DATE

DES	DRW	CHK
PM		
BRANCH MANAGER		
CHIEF ENG/ARCH		
FIRE PROTECTION		

DEPARTMENT OF THE NAVY
NAVAL FACILITIES ENGINEERING COMMAND
NAVAL FACILITIES ENGINEERING COMMAND ~ MID-ATLANTIC
ROICC FLORENCE CAMP LEJEUNE
JACKSONVILLE, NC

MCB CAMP LEJEUNE
JACKSONVILLE, NC
P1338 II MEF SIMULATION/TRAINING CENTER
REPLACEMENT
PLUMBING - FIRST FLOOR PLAN - AREA A

SCALE: AS NOTED
EPROJECT NO.: 1590892
CONSTR. CONTR. NO.
N40085-20-C-0059
NAVFAC DRAWING NO.
SHEET OF

P-111

DP2 SUBMISSION – P1338 BUILDING - PRE-FINAL SUBMISSION

PLOTTED: 6/10/2021 3:53:54 PM

FILE NAME: BIM 360://HF PACKAGE 3/P1338 MEF SIM CTR-1590892-M.rvt

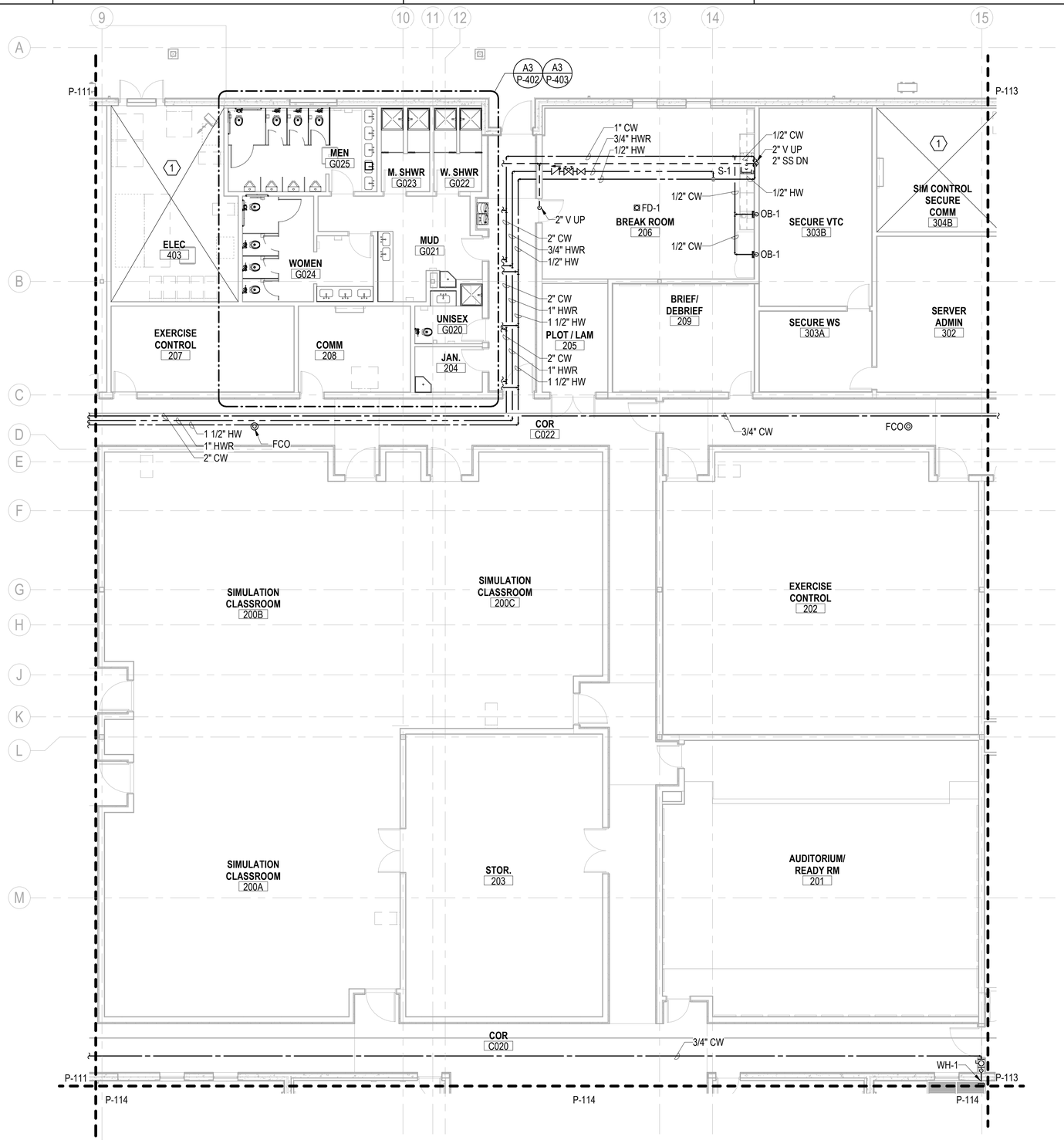

PLUMBING - FIRST FLOOR PLAN - AREA B

SCALE: 1/8" = 1'-0"

FFE: 0'-0"

GENERAL NOTES

1. SEE P-001 FOR GENERAL NOTES, ABBREVIATIONS & SYMBOLS.
2. ALL SANITARY SEWERS SHALL BE INSTALLED AT A MINIMUM SLOPE OF 1/8"/1'-0", UNLESS NOTED OTHERWISE.
3. VENTS SHALL CONNECT ABOVE CENTERLINE OF HORIZONTAL WASTE / SANITARY PIPE & SHALL RISE CONTINUOUSLY THROUGH FLOOR A MINIMUM 6" ABOVE FLOOD LEVEL OF FIXTURE. PROVIDE 45° CONNECTION TO WASTE / SANITARY LINE.
4. REFER TO P-700 SERIES FOR RISER DIAGRAMS.

KEYNOTES

1. THERE SHALL NOT BE ANY PIPING THAT DOES NOT SERVE THIS SPACE INSTALLED ABOVE OR WITHIN THIS SPACE.

KEYPLAN

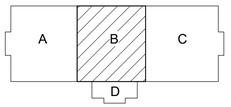

0 4' - 0" 8' - 0" 16' - 0"

SCALE: 1/8" = 1' - 0"

N

			APPR
			DATE
			DESCRIPTION
			SYM

NAVFAC

PRELIMINARY NOT FOR CONSTRUCTION

SEAL

RQ W.M. Jordan COMPANY – A JOINT VENTURE –

Michael Baker INTERNATIONAL

100 AIRSIDE DRIVE
MOON TOWNSHIP, PA 15108 A/E INFO

APPROVED

FOR COMMANDER NAVFAC

ACTIVITY
MARINE CORPS BASE
CAMP LEJEUNE

SATISFACTORY TO DATE

DES	DRW	CHK

PM

BRANCH MANAGER

CHIEF ENG/ARCH

FIRE PROTECTION

DEPARTMENT OF THE NAVY
NAVAL FACILITIES ENGINEERING COMMAND – MID-ATLANTIC
ROICC FLORENCE CAMP LEJEUNE
MCB CAMP LEJEUNE

NAVAL FACILITIES ENGINEERING COMMAND – MID-ATLANTIC
JACKSONVILLE, NC

JACKSONVILLE, NC

P1338 II MEF SIMULATION/TRAINING CENTER REPLACEMENT

PLUMBING - FIRST FLOOR PLAN - AREA B

SCALE: AS NOTED

EPROJECT NO.: 1590892

CONSTR. CONTR. NO.
N40085-20-C-0059

NAVFAC DRAWING NO.

SHEET OF

P-112

DP2 SUBMISSION – P1338 BUILDING -PRE-FINAL SUBMISSION

PLOTTED: 6/10/2021 4:01:25 PM

FILE NAME: BIM 360://HF PACKAGE 3/P1338 MEF SIM CTR-1590892-M.rvt

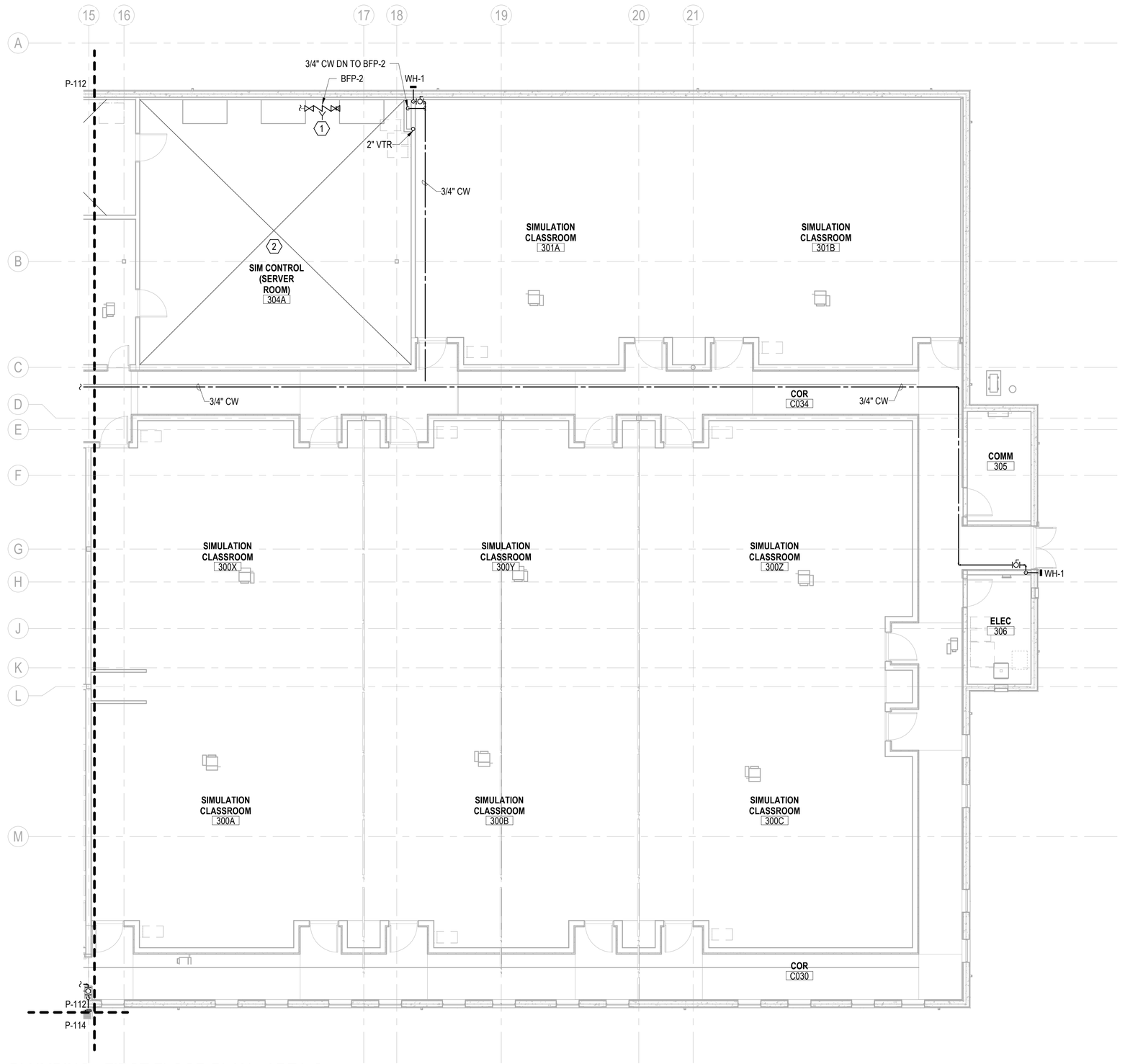

PLUMBING - FIRST FLOOR PLAN - AREA C

SCALE: 1/8" = 1'-0"

FFE: 0'-0"

GENERAL NOTES

1. SEE P-001 FOR GENERAL NOTES, ABBREVIATIONS & SYMBOLS.
2. ALL SANITARY SEWERS SHALL BE INSTALLED AT A MINIMUM SLOPE OF 1/8"/1'-0", UNLESS NOTED OTHERWISE.
3. VENTS SHALL CONNECT ABOVE CENTERLINE OF HORIZONTAL WASTE / SANITARY PIPE & SHALL RISE CONTINUOUSLY THROUGH FLOOR A MINIMUM 6" ABOVE FLOOD LEVEL OF FIXTURE. PROVIDE 45° CONNECTION TO WASTE / SANITARY LINE.
4. REFER TO P-700 SERIES FOR RISER DIAGRAMS.

KEYNOTES

1. 3/4" MAKEUP WATER TO CRAC UNITS. PROVIDE 3/4" BACKFLOW PREVENTER LOCATED MAXIMUM OF 5'-0" ABOVE FINISHED FLOOR. COORDINATE EQUIPMENT LOCATION AND POINT OF CONNECTION WITH MECHANICAL DRAWINGS.
2. THERE SHALL NOT BE ANY PIPING THAT DOES NOT SERVE THIS SPACE INSTALLED ABOVE OR WITHIN THIS SPACE.

KEYPLAN

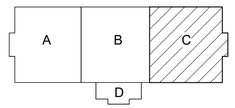

0 4' - 0" 8' - 0" 16' - 0"

SCALE: 1/8" = 1' - 0"

N

APPR	DATE	DESCRIPTION	SYM

PRELIMINARY NOT FOR CONSTRUCTION

SEAL

RQ W.M. Jordan COMPANY – A JOINT VENTURE –

Michael Baker INTERNATIONAL

100 AIRSIDE DRIVE
MOON TOWNSHIP, PA 15108 A/E INFO

APPROVED

FOR COMMANDER NAVFAC

ACTIVITY
MARINE CORPS BASE CAMP LEJEUNE

SATISFACTORY TO DATE

DES	DRW	CHK

PM

BRANCH MANAGER

CHIEF ENG/ARCH

FIRE PROTECTION

DEPARTMENT OF THE NAVY
NAVAL FACILITIES ENGINEERING COMMAND
ROICC FLORENCE CAMP LEJEUNE
MCB CAMP LEJEUNE

NAVAL FACILITIES ENGINEERING COMMAND – MID-ATLANTIC
JACKSONVILLE, NC

JACKSONVILLE, NC
P1338 II MEF SIMULATION/TRAINING CENTER REPLACEMENT

PLUMBING - FIRST FLOOR PLAN - AREA C

SCALE: AS NOTED

EPROJECT NO.: 1590892

CONSTR. CONTR. NO.
N40085-20-C-0059

NAVFAC DRAWING NO.

SHEET OF

P-113

DP2 SUBMISSION – P1338 BUILDING - PRE-FINAL SUBMISSION

PLOTTED: 6/10/2021 3:54:06 PM

FILE NAME: BIM 360://HF PACKAGE 3/P1338 MEF SIM CTR-1590892-M.rvt

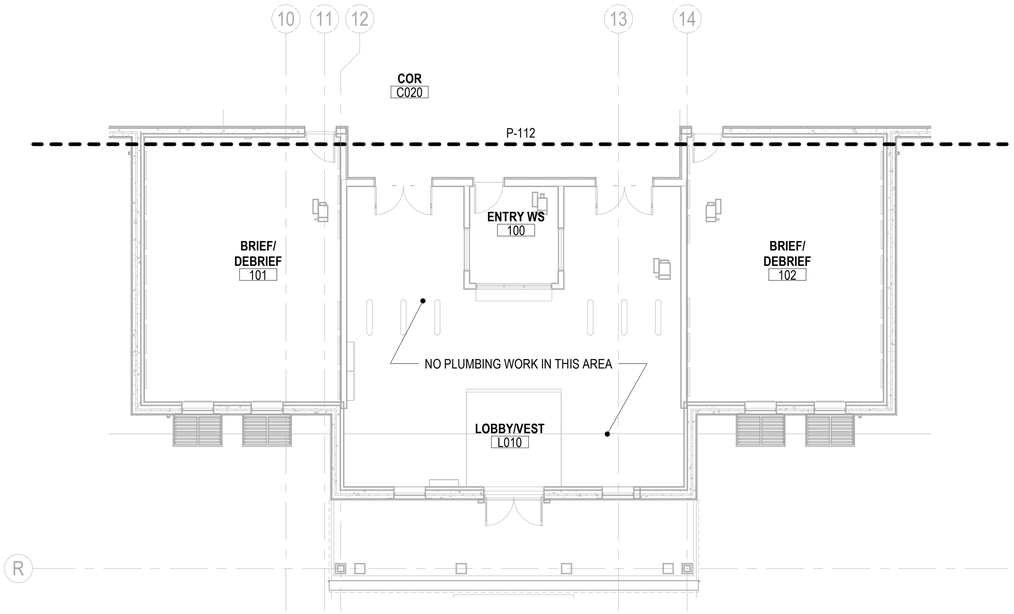

PLUMBING - FIRST FLOOR PLAN - AREA D

FFE: 0'-0"

SCALE: 1/8" = 1'-0"

GENERAL NOTES

1. SEE P-001 FOR GENERAL NOTES, ABBREVIATIONS & SYMBOLS.
2. ALL SANITARY SEWERS SHALL BE INSTALLED AT A MINIMUM SLOPE OF 1/8"/1'-0", UNLESS NOTED OTHERWISE.
3. VENTS SHALL CONNECT ABOVE CENTERLINE OF HORIZONTAL WASTE / SANITARY PIPE & SHALL RISE CONTINUOUSLY THROUGH FLOOR A MINIMUM 6" ABOVE FLOOD LEVEL OF FIXTURE. PROVIDE 45° CONNECTION TO WASTE / SANITARY LINE.
4. REFER TO P-700 SERIES FOR RISER DIAGRAMS.

SYM	DESCRIPTION	DATE	APPR

NAVFAC

PRELIMINARY
NOT FOR CONSTRUCTION

SEAL

IRQ W.M. Jordan COMPANY – A JOINT VENTURE –

Michael Baker
INTERNATIONAL

100 AIRSIDE DRIVE
MOON TOWNSHIP, PA 15108 A/E INFO

APPROVED

FOR COMMANDER NAVFAC

ACTIVITY
MARINE CORPS BASE
CAMP LEJEUNE

SATISFACTORY TO DATE

DES	DRW	CHK

PM

BRANCH MANAGER

CHIEF ENG/ARCH

FIRE PROTECTION

DEPARTMENT OF THE NAVY
NAVAL FACILITIES ENGINEERING COMMAND
ROICC FLORENCE CAMP LEJEUNE
MCB CAMP LEJEUNE

NAVAL FACILITIES ENGINEERING COMMAND ~ MID-ATLANTIC
JACKSONVILLE, NC

JACKSONVILLE, NC
P1338 II MEF SIMULATION/TRAINING CENTER
REPLACEMENT

PLUMBING - FIRST FLOOR PLAN - AREA D

SCALE: AS NOTED

EPROJECT NO.: 1590892

CONSTR. CONTR. NO.
N40085-20-C-0059

NAVFAC DRAWING NO.

SHEET OF

P-114

KEYPLAN

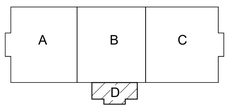

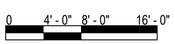

SCALE: 1/8" = 1' - 0"



PLOTTED: 6/10/2021 3:54:10 PM

FILE NAME: BIM 360://HF PACKAGE 3/P1338 MEF SIM CTR-1590892-M.rvt

DP2 SUBMISSION – P1338 BUILDING - PRE-FINAL SUBMISSION

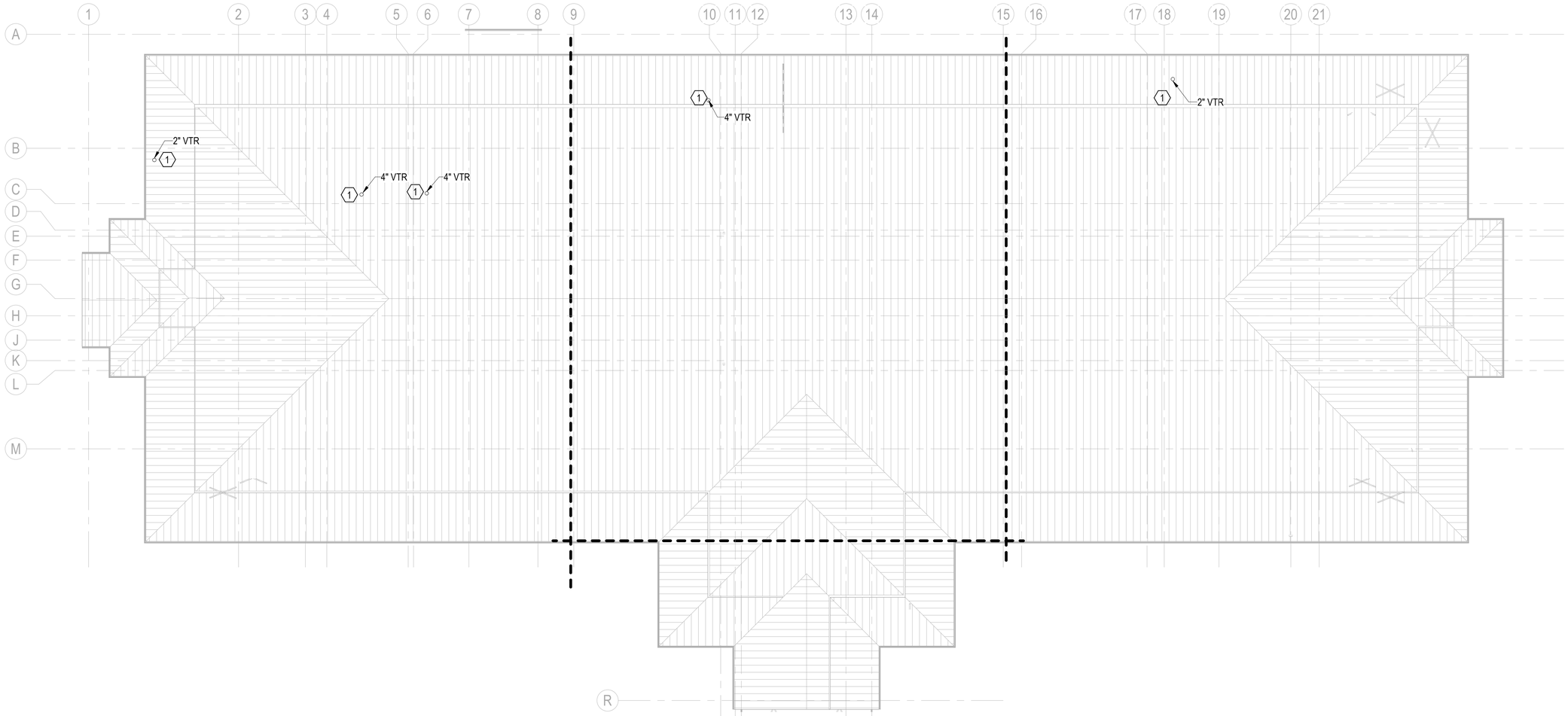

PLUMBING - OVERALL - ROOF PLAN

SCALE: 1/16" = 1'-0"

GENERAL NOTES

1. SEE P-001 FOR GENERAL NOTES, ABBREVIATIONS & SYMBOLS.
2. ALL SANITARY SEWERS SHALL BE INSTALLED AT A MINIMUM SLOPE OF 1/8"/1'-0", UNLESS NOTED OTHERWISE.
3. VENTS SHALL CONNECT ABOVE CENTERLINE OF HORIZONTAL WASTE / SANITARY PIPE & SHALL RISE CONTINUOUSLY THROUGH FLOOR A MINIMUM 6" ABOVE FLOOD LEVEL OF FIXTURE. PROVIDE 45° CONNECTION TO WASTE / SANITARY LINE.
4. REFER TO P-700 SERIES FOR RISER DIAGRAMS.

KEYNOTES

1. COORDINATE INSTALLATION WITH STANDING SEAM ROOF RIDGES. REFER TO ARCHITECTURAL DRAWINGS FOR ROOF PENETRATION DETAIL.

KEYPLAN

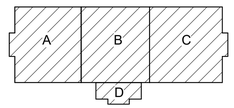

0 8' - 0" 16' - 0" 32' - 0"

SCALE: 1/16" = 1' - 0"

N

SYM	DESCRIPTION	DATE	APPR

NAVFAC

PRELIMINARY
NOT FOR CONSTRUCTION

SEAL

RQ W.M. Jordan COMPANY
- A JOINT VENTURE -

Michael Baker
INTERNATIONAL
100 AIRSIDE DRIVE
MOON TOWNSHIP, PA 15108
A/E INFO

APPROVED

FOR COMMANDER NAVFAC

ACTIVITY
MARINE CORPS BASE
CAMP LEJEUNE

SATISFACTORY TO DATE

DES	DRW	CHK
PM		
BRANCH MANAGER		
CHIEF ENG/ARCH		
FIRE PROTECTION		

DEPARTMENT OF THE NAVY
NAVAL FACILITIES ENGINEERING COMMAND
NAVAL FACILITIES ENGINEERING COMMAND ~ MID-ATLANTIC
ROICC FLORENCE CAMP LEJEUNE
JACKSONVILLE, NC

MCB CAMP LEJEUNE
JACKSONVILLE, NC
P1338 II MEF SIMULATION/TRAINING CENTER
REPLACEMENT

PLUMBING - OVERALL - ROOF PLAN

SCALE: AS NOTED
EPROJECT NO.: 1590892
CONSTR. CONTR. NO.
N40085-20-C-0059
NAVFAC DRAWING NO.
SHEET OF

P-150

DP2 SUBMISSION – P1338 BUILDING - PRE-FINAL SUBMISSION

PLOTTED: 6/10/2021 4:03:26 PM

FILE NAME: BIM 360://HF PACKAGE 3/P1338 MEF SIM CTR-1590892-M.rvt

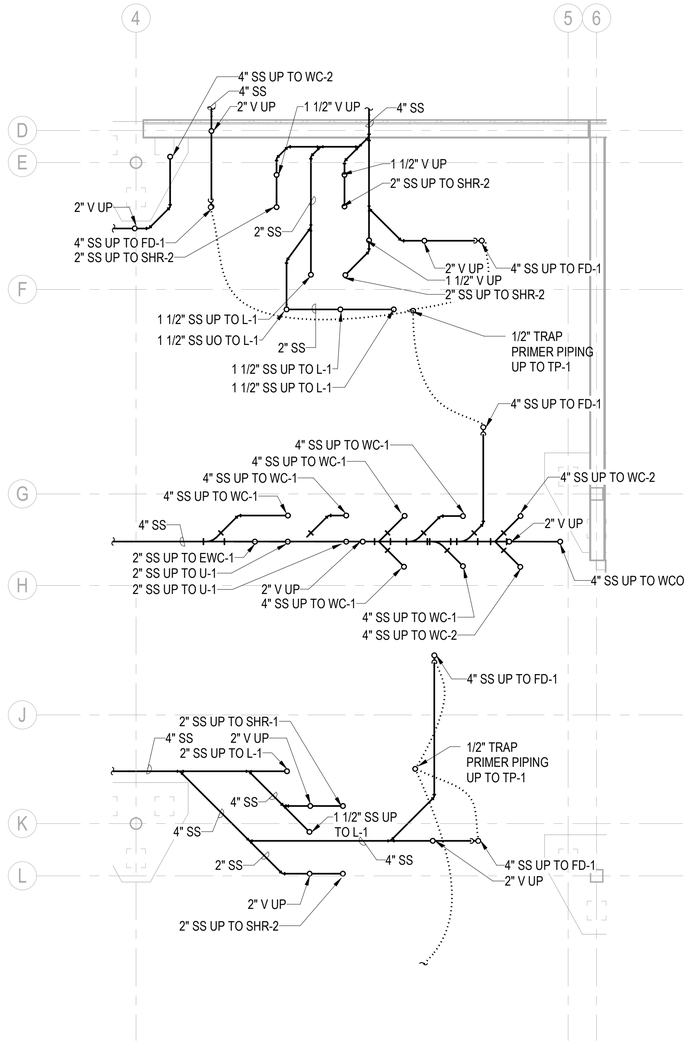

PLUMBING - ENLARGED PLAN - UNDERGROUND AREA A

SCALE: 1/4" = 1'-0"

PU110 A1

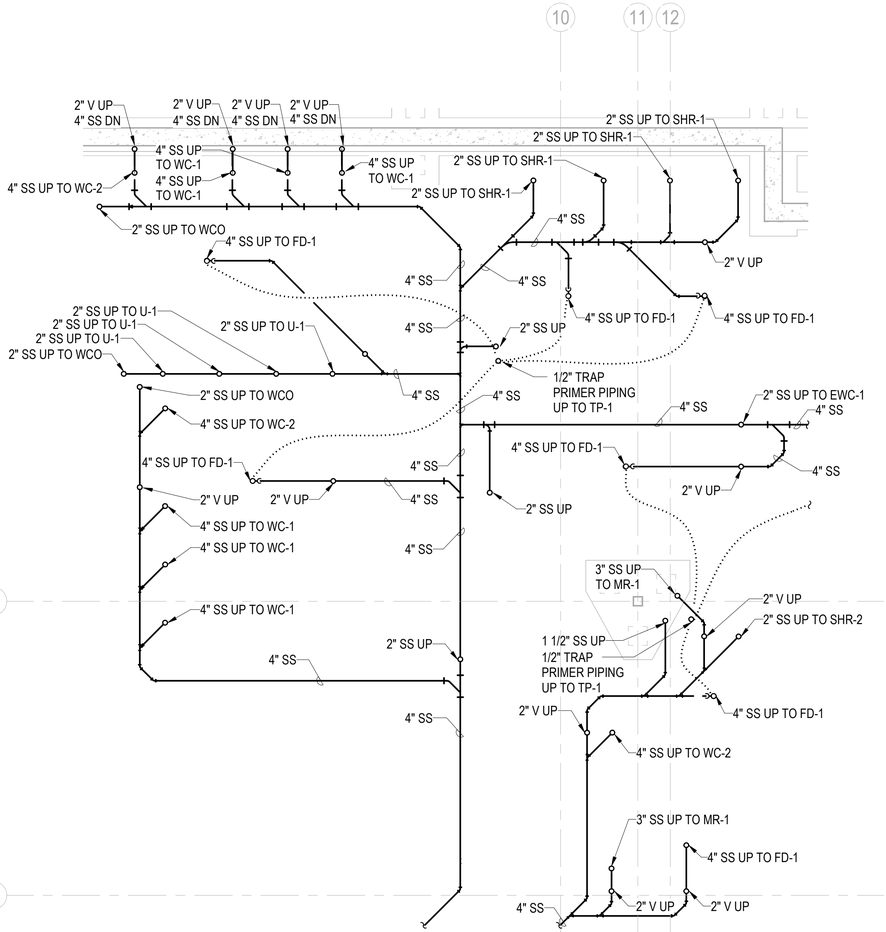

PLUMBING - ENLARGED PLAN - UNDERGROUND AREA B

SCALE: 1/4" = 1'-0"

PU110 A3

GENERAL NOTES

1. SEE P-001 FOR GENERAL NOTES, ABBREVIATIONS & SYMBOLS.
2. REFER TO STRUCTURAL DRAWINGS FOR THE EXACT SIZE, LOCATION, AND ELEVATION OF FOUNDATIONS, FOOTINGS AND GRADE BEAMS.
3. REFER TO STRUCTURAL DRAWINGS FOR DETAILS OF PIPE CROSSINGS UNDER OR THROUGH THE STRUCTURAL FOUNDATIONS, FOOTINGS AND GRADE BEAMS.
4. ALL SANITARY SEWERS SHALL BE INSTALLED AT A MINIMUM SLOPE OF 1/8"/1'-0", UNLESS NOTED OTHERWISE.
5. UNDERFLOOR VENTS SHALL CONNECT ABOVE CENTERLINE OF WASTE / SANITARY PIPE & SHALL RISE CONTINUOUSLY THROUGH FLOOR A MINIMUM 6" ABOVE FLOOD LEVEL OF FIXTURE. PROVIDE 45° CONNECTION TO WASTE / SANITARY LINE.
6. UNDERFLOOR SANITARY SEWER PIPING SHALL BE A MINIMUM OF 4" UNLESS NOTED OTHERWISE.
7. REFER TO P-700 SERIES FOR RISER DIAGRAMS.

SYM	DESCRIPTION	DATE	APPR

PRELIMINARY
NOT FOR CONSTRUCTION

SEAL

IRQ Joint Venture — W.M. Jordan Company

Michael Baker INTERNATIONAL
100 AIRSIDE DRIVE
MOON TOWNSHIP, PA 15108
A/E INFO

APPROVED

FOR COMMANDER NAVFAC

ACTIVITY
MARINE CORPS BASE
CAMP LEJEUNE

SATISFACTORY TO DATE

DES	DRW	CHK

PM

BRANCH MANAGER

CHIEF ENG/ARCH

FIRE PROTECTION

DEPARTMENT OF THE NAVY
NAVAL FACILITIES ENGINEERING COMMAND ~ MID-ATLANTIC
ROICC FLORENCE CAMP LEJEUNE
JACKSONVILLE, NC
MCB CAMP LEJEUNE

JACKSONVILLE, NC
P1338 II MEF SIMULATION/TRAINING CENTER
REPLACEMENT

PLUMBING - ENLARGED PLANS

SCALE: AS NOTED
EPROJECT NO.: 1590892
CONSTR. CONTR. NO.
N40085-20-C-0059
NAVFAC DRAWING NO.
SHEET OF

P-401

KEYPLAN

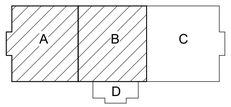

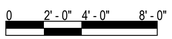

SCALE: 1/4" = 1' - 0"



DP2 SUBMISSION – P1338 BUILDING - PRE-FINAL SUBMISSION

PLOTTED: 6/10/2021 4:12:04 PM

FILE NAME: BIM 360://HF PACKAGE 3/P1338 MEF SIM CTR-1590892-M.rvt

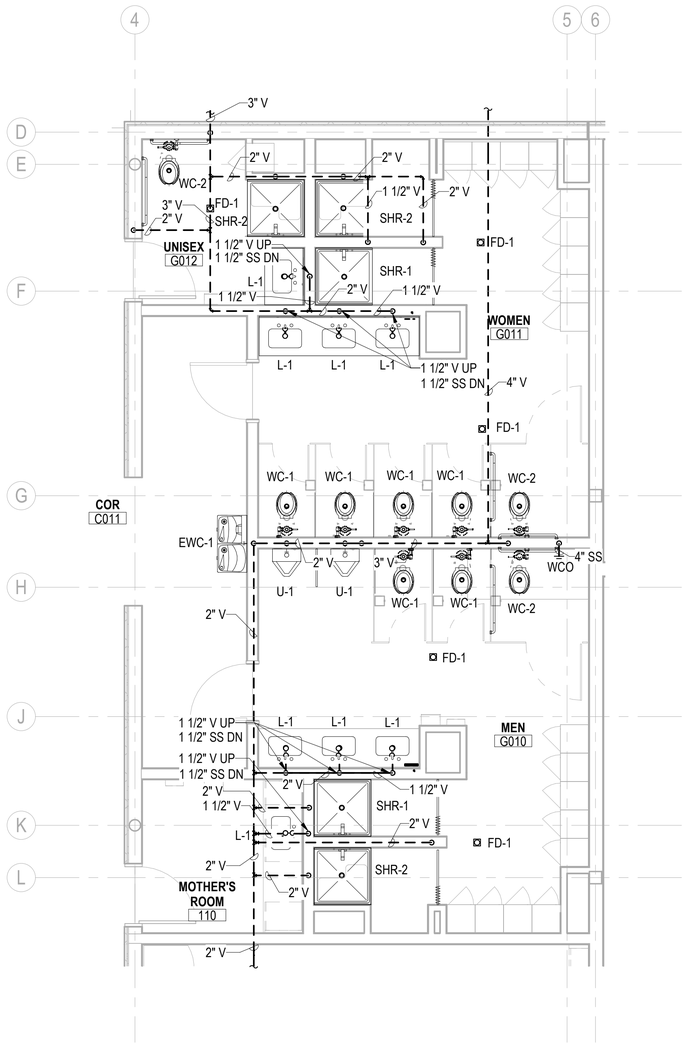

PLUMBING - ENLARGED PLAN - AREA A SANITARY & VENT

SCALE: 1/4" = 1'-0"

P-110 A1

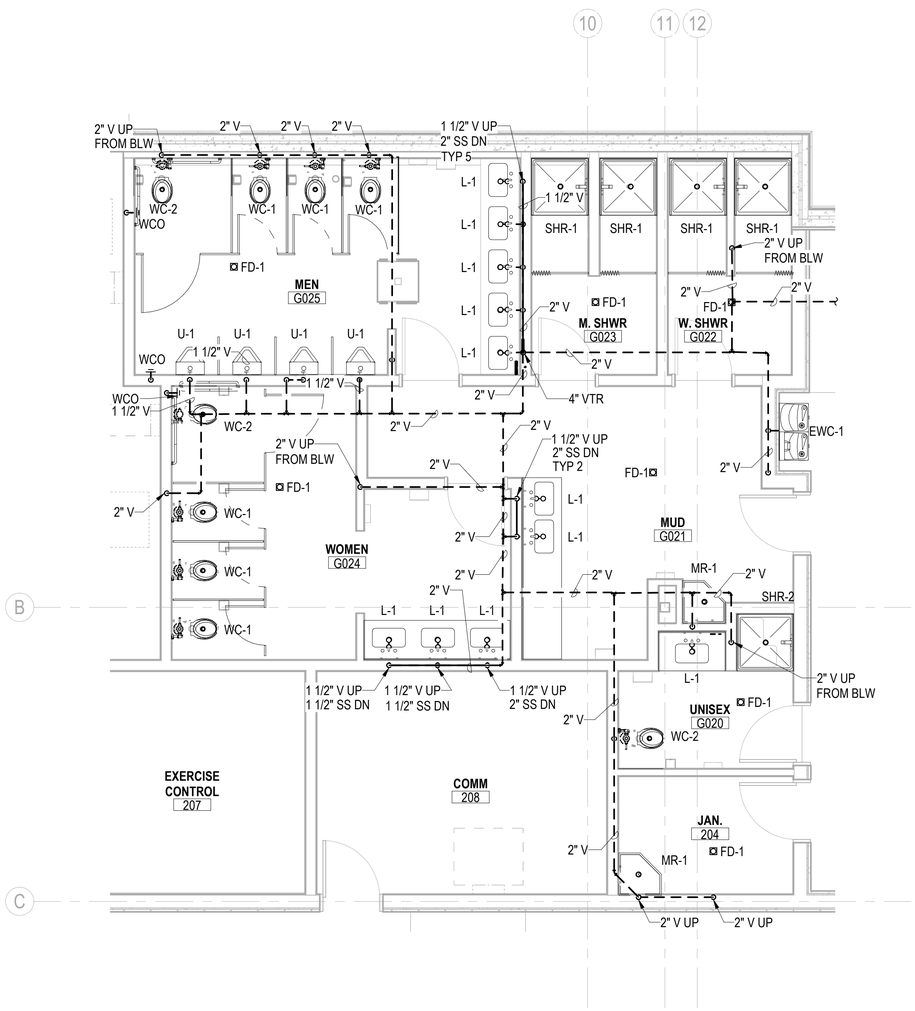

PLUMBING - ENLARGED PLAN - AREA B SANITARY & VENT

SCALE: 1/4" = 1'-0"

P-110 A3

GENERAL NOTES

1. SEE P-001 FOR GENERAL NOTES, ABBREVIATIONS & SYMBOLS.
2. REFER TO STRUCTURAL DRAWINGS FOR THE EXACT SIZE, LOCATION, AND ELEVATION OF FOUNDATIONS, FOOTINGS AND GRADE BEAMS.
3. REFER TO STRUCTURAL DRAWINGS FOR DETAILS OF PIPE CROSSINGS UNDER OR THROUGH THE STRUCTURAL FOUNDATIONS, FOOTINGS AND GRADE BEAMS.
4. ALL SANITARY SEWERS SHALL BE INSTALLED AT A MINIMUM SLOPE OF 1/8"/1'-0", UNLESS NOTED OTHERWISE.
5. UNDERFLOOR VENTS SHALL CONNECT ABOVE CENTERLINE OF WASTE / SANITARY PIPE & SHALL RISE CONTINUOUSLY THROUGH FLOOR A MINIMUM 6" ABOVE FLOOD LEVEL OF FIXTURE. PROVIDE 45° CONNECTION TO WASTE / SANITARY LINE.
6. UNDERFLOOR SANITARY SEWER PIPING SHALL BE A MINIMUM OF 4" UNLESS NOTED OTHERWISE.
7. REFER TO P-700 SERIES FOR RISER DIAGRAMS.

KEYPLAN

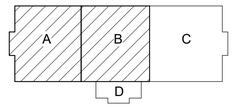

0 2' - 0" 4' - 0" 8' - 0"

SCALE: 1/4" = 1' - 0"

SYM	DESCRIPTION	DATE	APPR

NAVFAC

PRELIMINARY
NOT FOR CONSTRUCTION

SEAL

IRQ WM Jordan COMPANY – A JOINT VENTURE –

Michael Baker INTERNATIONAL

100 AIRSIDE DRIVE
MOON TOWNSHIP, PA 15108 A/E INFO

APPROVED

FOR COMMANDER NAVFAC

ACTIVITY
MARINE CORPS BASE
CAMP LEJEUNE

SATISFACTORY TO DATE

DES	DRW	CHK
PM		
BRANCH MANAGER		
CHIEF ENG/ARCH		
FIRE PROTECTION		

DEPARTMENT OF THE NAVY
NAVAL FACILITIES ENGINEERING COMMAND – MID-ATLANTIC
JACKSONVILLE, NC
ROICC FLORENCE CAMP LEJEUNE
MCB CAMP LEJEUNE
JACKSONVILLE, NC
P1338 II MEF SIMULATION/TRAINING CENTER
REPLACEMENT
PLUMBING - ENLARGED PLANS

SCALE: AS NOTED
EPROJECT NO.: 1590892
CONSTR. CONTR. NO.
N40085-20-C-0059
NAVFAC DRAWING NO.
SHEET OF
P-402

DP2 SUBMISSION – P1338 BUILDING -PRE-FINAL SUBMISSION

PLOTTED: 6/10/2021 4:16:02 PM

FILE NAME: BIM 360://HF PACKAGE 3/P1338 MEF SIM CTR-1590892-M.rvt

GENERAL NOTES

1. SEE P-001 FOR GENERAL NOTES, ABBREVIATIONS & SYMBOLS.
2. REFER TO STRUCTURAL DRAWINGS FOR THE EXACT SIZE, LOCATION, AND ELEVATION OF FOUNDATIONS, FOOTINGS AND GRADE BEAMS.
3. REFER TO STRUCTURAL DRAWINGS FOR DETAILS OF PIPE CROSSINGS UNDER OR THROUGH THE STRUCTURAL FOUNDATIONS, FOOTINGS AND GRADE BEAMS.
4. ALL SANITARY SEWERS SHALL BE INSTALLED AT A MINIMUM SLOPE OF 1/8"/1'-0", UNLESS NOTED OTHERWISE.
5. UNDERFLOOR VENTS SHALL CONNECT ABOVE CENTERLINE OF WASTE / SANITARY PIPE & SHALL RISE CONTINUOUSLY THROUGH FLOOR A MINIMUM 6" ABOVE FLOOD LEVEL OF FIXTURE. PROVIDE 45° CONNECTION TO WASTE / SANITARY LINE.
6. UNDERFLOOR SANITARY SEWER PIPING SHALL BE A MINIMUM OF 4" UNLESS NOTED OTHERWISE.
7. REFER TO P-700 SERIES FOR RISER DIAGRAMS.

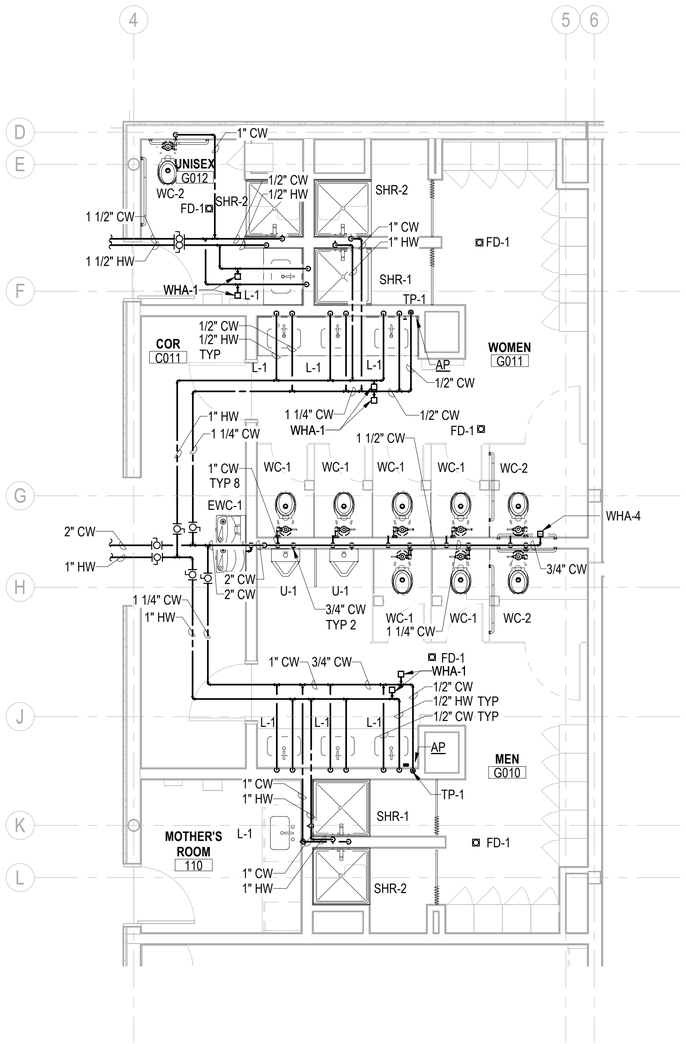

PLUMBING - ENLARGED PLAN - AREA A WATER

SCALE: 1/4" = 1'-0"

P-110 A1

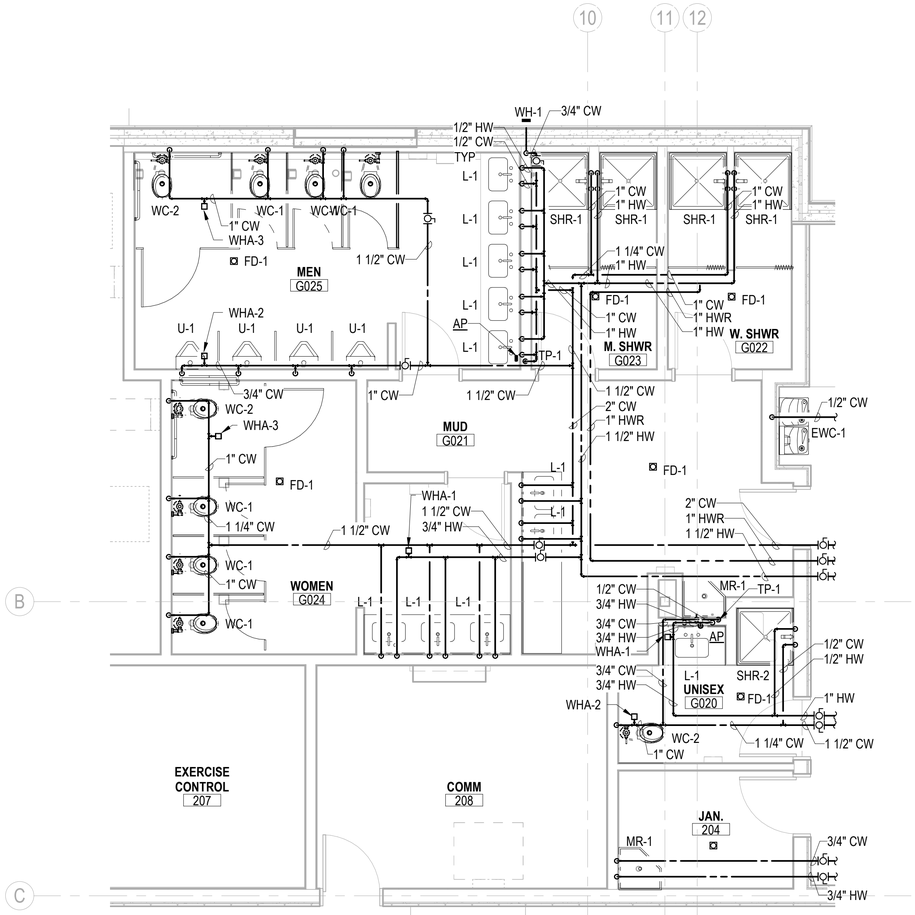

PLUMBING - ENLARGED PLAN - AREA B WATER

SCALE: 1/4" = 1'-0"

P-110 A3

KEYPLAN

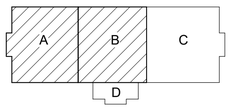

SCALE: 1/4" = 1' - 0"

DEPARTMENT OF THE NAVY	NAVAL FACILITIES ENGINEERING COMMAND ~ MID-ATLANTIC
ROICC FLORENCE CAMP LEJEUNE	JACKSONVILLE, NC
MCB CAMP LEJEUNE	P1338 II MEF SIMULATION/TRAINING CENTER REPLACEMENT
	PLUMBING - ENLARGED PLANS
SCALE:	AS NOTED
EPROJECT NO.:	1590892
CONSTR. CONTR. NO.	N40085-20-C-0059
NAVFAC DRAWING NO.	
SHEET	OF
	P-403

PRELIMINARY NOT FOR CONSTRUCTION

SEAL

Michael Baker INTERNATIONAL
100 AIRSIDE DRIVE
MOON TOWNSHIP, PA 15108
A/E INFO

APPROVED
FOR COMMANDER NAVFAC

ACTIVITY
MARINE CORPS BASE CAMP LEJEUNE

SATISFACTORY TO DATE

DES	DRW	CHK
PM		
BRANCH MANAGER		
CHIEF ENG/ARCH		
FIRE PROTECTION		

SYM	DESCRIPTION	DATE	APPR

DP2 SUBMISSION – P1338 BUILDING - PRE-FINAL SUBMISSION

PLOTTED: 6/10/2021 3:54:45 PM

FILE NAME: BIM 360://HF PACKAGE 3/P1338 MEF SIM CTR-1590892-M.rvt

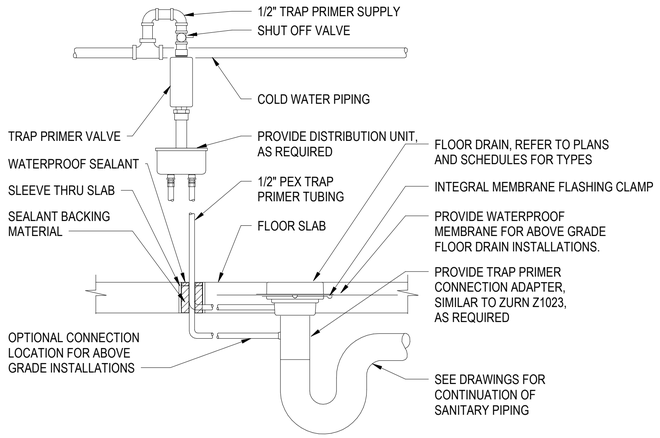

FLOOR DRAIN AND TRAP PRIMER VALVE DETAIL

SCALE:NTS

C1

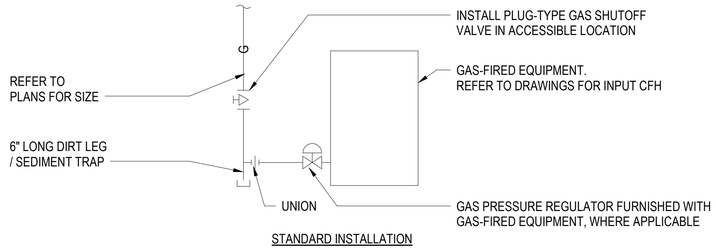

STANDARD INSTALLATION

NATURAL GAS CONNECTION DETAIL

SCALE:NTS

C3

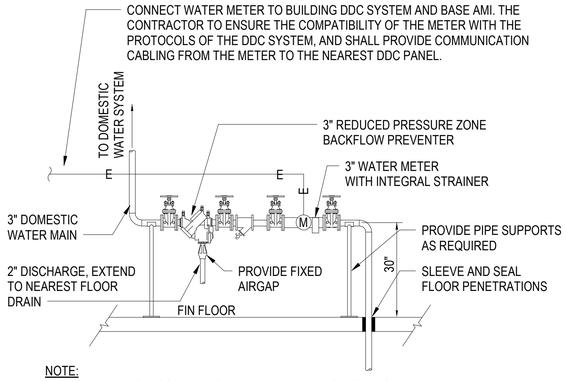

NOTE:
WATER ENTRANCE ASSEMBLY SHALL BE A MINIMUM OF 12" FROM REAR WALL.

WATER SERVICE ENTRANCE

SCALE:NTS

C4

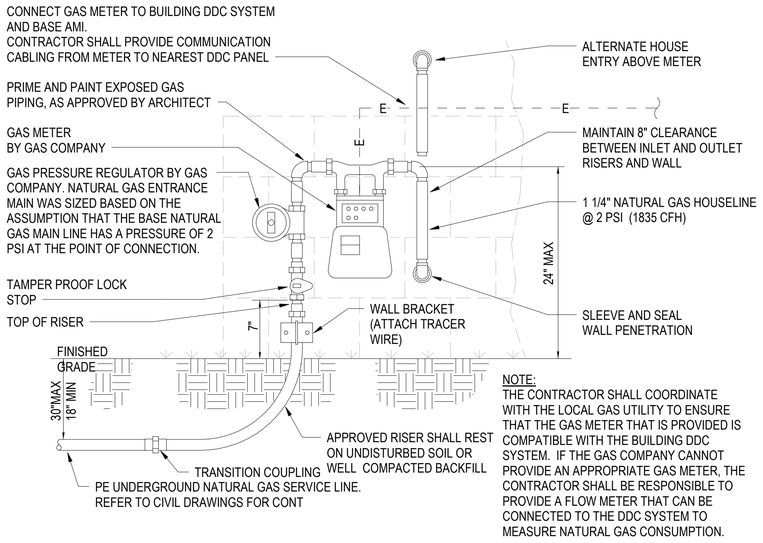

NOTE:
THE CONTRACTOR SHALL COORDINATE WITH THE LOCAL GAS UTILITY TO ENSURE THAT THE GAS METER THAT IS PROVIDED IS COMPATIBLE WITH THE BUILDING DDC SYSTEM. IF THE GAS COMPANY CANNOT PROVIDE AN APPROPRIATE GAS METER, THE CONTRACTOR SHALL BE RESPONSIBLE TO PROVIDE A FLOW METER THAT CAN BE CONNECTED TO THE DDC SYSTEM TO MEASURE NATURAL GAS CONSUMPTION.

GAS METER DETAIL

SCALE:NTS

B1

NOTE:
WATER ENTRANCE ASSEMBLY SHALL BE A MINIMUM OF 12" FROM REAR WALL.

FIRE PROTECTION SERVICE ENTRANCE DETAIL

SCALE:NTS

B3

PRELIMINARY NOT FOR CONSTRUCTION

SEAL

APPR	DATE	DESCRIPTION	SYM

NAVFAC

RQ W.M. Jordan COMPANY – A JOINT VENTURE –

Michael Baker INTERNATIONAL

100 AIRSIDE DRIVE
MOON TOWNSHIP, PA 15108 A/E INFO

APPROVED

FOR COMMANDER NAVFAC

ACTIVITY
MARINE CORPS BASE
CAMP LEJEUNE

SATISFACTORY TO DATE

DES	DRW	CHK
PM		
BRANCH MANAGER		
CHIEF ENG/ARCH		
FIRE PROTECTION		

DEPARTMENT OF THE NAVY
NAVAL FACILITIES ENGINEERING COMMAND ~ MID-ATLANTIC
JACKSONVILLE, NC
ROICC FLORENCE CAMP LEJEUNE
MCB CAMP LEJEUNE

JACKSONVILLE, NC
P1338 II MEF SIMULATION/TRAINING CENTER
REPLACEMENT
PLUMBING - DETAILS

SCALE: AS NOTED
EPROJECT NO.: 1590892
CONSTR. CONTR. NO.
N40085-20-C-0059
NAVFAC DRAWING NO.
SHEET OF

P-501

DP2 SUBMISSION – P1338 BUILDING - PRE-FINAL SUBMISSION

PLOTTED: 6/10/2021 3:54:47 PM

FILE NAME: BIM 360://MF PACKAGE 3/P1338 MEF SIM CTR-1590892-M.rvt

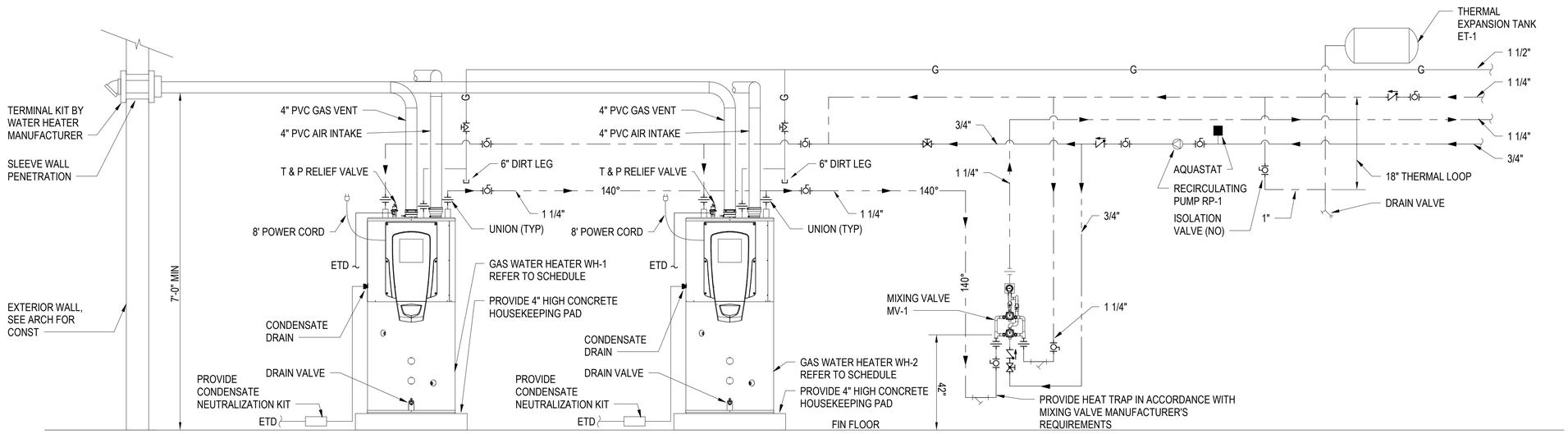

GAS WATER HEATER DETAIL

SCALE:NTS

C1

APPR	DATE	DESCRIPTION	SYM

NAVFAC

PRELIMINARY NOT FOR CONSTRUCTION

SEAL

IRQ Jordan COMPANY – A JOINT VENTURE –

Michael Baker INTERNATIONAL

100 AIRSIDE DRIVE
MOON TOWNSHIP, PA 15108

A/E INFO

APPROVED

FOR COMMANDER NAVFAC

ACTIVITY
MARINE CORPS BASE CAMP LEJEUNE

SATISFACTORY TO DATE

DES	DRW	CHK

PM

BRANCH MANAGER

CHIEF ENG/ARCH

FIRE PROTECTION

DEPARTMENT OF THE NAVY
NAVAL FACILITIES ENGINEERING COMMAND
ROICC FLORENCE CAMP LEJEUNE
MCB CAMP LEJEUNE

NAVAL FACILITIES ENGINEERING COMMAND ~ MID-ATLANTIC
JACKSONVILLE, NC

JACKSONVILLE, NC
P1338 II MEF SIMULATION/TRAINING CENTER
REPLACEMENT
PLUMBING - DETAILS

SCALE: AS NOTED

EPROJECT NO.: 1590892

CONSTR. CONTR. NO.
N40085-20-C-0059

NAVFAC DRAWING NO.

SHEET OF

P-502

DP2 SUBMISSION – P1338 BUILDING - PRE-FINAL SUBMISSION

PLOTTED: 6/10/2021 3:54:48 PM

FILE NAME: BIM 360://HF PACKAGE 3/P1338 MEF SIM CTR-1590892-M.rvt

PLUMBING FIXTURE SCHEDULE

TAG	FIXTURE	BASIS OF DESIGN	DESCRIPTION	SAN	VENT	CW	HW	DFU	SFU			NOTES
									HW	CW	TOTAL	
WC-1	WATER CLOSET	FIXTURE: AMERICAN STANDARD #3451.128 VALVE: SLOAN #ECOS 111-1.28-HW SEAT: OLSONITE #95SSCT	FLOORL MOUNTED, VITREOUS CHINA, HARD-WIRED INFRARED FLUSH VALVE, 1.28 GPF	4"	2"	1"	-	4	-	10	10	1,2,3,4,9
WC-2	WATER CLOSET	FIXTURE: AMERICAN STANDARD #3461.128 VALVE: SLOAN #ECOS 111-1.28-HW SEAT: OLSONITE #95SSCT	FLOOR MOUNTED, VITREOUS CHINA, HARD-WIRED INFRARED FLUSH VALVE, 1.28 GPF, ADA COMPLIANT	4"	2"	1"	-	4	-	10	10	1,2,3,4,9
U-1	URINAL	FIXTURE: AMERICAN STANDARD #6590.001 VALVE: SLOAN #ECOS 186HW-0.5 CARRIER: ZURN #Z1222	WALL HUNG, VITREOUS CHINA, HARD-WIRED INFRARED FLUSH VALVE, 0.5 GPF, WALL URINAL SUPPORT SYSTEM	2"	1 1/2"	3/4"	-	0.5	-	5	5	1, 2, 4,9
L-1	LAVATORY	FAUCET: MOEN #CA8302	SOLID SURFACE, INTERGRAL TO COUNTERTOP, HARD-WIRED INFRARED FAUCET, 0.5 GPM	1 1/2"	1 1/2"	1/2"	1/2"	1	1.5	1.5	2	1,2,4,5,6,9
S-1	SINK	FIXTURE: ELKAY #ELUHAD3118 FAUCET: MOEN #8287	DOUBLE COMPARTMENT 18 GAUGE STAINLESS STEEL, 0.5 GPM FAUCET WITH GOOSENECK SPOUT	1 1/2"	1 1/2"	1/2"	1/2"	2	1.5	1.5	2	1,2,5,9
EWC-1	ELECTRIC WATER COOLER	FIXTURE: ELKAY #LZSTL8WSSK	WALL HUNG, DUAL HEIGHT UNIT, FRONT & SIDE PUSH PADS, FILTERED BOTTLE FILLER, CANE APRON, ADA COMPLIANT, 120 VOLTS/1PH/60HZ, 370 WATTS, 4.0 FLA	1 1/2"	1 1/2"	1/2"	-	0.5	-	0.25	0.25	1,2,9
SHR-1	SHOWER	VALVE: SYMMONS #1-901	SOLID SURFACE SHOWER BASE WITH SOLID SURFACE WALL PANELS, PRESSURE BALANCING MIXING VALVE, 1.5 GPM STATIONARY SHOWER HEAD, STAINLESS STEEL INSTITUTIONAL BRACKET	2"	1 1/2"	1/2"	1/2"	2	3	3	4	1,2,9
SHR-2	SHOWER	VALVE: SYMMONS #1-901T724	SOLID SURFACE SHOWER BASE WITH SOLID SURFACE WALL PANELS, PRESSURE BALANCING MIXING VALVE, 1.5 GPM STATIONARY SHOWER HEAD, STAINLESS STEEL INSTITUTIONAL BRACKET, HAND-HELD SHOWER WITH 60" HOSE, TRANSFER SEAT, ADA COMPLIANT	2"	1 1/2"	1/2"	1/2"	2	3	3	4	1,2,9
MR-1	MOP RECEPTOR	FIXTURE: FIAT #TSB-3010 FAUCET: MOEN #8230	24"x24" TERRAZZO BASIN WITH 6" DROP FRONT, STAINLESS STEEL THRESHOLD CAP, SERVICE SINK FAUCET WITH INTERGRAL VACUUM BREAKER & WALL BRACE, STAINLESS STEEL WALL SURROUND, HOSE & BRACKET	3"	2"	1/2"	1/2"	2	2.25	2.25	3	1,2,9
HB-1	HOSE BIBB	FIXTURE: WATTS #SC8	EXPOSED, WITH VACUUM BREAKER	-	-	1/2"	-	-	-	-	-	1,2,7,9
WH-1	WALL HYDRANT	FIXTURE: WATTS #HY-725	NON-FREEZE, CONCEALED, KEY OPERATED WALL HYDRANT, NICKEL BRONZE BOX AND DOOR, INTEGRAL VACUUM BREAKER. ALL BRONZE HEAD, SEAT CASTING AND INTERNAL WORKING PARTS. ASSE 1019	-	-	3/4	-	-	-	-	-	1,2,8,9
TP-1	TRAP PRIMER VALVE ASSEMBLY	FIXTURE: PRECISION PLUMBING PRODUCTS #P1-500 WITH DU-4	AUTOMATIC, PRESSURE-ACTIVATED VALVE, 4-WAY DISTRIBUTION UNIT, FOR 1-4 FLOOR DRAINS	-	-	(1-4) - 1/2"	-	-	-	-	-	1,2,9
OB-1	OUTLET BOX	FIXTURE: OATEY #39142	RECESSED POLYSTYRENE BOX WITH TWO 1/4 TURN BALL VALVES WITH WATER HAMMER ARRESTOR, 6 FOOT STAINLESS STEEL HOSE	-	-	1/2"	-	-	-	-	-	1,2,9
YH-1	YARD HYDRANT	FIXTURE: WATTS YH-800	NON-FREEZE YARD HYDRANT, EPOXY COATED CAST IRON HEAD, LIFT HANDLE, GALVANIZED CASING, 1/8" NPT DRAIN PORT	-	-	3/4"	-	-	-	-	-	1,2,9

NOTES:

1. **INSTALL FIXTURE AND ALL ASSOCIATED ACCESSORIES AND APPURTENANCES IN ACCORDANCE WITH MANUFACTURER'S REQUIREMENTS.**
2. **PROVIDE ALL REQUIRED ACCESSORIES AND APPURTENANCES, INCLUDING BUT NOT LIMITED TO, COUPLINGS, STUDS & GASKETS, SUPPLIES & STOPS, ESCUTCHEONS, TAILPIECES AND P-TRAPS.**
3. **FOR ADA COMPLIANT WATER CLOSETS, FLUSH VALVE CONTROLS SHALL BE LOCATED ON THE OPEN SIDE OF THE WATER CLOSET. COORDINATE INSTALLATION OF FLUSH VALVE WITH GRAB BAR. REFER TO ARCHITECTURAL DRAWINGS.**
4. **REFER TO ARCHITECTURAL DRAWINGS FOR MOUNTING HEIGHTS.**
5. **PROVIDE PRE-MOLDED INSULATION ON EXPOSED CW & HW SUPPLIES AND STOPS, AND DRAIN PIPING BELOW FIXTURES.**
6. **PROVIDE THERMOSTATIC MIXING VALVE, COMPLYING WITH ASSE 1070, BELOW FIXTURE.**
7. **INSTALL AT 18" ABOVE FINISHED FLOOR, UNLESS OTHERWISE NOTED.**
8. **INSTALL AT 36" ABOVE FINISHED GRADE, UNLESS OTHERWISE NOTED.**
9. **BASIS OF DESIGN INDICATED IS TO PROVIDE A REFERENCE AND IS NOT INTEDED TO INDICATE A SINGE SOURCE OF PROCUREMENT.**

6/10/2021 14:03

APPR | DATE | DESCRIPTION | SYM

NAVFAC

PRELIMINARY NOT FOR CONSTRUCTION

SEAL

RQ Jordan COMPANY – A JOINT VENTURE –

Michael Baker INTERNATIONAL

100 AIRSIDE DRIVE
MOON TOWNSHIP, PA 15108 A/E INFO

APPROVED

FOR COMMANDER NAVFAC

ACTIVITY
MARINE CORPS BASE
CAMP LEJEUNE

SATISFACTORY TO DATE

DES	DRW	CHK

PM

BRANCH MANAGER

CHIEF ENG/ARCH

FIRE PROTECTION

DEPARTMENT OF THE NAVY
NAVAL FACILITIES ENGINEERING COMMAND ~ MID-ATLANTIC
ROICC FLORENCE CAMP LEJEUNE
MCB CAMP LEJEUNE

NAVAL FACILITIES ENGINEERING COMMAND ~ MID-ATLANTIC
JACKSONVILLE, NC

JACKSONVILLE, NC
P1338 II MEF SIMULATION/TRAINING CENTER
REPLACEMENT

PLUMBING - SCHEDULES

SCALE: AS NOTED

EPROJECT NO.: 1590892

CONSTR. CONTR. NO.
N40085-20-C-0059

NAVFAC DRAWING NO.

SHEET OF

P-601

DP2 SUBMISSION – P1338 BUILDING - PRE-FINAL SUBMISSION

PLOTTED: 6/10/2021 3:54:51 PM

FILE NAME: BIM 360://HF PACKAGE 3/P1338 MEF SIM CTR-1590892-M.rvt

MIXING VALVE SCHEDULE

TAG	LOCATION	ASSE NO.	MINIMUM FLOW RATE (GPM)	MAXIMUM FLOW RATE (GPM) (SEE NOTE 2)	CONNECTIONS		BASIS OF DESIGN		NOTES
					INLET (IN)	OUTLET (IN)	MANUF	MODEL	
MV-1	MASTER	1017	1	91	1 1/4"	1 1/4"	BRADLEY	NSR-20	1, 2, 3
MV-2	HANDWASHING SINKS	1070	0.2	3.5	1/2"	1/2"	BRADLEY	S59-4007	1, 2, 3

NOTES: 1. INSTALL IN ACCORDANCE WITH MANUFACTURER'S REQUIREMENTS.
2. AT 10 PSI SYSTEM PRESSURE DROP
3. BASIS OF DESIGN INDICATED IS TO PROVIDE A REFERENCE AND IS NOT INTEDED TO INDICATE A SINGE SOURCE OF PROCUREMENT.

6/10/2021 14:03

BACKFLOW PREVENTER (BFP) SCHEDULE

TAG	TYPE	SYSTEM	LOCATION	NOMINAL SIZE (IN)	FLOW RATE (GPM)	MAXIMUM PRESSURE DROP (PSI)	NOTES
BFP-1	REDUCED PRESSURE ZONE	DOMESTIC WATER	MECH ROOM	3"	119.8	7.2	1, 2, 3, 4
BFP-2	REDUCED PRESSURE ZONE	MAKE-UP WATER	MECH ROOM	3/4"	-	-	1, 2, 3, 4

NOTES: 1. INSTALL IN ACCORDANCE WITH MANUFACTURER'S REQUIREMENTS.
2. PROVIDE FIXED AIRGAP. DISCHARGE TO NEAREST FLOOR DRAIN.
3. ALL INSTALLED BACKFLOW PREVENTERS TO BE TESTED AND CERTIFIED AT THE COMPLETION OF THE...
BY A PERSON CERTIFIED TO TEST THESE DEVICES, AND THE TEST RESULTS SUBMITTED.
4. INSTALL AT A MAXIMUM OF 60" ABOVE FINISHED FLOOR.

6/10/2021 14:03

WATER HAMMER ARRESTOR (WHA) SCHEDULE

TAG	P.D.I. SIZE	CONNECTION SIZE (IN)	TYPE	FIXTURE UNIT CAPACITY	NOTES
WHA-1	A	3/4"	PISTON-TYPE	1 TO 11 SFU	1, 2, 3
WHA-2	B	3/4"	PISTON-TYPE	12 TO 32 SFU	1, 2, 3
WHA-3	C	1"	PISTON-TYPE	33 TO 60 SFU	1, 2, 3
WHA-4	D	1"	PISTON-TYPE	61 TO 113 SFU	1, 2, 3
WHA-5	E	1"	PISTON-TYPE	114 TO 154 SFU	1, 2, 3
WHA-6	F	1"	PISTON-TYPE	155 TO 330 SFU	1, 2, 3

NOTES: 1. INSTALL IN ACCORDANCE WITH MANUFACTURER'S REQUIREMENTS.
2. PROVIDE WATER HAMMER ARRESTORS AT FLUSH VALVE-OPERATER FIXTURES, SOLENOID VALVES,
AND ANY OTHER QUICK CLOSING VALVES.
3. FURNISH ACCESS PANELS, WHERE REQUIRED, FOR INSTALLATION BY GENERAL CONTRACTOR.

6/10/2021 14:03

FLOOR DRAIN SCHEDULE

TAG	DESCRIPTION	LOCATION	STRAINER SIZE	STRAINER MATERIAL	BODY MATERIAL	OPEN DRAIN AREA (in^2)	ACCESSORIES	BASIS OF DESIGN		NOTES
								MANUF	MODEL	
FD-1	FLOOR DRAIN	TOILET ROOMS & SHOWERS	8"ø	NICKEL BRONZE	CAST IRON	12	1/2" TRAP PRIMER CONNECTION	JAY R. SMITH	#2010	1,2
FD-2	FLOOR DRAIN	MECHANICAL ROOM	12"ø	ACRYLIC COATED CAST IRON	CAST IRON	14.25	1/2" TRAP PRIMER CONNECTION, SEDIMENT BUCKET	JAY R. SMITH	#2110	1,2
FS-1	FLOOR SINK	WATER SERVICE ENTRANCE	12"x12"	ACRYLIC COATED CAST IRON	CAST IRON	31	1/2" TRAP PRIMER CONNECTION, INTERIOR DOME STRAINER, 1/2 GRATE	JAY R. SMITH	#3110	1,2

NOTES: 1. INSTALL IN ACCORDANCE WITH MANUFACTURER'S REQUIREMENTS.
2. BASIS OF DESIGN INDICATED IS TO PROVIDE A REFERENCE AND IS NOT INTEDED TO INDICATE A SINGE SOURCE OF PROCUREMENT.

6/10/2021 14:03

GAS REGULATOR SCHEDULE

TAG	SERVICE	CAPACITY (CFH)	INLET PRESSURE (IN PSI)	OUTLET PRESSURE (IN WC)	NOTES
GR-1	GWH-1	199	2	14	1, 2
GR-2	GWH-2	199	2	14	1, 2
GR-3	B-1, B-2, B-3	399	2	14	1, 2

NOTES: 1. REFER TO MECHANICAL PLANS FOR ADDITIONAL EQUIPMENT INFORMATION AND LOCATIONS.
2. REFER TO PLUMBING PLANS FOR GAS REGULATOR LOCATIONS.

6/10/2021 14:03

EXPANSION TANK SCHEDULE

TAG	TYPE	SYSTEM	LOCATION	DIMENSIONS DIA X H (in)	CONNECTIONS (in)	VOLUME		FACTORY PRE-CHARGE PRESSURE (PSI)	BASIS OF DESIGN		NOTES
						TANK (GAL)	ACCEPTANCE (GAL)		MANUF	MODEL	
ET-1	FIXED BLADDER	DOMESTIC COLD WATER	MECH ROOM	10" x 37"	1"	10	10	25	AMTROL	ST-35-CL	1,2,3

NOTES: 1. INSTALL IN ACCORDANCE WITH MANUFACTURER'S REQUIREMENTS.
2. CONTRACTOR SHALL FIELD ADJUST THE PRE-CHARGED PRESSURE TO EQUAL TO COLD WATER SUPPLY SCHEDULE.
3. BASIS OF DESIGN INDICATED IS TO PROVIDE A REFERENCE AND IS NOT INTEDED TO INDICATE A SINGE SOURCE OF PROCUREMENT.

6/10/2021 14:03

RECIRCULATION PUMP (RP) SCHEDULE

TAG	PUMP TYPE	SYSTEM	LOCATION	FLOW RATE (GPM)	HEAD	CONNECTIONS		ELECTRICAL				BASIS OF DESIGN		NOTES
						SUCTION (IN)	DISCHARGE (IN)	W	VOLTS	PHASE	HERTZ	MANUF	MODEL	
RP-1	IN-LINE CIRCULATOR	DOMESTIC HOT WATER RETURN	MECH ROOM	5.0	37.0	1.0	1.0	370.0	115.0	1.0	60.0	GRUNDFOS	UPS 26-150	1, 2, 3

NOTES: 1. INSTALL IN ACCORDANCE WITH MANUFACTURER'S REQUIREMENTS.
2. PROVIDE TIME CLOCK AND AQUASTAT FOR PUMP CONTROL.
3. BASIS OF DESIGN INDICATED IS TO PROVIDE A REFERENCE AND IS NOT INTEDED TO INDICATE A SINGE SOURCE OF PROCUREMENT.

6/10/2021 14:03

GAS-FIRED WATER HEATER SCHEDULE

TAG	TYPE	LOCATION	DIMENSIONS DIA x H (IN)	STORAGE (GAL)	RECOVERY (GPH)	TEMPERATURE RISE (°F)	STORAGE TEMPERATURE (°F)	CONNECTIONS					ELECTRICAL				BASIS OF DESIGN		NOTES
								CW (IN)	HW (IN)	GAS	GAS VENT	AIR INLET	VOLTS	PHASE	HERTZ	AMPS	MANUF	MODEL	
GWH-1	STORAGE TANK	MECH ROOM	28"X76"	90	232	78	140	1 1/2"	1 1/2"	1/2"	3"	3"	120	1	60	3	LOCHINVAR	SHIELD	1,2,3,4,5
GWH-2	STORAGE TANK	MECH ROOM	28"X76"	90	232	78	140	1 1/2"	1 1/2"	1/2"	3"	3"	120	1	60	3	LOCHINVAR	SHIELD	1,2,3,4,5

NOTES: 1. INSTALL IN ACCORDANCE WITH MANUFACTURER'S REQUIREMENTS.
2. RECOVERY RATE AT 100°F RISE.
3. PROVIDE TERMINAL KIT FOR EXTENSION OF GAS VENT AND COMBUSTION AIR THRU EXTERIOR WALL. REFER TO HVAC DRAWINGS FOR GAS VENTING AND AIR INLET PIPING.
4. PROVIDE CONDENSATE NEUTRALIZATION KIT.
5. BASIS OF DESIGN INDICATED IS TO PROVIDE A REFERENCE AND IS NOT INTEDED TO INDICATE A SINGE SOURCE OF PROCUREMENT.

6/10/2021 14:03

APPR | DATE | NO | DESCRIPTION

NAVFAC

PRELIMINARY NOT FOR CONSTRUCTION

SEAL

IRQ W.M. Jordan COMPANY – A JOINT VENTURE –

Michael Baker INTERNATIONAL

100 AIRSIDE DRIVE
MOON TOWNSHIP, PA 15108 A/E INFO

APPROVED

FOR COMMANDER NAVFAC

ACTIVITY
MARINE CORPS BASE
CAMP LEJEUNE

SATISFACTORY TO DATE

DES	DRW	CHK

PM

BRANCH MANAGER

CHIEF ENG/ARCH

FIRE PROTECTION

DEPARTMENT OF THE NAVY
NAVAL FACILITIES ENGINEERING COMMAND
ROICC FLORENCE CAMP LEJEUNE
MCB CAMP LEJEUNE

NAVAL FACILITIES ENGINEERING COMMAND ~ MID-ATLANTIC
JACKSONVILLE, NC

JACKSONVILLE, NC
P1338 II MEF SIMULATION/TRAINING CENTER
REPLACEMENT

PLUMBING - SCHEDULES

SCALE: AS NOTED

EPROJECT NO.: 1590892

CONSTR. CONTR. NO.
N40085-20-C-0059

NAVFAC DRAWING NO.

SHEET OF

P-602

DP2 SUBMISSION – P1338 BUILDING - PRE-FINAL SUBMISSION

PLOTTED: 6/10/2021 3:54:55 PM

FILE NAME: BIM 360://HF PACKAGE 3/P1338 MEF SIM CTR-1590892-M.rvt

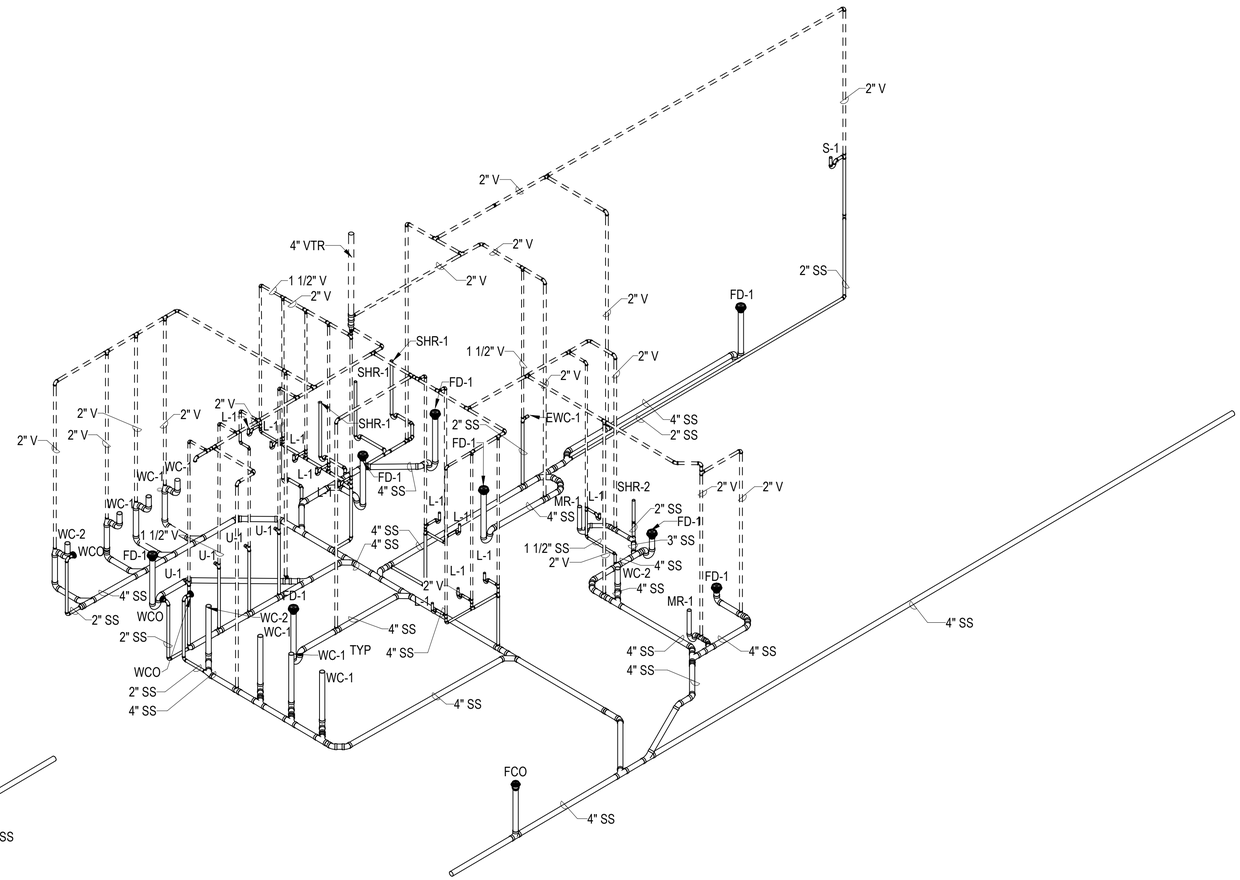

WASTE AND VENT RISER DIAGRAM - AREA B

SCALE:

B3

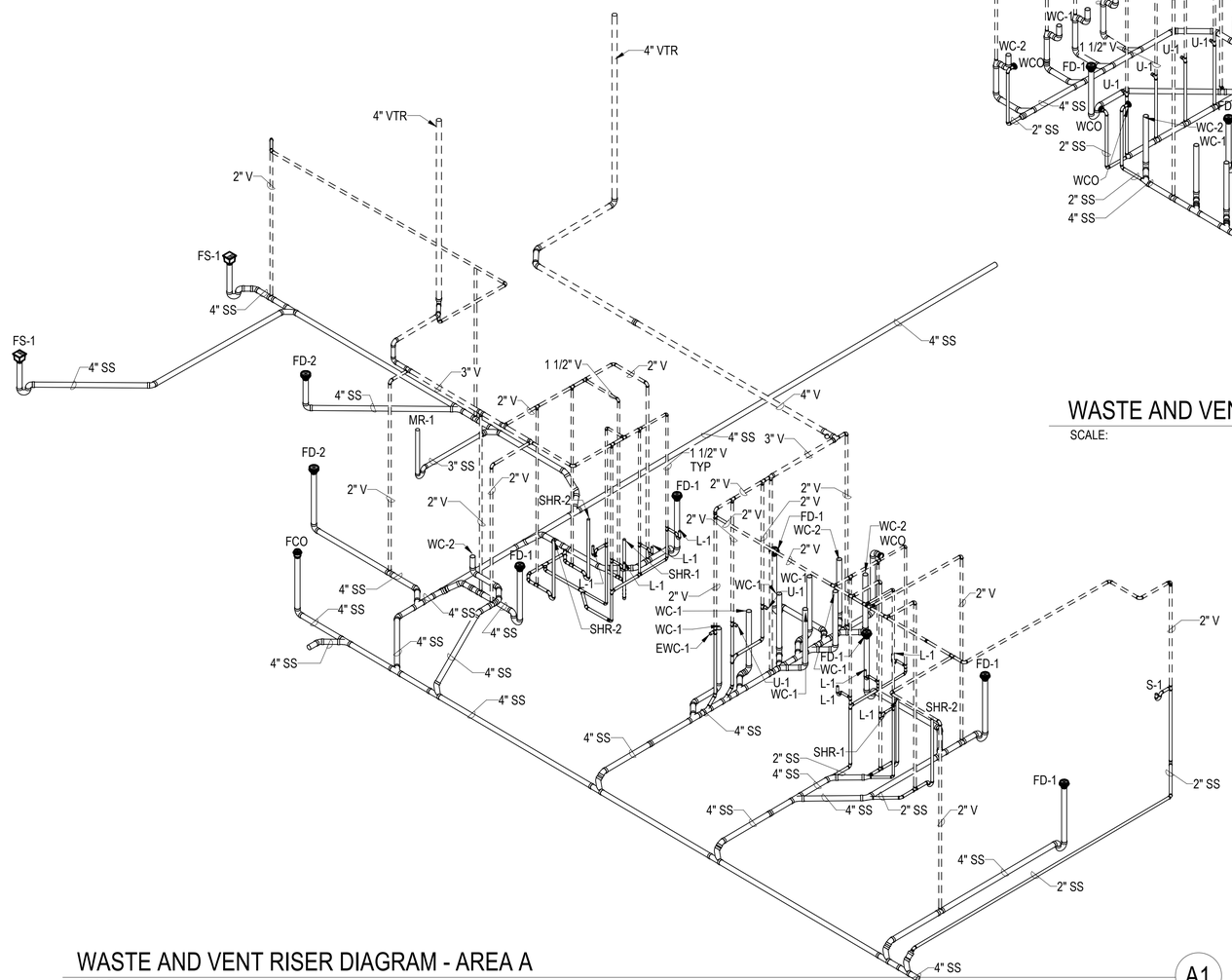

WASTE AND VENT RISER DIAGRAM - AREA A

SCALE:

A1

SYM	DESCRIPTION	DATE	APPR

NAVFAC

PRELIMINARY
NOT FOR CONSTRUCTION

SEAL

RQ W.M. Jordan COMPANY
~ A JOINT VENTURE ~

Michael Baker
INTERNATIONAL
100 AIRSIDE DRIVE
MOON TOWNSHIP, PA 15108
A/E INFO

APPROVED

FOR COMMANDER NAVFAC

ACTIVITY
MARINE CORPS BASE
CAMP LEJEUNE

SATISFACTORY TO DATE

DES	DRW	CHK
PM		
BRANCH MANAGER		
CHIEF ENG/ARCH		
FIRE PROTECTION		

DEPARTMENT OF THE NAVY
NAVAL FACILITIES ENGINEERING COMMAND
NAVAL FACILITIES ENGINEERING COMMAND ~ MID-ATLANTIC
ROICC FLORENCE CAMP LEJEUNE
JACKSONVILLE, NC
MCB CAMP LEJEUNE
JACKSONVILLE, NC

P1338 II MEF SIMULATION/TRAINING CENTER
REPLACEMENT
PLUMBING - RISER DIAGRAMS

SCALE: AS NOTED
EPROJECT NO.: 1590892
CONSTR. CONTR. NO.
N40085-20-C-0059
NAVFAC DRAWING NO.
SHEET OF

P-701

DP2 SUBMISSION – P1338 BUILDING - PRE-FINAL SUBMISSION

UNCLASSIFIED

FILE NAME: BIM 360://HF PACKAGE 3/P1338 MEF SIM CTR-1590892-M.rvt
PLOTTED: 6/10/2021 4:13:34 PM

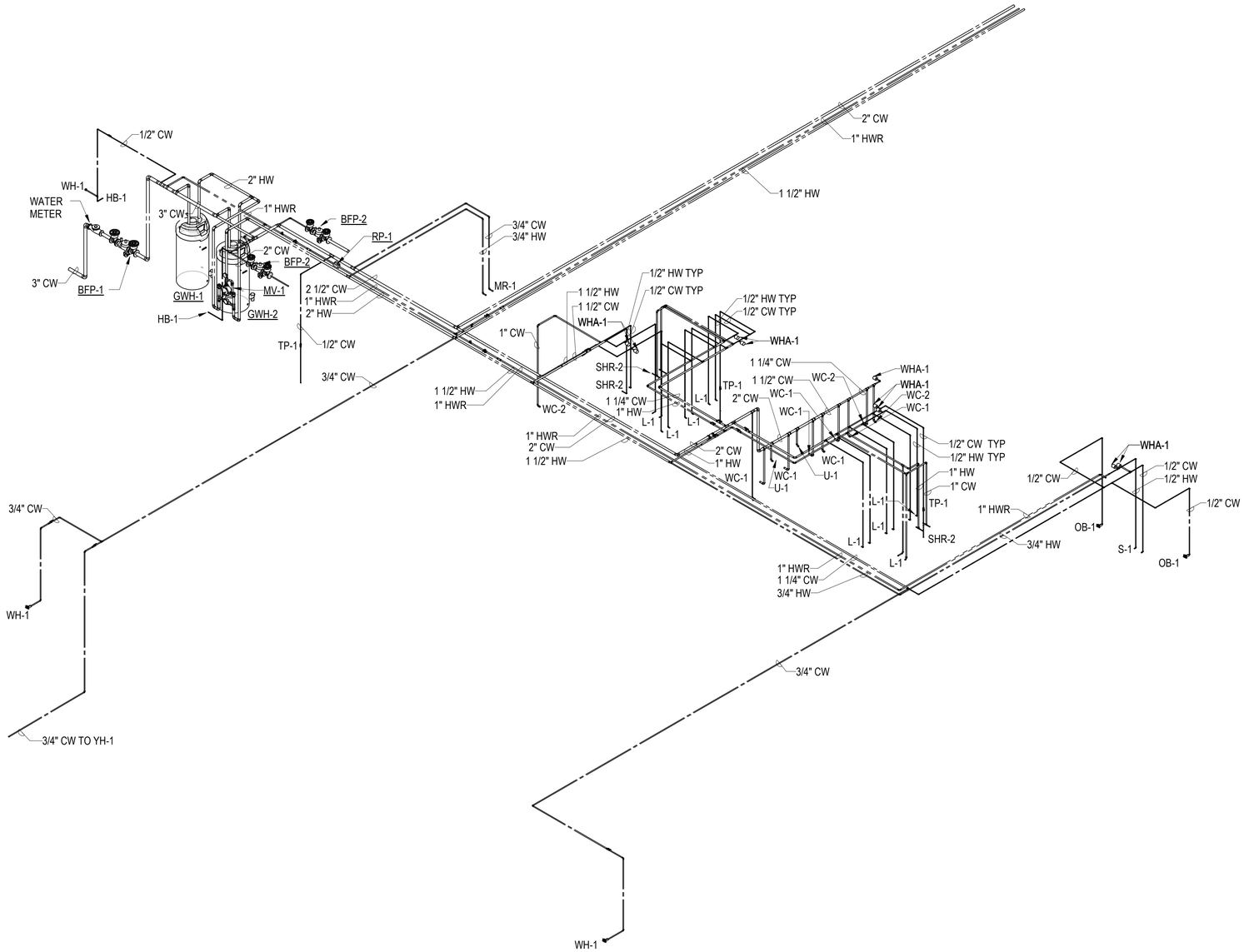

DOMESTIC WATER RISER DIAGRAM - AREA A

SCALE:

A1

			APPR
			DATE
			DESCRIPTION
			SYM

NAVFAC

PRELIMINARY
NOT FOR CONSTRUCTION
SEAL

RQ W.M. Jordan COMPANY – A JOINT VENTURE –

Michael Baker INTERNATIONAL

100 AIRSIDE DRIVE
MOON TOWNSHIP, PA 15108 A/E INFO

APPROVED

FOR COMMANDER NAVFAC

ACTIVITY
MARINE CORPS BASE
CAMP LEJEUNE

SATISFACTORY TO DATE

DES	DRW	CHK

PM

BRANCH MANAGER

CHIEF ENG/ARCH

FIRE PROTECTION

DEPARTMENT OF THE NAVY
NAVAL FACILITIES ENGINEERING COMMAND
ROICC FLORENCE CAMP LEJEUNE

NAVAL FACILITIES ENGINEERING COMMAND ~ MID-ATLANTIC
JACKSONVILLE, NC

MCB CAMP LEJEUNE
JACKSONVILLE, NC
P1338 II MEF SIMULATION/TRAINING CENTER
REPLACEMENT

PLUMBING - RISER DIAGRAMS

SCALE: AS NOTED

EPROJECT NO.: 1590892

CONSTR. CONTR. NO.
N40085-20-C-0059

NAVFAC DRAWING NO.

SHEET OF

P-702

DP2 SUBMISSION – P1338 BUILDING - PRE-FINAL SUBMISSION

PLOTTED: 6/10/2021 3:55:06 PM

FILE NAME: BIM 360://HF PACKAGE 3/P1338 MEF SIM CTR-1590892-M.rvt

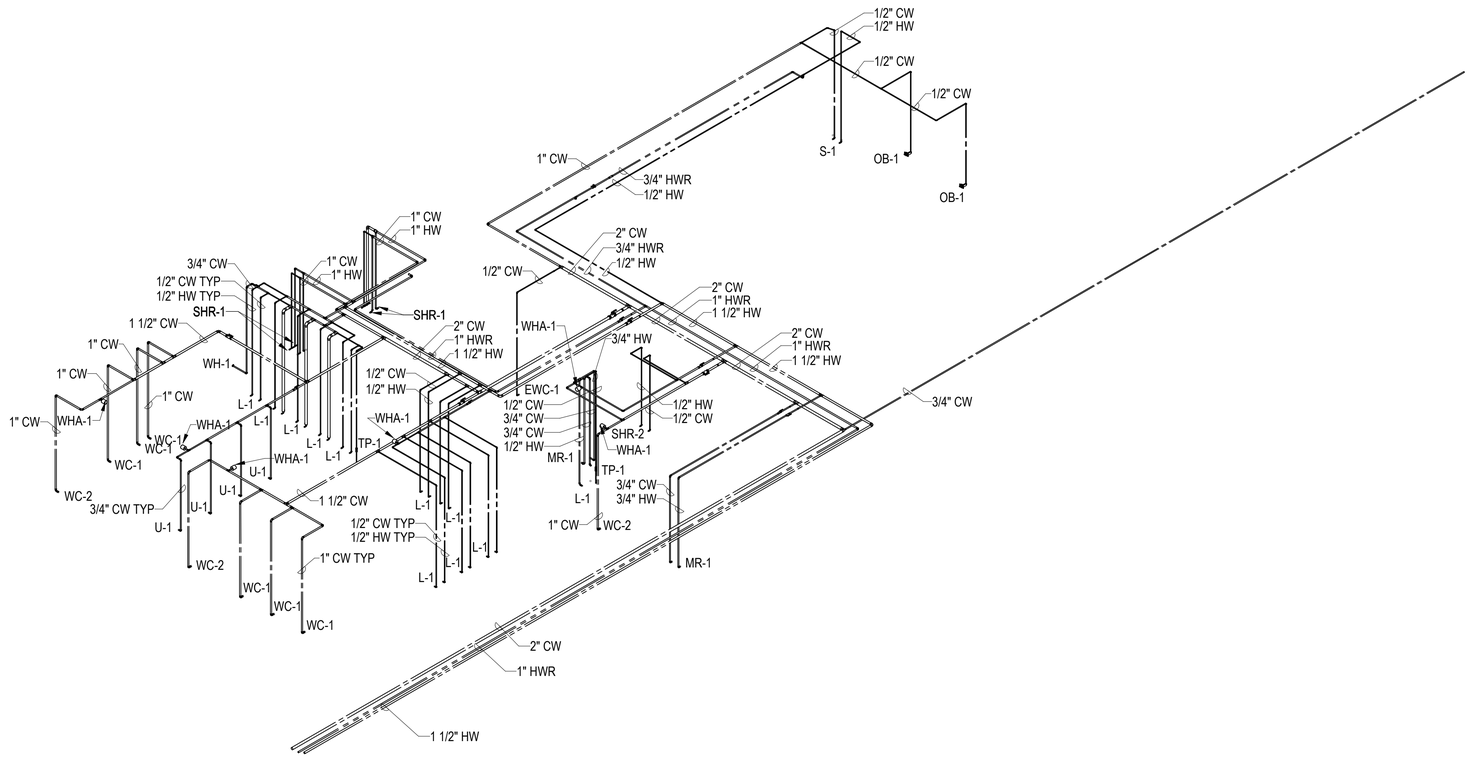

DOMESTIC WATER RISER DIAGRAM - AREA B

SCALE:

A1

		APPR
		DATE
		DESCRIPTION
		SYM

NAVFAC

PRELIMINARY
NOT FOR CONSTRUCTION

SEAL

IRQ W.M. Jordan COMPANY
– A JOINT VENTURE –

Michael Baker
INTERNATIONAL
100 AIRSIDE DRIVE
MOON TOWNSHIP, PA 15108
A/E INFO

APPROVED

FOR COMMANDER NAVFAC

ACTIVITY
MARINE CORPS BASE
CAMP LEJEUNE

SATISFACTORY TO DATE

DES	DRW	CHK

PM

BRANCH MANAGER

CHIEF ENG/ARCH

FIRE PROTECTION

DEPARTMENT OF THE NAVY
NAVAL FACILITIES ENGINEERING COMMAND
ROICC FLORENCE CAMP LEJEUNE
MCB CAMP LEJEUNE

NAVAL FACILITIES ENGINEERING COMMAND – MID-ATLANTIC
JACKSONVILLE, NC

JACKSONVILLE, NC
P1338 II MEF SIMULATION/TRAINING CENTER
REPLACEMENT

PLUMBING - RISER DIAGRAMS

SCALE: AS NOTED

EPROJECT NO.: 1590892

CONSTR. CONTR. NO.
N40085-20-C-0059

NAVFAC DRAWING NO.

SHEET OF

P-703

DP2 SUBMISSION – P1338 BUILDING -PRE-FINAL SUBMISSION

PLOTTED: 6/10/2021 3:55:09 PM

FILE NAME: BIM 360://HF PACKAGE 3/P1338 MEF SIM CTR-1590892-M.rvt

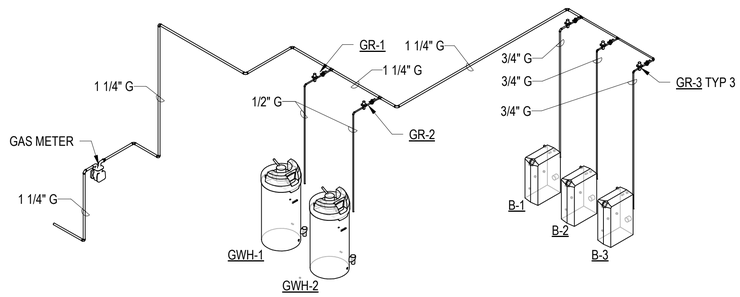

GAS RISER DIAGRAM - AREA A

SCALE:

A1

SYM	DESCRIPTION	DATE	APPR

NAVFAC

PRELIMINARY
NOT FOR CONSTRUCTION

SEAL

RQ W.M. Jordan COMPANY
- A JOINT VENTURE -

Michael Baker
INTERNATIONAL
100 AIRSIDE DRIVE
MOON TOWNSHIP, PA 15108
A/E INFO

APPROVED

FOR COMMANDER NAVFAC

ACTIVITY
MARINE CORPS BASE
CAMP LEJEUNE

SATISFACTORY TO DATE

DES	DRW	CHK
PM		
BRANCH MANAGER		
CHIEF ENG/ARCH		
FIRE PROTECTION		

DEPARTMENT OF THE NAVY
NAVAL FACILITIES ENGINEERING COMMAND
NAVAL FACILITIES ENGINEERING COMMAND ~ MID-ATLANTIC
ROICC FLORENCE CAMP LEJEUNE
JACKSONVILLE, NC

MCB CAMP LEJEUNE
JACKSONVILLE, NC

P1338 II MEF SIMULATION/TRAINING CENTER
REPLACEMENT

PLUMBING - RISER DIAGRAMS

SCALE: AS NOTED
EPROJECT NO.: 1590892
CONSTR. CONTR. NO.
N40085-20-C-0059
NAVFAC DRAWING NO.
SHEET OF

P-704

DP2 SUBMISSION – P1338 BUILDING - PRE-FINAL SUBMISSION

PLOTTED: 6/10/2021 3:55:11 PM

FILE NAME: BIM 360://HF PACKAGE 3/P1338 MEF SIM CTR-1590892-M.rvt

HVAC PIPE LEGEND

SYMBOL	ABBREV	DESCRIPTION
-CD-	CD	CONDENSATE DRAIN
	CW	DOMESTIC COLD WATER
	HW	DOMESTIC HOT WATER
CHWR	CHWR	CHILLED WATER RETURN
CHWS	CHWS	CHILLED WATER SUPPLY
HWR	HWR	HEATING HOT WATER RETURN
HWS	HWS	HEATING HOT WATER SUPPLY
RS/RL	RS/RL	REFRIGERANT SUCTION / REFRIGERANT LIQUID *

* RS/RL LINES TYPICALLY TO BE SIZED PER EQUIPMENT MANUFACTURER'S RECOMMENDATIONS UNLESS NOTED OTHERWISE.

NOTE: LEGEND AND ABBREVIATIONS ARE ALL INCLUSIVE, SOME SYMBOLS OR ABBREVIATIONS SHOWN MAY NOT BE INCLUDED IN THIS PROJECT

MECHANICAL SYMBOLS LEGEND

SYMBOL	DESCRIPTION	SYMBOL	DESCRIPTION	SYMBOL	DESCRIPTION	SYMBOL	DESCRIPTION	SYMBOL	DESCRIPTION	SYMBOL	DESCRIPTION
ATFP -OR- ATFP	ATFP SHUTDOWN SWITCH	A/B	DUCTWORK - DIMENSIONS - FLAT OVAL (SIDE SHOWN / SIDE NOT SHOWN)		DUCTWORK - FLEXIBLE CONNECTION	MV	PIPING - AIR VENT (MANUAL)		PIPING - EXPANSION JOINT		PIPING - TEE DOWN
NOTE TAG CFM	AIR DEVICE	AØ	DUCTWORK - DIMENSIONS - ROUND		DUCTWORK - EXHAUST OR RETURN DUCT DOWN (SLASH MAY BE FLIPPED)		PIPING - ANGLE GLOBE VALVE		PIPING - UNION		PIPING - TEE UP
	ACCESS PANEL	DN	DUCTWORK - DUCT ELEVATION DROP		DUCTWORK - EXHAUST OR RETURN DUCT UP (SLASH MAY BE FLIPPED)		PIPING - BALL VALVE		PIPING - FLEXIBLE CONNECTION	T	PIPING - TEMPERATURE SENSOR
CO_2	CARBON DIOXIDE SENSOR	UP	DUCTWORK - DUCT ELEVATION RISE		DUCTWORK - SUPPLY DUCT DOWN		PIPING - BUTTERFLY VALVE		PIPING - FLOWMETER - ORIFICE		PIPING - THERMOMETER
CO	CARBON MONOXIDE SENSOR	DN	DUCTWORK - DUCT ELEVATION DROP (ROUND OR FLAT OVAL)		DUCTWORK - SUPPLY DUCT UP		PIPING - CALIBRATED BALANCE VALVE		PIPING - FLOWMETER - VENTURI		PIPING - PRESSURE GAUGE WITH GAUGE COCK
	CONNECT TO EXISTING	UP	DUCTWORK - DUCT ELEVATION RISE (ROUND OR FLAT OVAL)	AxB AxB	DUCTWORK - TRANSITION - RECTANGULAR		PIPING - CAP	FS	PIPING - FLOW SWITCH		PIPING - PT (PRESSURE & TEMPERATURE) TEST PORT
L	DOOR LOUVER	DSD	DUCTWORK - DUCT SMOKE DETECTOR	AxB (AØ) (A/B)	DUCTWORK - TRANSITION - RECTANGULAR TO ROUND / FLAT OVAL		PIPING - CHECK VALVE (SPRING)		PIPING - GATE VALVE	P-#	PIPING - PUMP (ARROW IS DIRECTION OF FLOW)
UC	DOOR UNDERCUT		DUCTWORK - ELBOW 90° UP		EXHAUST FAN		PIPING - CHECK VALVE (SWING GATE)		PIPING - GLOBE VALVE		PIPING - REDUCER
DDCP	DIRECT DIGITAL CONTROL PANEL		DUCTWORK - ELBOW 90° DOWN	H	HUMIDISTAT		PIPING - CONTROL VALVE (2-WAY)		PIPING - PIPE ANCHOR		RETURN OR EXHAUST AIR DEVICE (SLASH MAY BE FLIPPED)
AFS	DUCTWORK - AIRFLOW MEASUREMENT STATION	FD	DUCTWORK - FIRE DAMPER	H_2	HYDROGEN SENSOR		PIPING - CONTROL VALVE (3-WAY)		PIPING - PIPE GUIDE		REMOVE EXISTING TO
BDD	DUCTWORK - BACKDRAFT DAMPER	SD DSD	DUCTWORK - SMOKE DAMPER	#	KEYNOTE		PIPING - DIRECTION OF WATER FLOW		PIPING - PLUG VALVE	#	REVISION
	DUCTWORK - DIRECTION OF AIRFLOW - RETURN	FS DSD	DUCTWORK - COMBINATION FIRE / SMOKE DAMPER		LOUVER		PIPING - ELBOW 90° DOWN		PIPING - PRESSURE REDUCING VALVE	S	STARTER (EQUIPMENT SERVED)
	DUCTWORK - DIRECTION OF AIRFLOW - SUPPLY		DUCTWORK - MANUAL VOLUME DAMPER	NO_x	NITROGEN OXIDE SENSOR		PIPING - ELBOW 90° UP		PIPING - PRESSURE RELIEF VALVE	$	SWITCH
DP	DUCTWORK - DIFFERENTIAL PRESSURE		DUCTWORK - MOTOR OPERATED DAMPER	ϕ	PHASE		PIPING - ELBOW 90°	S	PIPING - SOLENOID VALVE		SQUARE SUPPLY AIR DIFFUSER
AxB	DUCTWORK - DIMENSIONS (SIDE SHOWN x SIDE NOT SHOWN)		DUCTWORK - FLEXIBLE DUCT	AV	PIPING - AIR VENT (AUTOMATIC)		PIPING - ELBOW 45°		PIPING - STRAINER WITH VALVED AND CAPPED BLOW DOWN	T	THERMOSTAT (DASHED LINE RUNS TO CONTROLLED DEVICE)

MECHANICAL ABBREVIATIONS

ABBREV	DESCRIPTION	ABBREV	DESCRIPTION	ABBREV	DESCRIPTION	ABBREV	DESCRIPTION	ABBREV	DESCRIPTION	ABBREV	DESCRIPTION
AC	AIR CONDITIONER, AIR CURTAIN	CONTR	CONTRACTOR	(F)	FUTURE	L	LOUVER	PTAC	PACKAGED TERMINAL AIR CONDITIONER	VFD / VSD	VARIABLE FREQUENCY DRIVE / VARIABLE SPEED DRIVE (ALSO REFERRED TO AS ASD - ADJUSTABLE SPEED DRIVE)
ACCU	AIR COOLED CONDENSING UNIT	CONV	CONVECTOR	F	FAHRENHEIT	L/s	LITERS PER SECOND	QTY	QUANTITY	VOL	VOLUME
ACU	AIR CONDITIONING UNIT	CU FT	CUBIC FEET	FAI	FRESH AIR INTAKE	LAT	LEAVING AIR TEMPERATURE	RA	RETURN AIR	W	WATT(S)
AD	ACCESS DOOR	CUH	CABINET UNIT HEATER	FCU	FAN COIL UNIT	LBS	POUNDS	REQ'D	REQUIRED	W/	WITH
AFF	ABOVE FINISHED FLOOR	CWBT	CHILLED WATER BUFFER TANK	FDB	DEGREES FAHRENHEIT DRY BULB	LWT	LEAVING WATER TEMPERATURE	RF	RETURN FAN	W/O	WITHOUT
AHU	AIR HANDLING UNIT	CWP	CONDENSER WATER PUMP	FIN FLR	FINISHED FLOOR	m	METERS	RH	RELATIVE HUMIDITY	WB	WET BULB
AP	ACCESS PANEL	CWR	CONDENSER WATER RETURN	FLEX	FLEXIBLE	MAG	MAGNETIC	RM	ROOM	WG	WATER GAUGE
APD	AIR PRESSURE DROP	CWS	CONDENSER WATER SUPPLY	FPM	FEET PER MINUTE	MAINT	MAINTENANCE	RPM	REVOLUTIONS PER MINUTE	WSHP	WATER SOURCE HEAT PUMP
APPROX	APPROXIMATE(LY)	DB	DRY BULB	FT	FOOT, FEET	MAU	MAKE-UP AIR UNIT	RTU	ROOFTOP AIR HANDLING UNIT	WST	WATER STORAGE TANK
ARCH	ARCHITECT OR ARCHITECTURAL	DDC	DIRECT DIGITAL CONTROL	FWB	DEGREES FAHRENHEIT WET BULB	MAX	MAXIMUM	SA	SUPPLY AIR	WTWHP	WATER TO WATER HEAT PUMP
AS	AIR SEPARATOR	DEG	DEGREE(S)	GA	GAUGE	MBH	1,000 BTUH	SAR	SUPPLY AIR REGISTER	XFER	TRANSFER
ASD	ADJUSTABLE SPEED DRIVE (VFD / VSD SIMILAR)	DEH	DEHUMIDIFIER	GC	GENERAL CONTRACTOR	MECH	MECHANICAL	SF	SUPPLY FAN		
B	BOILER	DIA	DIAMETER	GMU	GLYCOL MAKEUP UNIT	MFR / MFGR / MANUF	MANUFACTURER	SOV	SHUT-OFF VALVE		
BCU	BLOWER COIL UNIT	DIFF	DIFFUSER	GPM	GALLONS PER MINUTE			SP	STATIC PRESSURE (INCHES OF WATER)		
BHP	BREAK HORSEPOWER	DISC	DISCONNECT	GV	GRAVITY VENTILATOR	MIN	MINIMUM	SPECS	SPECIFICATIONS		
BI	BINARY INPUT	DOAS	DEDICATED OUTDOOR AIR SYSTEM	GWR	GLYCOL WATER RETURN	MISC	MISCELLANEOUS	SQ	SQUARE		
BLDG	BUILDING	DWG	DRAWING	GWS	GLYCOL WATER SUPPLY	mm	MILLIMETERS	SSCU	SPLIT SYSTEM CONDENSING UNIT		
BOT	BOTTOM	DWH	DOMESTIC WATER HEATER	HC	HEATING COIL	MUA	MAKE-UP AIR	SSHP	SPLIT SYSTEM HEAT PUMP		
BTU	BRITISH THERMAL UNIT	EA	EXHAUST AIR	HOA	HAND-OFF-AUTOMATIC	NC	NORMALLY CLOSED	STRUC	STRUCTURAL		
BTUH	BRITISH THERMAL UNIT PER HOUR	EAG	EXHAUST AIR GRILLE	HP	HORSE POWER	NIC	NOT IN CONTRACT	TA	TRANSFER AIR		
C	CELSIUS	EAR	EXHAUST AIR REGISTER	HPU	HEAT PUMP UNIT	NO	NORMALLY OPEN	TEMP	TEMPERATURE		
CAP	CAPACITY	EAT	ENTERING AIR TEMPERATURE	HTG	HEATING	NTS	NOT TO SCALE	TXV	THERMAL EXPANSION VALVE		
CCFC	CLOSED CIRCUIT FLUID COOLER	EF	EXHAUST FAN	HTR	HEATER	OA	OUTSIDE AIR	TYP	TYPICAL		
CFM	CUBIC FEET PER MINUTE	ELEC	ELECTRIC(AL)	HVAC	HEATING VENTILATION / AIR CONDITIONING	OD	OUTSIDE DIAMETER	UH	UNIT HEATER		
CH	CHILLER	ERU	ENERGY RECOVERY UNIT			OED	OPEN END DUCT	UNO	UNLESS NOTED OTHERWISE		
CHWR	CHILLED WATER RETURN	ERV	ENERGY RECOVERY VENTILATOR	HWR	HEATING HOT WATER RETURN	P	PUMP	VAV	VARIABLE AIR VOLUME		
CHWS	CHILLED WATER SUPPLY	ERW	ENERGY RECOVERY WHEEL	HWS	HEATING HOT WATER SUPPLY	PLBG	PLUMBING	VEF	VEHICLE EXHAUST FAN		
CLG	CEILING, COOLING	ESP	EXTERNAL STATIC PRESSURE	ID	INSIDE DIAMETER	POC	POINT OF CONNECTION	VEL	VELOCITY		
CON	CONNECTION	ET	EXPANSION TANK	IN	INCH(ES)	PRESS	PRESSURE	VENT	VENTILATION, VENTILATOR		
CONC	CONCRETE	EWT	ENTERING WATER TEMPERATURE	INSUL	INSULATE(D), INSULATION	PRV	PRESSURE RELIEVING VALVE	VER	VEHICLE EXHAUST REEL		
CONT	CONTINUOUS, CONTINUATION	EXH	EXHAUST	Kg	KILOGRAM(S)	PSI	POUNDS PER SQUARE INCH	VERT	VERTICAL		
		EXIST, EX	EXISTING	KW	KILOWATTS	PSIG	PSI GAUGE				

APPR. | DATE | DESCRIPTION | SYM

NAVFAC

PRELIMINARY NOT FOR CONSTRUCTION

SEAL

RQ W.M. Jordan COMPANY – A JOINT VENTURE –

Michael Baker INTERNATIONAL

100 AIRSIDE DRIVE
MOON TOWNSHIP, PA 15108 A/E INFO

APPROVED

FOR COMMANDER NAVFAC

ACTIVITY
MARINE CORPS BASE CAMP LEJEUNE

SATISFACTORY TO DATE

DES	DRW	CHK

PM

BRANCH MANAGER

CHIEF ENG/ARCH

FIRE PROTECTION

NAVAL FACILITIES ENGINEERING COMMAND
NAVAL FACILITIES ENGINEERING COMMAND ~ MID-ATLANTIC
JACKSONVILLE, NC
DEPARTMENT OF THE NAVY
ROICC FLORENCE CAMP LEJEUNE
MCB CAMP LEJEUNE
JACKSONVILLE, NC
P1338 II MEF SIMULATION/TRAINING CENTER REPLACEMENT
MECHANICAL - SYMBOLS AND ABBREVIATIONS

SCALE: AS NOTED

EPROJECT NO.: 1590892

CONSTR. CONTR. NO.
N40085-20-C-0059

NAVFAC DRAWING NO.

SHEET OF

M-001

DP2 SUBMISSION – P1338 BUILDING - PRE-FINAL SUBMISSION

PLOTTED: 6/10/2021 3:33:09 PM

FILE NAME: BIM 360://HF PACKAGE 3/P1338 MEF SIM CTR-1590892-M.rvt

GENERAL NOTES

1.0 GENERAL

1.1 CONTRACT DOCUMENT DRAWINGS FOR MECHANICAL WORK ARE DIAGRAMMATIC AND ARE INTENDED TO CONVEY SCOPE AND GENERAL ARRANGEMENT ONLY. DO NOT SCALE DRAWINGS. CONTRACTOR MUST BE RESPONSIBLE TO FIELD SURVEY ACTUAL SITE CONDITIONS AND ACCOMMODATE ACTUAL SITE CONDITIONS AS PART OF SCOPE OF WORK AT NO ADDITIONAL COST TO GOVERNMENT.

1.2 PROVIDE WORK INDICATED OR IMPLIED ON THE DRAWINGS UNLESS SPECIFICALLY NOTED OTHERWISE.

1.3 PROVIDE MATERIALS, EQUIPMENT AND PERFORM LABOR REQUIRED TO PROVIDE COMPLETE AND OPERABLE MECHANICAL SYSTEMS AS INDICATED ON THE DRAWINGS, AS SPECIFIED, AND AS REQUIRED BY CODE.

1.4 WORK SHOWN ON THE DRAWINGS MUST BE PERFORMED BY THE CONTRACTOR UNLESS SPECIFICALLY NOTED OTHERWISE.

1.5 EQUIPMENT SUBMITTALS AND SHOP DRAWINGS REQUIRED BY THE SPECIFICATIONS MUST BE APPROVED IN ACCORDANCE WITH CONTRACT REQUIREMENTS PRIOR TO PURCHASE, FABRICATION, AND INSTALLATION.

1.6 WHERE TWO OR MORE ITEMS OF THE SAME TYPE OF EQUIPMENT ARE REQUIRED, THE PRODUCTS OF A SINGLE MANUFACTURER MUST BE USED.

1.7 VERIFY EXISTING CONDITIONS AT THE SITE AND REPORT DISCREPANCIES TO THE CONTRACTING OFFICER BEFORE PROCEEDING WITH WORK.

1.8 LIMITS OF WORK ARE SHOWN FOR GENERAL REFERENCE AND DO NOT ESTABLISH PRECISE BOUNDARIES OF WORK FOR TRADES THAT MAY BE REQUIRED TO COMPLETE THE PROJECT.

1.9 THE VERBIAGE ON THE DRAWING INDICATING TYPES OF MATERIALS IS INTENDED TO AID THE CONTRACTOR IN UNDERSTANDING THE VARIOUS CONDITIONS LIKELY TO BE ENCOUNTERED.

1.10 THE CONTRACTOR IS RESPONSIBLE FOR DETERMINING QUANTITIES OF MATERIALS REQUIRED TO COMPLETE THE PROJECT.

1.11 REFER TO DETAILS FOR ADDITIONAL REQUIREMENTS REGARDING SIZES AND ARRANGEMENTS.

1.12 PAINT COLORS AND OTHER FINISHES ARE SUBJECT TO CHANGE FROM THOSE LISTED IN THE CONTRACT DOCUMENTS WITHOUT NOTICE. CONTRACTOR TO SUBMIT SAMPLES OF COLORS AND FINISHES TO CONTRACTING OFFICER FOR REVIEW AND APPROVAL BEFORE THE INSTALLATION/FINISHING OF SURFACES.

1.13 IT IS THE CONTRACTOR'S RESPONSIBILITY TO DETERMINE AND TO MAINTAIN THE BUILDING'S STRUCTURAL INTEGRITY DURING PHASES OF DEMOLITION AND NEW WORK. PROVIDE REQUIRED SUPPORT, SHORING, PINNING, ETC. TO ASSURE THIS REQUIREMENT.

1.14 MAINTAIN BUILDING IN WEATHERPROOF AND WATERTIGHT CONDITIONS THROUGHOUT THE DURATION OF CONSTRUCTION.

1.15 FIRE STOP FLOOR/CEILING PENETRATIONS AND PENETRATIONS THROUGH RATED PARTITIONS/WALLS.

1.16 LEGALLY DISPOSE OF DEMOLISHED MATERIALS OFF-SITE PER REGULATIONS OF AUTHORITIES HAVING JURISDICTION OVER THIS PROJECT.

1.17 WORK SHOWN ON DRAWINGS INVOLVES THE REMOVAL, REPLACEMENT, DEMOLITION, CUTTING, PATCHING AND PLASTERING OF EXISTING SURFACES IN ROOMS ABOVE AND BELOW THE CONSTRUCTION AREA. THE CONTRACTOR MUST RESTORE SURFACES AND FLOORS THAT ARE AFFECTED BY THEIR WORK. THE CONTRACTOR MUST COORDINATE THE PATCHING AND REPAIR OF THEIR WORK WITH THE WORK OF THE GENERAL CONTRACTOR'S FINAL FINISHES.

1.18 MAINTAIN A MINIMUM OF 6'-8" CLEARANCE TO UNDERSIDE OF PIPES, DUCTS, CONDUITS, SUSPENDED EQUIPMENT, SUPPORTS, ETC., THROUGHOUT ACCESS ROUTES IN MECHANICAL ROOMS.

1.19 COORDINATE FINAL EQUIPMENT CONNECTIONS WITH MANUFACTURERS' CERTIFIED DRAWINGS. COORDINATE AND PROVIDE DUCTWORK AND PIPING TRANSITIONS REQUIRED FOR FINAL EQUIPMENT CONNECTIONS. FIELD VERIFY AND COORDINATE DUCTWORK AND PIPING DIMENSIONS BEFORE FABRICATION.

1.20 PROVIDE MISCELLANEOUS STEEL REQUIRED TO ENSURE INSTALLATION AND SUPPORT OF MECHANICAL WORK AS SHOWN IN DETAILS FOR PIPING, DUCTWORK AND EQUIPMENT (UNLESS OTHERWISE NOTED) AT NO ADDITIONAL COST TO THE GOVERNMENT.

1.21 EQUIPMENT, PIPING, DUCTWORK, ETC., MUST BE SUPPORTED AS DETAILED AND SPECIFIED TO PROVIDE A VIBRATION FREE INSTALLATION.

1.22 PROVIDE FLEXIBLE CONNECTIONS IN DUCTWORK SYSTEMS CONNECTED TO FANS AND OTHER EQUIPMENT WHICH REQUIRE VIBRATION ISOLATION. FLEXIBLE CONNECTIONS MUST BE PROVIDED AT THE POINT OF CONNECTION TO THE EQUIPMENT UNLESS OTHERWISE INDICATED.

2.0 COORDINATION

2.1 SEVERAL PROJECTS MAY OCCUR AT THE SITE SIMULTANEOUSLY WITH THIS PROJECT. COORDINATE WORK REQUIREMENTS UNDER THIS CONTRACT WITH THESE PROJECTS.

2.2 THE CONTRACTOR MUST REVIEW DRAWINGS AND INCORPORATE PHASING REQUIREMENTS IN BID.

2.3 MECHANICAL CONTRACTOR MUST REFER TO AND COORDINATE WITH OTHER DISCIPLINE DRAWINGS (INCLUDING ARCHITECTURAL, INTERIORS, TELECOMMUNICATIONS, STRUCTURAL, CIVIL, PLUMBING, ELECTRICAL AND FIRE PROTECTION).

2.4 COORDINATE WITH THE ELECTRICAL CONTRACTOR:

2.4.1 LOCATION AND POWER REQUIREMENTS OF EQUIPMENT, CONTROL PANELS AND DEVICES.

2.4.2 MECHANICAL CONTRACTOR MUST FURNISH MOTOR CONTROL DEVICES TO ELECTRICAL CONTRACTOR FOR INSTALLATION. MOTOR CONTROL DEVICES INCLUDE BUT ARE NOT LIMITED TO FUSED DISCONNECTS, DISCONNECTS, MOTOR STARTING SWITCHES, PUSH BUTTON STATIONS, FRACTIONAL HORSEPOWER MANUAL MOTOR STARTERS WITH THERMAL OVERLOADS, 3 PHASE MOTOR CONTACTORS, COMBINATION MOTOR STARTERS, VARIABLE FREQUENCY DRIVES, SINGLE PHASE MOTOR SPEED ADJUSTMENT DEVICES.

2.4.3 COORDINATE ELECTRICAL REQUIREMENTS AND LOCATIONS OF EQUIPMENT WITH THE ELECTRICAL CONTRACTOR PRIOR TO ORDERING AND INSTALLATION.

2.4.4 LOCATIONS AND SIZES OF FLOOR, WALL AND ROOF OPENINGS MUST BE COORDINATED WITH OTHER TRADES INVOLVED.

2.4.5 PROVIDE CONTROL WIRING FROM REMOTE DISCONNECTS TO VFDs. PROVIDE FAST ACTING AUXILIARY CONTACT IN DISCONNECT CONNECTED TO LOGIC/DIGITAL INPUT ON VFD TO TRIGGER FREEWHEEL STOP.

3.0 WORK AREA

3.1 PROVIDE CONSTRUCTION AND DUST BARRICADES AS INDICATED AND AS DIRECTED BY THE CONTRACTING OFFICER TO ISOLATE WORK AREAS FROM OTHER PARTS OF THE BUILDING AND TO MAINTAIN EGRESS PATHWAYS. PROVIDE TEMPORARY EXIT SIGNAGE, WALK-OFF MATS AND DOORS.

3.2 BARRICADES MUST HAVE LOCKABLE DOOR TO PREVENT UNAUTHORIZED ENTRY. PROVIDE "WIPE OFF" MATS TO MINIMIZE TRACKING DUST AND DEBRIS.

3.3 DEVELOP, POST, AND IMPLEMENT NEW, SAFE PATHS OF EGRESS IF BARRICADES BLOCK NORMAL PATHS OF EGRESS.

3.4 PROVIDE TEMPORARY EXIT SIGNS.

3.5 DUST-PROOF PARTITIONS MUST HAVE LOCKABLE PRE-HUNG DOOR 3'-0" X 7'-0" TO PREVENT UNAUTHORIZED ENTRY, FIRE-PROOF OR METAL STUDS AND PLYWOOD. "WIPE OFF" MATS TO MINIMIZE TRACKING DUST AND DEBRIS TO ADJOINING SPACES, AND TEMPORARY EXIT SIGNS IF PARTITIONS INTERFERE WITH PATHS OF EGRESS.

3.6 IF DUST-PROOF PARTITIONS BLOCKS NORMAL PATHS OF EGRESS, THE CONTRACTOR MUST DEVELOP, POST, AND IMPLEMENT NEW, SAFE PATHS OF EGRESS.

3.7 RETURN ADJACENT AREAS DISTURBED BY THIS PROJECT'S CONSTRUCTION TO THE CONDITION PRIOR TO CONSTRUCTION.

4.0 HVAC WORK

4.1 COORDINATE THE LOCATIONS OF GRILLES, REGISTERS AND DIFFUSERS WITH THE CEILING GRID, LIGHTING, AUDIO VISUAL EQUIPMENT, AND SPRINKLER HEAD LAYOUTS.

4.2 HEATING DEVICES AND SURFACES WITH ELEVATED TEMPERATURES WHICH CAN BE ACCESSED OR COME IN CONTACT WITH BUILDING OCCUPANTS AND MAINTENANCE PERSONNEL MUST BE PROTECTED, INSULATED, OR CONTROLLED TO REMAIN BELOW 120°F.

4.3 PIPING AND DUCTWORK MUST CLEAR DOORS, WINDOWS, EQUIPMENT CLEARANCES, MAINTENANCE REQUIREMENTS, CODE SETBACKS, ETC. TO ASSURE OPERATION, INSPECTION, AND MAINTENANCE.

4.4 WELDING TO STRUCTURAL MEMBERS MUST NOT BE PERMITTED. ATTACHMENTS MUST BE MADE USING CLAMPS MEETING MSS STANDARDS AS SPECIFIED.

4.5 MECHANICAL EQUIPMENT, DUCTWORK, AND PIPING MUST NOT BE SUPPORTED FROM ROOF OR DECK ASSEMBLY. SUPPORTS MUST ATTACH TO STRUCTURAL MEMBERS.

4.6 PROVIDE VIBRATION ISOLATION FOR MECHANICAL EQUIPMENT TO PREVENT VIBRATION TRANSMISSION TO BUILDING STRUCTURE.

4.7 PROVIDE ACCESS DOORS AT EVERY LOCATION THAT A VOLUME DAMPER, FIRE DAMPER, VALVE OR OTHER CONTROL/BALANCING ITEM WILL BE INSTALLED ABOVE AN INACCESSIBLE CEILING.

5.0 DUCTWORK

5.1 DUCT DIMENSIONS SHOWN ON PLANS ARE THE INSIDE CLEAR DESIGN DIMENSIONS. FLAT OVAL DIMENSIONS ARE FROM OUTSIDE RADIUS TO OUTSIDE RADIUS OF THE ROUNDED DIMENSION (NOT CENTERLINE TO CENTERLINE). INSTALLATION SHALL INCLUDE PROVISIONS FOR DUCT FLANGES, HANGERS, AND INSULATION IN ACCORDANCE WITH SMACNA REQUIREMENTS AS SPECIFIED.

5.2 PROVIDE RADIUS TYPE ELBOWS WITH A CENTERLINE RADIUS OF 1.5 TIMES THE WIDTH OR DIAMETER OF THE DUCT WHERE SPACE PERMITS. OTHERWISE, ELBOWS HAVING A MINIMUM RADIUS EQUAL TO THE WIDTH OR DIAMETER OF THE DUCT OR SQUARE ELBOWS WITH FACTORY FABRICATED SINGLE WIDTH TURNING VANES ARE ALLOWED PROPERLY INSTALLED AND SPACED PER SMACNA GUIDELINES. PROVIDE 90 DEGREE SQUARE DUCT ELBOWS WITH TURNING VANES UNLESS OTHERWISE INDICATED OR SPECIFIED. PROVIDE ACCESS DOORS UPSTREAM OF ELBOWS CONTAINING TURNING VANES.

5.3 DUCTS MUST BE GROUNDED ACROSS FLEXIBLE CONNECTIONS WITH FLEXIBLE COPPER GROUNDING STRAPS. GROUNDING STRAPS MUST BE BOLTED OR SOLDERED TO BOTH THE EQUIPMENT AND THE DUCT.

5.4 WHERE DUCT BRANCHES OR TERMINAL DEVICES ARE REMOVED FROM EXISTING DUCTS, THE CONTRACTOR MUST PATCH THE MAIN WITH LIKE THICKNESS SHEET METAL. EXTEND PATCH TO DUCT EDGES. PATCHES MUST BE MADE WITH HEMMED EDGES. PAINT PATCHES TO MATCH DUCTWORK.

5.5 COORDINATE DUCT ROUTING AND ELEVATION WITH LIGHTING, CEILING GRID, PIPING, CABLE TRAYS, CONDUIT, AND OTHER ITEMS REQUIRED FOR THE COMPLETION OF THIS PROJECT.

5.6 PROVIDE OFFSETS IN DUCTWORK AS REQUIRED TO COORDINATE WITH OTHER TRADES AND FIELD INSTALLED CONDITIONS. DUCTWORK OFFSETS MUST BE MADE WITH GRADUAL TRANSITIONS (NO GREATER THAN 30 DEGREES) AND MAINTAIN EQUIVALENT CROSS-SECTIONAL AREAS.

6.0 PIPING

6.1 PROVIDE PIPING SO THAT VALVES, STRAINERS, UNIONS, TRAPS, FLANGES, AND OTHER APPURTENANCES REQUIRING ACCESS ARE ACCESSIBLE.

6.2 ISOLATION VALVES MUST BE PROVIDED IN A LOCATION AND ELEVATION WHICH ALLOWS FOR EQUIPMENT AND BRANCH PIPING REMOVAL, WHILE MAINTAINING SERVICE UPSTREAM OF THE ISOLATION VALVE.

6.3 VALVES MUST BE ADJUSTED FOR SMOOTH AND EASY OPERATION.

6.4 BALANCING VALVES AND ISOLATION VALVES USED TO ADJUST FLOW RATES MUST BE PROVIDED WITH POSITION INDICATORS AND MAXIMUM ADJUSTABLE STOPS (MEMORY STOPS).

6.5 ISOLATION VALVES (EXCEPT CONTROL VALVES) AND PIPING SPECIALTIES AND STRAINERS MUST BE FULL LINE SIZE BEFORE REDUCING SIZE TO MAKE CONNECTIONS TO EQUIPMENT AND CONTROLS.

6.6 PROVIDE MECHANICAL JOINTS SUCH AS UNIONS, FLANGES, OR THREADED FITTINGS AT EACH EQUIPMENT CONNECTION, IN BYPASSES, AT FLOOR PENETRATIONS, AT CONTROL DEVICES, AND IN LONG PIPE RUNS (100 FEET OR MORE) TO PERMIT DISASSEMBLY FOR ALTERATION AND REPAIRS.

6.7 MEASURE, CUT, AND INSTALL PIPE LENGTH ACCURATELY TO MINIMIZE MISALIGNMENT. INSTALL PIPING WITHOUT FORCING OR SPRINGING.

7.0 EQUIPMENT

7.1 PROVIDE EQUIPMENT AND APPURTENANCES IN ACCORDANCE WITH MANUFACTURER'S RECOMMENDATIONS, CONTRACT DOCUMENTS, APPLICABLE BUILDING, STATE, AND LOCAL CODES, ENERGY CODES, ASHRAE AND NFPA STANDARDS, AND INSURANCE UNDERWRITER REQUIREMENTS.

8.0 CONTROLS

8.1 COORDINATE AUXILIARY CONTACT AND RELAY REQUIREMENTS WITH SEQUENCES OF OPERATION.

8.2 COORDINATE MOTOR AND MOTOR CONTROL REQUIREMENTS WITH EQUIPMENT SCHEDULES AND SEQUENCES OF OPERATION.

8.3 HARDWIRE SAFETIES TO SHUTDOWN HVAC EQUIPMENT.

8.4 LOCATE TEMPERATURE, PRESSURE AND FLOW MEASURING DEVICES IN ACCESSIBLE LOCATIONS WITH A STRAIGHT SECTION OF PIPE OR DUCT UPSTREAM AND DOWNSTREAM, AS RECOMMENDED BY THE MANUFACTURER FOR ACCURACY.

8.5 CONTROL WIRE AND CONDUIT MUST COMPLY WITH THE NATIONAL ELECTRIC CODE, DIVISION 26 OF THE SPECIFICATIONS, AND LOCAL CODES.

8.6 UNLESS OTHERWISE SHOWN, LOCATE ROOM THERMOSTATS WITH CONTROLS BETWEEN 42"-48" ABOVE FINISHED FLOOR IN ACCORDANCE WITH ADA AND ABA REQUIREMENTS. NOTIFY THE CONTRACTING OFFICER OF ROOMS WHERE THE ABOVE LOCATION CANNOT BE MAINTAINED OR WHERE THERE IS A QUESTION ON LOCATION.

9.0 TEST AND INSPECTION

9.1 TESTING ADJUSTING AND BALANCING (TAB) AGENCY MUST BE A MEMBER OF THE ASSOCIATED AIR BALANCING COUNCIL (AABC), THE NATIONAL ENVIRONMENTAL BALANCING BUREAU (NEBB), OR THE TESTING, ADJUSTING AND BALANCING BUREAU (TABB). THE TAB FIRM MUST BE A SUBCONTRACTOR HIRED DIRECTLY BY THE GENERAL CONTRACTOR. TAB FIRM MUST HAVE A MINIMUM OF 5 YEARS EXPERIENCE ON SIMILAR PROJECTS. PERFORM TAB IN ACCORDANCE WITH THE REQUIREMENTS OF THE TAB PROCEDURAL STANDARD RECOMMENDED BY THE TAB TRADE ASSOCIATION THAT APPROVED THE TAB FIRM'S QUALIFICATIONS. COMPLY WITH REQUIREMENTS OF AABC MN-1, NEBB PROCEDURAL STANDARDS, OR SMACNA HVAC TAB(TABB) AS SUPPLEMENTED AND MODIFIED BY SPECIFICATION SECTIONS.

MECHANICAL - HVAC REQUIRED CODES, STANDARDS, & REFERENCES

- INTERNATIONAL BUILDING CODE 2018
- INTERNATIONAL MECHANICAL CODE 2018
- ASHRAE 62.1-2016, VENTILATION FOR ACCEPTABLE INDOOR AIR QUALITY
- ASHRAE 90.1-2013, ENERGY STANDARD FOR BUILDINGS EXCEPT LOW-RISE RESIDENTIAL BUILDINGS
- ASHRAE HANDBOOKS: 2017 FUNDAMENTALS, 2018 REFRIGERATION, 2019 HVAC APPLICATIONS, 2020 HVAC SYSTEMS AND EQUIPMENT
- ASHRAE 189.1-2014, STANDARD FOR THE DESIGN OF HIGH-PERFORMANCE GREEN BUILDINGS EXCEPT LOW-RISE RESIDENTIAL BUILDINGS
- ASHRAE TC 9.9 / TIA-589-D
- ALL OTHER APPLICABLE ASHRAE HANDBOOKS AND GUIDELINES.
- EPACT 2005
- ALL APPLICABLE NATIONAL FIRE PROTECTION ASSOCIATION (NFPA) CODES AND STANDARDS
- SMACNA HVAC DUCT CONSTRUCTION STANDARDS, METAL AND FLEXIBLE
- SMACNA, HVAC SYSTEMS – TESTING, ADJUSTING, AND BALANCING
- CAMP LEJEUNE MECHANICAL DESIGN GUIDANCE
- ASTM - AMERICAN SOCIETY FOR TESTING AND MATERIALS
- UFC 1-200-01, DoD BUILDING CODE - (8 OCTOBER 2019)
- UFC 1-200-02, HIGH PERFORMANCE AND SUSTAINABLE BUILDING REQUIREMENTS - (CHANGE 04, 01 OCTOBER 2019)
- UFC 3-101-01, ARCHITECTURE - (CHANGE 5, 25 SEPTEMBER 2019)
- UFC 3-400-02, DESIGN: ENGINEERING WEATHER DATA - (20 SEPTEMBER 2018)
- UFC 3-410-01, HEATING, VENTILATING, AND AIR CONDITIONING SYSTEMS - (CHANGE 6, 30 MARCH 2020)
- UFC 3-450-01, NOISE AND VIBRATION CONTROL - (15 MAY 2013)
- UFC 3-580-01, TELECOMMUNICATIONS INTERIOR INFASTRUCTURE PLANNING AND DESIGN - (CHANGE 1, 01 JUNE 2016)
- UFC 3-600-01 FIRE PROTECTION ENGINEERING FOR FACITILIES - (CHANG 4, 7 FEBRUARY 2020)
- UFC 4-010-01, DoD MINIMUM ANTITERRORISM STANDARDS FOR BUILDINGS - (12 DECEMBER 2018)
- UFC 4-010-06, CYBERSECURITY OF FACILITY-RELATED CONTROL SYSTEMS - (CHANGE 1, 18 JANUARY 2017)

DESIGN CONDITIONS

CONDITIONS AS INDICATED IN THE RFP
OUTSIDE DESIGN CONDITIONS:
SUMMER: 91°F DB / 79°F MCWB
WINTER: 26°F DB
INSIDE CONDITIONS:
SUMMER: 78°F DB / 50% RH
WINTER: 68°F DB
OUTDOOR CONDITIONS FOR AIR-COOLED EQUIPMENT: 95°F DB
HEATING & VENTILATING INSIDE CONDITIONS:
SUMMER: 10°F DB ABOVE AMBIENT
WINTER: 60°F DB
COMMUNICATION, IT ROOMS AND ELECTRICAL ROOMS INSIDE CONDITIONS:
SUMMER: 78°F DB, 55°F DEWPOINT
WINTER: 68°F DB
MECH ROOM WITH HEAT PRODUCTING EQUIPMENT INSIDE CONDITIONS:
SUMMER: 10°F DB ABOVE AMBIENT
WINTER: 55°F DB
COLD MECHANICAL ROOMS INSIDE CONDTIONS:
SUMMER: N/A DB, 55°F DEWPOINT
WINTER: 55° DB
UNOCCUPIED MODE (NIGHT SETBACK):
SUMMER: 5°F DB HIGHER THAN INDOOR COOLING DESIGN CONDITIONS BUT NO HIGHER THAN 85°F DB.
WINTER: 10°F DB LOWER THAN INDOOR HEATING DESIGN CONDTIONS BUT NO LOWER THAN 55°F DB.

APPR | DATE | DESCRIPTION | SYM

NAVFAC

PRELIMINARY NOT FOR CONSTRUCTION

SEAL

W.M. Jordan COMPANY – A JOINT VENTURE –

Michael Baker INTERNATIONAL
100 AIRSIDE DRIVE
MOON TOWNSHIP, PA 15108 A/E INFO

APPROVED

FOR COMMANDER NAVFAC

ACTIVITY
MARINE CORPS BASE CAMP LEJEUNE

SATISFACTORY TO DATE

DES	DRW	CHK
PM		
BRANCH MANAGER		
CHIEF ENG/ARCH		
FIRE PROTECTION		

DEPARTMENT OF THE NAVY
NAVAL FACILITIES ENGINEERING COMMAND ~ MID-ATLANTIC
ROICC FLORENCE CAMP LEJEUNE
MCB CAMP LEJEUNE

NAVAL FACILITIES ENGINEERING COMMAND ~ MID-ATLANTIC
JACKSONVILLE, NC

JACKSONVILLE, NC

P1338 II MEF SIMULATION/TRAINING CENTER REPLACEMENT

MECHANICAL - GENERAL NOTES

SCALE: AS NOTED
EPROJECT NO.: 1590892
CONSTR. CONTR. NO.
N40085-20-C-0059
NAVFAC DRAWING NO.
SHEET OF

M-002

DP2 SUBMISSION – P1338 BUILDING - PRE-FINAL SUBMISSION

PLOTTED: 6/10/2021 3:33:11 PM

FILE NAME: BIM 360://HF PACKAGE 3/P1338 MEF SIM CTR-1590892-M.rvt

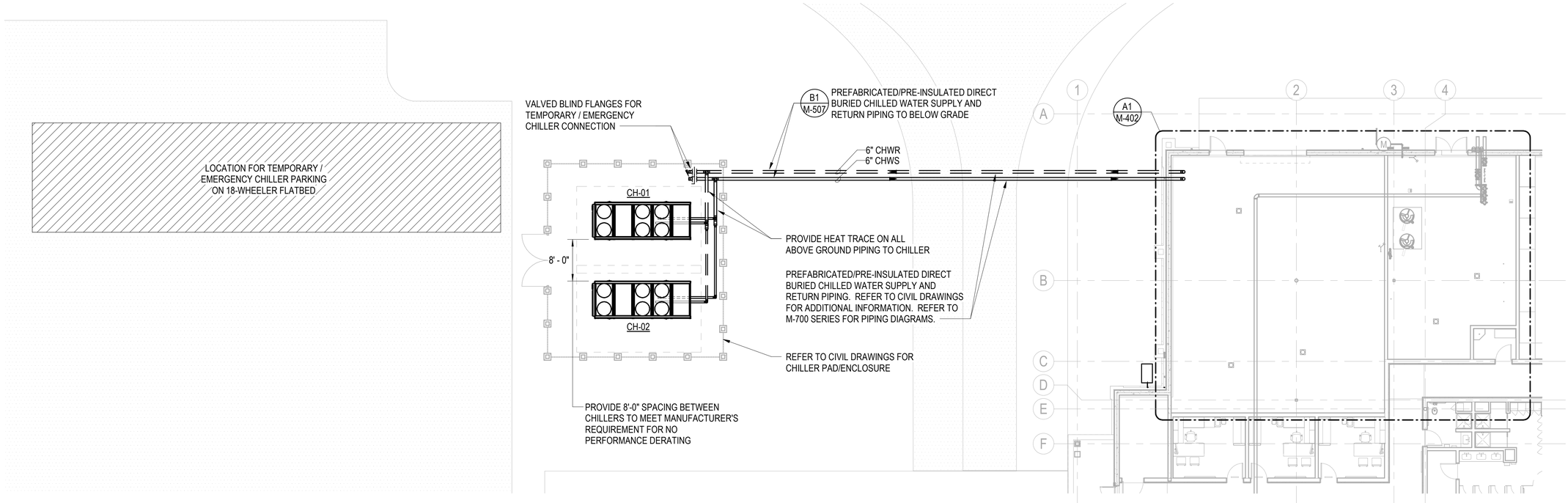

MECHANICAL - SITE PLAN

SCALE: 3/32" = 1'-0"

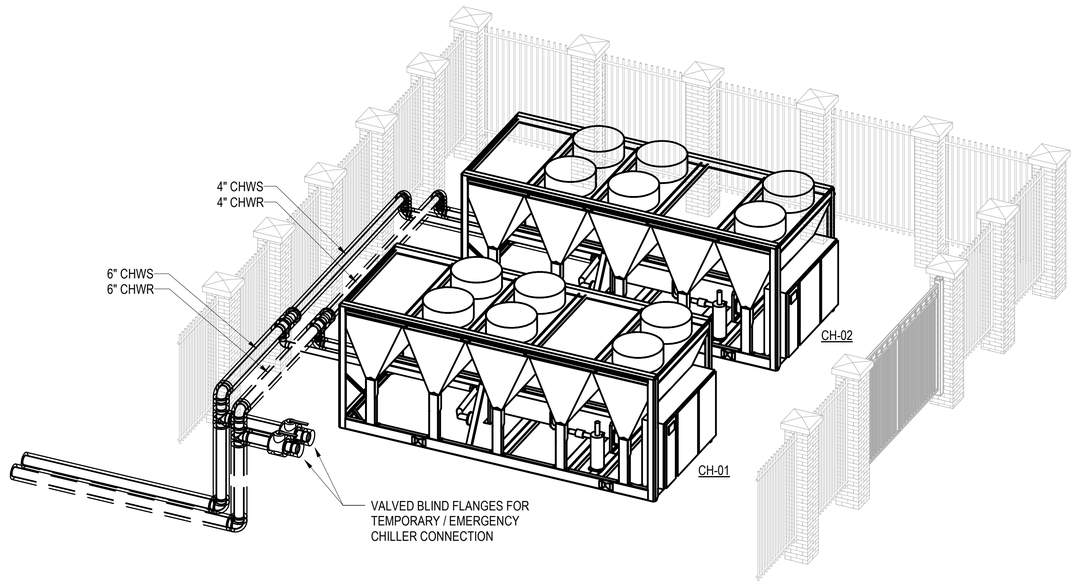

CHILLERS AND PIPING ISOMETRIC

SCALE: NTS

A2

0 8' - 0" 16' - 0" 32' - 0"

SCALE: 3/32" = 1' - 0"

N

APPR	DATE	DESCRIPTION	SYM

NAVFAC

PRELIMINARY NOT FOR CONSTRUCTION

SEAL

RQ W.M. Jordan COMPANY – A JOINT VENTURE –

Michael Baker INTERNATIONAL

100 AIRSIDE DRIVE
MOON TOWNSHIP, PA 15108

A/E INFO

APPROVED

FOR COMMANDER NAVFAC

ACTIVITY
MARINE CORPS BASE CAMP LEJEUNE

SATISFACTORY TO DATE

DES	DRW	CHK

PM

BRANCH MANAGER

CHIEF ENG/ARCH

FIRE PROTECTION

DEPARTMENT OF THE NAVY
NAVAL FACILITIES ENGINEERING COMMAND
ROICC FLORENCE CAMP LEJEUNE
MCB CAMP LEJEUNE

NAVAL FACILITIES ENGINEERING COMMAND – MID-ATLANTIC
JACKSONVILLE, NC

JACKSONVILLE, NC
P1338 II MEF SIMULATION/TRAINING CENTER REPLACEMENT

MECHANICAL - SITE PLAN

SCALE: AS NOTED

EPROJECT NO.: 1590892

CONSTR. CONTR. NO.
N40085-20-C-0059

NAVFAC DRAWING NO.

SHEET OF

MS101

DP2 SUBMISSION – P1338 BUILDING - PRE-FINAL SUBMISSION

PLOTTED: 6/10/2021 3:36:33 PM

FILE NAME: BIM 360://HF PACKAGE 3/P1338 MEF SIM CTR-1590892-M.rvt

DUCT CONSTRUCTION SCHEDULE

DUCT SYSTEM	MIN PRESS CLASS	MIN. SEAL CLASS	SMACNA DUCT LEAKAGE CLASS (CL)			DUCT TEST PRESS
			RECT	ROUND	FLAT OVAL	
VAV SUPPLY - UPSTREAM OF BOXES	3" W.C.	A	4	2	2	3" W.C.
VAV SUPPLY - DOWNSTREAM OF BOXES	2" W.C.	A	4	2	2	2" W.C.
EXHAUST DUCTS	±1" W.C.	A	4	2	2	1" W.C.
RETURN DUCTS	±1" W.C.	A	4	2	2	1" W.C.
OUTSIDE AIR DUCTS	-1" W.C.	A	4	2	2	1" W.C.
TRANSFER AIR DUCTS	1" W.C.	A	NA	NA	NA	NA

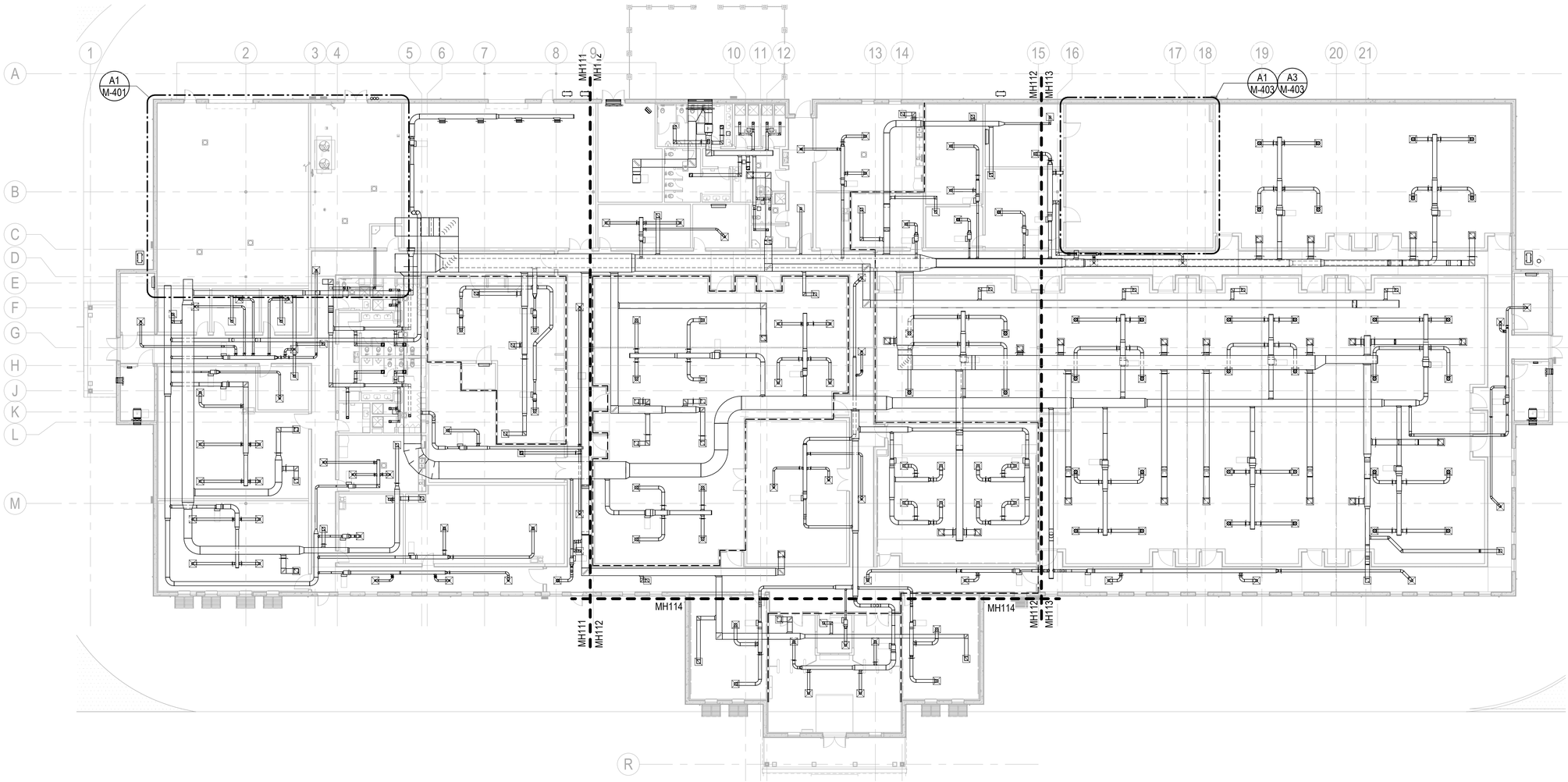

HVAC - 1ST FLOOR PLAN - OVERALL

SCALE: 1/16" = 1'-0"

GENERAL NOTES

1. PROVIDE MANUAL VOLUME DAMPERS IN ALL RUN-OUTS TO DIFFUSERS, AT ALL BRANCH TAKE-OFFS FROM MAIN SUPPLY DUCTS, AND WHERE DEEMED NECESSARY BY TAB SUB-CONTRACTOR TO ACHIEVE PROPER SYSTEM BALANCING.
2. ALL DUCT RUN-OUTS TO DIFFUSERS, REGISTERS AND GRILLES NOT INDICATED ON THE PLANS SHALL BE SIZED TO MATCH THE NECK SIZE INDICATED ON THE DIFFUSER, REGISTER AND GRILLE SCHEDULE.
3. ALL SUPPLY DUCT RUN-OUTS TO VAV BOXES NOT INDICATED ON THE PLANS SHALL BE SIZED TO MATCH THE VAV BOX INLET SIZE INDICATED ON THE VARIABLE AIR VOLUME (VAV) BOX SCHEDULE.
4. SHEET METAL FABRICATOR MAY SUBSTITUTE EQUIVALENT ROUND OR FLAT OVAL DUCTWORK FOR RECTANGULAR SIZES INDICATED. DUCTWORK BETWEEN AHU AND VAV BOXES SHALL BE SIZED TO 0.2" STATIC PRESSURE LOSS PER 100' OF DUCT RUN. DUCTWORK DOWNSTREAM OF VAV BOXES SHALL BE SIZED TO 0.08" STATIC PRESSURE LOSS PER 100' OF DUCT RUN. RETURN, EXHAUST AND TRANSFER AIR DUCTS SHALL BE SIZED TO 0.05"/100' OF DUCT RUN. ALL REVISIONS MUST BE COORDINATED WITH ALL OTHER TRADES AND ILLUSTRATED IN DUCTWORK SHOP DRAWINGS FOR APPROVAL.
5. PLAN DRAWINGS ARE DIAGRAMMATIC IN NATURE AND DO NOT ILLUSTRATE ALL SPECIFIC DUCT TAKE-OFF CONFIGURATIONS, TAPS, ETC. REFER TO PROJECT SPECIFICATIONS AND DUCTWORK DETAILS FOR SPECIFIC REQUIREMENTS.
6. ALL EQUIPMENT SHALL BE INSTALLED WITH MANUFACTURER'S REQUIRED ACCESS SPACE BETWEEN UNIT AND FULL HEIGHT WALLS AND OTHER OBSTRUCTIONS.

LEGEND

SECURE AREA BOUNDARY

KEYPLAN

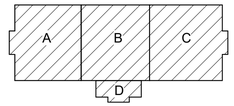

0 8' - 0" 16' - 0" 32' - 0"

SCALE: 1/16" = 1' - 0"

N

APPR | DATE | SYM | DESCRIPTION

NAVFAC

PRELIMINARY NOT FOR CONSTRUCTION

SEAL

RQ W.M. Jordan COMPANY ~ A JOINT VENTURE ~

Michael Baker INTERNATIONAL

100 AIRSIDE DRIVE
MOON TOWNSHIP, PA 15108

A/E INFO

APPROVED

FOR COMMANDER NAVFAC

ACTIVITY
MARINE CORPS BASE
CAMP LEJEUNE

SATISFACTORY TO DATE

DES	DRW	CHK
PM		
BRANCH MANAGER		
CHIEF ENG/ARCH		
FIRE PROTECTION		

DEPARTMENT OF THE NAVY
NAVAL FACILITIES ENGINEERING COMMAND ~ MID-ATLANTIC
ROICC FLORENCE CAMP LEJEUNE
NAVAL FACILITIES ENGINEERING COMMAND
JACKSONVILLE, NC

MCB CAMP LEJEUNE
JACKSONVILLE, NC
P1338 II MEF SIMULATION/TRAINING CENTER REPLACEMENT
HVAC - OVERALL 1ST FLOOR PLAN

SCALE: AS NOTED
EPROJECT NO.: 1590892
CONSTR. CONTR. NO.
N40085-20-C-0059
NAVFAC DRAWING NO.
SHEET OF

MH110

DP2 SUBMISSION – P1338 BUILDING - PRE-FINAL SUBMISSION

PLOTTED: 6/10/2021 3:35:13 PM

FILE NAME: BIM 360://HF PACKAGE 3/P1338 MEF SIM CTR-1590892-M.rvt

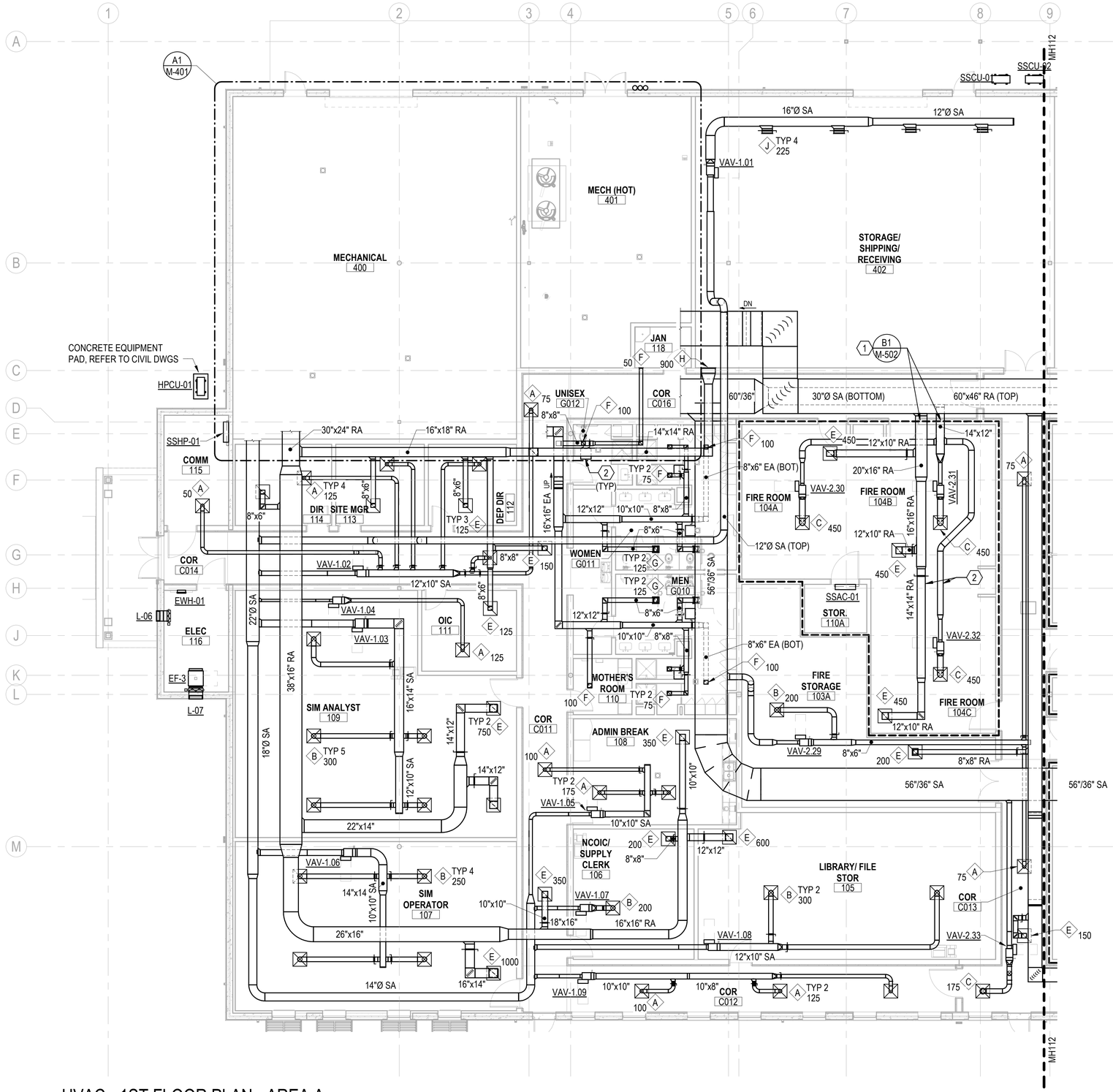

HVAC - 1ST FLOOR PLAN - AREA A

SCALE: 1/8" = 1'-0"

GENERAL NOTES

1. PROVIDE MANUAL VOLUME DAMPERS IN ALL RUN-OUTS TO DIFFUSERS, AT ALL BRANCH TAKE-OFFS FROM MAIN SUPPLY DUCTS, AND WHERE DEEMED NECESSARY BY TAB SUB-CONTRACTOR TO ACHIEVE PROPER SYSTEM BALANCING.
2. ALL DUCT RUN-OUTS TO DIFFUSERS, REGISTERS AND GRILLES NOT INDICATED ON THE PLANS SHALL BE SIZED TO MATCH THE NECK SIZE INDICATED ON THE DIFFUSER, REGISTER AND GRILLE SCHEDULE.
3. ALL SUPPLY DUCT RUN-OUTS TO VAV BOXES NOT INDICATED ON THE PLANS SHALL BE SIZED TO MATCH THE VAV BOX INLET SIZE INDICATED ON THE VARIABLE AIR VOLUME (VAV) BOX SCHEDULE.
4. SHEET METAL FABRICATOR MAY SUBSTITUTE EQUIVALENT ROUND OR FLAT OVAL DUCTWORK FOR RECTANGULAR SIZES INDICATED. DUCTWORK BETWEEN AHU AND VAV BOXES SHALL BE SIZED TO 0.2" STATIC PRESSURE LOSS PER 100' OF DUCT RUN. DUCTWORK DOWNSTREAM OF VAV BOXES SHALL BE SIZED TO 0.08" STATIC PRESSURE LOSS PER 100' OF DUCT RUN. RETURN, EXHAUST AND TRANSFER AIR DUCTS SHALL BE SIZED TO 0.05"/100' OF DUCT RUN. ALL REVISIONS MUST BE COORDINATED WITH ALL OTHER TRADES AND ILLUSTRATED IN DUCTWORK SHOP DRAWINGS FOR APPROVAL.
5. PLAN DRAWINGS ARE DIAGRAMMATIC IN NATURE AND DO NOT ILLUSTRATE ALL SPECIFIC DUCT TAKE-OFF CONFIGURATIONS, TAPS, ETC. REFER TO PROJECT SPECIFICATIONS AND DUCTWORK DETAILS FOR SPECIFIC REQUIREMENTS.
6. ALL EQUIPMENT SHALL BE INSTALLED WITH MANUFACTURER'S REQUIRED ACCESS SPACE BETWEEN UNIT AND FULL HEIGHT WALLS AND OTHER OBSTRUCTIONS.

KEYNOTES

1. SECURE AREA PENETRATION. PROVIDE INTRUSION PREVENTION BARS IN ALL DUCTWORK WITH OPENINGS GREATER THAN 96 SQ IN, REFER TO DETAILS.
2. COORDINATE DUCT LOCATION WITH STRUCTURAL MEMBERS SUPPORTING FOLDING PARTITION. REFER TO STRUCTURAL AND ARCHITECTURAL DRAWINGS FOR ADDITIONAL INFORMATION.

DUCT CONSTRUCTION SCHEDULE

DUCT SYSTEM	MIN PRESS CLASS	MIN. SEAL CLASS	SMACNA DUCT LEAKAGE CLASS (CL)			DUCT TEST PRESS
			RECT	ROUND	FLAT OVAL	
VAV SUPPLY - UPSTREAM OF BOXES	3" W.C.	A	4	2	2	3" W.C.
VAV SUPPLY - DOWNSTREAM OF BOXES	2" W.C.	A	4	2	2	2" W.C.
EXHAUST DUCTS	±1" W.C.	A	4	2	2	1" W.C.
RETURN DUCTS	±1" W.C.	A	4	2	2	1" W.C.
OUTSIDE AIR DUCTS	-1" W.C.	A	4	2	2	1" W.C.
TRANSFER AIR DUCTS	1" W.C.	A	NA	NA	NA	NA

LEGEND

SECURE AREA BOUNDARY

KEYPLAN

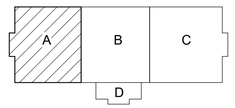

0 4' - 0" 8' - 0" 16' - 0"

SCALE: 1/8" = 1' - 0"

N

APPR	DATE	DESCRIPTION	SYM

NAVFAC

PRELIMINARY
NOT FOR CONSTRUCTION

SEAL

RQ W.M. Jordan COMPANY – A JOINT VENTURE –

Michael Baker INTERNATIONAL

100 AIRSIDE DRIVE
MOON TOWNSHIP, PA 15108 A/E INFO

APPROVED

FOR COMMANDER NAVFAC

ACTIVITY
MARINE CORPS BASE
CAMP LEJEUNE

SATISFACTORY TO DATE

DES	DRW	CHK
PM		
BRANCH MANAGER		
CHIEF ENG/ARCH		
FIRE PROTECTION		

DEPARTMENT OF THE NAVY
NAVAL FACILITIES ENGINEERING COMMAND ~ MID-ATLANTIC
ROICC FLORENCE CAMP LEJEUNE
MCB CAMP LEJEUNE

NAVAL FACILITIES ENGINEERING COMMAND ~ MID-ATLANTIC
JACKSONVILLE, NC

JACKSONVILLE, NC
P1338 II MEF SIMULATION/TRAINING CENTER
REPLACEMENT
HVAC - 1ST FLOOR PLAN - AREA A

SCALE: AS NOTED
EPROJECT NO.: 1590892
CONSTR. CONTR. NO.
N40085-20-C-0059
NAVFAC DRAWING NO.
SHEET OF

MH111

DP2 SUBMISSION – P1338 BUILDING - PRE-FINAL SUBMISSION

PLOTTED: 6/10/2021 3:35:23 PM

FILE NAME: BIM 360://HF PACKAGE 3/P1338 MEF SIM CTR-1590892-M.rvt

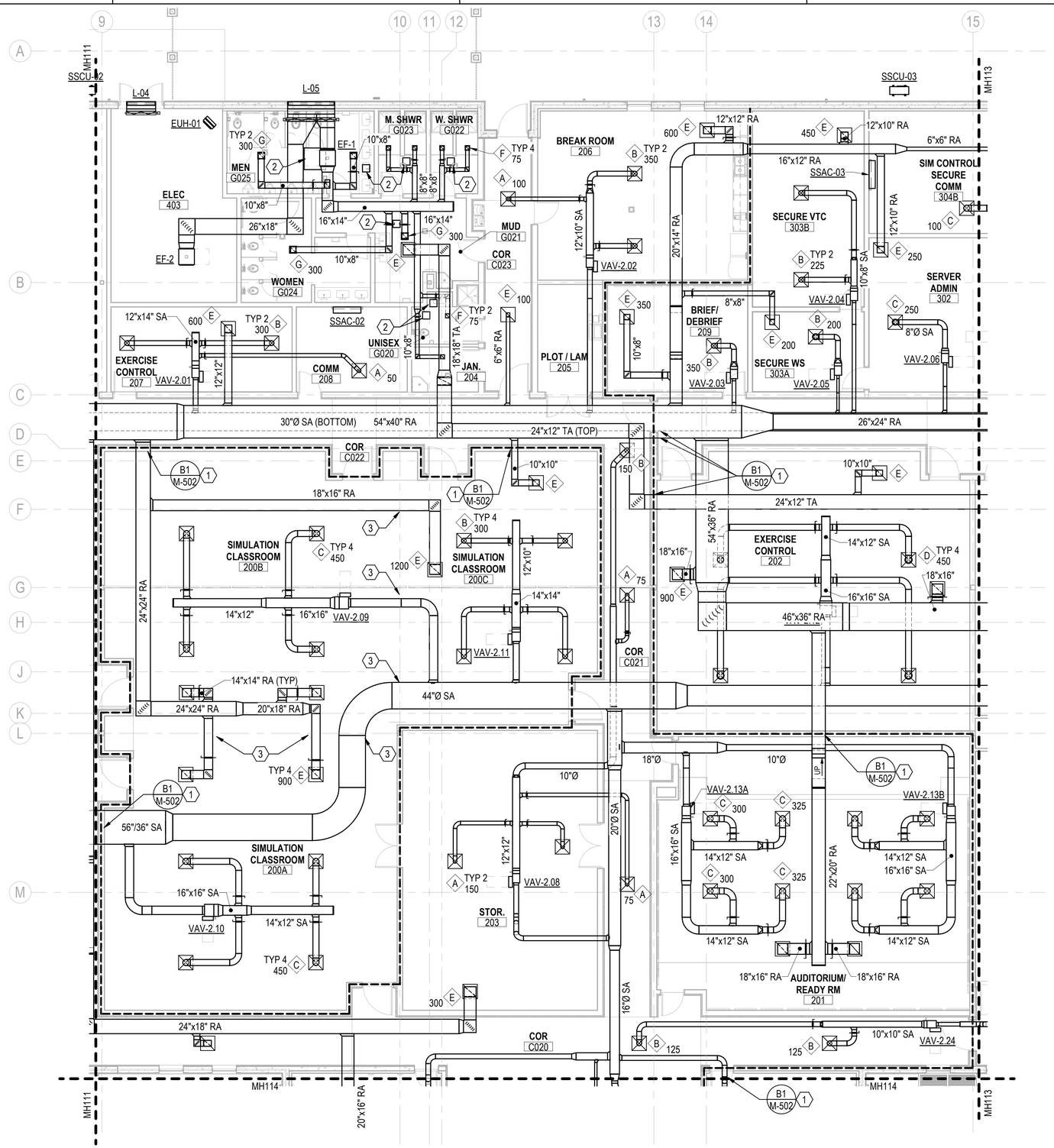

HVAC - 1ST FLOOR PLAN - AREA B

SCALE: 1/8" = 1'-0"

GENERAL NOTES

1. PROVIDE MANUAL VOLUME DAMPERS IN ALL RUN-OUTS TO DIFFUSERS, AT ALL BRANCH TAKE-OFFS FROM MAIN SUPPLY DUCTS, AND WHERE DEEMED NECESSARY BY TAB SUB-CONTRACTOR TO ACHIEVE PROPER SYSTEM BALANCING.
2. ALL DUCT RUN-OUTS TO DIFFUSERS, REGISTERS AND GRILLES NOT INDICATED ON THE PLANS SHALL BE SIZED TO MATCH THE NECK SIZE INDICATED ON THE DIFFUSER, REGISTER AND GRILLE SCHEDULE.
3. ALL SUPPLY DUCT RUN-OUTS TO VAV BOXES NOT INDICATED ON THE PLANS SHALL BE SIZED TO MATCH THE VAV BOX INLET SIZE INDICATED ON THE VARIABLE AIR VOLUME (VAV) BOX SCHEDULE.
4. SHEET METAL FABRICATOR MAY SUBSTITUTE EQUIVALENT ROUND OR FLAT OVAL DUCTWORK FOR RECTANGULAR SIZES INDICATED. DUCTWORK BETWEEN AHU AND VAV BOXES SHALL BE SIZED TO 0.2" STATIC PRESSURE LOSS PER 100' OF DUCT RUN. DUCTWORK DOWNSTREAM OF VAV BOXES SHALL BE SIZED TO 0.08" STATIC PRESSURE LOSS PER 100' OF DUCT RUN. RETURN, EXHAUST AND TRANSFER AIR DUCTS SHALL BE SIZED TO 0.05"/100' OF DUCT RUN. ALL REVISIONS MUST BE COORDINATED WITH ALL OTHER TRADES AND ILLUSTRATED IN DUCTWORK SHOP DRAWINGS FOR APPROVAL.
5. PLAN DRAWINGS ARE DIAGRAMMATIC IN NATURE AND DO NOT ILLUSTRATE ALL SPECIFIC DUCT TAKE-OFF CONFIGURATIONS, TAPS, ETC. REFER TO PROJECT SPECIFICATIONS AND DUCTWORK DETAILS FOR SPECIFIC REQUIREMENTS.
6. ALL EQUIPMENT SHALL BE INSTALLED WITH MANUFACTURER'S REQUIRED ACCESS SPACE BETWEEN UNIT AND FULL HEIGHT WALLS AND OTHER OBSTRUCTIONS.

KEYNOTES

1. SECURE AREA PENETRATION. PROVIDE INTRUSION PREVENTION BARS IN ALL DUCTWORK WITH OPENINGS GREATER THAN 96 SQ IN, REFER TO DETAILS.
2. ACCESS PANEL, REFER TO ARCHITECTURAL REFLECTED CEILING PLANS.
3. COORDINATE DUCT LOCATION WITH STRUCTURAL MEMBERS SUPPORTING FOLDING PARTITION. REFER TO STRUCTURAL AND ARCHITECTURAL DRAWINGS FOR ADDITIONAL INFORMATION.

DUCT CONSTRUCTION SCHEDULE

DUCT SYSTEM	MIN PRESS CLASS	MIN. SEAL CLASS	SMACNA DUCT LEAKAGE CLASS (CL)			DUCT TEST PRESS
			RECT	ROUND	FLAT OVAL	
VAV SUPPLY - UPSTREAM OF BOXES	3" W.C.	A	4	2	2	3" W.C.
VAV SUPPLY - DOWNSTREAM OF BOXES	2" W.C.	A	4	2	2	2" W.C.
EXHAUST DUCTS	±1" W.C.	A	4	2	2	1" W.C.
RETURN DUCTS	±1" W.C.	A	4	2	2	1" W.C.
OUTSIDE AIR DUCTS	-1" W.C.	A	4	2	2	1" W.C.
TRANSFER AIR DUCTS	1" W.C.	A	NA	NA	NA	NA

LEGEND

SECURE AREA BOUNDARY

KEYPLAN

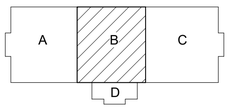

0 4' - 0" 8' - 0" 16' - 0"

SCALE: 1/8" = 1' - 0"

N

APPR | DATE | DESCRIPTION | SYM

NAVFAC

PRELIMINARY NOT FOR CONSTRUCTION

SEAL

IRQ W.M. Jordan COMPANY – A JOINT VENTURE –

Michael Baker INTERNATIONAL

100 AIRSIDE DRIVE MOON TOWNSHIP, PA 15108 A/E INFO

APPROVED

FOR COMMANDER NAVFAC

ACTIVITY: MARINE CORPS BASE CAMP LEJEUNE

SATISFACTORY TO DATE

DES	DRW	CHK

PM

BRANCH MANAGER

CHIEF ENG/ARCH

FIRE PROTECTION

DEPARTMENT OF THE NAVY
NAVAL FACILITIES ENGINEERING COMMAND ~ MID-ATLANTIC
ROICC FLORENCE CAMP LEJEUNE
MCB CAMP LEJEUNE

JACKSONVILLE, NC

JACKSONVILLE, NC
P1338 II MEF SIMULATION/TRAINING CENTER REPLACEMENT
HAVC - 1ST FLOOR PLAN - AREA B

SCALE: AS NOTED

EPROJECT NO.: 1590892

CONSTR. CONTR. NO. N40085-20-C-0059

NAVFAC DRAWING NO.

SHEET OF

MH112

DP2 SUBMISSION – P1338 BUILDING - PRE-FINAL SUBMISSION

PLOTTED: 6/10/2021 3:35:33 PM

FILE NAME: BIM 360://HF PACKAGE 3/P1338 MEF SIM CTR-1590892-M.rvt

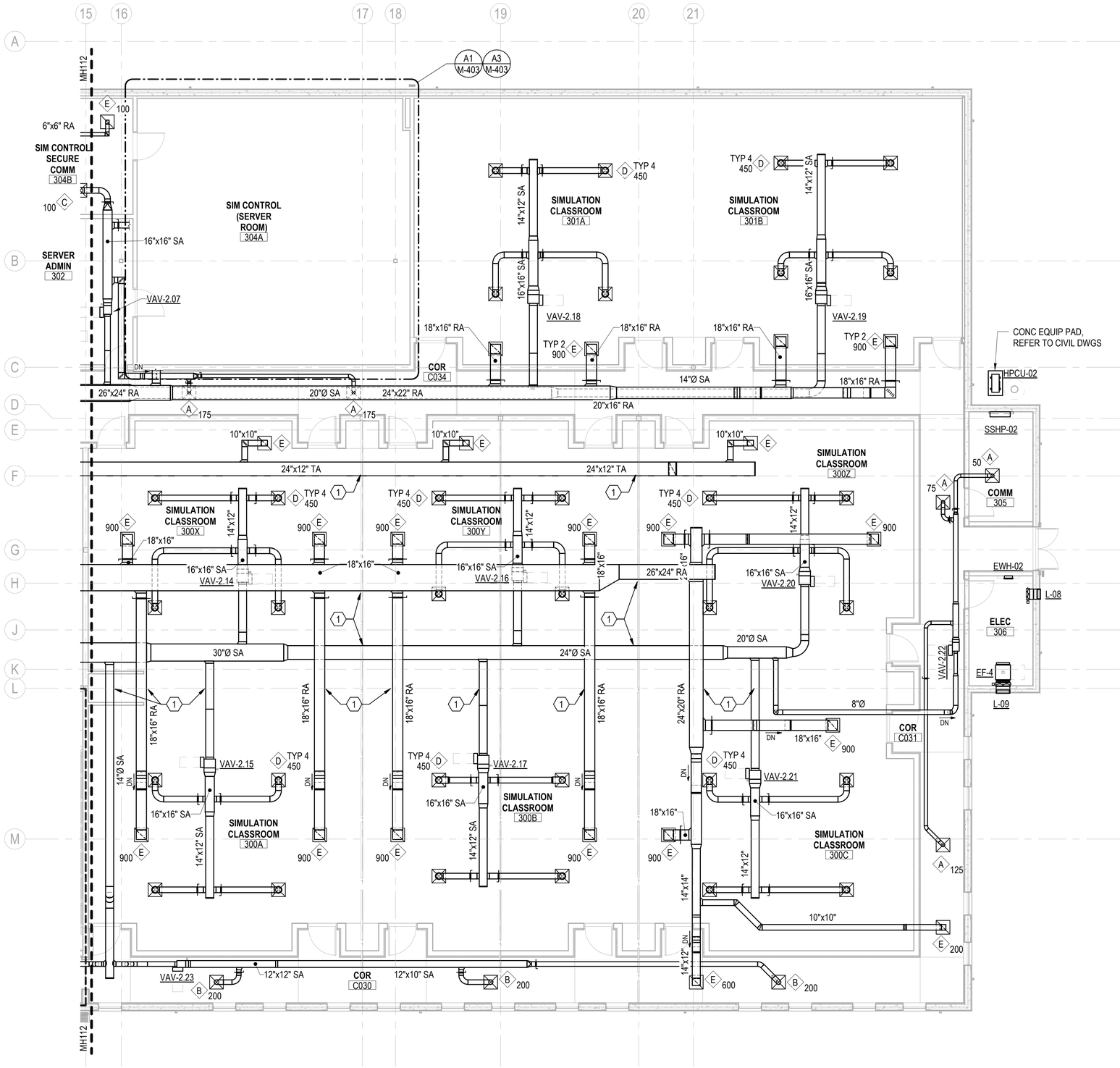

GENERAL NOTES

1. PROVIDE MANUAL VOLUME DAMPERS IN ALL RUN-OUTS TO DIFFUSERS, AT ALL BRANCH TAKE-OFFS FROM MAIN SUPPLY DUCTS, AND WHERE DEEMED NECESSARY BY TAB SUB-CONTRACTOR TO ACHIEVE PROPER SYSTEM BALANCING.
2. ALL DUCT RUN-OUTS TO DIFFUSERS, REGISTERS AND GRILLES NOT INDICATED ON THE PLANS SHALL BE SIZED TO MATCH THE NECK SIZE INDICATED ON THE DIFFUSER, REGISTER AND GRILLE SCHEDULE.
3. ALL SUPPLY DUCT RUN-OUTS TO VAV BOXES NOT INDICATED ON THE PLANS SHALL BE SIZED TO MATCH THE VAV BOX INLET SIZE INDICATED ON THE VARIABLE AIR VOLUME (VAV) BOX SCHEDULE.
4. SHEET METAL FABRICATOR MAY SUBSTITUTE EQUIVALENT ROUND OR FLAT OVAL DUCTWORK FOR RECTANGULAR SIZES INDICATED. DUCTWORK BETWEEN AHU AND VAV BOXES SHALL BE SIZED TO 0.2" STATIC PRESSURE LOSS PER 100' OF DUCT RUN. DUCTWORK DOWNSTREAM OF VAV BOXES SHALL BE SIZED TO 0.08" STATIC PRESSURE LOSS PER 100' OF DUCT RUN. RETURN, EXHAUST AND TRANSFER AIR DUCTS SHALL BE SIZED TO 0.05"/100' OF DUCT RUN. ALL REVISIONS MUST BE COORDINATED WITH ALL OTHER TRADES AND ILLUSTRATED IN DUCTWORK SHOP DRAWINGS FOR APPROVAL.
5. PLAN DRAWINGS ARE DIAGRAMMATIC IN NATURE AND DO NOT ILLUSTRATE ALL SPECIFIC DUCT TAKE-OFF CONFIGURATIONS, TAPS, ETC. REFER TO PROJECT SPECIFICATIONS AND DUCTWORK DETAILS FOR SPECIFIC REQUIREMENTS.
6. ALL EQUIPMENT SHALL BE INSTALLED WITH MANUFACTURER'S REQUIRED ACCESS SPACE BETWEEN UNIT AND FULL HEIGHT WALLS AND OTHER OBSTRUCTIONS.

KEYNOTES

1. COORDINATE DUCT LOCATION WITH STRUCTURAL MEMBERS SUPPORTING FOLDING PARTITION. REFER TO STRUCTURAL AND ARCHITECTURAL DRAWINGS FOR ADDITIONAL INFORMATION.

DUCT CONSTRUCTION SCHEDULE

DUCT SYSTEM	MIN PRESS CLASS	MIN. SEAL CLASS	SMACNA DUCT LEAKAGE CLASS (CL)			DUCT TEST PRESS
			RECT	ROUND	FLAT OVAL	
VAV SUPPLY - UPSTREAM OF BOXES	3" W.C.	A	4	2	2	3" W.C.
VAV SUPPLY - DOWNSTREAM OF BOXES	2" W.C.	A	4	2	2	2" W.C.
EXHAUST DUCTS	±1" W.C.	A	4	2	2	1" W.C.
RETURN DUCTS	±1" W.C.	A	4	2	2	1" W.C.
OUTSIDE AIR DUCTS	-1" W.C.	A	4	2	2	1" W.C.
TRANSFER AIR DUCTS	1" W.C.	A	NA	NA	NA	NA

LEGEND

---------- SECURE AREA BOUNDARY

KEYPLAN

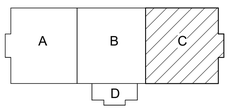

0 4'-0" 8'-0" 16'-0"

SCALE: 1/8" = 1'-0"

N

HVAC - 1ST FLOOR PLAN - AREA C

SCALE: 1/8" = 1'-0"

APPR | DATE | DESCRIPTION | SYM

NAVFAC

PRELIMINARY NOT FOR CONSTRUCTION

SEAL

IRQ WM Jordan COMPANY – A JOINT VENTURE –

Michael Baker INTERNATIONAL

100 AIRSIDE DRIVE
MOON TOWNSHIP, PA 15108 A/E INFO

APPROVED

FOR COMMANDER NAVFAC

ACTIVITY
MARINE CORPS BASE CAMP LEJEUNE

SATISFACTORY TO DATE

DES	DRW	CHK

PM

BRANCH MANAGER

CHIEF ENG/ARCH

FIRE PROTECTION

DEPARTMENT OF THE NAVY
NAVAL FACILITIES ENGINEERING COMMAND
ROICC FLORENCE CAMP LEJEUNE
MCB CAMP LEJEUNE

NAVAL FACILITIES ENGINEERING COMMAND ~ MID-ATLANTIC
JACKSONVILLE, NC

JACKSONVILLE, NC

P1338 II MEF SIMULATION/TRAINING CENTER REPLACEMENT

HVAC - 1ST FLOOR PLAN - AREA C

SCALE: AS NOTED

EPROJECT NO.: 1590892

CONSTR. CONTR. NO.
N40085-20-C-0059

NAVFAC DRAWING NO.

SHEET OF

MH113

DP2 SUBMISSION – P1338 BUILDING - PRE-FINAL SUBMISSION

PLOTTED: 6/10/2021 3:35:42 PM

FILE NAME: BIM 360://HF PACKAGE 3/P1338 MEF SIM CTR-1590892-M.rvt

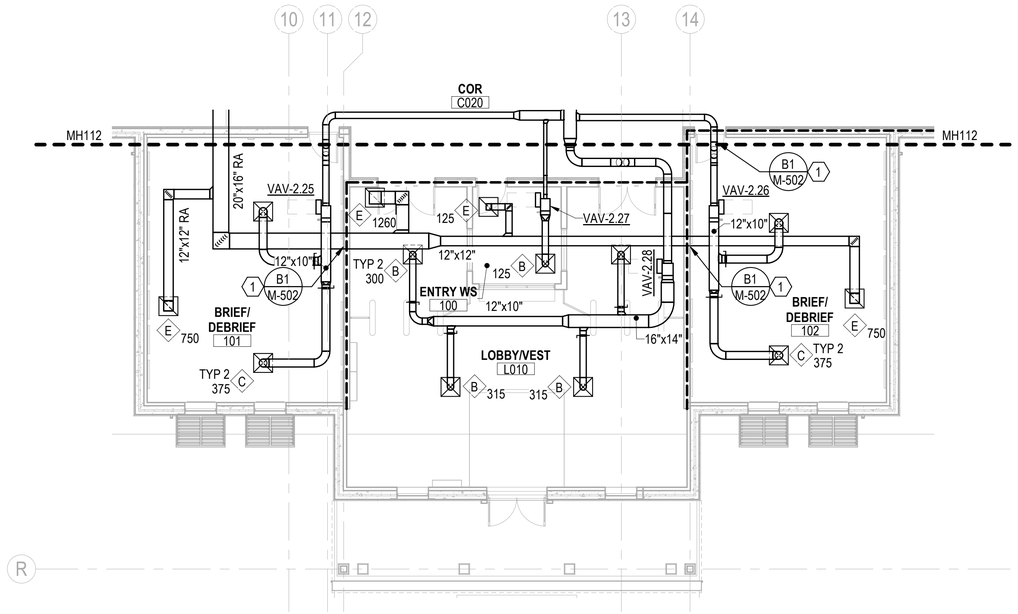

HVAC - 1ST FLOOR PLAN - AREA D

SCALE: 1/8" = 1'-0"

GENERAL NOTES

1. PROVIDE MANUAL VOLUME DAMPERS IN ALL RUN-OUTS TO DIFFUSERS, AT ALL BRANCH TAKE-OFFS FROM MAIN SUPPLY DUCTS, AND WHERE DEEMED NECESSARY BY TAB SUB-CONTRACTOR TO ACHIEVE PROPER SYSTEM BALANCING.
2. ALL DUCT RUN-OUTS TO DIFFUSERS, REGISTERS AND GRILLES NOT INDICATED ON THE PLANS SHALL BE SIZED TO MATCH THE NECK SIZE INDICATED ON THE DIFFUSER, REGISTER AND GRILLE SCHEDULE.
3. ALL SUPPLY DUCT RUN-OUTS TO VAV BOXES NOT INDICATED ON THE PLANS SHALL BE SIZED TO MATCH THE VAV BOX INLET SIZE INDICATED ON THE VARIABLE AIR VOLUME (VAV) BOX SCHEDULE.
4. SHEET METAL FABRICATOR MAY SUBSTITUTE EQUIVALENT ROUND OR FLAT OVAL DUCTWORK FOR RECTANGULAR SIZES INDICATED. DUCTWORK BETWEEN AHU AND VAV BOXES SHALL BE SIZED TO 0.2" STATIC PRESSURE LOSS PER 100' OF DUCT RUN. DUCTWORK DOWNSTREAM OF VAV BOXES SHALL BE SIZED TO 0.08" STATIC PRESSURE LOSS PER 100' OF DUCT RUN. RETURN, EXHAUST AND TRANSFER AIR DUCTS SHALL BE SIZED TO 0.05"/100' OF DUCT RUN. ALL REVISIONS MUST BE COORDINATED WITH ALL OTHER TRADES AND ILLUSTRATED IN DUCTWORK SHOP DRAWINGS FOR APPROVAL.
5. PLAN DRAWINGS ARE DIAGRAMMATIC IN NATURE AND DO NOT ILLUSTRATE ALL SPECIFIC DUCT TAKE-OFF CONFIGURATIONS, TAPS, ETC. REFER TO PROJECT SPECIFICATIONS AND DUCTWORK DETAILS FOR SPECIFIC REQUIREMENTS.
6. ALL EQUIPMENT SHALL BE INSTALLED WITH MANUFACTURER'S REQUIRED ACCESS SPACE BETWEEN UNIT AND FULL HEIGHT WALLS AND OTHER OBSTRUCTIONS.

KEYNOTES

DUCT CONSTRUCTION SCHEDULE

DUCT SYSTEM	MIN PRESS CLASS	MIN. SEAL CLASS	SMACNA DUCT LEAKAGE CLASS (CL)			DUCT TEST PRESS
			RECT	ROUND	FLAT OVAL	
VAV SUPPLY - UPSTREAM OF BOXES	3" W.C.	A	4	2	2	3" W.C.
VAV SUPPLY - DOWNSTREAM OF BOXES	2" W.C.	A	4	2	2	2" W.C.
EXHAUST DUCTS	±1" W.C.	A	4	2	2	1" W.C.
RETURN DUCTS	±1" W.C.	A	4	2	2	1" W.C.
OUTSIDE AIR DUCTS	-1" W.C.	A	4	2	2	1" W.C.
TRANSFER AIR DUCTS	1" W.C.	A	NA	NA	NA	NA

LEGEND

---------- SECURE AREA BOUNDARY

KEYPLAN

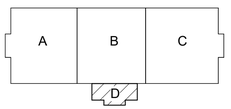

0 4' - 0" 8' - 0" 16' - 0"

SCALE: 1/8" = 1' - 0"

N

NO.	DESCRIPTION	DATE	APPR

NAVFAC

PRELIMINARY
NOT FOR CONSTRUCTION
SEAL

RQ W.M. Jordan COMPANY
~ A JOINT VENTURE ~

Michael Baker
INTERNATIONAL
100 AIRSIDE DRIVE
MOON TOWNSHIP, PA 15108
A/E INFO

APPROVED
FOR COMMANDER NAVFAC

ACTIVITY
MARINE CORPS BASE
CAMP LEJEUNE

SATISFACTORY TO DATE

DES	DRW	CHK

PM
BRANCH MANAGER
CHIEF ENG/ARCH
FIRE PROTECTION

DEPARTMENT OF THE NAVY
NAVAL FACILITIES ENGINEERING COMMAND ~ MID-ATLANTIC
JACKSONVILLE, NC
NAVAL FACILITIES ENGINEERING COMMAND
ROICC FLORENCE CAMP LEJEUNE
MCB CAMP LEJEUNE
JACKSONVILLE, NC
P1338 II MEF SIMULATION/TRAINING CENTER
REPLACEMENT
HVAC - 1ST FLOOR PLAN - AREA D

SCALE: AS NOTED
EPROJECT NO.: 1590892
CONSTR. CONTR. NO.
N40085-20-C-0059
NAVFAC DRAWING NO.
SHEET OF

MH114

DP2 SUBMISSION – P1338 BUILDING - PRE-FINAL SUBMISSION

PLOTTED: 6/10/2021 3:35:48 PM

FILE NAME: BIM 360://HF PACKAGE 3/P1338 MEF SIM CTR-1590892-M.rvt

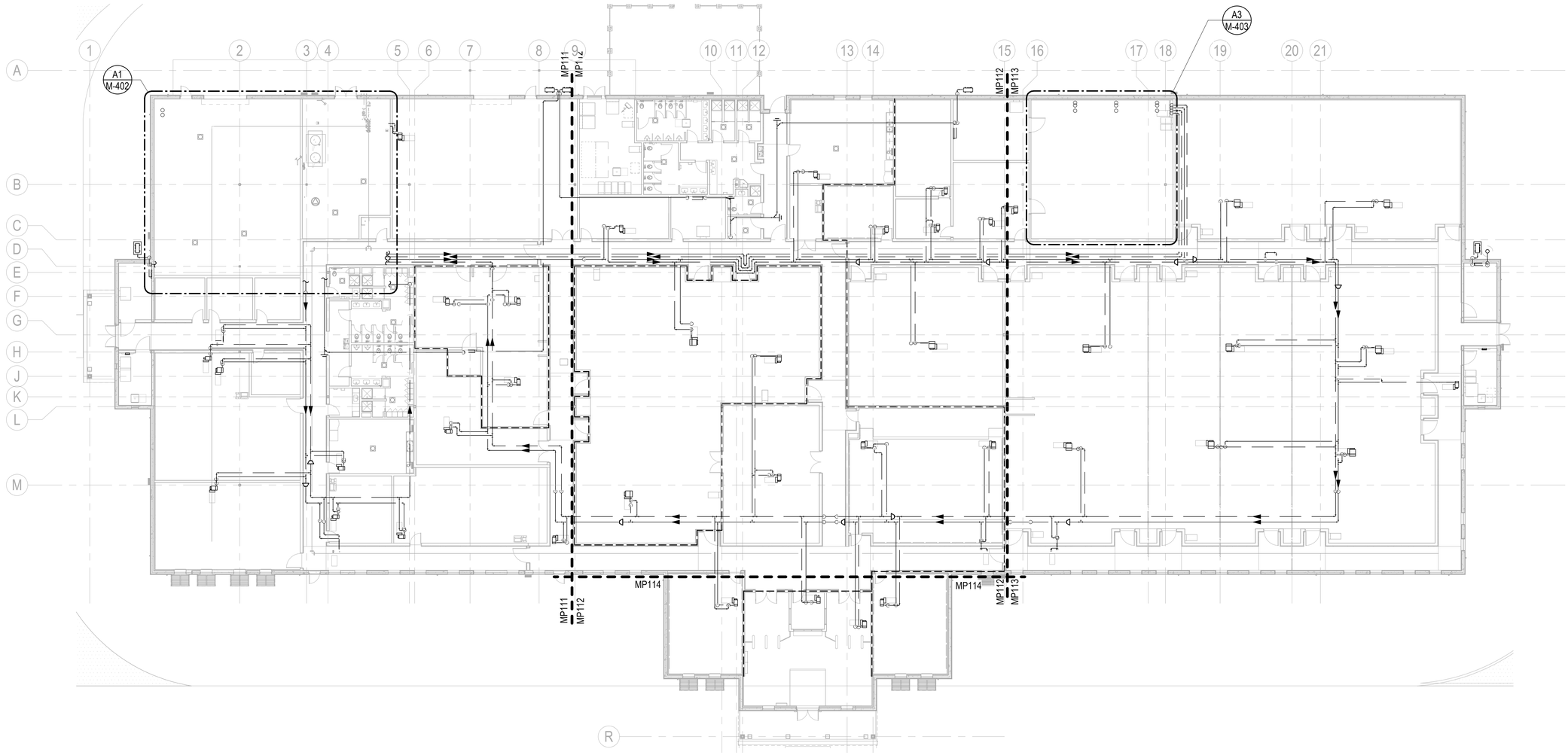

PIPING - 1ST FLOOR PLAN - OVERALL

SCALE: 1/16" = 1'-0"

GENERAL NOTES

1. ALL HWS & HWR BRANCHES ARE 3/4" UNLESS NOTED OTHERWISE.
2. PROVIDE AN AIR VENT AT THE HIGH POINT OF EACH DROP IN THE HEATING AND CHILLED WATER PIPING SYSTEMS. ALL PIPING SHALL GRADE TO THE LOW POINTS. PROVIDE HOSE END DRAIN VALVES AT THE BOTTOM OF ALL RISERS AND LOW POINTS.
3. INSTALL PIPING SO THAT ALL VALVES, STRAINERS, UNIONS, TRAPS, FLANGES AND OTHER APPURTENANCES REQUIRING ACCESS ARE EASILY ACCESSIBLE. ALL VALVES SHALL BE INSTALLED SO THAT THE REMAINS IN SERVICE WHEN EQUIPMENT OR PIPING ON EQUIPMENT SIDE OF VALVE IS REMOVED. ALL BALANCING VALVES AND BUTTERFLY VALVES SHALL BE PROVIDED WITH POSITION INDICATORS AND MAXIMUM ADJUSTABLE STOPS (AKA "MEMORY STOPS"). ALL VALVES (EXCEPT CONTROL VALVES) AND STRAINERS SHALL BE FULL SIZE OF PIPE BEFORE REDUCING SIZE TO MAKE CONNECTIONS TO EQUIPMENT AND CONTROLS.
4. INSTALL PIPING WITHOUT FORCING OR SPRINGING.
5. PLAN DRAWINGS ARE DIAGRAMMATIC IN NATURE AND NOT ILLUSTRATE ALL SPECIFIC DUCT TAKE-OFF CONFIGURATIONS, TAPS, ETC. REFER TO PROJECT SPECIFICATIONS AND DETAILS FOR SPECIFIC REQUIREMENTS.

LEGEND

- - - - - - - - - - - SECURE AREA BOUNDARY

KEYPLAN

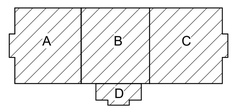

0 8' - 0" 16' - 0" 32' - 0"

SCALE: 1/16" = 1' - 0"

N

SYM	DESCRIPTION	DATE	APPR

NAVFAC

PRELIMINARY
NOT FOR CONSTRUCTION

SEAL

RQ W.M. Jordan COMPANY
- A JOINT VENTURE -

Michael Baker
INTERNATIONAL
100 AIRSIDE DRIVE
MOON TOWNSHIP, PA 15108
A/E INFO

APPROVED

FOR COMMANDER NAVFAC

ACTIVITY
MARINE CORPS BASE
CAMP LEJEUNE

SATISFACTORY TO DATE

DES	DRW	CHK
PM		
BRANCH MANAGER		
CHIEF ENG/ARCH		
FIRE PROTECTION		

DEPARTMENT OF THE NAVY
NAVAL FACILITIES ENGINEERING COMMAND
NAVAL FACILITIES ENGINEERING COMMAND ~ MID-ATLANTIC
ROICC FLORENCE CAMP LEJEUNE
JACKSONVILLE, NC
MCB CAMP LEJEUNE
JACKSONVILLE, NC

P1338 II MEF SIMULATION/TRAINING CENTER
REPLACEMENT

PIPING - OVERALL 1ST FLOOR PLAN

SCALE: AS NOTED
EPROJECT NO.: 1590892
CONSTR. CONTR. NO.
N40085-20-C-0059
NAVFAC DRAWING NO.
SHEET OF

MP110

DP2 SUBMISSION – P1338 BUILDING - PRE-FINAL SUBMISSION

PLOTTED: 6/10/2021 3:35:56 PM

FILE NAME: BIM 360://HF PACKAGE 3/P1338 MEF SIM CTR-1590892-M.rvt

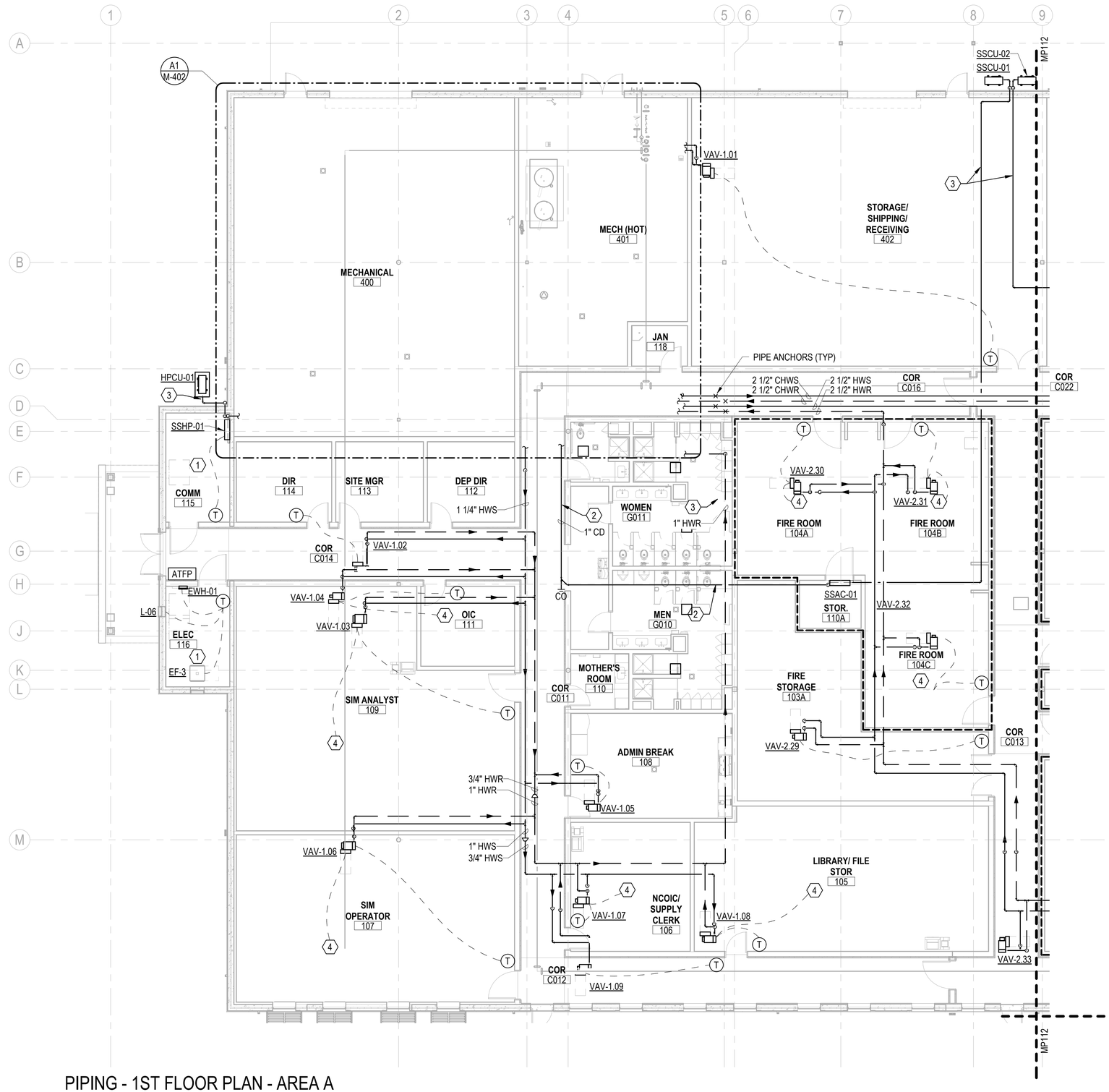

PIPING - 1ST FLOOR PLAN - AREA A

SCALE: 1/8" = 1'-0"

GENERAL NOTES

1. ALL HWS & HWR BRANCHES ARE 3/4" UNLESS NOTED OTHERWISE.
2. PROVIDE AN AIR VENT AT THE HIGH POINT OF EACH DROP IN THE HEATING AND CHILLED WATER PIPING SYSTEMS. ALL PIPING SHALL GRADE TO THE LOW POINTS. PROVIDE HOSE END DRAIN VALVES AT THE BOTTOM OF ALL RISERS AND LOW POINTS.
3. INSTALL PIPING SO THAT ALL VALVES, STRAINERS, UNIONS, TRAPS, FLANGES AND OTHER APPURTENANCES REQUIRING ACCESS ARE EASILY ACCESSIBLE. ALL VALVES SHALL BE INSTALLED SO THAT THE REMAINS IN SERVICE WHEN EQUIPMENT OR PIPING ON EQUIPMENT SIDE OF VALVE IS REMOVED. ALL BALANCING VALVES AND BUTTERFLY VALVES SHALL BE PROVIDED WITH POSITION INDICATORS AND MAXIMUM ADJUSTABLE STOPS (AKA "MEMORY STOPS"). ALL VALVES (EXCEPT CONTROL VALVES) AND STRAINERS SHALL BE FULL SIZE OF PIPE BEFORE REDUCING SIZE TO MAKE CONNECTIONS TO EQUIPMENT AND CONTROLS.
4. INSTALL PIPING WITHOUT FORCING OR SPRINGING.
5. PLAN DRAWINGS ARE DIAGRAMMATIC IN NATURE AND NOT ILLUSTRATE ALL SPECIFIC DUCT TAKE-OFF CONFIGURATIONS, TAPS, ETC. REFER TO PROJECT SPECIFICATIONS AND DETAILS FOR SPECIFIC REQUIREMENTS.

KEYNOTES

1. THERE SHALL NOT BE ANY EQUIPMENT (PIPING, DUCTWORK, MACHINERY, ETC.) THAT DOES NOT SERVE THIS SPACE INSTALLED ABOVE OR WITHIN THIS SPACE, NOR SHALL EQUIPMENT NOT SERVING THIS SPACE PASS THROUGH OR ENTER THIS SPACE.
2. ROUTE ALL CONDENSATE PIPING AT 1/8" PER 1'-0" SLOPE TOWARD POINT OF TERMINATION. PROVIDE CLEANOUT AT ALL CHANGES OF DIRECTION GREATER THAN 45°.
3. ROUTE PAIR OF REFRIGERANT LINES FROM INDOOR UNIT TO ASSOCIATED OUTDOOR CONDENSING UNIT. SIZE PER MANUFACTURER'S RECOMMENDATIONS.
4. CONTROL WIRING TO OCCUPANCY SENSOR IN SPACE SERVED FOR SHUT-OFF DURING UNOCCUPIED PERIODS. REFER TO ELECTRICAL DRAWINGS FOR LOCATION OF OCCUPANCY SENSOR.

LEGEND

SECURE AREA BOUNDARY

KEYPLAN

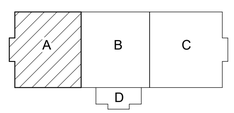

0 4' - 0" 8' - 0" 16' - 0"

SCALE: 1/8" = 1' - 0"

N

APPR	DATE	DESCRIPTION	SYM

PRELIMINARY
NOT FOR CONSTRUCTION

SEAL

RQ W.M. Jordan COMPANY – A JOINT VENTURE –

Michael Baker INTERNATIONAL
100 AIRSIDE DRIVE
MOON TOWNSHIP, PA 15108
A/E INFO

APPROVED

FOR COMMANDER NAVFAC

ACTIVITY
MARINE CORPS BASE
CAMP LEJEUNE

SATISFACTORY TO DATE

DES	DRW	CHK

PM

BRANCH MANAGER

CHIEF ENG/ARCH

FIRE PROTECTION

DEPARTMENT OF THE NAVY
NAVAL FACILITIES ENGINEERING COMMAND
ROICC FLORENCE CAMP LEJEUNE
MCB CAMP LEJEUNE

NAVAL FACILITIES ENGINEERING COMMAND – MID-ATLANTIC
JACKSONVILLE, NC

JACKSONVILLE, NC
P1338 II MEF SIMULATION/TRAINING CENTER
REPLACEMENT

PIPING - 1ST FLOOR PLAN - AREA A

SCALE: AS NOTED

EPROJECT NO.: 1590892

CONSTR. CONTR. NO.
N40085-20-C-0059

NAVFAC DRAWING NO.

SHEET OF

MP111

DP2 SUBMISSION – P1338 BUILDING - PRE-FINAL SUBMISSION

PLOTTED: 6/10/2021 3:36:04 PM

FILE NAME: BIM 360://HF PACKAGE 3/P1338 MEF SIM CTR-1590892-M.rvt

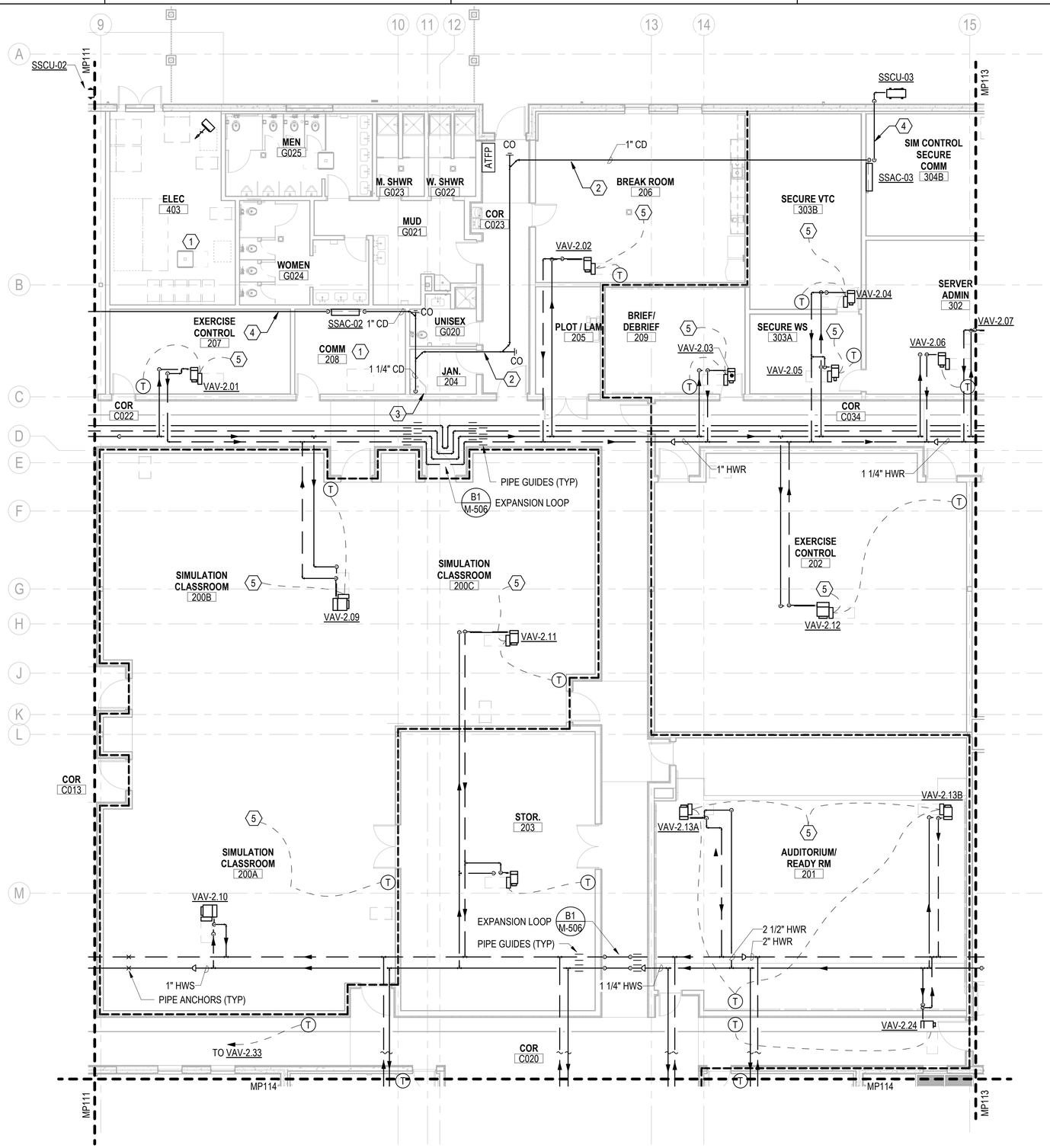

PIPING - 1ST FLOOR PLAN - AREA B

SCALE: 1/8" = 1'-0"

GENERAL NOTES

1. ALL HWS & HWR BRANCHES ARE 3/4" UNLESS NOTED OTHERWISE.
2. PROVIDE AN AIR VENT AT THE HIGH POINT OF EACH DROP IN THE HEATING AND CHILLED WATER PIPING SYSTEMS. ALL PIPING SHALL GRADE TO THE LOW POINTS. PROVIDE HOSE END DRAIN VALVES AT THE BOTTOM OF ALL RISERS AND LOW POINTS.
3. INSTALL PIPING SO THAT ALL VALVES, STRAINERS, UNIONS, TRAPS, FLANGES AND OTHER APPURTENANCES REQUIRING ACCESS ARE EASILY ACCESSIBLE. ALL VALVES SHALL BE INSTALLED SO THAT THE REMAINS IN SERVICE WHEN EQUIPMENT OR PIPING ON EQUIPMENT SIDE OF VALVE IS REMOVED. ALL BALANCING VALVES AND BUTTERFLY VALVES SHALL BE PROVIDED WITH POSITION INDICATORS AND MAXIMUM ADJUSTABLE STOPS (AKA "MEMORY STOPS"). ALL VALVES (EXCEPT CONTROL VALVES) AND STRAINERS SHALL BE FULL SIZE OF PIPE BEFORE REDUCING SIZE TO MAKE CONNECTIONS TO EQUIPMENT AND CONTROLS.
4. INSTALL PIPING WITHOUT FORCING OR SPRINGING.
5. PLAN DRAWINGS ARE DIAGRAMMATIC IN NATURE AND NOT ILLUSTRATE ALL SPECIFIC DUCT TAKE-OFF CONFIGURATIONS, TAPS, ETC. REFER TO PROJECT SPECIFICATIONS AND DETAILS FOR SPECIFIC REQUIREMENTS.

KEYNOTES

1. THERE SHALL NOT BE ANY EQUIPMENT (PIPING, DUCTWORK, MACHINERY, ETC.) THAT DOES NOT SERVE THIS SPACE INSTALLED ABOVE OR WITHIN THIS SPACE, NOR SHALL EQUIPMENT NOT SERVING THIS SPACE PASS THROUGH OR ENTER THIS SPACE.
2. ROUTE ALL CONDENSATE PIPING AT 1/8" PER 1'-0" SLOPE TOWARD POINT OF TERMINATION. PROVIDE CLEANOUT AT ALL CHANGES OF DIRECTION GREATER THAN 45°
3. 1-1/4" CD DOWN TO MOP RECEPTOR. TERMINATE PIPE OPEN ENDED APPROXIMATELY 3" ABOVE RECEPTOR.
4. ROUTE PAIR OF REFRIGERANT LINES FROM INDOOR UNIT TO ASSOCIATED OUTDOOR CONDENSING UNIT. SIZE PER MANUFACTURER'S RECOMMENDATIONS.
5. CONTROL WIRING TO OCCUPANCY SENSOR IN SPACE SERVED FOR SHUT-OFF DURING UNOCCUPIED PERIODS. REFER TO ELECTRICAL DRAWINGS FOR LOCATION OF OCCUPANCY SENSOR.

LEGEND

SECURE AREA BOUNDARY

KEYPLAN

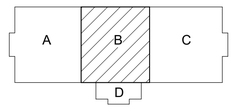

0 4' - 0" 8' - 0" 16' - 0"

SCALE: 1/8" = 1' - 0"

N

APPR	DATE	DESCRIPTION	SYM

PRELIMINARY NOT FOR CONSTRUCTION

SEAL

IRQ W.M. Jordan COMPANY ~ A JOINT VENTURE ~

Michael Baker INTERNATIONAL

100 AIRSIDE DRIVE
MOON TOWNSHIP, PA 15108 A/E INFO

APPROVED

FOR COMMANDER NAVFAC

ACTIVITY
MARINE CORPS BASE CAMP LEJEUNE

SATISFACTORY TO DATE

DES	DRW	CHK

PM

BRANCH MANAGER

CHIEF ENG/ARCH

FIRE PROTECTION

DEPARTMENT OF THE NAVY
NAVAL FACILITIES ENGINEERING COMMAND ~ MID-ATLANTIC
ROICC FLORENCE CAMP LEJEUNE
MCB CAMP LEJEUNE

JACKSONVILLE, NC

P1338 II MEF SIMULATION/TRAINING CENTER REPLACEMENT

PIPING - 1ST FLOOR PLAN - AREA B

SCALE: AS NOTED

EPROJECT NO.: 1590892

CONSTR. CONTR. NO.
N40085-20-C-0059

NAVFAC DRAWING NO.

SHEET OF

MP112

DP2 SUBMISSION – P1338 BUILDING - PRE-FINAL SUBMISSION

PLOTTED: 6/10/2021 3:36:13 PM

FILE NAME: BIM 360://HF PACKAGE 3/P1338 MEF SIM CTR-1590892-M.rvt

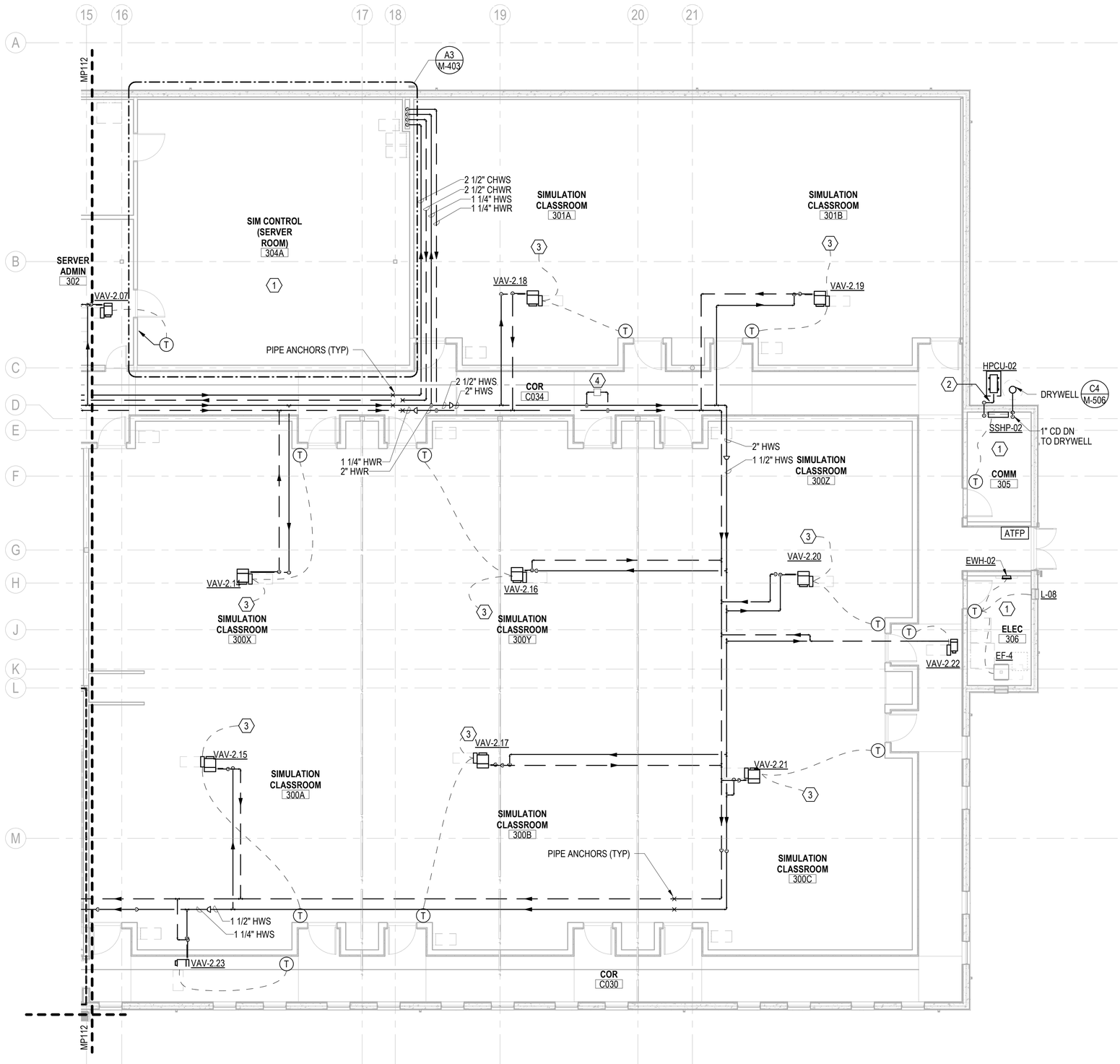

PIPING - 1ST FLOOR PLAN - AREA C

SCALE: 1/8" = 1'-0"

GENERAL NOTES

1. ALL HWS & HWR BRANCHES ARE 3/4" UNLESS NOTED OTHERWISE.
2. PROVIDE AN AIR VENT AT THE HIGH POINT OF EACH DROP IN THE HEATING AND CHILLED WATER PIPING SYSTEMS. ALL PIPING SHALL GRADE TO THE LOW POINTS. PROVIDE HOSE END DRAIN VALVES AT THE BOTTOM OF ALL RISERS AND LOW POINTS.
3. INSTALL PIPING SO THAT ALL VALVES, STRAINERS, UNIONS, TRAPS, FLANGES AND OTHER APPURTENANCES REQUIRING ACCESS ARE EASILY ACCESSIBLE. ALL VALVES SHALL BE INSTALLED SO THAT THE REMAINS IN SERVICE WHEN EQUIPMENT OR PIPING ON EQUIPMENT SIDE OF VALVE IS REMOVED. ALL BALANCING VALVES AND BUTTERFLY VALVES SHALL BE PROVIDED WITH POSITION INDICATORS AND MAXIMUM ADJUSTABLE STOPS (AKA "MEMORY STOPS"). ALL VALVES (EXCEPT CONTROL VALVES) AND STRAINERS SHALL BE FULL SIZE OF PIPE BEFORE REDUCING SIZE TO MAKE CONNECTIONS TO EQUIPMENT AND CONTROLS.
4. INSTALL PIPING WITHOUT FORCING OR SPRINGING.
5. PLAN DRAWINGS ARE DIAGRAMMATIC IN NATURE AND NOT ILLUSTRATE ALL SPECIFIC DUCT TAKE-OFF CONFIGURATIONS, TAPS, ETC. REFER TO PROJECT SPECIFICATIONS AND DETAILS FOR SPECIFIC REQUIREMENTS.

KEYNOTES

1. THERE SHALL NOT BE ANY EQUIPMENT (PIPING, DUCTWORK, MACHINERY, ETC.) THAT DOES NOT SERVE THIS SPACE INSTALLED ABOVE OR WITHIN THIS SPACE, NOR SHALL EQUIPMENT NOT SERVING THIS SPACE PASS THROUGH OR ENTER THIS SPACE.
2. ROUTE PAIR OF REFRIGERANT LINES FROM INDOOR UNIT TO ASSOCIATED OUTDOOR CONDENSING UNIT. SIZE PER MANUFACTURER'S RECOMMENDATIONS.
3. CONTROL WIRING TO OCCUPANCY SENSOR IN SPACE SERVED FOR SHUT-OFF DURING UNOCCUPIED PERIODS. REFER TO ELECTRICAL DRAWINGS FOR LOCATION OF OCCUPANCY SENSOR.
4. MINIMUM FLOW BYPASS AND DP SENSOR. LOCATE DP SENSOR AND ALL VALVES NO MORE THAN 12'-0" AFF.

LEGEND

SECURE AREA BOUNDARY

KEYPLAN

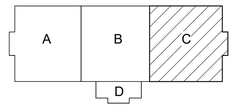

0 4' - 0" 8' - 0" 16' - 0"

SCALE: 1/8" = 1' - 0"

N

NO.	DESCRIPTION	DATE	APPR

NAVFAC

PRELIMINARY NOT FOR CONSTRUCTION

SEAL

RQ W.M. Jordan COMPANY – A JOINT VENTURE –

Michael Baker INTERNATIONAL

100 AIRSIDE DRIVE
MOON TOWNSHIP, PA 15108 A/E INFO

APPROVED

FOR COMMANDER NAVFAC

ACTIVITY
MARINE CORPS BASE CAMP LEJEUNE

SATISFACTORY TO DATE

DES	DRW	CHK
PM		
BRANCH MANAGER		
CHIEF ENG/ARCH		
FIRE PROTECTION		

DEPARTMENT OF THE NAVY
NAVAL FACILITIES ENGINEERING COMMAND ~ MID-ATLANTIC
ROICC FLORENCE CAMP LEJEUNE
MCB CAMP LEJEUNE

JACKSONVILLE, NC

P1338 II MEF SIMULATION/TRAINING CENTER REPLACEMENT

PIPING - 1ST FLOOR PLAN - AREA C

SCALE: AS NOTED

EPROJECT NO.: 1590892

CONSTR. CONTR. NO.
N40085-20-C-0059

NAVFAC DRAWING NO.

SHEET OF

MP113

DP2 SUBMISSION – P1338 BUILDING - PRE-FINAL SUBMISSION

PLOTTED: 6/10/2021 3:36:21 PM

FILE NAME: BIM 360://HF PACKAGE 3/P1338 MEF SIM CTR-1590892-M.rvt

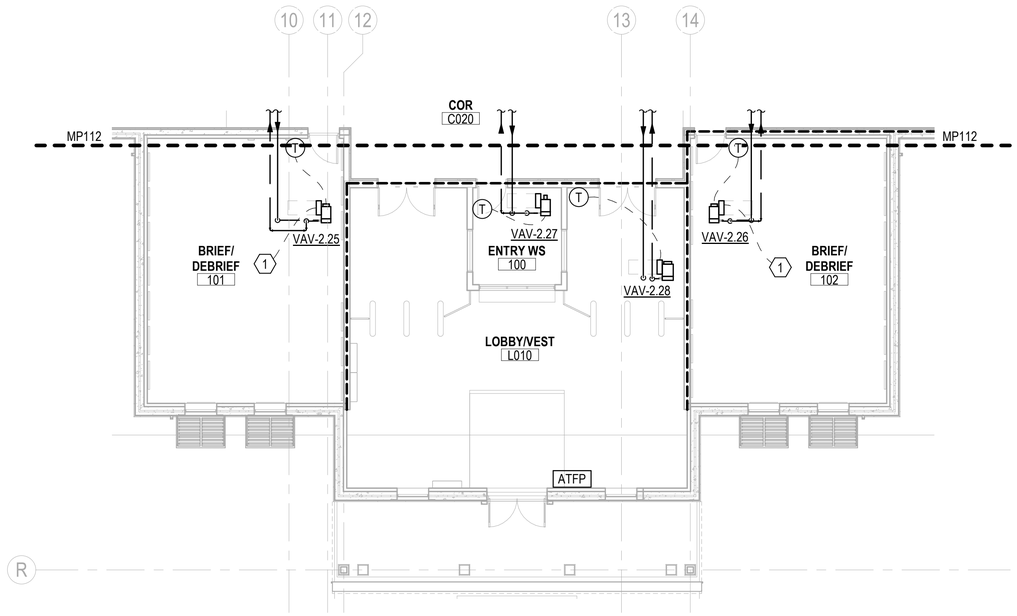

PIPING - 1ST FLOOR PLAN - AREA D

SCALE: 1/8" = 1'-0"

GENERAL NOTES

1. ALL HWS & HWR BRANCHES ARE 3/4" UNLESS NOTED OTHERWISE.
2. PROVIDE AN AIR VENT AT THE HIGH POINT OF EACH DROP IN THE HEATING AND CHILLED WATER PIPING SYSTEMS. ALL PIPING SHALL GRADE TO THE LOW POINTS. PROVIDE HOSE END DRAIN VALVES AT THE BOTTOM OF ALL RISERS AND LOW POINTS.
3. INSTALL PIPING SO THAT ALL VALVES, STRAINERS, UNIONS, TRAPS, FLANGES AND OTHER APPURTENANCES REQUIRING ACCESS ARE EASILY ACCESSIBLE. ALL VALVES SHALL BE INSTALLED SO THAT THE REMAINS IN SERVICE WHEN EQUIPMENT OR PIPING ON EQUIPMENT SIDE OF VALVE IS REMOVED. ALL BALANCING VALVES AND BUTTERFLY VALVES SHALL BE PROVIDED WITH POSITION INDICATORS AND MAXIMUM ADJUSTABLE STOPS (AKA "MEMORY STOPS"). ALL VALVES (EXCEPT CONTROL VALVES) AND STRAINERS SHALL BE FULL SIZE OF PIPE BEFORE REDUCING SIZE TO MAKE CONNECTIONS TO EQUIPMENT AND CONTROLS.
4. INSTALL PIPING WITHOUT FORCING OR SPRINGING.
5. PLAN DRAWINGS ARE DIAGRAMMATIC IN NATURE AND NOT ILLUSTRATE ALL SPECIFIC DUCT TAKE-OFF CONFIGURATIONS, TAPS, ETC. REFER TO PROJECT SPECIFICATIONS AND DETAILS FOR SPECIFIC REQUIREMENTS.

KEYNOTES

1. CONTROL WIRING TO OCCUPANCY SENSOR IN SPACE SERVED FOR SHUT-OFF DURING UNOCCUPIED PERIODS. REFER TO ELECTRICAL DRAWINGS FOR LOCATION OF OCCUPANCY SENSOR.

LEGEND

SECURE AREA BOUNDARY

KEYPLAN

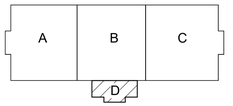

0 4' - 0" 8' - 0" 16' - 0"

SCALE: 1/8" = 1' - 0"

NO.	DESCRIPTION	DATE	APPR

NAVFAC

PRELIMINARY NOT FOR CONSTRUCTION

SEAL

RQ W.M. Jordan COMPANY – A JOINT VENTURE –

Michael Baker INTERNATIONAL

100 AIRSIDE DRIVE
MOON TOWNSHIP, PA 15108 A/E INFO

APPROVED

FOR COMMANDER NAVFAC

ACTIVITY
MARINE CORPS BASE
CAMP LEJEUNE

SATISFACTORY TO DATE

DES	DRW	CHK

PM

BRANCH MANAGER

CHIEF ENG/ARCH

FIRE PROTECTION

DEPARTMENT OF THE NAVY
NAVAL FACILITIES ENGINEERING COMMAND
ROICC FLORENCE CAMP LEJEUNE

NAVAL FACILITIES ENGINEERING COMMAND ~ MID-ATLANTIC
JACKSONVILLE, NC

MCB CAMP LEJEUNE
JACKSONVILLE, NC

P1338 II MEF SIMULATION/TRAINING CENTER REPLACEMENT

PIPING - 1ST FLOOR PLAN - AREA D

SCALE: AS NOTED

EPROJECT NO.: 1590892

CONSTR. CONTR. NO.
N40085-20-C-0059

NAVFAC DRAWING NO.

SHEET OF

MP114

DP2 SUBMISSION – P1338 BUILDING - PRE-FINAL SUBMISSION

PLOTTED: 6/10/2021 3:36:26 PM

FILE NAME: BIM 360://HF PACKAGE 3/P1338 MEF SIM CTR-1590892-M.rvt

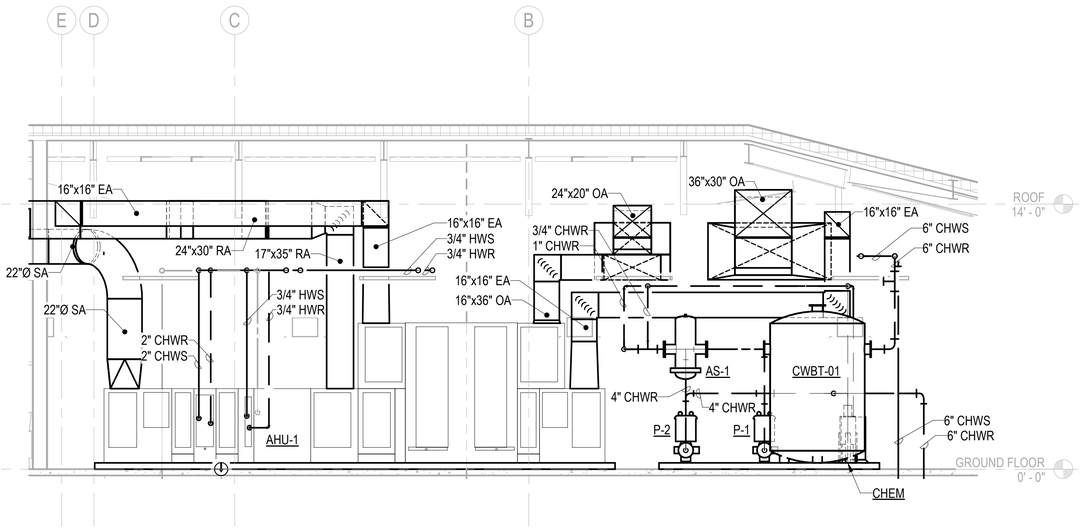

SECTION - AHU-1 & CHILLED WATER

SCALE: 1/4" = 1'-0"

M-401 C1

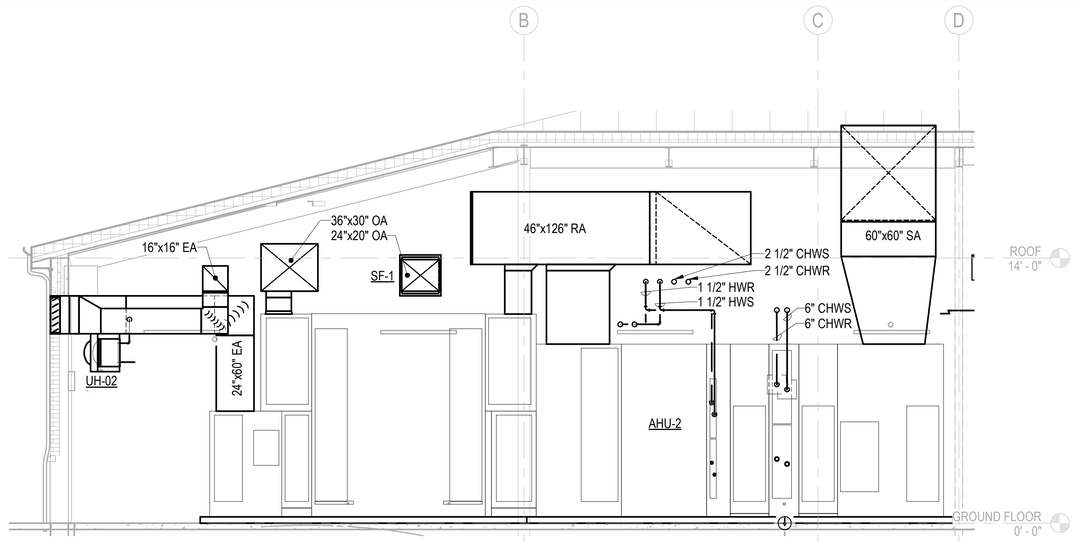

SECTION - AHU-2

SCALE: 1/4" = 1'-0"

M-401 C3

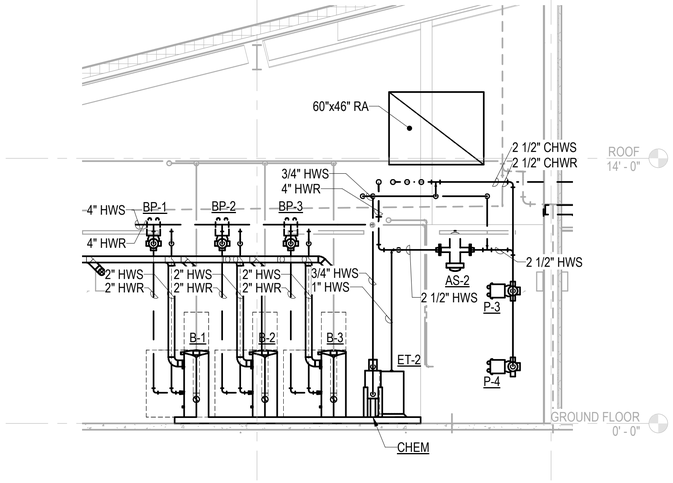

SECTION - BOILERS

SCALE: 1/4" = 1'-0"

A4

0 2' - 0" 4' - 0" 8' - 0"

SCALE: 1/4" = 1' - 0"

APPR | DATE | DESCRIPTION | SYM

NAVFAC

PRELIMINARY NOT FOR CONSTRUCTION

SEAL

IRQ W.M. Jordan COMPANY – A JOINT VENTURE –

Michael Baker INTERNATIONAL

100 AIRSIDE DRIVE
MOON TOWNSHIP, PA 15108 A/E INFO

APPROVED

FOR COMMANDER NAVFAC

ACTIVITY
MARINE CORPS BASE
CAMP LEJEUNE

SATISFACTORY TO DATE

DES	DRW	CHK
PM		
BRANCH MANAGER		
CHIEF ENG/ARCH		
FIRE PROTECTION		

DEPARTMENT OF THE NAVY
NAVAL FACILITIES ENGINEERING COMMAND
ROICC FLORENCE CAMP LEJEUNE
MCB CAMP LEJEUNE

NAVAL FACILITIES ENGINEERING COMMAND ~ MID-ATLANTIC
JACKSONVILLE, NC

JACKSONVILLE, NC
P1338 II MEF SIMULATION/TRAINING CENTER REPLACEMENT
MECHANICAL - SECTIONS

SCALE: AS NOTED

EPROJECT NO.: 1590892

CONSTR. CONTR. NO.
N40085-20-C-0059

NAVFAC DRAWING NO.

SHEET OF

M-301

DP2 SUBMISSION – P1338 BUILDING - PRE-FINAL SUBMISSION

PLOTTED: 6/10/2021 3:33:20 PM

FILE NAME: BIM 360://HF PACKAGE 3/P1338 MEF SIM CTR-1590892-M.rvt

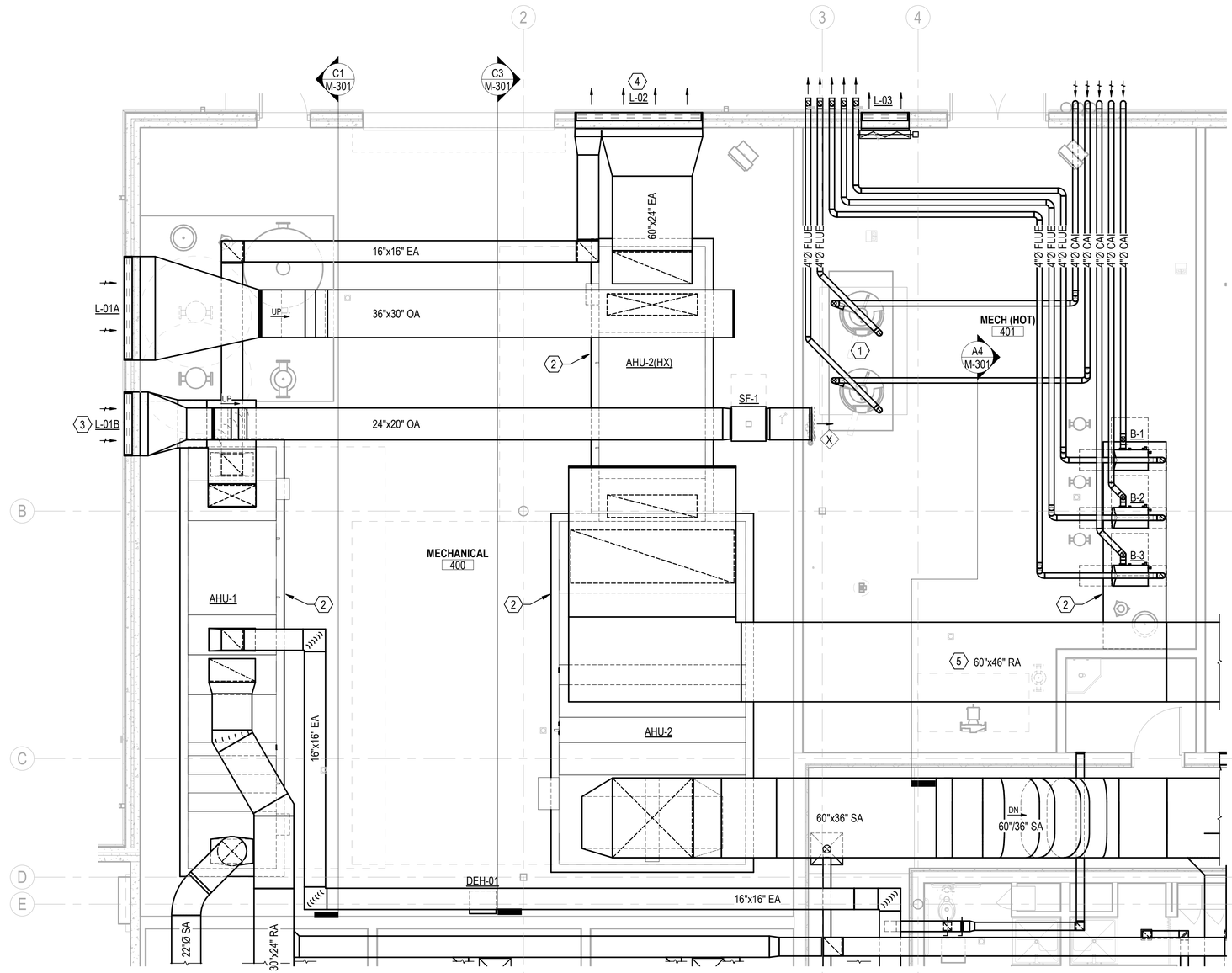

ENLARGED HVAC MECHANICAL ROOM DUCTWORK

SCALE: 1/4" = 1'-0"

MH110 A1

GENERAL NOTES

1. PROVIDE MANUAL VOLUME DAMPERS IN ALL RUN-OUTS TO DIFFUSERS, AT ALL BRANCH TAKE-OFFS FROM MAIN SUPPLY DUCTS, AND WHERE DEEMED NECESSARY BY TAB SUB-CONTRACTOR TO ACHIEVE PROPER SYSTEM BALANCING.
2. ALL DUCT RUN-OUTS TO DIFFUSERS, REGISTERS AND GRILLES NOT INDICATED ON THE PLANS SHALL BE SIZED TO MATCH THE NECK SIZE INDICATED ON THE DIFFUSER, REGISTER AND GRILLE SCHEDULE.
3. ALL SUPPLY DUCT RUN-OUTS TO VAV BOXES NOT INDICATED ON THE PLANS SHALL BE SIZED TO MATCH THE VAV BOX INLET SIZE INDICATED ON THE VARIABLE AIR VOLUME (VAV) BOX SCHEDULE.
4. SHEET METAL FABRICATOR MAY SUBSTITUTE EQUIVALENT ROUND OR FLAT OVAL DUCTWORK FOR RECTANGULAR SIZES INDICATED. DUCTWORK BETWEEN AHU AND VAV BOXES SHALL BE SIZED TO 0.2" STATIC PRESSURE LOSS PER 100' OF DUCT RUN. DUCTWORK DOWNSTREAM OF VAV BOXES SHALL BE SIZED TO 0.08" STATIC PRESSURE LOSS PER 100' OF DUCT RUN. RETURN, EXHAUST AND TRANSFER AIR DUCTS SHALL BE SIZED TO 0.05"/100' OF DUCT RUN. ALL REVISIONS MUST BE COORDINATED WITH ALL OTHER TRADES AND ILLUSTRATED IN DUCTWORK SHOP DRAWINGS FOR APPROVAL.
5. PLAN DRAWINGS ARE DIAGRAMMATIC IN NATURE AND DO NOT ILLUSTRATE ALL SPECIFIC DUCT TAKE-OFF CONFIGURATIONS, TAPS, ETC. REFER TO PROJECT SPECIFICATIONS AND DUCTWORK DETAILS FOR SPECIFIC REQUIREMENTS.
6. ALL EQUIPMENT SHALL BE INSTALLED WITH MANUFACTURER'S REQUIRED ACCESS SPACE BETWEEN UNIT AND FULL HEIGHT WALLS AND OTHER OBSTRUCTIONS.

KEYNOTES

1. PLUMBING EQUIPMENT - REFER TO PLUMBING DRAWINGS.
2. CONCRETE MECHANICAL EQUIPMENT PAD ON LEVEL SURFACE. EXTEND PAD 6" BEYOND THE EDGE OF THE EQUIPMENT IN ALL DIRECTIONS.
3. CONNECTION TO LOUVER TO BE SPLIT TO SERVE AHU-1 AND SF-1. TOP CONNECTION: 48x 20 CONNECTION, TRANSITION TO 24x20 TO SERVE SF-1. BOTTOM CONNECTION: 48x16 CONNECTION, TRANSITION TO 36x16 TO SERVER AHU-1.
4. CONNECTION TO LOUVER TO BE SPLIT TO SERVE AHU-1 AND AHU-2. LEFT CONNECTION: 20x24 CONNECTION, TRANSITION TO 16x16 TO EXHAUST AHU-1. RIGHT CONNECTION: 76x24 CONNECTION, TRANSITION TO 60x24 TO EXHAUST AHU-2.
5. DUCTWORK TRAVERSING 401 MECH (HOT), SHALL BE PROVIDED WITH PROVIDED WITH VAPOR BARRIER IN ACCORDANCE WITH SPECIFICATIONS FOR "DUCTS EXPOSED TO WEATHER".

0 2' - 0" 4' - 0" 8' - 0"

SCALE: 1/4" = 1' - 0"

N

APPR | DATE | DESCRIPTION | SYM

NAVFAC

PRELIMINARY
NOT FOR CONSTRUCTION

SEAL

IRQ WM Jordan COMPANY ~ A JOINT VENTURE ~

Michael Baker INTERNATIONAL
100 AIRSIDE DRIVE
MOON TOWNSHIP, PA 15108
A/E INFO

APPROVED

FOR COMMANDER NAVFAC

ACTIVITY
MARINE CORPS BASE
CAMP LEJEUNE

SATISFACTORY TO DATE

DES	DRW	CHK

PM

BRANCH MANAGER

CHIEF ENG/ARCH

FIRE PROTECTION

DEPARTMENT OF THE NAVY
NAVAL FACILITIES ENGINEERING COMMAND ~ MID-ATLANTIC
ROICC FLORENCE CAMP LEJEUNE
NAVAL FACILITIES ENGINEERING COMMAND
JACKSONVILLE, NC
MCB CAMP LEJEUNE
JACKSONVILLE, NC
P1338 II MEF SIMULATION/TRAINING CENTER
REPLACEMENT
MECHANICAL - ENLARGED PLANS

SCALE: AS NOTED

EPROJECT NO.: 1590892

CONSTR. CONTR. NO.
N40085-20-C-0059

NAVFAC DRAWING NO.

SHEET OF

M-401

DP2 SUBMISSION – P1338 BUILDING –PRE-FINAL SUBMISSION

PLOTTED: 6/10/2021 3:33:26 PM

FILE NAME: BIM 360://HF PACKAGE 3/P1338 MEF SIM CTR-1590892-M.rvt

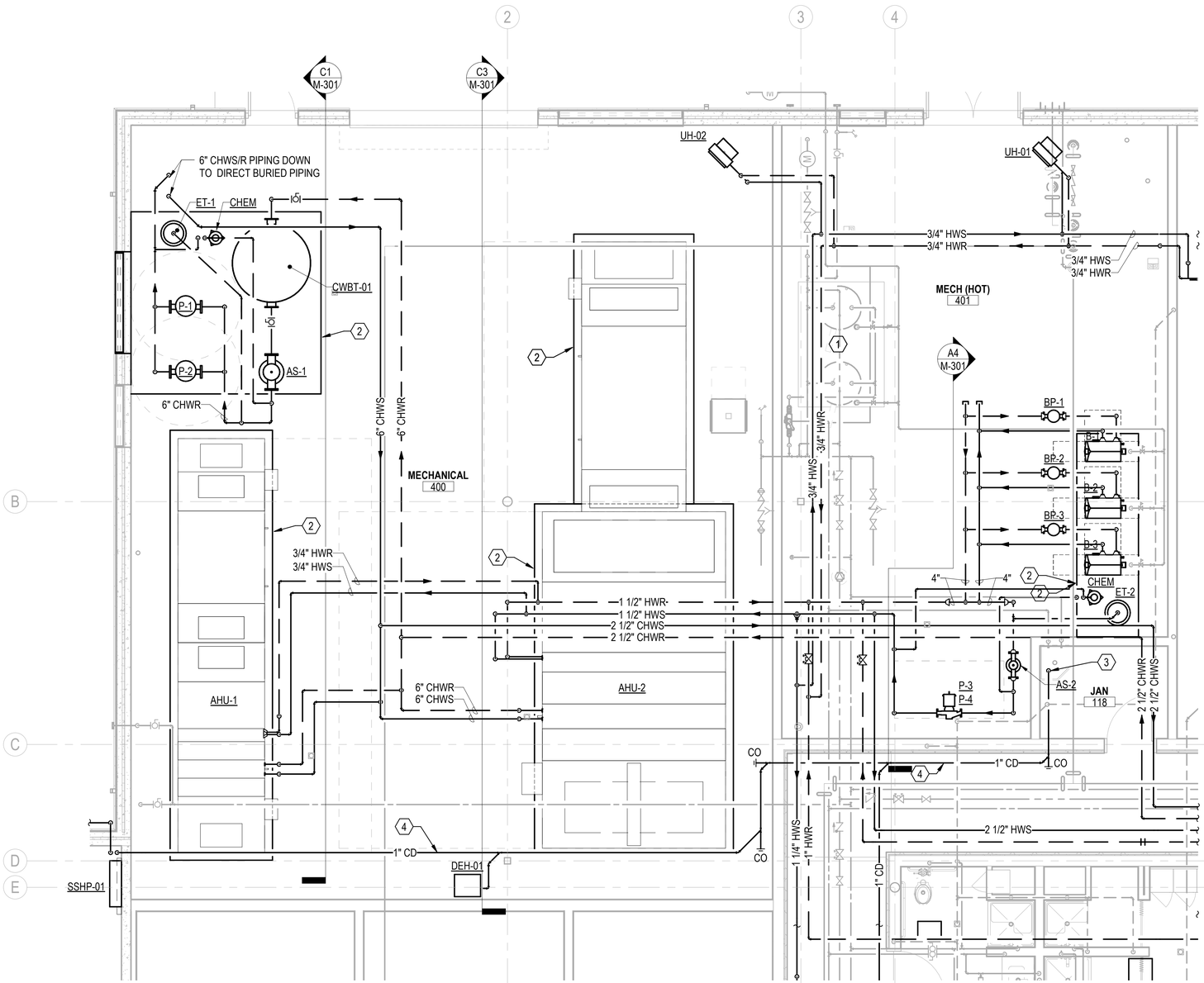

ENLARGED HVAC MECHANICAL ROOM PIPING

SCALE: 1/4" = 1'-0"

MP110 A1

GENERAL NOTES

1. PROVIDE MANUAL VOLUME DAMPERS IN ALL RUN-OUTS TO DIFFUSERS, AT ALL BRANCH TAKE-OFFS FROM MAIN SUPPLY DUCT, AND IN ALL OTHER AREAS AS REQUIRED TO PROVIDE PROPER SYSTEM BALANCING.
2. ALL SUPPLY AIR DUCT RUN-OUTS TO DIFFUSERS AND VAV BOXES SHALL BE SIZED TO MATCH DIFFUSER NECK SIZE OR VAV BOX INLET SIZE UNLESS OTHERWISE INDICATED.
3. SHEET METAL FABRICATOR MAY SUBSTITUTE EQUIVALENT ROUND OR FLAT OVAL DUCTWORK FOR RECTANGULAR SIZES INDICATED. DUCTWORK BETWEEN AHU AND VAV BOXES SHALL BE SIZED TO 0.2" STATIC PRESSURE LOSS PER 100' OF DUCT RUN, DUCTWORK DOWNSTREAM OF VAV BOXES, RETURN, EXHAUST AND TRANSFER AIR DUCTS SHALL BE SIZED TO 0.08"/100' OF DUCT RUN. ALL REVISIONS MUST BE COORDINATED WITH ALL OTHER TRADES AND ILLUSTRATED IN DUCTWORK SHOP DRAWINGS FOR APPROVAL.
4. PLAN DRAWINGS ARE DIAGRAMMATIC IN NATURE AND DO NOT ILLUSTRATE ALL SPECIFIC DUCT TAKE-OFF CONFIGURATIONS, TAPS, ETC. REFER TO PROJECT SPECIFICATIONS AND DETAILS FOR SPECIFIC REQUIREMENTS.
5. ALL EQUIPMENT SHALL BE INSTALLED WITH MANUFACTURER'S REQUIRED ACCESS SPACE BETWEEN UNIT AND FULL HEIGHT WALLS AND OTHER OBSTRUCTIONS.
6. ALL HWS & HWR BRANCHES ARE 3/4" UNLESS NOTED OTHERWISE.
7. PROVIDE AN AIR VENT AT THE HIGH POINT OF EACH DROP IN THE HEATING AND CHILLED WATER PIPING SYSTEMS. ALL PIPING SHALL GRADE TO THE LOW POINTS. PROVIDE HOSE END DRAIN VALVES AT THE BOTTOM OF ALL RISERS AND LOW POINTS.
8. INSTALL PIPING SO THAT ALL VALVES, STRAINERS, UNIONS, TRAPS, FLANGES AND OTHER APPURTENANCES REQUIRING ACCESS ARE EASILY ACCESSIBLE. ALL VALVES SHALL BE INSTALLED SO THAT THE REMAINS IN SERVICE WHEN EQUIPMENT OR PIPING ON EQUIPMENT SIDE OF VALVE IS REMOVED. ALL BALANCING VALVES AND BUTTERFLY VALVES SHALL BE PROVIDED WITH POSITION INDICATORS AND MAXIMUM ADJUSTABLE STOPS (AKA "MEMORY STOPS"). ALL VALVES (EXCEPT CONTROL VALVES) AND STRAINERS SHALL BE FULL SIZE OF PIPE BEFORE REDUCING SIZE TO MAKE CONNECTIONS TO EQUIPMENT AND CONTROLS.
9. INSTALL PIPING WITHOUT FORCING OR SPRINGING.

KEYNOTES

1. PLUMBING EQUIPMENT - REFER TO PLUMBING DRAWINGS.
2. CONCRETE MECHANICAL EQUIPMENT PAD ON LEVEL SURFACE. EXTEND PAD 6" BEYOND THE EDGE OF THE EQUIPMENT IN ALL DIRECTIONS.
3. 1" CD DOWN TO MOP RECEPTOR. TERMINATE PIPE OPEN ENDED APPROXIMATELY 3" ABOVE RECEPTOR.
4. ROUTE ALL CONDENSATE PIPING AT 1/8" PER 1'-0" SLOPE TOWARD POINT OF TERMINATION. PROVIDE CLEANOUT AT ALL CHANGES OF DIRECTION GREATER THAN 45°.

0 2' - 0" 4' - 0" 8' - 0"

SCALE: 1/4" = 1' - 0"

N

APPR	DATE	DESCRIPTION	SYM

NAVFAC

PRELIMINARY
NOT FOR CONSTRUCTION

SEAL

IRQ WM Jordan COMPANY – A JOINT VENTURE –

Michael Baker INTERNATIONAL

100 AIRSIDE DRIVE
MOON TOWNSHIP, PA 15108 A/E INFO

APPROVED

FOR COMMANDER NAVFAC

ACTIVITY
MARINE CORPS BASE
CAMP LEJEUNE

SATISFACTORY TO DATE

DES	DRW	CHK

PM

BRANCH MANAGER

CHIEF ENG/ARCH

FIRE PROTECTION

DEPARTMENT OF THE NAVY
NAVAL FACILITIES ENGINEERING COMMAND
ROICC FLORENCE CAMP LEJEUNE
MCB CAMP LEJEUNE

NAVAL FACILITIES ENGINEERING COMMAND ~ MID-ATLANTIC
JACKSONVILLE, NC

JACKSONVILLE, NC
P1338 II MEF SIMULATION/TRAINING CENTER
REPLACEMENT
MECHANICAL - ENLARGED PLANS

SCALE: AS NOTED

EPROJECT NO.: 1590892

CONSTR. CONTR. NO.
N40085-20-C-0059

NAVFAC DRAWING NO.

SHEET OF

M-402

DP2 SUBMISSION – P1338 BUILDING -,-PRE-FINAL SUBMISSION

PLOTTED: 6/10/2021 3:33:34 PM

FILE NAME: BIM 360://HF PACKAGE 3/P1338 MEF SIM CTR-1590892-M.rvt

NOTE:
ALL PIPING SHOWN IN THIS PLAN IS BELOW RAISED FLOOR SYSTEM.

REFER TO CHILLED WATER FLOW DIAGRAM ON SHEET M-702 FOR PIPE SIZING AND REVERSE RETURN CONFIGURATION SERVING CRAC UNITS.

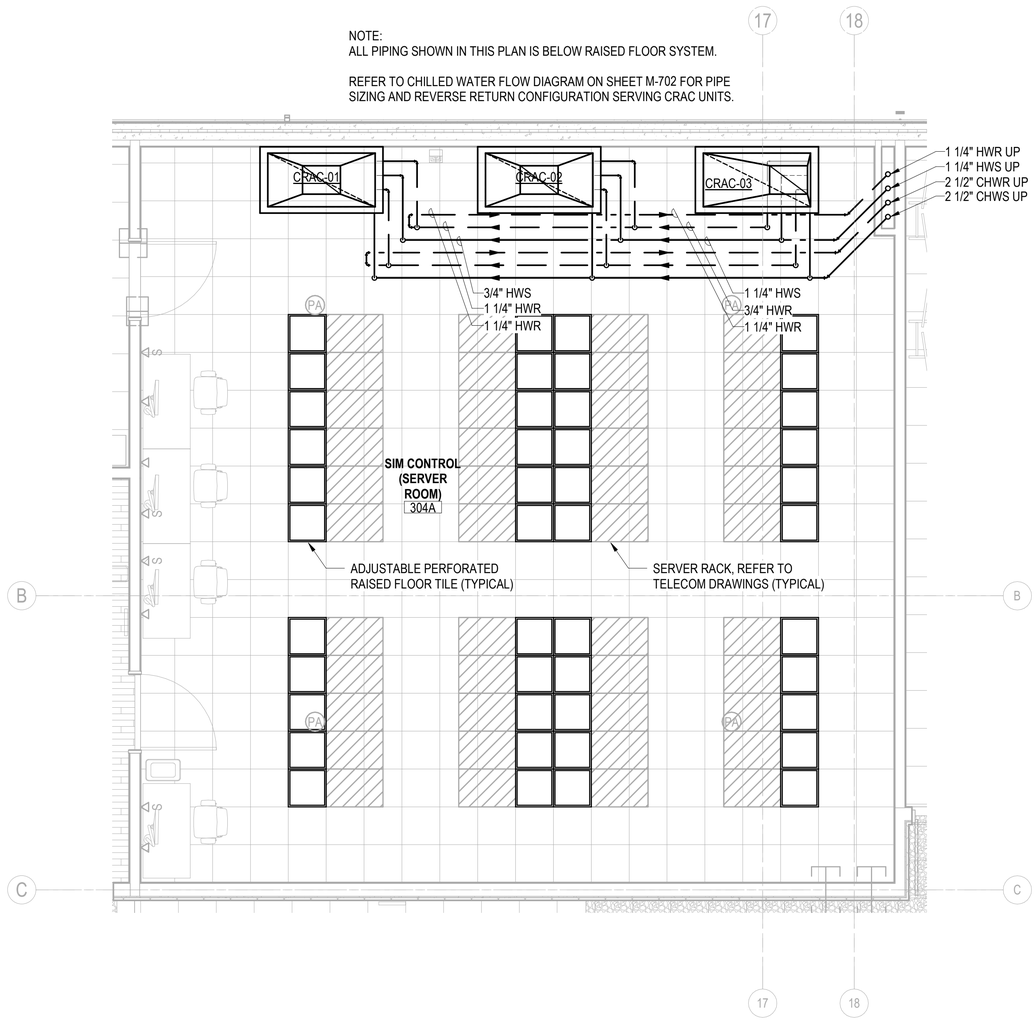

ENLARGED SIM CONTROL (SERVER ROOM) ROOM 304A FLOOR PLAN

SCALE: 1/4" = 1'-0"

MH110 A1

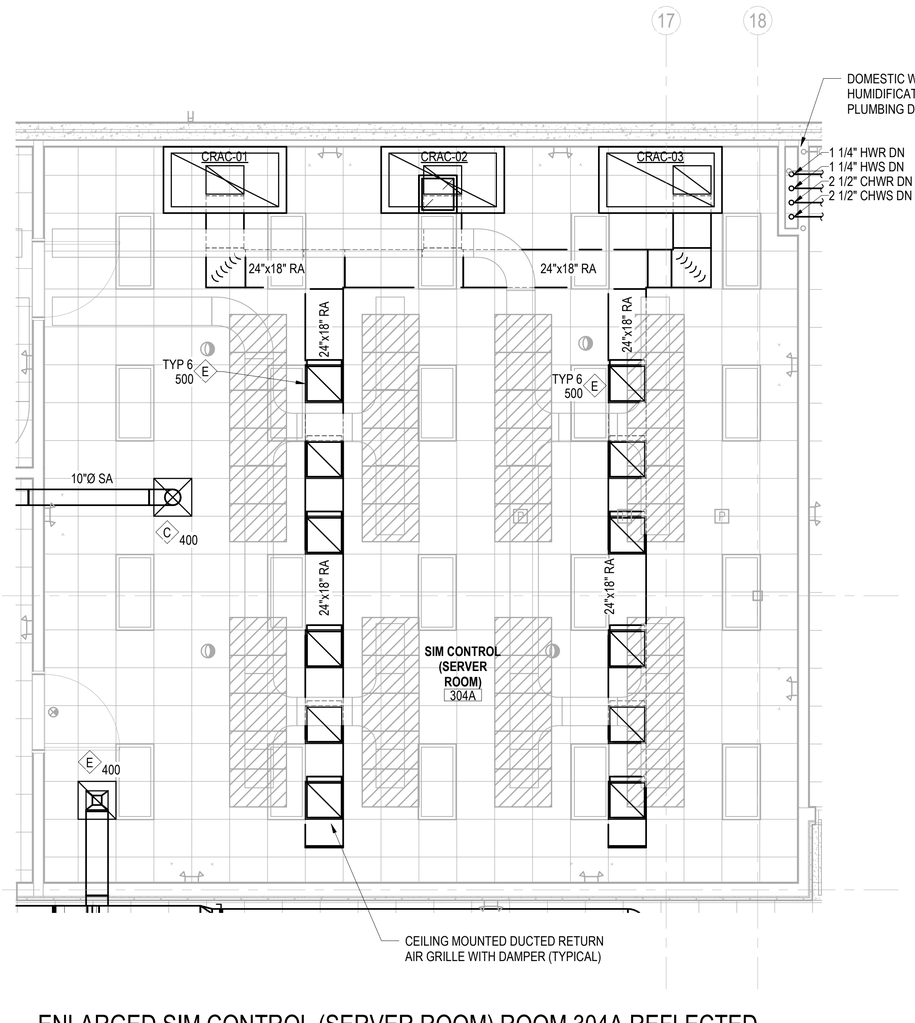

ENLARGED SIM CONTROL (SERVER ROOM) ROOM 304A REFLECTED CEILING PLAN

SCALE: 1/4" = 1'-0"

M-301 A3

0 2' - 0" 4' - 0" 8' - 0"

SCALE: 1/4" = 1' - 0"

N

SYM	DESCRIPTION	DATE	APPR

NAVFAC

PRELIMINARY NOT FOR CONSTRUCTION

SEAL

RQ W.M. Jordan COMPANY – A JOINT VENTURE –

Michael Baker INTERNATIONAL

100 AIRSIDE DRIVE
MOON TOWNSHIP, PA 15108 A/E INFO

APPROVED

FOR COMMANDER NAVFAC

ACTIVITY
MARINE CORPS BASE CAMP LEJEUNE

SATISFACTORY TO DATE

DES	DRW	CHK
PM		
BRANCH MANAGER		
CHIEF ENG/ARCH		
FIRE PROTECTION		

DEPARTMENT OF THE NAVY
NAVAL FACILITIES ENGINEERING COMMAND
ROICC FLORENCE CAMP LEJEUNE
MCB CAMP LEJEUNE

NAVAL FACILITIES ENGINEERING COMMAND – MID-ATLANTIC
JACKSONVILLE, NC

JACKSONVILLE, NC
P1338 II MEF SIMULATION/TRAINING CENTER REPLACEMENT

MECHANICAL - ENLARGED PLANS

SCALE: AS NOTED
EPROJECT NO.: 1590892
CONSTR. CONTR. NO.
N40085-20-C-0059
NAVFAC DRAWING NO.
SHEET OF

M-403

DP2 SUBMISSION – P1338 BUILDING -_PRE-FINAL SUBMISSION

PLOTTED: 6/10/2021 3:33:40 PM

FILE NAME: BIM 360://HF PACKAGE 3/P1338 MEF SIM CTR-1590892-M.rvt

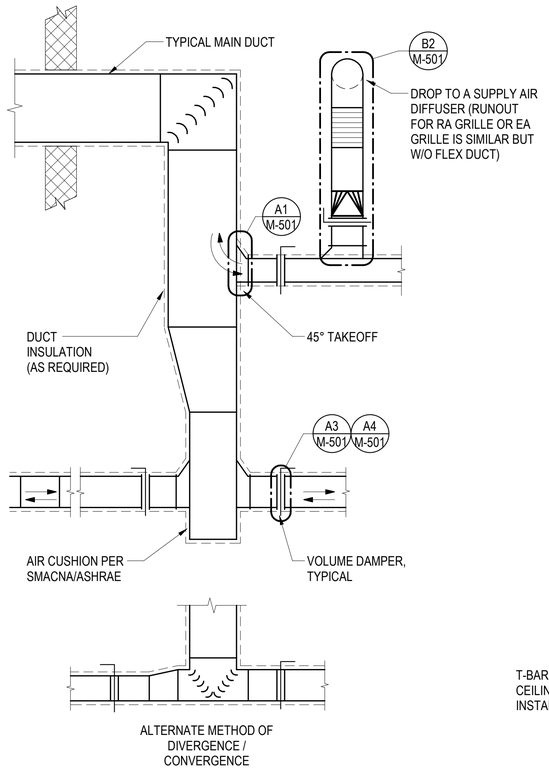

TYPICAL SUPPLY OR RETURN DUCT DETAIL

SCALE:NTS — B1.2

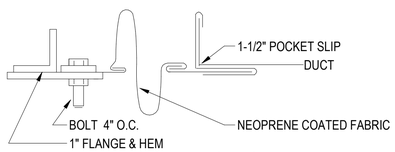

FLEXIBLE CONNECTION DETAIL

SCALE:NTS — B1.1

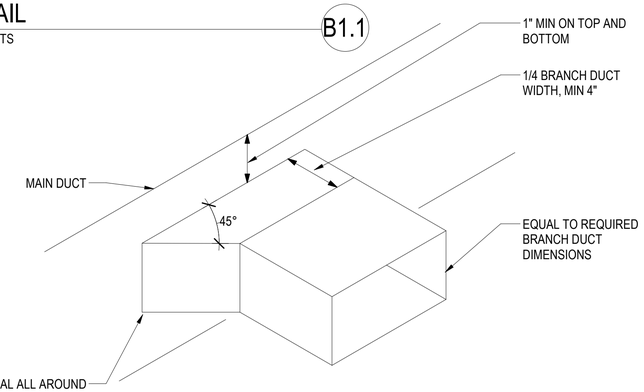

TYPICAL BRANCH DUCT TAKEOFF FITTING DETAIL

SCALE:NTS — M-501 — A1

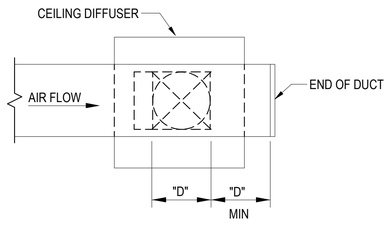

PLAN

SECTION - SUPPLY, OUTDOOR, OR MAKEUP

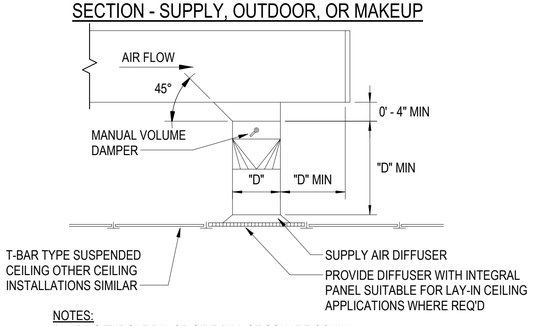

NOTES:
1. "D" IS THROAT DIA OR SIDE DIM. OF SQUARE CONN.
2. MIN LENGTH OF STRAIGHT DUCT ABOVE CD IS "D".
3. ABOVE DETAILS ARE REPRESENTATIVE OF STANDARD DUCT CONNECTIONS, ONLY. THESE DETAILS ARE NOT INTENDED TO SHOW ALL POSSIBLE DUCT CONNECTIONS.

DUCT CONNECTION DETAILS

SCALE:NTS — M-501 — B2

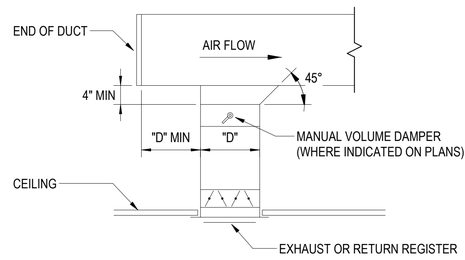

SECTION - EXHAUST OR RETURN

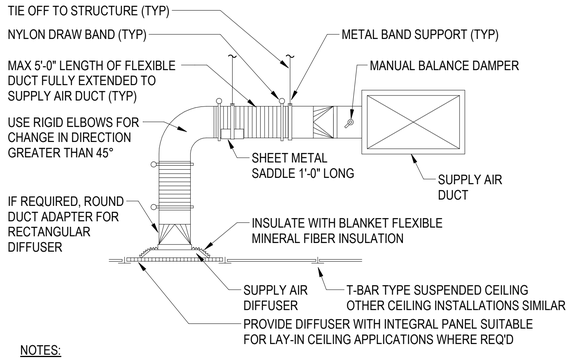

NOTES:
1. SQUARE MAIN DUCT SHOWN, INSTALLATION WITH ROUND MAIN DUCT IS SIMILAR
2. IF SPIN-IN TAKE-OFFS ARE NOT USED AND EXPANDED TAKE-OFFS ARE USED, INSTALL DAMPER AFTER TAKE-OFF PER SMACNA
3. PROVIDE PROPER INSTALLATION OF RADIUS AND SUPPORT PER SMACNA AND FLEX DUCT PER MFGR'S RECOMMENDATIONS FOR NO KINKING OR SIGNIFICANT AREA REDUCTION

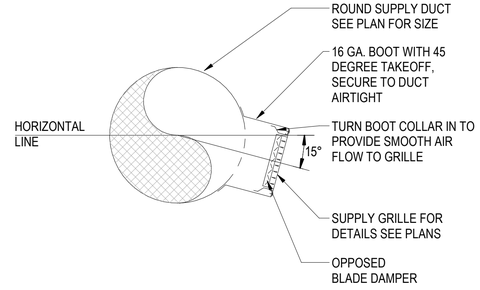

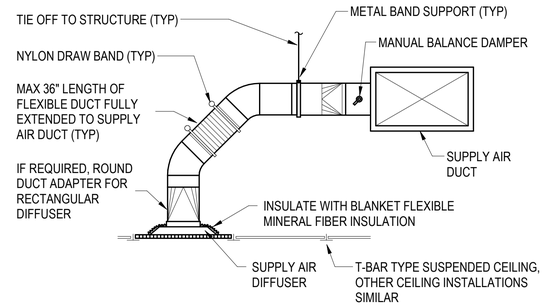

NOTES:
1. SQUARE MAIN DUCT SHOWN, INSTALLATION WITH ROUND MAIN DUCT IS SIMILAR
2. IF SPIN-IN TAKE-OFFS ARE NOT USED AND EXPANDED TAKE-OFFS ARE USED, INSTALL DAMPER AFTER TAKE-OFF PER SMACNA

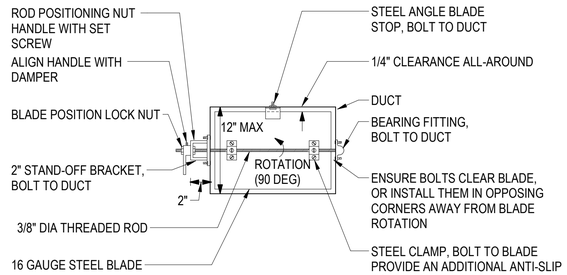

NOTES:
1. DAMPERS FOR ROUND DUCTS SHALL BE SIMILAR TO THE DAMPER SHOWN ABOVE
2. ENSURE THAT FULL 90 DEGREE DAMPER BLADE MOVEMENT IS UNOBSTRUCTED
3. FOR DUCT HEIGHTS MORE THAN 12" PROVIDE FACTORY-FABRICATED OPPOSED BLADE DAMPERS

MANUAL VOLUME DAMPER DETAIL - 12" OR LESS

SCALE:NTS — A3

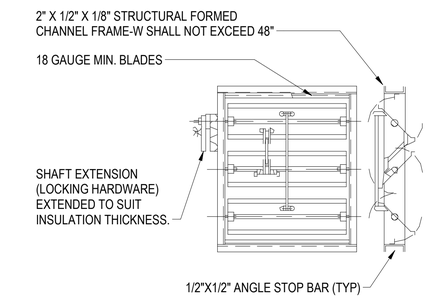

NOTE:
1) ALL BRANCH DUCTS SHALL HAVE VOLUME DAMPERS

MANUAL VOLUME DAMPER DETAIL - 12" OR MORE

SCALE:NTS — A4

APPR	DATE	DESCRIPTION	SYM

NAVFAC

PRELIMINARY NOT FOR CONSTRUCTION

SEAL

IRQ Jordan Company – A JOINT VENTURE –

Michael Baker INTERNATIONAL

100 AIRSIDE DRIVE, MOON TOWNSHIP, PA 15108 — A/E INFO

APPROVED

FOR COMMANDER NAVFAC

ACTIVITY: MARINE CORPS BASE CAMP LEJEUNE

SATISFACTORY TO DATE

DES	DRW	CHK
PM		
BRANCH MANAGER		
CHIEF ENG/ARCH		
FIRE PROTECTION		

DEPARTMENT OF THE NAVY
NAVAL FACILITIES ENGINEERING COMMAND ~ MID-ATLANTIC
ROICC FLORENCE CAMP LEJEUNE
MCB CAMP LEJEUNE

NAVAL FACILITIES ENGINEERING COMMAND ~ MID-ATLANTIC
JACKSONVILLE, NC

JACKSONVILLE, NC
P1338 II MEF SIMULATION/TRAINING CENTER REPLACEMENT

MECHANICAL - DETAILS

SCALE: AS NOTED

EPROJECT NO.: 1590892

CONSTR. CONTR. NO. N40085-20-C-0059

NAVFAC DRAWING NO. 17250094

SHEET 240 OF

M-501

DP2 SUBMISSION – P1338 BUILDING - PRE-FINAL SUBMISSION

PLOTTED: 6/10/2021 3:33:42 PM

FILE NAME: BIM 360://HF PACKAGE 3/P1338 MEF SIM CTR-1590892-M.rvt

GENERAL NOTES:
1. ANCHORAGE TO CONCRETE WALL OR SOLID BLOCK, USE HILTI KWIK BOLT 3 EXPANSION ANCHORS 3/8" Ø @ 3" OC (MIN)
2. ANCHORAGE TO HOLLOW CONCRETE BLOCK, USE HILTI HLC SLEEVE ANCHOR 3/8" Ø @ 3" OC (MIN)
3. ANCHORAGE TO METAL STUDS & GYP BOARD WALLS, USE CARBON STEEL THROUGH BOLT 3/8" (MIN). STUD WALL CONDITION NOT SHOWN BUT SIMILAR.
4. PROVIDE CARBON STEEL STRUCTURAL STEEL ANGLES, BARS AND SHEET PER ASTM A36.
5. WELD PER AMERICAN WELDING SOCIETY D1.1, STRUCTURAL STEEL.
6. GALVANIZED ANGLES AND ANCHORS MUST BE USED ON THE EXTERIOR SIDE OF EXTERIOR WALLS.

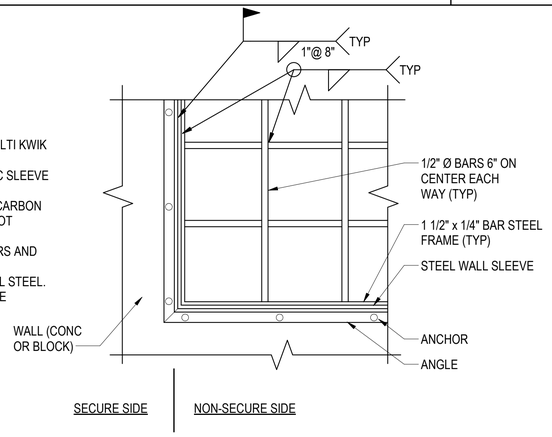

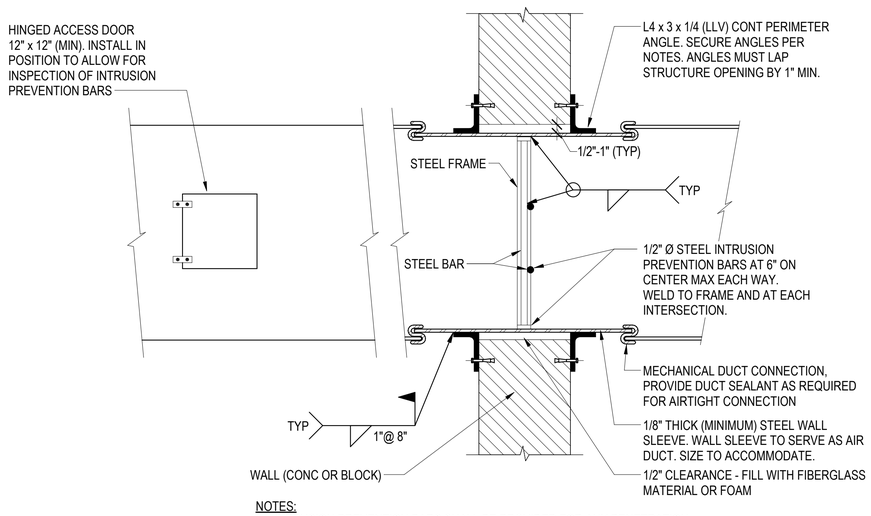

NOTES:
1. INTRUSION PREVENTION BARS SHALL BE PROVIDED FOR ANY PENETRATION LARGER THAN 96 in² OF ANY PERIMETER WALLS OR ROOFS IN SECURE AREA.

SECURE AREA DUCT WALL PENETRATION DETAIL — B1

SCALE: NTS

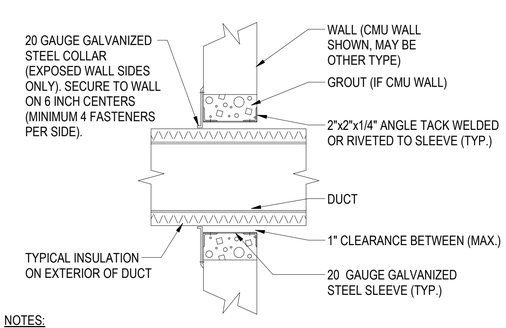

NOTES:
1. THIS DETAIL IS NOT APPLICABLE TO FIRE OR SMOKE RATED WALLS, REFER TO LIFE SAFETY DRAWINGS FOR LOCATION OF ALL FIRE/SMOKE RATED WALLS.
2. DUCTWORK PENETRATING FIRE RATED WALLS SHALL BE MIN 16 GAUGE THICK.
3. WALL PENETRATIONS OF RATED WALLS NOT INDICATED AS REQUIRING DAMPERS ON THE PLANS SHALL BE PROVIDED WITH FIRESTOPPING IN ACCORDANCE WITH SPECIFICATION SECTION 07 84 00 FIRESTOPPING.
4. STEEL COLLAR IS REQUIRED ONLY IN LOCATIONS WHERE THE WALL IS VISIBLE FROM THE SPACE, NOT REQUIRED WHERE PENETRATING WALLS ABOVE FINISHED CEILINGS.

DUCT PENETRATION THRU WALL DETAIL — C3

SCALE:NTS

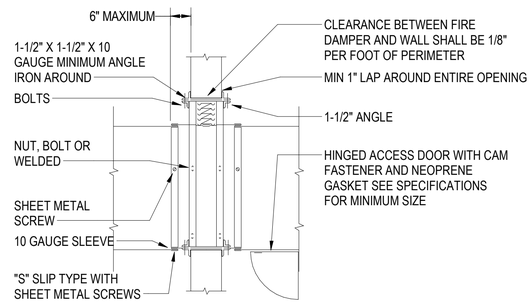

NOTE:
1. PROVIDE FIRE DAMPER FOR ROUND DUCT OR USE TRANSITION FOR ROUND TO SQUARE DUCT.

FIRE DAMPER DETAIL — B3

SCALE: NTS

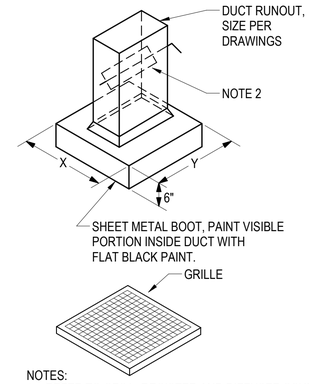

NOTES:
1. REFER TO GRILL, REGISTER AND DIFFUSER SCHEDULE FOR X & Y DUCT NECK SIZE CONNECTION TO RETURN GRILLE/REGISTER.
2. WHERE CFM IS SHOWN ON PLANS, DAMPER SHALL BE PLACED IN RETURN/EXHAUST DUCTWORK IN LOCATION SHOWN ON PLANS

DUCTED RETURN AIR CONNECTION DETAIL — C4

SCALE:NTS

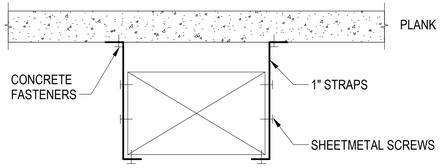

NOTE

1. FOR MEDIUM PRESSURE DUCTWORK SUPPORT STRAPS MAY BE BOLTED THROUGH AT REINFORCING ANGLE BOLT

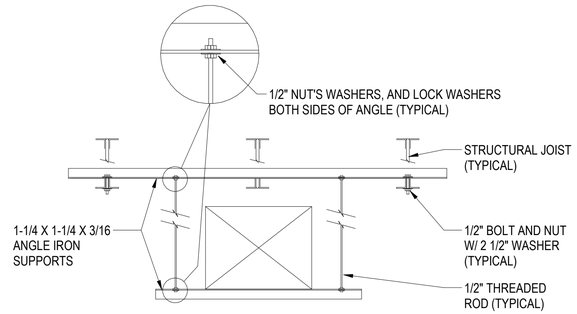

NOTE:
ALL DUCT SUPPORTS PER SMACNA.

DUCT HANGER DETAIL — A4

SCALE:NTS

APPR | DATE | DESCRIPTION | SYM

NAVFAC

PRELIMINARY NOT FOR CONSTRUCTION

SEAL

IRQ W.M. Jordan COMPANY – A JOINT VENTURE –

Michael Baker INTERNATIONAL
100 AIRSIDE DRIVE
MOON TOWNSHIP, PA 15108
A/E INFO

APPROVED
FOR COMMANDER NAVFAC
ACTIVITY
MARINE CORPS BASE CAMP LEJEUNE
SATISFACTORY TO DATE
DES | DRW | CHK
PM
BRANCH MANAGER
CHIEF ENG/ARCH
FIRE PROTECTION

DEPARTMENT OF THE NAVY
NAVAL FACILITIES ENGINEERING COMMAND ~ MID-ATLANTIC
JACKSONVILLE, NC
ROICC FLORENCE CAMP LEJEUNE
MCB CAMP LEJEUNE
JACKSONVILLE, NC
P1338 II MEF SIMULATION/TRAINING CENTER REPLACEMENT
MECHANICAL - DETAILS

SCALE: AS NOTED
EPROJECT NO.: 1590892
CONSTR. CONTR. NO.
N40085-20-C-0059
NAVFAC DRAWING NO.
17250095
SHEET 241 OF

M-502

DP2 SUBMISSION – P1338 BUILDING - PRE-FINAL SUBMISSION

PLOTTED: 6/10/2021 3:33:44 PM
FILE NAME: BIM 360://HF PACKAGE 3/P1338 MEF SIM CTR-1590892-M.rvt

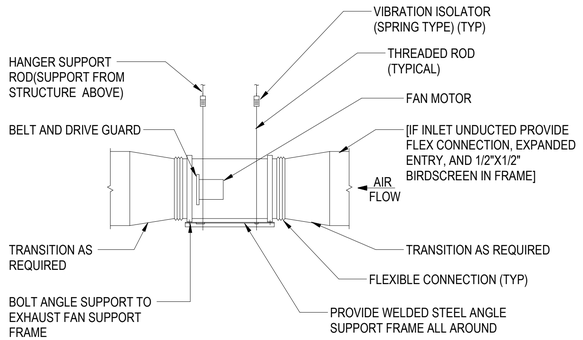

NOTES:
1. PROVIDE ADDITIONAL LATERAL OR AXIAL BRACING IF REQUIRED.
2. INLINE CABINET FAN IS SIMILAR.

INLINE FAN DETAIL

SCALE:NTS

C2

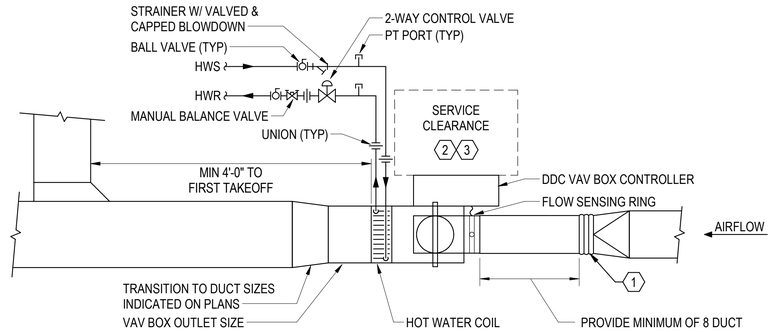

KEYNOTES
1. PROVIDE FLEX DUCT CONNECTION FOR ALLIGNMENT WHERE REQ'D-NOT IN EXCESS 12" IN LENGTH AND NO MORE THAN 2" ALIGNMENT (DO NOT KINK)
2. PROVIDE MINIMUM 3'-0" NEC SERVICE CLEARANCE AT CONTROLLER SIDE OF VAV BOX
3. PROVIDE CEILING ACCESS DOOR WHEN INSTALLED ABOVE NON-ACCESSIBLE CEILINGS

VARIABLE AIR VOLUME (VAV) BOX DETAIL

SCALE: NTS

C4

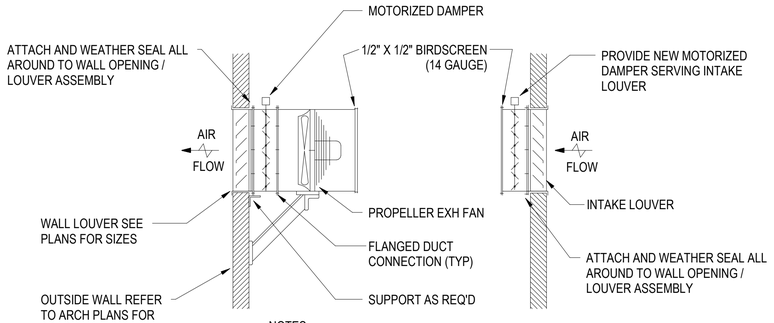

NOTES:
1. PROVIDE BIRD SCREEEN ON THE INSIDE FACE OF THE DISCHARGE LOUVER.
2. PROVIDE OSHA APPROVED GUARDS AT FAN.

WALL PROPELLER EXHAUST FAN AND ASSOCIATED INTAKE LOUVER/DAMPER ASSEMBLY DETAIL

SCALE:NTS

A1

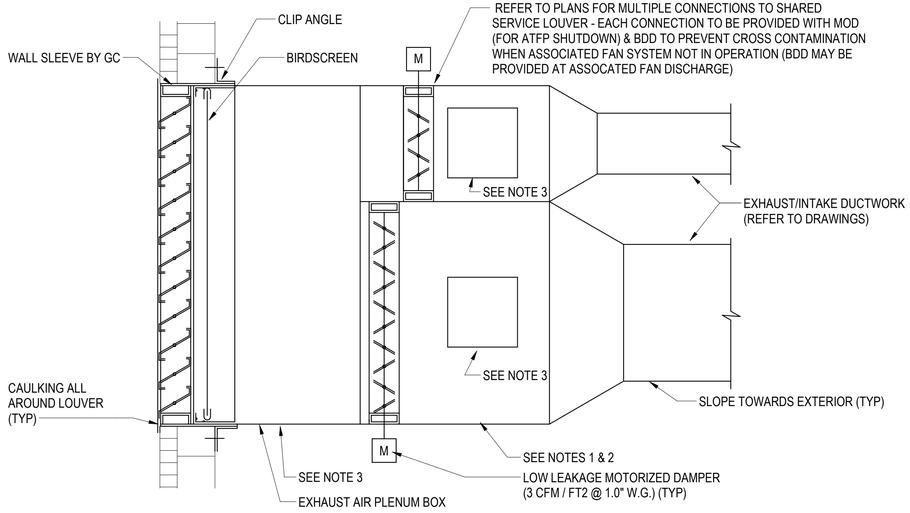

NOTES:
1. FOR UNDUCTED APPLICATIONS PROVIDE SUFFICIENT DUCTWORK TO HOUSE MOTORIZED DAMPER.
2. FOR APPLICATIONS WITHOUT MOTORIZED DAMPER CONNECT DUCT DIRECTLY TO LOUVER.
3. PROVIDE DUCT ACCESS DOOR FOR SERVICING OF MOTOR OPERATED DAMPER (IF REQUIRED). MAY BE MOUNTED ON PLENUM BOX IN LIEU OF INDIVIDUAL DUCTS

SHARED SERVICE LOUVER W/ PLENUM BOX AND MOTORIZED DAMPER DETAIL

SCALE:NTS

A4

APPR | DATE | DESCRIPTION | SYM

NAVFAC

PRELIMINARY NOT FOR CONSTRUCTION

SEAL

IRQ Wm. Jordan COMPANY – A JOINT VENTURE –

Michael Baker INTERNATIONAL

100 AIRSIDE DRIVE
MOON TOWNSHIP, PA 15108 A/E INFO

APPROVED

FOR COMMANDER NAVFAC

ACTIVITY
MARINE CORPS BASE CAMP LEJEUNE

SATISFACTORY TO DATE

DES	DRW	CHK
PM		
BRANCH MANAGER		
CHIEF ENG/ARCH		
FIRE PROTECTION		

DEPARTMENT OF THE NAVY
NAVAL FACILITIES ENGINEERING COMMAND
ROICC FLORENCE CAMP LEJEUNE
MCB CAMP LEJEUNE

NAVAL FACILITIES ENGINEERING COMMAND – MID-ATLANTIC
JACKSONVILLE, NC

JACKSONVILLE, NC
P1338 II MEF SIMULATION/TRAINING CENTER REPLACEMENT

MECHANICAL - DETAILS

SCALE: AS NOTED

EPROJECT NO.: 1590892

CONSTR. CONTR. NO.
N40085-20-C-0059

NAVFAC DRAWING NO.
17250096

SHEET 242 OF

M-503

DP2 SUBMISSION – P1338 BUILDING - PRE-FINAL SUBMISSION

PLOTTED: 6/10/2021 3:33:45 PM

FILE NAME: BIM 360://HF PACKAGE 3/P1338 MEF SIM CTR-1590892-M.rvt

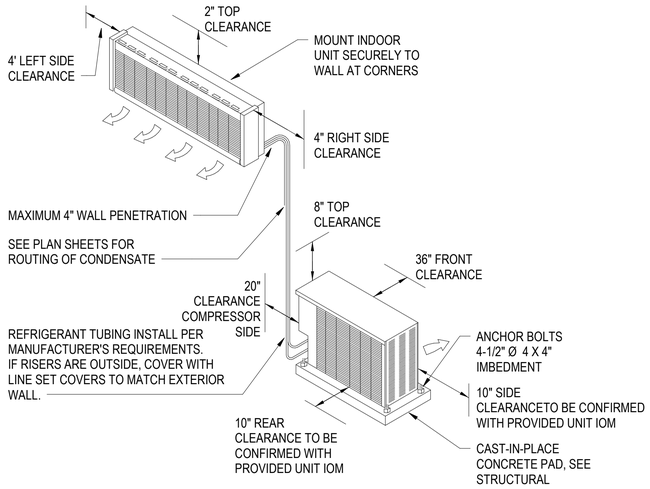

SPLIT SYSTEM AIR CONDITIONING OR HEAT PUMP UNIT (DUCTLESS) C1

SCALE:NTS

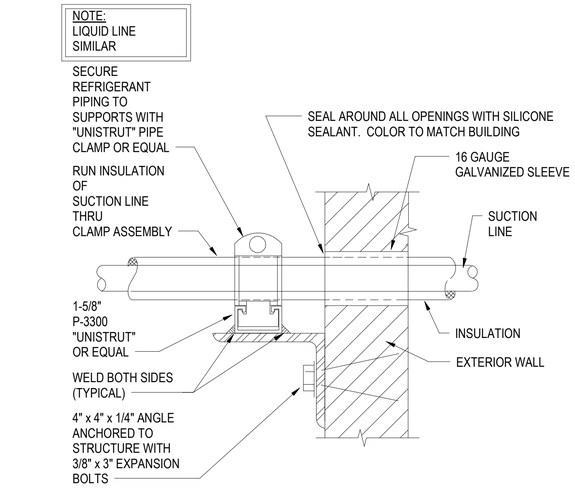

EXTERIOR WALL PENETRATION DETAIL C2

SCALE:NTS

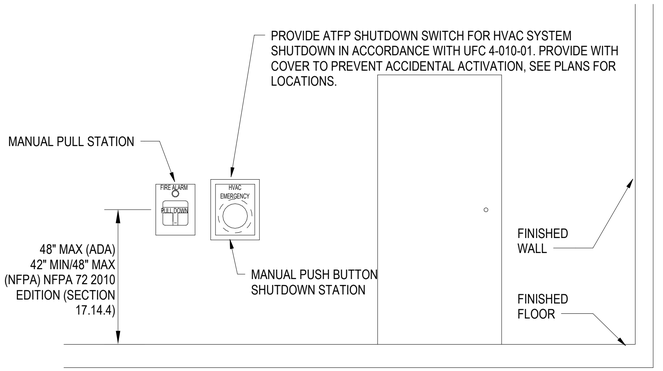

NOTES:
1. LOCATE ADJACENT TO FIRE ALARM MANUAL PULL STATION IF APPLICABLE.
2. INTERLOCK WITH DDC SYSTEM, SEE SEQUENCE OF CONTROLS.
3. PROVIDE LABEL ON SWITCH AS FOLLOWS: "HVAC EMERGENCY"

HVAC SHUTDOWN STATION INSTALLATION DETAIL C4

SCALE:NTS

ELECTRIC UNIT HEATER DETAIL B2

SCALE:NTS

** THIS DETAIL APPLIES TO ALL OVERHEAD MECHANICAL "EQUIPMENT" WEIGHING 31 LBS OR MORE,(DOES NOT APPLY TO DISTRIBUTION SYSTEMS SUCH AS PIPING AND DUCTWORK.)**

ATFP EQUIPMENT BRACING DETAIL B4

SCALE:NTS

APPR | DATE | DESCRIPTION | SYM

NAVFAC

PRELIMINARY NOT FOR CONSTRUCTION

SEAL

IRQ W.M. Jordan COMPANY ~A JOINT VENTURE~

Michael Baker INTERNATIONAL
100 AIRSIDE DRIVE
MOON TOWNSHIP, PA 15108 A/E INFO

APPROVED

FOR COMMANDER NAVFAC

ACTIVITY
MARINE CORPS BASE CAMP LEJEUNE

SATISFACTORY TO DATE

DES	DRW	CHK

PM

BRANCH MANAGER

CHIEF ENG/ARCH

FIRE PROTECTION

DEPARTMENT OF THE NAVY
NAVAL FACILITIES ENGINEERING COMMAND
ROICC FLORENCE CAMP LEJEUNE
MCB CAMP LEJEUNE

NAVAL FACILITIES ENGINEERING COMMAND ~ MID-ATLANTIC
JACKSONVILLE, NC

JACKSONVILLE, NC
P1338 II MEF SIMULATION/TRAINING CENTER REPLACEMENT

MECHANICAL - DETAILS

SCALE: AS NOTED

EPROJECT NO.: 1590892

CONSTR. CONTR. NO.
N40085-20-C-0059

NAVFAC DRAWING NO.

SHEET OF

M-504

DP2 SUBMISSION – P1338 BUILDING - PRE-FINAL SUBMISSION

PLOTTED: 6/10/2021 3:33:46 PM

FILE NAME: BIM 360://HF PACKAGE 3/P1338 MEF SIM CTR-1590892-M.rvt

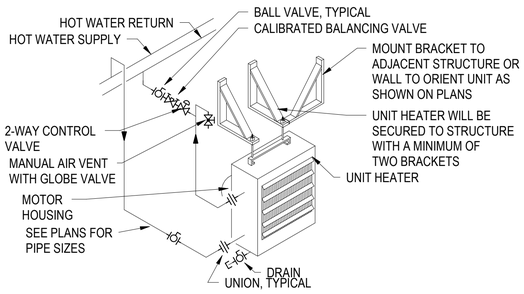

HOT WATER UNIT HEATER DETAIL

SCALE:NTS C1

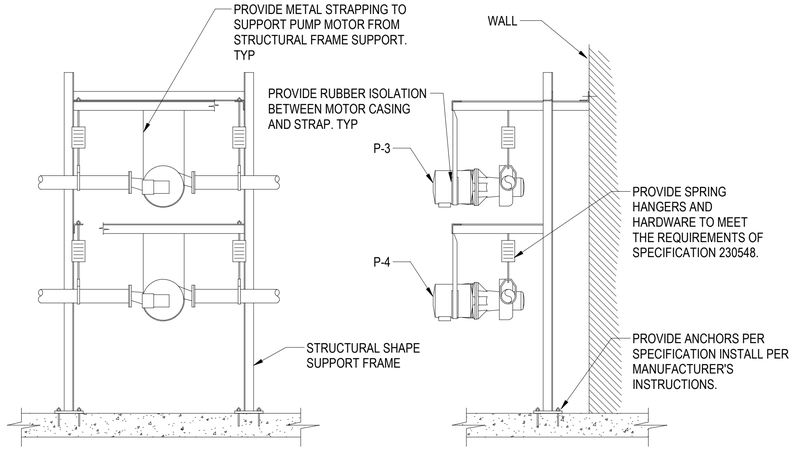

PUMP SUPPORT DETAIL

SCALE:NTS C2

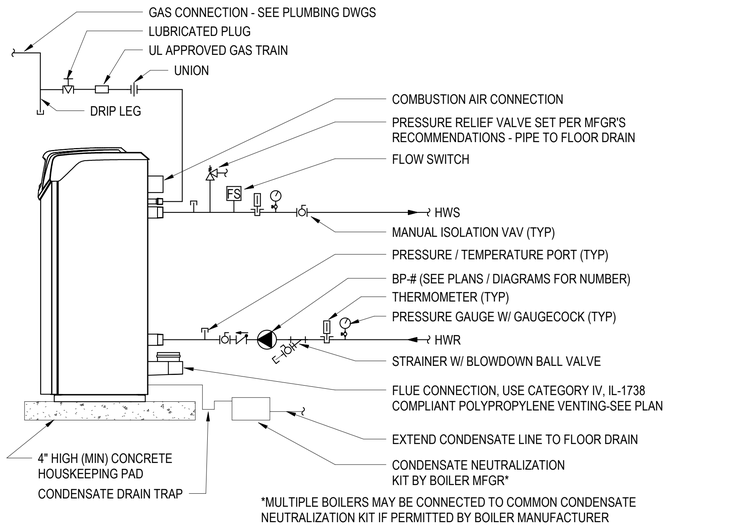

BOILER PIPING DETAIL

SCALE: NTS M-703 C4

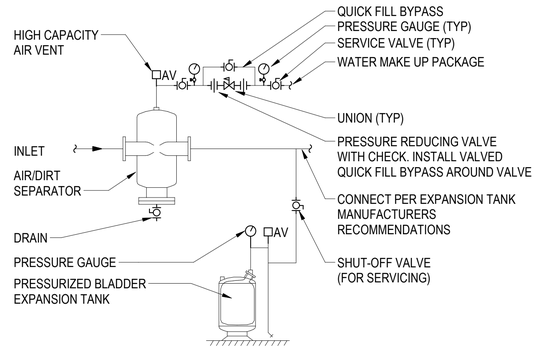

HYDRONICS SYSTEM AIR SEPARATOR & EXPANSION TANK SYSTEM CONNECTION

SCALE:NTS B1

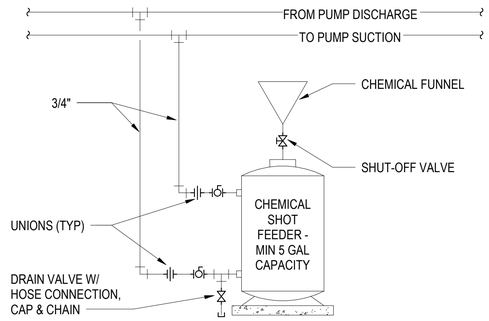

CHEMICAL SHOT FEEDER DETAIL

SCALE: NTS B2

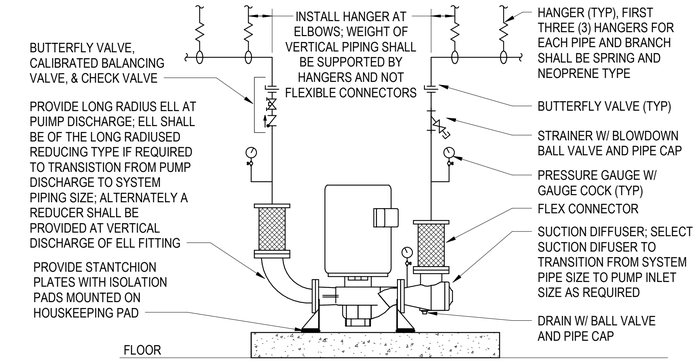

FLOOR SUPPORTED INLINE PUMP DETAIL

SCALE: NTS M-702 B4

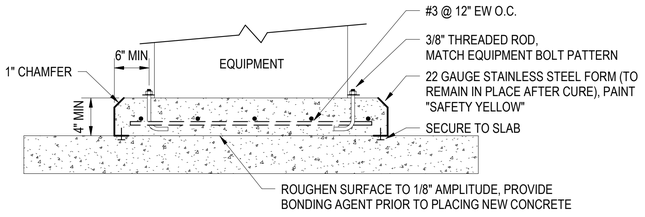

EQUIPMENT PAD DETAIL

SCALE:NTS A2

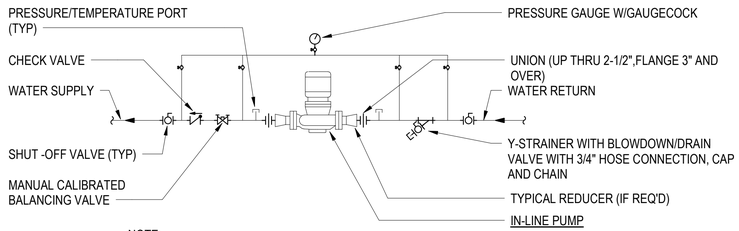

NOTE:
SUPPORT PUMP FROM WALL, FLOOR, OR ROOF STEEL, DO NOT PIPE SUPPORT.

IN-LINE PUMP DETAIL

SCALE:NTS M-703 A4

APPR | DATE | SYM | DESCRIPTION

NAVFAC

PRELIMINARY NOT FOR CONSTRUCTION

SEAL

IRQ W.M. Jordan COMPANY – A JOINT VENTURE –

Michael Baker INTERNATIONAL
100 AIRSIDE DRIVE
MOON TOWNSHIP, PA 15108 A/E INFO

APPROVED

FOR COMMANDER NAVFAC

ACTIVITY
MARINE CORPS BASE CAMP LEJEUNE

SATISFACTORY TO DATE

DES	DRW	CHK
PM		
BRANCH MANAGER		
CHIEF ENG/ARCH		
FIRE PROTECTION		

DEPARTMENT OF THE NAVY
NAVAL FACILITIES ENGINEERING COMMAND
ROICC FLORENCE CAMP LEJEUNE
MCB CAMP LEJEUNE

NAVAL FACILITIES ENGINEERING COMMAND – MID-ATLANTIC
JACKSONVILLE, NC

JACKSONVILLE, NC
P1338 II MEF SIMULATION/TRAINING CENTER REPLACEMENT

MECHANICAL - DETAILS

SCALE: AS NOTED
EPROJECT NO.: 1590892
CONSTR. CONTR. NO. N40085-20-C-0059
NAVFAC DRAWING NO.
SHEET OF

M-505

DP2 SUBMISSION – P1338 BUILDING - PRE-FINAL SUBMISSION

PLOTTED: 6/10/2021 3:33:49 PM

FILE NAME: BIM 360://HF PACKAGE 3/P1338 MEF SIM CTR-1590892-M.rvt

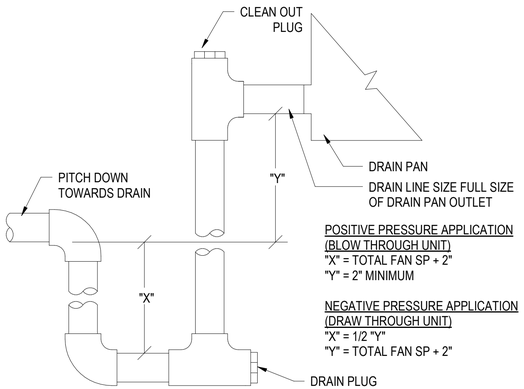

CONDENSATE TRAP/DRAIN DETAIL C1

SCALE:NTS

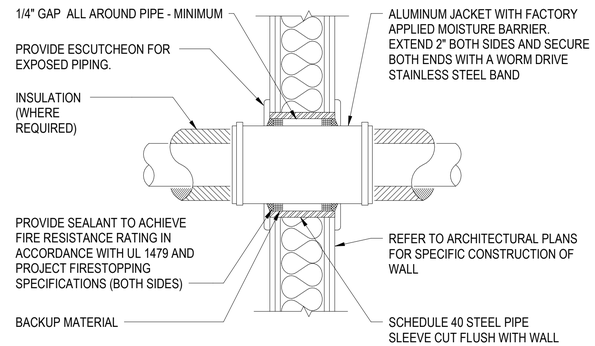

NOTES:
1. FOR GYB BOARD WALLS PROVIDE MIN. 16 GUAGE GALV. STEEL SLEEVE WITH LOCK-TYPE LONGITUDINAL SEAM.
2. PIPE SLEEVES FOR NON-FIRE RATED WALLS SHALL BE PROVIDED WITH CLEARANCES IN ACCORDANCE WITH THE MECHANICAL SEISMIC SPECIFICATIONS.

WALL PENETRATON DETAIL C2

SCALE:NTS

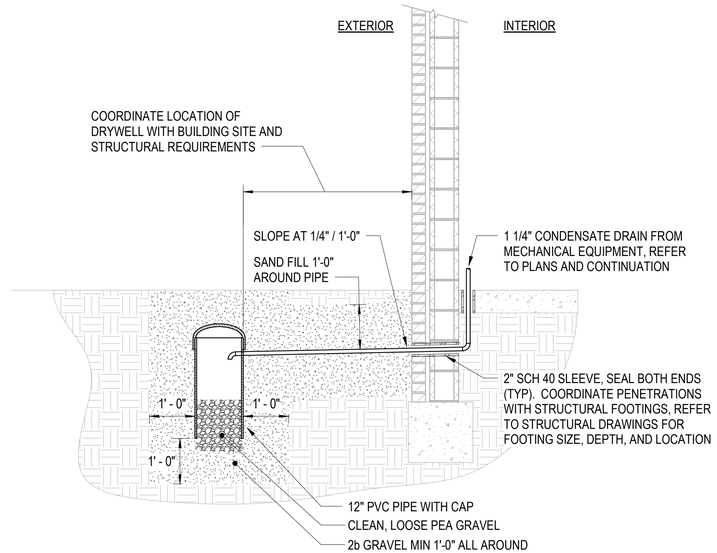

DRYWELL DETAIL C4

SCALE: NTS

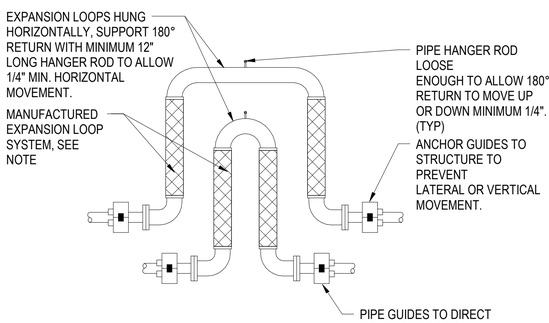

NOTES:
1. LOOPS MAY BE INSTALLED INDIVIDUALLY OR BE NESTED (AS SHOWN) PER MANUFACTURERS RECOMMENDATIONS.

HYDRONIC EXPANSION LOOP DETAIL B1

SCALE:NTS

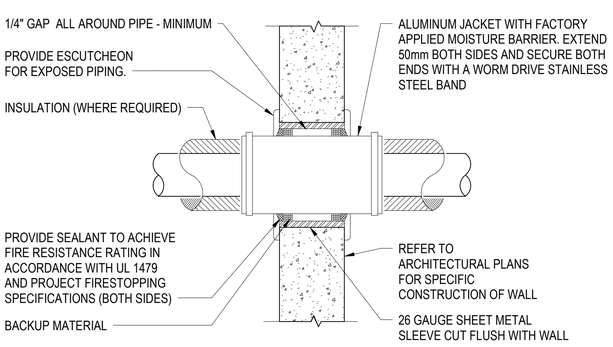

NOTES:
1. FOR GYB. BOARD WALLS PROVIDE MIN. 16 GAUGE GALV. STEEL SLEEVE WITH LOCK-TYPE LONGITUDINAL SEAM.

PIPE WALL PENETRATION DETAIL B2

SCALE:NTS

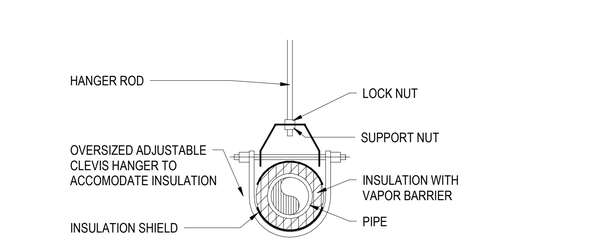

NOTES:
1. REFER TO SPECIFICATIONS FOR HANGER ROD SIZES AND SPACING. THE SPACING SHOWN IN SPECIFICATION IS MAXIMUM SPACING PIPE WILL SPAN. THE HANGER SUPPORTS AND STRUCTURAL ELEMENTS OF THE BUILDING SHOULD BE CHECKED FOR LOAD SUPPORT. SPACING MAY HAVE TO BE REDUCED TO LIGHTEN LOAD ON CERTAIN HANGER SUPPORTS. DERATE EXP. SHIELDS BY 50%.

PIPE HANGER DETAIL B4

SCALE:NTS

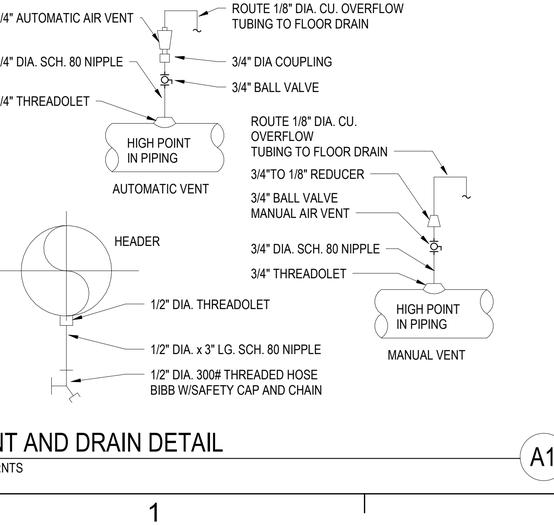

VENT AND DRAIN DETAIL A1

SCALE:NTS

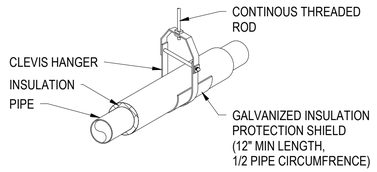

TYPICAL PIPE SUPPORT DETAIL A4

SCALE:NTS

APPR | DATE | DESCRIPTION | SYM

NAVFAC

PRELIMINARY NOT FOR CONSTRUCTION

SEAL

RQ W.M. Jordan COMPANY – A JOINT VENTURE –

Michael Baker INTERNATIONAL
100 AIRSIDE DRIVE
MOON TOWNSHIP, PA 15108
A/E INFO

APPROVED

FOR COMMANDER NAVFAC

ACTIVITY
MARINE CORPS BASE CAMP LEJEUNE

SATISFACTORY TO DATE

DES	DRW	CHK
PM		
BRANCH MANAGER		
CHIEF ENG/ARCH		
FIRE PROTECTION		

DEPARTMENT OF THE NAVY
NAVAL FACILITIES ENGINEERING COMMAND ~ MID-ATLANTIC
ROICC FLORENCE CAMP LEJEUNE
MCB CAMP LEJEUNE
JACKSONVILLE, NC

P1338 II MEF SIMULATION/TRAINING CENTER REPLACEMENT

MECHANICAL - DETAILS

SCALE: AS NOTED
EPROJECT NO.: 1590892
CONSTR. CONTR. NO.
N40085-20-C-0059
NAVFAC DRAWING NO.
SHEET OF

M-506

DP2 SUBMISSION – P1338 BUILDING -PRE-FINAL SUBMISSION

PLOTTED: 6/10/2021 3:33:52 PM

FILE NAME: BIM 360://HF PACKAGE 3/P1338 MEF SIM CTR-1590892-M.rvt

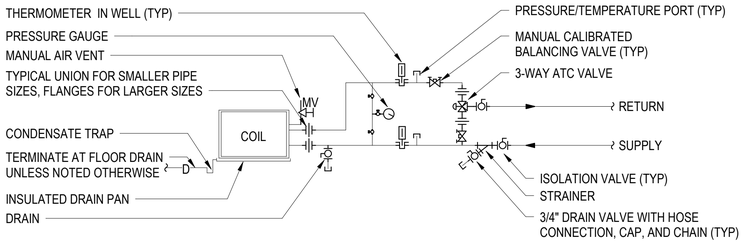

NOTE:
1. INSTALL 3-WAY VALVES AT COILS/LOADS OUT IN SYSTEMS AS REQUIRED TO ALLOW SYSTEM MINIMUM FLOWS, AND TO ALLOW PIPING SYSTEM THROUGHOUT BUILDING TO STAY AT TEMPERATURE
2. DRAIN PAN & TRAP REQUIRED ON HYDRONIC HEATING COILS UNLESS NOTED OTHERWISE

COIL PIPING W/3-WAY VALVES

SCALE: NTS — M-703 — C4

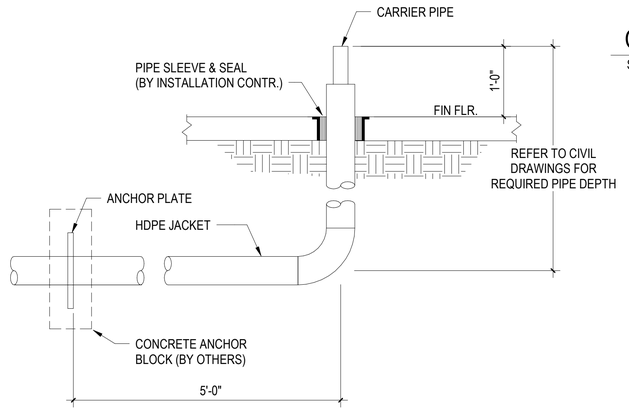

PIPING RISER DETAIL

SCALE:NTS — B1

NOTE:
DRAIN PAN & TRAP REQUIRED ON HYDRONIC HEATING COILS UNLESS NOTED OTHERWISE

COIL PIPING W/2-WAY VALVES DETAIL

SCALE: NTS — M-702 — B4

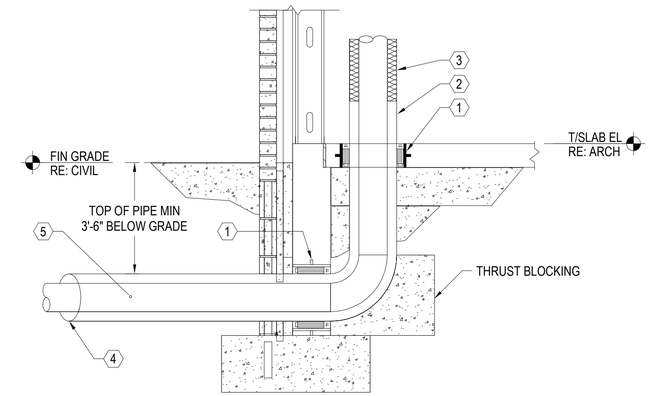

KEYNOTES:
1. PROVIDE PIPE SLEEVE WITH WATER STOP AND ANCHOR COLLAR; SEAL WITH LINK SEAL OR IN ACCORDANCE WITH PIPE MANUFACTUER'S INSTALLATION INSTRUCTIONS.
2. EXTEND PREFABRICATED/PRESINSULATED PIPE TO 12" ABOVE FINISHED FLOOR
3. EXTEND PIPING SERVING CURRENT BUILDING CHILLER/CHILLED WATER SYSTEM AS INDICATED ON DP-2 PLANS; FOR PIPING DEDICATED FOR FUTURE CENTRAL ENERGY PLANT CONNECTION; PIPE TO BE CAPPED AND SEALED.
4. EXTEND CHILLED WATER PIPING TO CHILLER - SEE CIVIL PLANS FOR SITE DISTRIBUTION ROUTING; FOR PIPING DEDICATED FOR FUTURE CENTRAL ENERGY PLANT CONNECTION THE PIPE IS TO BE CAPPED AND SEALED A MINIMUM OF 5' OUTSIDE THE BUILDING FOUNDATION LINE.
5. PRE-FABRICATED/PREINSULATED PIPING FOR DIRECT BURIAL SITE DISTRIBUTION; REFER TO SPECIFICATION SECTION 33 61 00.

TYPICAL CHW SERVICE PIPING

SCALE:NTS — A1

PROVIDE ELECTRICAL HEAT TRACING FOR ALL EXPOSED PIPING, ACCESSORIES, AND COMPONENTS ABOVE GRADE NOT PROVIDED BY HEAT TRACING FROM CHILLER MANUFACTURER. HEAT TRACING SHALL BE PROVIDED ON VERTICAL PIPING BELOW GRADE TO DEPTH OF HORIZONTALLY ROUTED BURIED PIPE.

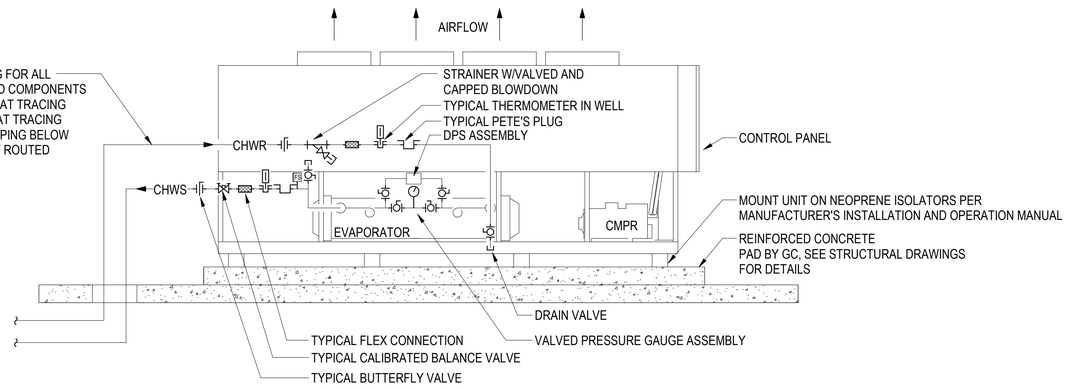

AIR COOLED CHILLER PIPING DETAIL

SCALE:NTS — M-702 — A3

APPR	DATE	SYM	DESCRIPTION

NAVFAC

PRELIMINARY NOT FOR CONSTRUCTION

SEAL

IRQ WM Jordan COMPANY ~A JOINT VENTURE~

Michael Baker INTERNATIONAL
100 AIRSIDE DRIVE
MOON TOWNSHIP, PA 15108
A/E INFO

APPROVED

FOR COMMANDER NAVFAC

ACTIVITY
MARINE CORPS BASE CAMP LEJEUNE

SATISFACTORY TO DATE

DES	DRW	CHK
PM		
BRANCH MANAGER		
CHIEF ENG/ARCH		
FIRE PROTECTION		

DEPARTMENT OF THE NAVY
NAVAL FACILITIES ENGINEERING COMMAND
ROICC FLORENCE CAMP LEJEUNE
MCB CAMP LEJEUNE

NAVAL FACILITIES ENGINEERING COMMAND ~ MID-ATLANTIC
JACKSONVILLE, NC

JACKSONVILLE, NC
P1338 II MEF SIMULATION/TRAINING CENTER REPLACEMENT

MECHANICAL - DETAILS

SCALE: AS NOTED
EPROJECT NO.: 1590892
CONSTR. CONTR. NO.
N40085-20-C-0059
NAVFAC DRAWING NO.
SHEET OF

M-507

DP2 SUBMISSION – P1338 BUILDING –PRE-FINAL SUBMISSION

PLOTTED: 6/10/2021 3:33:53 PM

FILE NAME: BIM 360://HF PACKAGE 3/P1338 MEF SIM CTR-1590892-M.rvt

AIR HANDING UNIT SCHEDULE (AHU-1 & 2) - P1338...

TAG	UNIT AIRFLOWS				CHIILLED WATER COOLING COIL								HOT WATER HEATING COIL							ENERGY RECOVERY SECTION				SUPPLY FAN DATA				EXHAUST FAN DATA				ELECTRICAL					BASIS OF DESIGN		NOTES
																				SUMMER		WINTER																		
																				OA	RET/EXH	OA	RET/EXH																
	MAX SUPPLY (CFM)	MIN HTG SUPPLY (CFM)	OA (CFM)	EXH/ RELIEF (CFM)	ROWS/ (FINS PER FT)	FLOW (GPM)	EWT/ LWT (°F)	WPD (FT H2O)	APD (IN H2O)	CAP SENS/ TOT (MBH)	EAT DB/ WB (°F)	LAT DB/ WB (°F)	ROWS/ (FINS PER FT)	FLOW (GPM)	EWT/ LWT (°F)	WPD (FT H2O)	APD (IN H2O)	CAP (MBH)	EAT/ LAT (°F)	ENT AIR (TOP) LVG AIR (BOT) (°F/°Fwb)	ENT AIR (TOP) LVG AIR (BOT) (°F/°Fwb)	ENT AIR (TOP) LVG AIR (BOT) (°F)	ENT AIR (TOP) LVG AIR (BOT) (°F)	FAN QTY	FAN HP (EA)	TOT SP (IN WG)	EXT SP (IN WG)	FAN QTY	FAN HP (EA)	TOT SP (IN WG)	EXT SP (IN WG)	CIRCUIT	VOLT / PHASE / HERTZ	FLA	MCA	MOP	MANUF	MODEL	
AHU-1	5,750	2,300	1,500	1,250	8/(105)	49.9	42 / 56	18.9	1.26	207.3 / 350.5	83.6 / 70.4	51.0/ 50.9	1/(80)	3.7	140/ 110	0.1	0.02	56	40.6 / 62.9	91.0 / 79.0	81.0 / 67.0	26.0	68.0	1	10	5.90	2.00	1	1.5	1.66	0.75	1 - SF	460 / 3 / 60	14.0	17.5	30	TRANE	CSAA012	1 - 4
																				83.9 / 72.7	89.5 / 75.4	48.8	40.6									2 - EF	460 / 3 / 60	3.4	4.3	15.0			
AHU-2	33,500	13,400	7,500	5,000	8/(112)	281.8	42 / 56	11.7	1.15	1194 / 1980	83.2 / 70	51.0/ 50.9	1/(80)	26.3	140/ 110	0.7	0.02	394	44.9 / 71.6	91.0 / 79.0	81.0 / 67.0	26.0	68.0	4	15	7.99	2.25	1	5	2.89	1.50	1 - SF	460 / 3 / 60	80.0	100.0	175	TRANE	CSAA025 (ERU) / CSAA080 (MAIN)	1 - 4
																				85.2 / 74.0	89.7 / 75.5	44.5	40.3									2 - EF	460 / 3 / 60	8.2	10.3	15.0			

NOTES:
1. HEATING AND COOLING COIL SIZING BASED ON REMOVAL/FAILURE OF ENERGY RECOVERY SECTION.
2. UNIT SHALL BE FACTORY WIRED BY MANUFACTUER; CIRCUIT CONNECTIONS AS SCHEDULED FOR SUPPLY/EXHAUST FAN SECTIONS.
3. UNIT COILS SHALL BE COPPER TUBE ALUMINIM FIN WITH ELECTROFIN COATING; ALL INTERIOR CASING PANELS SHALL BE STAINLESS STEEL.
4. PROVIDE WITH MERV 13 FILTERS ON UNIT SUPPLY; FILTERS AS RECOMMENDED BY MANUFACTURER FOR HX PROTECTION ON UNIT EXHAUST; PROVIDE WITH 2 SETS OF FILTERS; PROVIDE DIFFERNTIAL PRESSURE GAUGES ACROSS FILTER SECTIONS

6/7/2021 12:55

COMPUTER ROOM AIR CONDITIONER (CRAC) SCHEDULE - P1338

TAG	SPACE SERVED	UNIT TYPE	ECM FAN DATA			COOLING CAPACITY						HEATING CAPACITY				HUMIDIFIER CAPACITY (lb/h)	ELECTRICAL			BASIS OF DESIGN		NOTES
			AIR FLOW (CFM)	ESP (IN WG)	FAN (HP)	TOTAL / SENSIBLE (MBH)	EWT /LWT (°F)	GPM	PD (FT)	EAT DB/WB (°F)	LAT DB (°F)	CAPACITY (MBH)	EWT/ LWT (°F)	GPM	PD (FT)		VOLT/ PHASE/ HERTZ	MCA	MFS	MANUF.	MODEL	
CRAC-01	304A - SIM CONTROL (SERVER ROOM)	DOWNFLOW	11000	0.5	(2) @ 3.9	219.2 / 215.5	42 / 56	31.3	13.4	70 / 58.5	53.5	42.5	140 / 110	2.5	<10	15.0	460 / 3 / 60	21.8	25	STULZ	TR-CFU-060-C1L-0-I0	1 - 7
CRAC-02	304A - SIM CONTROL (SERVER ROOM)	DOWNFLOW	11000	0.5	(2) @ 3.9	219.2 / 215.5	42 / 56	31.3	13.4	70 / 58.5	53.5	42.5	140 / 110	2.5	<10	15.0	460 / 3 / 60	21.8	25	STULZ	TR-CFU-060-C1L-0-I0	1 - 7
CRAC-03	304A - SIM CONTROL (SERVER ROOM)	DOWNFLOW	11000	0.5	(2) @ 3.9	219.2 / 215.5	42 / 56	31.3	13.4	70 / 58.5	53.5	42.5	140 / 110	2.5	<10	15.0	460 / 3 / 60	21.8	25	STULZ	TR-CFU-060-C1L-0-I0	1 - 7

NOTES:

1. PROVIDE WITH MANUFACTURER'S 24" HIGH FLOOR STAND TO INSTALL LEVEL WITH RAISED FLOOR; BASIS OF DESIGN UNIT DIMENSIONS ARE 77.4" WIDTH X 40.3" DEPTH X 76.2" HEIGHT.
2. CRAC UNITS FOR SIM CONTROL (SERVER ROOM) 304A HAVE BEEN SELECTED BASED ON PROVIDING "N+1" SERVICE TO THE SPACE.
3. PROVIDE WITH 4" MERV-8 PRE-FILTERS.
4. CONDENSATE PAN SHALL BE DOUBLE SLOPED AND CONSTRUCTED OF NON-CORROSIVE MATERIALS.
5. PROVIDE AN AUXILLIARY DRAIN CONNECTION AT CONDENSATE DRAIN.
6. PROVIDE WITH MANUFACTURER'S STANDARD INFRARED HUMIDIFIER.
7. MANUFACTURER'S INTEGRAL SMOKE DETECTION AND SYSTEM SHUTDOWN BY SUCH DETECTION SHALL BE DISABLED IF PROVIDED; SHUTDOWN OF THE CRAC UNITS SHALL BE UNDER THE CONTROL OF THE FIRE ALARM SYSTEM.

6/7/2021 12:55

APPR | DATE | DESCRIPTION | SYM

NAVFAC

PRELIMINARY NOT FOR CONSTRUCTION

SEAL

IRQ W.M. Jordan COMPANY – A JOINT VENTURE –

Michael Baker INTERNATIONAL
100 AIRSIDE DRIVE
MOON TOWNSHIP, PA 15108 A/E INFO

APPROVED

FOR COMMANDER NAVFAC

ACTIVITY
MARINE CORPS BASE CAMP LEJEUNE

SATISFACTORY TO DATE

DES	DRW	CHK
PM		
BRANCH MANAGER		
CHIEF ENG/ARCH		
FIRE PROTECTION		

DEPARTMENT OF THE NAVY
NAVAL FACILITIES ENGINEERING COMMAND ~ MID-ATLANTIC
ROICC FLORENCE CAMP LEJEUNE
JACKSONVILLE, NC
MCB CAMP LEJEUNE
JACKSONVILLE, NC
P1338 II MEF SIMULATION/TRAINING CENTER REPLACEMENT
MECHANICAL - SCHEDULES

SCALE: AS NOTED
EPROJECT NO.: 1590892
CONSTR. CONTR. NO.
N40085-20-C-0059
NAVFAC DRAWING NO.
SHEET OF

M-601

DP2 SUBMISSION – P1338 BUILDING - PRE-FINAL SUBMISSION

PLOTTED: 6/10/2021 3:33:56 PM
FILE NAME: BIM 360://HF PACKAGE 3/P1338 MEF SIM CTR-1590892-M.rvt

DIFFUSER, REGISTER AND GRILLE SCHEDULE - P1338

TAG	MAX CFM	SERVICE	TYPE	SIZE (INCHES)		MAX NC	BASIS OF DESIGN		NOTES
				FACE	NECK		MANUF	MODEL	
A	190	SUPPLY	DIFFUSER	24 x 24	6" DIA	<25	TITUS	TMS-AA	1 - 3, 4
B	290	SUPPLY	DIFFUSER	24 x 24	8" DIA	<25	TITUS	TMS-AA	1 - 3, 4
C	410	SUPPLY	DIFFUSER	24 x 24	10" DIA	<25	TITUS	TMS-AA	1 - 3, 4
D	630	SUPPLY	DIFFUSER	24 x 24	12" DIA	<25	TITUS	TMS-AA	1 - 3, 4
E	1300	RETURN / EXHAUST / TRANSFER	GRILLE	24 x 24	22 x 22	<20	TITUS	PXP-AA	1 - 3
F	115	RETURN / EXHAUST / TRANSFER	GRILLE	8 x 8	6 x 6	<20	TITUS	355FL	1 - 3
G	345	RETURN / EXHAUST / TRANSFER	GRILLE	12 x 12	10 x 10	<20	TITUS	355FL	1 - 3
H	910	RETURN / EXHAUST / TRANSFER	GRILLE	26 x 14	24 x 12	<20	TITUS	355FL	1 - 3
J	330	SUPPLY	DRUM LOUVER	20 x 10	18 x 8	<20	TITUS	DL	1 - 3
-	-	-	-	-	-	-	-	-	-
-	-	-	-	-	-	-	-	-	-
X	THIS TAG "X" USED TO DESIGNATE BALANCED CFM OF OPEN ENDED DUCT TERMINATIONS.								5

NOTES:
1. REFER TO DRAWINGS FOR ACTUAL AIR BALANCE QUANTITIES IN SPECIFIC LOCATIONS.
2. CONTRACTOR TO VERIFY CEILING TYPE AND PROVIDE PROPER FRAME AND BORDER TYPE.
3. ALL DIFFUSERS, REGISTERS AND GRILLES ARE TO BE OF ALUMINUM CONSTRUCTION AND PROVIDED WITH MANUFACTURER'S STANDARD ENAMEL PAINT FINISH. REFER TO DIVISION 09 90 00 PAINTS AND COATINGS, AND ARCHITECTURAL DRAWINGS FOR FINISH SCHEDULES TO DETERMINE REQUIRED COLOR/FINISH FOR DIFFUSERS/REGISTERS/GRILLES.
4. NC LEVELS ARE BASED ON DIFFUSER BLADES SET FOR HORIZONTAL AIRFLOW.
5. PROVIDE 1/2" HARDWARE CLOTH IN REMOVEABLE "U" FRAME OVER BELMOUTH AT OPEN END OF DUCT.

6/7/2021 12:55

LOUVER (L-) SCHEDULE - P1338

TAG	SERVING	SERVICE	SIZE WxH (IN)	DESIGN CFM	FREE AREA (SQFT)	MAX PRESSURE DROP (IN WG)	BASIS OF DESIGN		NOTES
							MANUF	MODEL	
L-01A	AHU-02 OA INTAKE	INTAKE	78 x 36	7500	>10.9	0.10	RUSKIN	ELF6375DXD	1 - 4
L-01B	AHU-01 INTAKE & SF-1 INTAKE	INTAKE	48 x 36	3500	>6.6	0.10	RUSKIN	ELF6375DXD	1 - 5
L-02	AHU-1 EXH; AHU-2	EXHAUST	96 x 24	6250	>8.4	0.10	RUSKIN	ELF6375DXD	1 - 5
L-03	SF-01 RELIEF	RELIEF	36 x 24	2000	>3.6	0.10	RUSKIN	ELF6375DXD	1 - 4
L-04	EF-2 INTAKE	INTAKE	48 x 24	3000	>4	0.10	RUSKIN	ELF6375DXD	1 - 4
L-05	EF-1 & 2 EXHAUST	EXHAUST	78 x 24	4650	>6.2	0.10	RUSKIN	ELF6375DXD	1 - 5
L-06	EF-3 INTAKE	INTAKE	18 x 18	300	>0.5	0.10	RUSKIN	ELF6375DXD	1 - 4
L-07	EF-3 EXHAUST	EXHAUST	24 x 24	300	>0.5	0.10	RUSKIN	ELF6375DXD	1 - 4
L-08	EF-4 INTAKE	INTAKE	18 x 18	750	>1	0.10	RUSKIN	ELF6375DXD	1 - 4
L-09	EF-3 EXHAUST	EXHAUST	24 x 24	750	>1	0.10	RUSKIN	ELF6375DXD	1 - 4

NOTES:
1. PROVIDE MANUFACTURER'S STANDARD COLOR AND FINISH CHART WITH SUBMITTAL FOR SELECTION BY ARCHITECT.
2. LOUVER SHALL BE AMCA LISTED TO MEET AMCA 550 (HIGH VELOCITY WIND DRIVEN RAIN RESISTANT) AND MIAMI-DADE COUNTY APPROVED.
3. PROVIDE WITH LOW LEAKAGE MOTORIZED DAMPER(S) FOR ATFP COMPLIANCE (3 CFM/SQFT AGAINST 1" DIFFERENTIAL PRESSURE) INTERNAL OR EXTERNAL TO LOUVER. SEE DRAWINGS FOR LOCATION OF MOTORIZED DAMPERS.
4. PROVIDE CORROSION RESISTANT COATINGS AND MATERIALS; PROVIDE WITH ALUMINUM BIRDSCREEN.
5. LOUVER SELECTED FOR SHARED SERVICE OF MULTIPLE DEVICES; INSULATED PLENUM BOX SHALL BE PROVIDED BEHIND LOUVER WITH DUCTED CONNECTION TO EACH DEVICE (COMPLETE WITH BACKDRAFT DAMPERS TO PREVENT CROSS FLOW IN ADDITION TO MOTORIZED DAMPERS FOR CONTROL AND ATFP SHUTDOWN).

6/7/2021 12:55

VARIABLE AIR VOLUME (VAV) BOX SCHEDULE - P1338

TAG	SPACE SERVED	COOLING CFM		INLET DUCT SIZE (DIA)	REHEAT COIL DATA								BASIS OF DESIGN		NOTES
		MAX	MIN		HTG AIRFLOW (CFM)	MBH	GPM	COIL ROWS	HW TEMP (°F)		MAX. WPD (FT H2O)	LAT (°F)	MANUF	MODEL	
									EWT	LWT					
VAV-1.01	402 - STORAGE / SHIPPING / RECEIVING	900	300	10	300	13.9	1.0	2	140	112	0.2	98	TRANE	VCWF	1 - 4
VAV-1.02	114, 113, 112, C014, C016 - OFFICES & CORRIDOR; 115 COMM	625	250	8	250	10.3	1.0	2	140	120	0.10	93	TRANE	VCWF	1 - 4
VAV-1.03	109 - SIM ANALYST	1,500	400	12	400	14.9	1.0	2	140	110	0.10	89	TRANE	VCWF	1 - 5
VAV-1.04	111 - OIC OFFICE	125	50	4	50	3.0	0.5	1	140	128	0.52	110	TRANE	VCWF	1 - 5
VAV-1.05	108 - ADMIN BREAK ROOM & C011 CORRIDOR	450	300	6	300	11.8	1.0	2	140	116	0.70	91	TRANE	VCWF	1 - 4
VAV-1.06	107 - SIM OPERATOR	1,000	300	10	500	22.2	2.0	2	140	118	0.70	96	TRANE	VCWF	1 - 5
VAV-1.07	106 - NCOIC / SUPPLY CLERK	200	80	5	100	4.1	0.5	1	140	123	0.60	93	TRANE	VCWF	1 - 5
VAV-1.08	105 - LIBRARY / FILE STORAGE	600	200	8	300	11.1	1.0	2	140	118	0.10	89	TRANE	VCWF	1 - 5
VAV-1.09	C012 - CORRIDOR	350	80	5	80	3.7	0.5	1	140	125	0.60	98	TRANE	VCWF	1 - 4
VAV-2.01	207 - EXERCISE CONTROL, 208 COMM	650	200	8	200	9.3	1.0	2	140	121	0.10	98	TRANE	VCWF	1 - 5
VAV-2.02	206 - BREAK ROOM; C023 - COR	800	450	8	450	16.4	1.0	2	140	107	0.20	89	TRANE	VCWF	1 - 5
VAV-2.03	209 - BRIEF / DEBRIEF	350	100	5	100	4.1	0.5	1	140	123	0.60	93	TRANE	VCWF	1 - 5
VAV-2.04	303B - SECURE VTC	450	175	6	175	7.4	0.5	2	140	110	0.20	94	TRANE	VCWF	1 - 5
VAV-2.05	303A - SECURE WS	200	75	5	75	3.6	0.5	1	140	125	0.60	99	TRANE	VCWF	1 - 5
VAV-2.06	302 - SERVER ADMIN	250	100	5	100	4.1	0.5	1	140	123	0.60	93	TRANE	VCWF	1 - 4
VAV-2.07	304B/304A/C034 - SIM CONTROL (SERVER/VAULT); CORR	850	600	10	600	14.2	1.0	1	140	111	3.22	77	TRANE	VCWF	1 - 4
VAV-2.08	203/C021/C022 - STORAGE AND CORRIDOR	600	500	8	500	20.6	1.5	3	140	112	0.30	93	TRANE	VCWF	1 - 4
VAV-2.09	200B - CLASSIFIED SIMULATION CLASSROOM	1,800	500	14	600	23.1	1.5	2	140	109	0.15	91	TRANE	VCWF	1 - 5
VAV-2.10	200A - CLASSIFIED SIMULATION CLASSROOM	1,800	500	14	600	23.1	1.5	2	140	109	0.15	91	TRANE	VCWF	1 - 5
VAV-2.11	200C - SIMULATION CLASSROOM	1,200	400	10	400	15.7	1.0	2	140	108	0.18	91	TRANE	VCWF	1 - 5
VAV-2.12	202 - EXERCISE CONTROL	1,800	500	14	600	23.1	1.5	2	140	109	0.15	91	TRANE	VCWF	1 - 5
VAV-2.13A	201 - AUDITORIUM/READY RM (WEST)	1,250	400	10	700	32.3	2.0	3	140	107	0.35	97	TRANE	VCWF	1 - 5
VAV-2.13B	201 - AUDITORIUM/READY RM (EAST)	1,250	400	10	700	32.3	2.0	3	140	107	0.35	97	TRANE	VCWF	1 - 5
VAV-2.14	300X - SIMULATION CLASSROOM	1,800	600	14	600	23.1	1.5	2	140	109	0.15	90	TRANE	VCWF	1 - 5
VAV-2.15	300A - SIMULATION CLASSROOM	1,800	600	14	600	23.1	1.5	2	140	109	0.15	90	TRANE	VCWF	1 - 5
VAV-2.16	300Y - SIMULATION CLASSROOM	1,800	600	14	600	23.1	1.5	2	140	109	0.15	90	TRANE	VCWF	1 - 5
VAV-2.17	300B - SIMULATION CLASSROOM	1,800	600	14	600	23.1	1.5	2	140	109	0.15	90	TRANE	VCWF	1 - 5
VAV-2.18	301A - SIMULATION CLASSROOM	1,800	600	14	600	23.1	1.5	2	140	109	0.15	90	TRANE	VCWF	1 - 5
VAV-2.19	301B - SIMULATION CLASSROOM	1,800	600	14	600	23.1	1.5	2	140	109	0.15	90	TRANE	VCWF	1 - 5
VAV-2.20	300Z - SIMULATION CLASSROOM	1,800	600	14	600	23.1	1.5	2	140	109	0.15	90	TRANE	VCWF	1 - 5
VAV-2.21	300C - SIMULATION CLASSROOM	1,800	600	14	600	23.1	1.5	2	140	109	0.15	90	TRANE	VCWF	1 - 5
VAV-2.22	C031 - COR, 305 COMM	250	80	5	200	7.8	0.5	2	140	108	0.20	91	TRANE	VCWF	1 - 4
VAV-2.23	C030 -CORRIDOR	600	150	8	400	15.7	1.0	3	140	108	0.20	91	TRANE	VCWF	1 - 4
VAV-2.24	C020 - COR	250	80	5	200	7.8	0.5	2	140	108	0.20	91	TRANE	VCWF	1 - 4
VAV-2.25	101 - BRIEF/DEBRIEF	750	200	8	200	9.3	1.0	2	140	121	0.10	98	TRANE	VCWF	1 - 5
VAV-2.26	102 - BRIEF/DEBRIEF	750	200	8	200	9.3	1.0	2	140	121	0.10	98	TRANE	VCWF	1 - 5
VAV-2.27	100 - ENTRY WS	125	40	4	60	3.2	0.5	1	140	127	0.52	105	TRANE	VCWF	1 - 4
VAV-2.28	L010 - MAIN ENTRY LOBBY	1,250	300	10	600	24.1	2.0	2	140	116	0.70	92	TRANE	VCWF	1 - 4
VAV-2.29	103A - FIRE STORAGE & CORRIDOR C013	350	150	6	275	11.4	1.0	2	140	117	0.70	93	TRANE	VCWF	1 - 4
VAV-2.30	104A - FIRE ROOM	450	150	6	150	6.9	0.5	2	140	112	0.20	98	TRANE	VCWF	1 - 5
VAV-2.31	104B - FIRE ROOM	450	150	6	150	6.9	0.5	2	140	112	0.20	98	TRANE	VCWF	1 - 5
VAV-2.32	104C - FIRE ROOM	450	150	6	150	6.9	0.5	2	140	112	0.20	98	TRANE	VCWF	1 - 5
VAV-2.33	C010 - CORRIDOR	175	40	4	60	3.3	0.5	1	140	127	0.60	105	TRANE	VCWF	1 - 4

NOTES:
1. MAXIMUM ALLOWABLE STATIC PRESSURE LOSS ACROSS THE BOX = 0.5 INCHES WATER GAUGE.
2. MAXIMUM DISCHARGE STATIC PRESSURE DOWNSTREAM = 0.5 INCHES WATER GAUGE.
3. MAXIMUM ALLOWABLE DISCHARGE OR RADIATED NOISE CRITERIA (NC) = 30.
4. HOT WATER COIL PERFORMANCE DATA IS BASED ON A 140 DEGREE EWT - MFG TO PROVIDE SPECIFIC COIL PARAMETERS (FPI, ETC.) TO MEET ALL REQUIRED PERFORMANCE CRITERIA (MBH @ 140° INPUT; TOTAL APD ACROSS BOX & COIL)
5. ROOM TO CONTAIN OCCUPANCY SENSOR TIED TO VAV BOX TO ALLOW FOR SHUT-OFF MINIMUM AIRFLOW DURING PERIODS OF UNOCCUPANCY (VS. SCHEDULED MINIMUM).

6/7/2021 12:55

APPR | DATE | DESCRIPTION | SYM

NAVFAC

PRELIMINARY NOT FOR CONSTRUCTION

SEAL

IRQ Jordan COMPANY ~ A JOINT VENTURE ~

Michael Baker INTERNATIONAL
100 AIRSIDE DRIVE, MOON TOWNSHIP, PA 15108 — A/E INFO

APPROVED

FOR COMMANDER NAVFAC

ACTIVITY
MARINE CORPS BASE CAMP LEJEUNE

SATISFACTORY TO DATE

DES	DRW	CHK

PM

BRANCH MANAGER

CHIEF ENG/ARCH

FIRE PROTECTION

DEPARTMENT OF THE NAVY
NAVAL FACILITIES ENGINEERING COMMAND ~ MID-ATLANTIC
JACKSONVILLE, NC
ROICC FLORENCE CAMP LEJEUNE
MCB CAMP LEJEUNE

JACKSONVILLE, NC
P1338 II MEF SIMULATION/TRAINING CENTER REPLACEMENT
MECHANICAL - SCHEDULES

SCALE: AS NOTED

EPROJECT NO.: 1590892

CONSTR. CONTR. NO.
N40085-20-C-0059

NAVFAC DRAWING NO.

SHEET OF

M-602

DP2 SUBMISSION – P1338 BUILDING - PRE-FINAL SUBMISSION

PLOTTED: 6/10/2021 3:34:00 PM

FILE NAME: BIM 360://HF PACKAGE 3/P1338 MEF SIM CTR-1590892-M.rvt

DUCTLESS MINI-SPLIT AIR CONDITIONER (SSAC/SSCU) & HEAT PUMP (SSHP/HPCU) SYSTEM SCHEDULE - P1338

TAG (INDOOR / OUTDOOR UNIT)	SPACE SERVED	ARI COOLING CAPACITY		HEATING CAPACITY		ARI MATCHED PAIR EFFICIENCY			INDOOR UNIT				OUTDOOR UNIT					REFRIGERANT PIPING				BASIS OF DESIGN		NOTES
		TOTAL (MBH)	MIN. (MBH)	@ AHRI 47° OUTDOOR	@ 17° OUTDOOR	SEER	EER	HSPF	FAN AIRFLOW MIN-MAX (CFM)	TYPE	SIZE LENGTH X HEIGHT X DEPTH (INCHES)	WEIGHT (LBS)	ELECTRICAL (SEE NOTE 1) VOLTS/ PHASE/ HERTZ	MCA (AMPS)	MOCP (AMPS)	SIZE LENGTH X WIDTH X HEIGHT (INCHES)	WEIGHT (LBS)	LIQUID LINE Φ	VAPOR LINE Φ	MAX PIPING LENGTH (FT)	MAX ELEVATION (FT)	MANUF	MODEL (INDOOR / OUTDOOR UNIT)	
SSAC-01 / SSCU-01	110A - STOR	18	8	-	-	18.5	9.9	-	320 - 425	WALL MTD	36 x 10 x 12	30	208 / 1 / 60	11	28	32 x 11 x 25	100	1/4	1/2	165	100	MITSUBISHI	PKA/PUY-A18-BS	1-3,5-10
SSAC-02 / SSCU-02	208 - COMM	30	9	-	-	19.8	9.5	-	635 - 775	WALL MTD	46 x 12 x 15	50	208 / 1 / 60	19	26	38 x 14 x 38	155	3/8	5/8	225	100	MITSUBISHI	PKA/PUY-A30-BS	1-3,5-10
SSAC-03 / SSCU-03	304B - SIM CTRL SECURE COMM (VAULT)	36	16	-	-	18.8	10.8	-	705 - 920	WALL MTD	46 x 12 x 15	50	208 / 1 / 60	25	31	42x 14 x 53	215	3/8	5/8	225	100	MITSUBISHI	PKA/PUY-A36-BS	1-3,5-10
SSHP-01 / HPCU-01	115 - COMM	18	8	19	11.3	18.5	9.9	10.2	320 - 425	WALL MTD	36 x 10 x 12	30	208 / 1 / 60	11	28	32 x 11 x 25	100	1/4	1/2	100	100	MITSUBISHI	PKA/PUY-A18-BS	1 - 10
SSHP-02 / HPCU-02	305 - COMM	18	8	19	11.3	18.5	9.9	10.2	320 - 425	WALL MTD	36 x 10 x 12	30	208 / 1 / 60	11	28	32 x 11 x 25	100	1/4	1/2	100	100	MITSUBISHI	PKA/PUY-A18-BS	1 - 10

NOTES:
1. INDOOR UNIT SHALL BE POWERED BY THE OUTDOOR UNIT. POWER AND CONTROL WIRING BETWEEN INDOOR AND OUTDOOR UNITS PROVIDED BY MECHANICAL CONTRACTOR.
2. PROVIDE WITH LOCAL DISCONNECT, OVERCURRENT PROTECTION, AND STARTER.
3. ARI COOLING RATED CAPACITIES ARE BASED ON 80°F DB/67°F WB INDOOR TEMPERATURES AND 95°F DB/75°F WB OUTDOOR TEMPERATURES.
4. ARI HEATING RATED CAPACITIES ARE BASED ON 70°F DB/60°F WB INDOOR TEMPERATURES AND 47°F DB/43°F WB OUTDOOR TEMPERATURES.
5. PROVIDE UNIT WITH LOW AMBIENT COOLING CAPABILITY DOWN TO 15°F OR LESS.
6. PROVIDE WITH CONDENSATE PUMP AS REQUIRED TO PROVIDE NECESSARY LIFT TO ACCOMMODATE GRAVITY CONDENSATE DRAINAGE TO POINT OF TERMINATION AS INDICATED ON PLANS.
7. PROVIDE WITH COMPONENTS FULLY CHARGED WITH R-410A REFRIGRANT AND INTERCONNECTING REFRIGERANT PIPING FOR FIELD INSTALLATION.
8. PROVIDE WITH MANUFACTURER'S STANDARD WASHABLE AIR FILTER/FILTRATION SYSTEM.
9. UNIT TO BE PROVIDED WITH BACNET CONTROLLER FOR CONNECTION AND CONTROL FROM BUILDING DDC SYSTEM
10. OUTDOOR UNIT TO BE PROVIDED WITH MANUFACTURER'S STANDARD SEACOAST PROTECTION SYETEM FOR CORROSION RESISTANCE WHEN INSTALLED IN A COASTAL ENVIRONMENT.

6/7/2021 12:55

EXHAUST (EF-) & SUPPLY (SF-) FAN SCHEDULE - P1338

TAG	SERVICE	LOCATION / SPACE SERVED	FAN TYPE	WHEEL TYPE	DRIVE TYPE	AIR FLOW (CFM)	ESP (IN. WG.)	FAN RPM	MAX SOUND (SONES)	MOTOR DATA			BASIS OF DESIGN		NOTES
										MOTOR SIZE (HP)	MOTOR RPM	VOLTS/ PHASE/ HERTZ	MANUF	MODEL	
SF-1	SUPPLY	401 - MECHANICAL (HOT)	INLINE	BI	DIRECT	2,000	0.5	1011	8.8	1/2	1140	115 / 1 / 60	GREENHECK	SQ-160-B	1 - 3, 6
EF-1	EXHAUST	101 - CLASSIFIED AREA RR, ETC.	INLINE	BI	DIRECT	1,650	0.5	870	6.7	1/2	1140	115 / 1 / 60	GREENHECK	SQ-160-B	1,2,4
EF-2	EXHAUST	403 - ELECTRICAL ROOM	INLINE	BI	DIRECT	3,000	0.5	1616	18	2	1725	460 / 3 / 60	GREENHECK	SQ-160HP-VG	1 - 3
EF-3	EXHAUST	116 - ELECTRICAL ROOM	WALL PROP	PROP	DIRECT	300	0.25	979	4.0	1/4	1725	115 / 1 / 60	GREENHECK	SE1-12-432 VG	1 - 3, 5
EF-4	EXHAUST	306 - ELECTRICAL ROOM	WALL PROP	PROP	DIRECT	750	0.25	1308	7.2	1/4	1725	115 / 1 / 60	GREENHECK	SE1-12-432 VG	1 - 3, 5

NOTES:
1. PROVIDE WITH LOCAL DISCONNECT SWITCH FOR FIELD MOUNTING AND INSTALLATION. PROVIDE WITH MOTOR STARTER AND OVERCURRENT PROTECTION.
2. PROVIDE UNIT WITH SOLID STATE SPEED CONTROLLER TO BE MOUNTED ON UNIT (SF 1, EF-1) OR ECM WITH DIAL (EF 2, 3,4) - FIELD ADJUSTABLE TO SCHEDULED AIRFLOW.
3. CONTROL: CONTROL SHALL BE BY SPACE MOUNTED THERMOSTAT FOR VENTILATION ROOM COOLING - SEE CONTROL DRAWINGS.
4. CONTROL: INTERLOCK TO OPERATE CONTINOUSLY IN CONJUNCTION WITH ASSOCIATED AHU-2 (SECURE AREA) OCCUPATION - SEE CONTROL DRAWINGS.
5. PROVIDE WITH LOW LEAKAGE INSULATED DAMPER.
6. PROVIDE WITH FILTER SECTION UTILIZING 1" PLEATED MERV 8 FILTERS (SIZE 20x20x1).

6/7/2021 12:55

APPR | DATE | DESCRIPTION | SYM

NAVFAC

PRELIMINARY NOT FOR CONSTRUCTION

SEAL

IRQ W.M. Jordan COMPANY – A JOINT VENTURE –

Michael Baker INTERNATIONAL

100 AIRSIDE DRIVE
MOON TOWNSHIP, PA 15108 A/E INFO

APPROVED

FOR COMMANDER NAVFAC

ACTIVITY
MARINE CORPS BASE
CAMP LEJEUNE

SATISFACTORY TO DATE

DES	DRW	CHK

PM

BRANCH MANAGER

CHIEF ENG/ARCH

FIRE PROTECTION

DEPARTMENT OF THE NAVY
NAVAL FACILITIES ENGINEERING COMMAND ~ MID-ATLANTIC
JACKSONVILLE, NC
ROICC FLORENCE CAMP LEJEUNE
MCB CAMP LEJEUNE

JACKSONVILLE, NC
P1338 II MEF SIMULATION/TRAINING CENTER
REPLACEMENT

MECHANICAL - SCHEDULES

SCALE: AS NOTED

EPROJECT NO.: 1590892

CONSTR. CONTR. NO.
N40085-20-C-0059

NAVFAC DRAWING NO.

SHEET OF

M-603

DP2 SUBMISSION – P1338 BUILDING - PRE-FINAL SUBMISSION

PLOTTED: 6/10/2021 3:34:03 PM

FILE NAME: BIM 360://HF PACKAGE 3/P1338 MEF SIM CTR-1590892-M.rvt

PACKAGED AIR COOLED CHILLER SCHEDULE (CH-01,02) - P1338

TAG	NOMINAL CAPACITY (TONS)	NET CAPACITY @95° OAT (TONS)	EFFICIENCY		EVAPORATOR				CONDENSER FANS		COMPRESSOR				ELECTRICAL			BASIS OF DESIGN		NOTES
			EER	NPLV	EWT (°F)	LWT (°F)	GPM	PD (FT H2O)	NO. OF FANS	FAN FLA (EACH)	QTY	TYPE	NO. OF CIRCUITS	REFRIG. TYPE	VOLTS/ PHASE/ HERTZ	MCA	MOP	MANUF.	MODEL	
CH-01	130	118.1	10.2	15.7	56	42	200.0	6.0	10	2.8	2	ROTARY SCREW	2	R-134A	460 / 3 / 60	229	250	TRANE	RTAF-130	1 - 11
CH-02	130	118.1	10.2	15.7	56	42	200.0	6.0	10	2.8	2	ROTARY SCREW	2	R-134A	460 / 3 / 60	229	250	TRANE	RTAF-130	1 - 11

NOTES:
1. UNIT PERFORMANCE INDICATED BASED ON 95° AMBIENT AIR TEMPERATURE.
2. CHILLER PHYSICAL DATA: LENGTH =230"; WIDTH = 87"; HEIGHT = 98"; OPERATING WEIGHT = 8631 LBS; REFRIGERANT CHARGE = 86.6 + 84.9 = 171.5 LB.
3. CHILLER TO BE EQUIPPED WITH LOW SOUND FANS; SHELL AND TUBE TYPE EVAPORTATOR HEAT EXCHANGER; MICROCHANNEL CONDENSER WITH CORROSION RESISTANT COATING.
4. CONDENSER FANS TO HAVE SOUND ATTENUATION AS REQUIRED TO REDUCE SOUND PRESSURE LEVELS TO 85 dBA OR LESS WITH WITH A REFERENCE PRESSURE OF 20 MICROPASCALS IAW AHRI 575.
5. ALL COILS SHALL HAVE COATINGS THAT PASS A 6000 HR ASTM B117 SALT-SPRAY TEST. COIL COATING MUST BE FLEXIBLE POLYMER E-COATING UNIFORMLY COVERING THE COIL. COATING MUST MEET 5B RATING FOR CROSS HATCH ADHESION IAW ASTM D3359-97. COILS MUST INCLUDE TOP COAT TO PREVENT UV DEGRADATION OF E-COATING FILM; TOP COATING MUST HAVE DRY FILM THICKNESS FROM 120-170µm. FIELD COATED COILS WILL NOT BE ACCEPTED.
6. ELECTRICAL DATA LISTED IS FOR SINGLE POINT POWER CONNECTION; PROVIDE WITH FACTORY INSTALLED SINGLE POINT NON-FUSED DISCONNECT, UNIT MOUNTED WITH LOCKABLE HANDLE. CHILLERS TO INCLUDE PHASE LOSS WITH UNDER/OVER VOLTAGE PROTECTION WITH LED INDICATION OF THE FAULT TYPE.
7. PROVIDE SOFT STARTER IN UL1995 RATED PANEL; STARTER SHALL BE FACTORY MOUNTED AND PRE-WIRED TO COMPRESSOR MOTORS AND CONTROL PANEL.
8. PROVIDE CHILLER WITH FACTORY INSTALLED THERMOSTATICALLY CONTROLLED HEATERS/HEAT TRACING TO PROTECT DOWN TO 10°F AMBIENT IN OFF-CYCLE ; HEAT TRACING OF CHW PIPING AND CWBT(S) OUTSIDE OF UNIT TO BE PROVIDED SEPARATELY.
9. CHILLER SHALL BE CAPABLE OF OPERATION IN AMBIENT CONDITIONS TO 15° F.
10. PROVIDE WITH THERMAL DISPERSION TYPE FLOW SWITCH ON EVAPORATOR TO INDICATE PROOF OF FLOW (PADDLE TYPE FLOW SWITCHES ARE NOT ACCEPTABLE).
11. PROVIDE WITH LOUVERED PANELS TO COVER THE CONDENSER COIL FOR PROTECTION AGAINST VANDALISM, DEBRIS OR HAIL.

6/7/2021 12:54

ELECTRIC WALL (EWH) & UNIT HEATER (EUH) SCHEDULE - P1338

TAG	AREA (ROOM) SERVED	AIR FLOW (CFM)	HEATER DATA			WEIGHT (LBS)	BASIS OF DESIGN		NOTES
			KW	VOLTS/ PHASE/ HERTZ	AMPS		MANUF	MODEL	
EWH-01	116 - ELEC	80	1.5	120 / 1 / 60	12.9	10	INDEECO	HLA12	1
EWH-02	306 - ELEC	80	1.5	120 / 1 / 60	12.9	10	INDEECO	HLA12	1
EUH-01	403 - ELEC	350	3.7	480/ 3 / 60	4.66	25	INDEECO	UHIR	1

NOTES : 1. UNIT SHALL BE CONTROLLED BY BUILDING DDC SYSTEM THERMOSTAT; PROVIDE WITH DISCONNECT.

6/7/2021 12:55

HOT WATER BOILER (B-) SCHEDULE - B1338

TAG	TYPE	MAX OUTPUT (MBH)	MAX GAS INPUT (MBH)	MIN GAS INPUT (MBH)	MIN GAS PRESS (IN WG)	WATER DATA				PUMP			BASIS OF DESIGN		NOTES
						EWT (°F)	LWT (°F)	GPM	WPD (FT H20)	MOTOR (HP)	VOLT/ PHASE/ HERTZ	AMPS	MANUF	MODEL	
B-1	CONDENSING	387	399	39.9	4	110	140	22	4	BP-1, SEE PUMP SCEHDULE			LOCHINVAR	KBX0400N	1 - 7
B-2	CONDENSING	387	399	39.9	4	110	140	22	4	BP-2, SEE PUMP SCHEDULE			LOCHINVAR	KBX0400N	1 - 7
B-3	CONDENSING	387	399	39.9	4	110	140	22	4	BP-3, SEE PUMP SCHEDULE			LOCHINVAR	KBX0400N	1 - 7

NOTES:
1. PROVIDE WITH MULTIPLE BOILER CONTROLLER AND INTERFACE TO BUILDING DDC SYSTEM (BACNET COMPATIBLE)
2. PROVIDE WITH DIRECT SPARK IGNITION SYSTEM, MODULATING GAS VALVE AND BURNER CAPABLE OF 5:1 TURNDOWN.
3. BOILER SHALL ACHIEVE 95% THERMAL EFFICIENCY & MEET ALL CURRENT LOW NOx REGULATIONS.
4. BOILER TO BE SUPPLIED WITH FORCED COMBUSTION AIR DRAFT SYSTEM.
5. PROVIDE THRU-WALL TERMINATIONS FOR VENTING AND COMBUSTION AIR INLET AS INDICATED ON PLANS & DETAILS UTLIZING MANUFACTURER'S CONCENTRIC VENT KIT.
6. PROVIDE WITH MANUFACTUER'S CONDENSATE TRAP AND NEUTRALIZATION KIT FOR CONDENSATE DISCHARGE.
7. UNIT SHALL COMPLY WITH ASME CSD-1 REQUIREMENTS FOR ELECTRICAL (PART CE) AND WATERSIDE CONTROL (PART CW); PROVIDE EPO (EMERGENCY POWER OFF) MUSHROOM TYPE SWITCH AT EXIT(S) OF MECHANICAL ROOMS HOUSING BOILERS.

6/7/2021 12:55

DEHUMIDIFIER (DEH) SCHEDULE - P1338

TAG	AREA SERVED	AMBIENT TEMP. OPERATING RANGE	CAPACITY (PINTS PER DAY)	ELECTRICAL			BASIS OF DESIGN		NOTES
				VOLT/ PHASE/ HERTZ	AMPS	CONNECTION (DISCONNECT) TYPE	MANUF	MODEL	
DEH-01	400 - MECHANICAL	56-95°F	110	115 / 60 / 1	6.4	HARDWIRED	SANTA FE	CLASSIC	1 - 6

NOTES:
1. UNIT SHALL BE PROVIDED WITH FULL CHARGE OF R-410A REFRIGERANT
2. UNIT WEIGHT = 110 LBS; DIMENSIONS (L x W x H inches): 20 x 17 x 36
3. MOUNT UNIT ON WALL BRACKET; PROVIDE WITH CONDENSATE PUMP AS REQUIRED TO PROVIDE NECESSARY LIFT TO ACCOMMODATE GRAVITY CONDENSATE DRAINAGE TO POINT OF TERMINATION AS INDICATED ON PLANS.
4. CAPACITY RATINGS BASED ON STANDARD DEHUMIDIFIER RATING CONDITIONS OF 80°F, 60% RH.
5. UNIT SHALL HARD WIRED WITH DISCONNECT (NO PIGTAIL PLUG) TO DISCOURAGE THEFT/RELOCATION.
5. UNIT SHALL BE WALL MOUNTED WITHIN THE MECHANICAL ROOMS AS INDICATED ON PLANS.

6/7/2021 12:55

HYDRONIC UNIT HEATER (UH) SCHEDULE - P1338

TAG	SPACE SERVED	AIRFLOW (CFM)	GPM	EWT/ LWT (°F)	MBH	MAX WPD (FT H20)	ELECTRICAL DATA			BASIS OF DESIGN		NOTES
							FAN MOTOR HP OR (W)	AMPS	VOLT/ PHASE/ HERTZ	MANUF.	MODEL	
UH-01	401 - MECH (HOT)	500	0.7	140 / 110	9.5	0.9	(16)	0.8	115 / 1 / 60	STERLING	HS-118A	1
UH-02	400 - MECHANICAL	500	0.7	140 / 110	9.5	0.9	(16)	0.8	115 / 1 / 60	STERLING	HS-118A	1

NOTES: 1. PROVIDE WITH LOCAL DISCONNECT, OVERCURRENT PROTECTION, AND STARTER.

6/7/2021 12:55

APPR | DATE | DESCRIPTION | SYM

NAVFAC

PRELIMINARY NOT FOR CONSTRUCTION

SEAL

IRQ WM Jordan COMPANY – A JOINT VENTURE –

Michael Baker INTERNATIONAL
100 AIRSIDE DRIVE
MOON TOWNSHIP, PA 15108
A/E INFO

APPROVED

FOR COMMANDER NAVFAC

ACTIVITY
MARINE CORPS BASE CAMP LEJEUNE

SATISFACTORY TO DATE

DES	DRW	CHK

PM
BRANCH MANAGER
CHIEF ENG/ARCH
FIRE PROTECTION

DEPARTMENT OF THE NAVY
NAVAL FACILITIES ENGINEERING COMMAND ~ MID-ATLANTIC
ROICC FLORENCE CAMP LEJEUNE
MCB CAMP LEJEUNE

NAVAL FACILITIES ENGINEERING COMMAND ~ MID-ATLANTIC
JACKSONVILLE, NC

JACKSONVILLE, NC
P1338 II MEF SIMULATION/TRAINING CENTER REPLACEMENT

MECHANICAL - SCHEDULES

SCALE: AS NOTED
EPROJECT NO.: 1590892
CONSTR. CONTR. NO.
N40085-20-C-0059
NAVFAC DRAWING NO.
SHEET OF

M-604

DP2 SUBMISSION – P1338 BUILDING -,PRE-FINAL SUBMISSION

PLOTTED: 6/10/2021 3:34:07 PM

FILE NAME: BIM 360://HF PACKAGE 3/P1338 MEF SIM CTR-1590892-M.rvt

PUMP (P-) SCHEDULE - P1338

TAG	PUMP TYPE	SERVICE	LOCATION	FLUID TYPE	FLUID TEMP (°F)	GPM	HEAD (FT H2O)	NSPH REQD (FT)	IMPELLER DIAMETER (IN)	MIN EFF. (%)	ELECTRICAL DATA			BASIS OF DESIGN		NOTES
											MTR HP	NOMINAL MOTOR RPM	VOLTS/ PHASE/ HERTZ	MANUF	MODEL	
P-1	FLOOR MTD, HORIZONTAL INLINE	CHW - PRIMARY (CH-1)	402-MECANICAL	WATER	56	395	60	6	8.375	75	10	1800	480 / 3 / 60	B & G	e-80 4x4x9.5B	1, 2
P-2	FLOOR MTD, HORIZONTAL INLINE	CHW-PRIMARY (CH-1)	402-MECANICAL	WATER	56	395	60	6	8.375	75	10	1800	480 / 3 / 60	B & G	e-80 4x4x9.5B	1, 2
P-3	FLOOR MTD, HORIZONTAL INLINE	HW - SECONDARY	401 - MECH (HOT)	WATER	140	65	65	6	8.75	53	3	1800	480 / 3 / 60	B & G	e-80 1.5x1.5x9.5B	1, 3
P-4	FLOOR MTD, HORIZONTAL INLINE	HW - SECONDARY	401 - MECH (HOT)	WATER	140	65	65	6	8.75	53	3	1800	480 / 3 / 60	B & G	e-80 1.5x1.5x9.5B	1, 3
BP-1,2,3	INLINE, BOILER CIRC	HOT WATER	401 - MECH (HOT)	WATER	110	22	10	3.97	6	54	3/4	1200	480 / 3 / 60	B & G	e-80	1,3

NOTES:
1. MOTORS SHALL BE PREMIUM EFFICIENCY TYPE.
2. INLINE TYPE PUMP - PROVDE WITH ACCESSORIES NECESSARY FOR FLOOR MOUNTING IN HORZONTAL INLINE FASHION ; PROVIDE RIGGING POINTS FOR PUMPS 5HP AND GREATER.
3. INLINE TYPE PUMP - TO BE MOUNTED ON PIPING / INLINE PUMP SUPPORT RACK AS INDICATED ON PLANS

6/7/2021 12:55

CONTROL VALVE SCHEDULE (CV) - P1338

VALVE	MAX FLOW (GPM)	DESIGN FLOW COEFFICIENT (Cv)	CONFIGURATION (2 WAY OR 3 WAY)	ACTION (MODULATING OR 2 POSITION)	NOTES
VAV BOXES<0.5 GPM	0.5	0.25	2 WAY	MODULATING	1 - 4
VAV BOXES<1.0 GPM	1.0	0.50	2 WAY	MODULATING	1 - 4
VAV BOXES<1.5 GPM	1.5	0.75	2 WAY	MODULATING	1 - 4
AHU-01 CHW	49.9	24.95	3 WAY	MODULATING	1 - 3
AHU-02 CHW	281.8	140.90	3 WAY	MODULATING	1 - 3
AHU-01 HW	3.7	1.85	2 WAY	MODULATING	1 - 3
AHU-02 HW	26.3	13.15	2 WAY	MODULATING	1 - 3
CRAC-1-3 CHW ISOLATION	31.3	15.65	2 WAY	2 POSITION	1 - 3
CRAC 1-3 CHW FLOW	31.3	15.65	3 WAY	MODULATING	1 - 3, 5
CRAC 1-3 HW FLOW	2.5	1.25	2 WAY	MODULATING	1 - 3, 5

NOTES:
1. THE INFORMATION IN THIS SCHEDULE IS BASED ON EQUIPMENT SELECTIONS MADE DURING THE DESIGN. THE CONTRACTOR SHALL VERIFY THE VALVE REQUIREMENTS FOR THE ACTUAL EQUIPMENT PROVIDED.
2. THE FLOW COEFFICIENT Cv (OR FLOW-CAPACITY RATING OF VALVE) IS C v= Q·√(SG/ΔP) WHERE: Q IS THE RATE OF FLOW(GPM), SG IS THE SPECIFIC GRAVITY OF THE FLUID (FOR WATER = 1), ΔP IS THE PRESSURE DROP ACROSS THE VALVE (AT 4 PSI IN THIS SCHEDULE). CONTRACTOR MAY SELECT A DIFFERENT PRESSURE DROP TO SUIT EQUIPMENT REQUIREMENTS IF REQUIRED.
3. TWO POSITION ON/OFF CONTROL VALVE BODIES SHALL BE LINE SIZED. MODULATING VALVE BODIES SHALL BE LINE SIZED WITH CHARACTERIZED PORTING OR ONE TO TWO SIZES SMALLER TO ENSURE CONTROLLABILITY OVER FULL ACTUATOR RANGE. Cv VALUES INDICATED ARE BASED ON FULL FLOW.
4. VAV BOXES SHALL BE PROVIDE WITH MANUFACTURER'S VALVE PACKAGE INCLUDING TWO WAY MODULATING CONTROL VALVE IN ACCORDANCE WITH MANUFACTURER'S EQUIPMENT REQUIREMENTS.
5. CRAC UNITS SHALL BE PROVIDED WITH MANUFACTURER'S PROVIDED 3-WAY CHILLED WATER VALVES AND 2-WAY HEATING VALVES.

6/7/2021 12:55

EXPANSION TANK (ET-) SCHEDULE - P1338

TAG	LOCATION	SERVICE	TYPE	SIZE	VOLUME (GALLON)		BASIS OF DESIGN		NOTES
					TANK	ACCEP-TANCE	MANUF	MODEL	
ET-1	401 - MECH (HOT)	HYDRONIC HOT WATER	VERTICAL - FLR MTD	16" DIA X 34.5" H	22	8.2	B & G	B-85LA	1, 2, 3
ET-2	402 - MECHANICAL	CHILLED WATER	VERTICAL - FLR MTD	16" DIA X 34.5" H	22	9.8	B & G	B-85LA	1, 2, 3

NOTES:
1. HEAVY DUTY BUTYL RUBBER BLADDER TYPE; PRE-CHARGED TO 10 PSI; 125 PSI RATED DESIGN PRESSURE.
2. TANK ACCEPTANCE VOLUME SHALL BE NO GREATER THAN 50% OF TANK VOLUME REGARDLESS OF MANUFACTURER'S LITERATURE INDICATING BLADDER TANKS WITH 100% TANK VOLUME ACCEPTANCE CAPACITY.
3. CONNECTION SIZE SHALL BE 1" NPT

6/7/2021 12:55

CHILLED WATER BUFFER TANK (CWBT) SCHEDULE - P1338

TAG	TYPE	SERVICE	LOCATION	SIZE DIA x HT (IN)	CONN. SIZE (IN)	CAPACITY (GAL)	FACTORY HEAT TRACING		BASIS OF DESIGN		NOTES
							VOLT/ PHASE/ HERTZ	MCA/ MOP	MANUF	MODEL	
CWBT-1	VERTICAL	CHILLED WATER	MECH ROOM	60 x 96	6" FLANGE	1040	120/1/60	<12 / 15	CEMLINE	V-CWB-F-C-2I	1 - 2

NOTES:
1. TANK TO BE PROVIDED WITH 2" FLEXIBLE ELASTOMERIC INSULATION; INTERNAL BAFFLE; 6" FLANGED CONNECTIONS & AIR VENT.
2. UNIT SHALL BE ASME RATED PRESSURE VESSEL - RATED TO 125PSIG @ 375°F; BUILT TO ASME SECTION VIII, DIVISION 1.

6/7/2021 12:55

AIR SEPARATION & SEDIMENT REMOVAL TANK (AS) SCHEDULE -P1338

TAG	LOCATION	SERVICE	TYPE	GPM	CONNECTION SIZE	INSTALLED WEIGHT (LBS)	BASIS OF DESIGN		NOTES
							MANUF	MODEL	
AS-1	401 - MECH (HOT)	HYDRONIC HOT WATER	COALSESCING	65	2-1/2" FLANGED	110	B & G	CRS - 6F	1 - 3
AS-2	402 - MECHANICAL	CHILLED WATER	COALSESCING	400	6" FLANGED	500	B & G	CRS - 3F	1 - 3

NOTES:
1. REFER TO PIPING DIAGRAMS FOR INSTALLATION LOCATION IN HYDRONIC SYSTEM.
2. PROVIDE WITH BLOW DOWN CONNECTION AND MANUAL BLOW DOWN VALVE.
3. PROVIDE WITH AUTOMATIC AIR VENT FROM SAME MFG.

6/7/2021 12:55

VIBRATION ISOLATION SCHEDULE - P1338

EQUIPMENT TYPE	TAG	HP	BASE TYPE	ISOLATOR TYPE	MINIMUM LOADED STATIC DEFLECTION (INCHES)	NOTES
AIR HANDLING UNIT	AHU-1, 2	ANY	4" HOUSKEEPING PAD	NA (SEE NOTE 2)	NA (SEE NOTE 2)	1 - 4
COMPUTER ROOM AC	CRAC-1,2,3	ANY	MFR FLOOR STAND	NA (SEE NOTE 2)	NA (SEE NOTE 2)	1 - 4
PUMPS (INLINE/FLOOR MOUNTED)	P-1,2	5 TO 25	DIRECT	SPRING	0.75	1, 4
FANS; INLINE ≤ 22" DIA	EF, SF-#	ANY	MFG RECOMMENDED	SPRING HANGAR	0.75	1, 3
BOILERS; FIRE TUBE	B-1,2,3	ALL	DIRECT	RUBBER PAD	0.25	1, 2, 4
AIR COOLED CHILLER	CH-#	ANY	OUTDOOR EQUIPMENT PAD	NA (SEE NOTE 2)	NA (SEE NOTE 2)	1, 2, 4

NOTES:
1. REFER TO SPECIFICATION SECTION 22 05 48.00 20 MECHANICAL SOUND, VIBRATION AND SEISMIC CONTROL.
2. FANS, PUMPS, COMPRESSORS, ETC. WITHIN MANUFACTURER SUPPLIED EQUIPMENT SHALL BE PROVIDED WITH MANUFACTUER'S RECOMMENDED VIBRATION ISOLATION
3. FLEXIBLE DUCT CONNECTIONS SHALL BE PROVIDED AT CONNECTIONS TO DUCTWORK.
4. FLEXIBLE PIPING CONNECTIONS SHALL BE PROVIDED AT CONNECTIONS TO SYSTEM PIPING.

APPR | DATE | DESCRIPTION | SYM

NAVFAC

PRELIMINARY NOT FOR CONSTRUCTION

SEAL

IRQ W.M. Jordan COMPANY – A JOINT VENTURE –

Michael Baker INTERNATIONAL

100 AIRSIDE DRIVE MOON TOWNSHIP, PA 15108 A/E INFO

APPROVED

FOR COMMANDER NAVFAC

ACTIVITY: MARINE CORPS BASE CAMP LEJEUNE

SATISFACTORY TO DATE

DES	DRW	CHK

PM

BRANCH MANAGER

CHIEF ENG/ARCH

FIRE PROTECTION

DEPARTMENT OF THE NAVY
NAVAL FACILITIES ENGINEERING COMMAND ~ MID-ATLANTIC
JACKSONVILLE, NC
ROICC FLORENCE CAMP LEJEUNE
MCB CAMP LEJEUNE
JACKSONVILLE, NC
P1338 II MEF SIMULATION/TRAINING CENTER REPLACEMENT
MECHANICAL - SCHEDULES

SCALE: AS NOTED

EPROJECT NO.: 1590892

CONSTR. CONTR. NO. N40085-20-C-0059

NAVFAC DRAWING NO.

SHEET OF

M-605

DP2 SUBMISSION – P1338 BUILDING - PRE-FINAL SUBMISSION

PLOTTED: 6/10/2021 3:34:11 PM

FILE NAME: BIM 360://HF PACKAGE 3/P1338 MEF SIM CTR-1590892-M.rvt

VENTILATION SCHEDULE - AHU-1

ROOM NUMBER	ROOM NAME	AREA (FT2)	OCCUPANCY (# PEOPLE)	CALCULATED REQUIRED OUTSIDE AIR (OA)					EXHAUST AIR (EA)					NOTES
				ASHRAE 62.1 2016 VENTILATION CRITERIA / CLASSIFICATION	CFM/SF	CFM/ PERSON	EZ	TOTAL (CFM)	CFM/SF	FIXTURE COUNT	CFM/ FIXTURE	TOTAL EA REQ'D (CFM)	SPECIFIED EA (CFM)	
105	LIBRARY / FILE STORAGE	930	2	PUBLIC ASSEMBLY/LIBRARIES	THE VENTILATION REQUIREMENT FOR THIS AIR HANDLING SYSTEM HAS BEEN DETERMINED BY UTILIZING THE ASHRAE 62.1 MULTI-ZONE CALCULATION SPREADSHEET THAT ACCOUNTS FOR INDIVIDIAL VAV ZONES AND THEIR RESPECTIVE AREA AND OCCUPANCY AND SPACE CLASSIFICATION IN ACCORDANCE WITH ASHRAE 62.1. THE VAV BOX SCHEDULE MINIMUM AIRFLOWS PER BOX HAVE BEEN ADJUSTED USING THIS SPREADSHEET TO PROVIDE THE REQUIRED VENTILATION TO THEIR ASSOCIATED AHU. THE ASHRAE 62.1 MULTI-ZONE CALCULATIONS ARE INCLUDED IN THE MECHANICAL CALCULATIONS.									
106	NCIOC/SUPPLY CLERK	343	4	OFF BLDG / OFFICE SPACE										
107	SIM OPERATOR	991	16	OFF BLDG / OFFICE SPACE										
108	ADMIN/BREAK ROOM	365	16	OFFICE BLDG / BREAKROOM										
109	SIM ANALYST	1,265	20	OFF BLDG / OFFICE SPACE										
110	MOTHER'S ROOM	71	-	TOILET - PUBLIC						1	50	50	50	
111	PRIVATE OFFICE - OIC	159	2	OFF BLDG / OFFICE SPACE										
112	PRIVATE OFFICE - DEP DIRECTOR	150	2	OFF BLDG / OFFICE SPACE										
113	PRIVATE OFFICE - SITE MANAGER	148	2	OFF BLDG / OFFICE SPACE										
114	PRIVATE OFFICE - DIRECTOR	161	2	OFF BLDG / OFFICE SPACE										
115	COMM ROOM, WEST EXTERIOR	140	0	MISC / TELEPHONE CLOSETS										
116	ELEC	125	-	NO REQUIREMENT										
118	JANITOR - NOT CLASSIFIED AREA	45	0	EXH 1 CFM/SQFT					1			45	50	
306	ELEC	152	-	NO REQUIREMENT										
400	STORAGE/SHIPPING/RECEIVING	2,039	4	MISC / SHIPPING-RECEIVING										
401	MECHANICAL - (GAS FIRED EQUIPMENT)	657	-	NO REQUIREMENT										
402	MECHANICAL (AIR HANDLING SYSTEMS)	2,277	-	NO REQUIREMENT										
C011	CORRIDOR	536	0	GENERAL / CORRIDORS										
C012	CORRIDOR	347	0	GENERAL / CORRIDORS										
C014	CORRIDOR	383	0	GENERAL / CORRIDORS										
C016	CORRIDOR	198	0	GENERAL / CORRIDORS										
G010	MENS LOCKER/TOILET	285	-	TOILET - PUBLIC						7	50	350	350	
G011	WOMENS LOCKER/TOILET	312	-	TOILET - PUBLIC						7	50	350	250	
G012	UNISEX TOILET	67	-	TOILET - PUBLIC						1	50	50	50	

NOTES:

6/2/2021 16:09

VENTILATION SCHEDULE - AHU-2

ROOM NUMBER	ROOM NAME	AREA (FT2)	OCCUPANCY (# PEOPLE)	CALCULATED REQUIRED OUTSIDE AIR (OA)					EXHAUST AIR (EA)					NOTES
				ASHRAE 62.1 2016 VENTILATION CRITERIA / CLASSIFICATION	CFM/SF	CFM/ PERSON	EZ	TOTAL (CFM)	CFM/SF	FIXTURE COUNT	CFM/ FIXTURE	TOTAL EA REQ'D (CFM)	SPECIFIED EA (CFM)	
100	ENTRY WS	100	2	OFF BLDG / OFFICE SPACE	THE VENTILATION REQUIREMENT FOR THIS AIR HANDLING SYSTEM HAS BEEN DETERMINED BY UTILIZING THE ASHRAE 62.1 MULTI-ZONE CALCULATION SPREADSHEET THAT ACCOUNTS FOR INDIVIDIAL VAV ZONES AND THEIR RESPECTIVE AREA AND OCCUPANCY AND SPACE CLASSIFICATION IN ACCORDANCE WITH ASHRAE 62.1. THE VAV BOX SCHEDULE MINIMUM AIRFLOWS PER BOX HAVE BEEN ADJUSTED USING THIS SPREADSHEET TO PROVIDE THE REQUIRED VENTILATION TO THEIR ASSOCIATED AHU. THE ASHRAE 62.1 MULTI-ZONE CALCULATIONS ARE INCLUDED IN THE MECHANICAL CALCULATIONS.									
101	BRIEF / DEBRIEF	591	14	GENERAL / CONFERENCE-MEETING										
102	BRIEF / DEBRIEF	590	14	GENERAL / CONFERENCE-MEETING										
103A	FIRE STORAGE ROOM	781	1	STORAGE ROOM FOR DRY MAT										
104A	FIRE ROOM	410	8	OFF BLDG / OFFICE SPACE										
104B	FIRE ROOM	417	8	OFF BLDG / OFFICE SPACE										
104C	FIRE ROOM	402	8	OFF BLDG / OFFICE SPACE										
110A	FIRE SERVER RACK ROOM	63	0	MISC / TELEPHONE CLOSETS										
200A	CLASSIFIED SIMULATION CLASSROOM	1,533	32	GENERAL / CONFERENCE-MEETING										
200B	CLASSIFIED SIMULATION CLASSROOM	1,517	32	GENERAL / CONFERENCE-MEETING										
200C	SIMULATION CLASSROOM	1,018	18	GENERAL / CONFERENCE-MEETING										
201	AUDITORIUM / READY ROOM	1,616	130	PUBLIC / AUDITORIUM SEATING										
202	EXERCISE CONTROL	1,599	32	GENERAL / CONFERENCE-MEETING										
203	STORAGE	1,031	2	STORAGE ROOM FOR DRY MAT										
205	PLOTTER/LAMINATOR	138	-	COPY, PRINTING ROOMS					0.5			69	70	
206	BREAK ROOM	679	32	OFFICE BLDG / BREAKROOM										
207	EXERCISE CONTROL	299	14	GENERAL / CONFERENCE-MEETING										
208	COMM	184	0	MISC / TELEPHONE CLOSETS										
209	BRIEF/DEBRIEF	294	8	GENERAL / CONFERENCE-MEETING										
300A	SIMULATION CLASSROOM	1,488	40	GENERAL / CONFERENCE-MEETING										
300B	SIMULATION CLASSROOM	1,499	40	GENERAL / CONFERENCE-MEETING										
300C	SIMULATION CLASSROOM	1,497	40	GENERAL / CONFERENCE-MEETING										
300V	SIMULATION CLASSROOM	1,507	40	GENERAL / CONFERENCE-MEETING										
300X	SIMULATION CLASSROOM	1,499	40	GENERAL / CONFERENCE-MEETING										
300Z	SIMULATION CLASSROOM	1,504	40	GENERAL / CONFERENCE-MEETING										
301A	SIMULATION CLASSROOM	1,507	40	GENERAL / CONFERENCE-MEETING										
301B	SIMULATION CLASSROOM	1,497	40	GENERAL / CONFERENCE-MEETING										
302	SERVER ADMIN	458	4	OFF BLDG / OFFICE SPACE										
303A	SECURE WS	175	4	OFF BLDG / OFFICE SPACE										
303B	SECURE VTC	418	12	GENERAL / CONFERENCE-MEETING										
304A	SIM CONTROL (SERVER ROOM)	1,550	4	MISC / COMPUTER (NOT PRINTING)										
304B	SIM CONTROL SECURE COMM (VAULT)	356	1	MISC / COMPUTER (NOT PRINTING)										
305	COMM	151	0	MISC / TELEPHONE CLOSETS										
403	JANITOR -CLASSIFIED AREA	58	-	EXH 1 CFM/SQFT					1			58	60	
403	ELEC ROOM, NORTH CENTRAL	440	0	MISC / TELEPHONE CLOSETS										
C010	CORRIDOR	236	0	GENERAL / CORRIDORS										
C013	CORRIDOR	550	0	GENERAL / CORRIDORS										
C018	CORRIDOR	283	0	GENERAL / CORRIDORS										
C020	CORRIDOR	1,030	0	GENERAL / CORRIDORS										
C021	COR	550	0	GENERAL / CORRIDORS										
C022	CORRIDOR	530	0	GENERAL / CORRIDORS										
C023	CORRIDOR TO BREAKROOM	235	0	GENERAL / CORRIDORS										
C030	CORRIDOR	875	0	GENERAL / CORRIDORS										
C031	COR	563	0	GENERAL / CORRIDORS										
C034	CORRIDOR	1,355	0	GENERAL / CORRIDORS										
G020	UNI	64	0	TOILET - PUBLIC						2	50	100	100	
G021	MUD	214	0	LOCKER ROOMS					0.5		50	107	110	
G022	W. SHWR	72	0	TOILET - PUBLIC						2	50	100	100	
G023	M. SHWR	72	0	TOILET - PUBLIC						2	50	100	100	
G024	WOMEN	212	0	TOILET - PUBLIC						4	50	200	200	
G025	MEN	232	0	TOILET - PUBLIC						8	50	400	400	
L010	LOBBY/VESTIBULE	1,024	10	LOBBIES / PREFUNCTION										

NOTES:

6/2/2021 16:09

APPR | DATE | DESCRIPTION | SYM

NAVFAC

PRELIMINARY NOT FOR CONSTRUCTION

SEAL

RQ W.M. Jordan COMPANY – A JOINT VENTURE –

Michael Baker INTERNATIONAL

100 AIRSIDE DRIVE
MOON TOWNSHIP, PA 15108 A/E INFO

APPROVED

FOR COMMANDER NAVFAC

ACTIVITY
MARINE CORPS BASE
CAMP LEJEUNE

SATISFACTORY TO DATE

DES	DRW	CHK
PM		
BRANCH MANAGER		
CHIEF ENG/ARCH		
FIRE PROTECTION		

DEPARTMENT OF THE NAVY
NAVAL FACILITIES ENGINEERING COMMAND ~ MID-ATLANTIC
ROICC FLORENCE CAMP LEJEUNE
MCB CAMP LEJEUNE

NAVAL FACILITIES ENGINEERING COMMAND
JACKSONVILLE, NC

JACKSONVILLE, NC
P1338 II MEF SIMULATION/TRAINING CENTER
REPLACEMENT
MECHANICAL - SCHEDULES

SCALE: AS NOTED

EPROJECT NO.: 1590892

CONSTR. CONTR. NO.
N40085-20-C-0059

NAVFAC DRAWING NO.

SHEET OF

M-606

DP2 SUBMISSION – P1338 BUILDING - PRE-FINAL SUBMISSION

PLOTTED: 6/10/2021 3:34:14 PM

FILE NAME: BIM 360://HF PACKAGE 3/P1338 MEF SIM CTR-1590892-M.rvt

AIR BALANCE CALCULATION - P1338

DEVICE	ROOM OR AREA SERVED	SECURE AREA AIRFLOWS (CFM)						NON-SECURE AREA AIRFLOWS					MECH & ELEC AREAS (EXCLUDED FROM AIR BARRIER)			NOTES
		SA (VARIABLE)	RA (RECIRC) (VARIABLE)	AHU HX RA (EXH) (CONST)	AHU HX OA (CONST)	EA (CONST)	+/- PRESS	SA (VARIABLE)	RA (RECIRC) (VARIABLE)	AHU HX OA (CONST)	AHU HX EA (CONST)	+/- PRESS	SA	EA	+/- PRESS	
AHU-01	NON-SECURE BUILDING AREA							5750	(4250)	1500	(1250)					
AHU-02	SECURE BUILDING AREA	33500	(26000)	(5000)	7500											
SF-01	401 - MECHANICAL ROOM (HEATING EQUIPMENT)												2000		POS	1, 2
EF-01	CLASSIFIED AREA RESTROOMS, ETC.					(1650)										
EF-02	403 - MAIN ELECTRICAL ROOM													(3000)	NEG	1
EF-03	116 - ELECTRICAL ROOM (WEST)													(300)	NEG	1
EF-04	306 - ELECTRICAL ROOM (EAST)													(750)	NEG	1
	AREA TOTALS:	33500	(26000)	(5000)	7500	(1650)	**850**	5750	(4250)	**1500**	**(1250)**	**250**				

NOTES
1) EF/SF SHALL OPERATE INTERMITTENTLY BY THERMOSTATIC CONTROL (TSTAT SET AT 85°F - ADJ.) TO PROVIDE VENTILATION BASED COOLING/AIR CHANGES TO MAINTAIN SPACE WITHIN +10°F OF OUTDOOR AMBIENT.
2) SF-01 SHALL PUSH AIR THROUGH MECHANICAL ROOM WITH GAS FIRED EQUIPMENT TO MAINTAIN SPACE POSITIVE PRESSURE IAW RFP.

DEFINITIONS
SA: SUPPLY AIR, CONDITIONED AND DELIVERED THROUGH VAV FOR SPACE CONDITIONING AND VENTILATION
RA (RECIRC): RETURN AIR, RETURNED TO AHU FOR RE-MIXING WITH OA AND REDISTRIBUTION
RA (EXH): RETURN AIR, RETURNED TO AHU FROM SPACE; THEN EXHAUSTED-RELIEVED AT/FROM AHU (USED FOR HX ENERGY RECOVERY)
OA: OUTSIDE AIR, FRESH OUTSIDE AIR FILTERED / PRECONDITIONED BY HX & DELIVERED AS COMPONENT OF SUPPLY AIR TO SPACES SERVED.
EA: EXHAUST AIR, AIR REMOVED FROM BLDG IN BALANCED CONSTANT QTY BY FAN ON NORMAL BASIS DURING OCCUPIED HRS
EA(I): EXHAUST AIR (INTERMITTENT), AIR REMOVED FROM BUILDING BY EXHAUST FAN NOT REGULARLY IN USE, NOT INCLUDED IN AIR BALANCE DETERMINATION

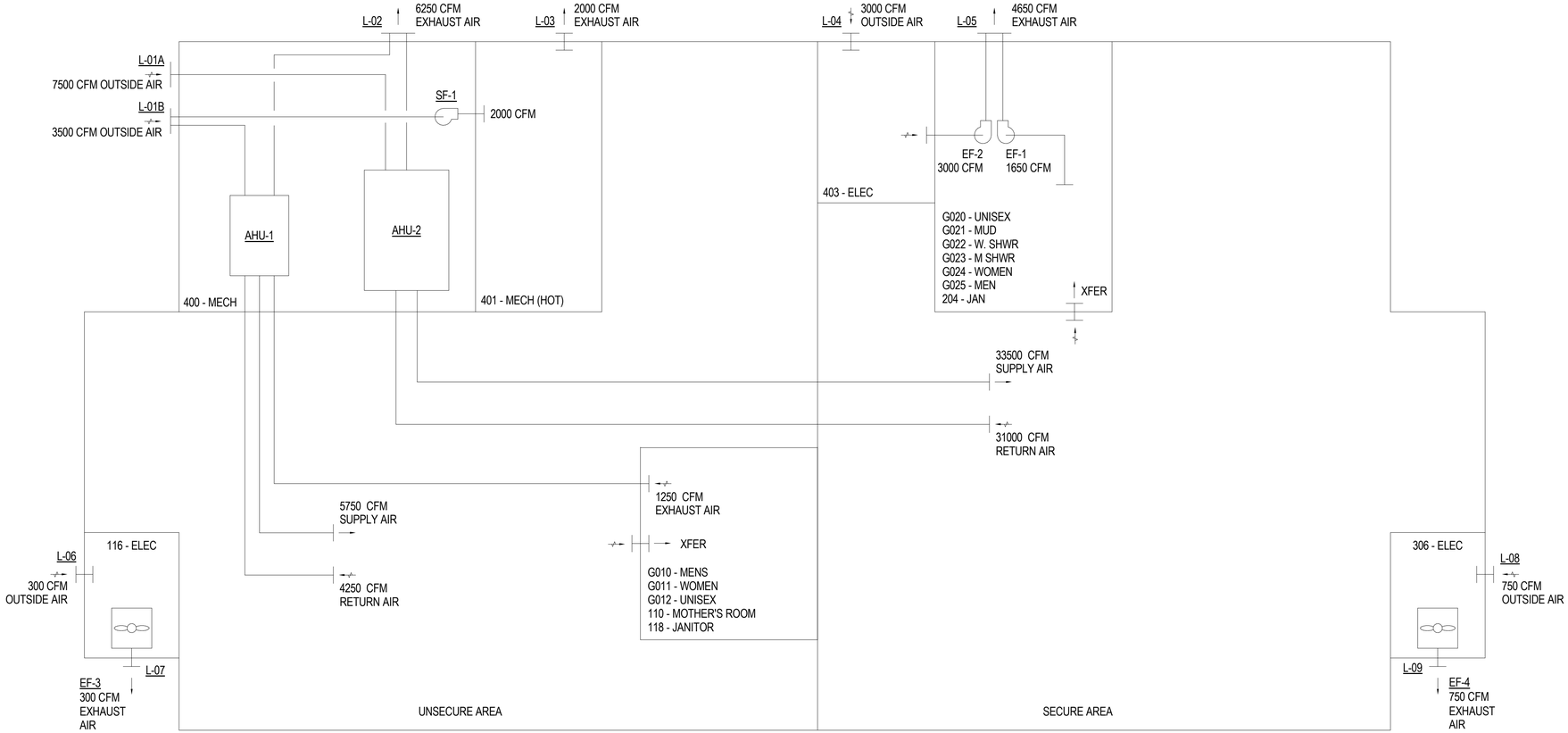

AIR BALANCE DIAGRAM

SCALE: NTS

A1

APPR | DATE | DESCRIPTION | SYM

NAVFAC

PRELIMINARY
NOT FOR CONSTRUCTION

SEAL

IRQ W.M. Jordan COMPANY – A JOINT VENTURE –

Michael Baker INTERNATIONAL
100 AIRSIDE DRIVE
MOON TOWNSHIP, PA 15108
A/E INFO

APPROVED
FOR COMMANDER NAVFAC

ACTIVITY
MARINE CORPS BASE
CAMP LEJEUNE

SATISFACTORY TO DATE

DES	DRW	CHK
PM		
BRANCH MANAGER		
CHIEF ENG/ARCH		
FIRE PROTECTION		

NAVAL FACILITIES ENGINEERING COMMAND
NAVAL FACILITIES ENGINEERING COMMAND ~ MID-ATLANTIC
JACKSONVILLE, NC
DEPARTMENT OF THE NAVY
NAVAL FACILITIES ENGINEERING COMMAND
ROICC FLORENCE CAMP LEJEUNE
MCB CAMP LEJEUNE
JACKSONVILLE, NC
P1338 II MEF SIMULATION/TRAINING CENTER
REPLACEMENT
MECHANICAL - DIAGRAMS

SCALE: AS NOTED
EPROJECT NO.: 1590892
CONSTR. CONTR. NO.
N40085-20-C-0059
NAVFAC DRAWING NO.
SHEET OF

M-701

DP2 SUBMISSION – P1338 BUILDING - PRE-FINAL SUBMISSION

PLOTTED: 6/10/2021 3:34:15 PM
FILE NAME: BIM 360://HF PACKAGE 3/P1338 MEF SIM CTR-1590892-M.rvt

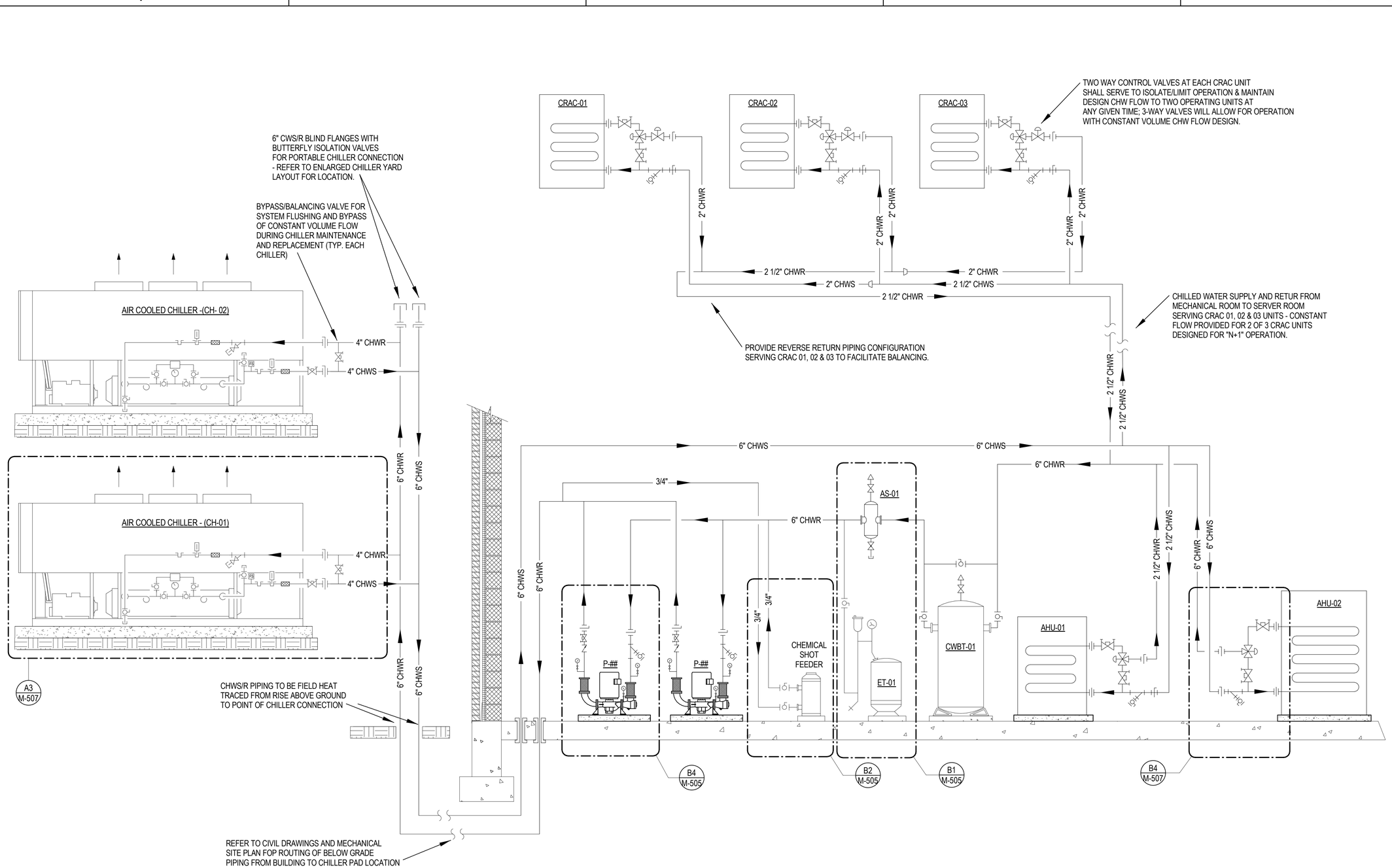

CHILLED WATER FLOW DIAGRAM

SCALE: NTS

A1

PLOTTED: 6/10/2021 3:34:16 PM

FILE NAME: BIM 360://HF PACKAGE 3/P1338 MEF SIM CTR-1590892-M.rvt

NO.	DESCRIPTION	DATE	APPR

NAVFAC

PRELIMINARY NOT FOR CONSTRUCTION

SEAL

IRQ Joint Venture — W.M. Jordan Company

Michael Baker INTERNATIONAL

100 AIRSIDE DRIVE
MOON TOWNSHIP, PA 15108 — A/E INFO

APPROVED

FOR COMMANDER NAVFAC

ACTIVITY
MARINE CORPS BASE CAMP LEJEUNE

SATISFACTORY TO DATE

DES	DRW	CHK

PM

BRANCH MANAGER

CHIEF ENG/ARCH

FIRE PROTECTION

DEPARTMENT OF THE NAVY
NAVAL FACILITIES ENGINEERING COMMAND – MID-ATLANTIC
ROICC FLORENCE CAMP LEJEUNE — JACKSONVILLE, NC
MCB CAMP LEJEUNE — JACKSONVILLE, NC

P1338 II MEF SIMULATION/TRAINING CENTER REPLACEMENT

MECHANICAL - DIAGRAMS

SCALE: AS NOTED

EPROJECT NO.: 1590892

CONSTR. CONTR. NO.
N40085-20-C-0059

NAVFAC DRAWING NO.

SHEET OF

M-702

DP2 SUBMISSION – P1338 BUILDING -PRE-FINAL SUBMISSION

GENERAL NOTES

1. HOT WATER PIPING DIAGRAMS INDICATED ON THIS DRAWING SHEET ARE DIAGRAMMATIC IN NATURE AND DO NOT NECESSARILY INDICATE ALL REQUIRED PIPING APPURTENANCES. REFER TO EQUIPMENT DETAILS ON M-500 SERIES OF DRAWINGS AS WELL AS MANUFACTURER'S INSTALLATION INSTRUCTIONS AND PROVIDE ALL NECESSARY PIPING APPURTENANCES REQUIRED FOR A COMPLETE INSTALLATION.
2. INSTALL VALVED DRAINS AT ALL SYSTEM HIGH POINTS.
3. BOILERS (B-1, B-2 & B-3) SHALL FUNCTION VIA THEIR FACTORY CONTROLS. BOILER CONTROLS SHALL HAVE LEAD-LAG SEQUENCES TO PROVIDE BOILER STAGING MODULATION AND EQUAL RUN TIME FOR EACH BOILER.
4. P-3, AND P-4 SHALL BE DUTY/STAND-BY OPERATION. IF DUTY PUMP FAILS BASED ON CURRENT SWITCH MONITORING IT'S OPERATION, THE STAND-BY PUMP SHALL BE ENABLED.

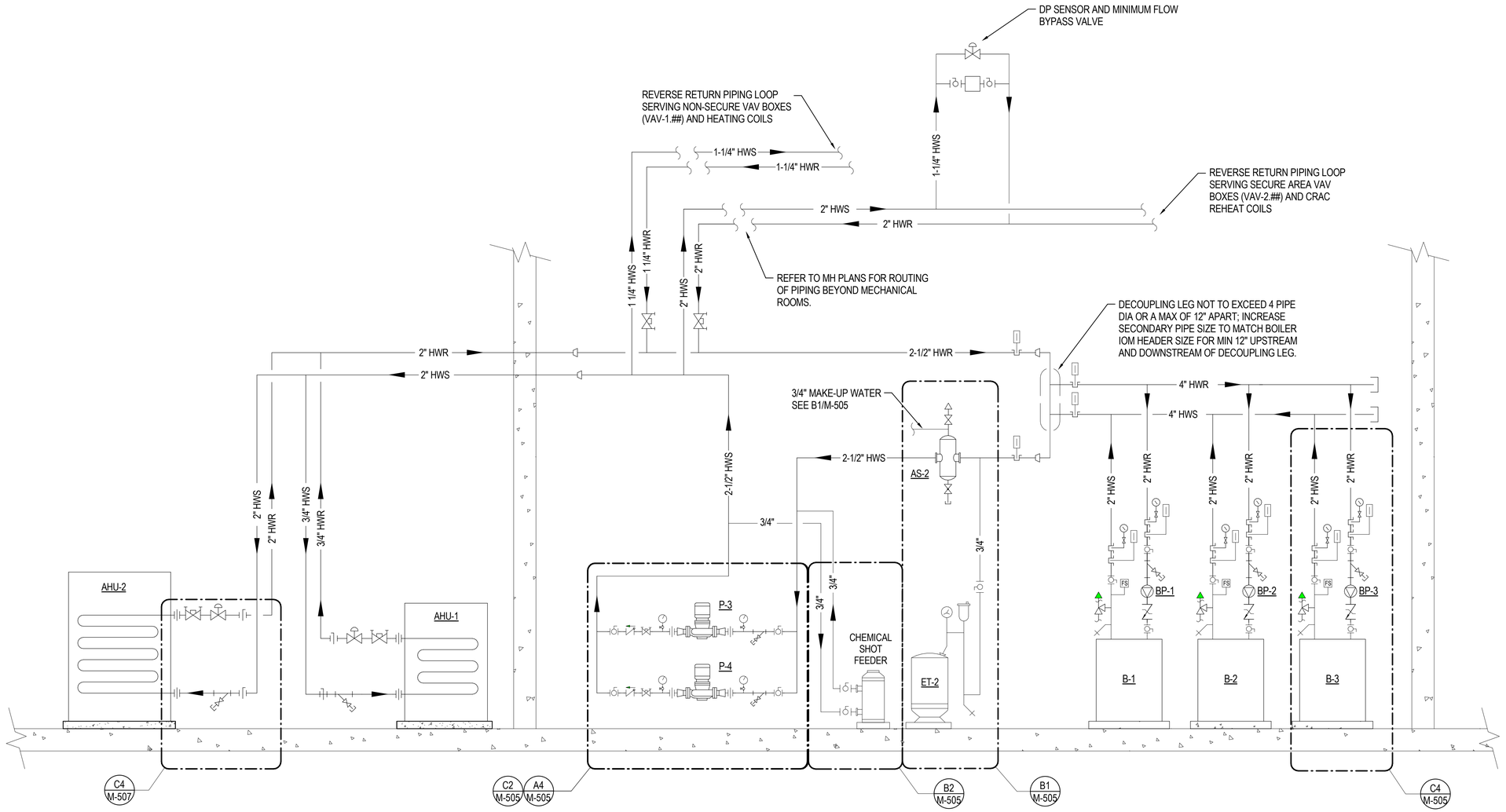

HOT WATER FLOW DIAGRAM

SCALE: NTS

A1

SYM	DESCRIPTION	DATE	APPR

NAVFAC

PRELIMINARY NOT FOR CONSTRUCTION

SEAL

RQ W.M. Jordan COMPANY – A JOINT VENTURE –

Michael Baker INTERNATIONAL
100 AIRSIDE DRIVE
MOON TOWNSHIP, PA 15108
A/E INFO

APPROVED

FOR COMMANDER NAVFAC

ACTIVITY
MARINE CORPS BASE CAMP LEJEUNE

SATISFACTORY TO DATE

DES	DRW	CHK
PM		
BRANCH MANAGER		
CHIEF ENG/ARCH		
FIRE PROTECTION		

DEPARTMENT OF THE NAVY
NAVAL FACILITIES ENGINEERING COMMAND
NAVAL FACILITIES ENGINEERING COMMAND ~ MID-ATLANTIC
ROICC FLORENCE CAMP LEJEUNE
JACKSONVILLE, NC
MCB CAMP LEJEUNE
JACKSONVILLE, NC

P1338 II MEF SIMULATION/TRAINING CENTER REPLACEMENT

MECHANICAL - DIAGRAMS

SCALE: AS NOTED
EPROJECT NO.: 1590892
CONSTR. CONTR. NO. N40085-20-C-0059
NAVFAC DRAWING NO.
SHEET OF

M-703

DP2 SUBMISSION – P1338 BUILDING - PRE-FINAL SUBMISSION

PLOTTED: 6/10/2021 3:44:04 PM

FILE NAME: BIM 360://HF PACKAGE 3/P1338 MEF SIM CTR-1590892-M.rvt

CONTROLS - GENERAL NOTES

TERMS USED WITHIN THE SEQUENCES OF OPERATION:

ADJ.: ADJUSTABLE BY THE END USER, THROUGH THE SUPPLIED USER INTERFACE.

AI: ANALOG INPUT. A PHYSICAL INPUT TO THE CONTROL MODULE.

AO: ANALOG OUTPUT. A PHYSICAL OUTPUT FROM THE CONTROL MODULE.

AV: ANALOG VALUE. AN INTERMEDIATE (SOFTWARE) POINT THAT MAY BE EDITABLE OR READ-ONLY. EDITABLE AVS ARE TYPICALLY USED TO ALLOW THE USER TO SET A FIXED CONTROL PARAMETER, SUCH AS A SETPOINT. READ ONLY AVS ARE TYPICALLY USED TO DISPLAY THE STATUS OF A CONTROL OPERATION.

BI: BINARY INPUT. A PHYSICAL INPUT TO THE CONTROL MODULE.

BO: BINARY OUTPUT. A PHYSICAL OUTPUT FROM THE CONTROL MODULE.

BV: BINARY VALUE. AN INTERMEDIATE (SOFTWARE) POINT THAT MAY BE EDITABLE OR READ-ONLY. EDITABLE BVS ARE TYPICALLY USED TO ALLOW THE USER TO SET A FIXED CONTROL PARAMETER, SUCH AS A SETPOINT. READ ONLY BVS ARE TYPICALLY USED TO DISPLAY THE STATUS OF A CONTROL OPERATION.

LOOP: A CONTROL LOOP. MOST COMMONLY A PID CONTROL LOOP. TYPICALLY A CONTROL LOOP WILL INCLUDE A SETPOINT, AN INPUT WHICH IS COMPARED TO THE SETPOINT, AND AN OUTPUT WHICH CONTROLS SOME ACTION BASED UPON THE DIFFERENCE BETWEEN THE INPUT AND THE SETPOINT. A PID CONTROL LOOP WILL ALSO INCLUDE GAINS FOR THE PROPORTIONAL, INTEGRAL, AND DERIVATIVE RESPONSE AS WELL AS AN INTERVAL WHICH CONTROLS HOW FREQUENTLY THE CONTROL LOOP UPDATES ITS OUTPUT. THESE GAINS MAY BE ADJUSTABLE BY THE END USER FOR CONTROL LOOP "TUNING," BUT IN SELF-TUNING CONTROL LOOPS OR LOOPS WHICH HAVE BEEN OPTIMIZED FOR A SPECIFIC APPLICATION THE GAINS MAY NOT BE ADJUSTABLE

SCHED: SCHEDULE. THE CONTROL ALGORITHM FOR THIS EQUIPMENT SHALL INCLUDE A USER EDITABLE SCHEDULE.

TREND: THE CONTROL SYSTEM SHALL BE CONFIGURED TO COLLECT AND DISPLAY A TREND LOG OF THIS OBJECT. THE TRENDING INTERVAL SHALL BE NO LESS THAN ONE SAMPLE EVERY 5 MINUTES. (CHANGE OF VALUE TRENDING, WHERE A SAMPLE IS TAKEN EVERY TIME THE VALUE CHANGES BY MORE THAN A USER-DEFINED MINIMUM, IS AN ACCEPTABLE ALTERNATIVE.)
THE CONTROL SYSTEM SHALL BE CONFIGURED TO GENERATE AN ALARM WHEN THIS OBJECT EXCEEDS USER DEFINABLE LIMITS, AS DESCRIBED IN THE SEQUENCE OF CONTROLS.

NOTE: ALL OF THE ABOVE SHALL BE PROVIDED AS BACNET NETWORK VARIABLES.

OCCUPANT OVERRIDE SWITCH, OR TIMED LOCAL OVERRIDE:
A CONTROL OPTION THAT ALLOWS BUILDING OCCUPANTS TO OVERRIDE THE PROGRAMMED HVAC SCHEDULE FOR A LIMITED PERIOD OF TIME.

WHEN THE OVERRIDE TIME EXPIRES, THE ZONE RETURNS TO ITS UNOCCUPIED STATE.

OCCUPANT SETPOINT ADJUSTMENT:
A CONTROL OPTION THAT ALLOWS BUILDING OCCUPANTS TO ADJUST - WITHIN LIMITS SET BY THE HVAC CONTROL SYSTEM - THE HEATING AND COOLING SETPOINTS OF SELECTED ZONES. TYPICALLY THE USER INTERFACE FOR THIS FUNCTION IS BUILT INTO THE ZONE SENSOR.

OPTIMAL START-UP:
A CONTROL STRATEGY THAT AUTOMATICALLY STARTS AN HVAC SYSTEM AT THE LATEST POSSIBLE TIME YET ENSURES COMFORT CONDITIONS BY THE TIME THE BUILDING BECOMES OCCUPIED.

IN A TYPICAL IMPLEMENTATION, A CONTROLLER MEASURES THE TEMPERATURE OF THE ZONE AND THE OUTSIDE AIR. THEN, USING DESIGN HEATING OR COOLING CAPACITY AT THE DESIGN OUTSIDE AIR TEMPERATURE, THE SYSTEM COMPUTES HOW LONG A UNIT MUST RUN AT MAXIMUM CAPACITY TO BRING THE ZONE TEMPERATURE TO ITS OCCUPIED SETPOINT.

THE OPTIMAL START ALGORITHM OFTEN INCLUDES A SELF-LEARNING FEATURE TO ADJUST FOR VARIATIONS FROM DESIGN CAPACITY.

A DISTRIBUTED SYSTEM MUST USE RUN ON REQUEST WITH OPTIMAL START. (SEE BELOW.)

REQUESTED, OR RUN ON REQUEST:
A CONTROL STRATEGY THAT OPTIMIZES THE RUNTIME OF A SOURCE PIECE OF EQUIPMENT THAT SUPPLIES ONE OR MORE RECEIVING UNITS - SUCH AS AN AIR HANDLER UNIT SUPPLYING ZONE TERMINAL UNITS WITH HEATING, COOLING, VENTILATION, OR SIMILAR SERVICE. SOURCE EQUIPMENT RUNS ONLY WHEN NEEDED, NOT ON A FIXED SCHEDULE.

THE SOURCE EQUIPMENT RUNS WHEN ONE OR MORE RECEIVING UNITS REQUEST ITS SERVICES. AN OPERATOR DETERMINES HOW MANY REQUESTS ARE REQUIRED TO START THE SOURCE EQUIPMENT.
FOR EXAMPLE, IF ALL THE ZONES IN A BUILDING ARE UNOCCUPIED AND THE ZONE TERMINAL UNITS DO NOT NEED HEATING OR COOLING, THE AHU WILL SHUT DOWN. HOWEVER, IF A ZONE BECOMES OCCUPIED OR NEEDS COOLING, THE TERMINAL UNIT WILL SEND A RUN REQUEST TO THE AHU TO INITIATE THE START-UP SEQUENCE. IF THIS AHU DEPENDS ON A CENTRAL CHILLER, IT CAN SEND A RUN REQUEST TO THE CHILLER.

THE RUN ON REQUEST ALGORITHM ALSO ALLOWS AN OPERATOR TO SCHEDULE OCCUPANCY FOR INDIVIDUAL ZONES BASED ON THE NEEDS OF THE OCCUPANTS WITHOUT HAVING TO ADJUST THE SCHEDULES OF RELATED AHUS AND CHILLERS.

TRIM AND RESPOND, OR SETPOINT OPTIMIZATION:
A CONTROL STRATEGY THAT OPTIMIZES THE SETPOINT OF A SOURCE PIECE OF EQUIPMENT THAT SUPPLIES ONE OR MORE RECEIVING UNITS - SUCH AS AN AIR HANDLER UNIT SUPPLYING ZONE TERMINAL UNITS WITH HEATING, COOLING, VENTILATION, OR SIMILAR SERVICE.

THE SOURCE UNIT COMMUNICATES WITH RECEIVING UNITS TO DETERMINE HEATING, COOLING, AND OTHER REQUIREMENTS, AND THEN ADJUSTS ITS SETPOINT.

FOR EXAMPLE, IF ALL ZONES ARE COMFORTABLE AND DO NOT REQUEST COOLING, THE AHU WILL GRADUALLY INCREASE (TRIM) ITS SUPPLY AIR SETPOINT. WHEN A ZONE REQUESTS COOLING, THE AHU RESPONDS BY DROPPING ITS SETPOINT. THE MORE ZONES THAT REQUEST COOLING, THE MORE IT DROPS THE SETPOINT. THE AHU REPEATS THIS PROCESS THROUGHOUT THE DAY TO KEEP ZONES COOL, BUT WITH A SUPPLY AIR SETPOINT THAT IS NO COOLER THAN NECESSARY.

INTERFACE
THE PHYSICAL DEVICE REQUIRED TO PROVIDE INTEGRATION CAPABILITIES FROM AN EQUIPMENT VENDOR'S PRODUCT TO THE CONTROL SYSTEM. THE EQUIPMENT VENDOR MOST NORMALLY FURNISHES THE INTERFACE DEVICE. AN EXAMPLE OF AN INTERFACE IS THE CHILLED WATER TEMPERATURE RESET INTERFACE CARD PROVIDED BY THE CHILLER MANUFACTURER IN ORDER TO ALLOW THE CONTROL SYSTEM TO INTEGRATE THE CHILLED WATER TEMPERATURE RESET FUNCTION INTO THE CONTROL SYSTEM.

INTEGRATE
THE PHYSICAL CONNECTIONS FROM A CONTROL SYSTEM TO ALL SPECIFIED EQUIPMENT THROUGH AN INTERFACE AS REQUIRED TO ALLOW THE SPECIFIED CONTROL AND MONITORING FUNCTIONS OF THE EQUIPMENT TO BE PERFORMED VIA THE CONTROL SYSTEM.

ABBREVIATIONS / ACRONYMS

ADJ. - ADJUSTABLE
AI - ANALOG INPUT
AO - ANALOG OUTPUT
AV - ANALOG VARIABLE
BI - BINARY INPUT
BO - BINARY OUTPUT
BV - BINARY VARIABLE
DX - DIRECT EXPANSION
EC - ELECTRICAL CONTRACTOR
MC - MECHANICAL CONTRACTOR
NC - NORMALLY CLOSED
NO - NORMALLY OPEN

CONTROL DIAGRAM SYMBOLS

SF	SUPPLY FAN
EF	EXHAUST FAN
RF	RELIEF/RETURN FAN
EH	ELECTRIC HEATING COIL
S	SMOKE DETECTOR
CO2	CO2 SENSOR
F	AIRFLOW SENSOR
CP	CONTROL PANEL
DC	POWER DISCONNECT SWITCH
MS	MOTOR STARTER/SWITCH
VFD	VARIABLE FREQUENCY DRIVE MOTOR STARTER
M M / NC NO	NORMALLY CLOSED OR OPEN MOTORIZED DAMPER WITH DAMPER ACTUATOR
	AIR FILTER
DT	DUCT THERMOSTAT
	DIFFERENTIAL PRESSURE SENSOR
H L	DIFFERENTIAL PRESSURE SENSOR WITH HIGH AND LOW
AF	AIRFLOW PRESSURE SWITCH
PB	PUSH BUTTON SWITCH
T	TEMPERATURE SENSOR

CONTROL DIAGRAM SYMBOLS

	VAV DAMPER
CSR	CURRENT SENSOR RELAY
M	MOTOR
CO2 CO2	WALL MOUNTED CARBON DIOXIDE SENSOR
TS TS	WALL MOUNTED TEMPERATURE SENSOR
T T	LINE OR LOW-VOLTAGE WALL MOUNTED THERMOSAT
M	CONTROL VALVE WITH MOTORIZED ACTUATOR
	FLOW SENSOR
CT	CURRENT TRANSMITTER
T	WATER TEMP SENSOR
	FLOW METER
	FLOW DIRECTION
PUMP ID P-#	PUMP
H	ROOM HUMIDITY SENSOR
TS	ROOM TEMPERATURE SENSOR
T	ROOM THERMOSTAT
OAT	OUTDOOR AIR TEMPERATURE SENSOR
DH	DUCT HUMIDITY SENSOR
	DAMPER STATUS SWITCH
SCR	SILICON CONTROLLER RECEPTOR
	BACKDRAFT DAMPER
H	HUMIDITY SENSOR

APPR	DATE	DESCRIPTION	SYM

NAVFAC

PRELIMINARY NOT FOR CONSTRUCTION

SEAL

RQ W.M. Jordan COMPANY – A JOINT VENTURE –

Michael Baker INTERNATIONAL

100 AIRSIDE DRIVE
MOON TOWNSHIP, PA 15108 A/E INFO

APPROVED

FOR COMMANDER NAVFAC

ACTIVITY
MARINE CORPS BASE
CAMP LEJEUNE

SATISFACTORY TO DATE

DES	DRW	CHK
PM		
BRANCH MANAGER		
CHIEF ENG/ARCH		
FIRE PROTECTION		

DEPARTMENT OF THE NAVY
NAVAL FACILITIES ENGINEERING COMMAND ~ MID-ATLANTIC
ROICC FLORENCE CAMP LEJEUNE
MCB CAMP LEJEUNE
JACKSONVILLE, NC

P1338 II MEF SIMULATION/TRAINING CENTER REPLACEMENT

MECHANICAL - CONTROLS

SCALE: AS NOTED

EPROJECT NO.: 1590892

CONSTR. CONTR. NO.
N40085-20-C-0059

NAVFAC DRAWING NO.

SHEET OF

M-801

DP2 SUBMISSION – P1338 BUILDING - PRE-FINAL SUBMISSION

PLOTTED: 6/10/2021 3:34:19 PM

FILE NAME: BIM 360://HF PACKAGE 3/P1338 MEF SIM CTR-1590892-M.rvt

ELECTRIC METER SEQUENCE OF OPERATION:

THE CONTROLLER SHALL MONITOR THE ELECTRIC METER FOR ELECTRIC CONSUMPTION ON A CONTINUAL BASIS. THESE VALUES SHALL BE MADE AVAILABLE TO THE SYSTEM AT ALL TIMES.

ALARM SHALL BE GENERATED AS FOLLOWS:

- METER FAILURE: SENSOR READING INDICATES A LOSS OF PULSE OUTPUT FROM THE ELECTRIC METER.

PEAK DEMAND HISTORY:
THE CONTROLLER SHALL MONITOR AND RECORD THE PEAK (HIGH AND LOW) DEMAND READINGS FROM THE ELECTRIC METER. PEAK READINGS SHALL BE RECORDED ON A DAILY, MONTH-TO-DATE, AND YEAR-TO-DATE BASIS.

USAGE HISTORY:
THE CONTROLLER SHALL MONITOR AND RECORD ELECTRIC METER READINGS SO AS TO PROVIDE A POWER CONSUMPTION HISTORY. USAGE READINGS SHALL BE RECORDED ON A DAILY, MONTH-TO-DATE, AND YEAR-TO-DATE BASIS.

NOTE: THIS METER IS SEPARATE AND DISTINCT FROM THE METER INDICATED ON THE ELECTRICAL DRAWINGS. ATC SUB-CONTRACTOR TO PROVIDE.

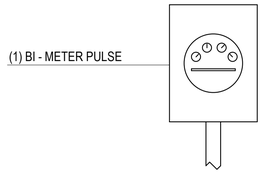

ELECTRIC METER CONTROL DIAGRAM

SCALE: NTS

C1

SYSTEM POINT LIST

POINT NUMBER	SYSTEM POINT DESCRIPTION: ELECTRIC METER	COLOR GRAPHIC	ANALOG INPUT (AI): VALUE	ANALOG OUTPUT (AO)	DIGITAL (BINARY) INPUT (BI): PULSE	DIGITAL (BINARY) OUTPUT (BO)	SYSTEMS FEATURES ALARMS: COMM. FAIL	ALARMS: LEVEL EXCEEDED	PROGRAMS: TREND	NOTES
	DDC CONTROL PANEL						●		●	
	SYSTEM GRAPHIC	●								
1	PULSE INPUT				●					
2	CURRENT DEMAND LEVEL		●						●	
3	kW DEMAND								●	
4	kW PEAK MONTH-TO-DATE								●	
5	kW PEAK TODAY								●	
6	kW PEAK YEAR-TO-DATE								●	
7	kWh TODAY								●	
8	MWh MONTH-TO-DATE								●	
9	MWh YEAR-TO-DATE								●	
10	DEMAND LEVEL 1							●		
11	DEMAND LEVEL 2							●		
12	DEMAND LEVEL 3							●		
13	METER FAILURE						●			
14	RESERVED FOR FUTURE									
15	RESERVED FOR FUTURE									

WATER FLOW METER SEQUENCE OF OPERATION:

WATER METER:
THE CONTROLLER SHALL MONITOR THE WATER METER FOR WATER CONSUMPTION ON A CONTINUAL BASIS. THESE VALUES SHALL BE MADE AVAILABLE TO THE SYSTEM AT ALL TIMES.

ALARM SHALL BE GENERATED AS FOLLOWS:

- METER FAILURE: SENSOR READING INDICATES A LOSS OF PULSE OUTPUT FROM THE WATER METER.

PEAK DEMAND HISTORY:
THE CONTROLLER SHALL MONITOR AND RECORD THE PEAK (HIGH AND LOW) DEMAND READINGS FROM THE WATER METER. THESE READINGS SHALL BE RECORDED ON A DAILY, MONTH-TO-DATE, AND YEAR-TO-DATE BASIS.

USAGE HISTORY:
THE CONTROLLER SHALL MONITOR AND RECORD WATER METER READINGS SO AS TO PROVIDE A WATER CONSUMPTION HISTORY. USAGE READINGS SHALL BE RECORDED ON A DAILY, MONTH-TO-DATE, AND YEAR-TO-DATE BASIS.

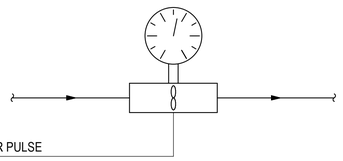

WATER FLOW METER CONTROL DIAGRAM

SCALE: NTS

B1

SYSTEM POINT LIST

POINT NUMBER	SYSTEM POINT DESCRIPTION: WATER METER	COLOR GRAPHIC	ANALOG INPUT (AI): VALUE	ANALOG OUTPUT (AO)	DIGITAL (BINARY) INPUT (BI): PULSE	DIGITAL (BINARY) OUTPUT (BO)	SYSTEMS FEATURES ALARMS: COMM. FAIL	PROGRAMS: TREND	NOTES
	DDC CONTROL PANEL						●	●	
	SYSTEM GRAPHIC	●							
1	PULSE INPUT				●				
2	CURRENT DEMAND LEVEL		●					●	
3	DEMAND							●	
4	PEAK MONTH-TO-DATE							●	
5	PEAK TODAY							●	
6	PEAK YEAR-TO-DATE							●	
7	USAGE TODAY							●	
8	USAGE MONTH-TO-DATE							●	
9	USAGE YEAR-TO-DATE							●	
10	METER FAILURE						●		
11	RESERVED FOR FUTURE								
12	RESERVED FOR FUTURE								

GAS METER SEQUENCE OF OPERATION:

GAS METER:
THE CONTROLLER SHALL MONITOR THE GAS METER FOR GAS CONSUMPTION ON A CONTINUAL BASIS. THESE VALUES SHALL BE MADE AVAILABLE TO THE SYSTEM AT ALL TIMES.

ALARM SHALL BE GENERATED AS FOLLOWS:

- METER FAILURE: SENSOR READING INDICATES A LOSS OF PULSE OUTPUT FROM THE GAS METER.

PEAK DEMAND HISTORY:
THE CONTROLLER SHALL MONITOR AND RECORD THE PEAK (HIGH AND LOW) DEMAND READINGS FROM THE GAS METER. PEAK READINGS SHALL BE RECORDED ON A DAILY, MONTH-TO-DATE, AND YEAR-TO-DATE BASIS.

USAGE HISTORY:
THE CONTROLLER SHALL MONITOR AND RECORD GAS METER READINGS SO AS TO PROVIDE A GAS CONSUMPTION HISTORY. USAGE READINGS SHALL BE RECORDED ON A DAILY, MONTH-TO-DATE, AND YEAR-TO-DATE BASIS.

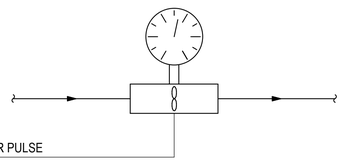

GAS METER CONTROL DIAGRAM

SCALE: NTS

A1

SYSTEM POINT LIST

POINT NUMBER	SYSTEM POINT DESCRIPTION: GAS METER	COLOR GRAPHIC	ANALOG INPUT (AI): VALUE	ANALOG OUTPUT (AO)	DIGITAL (BINARY) INPUT (BI): PULSE	DIGITAL (BINARY) OUTPUT (BO)	SYSTEMS FEATURES ALARMS: COMM. FAIL	PROGRAMS: TREND	NOTES
	DDC CONTROL PANEL						●	●	
	SYSTEM GRAPHIC	●							
1	PULSE INPUT				●				
2	CURRENT DEMAND LEVEL		●					●	
3	DEMAND							●	
4	PEAK MONTH-TO-DATE							●	
5	PEAK TODAY							●	
6	PEAK YEAR-TO-DATE							●	
7	USAGE TODAY							●	
8	USAGE MONTH-TO-DATE							●	
9	USAGE YEAR-TO-DATE							●	
10	METER FAILURE						●		
-	-								
##	RESERVED FOR FUTURE								

APPR | DATE | DESCRIPTION | SYM

NAVFAC

PRELIMINARY NOT FOR CONSTRUCTION

SEAL

IRQ W.M. Jordan COMPANY – A JOINT VENTURE –

Michael Baker INTERNATIONAL
100 AIRSIDE DRIVE
MOON TOWNSHIP, PA 15108 A/E INFO

APPROVED

FOR COMMANDER NAVFAC

ACTIVITY
MARINE CORPS BASE CAMP LEJEUNE

SATISFACTORY TO DATE

DES	DRW	CHK

PM

BRANCH MANAGER

CHIEF ENG/ARCH

FIRE PROTECTION

DEPARTMENT OF THE NAVY
NAVAL FACILITIES ENGINEERING COMMAND ~ MID-ATLANTIC
ROICC FLORENCE CAMP LEJEUNE
MCB CAMP LEJEUNE
JACKSONVILLE, NC

P1338 II MEF SIMULATION/TRAINING CENTER REPLACEMENT

MECHANICAL - CONTROLS

SCALE: AS NOTED

EPROJECT NO.: 1590892

CONSTR. CONTR. NO.
N40085-20-C-0059

NAVFAC DRAWING NO.

SHEET OF

M-802

DP2 SUBMISSION – P1338 BUILDING -PRE-FINAL SUBMISSION

PLOTTED: 6/10/2021 3:34:22 PM

FILE NAME: BIM 360://HF PACKAGE 3/P1338 MEF SIM CTR-1590892-M.rvt

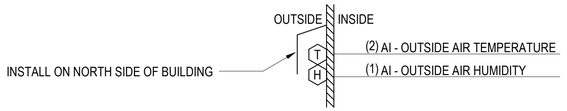

OUTDOOR AIR CONDITIONS SEQUENCE OF OPERATION:

THE CONTROLLER SHALL MONITOR THE OUTSIDE AIR TEMPERATURE AND HUMIDITY AND CALCULATE THE OUTSIDE AIR ENTHALPY ON A CONTINUAL BASIS. THESE VALUES SHALL BE MADE AVAILABLE TO THE SYSTEM AT ALL TIMES.

ALARM SHALL BE GENERATED AS FOLLOWS:

- SENSOR FAILURE: SENSOR READING INDICATES SHORTENED OR DISCONNECTED SENSOR. IN THE EVENT OF A SENSOR FAILURE, AN ALTERNATE OUTSIDE AIR CONDITIONS SENSOR (SUCH AS AHU OA SENSOR) SHALL BE MADE AVAILABLE TO THE SYSTEM WITHOUT INTERRUPTION IN SENSOR READINGS.

IF NO OA TEMP SENSOR CAN BE READ, A DEFAULT VALUE OF 65°F WILL BE USED.

IF NO OA HUMIDITY SENSOR CAN BE READ, A DEFAULT VALUE OF 50% WILL BE USED.

OUTSIDE AIR TEMPERATURE HISTORY:
THE CONTROLLER SHALL MONITOR AND RECORD THE HIGH AND LOW TEMPERATURE READINGS FOR THE OUTSIDE AIR. THESE READINGS SHALL BE RECORDED ON A DAILY, MONTH-TO-DATE, AND YEAR-TO-DATE BASIS.

OUTDOOR AIR CONDITIONS POINT LIST

POINT NUMBER	SYSTEM POINT DESCRIPTION: OUTDOOR AIR CONDITIONS	COLOR GRAPHIC	ANALOG: INPUT (AI)	ANALOG: OUTPUT (AO)	DIGITAL (BINARY): INPUT (BI)	DIGITAL (BINARY): OUTPUT (BO)	SYSTEM FEATURES: ALARMS: FAILURE	SYSTEM FEATURES: PROGRAMS: TREND	SYSTEM FEATURES: PROGRAMS: ANALOG VALUE (AV)	NOTES
1	OUTSIDE AIR HUMIDITY	●	●					●		
2	OUTSIDE AIR TEMP	●	●					●		
3	OUTSIDE AIR ENTHALPY	●						●	●	
4	HIGH TEMP MONTH-TO-DATE	●						●		
5	HIGH TEMP TODAY	●						●		
6	HIGH TEMP YEAR-TO-DATE	●						●		
7	LOW TEMP MONTH-TO-DATE	●						●		
8	LOW TEMP TODAY	●						●		
9	LOW TEMP YEAR-TO-DATE	●						●		
10	SENSOR FAILURE						●			
-	-									
##	RESERVED FOR FUTURE									

OUTSIDE AIR CONDITIONS CONTROL DIAGRAM

C1

SCALE: NTS

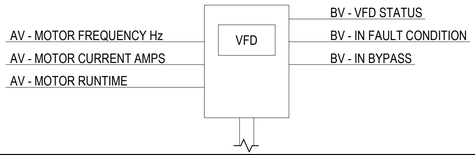

VARIABLE FREQUENCY DRIVE INTERFACE

VARIABLE FREQUENCY DRIVE (VFD) INTERFACE MONITOR:
CURRENT VFD STATUS AND OPERATING CONDITIONS SHALL BE MONITORED THROUGH ITS COMMUNICATIONS INTERFACE PORT. THE INTERFACE SHALL MONITOR AND TREND THE POINTS AS SHOWN ON THE POINTS LIST.

VARIABLE FREQUENCY DRIVE POINTS LIST

POINT NUMBER	SYSTEM POINT DESCRIPTION: SUB-TITLE	COLOR GRAPHIC	ANALOG: INPUT (AI)	ANALOG: OUTPUT (AO)	DIGITAL (BINARY): INPUT (BI)	DIGITAL (BINARY): OUTPUT (BO)	SYSTEM FEATURES: ALARMS	SYSTEM FEATURES: PROGRAMS	NOTES
1	MOTOR CURRENT AMPS	●							
2	MOTOR FREQUENCY HERTZ	●							
3	MOTOR RUNTIME	●							
4	IN BYPASS	●							
5	IN FAULT CONDITION	●							
6	VFD STATUS	●							
-	-								
##	RESERVED FOR FUTURE								

VARIABLE FREQUENCY DRIVE (VFD)

A1

SCALE: NTS

S (1) BI - ATFP SWITCH

ANTI-TERRORISM FORCE PROTECTION (ATFP) SHUTDOWN SEQUENCE OF OPERATION

THE CONTROLLER SHALL MONITOR THE ANTI-TERRORISM FORCE PROTECTION SHUTDOWN SWITCHES.

UPON ACTIVATION OF A SHUTDOWN SWITCH THE FOLLOWING SHALL OCCUR WITHIN 30 SECONDS (IN NORMAL OCCUPIED SPACES):

- ALL FANS SHALL SHUT DOWN (EXCEPT AS INDICATED)
- ALL OUTDOOR AIR DAMPERS SHALL CLOSE
- ALL EXHAUST DAMPERS SHALL CLOSE
- AN ALARM SHALL BE GENERATED

SYSTEM SHALL SHUT DOWN AND DAMPERS SHALL CLOSE REGARDLESS OF THE POSITION OF HAND-OFF-AUTO SWITCHES

SYSTEMS EXCLUDED FROM ATFP SHUTDOWN

- COMPUTER ROOM AIR CONDITIONING UNITS (CRAC-01 THRU CRAC-03)

ATFP SHUTDOWN POINT LIST

POINT NUMBER	SYSTEM POINT DESCRIPTION: ATFP SHUTDOWN	COLOR GRAPHIC	ANALOG: INPUT (AI)	ANALOG: OUTPUT (AO)	DIGITAL (BINARY): INPUT (BI)	DIGITAL (BINARY): OUTPUT (BO)	SYSTEM FEATURES: ALARMS: ACTIVATION	SYSTEM FEATURES: PROGRAMS: TREND	NOTES
1	ATFP SWITCH	●			●		●	●	
-	-								
##	RESERVED FOR FUTURE								

AFTP SHUTDOWN CONTROL DIAGRAM

C3

SCALE: NTS

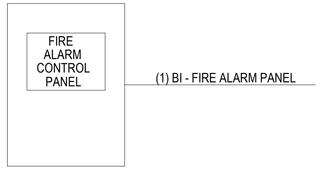

FIRE ALARM SEQUENCE OF OPERATION:

THE CONTROLLER SHALL MONITOR FIRE ALARM. CONNECT TO RELAY MODULE.

UPON ACTIVATION OF FIRE ALARM SYSTEM THE FOLLOWING SHALL OCCUR WITHIN 30 SECONDS:

- ALL FANS SHALL SHUTDOWN
- ALL OUTDOOR AIR DAMPERS SHALL CLOSE
- ALL EXHAUST DAMPERS SHALL CLOSE
- AN ALARM SHALL BE GENERATED

SYSTEM SHALL SHUTDOWN AND DAMPERS SHALL CLOSE REGARDLESS OF THE POSITION OF HAND-OFF-AUTO SWITCHES.

SYSTEMS EXCLUDED FROM FIRE ALARM SHUTDOWN:

- COMPUTER ROOM AIR CONDITIONING UNITS (CRAC-01 THRU CRAC-03)

FIRE ALARM SYSTEM

POINT NUMBER	SYSTEM POINT DESCRIPTION: FIRE ALARM SYSTEM	COLOR GRAPHIC	ANALOG: INPUT (AI)	ANALOG: OUTPUT (AO)	DIGITAL (BINARY): INPUT (BI)	DIGITAL (BINARY): OUTPUT (BO)	SYSTEM FEATURES: ALARMS	SYSTEM FEATURES: PROGRAMS	NOTES
1	FIRE ALARM PANEL	●			●		●		
-	-								
##	RESERVED FOR FUTURE								

FIRE ALARM SYSTEM CONTROL DIAGRAM

A4

SCALE: NTS

APPR	DATE	DESCRIPTION	SYM

NAVFAC

PRELIMINARY NOT FOR CONSTRUCTION

SEAL

IRQ W.M. Jordan COMPANY – A JOINT VENTURE –

Michael Baker INTERNATIONAL
100 AIRSIDE DRIVE
MOON TOWNSHIP, PA 15108
A/E INFO

APPROVED

FOR COMMANDER NAVFAC

ACTIVITY
MARINE CORPS BASE CAMP LEJEUNE

SATISFACTORY TO DATE

DES	DRW	CHK

PM

BRANCH MANAGER

CHIEF ENG/ARCH

FIRE PROTECTION

DEPARTMENT OF THE NAVY
NAVAL FACILITIES ENGINEERING COMMAND
ROIOC FLORENCE CAMP LEJEUNE
MCB CAMP LEJEUNE

NAVAL FACILITIES ENGINEERING COMMAND ~ MID-ATLANTIC
JACKSONVILLE, NC

JACKSONVILLE, NC
P1338 II MEF SIMULATION/TRAINING CENTER REPLACEMENT
MECHANICAL - CONTROLS

SCALE: AS NOTED
EPROJECT NO.: 1590892
CONSTR. CONTR. NO.
N40085-20-C-0059
NAVFAC DRAWING NO.
SHEET OF

M-803

DP2 SUBMISSION – P1338 BUILDING -PRE-FINAL SUBMISSION

PLOTTED: 6/10/2021 3:34:26 PM

FILE NAME: BIM 360://HF PACKAGE 3/P1338 MEF SIM CTR-1590892-M.rvt

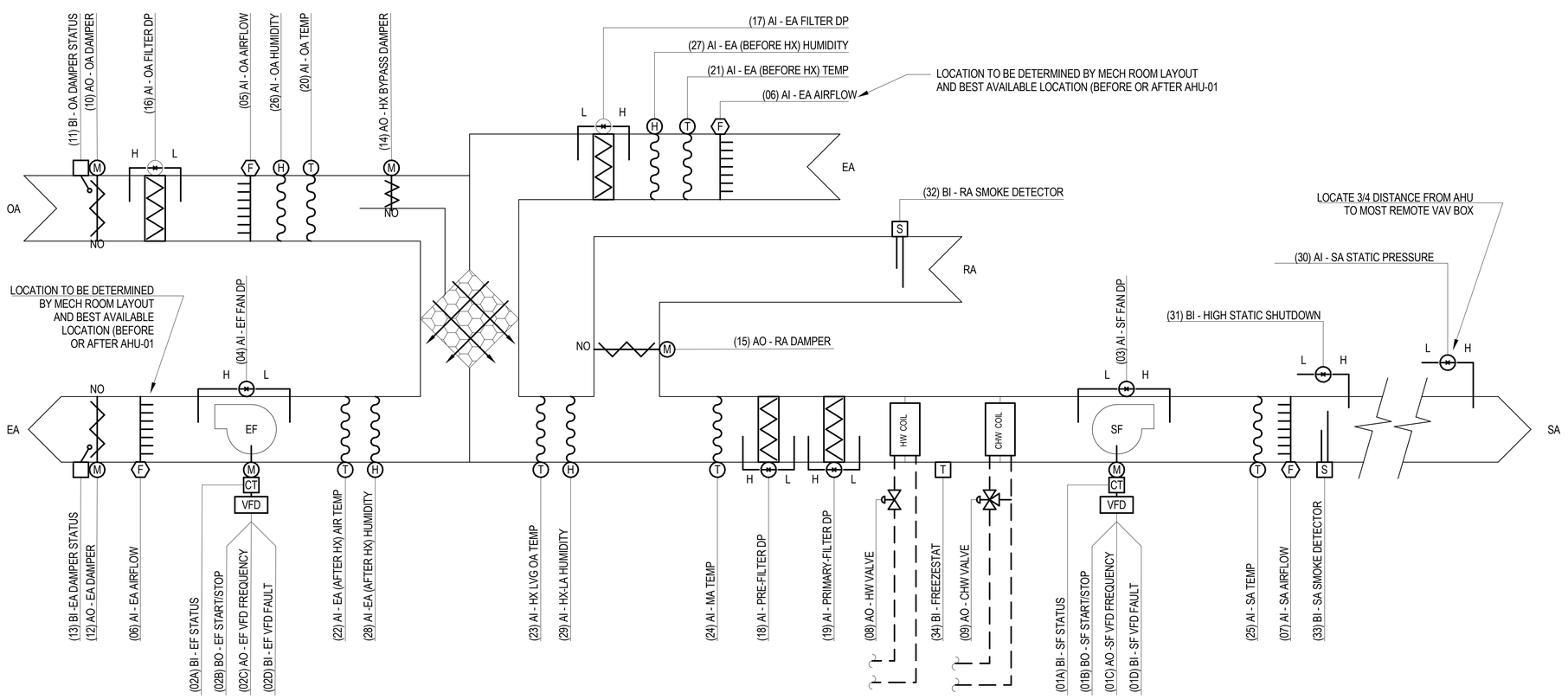

HF-3, P-1338, AHU-1 SOO:

BUILDING AUTOMATION SYSTEM INTERFACE:
THE BUILDING AUTOMATION SYSTEM (BAS) SHALL SEND THE CONTROLLER OCCUPIED/UNOCCUPIED, OCCUPIED BYPASS, MORNING WARM UP/PRE COOL, ATFP ALARM CONDITION AND MODES. THE UNIT SHALL DELIVER SUPPLY AIR AT A CONSTANT 55 °F DB (ADJ.) SUPPLY TEMPERATURE WITH INDIVIDUAL ZONE COOLING/HEATING CONTROLLED AT THE VAV BOX/ZONE LEVEL. THE BAS SHALL ALSO SEND THE DISCHARGE AIR TEMPERATURE SETPOINT (55 °F DB) AND THE DUCT STATIC PRESSURE SETPOINT. IF A BAS IS NOT PRESENT, OR COMMUNICATION IS LOST WITH THE BAS THE CONTROLLER SHALL OPERATE USING DEFAULT MODES AND SETPOINTS.

OCCUPIED MODE:
DURING OCCUPIED PERIODS, THE SUPPLY FAN AND EXHAUST FAN SHALL RUN CONTINUOUSLY, AND THE OUTSIDE AIR DAMPER SHALL OPEN/MODULATE IN CONJUNCTION WITH THE RETURN AIR DAMPER TO MAINTAIN THE CONSTANT VENTILATION AND EXHAUST REQUIREMENT AND BUILDING PRESSURIZATION. THE CHILLED WATER AND HOT WATER VALVES SHALL MODULATE TO MAINTAIN THE DISCHARGE AIR TEMPERATURE SETPOINT.

UNOCCUPIED MODE:
WHEN THE SPACE TEMPERATURE OF ANY ZONE IS BELOW THE UNOCCUPIED HEATING SETPOINT OF 60.0 DEG. F (ADJ.) THE SUPPLY FAN SHALL START, THE OUTSIDE AIR DAMPER SHALL REMAIN CLOSED, THE EXHAUST FAN SHALL REMAIN OFF, AND THE HOT WATER VALVE SHALL OPEN. WHEN THE SPACE TEMPERATURE OF EACH ZONE RISES ABOVE THE UNOCCUPIED HEATING SETPOINT OF 60.0 DEG. F (ADJ.) PLUS THE UNOCCUPIED DIFFERENTIAL OF 4.0 DEG. F (ADJ.) THE SUPPLY FAN SHALL STOP AND THE HOT WATER VALVE SHALL CLOSE.

WHEN THE SPACE TEMPERATURE IS ABOVE THE UNOCCUPIED COOLING SETPOINT OF 85.0 DEG. F (ADJ.) THE SUPPLY FAN SHALL START, THE OUTSIDE AIR DAMPER SHALL REMAIN CLOSED, THE EXHAUST FAN SHALL REMAIN OFF, AND THE CHILLED WATER VALVE SHALL OPEN. WHEN THE SPACE TEMPERATURE OF ALL ZONES FALLS BELOW THE UNOCCUPIED COOLING SETPOINT OF 85.0 DEG. F (ADJ.) MINUS THE UNOCCUPIED DIFFERENTIAL OF 4.0 DEG. F (ADJ.) THE SUPPLY FAN SHALL STOP AND THE CHILLED WATER VALVE SHALL CLOSE.

OPTIMAL START:
THE BAS SHALL MONITOR THE SCHEDULED OCCUPIED TIME, OCCUPIED SPACE SETPOINTS AND SPACE TEMPERATURE TO CALCULATE WHEN THE OPTIMAL START OCCURS.

MORNING WARM UP MODE:
DURING OPTIMAL START, IF THE AVERAGE SPACE TEMPERATURE IS BELOW THE OCCUPIED HEATING SETPOINT A MORNING WARM UP MODE SHALL BE ACTIVATED. WHEN MORNING WARM UP IS INITIATED THE UNIT SHALL ENABLE THE HEATING AND SUPPLY FAN. THE OUTSIDE AIR DAMPER SHALL REMAIN CLOSED AND THE EXHAUST FAN SHALL REMAIN OFF. WHEN THE SPACE TEMPERATURE REACHES THE OCCUPIED HEATING SETPOINT (ADJ.), THE UNIT SHALL TRANSITION TO THE OCCUPIED MODE.

PRE COOL MODE:
DURING OPTIMAL START, IF THE AVERAGE SPACE TEMPERATURE IS ABOVE THE OCCUPIED COOLING SETPOINT, PRE COOL MODE SHALL BE ACTIVATED. WHEN PRE COOL IS INITIATED THE UNIT SHALL ENABLE THE COOLING AND SUPPLY FAN. THE OUTSIDE AIR DAMPER SHALL REMAIN CLOSED AND THE EXHAUST FAN SHALL REMAIN OFF. WHEN THE SPACE TEMPERATURE REACHES OCCUPIED COOLING SETPOINT (ADJ.), THE UNIT SHALL TRANSITION TO THE OCCUPIED MODE.

OCCUPIED BYPASS:
THE BAS SHALL MONITOR THE STATUS OF THE "ON" AND "CANCEL" BUTTONS OF THE VAV SPACE TEMPERATURE SENSORS. WHEN AN OCCUPIED BYPASS REQUEST IS RECEIVED FROM A SPACE SENSOR, THE UNIT SHALL TRANSITION FROM ITS CURRENT OCCUPANCY MODE TO OCCUPIED BYPASS MODE AND THE UNIT SHALL MAINTAIN THE SPACE TEMPERATURE TO THE OCCUPIED SETPOINTS.

FIXED PLATE ENTHALPY HX OPERATION:
WHEN THE OA DRY BULB TEMPERATURE IS HIGHER THAN THE EXHAUST AIR DRY BULB TEMPERATURE, THE FIXED PLATE ENTHALPY HX FACE AND BYPASS DAMPER SHALL BE POSITIONED FOR 0% BYPASS. WHEN THE OA DRY BULB TEMPERATURE IS LESS THAN THE EA DRY BULB TEMPERATURE AND THE AHU IS COOLING, THE FACE AND BYPASS DAMPER SHALL BE POSITIONED FOR 100% BYPASS.

WHEN THE AHU IS HEATING, THE FIXED PLATE ENTHALPY HX FACE AND BYPASS DAMPER SHALL MODULATE (AS NECESSARY) TO MAINTAIN DISCHARGE AIR TEMPERATURE AT SETPOINT (ADJ.). IF THE TEMPERATURE LEAVING THE EXHAUST-SIDE OF THE FIXED PLATE ENTHALPY HX DROPS BELOW THE FROST THRESHOLD SETPOINT (ADJ.), THE FACE AND BYPASS DAMPER SHALL MODULATE TOWARDS THE BYPASS POSITION AS REQUIRED TO PREVENT FROST ACCUMULATION AS MEASURED BY THE FROST SENSOR.

SUPPLY FAN:
THE FAN SHALL BE OFF IN THE UNOCCUPIED MODE. WHEN THE UNIT CONTROLLER IS IN THE OCCUPIED MODE, THE SUPPLY FAN SHALL OPERATE CONTINUOUSLY AND ITS SPEED SHALL BE MODULATED TO MAINTAIN THE DUCT STATIC PRESSURE SETPOINT. THE DUCT STATIC PRESSURE SETPOINT SHALL BE SENT BY THE BAS AND SHALL BE RESET BETWEEN THE MINIMUM AND MAXIMUM STATIC PRESSURE LIMITS TO MAINTAIN THE CRITICAL ZONE VAV AIR DAMPER IN A POSITION BETWEEN 65% AND 75% OPEN.

IF THE SUPPLY FAN FAILS TO PROVE STATUS FOR 30 SECONDS (ADJ.), THE FAN SHALL BE COMMANDED OFF, THE OUTSIDE AIR DAMPER SHALL CLOSE, THE EXHAUST FAN SHALL TURN OFF, ALL VALVES SHALL CLOSE AND AN ALARM SHALL BE ANNUNCIATED AT THE BAS. A MANUAL RESET SHALL BE REQUIRED TO RESTART THE FAN.

A HARDWIRED, HIGH STATIC PRESSURE CUT OFF SWITCH SHALL BE ELECTRICALLY INTERLOCKED WITH THE VARIABLE SPEED DRIVE. IF THE HIGH STATIC PRESSURE CUT OFF SWITCH IS TRIPPED THE FAN SHALL STOP, THE OUTSIDE AIR DAMPER-SHALL CLOSE, THE EXHAUST FAN SHALL TURN OFF, ALL VALVES SHALL CLOSE AND AN ALARM SHALL BE ANNUNCIATED AT THE BAS. A MANUAL RESET OF THE HIGH STATIC PRESSURE CUT OFF SWITCH SHALL BE REQUIRED TO RESTART THE FAN.

FILTER STATUS:
A DIFFERENTIAL PRESSURE SWITCH SHALL MONITOR THE DIFFERENTIAL PRESSURE ACROSS THE FILTERS WHEN THE FANS ARE RUNNING. THIS INFORMATION SHALL BE PROVIDED TO THE DDC SYSTEM FOR INFORMATION ONLY. CAMP LEJEUNE MECHANICAL POLICIES DO NOT DESIRE FILTER ALARMS (FILTERS SHALL BE CHANGED ON REGULAR MAINTENANCE INTERVALS).

FREEZE PROTECTION:
A HARDWIRED, LOW LIMIT TEMPERATURE SWITCH SHALL BE ELECTRICALLY INTERLOCKED WITH THE SUPPLY FAN VARIABLE SPEED DRIVE. IF THE LOW LIMIT TEMPERATURE SWITCH IS TRIPPED 38.0 DEG. F (ADJ.), THE OUTSIDE AIR DAMPER SHALL CLOSE, THE EXHAUST FAN SHALL TURN OFF, ALL VALVES SHALL OPEN TO 100% (ADJ.) AND AN ALARM SHALL BE ANNUNCIATED AT THE BAS. A MANUAL RESET OF THE LOW LIMIT TEMPERATURE SWITCH SHALL BE REQUIRED TO RESTART THE SUPPLY FAN.

ATFP SHUTDOWN:
IF A SIGNAL IS RECEIVED FROM THE BAS THAT AN ATFP SWITCH HAS BEEN ACTIVATED, THE SUPPLY FAN AND EXHAUST FAN SHALL TURN OFF AND THE OUTSIDE AIR AND EXHAUST AIR DAMPERS SHALL CLOSE.

BUILDING PRESSURE CONTROL:
THE OUTDOOR AIR DAMPER SHALL MODULATE TO MAINTAIN THE CONSTANT VENTILATION REQUIREMENT AS MEASURED BY THE OUTDOOR AIRFLOW STATION. IF THE OUTSIDE AIR DAMPER IS 100% OPEN, AND THE VENTILATION AIRFLOW IS LESS THAN THE CONSTANT VOLUME REQUIREMENT, THEN THE RETURN AIR DAMPER SHALL SLOWLY MODULATE CLOSED IN ORDER TO ACHIEVE THE CONSTANT VENTILATION REQUIREMENT. THE RETURN AIR DAMPER SHALL NOT BE ALLOWED TO CLOSE FULLY IN ORDER TO PREVENT STARVING THE SUPPLY FAN.

THE EXHAUST FAN SPEED SHALL MODULATE TO MAINTAIN THE CONSTANT EXHAUST AIRFLOW REQUIREMENT AS MEASURED BY THE EXHAUST AIRFLOW STATION. IF THE EXHAUST FAN IS AT MINIMUM SPEED, AND THE EXHAUST AIRFLOW IS GREATER THAN THE CONSTANT VOLUME REQUIREMENT, THEN THE EXHAUST AIR DAMPER SHALL SLOWLY MODULATE CLOSED TO ACHIEVE THE CONSTANT EXHAUST AIRFLOW REQUIREMENT. THE EXHAUST AIR DAMPER SHALL NOT BE ALLOWED TO CLOSE FULLY TO PREVENT STARVING THE EXHAUST FAN.

BY MAINTAINING BOTH THE CONSTANT OUTSIDE AIR VENTILATION AND THE CONSTANT EXHAUST AIRFLOW REQUIREMENTS, THE RESULTING SPACE PRESSURE SHALL REMAIN SLIGHTLY POSITIVE.

AHU CONTROL DIAGRAM (AHU-01)

SCALE: NTS

A1

APPR	DATE	DESCRIPTION	SYM

NAVFAC

PRELIMINARY NOT FOR CONSTRUCTION

SEAL

IRQ W.M. Jordan COMPANY – A JOINT VENTURE –

Michael Baker INTERNATIONAL
100 AIRSIDE DRIVE
MOON TOWNSHIP, PA 15108
A/E INFO

APPROVED

FOR COMMANDER NAVFAC

ACTIVITY
MARINE CORPS BASE
CAMP LEJEUNE

SATISFACTORY TO DATE

DES	DRW	CHK

PM

BRANCH MANAGER

CHIEF ENG/ARCH

FIRE PROTECTION

DEPARTMENT OF THE NAVY
NAVAL FACILITIES ENGINEERING COMMAND
ROICC FLORENCE CAMP LEJEUNE
MCB CAMP LEJEUNE

NAVAL FACILITIES ENGINEERING COMMAND – MID-ATLANTIC
JACKSONVILLE, NC

JACKSONVILLE, NC
P1338 II MEF SIMULATION/TRAINING CENTER
REPLACEMENT
MECHANICAL - CONTROLS

SCALE: AS NOTED
EPROJECT NO.: 1590892
CONSTR. CONTR. NO.
N40085-20-C-0059
NAVFAC DRAWING NO.
SHEET OF

M-804

DP2 SUBMISSION – P1338 BUILDING - PRE-FINAL SUBMISSION

PLOTTED: 6/10/2021 3:34:28 PM

FILE NAME: BIM 360://HF PACKAGE 3/P1338 MEF SIM CTR-1590892-M.rvt

AHU-1 SYSTEM POINT LIST

POINT NUMBER	SYSTEM POINT DESCRIPTION	COLOR GRAPHIC	ANALOG INPUT (AI) TEMPERATURE	PRESSURE	RELATIVE HUMIDITY	AIRFLOW (CFM)	% OPEN / FREQUENCY	ANALOG OUTPUT (AO) % OPEN / CLOSE	% OPEN / FREQUENCY	DIGITAL (BINARY) INPUT (BI) STATUS ON/OFF	OPEN/CLOSE	SMOKE	STATUS (FAULT)	DIGITAL (BINARY) OUTPUT (BO) START / STOP	SYSTEM FEATURES ALARMS HIGH ANALOG	LOW ANALOG	SENSOR FAIL	FLOW FAIL	COMM. FAIL	SMOKE DETECTOR	PROGRAMS TIME SCHEDULING	OPT. START/STOP	EVENT	ALARM INSTRUCT	RUN TIME	AUTO RESTART	NOTES
	DDC CONTROL PANEL																		●		●	●	●	●	●	●	
	SYSTEM GRAPHIC	●																										
01A-D	SUPPLY FAN VFD						●		●				●	●				●										1
02A-D	EXHAUST FAN VFD						●		●				●	●				●										1
03	SUPPLY FAN DP			●												●												
04	EXHAUST FAN DP			●												●												
05	AFMS - OUTSIDE AIR (OA) AIRFLOW					●										●	●	●										
06	AFMS - EXHAUST AIRFLOW					●										●	●	●										
07	AFMS - SUPPLY AIR (SA) AIRFLOW					●												●										
08	HOT WATER HEATING (HW) VALVE							●																				
09	CHILLED WATER COOLING (CHW) VALVE							●																				
10	OUTSIDE AIR (OA) DAMPER							●																				
11	OUTSIDE AIR (OA) DAMPER END SWITCH										●																	
12	EXHAUST AIR (EA) DAMPER							●																				
13	EXHAUST AIR (EA) DAMPER END SWITCH										●																	
14	HX BYPASS DAMPER							●																				
15	RETURN AIR DAMPER							●																				
16	OUTSIDE AIR (OA) FILTER DP SWITCH (DPS)			●																								
17	EXHAUST AIR (EA) FILTER DP SWITCH			●																								
18	PRE-FILTER DP SWITCH			●																								
19	PRIMARY FILTER DP SWITCH			●																								
20	OUTSIDE AIR (OA) TEMPERATURE		●																									
21	EXHAUST AIR (EA) BEFORE HX TEMP		●																									
22	EXHAUST AIR (EA) AFTER HX TEMP		●																									
23	HX LEAVING (HX-LVG) OA TEMP		●																									
24	MIXED AIR (MA) TEMPERATURE		●														●	●										
25	SUPPLY AIR (SA) TEMPERATURE		●													●	●	●										
26	OUTSIDE AIR (OA) HUMIDITY				●																							
27	EXHAUST AIR (EA) BEFORE HX HUMIDITY				●																							
28	EXHAUST AIR (EA) AFTER HX HUMIDITY				●																							
29	HX LEAVING (HX-LA) OA AIR HUMIDITY				●																							
30	SUPPLY AIR (SA) STATIC PRESSURE			●																								
31	HIGH STATIC SHUTDOWN SWITCH										●						●											
32	RETURN AIR (RA) SMOKE DETECTOR												●								●							
33	SUPPLY AIR (SA) SMOKE DETECTOR												●								●							
34	FREEZESTAT										●																	
##	RESERVED FOR FUTURE																											

NOTES: 1. SUPPLY AND EXHAUST FAN & VFD'S AS INDICATED ON THESE DRAWINGS MAY REFER TO FAN-WALL ARRAYS CONSISTING OF MULTIPLE FANS AND VFD'S; FAN WALL SHALL MODULATE PER MANUFACTURER'S PROVIDED CONTROLS FOR OPTIMUM PERFORMANCE AND EFFICIENCY BASED ON COMMON ANALOG OUTPUT SIGNAL.

SYM	DESCRIPTION	DATE	APPR

NAVFAC

PRELIMINARY NOT FOR CONSTRUCTION

SEAL

IRQ W.M. Jordan COMPANY – A JOINT VENTURE –

Michael Baker INTERNATIONAL

100 AIRSIDE DRIVE MOON TOWNSHIP, PA 15108 A/E INFO

APPROVED

FOR COMMANDER NAVFAC

ACTIVITY

MARINE CORPS BASE CAMP LEJEUNE

SATISFACTORY TO DATE

DES	DRW	CHK

PM

BRANCH MANAGER

CHIEF ENG/ARCH

FIRE PROTECTION

DEPARTMENT OF THE NAVY
NAVAL FACILITIES ENGINEERING COMMAND – MID-ATLANTIC
JACKSONVILLE, NC
ROICC FLORENCE CAMP LEJEUNE
MCB CAMP LEJEUNE
JACKSONVILLE, NC
P1338 II MEF SIMULATION/TRAINING CENTER REPLACEMENT
MECHANICAL - CONTROLS

SCALE: AS NOTED

EPROJECT NO.: 1590892

CONSTR. CONTR. NO.
N40085-20-C-0059

NAVFAC DRAWING NO.

SHEET OF

M-805

DP2 SUBMISSION – P1338 BUILDING -PRE-FINAL SUBMISSION

PLOTTED: 6/10/2021 3:34:29 PM

FILE NAME: BIM 360://HF PACKAGE 3/P1338 MEF SIM CTR-1590892-M.rvt

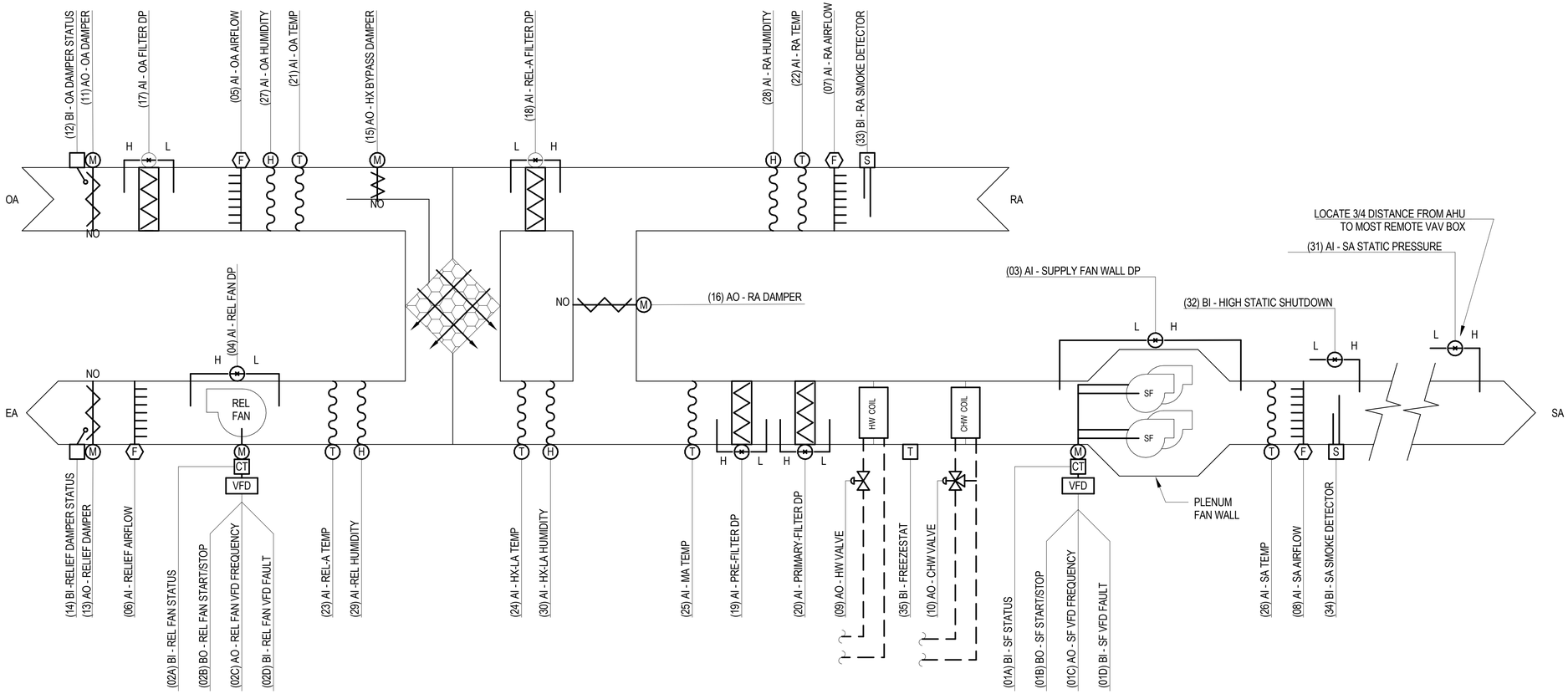

HF-3, P-1338, AHU-2 SOO:

BUILDING AUTOMATION SYSTEM INTERFACE:
THE BUILDING AUTOMATION SYSTEM (BAS) SHALL SEND THE CONTROLLER OCCUPIED/UNOCCUPIED, OCCUPIED BYPASS, MORNING WARM UP/PRE COOL, ATFP ALARM CONDITION AND MODES. THE UNIT SHALL DELIVER SUPPLY AIR AT A CONSTANT 55 °F DB (ADJ.) SUPPLY AIR TEMPERATURE WITH INDIVIDUAL ZONE COOLING/HEATING CONTROLLED AT THE VAV BOX/ZONE LEVEL. THE BAS SHALL ALSO SEND THE DISCHARGE AIR TEMPERATURE SETPOINT (55 °F DB ADJ.) AND THE DUCT STATIC PRESSURE SETPOINT. IF A BAS IS NOT PRESENT, OR COMMUNICATION IS LOST WITH THE BAS THE CONTROLLER SHALL OPERATE USING DEFAULT MODES AND SETPOINTS.

OCCUPIED MODE:
DURING OCCUPIED PERIODS, THE SUPPLY FAN(S) AND RELIEF FAN SHALL RUN CONTINUOUSLY, AND THE OUTSIDE AIR DAMPER SHALL OPEN/MODULATE IN CONJUNCTION WITH THE RETURN AIR DAMPER TO MAINTAIN THE CONSTANT VENTILATION/RELIEF REQUIREMENTS AND BUILDING PRESSURIZATION. THE CHILLED WATER AND HOT WATER VALVES SHALL MODULATE TO MAINTAIN THE DISCHARGE AIR TEMPERATURE SETPOINT.

UNOCCUPIED MODE:
WHEN THE SPACE TEMPERATURE OF ANY ZONE IS BELOW THE UNOCCUPIED HEATING SETPOINT OF 60.0 DEG. F (ADJ.) THE SUPPLY FAN SHALL START, THE OUTSIDE AIR DAMPER SHALL REMAIN CLOSED, THE RELIEF FAN SHALL REMAIN OFF, AND THE HOT WATER VALVE SHALL OPEN. WHEN THE SPACE TEMPERATURE OF EACH ZONE RISES ABOVE THE UNOCCUPIED HEATING SETPOINT OF 60.0 DEG. F (ADJ.) PLUS THE UNOCCUPIED DIFFERENTIAL OF 4.0 DEG. F (ADJ.) THE SUPPLY FAN SHALL STOP AND THE HOT WATER VALVE SHALL CLOSE.

WHEN THE SPACE TEMPERATURE IS ABOVE THE UNOCCUPIED COOLING SETPOINT OF 85.0 DEG. F (ADJ.) THE SUPPLY FAN SHALL START, THE OUTSIDE AIR DAMPER SHALL REMAIN CLOSED, THE RELIEF FAN SHALL REMAIN OFF, AND THE CHILLED WATER VALVE SHALL OPEN. WHEN THE SPACE TEMPERATURE OF ALL ZONES FALLS BELOW THE UNOCCUPIED COOLING SETPOINT OF 85.0 DEG. F (ADJ.) MINUS THE UNOCCUPIED DIFFERENTIAL OF 4.0 DEG. F (ADJ.) THE SUPPLY FAN SHALL STOP AND THE CHILLED WATER VALVE SHALL CLOSE.

OPTIMAL START:
THE BAS SHALL MONITOR THE SCHEDULED OCCUPIED TIME, OCCUPIED SPACE SETPOINTS AND SPACE TEMPERATURE TO CALCULATE WHEN THE OPTIMAL START OCCURS.

MORNING WARM UP MODE:
DURING OPTIMAL START, IF THE AVERAGE SPACE TEMPERATURE IS BELOW THE OCCUPIED HEATING SETPOINT A MORNING WARM UP MODE SHALL BE ACTIVATED. WHEN MORNING WARM UP IS INITIATED THE UNIT SHALL ENABLE THE HEATING AND SUPPLY FAN. THE OUTSIDE AIR DAMPER SHALL REMAIN CLOSED AND THE RELIEF FAN SHALL REMAIN OFF. WHEN THE SPACE TEMPERATURE REACHES THE OCCUPIED HEATING SETPOINT (ADJ.), THE UNIT SHALL TRANSITION TO THE OCCUPIED MODE.

PRE COOL MODE:
DURING OPTIMAL START, IF THE AVERAGE SPACE TEMPERATURE IS ABOVE THE OCCUPIED COOLING SETPOINT, PRE COOL MODE SHALL BE ACTIVATED. WHEN PRE COOL IS INITIATED THE UNIT SHALL ENABLE THE COOLING AND SUPPLY FAN. THE OUTSIDE AIR DAMPER SHALL REMAIN CLOSED AND THE RELIEF FAN SHALL REMAIN OFF. WHEN THE SPACE TEMPERATURE REACHES OCCUPIED COOLING SETPOINT (ADJ.), THE UNIT SHALL TRANSITION TO THE OCCUPIED MODE.

OCCUPIED BYPASS:
THE BAS SHALL MONITOR THE STATUS OF THE "ON" AND "CANCEL" BUTTONS OF THE VAV SPACE TEMPERATURE SENSORS. WHEN AN OCCUPIED BYPASS REQUEST IS RECEIVED FROM A SPACE SENSOR, THE UNIT SHALL TRANSITION FROM ITS CURRENT OCCUPANCY MODE TO OCCUPIED BYPASS MODE AND THE UNIT SHALL MAINTAIN THE SPACE TEMPERATURE TO THE OCCUPIED SETPOINTS.

FIXED PLATE ENTHALPY HX OPERATION:
WHEN THE OA DRY BULB TEMPERATURE IS HIGHER THAN THE [RELIEF AIR DRY BULB TEMPERATURE, THE FIXED PLATE ENTHALPY HX FACE AND BYPASS DAMPER SHALL BE POSITIONED FOR 0% BYPASS. WHEN THE OA DRY-BULB TEMPERATURE IS LESS THAN THE EA DRY BULB TEMPERATURE AND THE AHU IS COOLING, THE FACE AND BYPASS DAMPER SHALL BE POSITIONED FOR 100% BYPASS.

WHEN THE AHU IS HEATING, THE FIXED PLATE ENTHALPY HX FACE AND BYPASS DAMPER SHALL MODULATE (AS NECESSARY) TO MAINTAIN DISCHARGE AIR TEMPERATURE AT SETPOINT (ADJ.). IF THE TEMPERATURE LEAVING THE RELIEF SIDE OF THE FIXED PLATE ENTHALPY HX DROPS BELOW THE FROST THRESHOLD SETPOINT (ADJ.), THE FACE AND BYPASS DAMPER SHALL MODULATE TOWARDS THE BYPASS POSITION AS REQUIRED TO PREVENT FROST ACCUMULATION AS MEASURED BY THE FROST SENSOR.

SUPPLY FAN (4-FAN "FANWALL"):
THE FAN SHALL BE OFF IN THE UNOCCUPIED MODE. WHEN THE UNIT CONTROLLER IS IN THE OCCUPIED MODE, THE SUPPLY FAN SHALL OPERATE CONTINUOUSLY AND ITS SPEED SHALL BE MODULATED TO MAINTAIN THE DUCT STATIC PRESSURE SETPOINT. THE DUCT STATIC PRESSURE SETPOINT SHALL BE SENT BY THE BAS AND SHALL BE RESET BETWEEN THE MINIMUM AND MAXIMUM STATIC PRESSURE LIMITS TO MAINTAIN THE CRITICAL ZONE VAV AIR DAMPER IN A POSITION BETWEEN 65% AND 75% OPEN.

IF THE SUPPLY FAN FAILS TO PROVE STATUS FOR 30 SECONDS (ADJ.), THE FAN SHALL BE COMMANDED OFF, THE OUTSIDE AIR DAMPER SHALL CLOSE, THE RELIEF FAN SHALL TURN OFF, ALL VALVES SHALL CLOSE AND AN ALARM SHALL BE ANNUNCIATED AT THE BAS. A MANUAL RESET SHALL BE REQUIRED TO RESTART THE FAN.

A HARDWIRED, HIGH STATIC PRESSURE CUT OFF SWITCH SHALL BE ELECTRICALLY INTERLOCKED WITH THE VARIABLE SPEED DRIVE. IF THE HIGH STATIC PRESSURE CUT OFF SWITCH IS TRIPPED THE FAN SHALL STOP, THE OUTSIDE AIR DAMPER SHALL CLOSE, THE RELIEF FAN SHALL TURN OFF, ALL VALVES SHALL CLOSE AND AN ALARM SHALL BE ANNUNCIATED AT THE BAS. A MANUAL RESET OF THE HIGH STATIC PRESSURE CUT OFF SWITCH SHALL BE REQUIRED TO RESTART THE FAN.

FILTER STATUS:
A DIFFERENTIAL PRESSURE SWITCH SHALL MONITOR THE DIFFERENTIAL PRESSURE ACROSS THE FILTERS WHEN THE FANS ARE RUNNING. THIS INFORMATION SHALL BE PROVIDED TO THE DDC SYSTEM FOR INFORMATION ONLY. CAMP LEJEUNE MECHANICAL POLICIES DO NOT DESIRE FILTER ALARMS (FILTERS SHALL BE CHANGED ON REGULAR MAINTENANCE INTERVALS).

FREEZE PROTECTION:
A HARDWIRED, LOW LIMIT TEMPERATURE SWITCH SHALL BE ELECTRICALLY INTERLOCKED WITH THE SUPPLY FAN VARIABLE SPEED DRIVE. IF THE LOW LIMIT TEMPERATURE SWITCH IS TRIPPED 38.0 DEG. F (ADJ.), THE OUTSIDE AIR DAMPER SHALL CLOSE, THE RELIEF FAN SHALL TURN OFF, ALL VALVES SHALL OPEN TO 100% (ADJ.) AND AN ALARM SHALL BE ANNUNCIATED AT THE BAS. A MANUAL RESET OF THE LOW LIMIT TEMPERATURE SWITCH SHALL BE REQUIRED TO RESTART THE SUPPLY FAN.

ATFP SHUTDOWN:
IF A SIGNAL IS RECEIVED FROM THE BAS THAT AN ATFP SWITCH HAS BEEN ACTIVATED, THE SUPPLY FAN AND RELIEF FAN SHALL TURN OFF AND THE OUTSIDE AIR AND RELIEF AIR DAMPERS SHALL CLOSE.

BUILDING PRESSURE CONTROL:
THE OUTDOOR AIR DAMPER SHALL MODULATE TO MAINTAIN THE CONSTANT VENTILATION REQUIREMENT AS MEASURED BY THE OUTDOOR AIRFLOW STATION. IF THE OUTSIDE AIR DAMPER IS 100% OPEN, AND THE VENTILATION AIRFLOW IS LESS THAN THE CONSTANT VOLUME REQUIREMENT, THEN THE RETURN AIR DAMPER SHALL SLOWLY MODULATE CLOSED IN ORDER TO ACHIEVE THE CONSTANT VENTILATION REQUIREMENT. THE RETURN AIR DAMPER SHALL NOT BE ALLOWED TO CLOSE FULLY IN ORDER TO PREVENT STARVING THE SUPPLY FAN.

THE RELIEF FAN SPEED SHALL MODULATE TO MAINTAIN THE CONSTANT RELIEF AIRFLOW REQUIREMENT AS MEASURED BY THE RELIEF AIRFLOW STATION. IF THE RELIEF FAN IS AT MINIMUM SPEED, AND THE RELIEF AIRFLOW IS GREATER THAN THE CONSTANT VOLUME REQUIREMENT, THEN THE RELIEF AIR DAMPER SHALL SLOWLY MODULATE CLOSED TO ACHIEVE THE CONSTANT RELIEF AIRFLOW REQUIREMENT. THE RELIEF AIR DAMPER SHALL NOT BE ALLOWED TO CLOSE FULLY TO PREVENT STARVING THE RELIEF FAN.

BY MAINTAINING BOTH THE CONSTANT VENTILATION AND THE CONSTANT RELIEF AIRFLOW REQUIREMENTS, THE RESULTING SPACE PRESSURE SHALL REMAIN SLIGHTLY POSITIVE.

AHU CONTROL DIAGRAM (AHU-02)

SCALE: NTS

A1

APPR | DATE | SYM | DESCRIPTION

NAVFAC

PRELIMINARY NOT FOR CONSTRUCTION

SEAL

IRQ | W.M. Jordan COMPANY – A JOINT VENTURE –

Michael Baker INTERNATIONAL
100 AIRSIDE DRIVE
MOON TOWNSHIP, PA 15108
A/E INFO

APPROVED

FOR COMMANDER NAVFAC

ACTIVITY
MARINE CORPS BASE
CAMP LEJEUNE

SATISFACTORY TO DATE		
DES	DRW	CHK
PM		
BRANCH MANAGER		
CHIEF ENG/ARCH		
FIRE PROTECTION		

DEPARTMENT OF THE NAVY
NAVAL FACILITIES ENGINEERING COMMAND – MID-ATLANTIC
JACKSONVILLE, NC
ROICC FLORENCE CAMP LEJEUNE
MCB CAMP LEJEUNE
JACKSONVILLE, NC
P1338 II MEF SIMULATION/TRAINING CENTER REPLACEMENT
MECHANICAL - CONTROLS

SCALE: AS NOTED
EPROJECT NO.: 1590892
CONSTR. CONTR. NO.
N40085-20-C-0059
NAVFAC DRAWING NO.
SHEET OF

M-806

DP2 SUBMISSION – P1338 BUILDING - PRE-FINAL SUBMISSION

PLOTTED: 6/10/2021 3:34:32 PM

FILE NAME: BIM 360://HF PACKAGE 3/P1338 MEF SIM CTR-1590892-M.rvt

AHU-2 SYSTEM POINT LIST

POINT NUMBER	SYSTEM POINT DESCRIPTION	COLOR GRAPHIC	ANALOG INPUT (AI): TEMPERATURE	PRESSURE	RELATIVE HUMIDITY	AIRFLOW (CFM)	% OPEN / FREQUENCY	ANALOG OUTPUT (AO): % OPEN / CLOSE	% OPEN / FREQUENCY	DIGITAL (BINARY) INPUT (BI): STATUS ON/OFF	OPEN/CLOSE	SMOKE	STATUS (FAULT)	DIGITAL (BINARY) OUTPUT (BO): START / STOP	SYSTEM / SOFTWARE FEATURES ALARMS: HIGH ANALOG	LOW ANALOG	SENSOR FAIL	FLOW FAIL	COMM. FAIL	SMOKE DETECTOR	PROGRAMS: TIME SCHEDULING	OPT. START/STOP	EVENT	ALARM INSTRUCT	RUN TIME	AUTO RESTART	NOTES
	DDC CONTROL PANEL																		●		●	●	●	●	●	●		
	SYSTEM GRAPHIC	●																										
01A-D	SUPPLY FAN (FANWALL) VFD						●		●				●	●					●									1
02A-D	RELIEF FAN VFD						●		●				●	●					●									1
03	SUPPLY FAN (FANWALL) WALL DP			●												●												
04	RELIEF FAN DP			●												●												
05	AFMS - OUTSIDE AIR (OA) AIRFLOW					●										●	●	●										
06	AFMS - RELIEF AIR (REL-A) AIRFLOW					●										●	●	●										
07	AFMS - RETURN AIR (RA) AIRFLOW					●												●										
08	AFMS - SUPPLY AIR (SA) AIRFLOW					●												●										
09	HOT WATER HEATING (HW) VALVE							●																				
10	CHILLED WATER COOLING (CHW) VALVE							●																				
11	OUTSIDE AIR (OA) DAMPER							●																				
12	OUTSIDE AIR (OA) DAMPER END SWITCH										●																	
13	RELIEF AIR (REL-A) DAMPER							●																				
14	RELEIF AIR (REL-A) DAMPER END SWITCH										●																	
15	HX BYPASS DAMPER							●																				
16	RETURN AIR (RA) DAMPER							●																				
17	OA FILTER DPS			●																								
18	REL-A FILTER DPS			●																								
19	PRE-FILTER DPS			●																								
20	PRIMARY FILTER DPS			●																								
21	OUTSIDE AIR (OA) TEMPERATURE		●																									
22	RETURN AIR (RA) TEMPERATURE		●																									
23	RELIEF AIR (REL-A) TEMPERATURE		●																									
24	HX LEAVING (HX-LA) AIR TEMPERATURE		●																									
25	MIXED AIR (MA) TEMPERATURE		●														●	●										
26	SUPPLY AIR (SA) TEMPERATURE		●														●	●	●									
27	OUTSIDE AIR (OA) HUMIDITY				●																							
28	RETURN AIR (OA) HUMIDITY				●																							
29	RELIEF AIR (OA) HUMIDITY				●																							
30	HX LEAVING (HX-LA) AIR HUMIDITY				●																							
31	SUPPLY AIR (SA) STATIC PRESSURE			●																								
32	HIGH STATIC SHUTDOWN SWITCH										●						●											
33	RETURN AIR (SA) SMOKE DETECTOR												●								●							
34	SUPPLY AIR (SA) SMOKE DETECTOR												●								●							
35	FREEZESTAT										●																	
##	RESERVED FOR FUTURE																											

NOTES: 1. SUPPLY AND RELIEF FAN & VFD'S AS INDICATED ON THESE DRAWINGS MAY REFER TO FAN-WALL ARRAYS CONSISTING OF MULTIPLE FANS AND VFD'S; FAN WALL SHALL MODULATE PER MANUFACTURER'S PROVIDED CONTROLS FOR OPTIMUM PERFORMANCE AND EFFICIENCY BASED ON COMMON ANALOG OUTPUT SIGNAL.

APPR | DATE | SYM | DESCRIPTION

NAVFAC

PRELIMINARY
NOT FOR CONSTRUCTION

SEAL

IRQ Joint Venture: WM Jordan Company

Michael Baker INTERNATIONAL
100 AIRSIDE DRIVE
MOON TOWNSHIP, PA 15108
A/E INFO

APPROVED

FOR COMMANDER NAVFAC

ACTIVITY
MARINE CORPS BASE
CAMP LEJEUNE

SATISFACTORY TO DATE

DES	DRW	CHK
PM		
BRANCH MANAGER		
CHIEF ENG/ARCH		
FIRE PROTECTION		

DEPARTMENT OF THE NAVY
NAVAL FACILITIES ENGINEERING COMMAND
ROICC FLORENCE CAMP LEJEUNE
MCB CAMP LEJEUNE

NAVAL FACILITIES ENGINEERING COMMAND ~ MID-ATLANTIC
JACKSONVILLE, NC

JACKSONVILLE, NC
P1338 II MEF SIMULATION/TRAINING CENTER
REPLACEMENT

MECHANICAL - CONTROLS

SCALE: AS NOTED
EPROJECT NO.: 1590892
CONSTR. CONTR. NO.
N40085-20-C-0059
NAVFAC DRAWING NO.
SHEET OF

M-807

DP2 SUBMISSION – P1338 BUILDING - PRE-FINAL SUBMISSION

PLOTTED: 6/10/2021 3:34:33 PM

FILE NAME: BIM 360://HF PACKAGE 3/P1338 MEF SIM CTR-1590892-M.rvt

CHILLED WATER SYSTEM SYSTEM POINT LIST

POINT NUMBER	SYSTEM POINT DESCRIPTION	ANALOG INPUT (AI): COLOR GRAPHIC	TEMPERATURE	PRESSURE	KW	PERCENT RLA	FLOW (GPM)	ANALOG OUTPUT (AO): SETPOINT ADJ	DIGITAL (BINARY) INPUT (BI): STATUS ON/OFF	FILTER STATUS	STATUS OPEN / CLOSE	DIGITAL OUTPUT (BO): START/STOP	SYSTEM FEATURES ALARMS: HIGH ANALOG	LOW ANALOG	SENSOR FAIL	FLOW FAIL	COMM. FAIL	CHILLER PANEL	SYSTEM FEATURES PROGRAMS: TIME SCHEDULING	ALARM INSTRUCT	RUN TIME	NOTES
	DDC CONTROL PANEL																●		●	●		
01	CHILLED WATER SETPOINT							●														
02.1-4	CHILLER CH-01	●			●	●			●			●					●	●			●	
03.1-4	CHILLER CH-02	●			●	●			●			●					●	●			●	
03	CHWS TEMP (MAIN) SENSOR T-1		●										●	●	●							
04	CHWS TEMP (CH-01) SENSOR T-2		●										●	●	●							
05	CHWS TEMP (CH-02) SENSOR T-3		●										●	●	●							
06	CHWR TEMP (MAIN) SENSOR T-4		●										●	●	●							
07	CHWR TEMP (CH-01) SENSOR T-5		●										●	●	●							
08	CHWR TEMP (CH-02) SENSOR T-6		●										●	●	●							
9	RESERVED FOR FUTURE																					
10	CH-01 FLOW SWITCH FS-1										●					●	●					
11	CH-02 FLOW SWITCH FS-2										●					●	●					
12	PUMP P-1 START/STOP											●										
13	PUMP P-1 STATUS								●													
14	PUMP P-2 START/STOP											●										
15	PUMP P-2 STATUS								●													
16	PUMP P-1,2 DIFFERENTIAL PRESS			●																		
17	SYSTEM FLOW (TOTAL)						●															
18	CH-01 FLOW						●															
19	CH-02 FLOW						●															
-	RESERVED FOR FUTURE																					

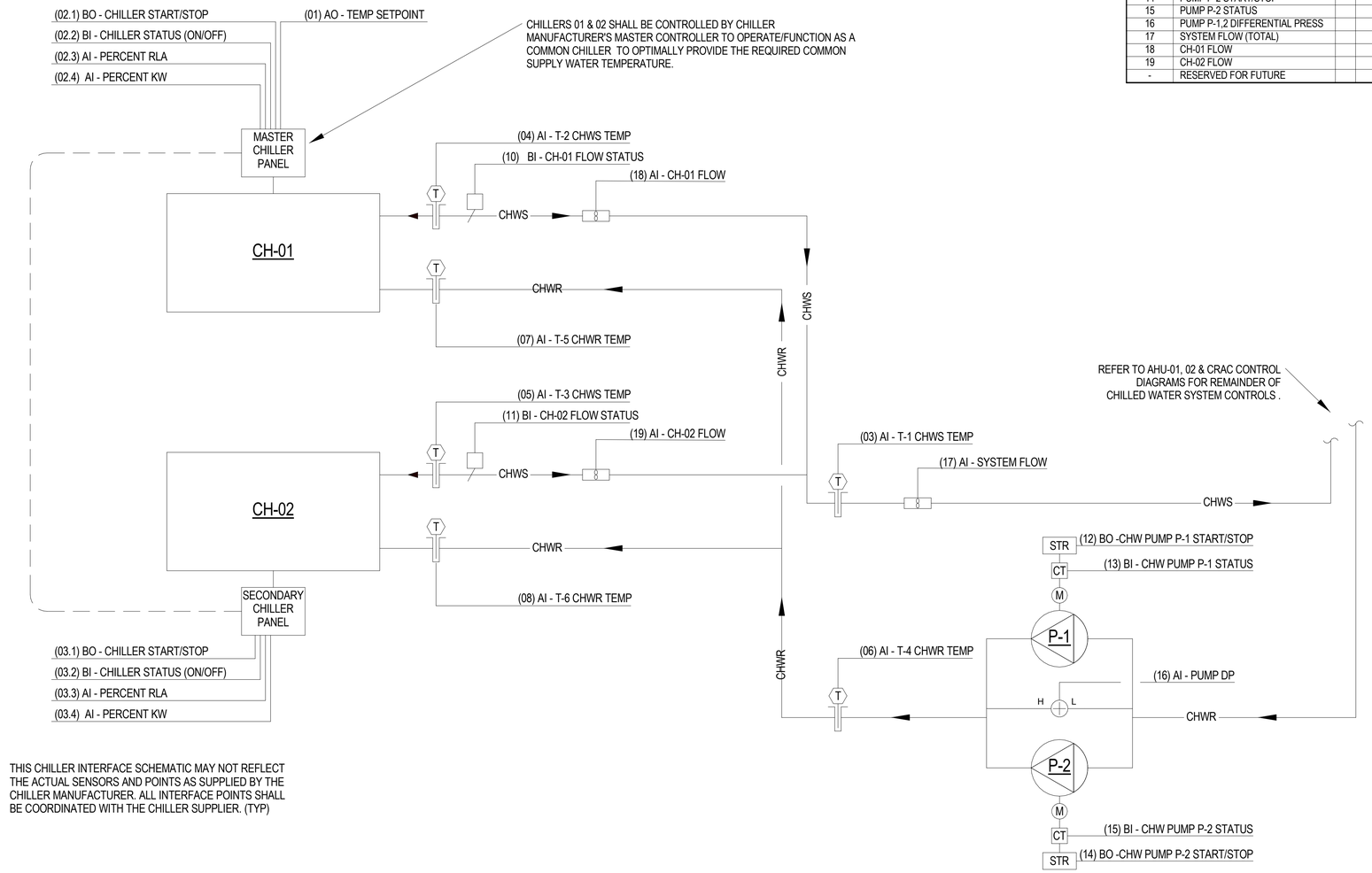

THIS CHILLER INTERFACE SCHEMATIC MAY NOT REFLECT THE ACTUAL SENSORS AND POINTS AS SUPPLIED BY THE CHILLER MANUFACTURER. ALL INTERFACE POINTS SHALL BE COORDINATED WITH THE CHILLER SUPPLIER. (TYP)

AIR COOLED CHILLED WATER SYSTEM SEQUENCE OF OPERATION

1. CHILLED WATER CONTROL

   1.1. UPON COMMAND FOR CHILLED WATER BY ANY SERVED AHU/CRAC UNIT; ENABLE LEAD CHILLED WATER PUMP AND CHILLED WATER PLANT.

   1.2. THE COOLING PLANT WILL BE ENERGIZED BY FIRST ENERGIZING LEAD CHW PUMP (P-1 OR P-2) AT FULL SYSTEM CONSTANT VOLUME FLOWRATE. FLOW SHALL BE EQUALLY BALANCED (VIA MANUAL BALANCING VALVES) FOR EQUAL CONSTANT VOLUME FLOWRATE (50% OF SYSTEM FLOW) THROUGH EACH CHILLER.

   1.3. EACH CHILLER SHALL BE PROVIDED WITH AN INTEGRAL FLOW SWITCH TO ASSURE PROOF OF FLOW AND ENABLE CHILLER OPERATION.

   1.4. MANUFACTUER'S CHILLER CONTROLLERS SHALL BE TIED TOGETHER TO ALLOW THE DUAL CHILLER PLANT TO OPERATE / STAGE / SEQUENCE INDIVUDUAL CHILLER CAPACITIES FROM A SINGLE STAGE/SINGLE CHILLER (MINIMUM COOLING CAPACITY) OPERATION TO ALL STAGES/BOTH CHILLERS (MAXIMUM COOLING CAPACITY). CHILLERS SHALL OPERATE IN TANDEM VIA THE CHILLER MASTER CONTROLLER TO DELVER CHILLED WATER SUPPLY TEMPERATURE (42°F, ADJ.) IN MOST ENERGY EFFICIENT COMBINATION OF CHILLERS/CHILLER STAGING AS DETERMINED BY THE MANUFACTUER'S MASTER CHILLER CONTROLLER.

2. CHILLED WATER SYSTEM ALARM

   2.1 A LOW TEMPERATURE (36°F ADJUSTABLE) OR HIGH TEMPERATURE (48°F ADJUSTBALE) SENSED AT **T-1** SHALL SIGNAL AN ALARM AT DDC.

   2.2 AN ALARM CONDITION AT THE CHILLER MASTER CONTROL PANEL SHALL SIGNAL AN ALARM CONDITION.

3. ADDITIONAL MONITORING AND ALARMS:

   - PUMP (P-1, P-2) STATUS: ON/OFF/FAULT
   - CHILLER STATUS: ENABLED/DISABLED/FAULT
   - BUILDING CHILLED WATER SUPPLY TEMPERATUERE: MONITOR/LOW ALARM (38°F, ADJ.)/HIGH ALARM (46°F, ADJ.)
   - BUILDING CHILLED WATER RETURN TEMPERATUERE: MONITOR/LOW ALARM (44°F, ADJ.)/HIGH ALARM (60°F, ADJ.)
   - CHILLER (CH-1, CH-2) LEAVING WATER TEMPERATURE: MONITOR
   - CHILLER (CH-1, CH-2) ENTERING WATER TEMPERATURE: MONITOR

CHILLED WATER SYSTEM CONTROL DIAGRAM

SCALE: NTS

A1

APPR | DATE | DESCRIPTION | SYM

NAVFAC

PRELIMINARY NOT FOR CONSTRUCTION

SEAL

IRQ W.M. Jordan COMPANY – A JOINT VENTURE –

Michael Baker INTERNATIONAL

100 AIRSIDE DRIVE
MOON TOWNSHIP, PA 15108 A/E INFO

APPROVED

FOR COMMANDER NAVFAC

ACTIVITY
MARINE CORPS BASE CAMP LEJEUNE

SATISFACTORY TO DATE

DES	DRW	CHK

PM

BRANCH MANAGER

CHIEF ENG/ARCH

FIRE PROTECTION

DEPARTMENT OF THE NAVY
NAVAL FACILITIES ENGINEERING COMMAND – MID-ATLANTIC
ROICC FLORENCE CAMP LEJEUNE
MCB CAMP LEJEUNE

NAVAL FACILITIES ENGINEERING COMMAND
JACKSONVILLE, NC

JACKSONVILLE, NC

P1338 II MEF SIMULATION/TRAINING CENTER REPLACEMENT

MECHANICAL - CONTROLS

SCALE: AS NOTED

EPROJECT NO.: 1590892

CONSTR. CONTR. NO.
N40085-20-C-0059

NAVFAC DRAWING NO.

SHEET OF

M-808

DP2 SUBMISSION – P1338 BUILDING - PRE-FINAL SUBMISSION

PLOTTED: 6/10/2021 3:34:35 PM

FILE NAME: BIM 360://HF PACKAGE 3/P1338 MEF SIM CTR-1590892-M.rvt

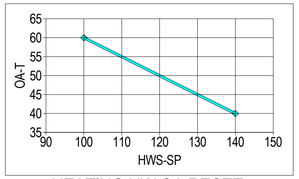

HEATING HW OA RESET SCHEDULE

THIS TYPICAL BOILER INTERFACE SCHEMATIC MAY NOT REFLECT THE ACTUAL SENSORS AND POINTS AS SUPPLIED BY THE BOILER MANUFACTURER. ALL INTERFACE POINTS SHALL BE COORDINATED WITH THE BOILER SUPPLIER. BOILER CONTROL PANELS SHALL BE INTERFACED AND CONTROLLED AS A SINGLE OPERATING BOILER PLANT

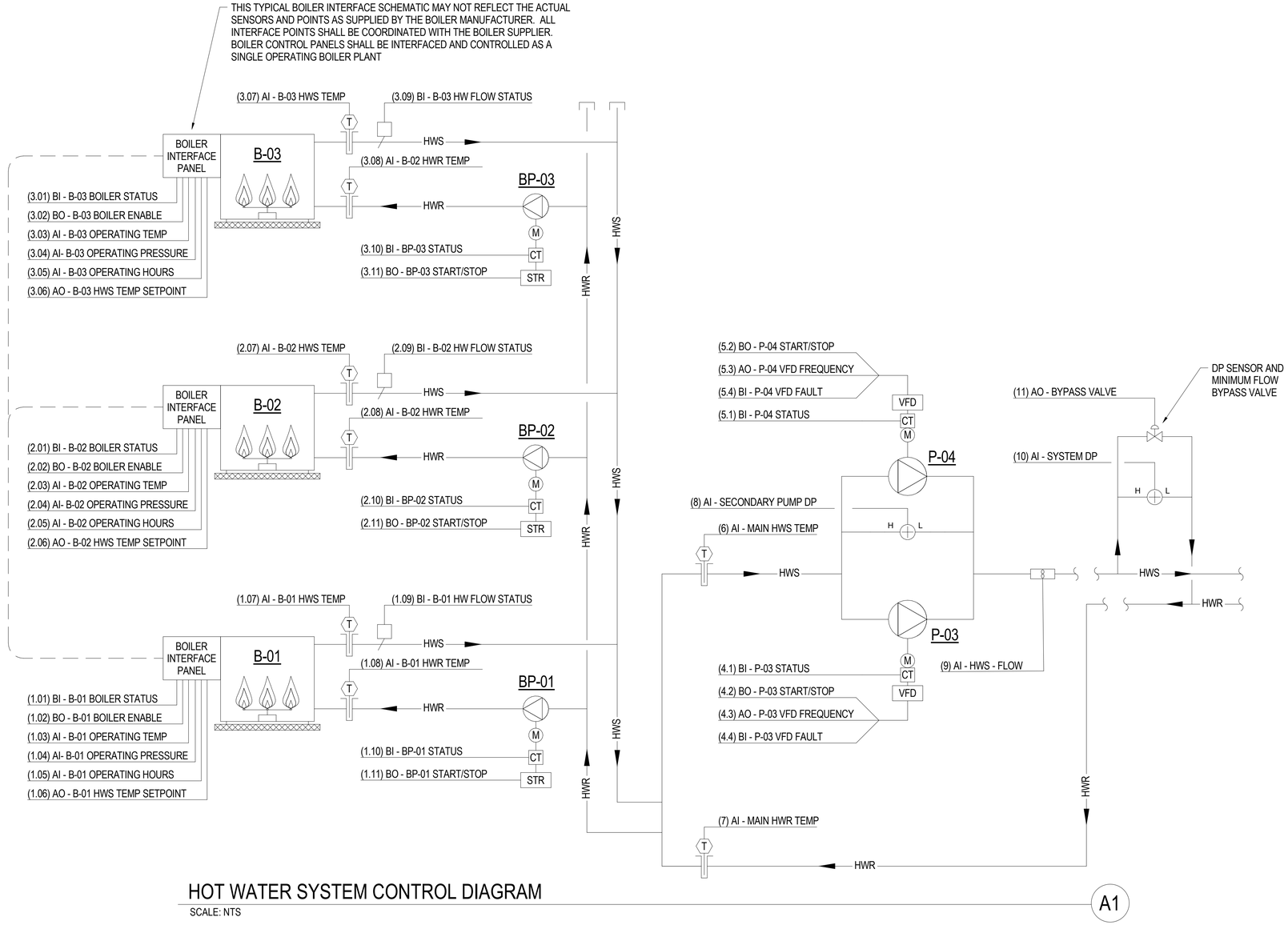

HOT WATER SYSTEM CONTROL DIAGRAM

SCALE: NTS

A1

NO.	DESCRIPTION	DATE	APPR

NAVFAC

PRELIMINARY NOT FOR CONSTRUCTION

SEAL

IRQ Jordan COMPANY – A JOINT VENTURE –

Michael Baker INTERNATIONAL

100 AIRSIDE DRIVE
MOON TOWNSHIP, PA 15108 A/E INFO

APPROVED

FOR COMMANDER NAVFAC

ACTIVITY
MARINE CORPS BASE CAMP LEJEUNE

SATISFACTORY TO DATE

DES	DRW	CHK

PM

BRANCH MANAGER

CHIEF ENG/ARCH

FIRE PROTECTION

DEPARTMENT OF THE NAVY
NAVAL FACILITIES ENGINEERING COMMAND
ROICC FLORENCE CAMP LEJEUNE
MCB CAMP LEJEUNE

NAVAL FACILITIES ENGINEERING COMMAND – MID-ATLANTIC
JACKSONVILLE, NC

JACKSONVILLE, NC
P1338 II MEF SIMULATION/TRAINING CENTER REPLACEMENT

MECHANICAL - CONTROLS

SCALE: AS NOTED

EPROJECT NO.: 1590892

CONSTR. CONTR. NO.
N40085-20-C-0059

NAVFAC DRAWING NO.

SHEET OF

M-809

DP2 SUBMISSION – P1338 BUILDING - PRE-FINAL SUBMISSION

PLOTTED: 6/10/2021 3:34:36 PM

FILE NAME: BIM 360://HF PACKAGE 3/P1338 MEF SIM CTR-1590892-M.rvt

HOT WATER BOILER / HEATING SYSTEM POINT LIST

POINT NUMBER	SYSTEM POINT DESCRIPTION	COLOR GRAPHIC	ANALOG INPUT (AI) TEMPERATURE	PRESSURE	FREQUENCY	FLOWRATE (GPM)	INFO	ANALOG OUTPUT (AO) SETPOINT ADJ	% OPEN/CLOSE	FREQUENCY	TEMPERATURE	DIGITAL (BINARY) INPUT (BI) STATUS ON/OFF	FLOW STATUS	STATUS (FAULT)	DIGITAL (BINARY) OUTPUT (BO) OFF/ON (ENABLE)	START / STOP			SYSTEM FEATURES ALARMS HIGH ANALOG	LOW ANALOG	SENSOR FAIL	FLOW FAIL	COMM. FAIL	PROGRAMS TIME SCHEDULING	ALARM INSTRUCT	RUN TIME	NOTES
	DDC CONTROL PANEL																						●	●	●	●	
	SYSTEM GRAPHIC	●																									
1.01	B-01, BOILER STATUS											●															
1.02	B-01, BOILER ENABLE														●												
1.03	B-01, OPERATING TEMP		●																●	●							
1.04	B-01, OPERATING PRESSURE			●															●								
1.05	B-01, OPERATING HOURS						●																				
1.06	B-01. HWS TEMP SETPOINT							●																			
1.07	B-01, HWS (LEAVING) TEMP		●																●	●							
1.08	B-01, HWR (ENTERING) TEMP		●																●	●							
1.09	B-01, HW FLOW STATUS												●									●					
1.10	BP-01, STATUS											●														●	
1.11	BP-01, START/STOP (ENABLE)														●												
2.01	B-02, BOILER STATUS											●															
2.02	B-02, BOILER ENABLE														●												
2.03	B-02, OPERATING TEMP		●																●	●							
2.04	B-02, OPERATING PRESSURE			●															●								
2.05	B-02, OPERATING HOURS						●																				
2.06	B-02. HWS TEMP SETPOINT							●																			
2.07	B-02, HWS (LEAVING) TEMP		●																●	●							
2.08	B-02, HWR (ENTERING) TEMP		●																●	●							
2.09	B-02, HW FLOW STATUS												●									●					
2.10	BP-02, STATUS											●															
2.11	BP-02, START/STOP (ENABLE)														●												
3.01	B-03, BOILER STATUS											●														●	
3.02	B-03, BOILER ENABLE														●												
3.03	B-03, OPERATING TEMP		●																●	●							
3.04	B-03, OPERATING PRESSURE			●															●								
3.05	B-03, OPERATING HOURS						●																				
3.06	B-03, HWS TEMP SETPOINT							●																			
3.07	B-03, HWS (LEAVING) TEMP		●																●	●							
3.08	B-03, HWR (ENTERING) TEMP		●																●	●							
3.09	B-03, HW FLOW STATUS												●									●					
3.10	BP-03, STATUS											●														●	
3.11	BP-03, START/STOP (ENABLE)														●												
4.1	P-03, STATUS											●										●				●	
4.2	P-03, START/STOP															●											
4.3	P-03, VFD FREQUENCY									●																	
4.4	P-03, VFD FAULT													●													
5.1	P-04, STATUS											●										●				●	
5.2	P-04, START/STOP															●											
5.3	P-04, VFD FREQUENCY									●																	
5.4	P-04, VFD FAULT													●													
6	SECONDARY MAIN HWS TEMP		●																								
7	SECONDARY MAIN HWR TEMP		●																								
8	SECONDARY PUMPING PRESS			●															●	●	●						
9	SECONDARY PUMPING FLOW				●																						
10	REMOTE SYSTEM DP			●																							
11	MIN FLOW BYPASS VALVE								●																		
12	OUTSIDE AIR TEMPERATURE										●																1, 3
13	HW SUPPLY TEMP										●																2, 3
##	RESERVED FOR FUTURE																										
##	RESERVED FOR FUTURE																										

NOTES:
1. OUTSIDE AIR TEMPERATURE TO BE PROVIDED TO DDC SYSTEM FROM COMMON OAT TEMPERATURE SENSOR (GENERAL CONTROL DIAGRAMS PAGE)
2. SUPPLY WATER TEMPERATURE SHALL RESET LINEARLY FROM A SUPPLY TEMPERATURE OF 140° AT OAT < 40° (ADJ.) TO 100° AT OAT > 60°F (ADJ.)
3. THESE POINTS MAY BE PROVIDED BY THE BOILER MANUFACTUER AND DIRECTLY INTEGRATED TO THE BOILER CONTROLLER, IF DONE THIS WAY, BOILER CONTROLLER SHALL SEND THESE POINTS AS ANALOG INPUTS (AI) TO THE DDC SYSTEM FOR REMOTE OBSERVATION & TROUBLESHOOTING PURPOSES.

BOILER & HEATING HOT WATER PRIMARY/SECONDARY SYSTEM SEQUENCE OF OPERATION

1. HEATING HOT WATER CONTROL

1.1. UPON COMMAND FOR HOT WATER BY ANY SERVED DEVICE; ENABLE LEAD SECONDARY HEATING HOT WATER PUMP AND BOILER PLANT.

1.2. THE 3-BOILER PLANT SHALL STAGE AND MODULATE THE BOILERS IN THE MOST ENERGY EFFICIENCY COMBINATION OF ACTIVE BOILERS AND FIRING RATES AS DETERMINED BY THE BOILER MANUFACTURER'S INTEGRAL CONTROL SEQUENCE TO MAINTAIN THE MAIN HWS TEMPERATURE AT THE HW SUPPLY TEMPERATURE SETPOINT COMMANDED BY THE DDC SYSTEM IN RESPONSE TO THE OUTDOOR AIR CONDITIONS PER THE HEATING HW OA RESET SCHEDULE. BOILER MASTER CONTROLLER SHALL ALTERNATE LEAD BOILER TO PROVIDE EQUALIZED RUN TIME.

1.3. TO PREVENT SHORT CYCLING; THE BOILER SYSTEM SHALL RUN FOR AND BE OFF FOR MINIMUM ADJUSTABLE TIMES (BOTH USER DEFINABLE), UNLESS SHUTDOWN ON SAFETIES.

1.4. THE BOILER(S) SHALL RUN SUBJECT TO THEIR OWN INTERNAL SAFETIES AND CONTROLS.

1.5. STANDBY SECONDARY HW PUMP SHALL BE ENABLED UPON A FAILURE OF THE LEAD PUMP. THE LEAD PUMP SHALL BE THE PUMP WITH THE LEAST RUNTIME HOURS; SECONDARY PUMPS SHALL CYCLE BETWEEN LEAD/STANDBY ON A WEEKLY BASIS.

2. SECONDARY PUMP DIFFERENTIAL PRESSURE CONTROL:

2.1. THE OPERATING SECONDARY PUMP VFD SHALL MODULATE THE PUMP SPEED TO MAINTAIN THE DIFFERENTIAL PRESSURE (DP) AS MEASURED AT THE REMOTE SYSTEM DP SENSOR. DP SETPOINT SHALL BE AS DETERMINED/RECOMMENDED BY TAB AGENT TO ACHIEVE SYSTEM BALANCING.

2.2. MINIMUM SYSTEM FLOW SHALL BE BASED UPON MINIMUM PERMISSIBLE VFD SPEED AS INDICATED BY THE VFD MANUFACTURER'S IOM. AT MINIMUM ALLOWABLE FLOW, UPON RISE IN REMOTE SYSTEM DIFFERENTIUAL PRESSURE ABOVE DESIGN DP SETPOINT THE 2-WAY MODULATING BYPASS VALVE SHALL MODULATE OPEN TO ALLOW SYSTEM FLOW BYPASS AND PREVENT SYSTEM DIFFERENTIAL PRESSURE FROM EXCEEDING THE DESIGN SYSTEM DP BY 10% (ADJUSTABLE).

3. ALARMS AND SYSTEM MONITORING:

3.1. ALARMS SHALL BE PROVIDED AS INDICATED ON THE POINTS LIST AND AS FOLLOWS:

- SECONDARY HW PUMP FAILURE: COMMANDED ON, BUT STATUS IS OFF.
- SECONDARY HW PUMP RUNNING IN HAND; COMMANDED OFF, BUT STATUS IS ON.
- SECONDARY HW PUMP RUNTIME EXCEEDED; STATUS RUNTIME EXCEEDS 168 HOURS (ADJ.)
- HIGH SECONDARY HW SUPPLY TEMP; IF GREATER THAN 160°F (ADJ).
- LOW SECONDARY HW RETURN TEMP; IF LESS THAN 100° OR 15° BELOW SUPPLY WATER TEMPERATURE (WHICHEVER IS LOWER TO ACCOUNT FOR HW RESET)
- HIGH SYSTEM PRESSURE IF REMOTE DP SENSOR IS 25% (ADJ.) ABOVE SETPOINT.
- LOW SYSTEM PRESSURE IF REMOTE DP SENSOR IS 25% (ADJ.) BELOW SETPOINT.

3.2. SYSTEM MONITORING POINTS SHALL BE AS INDICATED ON THE POINTS LIST, INCLUDING BUT NOT LIMITED TO THE FOLLOWING:

- SECONDARY HWS FLOWRATE (UFC 3-410-01 REQUIRED POINT)
- SECONDARY HWS/R TEMPERATURES
- DIFFERENTIAL PRESSURE ACROSS SECONDARY PUMPS (UFC 3-410-01 REQUIRED POINT)
- BOILER FAILURE ALARMS NOT OTHERWISE INDICATED BUT PROVIDED WITH BOILER CONTROLLER / BOILER BACNET INTERFACE.

APPR | DATE | DESCRIPTION | SYM

NAVFAC

PRELIMINARY NOT FOR CONSTRUCTION

SEAL

IRQ WM Jordan COMPANY ~ A JOINT VENTURE ~

Michael Baker INTERNATIONAL
100 AIRSIDE DRIVE
MOON TOWNSHIP, PA 15108
A/E INFO

APPROVED

FOR COMMANDER NAVFAC

ACTIVITY
MARINE CORPS BASE
CAMP LEJEUNE

SATISFACTORY TO DATE

DES	DRW	CHK

PM

BRANCH MANAGER

CHIEF ENG/ARCH

FIRE PROTECTION

DEPARTMENT OF THE NAVY
NAVAL FACILITIES ENGINEERING COMMAND ~ MID-ATLANTIC
JACKSONVILLE, NC
ROICC FLORENCE CAMP LEJEUNE
MCB CAMP LEJEUNE

JACKSONVILLE, NC
P1338 II MEF SIMULATION/TRAINING CENTER REPLACEMENT
MECHANICAL - CONTROLS

SCALE: AS NOTED

EPROJECT NO.: 1590892

CONSTR. CONTR. NO.
N40085-20-C-0059

NAVFAC DRAWING NO.

SHEET OF

M-810

DP2 SUBMISSION – P1338 BUILDING - PRE-FINAL SUBMISSION

PLOTTED: 6/10/2021 3:34:38 PM

FILE NAME: BIM 360://HF PACKAGE 3/P1338 MEF SIM CTR-1590892-M.rvt

VAV BOX WITH HW HEATING COIL - SEQUENCE OF OPERATION

1. OPERATING CONDITIONS

1.1. THE VAV BOX SHALL OPERATE ACCORDING TO A USER DEFINABLE OCCUPANCY SCHEDULE TO MAINTAIN SPACE TEMPERATURES AS FOLLOWS:

OCCUPIED MODE:
- 78°F (ADJ.) COOLING SETPOINT
- 68°F (ADJ.) HEATING SETPOINT

UN-OCCUPIED MODE:
- 85°F (ADJ.) COOLING SETPOINT
- 55°F (ADJ.) HEATING SETPOINT

OCCUPANCY OVERRIDES:
- ZONE OCCUPANCY OVERRIDE AT THE ZONE TEMPERATURE SENSOR DURING OTHERWISE UNOCCUPIED PERIODS BY OCCUPANT CONTROL SHALL OVERRIDE THE SCHEDULE AND PLACE THE UNIT INTO AN OCCUPIED MODE FOR AN ADJUSTABLE PERIOD OF TIME (DEFAULT 60 MINUTES). AT THE EXPIRATION OF THIS OVERRIDE TIME PERIOD, CONTROL OF THE UNIT SHALL AUTOMATICALLY RETURN TO THE SCHEDULE.
- ZONE OCCUPANCY SENSOR (SHARED WITH ZONE LIGHTING CONTROL IN HIGH OCCUPANCY SPACE ONLY) SHALL PROVIDE SIGNAL OF ZONE UNOCCUPIED STATUS DURING SCHEDULE OCCUPIED PERIODS. DURING SCHEDULED OCCUPIED HOURS WHEN THE ROOM IS UNOCCUPIED, TEMPERATURES SHALL BE MAINTAINED, BUT VAV BOX MINIMUM AIRFLOW SHALL BE PERMITTED TO DROP TO FULL CLOSURE OF IN LIEU OF THE SCHEDULE MINIMUM AIRFLOW REQUIRED FOR SPACE VENTILATION PURPOSES.

1.2. ZONE SETPOINT ADJUST(MENT):

ROOM OCCUPANTS SHALL BE ABLE TO ADJUST THE ZONE HEATING AND COOLING SETPOINTS AT THE ZONE CONTROLLER. USER SELECTED INPUTS SHALL BE LIMITED TO ± 3°F OF THE DDC OCCUPIED MODE HEATING AND COOLING SETPOINTS.

1.3. ZONE OPTIMAL START:

THE SYSTEM SHALL UTILIZE AN OPTIMAL START ALGORITHM FOR MORNING START UP IN CONJUNCTION WITH THE ASSOCIATED AHU. THIS ALGORITHM SHALL MINIMIZE THE UNOCCUPIED WARM -UP OR COOL-DOWN PERIOD WHILE STILL ACHIEVING SPACE TEMPERATURE SETPOINT BY THE START OF THE SCHEDULED OCCUPIED PERIOD.

2. VARIABLE VOLUME TERMINAL UNIT – AIRFLOW / HW FLOW CONTROL

2.1. OCCUPIED

- WHEN ZONE TEMPERATURE IS GREATER THAN ZONE COOLING SETPOINT, THE ZONE DAMPER SHALL MODULATE BETWEEN THE SCHEDULED MINIMUM AIRFLOW* AND THE SCHEDULED MAXIMUM COOLING AIRFLOW UNTIL ZONE IS SATISFIED. (* IF ZONE OCCUPANCY SENSOR, WHERE APPLICABLE, IS INDICATING ROOM IS NOT CURRENTLY OCCUPIED DAMPER MAY MODULATE TO FULLY CLOSED POSITION)
- WHEN ZONE TEMPERATURE IS BETWEEN THE COOLING SETPOINT AND THE HEATING SETPOINT, THE ZONE DAMPER SHALL MAINTAIN THE MINIMUM REQUIRED ZONE VENTILATION BY MAINTAINING THE MINIMUM SCHEDULED AIRFLOW*. (* IF ZONE OCCUPANCY SENSOR, WHERE APPLICABLE, IS INDICATING ROOM IS NOT CURRENTLY OCCUPIED DAMPER MAY MODULATE TO FULLY CLOSED POSITION)
- WHEN ZONE TEMPERATURE IS LESS THAN ITS HEATING SETPOINT, THE CONTROLLER SHALL ENABLE HEATING TO MAINTAIN THE ZONE TEMPERATURE AT ITS HEATING SETPOINT (SEE "HEATING MODE" BELOW).

2.2. UNOCCUPIED

- WHEN THE BUILDING IS SCHEDULED FOR UNOCCUPIED MODE THE ZONE DAMPER SHALL CLOSE.
- WHEN THE ZONE DAMPER IS GREATER THAN ITS UNOCCUPIED COOLING SETPOINT, THE ZONE DAMPER SHALL MODULATE BETWEEN A FULLY CLOSED POSITION AND THE MAXIMUM SCHEDULED COOLING AIRFLOW UNTIL ZONE IS SATISFIED.
- WHEN THE ZONE TEMPERATURE IS LESS THAN ITS UNOCCUPIED HEATING SETPOINT, THE CONTROLLER SHALL ENABLE HEATING TO MAINTAIN THE ZONE TEMPERATURE AT THE SETPOINT (SEE "HEATING MODE" BELOW), ADDITIONALLY IF WARM AIR IS AVAILABLE FROM THE AHU, THE ZONE DAMPER SHALL MODULATE BETWEEN FULLY CLOSED TO THE SCHEDULED HEATING AIRFLOW UNTIL THE ZONE IS SATISFIED.

2.3. HEATING MODE

- VAV BOX SHALL BE SET UP TO PROVIDE A "DUAL MAXIMUM CONTROL" STRATEGY.
- WHEN THE SPACE TEMPERATURE DROPS BELOW THE COOLING SETPOINT, THE VAV BOX SHALL REMAIN AT MINIMUM REQUIRED FLOW (SCHEDULED MINIMUM FLOW OR FULL SHUTOFF PER OCCUPIED/UNOCCUPIED AIRFLOW STATUS) THROUGH THE DEADBAND ROOM TEMPERATURE RANGE BETWEEN THE COOLING SETPOINT AND HEATING SETPOINT.
- UPON FALL IN SPACE TEMPERATURE BELOW HEATING SETPOINT, HW VALVE SHALL MODULATE OPEN TO MAINTAIN SPACE HEATING SETPOINT THROUGH RANGE OF DISCHARGE AIR TEMPERATURES RANGING FROM LOW (AS SUPPLED FROM AHU), UP TO A HIGH DISCHARGE AIR (SA TO ZONE) TEMPERATURE OF 90°F.
- UPON FURTHER DEMAND FOR HEATING ONCE DISCHARGE AIR (SA TO ZONE) REACHES 90°F THE VAV BOX SHALL INCREASE AIRFLOW FROM THE COOLING MINIMUM AIR FLOWRATE AS SCHEDULED TO THE HEATING AIR FLOWRATE AS SCHEDULED, AND THE HW VALVE SHALL MODULATE TO MAINTAIN DISCHARGE AIR TEMPERATURE AT 90°F.

3. ALARMS AND SYSTEM MONITORING:

3.1. ALARMS SHALL BE PROVIDED AS INDICATED ON THE POINTS LIST AND AS FOLLOWS:

- COMMUNICATIONS FAILURE BETWEEN VAV BOX CONTROLLER AND DDC SYSTEM.
- FAILURE OF SA AIRFLOW SENSOR
- FAILURE OF DISCHARGE AIR TEMPERATURE SENSOR
- FAILURE OF ZONE TEMPERATURE (THERMOSTAT) SETPOINT/INTERFACE

3.2. SYSTEM MONITORING POINTS SHALL BE AS INDICATED ON THE POINTS LIST, INCLUDING BUT NOT LIMITED TO THE FOLLOWING:

- VAV BOX DISCHARGE AIR TEMPERATURE (UFC 3-410-01 REQUIRED POINT)

VAV TERMINAL BOX WITH HOT WATER REHEAT - POINT LIST

POINT NUMBER	SYSTEM POINT DESCRIPTION	COLOR GRAPHIC	ANALOG INPUT (AI)			ANALOG OUTPUT (AO)			DIGITAL (BINARY) INPUT (BI)				DIGITAL (BINARY) OUTPUT (BO)				SYSTEM FEATURES ALARMS			SYSTEM FEATURES PROGRAMS			NOTES
			TEMPERATURE	FLOWRATE (CFM)		% OPEN/CLOSE			OCCUPANCY STATUS								SENSOR FAIL	COMM. FAIL		TIME SCHEDULING	ALARM INSTRUCT	AUTOMATIC RESTART	
	VAV BOX CONTROLLER																	●		●	●	●	1
	SYSTEM GRAPHIC	●																					
01	SA AIRFLOW			●													●						
02	VAV DAMPER					●																	
03	HW VALVE					●																	
04	DISCHARGE AIR (DA) TEMP		●														●						2
05	ZONE TEMPERATURE		●														●						
06	ZONE OCCUPANCY OVERRIDE								●														
07	ZONE SETPOINT ADJUST		●																				
08	ZONE OCCUPANCY								●														3
##	RESERVED FOR FUTURE																						

NOTES: 1. VAV BOX CONTROLLER SHALL BE CAPABLE OF ZONE CONTROL INDEPENDENT OF STATUS OF CONNECTION TO BUILDING DDC SYSTEM.
2. MONITORING POINT IN DISCHARGE AIR DUCT AS REQUIRED BY UFC 3-410-01 & FOR DUAL MAXIMUM REHEAT CONTROL.
3. ZONE OCCUPANCY SENSOR SIGNAL SHALL BE VIA AUXILARY CONTACTS ON ROOM OCCUPANCY/LIGHTING CONTROL SENSOR (BY ELECTRICAL CONTRACTOR) - NOT AVAILABLE FOR ALL SPACES.

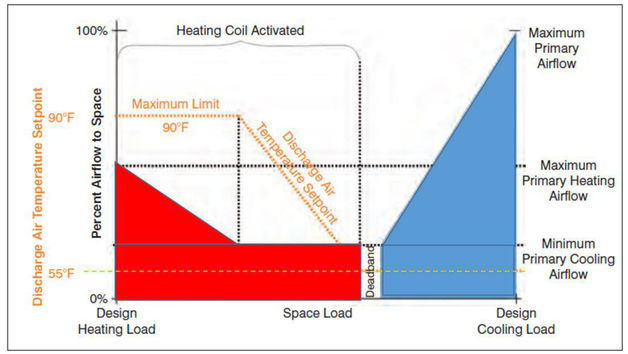

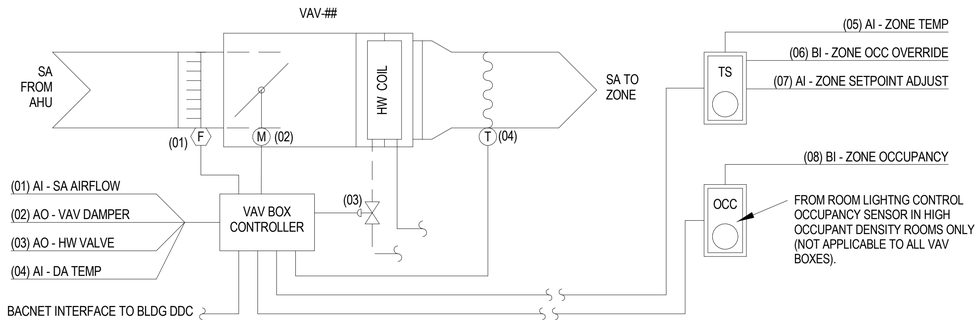

VAV BOX WITH HW HEATING CONTROL DIAGRAM

SCALE: NTS

A1

APPR | DATE | DESCRIPTION | SYM

NAVFAC

PRELIMINARY NOT FOR CONSTRUCTION

SEAL

IRQ W.M. Jordan COMPANY – A JOINT VENTURE –

Michael Baker INTERNATIONAL
100 AIRSIDE DRIVE
MOON TOWNSHIP, PA 15108 A/E INFO

APPROVED

FOR COMMANDER NAVFAC

ACTIVITY
MARINE CORPS BASE CAMP LEJEUNE

SATISFACTORY TO DATE

DES	DRW	CHK
PM		
BRANCH MANAGER		
CHIEF ENG/ARCH		
FIRE PROTECTION		

DEPARTMENT OF THE NAVY
NAVAL FACILITIES ENGINEERING COMMAND
ROICC FLORENCE CAMP LEJEUNE
MCB CAMP LEJEUNE

NAVAL FACILITIES ENGINEERING COMMAND – MID-ATLANTIC
JACKSONVILLE, NC

JACKSONVILLE, NC
P1338 II MEF SIMULATION/TRAINING CENTER REPLACEMENT

MECHANICAL - CONTROLS

SCALE: AS NOTED
EPROJECT NO.: 1590892
CONSTR. CONTR. NO. N40085-20-C-0059
NAVFAC DRAWING NO.
SHEET OF

M-811

DP2 SUBMISSION – P1338 BUILDING - PRE-FINAL SUBMISSION

PLOTTED: 6/10/2021 3:34:39 PM

FILE NAME: BIM 360://HF PACKAGE 3/P1338 MEF SIM CTR-1590892-M.rvt

COMPUTER ROOM AIR CONDITIONER (CRAC) SYSTEM - SEQUENCE OF OPERATION

1. GENERAL:
   THE SYSTEM SERVING THE SIM CONTROL SERVER ROOM SHALL CONSIST OF 3 CRAC UNITS OPERATING IN AN N+1 FASHION, WITH NO MORE THAN 2 CRAC UNITS OPERATING AT ANY GIVEN TIME. CRAC UNIT CONTROLLERS SHALL BE INTERCONNECTED AND CONTROLLED BY THE CRAC MANUFACTUER'S INTEGRAL CONTROL SEQUENCE TO MODULATE AND STAGE 2 ACTIVE UNITS TO MEET ROOM TEMPERATURE AND HUMIDITY REQUIRMENTS WHILE THE THIRD UNIT IS IN STANDBY MODE. MANUFACTURER'S CONTROLS SHALL ROTATE ACTIVE / STANDBY UNIT STATUS BETWEEN THE THREE UNITS ON A WEEKLY (ADJUSTABLE) BASIS TO MAINTAIN EQUAL RUNTIMES.

2. RUN CONDITIONS:
   THE CRAC SYSTEM SHALL OPERATE CONTINUOUSLY AND SHALL MAINTAIN THE SPACE AT A MAXIMUM 78°F TEMPERATURE AND MAXIMUM HUMIDITY LEVEL (55°F DEWPOINT).
   PROVIDE ALARMS AS FOLLOWS:
   - HIGH ZONE TEMPERATURE: IF THE ZONE TEMPERATURE IS GREATER THAN THE SPACE SETPOINT BY 5°F (ADJ.)
   - LOW ZONE TEMPERATURE: IF THE ZONE TEMPERATURE IS LESS THAN 65° (ADJ.)
   - HIGH ZONE HUMIDITY: IF THE ZONE DEWPOINT EXCEEDS 59°F
   - LOW ZONE HUMIDITY: IF THE ZONE DEWPOINT FALLS BELOW 42°F
   - HIGH UNIT DISCHARGE AIR TEMPERATURE: IF THE DISCHARGE AIR TEMPERATURE EXCEEDS 120°F (ADJ.)
   - LOW UNIT DISCHARGE AIR TEMPERATURE: IF THE DISCHARGE AIR TEMPERATURE IS LESS THAN 40°F (ADJ.)

3. ATFP / SMOKE DETECTION SHUTDOWN:
   UNITS SERVING INFORMATION TECHNOLOGY AND COMMUNICATIONS EQUIPMENT SHALL CONTINUE TO OPERATE UPON A BUILDING WIDE FIRE ALARM OR ATFP HVAC SHUTDOWN INITIATION.

4. FAN / FAN STATUS:
   THE ACTIVE CRAC UNIT FANS SHALL OPERATE CONTINUOUSLY WHEN THE UNIT IS COMMANDED TO RUN, UNLESS SHUTDOWN ON INTERNAL SAFETIES.
   THE UNIT CONTROLLER SHALL MONITOR THE FAN STATUS AND PROVIDE ALARMS AS FOLLOWS:
   - FAN FAILURE: COMMANDED ON, BUT THE STATUS IS OFF
   - FAN IN HAND: COMMANDED OFF, BUT THE FAN IS ON
   - FAN RUNTIME EXCEEDED: FAN STATUS RUNTIME EXCEEDS A USER DEFINABLE LIMIT (ADJ.)

5. FILTER DIFFERENTIAL PRESSURE MONITOR:
   THE CRAC UNIT CONTROLLER SHALL MONITOR THE DIFFERENTIAL PRESSURE ACROSS THE FILTER; THIS INFORMATION SHALL BE AVAILABLE ON THE UNIT CONTROLLER INTERFACE AND PROVIDED TO THE DDC SYSTEM FOR INFORMATIONAL PURPOSES ONLY. CAMP LEJEUNE MECHANICAL POLICIES DO NOT DESIRE FILTER ALARMS (FILTER SHALL BE CHANGED ON REGULAR MAINTENANCE INTERVALS).

6. COOLING COIL ISOLATION (2-WAY) AND MODULATING FLOW (3-WAY) CONTROL VALVES:
   2-WAY UNIT ISOLATION VALVES: THE TWO ACTIVE CRAC UNITS SHALL HAVE THEIR CHILLED WATER SYSTEM COIL ISOLATION VALVES OPEN TO FLOW FROM THE CONSTANT VOLUME CHILLED WATER PUMPING SYSTEM, WHILE THE STANDBY (N+1 REDUNDANT) UNIT'S ISOLATION VALVE SHALL BE CLOSED IN ORDER TO MAINTAIN THE CONSTANT CHILLED WATER FLOW SYSTEM BALANCE (SERVICE TO TWO ACTIVE CRAC UNITS).

   3-WAY MODULATING CHILLED WATER CONTROL VALVES: THE TWO ACTIVE CRAC UNIT'S FACTORY INSTALLED 3-WAY CONTROL VALVES SHALL MODULATE TO CONTROL CHILLED WATER FLOW TO THE CRAC UNIT COOLING COILS AS REQUIRED FOR COOLING AND HUMIDITY CONTROL; REMAINDER OF FLOW SHALL BYPASS THE CHILLED WATER COIL.

7. HEATING COIL CONTROL VALVES (REHEAT/DEHUMIDIFICATION):
   THE FACTORY INSTALLED 2-WAY CONTROL VALVE SHALL MODULATE THE FLOW OF HOT WATER FOR AUTOMATIC SENSISBLE REHEATING MODE DURING THE DEHUMIDIFICATION CYCLE AND AUTOMATIC HEATING MODE AS REQUIRED THROUGH THE CRAC UNIT FACTORY CONTROLLER.

8. HUMIDITY CONTROL:
   THE CRAC UNIT'S INTERNAL MICROPROCESSOR/CONTROLLER SHALL DETERMINE THE MOISUTRE CONTENT OF THE ROOM AIR AND PREVENT UNNESSARY HUMIDIFICATION AND DEHUMIDIFICATION CYCLES BY RESPONDING TO CHANGES IN DEWPOINT TEMPERATURE. ON A RISE IN SPACE HUMIDITY ABOVE UPPER LIMIT SETPOINT OF 55°F DEWPOINT THE DEHUMIDIFCATION CYCLE SHALL BE ENABLED, UPOIN A FALL IN SPACE HUMIDITY BELOW 55° DEWPOINT THE DEHUMDIFICATION CYCLE SHALL BE DISABLED. ON A FALL IN SPACE HUMIDITY BELOW LOWER LIMIT SETPOINT OF 42°F DEWPOINT, THE HUMIDIFICATION CYCLE SHALL BE ENABLED UNTIL SPACE REACHES SETPOINT.

9. DEHUMIDIFICATION CYCLE:
   EACH CRAC UNIT SHALL BE PROVIDED WITH A CHILLED WATER / HOT WATER BASED DEHUMIDIFICATION CYCLE TO CONDENSE EXCESS MOISTURE ON THE COOLING COIL TO DISCHARGE THROUGH THE CONDENSATE DRAIN, WITH HOT WATER REHEATING PROVIDED TO OFFSET EXCESS SENSIBLE COOLING INCURRED DURING THE DEHUMDIFICATION CYCLE TO PREVENT SUBCOOLING OF THE SPACE BEYOND 5°F (ADJUSTABLE) BELOW THE ROOM TEMPERATURE SETPOINT. CRAC SYSTEM CONTROLLER SHALL ENABLE/MODULATE DEHUMIDIFICATION CYCLE AS REQUIRED TO MAINTAIN SPACE HUMIDITY LEVELS AT OR BELOW 55°F DEWPOINT.

10. HUMIDIFICATION CYCLE:
    EACH CRAC UNIT SHALL BE PROVIDED WITH A FACTORY INSTALLED SELF-CONTAINED ATMOSPHERIC STEAM GENERATOR UTILIZING BUILDING POTABLE WATER. CRAC SYSTEM CONTROLLER SHALL ENABLE/MODULATE STEAM SUPPLY TO MAINTAIN SPACE HUMIDITY LEVELS ABOVE 42°F DEWPOINT PER TIA-569.

CRAC (COMPUTER ROOM AIR CONDITIONER) - POINT LIST

POINT NUMBER	SYSTEM POINT DESCRIPTION	COLOR GRAPHIC	ANALOG INPUT (AI)			ANALOG OUTPUT (AO)			DIGITAL (BINARY) INPUT (BI)			DIGITAL (BINARY) OUTPUT (BO)			SYSTEM FEATURES ALARMS			SYSTEM FEATURES PROGRAMS			NOTES
			TEMPERATURE	RELATIVE HUMIDITY	PRESSURE	% OPEN/CLOSE	% OPEN/CLOSE	FAN % MODULATION (ECM)	STATUS ON/OFF			OFF/ON (ENABLE)	OPEN/CLOSE	START/STOP	SENSOR FAIL	COMM. FAIL		TIME SCHEDULING	ALARM INSTRUCT	AUTOMATIC RESTART	
	CRAC UNIT CONTROLLER(S)	●													●	●		●	●	●	1
	SYSTEM GRAPHIC	●																			
01	ZONE TEMPERATURE		●												●						
02	ZONE HUMIDITY			●											●						
03	RETURN AIR TEMPERATURE		●																		
04	RETURN AIR HUMIDITY			●																	
05	FILTER DIFFERENTIAL PRESSURE				●																
06	CHW COOLING VALVE (3-WAY)					●															
07	CHW ISOLATION VALVE (2-WAY)											●									
08	HW REHEAT VALVE					●															
09	SUPPLY FAN STATUS								●												
10	SUPPLY FAN START/STOP													●							
11	SUPPLY FAN ECM SETPOINT				●																
12	SUPPLY FAN ECM FAULT								●												
13	SUPPY FAN PRESSSURE				●																
14	DISCHARGE AIR TEMPERATURE		●																		
15	DISCHARGE AIR HUMIDITY			●																	
##	RESERVED FOR FUTURE																				

1. NOT ALL FACTORY PROVIDED CONTROL POINTS INDICATED - REFER TO CRAC UNIT IOM AND PROJECT SPECIFICATIONS FOR COMPLETE INTERNAL UNIT CONTROL DEVICES AND SEQUENCES INCLUDING INTEGRAL HUMIDIFIER CONTROL; SUBFLOOR WATER DETECTION, ETC.

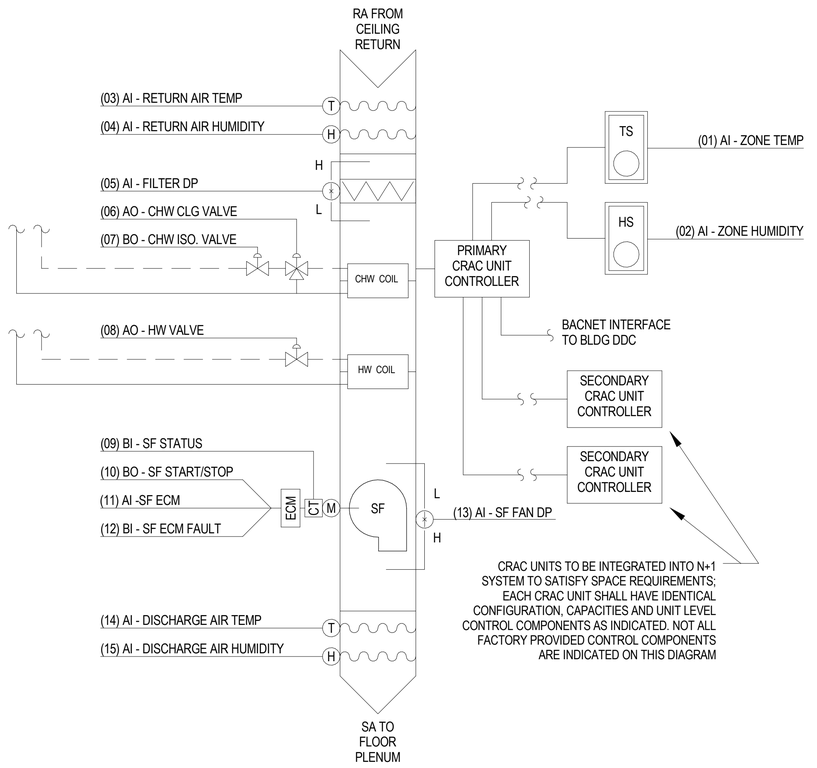

CRAC SYSTEM - CONTROL DIAGRAM

SCALE: NTS

A2

APPR | DATE | DESCRIPTION | SYM

NAVFAC

PRELIMINARY NOT FOR CONSTRUCTION

SEAL

IRQ W.M. Jordan COMPANY – A JOINT VENTURE –

Michael Baker INTERNATIONAL
100 AIRSIDE DRIVE
MOON TOWNSHIP, PA 15108
A/E INFO

APPROVED

FOR COMMANDER NAVFAC

ACTIVITY
MARINE CORPS BASE CAMP LEJEUNE

SATISFACTORY TO DATE

DES	DRW	CHK

PM

BRANCH MANAGER

CHIEF ENG/ARCH

FIRE PROTECTION

DEPARTMENT OF THE NAVY
NAVAL FACILITIES ENGINEERING COMMAND
ROICC FLORENCE CAMP LEJEUNE
MCB CAMP LEJEUNE

NAVAL FACILITIES ENGINEERING COMMAND – MID-ATLANTIC
JACKSONVILLE, NC

JACKSONVILLE, NC
P1338 II MEF SIMULATION/TRAINING CENTER REPLACEMENT
MECHANICAL - CONTROLS

SCALE: AS NOTED

EPROJECT NO.: 1590892

CONSTR. CONTR. NO.
N40085-20-C-0059

NAVFAC DRAWING NO.

SHEET OF

M-812

DP2 SUBMISSION – P1338 BUILDING - PRE-FINAL SUBMISSION

PLOTTED: 6/10/2021 3:34:42 PM

FILE NAME: BIM 360://HF PACKAGE 3/P1338 MEF SIM CTR-1590892-M.rvt

ELECTRICAL ROOM FAN FORCED VENTILATION COOLING / ELECTRIC HEATING - SEQUENCE OF OPERATION

1. ROOM TO BE THERMOSTATICALLY CONTROLLED BY COMMON THERMOSTAT CONNECTED TO THE DDC SYSTEM FOR SPACE HEATING AND EXHAUST BASED FORCED OUTSIDE AIR VENTILATION COOLING TO MAINTAIN TEMPERATURES WITH 10°F OF AMBIENT OUTDOOR CONDITIONS.
2. ON RISE IN SPACE TEMPERATURE ABOVE 80°F (ADJ.) DAMPERS ASSOCIATED WITH THE ROOM INTAKE AND EXHAUST LOUVERS SHALL OPEN AND THE EXHAUST FAN SHALL OPERATE CONTINUOUSLY. UPON FALL IN SPACE TEMPERATURE BELOW 80°F (ADJ.) THE REVERSE SHALL OCCUR.
3. UPON FALL IN SPACE TEMPERATURE BELOW HEATING SETPOINT OF 55°F (ADJ.), ELECTRIC UNIT/WALL HEATER SERVING SPACE SHALL ENERGIZE BY STARTING FAN AND ELECTRIC HEATING COIL TO MAINTAIN SPACE HEATING SETPOINT. UPON RISE IN TEMPERATURE ABOVE 55°F (ADJ.), THE REVERSE SHALL OCCUR. WHERE ELECTRIC HEATERS PROVIDED WITH INTEGRAL THERMOSTATIC CONTROL, SET SUC CONTROL AT 55°; PROVIDE ALARM TO DDC SYSTEM OF SPACE TEMPERATURE FALLS BELOW 50°.

SPLIT DX HEAT PUMP - SEQUENCE OF OPERATION

1. REMOTE CONTROL PANEL BY UNIT/SYSTEM MANUFACTURER SHALL BE WALL MOUNTED AND CONTROL COOLING AND HEATING MODES OF OPERATION. TEMPERATURE AND HUMIDITY SENSORS SHALL BE INTEGRAL TO THE CONTROL PANEL (IF AVAILABLE FROM MANUFACTURER) OR MOUNTED SEPARATELY ADJACENT TO THE CONTROL PANEL BY THE CONTROLS CONTRACTOR.
2. MANUFACTUER'S CONTROL PANEL SHALL INCLUDE AUTOMATIC UNIT SWITCHING OPERATIONS (HEATING / COOLING) AND DISPLAY NORMAL FUNCTIONS, MALFUNCTIONS AND SERVICE DIAGNOSTICS ON AN INTEGRAL LCD DISPLAY. BACNET INTERFACE MODULE SHALL BE PROVIDED (IF AVAILABLE FROM MANUFACTURER) TO INTEGRATE INTO BUILDING DDC SYSTEM.
3. ALARM CONDITIONS, IN ADDITION TO BEING DISPLAYED ON THE LOCAL LCD CONTROL PANEL SHALL BE RELAYED TO THE DDC SYSTEM. IF BACNET INTERFACE IS AVAILABLE, ALARM SPECIFICS SHALL BE SENT TO THE DDC SYSTEM, OTHERWISE A BASIC ALARM RELAY SHALL BE PROVIDED TO SIGNAL AN ALARM CONDITION TO THE DDC TO ALERT BUILDING OPERATOR OF CONDITION.
4. THE UNIT SHALL OPERATE CONTINUOUSLY. THE HEATING TEMPERATURE SETPOINT (HEAT PUMPS) IS 68° F DB (ADJ). THE COOLING TEMPERATURE SETPOINT IS 78°F DB (ADJ). ALARMS SHALL BE PROVIDED WHEN SPACE TEMPERATURE CONDITIONS FALL OUTSIDE THE HEATING (HEAT PUMPS ONLY) AND COOLING SETPOINTS BY 5°F OR WHEN SPACE HUMIDITY EXCEEDS 65%. ALL ALARM POINTS SHALL BE ADJUSTABLE.
5. CONTROL CONTRACTOR SHALL PROVIDE ALL INTERCONNECTING WIRING, RELAYS AND CONNECTIONS BETWEEN MANUFACTURER'S CONTROL PANEL, INDOOR UNIT AND OUTDOOR CONDENSING UNIT AND INTERFACE TO BUILDING DDC SYSTEM.

EXHAUST FAN / VENTILATION DAMPERS / ELECTRIC UNIT HEATER SYSTEM POINT LIST

POINT NUMBER	SYSTEM POINT DESCRIPTION	COLOR GRAPHIC	ANALOG INPUT (AI)				ANALOG OUTPUT(AO)				DIGITAL (BINARY) INPUT (BI)				DIGITAL (BINARY) OUTPUT (BO)				SYSTEM FEATURES ALARMS				SYSTEM FEATURES PROGRAMS				NOTES
	EXHAUST FAN / VENTILATION COOLING & ASSOCIATED LOUVERS / ELECTRIC HEATERS		TEMPERATURE				SETPOINT ADJ				STATUS				START/STOP	OPEN/CLOSED	ON/OFF		FAILURE	IN HAND	RUNTIME EXCEEDED	LOW ANALOG	TREND - START/STOP	TREND - STATUS	TREND - OPEN/CLOSED	TREND - HEATER	
1	ZONE TEMP	●	●																			●					
2	HEATING SETPOINT*	●					●															●					1
3	COOLING (VENTILATION) SETPOINT	●					●																				
4	EXHAUST FAN STATUS	●									●								●	●	●		●	●			
5	EXHAUST FAN START/STOP	●													●												
6	EXHAUST DAMPER	●														●									●		
7	OUTDOOR AIR DAMPER	●														●									●		
8	UNIT HEATER FAN START/STOP*	●													●											●	1
9	UNIT HEATER ELECTRIC COIL*	●															●										1
-	-																										
##	RESERVED FOR FUTURE																										

DUCTLESS MINI-SPLIT COOLING/ HEAT PUMP SYSTEMS (SSAC / SSCU & SSHP / HPCU) POINT LIST

POINT NUMBER	SYSTEM POINT DESCRIPTION	COLOR GRAPHIC	ANALOG INPUT (AI)			ANALOG OUTPUT (AO)			DIGITAL (BINARY) INPUT (BI)			DIGITAL (BINARY) OUTPUT (BO)			SYSTEM FEATURES ALARMS			SYSTEM FEATURES PROGRAMS			NOTES
	SPLIT DX HEAT PUMP		TEMPERATURE	RELATIVE HUMIDITY		TEMPERATURE			UNIT STATUS						HIGH ANALOG	LOW ANALOG		TREND			
	DDC SYSTEM BACNET INTERFACE	●																			
	SYSTEM GRAPHIC	●																			
1	SYSTEM STATUS								●									●			
2	CONDENSING UNIT STATUS								●									●			
3	SPACE TEMPERATURE		●															●			
4	SPACE HUMIDITY			●																	
5	COOLING SETPOINT					●															
6	HEATING SETPOINT					●															
7	ZONE TEMP ALARM - COOLING		●												●						
8	ZONE TEMP ALARM - HEATING		●													●					
9	ZONE HIGH HUMIDITY ALARM			●											●						
-	-																				
##	RESERVED FOR FUTURE																				

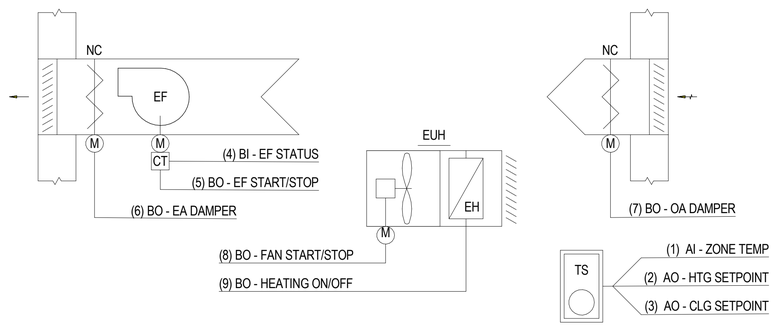

ELECTRICAL ROOM CONTROL DIAGRAM
(EF-02, 03, & 04, EWH-01, 02 / EUH-01)
SCALE: NTS
A1

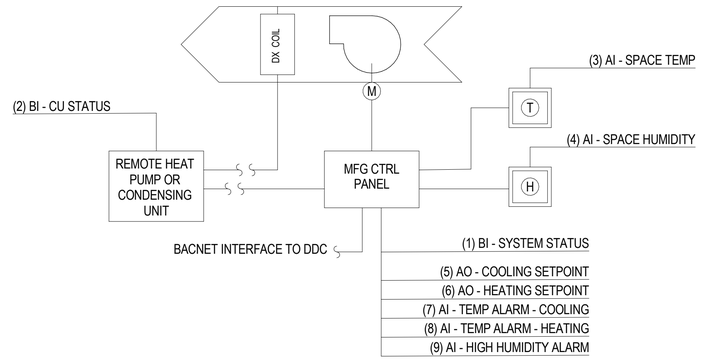

SPLIT DX HEAT PUMP - CONTROL DIAGRAM
SCALE: NTS
A3

APPR	DATE	DESCRIPTION	SYM

NAVFAC

PRELIMINARY
NOT FOR CONSTRUCTION

SEAL

IRQ Jordan COMPANY – A JOINT VENTURE –

Michael Baker INTERNATIONAL
100 AIRSIDE DRIVE
MOON TOWNSHIP, PA 15108
A/E INFO

APPROVED

FOR COMMANDER NAVFAC

ACTIVITY
MARINE CORPS BASE
CAMP LEJEUNE

SATISFACTORY TO DATE

DES	DRW	CHK

PM
BRANCH MANAGER
CHIEF ENG/ARCH
FIRE PROTECTION

DEPARTMENT OF THE NAVY
NAVAL FACILITIES ENGINEERING COMMAND – MID-ATLANTIC
ROICC FLORENCE CAMP LEJEUNE
JACKSONVILLE, NC
MCB CAMP LEJEUNE
P1338 II MEF SIMULATION/TRAINING CENTER REPLACEMENT
MECHANICAL - CONTROLS

SCALE: AS NOTED
EPROJECT NO.: 1590892
CONSTR. CONTR. NO.
N40085-20-C-0059
NAVFAC DRAWING NO.
SHEET OF

M-813

DP2 SUBMISSION – P1338 BUILDING - PRE-FINAL SUBMISSION

PLOTTED: 6/10/2021 3:34:45 PM
FILE NAME: BIM 360://HF PACKAGE 3/P1338 MEF SIM CTR-1590892-M.rvt

COLD MECHANICAL ROOM HYDRONIC HEATING AND DEHUMIDIFICATION - SEQUENCE OF OPERATION

1. ROOM TO BE DEHUMIDIFIED BY DEHUMIDIFIER INTERNAL CONTROLS. UPON RISE IN RELATIVE HUMIDITY ABOVE 55°F DEWPOINT (ADJ.), DEHUMIDIFIER TO TURN ON AND OPERATE CONTINUOUSLY. UPON FALL IN DEWPOINT BELOW 55°F DEWPOINT (ADJ.), THE REVERSE SHALL OCCUR.
2. ZONE HUMIDITY SENSOR TO SEND ROOM HUMIDITY LEVEL TO DDC SYSTEM. UPON RISE IN HUMIDITY LEVEL ABOVE 65°F DEWPOINT (ADJ.), ALARM SHALL BE GENERATED.
3. UPON FALL IN SPACE TEMPERATURE BELOW HEATING SETPOINT OF 55°F (ADJ.), HYDRONIC UNIT HEATER SERVING SPACE SHALL ENERGIZE BY STARTING FAN AND FULLY OPENING HOT WATER VALVE TO MAINTAIN SPACE HEATING SETPOINT. UPON RISE IN TEMPERATURE ABOVE 55°F (ADJ.), THE REVERSE SHALL OCCUR.

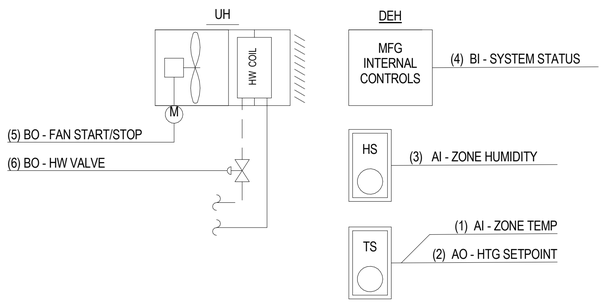

MECHANICAL ROOM 400 CONTROL DIAGRAM (UH-02, DEH-01)

SCALE: NTS

C1

HYDRONIC UNIT HEATER / DEHUMIDIFIER (UH / DEH) POINTS LIST

POINT NUMBER	SYSTEM POINT DESCRIPTION: HYDRONIC UNIT HEATERS AND DEHUMIDIFIER	COLOR GRAPHIC	ANALOG INPUT (AI): TEMPERATURE	ANALOG INPUT (AI): HUMIDITY	ANALOG OUTPUT(AO): SETPOINT ADJ	DIGITAL (BINARY) INPUT (BI): STATUS	DIGITAL (BINARY) OUTPUT (BO): START/STOP	DIGITAL (BINARY) OUTPUT (BO): POSITION	SYSTEM FEATURES ALARMS: FAILURE	ALARMS: IN HAND	ALARMS: RUNTIME EXCEEDED	ALARMS: LOW ANALOG	PROGRAMS: TREND - START/STOP	PROGRAMS: TREND - STATUS	PROGRAMS: TREND - HEATER	NOTES
1	ZONE TEMP	●	●									●				
2	HEATING SETPOINT	●			●											
3	AI - ZONE HUMIDITY	●		●								●				
4	BI - SYSTEM STATUS	●				●			●	●				●		
5	UNIT HEATER FAN START/STOP	●					●								●	
6	UNIT HEATER HW VALVE	●						●								
-	-															
##	RESERVED FOR FUTURE															

MECHANICAL ROOM 401 FAN FORCED VENTILATION COOLING/HYDRONIC HEATING - SEQUENCE OF OPERATION

1. ROOM TO BE THERMOSTATICALLY CONTROLLED BY COMMON THERMOSTAT CONNECTED TO THE DDC SYSTEM FOR SPACE HEATING AND SUPPLY BASED FORCED OUTSIDE AIR VENTILATION COOLING TO MAINTAIN TEMPERATURES WITH 10°F OF AMBIENT OUTDOOR CONDITIONS.
2. ON RISE IN SPACE TEMPERATURE ABOVE 80°F (ADJ.) DAMPERS ASSOCIATED WITH THE ROOM INTAKE AND EXHAUST LOUVERS SHALL OPEN AND THE SUPPLY FAN SHALL OPERATE CONTINUOUSLY. UPON FALL IN SPACE TEMPERATURE BELOW 80°F (ADJ.), THE REVERSE SHALL OCCUR.
3. UPON FALL IN SPACE TEMPERATURE BELOW HEATING SETPOINT OF 55°F (ADJ.), HYDRONIC UNIT HEATER SERVING SPACE SHALL ENERGIZE BY STARTING FAN AND OPENING HOT WATER VALVE TO MAINTAIN SPACE HEATING SETPOINT. UPON RISE IN TEMPERATURE ABOVE 55°F (ADJ.), THE REVERSE SHALL OCCUR.

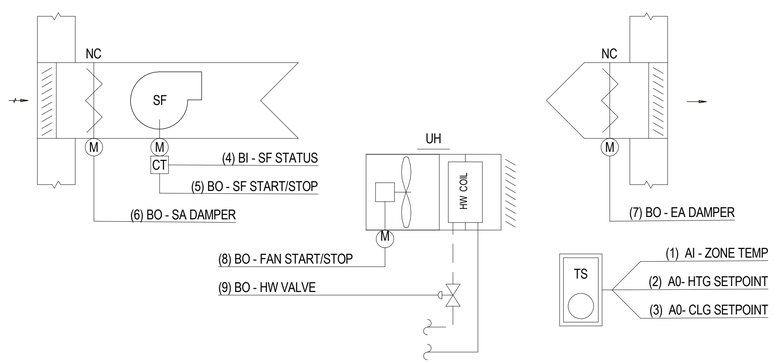

MECHANICAL ROOM 401 (HOT) CONTROL DIAGRAM (SF-01, UH-01)

SCALE: NTS

B1

SUPPLY FAN / VENTILATION DAMPERS / UNIT HEATER SYSTEM POINT LIST

POINT NUMBER	SYSTEM POINT DESCRIPTION: EXHAUST FAN / VENTILATION COOLING & ASSOCIATED LOUVERS / HYDRONIC HEATERS	COLOR GRAPHIC	ANALOG INPUT (AI): TEMPERATURE	ANALOG OUTPUT(AO): SETPOINT ADJ	ANALOG OUTPUT(AO): POSITION / % OPEN	DIGITAL (BINARY) INPUT (BI): STATUS	DIGITAL (BINARY) OUTPUT (BO): START/STOP	DIGITAL (BINARY) OUTPUT (BO): OPEN/CLOSED	SYSTEM FEATURES ALARMS: FAILURE	ALARMS: IN HAND	ALARMS: RUNTIME EXCEEDED	ALARMS: LOW ANALOG	PROGRAMS: TREND - START/STOP	PROGRAMS: TREND - STATUS	PROGRAMS: TREND - OPEN/CLOSED	PROGRAMS: TREND - HEATER	NOTES
1	ZONE TEMP	●	●									●					
2	HEATING SETPOINT	●		●													
3	COOLING (VENTILATION) SETPOINT	●		●													
4	SUPPLY FAN STATUS	●				●			●	●	●		●	●			
5	SUPPLY FAN START/STOP	●					●										
6	SUPPLY DAMPER	●						●							●		
7	EXHAUST AIR DAMPER	●						●							●		
8	UNIT HEATER FAN START/STOP	●					●									●	
9	UNIT HEATER HW VALVE	●					●										
-	-																
##	RESERVED FOR FUTURE																

EXHAUST FAN (EF-01) - SEQUENCE OF OPERATION

1. THE FAN SHALL RUN DURING OCCUPLIED HOURS IN IN CONJUNCTION WITH AHU-02, UNLESS SHUTDOWN ON SAFETIES.
2. THE FAN SHALL SHUTDOWN, THE ASSOCIATED EXHAUST DAMPER SHALL CLOSE, AND AN ALARM SHALL BE GENERATED UPON RECEIVING AN ATFP SHUTDOWN SIGNAL.
3. THE CONTROLLER SHALL MONITOR THE FAN STATUS.
4. ALARMS SHALL BE PROVIDED AS FOLLOWS:
   - FAN FAILURE: COMMANDED ON, BUT THE STATUS IS OFF.
   - FAN IN HAND: COMMANDED OFF, BUT THE STATUS IS ON.
   - FAN RUNTIME EXCEEDED: FAN STATUS RUNTIME EXCEEDS A USER DEFINABLE LIMIT (ADJ.).

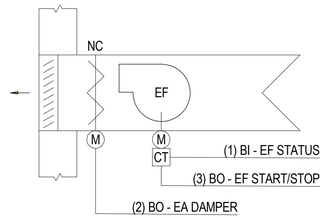

MECHANICAL ROOM 401 (HOT) CONTROL DIAGRAM (SF-01, UH-01)

SCALE: NTS

A1

EXHAUST FAN EF-01 & DAMPER POINT LIST

POINT NUMBER	SYSTEM POINT DESCRIPTION: EXHAUST FAN / ASSOCIATED LOUVER	COLOR GRAPHIC	DIGITAL (BINARY) INPUT (BI): STATUS	DIGITAL (BINARY) OUTPUT (BO): START/STOP	DIGITAL (BINARY) OUTPUT (BO): OPEN/CLOSED	SYSTEM FEATURES ALARMS: FAILURE	ALARMS: IN HAND	ALARMS: RUNTIME EXCEEDED	ALARMS: LOW ANALOG	PROGRAMS: TREND - START/STOP	PROGRAMS: TREND - STATUS	PROGRAMS: TREND - OPEN/CLOSED	NOTES
1	EXHAUST FAN	●	●	●		●	●	●		●	●		
2	EXHAUST DAMPER	●			●							●	
3	FAN START/STOP	●		●									
-	-												
##	RESERVED FOR FUTURE												

PLOTTED: 6/10/2021 3:34:48 PM

FILE NAME: BIM 360://HF PACKAGE 3/P1338 MEF SIM CTR-1590892-M.rvt

APPR	DATE	DESCRIPTION	SYM

NAVFAC

PRELIMINARY NOT FOR CONSTRUCTION

SEAL

IRQ W.M. Jordan COMPANY ~ A JOINT VENTURE ~

Michael Baker INTERNATIONAL

100 AIRSIDE DRIVE
MOON TOWNSHIP, PA 15108 A/E INFO

APPROVED

FOR COMMANDER NAVFAC

ACTIVITY
MARINE CORPS BASE
CAMP LEJEUNE

SATISFACTORY TO DATE

DES	DRW	CHK

PM

BRANCH MANAGER

CHIEF ENG/ARCH

FIRE PROTECTION

DEPARTMENT OF THE NAVY
NAVAL FACILITIES ENGINEERING COMMAND ~ MID-ATLANTIC
ROICC FLORENCE CAMP LEJEUNE
JACKSONVILLE, NC
MCB CAMP LEJEUNE
JACKSONVILLE, NC
P1338 II MEF SIMULATION/TRAINING CENTER REPLACEMENT
MECHANICAL - CONTROLS

SCALE: AS NOTED
EPROJECT NO.: 1590892
CONSTR. CONTR. NO.
N40085-20-C-0059
NAVFAC DRAWING NO.
SHEET OF

M-814

DP2 SUBMISSION – P1338 BUILDING -,-PRE-FINAL SUBMISSION

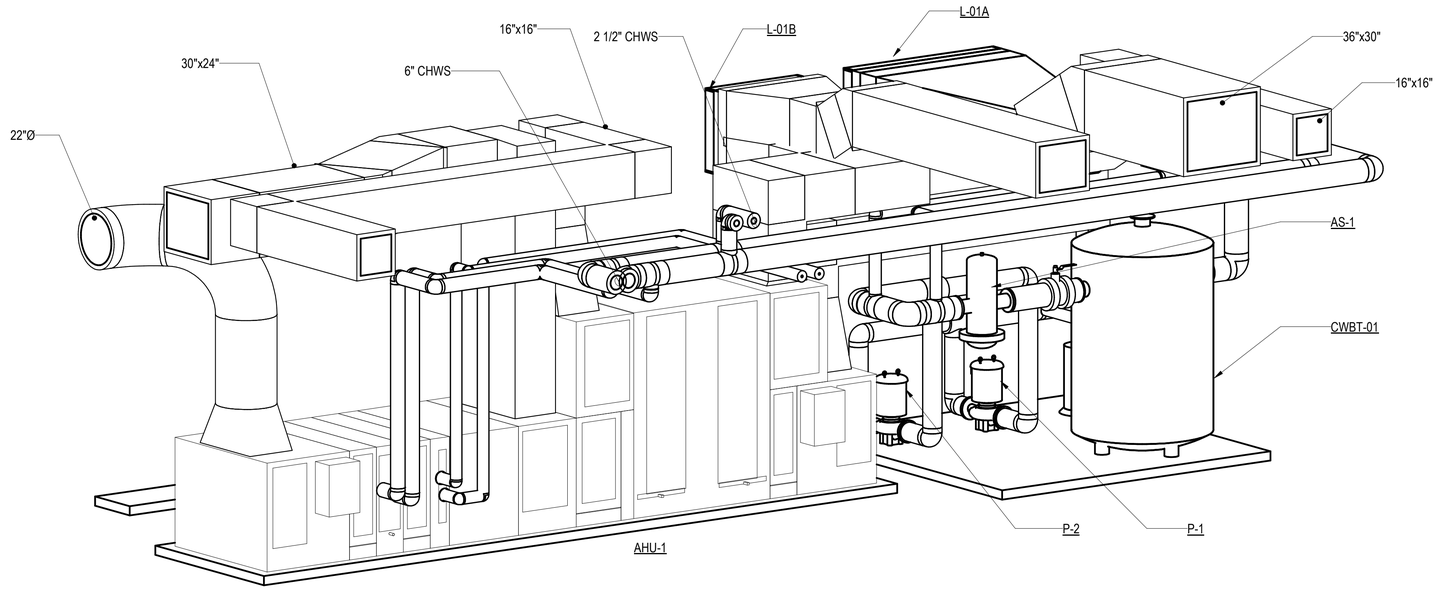

C1 AHU-01 ISOMETRIC

SCALE: NOT TO SCALE

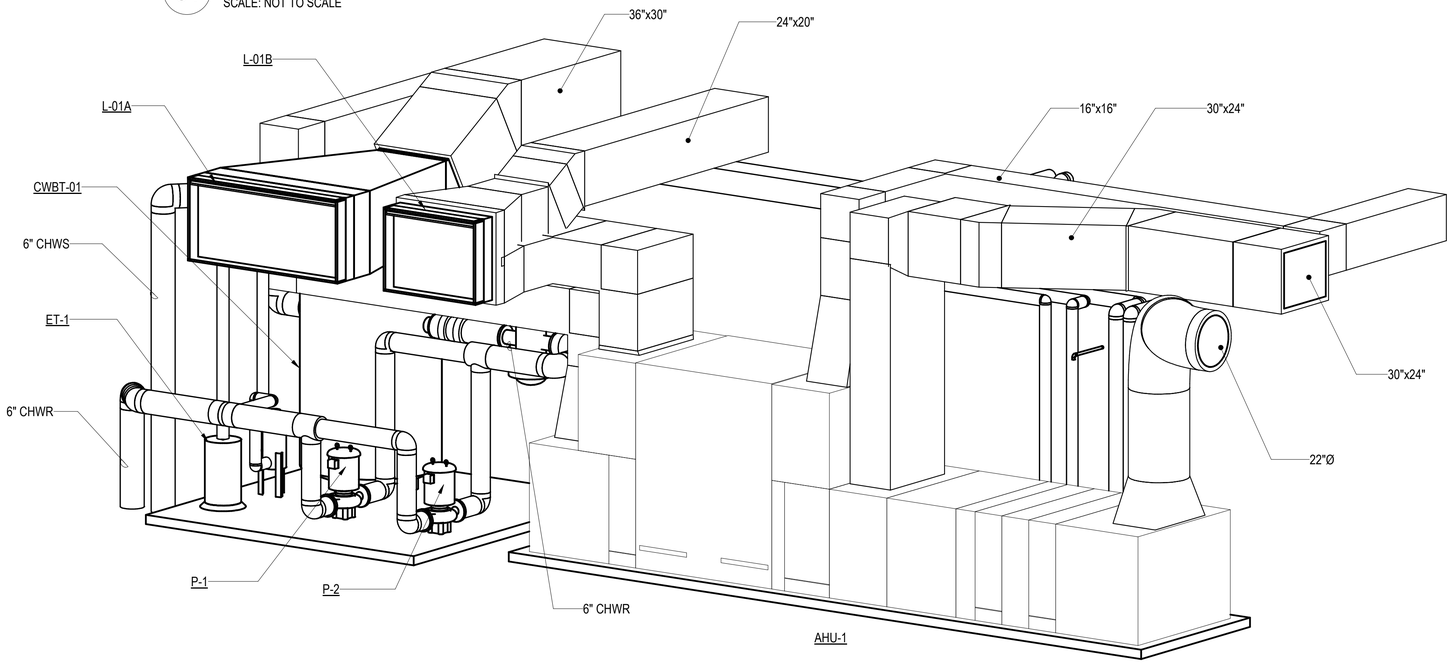

A1 AHU-01 ISOMETRIC

SCALE: NOT TO SCALE

SYM	DESCRIPTION	DATE	APPR

NAVFAC

PRELIMINARY
NOT FOR CONSTRUCTION

SEAL

RQ W.M. Jordan COMPANY – A JOINT VENTURE –

Michael Baker INTERNATIONAL
100 AIRSIDE DRIVE
MOON TOWNSHIP, PA 15108
A/E INFO

APPROVED

FOR COMMANDER NAVFAC

ACTIVITY
MARINE CORPS BASE
CAMP LEJEUNE

SATISFACTORY TO DATE

DES	DRW	CHK

PM

BRANCH MANAGER

CHIEF ENG/ARCH

FIRE PROTECTION

DEPARTMENT OF THE NAVY
NAVAL FACILITIES ENGINEERING COMMAND
NAVAL FACILITIES ENGINEERING COMMAND ~ MID-ATLANTIC
ROICC FLORENCE CAMP LEJEUNE
JACKSONVILLE, NC
MCB CAMP LEJEUNE
JACKSONVILLE, NC

P1338 II MEF SIMULATION/TRAINING CENTER
REPLACEMENT

MECHANICAL ISOMETRIC VIEWS

SCALE: AS NOTED
EPROJECT NO.: 1590892
CONSTR. CONTR. NO.
N40085-20-C-0059
NAVFAC DRAWING NO.
SHEET OF

M-901

DP2 SUBMISSION – P1338 BUILDING - PRE-FINAL SUBMISSION

UNCLASSIFIED

PLOTTED: 6/10/2021 3:34:52 PM

FILE NAME: BIM 360://HF PACKAGE 3/P1338 MEF SIM CTR-1590892-M.rvt

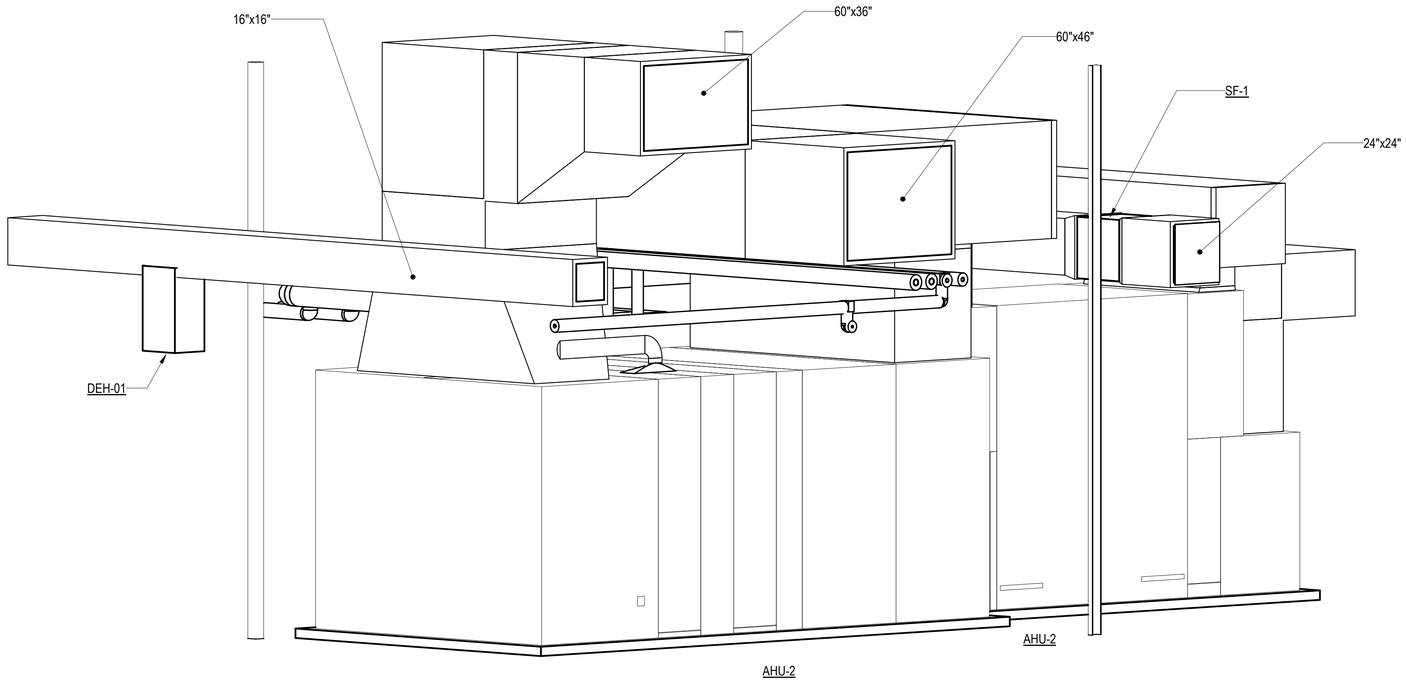

C1 AHU-02 ISOMETRIC

SCALE: NOT TO SCALE

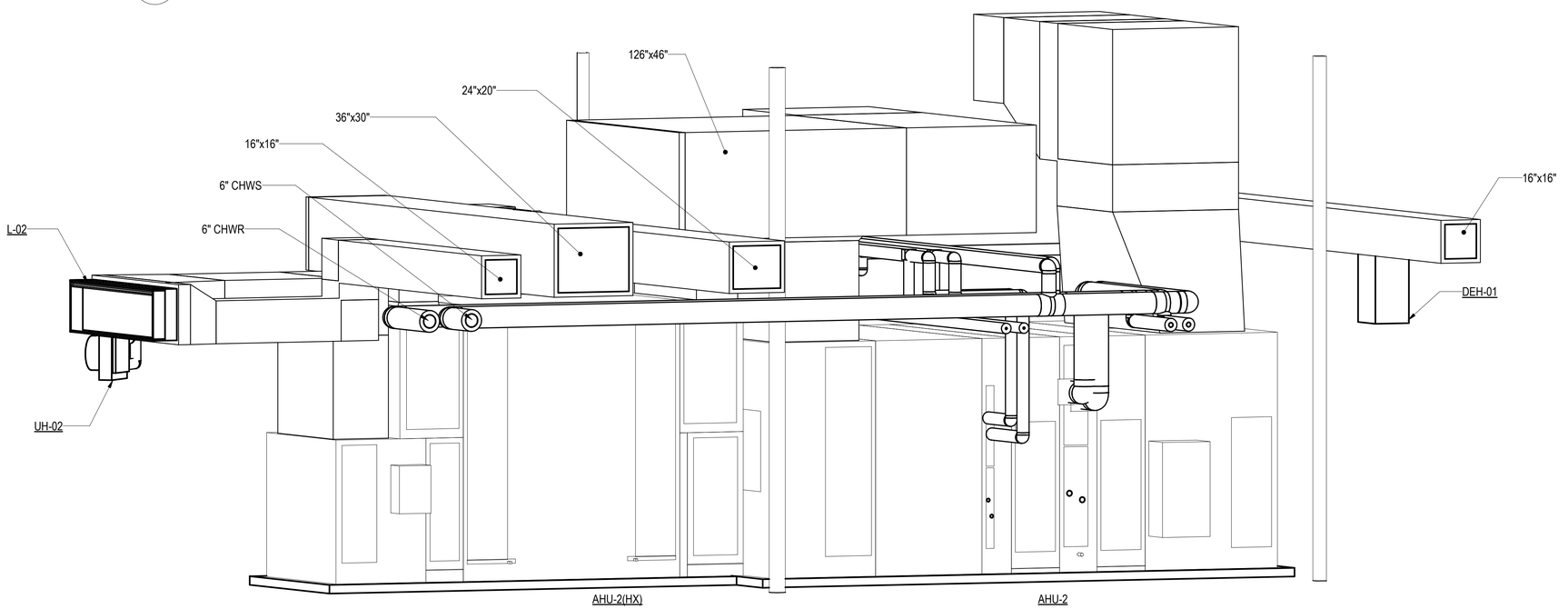

A1 AHU-02 ISOMETRIC

SCALE: NOT TO SCALE

PLOTTED: 6/10/2021 3:34:56 PM

FILE NAME: BIM 360://HF PACKAGE 3/P1338 MEF SIM CTR-1590892-M.rvt

APPR | DATE | DESCRIPTION | SYM

NAVFAC

PRELIMINARY NOT FOR CONSTRUCTION

SEAL

IRQ W.M. Jordan COMPANY ~ A JOINT VENTURE ~

Michael Baker INTERNATIONAL

100 AIRSIDE DRIVE
MOON TOWNSHIP, PA 15108 A/E INFO

APPROVED

FOR COMMANDER NAVFAC

ACTIVITY
MARINE CORPS BASE
CAMP LEJEUNE

SATISFACTORY TO DATE

DES	DRW	CHK

PM

BRANCH MANAGER

CHIEF ENG/ARCH

FIRE PROTECTION

DEPARTMENT OF THE NAVY
NAVAL FACILITIES ENGINEERING COMMAND
ROICC FLORENCE CAMP LEJEUNE
MCB CAMP LEJEUNE

NAVAL FACILITIES ENGINEERING COMMAND ~ MID-ATLANTIC
JACKSONVILLE, NC

JACKSONVILLE, NC
P1338 II MEF SIMULATION/TRAINING CENTER
REPLACEMENT

MECHANICAL ISOMETRIC VIEWS

SCALE: AS NOTED

EPROJECT NO.: 1590892

CONSTR. CONTR. NO.
N40085-20-C-0059

NAVFAC DRAWING NO.

SHEET OF

M-902

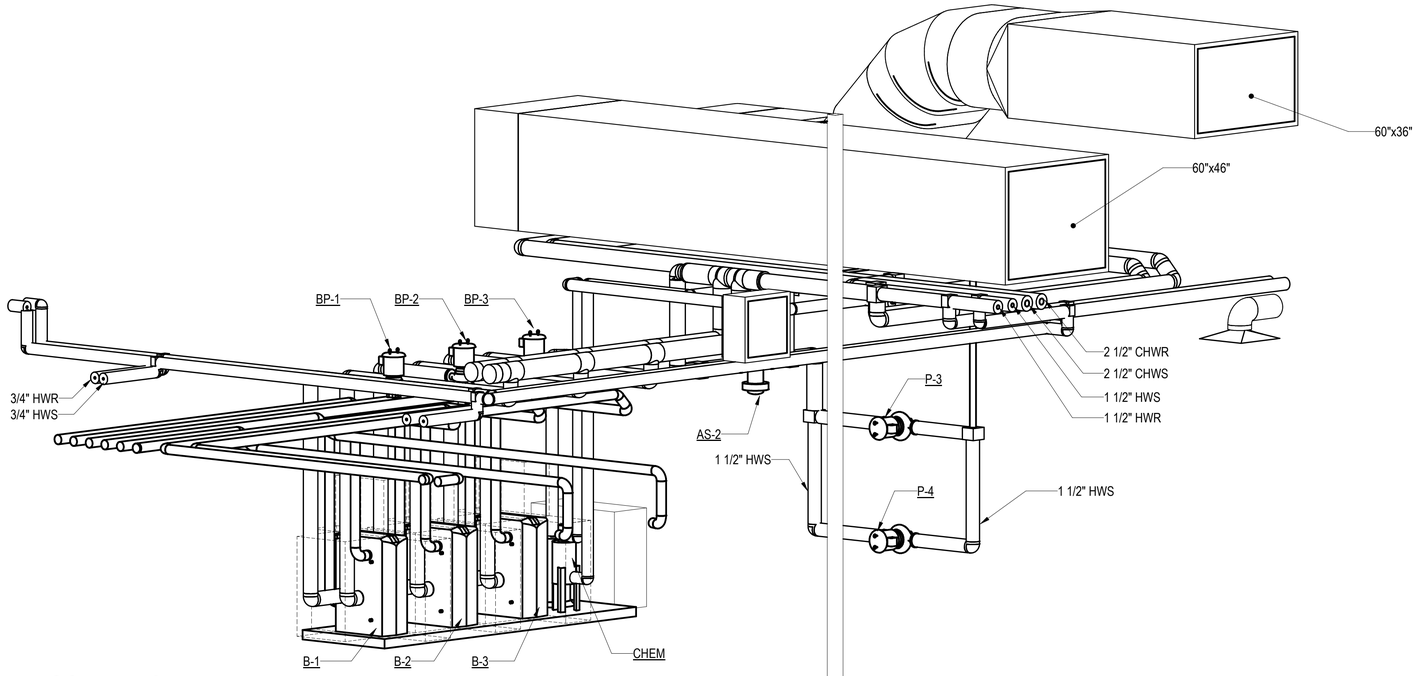

BOILER ISOMETRIC

SCALE:

C1

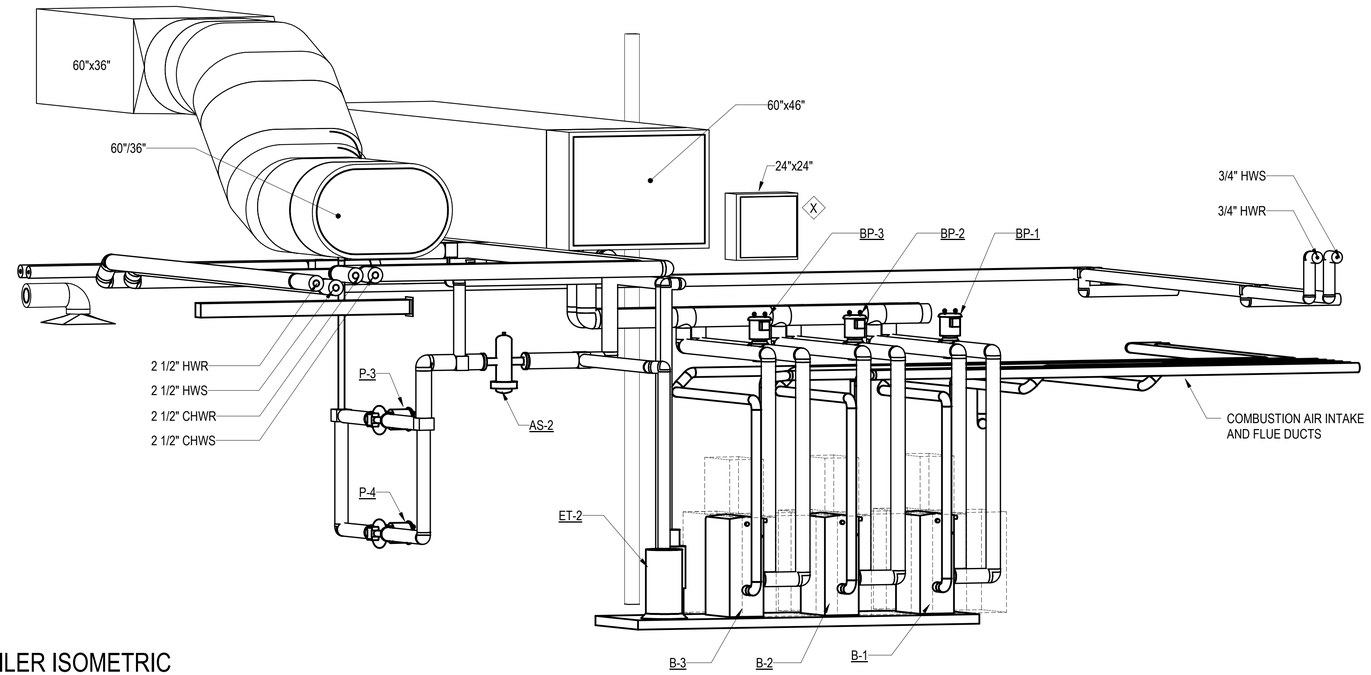

BOILER ISOMETRIC

SCALE:

A1

PLOTTED: 6/10/2021 3:35:00 PM

FILE NAME: BIM 360://HF PACKAGE 3/P1338 MEF SIM CTR-1590892-M.rvt

APPR | DATE | SYM | DESCRIPTION

PRELIMINARY
NOT FOR CONSTRUCTION

SEAL

RQ W.M. Jordan COMPANY – A JOINT VENTURE –

Michael Baker INTERNATIONAL

100 AIRSIDE DRIVE
MOON TOWNSHIP, PA 15108 A/E INFO

APPROVED

FOR COMMANDER NAVFAC

ACTIVITY
MARINE CORPS BASE
CAMP LEJEUNE

SATISFACTORY TO DATE

DES	DRW	CHK
PM		
BRANCH MANAGER		
CHIEF ENG/ARCH		
FIRE PROTECTION		

DEPARTMENT OF THE NAVY
NAVAL FACILITIES ENGINEERING COMMAND
ROICC FLORENCE CAMP LEJEUNE
MCB CAMP LEJEUNE

NAVAL FACILITIES ENGINEERING COMMAND ~ MID-ATLANTIC
JACKSONVILLE, NC

JACKSONVILLE, NC
P1338 II MEF SIMULATION/TRAINING CENTER
REPLACEMENT

MECHANICAL ISOMETRIC VIEWS

SCALE: AS NOTED

EPROJECT NO.: 1590892

CONSTR. CONTR. NO.
N40085-20-C-0059

NAVFAC DRAWING NO.

SHEET OF

M-903

DP2 SUBMISSION – P1338 BUILDING - PRE-FINAL SUBMISSION

SYMBOL — POWER

SYMBOL	
LP2A-1,3	HOME RUN TO PANELBOARD LETTERS AND NUMBERS DESIGNATE PANEL AND CIRCUITS. PROVIDE ONE PHASE CONDUCTOR, ONE NEUTRAL CONDUCTOR , AND ONE EQUIPMENT GROUNDING CONDUCTOR FOR SINGLE POLE CIRCUIT BREAKER CIRCUITS. PROVIDE TWO PHASE CONDUCTORS AND ONE EQUIPMENT GROUNDING CONDUCTOR FOR TWO POLE CIRCUIT BREAKER CIRCUITS. PROVIDE THREE PHASE CONDUCTORS AND ONE EQUIPMENT GROUNDING CONDUCTOR FOR THREE POLE CIRCUIT BREAKER CIRCUITS.
	CONDUIT AND CABLE, CONCEALED IN FINISHED SPACES, EXPOSED ELSEWHERE.
	CONDUIT AND CABLE, BELOW GRADE OR SLAB.
EU	UNDERGROUND DUCTBANK: EU = DENOTES ELECTRICAL GAS = DENOTES GAS LINE OE = DENOTES OVERHEAD ELECTRIC LINE T = DENOTES TELECOMMUNICATIONS
	CONDUIT TURNED UP.
	CONDUIT TURNED DOWN.
TW	GROUND ROD TEST WELL
	GROUND ROD
	EXOTHERMIC WELD.
	CLAMP CONNECTOR
	BOLTED CONNECTION
	AIR TERMINAL
	GROUND / GROUND ROD / GEC
	LIGHTNING PROTECTION MAIN CONDUCTOR
G	BARE COPPER GROUNDING CONDUCTOR.
	GROUNDING BUSBAR
S Xa	WALL SWITCH UNLESS OTHERWISE NOTED MOUNTED 48"AFF. "X" REPRESENTS TYPE. "a" REPRESENTS LIGHTS SWITCHED.
	LV4 = 4 BUTTON LOW VOLTAGE SWITCH WITH RAISE/LOWER AND ON/OFF LV8 = 8 BUTTON LOW VOLTAGE SWITCH WITH RAISE/LOWER AND ON/OFF AND 4 ZONES TS = TIME SWITCH D = LOW VOLTAGE DIMMER K = KEY OPERATED LV = LOW VOLTAGE SWITCH
	SINGLE, DUPLEX, 4-PLEX RECEPTACLE, MOUNTED 18"AFF UON. WP = WATERPROOF SP = SURGE SUPPRESSION TR = TAMPER RESISTANT AC = MOUNTED ABOVE COUNTER
	SPECIAL PURPOSE RECEPTACLE, SIZE AND TYPE AS SHOWN ON THE DRAWING.
	GFI DUPLEX RECEPTACLE.
	DUPLEX RECEPTACLE. FLUSH FLOOR MOUNTED, UNLESS OTHERWISE NOTED.
	DUPLEX RECEPTACLE. CEILING MOUNTED, UNLESS OTHERWISE NOTED.
	DUPLEX RECEPTACLE WITH TWO 5VDC USB PORTS, ONE TYPE A USB PORT AND ONE TYPE B USB PORT.
PB	PULLBOX SIZE PER NEC UNLESS OTHERWISE NOTED.
T	TRANSFORMER.
J	JUNCTION BOX SIZE PER NEC UNLESS OTHERWISE NOTED.
	EQUIPMENT CONNECTION POINT.
	PANELBOARD SURFACE OR FLUSH MOUNTED AS INDICATED.
VFD	VARIABLE FREQUENCY DRIVE.
	MOTOR CONNECTION.
M	SINGLE POLE MANUAL MOTOR STARTER, WITH THERMAL OVERLOAD PROTECTION.
100/3/3R	NON-FUSIBLE DISCONNECT. "100/3" DENOTES 100A, 3P, '3R'.
200/3/150	FUSIBLE DISCONNECT SWITCH. "200/3/150" DENOTES 200A, 3P, WITH 150A FUSES.
100/3/3R	ENCLOSED THERMAL MAGNETIC CIRCUIT BREAKER INDIVIDUALLY MOUNTED. "100/3" DENOTES 100A, 3P, 3R (NOTATION TYPICAL).
	MAGNETIC MOTOR STARTER INDIVIDUALLY MOUNTED.
100/3	FUSIBLE DISCONNECT SWITCH TYPE COMBINATION MAGNETIC MOTOR STARTER, CIRCUIT NUMBER AS SHOWN ON THE DRAWINGS. INDIVIDUALLY MOUNTED 54 IN. ABOVE FINISHED FLOOR.
	MOTOR CIRCUIT PROTECTOR TYPE COMBINATION MAGNETIC MOTOR STARTER, CIRCUIT NUMBERS AS SHOWN ON THE DRAWINGS. INDIVIDUALLY MOUNTED 54 IN. ABOVE FINISHED FLOOR.
	SURFACE METAL RACEWAY, (SMR) COORDINATE SIZE WITH SPECIFICATION, MOUNTED ABOVE COUNTER TOP, UNLESS OTHERWISE NOTED.
FB1	MULTISERVICE FLOOR BOX, . SEE E-502 FOR MORE INFORMATION.
FB2	MULTISERVICE FLOOR BOX, . SEE E-502 FOR MORE INFORMATION.
PT1	MULTISERVICE POKE THRU WITH QUADRUPLEX SOCKET AND GROUND. SEE MTF-T001 FOR TELECOMMUNICATIONS INFORMATION.
	EMERGENCY PUSH BUTTON
	PUSH BUTTON CONTROLLER

SYMBOL — FLOORBOXES

SYMBOL	
	FLOORBOX LOCATION, TRAINING SIMULATION SYSTEM – UNCLASSIFIED; INSTALLED IN RAISED ACCESS FLOOR. INSTALL EIGHT (8) CATEGORY 6A UTP PLENUM-RATED, GREEN JACKET COPPER CABLES FROM TERMINATING RACK IN SIM SERVER ROOM TO FLOORBOX LOCATION. SEE DETAIL SHEET E-502 FOR TERMINATION DETAILS.
	FLOORBOX LOCATION, TRAINING SIMULATION SYSTEM – CLASSIFIED; INSTALLED IN RAISED ACCESS FLOOR. INSTALL EIGHT (8) CATEGORY 6A UTP PLENUM-RATED, RED JACKET COPPER CABLES FROM TERMINATING RACK IN SIM SERVER ROOM TO FLOORBOX LOCATION. SEE DETAIL SHEET E-502 FOR TERMINATION DETAILS.

SYMBOL — GENERAL

SYMBOL	
X	SHEET KEYNOTE X = KEYNOTE NUMBER

SYMBOL — LIGHTING

SYMBOL	
A LP1-2b	STRIP LIGHTING FIXTURE. "LP1"=PANELBOARD, "2"=CIRCUIT NUMBER, "b"=SWITCH LETTER, "A"=FIXTURE TYPE LETTER. SEE LIGHTING FIXTURE SCHEDULE FOR DETAILS.
A LP1-2b	LIGHTING FIXTURE. "LP1"=PANELBOARD, "2"=CIRCUIT NUMBER, "b"=SWITCH LETTER, "A"=FIXTURE TYPE LETTER.
A LP1-2b	LIGHTING FIXTURE. "LP1"=PANELBOARD, "2"=CIRCUIT NUMBER, "b"=SWITCH LETTER, "A"=FIXTURE TYPE LETTER. SHADING DENOTES FIXTURE IS PROVIDED WITH EMERGENCY BATTERY BALLAST/DRIVER CONNECTED TO UNSWITCHED SENSING CIRCUIT WIRE.
A LP1-2	LIGHTING FIXTURE. "LP1"=PANELBOARD, "2"=CIRCUIT NUMBER, "A"=FIXTURE TYPE LETTER. FULL SHADING DENOTES FIXTURE IS UNSWITCHED AND PROVIDED WITH EMERGENCY BATTERY BALLAST/DRIVER.
	PENDANT MOUNTED LIGHTING FIXTURE.
	PENDANT MOUNTED STRIP LIGHTING FIXTURE
	CEILING MOUNTED LIGHTING FIXTURE.
	WALL MOUNTED LIGHTING FIXTURE.
	SITE LIGHTING ASSEMBLY.
	TWIN SITE LIGHTING ASSEMBLY.
PC	PHOTOCELL. COMPATIBLE WITH LIGHTING CONTROL PANEL.
	CEILING MOUNTED EXIT SIGN, DRAWINGS INDICATE SINGLE OR DOUBLE FACED WITH DIRECTIONAL ARROWS..
	WALL MOUNTED EXIT SIGN, DRAWINGS INDICATE SINGLE OR DOUBLE FACED WITH DIRECTIONAL ARROWS. MOUNT 8'-0"AFF.
W LP1-12	EMERGENCY LIGHTING MASTER UNIT, BATTERY POWERED. CONNECT TO UNSWITCHED PORTION OF LOCAL LIGHTING CIRCUIT. LP1 DENOTES PANELBOARD DESIGNATION. 12 DENOTES CIRCUIT NUMBER. W DENOTES FIXTURE TYPE LETTER.
	WALL SWITCH DUAL TECH, LOW VOLTAGE VACANCY SENSOR
D	WALL SWITCH DUAL TECH, LOW VOLTAGE VACANCY SENSOR - WITH DIMMING
OS	WALL SWITCH DUAL TECH, LOW VOLTAGE OCCUPANCY SENSOR
	CEILING MOUNTED, DUAL TECH LOW VOLTAGE OCCUPANCY SENSOR
	CEILING MOUNTED, LOW VOLTAGE ULTRASONIC CORRIDOR OCCUPANCY SENSOR
	CEILING MOUNTED DUAL TECH LOW VOLTAGE VACANCY SENSOR
R	DENOTES CEILING SENSOR WITH AUXILARY RELAY FOR TIE IN/ INTERFACE WITH VAV BOX.
P	SMART POWER PACK, EQUAL TO nLIGHT. - PROVIDE WITH DIMMING
LCP	LIGHTING CONTROL CONTACTOR PANEL.
DC	DOOR CONTACT LIGHT SWITCH.
LVS	LOW VOLTAGE SWITCH

SYMBOL — PHASING

SYMBOL	
	NEW CONSTRUCTION
	DEMOLITION
	EXISTING TO REMAIN
RR RR RR	REMOVE AND RELOCATE
ER ER ER	EXISTING RELOCATED

GENERAL NOTES

1. THIS IS A STANDARD LEGEND SHEET. NOT ALL SYMBOLS OR ABBREVIATIONS MAY APPEAR ON DRAWINGS.
2. MOUNTING DEVICES AND EQUIPMENT PER SPECIFICATIONS UNLESS OTHERWISE NOTED.
3. ENCLOSURES SHALL BE NEMA 1 UNLESS OTHERWISE NOTED. 3R=NEMA 3R, 4X=NEMA 4X, WP=WEATHERPROOF, AND XP=EXPLOSION PROOF.
4. PROVIDE GROUND CONDUCTOR FOR ALL BRANCH, FEED, AND EQUIPMENT CIRCUITS SIZED PER NEC, UNLESS OTHERWISE INDICATED.
5. WHERE MULTIPLE CIRCUITS ARE COMBINED IN A SINGLE RACEWAY THE CONTRACTOR SHALL DETERMINE THE EXACT NUMBER OF CONDUCTORS, ROUTING, AND SIZE OF THE RACEWAY. SIZE THE WIRE AMPACITY IN ACCORDANCE WITH THE NEC.
6. CONTRACTOR SHALL COORDINATE ALL CONDUIT PENETRATIONS AND PROVIDE CONDUIT SEALS IN HAZARDOUS LOCATION. PENETRATION SEALS, EXPANSION/VIBRATION ISOLATION FITTINGS AS APPLICABLE.
7. ELECTRICAL CONTRACTOR IS RESPONSIBLE TO MAINTAIN AIR BARRIER INTEGRITY FOR ELECTRICAL RACEWAY PENETRATION.
8. ALL WIRING FOR LIGHTING AND POWER CIRCUITS SHALL BE NO. 12 AWG MINIMUM.
9. ALL WIRING FOR CONTROL SHALL BE NO. 14 MINIMUM.
10. ALL CONDUIT SHALL BE MINIMUM 3/4" FOR POWER, MINIMUM 1" FOR DATA/COMM.
11. THE WIRE SIZE FROM A 20 AMPERE, SINGLE POLE, 120 VOLT CIRCUIT BREAKER MOUNTED IN A LIGHTING PANELBOARD TO THE LOAD SHALL BE AS FOLLOWS: NO. 12 AWG WIRE UP TO 100 FEET RUN; NO. 10 AWG WIRE; 101 FEET RUN UP TO 200 FEET RUN; NO. 8 AWG WIRE 201 FEET RUN UP TO 300 FEET RUN.
12. SELF CONTAINED UNIT EQUIPMENT SERVING EXIT AND EGRESS LIGHTING SYSTEMS SHALL BE CONNECTED TO THE UNSWITCHED PORTION OF THE LOCAL LIGHTING CIRCUIT IN COMPLIANCE WITH NEC 700.12 (F).
13. CONTRACTOR SHALL COMPLY WITH ALL CONTRACT REQUIREMENTS AND ALL APPLICABLE CODES, LAWS, AND REGULATIONS, INCLUDING NATIONAL ELECTRICAL CODE, OSHA, AND NATIONAL ELECTRICAL SAFETY CODE.
14. THIS SPECIFICATION AND THE DRAWINGS ARE NOT INTENDED TO SHOW ALL DETAILS, WIRING, BOXES, COVERS, FITTINGS, AND SPECIAL CONSTRUCTION WHICH MAY BE NECESSARY OR REQUIRED. THIS CONTRACTOR SHALL FURNISH, INSTALL, AND CONNECT ALL REQUIRED WORK IN ORDER TO MAKE THE INSTALLATION COMPLETE AS INDICATED BY THIS SPECIFICATION AND THE DRAWINGS. "PROVIDE" SHALL MEAN FURNISH AND INSTALL COMPLETE. "APPROVED" SHALL MEAN APPROVED BY OWNER'S REPRESENTATIVE. "DIRECTED" SHALL MEAN DIRECTED BY THE OWNER'S REPRESENTATIVE.
15. THE DRAWINGS ARE DIAGRAMMATIC AND DO NOT SHOW EXACT ROUTES OF WIRING AND EXACT LOCATION OF EQUIPMENT. CONTRACTOR SHALL BECOME FAMILIAR WITH JOB CONDITIONS AND SHALL ARRANGE ALL WORK TO AVOID CONFLICTS. ALL FINAL LOCATIONS OF NEW CONDUITS, OUTLETS, AND EQUIPMENT SHALL BE SUBJECT TO APPROVAL.
16. PROVIDE ALL ITEMS INDICATED ON DRAWINGS AND REQUIRED BY SPECIFICATIONS, INCLUDING: ALL SUPPORTS, HARDWARE AND ACCESSORIES, BRANCH CIRCUIT WIRING, AND DEVICES.
17. PRIOR TO EXECUTION OF THIS CONTRACT, THIS CONTRACTOR SHALL HAVE VISITED THE SITE (BY APPOINTMENT) AND SHALL HAVE EXAMINED ALL EXISTING CONDITIONS WHICH MAY AFFECT HIS WORK. SUBMISSION OF A BID SHALL BE CONSIDERED INDICATIVE THAT THIS CONTRACTOR HAS VISITED THE SITE AND HAS DETERMINED ALL EXISTING CONDITIONS WHICH MAY AFFECT THE CONTRACT WORK AND HAS INCLUDED ALL COSTS RELATED TO SITE CONDITIONS IN THE AMOUNT BID.
18. PROVIDE ARC FLASH LABELING IAW NEC 110.16.
19. ALL LISTED MATERIALS AND EQUIPMENT ARE INDICATIVE OF COMPLETE AND WHOLE UNITS (UNLESS SPECIFICALLY INDICATED TO THE CONTRARY) AND SHALL BE FURNISHED AS SUCH.
20. ALL CONSTRUCTION UNDER THIS CONTRACT SHALL BE INSTALLED IN A NEAT AND WORKMANLIKE MANNER BY MECHANICS SKILLED IN THE TRADE. THE CONTRACTOR SHALL REMOVE AND REPLACE ALL WORK WHICH IS NOT INSTALLED AS APPROVED.
21. UNLESS NOTED OTHERWISE, ALL MATERIALS AND EQUIPMENT SHALL BE NEW, APPROVED QUALITY, SPECIFICATION GRADE, AND LISTED BY UNDERWRITER'S LABORATORIES OF NATIONAL BOARD OF FIRE UNDERWRITERS.
22. ALL CUTTING REQUIRED FOR THE INSTALLATION OF ELECTRICAL CONSTRUCTION UNDER THIS CONTRACT SHALL BE ACCOMPLISHED IN SUCH MANNER AS NOT TO CAUSE STRUCTURAL OR ARCHITECTURAL DAMAGE TO BUILDING OR LEAVE UNSIGHTLY SURFACES. THIS CONTRACTOR SHALL BE RESPONSIBLE FOR PATCHING TO PROVIDE A NEAT AND FINISHED SURFACE EQUAL TO SURROUNDING UNDISTURBED SURFACES WHEREVER CUTTING, PATCHING, DAMAGE OR REMOVAL OF EQUIPMENT IS PERFORMED UNDER THIS CONTRACT. ALL PATCHING AND RESTORING OF SURFACES SHALL BE PERFORMED BY WORKMEN SKILLED IN THE TRADE INVOLVED AND SHALL BE SUBJECT TO APPROVAL.
23. PROVIDE ROUGH-IN CONNECTIONS FOR ALL OFOI/OFCI EQUIPMENT INCLUDING BUT NOT LIMITED TO PRINTER, COPIER, FAX MACHINES, INTERCOM, CAMERAS, PROJECTORS, PODIUMS, SMARTBOARDS, FLAT SCREEN MONITORS, FURNITURE SYSTEMS, AND SECURITY SYSTEMS.
24. THE ELECTRICAL CONTRACTOR SHALL REVIEW REQUIREMENTS FOR THE INSTALLATION OF ELECTRICAL PORTIONS OF WORK INDICATED ON THE CONSTRUCTION DOCUMENTS OF OTHER TRADES AND INCLUDE REQUIREMENTS IN BIDDING THIS CONTRACT.

SYMBOL — SINGLE-LINE DIAGRAM

SYMBOL	
	SINGLE LINE DIAGRAM THERMAL-MAGNETIC CIRCUIT BREAKER.
	SINGLE LINE DIAGRAM COMBINATION MOTOR STARTER WITH MOTOR CIRCUIT PROTECTOR (MCP) AND THERMAL OVERLOAD (OL).
	SINGLE LINE DIAGRAM NON-FUSED DISCONNECT SWITCH.
	SINGLE LINE DIAGRAM FUSED DISCONNECT SWITCH.
	SINGLE LINE DIAGRAM TRANSFORMER
VFD	VARIABLE FREQUENCY DRIVE WITH INTERNAL OVERCURRENT DISCONNECT DEVICE.
	WOOD UTILITY POLE
	ATS
	GROUNDING ELECTRODE
G	GENERATOR
M	SINGLE LINE DIAGRAM METER

ABBREVIATIONS

A	AMPS	XFMR	TRANSFORMER
AFF	ABOVE FINISHED FLOOR	XP	EXPLOSION PROOF
AFG	ABOVE FINISHED GROUND		
AHU	AIR HANDLING UNIT		
AIC	CURRENT INTERRUPTER CAPACITY		
ATS	AUTOMATIC TRANSFER SWITCH		
AWG	AMERICAN WIRE GAUGE		
BFC	BELOW FINISHED CEILING		
BRKR	CIRCUIT BREAKER		
C	CONDUIT		
CB	CIRCUIT BREAKER		
CFCI	CONTRACTOR FURNISHED CONTRACTOR INSTALLED		
CPR	COPIER		
CRAC	COMPUTER ROOM AIR CONDITIONER		
CRCU	COMPUTER ROOM CONDENSING UNIT		
CT	CONTROL TRANSFORMERS		
DB	DIRECT BURIED		
DIA	DIAMETER		
DP	DISTRIBUTION PANEL		
DWG	DRAWING		
EGC	EQUIPMENT GROUNDING CONDUCTOR		
EMT	ELECTRICAL METALLIC TUBING		
ER	EXISTING RELOCATED		
ERU	ENERGY RECOVERY UNIT		
ETR	EXISTING TO REMAIN		
EWC	ELECTRIC WATER COOLER		
EXST	EXISTING		
FB	FLOOR BOX		
GEC	GROUNDING ELECTRODE CONDUCTOR		
GFP	GROUND FAULT PROTECTION		
GND	GROUND		
GRD	GROUND		
GRS	GALVANIZED RIGID STEEL		
IAW	IN ACCORDANCE WITH		
IDS	INTRUSION DETECTION SYSTEM		
IMC	INTERMEDIATE METALLIC CONDUIT		
KVA	KILO VOLT AMPS		
KW	KILO WATT		
LCP	LIGHTING CONTROL PANEL		
LED	LIGHT EMITTING DIODE		
LP	LIGHTING PANEL		
MC	MECHANICAL CONTRACTOR		
MCP	MOTOR CIRCUIT PROTECTOR		
MCS	MOLDED CASE SWITCH		
MEP	MECHANICAL EQUIPMENT PANEL		
MIN	MINIMUM		
MLO	MAIN LUG ONLY		
MTD	MOUNTED		
MUA	MAKE UP AIR UNIT		
NEC	NATIONAL ELECTRIC CODE		
NEMA	NATIONAL ELECTRICAL MANUFACTURERS ASSOCIATION		
NESC	NATIONAL ELECTRICAL SAFETY CODE		
NFPA	NATIONAL FIRE PROTECTION ASSOCIATION		
NIC	NOT IN CONTRACT		
NO	NUMBER		
NP	NIPRNET SENDER		
NS	SIPRNET SENDER		
NTS	NOT TO SCALE		
OEM	ORIGINAL EQUIPMENT MANUFACTURER		
OFCI	OWNER FURNISHED CONTRACTOR INSTALLED		
OFOI	OWNER FURNISHED OWNER INSTALLED		
OL	THERMAL OVERLOAD		
OSHA	OCCUPATIONAL SAFETY AND HEALTH ADMINISTRATION		
OSP	OUTSIDE PLANT		
P	POLE		
PH	PHASE		
PIV	POST INDICATOR VALVE		
PP	POWER PANEL		
PSI	POUNDS PER SQUARE INCH		
PT	POTENTIAL TRANSFORMERS		
PVC	POLYVINYL CHLORIDE		
QTY	QUANTITY		
RCD	RESIDUAL CURRENT DEVICE		
RECEPT	RECEPTACLE		
RR	REMOVE AND RELOCATE		
RGS	RIGID GALVANIZED STEEL CONDUIT		
RMC	RIGID METAL CONDUIT		
RS	RIGID STEEL		
SCH	SCHEDULE		
SDP	STANDBY DISTRIBUTION PANEL		
SGP	SINGLE GROUND POINT		
SLP	STANDBY LIGHTING PANEL		
SP	SIPRNET PRINTER		
SPD	SURGE PROTECTION DEVICE		
SPP	STANDBY POWER PANEL		
SS	SIPRNET SENDER		
SW	SWITCHED		
T	TRANSFORMER		
TV	TELEVISION		
TW	TEST WELL		
TX	TRANSFORMER		
TYP	TYPICAL		
U/G	UNDERGROUND		
UON	UNLESS OTHERWISE NOTED		
V	VOLTS		
VAV	VARIABLE AIR VOLUME		
VDC	VOLTS DIRECT CURRENT		
VFD	VARIABLE FREQUENCY DRIVE		
W	WATTS OR WIRE		
WP	WEATHERPROOF		

APPR | DATE | DESCRIPTION | SYM

NAVFAC

SEAL

IRQ Jordan COMPANY – A JOINT VENTURE –

Michael Baker INTERNATIONAL
100 AIRSIDE DRIVE, MOON TOWNSHIP, PA 15108 — A/E INFO

APPROVED

FOR COMMANDER NAVFAC

ACTIVITY
MARINE CORPS BASE CAMP LEJEUNE

SATISFACTORY TO DATE

DES	DRW	CHK
SD	LAK	YPS

PM

BRANCH MANAGER

CHIEF ENG/ARCH

FIRE PROTECTION

DEPARTMENT OF THE NAVY
NAVAL FACILITIES ENGINEERING COMMAND
ROICC FLORENCE CAMP LEJEUNE
MCB CAMP LEJEUNE

NAVAL FACILITIES ENGINEERING COMMAND – MID-ATLANTIC
JACKSONVILLE, NC

JACKSONVILLE, NC
P1338 II MEF SIMULATION/TRAINING CENTER
REPLACEMENT

ELECTRICAL - NOTES, SYMBOLS, AND ABBREVIATIONS

SCALE: AS NOTED

EPROJECT NO.: 1590892

CONSTR. CONTR. NO.
N40085-20-C-0059

NAVFAC DRAWING NO.

SHEET OF

E-001

DP2 SUBMISSION – P1338 BUILDING -PRE-FINAL SUBMISSION

PLOTTED: 6/10/2021 5:41:52 PM

FILE NAME: BIM 360://HF PACKAGE 3/P1338 MEF SIM CTR-1590892-E.rvt

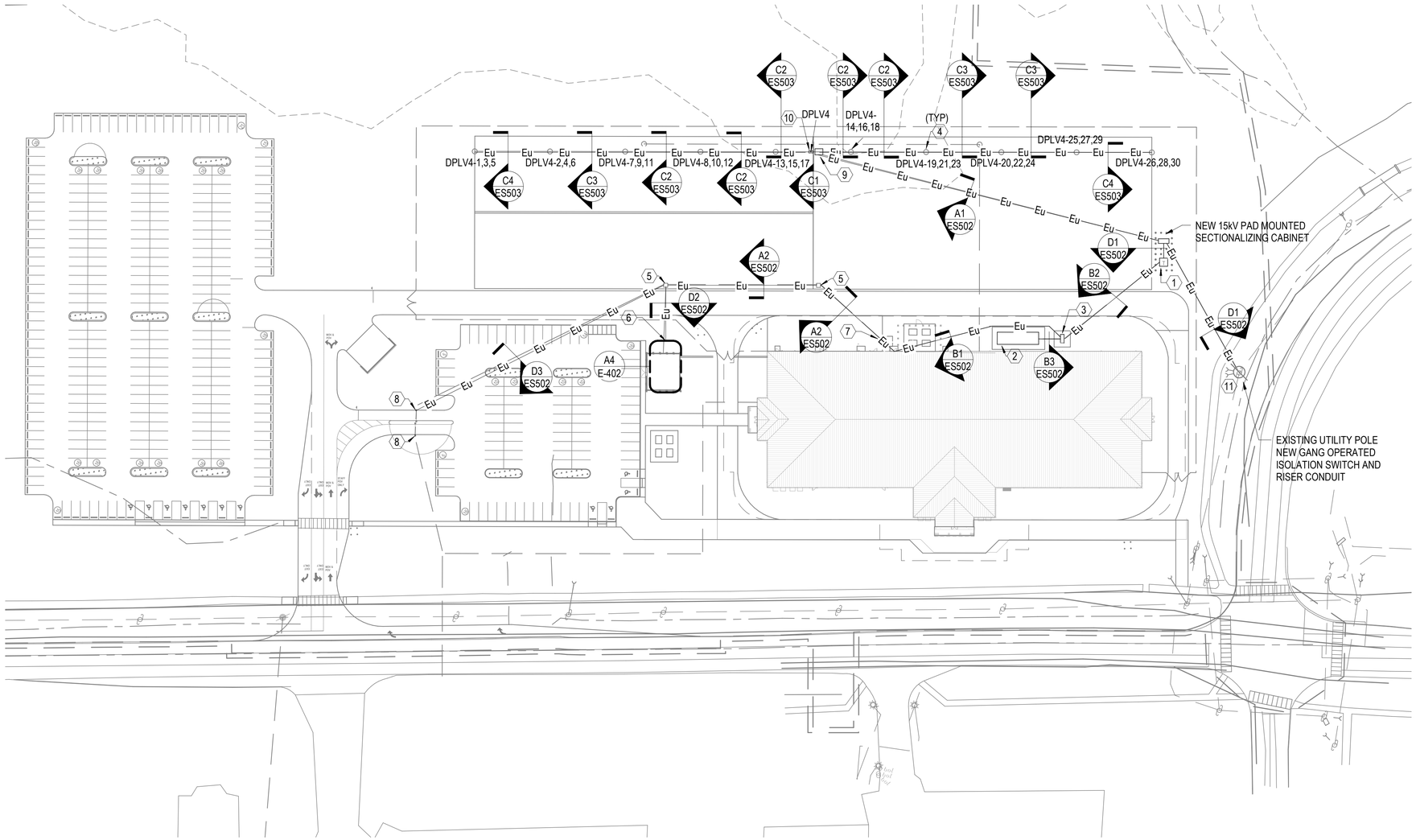

ELECTRICAL - SITE UTILITY PLAN

SCALE: 1" = 60'-0"

0 30'-0" 60'-0" 120'-0"

SCALE: 0'-1" = 60'-0"

GENERAL NOTES

1 SEE SHEET E-001 FOR ELECTRICAL NOTES, SYMBOLS, AND ABBREVIATIONS.
2 DEPTH OF DUCTBANKS SHALL BE COORDINATED WITH OTHER UTILITIES.

KEYNOTES

1 12.47kV-480Y/277V, 3PH, 4W, 60Hz, OIL FILLED UTILITY TRANSFORMER, OVER A PRECAST TRANSFORMER PAD. FOR ADDITIONAL INFORMATION SEE SPECIFICATIONS AND DRAWING E-602.
2 480Y/277V, DIESEL GENERATOR WITH SUBBASE FUEL TANK AND CONCRETE PAD. SEE ADDITIONAL INFORMATION ON DRAWING E-502. FOR ADDITIONAL INFORMATION SEE SPECIFICATIONS AND DRAWINGS E-502 / E-602.
3 AUTOMATIC TRANSFER SWITCH EQUIPPED WITH MAINTENANCE BYPASS SWITCH. FOR ADDITIONAL INFORMATION SEE SPECFICATIONS AND DRAWING E-602.
4 POWER PEDESTAL WITH HEAVY-DUTY NEMA 4X STAINLESS STEEL AND FUSED DISCONNECT SWITCH. COORDINATE FINAL POWER LOCATIONS WITH FINAL PEDESTAL LOCATION.
5 TYPE 4 TRAFFIC/AIRFIELD RATED HANDHOLE FOR POWER. COORDINATE HANDHOLE LOCATIONS WITH FINAL POWER LOCATIONS. SEE DETAIL UG-5 ON ES505.
6 CONTRACTOR TO COORDINATE FINAL TERMINATION POINT FOR ELECTRICAL CONNECTIONS BEFORE RUNNING CONDUIT.
7 RUN CHILLER CONDUITS UNDER ELECTRICAL ROOM SLAB AND STUB UP AT SWITCHBOARD LOCATION. SEE DRAWING E-401 FOR SWITCHBOARD LOCATION.
8 TYPE 5 COMPOSITE / FIBERGLASS, NON TRAFFIC RATED HANDHOLE FOR POWER AND COMM TO VEHICLE LIFT GATES. COORDINATE HANDHOLE LOCATION WITH FINAL POWER LOCATIONS FOR LIFT GATES. SEE DETAIL UG-6 ON ES505.
9 12.47kV-208Y/120V, 3PH, 4W, 60Hz, OIL FILLED UTILITY TRANSFORMER, OVER A PRECAST TRANSFORMER PAD TO SERVE DISTRIBUTION PANELBOARD FEEDING POWER PEDESTALS. FOR ADDITIONAL INFORMATION SEE SPECIFICATIONS AND DRAWING E-602.
10 800A, NEMA 4X STAINLESS STEEL, 208/120V DISTRIBUTION PANELBOARD FOR POWER PEDESTAL CONNECTIONS.
11 SEE NAVFAC STANDARD OVERHEAD TEMPLATES ON SHEET ES504.

NO.	DESCRIPTION	DATE	APPR

NAVFAC

SEAL

WJM Jordan COMPANY ~ A JOINT VENTURE ~

Michael Baker INTERNATIONAL
100 AIRSIDE DRIVE
MOON TOWNSHIP, PA 15108 A/E INFO

APPROVED

FOR COMMANDER NAVFAC

ACTIVITY
MARINE CORPS BASE
CAMP LEJEUNE

SATISFACTORY TO DATE

DES SD | DRW LAK | CHK YPS

PM

BRANCH MANAGER

CHIEF ENG/ARCH

FIRE PROTECTION

DEPARTMENT OF THE NAVY
NAVAL FACILITIES ENGINEERING COMMAND
ROICC FLORENCE CAMP LEJEUNE
MCB CAMP LEJEUNE

NAVAL FACILITIES ENGINEERING COMMAND ~ MID-ATLANTIC
JACKSONVILLE, NC

JACKSONVILLE, NC
P1338 II MEF SIMULATION/TRAINING CENTER
REPLACEMENT

ELECTRICAL - SITE UTILITY PLAN

SCALE: AS NOTED
EPROJECT NO.: 1590892
CONSTR. CONTR. NO.
N40085-20-C-0059
NAVFAC DRAWING NO.
SHEET OF

ES101

DP2 SUBMISSION – P1338 BUILDING -,PRE-FINAL SUBMISSION

PLOTTED: 6/10/2021 5:44:32 PM

FILE NAME: BIM 360://HF PACKAGE 3/P1338 MEF SIM CTR-1590892-E.rvt

GENERAL NOTES

1 SEE SHEET E-001 FOR ELECTRICAL NOTES, SYMBOLS, AND ABBREVIATIONS.
2 SEE SHEET E-601 FOR LIGHTING FIXTURE SCHEDULE.
3 DUCTBANKS UNDER PAVEMENT SHALL BE CONCRETE ENCASED.

KEYNOTES

1 SITE LIGHTING HAND HOLE, SIZE PER NEC.
2 MOUNT FIXTURE 8'-0" ABOVE FINISHED GRADE.

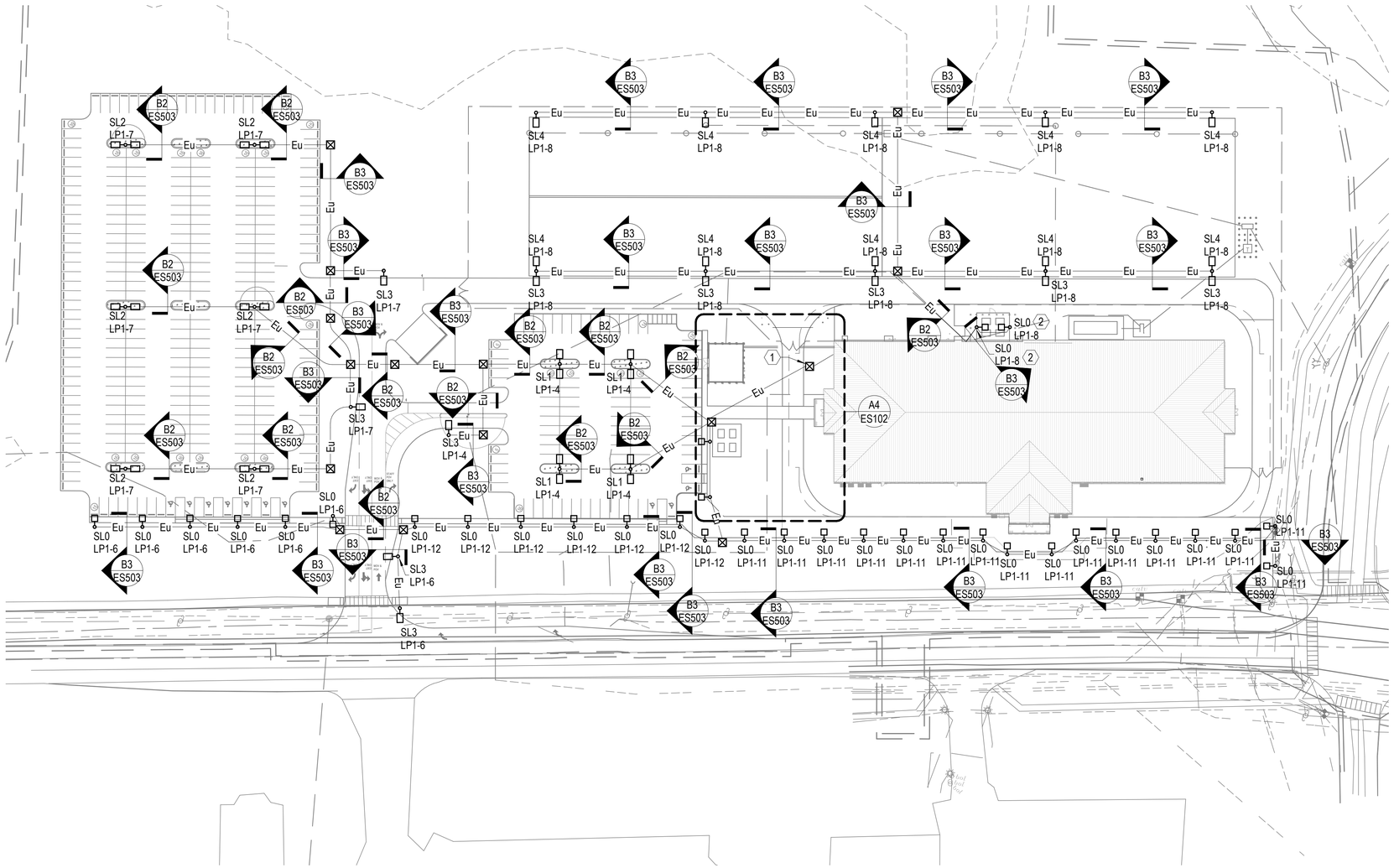

ELECTRICAL - SITE LIGHTING PLAN

SCALE: 1" = 60'-0"

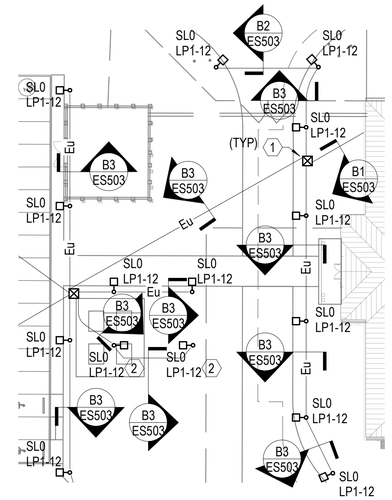

A4 ELECTRICAL - SITE LIGHTING PLAN

SCALE: 1" = 30'-0" (ES102)

0 30'-0" 60'-0" 120'-0"

SCALE: 0'-1" = 60'-0"

N

NO.	DESCRIPTION	DATE	APPR

NAVFAC

SEAL

IRQ Jordan COMPANY – A JOINT VENTURE –

Michael Baker INTERNATIONAL
100 AIRSIDE DRIVE
MOON TOWNSHIP, PA 15108 A/E INFO

APPROVED

FOR COMMANDER NAVFAC

ACTIVITY
MARINE CORPS BASE
CAMP LEJEUNE

SATISFACTORY TO DATE

DES SD | DRW LAK | CHK YPS

PM

BRANCH MANAGER

CHIEF ENG/ARCH

FIRE PROTECTION

DEPARTMENT OF THE NAVY
NAVAL FACILITIES ENGINEERING COMMAND
ROICC FLORENCE CAMP LEJEUNE
MCB CAMP LEJEUNE

NAVAL FACILITIES ENGINEERING COMMAND ~ MID-ATLANTIC
JACKSONVILLE, NC

JACKSONVILLE, NC
P1338 II MEF SIMULATION/TRAINING CENTER
REPLACEMENT

ELECTRICAL - SITE LIGHTING PLAN

SCALE: AS NOTED
EPROJECT NO.: 1590892
CONSTR. CONTR. NO.
N40085-20-C-0059
NAVFAC DRAWING NO.
SHEET OF

ES102

DP2 SUBMISSION – P1338 BUILDING - PRE-FINAL SUBMISSION

PLOTTED: 6/10/2021 5:44:39 PM

FILE NAME: BIM 360://HF PACKAGE 3/P1338 MEF SIM CTR-1590892-E.rvt

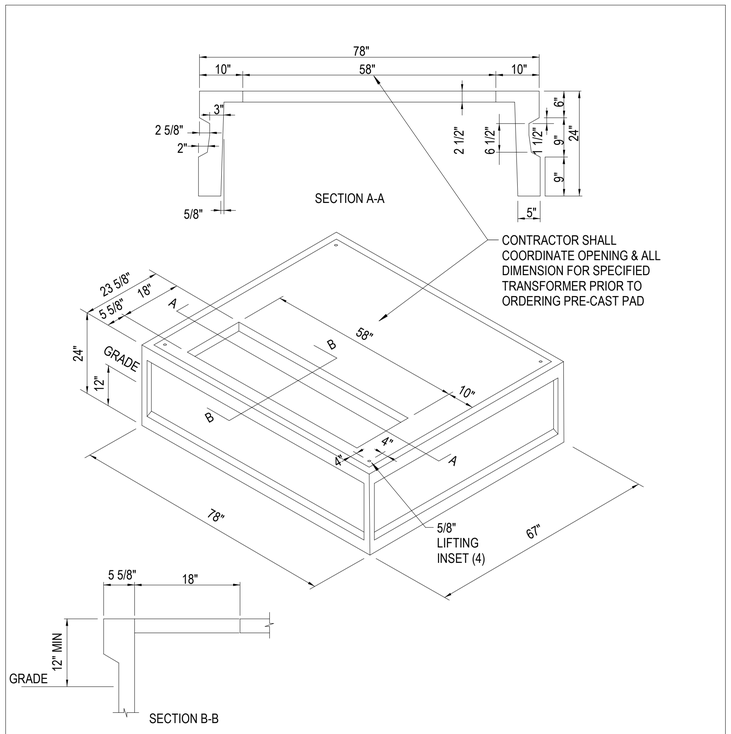

PRECAST TRANSFORMER PAD DETAIL

SKETCH DATE	APRIL 2015	STYLE

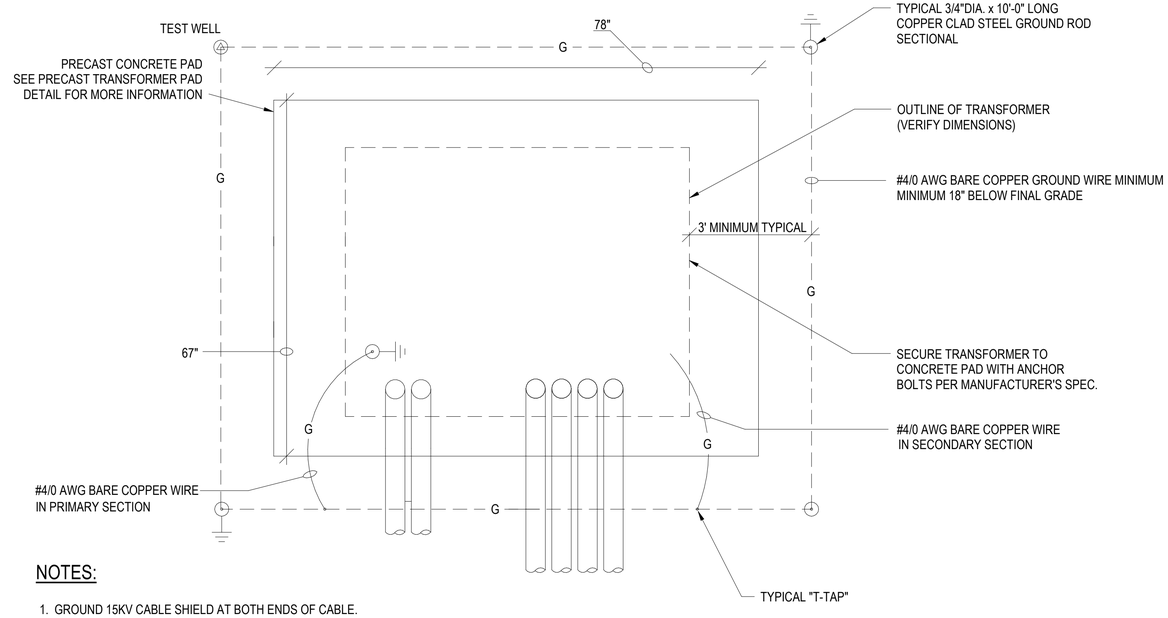

NOTES:

1. GROUND 15KV CABLE SHIELD AT BOTH ENDS OF CABLE.
2. FINAL CONNECTIONS TO EXISTING PRIMARY SYSTEM SHALL BE MADE BY CONTRACTOR AFTER INSPECTION BY THE BASE EXTERIOR ELECTRICAL SHOP. ALL MATERIALS REQUIRED SHALL BE PROVIDED BY CONTRACTOR.
3. PROVIDE WINDOWS IN PAD PER TRANSFORMER MANUFACTURER'S RECOMMENDATIONS.

PRECAST TRANSFORMER PAD GROUNDING DETAIL

SCALE: 12" = 1'-0"

C3

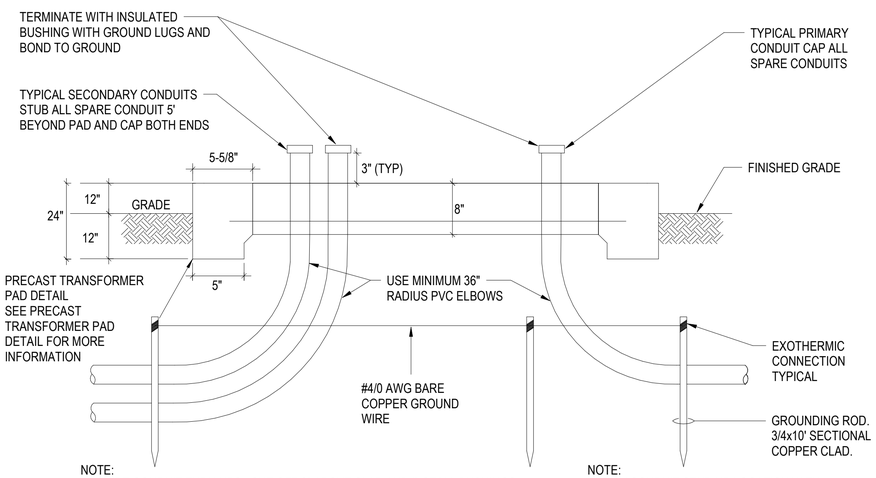

PRECAST TRANSFORMER PAD GROUNDING SECTION

SCALE: 12" = 1'-0"

A1

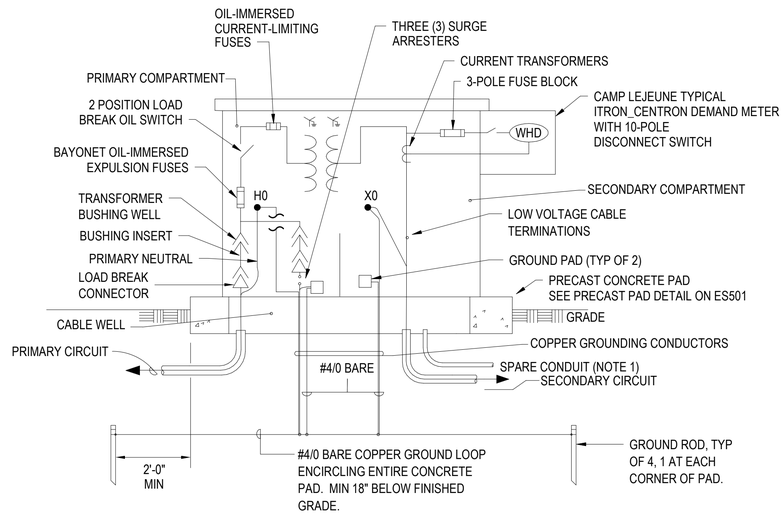

NOTE 1:PROVIDE ONE 2" SPARE CONDUIT STUBBED-OUT FIVE FEET FROM PAD. COORDINATE WITH ACTIVITY FOR ADDITIONAL METERING INPUT (GAS, STEAM OR WATER SYSTEMS).

PAD MOUNTED TRANSFORMER DETAIL

SCALE: 12" = 1'-0"

A3

APPR | DATE | DESCRIPTION | SYM

NAVFAC

SEAL

IRQ Joint Venture: W.M. Jordan Company

Michael Baker INTERNATIONAL
100 AIRSIDE DRIVE
MOON TOWNSHIP, PA 15108
A/E INFO

APPROVED

FOR COMMANDER NAVFAC

ACTIVITY
MARINE CORPS BASE CAMP LEJEUNE

SATISFACTORY TO DATE

DES SD | DRW LAK | CHK YPS

PM

BRANCH MANAGER

CHIEF ENG/ARCH

FIRE PROTECTION

DEPARTMENT OF THE NAVY
NAVAL FACILITIES ENGINEERING COMMAND ~ MID-ATLANTIC
JACKSONVILLE, NC
ROICC FLORENCE CAMP LEJEUNE
MCB CAMP LEJEUNE
P1338 II MEF SIMULATION/TRAINING CENTER
REPLACEMENT
JACKSONVILLE, NC
ELECTRICAL - SITE DETAILS

SCALE: AS NOTED

EPROJECT NO.: 1590892

CONSTR. CONTR. NO.
N40085-20-C-0059

NAVFAC DRAWING NO.

SHEET OF

ES501

DP2 SUBMISSION – P1338 BUILDING -,PRE-FINAL SUBMISSION

PLOTTED: 6/10/2021 5:44:40 PM

FILE NAME: BIM 360://HF PACKAGE 3/P1338 MEF SIM CTR-1590892-E.rvt

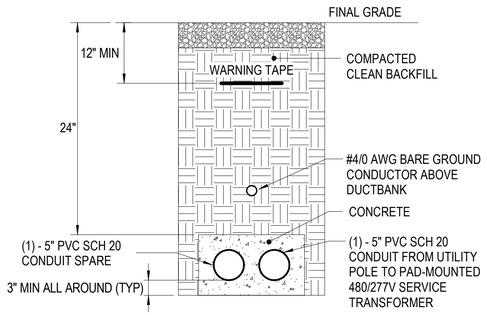

2-WAY CONCRETE ENCASED DUCTBANK

SCALE:NTS ES101 D1

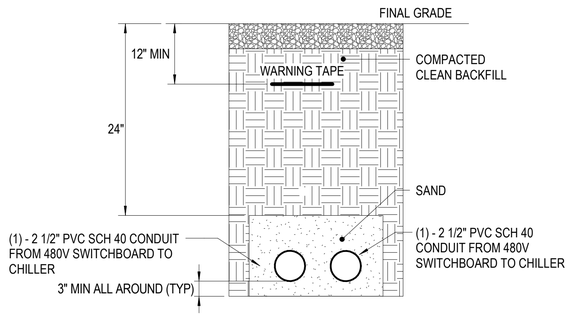

2-WAY DUCTBANK - CHILLER

SCALE:NTS ES101 D2

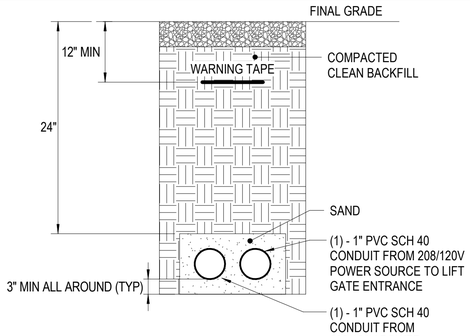

2-WAY DUCTBANK - LIFT GATE

SCALE:NTS ES101 D3

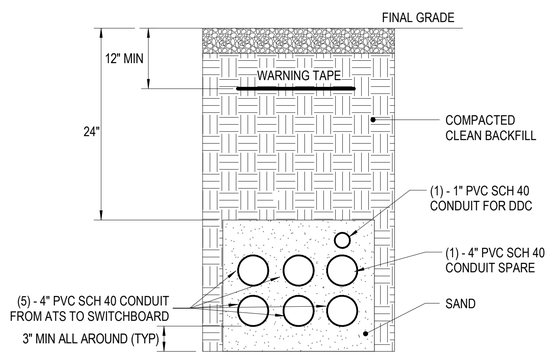

7-WAY DUCTBANK

SCALE:NTS ES101 B1

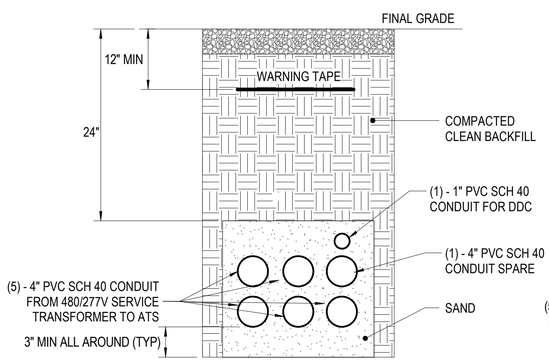

7-WAY DUCTBANK (A)

SCALE:NTS ES101 B2

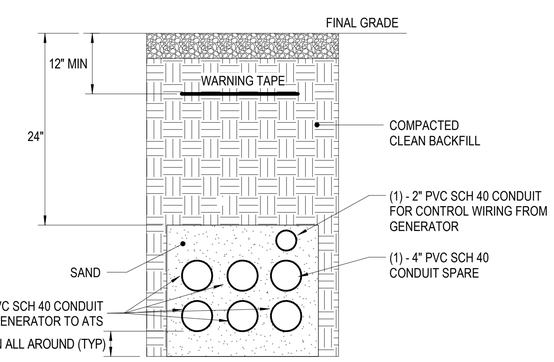

7-WAY DUCTBANK - GENERATOR

SCALE:NTS ES101 B3

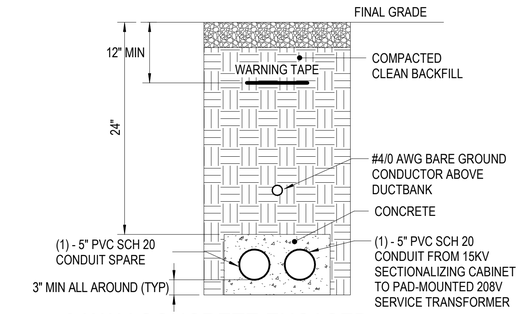

2-WAY CONCRETE ENCASED DUCTBANK (B)

SCALE:1 : 15 ES101 A1

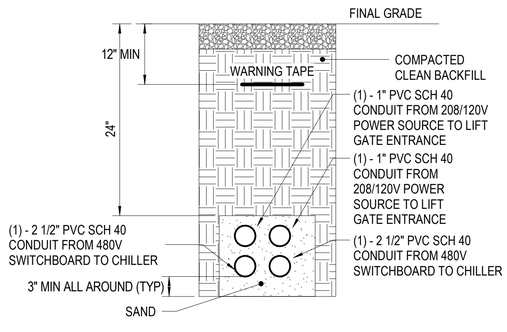

5-WAY DUCTBANK(B)

SCALE:1 : 15 ES101 A2

APPR	
DATE	
DESCRIPTION	
SYM	

NAVFAC

SEAL

RQ W.M. Jordan COMPANY – A JOINT VENTURE –

Michael Baker INTERNATIONAL
100 AIRSIDE DRIVE
MOON TOWNSHIP, PA 15108 A/E INFO

APPROVED

FOR COMMANDER NAVFAC

ACTIVITY
MARINE CORPS BASE CAMP LEJEUNE

SATISFACTORY TO DATE

DES SD | DRW LAK | CHK YPS

PM

BRANCH MANAGER

CHIEF ENG/ARCH

FIRE PROTECTION

DEPARTMENT OF THE NAVY
NAVAL FACILITIES ENGINEERING COMMAND ~ MID-ATLANTIC
ROICC FLORENCE CAMP LEJEUNE JACKSONVILLE, NC
MCB CAMP LEJEUNE
P1338 II MEF SIMULATION/TRAINING CENTER
REPLACEMENT
JACKSONVILLE, NC
ELECTRICAL - SITE DETAILS

SCALE: AS NOTED
EPROJECT NO.: 1590892
CONSTR. CONTR. NO.
N40085-20-C-0059
NAVFAC DRAWING NO.
SHEET OF

ES502

DP2 SUBMISSION – P1338 BUILDING –PRE-FINAL SUBMISSION

PLOTTED: 6/10/2021 5:44:41 PM

FILE NAME: BIM 360://HF PACKAGE 3/P1338 MEF SIM CTR-1590892-E.rvt

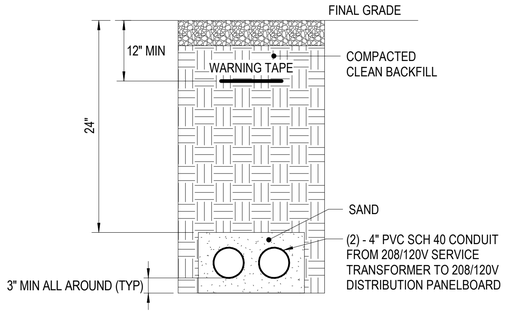

2-WAY DUCTBANK (A) — C1
SCALE:NTS — ES101

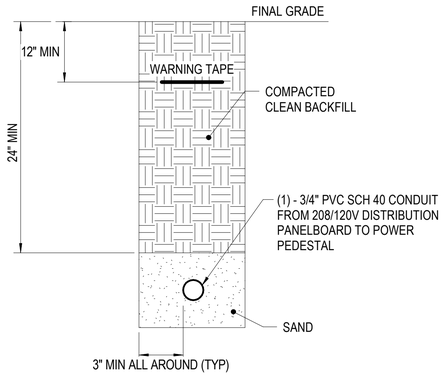

1-WAY DUCTBANK — C2
SCALE:NTS — ES101

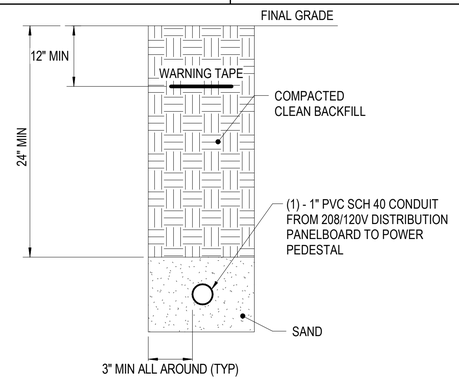

1-WAY DUCTBANK(A) — C3
SCALE:NTS — ES101

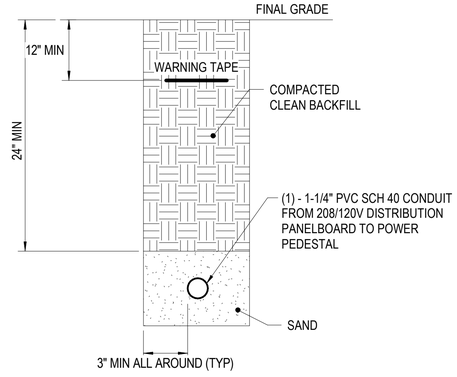

1-WAY DUCTBANK(B) — C4
SCALE:NTS — ES101

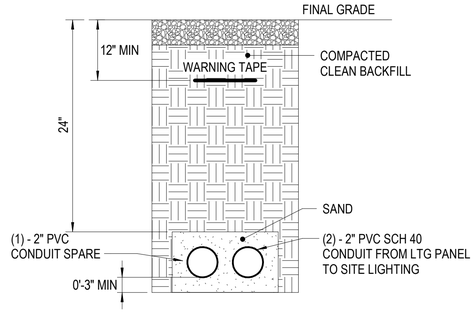

2-WAY DUCTBANK - SITE LIGHTING — B1
SCALE:NTS — ES102

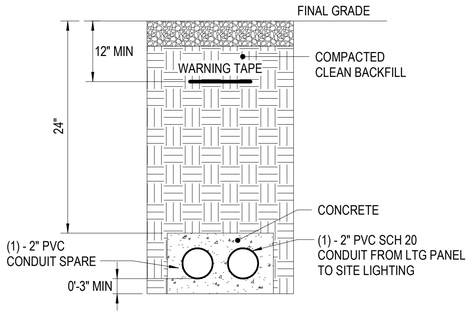

2-WAY CONCRETE ENCASED DUCTBANK - SITE LIGHTING — B2
SCALE:NTS — ES102

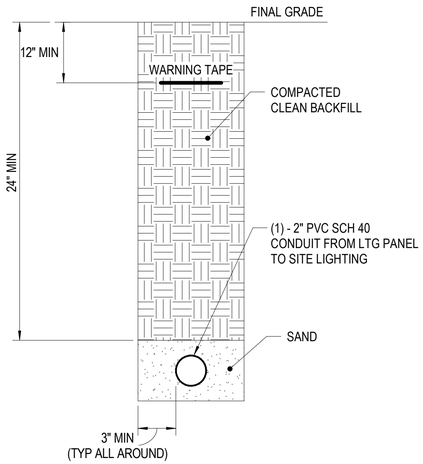

1-WAY DUCTBANK - SITE LIGHTING — B3
SCALE:NTS — ES102

SYM	DESCRIPTION	DATE	APPR

NAVFAC

SEAL

RQ W.M. Jordan COMPANY – A JOINT VENTURE –

Michael Baker INTERNATIONAL
100 AIRSIDE DRIVE
MOON TOWNSHIP, PA 15108
A/E INFO

APPROVED

FOR COMMANDER NAVFAC

ACTIVITY
MARINE CORPS BASE CAMP LEJEUNE

SATISFACTORY TO DATE

DES SD | DRW LAK | CHK YPS

PM

BRANCH MANAGER

CHIEF ENG/ARCH

FIRE PROTECTION

DEPARTMENT OF THE NAVY
NAVAL FACILITIES ENGINEERING COMMAND
NAVAL FACILITIES ENGINEERING COMMAND ~ MID-ATLANTIC
ROICC FLORENCE CAMP LEJEUNE
JACKSONVILLE, NC
MCB CAMP LEJEUNE
JACKSONVILLE, NC

P1338 II MEF SIMULATION/TRAINING CENTER
REPLACEMENT
ELECTRICAL - SITE DETAILS

SCALE: AS NOTED
EPROJECT NO.: 1590892
CONSTR. CONTR. NO.
N40085-20-C-0059
NAVFAC DRAWING NO.
SHEET OF

ES503

DP2 SUBMISSION – P1338 BUILDING - PRE-FINAL SUBMISSION

PLOTTED: 6/10/2021 5:44:43 PM

FILE NAME: BIM 360://HF PACKAGE 3/P1338 MEF SIM CTR-1590892-E.rvt

POLE LINE MATERIAL LIST

1. FLAT STEEL BRACE (TWO PIECES)
2. MACHINE BOLT, 3/8" X LENGTH NEEDED WITH WASHER, NUT AND LOCKWASHER
3. 8' WOOD CROSSARM WITH CROSS SECTION DIMENSIONS OF 3 1/2" X 4 1/2"
4. MACHINE BOLT, 5/8" X LENGTH NEEDED WITH WASHER, NUT AND LOCKWASHER
5. TIMBER CONNECTOR
6. LAGSCREW, 1/2" X 4"
7. ANGLE STEEL BRACE (TWO PIECES)
8. MACHINE BOLT, 1/2" X LENGTH NEEDED, WITH WASHER, NUT & LOCKWASHER
9. DEADEND BOX
10. STEEL PIN
11. PIN INSULATOR
12. GRID GAIN, USED ONLY WHEN THERE IS NO POLE GAIN
13. ANGLE STEEL BRACE (ONE PIECE)
14. 10' WOOD CROSSARM WITH CROSS SECTION DIMENSIONS OF 3 1/2" X 4 1/2"
15. 5/8" EYE NUT
16. 5/8" EYE BOLT, LENGTH AS NEEDED, WITH WASHER, NUT & LOCKWASHER
17. EXTENSION LINK
18. BELL TYPE SUSPENSION INSULATOR WITH CONNECTING HARDWARE
19. STRAIN CLAMP
20. STEEL ANGLE PIN
21. CLUSTER MOUNTING BRACKET, STEEL
22. TRANSFORMER GROUNDING CONNECTION
23. STIRRUP
24. SECONDARY LEAD SUPPORT BRACKET
25. ADAPTER PLATE FOR CLUSTER MOUNTING
26. CLEVIS BRACKET FOR SPOOL INSULATOR
27. SPOOL INSULATOR
28. U BOLT CLAMP
29. PREFORMED GUY GRIP
30. GUY HOOK
31. GUY STRAIN INSULATOR
32. GUY WIRE, SIZE AS SPECIFIED
33. #4 WP CU. SOFT DRAWN GROUND WIRE
34. GROUND CLAMP
35. CONDUIT COUPLING
36. CONDUIT BEND
37. INSULATED BUSHING
38. PERFORATED STRAPPING, 1-1/2" WIDE
39. HOT LINE CLAMP
40. GANG OPERATED ISOLATION SWITCH, AS SPECIFIED
41. SURGE ARRESTER, AS SPECIFIED
42. POLE TOP PIN (RIDGE PIN) - 24 INCHES LONG
43. CROSSARM ANGLE PIN
44. ANGLE POLE TOP PIN
45. WEATHERPROOF SOFT DRAWN WIRE-SIZE
    (a) T0 MATCH OR EXCEED AMPACITY OF CONNECTING CABLE, OR
    (b) AT 125% OF TRANSFORMER FULL LOAD CURRENT, BUT NOT LESS THAN NO. 4 AWG

POLE LINE MATERIAL LIST

SKETCH DATE:	JUNE 2002	STYLE:	OH-1.5

POLE LINE MATERIAL LIST

46. TRI-MOUNT BRACKET
47. TERMINATOR
48. MOUNTING BRACKET
49. CABLE GRIP HANGER
50. HOSE CLAMP
51. STUD, 3/4" X 1-3/4"
52. LINE POST INSULATOR
53. TRIPLE INSULATOR BRACKET
54. ANGLE CLAMP
55. INSULATOR, LINE POST CLAMP
56. 4' CROSSARM
57. CROSSARM GAIN BRACKET
58. PULLEY BRACKET
59. WEDGE CLAMP
60. MIDSPAN SERVICE CLAMP
61. STUD, 7"
62. SADDLE, ANGLE
63. SADDLE CROSSARM
64. FITTING, POLE TOP
65. CONNECTOR
66. SUSPENSION CLAMP
67. TIE, SERVICE CABLE
68. 54" FIBERGLASS STRAIN INSULATOR
69. PVC RISER SHIELD
70. PVC EXTENSION SHIELD
71. PVC BACK PLATE
72. 8' WOOD CROSSARM WITH CROSS SECTION DIMENSIONS OF 4 3/4" X 5 3/4"
73. 10' WOOD CROSSARM WITH CROSS SECTION DIMENSIONS OF 4 3/4" X 5 3/4"
74. BACK-UP CURRENT LIMITING FUSE

SKETCH DATE:	JUNE 2002	STYLE:	OH1.5A

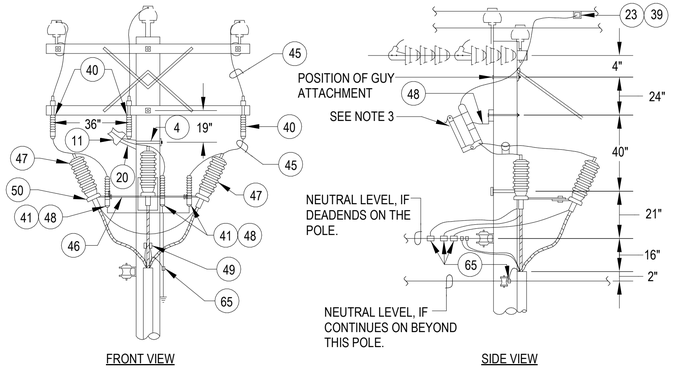

NOTES
1. MODIFY POSITION OF TERMINAL ON DEADENDS TO BE UNDER THE CONDUCTORS AND THE CUTOUTS ON THE BACKSIDE OF CROSSARM. POLE RISER MUST BE OFFSET TO CLEAR NEUTRAL CLEVIS BRACKET.
2. CONNECT BOTTOM LEAD OF ARRESTER DIRECTLY TO POLE GROUND. INTERCONNECT CABLE INSULATION SHIELD DRAIN WIRES AND CONDUIT RISER GROUND TO MULTI-GROUNDED NEUTRAL (IF EXISTING) AND POLE GROUND.
3. PROVIDE GANG OPERATED ISOLATION SWITCH. COORDINATE WITH SPECIFIC DESIGN REQUIREMENTS PROVIDED.

U.G. TERMINAL (0-25kV)

SKETCH DATE:	JUNE 2002	STYLE:	OH-31

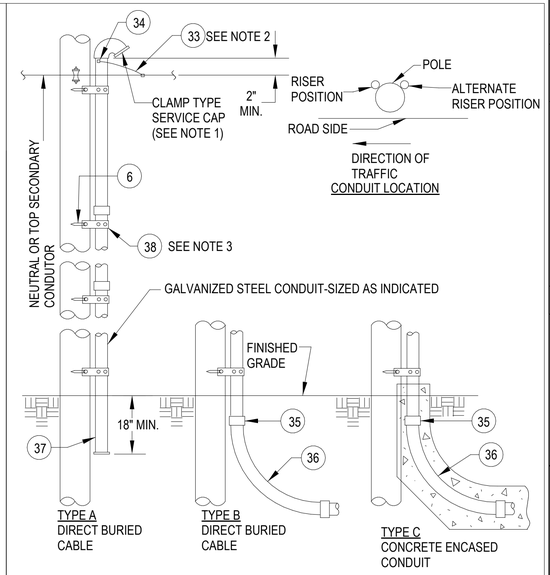

NOTES
1. ON CONDUIT RISER FOR PRIMARY CIRCUITS, ELIMINATE SERVICE CAP AND PROVIDE GROUNDING TYPE INSULATON BUSHING.
2. BOND CONDUIT TO POLE GROUND AND SYSTEM NEUTRAL (IF EXISTING). SEE GROUNDING NOTES ON SKETCH OH-41.
3. SPACE STRAPS AT MAXIMUM OF 4' INTERVALS.

CONDUIT RISER (SIZE & TYPE AS INDICATED)

SKETCH DATE:	JUNE 2002	STYLE:	OH-35

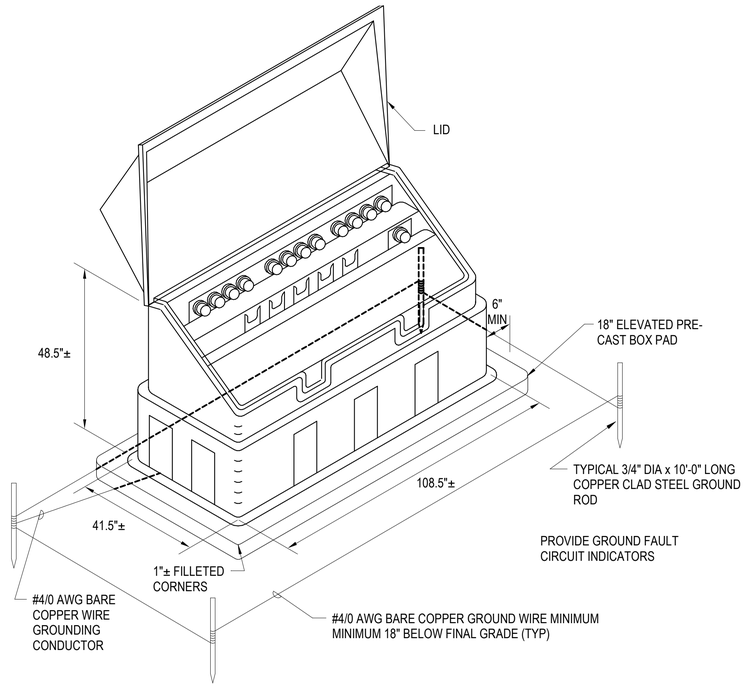

TYPICAL SECTIONALIZING CABINET

SCALE:NTS

A2

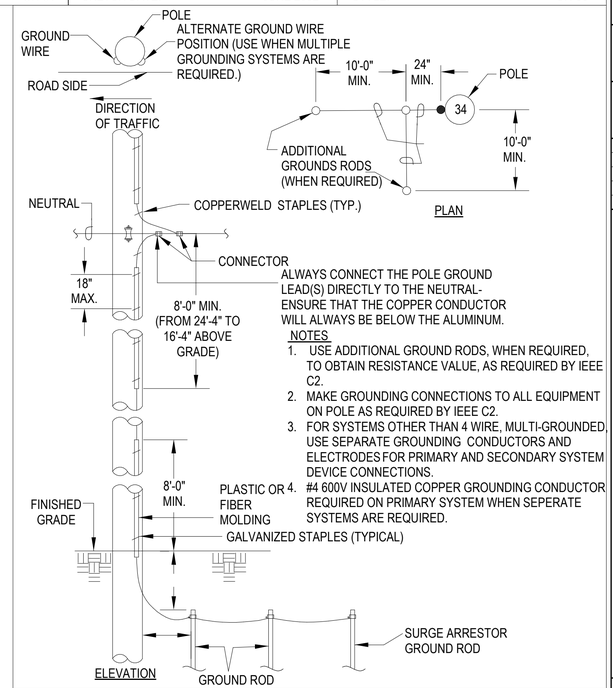

GROUND

SKETCH DATE:	JUNE 2002	STYLE:	OH-41

NAVFAC

RQ W.M. Jordan COMPANY – A JOINT VENTURE –

Michael Baker INTERNATIONAL
100 AIRSIDE DRIVE
MOON TOWNSHIP, PA 15108
A/E INFO

APPROVED
FOR COMMANDER NAVFAC
ACTIVITY
MARINE CORPS BASE CAMP LEJEUNE
SATISFACTORY TO DATE
DES SD | DRW LAK | CHK YPS
PM
BRANCH MANAGER
CHIEF ENG/ARCH
FIRE PROTECTION

NAVAL FACILITIES ENGINEERING COMMAND ~ MID-ATLANTIC
JACKSONVILLE, NC
DEPARTMENT OF THE NAVY
NAVAL FACILITIES ENGINEERING COMMAND
ROICC FLORENCE CAMP LEJEUNE
MCB CAMP LEJEUNE
JACKSONVILLE, NC
P1338 II MEF SIMULATION/TRAINING CENTER
REPLACEMENT
ELECTRICAL - SITE DETAILS

SCALE: AS NOTED
EPROJECT NO.: 1590892
CONSTR. CONTR. NO.
N40085-20-C-0059
NAVFAC DRAWING NO.
SHEET OF
ES504

APPR | DATE | DESCRIPTION | SYM

SEAL

DP2 SUBMISSION – P1338 BUILDING -,PRE-FINAL SUBMISSION

PLOTTED: 6/10/2021 5:44:45 PM

FILE NAME: BIM 360://HF PACKAGE 3/P1338 MEF SIM CTR-1590892-E.rvt

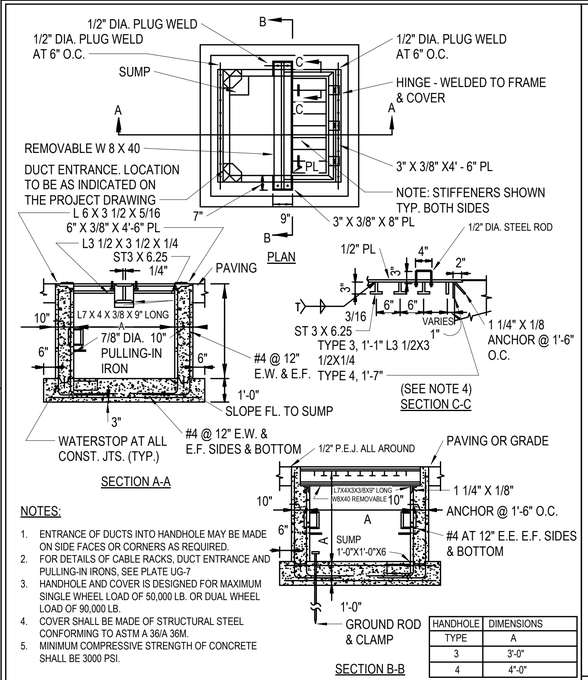

NOTES:

1. ENTRANCE OF DUCTS INTO HANDHOLE MAY BE MADE ON SIDE FACES OR CORNERS AS REQUIRED.
2. FOR DETAILS OF CABLE RACKS, DUCT ENTRANCE AND PULLING-IN IRONS, SEE PLATE UG-7
3. HANDHOLE AND COVER IS DESIGNED FOR MAXIMUM SINGLE WHEEL LOAD OF 50,000 LB. OR DUAL WHEEL LOAD OF 90,000 LB.
4. COVER SHALL BE MADE OF STRUCTURAL STEEL CONFORMING TO ASTM A 36/A 36M.
5. MINIMUM COMPRESSIVE STRENGTH OF CONCRETE SHALL BE 3000 PSI.

HANDHOLE TYPE	DIMENSIONS A
3	3'-0"
4	4'-0"

STANDARD ELECTRICAL HANDHOLE (TRAFFIC/AIRFIELD) TYPES 3 & 4

SKETCH DATE:	JUNE 2002	STYLE:	UG - 5

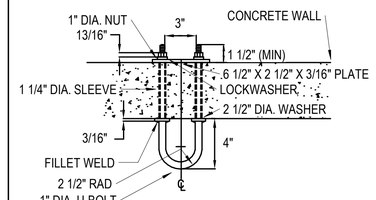

ALTERNATE METHOD

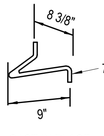

CAST IN PLACE

NOTE:
ALL METAL PARTS SHALL BE HOT DIP GALVANIZED

DETAIL OF PULLING-IN IRON

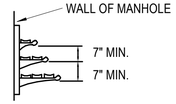

TYPICAL CABLE RACK

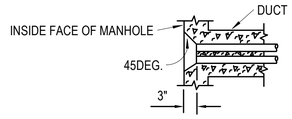

TYPICAL DUCT ENTRANCE

DETAILS (PULLING-IN IRONS, CABLE RACK AND DUCT ENTRANCE)

SKETCH DATE:	JUNE 2002	STYLE:	UG - 7

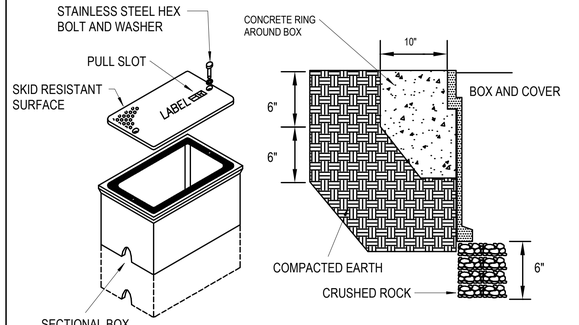

TYPE	HANDHOLE SIZING
5	12" X 12" X 24" DEEP
6	12" X 18" X 24" DEEP
7	12" X 24" X 24" DEEP
8	24" X 36" X 24" DEEP
9	30" X 48" X 24" DEEP

HANDHOLE REQUIREMENTS

1. HOUSING SHALL BE A POLYMER CONCRETE REINFORCED WITH A HEAVY WEAVE FIBERGLASS REINFORCING WITH COMPRESSIVE STRENGTH OF NO LESS THAN 10,000 PSI.
2. COVER AND BOX SHALL WITHSTAND A SERVICE LOAD OF NO LESS THAN 15,000 LBS OVER A 10" X 10" AREA.
3. PROVIDE STAINLESS STEEL BOLTS AND INSERTS.
4. PROVIDE WITH (2) 2 1/2" MOUSEHOLES.
5. PROVIDE LABEL "ELECTRICAL" FOR POWER HANDHOLES OR "TELEPHONE" FOR TELEPHONE HEANDHOLES, OR AS INDICATED

STANDARD ELECTRICAL HANDHOLE (NONTRAFFIC)(COMPOSITE/FIBERGLASS) TYPES 5, 6, 7, 8, & 9

SKETCH DATE:	JUNE 2002	STYLE:	UG - 6

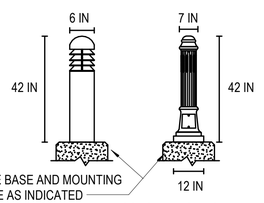

LUMINAIRE REQUIREMENTS: CONCRETE BASE AND MOUNTING HARDWARE AS INDICATED

1. HOUSING - EXTRUDED OR HEAVY- DUTY DIE-CAST ALUMINUM; CONCRETE OPTIONAL. ALL EXPOSED HARDWARE SHALL BE STAINLESS STEEL.
2. FINISH - MULTI-STAGE PRE-TREATMENT, FINISHED WITH BAKED-ON POLYESTER POWDER COAT. FINISH SHALL PASS 2500 HOUR SALT SPRAY TEST PER ASTM B117. CONCRETE MODEL SHALL HAVE OPTIONAL IMPREGNATED COLOR AND SMOOTH OR AGGREGATE FINSIH AS INDICATED.
3. BALLAST/DRIVER - TYPE A - CLASS P, HIGH POWER FACTOR, PROGRAMMED START, ELECTRONIC TYPE FOR COMPACT FLUORESCENT LIGHT SOURCE.
   TYPE B - ENCAPSULATED, CWA, HIGH POWER FACTOR, COIL AND CORE OR ELECTRONIC FOR METAL HALIDE LIGHT SOURCE (PROVIDE PULSE START WHEN AVAILABLE)
   TYPE C - CLASS 1, CONSTANT CURRENT, ELECTRONIC DRIVER FOR LED LIGHT SOURCE
4. OPTICAL ASSEMBLY - TYPES A AND B - ANODIZED, SPECULAR ALUMINUM WIH ACRYLIC OR TEMPERED GLASS LENS FOR METAL HALIDE AND CFL.
   TYPE C - DIRECTIONAL LED ASSEMBLIES FOR MAXIMUM BEAM ANGLE PROJECTION THROUGH LOUVERS OR OPENINGS IN LUMINAIRE BODY. PROVIDE NEMA TYPE I, III, OR V DISTRIBUTION AS INDICATED.
5. LIGHT SOURCE - COMPACT FLUORESCENT, METAL HALIDE OR LED.
6. CERTIFICATION - UL AND/OR ETL LISTED FOR WET LOCATION AND RoHS COMPLIANT.
7. OPTIONS - CLEAR OR FROSTED LENS, HOUSE SIDE SHIELD FOR 90 OR 180 DEGREE COVERAGE.
8. OTHER - THE ABOVE SKETCH IS A NON-PROPRIETARY GRAPHIC REPRESENTATION OF A LUMINAIRE THAT MAY MEET THE SPECIFICATION REQUIREMENTS AND IS NOT INTENDED TO INDICATE A CERYAIN MANUFACTURER'S PREFERENCE. ALL DIMENSIONS ARE NOMINAL AND VARY PER MANUFACTURER.

DECORATIVE BOLLARD

REVISED:	MARCH 2013	LUMINAIRE PLATE:	XL-12

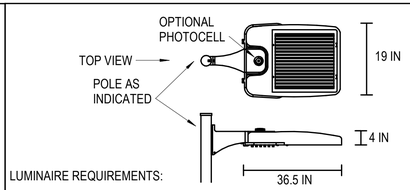

LUMINAIRE REQUIREMENTS:

1. HOUSING - DIE-CAST ALUMINUM OR DIE-CAST AND EXTRUDED ALUMINUM WITH INTEGRAL, SELF CLEANING HEAT SINK FINS, RIBS, OR EQUIVALENT PASSIVE COOLING MECHANISM. HEAT SINK SHALL BE INCORPORATED DIRECTLY INTO HOUSING TO ENSURE MAXIMUM HEAT TRANSFER AND DISSIPATION.
2. FINISH - MULTI-STAGE PRE-TREATMENT, FINISHED WITH BAKED-ON POLYESTER POWDER COAT. FINISH SHALL PASS 2500 HOUR SALT SPRAY TEST PER ASTM B117 FINISH COLORS INCLUDE DARK BRONZE, SILVER, OR BLACK WITH CUSTOM COLORS AVAILABLE.
3. POWER SUPPLY/LED DRIVER - PROVIDE IN SEPERATE COMPARTMENT ACCESSIBLE WITHOUT THE USE OF HAND TOOLS. CLASS 1 DRIVER SHALL OPERATE AT 120/277V, 50/60HZ; OTHER VOLTAGES OPTIONAL. POWER FACTOR GREATER THAN 0.9 AND THD LESS THAN 20% AT FULL LOAD. MINIMUM EFFICACY SHALL BE 60 LM/W AT MAXIMUM 60mA OPERATING CURRENT.
4. LED OPTICAL ASSEMBLY - NUMBER OF LED ARRAYS SHALL VARY TO ACCOMODATE DESIRED LUMINAIRE OUTPUT. PROVIDE WITH EQUIVALENT NEMA TYPE III, IV OR V DISTRIBUTION AS INDICATED. BUG UPLIGHT RATING OF UO, WITH BACKLIGHT AND GLARE RATINGS AS DETERMINED BY LIGTING ZONE INSTALLED. MINIMUM COLOR RENDERING INDEX (CRI) SHALL BE 70 FOR CORRELATED COLOR TEMPERATURE (CCT) OF 4000 K TO 4500 DEGREES K.
5. SURGE PROTECTION - 6 kV MINIMUM, COMPLAINT WITH ANSI C62.41.2.
6. CERTIFICATION - UL AND/OR ETL LISTED, MINIMUM IP65 RATED PER ANSI/IEC 60529, AND RoHS COMPLIANT.
7. OPTIONS - PHOTOCELL AND RECEPTACLE, SHORTING CAP, BIRD SPIKES, AND 0-10 VOLT DIMMING
8. OTHER - THE ABOVE SKETCH IS A NON-PROPRIETARY GRAPHIC REPRESENTATION OF A LUMINAIRE THAT MAY MEET THE SPECIFICATION REQUIREMENTS AND IS NOT INTENDED TO INDICATE A CERTAIN MANUFACTURER'S PREFERENCE. ALL DIMENSIONS ARE NOMINAL AND VARY PER MANUFACTURER.

LED AREA LUMINAIRE

REVISED:	MARCH 2013	LUMINAIRE PLATE:	XL-03

APPR | DATE | DESCRIPTION | SYM

NAVFAC

SEAL

IRQ Jordan COMPANY – A JOINT VENTURE –

Michael Baker INTERNATIONAL
100 AIRSIDE DRIVE
MOON TOWNSHIP, PA 15108 A/E INFO

APPROVED

FOR COMMANDER NAVFAC

ACTIVITY
MARINE CORPS BASE CAMP LEJEUNE

SATISFACTORY TO DATE

DES SD | DRW LAK | CHK YPS

PM

BRANCH MANAGER

CHIEF ENG/ARCH

FIRE PROTECTION

DEPARTMENT OF THE NAVY
NAVAL FACILITIES ENGINEERING COMMAND ~ MID-ATLANTIC
ROICC FLORENCE CAMP LEJEUNE
MCB CAMP LEJEUNE
JACKSONVILLE, NC

NAVAL FACILITIES ENGINEERING COMMAND ~ MID-ATLANTIC
JACKSONVILLE, NC

P1338 II MEF SIMULATION/TRAINING CENTER
REPLACEMENT

ELECTRICAL - SITE DETAILS

SCALE: AS NOTED

EPROJECT NO.: 1590892

CONSTR. CONTR. NO.
N40085-20-C-0059

NAVFAC DRAWING NO.

SHEET OF

ES505

DP2 SUBMISSION – P1338 BUILDING - PRE-FINAL SUBMISSION

PLOTTED: 6/10/2021 5:44:48 PM

FILE NAME: BIM 360://HF PACKAGE 3/P1338 MEF SIM CTR-1590892-E.rvt

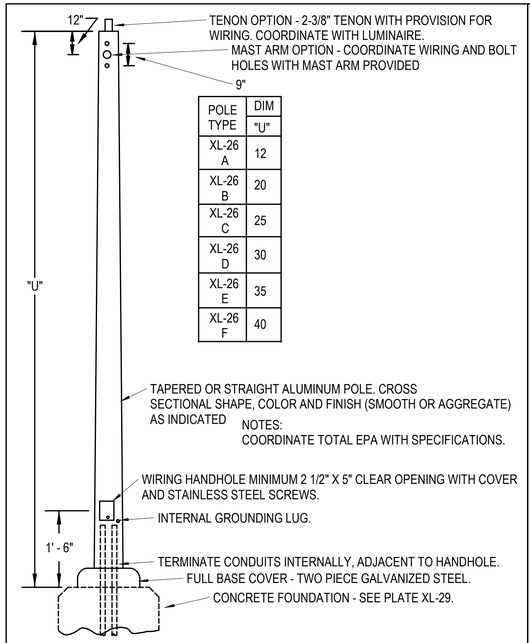

POLE TYPE	DIM "U"
XL-26 A	12
XL-26 B	20
XL-26 C	25
XL-26 D	30
XL-26 E	35
XL-26 F	40

ANCHOR BASE ALUMINUM POLE

REVISED: MARCH 2013 | LUMINAIRE PLATE: XL - 28

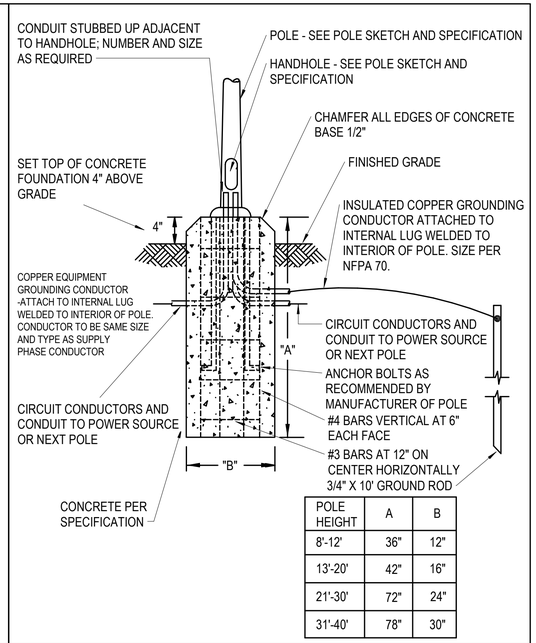

POLE HEIGHT	A	B
8'-12'	36"	12"
13'-20'	42"	16"
21'-30'	72"	24"
31'-40'	78"	30"

ANCHOR BASE POLE FOUNDATION

REVISED: MARCH 2013 | LUMINAIRE PLATE: XL - 29

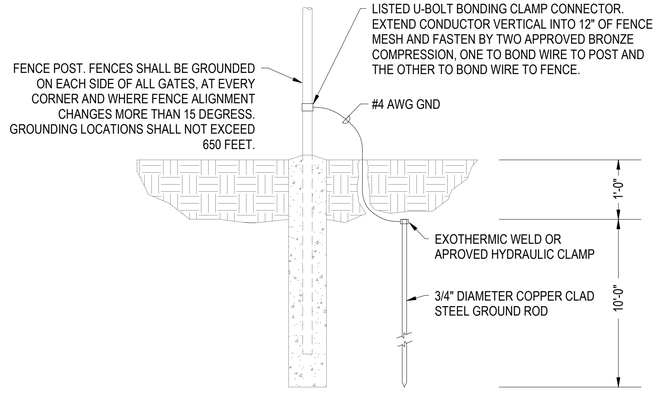

NOTES:
1. PLACE GROUND ROD NOT CLOSER THAN 2 FEET FROM FENCE POST AND NOT MORE THAN 8 FEET FROM FENCE POST.
2. EACH GATE SECTION SHALL BE BONDED TO ITS GATEPOST BY 1 1/8" X 1" FLEXIBLE BRAIDED COPPER STRAP AND GROUND POST CLAMPS.

FENCE GROUNDING DETAIL

SCALE:NTS

C4

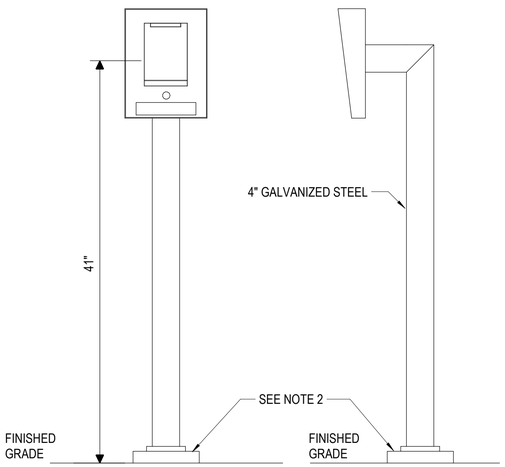

NOTES:
1. CONTRACTROR SHALL PLACE CARD READER SUCH THAT THE FACE OF THE READERS ARE NO LESS THAN 6" FROM THE FACE OF CURB, OR IF GIVEN, AT A DISTANCE SPECIFIED BY THE MANUFACTURER.
2. PROVIDE CONCRETE PAD OR SET IN CONCRETE FOR PEDESTAL INSTALLATION.

ACS PEDESTAL SECURITY DETAIL

SCALE:NTS

A1

APPR	DATE	DESCRIPTION	SYM

SEAL

W.M. Jordan COMPANY – A JOINT VENTURE –

Michael Baker INTERNATIONAL

100 AIRSIDE DRIVE
MOON TOWNSHIP, PA 15108 A/E INFO

APPROVED

FOR COMMANDER NAVFAC

ACTIVITY
MARINE CORPS BASE CAMP LEJEUNE

SATISFACTORY TO DATE

DES SD | DRW LAK | CHK YPS

PM

BRANCH MANAGER

CHIEF ENG/ARCH

FIRE PROTECTION

DEPARTMENT OF THE NAVY
NAVAL FACILITIES ENGINEERING COMMAND
ROICC FLORENCE CAMP LEJEUNE
MCB CAMP LEJEUNE

NAVAL FACILITIES ENGINEERING COMMAND ~ MID-ATLANTIC
JACKSONVILLE, NC

JACKSONVILLE, NC
P1338 II MEF SIMULATION/TRAINING CENTER
REPLACEMENT

ELECTRICAL - SITE DETAILS

SCALE: AS NOTED

EPROJECT NO.: 1590892

CONSTR. CONTR. NO.
N40085-20-C-0059

NAVFAC DRAWING NO.

SHEET OF

ES506

DP2 SUBMISSION – P1338 BUILDING - PRE-FINAL SUBMISSION

PLOTTED: 6/10/2021 5:44:49 PM

FILE NAME: BIM 360://HF PACKAGE 3/P1338 MEF SIM CTR-1590892-E.rvt

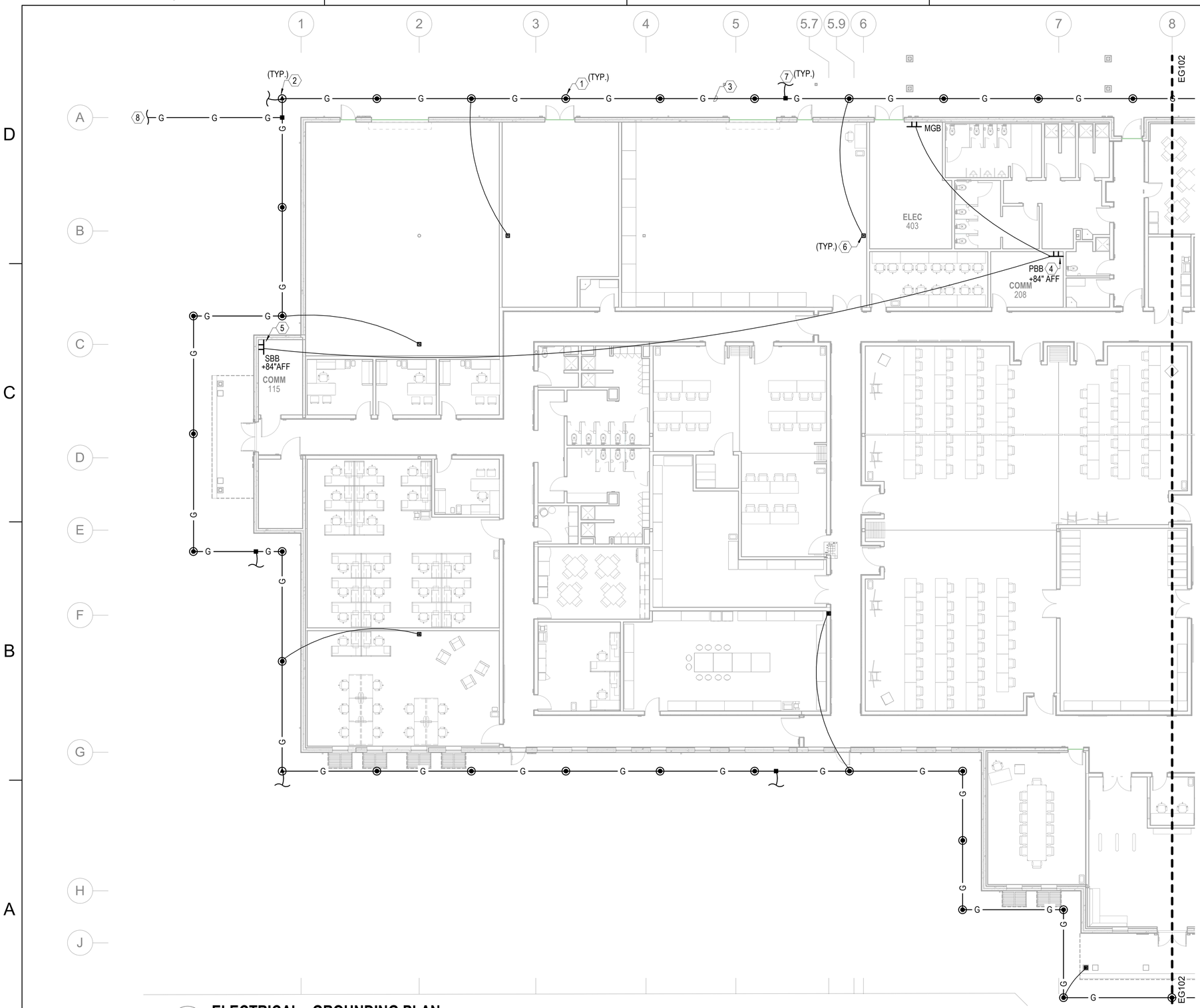

GENERAL NOTES

1. SEE SHEET E-001 FOR ELECTRICAL NOTES, SYMBOLS, AND ABBREVIATIONS.
2. SEE SHEET EG501 FOR GROUNDING DETAILS
3. SEE SHEETS EG103 AND EG104 FOR LIGHTNING PROTECTION PLAN

KEYNOTES

1. 3/4" DIAMETER BY 10' LONG COPPER CLAD GROUND ROD.
2. GROUND TEST WELL STATION. SEE DETAIL C4 ON SHEET EG501.
3. #4/0 AWG BARE COPPER GROUND LOOP INSTALLED 3' MINIMUM TO 10' MAXIMUM FROM BUILDING FOUNDATION AND BEYOND THE BUILDING PERIMETER.
4. PROVIDE CONNECTION TO MAIN GROUNDING BUS (MGB) IN ELECTRICAL ROOM 403 WITH #4/0 AWG BARE COPPER GEC. SEE DETAIL 1 ON SHEET EG501.
5. TELECOMMUNICATION SECONDARY GROUNDING BUSBAR (SBB) TO BE CONNECTED TO TELECOMMUNICATION PRIMARY GROUNDING BUSBAR (PBB) IN ROOM 208. #4/0 AWG BARE COPPER GROUNDING WIRE TO BE USED FOR CONNECTION.
6. EXOTHERMIC WELD CONNECTION TO BUILDING STEEL.
7. DOWN CONDUCTOR CONNECTION FROM ROOF LIGHTNING PROTECTION SYSTEM. DOWN CONDUCTORS SHALL RUN DOWN THE EXTERIOR OF THE BUILDING WALLS, PROTECTED BY SCH. 40 PVC CONDUIT. COORDINATE WITH LIGHTNING PROTECTION PLANS ON SHEETS EG103 AND EG104.
8. #4/0 AWG BARE COPPER GROUND CABLE RUN LENGTH OF NEW FENCE. TIE FENCE POST TO GROUND WIRE VIA GROUND ROD. SEE DETAIL A2 ON SHEET ES506.

A1 ELECTRICAL - GROUNDING PLAN

SCALE: 3/32" = 1'-0"

0 8'-0" 16'-0" 32'-0"

SCALE: 0'-0 3/32" = 1'-0"

N

APPR | DATE | SYM | DESCRIPTION

NAVFAC

SEAL

W.M. Jordan COMPANY – A JOINT VENTURE –

Michael Baker INTERNATIONAL

100 AIRSIDE DRIVE
MOON TOWNSHIP, PA 15108 A/E INFO

APPROVED

FOR COMMANDER NAVFAC

ACTIVITY
MARINE CORPS BASE
CAMP LEJEUNE

SATISFACTORY TO DATE

DES SD | DRW LAK | CHK YPS

PM

BRANCH MANAGER

CHIEF ENG/ARCH

FIRE PROTECTION

DEPARTMENT OF THE NAVY
NAVAL FACILITIES ENGINEERING COMMAND
ROICC FLORENCE CAMP LEJEUNE
MCB CAMP LEJEUNE

NAVAL FACILITIES ENGINEERING COMMAND – MID-ATLANTIC
JACKSONVILLE, NC

JACKSONVILLE, NC
P1338 II MEF SIMULATION/TRAINING CENTER
REPLACEMENT

ELECTRICAL - GROUNDING PLAN

SCALE: AS NOTED

EPROJECT NO.: 1590892

CONSTR. CONTR. NO.
N40085-20-C-0059

NAVFAC DRAWING NO.

SHEET OF

EG101

DP2 SUBMISSION – P1338 BUILDING - PRE-FINAL SUBMISSION

PLOTTED: 6/10/2021 5:42:45 PM

FILE NAME: BIM 360://HF PACKAGE 3/P1338 MEF SIM CTR-1590892-E.rvt

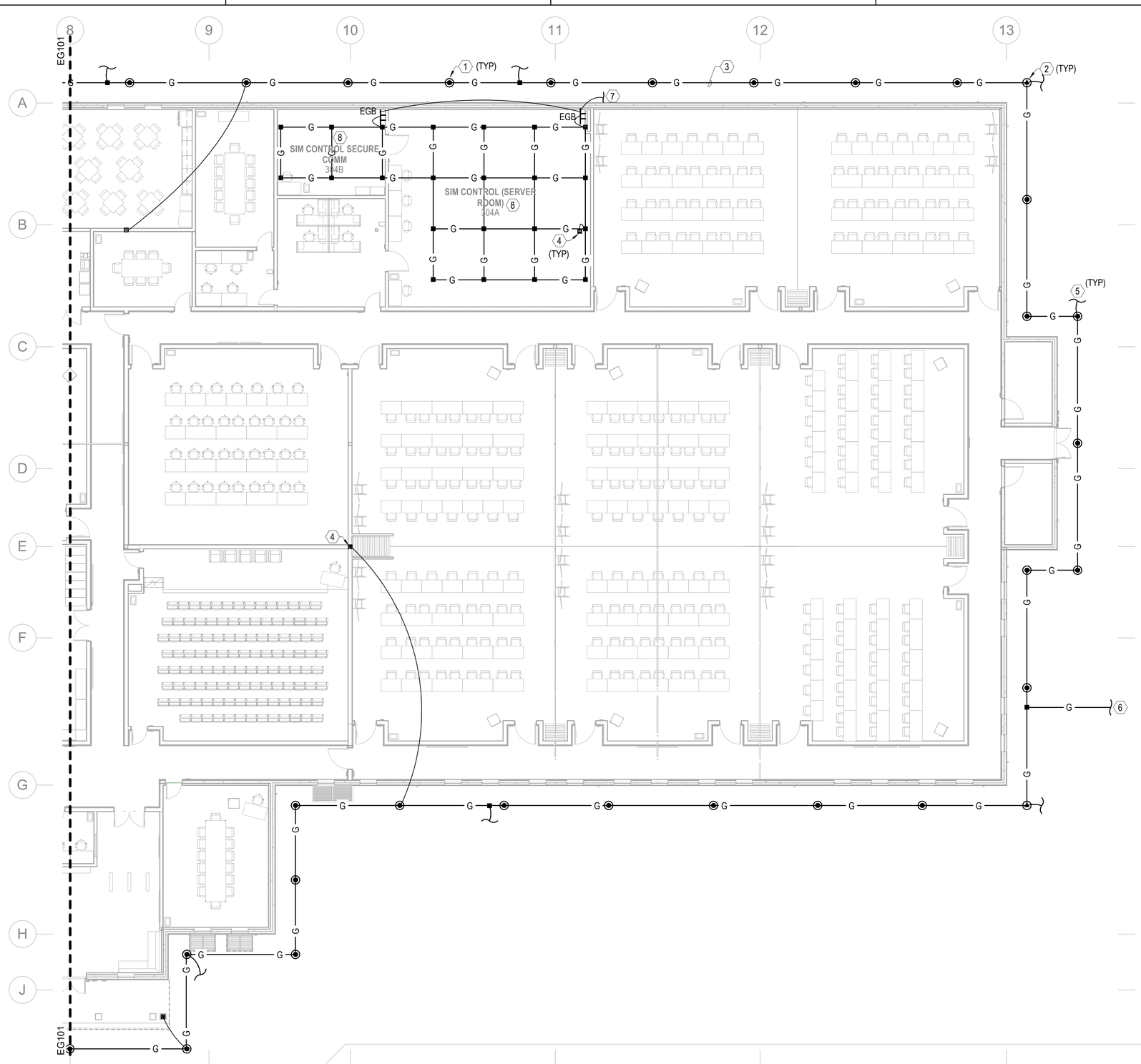

A1 ELECTRICAL - GROUNDING PLAN

SCALE: 3/32" = 1'-0"

SCALE: 0'-0 3/32" = 1'-0"

0 8'-0" 16'-0" 32'-0"

N

GENERAL NOTES

1 SEE SHEET E-001 FOR ELECTRICAL NOTES, SYMBOLS, AND ABBREVIATIONS.
2 SEE SHEET EG501 FOR GROUNDING DETAILS
3 SEE SHEETS EG103 AND EG104 FOR LIGHTNING PROTECTION PLAN

KEYNOTES

1 3/4" DIAMETER BY 10' LONG COPPER CLAD GROUND ROD.
2 GROUND TEST WELL STATION. SEE DETAIL C4 ON SHEET EG501.
3 #4/0 AWG BARE COPPER GROUND LOOP INSTALLED 3' MINIMUM TO 10' MAXIMUM FROM BUILDING FOUNDATION AND BEYOND THE BUILDING PERIMETER.
4 EXOTHERMIC WELD CONNECTION TO BUILDING STEEL.
5 DOWN CONDUCTOR CONNECTION FROM ROOF LIGHTNING PROTECTION SYSTEM. DOWN CONDUCTORS SHALL RUN DOWN THE EXTERIOR OF THE BUILDING WALLS, PROTECTED BY SCH. 40 PVC CONDUIT. COORDINATE WITH LIGHTNING PROTECTION PLANS ON SHEETS EG103 AND EG104.
6 #4/0 AWG BARE COPPER GROUND CABLE RUN LENGTH OF NEW FENCE. TIE FENCE POST TO GROUND WIRE VIA GROUND ROD. SEE DETAIL A2 ON SHEET ES506.
7 PROVIDE CONNECTION TO MAIN GROUNDING BUS (MGB) IN ELECTRICAL ROOM 403 WITH #4/0 AWG BARE COPPER GEC. SEE DETAIL 1 ON SHEET EG501.
8 #4/0 AWG BARE COPPER GROUND BONDING CONNECTION TO TELECOMMUNICATION RACKS IN RM 304A AND 304B. COORDINATE FINAL LOCATION OF TELECOMMUNICATION RACKS.

APPR	DATE	DESCRIPTION	SYM

SEAL

RQ W.M. Jordan COMPANY – A JOINT VENTURE –

Michael Baker INTERNATIONAL
100 AIRSIDE DRIVE
MOON TOWNSHIP, PA 15108
A/E INFO

APPROVED

FOR COMMANDER NAVFAC

ACTIVITY
MARINE CORPS BASE CAMP LEJEUNE

SATISFACTORY TO DATE

DES	DRW	CHK
SD	LAK	YPS

PM
BRANCH MANAGER
CHIEF ENG/ARCH
FIRE PROTECTION

DEPARTMENT OF THE NAVY
NAVAL FACILITIES ENGINEERING COMMAND
ROICC FLORENCE CAMP LEJEUNE
MCB CAMP LEJEUNE

NAVAL FACILITIES ENGINEERING COMMAND ~ MID-ATLANTIC
JACKSONVILLE, NC

JACKSONVILLE, NC
P1338 II MEF SIMULATION/TRAINING CENTER
REPLACEMENT

ELECTRICAL - GROUNDING PLAN

SCALE: AS NOTED
EPROJECT NO.: 1590892
CONSTR. CONTR. NO.
N40085-20-C-0059
NAVFAC DRAWING NO.
SHEET OF

EG102

DP2 SUBMISSION – P1338 BUILDING - PRE-FINAL SUBMISSION

PLOTTED: 6/10/2021 5:42:48 PM

FILE NAME: BIM 360://HF PACKAGE 3/P1338 MEF SIM CTR-1590892-E.rvt

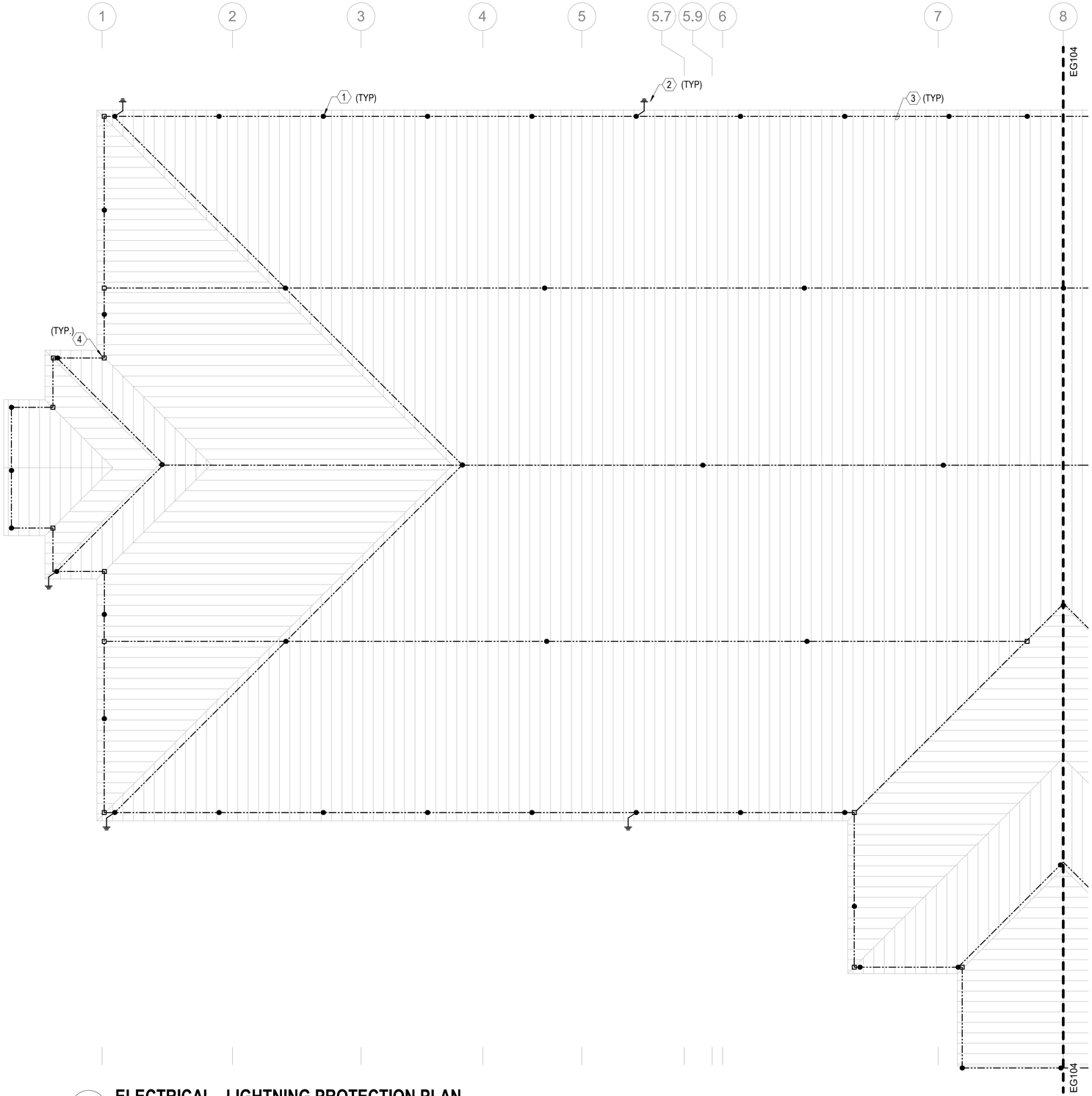

GENERAL NOTES

1. SEE SHEET E-001 FOR ELECTRICAL NOTES, SYMBOLS, AND ABBREVIATIONS.
2. SEE SHEETS EG101 AND EG102 FOR GROUNDING PLANS
3. SEE SHEET EG501 FOR LIGHTNING PROTECTION DETAILS
4. LIGHTNING PROTECTION DESIGN AND INSTALLATION SHALL MEET THE REQUIREMENTS OF NFPA 780 AND UL96. DESIGN SHALL BE LPI MASTER LABEL CERTIFIED.

KEYNOTES

1. 5/8" BY 10" SOLID ALUMINUM AIR TERMINAL.
2. #4/0 AWG BARE STRANDED CLASS 1 ALUMINUM DOWN CONDUCTOR CONSISTING OF STRANDS OF #13 AWG ALUMINUM. CONCEAL DOWN CONDUCTORS. PROVIDE APPROPRIATE ALUMINUM TO COPPER BIMETALLIC CONNECTORS AS REQUIRED FOR CONNECTION TO COPPER CLAD GROUND ROD. COORDINATE CONNECTION WITH GROUNDING PLAN ON SHEET EG101 AND EG102.
3. #4/0 AWG BARE STRANDED CLASS 1 ALUMINUM LIGHTNING PROTECTION MAIN CONDUCTOR CONSISTING OF STRANDS OF #13 AWG ALUMINUM.
4. ALUMINUM TO ALUMINUM CLAMP CONNECTOR.

A1 ELECTRICAL - LIGHTNING PROTECTION PLAN

SCALE: 3/32" = 1'-0"

0 8'-0" 16'-0" 32'-0"

SCALE: 0'-0 3/32" = 1'-0"

N

NO.	DESCRIPTION	DATE	APPR

NAVFAC

SEAL

RQ W.M. Jordan COMPANY – A JOINT VENTURE –

Michael Baker INTERNATIONAL

100 AIRSIDE DRIVE
MOON TOWNSHIP, PA 15108 A/E INFO

APPROVED

FOR COMMANDER NAVFAC

ACTIVITY
MARINE CORPS BASE
CAMP LEJEUNE

SATISFACTORY TO DATE

DES SD | DRW LAK | CHK YPS

PM

BRANCH MANAGER

CHIEF ENG/ARCH

FIRE PROTECTION

DEPARTMENT OF THE NAVY
NAVAL FACILITIES ENGINEERING COMMAND
ROICC FLORENCE CAMP LEJEUNE

NAVAL FACILITIES ENGINEERING COMMAND – MID-ATLANTIC
JACKSONVILLE, NC

MCB CAMP LEJEUNE
JACKSONVILLE, NC
P1338 II MEF SIMULATION/TRAINING CENTER
REPLACEMENT

ELECTRICAL - LIGHTNING PROTECTION PLAN

SCALE: AS NOTED

EPROJECT NO.: 1590892

CONSTR. CONTR. NO.
N40085-20-C-0059

NAVFAC DRAWING NO.

SHEET OF

EG103

DP2 SUBMISSION – P1338 BUILDING -_PRE-FINAL SUBMISSION

PLOTTED: 6/10/2021 5:42:51 PM

FILE NAME: BIM 360://HF PACKAGE 3/P1338 MEF SIM CTR-1590892-E.rvt

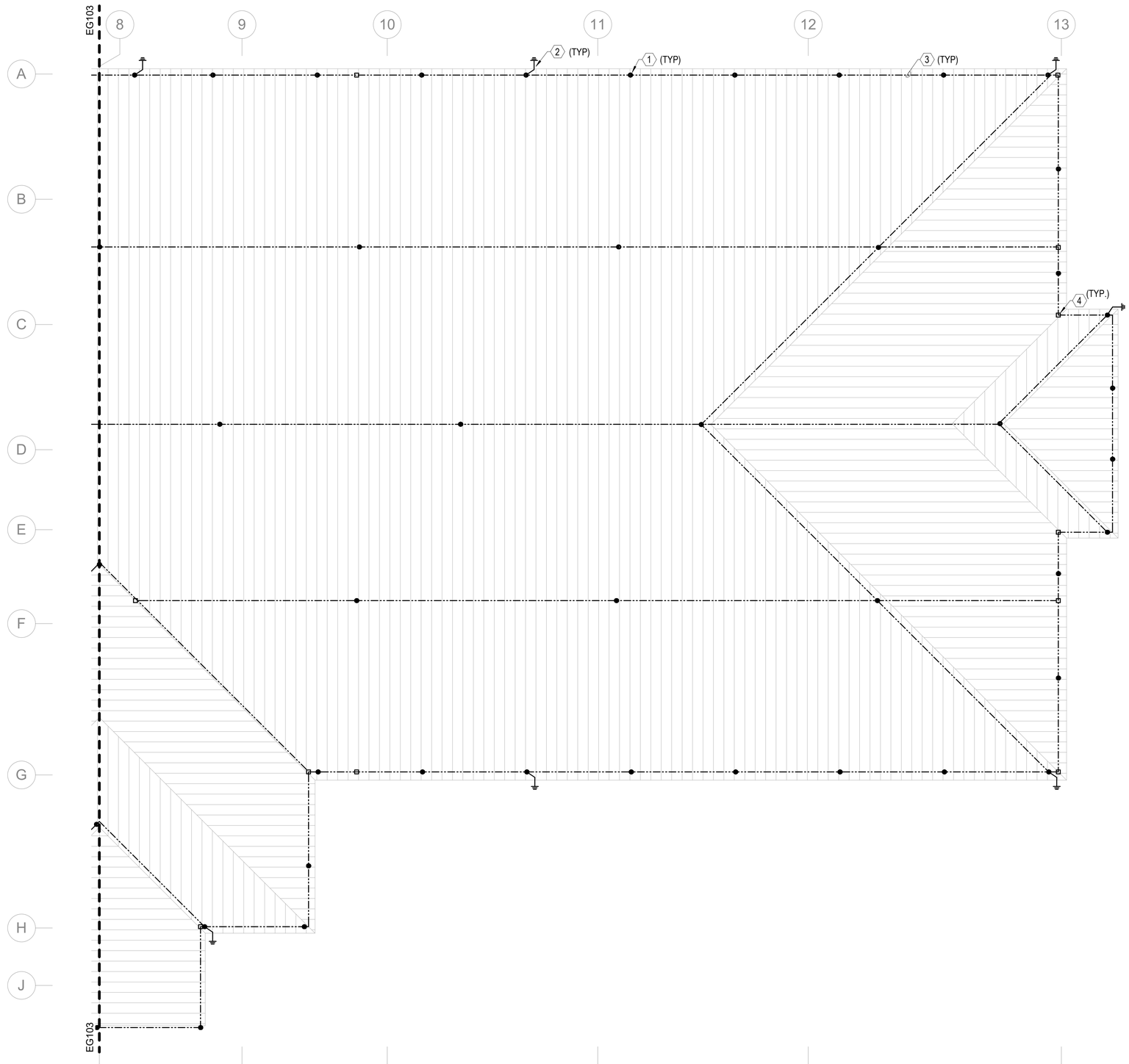

A1 ELECTRICAL - LIGHTNING PROTECTION PLAN

SCALE: 3/32" = 1'-0"

GENERAL NOTES

1. SEE SHEET E-001 FOR ELECTRICAL NOTES, SYMBOLS, AND ABBREVIATIONS.
2. SEE SHEETS EG101 AND EG102 FOR GROUNDING PLANS
3. SEE SHEET EG501 FOR LIGHTNING PROTECTION DETAILS
4. LIGHTNING PROTECTION DESIGN AND INSTALLATION SHALL MEET THE REQUIREMENTS OF NFPA 780 AND UL96. DESIGN SHALL BE LPI MASTER LABEL CERTIFIED.

KEYNOTES

1. 5/8" BY 10" SOLID ALUMINUM AIR TERMINAL.
2. #4/0 AWG BARE STRANDED CLASS 1 ALUMINUM DOWN CONDUCTOR CONSISTING OF STRANDS OF #13 AWG ALUMINUM. CONCEAL DOWN CONDUCTORS. PROVIDE APPROPRIATE ALUMINUM TO COPPER BIMETALLIC CONNECTORS AS REQUIRED FOR CONNECTION TO COPPER CLAD GROUND ROD. COORDINATE CONNECTION WITH GROUNDING PLAN ON SHEET EG101 AND EG102.
3. #4/0 AWG BARE STRANDED CLASS 1 ALUMINUM LIGHTNING PROTECTION MAIN CONDUCTOR CONSISTING OF STRANDS OF #13 AWG ALUMINUM.
4. ALUMINUM TO ALUMINUM CLAMP CONNECTOR.

0 8'-0" 16'-0" 32'-0"

SCALE:0'-0 3/32" = 1'-0"

N

SYM	DESCRIPTION	DATE	APPR

NAVFAC

SEAL

IRQ W.M. Jordan COMPANY ~ A JOINT VENTURE ~

Michael Baker INTERNATIONAL

100 AIRSIDE DRIVE
MOON TOWNSHIP, PA 15108 A/E INFO

APPROVED

FOR COMMANDER NAVFAC

ACTIVITY
MARINE CORPS BASE
CAMP LEJEUNE

SATISFACTORY TO DATE

DES SD | DRW LAK | CHK YPS

PM

BRANCH MANAGER

CHIEF ENG/ARCH

FIRE PROTECTION

DEPARTMENT OF THE NAVY
NAVAL FACILITIES ENGINEERING COMMAND ~ MID-ATLANTIC
JACKSONVILLE, NC
ROICC FLORENCE CAMP LEJEUNE
MCB CAMP LEJEUNE

P1338 II MEF SIMULATION/TRAINING CENTER
REPLACEMENT
JACKSONVILLE, NC

ELECTRICAL - LIGHTNING PROTECTION PLAN

SCALE: AS NOTED

EPROJECT NO.: 1590892

CONSTR. CONTR. NO.
N40085-20-C-0059

NAVFAC DRAWING NO.

SHEET OF

EG104

DP2 SUBMISSION – P1338 BUILDING - PRE-FINAL SUBMISSION

PLOTTED: 6/10/2021 5:42:53 PM

FILE NAME: BIM 360://HF PACKAGE 3/P1338 MEF SIM CTR-1590892-E.rvt

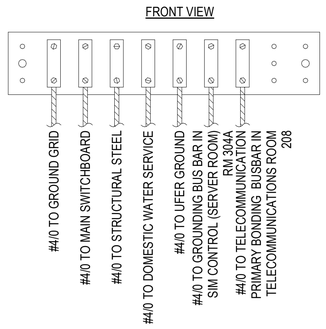

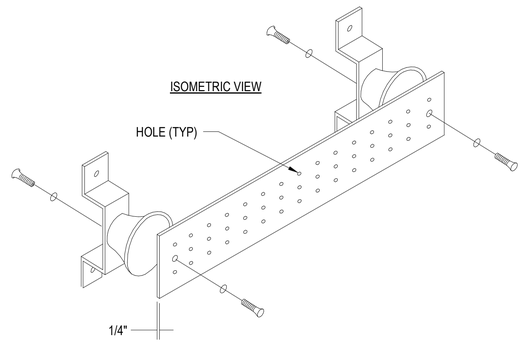

NOTES:
1. GROUND BUSBAR IS PRE-DRILLED COPPER WITH STANDARD NEMA BOLT HOLE SIZING AND SPACING.
2. MGB IS 1/4" THICK AND 4" WIDE.
3. LENGTH SIZED TO ACCOMMODATE GROUND CONNECTIONS OF ALL GROWTH PROVISION. MINIMUM LENGTH SHALL BE 12".

ELECTRICAL MAIN GROUNDING BUSBAR

SCALE:NTS

REF EG101 - EG102 (C1)

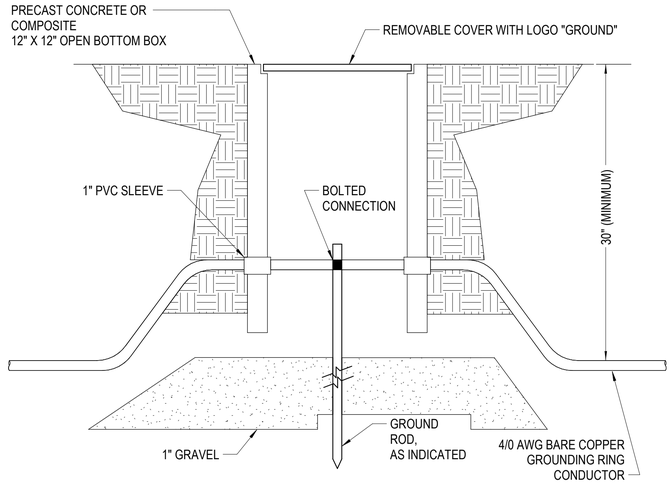

GROUND ROD TEST WELL

SCALE:NTS

REF EG101 - EG102 (C4)

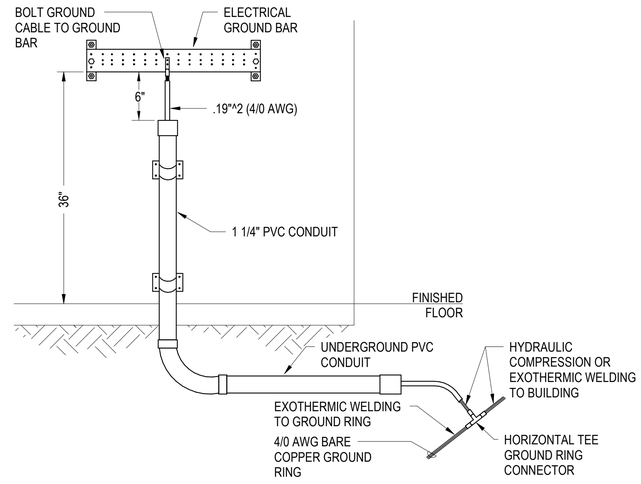

ELECTRICAL GROUND BAR AND GROUND RING CONNECTIONS

SCALE:NTS

REF EG101 - EG102 (A1)

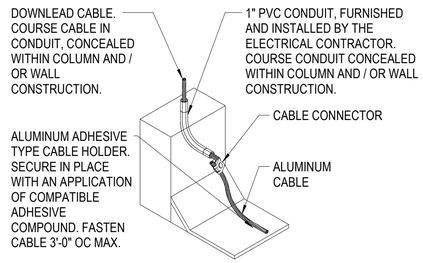

CONCEALED DOWNLEAD TO LOWER ROOF

SCALE:NTS

REF EG103 - EG104 (A3)

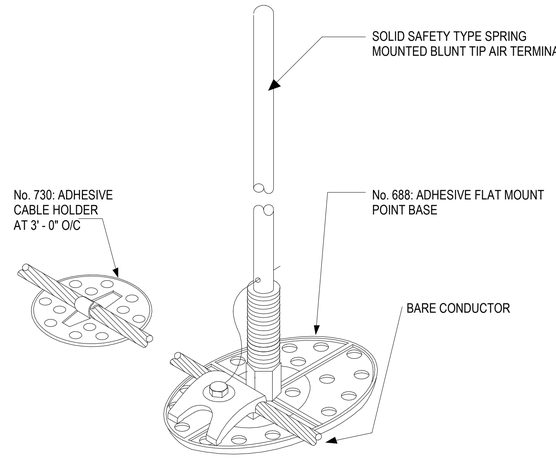

AIR TERMINALS & CABLE HOLDERS

SCALE:NTS

REF EG103 - EG104 (A4)

APPR | DATE | DESCRIPTION | SYM

SEAL

W.M. Jordan COMPANY – A JOINT VENTURE –

Michael Baker INTERNATIONAL
100 AIRSIDE DRIVE
MOON TOWNSHIP, PA 15108
A/E INFO

APPROVED

FOR COMMANDER NAVFAC

ACTIVITY: MARINE CORPS BASE CAMP LEJEUNE

SATISFACTORY TO DATE

DES SD | DRW LAK | CHK YPS

PM

BRANCH MANAGER

CHIEF ENG/ARCH

FIRE PROTECTION

DEPARTMENT OF THE NAVY
NAVAL FACILITIES ENGINEERING COMMAND
ROICC FLORENCE CAMP LEJEUNE
NAVAL FACILITIES ENGINEERING COMMAND ~ MID-ATLANTIC
JACKSONVILLE, NC
MCB CAMP LEJEUNE
JACKSONVILLE, NC
P1338 II MEF SIMULATION/TRAINING CENTER
REPLACEMENT
ELECTRICAL - GROUNDING DETAILS

SCALE: AS NOTED

EPROJECT NO.: 1590892

CONSTR. CONTR. NO.: N40085-20-C-0059

NAVFAC DRAWING NO.: 12826285

SHEET OF

EG501

DP2 SUBMISSION – P1338 BUILDING - PRE-FINAL SUBMISSION

PLOTTED: 6/10/2021 5:42:54 PM

FILE NAME: BIM 360://HF PACKAGE 3/P1338 MEF SIM CTR-1590892-E.rvt

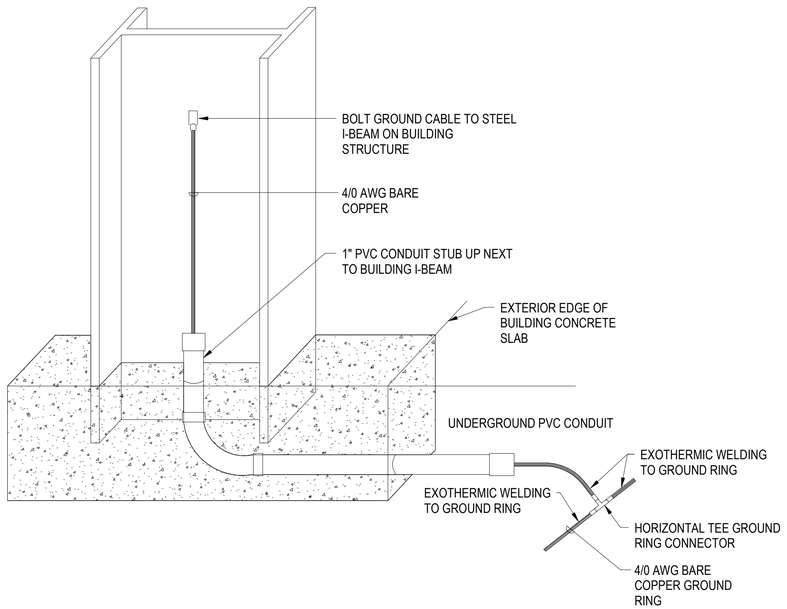

BUILDING GROUND AND GROUND RING CONNECTIONS

C1

SCALE:NTS

REF EG101 - EG102

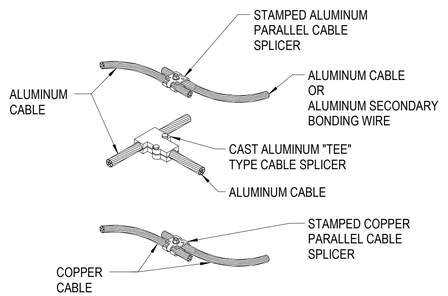

TYPICAL CABLE SPLICERS

C3

SCALE:NTS

REF EG101 - EG102

SYM	DESCRIPTION	DATE	APPR

NAVFAC

SEAL

RQ W.M. Jordan COMPANY – A JOINT VENTURE –

Michael Baker INTERNATIONAL

100 AIRSIDE DRIVE
MOON TOWNSHIP, PA 15108

A/E INFO

APPROVED

FOR COMMANDER NAVFAC

ACTIVITY
MARINE CORPS BASE CAMP LEJEUNE

SATISFACTORY TO DATE

DES SD | DRW LAK | CHK YPS

PM

BRANCH MANAGER

CHIEF ENG/ARCH

FIRE PROTECTION

DEPARTMENT OF THE NAVY
NAVAL FACILITIES ENGINEERING COMMAND ~ MID-ATLANTIC
ROICC FLORENCE CAMP LEJEUNE
JACKSONVILLE, NC

MCB CAMP LEJEUNE
JACKSONVILLE, NC

P1338 II MEF SIMULATION/TRAINING CENTER
REPLACEMENT

ELECTRICAL - GROUNDING DETAILS

SCALE: AS NOTED

EPROJECT NO.: 1590892

CONSTR. CONTR. NO.
N40085-20-C-0059

NAVFAC DRAWING NO.
12826285

SHEET OF

EG502

DP2 SUBMISSION – P1338 BUILDING - PRE-FINAL SUBMISSION

PLOTTED: 6/10/2021 5:42:55 PM

FILE NAME: BIM 360://HF PACKAGE 3/P1338 MEF SIM CTR-1590892-E.rvt

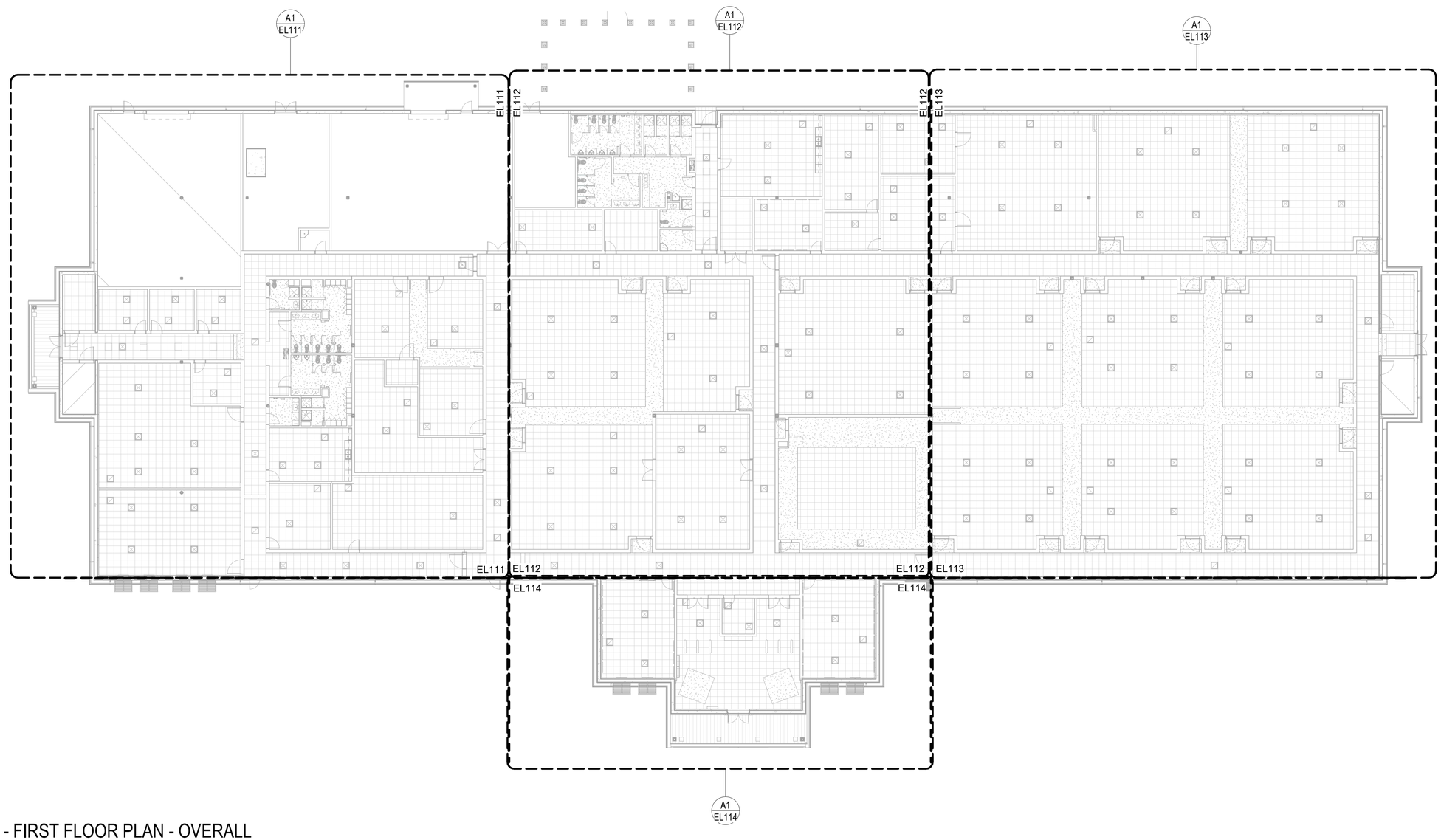

LIGHTING - FIRST FLOOR PLAN - OVERALL

SCALE: 1/16" = 1'-0"

KEYPLAN

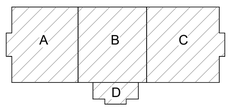

0 8'-0" 16'-0" 32'-0"

SCALE: 0'-0 1/16" = 1'-0"

N

SYM	DESCRIPTION	DATE	APPR

NAVFAC

SEAL

W.M. Jordan COMPANY — A JOINT VENTURE —

RQ

Michael Baker INTERNATIONAL

100 AIRSIDE DRIVE
MOON TOWNSHIP, PA 15108

A/E INFO

APPROVED

FOR COMMANDER NAVFAC

ACTIVITY
MARINE CORPS BASE
CAMP LEJEUNE

SATISFACTORY TO DATE

DES	DRW	CHK
SD	LAK	YPS

PM

BRANCH MANAGER

CHIEF ENG/ARCH

FIRE PROTECTION

DEPARTMENT OF THE NAVY
NAVAL FACILITIES ENGINEERING COMMAND
ROICC FLORENCE CAMP LEJEUNE
MCB CAMP LEJEUNE

NAVAL FACILITIES ENGINEERING COMMAND ~ MID-ATLANTIC
JACKSONVILLE, NC

P1338 II MEF SIMULATION/TRAINING CENTER
REPLACEMENT
JACKSONVILLE, NC

LIGHTING - FIRST FLOOR PLAN - OVERALL

SCALE:	AS NOTED
EPROJECT NO.:	1590892
CONSTR. CONTR. NO.	N40085-20-C-0059
NAVFAC DRAWING NO.	
SHEET	OF

EL110

DP2 SUBMISSION – P1338 BUILDING - PRE-FINAL SUBMISSION

PLOTTED: 6/10/2021 5:43:09 PM

FILE NAME: BIM 360://HF PACKAGE 3/P1338 MEF SIM CTR-1590892-E.rvt

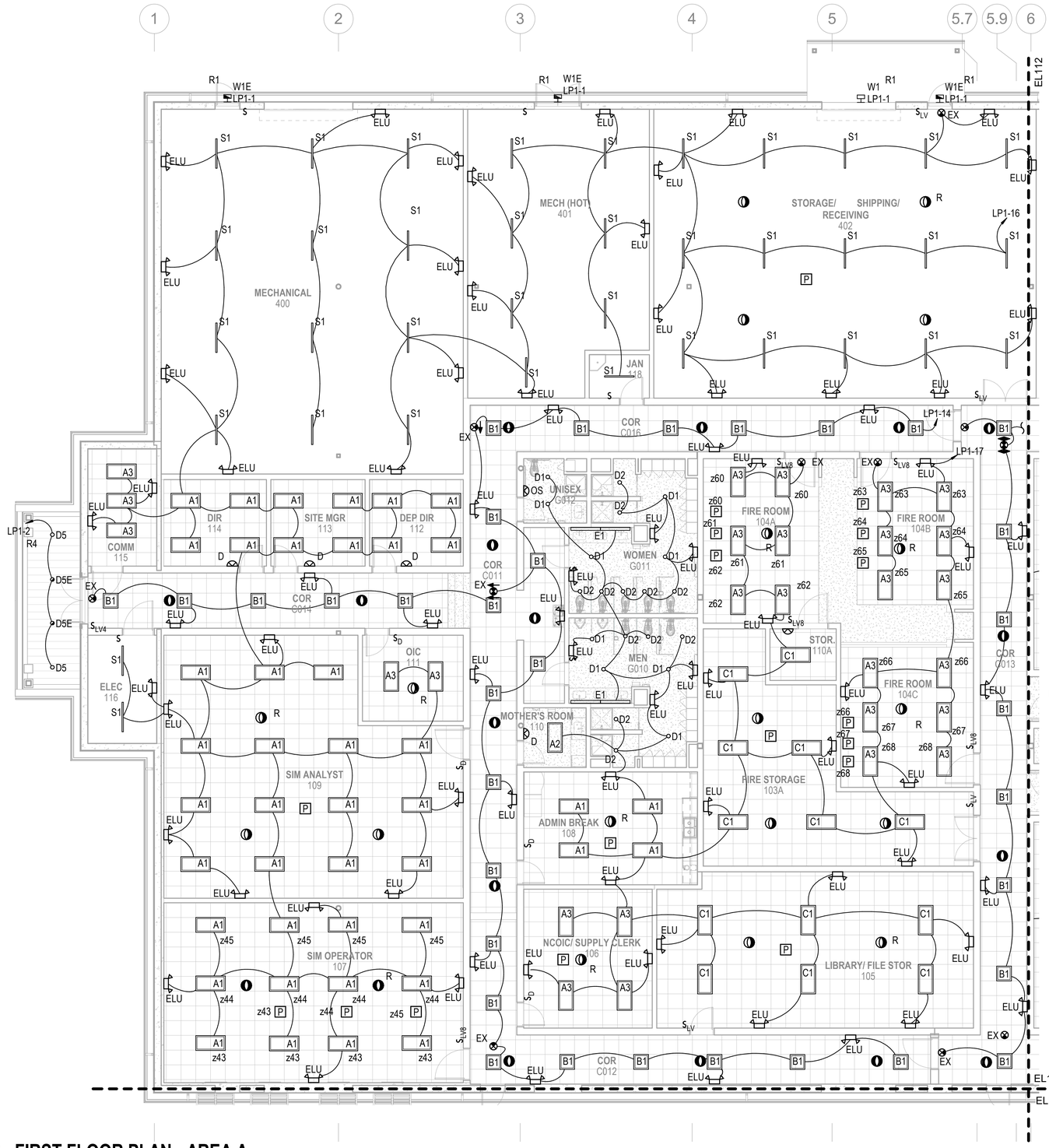

A1 LIGHTING - FIRST FLOOR PLAN - AREA A

SCALE: 1/8" = 1'-0" (EL110)

GENERAL NOTES

1. SEE SHEET E-001 FOR ELECTRICAL NOTES, SYMBOLS, AND ABBREVIATIONS.
2. SEE SHEET E-601 FOR LIGHTING FIXTURE SCHEDULE.
3. THE WIRING SHOWN ON THE LIGHTING PLANS INDICATE FIXTURES WHICH ARE ON THE SAME CIRCUIT, NOT THE ACTUAL WIRING. CONTRACTOR SHALL ADHERE TO THE SWITCH DESIGNATIONS AND LIGHTING CONTROL DIAGRAMS FOR THE ACTUAL WIRING.
4. CONNECT EXIT SIGN AND EMERGENCY LIGHTING UNITS AHEAD OF THE SWITCH/SENSOR TO THE NORMAL LIGHTING CICUIT THAT IS LOCATED IN THE SAME AREA/ROOM IN WHICH THOSE EXIT AND EMERGENCY LUMINAIRES ARE SERVING.

KEYPLAN

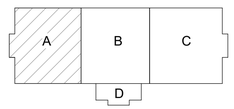

0 4'-0" 8'-0" 16'-0"

SCALE: 0'-0 1/8" = 1'-0"

N

SYM	DESCRIPTION	DATE	APPR

NAVFAC

SEAL

RQ W.M. Jordan COMPANY – A JOINT VENTURE –

Michael Baker INTERNATIONAL

100 AIRSIDE DRIVE
MOON TOWNSHIP, PA 15108

A/E INFO

APPROVED

FOR COMMANDER NAVFAC

ACTIVITY
MARINE CORPS BASE CAMP LEJEUNE

SATISFACTORY TO DATE

DES SD | DRW LAK | CHK YPS

PM

BRANCH MANAGER

CHIEF ENG/ARCH

FIRE PROTECTION

DEPARTMENT OF THE NAVY
NAVAL FACILITIES ENGINEERING COMMAND
NAVAL FACILITIES ENGINEERING COMMAND ~ MID-ATLANTIC
ROICC FLORENCE CAMP LEJEUNE
JACKSONVILLE, NC
MCB CAMP LEJEUNE
JACKSONVILLE, NC

P1338 II MEF SIMULATION/TRAINING CENTER
REPLACEMENT

LIGHTING - FIRST FLOOR PLAN - AREA A

SCALE: AS NOTED

EPROJECT NO.: 1590892

CONSTR. CONTR. NO.
N40085-20-C-0059

NAVFAC DRAWING NO.

SHEET OF

EL111

DP2 SUBMISSION – P1338 BUILDING - PRE-FINAL SUBMISSION

UNCLASSIFIED

FILE NAME: BIM 360://HF PACKAGE 3/P1338 MEF SIM CTR-1590892-E.rvt

PLOTTED: 6/10/2021 5:43:24 PM

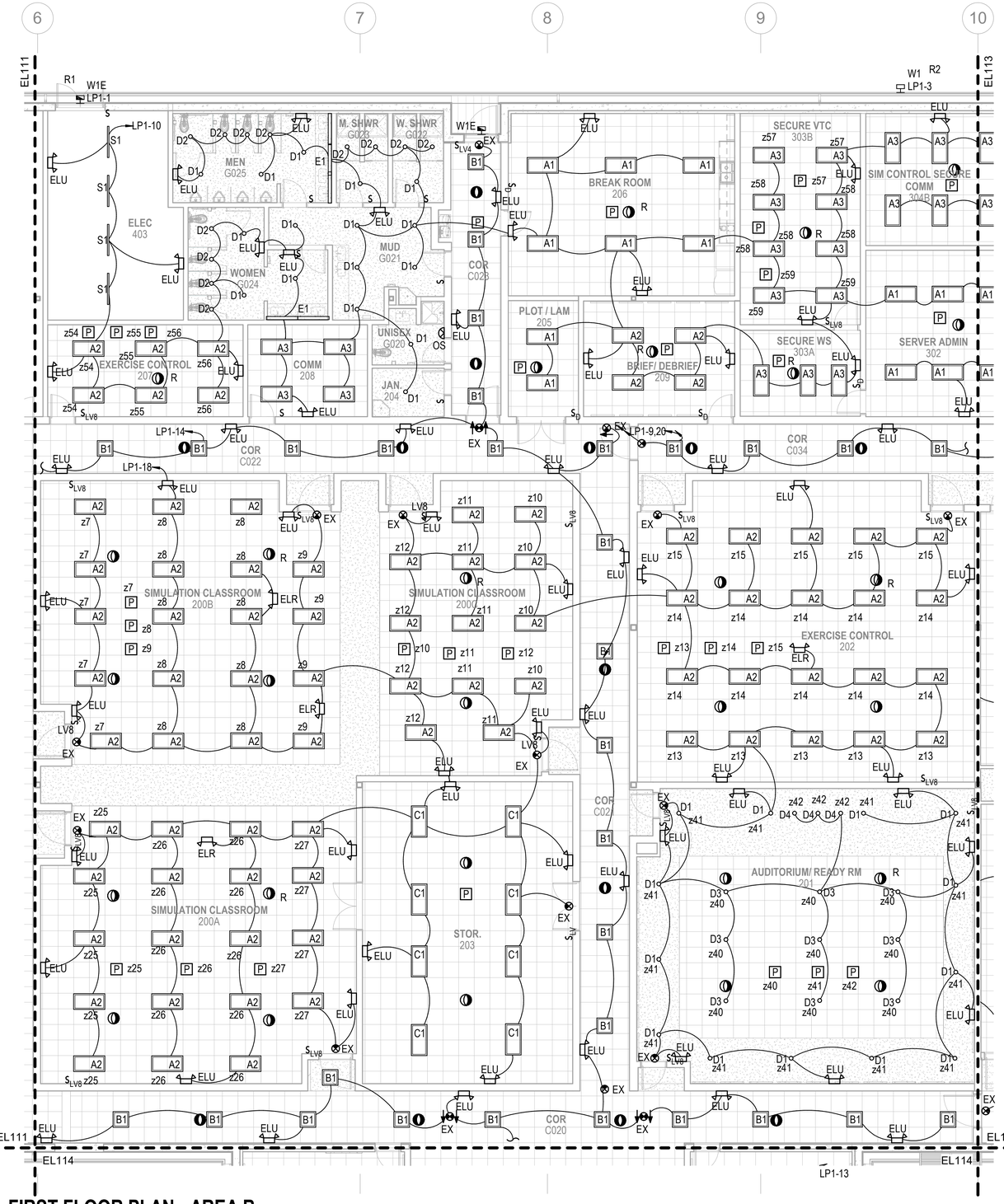

A1 LIGHTING - FIRST FLOOR PLAN - AREA B

SCALE: 1/8" = 1'-0" (EL110)

GENERAL NOTES

1. SEE SHEET E-001 FOR ELECTRICAL NOTES, SYMBOLS, AND ABBREVIATIONS.
2. SEE SHEET E-601 FOR LIGHTING FIXTURE SCHEDULE.
3. THE WIRING SHOWN ON THE LIGHTING PLANS INDICATE FIXTURES WHICH ARE ON THE SAME CIRCUIT, NOT THE ACTUAL WIRING. CONTRACTOR SHALL ADHERE TO THE SWITCH DESIGNATIONS AND LIGHTING CONTROL DIAGRAMS FOR THE ACTUAL WIRING.
4. CONNECT EXIT SIGN AND EMERGENCY LIGHTING UNITS AHEAD OF THE SWITCH/SENSOR TO THE NORMAL LIGHTING CICUIT THAT IS LOCATED IN THE SAME AREA/ROOM IN WHICH THOSE EXIT AND EMERGENCY LUMINAIRES ARE SERVING.

KEYPLAN

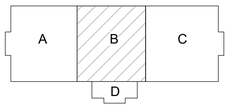

0 4'-0" 8'-0" 16'-0"

SCALE: 0'-0 1/8" = 1'-0"

N

APPR | DATE | NO. | DESCRIPTION

SEAL

RQ W.M. Jordan COMPANY – A JOINT VENTURE –

Michael Baker INTERNATIONAL

100 AIRSIDE DRIVE
MOON TOWNSHIP, PA 15108 A/E INFO

APPROVED

FOR COMMANDER NAVFAC

ACTIVITY
MARINE CORPS BASE CAMP LEJEUNE

SATISFACTORY TO DATE

DES SD | DRW LAK | CHK YPS

PM

BRANCH MANAGER

CHIEF ENG/ARCH

FIRE PROTECTION

DEPARTMENT OF THE NAVY
NAVAL FACILITIES ENGINEERING COMMAND ~ MID-ATLANTIC
ROICC FLORENCE CAMP LEJEUNE
MCB CAMP LEJEUNE

NAVAL FACILITIES ENGINEERING COMMAND ~ MID-ATLANTIC
JACKSONVILLE, NC

JACKSONVILLE, NC
P1338 II MEF SIMULATION/TRAINING CENTER
REPLACEMENT

LIGHTING - FIRST FLOOR PLAN - AREA B

SCALE: AS NOTED

EPROJECT NO.: 1590892

CONSTR. CONTR. NO.
N40085-20-C-0059

NAVFAC DRAWING NO.

SHEET OF

EL112

DP2 SUBMISSION – P1338 BUILDING - PRE-FINAL SUBMISSION

PLOTTED: 6/10/2021 5:43:39 PM

FILE NAME: BIM 360://HF PACKAGE 3/P1338 MEF SIM CTR-1590892-E.rvt

GENERAL NOTES

1. SEE SHEET E-001 FOR ELECTRICAL NOTES, SYMBOLS, AND ABBREVIATIONS.
2. SEE SHEET E-601 FOR LIGHTING FIXTURE SCHEDULE.
3. THE WIRING SHOWN ON THE LIGHTING PLANS INDICATE FIXTURES WHICH ARE ON THE SAME CIRCUIT, NOT THE ACTUAL WIRING. CONTRACTOR SHALL ADHERE TO THE SWITCH DESIGNATIONS AND LIGHTING CONTROL DIAGRAMS FOR THE ACTUAL WIRING.
4. CONNECT EXIT SIGN AND EMERGENCY LIGHTING UNITS AHEAD OF THE SWITCH/SENSOR TO THE NORMAL LIGHTING CICUIT THAT IS LOCATED IN THE SAME AREA/ROOM IN WHICH THOSE EXIT AND EMERGENCY LUMINAIRES ARE SERVING.

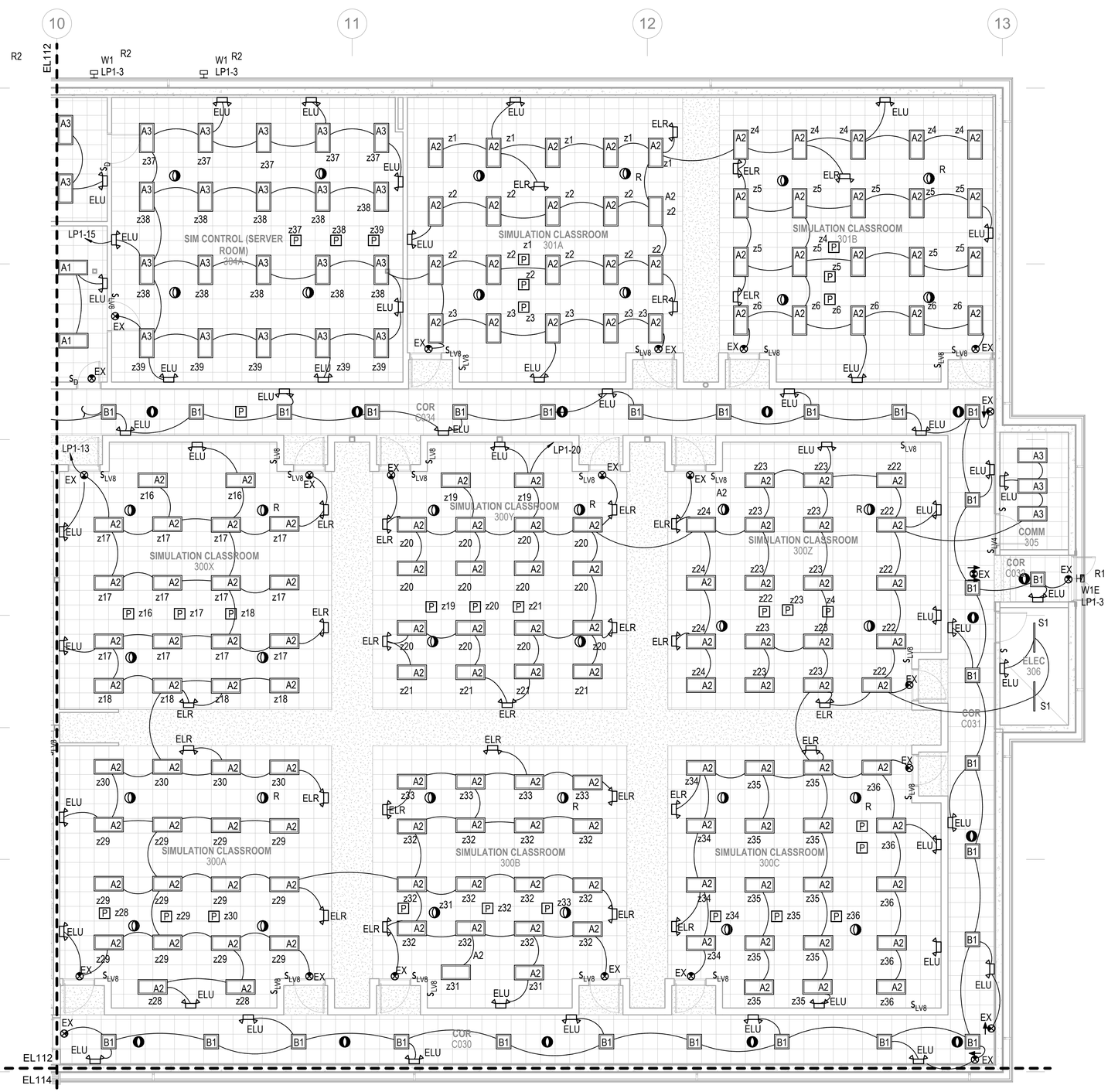

KEYPLAN

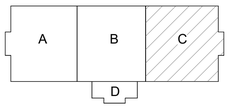

0 4'-0" 8'-0" 16'-0"

SCALE: 0'-0 1/8" = 1'-0"

N

A1 LIGHTING - FIRST FLOOR PLAN - AREA C

SCALE: 1/8" = 1'-0" (EL110)

DEPARTMENT OF THE NAVY	NAVAL FACILITIES ENGINEERING COMMAND ~ MID-ATLANTIC
ROICC FLORENCE CAMP LEJEUNE	JACKSONVILLE, NC
MCB CAMP LEJEUNE	JACKSONVILLE, NC
P1338 II MEF SIMULATION/TRAINING CENTER	REPLACEMENT
LIGHTING - FIRST FLOOR PLAN - AREA C	
SCALE:	AS NOTED
EPROJECT NO.:	1590892
CONSTR. CONTR. NO.	N40085-20-C-0059
NAVFAC DRAWING NO.	
SHEET	OF
EL113	

NAVAL FACILITIES ENGINEERING COMMAND

W.M. Jordan COMPANY – A JOINT VENTURE –

Michael Baker INTERNATIONAL

100 AIRSIDE DRIVE MOON TOWNSHIP, PA 15108 A/E INFO

APPROVED

FOR COMMANDER NAVFAC

ACTIVITY: MARINE CORPS BASE CAMP LEJEUNE

SATISFACTORY TO DATE

DES SD | DRW LAK | CHK YPS

PM

BRANCH MANAGER

CHIEF ENG/ARCH

FIRE PROTECTION

APPR | DATE | DESCRIPTION | SYM

SEAL

DP2 SUBMISSION – P1338 BUILDING - PRE-FINAL SUBMISSION

PLOTTED: 6/10/2021 5:43:45 PM

FILE NAME: BIM 360://HF PACKAGE 3/P1338 MEF SIM CTR-1590892-E.rvt

GENERAL NOTES

1. SEE SHEET E-001 FOR ELECTRICAL NOTES, SYMBOLS, AND ABBREVIATIONS.
2. SEE SHEET E-601 FOR LIGHTING FIXTURE SCHEDULE.
3. THE WIRING SHOWN ON THE LIGHTING PLANS INDICATE FIXTURES WHICH ARE ON THE SAME CIRCUIT, NOT THE ACTUAL WIRING. CONTRACTOR SHALL ADHERE TO THE SWITCH DESIGNATIONS AND LIGHTING CONTROL DIAGRAMS FOR THE ACTUAL WIRING.
4. CONNECT EXIT SIGN AND EMERGENCY LIGHTING UNITS AHEAD OF THE SWITCH/SENSOR TO THE NORMAL LIGHTING CICUIT THAT IS LOCATED IN THE SAME AREA/ROOM IN WHICH THOSE EXIT AND EMERGENCY LUMINAIRES ARE SERVING.

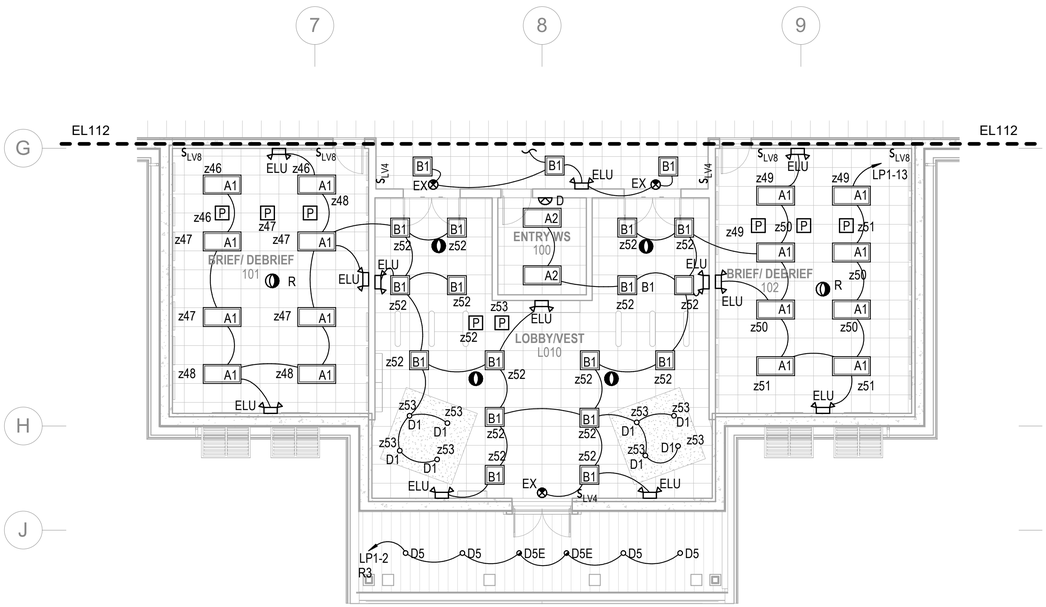

A1 LIGHTING - FIRST FLOOR PLAN - AREA D

SCALE: 1/8" = 1'-0" (EL110)

KEYPLAN

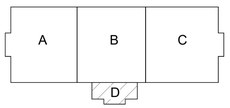

0 4'-0" 8'-0" 16'-0"

SCALE:0'-0 1/8" = 1'-0"

N

APPR	
DATE	
DESCRIPTION	
SYM	

SEAL

W.M. Jordan COMPANY – A JOINT VENTURE –

Michael Baker INTERNATIONAL

100 AIRSIDE DRIVE
MOON TOWNSHIP, PA 15108 A/E INFO

APPROVED

FOR COMMANDER NAVFAC

ACTIVITY
MARINE CORPS BASE
CAMP LEJEUNE

SATISFACTORY TO DATE

DES SD | DRW LAK | CHK YPS

PM

BRANCH MANAGER

CHIEF ENG/ARCH

FIRE PROTECTION

DEPARTMENT OF THE NAVY
NAVAL FACILITIES ENGINEERING COMMAND
ROICC FLORENCE CAMP LEJEUNE
MCB CAMP LEJEUNE

NAVAL FACILITIES ENGINEERING COMMAND ~ MID-ATLANTIC
JACKSONVILLE, NC

JACKSONVILLE, NC
P1338 II MEF SIMULATION/TRAINING CENTER
REPLACEMENT

LIGHTING - FIRST FLOOR PLAN - AREA D

SCALE: AS NOTED
EPROJECT NO.: 1590892
CONSTR. CONTR. NO.
N40085-20-C-0059
NAVFAC DRAWING NO.
SHEET OF

EL114

DP2 SUBMISSION – P1338 BUILDING - PRE-FINAL SUBMISSION

PLOTTED: 6/10/2021 5:43:49 PM

FILE NAME: BIM 360://HF PACKAGE 3/P1338 MEF SIM CTR-1590892-E.rvt

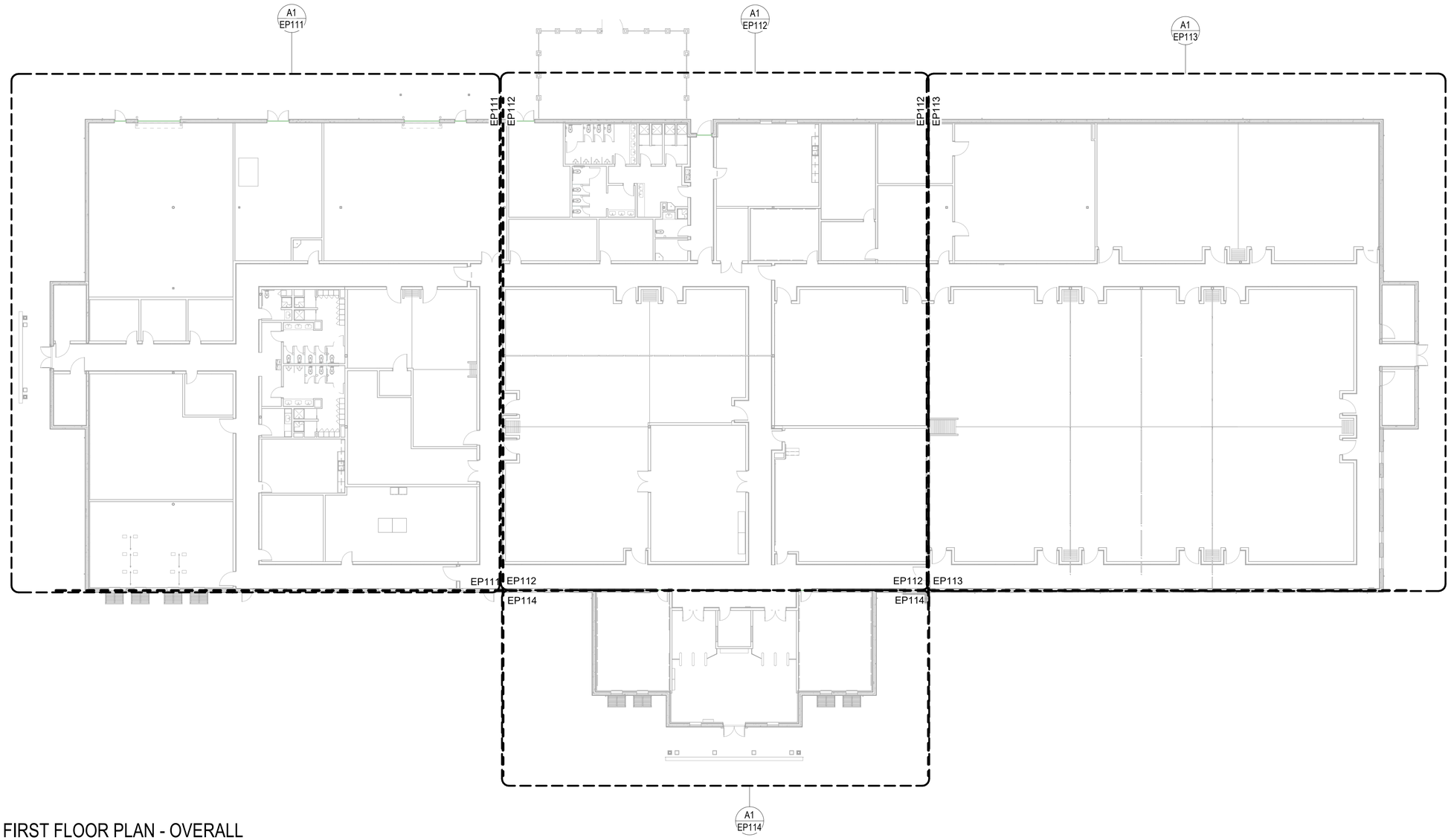

POWER - FIRST FLOOR PLAN - OVERALL

SCALE: 1/16" = 1'-0"

KEYPLAN

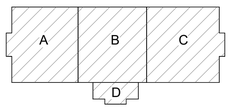

0 8'-0" 16'-0" 32'-0"

SCALE: 0'-0 1/16" = 1'-0"

N

NO.	DESCRIPTION	DATE	APPR

NAVFAC

SEAL

RQ W.M. Jordan COMPANY – A JOINT VENTURE –

Michael Baker INTERNATIONAL

100 AIRSIDE DRIVE
MOON TOWNSHIP, PA 15108 A/E INFO

APPROVED

FOR COMMANDER NAVFAC

ACTIVITY
MARINE CORPS BASE
CAMP LEJEUNE

SATISFACTORY TO DATE

DES SD | DRW LAK | CHK YPS

PM

BRANCH MANAGER

CHIEF ENG/ARCH

FIRE PROTECTION

DEPARTMENT OF THE NAVY
NAVAL FACILITIES ENGINEERING COMMAND
ROICC FLORENCE CAMP LEJEUNE
MCB CAMP LEJEUNE

NAVAL FACILITIES ENGINEERING COMMAND – MID-ATLANTIC
JACKSONVILLE, NC

P1338 II MEF SIMULATION/TRAINING CENTER
REPLACEMENT
JACKSONVILLE, NC

POWER - FIRST FLOOR PLAN - OVERALL

SCALE: AS NOTED

EPROJECT NO.: 1590892

CONSTR. CONTR. NO.
N40085-20-C-0059

NAVFAC DRAWING NO.

SHEET OF

EP110

DP2 SUBMISSION – P1338 BUILDING - PRE-FINAL SUBMISSION

PLOTTED: 6/10/2021 5:43:52 PM

FILE NAME: BIM 360://HF PACKAGE 3/P1338 MEF SIM CTR-1590892-E.rvt

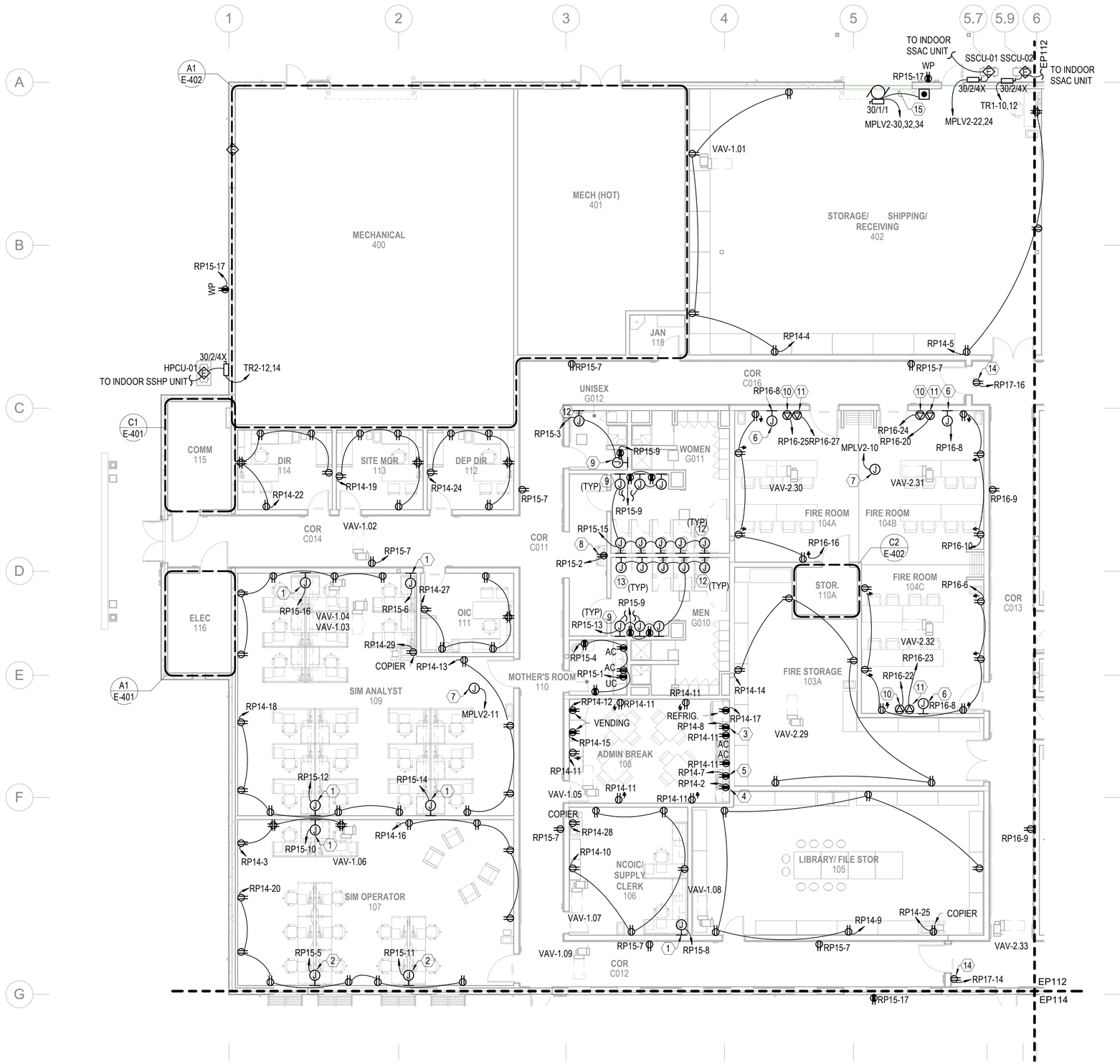

A1 POWER - FIRST FLOOR PLAN - AREA A

SCALE: 1/8" = 1'-0" (EP110)

GENERAL NOTES

1. SEE SHEET E-001 FOR ELECTRICAL NOTES, SYMBOLS, AND ABBREVIATIONS.
2. ALL FLOORBOX AND JUNCTION BOX LOCATIONS ARE APPROXIMATE. FINAL LOCATIONS BASED ON EQUIPMENT AND FURNITURE FINAL LOCATIONS.

KEYNOTES

1. JUNCTION BOX FOR FURNITURE WHIP. COORDINATE AND INSTALL PER MANUFACTURER'S RECOMMENDATIONS.
2. JUNCTION BOX FOR FURNITURE POWER BAR. COORDINATE AND INSTALL PER MANUFACTURER'S RECOMMENDATIONS.
3. RECEPTACLE FOR MICROWAVE ON SHELF ABOVE COUNTERTOP, MOUNT RECEPTACLE AT 60" AFF.
4. GFCI RECEPTACLE ABOVE COUNTER DEDICATED FOR COFFEE POT.
5. GFCI RECEPTACLE ABOVE COUNTER DEDICATED FOR MICROWAVE.
6. DEDICATED RECEPTACLE FOR AV FLAT PANEL. RECEPTACLE TO BE INSTALLED IN AV WALL BOX. REFERENCE TA-SERIES DRAWINGS FOR DETAILS, MOUNTING HEIGHT, AND LOCATION.
7. JUNCTION BOX FOR VAV LOW VOLTAGE POWER. COORDINATE LOCATION AND QUANTITY WITH MECHANICAL INSTALLATION.
8. RECEPTACLE FOR ELECTRIC WATER COOLER. COORDINATE LOCATION WITH MANUFACTURER'S RECOMMENDATIONS.
9. HARD-WIRED 120V CONNECTION FOR LAVATORY INFRARED FLUSH VALVE. COORDINATE FINAL LOCATION WITH INSTALLATION OF LAVATORY. INSTALL PER MANUFACTURER'S RECOMMENDATIONS.
10. NEMA L5-30R TWIST LOCK RECEPTACLE. COORDINATE FINAL LOCATION AND MOUNTING HEIGHT WITH USER.
11. NEMA 5-20R RECEPTACLE. COORDINATE FINAL LOCATION AND MOUNTING HEIGHT WITH USER.
12. HARD-WIRED 120V CONNECTION FOR WATER CLOSET INFRARED FLUSH VALVE. COORDINATE FINAL LOCATION WITH INSTALLATION OF WATER CLOSET. INSTALL PER MANUFACTURER'S RECOMMENDATIONS.
13. HARD-WIRED 120V CONNECTION FOR URINAL INFRARED FLUSH VALVE. COORDINATE FINAL LOCATION WITH INSTALLATION OF URINAL. INSTALL PER MANUFACTURER'S RECOMMENDATIONS.
14. DEDICATED DUPLEX RECEPTACLE FOR SYNCHRONIZED CLOCK SYSTEM. COORDINATE FINAL HEIGHT AND LOCATION WITH INSTALLATION OF CLOCK.
15. CONDUIT BY ELECTRICAL CONTRACTOR. LOW VOLTAGE WIRING BY OTHERS.

KEYPLAN

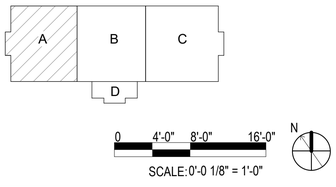

0 4'-0" 8'-0" 16'-0"

SCALE: 0'-0 1/8" = 1'-0"

N

APPR	DATE	DESCRIPTION	SYM

SEAL

W.M. Jordan COMPANY – A JOINT VENTURE –

Michael Baker INTERNATIONAL

100 AIRSIDE DRIVE MOON TOWNSHIP, PA 15108 A/E INFO

APPROVED

FOR COMMANDER NAVFAC

ACTIVITY: MARINE CORPS BASE CAMP LEJEUNE

SATISFACTORY TO DATE

DES SD | DRW LAK | CHK YPS

PM

BRANCH MANAGER

CHIEF ENG/ARCH

FIRE PROTECTION

DEPARTMENT OF THE NAVY
NAVAL FACILITIES ENGINEERING COMMAND
ROICC FLORENCE CAMP LEJEUNE
MCB CAMP LEJEUNE

NAVAL FACILITIES ENGINEERING COMMAND ~ MID-ATLANTIC
JACKSONVILLE, NC

JACKSONVILLE, NC
P1338 II MEF SIMULATION/TRAINING CENTER
REPLACEMENT

POWER - FIRST FLOOR PLAN - AREA A

SCALE: AS NOTED

EPROJECT NO.: 1590892

CONSTR. CONTR. NO. N40085-20-C-0059

NAVFAC DRAWING NO.

SHEET OF

EP111

DP2 SUBMISSION – P1338 BUILDING - PRE-FINAL SUBMISSION

PLOTTED: 6/10/2021 5:43:56 PM

FILE NAME: BIM 360://HF PACKAGE 3/P1338 MEF SIM CTR-1590892-E.rvt

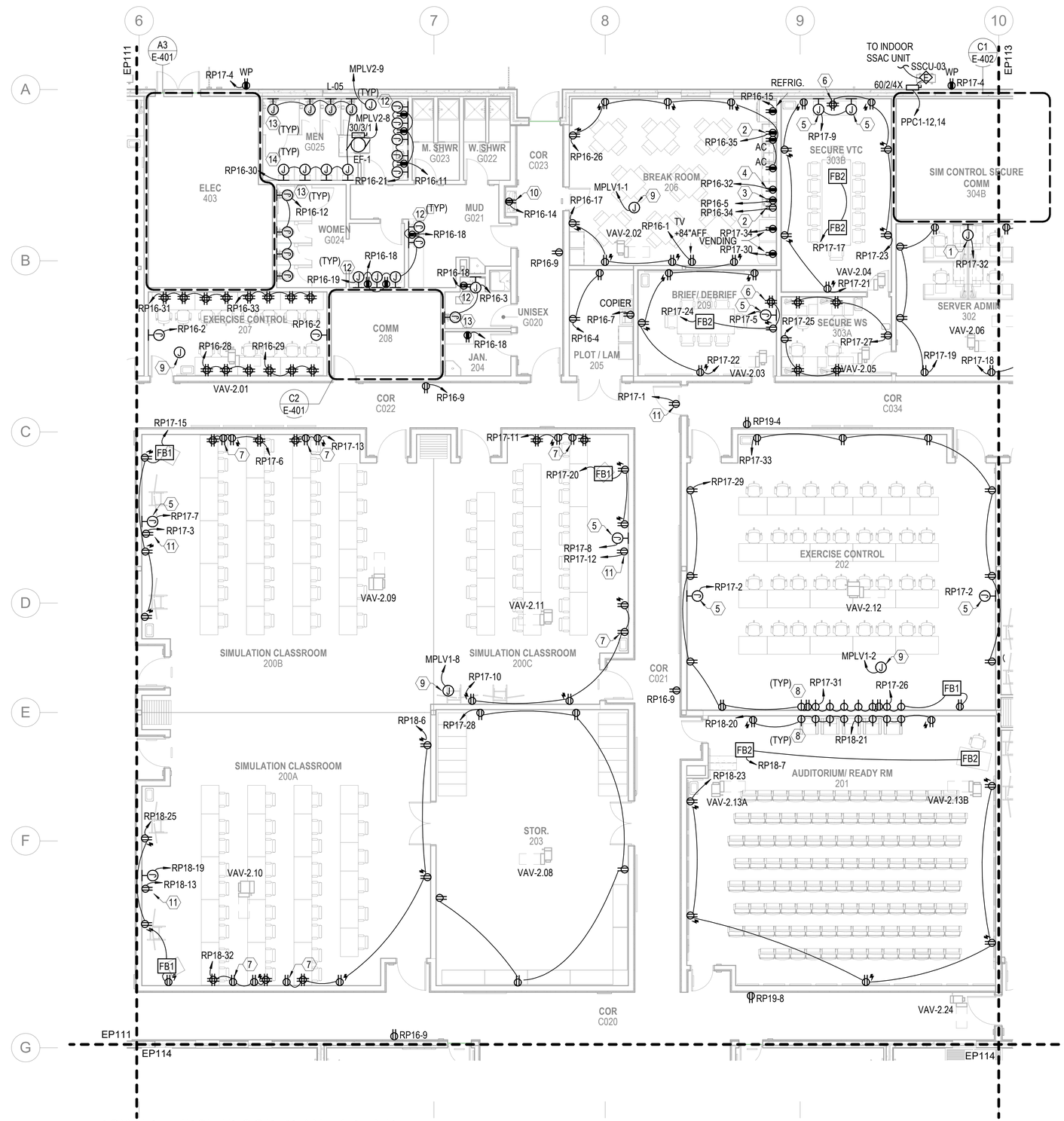

GENERAL NOTES

1. SEE SHEET E-001 FOR ELECTRICAL NOTES, SYMBOLS, AND ABBREVIATIONS.
2. ALL FLOORBOX AND JUNCTION BOX LOCATIONS ARE APPROXIMATE. FINAL LOCATIONS BASED ON EQUIPMENT AND FURNITURE FINAL LOCATIONS.

KEYNOTES

1. JUNCTION BOX FOR FURNITURE WHIP. COORDINATE AND INSTALL PER MANUFACTURER'S RECOMMENDATIONS.
2. RECEPTACLE FOR MICROWAVE ON SHELF ABOVE COUNTERTOP, MOUNT RECEPTACLE AT 60" AFF.
3. GFCI RECEPTACLE ABOVE COUNTER DEDICATED FOR COFFEE POT.
4. GFCI RECEPTACLE ABOVE COUNTER DEDICATED FOR MICROWAVE.
5. DEDICATED RECEPTACLE FOR AV FLAT PANEL. RECEPTACLE TO BE INSTALLED IN AV WALL BOX. REFERENCE TA-SERIES DRAWINGS FOR DETAILS, MOUNTING HEIGHT, AND LOCATION.
6. AV RECESSED QUAD RECEPTACLE. COORDINATE MOUNTING HEIGHT AND LOCATION WITH AV INSTALLATION.
7. AV RECESSED DUPLEX RECETACLE. COORDINATE MOUNTING HEIGHT AND LOCATION WITH AV INSTALLATION.
8. AV RECESSED CLOCK RECEPTACLE. COORDINATE MOUNTING HEIGHT AND LOCATION WITH AV INSTALLATION.
9. JUNCTION BOX FOR VAV LOW VOLTAGE POWER. COORDINATE LOCATION AND QUANTITY WITH MECHANICAL INSTALLATION.
10. RECEPTACLE FOR ELECTRIC WATER COOLER. COORDINATE LOCATION WITH MANUFACTURER'S RECOMMENDATIONS.
11. DEDICATED DUPLEX RECEPTACLE FOR SYNCHRONIZED CLOCK SYSTEM. COORDINATE FINAL HEIGHT AND LOCATION WITH INSTALLATION OF CLOCK.
12. HARD-WIRED 120V CONNECTION FOR LAVATORY INFRARED FLUSH VALVE. COORDINATE FINAL LOCATION WITH INSTALLATION OF LAVATORY. INSTALL PER MANUFACTURER'S RECOMMENDATIONS.
13. HARD-WIRED 120V CONNECTION FOR WATER CLOSET INFRARED FLUSH VALVE. COORDINATE FINAL LOCATION WITH INSTALLATION OF WATER CLOSET. INSTALL PER MANUFACTURER'S RECOMMENDATIONS.
14. HARD-WIRED 120V CONNECTION FOR URINAL INFRARED FLUSH VALVE. COORDINATE FINAL LOCATION WITH INSTALLATION OF URINAL. INSTALL PER MANUFACTURER'S RECOMMENDATIONS.

KEYPLAN

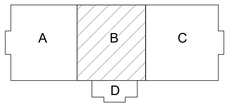

SCALE: 0'-0 1/8" = 1'-0"

A1 POWER - FIRST FLOOR PLAN - AREA B

SCALE: 1/8" = 1'-0" (EP110)

APPR	
DATE	
DESCRIPTION	
SYM	

NAVFAC

SEAL

WNM Jordan COMPANY – A JOINT VENTURE –

Michael Baker INTERNATIONAL
100 AIRSIDE DRIVE
MOON TOWNSHIP, PA 15108
A/E INFO

APPROVED

FOR COMMANDER NAVFAC

ACTIVITY
MARINE CORPS BASE CAMP LEJEUNE

SATISFACTORY TO DATE

DES	SD	DRW	LAK	CHK	YPS

PM

BRANCH MANAGER

CHIEF ENG/ARCH

FIRE PROTECTION

DEPARTMENT OF THE NAVY
NAVAL FACILITIES ENGINEERING COMMAND ~ MID-ATLANTIC
ROICC FLORENCE CAMP LEJEUNE
MCB CAMP LEJEUNE

NAVAL FACILITIES ENGINEERING COMMAND
JACKSONVILLE, NC
JACKSONVILLE, NC
P1338 II MEF SIMULATION/TRAINING CENTER
REPLACEMENT
POWER - FIRST FLOOR PLAN - AREA B

SCALE:	AS NOTED
EPROJECT NO.:	1590892
CONSTR. CONTR. NO.	N40085-20-C-0059
NAVFAC DRAWING NO.	
SHEET	OF

EP112

DP2 SUBMISSION – P1338 BUILDING - PRE-FINAL SUBMISSION

PLOTTED: 6/10/2021 5:44:01 PM

FILE NAME: BIM 360://MF PACKAGE 3/P1338 MEF SIM CTR-1590892-E.rvt

GENERAL NOTES

1 SEE SHEET E-001 FOR ELECTRICAL NOTES, SYMBOLS, AND ABBREVIATIONS.
2 ALL FLOORBOX AND JUNCTION BOX LOCATIONS ARE APPROXIMATE. FINAL LOCATIONS BASED ON EQUIPMENT AND FURNITURE FINAL LOCATIONS.

KEYNOTES

1 DEDICATED RECEPTACLE FOR AV FLAT PANEL. RECEPTACLE TO BE INSTALLED IN AV WALL BOX. REFERENCE TA-SERIES DRAWINGS FOR DETAILS, MOUNTING HEIGHT, AND LOCATION.
2 AV RECESSED DUPLEX RECETACLE. COORDINATE MOUNTING HEIGHT AND LOCATION WITH AV INSTALLATION.
3 JUNCTION BOX FOR VAV LOW VOLTAGE POWER. COORDINATE LOCATION AND QUANTITY WITH MECHANICAL INSTALLATION.
4 DEDICATED DUPLEX RECEPTACLE FOR SYNCHRONIZED CLOCK SYSTEM. COORDINATE FINAL HEIGHT AND LOCATION WITH INSTALLATION OF CLOCK.

KEYPLAN

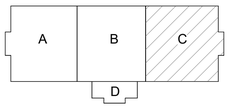

0 4'-0" 8'-0" 16'-0"
SCALE:0'-0 1/8" = 1'-0"

A1 POWER - FIRST FLOOR PLAN - AREA C

SCALE: 1/8" = 1'-0" (EP110)

DEPARTMENT OF THE NAVY	NAVAL FACILITIES ENGINEERING COMMAND ~ MID-ATLANTIC
ROICC FLORENCE CAMP LEJEUNE	JACKSONVILLE, NC
MCB CAMP LEJEUNE	JACKSONVILLE, NC
P1338 II MEF SIMULATION/TRAINING CENTER	REPLACEMENT
POWER - FIRST FLOOR PLAN - AREA C	
SCALE:	AS NOTED
EPROJECT NO.:	1590892
CONSTR. CONTR. NO.	N40085-20-C-0059
NAVFAC DRAWING NO.	
SHEET	OF
	EP113

NAVAL FACILITIES ENGINEERING COMMAND ~ MID-ATLANTIC, JACKSONVILLE, NC
RQ W.M. Jordan COMPANY ~A JOINT VENTURE~
Michael Baker INTERNATIONAL
100 AIRSIDE DRIVE MOON TOWNSHIP, PA 15108 A/E INFO
APPROVED
FOR COMMANDER NAVFAC
ACTIVITY: MARINE CORPS BASE CAMP LEJEUNE
SATISFACTORY TO DATE
DES SD | DRW LAK | CHK YPS
PM
BRANCH MANAGER
CHIEF ENG/ARCH
FIRE PROTECTION

APPR | DATE | DESCRIPTION | SYM

SEAL

DP2 SUBMISSION – P1338 BUILDING -PRE-FINAL SUBMISSION

PLOTTED: 6/10/2021 5:44:05 PM
FILE NAME: BIM 360://HF PACKAGE 3/P1338 MEF SIM CTR-1590892-E.rvt

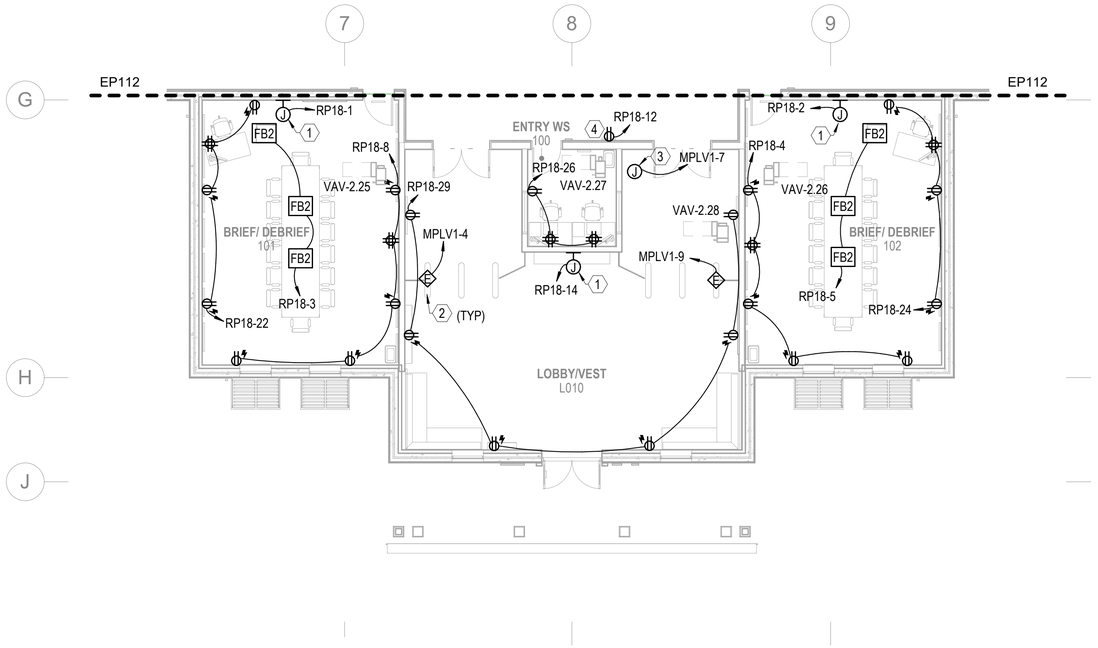

A1 POWER - FIRST FLOOR PLAN - AREA D

SCALE: 1/8" = 1'-0" (EP110)

GENERAL NOTES

1 SEE SHEET E-001 FOR ELECTRICAL NOTES, SYMBOLS, AND ABBREVIATIONS.

2 ALL FLOORBOX AND JUNCTION BOX LOCATIONS ARE APPROXIMATE. FINAL LOCATIONS BASED ON EQUIPMENT AND FURNITURE FINAL LOCATIONS.

KEYNOTES

1 DEDICATED RECEPTACLE FOR AV FLAT PANEL. RECEPTACLE TO BE INSTALLED IN AV WALL BOX. REFERENCE TA-SERIES DRAWINGS FOR DETAILS, MOUNTING HEIGHT, AND LOCATION.

2 POWER ELECTRICAL CONNECTION FOR TURNSTILE CONTROL GATE REMOTE POWER SUPPLY. COORDINATE FINAL POWER LOCATION WITH FINAL LOCATION OF REMOTE POWER SUPPLY. INSTALL PER MANUFACTURER'S RECOMMENDATIONS.

3 JUNCTION BOX FOR VAV LOW VOLTAGE POWER. COORDINATE LOCATION AND QUANTITY WITH MECHANICAL INSTALLATION.

4 DEDICATED DUPLEX RECEPTACLE FOR SYNCHRONIZED CLOCK SYSTEM. COORDINATE FINAL HEIGHT AND LOCATION WITH INSTALLATION OF CLOCK.

KEYPLAN

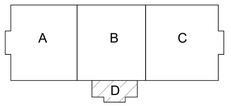

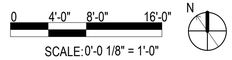

SYM	DESCRIPTION	DATE	APPR

SEAL

WJM Jordan COMPANY – A JOINT VENTURE –

Michael Baker INTERNATIONAL
100 AIRSIDE DRIVE
MOON TOWNSHIP, PA 15108
A/E INFO

APPROVED

FOR COMMANDER NAVFAC

ACTIVITY
MARINE CORPS BASE
CAMP LEJEUNE

SATISFACTORY TO DATE

DES	SD	DRW	LAK	CHK	YPS

PM

BRANCH MANAGER

CHIEF ENG/ARCH

FIRE PROTECTION

DEPARTMENT OF THE NAVY
NAVAL FACILITIES ENGINEERING COMMAND
ROICC FLORENCE CAMP LEJEUNE
MCB CAMP LEJEUNE

NAVAL FACILITIES ENGINEERING COMMAND – MID-ATLANTIC
JACKSONVILLE, NC

JACKSONVILLE, NC
P1338 II MEF SIMULATION/TRAINING CENTER
REPLACEMENT

POWER - FIRST FLOOR PLAN - AREA D

SCALE:	AS NOTED
EPROJECT NO.:	1590892
CONSTR. CONTR. NO.	N40085-20-C-0059
NAVFAC DRAWING NO.	
SHEET	OF

EP114

DP2 SUBMISSION – P1338 BUILDING - PRE-FINAL SUBMISSION

PLOTTED: 6/10/2021 5:44:08 PM

FILE NAME: BIM 360://HF PACKAGE 3/P1338 MEF SIM CTR-1590892-E.rvt

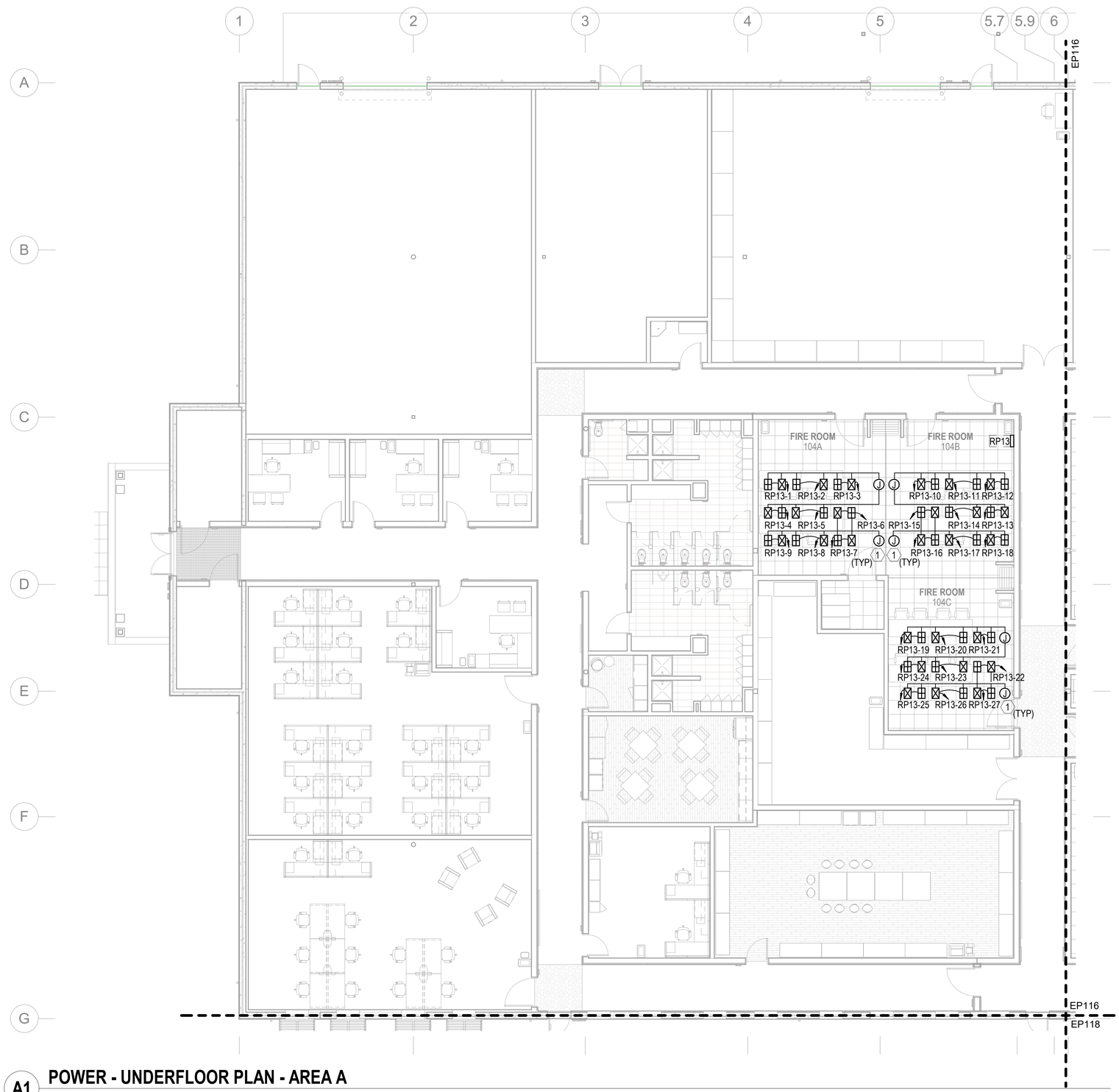

A1 POWER - UNDERFLOOR PLAN - AREA A

SCALE: 1/8" = 1'-0"

GENERAL NOTES

1 SEE SHEET E-001 FOR ELECTRICAL NOTES, SYMBOLS, AND ABBREVIATIONS.
2 ALL FLOORBOX AND JUNCTION BOX LOCATIONS ARE APPROXIMATE. FINAL LOCATIONS BASED ON EQUIPMENT AND FURNITURE FINAL LOCATIONS.

KEYNOTES

1 UNDERFLOOR MODULAR POWER MAIN DISTRIBUTION BOX. PREWIRED WITH HOME RUN CABLE BACK TO DESIGNATED RP PANEL WITHIN THE ROOM SERVING. COORDINATE FINAL LOCATION WITH INSTALLATION OF RAISED ACCESS FLOORING AND TELECOMMUNICATIONS CABLE TRAY. INSTALL PER MANUFACTURER'S RECOMMENDATIONS. FOR MORE INFORMATION SEE SPECIFICATIONS AND DETAILS ON SHEETS E-502 AND E-503.

KEYPLAN

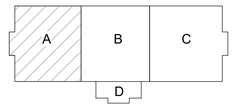

0 4'-0" 8'-0" 16'-0"
SCALE: 0'-0 1/8" = 1'-0"

N

SYM	DESCRIPTION	DATE	APPR

SEAL

W.M. Jordan COMPANY – A JOINT VENTURE –

Michael Baker INTERNATIONAL
100 AIRSIDE DRIVE
MOON TOWNSHIP, PA 15108
A/E INFO

APPROVED
FOR COMMANDER NAVFAC
ACTIVITY
MARINE CORPS BASE CAMP LEJEUNE
SATISFACTORY TO DATE
DES SD | DRW LAK | CHK YPS
PM
BRANCH MANAGER
CHIEF ENG/ARCH
FIRE PROTECTION

DEPARTMENT OF THE NAVY
NAVAL FACILITIES ENGINEERING COMMAND
ROICC FLORENCE CAMP LEJEUNE
NAVAL FACILITIES ENGINEERING COMMAND ~ MID-ATLANTIC
JACKSONVILLE, NC
MCB CAMP LEJEUNE
JACKSONVILLE, NC
P1338 II MEF SIMULATION/TRAINING CENTER
REPLACEMENT
POWER - UNDERFLOOR PLAN - AREA A

SCALE: AS NOTED
EPROJECT NO.: 1590892
CONSTR. CONTR. NO.
N40085-20-C-0059
NAVFAC DRAWING NO.
SHEET OF
EP115

DP2 SUBMISSION – P1338 BUILDING - PRE-FINAL SUBMISSION

PLOTTED: 6/10/2021 5:44:12 PM
FILE NAME: BIM 360://HF PACKAGE 3/P1338 MEF SIM CTR-1590892-E.rvt

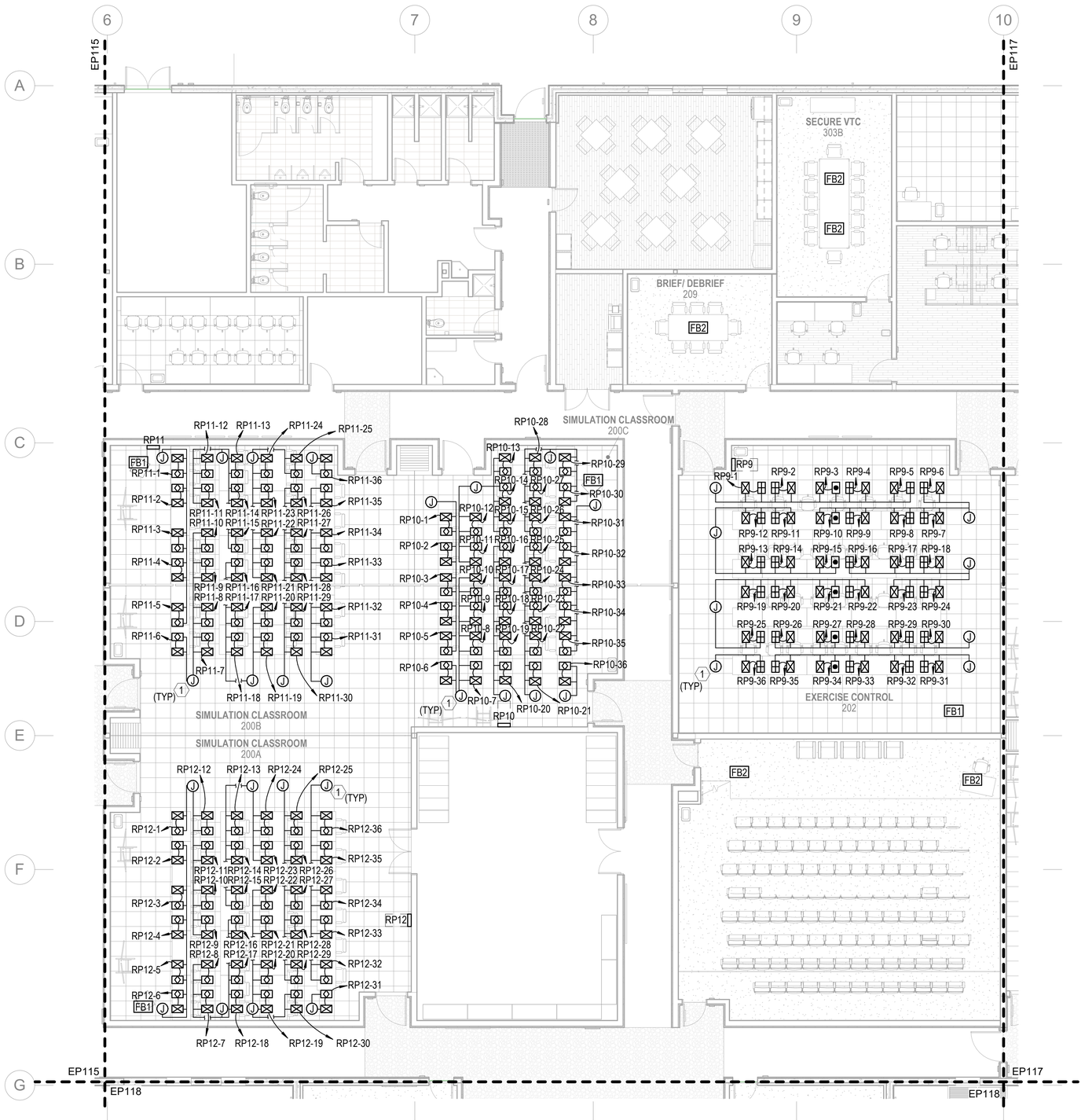

A1 POWER - UNDERFLOOR PLAN - AREA B

SCALE: 1/8" = 1'-0"

GENERAL NOTES

1 SEE SHEET E-001 FOR ELECTRICAL NOTES, SYMBOLS, AND ABBREVIATIONS.

2 ALL FLOORBOX AND JUNCTION BOX LOCATIONS ARE APPROXIMATE. FINAL LOCATIONS BASED ON EQUIPMENT AND FURNITURE FINAL LOCATIONS.

KEYNOTES

1 UNDERFLOOR MODULAR POWER MAIN DISTRIBUTION BOX. PREWIRED WITH HOME RUN CABLE BACK TO DESIGNATED RP PANEL WITHIN THE ROOM SERVING. COORDINATE FINAL LOCATION WITH INSTALLATION OF RAISED ACCESS FLOORING AND TELECOMMUNICATIONS CABLE TRAY. INSTALL PER MANUFACTURER'S RECOMMENDATIONS. FOR MORE INFORMATION SEE SPECIFICATIONS AND DETAILS ON SHEETS E-502 AND E-503.

KEYPLAN

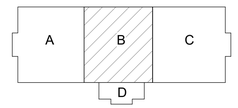

0 4'-0" 8'-0" 16'-0"

SCALE: 0'-0 1/8" = 1'-0"

N

APPR	DATE	DESCRIPTION	SYM

SEAL

RQ W.M. Jordan COMPANY – A JOINT VENTURE –

Michael Baker INTERNATIONAL

100 AIRSIDE DRIVE
MOON TOWNSHIP, PA 15108 A/E INFO

APPROVED

FOR COMMANDER NAVFAC

ACTIVITY
MARINE CORPS BASE
CAMP LEJEUNE

SATISFACTORY TO DATE

DES SD | DRW LAK | CHK YPS

PM

BRANCH MANAGER

CHIEF ENG/ARCH

FIRE PROTECTION

DEPARTMENT OF THE NAVY
NAVAL FACILITIES ENGINEERING COMMAND
ROICC FLORENCE CAMP LEJEUNE
MCB CAMP LEJEUNE

NAVAL FACILITIES ENGINEERING COMMAND – MID-ATLANTIC
JACKSONVILLE, NC

JACKSONVILLE, NC
P1338 II MEF SIMULATION/TRAINING CENTER
REPLACEMENT

POWER - UNDERFLOOR PLAN - AREA B

SCALE: AS NOTED

EPROJECT NO.: 1590892

CONSTR. CONTR. NO.
N40085-20-C-0059

NAVFAC DRAWING NO.

SHEET OF

EP116

DP2 SUBMISSION – P1338 BUILDING - PRE-FINAL SUBMISSION

PLOTTED: 6/10/2021 5:44:18 PM

FILE NAME: BIM 360://HF PACKAGE 3/P1338 MEF SIM CTR-1590892-E.rvt

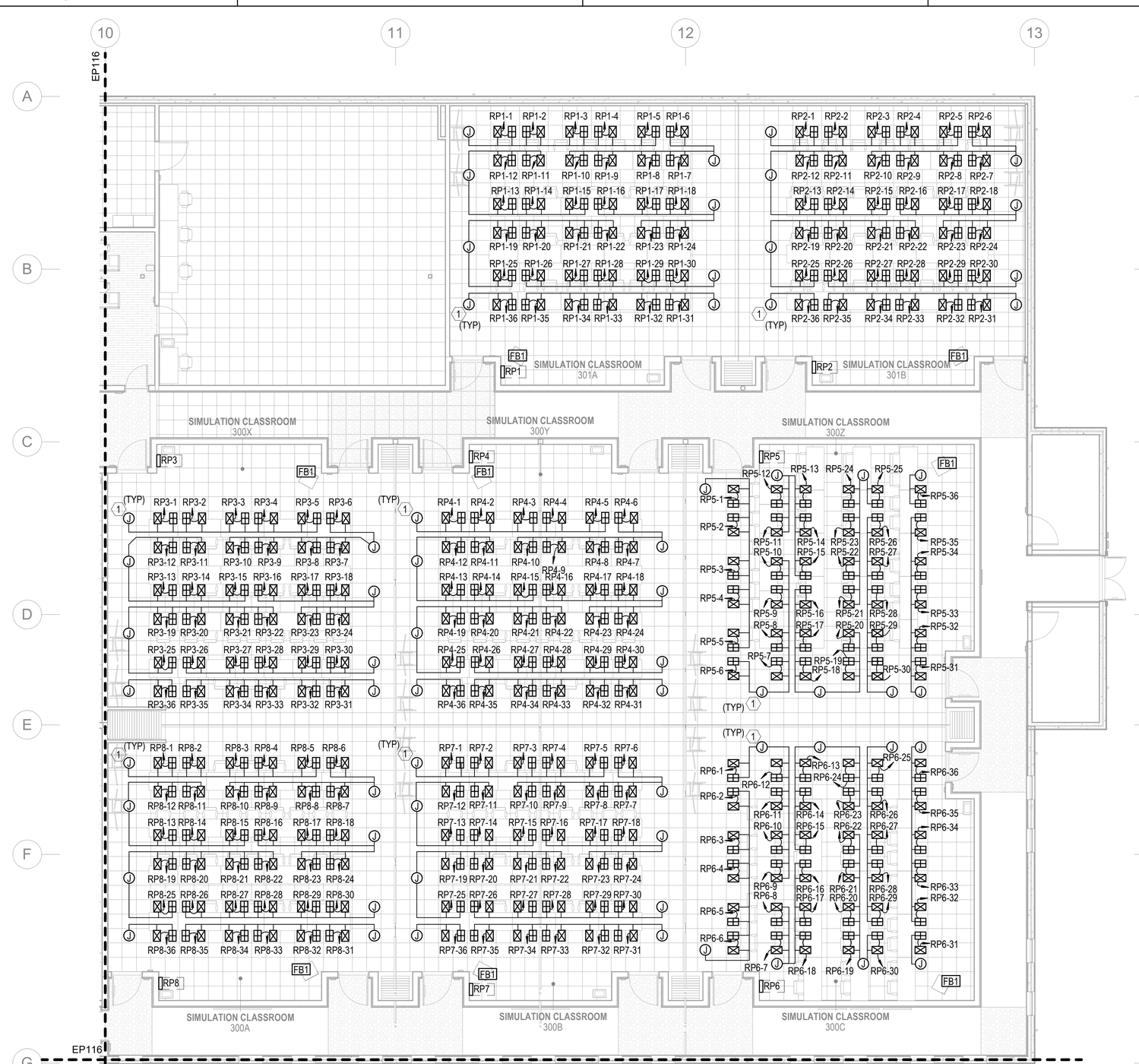

GENERAL NOTES

1 SEE SHEET E-001 FOR ELECTRICAL NOTES, SYMBOLS, AND ABBREVIATIONS.
2 ALL FLOORBOX AND JUNCTION BOX LOCATIONS ARE APPROXIMATE. FINAL LOCATIONS BASED ON EQUIPMENT AND FURNITURE FINAL LOCATIONS.

KEYNOTES

1 UNDERFLOOR MODULAR POWER MAIN DISTRIBUTION BOX. PREWIRED WITH HOME RUN CABLE BACK TO DESIGNATED RP PANEL WITHIN THE ROOM SERVING. COORDINATE FINAL LOCATION WITH INSTALLATION OF RAISED ACCESS FLOORING AND TELECOMMUNICATIONS CABLE TRAY. INSTALL PER MANUFACTURER'S RECOMMENDATIONS. FOR MORE INFORMATION SEE SPECIFICATIONS AND DETAILS ON SHEETS E-502 AND E-503.

KEYPLAN

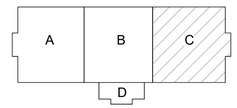

A1 POWER - UNDERFLOOR PLAN - AREA C

SCALE: 1/8" = 1'-0"

0 4'-0" 8'-0" 16'-0"

SCALE: 0'-0 1/8" = 1'-0"

N

APPR | DATE | DESCRIPTION | SYM

SEAL

RQ WM Jordan COMPANY – A JOINT VENTURE –

Michael Baker INTERNATIONAL
100 AIRSIDE DRIVE
MOON TOWNSHIP, PA 15108 A/E INFO

APPROVED

FOR COMMANDER NAVFAC

ACTIVITY
MARINE CORPS BASE
CAMP LEJEUNE

SATISFACTORY TO DATE

DES SD | DRW LAK | CHK YPS

PM

BRANCH MANAGER

CHIEF ENG/ARCH

FIRE PROTECTION

DEPARTMENT OF THE NAVY
NAVAL FACILITIES ENGINEERING COMMAND
ROICC FLORENCE CAMP LEJEUNE
MCB CAMP LEJEUNE

NAVAL FACILITIES ENGINEERING COMMAND – MID-ATLANTIC
JACKSONVILLE, NC

JACKSONVILLE, NC
P1338 II MEF SIMULATION/TRAINING CENTER
REPLACEMENT
POWER - UNDERFLOOR PLAN - AREA C

SCALE: AS NOTED
EPROJECT NO.: 1590892
CONSTR. CONTR. NO.
N40085-20-C-0059
NAVFAC DRAWING NO.
SHEET OF

EP117

DP2 SUBMISSION – P1338 BUILDING - PRE-FINAL SUBMISSION

PLOTTED: 6/10/2021 5:44:24 PM

FILE NAME: BIM 360://HF PACKAGE 3/P1338 MEF SIM CTR-1590892-E.rvt

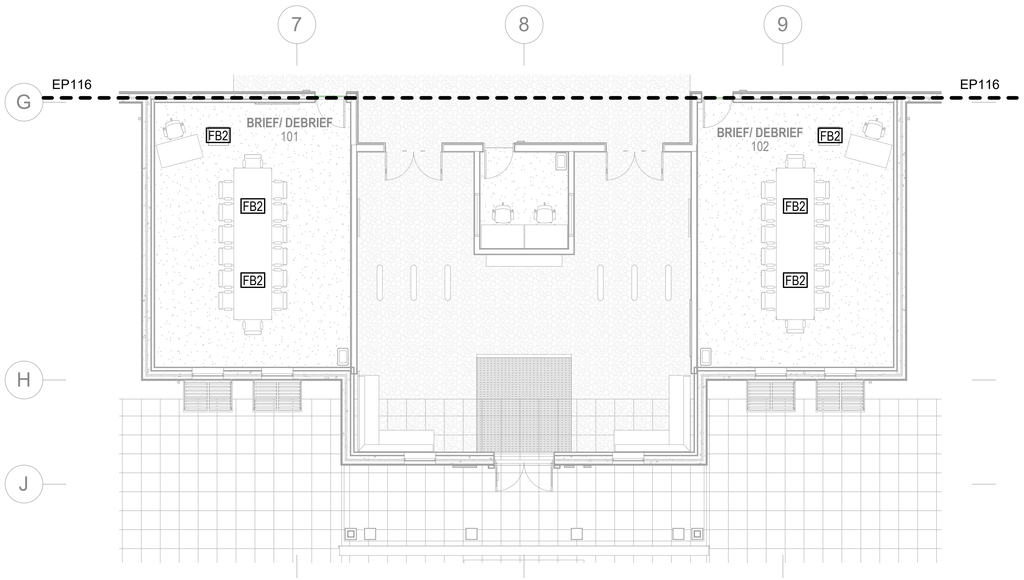

A1 POWER - UNDERFLOOR PLAN - AREA D

SCALE: 1/8" = 1'-0"

GENERAL NOTES

1 SEE SHEET E-001 FOR ELECTRICAL NOTES, SYMBOLS, AND ABBREVIATIONS.
2 ALL FLOORBOX AND JUNCTION BOX LOCATIONS ARE APPROXIMATE. FINAL LOCATIONS BASED ON EQUIPMENT AND FURNITURE FINAL LOCATIONS.

KEYPLAN

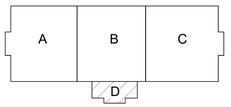

0 4'-0" 8'-0" 16'-0"

SCALE: 0'-0 1/8" = 1'-0"

N

SYM	DESCRIPTION	DATE	APPR

SEAL

Michael Baker INTERNATIONAL
100 AIRSIDE DRIVE
MOON TOWNSHIP, PA 15108
A/E INFO

APPROVED

FOR COMMANDER NAVFAC

ACTIVITY
MARINE CORPS BASE
CAMP LEJEUNE

SATISFACTORY TO DATE

DES SD | DRW LAK | CHK YPS

PM

BRANCH MANAGER

CHIEF ENG/ARCH

FIRE PROTECTION

DEPARTMENT OF THE NAVY
NAVAL FACILITIES ENGINEERING COMMAND
ROICC FLORENCE CAMP LEJEUNE
MCB CAMP LEJEUNE

NAVAL FACILITIES ENGINEERING COMMAND ~ MID-ATLANTIC
JACKSONVILLE, NC

JACKSONVILLE, NC
P1338 II MEF SIMULATION/TRAINING CENTER
REPLACEMENT

POWER - UNDERFLOOR PLAN - AREA D

SCALE: AS NOTED
EPROJECT NO.: 1590892
CONSTR. CONTR. NO.
N40085-20-C-0059
NAVFAC DRAWING NO.
SHEET OF

EP118

DP2 SUBMISSION – P1338 BUILDING - PRE-FINAL SUBMISSION

PLOTTED: 6/10/2021 5:44:27 PM
FILE NAME: BIM 360://HF PACKAGE 3/P1338 MEF SIM CTR-1590892-E.rvt

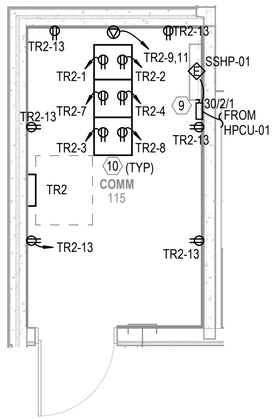

POWER - ENLARGED PLAN C1

SCALE: 1/4" = 1'-0" EP111

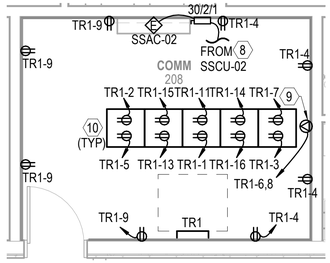

POWER - ENLARGED PLAN C2

SCALE: 1/4" = 1'-0" EP111

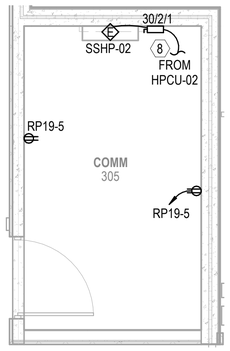

POWER - ENLARGED PLAN C3

SCALE: 1/4" = 1'-0" EP111

KEYNOTES

1. AV RECESSED QUAD RECEPTACLE. COORDINATE MOUNTING HEIGHT AND LOCATION WITH AV INSTALLATION.
2. NEMA L5-30P PLUG FOR 3KVA UPS INPUT CONNECTION.
3. NEMA L5-15P PLUG FOR 1KVA UPS INPUT CONNECTION.
4. POWER ELECTRICAL CONNECTION FOR HARDWIRE INPUT TO 10KVA UPS.
5. NEMA L6-30R RECEPTACLE FOR 2KVA UPS INPUT CONNECTION.
6. PROVIDE 4-INCH THICK CONCRETE PAD WITH CHAMFERED EDGES FOR FLOOR MOUNTED EQUIPMENT. EXTEND PAD 6-INCH BEYOND EDGE OF EQUIPMENT.
7. PROVIDE FIRE-RESISTANT, HEAT-INSULATING BARRIER. COORDINATE WITH FINAL LOCATION OF TRANSFORMER.
8. INDOOR UNIT POWERED BY OUTDOOR UNIT. CONTROL WIRING BETWEEN INDOOR AND OUTDOOR UNITS BY MECHANICAL CONTRACTOR. CONDUIT AND POWER WIRING BETWEEN INDOOR AND OUTDOOR UNITS BY ELECTRICAL CONTRACTOR. SEE MECH. SCHEDULES FOR ADDITIONAL INFORMATION.
9. L6-30R TWIST LOCK RECEPTACLE - 208V, 1PH, 30A. RECEPTACLE MUST BE INSTALLED 6" ABOVE AND 6" BEHIND TELECOM RACKS ON ITS OWN DEDICATED STRUCTURE.
10. TWO (2) DEDICATED 20AMP DUPLEX RECEPTACLES PER TELECOMMUNICATIONS RACK. COORDINATE MOUNTING AND INSTALLATION OF THE RECEPTACLES WITH THE ACTIVITY.
11. TWO (2) DEDICATED 20AMP DUPLEX RECEPTACLES PER SERVER RACK. COORDINATE MOUNTING AND INSTALLATION OF THE RECEPTACLES WITH THE ACTIVITY.
12. CEILING MOUNTED JUNCTION BOX FOR POWER TO LOUVER TRANSFORMERS. 120V POWER SHALL BE PROVIDED BY THE EC TO EACH TRANSFORMER. LOW VOLTAGE WIRING FROM THE TRANSFORMER TO THE LOUVER IS BY OTHERS. COORDINATE LOCATION AND QUANTITY WITH MECHANICAL INSTALLATION.
13. EMERGENCY POWER OFF (EPO) BOX. EACH EPO BOX HAS AN EIGHT (8) CIRCUIT CAPACITY WITH ONE CIRCUIT BEING REQUIRED FOR EACH UPS. USE THE SAME BRANCH CIRCUIT FOR ALL EPO BOXES IN THE ROOM. SEE DETAILS ON SHEETS E-504 AND E-505 FOR MORE INFORMATION. INSTALL PER MANUFACTURER'S RECOMMENDATIONS.

GENERAL NOTES

1. SEE SHEET E-001 FOR ELECTRICAL NOTES, SYMBOLS, AND ABBREVIATIONS.
2. ALL FLOORBOX AND JUNCTION BOX LOCATIONS ARE APPROXIMATE. FINAL LOCATIONS BASED ON EQUIPMENT AND FURNITURE FINAL LOCATIONS.

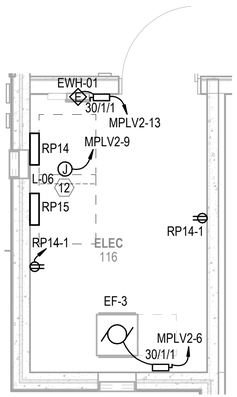

POWER - ENLARGED PLAN A1

SCALE: 1/4" = 1'-0" EP111

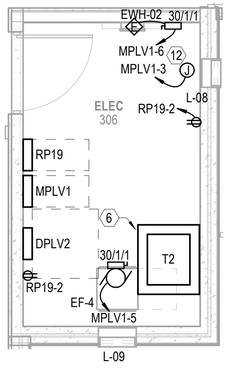

POWER - ENLARGED PLAN A2

SCALE: 1/4" = 1'-0" EP111

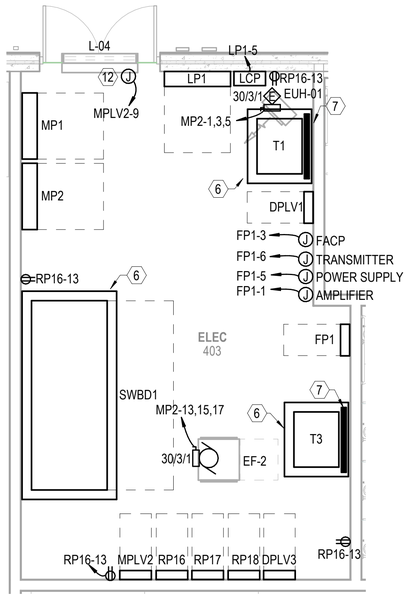

POWER - ENLARGED PLAN A3

SCALE: 1/4" = 1'-0" EP111

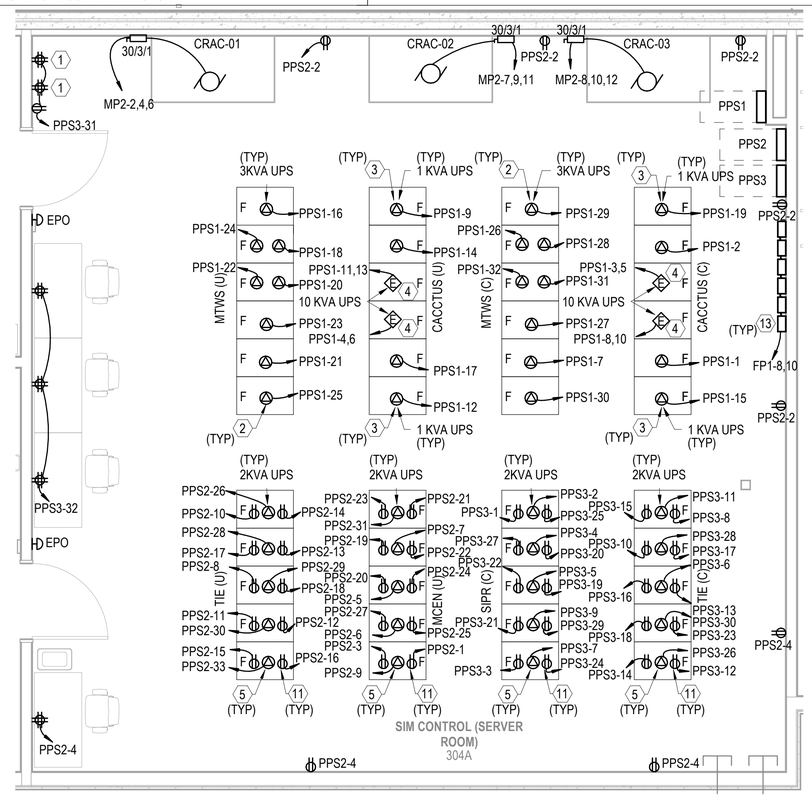

POWER - ENLARGED PLAN A4

SCALE: 1/4" = 1'-0" EP111

0 2'-0" 4'-0" 8'-0"

SCALE:0'-0 1/4" = 1'-0"

N

APPR	DATE	DESCRIPTION	SYM

NAVFAC

SEAL

WNJ Jordan Company – A JOINT VENTURE –

RQ

Michael Baker INTERNATIONAL

100 AIRSIDE DRIVE
MOON TOWNSHIP, PA 15108 A/E INFO

APPROVED

FOR COMMANDER NAVFAC

ACTIVITY
MARINE CORPS BASE CAMP LEJEUNE

SATISFACTORY TO DATE

DES SD | DRW LAK | CHK YPS

PM

BRANCH MANAGER

CHIEF ENG/ARCH

FIRE PROTECTION

NAVAL FACILITIES ENGINEERING COMMAND ~ MID-ATLANTIC
JACKSONVILLE, NC

JACKSONVILLE, NC
P1338 II MEF SIMULATION/TRAINING CENTER
REPLACEMENT

ELECTRICAL - ENLARGED PLANS

DEPARTMENT OF THE NAVY
NAVAL FACILITIES ENGINEERING COMMAND
ROICC FLORENCE CAMP LEJEUNE
MCB CAMP LEJEUNE

SCALE: AS NOTED

EPROJECT NO.: 1590892

CONSTR. CONTR. NO.
N40085-20-C-0059

NAVFAC DRAWING NO.

SHEET OF

E-401

DP2 SUBMISSION – P1338 BUILDING - PRE-FINAL SUBMISSION

PLOTTED: 6/10/2021 5:41:59 PM

FILE NAME: BIM 360://HF PACKAGE 3/P1338 MEF SIM CTR-1590892-E.rvt

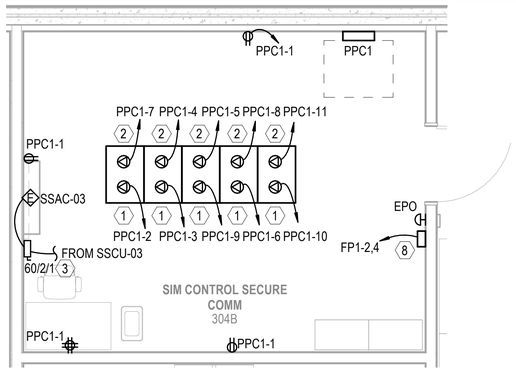

POWER - ENLARGED PLAN

SCALE: 1/4" = 1'-0" EP111 C1

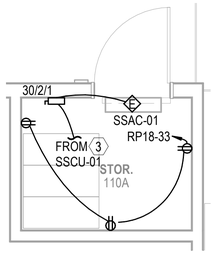

POWER - ENLARGED PLAN

SCALE: 1/4" = 1'-0" EP111 C2

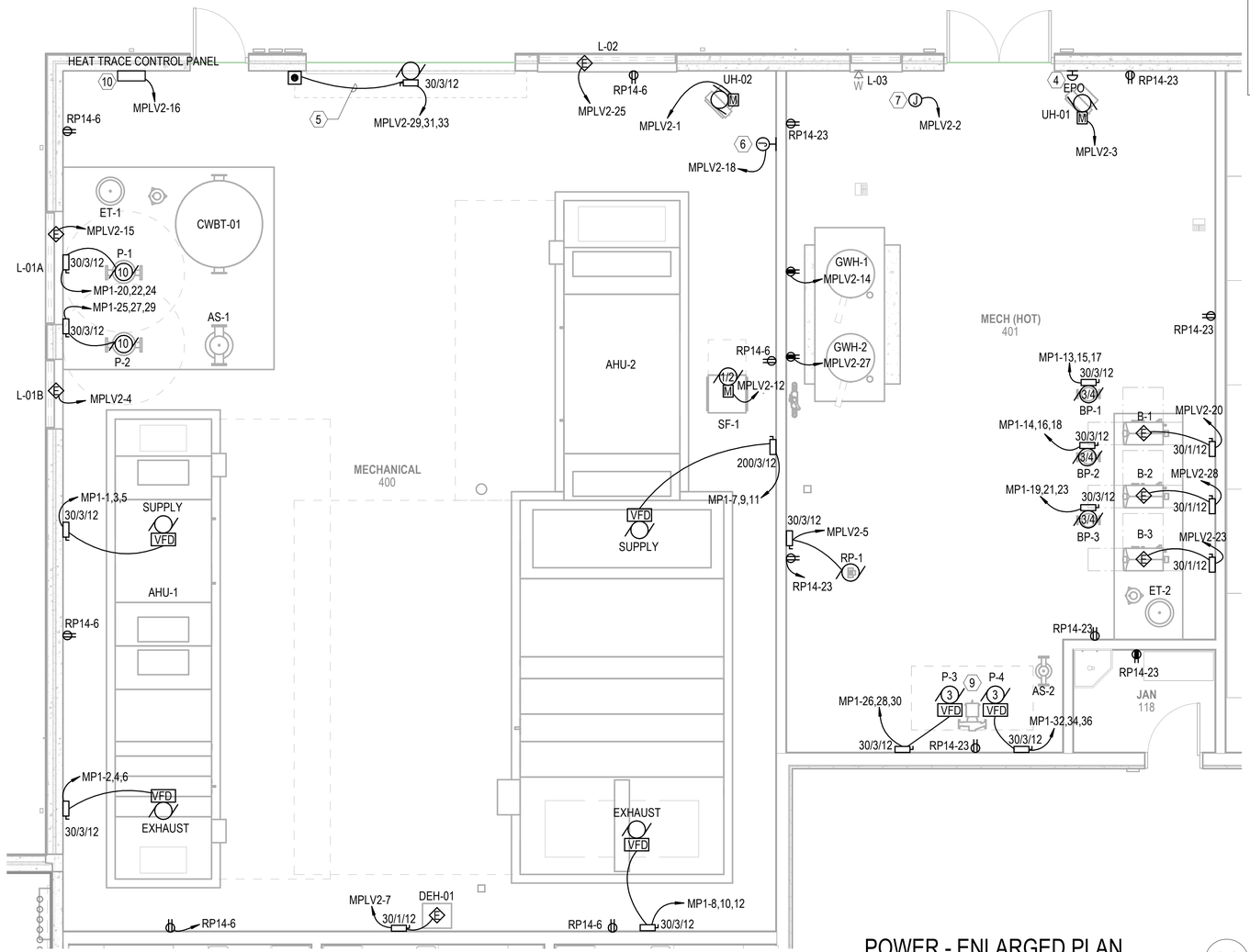

POWER - ENLARGED PLAN

SCALE: 1/4" = 1'-0" EP111 A1

KEYNOTES

1. NEMA L5-30R RECEPTACLE FOR TELECOMMUNICATIONS RACK. MOUNT RECEPTACLE ABOVE TELECOMMUNICATIONS RACK.
2. NEMA 5-20R RECEPTACLE FOR TELECOMMUNICATIONS RACK. MOUNT RECEPTACLE ABOVE TELECOMMUNICATIONS RACK.
3. INDOOR UNIT POWERED BY OUTDOOR UNIT. CONTROL WIRING BETWEEN INDOOR AND OUTDOOR UNITS BY MECHANICAL CONTRACTOR. CONDUIT AND POWER WIRING BETWEEN INDOOR AND OUTDOOR UNITS BY ELECTRICAL CONTRACTOR. SEE MECH. SCHEDULES FOR ADDITIONAL INFORMATION.
4. PROVIDE EMERGENCY POWER OFF MUSHROOM STYLE PUSH OFF/PULL ON WITH CLEAR COVER. PROVIDE LABEL FOR SWITCH: "EMERGENCY BOILER SHUT OFF SWITCH. PULL TO RESET." COMPLY WITH ALL ASME CSD-1 REQUIREMENTS. CONFIRM LOCATION WITH AUTHORITY HAVING JURISDICTION (AHJ) FOR APPROVAL PRIOR TO INSTALLING.
5. CONDUIT BY ELECTRICAL CONTRACTOR. LOW VOLTAGE WIRING BY OTHERS.
6. PROVIDE 120V POWER CONNECTION FOR DDC CONTROLLER. COORDINATE EXACT LOCATION WITH MECHANICAL/CONTROLS CONTRACTOR PRIOR TO ROUGH IN.
7. CEILING MOUNTED JUNCTION BOX FOR POWER TO LOUVER TRANSFORMERS. 120V POWER SHALL BE PROVIDED BY THE EC TO EACH TRANSFORMER. LOW VOLTAGE WIRING FROM THE TRANSFORMER TO THE LOUVER IS BY OTHERS. COORDINATE LOCATION AND QUANTITY WITH MECHANICAL INSTALLATION.
8. EMERGENCY POWER OFF (EPO) BOX. EACH EPO BOX HAS AN EIGHT (8) CIRCUIT CAPACITY WITH ONE CIRCUIT BEING REQUIRED FOR EACH UPS. USE THE SAME BRANCH CIRCUIT FOR ALL EPO BOXES IN THE ROOM. SEE DETAILS ON SHEETS E-504 AND E-505 FOR MORE INFORMATION. INSTALL PER MANUFACTURER'S RECOMMENDATIONS.
9. PUMPS ARE VERTICALLY STACKED. COORDINATE WITH INSTALLATION OF THE PUMPS.
10. ELECTRICAL CONNECTION FOR CHILLER HEAT TRACING CONTROL PANEL. COORDINATE EXACT POWER CONNECTION LOCATION WITH MECHANICAL DRAWINGS PRIOR TO ROUGH IN. PROVIDE 20A BREAKER WITH 30mA GROUND FAULT TRIP. ALL WIRING AND INSTALLATION PER MANUFACTURER'S RECOMMENDATIONS.

GENERAL NOTES

1. SEE SHEET E-001 FOR ELECTRICAL NOTES, SYMBOLS, AND ABBREVIATIONS.
2. ALL FLOORBOX AND JUNCTION BOX LOCATIONS ARE APPROXIMATE. FINAL LOCATIONS BASED ON EQUIPMENT AND FURNITURE FINAL LOCATIONS.

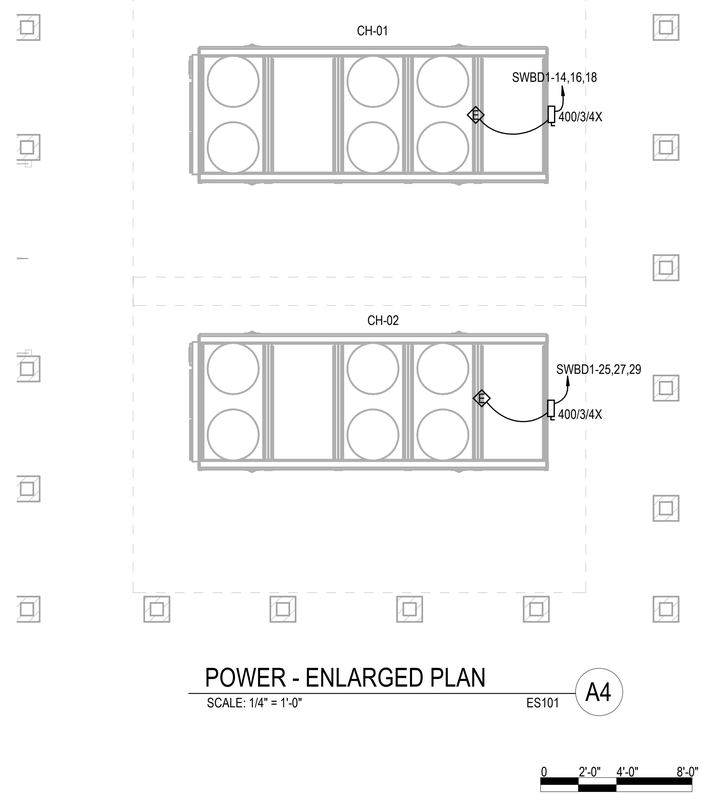

POWER - ENLARGED PLAN

SCALE: 1/4" = 1'-0" ES101 A4

SCALE: 0'-0 1/4" = 1'-0"

APPR	DATE	DESCRIPTION	SYM

SEAL

W.M. Jordan COMPANY – A JOINT VENTURE –

Michael Baker INTERNATIONAL
100 AIRSIDE DRIVE
MOON TOWNSHIP, PA 15108
A/E INFO

APPROVED

FOR COMMANDER NAVFAC

ACTIVITY
MARINE CORPS BASE
CAMP LEJEUNE

SATISFACTORY TO DATE

DES SD | DRW LAK | CHK YPS

PM

BRANCH MANAGER

CHIEF ENG/ARCH

FIRE PROTECTION

DEPARTMENT OF THE NAVY
NAVAL FACILITIES ENGINEERING COMMAND ~ MID-ATLANTIC
ROICC FLORENCE CAMP LEJEUNE
MCB CAMP LEJEUNE

NAVAL FACILITIES ENGINEERING COMMAND
JACKSONVILLE, NC

JACKSONVILLE, NC
P1338 II MEF SIMULATION/TRAINING CENTER
REPLACEMENT

ELECTRICAL - ENLARGED PLANS

SCALE: AS NOTED
EPROJECT NO.: 1590892
CONSTR. CONTR. NO.
N40085-20-C-0059
NAVFAC DRAWING NO.
SHEET OF

E-402

DP2 SUBMISSION – P1338 BUILDING - PRE-FINAL SUBMISSION

PLOTTED: 6/10/2021 5:42:04 PM

FILE NAME: BIM 360://HF PACKAGE 3/P1338 MEF SIM CTR-1590892-E.rvt

FIXTURE: A1, A2, A3, B1, C1

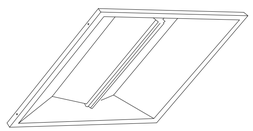

LUMINAIRE REQUIREMENTS:

1. HOUSING - DIE-FORMED, COLD ROLLED STEEL, WITH ONE-PIECE LOWER REFLECTOR HAVING TEXTURED, HIGH REFLECTANCE, WHITE POLYESTER POWDER-COATED FINISH. OPTIONAL SIZES OF 1FT x 4FT, 2FT x 2FT, AND 2FT x 4FT AVAILABLE.
2. LIGHT SOURCE - UPWARD-FACING LEDS WITH DIFFUSE LENS TO ELIMINATE DIRECT VIEW OF LIGHT SOURCE. 4000K COLOR TEMPERATURE UON, MAXIMUM BINNING TOLERANCE OF A 4-STEP MCADAM ELLIPSE, MINIMUM EFFICACY OF 90 LUMENS/WATT, WITH A MINIMUM CRI OF 82. INITIAL LUMEN OUTPUT AS INDICATED IN LUMINAIRE SCHEDULE.
3. DRIVER - REPLACEABLE, INTEGRAL, HIGH-EFFICIENCY DRIVER WITH MINIMUM 0.9 PF, OPERATING VOLTAGE OF 120-277V, THERMAL MANAGEMENT, < 20% TOTAL HARMONIC DISTORTION. STEP-DIMMABLE OR FULLY DIMMABLE AS INDICATED IN LUMINAIRE SCHEDULE.
4. CERTIFICATION - UL 1598, DAMP LOCATION, DLC QUALIFIED, AND ROHS COMPLIANT. COMPLIES WITH LM79, LM80 AND TM21 TESTING STANDARDS. IC RATED WHEN INDICATED.
5. MOUNTING - RECESSED IN SUSPENDED ACOUSTICAL TILE OR HARD CEILING.
6. THIS SKETCH IS A NON-PROPRIETARY GRAPHIC REPRESENTATION OF A LUMINAIRE THAT MAY MEET THE SPECIFICATION REQUIREMENTS. IT IS NOT INTENDED TO INDICATE A CERTAIN MANUFACTURER OR PREFERENCE.

DIRECT/INDIRECT LED TROFFER

REVISED:	APRIL 2016	LIGHTING PLATE:	NL-1

FIXTURE: E1, S1

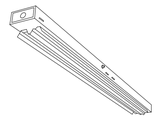

LUMINAIRE REQUIREMENTS:

1. HOUSING - DIE-FORMED, COLD-ROLLED STEEL, WITH REINFORCEMENT RIBS FOR RIGIDITY AND SPECULAR ALUMINUM OR HIGHLY-REFLECTIVE PAINTED STEEL REFLECTORS. OPTIONAL LENGTHS OF 4FT OR 8FT.
2. FINISH - MULTI-STAGE PHOSPHATE BONDING TREATMENT FINISHED WITH HIGH-REFLECTANCE, WHITE POLYESTER POWDER COAT, PAINTED AFTER FABRICATION.
3. LIGHT SOURCE - SOLID STATE LEDS WITH MINIMUM 50K HOURS RATED LIFE AT L70, 4000K CCT UON, MINIMUM 80 CRI, MAXIMUM 4-STEP MCADAM ELLIPSE BINNING TOLERANCE FOR COLOR CONSISTENCY, AND MINIMUM EFFICACY OF 100 LUMENS/WATT. INITIAL LUMEN OUTPUT AS INDICATED IN LUMINAIRE SCHEDULE.
4. DRIVER - REPLACEABLE, INTEGRAL, HIGH-EFFICIENCY DRIVER WITH MINIMUM 0.9 PF, OPERATING VOLTAGE OF 120-277V, THERMAL MANAGEMENT, < 20% TOTAL HARMONIC DISTORTION. ON-OFF CONTROL, STEP-DIMMABLE OR FULLY DIMMABLE AS INDICATED.
5. CERTIFICATION - UL 1598, DAMP LOCATION, DLC QUALIFIED, AND ROHS COMPLIANT. COMPLIES WITH LM79, LM80 AND TM21 TESTING STANDARDS. UL 924 WHEN EQUIPPED WITH EMERGENCY BATTERY BACK-UP.
6. MOUNTING - SURFACE ON CEILING OR SUSPENDED
7. OPTIONS - WIRE GUARD, CHAIN, STEM OR SWIVEL STEM HANGERS.
8. THIS SKETCH IS A NON-PROPRIETARY GRAPHIC REPRESENTATION OF A LUMINAIRE THAT MAY MEET THE SPECIFICATION REQUIREMENTS. IT IS NOT INTENDED TO INDICATE A CERTAIN MANUFACTURER OR PREFERENCE.

LED INDUSTRIAL STRIP

REVISED:	APRIL 2016	LIGHTING PLATE:	NL-7

FIXTURE: D1, D2, D3, D4, D5

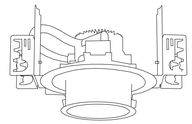

LUMINAIRE REQUIREMENTS:

1. HOUSING - DIE-FORMED, COLD-ROLLED STEEL, OR FORGED ALUMINUM WITH HEAT SINK. DRIVER MUST BE ACCESSIBLE FROM BOTTOM OF LUMINAIRE. PROVIDE T-BAR HANGERS FOR INSTALLATION IN ACOUSTICAL TILE CEILINGS OR TABS WHEN MOUNTING IN HARD CEILINGS.
2. REFLECTOR AND TRIM - SPECIFICATION GRADE, LOW IRRIDESCENT, SPECULAR ALUMINUM REFLECTOR WITH METALLIC OR PAINTED TRIM RING.
3. LIGHT SOURCE - SOLID STATE LEDS WITH MINIMUM 50K HOURS RATED LIFE AT L70, 4000K CCT UON, MINIMUM 80 CRI, MAXIMUM 4-STEP MCADAM ELLIPSE BINNING TOLERANCE FOR COLOR CONSISTENCY, AND MINIMUM EFFICACY OF 90 LUMENS/WATT. INITIAL LUMEN OUTPUT AS INDICATED IN LUMINAIRE SCHEDULE.
4. DRIVER - REPLACEABLE, INTEGRAL, HIGH-EFFICIENCY DRIVER WITH MINIMUM 0.9 PF, OPERATING VOLTAGE OF 120-277V, THERMAL MANAGEMENT, < 20% TOTAL HARMONIC DISTORTION. ON-OFF CONTROL, STEP-DIMMABLE OR FULLY DIMMABLE AS INDICATED.
5. CERTIFICATION - UL 1598, DAMP LOCATION, DLC QUALIFIED, AND ROHS COMPLIANT. COMPLIES WITH LM79, LM80 AND TM21 TESTING STANDARDS. UL 924 WHEN EQUIPPED WITH EMERGENCY BATTERY BACK-UP.
6. MOUNTING - RECESSED IN HARD OR ACOUSTICAL TILE CEILING.
7. OPTIONS - EMERGENCY BATTERY BACK-UP, WALL-WASH TRIM, IC RATED FOR DIRECT CONTACT WITH INSULATION, VARIOUS APERTURE DIAMETERS, AND VARIOUS GLASS LENSES.
8. THIS SKETCH IS A NON-PROPRIETARY GRAPHIC REPRESENTATION OF A LUMINAIRE THAT MAY MEET THE SPECIFICATION REQUIREMENTS. IT IS NOT INTENDED TO INDICATE A CERTAIN MANUFACTURER OR PREFERENCE.

LED RECESSED DOWNLIGHT

REVISED:	APRIL 2016	LIGHTING PLATE:	NL-19

FIXTURE: W1

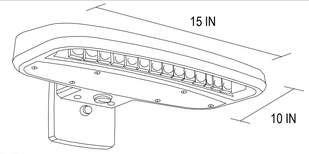

LUMINAIRE REQUIREMENTS:

1. HOUSING - DIE-CAST OR EXTRUDED ALUMINUM WITH INTEGRAL PASSIVE COOLING MECHANISM. HEAT SINK SHALL BE INCORPORATED DIRECTLY INTO HOUSING OR DRIVER COMPARTMENT TO ENSURE MAXIMUM HEAT TRANSFER AND DISSIPATION.
2. FINISH - MULTI-STAGE PRE-TREATMENT, FINISHED WITH BAKED-ON POLYESTER POWDER COAT. FINISH SHALL PASS 2500 HOUR SALT SPRAY TEST PER ASTM B117. STANDARD FINISH IS DARK BRONZE, WITH OTHER CUSTOM COLORS AVAILABLE.
3. POWER SUPPLY/LED DRIVER - CLASS 1 DRIVER SHALL OPERATE AT 120/277 VOLTS, 50/60 HZ, WITH OTHER VOLTAGES OPTIONAL; POWER FACTOR GREATER THAN 0.9 AND THD LESS THAN 20% AT FULL LOAD. MINIMUM EFFICACY SHALL BE 60 LM/W AT MAXIMUM 600mA OPERATING CURRENT.
4. LED OPTICAL ASSEMBLY - PRECISION MOLDED ACRYLIC LENS PROVIDED FOR MULTIPLE HIGH-POWERED LEDS PRODUCING NEMA TYPE III DISTRIBUTION OR AS OTHERWISE INDICATED. BUG UPLIGHT RATING OF U0, WITH GLARE RATING AS DETERMINED BY LIGHTING ZONE INSTALLED. MINIMUM COLOR RENDERING INDEX (CRI) SHALL BE 70 FOR CORRELATED COLOR TEMPERATURE (CCT) OF 4000-4500 DEGREES K.
5. CERTIFICATION - UL AND/OR ETL LISTED FOR DAMP OR WET LOCATIONS AS INDICATED, AND RoHS COMPLIANT.
6. OPTIONS - VARIOUS LUMEN OUTPUT RATING AS INDICATED, PHOTOCELL, AND 0-10 VOLT DIMMING DRIVER.
7. OTHER - THE ABOVE SKETCH IS A NON-PROPRIETY GRAPHIC REPRESENTATION OF A LUMINAIRE THAT MAY MEET THE SPECIFICATION REQUIREMENTS AND IS NOT INTENDED TO INDICATE A CERTAIN MANUFACTURER'S PREFERENCE. ALL DIMENSIONS ARE NOMINAL AND VARY PER MANUFACTURER.

LED WALL PACK

REVISED:	MARCH 2013	LIGHTING PLATE:	XL-17

FIXTURE: EX

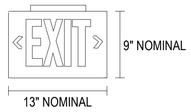

LUMINAIRE REQUIREMENTS:

1. HOUSING - HIGH-IMPACT, UV-STABILIZED, INJECTION-MOLDED THERMOPLASTIC. SINGLE OR DOUBLE-FACED AS INDICATED.
2. LETTERS/CHEVRONS - MINIMUM 6" HIGH WITH 3/4" STROKE. RED OR GREEN LETTERS AS INDICATED. PROVIDE CHEVRONS AS INDICATED EITHER LEFT, RIGHT, OR BOTH DIRECTIONS AS INDICATED. CHEVRONS PUNCHED OUT THROUGH HOUSING AS REQUIRED.
3. EMERGENCY PACK - SOLID-STATE, CONSTANT-CURRENT TYPE BATTERY CHARGER WITH MAINTENANCE-FREE, NICKEL-CADMIUM BATTERY, AC-ON INDICATOR LAMP AND TEST SWITCH.
4. MOUNTING - UNIVERSAL MOUNTING KIT FOR CEILING, WALL, OR END OF FIXTURE MOUNTING.
5. ILLUMINATION - PROVIDED BY RED, GREEN, OR WHITE HIGH-OUTPUT LEDS INSIDE OF FIXTURE HOUSING. PROVIDE POLYSTYRENE DIFFUSER IN COLOR INDICATED WITH FREQUENCY-MATCHED SILKSCREEN COATING FOR MAXIMUM LED LIGHT OUTPUT.
6. CERTIFICATION - UL LISTED AND CERTIFIED FOR DAMP LOCATIONS.

LED EXIT SIGN

REVISED:	AUGUST 2004	LIGHTING PLATE:	NL-63

FIXTURE: ELU

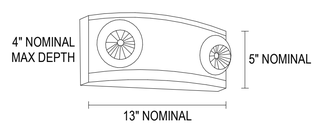

LUMINAIRE REQUIREMENTS:

1. HOUSING - UV STABLE, FLAME-RATED, HIGH-IMPACT THERMOPLASTIC IN WHITE OR BLACK TEXTURED FINISH.
2. INTERNAL COMPONENTS - FULLY AUTOMATIC, SOLID STATE, CONSTANT VOLTAGE, CURRENT-LIMITED BATTERY CHARGER; MAINTENANCE-FREE LEAD-ACID BATTERY; AND BUILT-IN OVERLOAD AND LOW-VOLTAGE BATTERY PROTECTION.
3. EXTERIOR HOUSING INDICATORS - LED AC-ON INDICATOR AND INTEGRAL TEST SWITCH.
4. LAMP HEADS - UV STABLE, FLAME RATED POLYCARBONATE THERMOPLASTIC. MR16 HALOGEN LAMPS SHALL BE 5 WATTS, HIGH-OUTPUT, OR AS INDICATED IN LIGHTING FIXTURE SCHEDULE.
5. MOUNTING - DIRECTLY TO 4" OCTAGONAL OR SQUARE OUTLET BOX.
6. CERTIFICATION - UL LISTED AND LABELED. COMLIES WITH UL 924 AND NFPA 101 REQUIREMENTS. LISTED FOR DAMP LOCATIONS.
7. OPTIONS - VOLTMETER, VANDEL-RESISTANT SHIELD, SELF-DIAGNOSTIC/TESTING ELECTRONICS, AND WIRE GUARD

DECORATIVE EMERGENCY LIGHTING UNIT

REVISED:	AUGUST 2004	LIGHTING PLATE:	NL-67

APPR | DATE | DESCRIPTION | SYM

SEAL

W.M. Jordan COMPANY – A JOINT VENTURE –

Michael Baker INTERNATIONAL

100 AIRSIDE DRIVE
MOON TOWNSHIP, PA 15108 A/E INFO

APPROVED

FOR COMMANDER NAVFAC

ACTIVITY
MARINE CORPS BASE
CAMP LEJEUNE

SATISFACTORY TO DATE

DES SD | DRW LAK | CHK YPS

PM

BRANCH MANAGER

CHIEF ENG/ARCH

FIRE PROTECTION

DEPARTMENT OF THE NAVY
NAVAL FACILITIES ENGINEERING COMMAND
ROICC FLORENCE CAMP LEJEUNE
MCB CAMP LEJEUNE

NAVAL FACILITIES ENGINEERING COMMAND ~ MID-ATLANTIC
JACKSONVILLE, NC

JACKSONVILLE, NC
P1338 II MEF SIMULATION/TRAINING CENTER
REPLACEMENT

ELECTRICAL - DETAILS

SCALE: AS NOTED

EPROJECT NO.: 1590892

CONSTR. CONTR. NO.
N40085-20-C-0059

NAVFAC DRAWING NO.

SHEET OF

E-501

DP2 SUBMISSION – P1338 BUILDING - PRE-FINAL SUBMISSION

PLOTTED: 6/10/2021 5:42:05 PM

FILE NAME: BIM 360://HF PACKAGE 3/P1338 MEF SIM CTR-1590892-E.rvt

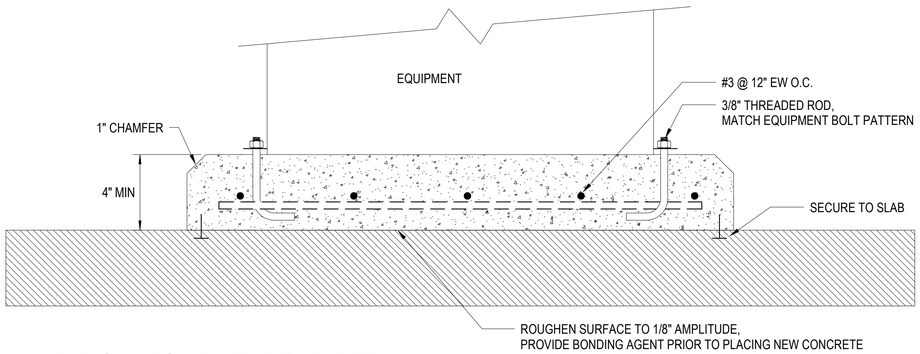

TYPICAL EQUIPMENT PAD DETAIL

SCALE:NTS

C1

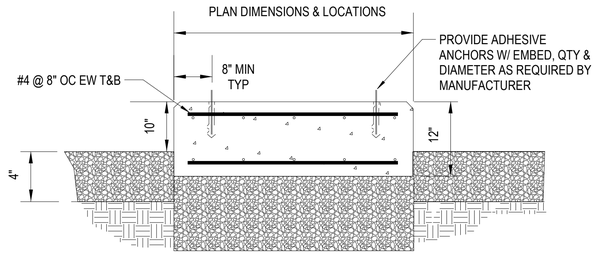

GENERATOR PAD DETAIL

SCALE:NTS

C3

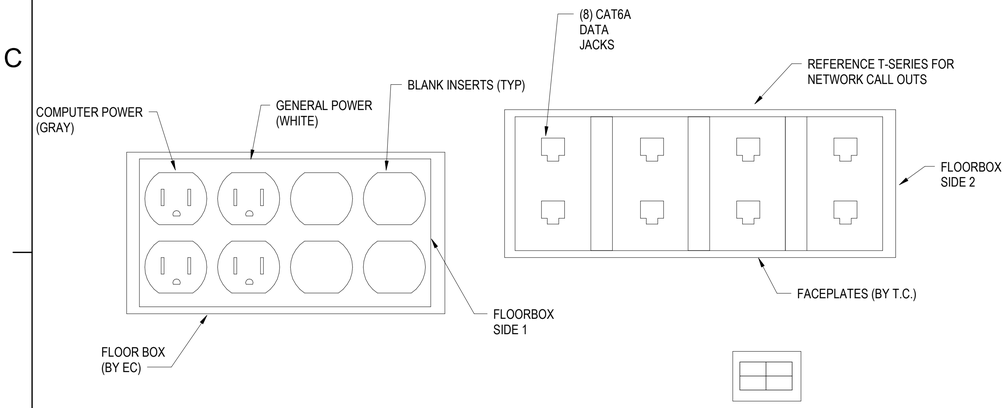

TYPICAL FLOORBOX FACEPLATES - CLASSIFIED

SCALE:NTS

B1

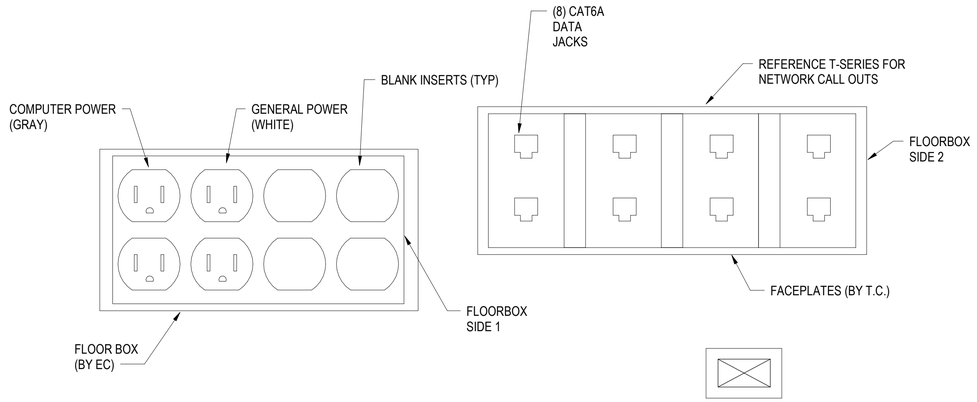

TYPICAL FLOORBOX FACEPLATES - UNCLASSIFIED

SCALE:NTS

B3

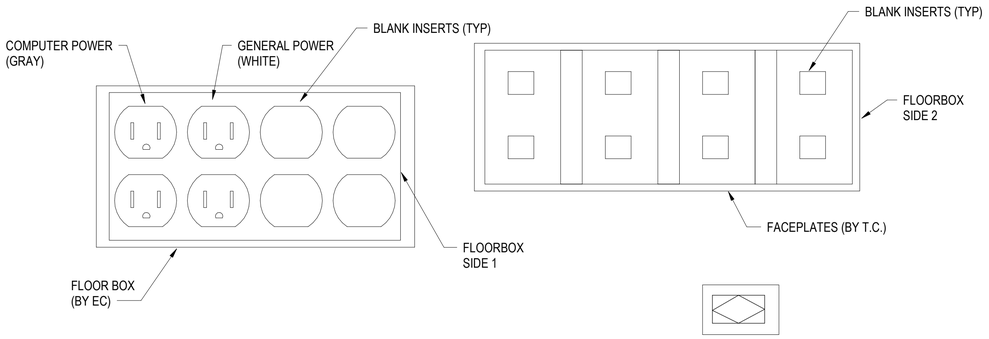

TYPICAL FLOORBOX FACEPLATES - POWER ONLY

SCALE:NTS

A1

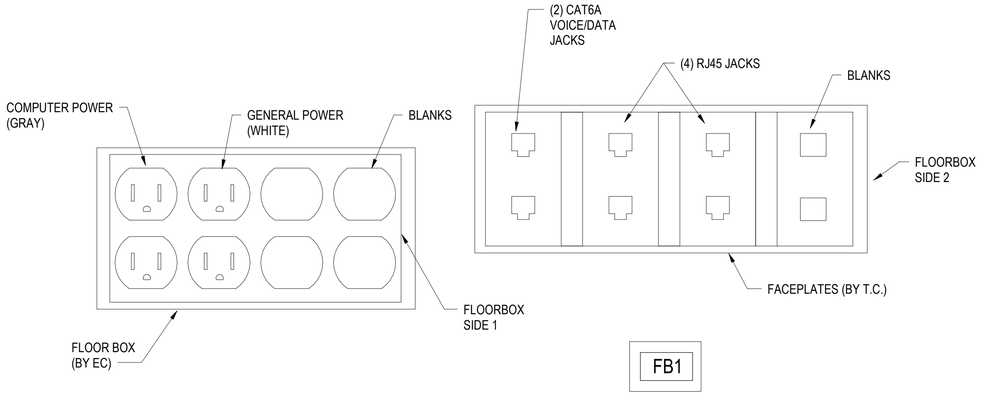

TYPICAL FLOORBOX FACEPLATES - FB1

SCALE:NTS

A3

APPR	DATE	DESCRIPTION	SYM

SEAL

W.M. Jordan COMPANY ~ A JOINT VENTURE ~

Michael Baker INTERNATIONAL

100 AIRSIDE DRIVE
MOON TOWNSHIP, PA 15108 A/E INFO

APPROVED

FOR COMMANDER NAVFAC

ACTIVITY
MARINE CORPS BASE
CAMP LEJEUNE

SATISFACTORY TO DATE

DES SD | DRW LAK | CHK YPS

PM

BRANCH MANAGER

CHIEF ENG/ARCH

FIRE PROTECTION

DEPARTMENT OF THE NAVY
NAVAL FACILITIES ENGINEERING COMMAND ~ MID-ATLANTIC
JACKSONVILLE, NC
ROICC FLORENCE CAMP LEJEUNE
MCB CAMP LEJEUNE

JACKSONVILLE, NC
P1338 II MEF SIMULATION/TRAINING CENTER
REPLACEMENT
ELECTRICAL - DETAILS

SCALE: AS NOTED

EPROJECT NO.: 1590892

CONSTR. CONTR. NO.
N40085-20-C-0059

NAVFAC DRAWING NO.

SHEET OF

E-502

DP2 SUBMISSION – P1338 BUILDING - PRE-FINAL SUBMISSION

PLOTTED: 6/10/2021 5:42:06 PM

FILE NAME: BIM 360://HF PACKAGE 3/P1338 MEF SIM CTR-1590892-E.rvt

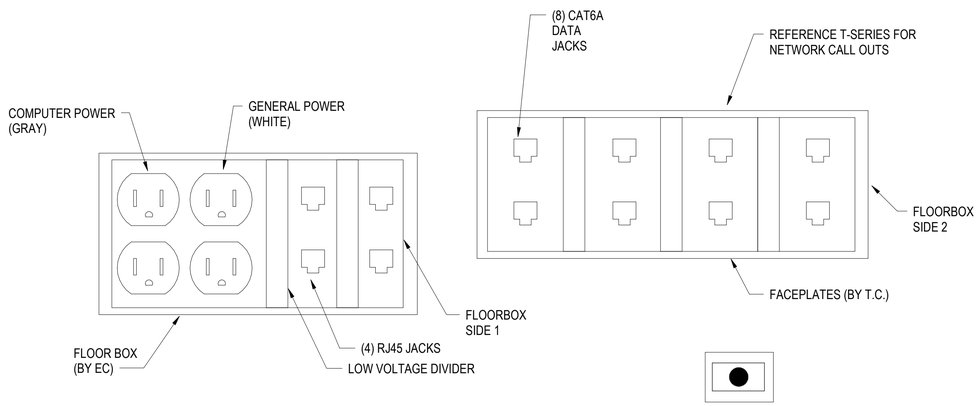

TYPICAL FLOORBOX FACEPLATES - CLASSIFIED WITH AV

SCALE:NTS

C1

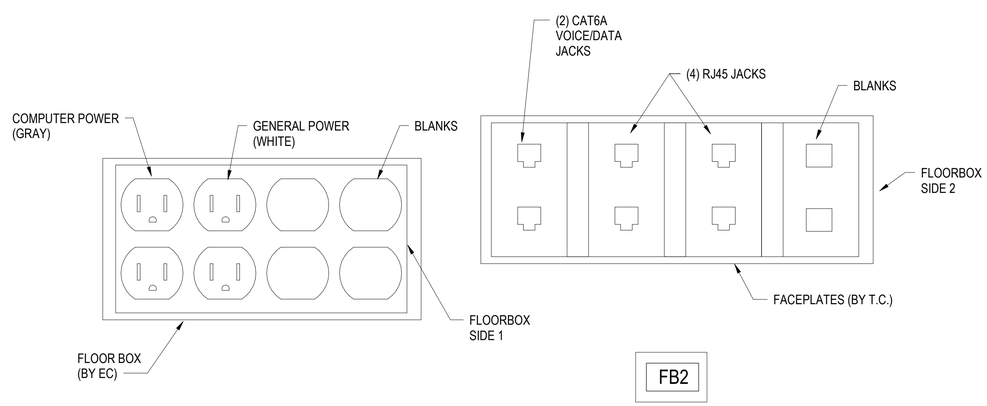

TYPICAL FLOORBOX FACEPLATES - SLAB ON GRADE

SCALE:NTS

C3

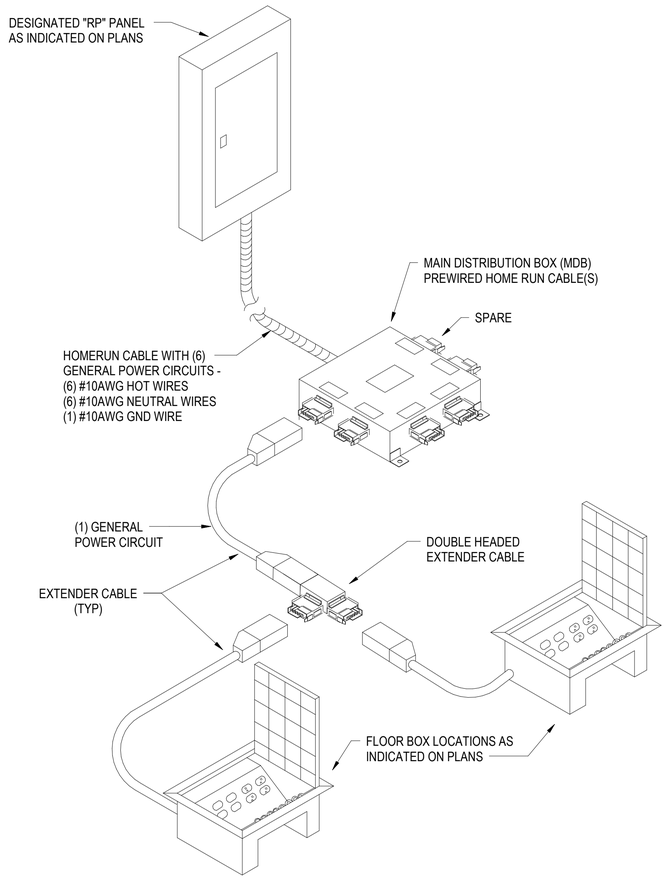

TYPICAL MODULAR POWER DISTRIBUTION SYSTEM

SCALE:NTS

A1

APPR	DATE	DESCRIPTION	SYM

SEAL

W.M. Jordan COMPANY – A JOINT VENTURE –

Michael Baker INTERNATIONAL

100 AIRSIDE DRIVE
MOON TOWNSHIP, PA 15108

A/E INFO

APPROVED

FOR COMMANDER NAVFAC

ACTIVITY
MARINE CORPS BASE
CAMP LEJEUNE

SATISFACTORY TO DATE

DES SD | DRW LAK | CHK YPS

PM

BRANCH MANAGER

CHIEF ENG/ARCH

FIRE PROTECTION

DEPARTMENT OF THE NAVY
NAVAL FACILITIES ENGINEERING COMMAND ~ MID-ATLANTIC
ROICC FLORENCE CAMP LEJEUNE
MCB CAMP LEJEUNE

NAVAL FACILITIES ENGINEERING COMMAND ~ MID-ATLANTIC
JACKSONVILLE, NC

JACKSONVILLE, NC
P1338 II MEF SIMULATION/TRAINING CENTER
REPLACEMENT

ELECTRICAL - DETAILS

SCALE: AS NOTED

EPROJECT NO.: 1590892

CONSTR. CONTR. NO.
N40085-20-C-0059

NAVFAC DRAWING NO.

SHEET OF

E-503

DP2 SUBMISSION – P1338 BUILDING - PRE-FINAL SUBMISSION

PLOTTED: 6/10/2021 5:42:07 PM

FILE NAME: BIM 360://HF PACKAGE 3/P1338 MEF SIM CTR-1590892-E.rvt

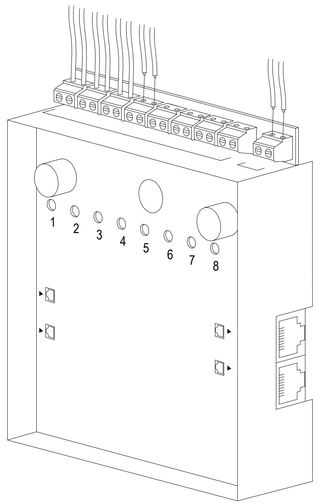

EMERGENCY POWER OFF (EPO) BOX - WIRING TERMINALS (INTERNAL)

SCALE:NTS

C1

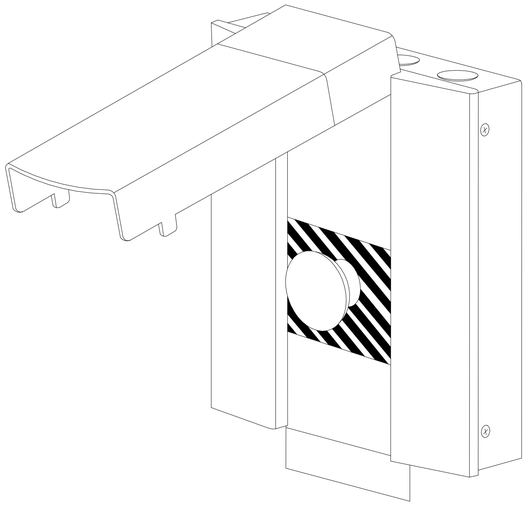

EMERGENCY POWER OFF (EPO) SYSTEM - SWITCH

SCALE:NTS

A1

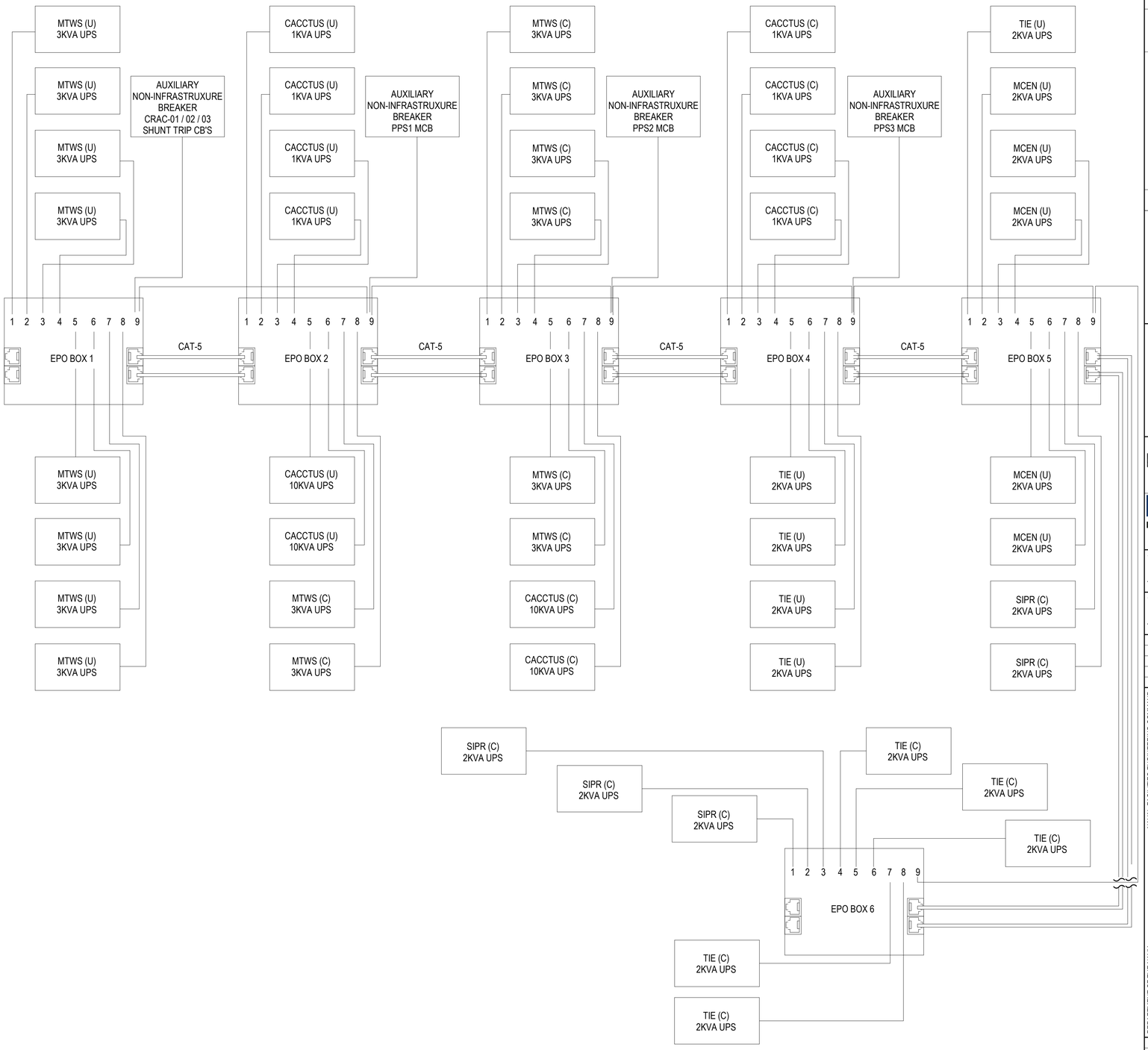

EMERGENCY POWER OFF (EPO) SYSTEM - WIRING DIAGRAM (SERVER ROOM)

SCALE:NTS

A3

APPR | DATE | DESCRIPTION | SYM

NAVFAC

SEAL

IRQ W.M. Jordan COMPANY ~ A JOINT VENTURE ~

Michael Baker INTERNATIONAL

100 AIRSIDE DRIVE
MOON TOWNSHIP, PA 15108

A/E INFO

APPROVED

FOR COMMANDER NAVFAC

ACTIVITY
MARINE CORPS BASE CAMP LEJEUNE

SATISFACTORY TO DATE

DES SD | DRW LAK | CHK YPS

PM

BRANCH MANAGER

CHIEF ENG/ARCH

FIRE PROTECTION

DEPARTMENT OF THE NAVY
NAVAL FACILITIES ENGINEERING COMMAND
ROICC FLORENCE CAMP LEJEUNE

NAVAL FACILITIES ENGINEERING COMMAND ~ MID-ATLANTIC
JACKSONVILLE, NC

MCB CAMP LEJEUNE
JACKSONVILLE, NC
P1338 II MEF SIMULATION/TRAINING CENTER
REPLACEMENT

ELECTRICAL - DETAILS

SCALE: AS NOTED

EPROJECT NO.: 1590892

CONSTR. CONTR. NO.
N40085-20-C-0059

NAVFAC DRAWING NO.

SHEET OF

E-504

DP2 SUBMISSION – P1338 BUILDING - PRE-FINAL SUBMISSION

PLOTTED: 6/10/2021 5:42:08 PM

FILE NAME: BIM 360://HF PACKAGE 3/P1338 MEF SIM CTR-1590892-E.rvt

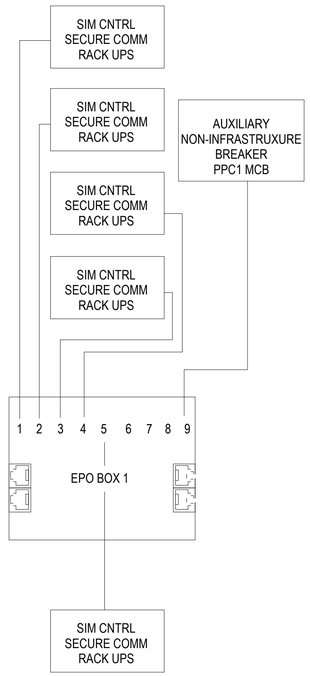

EMERGENCY POWER OFF (EPO) SYSTEM - WIRING DIAGRAM (SECURE COMM)

SCALE:NTS

B1

PLOTTED: 6/10/2021 5:42:09 PM

FILE NAME: BIM 360://HF PACKAGE 3/P1338 MEF SIM CTR-1590892-E.rvt

APPR	DATE	DESCRIPTION	SYM

SEAL

W.M. Jordan COMPANY – A JOINT VENTURE –

Michael Baker INTERNATIONAL

100 AIRSIDE DRIVE
MOON TOWNSHIP, PA 15108 A/E INFO

APPROVED

FOR COMMANDER NAVFAC

ACTIVITY
MARINE CORPS BASE
CAMP LEJEUNE

SATISFACTORY TO DATE

DES SD | DRW LAK | CHK YPS

PM

BRANCH MANAGER

CHIEF ENG/ARCH

FIRE PROTECTION

DEPARTMENT OF THE NAVY
NAVAL FACILITIES ENGINEERING COMMAND
ROICC FLORENCE CAMP LEJEUNE
MCB CAMP LEJEUNE

NAVAL FACILITIES ENGINEERING COMMAND ~ MID-ATLANTIC
JACKSONVILLE, NC

JACKSONVILLE, NC
P1338 II MEF SIMULATION/TRAINING CENTER
REPLACEMENT
ELECTRICAL - DETAILS

SCALE: AS NOTED

EPROJECT NO.: 1590892

CONSTR. CONTR. NO.
N40085-20-C-0059

NAVFAC DRAWING NO.

SHEET OF

E-505

DP2 SUBMISSION – P1338 BUILDING - PRE-FINAL SUBMISSION

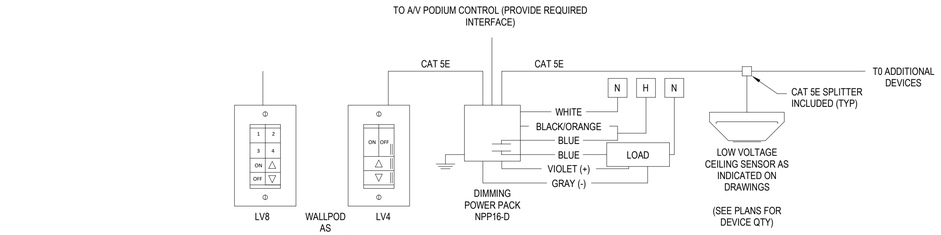

ZONING FOR 8 BUTTON SWITCHES
1. PROVIDE CONTROL OF UP TO 4 ZONES OF LIGHT (3 ZONES FOR CLASSROOMS).
2. PROVIDE WITH RAISE/LOWER AND ON/OFF.
3. AFTER 15 MINUTES OF NO OCCUPANCY, LIGHT FIXTURES SHALL TURN OFF.
4. TYPICAL APPLICATION: AS INDICATED ON DRAWINGS.
5. PROVIDE INTERFACE FOR LIGHTING CONTROL FROM A/V PODIUM CONTROL, AT ALL PODIUM LOCATIONS.

OPERATION SEQUENCE
1. LIGHT FIXTURES SHALL AUTOMATICALLY TURN ON TO 50% FOR OCCUPANCY.
2. LIGHT FIXTURE SHALL CONTINUOUSLY DIM / BRIGHTEN BASED UPON INPUT FROM THE DIMMER.
3. AFTER 15 MINUTES OF NO OCCUPANCY, LIGHT FIXTURES SHALL TURN OFF.
4. TYPICAL APPLICATION: AS INDICATED ON DRAWINGS.

CEILING OCCUPANCY / VACANCY SENSOR - DIMMING
SCALE:NTS — C1

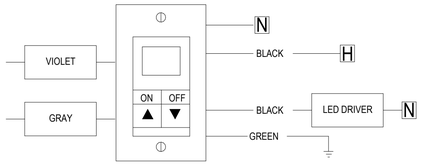

GENERAL NOTES
1. ALL LIGHTING CONTROL BUTTONS TO BE ENGRAVED FOR REQUIRED FUNCTIONALITY .
2. FINAL SCENE PRESET TO BE DESIGNATED BY OWNER.
3. ALL CATE 5E CABLES NEED TO BE CHECKED WITH A CAT5E METER FOR PROPER TERMINATION OF RJ45 CONNECTORS.
4. PROVIDE INTERFACE FOR LIGHTING CONTROL AT A/V PODIUM CONTROL, AT ALL PODIUM LOCATIONS.

OPERATION SEQUENCE
1. LIGHT FIXTURES SHALL AUTOMATICALLY TURN ON TO 50% FOR OCCUPANCY
2. LIGHT FIXTURE SHALL CONTINUOUSLY DIM / BRIGHTEN BASED UPON INPUT FROM THE DIMMER.
3. AFTER 15 MINUTES OF NO OCCUPANCY, LIGHT FIXTURES SHALL TURN OFF.
4. TYPICAL APPLICATION: AS INDICATED ON DRAWINGS

WALL SWITCH OCCUPANCY / VACANCY SENSOR - DIMMING
SCALE:NTS — C3

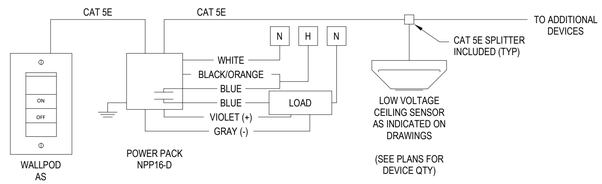

OPERATION SEQUENCE
1. AFTER 15 MINUTES OF NO OCCUPANCY, LIGHT FIXTURES SHALL TURN OFF.
2. TYPICAL APPLICATION: AS INDICATED ON DRAWINGS.
3. FINAL SCENE PRESET (DIMMING) TO BE AS SELECTED BY OWNER.

CEILING OCCUPANCY / VACANCY SENSOR - NON DIMMING
SCALE:NTS — B3

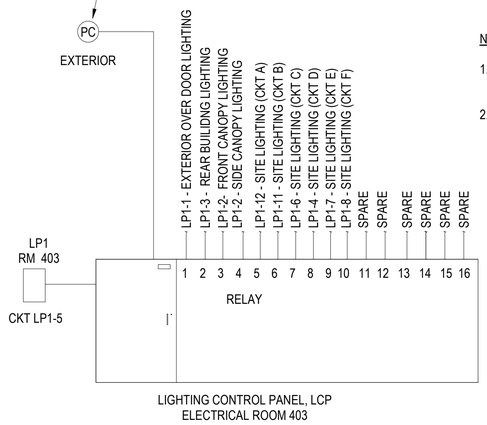

NOTES:
1. SEGREGATE CIRCUITS IN PANEL PER MANUFACTURER RECOMMENDATIONS IN ORDER TO MEET ALL APPLICABLE CODES AND STANDARDS.
2. EXTERIOR BUILDING LIGHTS ARE TO HAVE TIMED ON/OFF WITH PHOTOCELL OVERRIDE.

TYPICAL EXTERIOR LTG CONTROL WIRING DIAGRAM
SCALE:NTS — A1

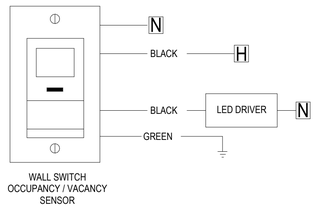

OPERATION SEQUENCE
1. LIGHT FIXTURES SHALL AUTOMATICALLY TURN ON TO 100%.
2. AFTER 15 MINUTES OF NO OCCUPANCY, LIGHT FIXTURES SHALL TURN OFF.
3. TYPICAL APPLICATION: AS INDICATED ON DRAWINGS

WALL SWITCH OCCUPANCY / VACANCY SENSOR - NON-DIMMING
SCALE:NTS — A3

APPR	DATE	DESCRIPTION	SYM

SEAL

IRQ Jordan COMPANY – A JOINT VENTURE –

Michael Baker INTERNATIONAL
100 AIRSIDE DRIVE
MOON TOWNSHIP, PA 15108
A/E INFO

APPROVED

FOR COMMANDER NAVFAC

ACTIVITY
MARINE CORPS BASE CAMP LEJEUNE

SATISFACTORY TO DATE

DES SD | DRW LAK | CHK YPS

PM

BRANCH MANAGER

CHIEF ENG/ARCH

FIRE PROTECTION

DEPARTMENT OF THE NAVY
NAVAL FACILITIES ENGINEERING COMMAND – MID-ATLANTIC
ROICC FLORENCE CAMP LEJEUNE
MCB CAMP LEJEUNE

NAVAL FACILITIES ENGINEERING COMMAND
JACKSONVILLE, NC

JACKSONVILLE, NC
P1338 II MEF SIMULATION/TRAINING CENTER
REPLACEMENT

ELECTRICAL - LIGHTING CONTROL DIAGRAMS

SCALE: AS NOTED

EPROJECT NO.: 1590892

CONSTR. CONTR. NO.
N40085-20-C-0059

NAVFAC DRAWING NO.

SHEET OF

E-506

DP2 SUBMISSION – P1338 BUILDING -PRE-FINAL SUBMISSION

PLOTTED: 6/10/2021 5:42:10 PM

FILE NAME: BIM 360://HF PACKAGE 3/P1338 MEF SIM CTR-1590892-E.rvt

LIGHTING FIXTURE SCHEDULE

TYPE	DESCRIPTION	MOUNTING	MANUFACTURER / CATALOG #	LAMP TYPE	LAMP QTY	INPUT WATTAGE	VOLTAGE	REMARKS
A1	2' x 4' LED TROFFER	RECESSED	LITHONIA LIGHTING 2BLT4 40L ADPT LP835 / OR APPROVED EQUAL	LED 82 CRI, 4000 LUMENS 3500K CCT	---	31	MVOLT	
A2	2' x 4' LED TROFFER	RECESSED	LITHONIA LIGHTING 2BLT4 48L ADP LP835/ OR APPROVED EQUAL	LED 82 CRI, 4800 LUMENS 3500K CCT	---	38	MVOLT	
A3	2' x 4' LED TROFFER	RECESSED	LITHONIA LIGHTING 2BLT4 60L ADP LP835/ OR APPROVED EQUAL	LED 82 CRI, 6000 LUMENS 3500K CCT	---	46	MVOLT	
B1	2' x 2' LED TROFFER	RECESSED	LITHONIA LIGHTING 2BLT2 20L ADP LP835/ OR APPROVED EQUAL	LED 82 CRI, 2000 LUMENS 3500K CCT	---	16	MVOLT	
C1	2' x 4' LED RECESSED FLAT PANEL	RECESSED	LITHONIA LIGHTING EPANL 2X4 3000LM 80CRI 35K / OR APPROVED EQUAL	LED 80 CRI, 3000 LUMENS 3500K CCT	---	26	MVOLT	
D1	6" RECESSED DOWNLIGHT	RECESSED	LITHONIA LIGHTING LDN6 35/15 LO6AR LD/ OR APPROVED EQUAL	LED 80 CRI, 1500 LUMENS 3500K CCT	---	18	MVOLT	
D2	6" RECESSED DOWNLIGHT	RECESSED	LITHONIA LIGHTING LDN6 35/05 LO6AR LD/ OR APPROVED EQUAL	LED 80 CRI, 500 LUMENS 3500K CCT	---	6	MVOLT	
D3	6" RECESSED DOWNLIGHT	RECESSED	LITHONIA LIGHTING LDN6 35/30 LO6AR LD/ OR APPROVED EQUAL	LED 80 CRI, 3000 LUMENS 3500K CCT	---	35	MVOLT	
D4	6" RECESSED DOWNLIGHT WALL WASH	RECESSED	LITHONIA LIGHTING/ LDN6 35/50 LW6WR/ OR APPROVED EQUAL	LED 80 CRI, 5000 LUMENS 3500K CCT	---	1	MVOLT	
D5	6" RECESSED DOWNLIGHT - WET LOCATION LISTED FOR UNDER CANOPY	RECESSED	LITHONIA LIGHTING LDN6 40/10 LO6AR LD/ OR APPROVED EQUAL	LED 80 CRI, 1000 LUMENS 4000K CCT	---	10	MVOLT	
D5E	6" RECESSED DOWNLIGHT - WET LOCATION LISTED FOR UNDER CANOPY W/ 90 MINUTE BATTERY BACKUP	RECESSED	LITHONIA LIGHTING LDN6 40/10 LO6AR LD/ OR APPROVED EQUAL	LED 80 CRI, 1000 LUMENS 4000K CCT	---	10	MVOLT	
E1	4' FLUSHED LED STRIP LIGHT	RECESSED	MARK ARCHITECTURAL LIGHTING SL4L 4 FLP 80 CRI 35K 400LMF/ OR APPROVED EQUAL	LED 80CRI, 400 LUMENS PER FT 3500K CCT	---	14	MVOLT	LENGTH AS REQUIRED-CONTINUOUS FLUSH LED STRIP LIGHT - PROVIDE WALL TO WALL INSTALLATION WITH EQUAL LENGTH FIXTURES. PROVIDE 1 PIECE FIXTURE FOR LENGTHS UP TO 12 FOOT
ELR	RECESSED EMERGENCY LIGHTING UNIT WITH LED LAMPS	RECESSED	LITHONIA LIGHTING ELR2 / OR APPROVED EQUAL	LED	---	16W	MVOLT	PROVIDE WITH 90 MINUTE BATTERY FOR EMERGENCY BACKUP POWER.
ELU	EMERGENCY LIGHTING UNIT W/ AIMABLE REMOTE HEADS MINIMUM 200 LUMENS PER HEAD	WALL	LITHONIA LIGHTING ELM2L / OR APPROVED EQUAL	LED	---	3W PER LAMP	MVOLT	MOUNT FIXTURE AT 7'-0" AFF UNLESS OTHERWISE NOTED. PROVIDE WITH 90 MINUTE BATTERY FOR EMERGENCY BACKUP POWER.
EX	LOW PROFILE SNAP TOGETHER QUICK MOUNT DESIGN. FLAME RATED, UV STABLE ABS THERMOPLASTIC HOUSING. UNIVERSAL MOUNTING, CANOPY PROVIDED. POP OUT SHEVRON DIRECTIONAL INDICATIONS EASILY REMOVED AS REQUIRED. MOUNTS TO STANDARD 4 INCH SQUARE OUTLET BOX.	UNIVERSAL	LITHONIA LIGHTING LE R ELN SD SERIES OR APPROVED EQUAL	LED	---	5	120	
S1	4' SUSPENDED LED STRIP LIGHT	SUSPENDED	LITHONIA LIGHTING ZL1N L48 5000LM FST MVOLT 40K 80 CRI/ OR APPROVED EQUAL	LED 80CRI, 5000 LUMENS 4000K CCT	---	34	MVOLT	MOUNT FIXTURES AT 10'-0" AFF. UNLESS OTHERWISE NOTED.
SL0	SITE LIGHTING TYPE VLS DISTRIBUTION	POLE	LITHONIA LIGHTING DSX0-LED-P1-40K-VLS-MVOLT-RPA-PER-DMG-PIRHN-FAO OR APPROVED EQUAL	LED 80 CRI, 4329 LUMENS 4000K CCT	---	56	277	MOUNT FIXTURE 12' ABOVE FINISHED GRADE UNLESS OTHERWISE NOTED.
SL1	SITE LIGHTING TYPE VS DISTRIBUTION	POLE BACK TO BACK	LITHONIA LIGHTING RSX1-LED-P1-40K-R5S-MVOLT-RPA-PE-DMG-PIRHN OR APPROVED EQUAL	LED 80 CRI, 7479 LUMENS EACH 4000K CCT	---	51 EACH	277	MOUNT FIXTURE 39' ABOVE FINISHED GRADE.
SL2	SITE LIGHTING TYPE VS DISTRIBUTION	POLE BACK TO BACK	LITHONIA LIGHTING RSX1-LED-P2-40K-R5S-MVOLT-RPA-PE-DMG-PIRHN OR APPROVED EQUAL	LED 80 CRI, 10374 LUMENS EACH 4000K CCT	---	72 EACH	277	MOUNT FIXTURE 39' ABOVE FINISHED GRADE.
SL3	SITE LIGHTING TYPE II DISTRIBUTION	POLE	LITHONIA LIGHTING RSX2-LED-P1-40K-R2-MVOLT-RPA-PE-DMG-PIRHN OR APPROVED EQUAL	LED 80 CRI, 11031 LUMENS 4000K CCT	---	73	277	MOUNT FIXTURE 39' ABOVE FINISHED GRADE.
SL4	SITE LIGHTING TYPE IV DISTRIBUTION	POLE	LITHONIA LIGHTING RSX2-LED-P2-40K-R4-MVOLT-RPA-PE-DMG-PIRHN OR APPROVED EQUAL	LED 80 CRI, 17427 LUMENS 4000K CCT	---	111	277	MOUNT FIXTURE 39' ABOVE FINISHED GRADE.
W1	EXTERIOR WALL PACK.	EXTERIOR WALL	LITHONIA LIGHTING WST LED P1 40K VW MVOLT OR APPROVED EQUAL	LED 70 CRI, 1500 LUMENS 4000K CCT	---	12	MVOLT	
W1E	EXTERIOR WALL PACK - PROVIDE WITH 90 MINUTE BATTERY BACKUP	EXTERIOR WALL	LITHONIA LIGHTING WST LED P1 40K VW MVOLT OR APPROVED EQUAL	LED 70 CRI, 1500 LUMENS 4000K CCT	---	12	MVOLT	

APPR | DATE | DESCRIPTION | SYM

SEAL

W.M. Jordan COMPANY – A JOINT VENTURE –

Michael Baker INTERNATIONAL
100 AIRSIDE DRIVE
MOON TOWNSHIP, PA 15108 A/E INFO

APPROVED

FOR COMMANDER NAVFAC

ACTIVITY
MARINE CORPS BASE
CAMP LEJEUNE

SATISFACTORY TO DATE

DES SD | DRW LAK | CHK YPS

PM

BRANCH MANAGER

CHIEF ENG/ARCH

FIRE PROTECTION

DEPARTMENT OF THE NAVY
NAVAL FACILITIES ENGINEERING COMMAND
ROICC FLORENCE CAMP LEJEUNE

NAVAL FACILITIES ENGINEERING COMMAND ~ MID-ATLANTIC
JACKSONVILLE, NC

MCB CAMP LEJEUNE
JACKSONVILLE, NC
P1338 II MEF SIMULATION/TRAINING CENTER
REPLACEMENT

ELECTRICAL - LIGHTING FIXTURE SCHEDULE

SCALE: AS NOTED

EPROJECT NO.: 1590892

CONSTR. CONTR. NO.
N40085-20-C-0059

NAVFAC DRAWING NO.

SHEET OF

E-601

DP2 SUBMISSION – P1338 BUILDING - PRE-FINAL SUBMISSION

PLOTTED: 6/10/2021 5:42:12 PM

FILE NAME: BIM 360://HF PACKAGE 3/P1338 MEF SIM CTR-1590892-E.rvt

EXISTING OVERHEAD 12.47kV UTILITY SERVICE

NEW RISER WITH 15kV TERMINATIONS, 10kV SURGE SUPPRESSORS, AND NEW FUSED CUTOUT WITH 100A FUSE

MV1

SC

MV1

PRIMARY NETURAL

SURGE ARRESTOR

LOAD BREAK CONNECTOR

BUSHING INSERT

TRANSFORMER BUSHING

HO

OIL-IMMERSED CURRENT LIMITING FUSE

2 POSITION LOAD OIL SWITCH

BAYONET OIL-IMMERSED CURRENT LIMITING FUSE

TRN1 1000 KVA PAD MOUNTED 12470V - 480/277V 3PH, 4W, 60Hz - 5.32% IMPEDANCE

WHD WATTHOUR DEMAND METER

3-POLE FUSE BLOCK

2004

MV1

PRIMARY NETURAL

SURGE ARRESTOR

LOAD BREAK CONNECTOR

BUSHING INSERT

TRANSFORMER BUSHING

HO

OIL-IMMERSED CURRENT LIMITING FUSE

2 POSITION LOAD OIL SWITCH

BAYONET OIL-IMMERSED CURRENT LIMITING FUSE

TRN2 225 KVA PAD MOUNTED 12470V - 208/120V 3PH, 4W, 60Hz - 2.87% IMPEDANCE

WHD WATTHOUR DEMAND METER

3-POLE FUSE BLOCK

STANDBY GENERATOR 1500kW 480/277V, 3PH, 4W COASTAL RATED WEATHERPROOF ALUMINUM ENCLOSURE

GEN

#3/0 GND

2000A 3P, LSIG

2000A 3P, LSIG

2004a

#4/0 AWG G.E.C.

NEMA 4X, 3PH, 4W 2000A ATS WITH MAINTENANCE BYPASS

2004a

804

OUTDOOR TRAINING AREA

DPLV4
208/120V, 800A BUS - 30kAIC
SERVICE ENTRANCE RATED NEMA 4X

800AT 800AF 3P, LSI

50A 3P (10) — 53b, 53a, 53, 53a, 53b

60A 3P NEMA 4X (10)

53

PEDESTAL (10)

P1338 MEF Simulation Training Center

SWBD1 - 2000A BUS, 480Y/277V 3PH, 4W - 42kAIC
SERVICE ENTRANCE RATED
ELEC 403

2000AT 2000AF 3P, 100% RATED LSIG

1 — SPD

100A 3P — 104 — LP1 100A MLO 22kAIC (SPD 1) — ELEC 403

250AT 250AF 3P, LSI — 253 — 400A 3P NEMA 4X — 253 — CHILLER-01

250AT 250AF 3P, LSI — 253 — 400A 3P NEMA 4X — 253 — CHILLER-02

225A 3P — 229 — MP1 225A MLO 22kAIC — ELEC 403

100A 3P — 104 — MP2 100A MLO 22kAIC — ELEC 403

400AT 400AF 3P, LSI — 403

XFMR T1 225KVA K-13, DRY TYPE PRIMARY 480V DELTA SECONDARY 208Y/120-3P-4W ELEC 403

805

400AT 400AF 3P, LSI — 403

225AF 225AT 3P, LSI — 228

ELEC 306
XFMR T2 150KVA DRY TYPE PRIMARY 480V DELTA SECONDARY 208Y/120-3P-4W

604

ELEC 306
DPLV2
600A BUS
208/120V - 10kAIC

600AT 600AF 3P, LSI

150A 3P (8) — 154

100A 3P (2) — 104

RP1 150A MCB 10kAIC — RM 301A
RP2 150A MCB 10kAIC — RM 301B
RP3 150A MCB 10kAIC — RM 300X
RP4 150A MCB 10kAIC — RM 300Y
RP5 150A MCB 10kAIC — RM 300Z
RP6 150A MCB 10kAIC — RM 300C
RP7 150A MCB 10kAIC — RM 300B
RP8 150A MCB 10kAIC — RM 300A
RP19 100A MLO 10kAIC — ELEC 306
MPLV1 100A MLO 10kAIC — ELEC 306

ELEC 403
DPLV1
800A BUS
208/120V - 18kAIC

800AT 800AF 3P, LSI

1 — SPD

100A 3P — 105 — TR1 100A MCB 10kAIC (SPD 1) — COMM 208

100A 3P — 105 — TR2 100A MCB 10kAIC (SPD 1) — COMM 115

150A 3P — 155 — PPC1 150A MCB 10kAIC (SPD 1) — RM 304B

400AT 400AF 3P, LSI — 405 — PPS1 400A MCB LSI 10kAIC (SPD 1) — RM 304A

125A 3P — PPS2 125A MCB 10kAIC (SPD 1) — RM 304A

125A 3P — 129a — PPS3 125A MCB 10kAIC (SPD 1) — RM 304A

XFMR T3 225KVA DRY TYPE PRIMARY 480V DELTA SECONDARY 208Y/120-3P-4W ELEC 403

804

ELEC 403
DPLV3
800A BUS
208/120V - 18kAIC

800AT 800AF 3P, LSI

50A 3P — 54 — FP1 50A MLO 10kAIC — ELEC 403

150A 3P — RP9 150A MCB 10kAIC — RM 202

150A 3P — RP10 150A MCB 10kAIC — RM 200C

150A 3P — RP11 150A MCB 10kAIC — RM 200B

150A 3P — RP12 150A MCB 10kAIC — RM 200A

150A 3P — RP13 150A MCB 10kAIC — RM 104B

150A 3P — RP16 150A MLO 10kAIC — ELEC 403

125A 3P — RP17 125A MLO 10kAIC — ELEC 403

125A 3P — RP18 125A MLO 10kAIC — ELEC 403

150A 3P — 154 — MPLV2 150A MLO 10kAIC — ELEC 403

200A 3P — 204

129

RP14 200A MCB 10kAIC 100A — ELEC 116

104 — RP15 100A MLO 10kAIC — ELEC 116

CLASSIFIED AREA

NON-CLASSIFIED AREA

LEGEND:

PPS(X) - SERVER ROOM POWER PANEL #X
PPC(X) - COMPUTER ROOM POWER PANEL #X
TR(X) - TELECOM POWER PANEL #X
DPLV(X) - LOW VOLTAGE DIST. PANEL #X
LP(X) - LIGHTING PANEL #X
RP(X) - RECEPTACLE PANEL #X
MP(X) - MECHANICAL PANEL #X
MPLV(X) - LOW VOLTAGE MECHANICAL PANEL #X
SWBD1 - SWITCHBOARD

GENERAL NOTES:

1. SEE FEEDER SCHEDULE ON SHEET E-603 FOR WIRE AND CONDUIT INFORMATION
2. ALL TR, PPC, AND PPS PANELS MUST HAVE A 200% RATED NEUTRAL BUS
3. PROVIDE SWBD1 WITH AN ARC ENERGY REDUCTION SYSTEM IN ACCORDANCE NEC ARTICLE 240.

KEYNOTES:

(1) SIZED PER MANUFACTURER'S RECOMMENDATIONS

ELECTRICAL - SINGLE LINE DIAGRAM

SCALE:NTS

A1

APPR | DATE | SYM | DESCRIPTION

NAVFAC

SEAL

W.M. Jordan COMPANY – A JOINT VENTURE –

Michael Baker INTERNATIONAL
100 AIRSIDE DRIVE
MOON TOWNSHIP, PA 15108
A/E INFO

APPROVED

FOR COMMANDER NAVFAC

ACTIVITY
MARINE CORPS BASE
CAMP LEJEUNE

SATISFACTORY TO DATE

DES SD | DRW LAK | CHK YPS

PM

BRANCH MANAGER

CHIEF ENG/ARCH

FIRE PROTECTION

NAVAL FACILITIES ENGINEERING COMMAND ~ MID-ATLANTIC
JACKSONVILLE, NC

DEPARTMENT OF THE NAVY
NAVAL FACILITIES ENGINEERING COMMAND
ROICC FLORENCE CAMP LEJEUNE
MCB CAMP LEJEUNE

JACKSONVILLE, NC
P1338 II MEF SIMULATION/TRAINING CENTER
REPLACEMENT
ELECTRICAL - SINGLE LINE DIAGRAM

SCALE: AS NOTED
EPROJECT NO.: 1590892
CONSTR. CONTR. NO.
N40085-20-C-0059
NAVFAC DRAWING NO.
SHEET OF
E-602

DP2 SUBMISSION – P1338 BUILDING - PRE-FINAL SUBMISSION

PLOTTED: 6/10/2021 5:42:15 PM

FILE NAME: BIM 360://HF PACKAGE 3/P1338 MEF SIM CTR-1590892-E.rvt

FEEDER SCHEDULE

53	(3) #6 AWG AND (1) #10 AWG GND IN 3/4" CONDUIT
53a	(3) #4 AWG AND (1) #8 AWG GND IN 1" CONDUIT
53b	(3) #3 AWG AND (1) #6 AWG GND IN 1-1/4" CONDUIT
54	(4) #6 AWG AND (1) #10 AWG GND IN 1" CONDUIT
104	(4) #1 AWG AND (1) #8 AWG GND IN 1-1/2" CONDUIT
105	(5) #1 AWG AND (1) #8 AWG GND IN 2" CONDUIT
129	(4) #1 AWG AND (1) #6 AWG GND IN 1-1/2" CONDUIT
129a	(5) #1/0 AWG AND (1) #4 AWG GND IN 2" CONDUIT
154	(4) #1/0 AWG AND (1) #6 AWG GND IN 1-1/2" CONDUIT
155	(5) #1/0 AWG AND (1) #6 AWG GND IN 2" CONDUIT
204	(4) #3/0 AWG AND (1) #6 AWG GND IN 2" CONDUIT
228	(3) #4/0 AWG AND (1) #4 AWG GND IN 2-1/2" CONDUIT
228a	(3) 250 kcmil AND (1) #4 AWG GND IN 2-1/2" CONDUIT
229	(4) #4/0 AWG AND (1) #4 AWG GND IN 2-1/2" CONDUIT
253	(3) 250 kcmil AND (1) #4 AWG GND IN 2-1/2" CONDUIT
403	(3) 600 kcmil AND (1) #3 AWG GND IN 3" CONDUIT
405	(5) 600 kcmil AND (1) #3 AWG GND IN 4" CONDUIT
603	TWO 3" CONDUITS, EACH WITH (3) 350 kcmil AND (1) #1 AWG GND
604	TWO 3" CONDUITS, EACH WITH (4) 350 kcmil AND (1) #1 AWG GND
804	TWO 4" CONDUITS, EACH WITH (4) 600 kcmil AND (1) #1/0 AWG GND
805	TWO 4" CONDUITS, EACH WITH (5) 600 kcmil AND (1) #1/0 AWG GND
2004	FIVE 4" CONDUITS, EACH WITH (4) 600 kcmil + (1) 4" CONDUIT SPARE
2004a	FIVE 4" CONDUITS, EACH WITH (4) 600 kcmil AND (1) #4/0 AWG GND + (1) 4" CONDUIT SPARE
MV1	TWO 5" CONDUITS, ONE WITH (4) #2 AWG, 15kV, MV-105 TYPE CABLE, 133% EPR TYPE INSULATION WITH JACKET. PROVIDE WITH FULL SIZED CONCENTRIC NEUTRAL AND WITH ONE 5" CONDUIT WILL BE A SPARE WITH NO WIRING IN A CONCRETE ENCASED DUCTBANK.

APPR | DATE | DESCRIPTION | SYM

SEAL

IRQ W.M. Jordan COMPANY ~ A JOINT VENTURE ~

Michael Baker INTERNATIONAL
100 AIRSIDE DRIVE
MOON TOWNSHIP, PA 15108 A/E INFO

APPROVED

FOR COMMANDER NAVFAC

ACTIVITY
MARINE CORPS BASE
CAMP LEJEUNE

SATISFACTORY TO DATE

DES SD | DRW LAK | CHK YPS

PM

BRANCH MANAGER

CHIEF ENG/ARCH

FIRE PROTECTION

DEPARTMENT OF THE NAVY
NAVAL FACILITIES ENGINEERING COMMAND
ROICC FLORENCE CAMP LEJEUNE

NAVAL FACILITIES ENGINEERING COMMAND ~ MID-ATLANTIC
JACKSONVILLE, NC

MCB CAMP LEJEUNE
JACKSONVILLE, NC
P1338 II MEF SIMULATION/TRAINING CENTER
REPLACEMENT
ELECTRICAL - SINGLE LINE DIAGRAM

SCALE: AS NOTED

EPROJECT NO.: 1590892

CONSTR. CONTR. NO.
N40085-20-C-0059

NAVFAC DRAWING NO.

SHEET OF

E-603

PLOTTED: 6/10/2021 5:42:16 PM

FILE NAME: BIM 360://HF PACKAGE 3/P1338 MEF SIM CTR-1590892-E.rvt

DP2 SUBMISSION – P1338 BUILDING - PRE-FINAL SUBMISSION

GENERAL NOTES

1 SEE SHEET E-001 FOR ELECTRICAL NOTES, SYMBOLS, AND ABBREVIATIONS.
2 * SEE E-603 FOR WIRE SIZES NOT INDICATED IN PANEL SCHEDULES.

PANEL SWBD1

FED FROM:
LOCATION: ELEC 403
MOUNT: FLOOR

2000 A MAIN CIRCUIT BREAKER
3PH 4WIRE 480Y/277V
42K AIC
GROUND BAR

CKT	LOAD SERVED	WIRE	BRKR	PL	A		B		C		PL	BRKR	WIRE	LOAD SERVED	CKT
1	LP1	1	100	3	9.01	41.01					3	225	4	MP1	2
3	--	--	--	--			8.93	41.01			--	--	--	--	4
5	--	--	--	--					8.85	41.01	--	--	--	--	6
7	MP2	1	100	3	16.73	80.64					3	225	4	T2	8
9	--	--	--	--			16.73	81.44			--	--	--	--	10
11	--	--	--	--					16.73	81.06	--	--	--	--	12
13	T1	*	400	3	67.50	50.77					3	250	*	CHILLER CH-01	14
15	--	--	--	--			65.84	50.77			--	--	--	--	16
17	--	--	--	--					69.10	50.77	--	--	--	--	18
19	T3	*	400	3	99.31	0.00					3	225	--	SPARE	20
21	--	--	--	--			97.41	0.00			--	--	--	--	22
23	--	--	--	--					96.72	0.00	--	--	--	--	24
25	CHILLER CH-02	*	250	3	50.77	0.00					3	600	--	SPARE	26
27	--	--	--	--			50.77	0.00			--	--	--	--	28
29	--	--	--	--					50.77	0.00	--	--	--	--	30
31	SURGE PROTECTIVE DEVICE	--	30	3	0.00	0.00					--	--	--	PROVISIONED SPACE	32
33	--	--	--	--			0.00	0.00			--	--	--	PROVISIONED SPACE	34
35	--	--	--	--					0.00	0.00	--	--	--	PROVISIONED SPACE	36
37	PROVISIONED SPACE	--	--	--	0.00	0.00					--	--	--	PROVISIONED SPACE	38
39	PROVISIONED SPACE	--	--	--			0.00	0.00			--	--	--	PROVISIONED SPACE	40
41	PROVISIONED SPACE	--	--	--					0.00	0.00	--	--	--	PROVISIONED SPACE	42
				TOTAL	415.7		412.9		415.0		KVA				
					1502.0		1490.6		1499.4		AMPS				
				CONNECTED LOAD	1243.7		KVA		1495.9		AMPS				
NEC ARTICLE 220				DEMAND LOAD	849.9		KVA		1022.3		AMPS				

Load Classification	Connected Load	Demand Factor	Estimated Demand	Panel Totals	
Equipment	210548 VA	100.00%	210548 VA		
Power	2360 VA	100.00%	2360 VA	**Total Conn. Load:**	1243667 VA
RECEPT	475120 VA	51.05%	242560 VA	**Total Est. Demand:**	849932 VA
LTG	26801 VA	75.00%	20101 VA	**Total Conn.:**	1496 A
Water Heater	720 VA	100.00%	720 VA	**Total Est. Demand:**	1022 A
UFC-MOTOR-25%	25362 VA	25.00%	6341 VA		
UFC-MOTOR-30%	41582 VA	30.00%	12475 VA		
UFC-HVAC-70%	146632 VA	70.00%	102642 VA		
UFC-HEATER-80%	7162 VA	80.00%	5730 VA		
UFC-CHILLER-80%	304619 VA	80.00%	243695 VA		
FIRE PROTECTION - 100%	2760 VA	100.00%	2760 VA		

PANEL DPLV1

FED FROM: T1
LOCATION: ELEC 403
MOUNT: SURFACE

800 A MAIN CIRCUIT BREAKER
3PH 4WIRE 208Y/120V
18K AIC
GROUND BAR

CKT	LOAD SERVED	WIRE	BRKR	PL	A		B		C		PL	BRKR	WIRE	LOAD SERVED	CKT
1	PPS1	*	400	3	32.00	8.16					3	125	1	PPS2	2
3	--	--	--	--			32.00	8.16			--	--	--	--	4
5	--	--	--	--					32.00	9.08	--	--	--	--	6
7	TR1	1	100	3	3.40	2.72					3	100	1	TR2	8
9	--	--	--	--			3.56	2.86			--	--	--	--	10
11	--	--	--	--					4.44	3.42	--	--	--	--	12
13	PPC1	1/0	150	3	11.98	9.24					3	125	1	PPS3	14
15	--	--	--	--			12.00	7.26			--	--	--	--	16
17	--	--	--	--					11.08	9.08	--	--	--	--	18
19	SURGE PROTECTIVE DEVICE	--	30	3	0.00	0.00					3	100	--	SPARE	20
21	--	--	--	--			0.00	0.00			--	--	--	--	22
23	--	--	--	--					0.00	0.00	--	--	--	--	24
25	PROVISIONED SPACE	--	--	--	0.00	0.00					--	--	--	PROVISIONED SPACE	26
27	PROVISIONED SPACE	--	--	--			0.00	0.00			--	--	--	PROVISIONED SPACE	28
29	PROVISIONED SPACE	--	--	--					0.00	0.00	--	--	--	PROVISIONED SPACE	30
31	PROVISIONED SPACE	--	--	--	0.00	0.00					--	--	--	PROVISIONED SPACE	32
33	PROVISIONED SPACE	--	--	--			0.00	0.00			--	--	--	PROVISIONED SPACE	34
35	PROVISIONED SPACE	--	--	--					0.00	0.00	--	--	--	PROVISIONED SPACE	36
37	PROVISIONED SPACE	--	--	--	0.00	0.00					--	--	--	PROVISIONED SPACE	38
39	PROVISIONED SPACE	--	--	--			0.00	0.00			--	--	--	PROVISIONED SPACE	40
41	PROVISIONED SPACE	--	--	--					0.00	0.00	--	--	--	PROVISIONED SPACE	42
				TOTAL	67.5		65.8		69.1		KVA				
					564.6		548.7		577.9		AMPS				
				CONNECTED LOAD	202.4		KVA		561.9		AMPS				
NEC ARTICLE 220				DEMAND LOAD	194.6		KVA		540.3		AMPS				

Load Classification	Connected Load	Demand Factor	Estimated Demand	Panel Totals	
Equipment	173200 VA	100.00%	173200 VA		
RECEPT	20080 VA	74.90%	15040 VA	**Total Conn. Load:**	202432 VA
UFC-HVAC-70%	9152 VA	70.00%	6406 VA	**Total Est. Demand:**	194646 VA
				Total Conn.:	562 A
				Total Est. Demand:	540 A

PANEL DPLV2

FED FROM: T2
LOCATION: ELEC 306
MOUNT: SURFACE

600 A MAIN CIRCUIT BREAKER
3PH 4WIRE 208Y/120V
10K AIC
GROUND BAR

CKT	LOAD SERVED	WIRE	BRKR	PL	A		B		C		PL	BRKR	WIRE	LOAD SERVED	CKT
1	MPLV1	1	100	3	4.10	8.28					3	150	1/0	RP1	2
3	--	--	--	--			4.18	8.64			--	--	--	--	4
5	--	--	--	--					4.16	8.64	--	--	--	--	6
7	RP2	1/0	150	3	8.64	8.64					3	150	1/0	RP3	8
9	--	--	--	--			8.64	8.64			--	--	--	--	10
11	--	--	--	--					8.64	8.64	--	--	--	--	12
13	RP4	1/0	150	3	8.64	8.64					3	150	1/0	RP5	14
15	--	--	--	--			8.64	8.64			--	--	--	--	16
17	--	--	--	--					8.64	8.64	--	--	--	--	18
19	RP6	1/0	150	3	8.64	8.64					3	150	1/0	RP7	20
21	--	--	--	--			8.64	8.64			--	--	--	--	22
23	--	--	--	--					8.64	8.64	--	--	--	--	24
25	RP8	1/0	150	3	8.64	7.78					3	100	1	RP19	26
27	--	--	--	--			8.64	8.14			--	--	--	--	28
29	--	--	--	--					8.64	7.78	--	--	--	--	30
31	SPARE	--	150	3	0.00	0.00					3	150	--	SPARE	32
33	--	--	--	--			0.00	0.00			--	--	--	--	34
35	--	--	--	--					0.00	0.00	--	--	--	--	36
37	PROVISIONED SPACE	--	--	--	0.00	0.00					--	--	--	PROVISIONED SPACE	38
39	PROVISIONED SPACE	--	--	--			0.00	0.00			--	--	--	PROVISIONED SPACE	40
41	PROVISIONED SPACE	--	--	--					0.00	0.00	--	--	--	PROVISIONED SPACE	42
				TOTAL	80.6		81.4		81.1		KVA				
					672.0		679.2		676.0		AMPS				
				CONNECTED LOAD	243.1		KVA		674.9		AMPS				
NEC ARTICLE 220				DEMAND LOAD	127.3		KVA		353.3		AMPS				

Load Classification	Connected Load	Demand Factor	Estimated Demand	Panel Totals	
Equipment	2880 VA	100.00%	2880 VA		
RECEPT	230700 VA	52.17%	120350 VA	**Total Conn. Load:**	243134 VA
UFC-MOTOR-25%	6176 VA	25.00%	1544 VA	**Total Est. Demand:**	127294 VA
UFC-HVAC-70%	1830 VA	70.00%	1281 VA	**Total Conn.:**	675 A
UFC-HEATER-80%	1548 VA	80.00%	1238 VA	**Total Est. Demand:**	353 A

PANEL DPLV3

FED FROM: T3
LOCATION: ELEC 403
MOUNT: SURFACE

800 A MAIN CIRCUIT BREAKER
3PH 4WIRE 208Y/120V
18K AIC
GROUND BAR

CKT	LOAD SERVED	WIRE	BRKR	PL	A		B		C		PL	BRKR	WIRE	LOAD SERVED	CKT
1	FP1	6	50	3	0.78	7.20					3	150	1/0	RP13	2
3	--	--	--	--			1.14	6.48			--	--	--	--	4
5	--	--	--	--					1.20	5.76	--	--	--	--	6
7	MPLV2	1/0	150	3	12.45	8.97					3	125	1	RP18	8
9	--	--	--	--			10.61	8.67			--	--	--	--	10
11	--	--	--	--					11.70	8.03	--	--	--	--	12
13	RP17	1	125	3	8.64	10.93					3	150	1/0	RP16	14
15	--	--	--	--			8.60	10.85			--	--	--	--	16
17	--	--	--	--					8.35	10.98	--	--	--	--	18
19	RP14	3/0	200	3	15.79	8.64					3	150	1/0	RP10	20
21	--	--	--	--			16.50	8.64			--	--	--	--	22
23	--	--	--	--					16.14	8.64	--	--	--	--	24
25	RP11	1/0	150	3	8.64	8.64					3	150	1/0	RP12	26
27	--	--	--	--			8.64	8.64			--	--	--	--	28
29	--	--	--	--					8.64	8.64	--	--	--	--	30
31	RP9	1/0	150	3	8.64	0.00					3	200	--	SPARE	32
33	--	--	--	--			8.64	0.00			--	--	--	--	34
35	--	--	--	--					8.64	0.00	--	--	--	--	36
37	SPARE	--	150	3	0.00	0.00					--	--	--	PROVISIONED SPACE	38
39	--	--	--	--			0.00	0.00			--	--	--	PROVISIONED SPACE	40
41	--	--	--	--					0.00	0.00	--	--	--	PROVISIONED SPACE	42
				TOTAL	99.3		97.4		96.7		KVA				
					828.5		812.6		806.0		AMPS				
				CONNECTED LOAD	293.4		KVA		814.5		AMPS				
NEC ARTICLE 220				DEMAND LOAD	167.9		KVA		466.1		AMPS				

Load Classification	Connected Load	Demand Factor	Estimated Demand	Panel Totals	
Equipment	34468 VA	100.00%	34468 VA		
Power	2360 VA	100.00%	2360 VA	**Total Conn. Load:**	293439 VA
RECEPT	224340 VA	52.23%	117170 VA	**Total Est. Demand:**	167911 VA
Water Heater	720 VA	100.00%	720 VA	**Total Conn.:**	815 A
UFC-MOTOR-25%	16360 VA	25.00%	4090 VA	**Total Est. Demand:**	466 A
UFC-MOTOR-30%	6332 VA	30.00%	1900 VA		
UFC-HVAC-70%	4359 VA	70.00%	3052 VA		
UFC-HEATER-80%	1740 VA	80.00%	1392 VA		
FIRE PROTECTION - 100%	2760 VA	100.00%	2760 VA		

APPR | DATE | SYM | DESCRIPTION

SEAL

Michael Baker INTERNATIONAL
100 AIRSIDE DRIVE
MOON TOWNSHIP, PA 15108
A/E INFO

APPROVED
FOR COMMANDER NAVFAC

ACTIVITY
MARINE CORPS BASE
CAMP LEJEUNE

SATISFACTORY TO DATE
DES SD | DRW LAK | CHK YPS
PM
BRANCH MANAGER
CHIEF ENG/ARCH
FIRE PROTECTION

DEPARTMENT OF THE NAVY
NAVAL FACILITIES ENGINEERING COMMAND ~ MID-ATLANTIC
ROICC FLORENCE CAMP LEJEUNE
MCB CAMP LEJEUNE

NAVAL FACILITIES ENGINEERING COMMAND
NAVFAC ~ MID-ATLANTIC
JACKSONVILLE, NC

JACKSONVILLE, NC
P1338 II MEF SIMULATION/TRAINING CENTER
REPLACEMENT

ELECTRICAL - PANEL SCHEDULES

SCALE: AS NOTED
EPROJECT NO.: 1590892
CONSTR. CONTR. NO.
N40085-20-C-0059
NAVFAC DRAWING NO.

SHEET OF
E-604

DP2 SUBMISSION – P1338 BUILDING - PRE-FINAL SUBMISSION

PLOTTED: 6/10/2021 5:42:18 PM
FILE NAME: BIM 360://HF PACKAGE 3/P1338 MEF SIM CTR-1590892-E.rvt

GENERAL NOTES

1 SEE SHEET E-001 FOR ELECTRICAL NOTES, SYMBOLS, AND ABBREVIATIONS.
2 * SEE E-603 FOR WIRE SIZES NOT INDICATED IN PANEL SCHEDULES.

PANEL DPLV4

800 A MAIN CIRCUIT BREAKER
3PH 4WIRE 208Y/120V
30K AIC
GROUND BAR

FED FROM:
LOCATION:
MOUNT: FLOOR

CKT	LOAD SERVED	WIRE	BRKR	PL	A		B		C		PL	BRKR	WIRE	LOAD SERVED	CKT
1	PEDESTAL 1	3	50	3	4.80	4.80					3	50	4	PEDESTAL 2	2
3	--	--	--	--			4.80	4.80			--	--	--	--	4
5	--	--	--	--					4.80	4.80	--	--	--	--	6
7	PEDESTAL 3	6	50	3	4.80	4.80					3	50	6	PEDESTAL 4	8
9	--	--	--	--			4.80	4.80			--	--	--	--	10
11	--	--	--	--					4.80	4.80	--	--	--	--	12
13	PEDESTAL 5	6	50	3	4.80	4.80					3	50	6	PEDESTAL 6	14
15	--	--	--	--			4.80	4.80			--	--	--	--	16
17	--	--	--	--					4.80	4.80	--	--	--	--	18
19	PEDESTAL 7	6	50	3	4.80	4.80					3	50	4	PEDESTAL 8	20
21	--	--	--	--			4.80	4.80			--	--	--	--	22
23	--	--	--	--					4.80	4.80	--	--	--	--	24
25	PEDESTAL 9	4	50	3	4.80	4.80					3	50	3	PEDESTAL 10	26
27	--	--	--	--			4.80	4.80			--	--	--	--	28
29	--	--	--	--					4.80	4.80	--	--	--	--	30
31	SPARE	--	50	3	0.00	0.00					3	50	--	SPARE	32
33	--	--	--	--			0.00	0.00			--	--	--	--	34
35	--	--	--	--					0.00	0.00	--	--	--	--	36
37	PROVISIONED SPACE	--	--	--	0.00	0.00					--	--	--	PROVISIONED SPACE	38
39	PROVISIONED SPACE	--	--	--			0.00	0.00			--	--	--	PROVISIONED SPACE	40
41	PROVISIONED SPACE	--	--	--					0.00	0.00	--	--	--	PROVISIONED SPACE	42
			TOTAL		48.0		48.0		48.0		KVA				
					400.3		400.3		400.3		AMPS				
			CONNECTED LOAD		144.1		KVA		400.0		AMPS				
NEC ARTICLE 220			DEMAND LOAD		144.1		KVA		400.0		AMPS				

Load Classification	Connected Load	Demand Factor	Estimated Demand	Panel Totals	
Equipment	144107 VA	100.00%	144107 VA		
				Total Conn. Load:	144107 VA
				Total Est. Demand:	144107 VA
				Total Conn.:	400 A
				Total Est. Demand:	400 A

PANEL LP1

100 A MAIN LUG ONLY
3PH 4WIRE 480Y/277V
22K AIC
GROUND BAR

FED FROM: SWBD1
LOCATION: ELEC 403
MOUNT: SURFACE

CKT	LOAD SERVED	WIRE	BRKR	PL	A		B		C		PL	BRKR	WIRE	LOAD SERVED	CKT
1	LTG BUILDING MOUNTED	12	20	1	0.06	0.10					1	20	12	LTG - EXTERIOR CANOPIES	2
3	LTG BUILDING MOUNTED	12	20	1			0.06	0.35			1	20	10	SITE LIGHTING (CKT D)	4
5	LCP RM 403	12	20	1					0.10	0.55	1	20	10	SITE LIGHTING (CKT C)	6
7	SITE LIGHTING (CKT E)	6	20	1	0.55	1.17					1	20	4	SITE LIGHTING (CKT F)	8
9	LTG COR C030	12	20	1			0.61	2.41			1	20	12	LTG RM 304B, 303B, 303A, 302, 209, 205, 206, 204, G020,...	10
11	SITE LIGHTING (CKT B)	10	20	1					1.10	1.52	1	20	10	SITE LIGHTING (CKT A)	12
13	LTG RM 300B, 300A, 300Y, 300X	12	20	1	3.30	1.26					1	20	12	LTG RM C020, C022, C021, C023	14
15	LTG RM 301A, 301B, 304A	12	20	1			2.62	2.89			1	20	12	LTG RM 402, 401, 400, 118	16
17	LTG RM 106, 105, 108, G011, G012, G010, 110	12	20	1					1.91	3.68	1	20	12	LTG RM 202, 201, 203, 200B, 200A, 200C	18
19	SPARE	--	20	1	0.00	2.56					1	20	12	LTG RM 300C, 300Z, C032, C034, C031, C030, 306	20
21	SPARE	--	20	1			0.00	0.00			3	30	--	SURGE PROTECTIVE DEVICE	22
23	SPARE	--	20	1					0.00	0.00	--	--	--	--	24
25	PROVISIONED SPACE	--	--	--	0.00	0.00					--	--	--	--	26
27	PROVISIONED SPACE	--	--	--			0.00	0.00			--	--	--	PROVISIONED SPACE	28
29	PROVISIONED SPACE	--	--	--					0.00	0.00	--	--	--	PROVISIONED SPACE	30
			TOTAL		9.0		8.9		8.9		KVA				
					32.6		32.3		32.0		AMPS				
			CONNECTED LOAD		26.8		KVA		32.2		AMPS				
NEC ARTICLE 220			DEMAND LOAD		20.1		KVA		24.2		AMPS				

Load Classification	Connected Load	Demand Factor	Estimated Demand	Panel Totals	
LTG	26801 VA	75.00%	20101 VA		
				Total Conn. Load:	26801 VA
				Total Est. Demand:	20101 VA
				Total Conn.:	32 A
				Total Est. Demand:	24 A

PROVIDE SHUNT TRIP CIRCUIT BREAKER ON CIRCUITS FEEDING CRAC UNITS.

PANEL MP1

225 A MAIN LUG ONLY
3PH 4WIRE 480Y/277V
22K AIC
GROUND BAR

FED FROM: SWBD1
LOCATION: ELEC 403
MOUNT: SURFACE

CKT	LOAD SERVED	WIRE	BRKR	PL	A		B		C		PL	BRKR	WIRE	LOAD SERVED	CKT
1	AHU-01 (SUPPLY FAN) RM MECHANICAL 400	10	30	3	3.88	0.94					3	15	12	AHU-01 (EXHASUT FAN) RM MECHANICAL 400	2
3	--	--	--	--			3.88	0.94			--	--	--	--	4
5	--	--	--	--					3.88	0.94	--	--	--	--	6
7	AHU-02 (SUPPLY FAN) RM MECHANICAL 400	2/0	175	3	22.17	2.27					3	15	12	AHU-02 (EXHASUT FAN) RM MECHANICAL 400	8
9	--	--	--	--			22.17	2.27			--	--	--	--	10
11	--	--	--	--					22.17	2.27	--	--	--	--	12
13	BP-1 RM MECH (HOT) 401	12	20	3	0.44	0.44					3	20	12	BP-2 RM MECH (HOT) 401	14
15	--	--	--	--			0.44	0.44			--	--	--	--	16
17	--	--	--	--					0.44	0.44	--	--	--	--	18
19	BP-3 RM MECH (HOT) 401	12	20	3	0.44	3.88					3	20	12	P-01 RM MECHANICAL 400	20
21	--	--	--	--			0.44	3.88			--	--	--	--	22
23	--	--	--	--					0.44	3.88	--	--	--	--	24
25	P-02 MECHANICAL 400	12	20	3	3.88	1.33					3	20	12	P-03 RM MECH (HOT) 401	26
27	--	--	--	--			3.88	1.33			--	--	--	--	28
29	--	--	--	--					3.88	1.33	--	--	--	--	30
31	SPARE	--	20	3	0.00	1.33					3	20	12	P-04 RM MECH (HOT) 401	32
33	--	--	--	--			0.00	1.33			--	--	--	--	34
35	--	--	--	--					0.00	1.33	--	--	--	--	36
37	PROVISIONED SPACE	--	--	--	0.00	0.00					3	20	--	SPARE	38
39	PROVISIONED SPACE	--	--	--			0.00	0.00			--	--	--	--	40
41	PROVISIONED SPACE	--	--	--					0.00	0.00	--	--	--	--	42
			TOTAL		41.0		41.0		41.0		KVA				
					148.1		148.1		148.1		AMPS				
			CONNECTED LOAD		123.0		KVA		148.0		AMPS				
NEC ARTICLE 220			DEMAND LOAD		72.0		KVA		86.6		AMPS				

Load Classification	Connected Load	Demand Factor	Estimated Demand	Panel Totals	
UFC-MOTOR-30%	35250 VA	30.00%	10575 VA		
UFC-HVAC-70%	87792 VA	70.00%	61454 VA		
				Total Conn. Load:	123042 VA
				Total Est. Demand:	72029 VA
				Total Conn.:	148 A
				Total Est. Demand:	87 A

PANEL MP2

100 A MAIN LUG ONLY
3PH 4WIRE 480Y/277V
22K AIC
GROUND BAR

FED FROM: SWBD1
LOCATION: ELEC 403
MOUNT: SURFACE

CKT	LOAD SERVED	WIRE	BRKR	PL	A		B		C		PL	BRKR	WIRE	LOAD SERVED	CKT
1	EUH-01 RM ELEC 402	12	20	3	1.29	4.83					3	25	10	CRAC-01 RM SIM CONTROL (SERVER ROOM) 304A	2
3	--	--	--	--			1.29	4.83			--	--	--	--	4
5	--	--	--	--					1.29	4.83	--	--	--	--	6
7	CRAC-02 RM SIM CONTROL (SERVER ROOM) 304A	10	25	3	4.83	4.83					3	25	10	CRAC-03 RM SIM CONTROL (SERVER ROOM) 304A	8
9	--	--	--	--			4.83	4.83			--	--	--	--	10
11	--	--	--	--					4.83	4.83	--	--	--	--	12
13	EF-02 RM ELEC 403	12	20	3	0.94	0.00					3	25	--	SPARE	14
15	--	--	--	--			0.94	0.00			--	--	--	--	16
17	--	--	--	--					0.94	0.00	--	--	--	--	18
19	PROVISIONED SPACE	--	--	--	0.00	0.00					--	--	--	PROVISIONED SPACE	20
21	PROVISIONED SPACE	--	--	--			0.00	0.00			--	--	--	PROVISIONED SPACE	22
23	PROVISIONED SPACE	--	--	--					0.00	0.00	--	--	--	PROVISIONED SPACE	24
25	PROVISIONED SPACE	--	--	--	0.00	0.00					--	--	--	PROVISIONED SPACE	26
27	PROVISIONED SPACE	--	--	--			0.00	0.00			--	--	--	PROVISIONED SPACE	28
29	PROVISIONED SPACE	--	--	--					0.00	0.00	--	--	--	PROVISIONED SPACE	30
31	PROVISIONED SPACE	--	--	--	0.00	0.00					--	--	--	PROVISIONED SPACE	32
33	PROVISIONED SPACE	--	--	--			0.00	0.00			--	--	--	PROVISIONED SPACE	34
35	PROVISIONED SPACE	--	--	--					0.00	0.00	--	--	--	PROVISIONED SPACE	36
37	PROVISIONED SPACE	--	--	--	0.00	0.00					--	--	--	PROVISIONED SPACE	38
39	PROVISIONED SPACE	--	--	--			0.00	0.00			--	--	--	PROVISIONED SPACE	40
41	PROVISIONED SPACE	--	--	--					0.00	0.00	--	--	--	PROVISIONED SPACE	42
			TOTAL		16.7		16.7		16.7		KVA				
					60.4		60.4		60.4		AMPS				
			CONNECTED LOAD		50.2		KVA		60.4		AMPS				
NEC ARTICLE 220			DEMAND LOAD		34.3		KVA		41.2		AMPS				

Load Classification	Connected Load	Demand Factor	Estimated Demand	Panel Totals	
UFC-MOTOR-25%	2826 VA	25.00%	707 VA		
UFC-HVAC-70%	43498 VA	70.00%	30449 VA	Total Conn. Load:	50198 VA
UFC-HEATER-80%	3874 VA	80.00%	3099 VA	Total Est. Demand:	34255 VA
				Total Conn.:	60 A
				Total Est. Demand:	41 A

APPR | DATE | DESCRIPTION | SYM

SEAL

W.M. Jordan COMPANY – A JOINT VENTURE –

Michael Baker INTERNATIONAL
100 AIRSIDE DRIVE
MOON TOWNSHIP, PA 15108 A/E INFO

APPROVED

FOR COMMANDER NAVFAC

ACTIVITY
MARINE CORPS BASE
CAMP LEJEUNE

SATISFACTORY TO DATE

DES SD | DRW LAK | CHK YPS

PM

BRANCH MANAGER

CHIEF ENG/ARCH

FIRE PROTECTION

DEPARTMENT OF THE NAVY
NAVAL FACILITIES ENGINEERING COMMAND
ROIOC FLORENCE CAMP LEJEUNE
MCB CAMP LEJEUNE

NAVAL FACILITIES ENGINEERING COMMAND ~ MID-ATLANTIC
JACKSONVILLE, NC

JACKSONVILLE, NC
P1338 II MEF SIMULATION/TRAINING CENTER
REPLACEMENT

ELECTRICAL - PANEL SCHEDULES

SCALE: AS NOTED
EPROJECT NO.: 1590892
CONSTR. CONTR. NO.
N40085-20-C-0059
NAVFAC DRAWING NO.
SHEET OF

E-605

DP2 SUBMISSION – P1338 BUILDING - PRE-FINAL SUBMISSION

PLOTTED: 6/10/2021 5:42:21 PM

FILE NAME: BIM 360://HF PACKAGE 3/P1338 MEF SIM CTR-1590892-E.rvt

GENERAL NOTES

1 SEE SHEET E-001 FOR ELECTRICAL NOTES, SYMBOLS, AND ABBREVIATIONS.
2 * SEE E-603 FOR WIRE SIZES NOT INDICATED IN PANEL SCHEDULES.

PANEL MPLV1

FED FROM: DPLV2
LOCATION: ELEC 306
MOUNT: SURFACE

100 A MAIN LUG ONLY
3PH 4WIRE 208Y/120V
10K AIC
GROUND BAR

CKT	LOAD SERVED	WIRE	BRKR	PL	A		B		C		PL	BRKR	WIRE	LOAD SERVED	CKT
1	J-BOX VAV 24V POWER RM BREAK ROOM 206	12	20	1	0.18	1.00					1	20	12	J-BOX VAV 24V POWER RM EXERCISE CONTROL 202	2
3	LOUVER LOW VOLTAGE POWER ELEC 306	12	20	1			0.30	1.44			1	15	12	LEFT TURNSTILE GATE POWER SUPPLY	4
5	EF-04 RM ELEC 306	12	20	1					0.70	1.55	1	20	12	EWH-02 RM ELEC 306	6
7	J-BOX VAV 24V POWER RM LOBBY/VEST L010	12	20	1	1.00	1.00					1	20	12	J-BOX VAV 24V POWER RM SIM. CLASSROOM 200C	8
9	RIGHT TURNSTILE GATE POWER SUPPLY	15	20	1			1.44	0.00			--	--	--	PROVISIONED SPACE	10
11	HPCU-02	10	30	2					0.92	0.00	--	--	--	PROVISIONED SPACE	12
13	--	--	--	--	0.92	0.00					--	--	--	PROVISIONED SPACE	14
15	J-BOX VAV 24V POWER RM SIM. CLASSROOM 300Y	12	20	1			1.00	0.00			--	--	--	PROVISIONED SPACE	16
17	J-BOX VAV 24V POWER RM SIM. CLASSROOM 301A	12	20	1					1.00	0.00	--	--	--	PROVISIONED SPACE	18
19	PROVISIONED SPACE	--	--	--	0.00	0.00					--	--	--	PROVISIONED SPACE	20
21	PROVISIONED SPACE	--	--	--			0.00	0.00			--	--	--	PROVISIONED SPACE	22
23	PROVISIONED SPACE	--	--	--					0.00	0.00	--	--	--	PROVISIONED SPACE	24
25	PROVISIONED SPACE	--	--	--	0.00	0.00					--	--	--	PROVISIONED SPACE	26
27	PROVISIONED SPACE	--	--	--			0.00	0.00			--	--	--	PROVISIONED SPACE	28
29	PROVISIONED SPACE	--	--	--					0.00	0.00	--	--	--	PROVISIONED SPACE	30
31	PROVISIONED SPACE	--	--	--	0.00	0.00					--	--	--	PROVISIONED SPACE	32
33	PROVISIONED SPACE	--	--	--			0.00	0.00			--	--	--	PROVISIONED SPACE	34
35	PROVISIONED SPACE	--	--	--					0.00	0.00	--	--	--	PROVISIONED SPACE	36
37	PROVISIONED SPACE	--	--	--	0.00	0.00					1	20	--	SPARE	38
39	PROVISIONED SPACE	--	--	--			0.00	0.00			1	20	--	SPARE	40
41	PROVISIONED SPACE	--	--	--					0.00	0.00	1	20	--	SPARE	42
				TOTAL	4.1		4.2		4.2		KVA				
					34.1		34.9		34.7		AMPS				
				CONNECTED LOAD	12.4		KVA		34.5		AMPS				
NEC ARTICLE 220				DEMAND LOAD	6.9		KVA		19.3		AMPS				

Load Classification	Connected Load	Demand Factor	Estimated Demand	Panel Totals	
Equipment	2880 VA	100.00%	2880 VA		
UFC-MOTOR-25%	6176 VA	25.00%	1544 VA	Total Conn. Load:	12434 VA
UFC-HVAC-70%	1830 VA	70.00%	1281 VA	Total Est. Demand:	6944 VA
UFC-HEATER-80%	1548 VA	80.00%	1238 VA	Total Conn.:	35 A
				Total Est. Demand:	19 A

PANEL MPLV2

FED FROM: DPLV3
LOCATION: ELEC 403
MOUNT: SURFACE

150 A MAIN LUG ONLY
3PH 4WIRE 208Y/120V
10K AIC
GROUND BAR

CKT	LOAD SERVED	WIRE	BRKR	PL	A		B		C		PL	BRKR	WIRE	LOAD SERVED	CKT
1	UH-01 RM MECHANICAL 400	12	20	1	0.10	0.50					1	20	12	J-BOX LOUVER 24V POWER MECH (HOT) 401	2
3	UH-02 RM MECH (HOT) 401	12	20	1			0.10	0.86			1	20	12	LOUVER L-01B RM MECHANICAL 400	4
5	RP-1 RM MECH (HOT) 401	12	20	1					0.42	0.70	1	20	12	EF-3 RM ELEC 116	6
7	DEHUMIDIFIER DEH-01 RM MECHANICAL 400	12	20	1	0.77	1.18					1	20	12	EF-1 RM MEN G025	8
9	J-BOX LOUVER 24V POWER ELEC 116/403/	12	20	1			0.90	1.00			1	20	12	J-BOX VAV 24V POWER RM FIRE ROOM 104B	10
11	J-BOX VAV 24V POWER RM 109	12	20	1					1.00	1.18	1	20	12	SF-1 RM MECHANICAL 400	12
13	EWH-01 RM ELEC 116	12	20	1	1.55	0.36					1	20	12	GWH-1 MECH (HOT) 401	14
15	LOUVERS L-01A RM MECHANICAL 400	12	20	1			0.86	2.00			1	20	12	CHILLER HEAT TRACE CNTRL PANEL RM MECHANICAL...	16
17	GENERATOR JACKET WATER HEATER WITH PUMP	4	60	2					4.26	0.36	1	20	12	J-BOX FOR DDC CONTROLLER MECHANICAL 400	18
19	--	--	--	--	4.26	0.59					1	15	12	BOILER B-01 RM MECH (HOT) 401	20
21	GENERATOR CHARGER	12	20	1			1.92	0.92			2	25	10	SSCU-01	22
23	BOILER B-03 RM MECH (HOT) 401	12	15	1					0.59	0.92	--	--	--	--	24
25	LOUVER L-02 RM MECHANICAL 400	12	20	1	0.86	1.18					1	20	12	LIFT GATE CIRCUIT 2	26
27	GWH-2 MECH (HOT) 401	12	20	1			0.36	0.59			1	15	12	BOILER B-02 RM MECH (HOT) 401	28
29	OH ROLL UP DOOR RM MECHANICAL 400	12	20	3					0.55	0.55	3	20	12	OH ROLL UP DOOR RM STORAGE/SHIP/RECEIVING 402	30
31	--	--	--	--	0.55	0.55					--	--	--	--	32
33	--	--	--	--			0.55	0.55			--	--	--	--	34
35	SPARE	--	15	1					0.00	1.18	1	20	12	LIFT GATE CIRCUIT 1	36
37	SPARE	--	20	1	0.00	0.00					1	20	--	SPARE	38
39	SPARE	--	20	1			0.00	0.00			1	20	--	SPARE	40
41	SPARE	--	20	1					0.00	0.00	1	20	--	SPARE	42
				TOTAL	12.4		10.6		11.7		KVA				
					105.1		88.4		98.9		AMPS				
				CONNECTED LOAD	34.8		KVA		96.5		AMPS				
NEC ARTICLE 220				DEMAND LOAD	22.1		KVA		61.3		AMPS				

Load Classification	Connected Load	Demand Factor	Estimated Demand	Panel Totals	
Equipment	10448 VA	100.00%	10448 VA		
Power	2360 VA	100.00%	2360 VA	Total Conn. Load:	34759 VA
Water Heater	720 VA	100.00%	720 VA	Total Est. Demand:	22071 VA
UFC-MOTOR-25%	8800 VA	25.00%	2200 VA	Total Conn.:	96 A
UFC-MOTOR-30%	6332 VA	30.00%	1900 VA	Total Est. Demand:	61 A
UFC-HVAC-70%	4359 VA	70.00%	3052 VA		
UFC-HEATER-80%	1740 VA	80.00%	1392 VA		

PANEL FP1

FED FROM: DPLV3
LOCATION: ELEC 403
MOUNT: SURFACE

50 A MAIN LUG ONLY
3PH 4WIRE 208Y/120V
10K AIC
GROUND BAR

CKT	LOAD SERVED	WIRE	BRKR	PL	A		B		C		PL	BRKR	WIRE	LOAD SERVED	CKT
1	AMPLIFIER RM 403	12	20	1	0.60	0.03					2	20	12	EPO BOX SIM CONTROL SECURE COMM 304B	2
3	FACP RM 403	12	20	1			0.96	0.03			--	--	--	--	4
5	POWER SUPPLY RM 403	12	20	1					0.60	0.60	1	20	12	TRANSMITTER PANEL RM 403	6
7	PROVISIONED SPACE	--	--	--	0.00	0.15					2	20	12	EPO BOXES SIM CONTROL (SERVER ROOM) 304A	8
9	PROVISIONED SPACE	--	--	--			0.00	0.15			--	--	--	--	10
11	PROVISIONED SPACE	--	--	--					0.00	0.00	--	--	--	PROVISIONED SPACE	12
13	PROVISIONED SPACE	--	--	--	0.00	0.00					--	--	--	PROVISIONED SPACE	14
15	PROVISIONED SPACE	--	--	--			0.00	0.00			--	--	--	PROVISIONED SPACE	16
17	PROVISIONED SPACE	--	--	--					0.00	0.00	--	--	--	PROVISIONED SPACE	18
19	PROVISIONED SPACE	--	--	--	0.00	0.00					--	--	--	PROVISIONED SPACE	20
21	PROVISIONED SPACE	--	--	--			0.00	0.00			--	--	--	PROVISIONED SPACE	22
23	PROVISIONED SPACE	--	--	--					0.00	0.00	--	--	--	PROVISIONED SPACE	24
25	PROVISIONED SPACE	--	--	--	0.00	0.00					--	--	--	PROVISIONED SPACE	26
27	PROVISIONED SPACE	--	--	--			0.00	0.00			--	--	--	PROVISIONED SPACE	28
29	PROVISIONED SPACE	--	--	--					0.00	0.00	--	--	--	PROVISIONED SPACE	30
				TOTAL	0.8		1.1		1.2		KVA				
					6.5		9.9		10.5		AMPS				
				CONNECTED LOAD	3.1		KVA		8.6		AMPS				
NEC ARTICLE 220				DEMAND LOAD	3.1		KVA		8.6		AMPS				

Load Classification	Connected Load	Demand Factor	Estimated Demand	Panel Totals	
Equipment	350 VA	100.00%	350 VA		
FIRE PROTECTION - 100%	2760 VA	100.00%	2760 VA	Total Conn. Load:	3110 VA
				Total Est. Demand:	3110 VA
				Total Conn.:	9 A
				Total Est. Demand:	9 A

APPR | DATE | DESCRIPTION | SYM

SEAL

DEPARTMENT OF THE NAVY
NAVAL FACILITIES ENGINEERING COMMAND
ROICC FLORENCE CAMP LEJEUNE
MCB CAMP LEJEUNE

NAVAL FACILITIES ENGINEERING COMMAND ~ MID-ATLANTIC
JACKSONVILLE, NC

P1338 II MEF SIMULATION/TRAINING CENTER
REPLACEMENT
JACKSONVILLE, NC

ELECTRICAL - PANEL SCHEDULES

Michael Baker INTERNATIONAL
100 AIRSIDE DRIVE
MOON TOWNSHIP, PA 15108
A/E INFO

APPROVED
FOR COMMANDER NAVFAC
ACTIVITY
MARINE CORPS BASE
CAMP LEJEUNE
SATISFACTORY TO DATE
DES SD | DRW LAK | CHK YPS
PM
BRANCH MANAGER
CHIEF ENG/ARCH
FIRE PROTECTION

SCALE: AS NOTED
EPROJECT NO.: 1590892
CONSTR. CONTR. NO.
N40085-20-C-0059
NAVFAC DRAWING NO.
SHEET OF

E-606

DP2 SUBMISSION – P1338 BUILDING - PRE-FINAL SUBMISSION

PLOTTED: 6/10/2021 5:42:23 PM
FILE NAME: BIM 360://HF PACKAGE 3/P1338 MEF SIM CTR-1590892-E.rvt

GENERAL NOTES

1 SEE SHEET E-001 FOR ELECTRICAL NOTES, SYMBOLS, AND ABBREVIATIONS.
2 * SEE E-603 FOR WIRE SIZES NOT INDICATED IN PANEL SCHEDULES.

PANEL RP1

FED FROM: DPLV2
LOCATION: SIMULATION CLASSROOM 301A
MOUNT: RECESSED

150 A MAIN CIRCUIT BREAKER
3PH 4WIRE 208Y/120V
10K AIC
GROUND BAR

CKT	LOAD SERVED	WIRE	BRKR	PL	A		B		C		PL	BRKR	WIRE	LOAD SERVED	CKT
1	FLOOR BOXES RM 301A	10	20	1	0.72	0.72					1	20	10	FLOOR BOXES RM 301A	2
3	FLOOR BOXES RM 301A	10	20	1			0.72	0.72			1	20	10	FLOOR BOXES RM 301A	4
5	FLOOR BOXES RM 301A	10	20	1					0.72	0.72	1	20	10	FLOOR BOXES RM 301A	6
7	FLOOR BOXES RM 301A	10	20	1	0.72	0.36					1	20	10	FLOOR BOXES RM 301A	8
9	FLOOR BOXES RM 301A	10	20	1			0.72	0.72			1	20	10	FLOOR BOXES RM 301A	10
11	FLOOR BOXES RM 301A	10	20	1					0.72	0.72	1	20	10	FLOOR BOXES RM 301A	12
13	FLOOR BOXES RM 301A	10	20	1	0.72	0.72					1	20	10	FLOOR BOXES RM 301A	14
15	FLOOR BOXES RM 301A	10	20	1			0.72	0.72			1	20	10	FLOOR BOXES RM 301A	16
17	FLOOR BOXES RM 301A	10	20	1					0.72	0.72	1	20	10	FLOOR BOXES RM 301A	18
19	FLOOR BOXES RM 301A	10	20	1	0.72	0.72					1	20	10	FLOOR BOXES RM 301A	20
21	FLOOR BOXES RM 301A	10	20	1			0.72	0.72			1	20	10	FLOOR BOXES RM 301A	22
23	FLOOR BOXES RM 301A	10	20	1					0.72	0.72	1	20	10	FLOOR BOXES RM 301A	24
25	FLOOR BOXES RM 301A	10	20	1	0.72	0.72					1	20	10	FLOOR BOXES RM 301A	26
27	FLOOR BOXES RM 301A	10	20	1			0.72	0.72			1	20	10	FLOOR BOXES RM 301A	28
29	FLOOR BOXES RM 301A	10	20	1					0.72	0.72	1	20	10	FLOOR BOXES RM 301A	30
31	FLOOR BOXES RM 301A	10	20	1	0.72	0.72					1	20	10	FLOOR BOXES RM 301A	32
33	FLOOR BOXES RM 301A	10	20	1			0.72	0.72			1	20	10	FLOOR BOXES RM 301A	34
35	FLOOR BOXES RM 301A	10	20	1					0.72	0.72	1	20	10	FLOOR BOXES RM 301A	36
37	SPARE	--	20	1	0.00	0.00					1	20	--	SPARE	38
39	SPARE	--	20	1			0.00	0.00			1	20	--	SPARE	40
41	SPARE	--	20	1					0.00	0.00	1	20	--	SPARE	42
				TOTAL	8.3		8.6		8.6		KVA				
					69.0		72.5		72.5		AMPS				
				CONNECTED LOAD	25.6		KVA		70.9		AMPS				
NEC ARTICLE 220				DEMAND LOAD	17.8		KVA		49.4		AMPS				

Load Classification	Connected Load	Demand Factor	Estimated Demand	Panel Totals	
RECEPT	25560 VA	69.56%	17780 VA		
				Total Conn. Load:	25560 VA
				Total Est. Demand:	17780 VA
				Total Conn.:	71 A
				Total Est. Demand:	49 A

PANEL RP2

FED FROM: DPLV2
LOCATION: SIMULATION CLASSROOM 301B
MOUNT: RECESSED

150 A MAIN CIRCUIT BREAKER
3PH 4WIRE 208Y/120V
10K AIC
GROUND BAR

CKT	LOAD SERVED	WIRE	BRKR	PL	A		B		C		PL	BRKR	WIRE	LOAD SERVED	CKT
1	FLOOR BOXES RM 301B	10	20	1	0.72	0.72					1	20	10	FLOOR BOXES RM 301B	2
3	FLOOR BOXES RM 301B	10	20	1			0.72	0.72			1	20	10	FLOOR BOXES RM 301B	4
5	FLOOR BOXES RM 301B	10	20	1					0.72	0.72	1	20	10	FLOOR BOXES RM 301B	6
7	FLOOR BOXES RM 301B	10	20	1	0.72	0.72					1	20	10	FLOOR BOXES RM 301B	8
9	FLOOR BOXES RM 301B	10	20	1			0.72	0.72			1	20	10	FLOOR BOXES RM 301B	10
11	FLOOR BOXES RM 301B	10	20	1					0.72	0.72	1	20	10	FLOOR BOXES RM 301B	12
13	FLOOR BOXES RM 301B	10	20	1	0.72	0.72					1	20	10	FLOOR BOXES RM 301B	14
15	FLOOR BOXES RM 301B	10	20	1			0.72	0.72			1	20	10	FLOOR BOXES RM 301B	16
17	FLOOR BOXES RM 301B	10	20	1					0.72	0.72	1	20	10	FLOOR BOXES RM 301B	18
19	FLOOR BOXES RM 301B	10	20	1	0.72	0.72					1	20	10	FLOOR BOXES RM 301B	20
21	FLOOR BOXES RM 301B	10	20	1			0.72	0.72			1	20	10	FLOOR BOXES RM 301B	22
23	FLOOR BOXES RM 301B	10	20	1					0.72	0.72	1	20	10	FLOOR BOXES RM 301B	24
25	FLOOR BOXES RM 301B	10	20	1	0.72	0.72					1	20	10	FLOOR BOXES RM 301B	26
27	FLOOR BOXES RM 301B	10	20	1			0.72	0.72			1	20	10	FLOOR BOXES RM 301B	28
29	FLOOR BOXES RM 301B	10	20	1					0.72	0.72	1	20	10	FLOOR BOXES RM 301B	30
31	FLOOR BOXES RM 301B	10	20	1	0.72	0.72					1	20	10	FLOOR BOXES RM 301B	32
33	FLOOR BOXES RM 301B	10	20	1			0.72	0.72			1	20	10	FLOOR BOXES RM 301B	34
35	FLOOR BOXES RM 301B	10	20	1					0.72	0.72	1	20	10	FLOOR BOXES RM 301B	36
37	SPARE	--	20	1	0.00	0.00					1	20	--	SPARE	38
39	SPARE	--	20	1			0.00	0.00			1	20	--	SPARE	40
41	SPARE	--	20	1					0.00	0.00	1	20	--	SPARE	42
				TOTAL	8.6		8.6		8.6		KVA				
					72.0		72.0		72.0		AMPS				
				CONNECTED LOAD	25.9		KVA		71.9		AMPS				
NEC ARTICLE 220				DEMAND LOAD	18.0		KVA		49.9		AMPS				

Load Classification	Connected Load	Demand Factor	Estimated Demand	Panel Totals	
RECEPT	25920 VA	69.29%	17960 VA		
				Total Conn. Load:	25920 VA
				Total Est. Demand:	17960 VA
				Total Conn.:	72 A
				Total Est. Demand:	50 A

PANEL RP3

FED FROM: DPLV2
LOCATION: SIMULATION CLASSROOM 300X
MOUNT: RECESSED

150 A MAIN CIRCUIT BREAKER
3PH 4WIRE 208Y/120V
10K AIC
GROUND BAR

CKT	LOAD SERVED	WIRE	BRKR	PL	A		B		C		PL	BRKR	WIRE	LOAD SERVED	CKT
1	FLOOR BOXES RM 300X	10	20	1	0.72	0.72					1	20	10	FLOOR BOXES RM 300X	2
3	FLOOR BOXES RM 300X	10	20	1			0.72	0.72			1	20	10	FLOOR BOXES RM 300X	4
5	FLOOR BOXES RM 300X	10	20	1					0.72	0.72	1	20	10	FLOOR BOXES RM 300X	6
7	FLOOR BOXES RM 300X	10	20	1	0.72	0.72					1	20	10	FLOOR BOXES RM 300X	8
9	FLOOR BOXES RM 300X	10	20	1			0.72	0.72			1	20	10	FLOOR BOXES RM 300X	10
11	FLOOR BOXES RM 300X	10	20	1					0.72	0.72	1	20	10	FLOOR BOXES RM 300X	12
13	FLOOR BOXES RM 300X	10	20	1	0.72	0.72					1	20	10	FLOOR BOXES RM 300X	14
15	FLOOR BOXES RM 300X	10	20	1			0.72	0.72			1	20	10	FLOOR BOXES RM 300X	16
17	FLOOR BOXES RM 300X	10	20	1					0.72	0.72	1	20	10	FLOOR BOXES RM 300X	18
19	FLOOR BOXES RM 300X	10	20	1	0.72	0.72					1	20	10	FLOOR BOXES RM 300X	20
21	FLOOR BOXES RM 300X	10	20	1			0.72	0.72			1	20	10	FLOOR BOXES RM 300X	22
23	FLOOR BOXES RM 300X	10	20	1					0.72	0.72	1	20	10	FLOOR BOXES RM 300X	24
25	FLOOR BOXES RM 300X	10	20	1	0.72	0.72					1	20	10	FLOOR BOXES RM 300X	26
27	FLOOR BOXES RM 300X	10	20	1			0.72	0.72			1	20	10	FLOOR BOXES RM 300X	28
29	FLOOR BOXES RM 300X	10	20	1					0.72	0.72	1	20	10	FLOOR BOXES RM 300X	30
31	FLOOR BOXES RM 300X	10	20	1	0.72	0.72					1	20	10	FLOOR BOXES RM 300X	32
33	FLOOR BOXES RM 300X	10	20	1			0.72	0.72			1	20	10	FLOOR BOXES RM 300X	34
35	FLOOR BOXES RM 300X	10	20	1					0.72	0.72	1	20	10	FLOOR BOXES RM 300X	36
37	SPARE	--	20	1	0.00	0.00					1	20	--	SPARE	38
39	SPARE	--	20	1			0.00	0.00			1	20	--	SPARE	40
41	SPARE	--	20	1					0.00	0.00	1	20	--	SPARE	42
				TOTAL	8.6		8.6		8.6		KVA				
					72.0		72.0		72.0		AMPS				
				CONNECTED LOAD	25.9		KVA		71.9		AMPS				
NEC ARTICLE 220				DEMAND LOAD	18.0		KVA		49.9		AMPS				

Load Classification	Connected Load	Demand Factor	Estimated Demand	Panel Totals	
RECEPT	25920 VA	69.29%	17960 VA		
				Total Conn. Load:	25920 VA
				Total Est. Demand:	17960 VA
				Total Conn.:	72 A
				Total Est. Demand:	50 A

PANEL RP4

FED FROM: DPLV2
LOCATION: SIMULATION CLASSROOM 300Y
MOUNT: RECESSED

150 A MAIN CIRCUIT BREAKER
3PH 4WIRE 208Y/120V
10K AIC
GROUND BAR

CKT	LOAD SERVED	WIRE	BRKR	PL	A		B		C		PL	BRKR	WIRE	LOAD SERVED	CKT
1	FLOOR BOXES RM 300Y	10	20	1	0.72	0.72					1	20	10	FLOOR BOXES RM 300Y	2
3	FLOOR BOXES RM 300Y	10	20	1			0.72	0.72			1	20	10	FLOOR BOXES RM 300Y	4
5	FLOOR BOXES RM 300Y	10	20	1					0.72	0.72	1	20	10	FLOOR BOXES RM 300Y	6
7	FLOOR BOXES RM 300Y	10	20	1	0.72	0.72					1	20	10	FLOOR BOXES RM 300Y	8
9	FLOOR BOXES RM 300Y	10	20	1			0.72	0.72			1	20	10	FLOOR BOXES RM 300Y	10
11	FLOOR BOXES RM 300Y	10	20	1					0.72	0.72	1	20	10	FLOOR BOXES RM 300Y	12
13	FLOOR BOXES RM 300Y	10	20	1	0.72	0.72					1	20	10	FLOOR BOXES RM 300Y	14
15	FLOOR BOXES RM 300Y	10	20	1			0.72	0.72			1	20	10	FLOOR BOXES RM 300Y	16
17	FLOOR BOXES RM 300Y	10	20	1					0.72	0.72	1	20	10	FLOOR BOXES RM 300Y	18
19	FLOOR BOXES RM 300Y	10	20	1	0.72	0.72					1	20	10	FLOOR BOXES RM 300Y	20
21	FLOOR BOXES RM 300Y	10	20	1			0.72	0.72			1	20	10	FLOOR BOXES RM 300Y	22
23	FLOOR BOXES RM 300Y	10	20	1					0.72	0.72	1	20	10	FLOOR BOXES RM 300Y	24
25	FLOOR BOXES RM 300Y	10	20	1	0.72	0.72					1	20	10	FLOOR BOXES RM 300Y	26
27	FLOOR BOXES RM 300Y	10	20	1			0.72	0.72			1	20	10	FLOOR BOXES RM 300Y	28
29	FLOOR BOXES RM 300Y	10	20	1					0.72	0.72	1	20	10	FLOOR BOXES RM 300Y	30
31	FLOOR BOXES RM 300Y	10	20	1	0.72	0.72					1	20	10	FLOOR BOXES RM 300Y	32
33	FLOOR BOXES RM 300Y	10	20	1			0.72	0.72			1	20	10	FLOOR BOXES RM 300Y	34
35	FLOOR BOXES RM 300Y	10	20	1					0.72	0.72	1	20	10	FLOOR BOXES RM 300Y	36
37	SPARE	--	20	1	0.00	0.00					1	20	--	SPARE	38
39	SPARE	--	20	1			0.00	0.00			1	20	--	SPARE	40
41	SPARE	--	20	1					0.00	0.00	1	20	--	SPARE	42
				TOTAL	8.6		8.6		8.6		KVA				
					72.0		72.0		72.0		AMPS				
				CONNECTED LOAD	25.9		KVA		71.9		AMPS				
NEC ARTICLE 220				DEMAND LOAD	18.0		KVA		49.9		AMPS				

Load Classification	Connected Load	Demand Factor	Estimated Demand	Panel Totals	
RECEPT	25920 VA	69.29%	17960 VA		
				Total Conn. Load:	25920 VA
				Total Est. Demand:	17960 VA
				Total Conn.:	72 A
				Total Est. Demand:	50 A

APPR | DATE | DESCRIPTION | SYM

NAVFAC

SEAL

WNJ Jordan COMPANY – A JOINT VENTURE –

Michael Baker INTERNATIONAL
100 AIRSIDE DRIVE
MOON TOWNSHIP, PA 15108 A/E INFO

APPROVED

FOR COMMANDER NAVFAC

ACTIVITY
MARINE CORPS BASE
CAMP LEJEUNE

SATISFACTORY TO DATE

DES SD | DRW LAK | CHK YPS

PM

BRANCH MANAGER

CHIEF ENG/ARCH

FIRE PROTECTION

DEPARTMENT OF THE NAVY
NAVAL FACILITIES ENGINEERING COMMAND ~ MID-ATLANTIC
ROICC FLORENCE CAMP LEJEUNE
MCB CAMP LEJEUNE
NAVAL FACILITIES ENGINEERING COMMAND ~ MID-ATLANTIC
JACKSONVILLE, NC
JACKSONVILLE, NC
P1338 II MEF SIMULATION/TRAINING CENTER
REPLACEMENT
ELECTRICAL - PANEL SCHEDULES

SCALE: AS NOTED
EPROJECT NO.: 1590892
CONSTR. CONTR. NO.
N40085-20-C-0059
NAVFAC DRAWING NO.
SHEET OF

E-607

DP2 SUBMISSION – P1338 BUILDING - PRE-FINAL SUBMISSION

PLOTTED: 6/10/2021 5:42:25 PM

FILE NAME: BIM 360://HF PACKAGE 3/P1338 MEF SIM CTR-1590892-E.rvt

GENERAL NOTES

1 SEE SHEET E-001 FOR ELECTRICAL NOTES, SYMBOLS, AND ABBREVIATIONS.
2 * SEE E-603 FOR WIRE SIZES NOT INDICATED IN PANEL SCHEDULES.

PANEL RP5

FED FROM: DPLV2
LOCATION: SIMULATION CLASSROOM 300Z
MOUNT: RECESSED

150 A MAIN CIRCUIT BREAKER
3PH 4WIRE 208Y/120V
10K AIC
GROUND BAR

CKT	LOAD SERVED	WIRE	BRKR	PL	A		B		C		PL	BRKR	WIRE	LOAD SERVED	CKT
1	FLOOR BOXES RM 300Z	10	20	1	0.72	0.72					1	20	10	FLOOR BOXES RM 300Z	2
3	FLOOR BOXES RM 300Z	10	20	1			0.72	0.72			1	20	10	FLOOR BOXES RM 300Z	4
5	FLOOR BOXES RM 300Z	10	20	1					0.72	0.72	1	20	10	FLOOR BOXES RM 300Z	6
7	FLOOR BOXES RM 300Z	10	20	1	0.72	0.72					1	20	10	FLOOR BOXES RM 300Z	8
9	FLOOR BOXES RM 300Z	10	20	1			0.72	0.72			1	20	10	FLOOR BOXES RM 300Z	10
11	FLOOR BOXES RM 300Z	10	20	1					0.72	0.72	1	20	10	FLOOR BOXES RM 300Z	12
13	FLOOR BOXES RM 300Z	10	20	1	0.72	0.72					1	20	10	FLOOR BOXES RM 300Z	14
15	FLOOR BOXES RM 300Z	10	20	1			0.72	0.72			1	20	10	FLOOR BOXES RM 300Z	16
17	FLOOR BOXES RM 300Z	10	20	1					0.72	0.72	1	20	10	FLOOR BOXES RM 300Z	18
19	FLOOR BOXES RM 300Z	10	20	1	0.72	0.72					1	20	10	FLOOR BOXES RM 300Z	20
21	FLOOR BOXES RM 300Z	10	20	1			0.72	0.72			1	20	10	FLOOR BOXES RM 300Z	22
23	FLOOR BOXES RM 300Z	10	20	1					0.72	0.72	1	20	10	FLOOR BOXES RM 300Z	24
25	FLOOR BOXES RM 300Z	10	20	1	0.72	0.72					1	20	10	FLOOR BOXES RM 300Z	26
27	FLOOR BOXES RM 300Z	10	20	1			0.72	0.72			1	20	10	FLOOR BOXES RM 300Z	28
29	FLOOR BOXES RM 300Z	10	20	1					0.72	0.72	1	20	10	FLOOR BOXES RM 300Z	30
31	FLOOR BOXES RM 300Z	10	20	1	0.72	0.72					1	20	10	FLOOR BOXES RM 300Z	32
33	FLOOR BOXES RM 300Z	10	20	1			0.72	0.72			1	20	10	FLOOR BOXES RM 300Z	34
35	FLOOR BOXES RM 300Z	10	20	1					0.72	0.72	1	20	10	FLOOR BOXES RM 300Z	36
37	SPARE	--	20	1	0.00	0.00					1	20	--	SPARE	38
39	SPARE	--	20	1			0.00	0.00			1	20	--	SPARE	40
41	SPARE	--	20	1					0.00	0.00	1	20	--	SPARE	42
			TOTAL		8.6		8.6		8.6		KVA				
					72.0		72.0		72.0		AMPS				
			CONNECTED LOAD		25.9		KVA		71.9		AMPS				
NEC ARTICLE 220			DEMAND LOAD		18.0		KVA		49.9		AMPS				

Load Classification	Connected Load	Demand Factor	Estimated Demand	Panel Totals	
RECEPT	25920 VA	69.29%	17960 VA		
				Total Conn. Load:	25920 VA
				Total Est. Demand:	17960 VA
				Total Conn.:	72 A
				Total Est. Demand:	50 A

PANEL RP6

FED FROM: DPLV2
LOCATION: SIMULATION CLASSROOM 300C
MOUNT: RECESSED

150 A MAIN CIRCUIT BREAKER
3PH 4WIRE 208Y/120V
10K AIC
GROUND BAR

CKT	LOAD SERVED	WIRE	BRKR	PL	A		B		C		PL	BRKR	WIRE	LOAD SERVED	CKT
1	FLOOR BOXES RM 300C	10	20	1	0.72	0.72					1	20	10	FLOOR BOXES RM 300C	2
3	FLOOR BOXES RM 300C	10	20	1			0.72	0.72			1	20	10	FLOOR BOXES RM 300C	4
5	FLOOR BOXES RM 300C	10	20	1					0.72	0.72	1	20	10	FLOOR BOXES RM 300C	6
7	FLOOR BOXES RM 300C	10	20	1	0.72	0.72					1	20	10	FLOOR BOXES RM 300C	8
9	FLOOR BOXES RM 300C	10	20	1			0.72	0.72			1	20	10	FLOOR BOXES RM 300C	10
11	FLOOR BOXES RM 300C	10	20	1					0.72	0.72	1	20	10	FLOOR BOXES RM 300C	12
13	FLOOR BOXES RM 300C	10	20	1	0.72	0.72					1	20	10	FLOOR BOXES RM 300C	14
15	FLOOR BOXES RM 300C	10	20	1			0.72	0.72			1	20	10	FLOOR BOXES RM 300C	16
17	FLOOR BOXES RM 300C	10	20	1					0.72	0.72	1	20	10	FLOOR BOXES RM 300C	18
19	FLOOR BOXES RM 300C	10	20	1	0.72	0.72					1	20	10	FLOOR BOXES RM 300C	20
21	FLOOR BOXES RM 300C	10	20	1			0.72	0.72			1	20	10	FLOOR BOXES RM 300C	22
23	FLOOR BOXES RM 300C	10	20	1					0.72	0.72	1	20	10	FLOOR BOXES RM 300C	24
25	FLOOR BOXES RM 300C	10	20	1	0.72	0.72					1	20	10	FLOOR BOXES RM 300C	26
27	FLOOR BOXES RM 300C	10	20	1			0.72	0.72			1	20	10	FLOOR BOXES RM 300C	28
29	FLOOR BOXES RM 300C	10	20	1					0.72	0.72	1	20	10	FLOOR BOXES RM 300C	30
31	FLOOR BOXES RM 300C	10	20	1	0.72	0.72					1	20	10	FLOOR BOXES RM 300C	32
33	FLOOR BOXES RM 300C	10	20	1			0.72	0.72			1	20	10	FLOOR BOXES RM 300C	34
35	FLOOR BOXES RM 300C	10	20	1					0.72	0.72	1	20	10	FLOOR BOXES RM 300C	36
37	SPARE	--	20	1	0.00	0.00					1	20	--	SPARE	38
39	SPARE	--	20	1			0.00	0.00			1	20	--	SPARE	40
41	SPARE	--	20	1					0.00	0.00	1	20	--	SPARE	42
			TOTAL		8.6		8.6		8.6		KVA				
					72.0		72.0		72.0		AMPS				
			CONNECTED LOAD		25.9		KVA		71.9		AMPS				
NEC ARTICLE 220			DEMAND LOAD		18.0		KVA		49.9		AMPS				

Load Classification	Connected Load	Demand Factor	Estimated Demand	Panel Totals	
RECEPT	25920 VA	69.29%	17960 VA		
				Total Conn. Load:	25920 VA
				Total Est. Demand:	17960 VA
				Total Conn.:	72 A
				Total Est. Demand:	50 A

PANEL RP7

FED FROM: DPLV2
LOCATION: SIMULATION CLASSROOM 300B
MOUNT: RECESSED

150 A MAIN CIRCUIT BREAKER
3PH 4WIRE 208Y/120V
10K AIC
GROUND BAR

CKT	LOAD SERVED	WIRE	BRKR	PL	A		B		C		PL	BRKR	WIRE	LOAD SERVED	CKT
1	FLOOR BOXES RM 300B	10	20	1	0.72	0.72					1	20	10	FLOOR BOXES RM 300B	2
3	FLOOR BOXES RM 300B	10	20	1			0.72	0.72			1	20	10	FLOOR BOXES RM 300B	4
5	FLOOR BOXES RM 300B	10	20	1					0.72	0.72	1	20	10	FLOOR BOXES RM 300B	6
7	FLOOR BOXES RM 300B	10	20	1	0.72	0.72					1	20	10	FLOOR BOXES RM 300B	8
9	FLOOR BOXES RM 300B	10	20	1			0.72	0.72			1	20	10	FLOOR BOXES RM 300B	10
11	FLOOR BOXES RM 300B	10	20	1					0.72	0.72	1	20	10	FLOOR BOXES RM 300B	12
13	FLOOR BOXES RM 300B	10	20	1	0.72	0.72					1	20	10	FLOOR BOXES RM 300B	14
15	FLOOR BOXES RM 300B	10	20	1			0.72	0.72			1	20	10	FLOOR BOXES RM 300B	16
17	FLOOR BOXES RM 300B	10	20	1					0.72	0.72	1	20	10	FLOOR BOXES RM 300B	18
19	FLOOR BOXES RM 300B	10	20	1	0.72	0.72					1	20	10	FLOOR BOXES RM 300B	20
21	FLOOR BOXES RM 300B	10	20	1			0.72	0.72			1	20	10	FLOOR BOXES RM 300B	22
23	FLOOR BOXES RM 300B	10	20	1					0.72	0.72	1	20	10	FLOOR BOXES RM 300B	24
25	FLOOR BOXES RM 300B	10	20	1	0.72	0.72					1	20	10	FLOOR BOXES RM 300B	26
27	FLOOR BOXES RM 300B	10	20	1			0.72	0.72			1	20	10	FLOOR BOXES RM 300B	28
29	FLOOR BOXES RM 300B	10	20	1					0.72	0.72	1	20	10	FLOOR BOXES RM 300B	30
31	FLOOR BOXES RM 300B	10	20	1	0.72	0.72					1	20	10	FLOOR BOXES RM 300B	32
33	FLOOR BOXES RM 300B	10	20	1			0.72	0.72			1	20	10	FLOOR BOXES RM 300B	34
35	FLOOR BOXES RM 300B	10	20	1					0.72	0.72	1	20	10	FLOOR BOXES RM 300B	36
37	SPARE	--	20	1	0.00	0.00					1	20	--	SPARE	38
39	SPARE	--	20	1			0.00	0.00			1	20	--	SPARE	40
41	SPARE	--	20	1					0.00	0.00	1	20	--	SPARE	42
			TOTAL		8.6		8.6		8.6		KVA				
					72.0		72.0		72.0		AMPS				
			CONNECTED LOAD		25.9		KVA		71.9		AMPS				
NEC ARTICLE 220			DEMAND LOAD		18.0		KVA		49.9		AMPS				

Load Classification	Connected Load	Demand Factor	Estimated Demand	Panel Totals	
RECEPT	25920 VA	69.29%	17960 VA		
				Total Conn. Load:	25920 VA
				Total Est. Demand:	17960 VA
				Total Conn.:	72 A
				Total Est. Demand:	50 A

PANEL RP8

FED FROM: DPLV2
LOCATION: SIMULATION CLASSROOM 300A
MOUNT: RECESSED

150 A MAIN CIRCUIT BREAKER
3PH 4WIRE 208Y/120V
10K AIC
GROUND BAR

CKT	LOAD SERVED	WIRE	BRKR	PL	A		B		C		PL	BRKR	WIRE	LOAD SERVED	CKT
1	FLOOR BOXES RM 300A	10	20	1	0.72	0.72					1	20	10	FLOOR BOXES RM 300A	2
3	FLOOR BOXES RM 300A	10	20	1			0.72	0.72			1	20	10	FLOOR BOXES RM 300A	4
5	FLOOR BOXES RM 300A	10	20	1					0.72	0.72	1	20	10	FLOOR BOXES RM 300A	6
7	FLOOR BOXES RM 300A	10	20	1	0.72	0.72					1	20	10	FLOOR BOXES RM 300A	8
9	FLOOR BOXES RM 300A	10	20	1			0.72	0.72			1	20	10	FLOOR BOXES RM 300A	10
11	FLOOR BOXES RM 300A	10	20	1					0.72	0.72	1	20	10	FLOOR BOXES RM 300A	12
13	FLOOR BOXES RM 300A	10	20	1	0.72	0.72					1	20	10	FLOOR BOXES RM 300A	14
15	FLOOR BOXES RM 300A	10	20	1			0.72	0.72			1	20	10	FLOOR BOXES RM 300A	16
17	FLOOR BOXES RM 300A	10	20	1					0.72	0.72	1	20	10	FLOOR BOXES RM 300A	18
19	FLOOR BOXES RM 300A	10	20	1	0.72	0.72					1	20	10	FLOOR BOXES RM 300A	20
21	FLOOR BOXES RM 300A	10	20	1			0.72	0.72			1	20	10	FLOOR BOXES RM 300A	22
23	FLOOR BOXES RM 300A	10	20	1					0.72	0.72	1	20	10	FLOOR BOXES RM 300A	24
25	FLOOR BOXES RM 300A	10	20	1	0.72	0.72					1	20	10	FLOOR BOXES RM 300A	26
27	FLOOR BOXES RM 300A	10	20	1			0.72	0.72			1	20	10	FLOOR BOXES RM 300A	28
29	FLOOR BOXES RM 300A	10	20	1					0.72	0.72	1	20	10	FLOOR BOXES RM 300A	30
31	FLOOR BOXES RM 300A	10	20	1	0.72	0.72					1	20	10	FLOOR BOXES RM 300A	32
33	FLOOR BOXES RM 300A	10	20	1			0.72	0.72			1	20	10	FLOOR BOXES RM 300A	34
35	FLOOR BOXES RM 300A	10	20	1					0.72	0.72	1	20	10	FLOOR BOXES RM 300A	36
37	SPARE	--	20	1	0.00	0.00					1	20	--	SPARE	38
39	SPARE	--	20	1			0.00	0.00			1	20	--	SPARE	40
41	SPARE	--	20	1					0.00	0.00	1	20	--	SPARE	42
			TOTAL		8.6		8.6		8.6		KVA				
					72.0		72.0		72.0		AMPS				
			CONNECTED LOAD		25.9		KVA		71.9		AMPS				
NEC ARTICLE 220			DEMAND LOAD		18.0		KVA		49.9		AMPS				

Load Classification	Connected Load	Demand Factor	Estimated Demand	Panel Totals	
RECEPT	25920 VA	69.29%	17960 VA		
				Total Conn. Load:	25920 VA
				Total Est. Demand:	17960 VA
				Total Conn.:	72 A
				Total Est. Demand:	50 A

APPR | DATE | DESCRIPTION | SYM

NAVFAC

SEAL

W.M. Jordan COMPANY – A JOINT VENTURE –

Michael Baker INTERNATIONAL
100 AIRSIDE DRIVE
MOON TOWNSHIP, PA 15108 A/E INFO

APPROVED

FOR COMMANDER NAVFAC

ACTIVITY
MARINE CORPS BASE
CAMP LEJEUNE

SATISFACTORY TO DATE

DES SD | DRW LAK | CHK YPS

PM

BRANCH MANAGER

CHIEF ENG/ARCH

FIRE PROTECTION

DEPARTMENT OF THE NAVY
NAVAL FACILITIES ENGINEERING COMMAND
ROICC FLORENCE CAMP LEJEUNE
MCB CAMP LEJEUNE

NAVAL FACILITIES ENGINEERING COMMAND – MID-ATLANTIC
JACKSONVILLE, NC

JACKSONVILLE, NC
P1338 II MEF SIMULATION/TRAINING CENTER
REPLACEMENT

ELECTRICAL - PANEL SCHEDULES

SCALE: AS NOTED
EPROJECT NO.: 1590892
CONSTR. CONTR. NO.
N40085-20-C-0059
NAVFAC DRAWING NO.
SHEET OF

E-608

DP2 SUBMISSION – P1338 BUILDING - PRE-FINAL SUBMISSION

PLOTTED: 6/10/2021 5:42:28 PM

FILE NAME: BIM 360://HF PACKAGE 3/P1338 MEF SIM CTR-1590892-E.rvt

GENERAL NOTES

1 SEE SHEET E-001 FOR ELECTRICAL NOTES, SYMBOLS, AND ABBREVIATIONS.
2 * SEE E-603 FOR WIRE SIZES NOT INDICATED IN PANEL SCHEDULES.

PANEL RP9

FED FROM: DPLV3
LOCATION: EXERCISE CONTROL 202
MOUNT: RECESSED

150 A MAIN CIRCUIT BREAKER
3PH 4WIRE 208Y/120V
10K AIC
GROUND BAR

CKT	*LOAD SERVED*	*WIRE*	*BRKR*	*PL*	*A*		*B*		*C*		*PL*	*BRKR*	*WIRE*	*LOAD SERVED*	*CKT*
1	FLOOR BOXES RM 202	10	20	1	0.72	0.72					1	20	10	FLOOR BOXES RM 202	2
3	FLOOR BOXES RM 202	10	20	1			0.72	0.72			1	20	10	FLOOR BOXES RM 202	4
5	FLOOR BOXES RM 202	10	20	1					0.72	0.72	1	20	10	FLOOR BOXES RM 202	6
7	FLOOR BOXES RM 202	10	20	1	0.72	0.72					1	20	10	FLOOR BOXES RM 202	8
9	FLOOR BOXES RM 202	10	20	1			0.72	0.72			1	20	10	FLOOR BOXES RM 202	10
11	FLOOR BOXES RM 202	10	20	1					0.72	0.72	1	20	10	FLOOR BOXES RM 202	12
13	FLOOR BOXES RM 202	10	20	1	0.72	0.72					1	20	10	FLOOR BOXES RM 202	14
15	FLOOR BOXES RM 202	10	20	1			0.72	0.72			1	20	10	FLOOR BOXES RM 202	16
17	FLOOR BOXES RM 202	10	20	1					0.72	0.72	1	20	10	FLOOR BOXES RM 202	18
19	FLOOR BOXES RM 202	10	20	1	0.72	0.72					1	20	10	FLOOR BOXES RM 202	20
21	FLOOR BOXES RM 202	10	20	1			0.72	0.72			1	20	10	FLOOR BOXES RM 202	22
23	FLOOR BOXES RM 202	10	20	1					0.72	0.72	1	20	10	FLOOR BOXES RM 202	24
25	FLOOR BOXES RM 202	10	20	1	0.72	0.72					1	20	10	FLOOR BOXES RM 202	26
27	FLOOR BOXES RM 202	10	20	1			0.72	0.72			1	20	10	FLOOR BOXES RM 202	28
29	FLOOR BOXES RM 202	10	20	1					0.72	0.72	1	20	10	FLOOR BOXES RM 202	30
31	FLOOR BOXES RM 202	10	20	1	0.72	0.72					1	20	10	FLOOR BOXES RM 202	32
33	FLOOR BOXES RM 202	10	20	1			0.72	0.72			1	20	10	FLOOR BOXES RM 202	34
35	FLOOR BOXES RM 202	10	20	1					0.72	0.72	1	20	10	FLOOR BOXES RM 202	36
37	SPARE	--	20	1	0.00	0.00					1	20	--	SPARE	38
39	SPARE	--	20	1			0.00	0.00			1	20	--	SPARE	40
41	SPARE	--	20	1					0.00	0.00	1	20	--	SPARE	42

		A	B	C	
	TOTAL	8.6	8.6	8.6	KVA
		72.0	72.0	72.0	AMPS
	CONNECTED LOAD	25.9	KVA	71.9	AMPS
NEC ARTICLE 220	DEMAND LOAD	18.0	KVA	49.9	AMPS

Load Classification	**Connected Load**	**Demand Factor**	**Estimated Demand**	**Panel Totals**	
RECEPT	25920 VA	69.29%	17960 VA		
				Total Conn. Load:	25920 VA
				Total Est. Demand:	17960 VA
				Total Conn.:	72 A
				Total Est. Demand:	50 A

PANEL RP10

FED FROM: DPLV3
LOCATION: SIMULATION CLASSROOM 200C
MOUNT: RECESSED

150 A MAIN CIRCUIT BREAKER
3PH 4WIRE 208Y/120V
10K AIC
GROUND BAR

CKT	*LOAD SERVED*	*WIRE*	*BRKR*	*PL*	*A*		*B*		*C*		*PL*	*BRKR*	*WIRE*	*LOAD SERVED*	*CKT*
1	FLOOR BOXES RM 200C	10	20	1	0.72	0.72					1	20	10	FLOOR BOXES RM 200C	2
3	FLOOR BOXES RM 200C	10	20	1			0.72	0.72			1	20	10	FLOOR BOXES RM 200C	4
5	FLOOR BOXES RM 200C	10	20	1					0.72	0.72	1	20	10	FLOOR BOXES RM 200C	6
7	FLOOR BOXES RM 200C	10	20	1	0.72	0.72					1	20	10	FLOOR BOXES RM 200C	8
9	FLOOR BOXES RM 200C	10	20	1			0.72	0.72			1	20	10	FLOOR BOXES RM 200C	10
11	FLOOR BOXES RM 200C	10	20	1					0.72	0.72	1	20	10	FLOOR BOXES RM 200C	12
13	FLOOR BOXES RM 200C	10	20	1	0.72	0.72					1	20	10	FLOOR BOXES RM 200C	14
15	FLOOR BOXES RM 200C	10	20	1			0.72	0.72			1	20	10	FLOOR BOXES RM 200C	16
17	FLOOR BOXES RM 200C	10	20	1					0.72	0.72	1	20	10	FLOOR BOXES RM 200C	18
19	FLOOR BOXES RM 200C	10	20	1	0.72	0.72					1	20	10	FLOOR BOXES RM 200C	20
21	FLOOR BOXES RM 200C	10	20	1			0.72	0.72			1	20	10	FLOOR BOXES RM 200C	22
23	FLOOR BOXES RM 200C	10	20	1					0.72	0.72	1	20	10	FLOOR BOXES RM 200C	24
25	FLOOR BOXES RM 200C	10	20	1	0.72	0.72					1	20	10	FLOOR BOXES RM 200C	26
27	FLOOR BOXES RM 200C	10	20	1			0.72	0.72			1	20	10	FLOOR BOXES RM 200C	28
29	FLOOR BOXES RM 200C	10	20	1					0.72	0.72	1	20	10	FLOOR BOXES RM 200C	30
31	FLOOR BOXES RM 200C	10	20	1	0.72	0.72					1	20	10	FLOOR BOXES RM 200C	32
33	FLOOR BOXES RM 200C	10	20	1			0.72	0.72			1	20	10	FLOOR BOXES RM 200C	34
35	FLOOR BOXES RM 200C	10	20	1					0.72	0.72	1	20	10	FLOOR BOXES RM 200C	36
37	SPARE	--	20	1	0.00	0.00					1	20	--	SPARE	38
39	SPARE	--	20	1			0.00	0.00			1	20	--	SPARE	40
41	SPARE	--	20	1					0.00	0.00	1	20	--	SPARE	42

		A	B	C	
	TOTAL	8.6	8.6	8.6	KVA
		72.0	72.0	72.0	AMPS
	CONNECTED LOAD	25.9	KVA	71.9	AMPS
NEC ARTICLE 220	DEMAND LOAD	18.0	KVA	49.9	AMPS

Load Classification	**Connected Load**	**Demand Factor**	**Estimated Demand**	**Panel Totals**	
RECEPT	25920 VA	69.29%	17960 VA		
				Total Conn. Load:	25920 VA
				Total Est. Demand:	17960 VA
				Total Conn.:	72 A
				Total Est. Demand:	50 A

PANEL RP11

FED FROM: DPLV3
LOCATION: SIMULATION CLASSROOM 200B
MOUNT: RECESSED

150 A MAIN CIRCUIT BREAKER
3PH 4WIRE 208Y/120V
10K AIC
GROUND BAR

CKT	*LOAD SERVED*	*WIRE*	*BRKR*	*PL*	*A*		*B*		*C*		*PL*	*BRKR*	*WIRE*	*LOAD SERVED*	*CKT*
1	FLOOR BOXES RM 200B	10	20	1	0.72	0.72					1	20	10	FLOOR BOXES RM 200B	2
3	FLOOR BOXES RM 200B	10	20	1			0.72	0.72			1	20	10	FLOOR BOXES RM 200B	4
5	FLOOR BOXES RM 200B	10	20	1					0.72	0.72	1	20	10	FLOOR BOXES RM 200B	6
7	FLOOR BOXES RM 200B	10	20	1	0.72	0.72					1	20	10	FLOOR BOXES RM 200B	8
9	FLOOR BOXES RM 200B	10	20	1			0.72	0.72			1	20	10	FLOOR BOXES RM 200B	10
11	FLOOR BOXES RM 200B	10	20	1					0.72	0.72	1	20	10	FLOOR BOXES RM 200B	12
13	FLOOR BOXES RM 200B	10	20	1	0.72	0.72					1	20	10	FLOOR BOXES RM 200B	14
15	FLOOR BOXES RM 200B	10	20	1			0.72	0.72			1	20	10	FLOOR BOXES RM 200B	16
17	FLOOR BOXES RM 200B	10	20	1					0.72	0.72	1	20	10	FLOOR BOXES RM 200B	18
19	FLOOR BOXES RM 200B	10	20	1	0.72	0.72					1	20	10	FLOOR BOXES RM 200B	20
21	FLOOR BOXES RM 200B	10	20	1			0.72	0.72			1	20	10	FLOOR BOXES RM 200B	22
23	FLOOR BOXES RM 200B	10	20	1					0.72	0.72	1	20	10	FLOOR BOXES RM 200B	24
25	FLOOR BOXES RM 200B	10	20	1	0.72	0.72					1	20	10	FLOOR BOXES RM 200B	26
27	FLOOR BOXES RM 200B	10	20	1			0.72	0.72			1	20	10	FLOOR BOXES RM 200B	28
29	FLOOR BOXES RM 200B	10	20	1					0.72	0.72	1	20	10	FLOOR BOXES RM 200B	30
31	FLOOR BOXES RM 200B	10	20	1	0.72	0.72					1	20	10	FLOOR BOXES RM 200B	32
33	FLOOR BOXES RM 200B	10	20	1			0.72	0.72			1	20	10	FLOOR BOXES RM 200B	34
35	FLOOR BOXES RM 200B	10	20	1					0.72	0.72	1	20	10	FLOOR BOXES RM 200B	36
37	SPARE	--	20	1	0.00	0.00					1	20	--	SPARE	38
39	SPARE	--	20	1			0.00	0.00			1	20	--	SPARE	40
41	SPARE	--	20	1					0.00	0.00	1	20	--	SPARE	42

		A	B	C	
	TOTAL	8.6	8.6	8.6	KVA
		72.0	72.0	72.0	AMPS
	CONNECTED LOAD	25.9	KVA	71.9	AMPS
NEC ARTICLE 220	DEMAND LOAD	18.0	KVA	49.9	AMPS

Load Classification	**Connected Load**	**Demand Factor**	**Estimated Demand**	**Panel Totals**	
RECEPT	25920 VA	69.29%	17960 VA		
				Total Conn. Load:	25920 VA
				Total Est. Demand:	17960 VA
				Total Conn.:	72 A
				Total Est. Demand:	50 A

PANEL RP12

FED FROM: DPLV3
LOCATION: SIMULATION CLASSROOM 200A
MOUNT: RECESSED

150 A MAIN CIRCUIT BREAKER
3PH 4WIRE 208Y/120V
10K AIC
GROUND BAR

CKT	*LOAD SERVED*	*WIRE*	*BRKR*	*PL*	*A*		*B*		*C*		*PL*	*BRKR*	*WIRE*	*LOAD SERVED*	*CKT*
1	FLOOR BOXES RM 200A	10	20	1	0.72	0.72					1	20	10	FLOOR BOXES RM 200A	2
3	FLOOR BOXES RM 200A	10	20	1			0.72	0.72			1	20	10	FLOOR BOXES RM 200A	4
5	FLOOR BOXES RM 200A	10	20	1					0.72	0.72	1	20	10	FLOOR BOXES RM 200A	6
7	FLOOR BOXES RM 200A	10	20	1	0.72	0.72					1	20	10	FLOOR BOXES RM 200A	8
9	FLOOR BOXES RM 200A	10	20	1			0.72	0.72			1	20	10	FLOOR BOXES RM 200A	10
11	FLOOR BOXES RM 200A	10	20	1					0.72	0.72	1	20	10	FLOOR BOXES RM 200A	12
13	FLOOR BOXES RM 200A	10	20	1	0.72	0.72					1	20	10	FLOOR BOXES RM 200A	14
15	FLOOR BOXES RM 200A	10	20	1			0.72	0.72			1	20	10	FLOOR BOXES RM 200A	16
17	FLOOR BOXES RM 200A	10	20	1					0.72	0.72	1	20	10	FLOOR BOXES RM 200A	18
19	FLOOR BOXES RM 200A	10	20	1	0.72	0.72					1	20	10	FLOOR BOXES RM 200A	20
21	FLOOR BOXES RM 200A	10	20	1			0.72	0.72			1	20	10	FLOOR BOXES RM 200A	22
23	FLOOR BOXES RM 200A	10	20	1					0.72	0.72	1	20	10	FLOOR BOXES RM 200A	24
25	FLOOR BOXES RM 200A	10	20	1	0.72	0.72					1	20	10	FLOOR BOXES RM 200A	26
27	FLOOR BOXES RM 200A	10	20	1			0.72	0.72			1	20	10	FLOOR BOXES RM 200A	28
29	FLOOR BOXES RM 200A	10	20	1					0.72	0.72	1	20	10	FLOOR BOXES RM 200A	30
31	FLOOR BOXES RM 200A	10	20	1	0.72	0.72					1	20	10	FLOOR BOXES RM 200A	32
33	FLOOR BOXES RM 200A	10	20	1			0.72	0.72			1	20	10	FLOOR BOXES RM 200A	34
35	FLOOR BOXES RM 200A	10	20	1					0.72	0.72	1	20	10	FLOOR BOXES RM 200A	36
37	SPARE	--	20	1	0.00	0.00					1	20	--	SPARE	38
39	SPARE	--	20	1			0.00	0.00			1	20	--	SPARE	40
41	SPARE	--	20	1					0.00	0.00	1	20	--	SPARE	42

		A	B	C	
	TOTAL	8.6	8.6	8.6	KVA
		72.0	72.0	72.0	AMPS
	CONNECTED LOAD	25.9	KVA	71.9	AMPS
NEC ARTICLE 220	DEMAND LOAD	18.0	KVA	49.9	AMPS

Load Classification	**Connected Load**	**Demand Factor**	**Estimated Demand**	**Panel Totals**	
RECEPT	25920 VA	69.29%	17960 VA		
				Total Conn. Load:	25920 VA
				Total Est. Demand:	17960 VA
				Total Conn.:	72 A
				Total Est. Demand:	50 A

SYM DESCRIPTION DATE APPR
SEAL
RQ W.M. Jordan COMPANY – A JOINT VENTURE –
Michael Baker INTERNATIONAL
100 AIRSIDE DRIVE
MOON TOWNSHIP, PA 15108 A/E INFO
APPROVED
FOR COMMANDER NAVFAC
ACTIVITY
MARINE CORPS BASE
CAMP LEJEUNE
SATISFACTORY TO DATE
DES SD DRW LAK CHK YPS
PM
BRANCH MANAGER
CHIEF ENG/ARCH
FIRE PROTECTION
DEPARTMENT OF THE NAVY
NAVAL FACILITIES ENGINEERING COMMAND
NAVAL FACILITIES ENGINEERING COMMAND ~ MID-ATLANTIC
JACKSONVILLE, NC
ROICC FLORENCE CAMP LEJEUNE
MCB CAMP LEJEUNE JACKSONVILLE, NC
P1338 II MEF SIMULATION/TRAINING CENTER
REPLACEMENT
ELECTRICAL - PANEL SCHEDULES
SCALE: AS NOTED
EPROJECT NO.: 1590892
CONSTR. CONTR. NO.
N40085-20-C-0059
NAVFAC DRAWING NO.
SHEET OF
E-609
DP2 SUBMISSION – P1338 BUILDING - PRE-FINAL SUBMISSION
PLOTTED: 6/10/2021 5:42:31 PM
FILE NAME: BIM 360://HF PACKAGE 3/P1338 MEF SIM CTR-1590892-E.rvt

GENERAL NOTES

1 SEE SHEET E-001 FOR ELECTRICAL NOTES, SYMBOLS, AND ABBREVIATIONS.
2 * SEE E-603 FOR WIRE SIZES NOT INDICATED IN PANEL SCHEDULES.

PANEL RP13

FED FROM: DPLV3
LOCATION: FIRE ROOM 104B
MOUNT: RECESSED

150 A MAIN CIRCUIT BREAKER
3PH 4WIRE 208Y/120V
10K AIC
GROUND BAR

CKT	LOAD SERVED	WIRE	BRKR	PL	A		B		C		PL	BRKR	WIRE	LOAD SERVED	CKT
1	FLOOR BOXES RM 104A	10	20	1	0.72	0.72					1	20	10	FLOOR BOXES RM 104A	2
3	FLOOR BOXES RM 104A	10	20	1			0.72	0.72			1	20	10	FLOOR BOXES RM 104A	4
5	FLOOR BOXES RM 104A	10	20	1					0.72	0.72	1	20	10	FLOOR BOXES RM 104A	6
7	FLOOR BOXES RM 104A	10	20	1	0.72	0.72					1	20	10	FLOOR BOXES RM 104A	8
9	FLOOR BOXES RM 104A	10	20	1			0.72	0.72			1	20	10	FLOOR BOXES RM 104B	10
11	FLOOR BOXES RM 104B	10	20	1					0.72	0.72	1	20	10	FLOOR BOXES RM 104B	12
13	FLOOR BOXES RM 104B	10	20	1	0.72	0.72					1	20	10	FLOOR BOXES RM 104B	14
15	FLOOR BOXES RM 104B	10	20	1			0.72	0.72			1	20	10	FLOOR BOXES RM 104B	16
17	FLOOR BOXES RM 104B	10	20	1					0.72	0.72	1	20	10	FLOOR BOXES RM 104B	18
19	FLOOR BOXES RM 104C	10	20	1	0.72	0.72					1	20	10	FLOOR BOXES RM 104C	20
21	FLOOR BOXES RM 104C	10	20	1			0.72	0.72			1	20	10	FLOOR BOXES RM 104C	22
23	FLOOR BOXES RM 104C	10	20	1					0.72	0.72	1	20	10	FLOOR BOXES RM 104C	24
25	FLOOR BOXES RM 104C	10	20	1	0.72	0.72					1	20	10	FLOOR BOXES RM 104C	26
27	FLOOR BOXES RM 104C	10	20	1			0.72	0.00			1	20	--	SPARE	28
29	SPARE	--	20	1					0.00	0.00	1	20	--	SPARE	30
31	SPARE	--	20	1	0.00	0.00					1	20	--	SPARE	32
33	SPARE	--	20	1			0.00	0.00			1	20	--	SPARE	34
35	PROVISIONED SPACE	--	--	--					0.00	0.00	--	--	--	PROVISIONED SPACE	36
37	PROVISIONED SPACE	--	--	--	0.00	0.00					--	--	--	PROVISIONED SPACE	38
39	PROVISIONED SPACE	--	--	--			0.00	0.00			--	--	--	PROVISIONED SPACE	40
41	PROVISIONED SPACE	--	--	--					0.00	0.00	--	--	--	PROVISIONED SPACE	42
				TOTAL	7.2		6.5		5.8		KVA				
					60.9		54.9		48.0		AMPS				
		CONNECTED LOAD			19.4		KVA		54.0		AMPS				
NEC ARTICLE 220		DEMAND LOAD			14.7		KVA		40.9		AMPS				

Load Classification	Connected Load	Demand Factor	Estimated Demand	Panel Totals	
RECEPT	19440 VA	75.72%	14720 VA		
				Total Conn. Load:	19440 VA
				Total Est. Demand:	14720 VA
				Total Conn.:	54 A
				Total Est. Demand:	41 A

PANEL RP14

FED FROM: DPLV3
LOCATION: ELEC 116
MOUNT: SURFACE

200 A MAIN CIRCUIT BREAKER
3PH 4WIRE 208Y/120V
10K AIC
GROUND BAR

CKT	LOAD SERVED	WIRE	BRKR	PL	A		B		C		PL	BRKR	WIRE	LOAD SERVED	CKT
1	RECEPT ELEC 116	12	20	1	0.36	0.85					1	20	12	COFFEE MAKER RM 108	2
3	RECEPT RM 107	12	20	1			0.54	0.72			1	20	12	RECEPT RM 402	4
5	RECEPT RM 402	12	20	1					0.72	1.08	1	20	12	RECEPT RM 400	6
7	MICROWAVE RM 108	12	20	1	1.65	1.65					1	20	12	MICROWAVE RM 108	8
9	RECEPT RM 105	12	20	1			0.90	0.90			1	20	12	RECEPT RM 106	10
11	RECEPT RM 108	12	20	1					1.26	1.44	1	20	12	VENDING MACHINE RM 108	12
13	RECEPT RM 109	12	20	1	0.72	0.90					1	20	12	RECEPT RM 103A	14
15	VENDING MACHINE RM 108	12	20	1			1.44	0.72			1	20	12	RECEPT RM 107	16
17	REFRIG RM 108	12	20	1					0.72	0.90	1	20	12	RECEPT RM 109	18
19	RECEPT RM 113	12	20	1	1.08	1.08					1	20	12	RECEPT RM 107	20
21	RECEPT RM 109	12	20	1			0.90	1.08			1	20	12	RECEPT RM 114	22
23	RECEPT RM 401 / RM 118	12	20	1					1.26	1.08	1	20	12	RECEPT RM 112	24
25	COPIER RM 105	12	20	1	1.20	0.00					--	--	--	PROVISIONED SPACE	26
27	RECEPT RM 111	12	20	1			1.08	1.20			1	20	12	COPIER RM 106	28
29	COPIER RM 109	12	20	1					1.20	6.48	3	100	1	RP15	30
31	SPARE	--	20	1	0.00	6.30					--	--	--	--	32
33	SPARE	--	20	1			0.00	7.02			--	--	--	--	34
35	SPARE	--	20	1					0.00	0.00	1	20	--	SPARE	36
37	PROVISIONED SPACE	--	--	--	0.00	0.00					1	20	--	SPARE	38
39	PROVISIONED SPACE	--	--	--			0.00	0.00			1	20	--	SPARE	40
41	PROVISIONED SPACE	--	--	--					0.00	0.00	1	20	--	SPARE	42
				TOTAL	15.8		16.5		16.1		KVA				
					131.6		137.9		134.9		AMPS				
		CONNECTED LOAD			48.4		KVA		134.4		AMPS				
NEC ARTICLE 220		DEMAND LOAD			34.5		KVA		95.8		AMPS				

Load Classification	Connected Load	Demand Factor	Estimated Demand	Panel Totals	
Equipment	12250 VA	100.00%	12250 VA		
RECEPT	32940 VA	65.18%	21470 VA		
UFC-MOTOR-25%	3240 VA	25.00%	810 VA		
				Total Conn. Load:	48430 VA
				Total Est. Demand:	34530 VA
				Total Conn.:	134 A
				Total Est. Demand:	96 A

PANEL RP15

FED FROM: RP14
LOCATION: ELEC 116
MOUNT: SURFACE

100 A MAIN LUG ONLY
3PH 4WIRE 208Y/120V
10K AIC
GROUND BAR

CKT	LOAD SERVED	WIRE	BRKR	PL	A		B		C		PL	BRKR	WIRE	LOAD SERVED	CKT
1	REFRIG RM 110	12	20	1	0.18	0.72					1	20	12	ELEC WATER COOLER COR. C011	2
3	LAVATORY / WATER CLOSET RM G012	12	20	1			0.36	0.72			1	20	12	RECEPT MOTHER'S ROOM 110	4
5	SYSTEMS FURNITURE RM 107	10	30	1					2.16	0.72	1	20	12	SYSTEMS FURNITURE RM 109	6
7	RECEPT COR. C011 / COR. C012 / COR. C014 / COR. C016	12	20	1	1.26	0.72					1	20	12	SYSTEMS FURNITURE RM 106	8
9	RECEPT RM G011, G010, G012	12	20	1			0.90	0.72			1	20	12	SYSTEMS FURNITURE RM 107	10
11	SYSTEMS FURNITURE RM 107	12	20	1					1.44	2.16	1	30	10	SYSTEMS FURNITURE RM 109	12
13	LAVATORY / URINAL / WATER CLOSET RM G010	12	20	1	1.44	2.16					1	30	10	SYSTEMS FURNITURE RM 109	14
15	LAVATORY / WATER CLOSET RM G011	12	20	1			1.44	2.16			1	30	10	SYSTEMS FURNITURE RM 109	16
17	RECEPT EXTERIOR	12	20	1					0.54	0.00	1	30	--	SPARE	18
19	SPARE	--	20	1	0.00	0.00					1	30	--	SPARE	20
21	SPARE	--	20	1			0.00	0.00			--	--	--	PROVISIONED SPACE	22
23	PROVISIONED SPACE	--	--	--					0.00	0.00	--	--	--	PROVISIONED SPACE	24
25	PROVISIONED SPACE	--	--	--	0.00	0.00					--	--	--	PROVISIONED SPACE	26
27	PROVISIONED SPACE	--	--	--			0.00	0.00			--	--	--	PROVISIONED SPACE	28
29	PROVISIONED SPACE	--	--	--					0.00	0.00	--	--	--	PROVISIONED SPACE	30
				TOTAL	6.5		6.3		7.0		KVA				
					54.2		52.5		58.7		AMPS				
		CONNECTED LOAD			19.8		KVA		55.0		AMPS				
NEC ARTICLE 220		DEMAND LOAD			14.5		KVA		40.4		AMPS				

Load Classification	Connected Load	Demand Factor	Estimated Demand	Panel Totals	
Equipment	900 VA	100.00%	900 VA		
RECEPT	15660 VA	81.93%	12830 VA		
UFC-MOTOR-25%	3240 VA	25.00%	810 VA		
				Total Conn. Load:	19800 VA
				Total Est. Demand:	14540 VA
				Total Conn.:	55 A
				Total Est. Demand:	40 A

PANEL RP16

FED FROM: DPLV3
LOCATION: ELEC 403
MOUNT: SURFACE

150 A MAIN LUG ONLY
3PH 4WIRE 208Y/120V
10K AIC
GROUND BAR

CKT	LOAD SERVED	WIRE	BRKR	PL	A		B		C		PL	BRKR	WIRE	LOAD SERVED	CKT
1	RECEPT TV RM 206	12	20	1	0.18	0.50					1	20	12	AV FLAT PANELS RM 207	2
3	LAVATORY / WATER CLOSET RM G020	12	20	1			0.36	0.36			1	20	12	RECEPT RM 205	4
5	COFFEE POT RM 206	12	20	1					0.85	1.08	1	20	12	RECEPT FIRE ROOM 104C	6
7	COPIER RM 205	12	20	1	1.20	0.54					1	20	12	AV FLAT PANELS RM 104A, 104B, 104C	8
9	RECEPT CORR C013, C020, C021, C022, C023	12	20	1			1.08	0.54			1	20	12	RECEPT FIRE ROOM 104B	10
11	RECEPT RM G025	12	20	1					0.54	0.72	1	20	12	WATER CLOSET RM G024	12
13	RECEPT RM 403	12	20	1	0.72	0.72					1	20	12	ELEC WATER COOLER COR C023	14
15	REFRIG RM 206	12	20	1			0.72	0.72			1	20	12	RECEPT FIRE ROOM 104A	16
17	RECEPT RM 206	12	20	1					0.72	0.90	1	20	12	RECEPT RM 204, G024, G020, G021	18
19	LAVATORY RM G021, G024	12	20	1	0.90	1.00					1	20	12	RECEPT FIRE ROOM 104B	20
21	LAVATORY RM G025	12	20	1			0.90	1.00			1	30	10	RECEPT FIRE ROOM 104C	22
23	RECEPT FIRE ROOM 104C	12	20	1					1.00	1.00	1	30	10	RECEPT FIRE ROOM 104B	24
25	RECEPT FIRE ROOM 104A	10	30	1	1.00	1.08					1	20	12	RECEPT RM 206	26
27	RECEPT FIRE ROOM 104A	12	20	1			1.00	1.08			1	20	12	RECEPT RM 207	28
29	RECEPT RM 207	12	20	1					1.08	1.44	1	20	12	URINAL / WATER CLOSET RM G025	30
31	RECEPT RM 207	12	20	1	1.44	1.65					1	20	12	MICROWAVE RM 206	32
33	RECEPT RM 207	12	20	1			1.44	1.65			1	20	12	MICROWAVE RM 206	34
35	MICROWAVE RM 206	12	20	1					1.65	0.00	1	20	--	SPARE	36
37	SPARE	--	20	1	0.00	0.00					1	20	--	SPARE	38
39	SPARE	--	20	1			0.00	0.00			1	20	--	SPARE	40
41	SPARE	--	20	1					0.00	0.00	1	20	--	SPARE	42
				TOTAL	10.9		10.9		11.0		KVA				
					91.2		90.4		91.6		AMPS				
		CONNECTED LOAD			32.8		KVA		90.9		AMPS				
NEC ARTICLE 220		DEMAND LOAD			24.5		KVA		68.1		AMPS				

Load Classification	Connected Load	Demand Factor	Estimated Demand	Panel Totals	
Equipment	8440 VA	100.00%	8440 VA		
RECEPT	20000 VA	75.00%	15000 VA		
UFC-MOTOR-25%	4320 VA	25.00%	1080 VA		
				Total Conn. Load:	32760 VA
				Total Est. Demand:	24520 VA
				Total Conn.:	91 A
				Total Est. Demand:	68 A

APPR | DATE | DESCRIPTION | SYM

NAVFAC

SEAL

W.M. Jordan COMPANY – A JOINT VENTURE –

Michael Baker INTERNATIONAL
100 AIRSIDE DRIVE
MOON TOWNSHIP, PA 15108
A/E INFO

APPROVED
FOR COMMANDER NAVFAC
ACTIVITY
MARINE CORPS BASE
CAMP LEJEUNE
SATISFACTORY TO DATE
DES SD | DRW LAK | CHK YPS
PM
BRANCH MANAGER
CHIEF ENG/ARCH
FIRE PROTECTION

DEPARTMENT OF THE NAVY
NAVAL FACILITIES ENGINEERING COMMAND – MID-ATLANTIC
ROICC FLORENCE CAMP LEJEUNE
MCB CAMP LEJEUNE

NAVAL FACILITIES ENGINEERING COMMAND – MID-ATLANTIC
JACKSONVILLE, NC
JACKSONVILLE, NC

P1338 II MEF SIMULATION/TRAINING CENTER
REPLACEMENT
ELECTRICAL - PANEL SCHEDULES

SCALE: AS NOTED
EPROJECT NO.: 1590892
CONSTR. CONTR. NO.
N40085-20-C-0059
NAVFAC DRAWING NO.
SHEET OF

E-610

DP2 SUBMISSION – P1338 BUILDING - PRE-FINAL SUBMISSION

PLOTTED: 6/10/2021 5:42:34 PM
FILE NAME: BIM 360://HF PACKAGE 3/P1338 MEF SIM CTR-1590892-E.rvt

GENERAL NOTES

1 SEE SHEET E-001 FOR ELECTRICAL NOTES, SYMBOLS, AND ABBREVIATIONS.
2 * SEE E-603 FOR WIRE SIZES NOT INDICATED IN PANEL SCHEDULES.

PANEL RP17

FED FROM: DPLV3
LOCATION: ELEC 403
MOUNT: SURFACE

125 A MAIN LUG ONLY
3PH 4WIRE 208Y/120V
10K AIC
GROUND BAR

CKT	LOAD SERVED	WIRE	BRKR	PL	A		B		C		PL	BRKR	WIRE	LOAD SERVED	CKT
1	RECEPT COR C022	12	20	1	0.18	0.50					1	20	12	AV FLAT PANELS RM 202	2
3	RECEPT TIMEZONE CLOCK 200B	12	20	1			0.18	0.36			1	20	12	RECEPT EXTERIOR	4
5	AV FLAT PANEL RM 209	12	20	1					0.25	1.08	1	20	12	RECEPT RM 200B	6
7	AV FLAT PANEL RM 200B	12	20	1	0.65	0.65					1	20	12	AV FLAT PANEL RM 200C	8
9	AV FLAT PANELS RM 303B	12	20	1			0.50	0.72			1	20	12	RECEPT RM 200C	10
11	RECEPT RM 200C	12	20	1					1.08	0.18	1	20	12	RECEPT TIMEZONE CLOCK RM 200C	12
13	RECEPT RM 200B	12	20	1	0.72	0.18					1	20	12	RECEPT TIMEZONE CLOCK COR C020	14
15	RECEPT RM 200B	12	20	1			0.90	0.18			1	20	12	RECEPT TIMEZONE CLOCK COR C022	16
17	RECEPT RM 303B	12	20	1					0.72	0.72	1	20	12	RECEPT RM 302	18
19	RECEPT RM 302	12	20	1	0.72	0.72					1	20	12	RECEPT RM 200C	20
21	RECEPT RM 303B	12	20	1			0.72	0.72			1	20	12	RECEPT RM 209	22
23	RECEPT RM 303B	12	20	1					0.90	0.90	1	20	12	RECEPT RM 209	24
25	RECEPT RM 303A	12	20	1	0.90	0.90					1	20	12	RECEPT RM 202	26
27	RECEPT RM 303A	12	20	1			0.90	0.90			1	20	12	RECEPT RM 203	28
29	RECEPT RM 202	12	20	1					1.08	1.44	1	20	12	VENDING MACHINE RM 206	30
31	RECEPT RM 202	12	20	1	1.08	1.44					1	20	12	SYSTEMS FURNITURE RM 302	32
33	RECEPT RM 202	12	20	1			1.08	1.44			1	20	12	VENDING MACHINE RM 206	34
35	PROVISIONED SPACE	--	--	--					0.00	0.00	1	20	--	SPARE	36
37	SPARE	--	20	1	0.00	0.00					1	20	--	SPARE	38
39	SPARE	--	20	1			0.00	0.00			1	20	--	SPARE	40
41	SPARE	--	20	1					0.00	0.00	1	20	--	SPARE	42
				TOTAL	8.6		8.6		8.4		KVA				
					72.3		72.0		69.6		AMPS				
				CONNECTED LOAD	25.6		KVA		71.0		AMPS				
NEC ARTICLE 220				DEMAND LOAD	19.2		KVA		53.4		AMPS				

Load Classification	Connected Load	Demand Factor	Estimated Demand	Panel Totals	
Equipment	2880 VA	100.00%	2880 VA		
RECEPT	22710 VA	72.02%	16355 VA	**Total Conn. Load:**	25590 VA
				Total Est. Demand:	19235 VA
				Total Conn.:	71 A
				Total Est. Demand:	53 A

PANEL RP18

FED FROM: DPLV3
LOCATION: ELEC 403
MOUNT: SURFACE

125 A MAIN LUG ONLY
3PH 4WIRE 208Y/120V
10K AIC
GROUND BAR

CKT	LOAD SERVED	WIRE	BRKR	PL	A		B		C		PL	BRKR	WIRE	LOAD SERVED	CKT
1	AV FLAT PANEL RM 101	12	20	1	0.65	0.65					1	20	12	AV FLAT PANEL RM 102	2
3	RECEPT RM 101	12	20	1			1.08	1.08			1	20	12	RECEPT RM 102	4
5	RECEPT RM 102	12	20	1					1.08	1.08	1	20	12	RECEPT RM 200A	6
7	RECEPT RM 201	12	20	1	0.72	1.08					1	20	12	RECEPT RM 101	8
9	RECEPT TIMEZONE CLOCK RM 300A	12	20	1			0.18	0.18			1	20	12	RECEPT TIMEZONE CLOCK COR 034	10
11	RECEPT TIMEZONE CLOCK RM 300X	12	20	1					0.18	0.18	1	20	12	RECEPT TIMEZONE CLOCK COR C020	12
13	RECEPT TIMEZONE CLOCK RM 200A	12	20	1	0.18	0.18					1	20	12	AV FLAT PANEL RM L010	14
15	AV FLAT PANEL RM 300A	12	20	1			0.65	0.90			1	20	12	RECEPT RM 300A	16
17	AV FLAT PANEL RM 300X	12	20	1					0.65	0.90	1	20	12	RECEPT RM 300X	18
19	AV FLAT PANEL RM 200A	12	20	1	0.65	0.90					1	20	12	RECEPT RM 201	20
21	RECEPT RM 201	12	20	1			0.90	0.90			1	20	12	RECEPT RM 101	22
23	RECEPT RM 201	12	20	1					0.90	0.90	1	20	12	RECEPT RM 102	24
25	RECEPT RM 200A	12	20	1	0.90	0.90					1	20	12	RECEPT RM 100	26
27	RECEPT RM 300X	12	20	1			1.08	1.08			1	20	12	RECEPT RM 300A	28
29	RECEPT RM L010	12	20	1					1.08	1.08	1	20	12	RECEPT RM 300A	30
31	RECEPT RM 300X	12	20	1	1.08	1.08					1	20	12	RECEPT RM 200A	32
33	RECEPT STOR. 110A	12	20	1			0.54	0.10			1	20	12	SHUNT TRIP CIRCUIT RM 304A / RM 304B	34
35	PROVISIONED SPACE	--	--	--					0.00	0.00	1	20	--	SPARE	36
37	SPARE	--	20	1	0.00	0.00					1	20	--	SPARE	38
39	SPARE	--	20	1			0.00	0.00			1	20	--	SPARE	40
41	SPARE	--	20	1					0.00	0.00	1	20	--	SPARE	42
				TOTAL	9.0		8.7		8.0		KVA				
					75.6		73.1		66.9		AMPS				
				CONNECTED LOAD	25.7		KVA		71.3		AMPS				
NEC ARTICLE 220				DEMAND LOAD	17.9		KVA		49.6		AMPS				

Load Classification	Connected Load	Demand Factor	Estimated Demand	Panel Totals	
Equipment	100 VA	100.00%	100 VA		
RECEPT	25570 VA	69.55%	17785 VA	**Total Conn. Load:**	25670 VA
				Total Est. Demand:	17885 VA
				Total Conn.:	71 A
				Total Est. Demand:	50 A

PANEL RP19

FED FROM: DPLV2
LOCATION: ELEC 306
MOUNT: SURFACE

100 A MAIN LUG ONLY
3PH 4WIRE 208Y/120V
10K AIC
GROUND BAR

CKT	LOAD SERVED	WIRE	BRKR	PL	A		B		C		PL	BRKR	WIRE	LOAD SERVED	CKT
1	RECEPT TIMEZONE CLOCK COR C030	12	20	1	0.18	0.36					1	20	12	RECEPT RM 306	2
3	RECEPT TIMEZONE CLOCK COR C034	12	20	1			0.18	0.90			1	20	12	RECEPT COR C031, C034	4
5	RECEPT RM 305	12	20	1					0.36	0.72	1	20	12	RECEPT RM 301A	6
7	RECEPT RM 301B	12	20	1	0.72	0.90					1	20	12	RECEPT COR C020, C030, C031	8
9	RECEPT RM 300B	12	20	1			1.08	0.18			1	20	12	RECEPT TIMEZONE CLOCK RM 301A	10
11	RECEPT RM 300C	12	20	1					1.08	0.18	1	20	12	RECEPT TIMEZONE CLOCK RM 301B	12
13	RECEPT TIMEZONE CLOCK RM 300Z	12	20	1	0.18	0.18					1	20	12	RECEPT TIMEZONE CLOCK RM 300B	14
15	RECEPT TIMEZONE CLOCK RM 300C	12	20	1			0.18	0.65			1	20	12	AV FLAT PANEL RM 301A	16
17	RECEPT TIMEZONE CLOCK RM 300Y	12	20	1					0.18	0.65	1	20	12	AV FLAT PANEL RM 301B	18
19	AV FLAT PANEL RM 300Z	12	20	1	0.65	0.65					1	20	12	AV FLAT PANEL RM 300B	20
21	AV FLAT PANEL RM 300C	12	20	1			0.65	0.90			1	20	12	RECEPT RM 301B	22
23	AV FLAT PANEL RM 300Y	12	20	1					0.65	0.90	1	20	12	RECEPT RM 301B	24
25	RECEPT RM 301A	12	20	1	0.90	0.90					1	20	12	RECEPT RM 300C	26
27	RECEPT RM 300Z	12	20	1			0.90	1.08			1	20	12	RECEPT RM 301B	28
29	RECEPT RM 301A	12	20	1					0.90	1.08	1	20	12	RECEPT SIMULATION CLASSROOM 300Z	30
31	RECEPT RM 301A	12	20	1	1.08	1.08					1	20	12	RECEPT RM 300C	32
33	RECEPT RM 300Y	12	20	1			1.08	0.36			1	20	12	RECEPT EXTERIOR	34
35	SPARE	--	20	1					0.00	1.08	1	20	12	RECEPT RM 300Z	36
37	SPARE	--	20	1	0.00	0.00					1	20	--	SPARE	38
39	SPARE	--	20	1			0.00	0.00			1	20	--	SPARE	40
41	SPARE	--	20	1					0.00	0.00	1	20	--	SPARE	42
				TOTAL	7.8		8.1		7.8		KVA				
					64.8		67.8		64.8		AMPS				
				CONNECTED LOAD	23.7		KVA		65.8		AMPS				
NEC ARTICLE 220				DEMAND LOAD	16.9		KVA		46.8		AMPS				

Load Classification	Connected Load	Demand Factor	Estimated Demand	Panel Totals	
RECEPT	23700 VA	71.10%	16850 VA		
				Total Conn. Load:	23700 VA
				Total Est. Demand:	16850 VA
				Total Conn.:	66 A
				Total Est. Demand:	47 A

APPR | DATE | SYM | DESCRIPTION

NAVFAC

SEAL

WNM Jordan COMPANY – A JOINT VENTURE –

Michael Baker INTERNATIONAL
100 AIRSIDE DRIVE
MOON TOWNSHIP, PA 15108 A/E INFO

APPROVED
FOR COMMANDER NAVFAC

ACTIVITY
MARINE CORPS BASE
CAMP LEJEUNE

SATISFACTORY TO DATE
DES SD | DRW LAK | CHK YPS
PM
BRANCH MANAGER
CHIEF ENG/ARCH
FIRE PROTECTION

DEPARTMENT OF THE NAVY
NAVAL FACILITIES ENGINEERING COMMAND ~ MID-ATLANTIC
ROICC FLORENCE CAMP LEJEUNE
MCB CAMP LEJEUNE

NAVAL FACILITIES ENGINEERING COMMAND ~ MID-ATLANTIC
JACKSONVILLE, NC

JACKSONVILLE, NC
P1338 II MEF SIMULATION/TRAINING CENTER
REPLACEMENT

ELECTRICAL - PANEL SCHEDULES

SCALE: AS NOTED
EPROJECT NO.: 1590892
CONSTR. CONTR. NO.
N40085-20-C-0059
NAVFAC DRAWING NO.
SHEET OF

E-611

DP2 SUBMISSION – P1338 BUILDING - PRE-FINAL SUBMISSION

PLOTTED: 6/10/2021 5:42:36 PM
FILE NAME: BIM 360://HF PACKAGE 3/P1338 MEF SIM CTR-1590892-E.rvt

UNCLASSIFIED

1 2 3 4 5

GENERAL NOTES

1. SEE SHEET E-001 FOR ELECTRICAL NOTES, SYMBOLS, AND ABBREVIATIONS.
2. * SEE E-603 FOR WIRE SIZES NOT INDICATED IN PANEL SCHEDULES.

PANEL TR1

FED FROM: DPLV1
LOCATION: COMM 208
MOUNT: SURFACE

100 A **MAIN CIRCUIT BREAKER**
3PH 4WIRE 208Y/120V
10K AIC
GROUND BAR

CKT	LOAD SERVED	WIRE	BRKR	PL	A		B		C		PL	BRKR	WIRE	LOAD SERVED	CKT
1	RECEPT TELECOM RACK RM 208	12	20	1	0.18	0.18					1	20	12	RECEPT TELECOM RACK RM 208	2
3	RECEPT TELECOM RACK RM 208	12	20	1			0.18	0.72			1	20	12	RECEPT RM 208	4
5	RECEPT TELECOM RACK RM 208	12	20	1					0.18	2.50	2	30	10	TELECOM RACK RM 208	6
7	RECEPT TELECOM RACK RM 208	12	20	1	0.18	2.50					--	--	--	--	8
9	RECEPT RM 208	12	20	1			0.72	1.58			2	25	10	SSCU-02	10
11	RECEPT TELECOM RACK RM 208	12	20	1					0.18	1.58	--	--	--	--	12
13	RECEPT TELECOM RACK RM 208	12	20	1	0.18	0.18					1	20	12	RECEPT TELECOM RACK RM 208	14
15	RECEPT TELECOM RACK RM 208	12	20	1			0.18	0.18			1	20	12	RECEPT TELECOM RACK RM 208	16
17	SURGE PROTECTIVE DEVICE	--	20	3					0.00	0.00	1	20	--	SPARE	18
19	--	--	--	--	0.00	0.00					1	20	--	SPARE	20
21	--	--	--	--			0.00	0.00			1	20	--	SPARE	22
23	SPARE	--	20	2					0.00	0.00	--	--	--	PROVISIONED SPACE	24
25	--	--	--	--	0.00	0.00					--	--	--	PROVISIONED SPACE	26
27	SPARE	--	20	1			0.00	0.00			--	--	--	PROVISIONED SPACE	28
29	PROVISIONED SPACE	--	--	--					0.00	0.00	--	--	--	PROVISIONED SPACE	30
				TOTAL	3.4		3.6		4.4		KVA				
					28.3		29.9		37.2		AMPS				
				CONNECTED LOAD	11.4		KVA		31.6		AMPS				
	NEC ARTICLE 220			DEMAND LOAD	10.5		KVA		29.0		AMPS				

Load Classification	Connected Load	Demand Factor	Estimated Demand	Panel Totals	
RECEPT	8240 VA	100.00%	8240 VA		
UFC-HVAC-70%	3162 VA	70.00%	2213 VA	**Total Conn. Load:**	11402 VA
				Total Est. Demand:	10453 VA
				Total Conn.:	32 A
				Total Est. Demand:	29 A

PANEL TR2

FED FROM: DPLV1
LOCATION: COMM 115
MOUNT: SURFACE

100 A **MAIN CIRCUIT BREAKER**
3PH 4WIRE 208Y/120V
10K AIC
GROUND BAR

CKT	LOAD SERVED	WIRE	BRKR	PL	A		B		C		PL	BRKR	WIRE	LOAD SERVED	CKT
1	RECEPT TELECOM RACK RM 115	12	20	1	0.18	0.18					1	20	12	RECEPT TELECOM RACK RM 115	2
3	RECEPT TELECOM RACK RM 115	12	20	1			0.18	0.18			1	20	12	RECEPT TELECOM RACK RM 115	4
5	SPARE	--	20	1					0.00	0.00	1	20	--	SPARE	6
7	RECEPT TELECOM RACK RM 115	12	20	1	0.18	0.18					1	20	12	RECEPT TELECOM RACK RM 115	8
9	TELECOM RACK RM 115	10	30	2			2.50	0.00			1	20	--	SPARE	10
11	--	--	--	--					2.50	0.92	2	25	10	HPCU-01	12
13	RECEPT RM 115	12	20	1	1.08	0.92					--	--	--	--	14
15	SPARE	--	20	2			0.00	0.00			3	20	--	SURGE PROTECTIVE DEVICE	16
17	--	--	--	--					0.00	0.00	--	--	--	--	18
19	PROVISIONED SPACE	--	--	--	0.00	0.00					--	--	--	--	20
21	PROVISIONED SPACE	--	--	--			0.00	0.00			--	--	--	PROVISIONED SPACE	22
23	PROVISIONED SPACE	--	--	--					0.00	0.00	--	--	--	PROVISIONED SPACE	24
25	PROVISIONED SPACE	--	--	--	0.00	0.00					--	--	--	PROVISIONED SPACE	26
27	PROVISIONED SPACE	--	--	--			0.00	0.00			--	--	--	PROVISIONED SPACE	28
29	PROVISIONED SPACE	--	--	--					0.00	0.00	--	--	--	PROVISIONED SPACE	30
				TOTAL	2.7		2.9		3.4		KVA				
					22.6		24.0		28.6		AMPS				
				CONNECTED LOAD	9.0		KVA		25.0		AMPS				
	NEC ARTICLE 220			DEMAND LOAD	8.4		KVA		23.4		AMPS				

Load Classification	Connected Load	Demand Factor	Estimated Demand	Panel Totals	
RECEPT	7160 VA	100.00%	7160 VA		
UFC-HVAC-70%	1830 VA	70.00%	1281 VA	**Total Conn. Load:**	8990 VA
				Total Est. Demand:	8441 VA
				Total Conn.:	25 A
				Total Est. Demand:	23 A

PROVIDE 150A MCB FOR PANEL
PPC1 WITH SHUNT TRIP

PANEL PPC1

FED FROM: DPLV1
LOCATION: SIM CONTROL SECURE COMM 304B
MOUNT: SURFACE

150 A **MAIN CIRCUIT BREAKER**
3PH 4WIRE 208Y/120V
10K AIC
GROUND BAR

CKT	LOAD SERVED	WIRE	BRKR	PL	A		B		C		PL	BRKR	WIRE	LOAD SERVED	CKT
1	RECEPT RM 304B	12	20	1	0.90	3.00					1	30	10	RECEPT TELECOME RACK RM 304B	2
3	RECEPT TELECOME RACK RM 304B	10	30	1			3.00	3.00			1	20	12	RECEPT TELECOME RACK RM 304B	4
5	RECEPT TELECOME RACK RM 304B	12	20	1					3.00	3.00	1	30	10	RECEPT TELECOME RACK RM 304B	6
7	RECEPT TELECOME RACK RM 304B	12	20	1	3.00	3.00					1	20	12	RECEPT TELECOME RACK RM 304B	8
9	RECEPT TELECOME RACK RM 304B	10	30	1			3.00	3.00			1	30	10	RECEPT TELECOME RACK RM 304B	10
11	RECEPT TELECOME RACK RM 304B	12	20	1					3.00	2.08	2	30	10	SSCU-03	12
13	SURGE PROTECTIVE DEVICE	--	20	3	0.00	2.08					--	--	--	--	14
15	--	--	--	--			0.00								16
17	--	--	--	--					0.00	0.00	1	20	--	SPARE	18
19	SPARE	--	30	1	0.00	0.00					1	20	--	SPARE	20
21	SPARE	--	30	1			0.00	0.00			1	20	--	SPARE	22
23	SPARE	--	20	1					0.00	0.00	--	--	--	PROVISIONED SPACE	24
25	SPARE	--	20	1	0.00	0.00					--	--	--	PROVISIONED SPACE	26
27	PROVISIONED SPACE	--	--	--			0.00	0.00			--	--	--	PROVISIONED SPACE	28
29	PROVISIONED SPACE	--	--	--					0.00	0.00	--	--	--	PROVISIONED SPACE	30
				TOTAL	12.0		12.0		11.1		KVA				
					101.0		101.2		92.3		AMPS				
				CONNECTED LOAD	35.1		KVA		97.3		AMPS				
	NEC ARTICLE 220			DEMAND LOAD	33.8		KVA		93.9		AMPS				

Load Classification	Connected Load	Demand Factor	Estimated Demand	Panel Totals	
Equipment	30000 VA	100.00%	30000 VA		
RECEPT	900 VA	100.00%	900 VA	**Total Conn. Load:**	35060 VA
UFC-HVAC-70%	4160 VA	70.00%	2912 VA	**Total Est. Demand:**	33812 VA
				Total Conn.:	97 A
				Total Est. Demand:	94 A

PROVIDE 400A MCB FOR PANEL
PPS1 WITH SHUNT TRIP

PANEL PPS1

FED FROM: DPLV1
LOCATION: SIM CONTROL (SERVER ROOM) 304A
MOUNT: SURFACE

400 A **MAIN CIRCUIT BREAKER**
3PH 4WIRE 208Y/120V
10K AIC
GROUND BAR

CKT	LOAD SERVED	WIRE	BRKR	PL	A		B		C		PL	BRKR	WIRE	LOAD SERVED	CKT
1	CACCTUS (C) UPS RM 304A	12	15	1	1.00	1.00					1	15	12	CACCTUS (C) UPS RM 304A	2
3	CACCTUS (C) UPS RM 304A	4	70	2			5.00	5.00			2	70	4	CACCTUS (U) UPS RM 304A	4
5	--	--	--	--					5.00	5.00	--	--	--	--	6
7	MTWS (C) UPS RM 304A	10	30	1	3.00	5.00					2	70	4	CACCTUS (C) UPS RM 304A	8
9	CACCTUS (U) UPS RM 304A	12	15	1			1.00	5.00			--	--	--	--	10
11	CACCTUS (U) UPS RM 304A	4	70	2					5.00	1.00	1	15	12	CACCTUS (U) UPS RM 304A	12
13	--	--	--	--	5.00	1.00					1	15	12	CACCTUS (U) UPS RM 304A	14
15	CACCTUS (C) UPS RM 304A	12	15	1			1.00	3.00			1	30	10	MTWS (U) UPS RM 304A	16
17	CACCTUS (U) UPS RM 304A	12	15	1					1.00	3.00	1	30	10	MTWS (U) UPS RM 304A	18
19	CACCTUS (C) UPS RM 304A	12	15	1	1.00	3.00					1	30	10	MTWS (U) UPS RM 304A	20
21	MTWS (U) UPS RM 304A	10	30	1			3.00	3.00			1	30	10	MTWS (U) UPS RM 304A	22
23	MTWS (U) UPS RM 304A	10	30	1					3.00	3.00	1	30	10	MTWS (U) UPS RM 304A	24
25	MTWS (U) UPS RM 304A	10	30	1	3.00	3.00					1	30	10	MTWS (C) UPS RM 304A	26
27	MTWS (C) UPS RM 304A	10	30	1			3.00	3.00			1	30	10	MTWS (C) UPS RM 304A	28
29	MTWS (C) UPS RM 304A	10	30	1					3.00	3.00	1	30	10	MTWS (C) UPS RM 304A	30
31	MTWS (C) UPS RM 304A	10	30	1	3.00	3.00					1	30	10	MTWS (C) UPS RM 304A	32
33	SPARE	--	30	1			0.00	0.00			1	30	--	SPARE	34
35	SPARE	--	15	1					0.00	0.00	1	30	--	SPARE	36
37	SPARE	--	15	1	0.00	0.00					3	20	--	SURGE PROTECTIVE DEVICE	38
39	SPARE	--	70	2			0.00	0.00			--	--	--	--	40
41	--	--	--	--					0.00	0.00	--	--	--	--	42
				TOTAL	32.0		32.0		32.0		KVA				
					266.7		266.7		266.7		AMPS				
				CONNECTED LOAD	96.0		KVA		266.5		AMPS				
	NEC ARTICLE 220			DEMAND LOAD	96.0		KVA		266.5		AMPS				

Load Classification	Connected Load	Demand Factor	Estimated Demand	Panel Totals	
Equipment	96000 VA	100.00%	96000 VA		
				Total Conn. Load:	96000 VA
				Total Est. Demand:	96000 VA
				Total Conn.:	266 A
				Total Est. Demand:	266 A

SYM | DESCRIPTION | DATE | APPR

SEAL

RQ W.M. Jordan COMPANY – A JOINT VENTURE –

Michael Baker INTERNATIONAL
100 AIRSIDE DRIVE
MOON TOWNSHIP, PA 15108
A/E INFO

APPROVED
FOR COMMANDER NAVFAC
ACTIVITY
MARINE CORPS BASE
CAMP LEJEUNE
SATISFACTORY TO DATE
DES SD DRW LAK CHK YPS
PM
BRANCH MANAGER
CHIEF ENG/ARCH
FIRE PROTECTION

DEPARTMENT OF THE NAVY
NAVAL FACILITIES ENGINEERING COMMAND
NAVAL FACILITIES ENGINEERING COMMAND ~ MID-ATLANTIC
JACKSONVILLE, NC
ROICC FLORENCE CAMP LEJEUNE
MCB CAMP LEJEUNE
JACKSONVILLE, NC
P1338 II MEF SIMULATION/TRAINING CENTER
REPLACEMENT
ELECTRICAL - PANEL SCHEDULES

SCALE: AS NOTED
EPROJECT NO.: 1590892
CONSTR. CONTR. NO. N40085-20-C-0059
NAVFAC DRAWING NO.
SHEET OF
E-612

DP2 SUBMISSION – P1338 BUILDING - PRE-FINAL SUBMISSION

UNCLASSIFIED

GENERAL NOTES

1 SEE SHEET E-001 FOR ELECTRICAL NOTES, SYMBOLS, AND ABBREVIATIONS.
2 * SEE E-603 FOR WIRE SIZES NOT INDICATED IN PANEL SCHEDULES.

PROVIDE 125A MCB FOR PANEL
PPS2 WITH SHUNT TRIP

FED FROM: DPLV1
LOCATION: SIM CONTROL (SERVER ROOM) 304A
MOUNT: SURFACE

PANEL PPS2

125 A MAIN CIRCUIT BREAKER
3PH 4WIRE 208Y/120V
10K AIC
GROUND BAR

CKT	LOAD SERVED	WIRE	BRKR	PL	A		B		C		PL	BRKR	WIRE	LOAD SERVED	CKT
1	RECEPT MCEN (U) RACK RM 304A	12	20	1	0.18	0.90					1	20	12	RECEPT RM 304A	2
3	RECEPT MCEN (U) RACK RM 304A	12	20	1			0.18	0.90			1	20	12	RECEPT RM 304A	4
5	MCEN (U) UPS RM 304A	10	30	1					2.00	2.00	1	30	10	MCEN (U) UPS RM 304A	6
7	MCEN (U) UPS RM 304A	10	30	1	2.00	0.18					1	20	12	RECEPT TIE (U) RACK RM 304A	8
9	MCEN (U) UPS RM 304A	10	30	1			2.00	0.18			1	20	12	RECEPT TIE (U) RACK RM 304A	10
11	RECEPT TIE (U) RACK RM 304A	12	20	1					0.18	0.18	1	20	12	RECEPT TIE (U) RACK RM 304A	12
13	RECEPT TIE (U) RACK RM 304A	12	20	1	0.18	0.18					1	20	12	RECEPT TIE (U) RACK RM 304A	14
15	RECEPT TIE (U) RACK RM 304A	12	20	1			0.18	0.18			1	20	12	RECEPT TIE (U) RACK RM 304A	16
17	RECEPT TIE (U) RACK RM 304A	12	20	1					0.18	0.18	1	20	12	RECEPT TIE (U) RACK RM 304A	18
19	RECEPT MCEN (U) RACK RM 304A	12	20	1	0.18	0.18					1	20	12	RECEPT MCEN (U) RACK RM 304A	20
21	RECEPT MCEN (U) RACK RM 304A	12	20	1			0.18	0.18			1	20	12	RECEPT MCEN (U) RACK RM 304A	22
23	RECEPT MCEN (U) RACK RM 304A	12	20	1					0.18	0.18	1	20	12	RECEPT MCEN (U) RACK RM 304A	24
25	RECEPT MCEN (U) RACK RM 304A	12	20	1	0.18	2.00					1	30	10	TIE (U) UPS RM 304A	26
27	RECEPT MCEN (U) RACK RM 304A	12	20	1			0.18	2.00			1	30	10	TIE (U) UPS RM 304A	28
29	TIE (U) UPS RM 304A	10	30	1					2.00	2.00	1	30	10	TIE (U) UPS RM 304A	30
31	MCEN (U) UPS RM 304A	10	30	1	2.00	0.00					3	20	--	SURGE PROTECTIVE DEVICE	32
33	TIE (U) UPS RM 304A	10	30	1			2.00	0.00			--	--	--	--	34
35	SPARE	--	20	1					0.00	0.00	--	--	--	--	36
37	SPARE	--	20	1	0.00	0.00					1	30	--	SPARE	38
39	SPARE	--	20	1			0.00	0.00			1	30	--	SPARE	40
41	SPARE	--	20	1					0.00	0.00	1	30	--	SPARE	42
			TOTAL		8.2		8.2		9.1		KVA				
					68.0		68.0		75.7		AMPS				
			CONNECTED LOAD		25.4		KVA		70.5		AMPS				
NEC ARTICLE 220			DEMAND LOAD		25.4		KVA		70.5		AMPS				

Load Classification	Connected Load	Demand Factor	Estimated Demand	Panel Totals	
Equipment	23600 VA	100.00%	23600 VA		
RECEPT	1800 VA	100.00%	1800 VA	Total Conn. Load:	25400 VA
				Total Est. Demand:	25400 VA
				Total Conn.:	71 A
				Total Est. Demand:	71 A

PROVIDE 125A MCB FOR PANEL
PPS3 WITH SHUNT TRIP

FED FROM: DPLV1
LOCATION: SIM CONTROL (SERVER ROOM) 304A
MOUNT: SURFACE

PANEL PPS3

125 A MAIN CIRCUIT BREAKER
3PH 4WIRE 208Y/120V
10K AIC
GROUND BAR

CKT	LOAD SERVED	WIRE	BRKR	PL	A		B		C		PL	BRKR	WIRE	LOAD SERVED	CKT
1	RECEPT SIPR (C) RACK RM 304A	12	20	1	0.18	2.00					1	30	10	SIPR (C) UPS RM 304A	2
3	RECEPT SIPR (C) RACK RM 304A	12	20	1			0.18	2.00			1	30	10	SIPR (C) UPS RM 304A	4
5	SIPR (C) UPS RM 304A	10	30	1					2.00	2.00	1	30	10	TIE (C) UPS RM 304A	6
7	SIPR (C) UPS RM 304A	10	30	1	2.00	0.18					1	20	12	RECEPT TIE (C) RACK RM 304A	8
9	SIPR (C) UPS RM 304A	10	30	1			2.00	0.18			1	20	12	RECEPT TIE (C) RACK RM 304A	10
11	TIE (C) UPS RM 304A	10	30	1					2.00	0.18	1	20	12	RECEPT TIE (C) RACK RM 304A	12
13	RECEPT TIE (C) RACK RM 304A	12	20	1	0.18	0.18					1	20	12	RECEPT TIE (C) RACK RM 304A	14
15	RECEPT TIE (C) RACK RM 304A	12	20	1			0.18	0.18			1	20	12	RECEPT TIE (C) RACK RM 304A	16
17	RECEPT TIE (C) RACK RM 304A	12	20	1					0.18	0.18	1	20	12	RECEPT TIE (C) RACK RM 304A	18
19	RECEPT SIPR (C) RACK RM 304A	12	20	1	0.18	0.18					1	20	12	RECEPT SIPR (C) RACK RM 304A	20
21	RECEPT SIPR (C) RACK RM 304A	12	20	1			0.18	0.18			1	20	12	RECEPT SIPR (C) RACK RM 304A	22
23	RECEPT TIE (C) RACK RM 304A	12	20	1					0.18	0.18	1	20	12	RECEPT SIPR (C) RACK RM 304A	24
25	RECEPT SIPR (C) RACK RM 304A	12	20	1	0.18	2.00					1	30	10	TIE (C) UPS RM 304A	26
27	RECEPT SIPR (C) RACK RM 304A	12	20	1			0.18	2.00			1	30	10	TIE (C) UPS RM 304A	28
29	RECEPT SIPR (C) RACK RM 304A	12	20	1					0.18	2.00	1	30	10	TIE (C) UPS RM 304A	30
31	RECEPT RM 304A	12	20	1	0.90	1.08					1	20	12	RECEPT RM 304A	32
33	SURGE PROTECTIVE DEVICE	--	20	3			0.00	0.00			1	30	--	SPARE	34
35	--	--	--	--					0.00	0.00	1	20	--	SPARE	36
37	--	--	--	--	0.00	0.00					1	20	--	SPARE	38
39	SPARE	--	30	1			0.00	0.00			1	20	--	SPARE	40
41	SPARE	--	30	1					0.00	0.00	1	20	--	SPARE	42
			TOTAL		9.2		7.3		9.1		KVA				
					79.3		60.5		78.0		AMPS				
			CONNECTED LOAD		25.6		KVA		71.0		AMPS				
NEC ARTICLE 220			DEMAND LOAD		25.6		KVA		71.0		AMPS				

Load Classification	Connected Load	Demand Factor	Estimated Demand	Panel Totals	
Equipment	23600 VA	100.00%	23600 VA		
RECEPT	1980 VA	100.00%	1980 VA	Total Conn. Load:	25580 VA
				Total Est. Demand:	25580 VA
				Total Conn.:	71 A
				Total Est. Demand:	71 A

APPR | DATE | DESCRIPTION | SYM

NAVFAC

SEAL

WJM Jordan COMPANY – A JOINT VENTURE –

Michael Baker INTERNATIONAL
100 AIRSIDE DRIVE
MOON TOWNSHIP, PA 15108 A/E INFO

APPROVED
FOR COMMANDER NAVFAC
ACTIVITY
MARINE CORPS BASE
CAMP LEJEUNE
SATISFACTORY TO DATE
DES SD | DRW LAK | CHK YPS
PM
BRANCH MANAGER
CHIEF ENG/ARCH
FIRE PROTECTION

DEPARTMENT OF THE NAVY
NAVAL FACILITIES ENGINEERING COMMAND
ROICC FLORENCE CAMP LEJEUNE
MCB CAMP LEJEUNE

NAVAL FACILITIES ENGINEERING COMMAND ~ MID-ATLANTIC
JACKSONVILLE, NC

JACKSONVILLE, NC
P1338 II MEF SIMULATION/TRAINING CENTER
REPLACEMENT

ELECTRICAL - PANEL SCHEDULES

SCALE: AS NOTED
EPROJECT NO.: 1590892
CONSTR. CONTR. NO.
N40085-20-C-0059
NAVFAC DRAWING NO.
SHEET OF

E-613

DP2 SUBMISSION – P1338 BUILDING - PRE-FINAL SUBMISSION

PLOTTED: 6/10/2021 5:42:41 PM
FILE NAME: BIM 360://HF PACKAGE 3/P1338 MEF SIM CTR-1590892-E.rvt

SYMBOL — TELECOMMUNICATIONS DESCRIPTION

APPLICABLE TO ALL OUTLETS LISTED BELOW:

TERMINATIONS SHALL BE PERFORMED USING PIN/PAIR ASSIGNMENTS IN ACCORDANCE WITH THE T568A PIN-OUT SEQUENCE USING 8-PIN 8 CONDUCTOR (8P8C) RJ45 TYPE CONNECTORS RATED FOR THE CATEGORY OF THE INSTALLED CABLE; COLOR SHALL MATCH THE U/UTP OUTER JACKET.

TELECOMMUNICATIONS OUTLETS, 8P8C RJ45 TYPE CONNECTOR
ALL UTP CABLES SHALL HAVE GREEN PLENUM RATED OUTER JACKET

STANDARD WORK AREA OUTLET, MOUNTED AT 18" AFF UON: FOUR (4) CATEGORY 6A UTP COPPER CABLES TO SERVING TR, TERMINATE ON RACK MOUNTED PATCH PANELS. SEE DETAILS FOR ADDITIONAL INFORMATION.

DDC — DIRECT DIGITAL CONTROL (DDC) OUTLET, MOUNTED AT 18" AFF UON: TWO (2) CATEGORY 6A UTP COPPER CABLE TO SERVING TR, TERMINATE ON RACK MOUNTED PATCH PANELS. SEE DETAILFOR ADDITIONAL INFORMATION.

W WP — WALL MOUNTED TELEPHONE OUTLET, MOUNTED AT 48" AFF UON: ONE (1) CATEGORY 6A UTP COPPER CABLE TO SERVING TR, TERMINATE ON RACK MOUNTED PATCH PANELS. SEE DETAIL FOR ADDITIONAL INFORMATION.

TV — CATV OUTLET, MOUNTED AT 72" AFF; TWO (2) CATEGORY 6A UTP COPPER CABLES AND ONE (1) RG-6 DUAL-SHIELD COAXIAL COPPER CABLES TO SERVING TR, TERMINATE CATEGORY 6 UTP CABLES ON RACK MOUNTED PATCH PANELS. TERMINATE RG-6 COAXIAL COPPER CABLE ON WALL AREA DESIGNATED FOR CATV.

M — MULTI-USER TELECOM OUTLET ASSEMBLY (MUTOA), MOUNTED AT COUNTER HEIGHT; TWELVE (12) CATEGORY 6A UTP COPPER CABLES TO SERVICE TR, TERMINATE ON RACK MOUNTED PATCH PANELS. "C" DENOTES CLASSIFIED, "U" DENOTES UNCLASSIFIED.

WAP — WIRELESS ACCESS POINT (WAP) OUTLET, MOUNTED TWO (2) CATEGORY-6A U/UTP OUTLETS), LOCATED 12" ABOVE DROPPED CEILING

STANDARD WORK ARE OUTLET, FLOORBOX MOUNTED; FOUR (4) CATEGORY 6A UTP COPPER CABLES TO SERVING TR, TERMINATE ON RACK MOUNTED PATCH PANELS. COORDINATE WITH ELECTRICAL AND AUDIOVISUAL FOR FLOORBOX LOCATIONS.

S — STANDARD WORK ARE OUTLET, SIPRNET, FOUR (4) CATEGORY 6 UTP COPPER CABLES, RED JACKET, TO SECURE ROOM; TERMINATE ON WALL MOUNTED RACK IN SECURE ROOM, INSTALL TO DESIGNATED WORK AREAS IN PDS, PER CNSSI 7003.

FA — FIRE ALARM SYSTEM PHONE INTERFACE OUTLET, COORDINATE MOUNTING HEIGHT WITH FIRE ALARM EQUIPMENT INSTALLER: TWO (2) CATEGORY 6A UTP COPPER CABLE TO SERVING TR, TERMINATE ON RACK MOUNTED PATCH PANELS. SEE FACEPLATE DETAILS FOR ADDITONAL INFORMATION.

SEU — SECURE EQUIPMENT ENCLOSURE; WALL MOUNTED 42" X 30" HIGH- SECURITY, LOCKABLE CABLE TERMINATION CABINET; COMPLIANT WITH CNSSI 7003.

FB1 — MULTISERVICE FLOOR BOX, SEE E-502 FOR MORE INFORMATION.

FB2 — MULTISERVICE FLOOR BOX, SEE E-502 FOR MORE INFORMATION.

FO — FIBER OPTIC HANDHOLE (EXISTING)

FLOORBOX LOCATION, TRAINING SIMULATION SYSTEM – UNCLASSIFIED; INSTALLED IN RAISED ACCESS FLOOR. INSTALL EIGHT (8) CATEGORY 6A UTP PLENUM-RATED, GREEN JACKET COPPER CABLES FROM TERMINATING RACK IN SIM SERVER ROOM TO FLOORBOX LOCATION. SEE DETAIL SHEET T-5xx FOR TERMINATION DETAILS. SEE E-001 FOR ELECTRICAL INFORMATION.

FLOORBOX LOCATION, TRAINING SIMULATION SYSTEM – CLASSIFIED; INSTALLED IN RAISED ACCESS FLOOR. INSTALL EIGHT (8) CATEGORY 6A UTP PLENUM-RATED, RED JACKET COPPER CABLES FROM TERMINATING RACK IN SIM SERVER ROOM TO FLOORBOX LOCATION. SEE DETAIL SHEET T-5xx FOR TERMINATION DETAILS. SEE E-001 FOR ELECTRICAL INFORMATION.

OTHER SYMBOLS:

PA — CEILING MOUNTED PA SYSTEM SPEAKER

PA — WALL MOUNTED PA SYSTEM SPEAKER

GROUNDING BUSBAR, TMGB OR TGB AS INDICATED ON PLANS

SYMBOL — TELECOMMUNICATIONS DESCRIPTION

SECURITY SYMBOLS:

IDS — INTRUSION DETECTION SYSTEM CONTROL PANEL

WALL-MOUNTED PASSIVE INFRARED SENSOR (PIR)

CEILING-MOUNTED PASSIVE INFRARED SENSOR (PIR)

HORIZONTAL CONDUIT RUN FROM TELECOMMUNICATION ROOMS TO RESPECTIVE AREAS AS INDICATED ON PLANS

CR — ACCESS CONTROL SYSTEM / INTRUSION DETECTION SYSTEM CARD READER

ES — ELECTRIC STRIKE

HSS — HIGH SECURITY BALANCED MAGNETIC SWITCH

KP — KEYPAD FOR ACCESS CONTROL SYSTEM / INTRUSION DETECTION SYSTEM

REX — REQUEST-TO-EXIT SENSOR

1DC — SINGLE DOOR TCP/IP ACS/IDS CONTROLLER MOUNTED ABOVE ACCESSIBLE CEILING ON SECURE SIDE OF DOOR WITH TWO CATEGORY-6 U/UTP CABLE TO MAIN ACS/IDS CONTROLLER PANEL

2DC — 2-DOOR TCP/IP ACS/IDS CONTROLLER MOUNTED ABOVE ACCESSIBLE CEILING ON SECURE SIDE OF DOOR WITH TWO CATEGORY-6 U/UTP CABLE TO MAIN ACS/IDS CONTROLLER PANEL

4DC — 4-DOOR TCP/IP ACS/IDS CONTROLLER MOUNTED ABOVE ACCESSIBLE CEILING ON SECURE SIDE OF DOOR WITH TWO CATEGORY-6 U/UTP CABLE TO MAIN ACS/IDS CONTROLLER PANEL

SECURITY CAMERA, FIXED

PTZ — SECURITY CAMERA WITH PAN, TILT, ZOOM CAPABILITIES

TELECOMMUNICATIONS STANDARDS

TELECOMMUNICATIONS INSTALLATION SHALL COMPLY WITH THE MOST CURRENT VERSION OF THE FOLLOWING STANDARDS:

AMERICANS WITH DISABILITIES ACT AND ARCHITECTURAL BARRIERS ACT ACCESSIBILITY GUIDELINES (UFAS/ADAAG), 2011

ANSI/TIA-568.0-D - GENERIC TELECOMMUNICATIONS CABLING FOR CUSTOMER PREMISES

ANSI/TIA-568.1-D - COMMERCIAL BUILDING TELECOMMUNICATIONS CABLING STANDARD

ANSI/TIA-568-C.2 - BALANCED TWISTED-PAIR TELECOMMUNICATIONS CABLING AND COMPONENTS STANDARD

ANSI/TIA-568.3-D - OPTICAL FIBER CABLING COMPONENTS STANDARD

ANSI/TIA-568.4-D - BROADBAND COAXIAL CABLING AND COMPONENTS STANDARD

ANSI/TIA-569-D - TELECOMMUNICATIONS PATHWAYS AND SPACES

ANSI/TIA-598-D - OPTICAL FIBER CABLE COLOR CODING.

ANSI/TIA-606-B - ADMINISTRATION STANDARD FOR COMMERCIAL TELECOMMUNICATIONS INFRASTRUCTURE

ANSI/TIA-607-C - COMMERCIAL BUILDING GROUNDING (EARTHING) AND BONDING REQUIREMENTS FOR TELECOMMUNICATIONS

ANSI/TIA-758-B - CUSTOMER-OWNED OUTSIDE PLANT TELECOMMUNICATIONS INFRASTRUCTURE STANDARD

ANSI/TIA-1152, 1152-A - REQUIREMENTS FOR FIELD TEST INSTRUMENTS AND MEASUREMENTS FOR BALANCED TWISTED-PAIR CABLING

TIA-526-7 - MEASUREMENT OF OPTICAL POWER LOSS OF INSTALLED SINGLE-MODE FIBER CABLE PLANT

TIA-526-14-C - OPTICAL POWER LOSS MEASUREMENTS OF INSTALLED MULTIMODE FIBER CABLE PLANT

NFPA 70 - NATIONAL ELECTRICAL CODE (NEC)

NFPA 75 - STANDARD FOR THE PROTECTION OF INFORMATION TECHNOLOGY EQUIPMENT

NFPA 76 - STANDARD FOR THE FIRE PROTECTION OF TELECOMMUNICATIONS FACILITIES

NFPA 780 - STANDARD FOR THE INSTALLATION OF LIGHTNING PROTECTION SYSTEMS

TELECOMMUNICATIONS STANDARDS CONT

UFC-3-580-01 CA - TELECOMMUNICATIONS INTERIOR INFRASTRUCTURE PLANNING AND DESIGN

UFC 4-020-04A - ELECTRONIC SECURITY SYSTEMS : SECURITY ENGINEERING

UFC 4-021-02 - ELECTRONIC SECURITY SYSTEMS

MIL-HDBK-232A - RED/BLACK ENGINEERING-INSTALLATION GUIDELINES

MIL-HDBK-419A – GROUNDING, BONDING, AND SHIELDING FOR ELECTRONIC EQUIPMENT AND FACILITIES

MIL-HDBK-1012/3 - TELECOMMUNICATIONS PREMISES DISTRIBUTION PLANNING, DESIGN, AND ESTIMATING

TM 5-853-4 - SECURITY ENGINEERING ELECTRONIC SECURITY SYSTEMS

IEC/TR 61602 ED. 1.0 B, 1996 - CONNECTORS USED IN THE FIELD OF AUDIO, VIDEO AND AUDIOVISUAL ENGINEERING

IEC 61883-1 ED. 3.0 EN, 2008 - CONSUMER AUDIO/VIDEO EQUIPMENT - DIGITAL INTERFACE - PART 1: GENERAL

IEC 61883-6 ED. 2.0 EN, 2005 - CONSUMER AUDIO/VIDEO EQUIPMENT - DIGITAL INTERFACE - PART 6: AUDIO AND MUSIC DATA TRANSMISSION PROTOCOL

IEC 61938 ED. 1.0 B, 1996 - AUDIO, VIDEO AND AUDIOVISUAL SYSTEMS - INTERCONNECTIONS AND MATCHING VALUES – PREFERRED MATCHING VALUES OF ANALOGUE SIGNALS

IEC 62075 ED. 1.0 B, 2008 - AUDIO/VIDEO, INFORMATION AND COMMUNICATION TECHNOLOGY EQUIPMENT – ENVIRONMENTALLY CONSCIOUS DESIGN

IEC 62087-BD ED. 2.0 EN, 2008 - METHODS OF MEASUREMENT FOR THE POWER CONSUMPTION OF AUDIO, VIDEO AND RELATED EQUIPMENT

NFPA 262 - STANDARD METHOD OF TEST FOR FLAME TRAVEL AND SMOKE OF WIRES AND CABLES FOR USE IN AIR-HANDLING SPACES

BICSI - BUILDING INDUSTRIES CONSULTING SERVICES INTERNATIONAL (TDMM), 13TH ED., 2014, TELECOMMUNICATIONS DISTRIBUTION METHODS MANUAL 13TH EDITION.

CAMP LEJEUNE GUIDE SPECIFICATIONS, (CLGS) 27 10 00

CAMP LEJEUNE GUIDE SPECIFICATIONS, (CLGS) 33 82 00

CAMP LEJEUNE GUIDE SPECIFICATIONS, (CLGS) 33 82 00

TELECOMMUNICATIONS GENERAL NOTES

1. THIS IS A STANDARD LEGEND SHEET. NOT ALL SYMBOLS OR ABBREVIATIONS MAY APPEAR ON DRAWINGS.
2. REFER TO DIVISIONS 26, 27, 28 AND 33 SPECIFICATIONS FOR TELECOMMUNICATION SYSTEM ITEMS.
3. MOUNTING DEVICES AND EQUIPMENT PER SPECIFICATIONS UNLESS OTHERWISE NOTED.
4. MOUNTING HEIGHTS, UNLESS OTHERWISE NOTED, ARE TO CENTER LINE OF DEVICE.
5. THE CONTRACTOR SHALL DETERMINE THE EXACT ROUTING OF RACEWAYS.
6. THE CONTRACTOR SHALL COORDINATE ALL RACEWAY PENETRATIONS AND PROVIDE FIREPROOFING AS APPLICABLE.
7. THE MAXIMUM PERMANENT HORIZONTAL LINK DISTANCE SHALL NOT EXCEED 295' AND THE MAXIMUM HORIZONTAL CHANNEL (LINK PLUS WORKSTATION CABLES AND PATCH CORDS) SHALL BE 328'.
8. ALL HORIZONTAL VOICE AND DATA CABLING SHALL BE CATEGORY-6 INSTALLED IN A MINIMUM 1-1/4" CONDUIT UNLESS NOTED OTHERWISE FROM TELECOMM OUTLET LOCATIONS TO THE CABLE TRAY.
9. ALL HORIZONTAL AND BACKBONE CABLING SHALL BE PLENUM RATED WITH THE EXCEPTION OF CABLING INSTALLED IN UNDERGROUND CONDUITS.
10. CATEGORY-6A CABLING SHALL BE TERMINATED ON 8-PIN, 8-CONDUCTOR (RJ-45) CONNECTORS USING PIN/PAIR ASSIGNMENTS IN ACCORDANCE WITH T568A PIN-OUT SEQUENCE.
11. CATEGORY-6A JACKS SHALL BE THE SAME COLOR AS CORRESPONDING HORIZONTAL VOICE AND DATA CABLING. CATEGORY-6 JACKS SHALL BE THE SAME MANUFACTURER AS THE PATCH PANELS.
12. PROVIDE CATEGORY-6, 8-PIN, 8-CONDUCTOR MODULAR TO 8-PIN, 8-CONDUCTOR MODULAR, PATCH CABLES IN QUANTITIES AND LENGTHS SUCH THAT ALL WORKSTATION CABLES ARE CONNECTED.
13. OPTICAL FIBER CABLES SHALL BE TERMINATED WITH DUPLEX SC-TYPE CONNECTORS.
14. ALL TELECOMMUNICATIONS RACKS AND SUPPORTING STRUCTURES (CABLE TRAYS, LADDER RACKS, CONDUITS, AND BASKETS) WITHIN A TR MUST BE BONDED TO THE TR SIGNAL GROUND RING OR BUS BAR (TGB OR TMGB) AS DEFINED IN ANSI/TIA-569-D AND IN ANSI/TIA-607-B.
15. CABLE TRAY SHALL BE WALL MOUNTED (PREFERABLE) OR TRAPEZE MOUNTED. CENTER HUNG CABLE TRAY IS NOT ALLOWED. CABLE TRAY SHALL NOT BE USED TO SUPPORT OTHER ITEMS, CONDUIT, CABLE TRAY, PIPING OF UTILITIES. CABLE TRAY SUPPORTS SHALL BE PER NEMA STANDARDS PUBLICATION VE 2 - METAL CABLE TRAY INSTALLATION GUIDELINES.
16. PROVIDE ACCESS PANELS IN NON LAY-IN CEILINGS SUCH THAT NO POINT IN THE CABLE TRAY SYSTEM IS MORE THAN 20' FROM AN ACCESS POINT.
17. PROVIDE A MINIMUM OF 12" OF CLEARANCE ABOVE THE TOP OF CABLE TRAYS AND A MINIMUM OF 3" CLEARANCE BELOW CABLE TRAYS.
18. COMPLY WITH ANSI/TIA-569-D TELECOMMUNICATION PATHWAYS AND SPACES.
19. USE ONLY COPPER CONDUCTORS FOR GROUND CONNECTIONS. THE USE OF ALUMINUM CONDUCTORS IS NOT ALLOWED.
20. PROVIDE CABLE INSTALLED IN UNDERGROUND CONDUITS LISTED FOR USE IN WET LOCATIONS. PLENUM RATED CABLE SHALL NOT BE INSTALLED IN ANY UNDERGROUND CONDUIT.
21. LABEL ALL CABLE TERMINATIONS AND BOTH ENDS OF ALL CABLES IN ACCORDANCE WITH UFC 3-580-01 AND ANSI/TIA-606-B.
22. PROVIDE AS-BUILT DOCUMENTATION INCLUDING COMPLETE TEST RESULT REPORTS, FLOOR PLANS SHOWING USER WORKSTATIONS WITH CABLING LABELING, AND BACKBONE CABLE SCHEMATIC AND LABELING IN AN ELECTRONIC FORMAT (PDF) OR OTHER APPROVED FORMAT AND A PRINTED HARDCOPY. TEST RESULTS SHALL BE SUPPLIED ELECTRONICALLY TO THE PROJECT RCDD AND CORPS PROJECT ENGINEER/ARCHITECT IN THE TEST PROGRAM NATIVE FORMAT.
23. ANY MOTOR, TRANSFORMER, OR OTHER ELECTRICAL DEVICE GREATER THAN 5 KVA SHALL HAVE A MINIMUM OF A 4' BUFFER FROM ANY WALL OF THE EF, TER, OR TR(S).

TELECOMMUNICATIONS ABBREVIATIONS

110	110 PUNCHDOWN BLOCKS
8P8C	8-PIN, 8-CONDUCTOR
ACS	ACCESS CONTROL SYSTEM
AFF	ABOVE FINISHED FLOOR
AHJ	AUTHORITY HAVING JURISDICTION
ANSI	AMERICAN NATIONAL STANDARDS INSTITUTE
AWG	AMERICAN WIRE GAUGE
BBC	BACKBONE BONDING CONDUCTOR
BCT	BONDING CONDUCTOR FOR TELECOMMUNICATIONS
C	CONDUIT(S)
CAA	CONTROLLED ACCESS AREA
CAT 6	CABLING ETL VERIFIED TO ANSI/TIA-568-C.2 CATEGORY 6
CATV	CABLE TELEVISION
CCH	CLOSET CONNECTOR HOUSING
CCTV	CLOSED-CIRCUIT TELEVISION
CFCI	CONTRACTOR FURNISHED CONTRACTOR INSTALLED
CP	CONSOLIDATION POINT
DB	DIRECT BURIED
DDC	DIRECT DIGITAL CONTROL
DIA	DIAMETER
DWG	DRAWING
ER	EXISTING RELOCATED
EMT	ELECTRICAL METALLIC TUBING
ETR	EXISTING TO REMAIN
EXIST	EXISTING
FB	FLOOR BOX
FT	FEET
GFGI	GOVERNMENT FURNISHED GOVERNMENT INSTALLED
GND	GROUND
GRC	GALVANIZED RIGID CONDUIT
GRS	GALVANIZED RIGID STEEL
IAW	IN ACCORDANCE WITH
IDS	INTRUSION DETECTION SYSTEM
IN	INCHES
LCA	LIMITED CONTROL ACCESS
MC	MECHANICAL CONTRACTOR
MIN	MINIMUM
MTD	MOUNTED
NEC	NATIONAL ELECTRICAL CODE
NEMA	NATIONAL ELECTRICAL MANUFACTURERS ASSOCIATION
NESC	NATIONAL ELECTRICAL SAFETY CODE
NFPA	NATIONAL FIRE PROTECTION ASSOCIATION
NIC	NOT IN CONTRACT
NTS	NOT TO SCALE
OEM	ORIGINAL EQUIPMENT MANUFACTURER
OFCI	OWNER FURNISHED CONTRACTOR INSTALLED
OFOI	OWNER FURNISHED OWNER INSTALLED
OSHA	OCCUPATIONAL SAFETY AND HEALTH ADMINISTRATION
PA	PUBLIC ADDRESS
PBB	PRIMARY BONDING BUSBAR
PE	POLYETHYLENE
PET	PROTECTED ENTRANCE TERMINALS
PDU	POWER DISTRIBUTION UNIT
POTS	PLAIN OLD TELEPHONE SERVICE (SWITCHED TELEPHONE LINE)
PSI	POUNDS PER SQUARE INCH
PTZ	PAN / TILT / ZOOM
QTY	QUANTITY
RBB	RACK BONDING BUSBAR
RBC	RACK BONDING CONDUCTOR
RMC	RIGID METAL CONDUIT
RR	REMOVE AND RELOCATE
RU	RACK UNIT
SBB	SECONDARY BONDING BUSBAR
SCH	SCHEDULE
STP	SHIELDED TWISTED PAIR
TBB	TELECOMMUNICATIONS BONDING BACKBONE
TBC	TELECOMMUNICATIONS BONDING CONDUCTOR
TE	TELECOMMUNICATIONS ENCLOSURE
TEBC	TELECOMMUNICATIONS EQUIPMENT BONDING CONDUCTOR
TEF	TELECOMMUNICATIONS ENTRANCE FACILITY
TGB	TELECOMMUNICATIONS GROUNDING BUSBAR
TMGB	TELECOMMUNICATIONS MAIN GROUNDING BUSBAR
TYP	TYPICAL
U/G	UNDERGROUND
UON	UNLESS OTHERWISE NOTED
U/UTP	UNSCREENED/UNSHIELDED TWISTED PAIR CABLE
VoIP	VOICE OVER INTERNET PROTOCOL
WP	WEATHERPROOF
XP	EXPLOSION PROOF

APPR | DATE | SYM | DESCRIPTION

NAVFAC

SEAL

WM Jordan Company – A JOINT VENTURE –

Michael Baker INTERNATIONAL
100 AIRSIDE DRIVE
MOON TOWNSHIP, PA 15108 — A/E INFO

APPROVED

FOR COMMANDER NAVFAC

ACTIVITY
MARINE CORPS BASE
CAMP LEJEUNE

SATISFACTORY TO DATE

DES JTE | DRW ETH | CHK JMG

PM

BRANCH MANAGER

CHIEF ENG/ARCH

FIRE PROTECTION

DEPARTMENT OF THE NAVY
NAVAL FACILITIES ENGINEERING COMMAND
ROICC FLORENCE CAMP LEJEUNE

NAVAL FACILITIES ENGINEERING COMMAND ~ MID-ATLANTIC
JACKSONVILLE, NC

MCB CAMP LEJEUNE
JACKSONVILLE, NC

P1338 II MEF SIMULATION/TRAINING CENTER
REPLACEMENT

TELECOMMUNICATIONS SYMBOLS, SCHEDULES, & NOTES

SCALE: AS NOTED

EPROJECT NO.: 1590892

CONSTR. CONTR. NO.
N40085-20-C-0059

NAVFAC DRAWING NO.

SHEET OF

T-001

DP2 SUBMISSION – P1338 BUILDING - PRE-FINAL SUBMISSION

PLOTTED: 6/10/2021 9:27:39 AM

FILE NAME: BIM 360://HF PACKAGE 3/P1338 MEF SIM CTR-1590892-E.rvt

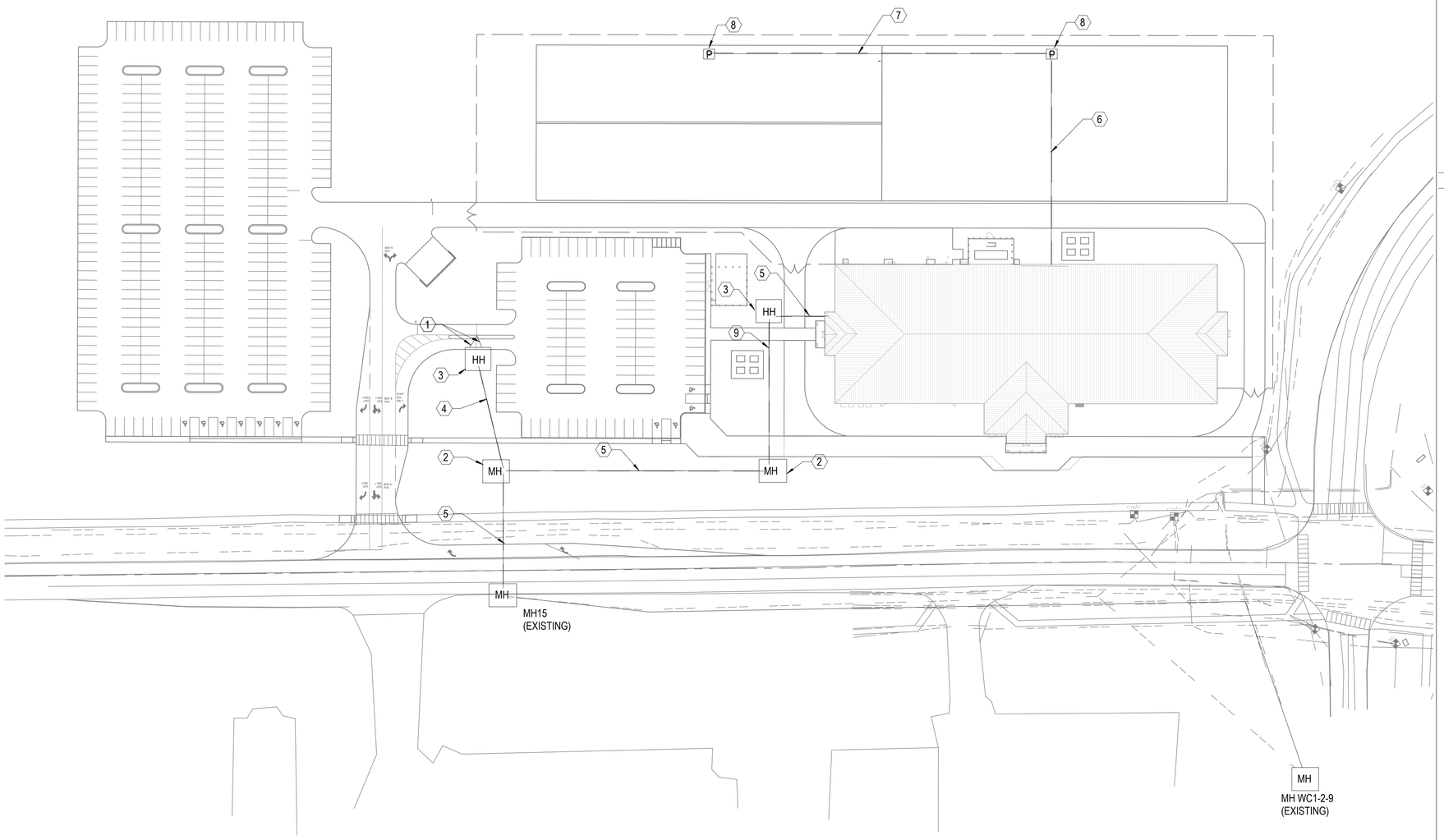

GENERAL NOTES

1 SEE SHEET E-001 FOR ELECTRICAL NOTES, SYMBOLS, AND ABBREVIATIONS.

2 DEPTH OF DUCTBANKS SHALL BE COORDINATED WITH OTHER UTILITIES. PROVIDE AND INSTALL ONE (1) NEW 24-STRAND SINGLEMODE OSP OPTICAL FIBER CABLE FROM MH15 TO NEW FACILITY EF VIA NEW DUCTBANK SYSTEM, AND ONE (1) 300-PAIR OSP PE39 COPPER CABLE FROM EXISTING MH WC1-2-9 TO NEW FACILITY EF VIA NEW DUCTBANK SYSTEM. COORDINATE WITH GOVERNMENT FOR PLACING, SPLICING, TERMINATION, AND CUTOVER REQUIREMENTS.

3 PROVIDE AND INSTALL ONE (1) NEW 24-STRAND SINGLEMODE OSP OPTICAL FIBER CABLE, AND ONE (1) 100-PAIR PE-93 OSP COPPER CABLE FROM TELECOM ROOM TR208 TO NEW PEDESTAL LOCATIONS AT BUILDING EXTERIOR; COORDINATE TERMINATION LOCATIONS WITH BASE COMMUNICATIONS.

4 PRESERVE AND PROTECT RORP211-5 AND DIRECT BURIED CABLING TO FORP211-5.

5 PRESERVE AND PROTECT HH211-5-4, CABLING AND DUCTBANK FROM HH211-5-4 TO 1248.

KEYNOTES

1 NEW 2-WAY 2" CONDUIT DUCTBANK FROM NEW SITE MANHOLE TO ROADWAY MEDIAN LOCATION; COORDINATE EXACT CONDUIT STUB UP LOCATION WITH PROPOSED CARD READER LOCATION.

2 NEW 4'x4'x4' PRECAST CONCRETE COMMUNICATION VAULT

3 NEW 2'x3' CONCRETE POLYMER HANDHOLE

4 NEW 2-WAY 4" CONDUIT DUCTBANK FROM NEW SITE MANHOLE TO NEW HANDHOLE

5 NEW 6-WAY 4" CONDUIT DUCTBANK FROM MH15 TO NEW SITE MANHOLE, WITH THREE (3) 3" 3-DUCT FABRIC INNERDUCT INSTALLED IN THREE CONDUITS

6 NEW 2-WAY 2" CONDUIT DUCTBANK FROM BUILDING TELECOM ROOM TR208 TO PEDESTAL LOCATION; ONE CONDUIT WITH ONE (1) 3" 3-DUCT FABRIC INNERDUCT INSTALLED IN ONE CONDUIT

7 NEW 2-WAY 2" CONDUIT DUCTBANK BETWEEN NEW PEDESTAL LOCATIONS; ONE CONDUIT WITH ONE (1) 1" 3-DUCT FABRIC INNERDUCT INSTALLED IN ONE CONDUIT

8 NEW TELECOMMUNICATIONS PEDESTAL LOCATION

9 NEW 3-WAY 4" CONDUIT DUCTBANK FROM MH15 TO NEW SITE MANHOLE, WITH THREE (3) 3" 3-DUCT FABRIC INNERDUCT INSTALLED IN ONE CONDUIT

TELECOMMUNICATIONS - SITE UTILITY PLAN

SCALE: 1" = 60'-0"

0 30'-0" 60'-0" 120'-0"

SCALE: 0'-1" = 60'-0"

N

APPR | DATE | DESCRIPTION | SYM

NAVFAC

SEAL

IRQ WM Jordan COMPANY – A JOINT VENTURE –

Michael Baker INTERNATIONAL

100 AIRSIDE DRIVE
MOON TOWNSHIP, PA 15108 A/E INFO

APPROVED

FOR COMMANDER NAVFAC

ACTIVITY
MARINE CORPS BASE
CAMP LEJEUNE

SATISFACTORY TO DATE

DES JTE | DRW ETH | CHK JMG

PM

BRANCH MANAGER

CHIEF ENG/ARCH

FIRE PROTECTION

DEPARTMENT OF THE NAVY
NAVAL FACILITIES ENGINEERING COMMAND
ROICC FLORENCE CAMP LEJEUNE
MCB CAMP LEJEUNE

NAVAL FACILITIES ENGINEERING COMMAND – MID-ATLANTIC
JACKSONVILLE, NC

JACKSONVILLE, NC
P1338 II MEF SIMULATION/TRAINING CENTER
REPLACEMENT

TELECOMMUNICATIONS - SITE PLAN

SCALE: AS NOTED

EPROJECT NO.: 1590892

CONSTR. CONTR. NO.
N40085-20-C-0059

NAVFAC DRAWING NO.

SHEET OF

TS101

DP2 SUBMISSION – P1338 BUILDING - PRE-FINAL SUBMISSION

PLOTTED: 6/10/2021 9:28:46 AM

FILE NAME: BIM 360://HF PACKAGE 3/P1338 MEF SIM CTR-1590892-E.rvt

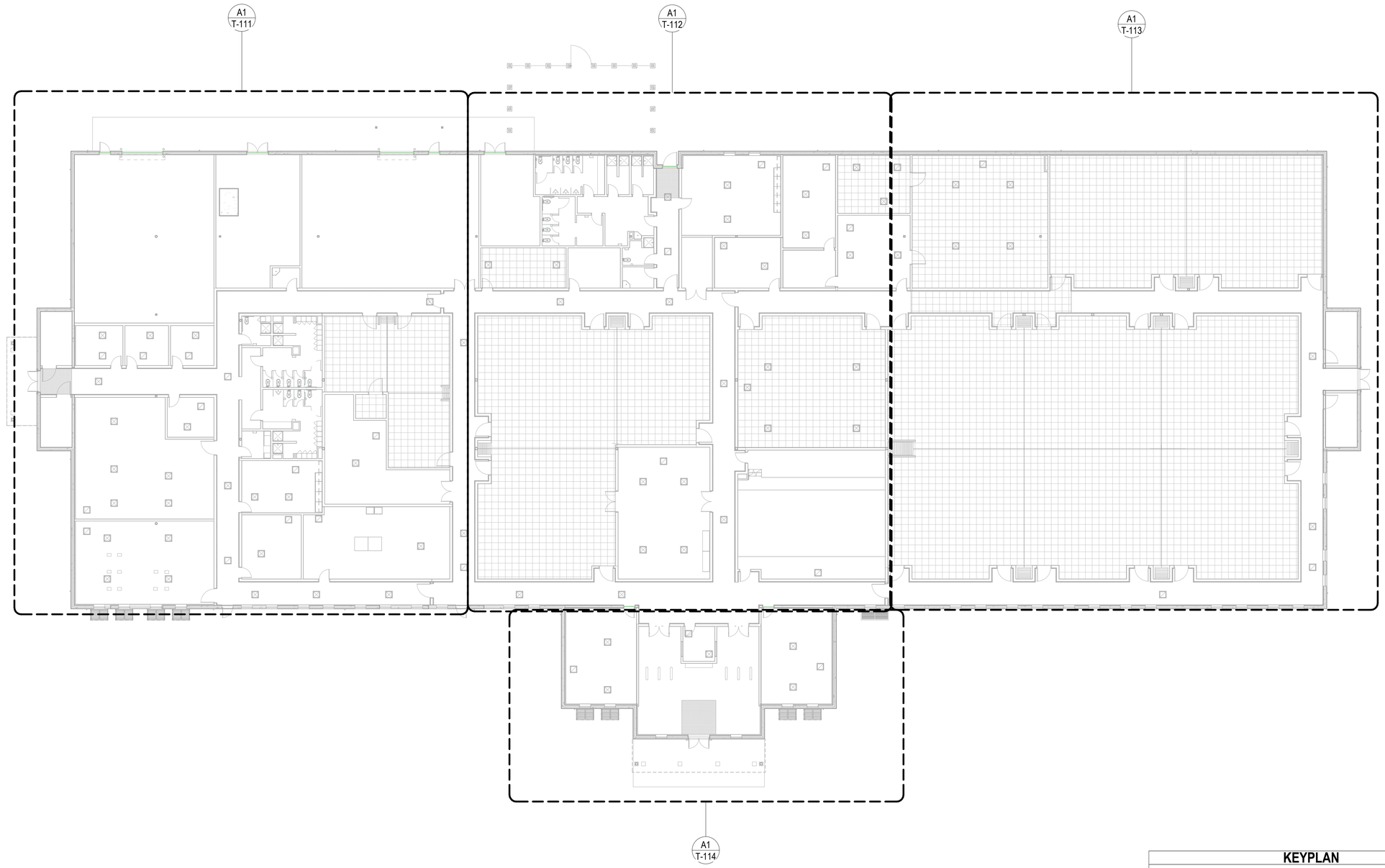

TELECOMMUNICATIONS - FLOOR PLAN OVERALL

SCALE: 1/16" = 1'-0"

KEYPLAN

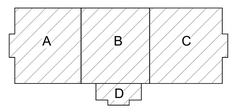

0 8'-0" 16'-0" 32'-0"

SCALE: 0'-0 1/16" = 1'-0"

N

MARK	DESCRIPTION	DATE	APPR

SEAL

RQ W.M. Jordan COMPANY – A JOINT VENTURE –

Michael Baker INTERNATIONAL

100 AIRSIDE DRIVE
MOON TOWNSHIP, PA 15108 A/E INFO

APPROVED

FOR COMMANDER NAVFAC

ACTIVITY
MARINE CORPS BASE
CAMP LEJEUNE

SATISFACTORY TO DATE

DES	JTE	DRW	ETH	CHK	JMG

PM

BRANCH MANAGER

CHIEF ENG/ARCH

FIRE PROTECTION

DEPARTMENT OF THE NAVY
NAVAL FACILITIES ENGINEERING COMMAND
ROICC FLORENCE CAMP LEJEUNE

NAVAL FACILITIES ENGINEERING COMMAND – MID-ATLANTIC
JACKSONVILLE, NC

MCB CAMP LEJEUNE
JACKSONVILLE, NC
P1338 II MEF SIMULATION/TRAINING CENTER
REPLACEMENT

TELECOMMUNICATIONS - FLOOR PLAN OVERALL

SCALE: AS NOTED

EPROJECT NO.: 1590892

CONSTR. CONTR. NO.
N40085-20-C-0059

NAVFAC DRAWING NO.

SHEET OF

T-100

DP2 SUBMISSION – P1338 BUILDING -PRE-FINAL SUBMISSION

PLOTTED: 6/10/2021 9:27:43 AM

FILE NAME: BIM 360://HF PACKAGE 3/P1338 MEF SIM CTR-1590892-E.rvt

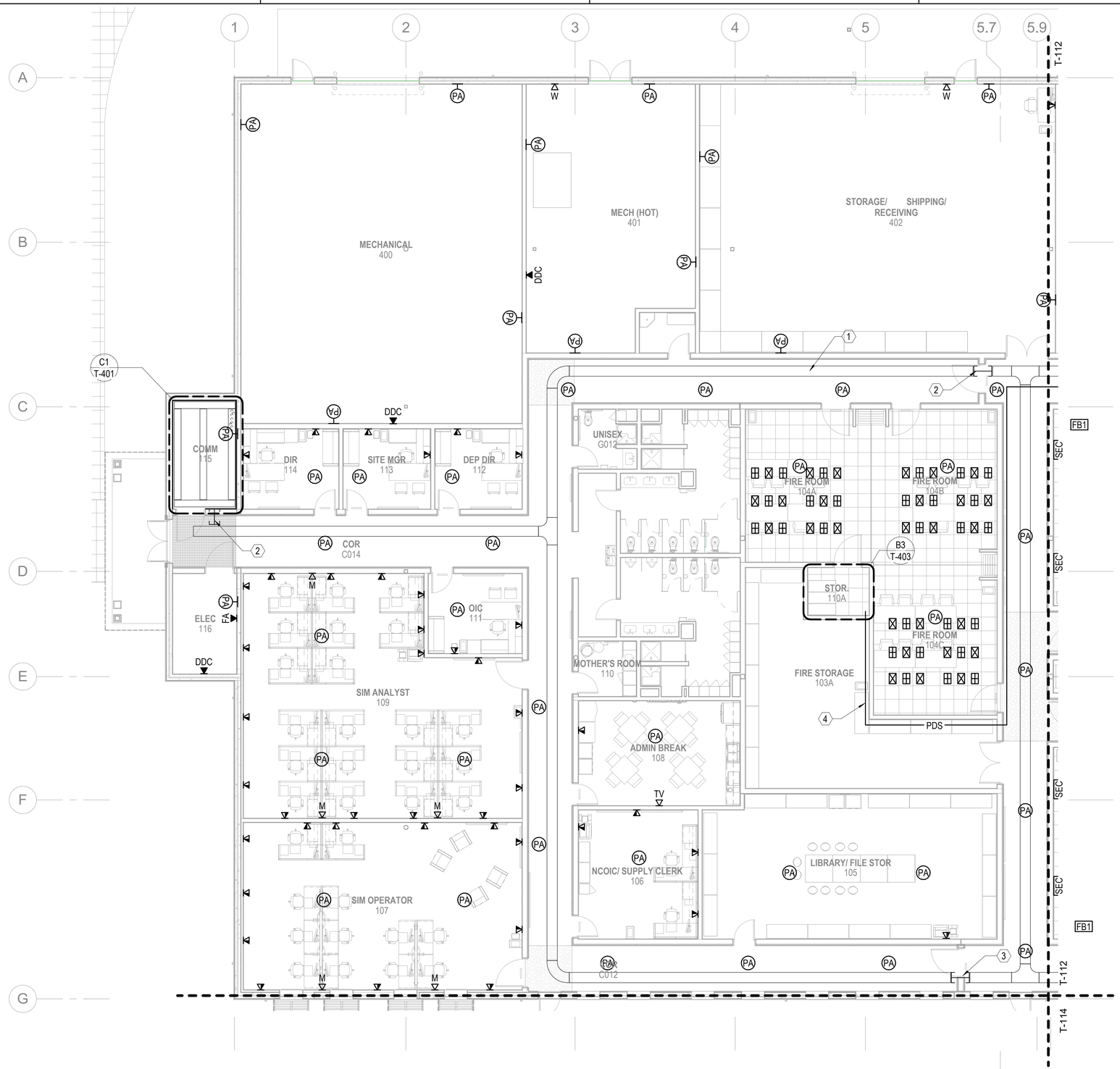

A1 TELECOMMUNICATIONS - FIRST FLOOR PLAN - AREA A

SCALE: 1/8" = 1'-0" (T-100)

GENERAL NOTES

1 SEE SHEET T-001 FOR TELECOMMUNICATIONS NOTES, SYMBOLS, AND ABBREVIATIONS.

KEYNOTES

1 18" X 4" WIRE-BASKET TYPE CABLE TRAY MOUNTED ABOVE ACCESSIBLE CEILING; COORDINATE TRAY PLACEMENT WITH OTHER TRADES (TYPICAL ALL LOCATIONS)

2 THREE (3) 4" FIRE-RATED PENETRATIONS (TYPICAL ALL LOCATIONS)

3 THREE (3) 4" FIRE-RATED PENETRATIONS (TYPICAL ALL LOCATIONS), WITH NON-CONDUCTIVE DIELECTIC BREAK

4 PROTECTED DISTRIBUTION SYSTEM (PDS) FOR SIPRNET TRANSPORT; COMPLY WITH CNSSI 7003

KEYPLAN

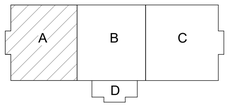

0 4'-0" 8'-0" 16'-0"

SCALE: 0'-0 1/8" = 1'-0"

N

APPR | DATE | DESCRIPTION | SYM

NAVFAC

SEAL

IRQ W.M. Jordan COMPANY – A JOINT VENTURE –

Michael Baker INTERNATIONAL

100 AIRSIDE DRIVE
MOON TOWNSHIP, PA 15108 A/E INFO

APPROVED

FOR COMMANDER NAVFAC

ACTIVITY
MARINE CORPS BASE CAMP LEJEUNE

SATISFACTORY TO DATE

DES JTE | DRW ETH | CHK JMG

PM

BRANCH MANAGER

CHIEF ENG/ARCH

FIRE PROTECTION

DEPARTMENT OF THE NAVY
NAVAL FACILITIES ENGINEERING COMMAND ~ MID-ATLANTIC
ROICC FLORENCE CAMP LEJEUNE
MCB CAMP LEJEUNE

NAVAL FACILITIES ENGINEERING COMMAND
JACKSONVILLE, NC

JACKSONVILLE, NC
P1338 II MEF SIMULATION/TRAINING CENTER
REPLACEMENT

TELECOMMUNICATIONS - FIRST FLOOR PLAN - AREA A

SCALE: AS NOTED

EPROJECT NO.: 1590892

CONSTR. CONTR. NO.
N40085-20-C-0059

NAVFAC DRAWING NO.

SHEET OF

T-111

DP2 SUBMISSION – P1338 BUILDING -PRE-FINAL SUBMISSION

PLOTTED: 6/10/2021 9:39:58 AM

FILE NAME: BIM 360://HF PACKAGE 3/P1338 MEF SIM CTR-1590892-E.rvt

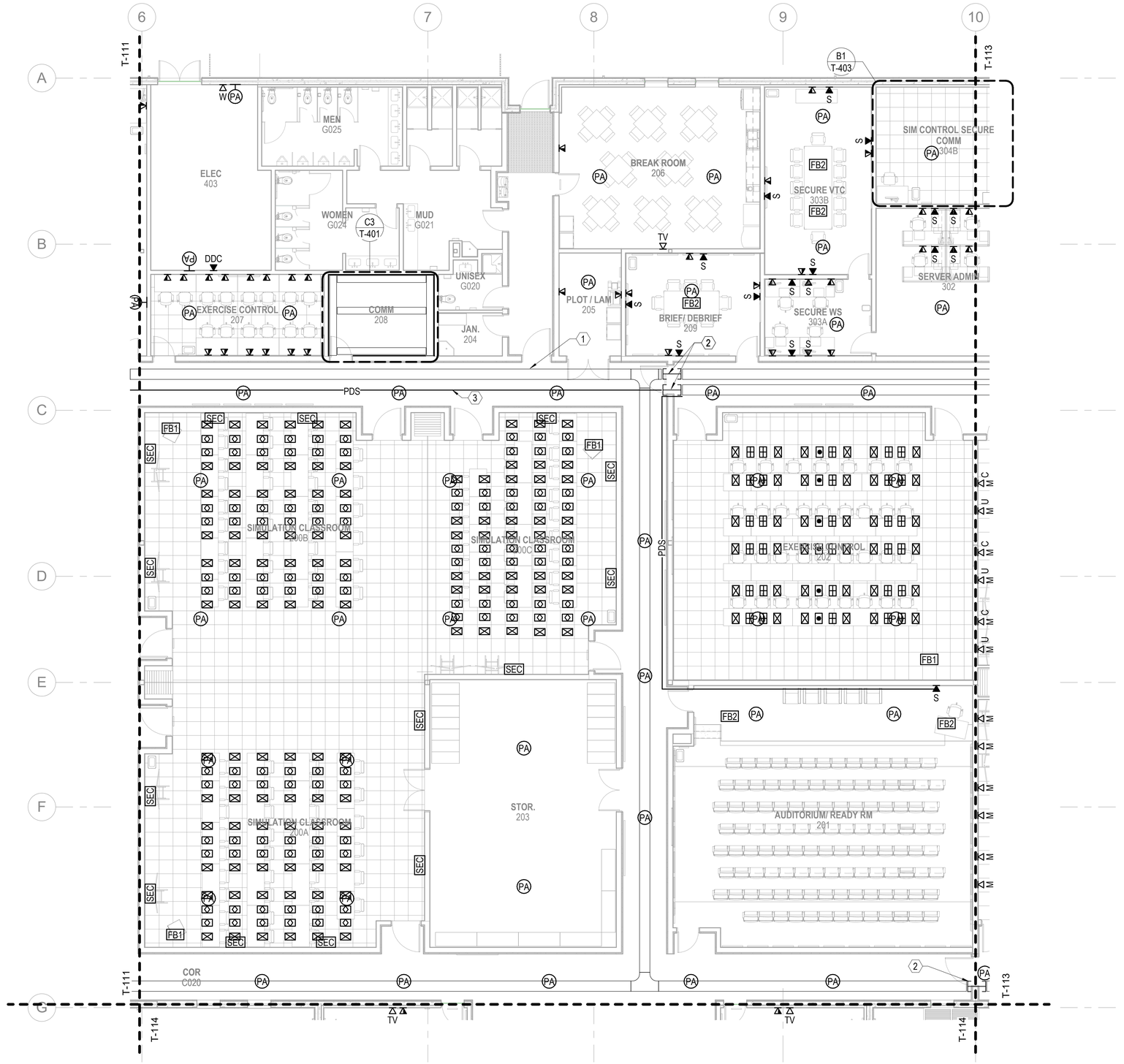

A1 TELECOMMUNICATIONS - FIRST FLOOR PLAN - AREA B

SCALE: 1/8" = 1'-0" (T-100)

GENERAL NOTES

1 SEE SHEET T-001 FOR TELECOMMUNICATIONS NOTES, SYMBOLS, AND ABBREVIATIONS.

KEYNOTES

1 18" X 4" WIRE-BASKET TYPE CABLE TRAY MOUNTED ABOVE ACCESSIBLE CEILING; COORDINATE TRAY PLACEMENT WITH OTHER TRADES (TYPICAL ALL LOCATIONS)

2 THREE (3) 4" FIRE-RATED PENETRATIONS (TYPICAL ALL LOCATIONS), WITH NON-CONDUCTIVE DIELECTIC BREAK

3 PROTECTED DISTRIBUTION SYSTEM (PDS) FOR SIPRNET TRANSPORT; COMPLY WITH CNSSI 7003

KEYPLAN

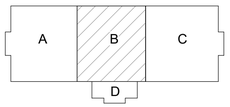

0 4'-0" 8'-0" 16'-0"

SCALE: 0'-0 1/8" = 1'-0"

N

NO.	DESCRIPTION	DATE	APPR

NAVFAC

SEAL

RQ W.M. Jordan COMPANY – A JOINT VENTURE –

Michael Baker INTERNATIONAL

100 AIRSIDE DRIVE
MOON TOWNSHIP, PA 15108 A/E INFO

APPROVED

FOR COMMANDER NAVFAC

ACTIVITY
MARINE CORPS BASE CAMP LEJEUNE

SATISFACTORY TO DATE

DES JTE | DRW ETH | CHK JMG

PM

BRANCH MANAGER

CHIEF ENG/ARCH

FIRE PROTECTION

DEPARTMENT OF THE NAVY
NAVAL FACILITIES ENGINEERING COMMAND
ROICC FLORENCE CAMP LEJEUNE

NAVAL FACILITIES ENGINEERING COMMAND – MID-ATLANTIC
JACKSONVILLE, NC

MCB CAMP LEJEUNE

JACKSONVILLE, NC

P1338 II MEF SIMULATION/TRAINING CENTER

REPLACEMENT

TELECOMMUNICATIONS - FIRST FLOOR PLAN - AREA B

SCALE: AS NOTED

EPROJECT NO.: 1590892

CONSTR. CONTR. NO.
N40085-20-C-0059

NAVFAC DRAWING NO.

SHEET OF

T-112

DP2 SUBMISSION – P1338 BUILDING - PRE-FINAL SUBMISSION

PLOTTED: 6/10/2021 9:28:03 AM

FILE NAME: BIM 360://HF PACKAGE 3/P1338 MEF SIM CTR-1590892-E.rvt

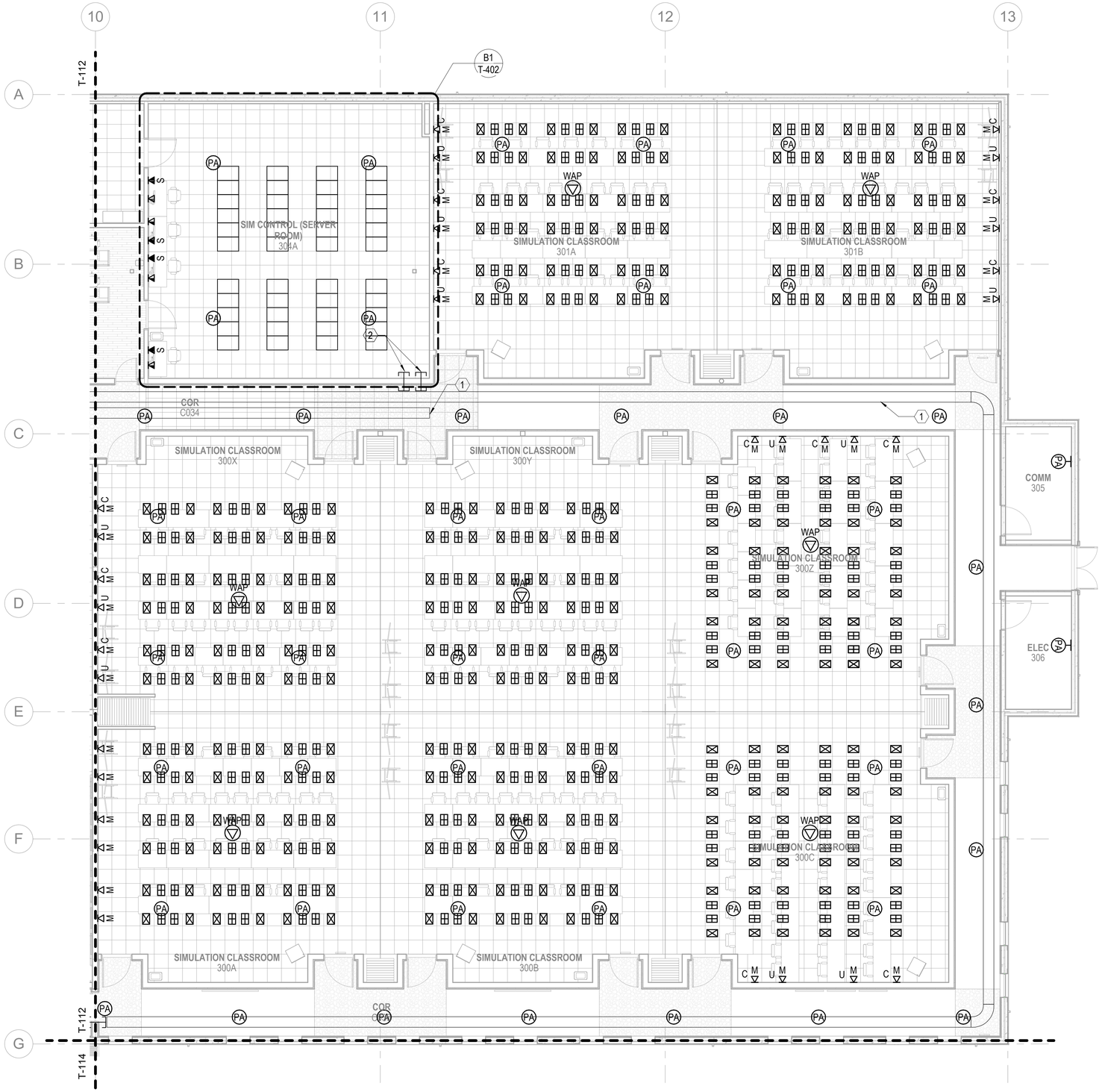

A1 TELECOMMUNICATIONS - FIRST FLOOR PLAN - AREA C

SCALE: 1/8" = 1'-0" (T-100)

GENERAL NOTES

1 SEE SHEET T-001 FOR TELECOMMUNICATIONS NOTES, SYMBOLS, AND ABBREVIATIONS.

KEYNOTES

1 18" X 4" WIRE-BASKET TYPE CABLE TRAY MOUNTED ABOVE ACCESSIBLE CEILING; COORDINATE TRAY PLACEMENT WITH OTHER TRADES (TYPICAL ALL LOCATIONS)

2 THREE (3) 4" FIRE-RATED PENETRATIONS (TYPICAL ALL LOCATIONS)

KEYPLAN

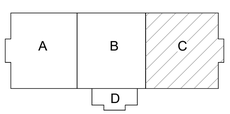

0 4'-0" 8'-0" 16'-0"

SCALE: 0'-0 1/8" = 1'-0"

N

APPR | DATE | DESCRIPTION | SYM

SEAL

RQ W.M. Jordan COMPANY – A JOINT VENTURE –

Michael Baker INTERNATIONAL

100 AIRSIDE DRIVE
MOON TOWNSHIP, PA 15108 A/E INFO

APPROVED

FOR COMMANDER NAVFAC

ACTIVITY
MARINE CORPS BASE CAMP LEJEUNE

SATISFACTORY TO DATE

DES JTE | DRW ETH | CHK JMG

PM

BRANCH MANAGER

CHIEF ENG/ARCH

FIRE PROTECTION

DEPARTMENT OF THE NAVY
NAVAL FACILITIES ENGINEERING COMMAND
RO/CC FLORENCE CAMP LEJEUNE

NAVAL FACILITIES ENGINEERING COMMAND ~ MID-ATLANTIC
JACKSONVILLE, NC

MCB CAMP LEJEUNE
JACKSONVILLE, NC
P1338 II MEF SIMULATION/TRAINING CENTER
REPLACEMENT

TELECOMMUNICATIONS - FIRST FLOOR PLAN - AREA C

SCALE: AS NOTED

EPROJECT NO.: 1590892

CONSTR. CONTR. NO.
N40085-20-C-0059

NAVFAC DRAWING NO.

SHEET OF

T-113

DP2 SUBMISSION – P1338 BUILDING - PRE-FINAL SUBMISSION

PLOTTED: 6/10/2021 9:28:08 AM

FILE NAME: BIM 360://HF PACKAGE 3/P1338 MEF SIM CTR-1590892-E.rvt

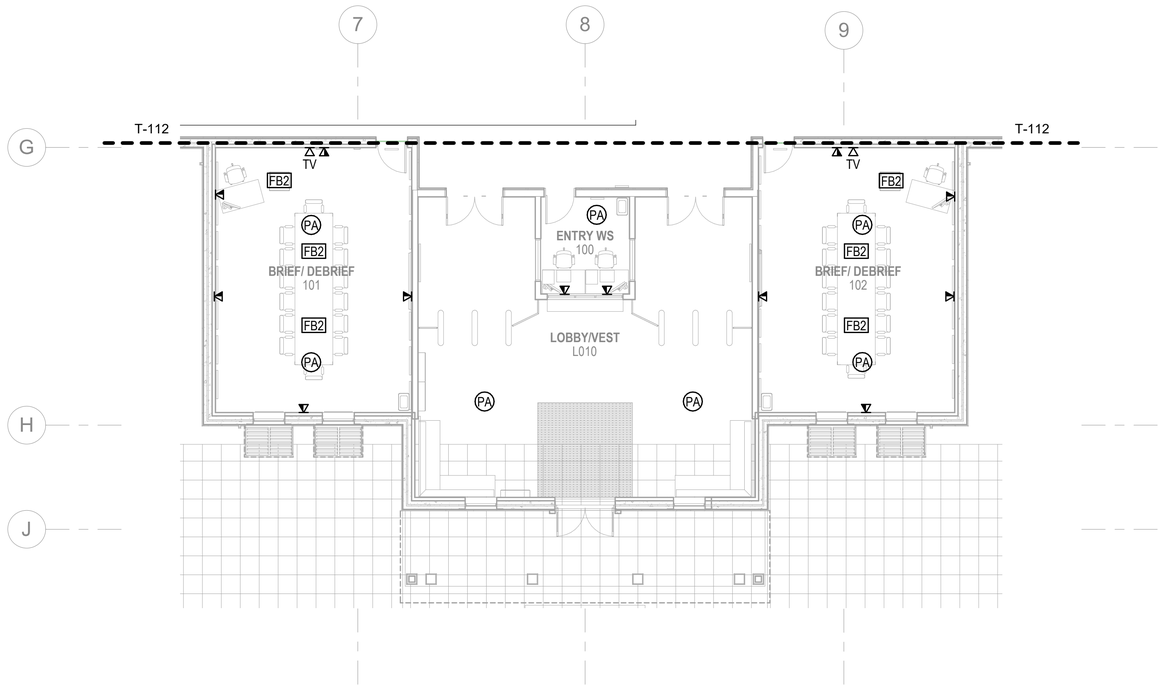

A1 TELECOMMUNICATIONS - FIRST FLOOR PLAN - AREA D

SCALE: 1/8" = 1'-0" (T-100)

GENERAL NOTES

1 SEE SHEET T-001 FOR TELECOMMUNICATIONS NOTES, SYMBOLS, AND ABBREVIATIONS.

KEYPLAN

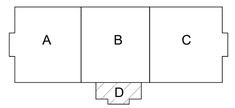

0 4'-0" 8'-0" 16'-0"

SCALE: 0'-0 1/8" = 1'-0"

N

SYM	DESCRIPTION	DATE	APPR

NAVFAC

SEAL

IRQ WM Jordan COMPANY ~ A JOINT VENTURE ~

Michael Baker INTERNATIONAL

100 AIRSIDE DRIVE
MOON TOWNSHIP, PA 15108 A/E INFO

APPROVED

FOR COMMANDER NAVFAC

ACTIVITY
MARINE CORPS BASE
CAMP LEJEUNE

SATISFACTORY TO DATE

DES JTE | DRW ETH | CHK JMG

PM

BRANCH MANAGER

CHIEF ENG/ARCH

FIRE PROTECTION

DEPARTMENT OF THE NAVY
NAVAL FACILITIES ENGINEERING COMMAND
ROICC FLORENCE CAMP LEJEUNE
MCB CAMP LEJEUNE

NAVAL FACILITIES ENGINEERING COMMAND ~ MID-ATLANTIC
JACKSONVILLE, NC

P1338 II MEF SIMULATION/TRAINING CENTER
REPLACEMENT
JACKSONVILLE, NC

TELECOMMUNICATIONS - FIRST FLOOR PLAN - AREA D

SCALE: AS NOTED

EPROJECT NO.: 1590892

CONSTR. CONTR. NO.
N40085-20-C-0059

NAVFAC DRAWING NO.

SHEET OF

T-114

DP2 SUBMISSION – P1338 BUILDING - PRE-FINAL SUBMISSION

PLOTTED: 6/10/2021 9:28:11 AM

FILE NAME: BIM 360://HF PACKAGE 3/P1338 MEF SIM CTR-1590892-E.rvt

GENERAL NOTES

1 SEE SHEET T-001 FOR TELECOMMUNICATIONS NOTES, SYMBOLS, AND ABBREVIATIONS.

TU112

TU112

A1 **TELECOMMUNICATIONS - UNDERFLOOR PLAN - AREA A**

SCALE: 1/8" = 1'-0"

KEYPLAN

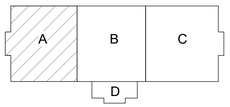

0 4'-0" 8'-0" 16'-0"

SCALE: 0'-0 1/8" = 1'-0"

N

SYM	DESCRIPTION	DATE	APPR

NAVFAC

SEAL

W.M. Jordan COMPANY – A JOINT VENTURE –

Michael Baker INTERNATIONAL

100 AIRSIDE DRIVE
MOON TOWNSHIP, PA 15108 A/E INFO

APPROVED

FOR COMMANDER NAVFAC

ACTIVITY
MARINE CORPS BASE
CAMP LEJEUNE

SATISFACTORY TO DATE

DES JTE	DRW ETH	CHK JMG

PM

BRANCH MANAGER

CHIEF ENG/ARCH

FIRE PROTECTION

DEPARTMENT OF THE NAVY
NAVAL FACILITIES ENGINEERING COMMAND
ROIOC FLORENCE CAMP LEJEUNE

NAVAL FACILITIES ENGINEERING COMMAND ~ MID-ATLANTIC
JACKSONVILLE, NC

MCB CAMP LEJEUNE
JACKSONVILLE, NC
P1338 II MEF SIMULATION/TRAINING CENTER
REPLACEMENT

TELECOMMUNICATIONS - FIRST FLOOR PLAN - AREA A UNDERSLAB

SCALE:	AS NOTED
EPROJECT NO.:	1590892
CONSTR. CONTR. NO.	N40085-20-C-0059
NAVFAC DRAWING NO.	
SHEET	OF

TU111

DP2 SUBMISSION – P1338 BUILDING - PRE-FINAL SUBMISSION

PLOTTED: 6/10/2021 9:28:48 AM

FILE NAME: BIM 360://HF PACKAGE 3/P1338 MEF SIM CTR-1590892-E.rvt

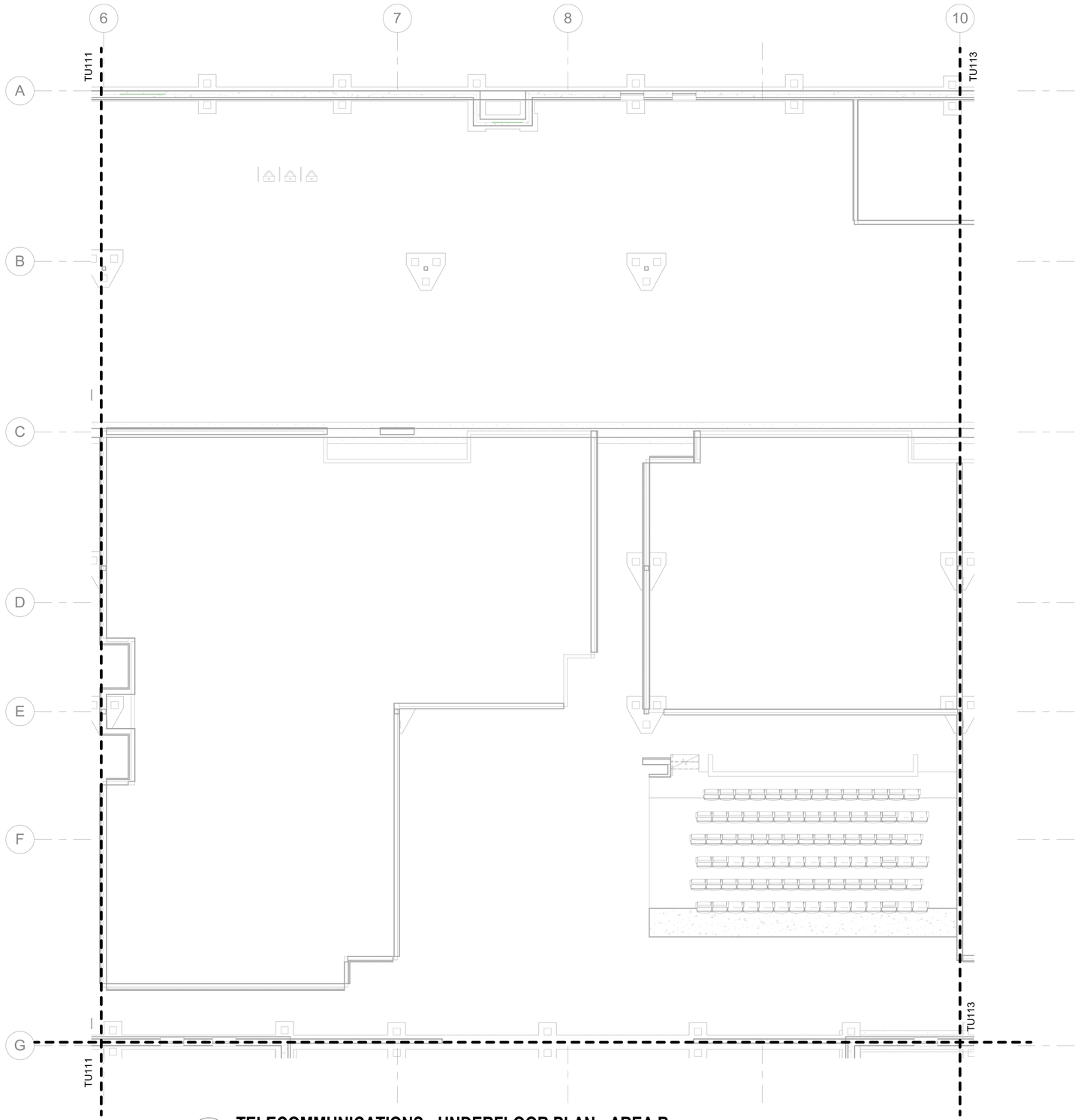

GENERAL NOTES

1 SEE SHEET T-001 FOR TELECOMMUNICATIONS NOTES, SYMBOLS, AND ABBREVIATIONS.

KEYPLAN

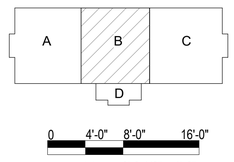

A1 TELECOMMUNICATIONS - UNDERFLOOR PLAN - AREA B

SCALE: 1/8" = 1'-0"

APPR | DATE | SYM | DESCRIPTION

SEAL

W.M. Jordan COMPANY – A JOINT VENTURE –

Michael Baker INTERNATIONAL

100 AIRSIDE DRIVE
MOON TOWNSHIP, PA 15108 A/E INFO

APPROVED

FOR COMMANDER NAVFAC

ACTIVITY
MARINE CORPS BASE
CAMP LEJEUNE

SATISFACTORY TO DATE

DES JTE | DRW ETH | CHK JMG

PM

BRANCH MANAGER

CHIEF ENG/ARCH

FIRE PROTECTION

DEPARTMENT OF THE NAVY
NAVAL FACILITIES ENGINEERING COMMAND
ROICC FLORENCE CAMP LEJEUNE
MCB CAMP LEJEUNE

NAVAL FACILITIES ENGINEERING COMMAND ~ MID-ATLANTIC
JACKSONVILLE, NC

JACKSONVILLE, NC
P1338 II MEF SIMULATION/TRAINING CENTER
REPLACEMENT

TELECOMMUNICATIONS - FIRST FLOOR PLAN - AREA B UNDERSLAB

SCALE: AS NOTED

EPROJECT NO.: 1590892

CONSTR. CONTR. NO.
N40085-20-C-0059

NAVFAC DRAWING NO.

SHEET OF

TU112

DP2 SUBMISSION – P1338 BUILDING - PRE-FINAL SUBMISSION

PLOTTED: 6/10/2021 9:28:50 AM

FILE NAME: BIM 360://HF PACKAGE 3/P1338 MEF SIM CTR-1590892-E.rvt

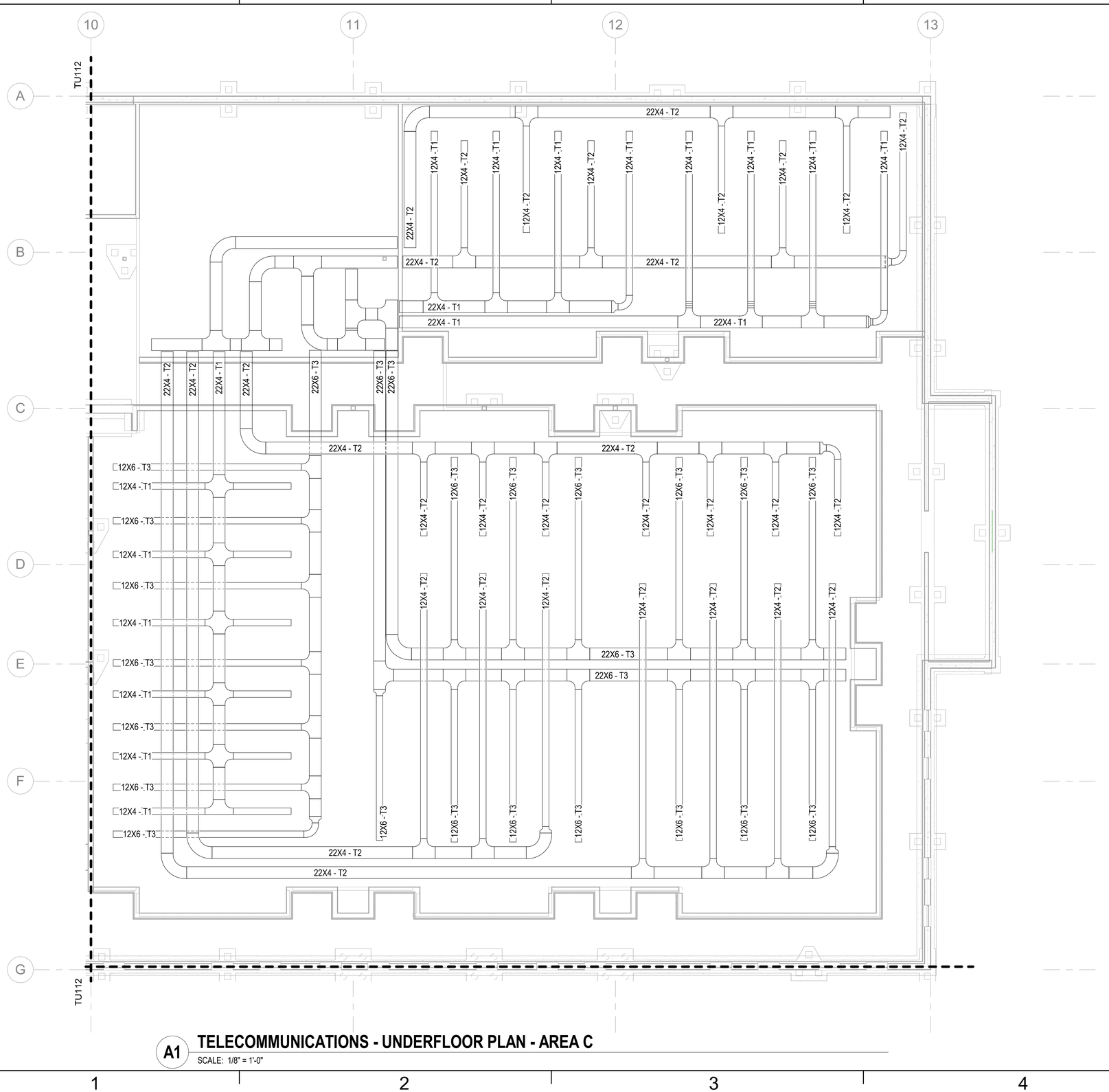

A1 TELECOMMUNICATIONS - UNDERFLOOR PLAN - AREA C

SCALE: 1/8" = 1'-0"

GENERAL NOTES

1 SEE SHEET T-001 FOR TELECOMMUNICATIONS NOTES, SYMBOLS, AND ABBREVIATIONS.

KEYPLAN

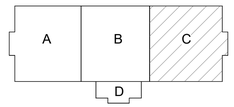

0 4'-0" 8'-0" 16'-0"

SCALE: 0'-0 1/8" = 1'-0"

N

APPR | DATE | SYM | DESCRIPTION

NAVFAC

SEAL

RQ W.M. Jordan COMPANY – A JOINT VENTURE –

Michael Baker INTERNATIONAL

100 AIRSIDE DRIVE
MOON TOWNSHIP, PA 15108 A/E INFO

APPROVED

FOR COMMANDER NAVFAC

ACTIVITY
MARINE CORPS BASE
CAMP LEJEUNE

SATISFACTORY TO DATE

DES JTE | DRW ETH | CHK JMG

PM

BRANCH MANAGER

CHIEF ENG/ARCH

FIRE PROTECTION

DEPARTMENT OF THE NAVY
NAVAL FACILITIES ENGINEERING COMMAND ~ MID-ATLANTIC
ROICC FLORENCE CAMP LEJEUNE
MCB CAMP LEJEUNE

NAVAL FACILITIES ENGINEERING COMMAND ~ MID-ATLANTIC
JACKSONVILLE, NC

JACKSONVILLE, NC
P1338 II MEF SIMULATION/TRAINING CENTER
REPLACEMENT

TELECOMMUNICATIONS - FIRST FLOOR PLAN - AREA C UNDERSLAB

SCALE: AS NOTED

EPROJECT NO.: 1590892

CONSTR. CONTR. NO.
N40085-20-C-0059

NAVFAC DRAWING NO.

SHEET OF

TU113

DP2 SUBMISSION – P1338 BUILDING - PRE-FINAL SUBMISSION

PLOTTED: 6/10/2021 9:28:53 AM

FILE NAME: BIM 360://HF PACKAGE 3/P1338 MEF SIM CTR-1590892-E.rvt

GENERAL NOTES

1 SEE SHEET T-001 FOR TELECOMMUNICATIONS NOTES, SYMBOLS, AND ABBREVIATIONS.

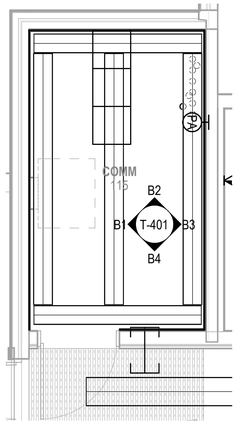

TELECOMMUNICATIONS - ENLARGED ROOM 115 — C1
SCALE: 1/4" = 1'-0" T-111

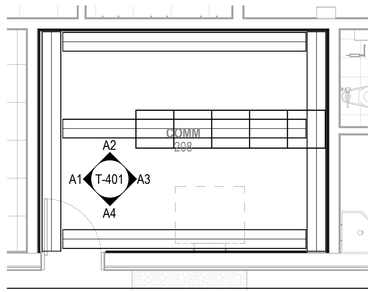

TELECOMMUNICATIONS - ENLARGED ROOM 208 — C3
SCALE: 1/4" = 1'-0" T-111

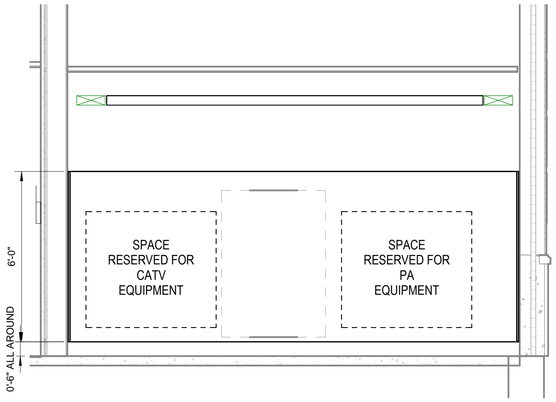

TELECOM RM 115 ELEVATION - DETAIL "B1" — B1
SCALE: 3/8" = 1'-0" T-401

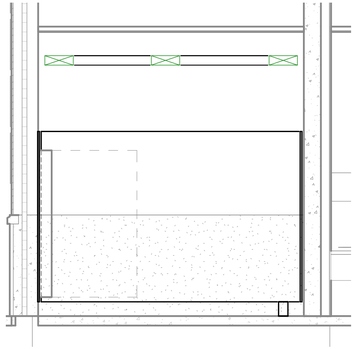

TELECOM RM 115 ELEVATION - DETAIL "B2" — B2
SCALE: 3/8" = 1'-0" T-401

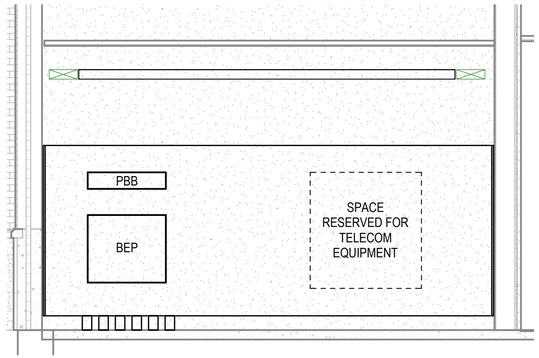

TELECOM RM 115 ELEVATION - DETAIL "B3" — B3
SCALE: 3/8" = 1'-0" T-401

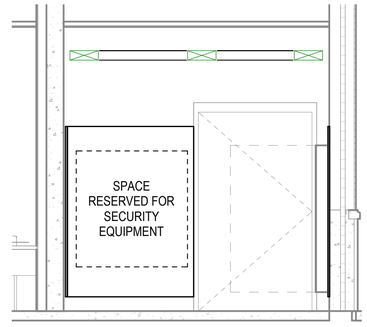

TELECOM RM 115 ELEVATION - DETAIL "B4" — B4
SCALE: 3/8" = 1'-0" T-401

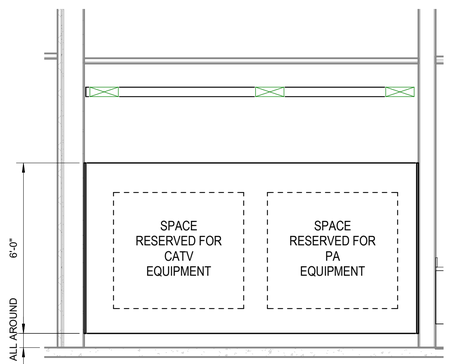

TELECOM RM 208 ELEVATION - DETAIL "A1" — A1
SCALE: 3/8" = 1'-0" T-401

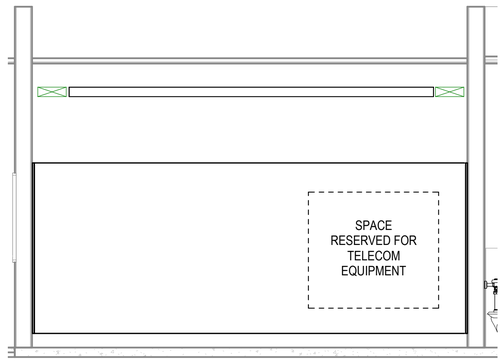

TELECOM RM 208 ELEVATION - DETAIL "A2" — A2
SCALE: 3/8" = 1'-0" T-401

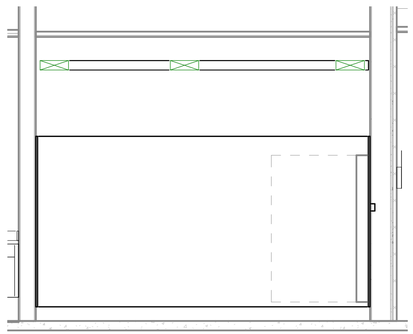

TELECOM RM 208 ELEVATION - DETAIL "A3" — A3
SCALE: 3/8" = 1'-0" T-401

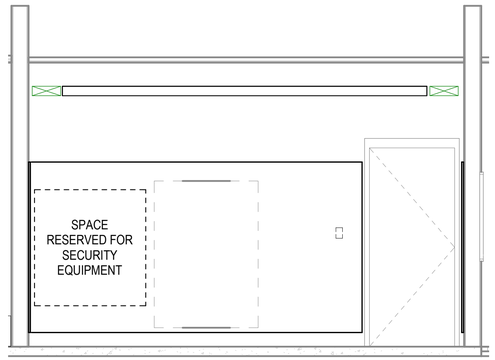

TELECOM RM 208 ELEVATION - DETAIL "A4" — A4
SCALE: 3/8" = 1'-0" T-401

0 2'-0" 4'-0" 8'-0"
SCALE: 0'-0 3/8" = 1'-0"

N

APPR	
DATE	
DESCRIPTION	
SYM	

NAVFAC

SEAL

W.M. Jordan COMPANY — A JOINT VENTURE —

Michael Baker INTERNATIONAL
100 AIRSIDE DRIVE
MOON TOWNSHIP, PA 15108 A/E INFO

APPROVED

FOR COMMANDER NAVFAC

ACTIVITY
MARINE CORPS BASE CAMP LEJEUNE

SATISFACTORY TO DATE

DES JTE | DRW ETH | CHK JMG

PM

BRANCH MANAGER

CHIEF ENG/ARCH

FIRE PROTECTION

DEPARTMENT OF THE NAVY
NAVAL FACILITIES ENGINEERING COMMAND ~ MID-ATLANTIC
ROICC FLORENCE CAMP LEJEUNE
MCB CAMP LEJEUNE

JACKSONVILLE, NC
JACKSONVILLE, NC

P1338 II MEF SIMULATION/TRAINING CENTER
REPLACEMENT

TELECOMMUNICATIONS - ENLARGED PLANS

SCALE: AS NOTED
EPROJECT NO.: 1590892
CONSTR. CONTR. NO.
N40085-20-C-0059
NAVFAC DRAWING NO.
SHEET OF

T-401

DP2 SUBMISSION – P1338 BUILDING -PRE-FINAL SUBMISSION

PLOTTED: 6/10/2021 9:28:16 AM

FILE NAME: BIM 360://HF PACKAGE 3/P1338 MEF SIM CTR-1590892-E.rvt

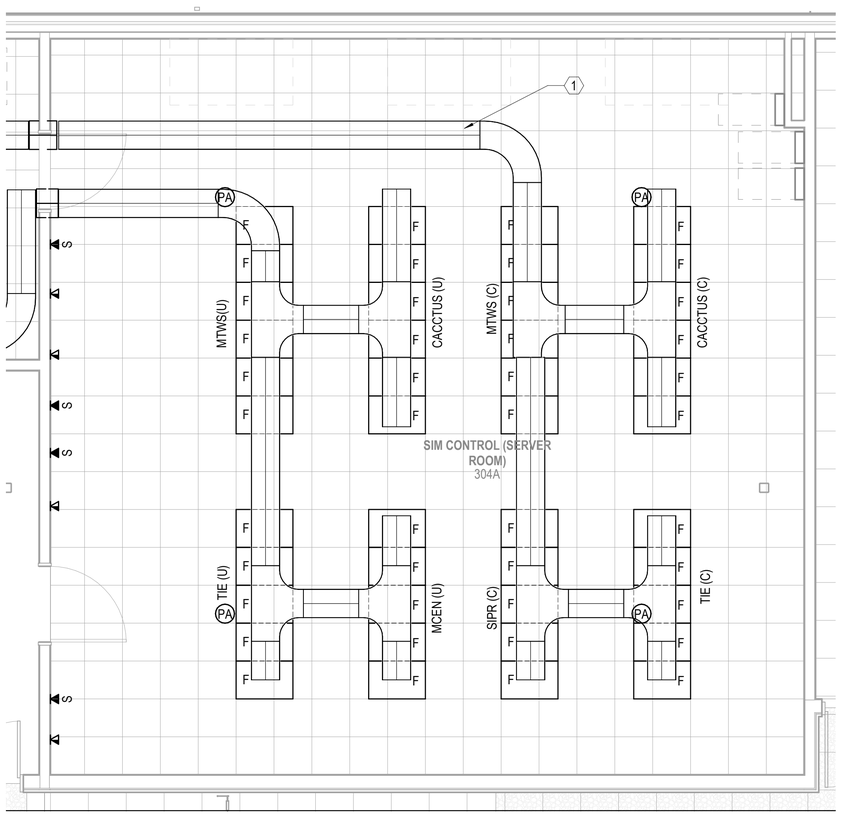

TELECOMMUNICATIONS - ENLARGED ROOM 304A

SCALE: 1/4" = 1'-0"

T-111 B1

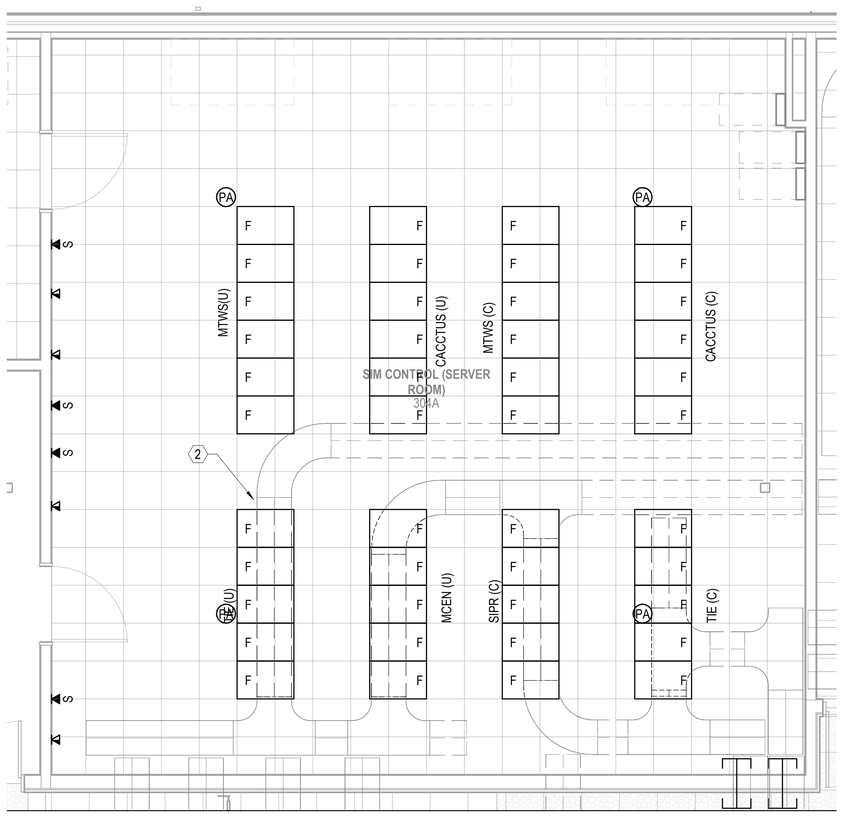

TELECOMMUNICATIONS - ENLARGED ROOM 304A UNDERFLOOR

SCALE: 1/4" = 1'-0"

B3

GENERAL NOTES

1 SEE SHEET T-001 FOR TELECOMMUNICATIONS NOTES, SYMBOLS, AND ABBREVIATIONS.

KEYNOTES

1 18" x 4" WIRE BASKET STYLE CABLE TRAY MOUNTED ABOVE CABINET, WITH RADIUS SPILLOUTS INTO CABINET

2 22" x 6" WIRE BASKET STYLE CABLE TRAY MOUNTED UNDER RASIED ACCESS FLOOR, SECURED TO PEDSTALS PER MANUFACTURER'S RECOMMENDATIONS

SCALE: 0'-0 1/4" = 1'-0"

0 2'-0" 4'-0" 8'-0"

N

APPR | DATE | SYM | DESCRIPTION

NAVFAC

SEAL

RQ W.M. Jordan COMPANY ~ A JOINT VENTURE ~

Michael Baker INTERNATIONAL

100 AIRSIDE DRIVE
MOON TOWNSHIP, PA 15108 A/E INFO

APPROVED

FOR COMMANDER NAVFAC

ACTIVITY
MARINE CORPS BASE CAMP LEJEUNE

SATISFACTORY TO DATE

DES JTE | DRW ETH | CHK JMG

PM

BRANCH MANAGER

CHIEF ENG/ARCH

FIRE PROTECTION

DEPARTMENT OF THE NAVY
NAVAL FACILITIES ENGINEERING COMMAND
ROICC FLORENCE CAMP LEJEUNE

NAVAL FACILITIES ENGINEERING COMMAND ~ MID-ATLANTIC
JACKSONVILLE, NC

MCB CAMP LEJEUNE
JACKSONVILLE, NC
P1338 II MEF SIMULATION/TRAINING CENTER
REPLACEMENT

TELECOMMUNICATIONS - ENLARGED PLANS

SCALE: AS NOTED

EPROJECT NO.: 1590892

CONSTR. CONTR. NO.
N40085-20-C-0059

NAVFAC DRAWING NO.

SHEET OF

T-402

DP2 SUBMISSION – P1338 BUILDING - PRE-FINAL SUBMISSION

PLOTTED: 6/10/2021 9:28:19 AM

FILE NAME: BIM 360://HF PACKAGE 3/P1338 MEF SIM CTR-1590892-E.rvt

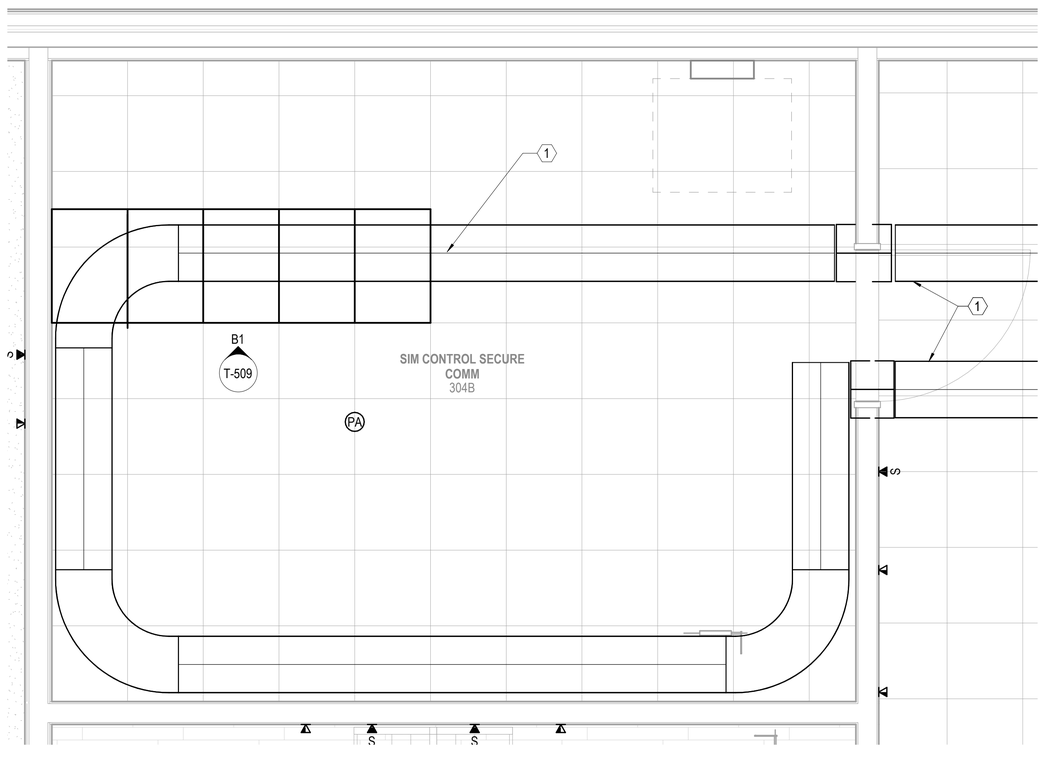

TELECOMMUNICATIONS - ENLARGED ROOM 304B B1

SCALE: 1/2" = 1'-0" T-111

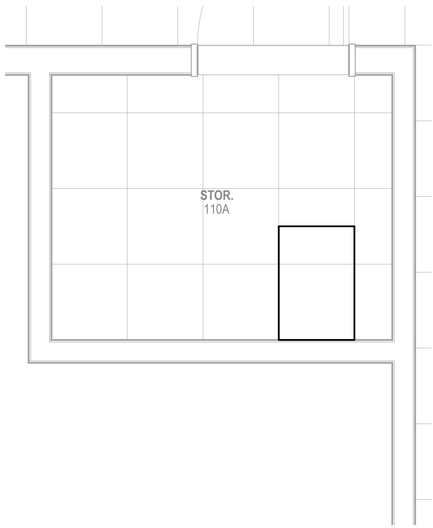

TELECOMMUNICATIONS - ENLARGED ROOM 110A B3

SCALE: 1/2" = 1'-0" T-111

GENERAL NOTES

1 SEE SHEET T-001 FOR TELECOMMUNICATIONS NOTES, SYMBOLS, AND ABBREVIATIONS.

KEYNOTES

1 18" X 4" WIRE BASKET STYLE CABLE TRAY MOUNTED ABOVE CABINET, WITH RADIUS SPILLOUTS INTO CABINETS

0 1'-0" 2'-0" 4'-0"

SCALE: 0'-0 1/2" = 1'-0"

N

SYM	DESCRIPTION	DATE	APPR

SEAL

RQ W.M. Jordan COMPANY ~ A JOINT VENTURE ~

Michael Baker INTERNATIONAL

100 AIRSIDE DRIVE
MOON TOWNSHIP, PA 15108 A/E INFO

APPROVED

FOR COMMANDER NAVFAC

ACTIVITY
MARINE CORPS BASE
CAMP LEJEUNE

SATISFACTORY TO DATE

DES JTE | DRW ETH | CHK JMG

PM

BRANCH MANAGER

CHIEF ENG/ARCH

FIRE PROTECTION

DEPARTMENT OF THE NAVY
NAVAL FACILITIES ENGINEERING COMMAND ~ MID-ATLANTIC
ROICC FLORENCE CAMP LEJEUNE
MCB CAMP LEJEUNE

NAVAL FACILITIES ENGINEERING COMMAND
JACKSONVILLE, NC

JACKSONVILLE, NC
P1338 II MEF SIMULATION/TRAINING CENTER
REPLACEMENT

TELECOMMUNICATIONS - ENLARGED PLANS

SCALE: AS NOTED

EPROJECT NO.: 1590892

CONSTR. CONTR. NO.
N40085-20-C-0059

NAVFAC DRAWING NO.

SHEET OF

T-403

DP2 SUBMISSION – P1338 BUILDING - PRE-FINAL SUBMISSION

PLOTTED: 6/10/2021 9:28:22 AM

FILE NAME: BIM 360://HF PACKAGE 3/P1338 MEF SIM CTR-1590892-E.rvt

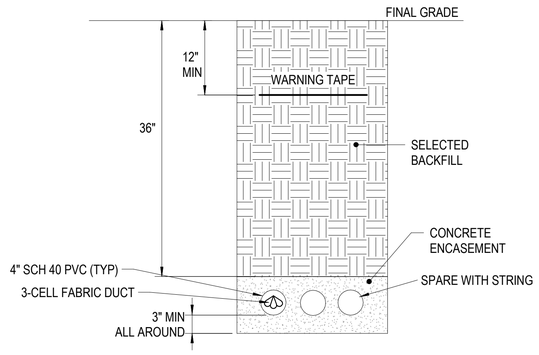

3-WAY 4" CONDUIT CONCRETE ENCASED DUCTBANK

SCALE:NTS — C1

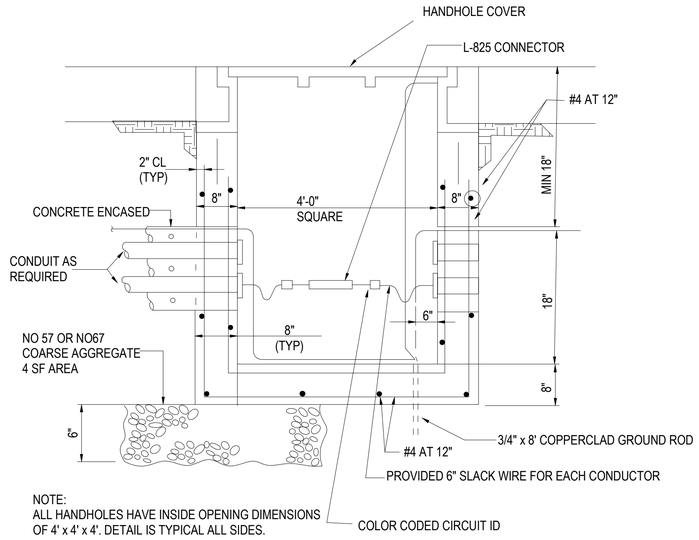

NOTE:
ALL HANDHOLES HAVE INSIDE OPENING DIMENSIONS OF 4' x 4' x 4'. DETAIL IS TYPICAL ALL SIDES.

TYPICAL HANDHOLE DETAIL

SCALE:NTS — C2

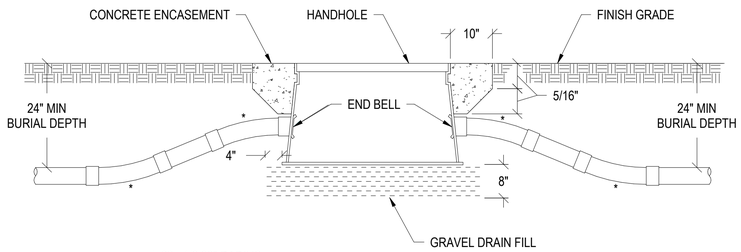

* 22 - 1/2 36" RADIUS SWEEP ELBOW

TYPICAL HANDHOLE ENTRY

SCALE: 12" = 1'-0" — D4

NOTE:
ALL MANHOLES TO HAVE 8' LADDERS

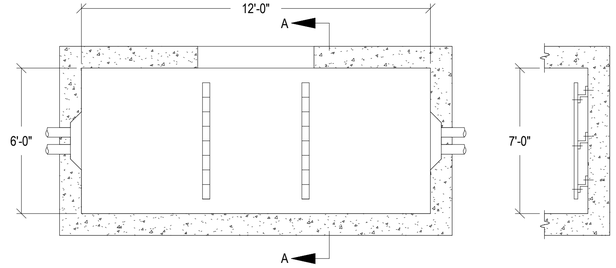

ELEVATION — SECTION A-A

TYPICAL TELECOMMUNICATIONS MANHOLE DETAIL

SCALE: 12" = 1'-0" — B4

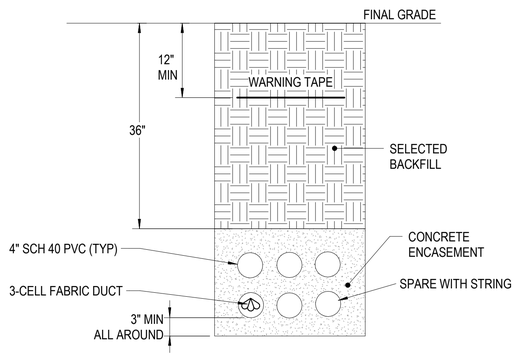

6-WAY 4" CONDUIT CONCRETE ENCASED DUCTBANK

SCALE:NTS — A1

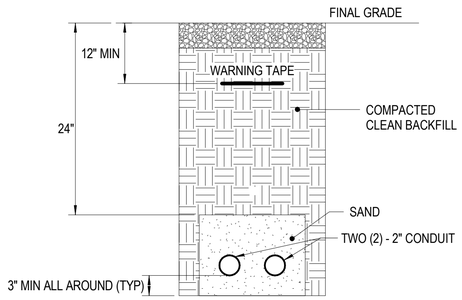

2-WAY 2" CONDUIT CONCRETE ENCASED DUCTBANK

SCALE:NTS — A2

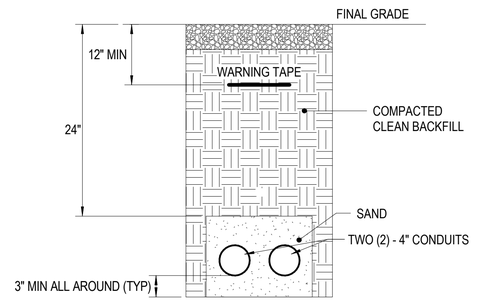

2-WAY 4" CONDUIT CONCRETE ENCASED DUCTBANK

SCALE:NTS — A4

APPR	DATE	DESCRIPTION	SYM

NAVFAC

PRELIMINARY NOT FOR CONSTRUCTION

SEAL

RQC CONSTRUCTION
1620 Faraday Avenue
Carlsbad, CA 92008

Michael Baker INTERNATIONAL
100 AIRSIDE DRIVE
MOON TOWNSHIP, PA 15108 — A/E INFO

APPROVED

FOR COMMANDER NAVFAC

ACTIVITY
MARINE CORPS BASE CAMP LEJEUNE

SATISFACTORY TO DATE	DD/MM/YY		
DES JTE	DRW ETH	CHK JMG	
PM	XXX		
BRANCH MANAGER	XXX		
CHIEF ENG/ARCH	XXX		

DEPARTMENT OF THE NAVY
NAVAL FACILITIES ENGINEERING COMMAND
NAVAL FACILITIES ENGINEERING COMMAND MIDLAND
NAVAL STATION - NORFOLK, VA
MCB CAMP LEJEUNE
JACKSONVILLE, NC
P1338 II MEF SIMULATION/TRAINING CENTER
REPLACEMENT
TELECOMMUNICATIONS - DETAILS

SCALE:	AS NOTED
EPROJECT NO.:	1611501
CONSTR. CONTR. NO.	N40085-20-C-0145
NAVFAC DRAWING NO.	
SHEET	OF

T-501

PLOTTED: 6/10/2021 9:28:24 AM

FILE NAME: BIM 360://HF PACKAGE 3/P1338 MEF SIM CTR-1590892-E.rvt

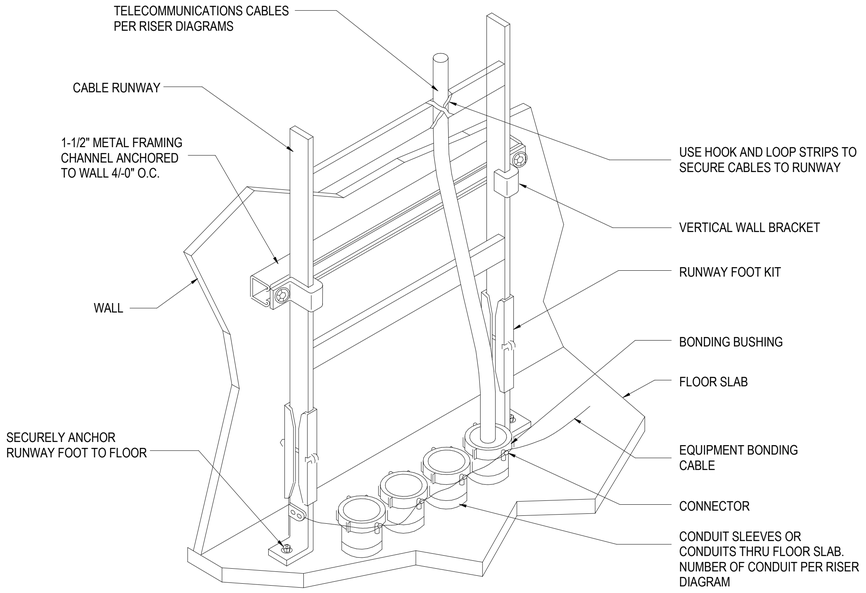

CABLE - VERTICAL RUNWAY MOUNTING

SCALE:NTS

C1

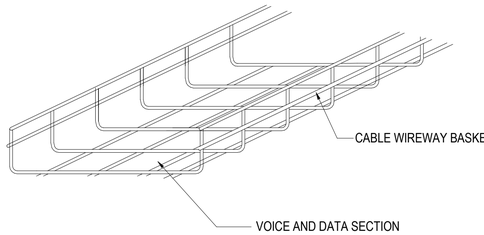

NOTES:
1. PRIMARY PATHWAY CABLE SUPPORTS ARE TO BE USED AS NECESSARY FOR CABLES TO COMPLY WITH THE EIA/TIA REQUIREMENTS FOR CABLE SUPPORT. OTHER ALTERNATIVES MUST BE SUBMITTED TO THE ENGINEER FOR APPROVAL PRIOR TO INSTALLATION.

2. CABLE WIREWAYS SHALL BE MOUNTED ABOVE ACOUSTICAL TILE CEILING IN CORRIDORS. CABLE WIREWAY SHALL BE SUPPORTED WITH UNISTRUT AND THREADED RODS IN A TRAPEZE CONFIGURATION. THREADED RODS SHALL BE SECURELY FASTENED TO STRUCTURE ABOVE. SUPPORT CABLE WIREWAY AT INTERVALS AS REQUIRED AND RECOMMENDED BY THE CABLE WIREWAY MANUFACTURER BASED ON MAXIMUM CAPACITY OF CABLES IN WIREWAY.

3. REFER TO MANUFACTURER'S RECOMMENDATIONS FOR MAX LOADING, APPLICATION REQUIREMENTS, AND SECURING TO STRUCTURE.

4. ALL CABLE SUPPORTS SHALL BE SPECIFICALLY MANUFACTURED TO SUPPORT HIGH SPEED COMMUNICATIONS CABLES.

CABLE - WIRE BASKET (PRIMARY PATHWAY)

SCALE:NTS

C3

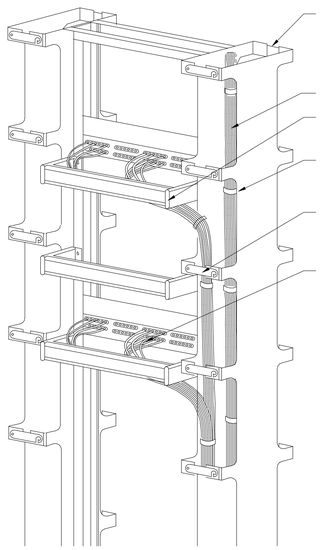

NOTES:
1. PROVIDE CABLE WRAPS ON MINIMUM 12" CENTERS IN VERTICAL WIRE MANAGERS. CABLES SHALL BE BUNDLED INTO LOGICAL GROUPS.
2. CABLES SHALL BE SECURED TO STRAIN RELIEF BRACKET
3. ATTACH CABLE LABEL BETWEEN STRAIN RELIED BRACKET AND PATCH PANEL SO THE LABEL CAN BE READ AND CORRELATED TO PATCH PANEL PORT WITHOUT UNBUNDLING ADJACENT CABLES.
4. CONTRACTOR SHALL ROUTE ALL CABLE BUNDLES TO AVOID SHARP BENDS, AND PINCH POINTS AND ALLOW LATCH OPERATION ON VERTICAL WIRE MANAGER.
5. PROVIDE PROPER QUANTITY OF PATCH PANELS.
6. STRAIN RELIEF BRACKET SHALL BE A MINIMUM OF 6" BEHIND PATCH PANEL.

CABLE STRAIN RELIEF DETAIL

SCALE:NTS

A1

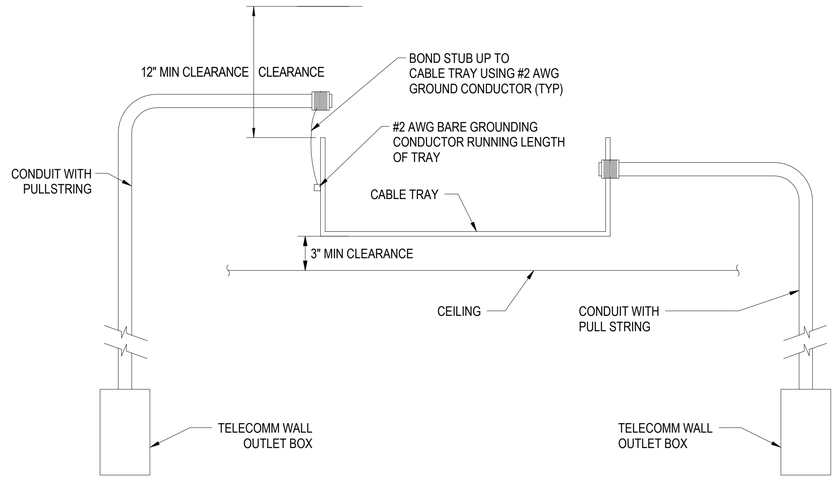

BASKET CABLE TRAY TO OUTLET CONDUIT TRANSITION

SCALE:NTS

A3

APPR | DATE | DESCRIPTION | SYM

NAVFAC

SEAL

RQ W.M. Jordan COMPANY – A JOINT VENTURE –

Michael Baker INTERNATIONAL

100 AIRSIDE DRIVE
MOON TOWNSHIP, PA 15108 A/E INFO

APPROVED

FOR COMMANDER NAVFAC

ACTIVITY
MARINE CORPS BASE CAMP LEJEUNE

SATISFACTORY TO DATE

DES JTE | DRW ETH | CHK JMG

PM

BRANCH MANAGER

CHIEF ENG/ARCH

FIRE PROTECTION

DEPARTMENT OF THE NAVY
NAVAL FACILITIES ENGINEERING COMMAND
ROICC FLORENCE CAMP LEJEUNE
MCB CAMP LEJEUNE

NAVAL FACILITIES ENGINEERING COMMAND ~ MID-ATLANTIC
JACKSONVILLE, NC

P1338 II MEF SIMULATION/TRAINING CENTER
REPLACEMENT
JACKSONVILLE, NC

TELECOMMUNICATIONS - DETAILS

SCALE: AS NOTED

EPROJECT NO.: 1590892

CONSTR. CONTR. NO.
N40085-20-C-0059

NAVFAC DRAWING NO.

SHEET OF

T-502

DP2 SUBMISSION – P1338 BUILDING - PRE-FINAL SUBMISSION

PLOTTED: 6/10/2021 9:28:25 AM

FILE NAME: BIM 360://HF PACKAGE 3/P1338 MEF SIM CTR-1590892-E.rvt

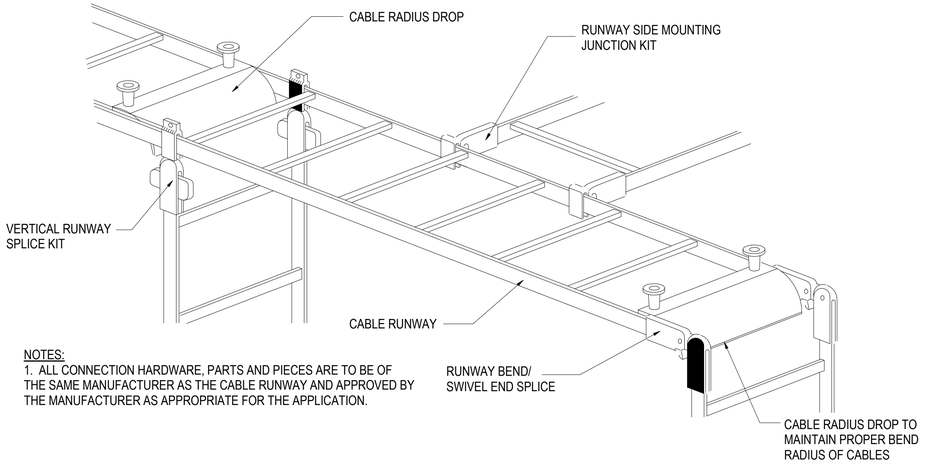

NOTES:
1. ALL CONNECTION HARDWARE, PARTS AND PIECES ARE TO BE OF THE SAME MANUFACTURER AS THE CABLE RUNWAY AND APPROVED BY THE MANUFACTURER AS APPROPRIATE FOR THE APPLICATION.

TYPICAL RUNWAY CONNECTIONS DETAIL

SCALE:NTS

C1

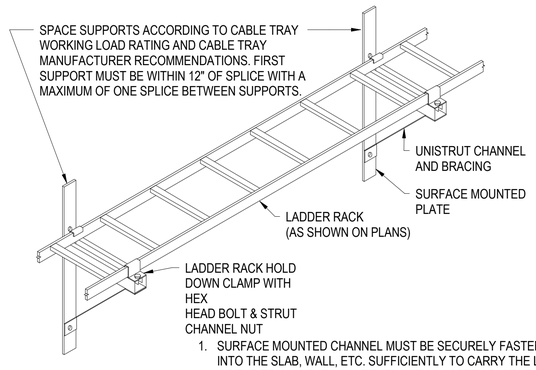

1. SURFACE MOUNTED CHANNEL MUST BE SECURELY FASTENED INTO THE SLAB, WALL, ETC. SUFFICIENTLY TO CARRY THE LOAD OF THE TRAY AND ITS CONTENTS WITH A SAFETY FACTOR OF 3.
2. ALL CHANNEL, TRAY FITTINGS AND ACCESSORIES ARE TO BE GALVANIZED.

LADDER TYPE CABLE RUNWAY WALL MOUNTING DETAIL

SCALE:NTS

B1

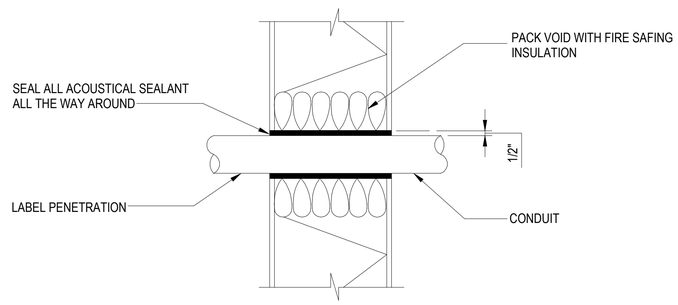

TYPICAL THROUGH WALL CONDUIT PENETRATION

SCALE:NTS

A1

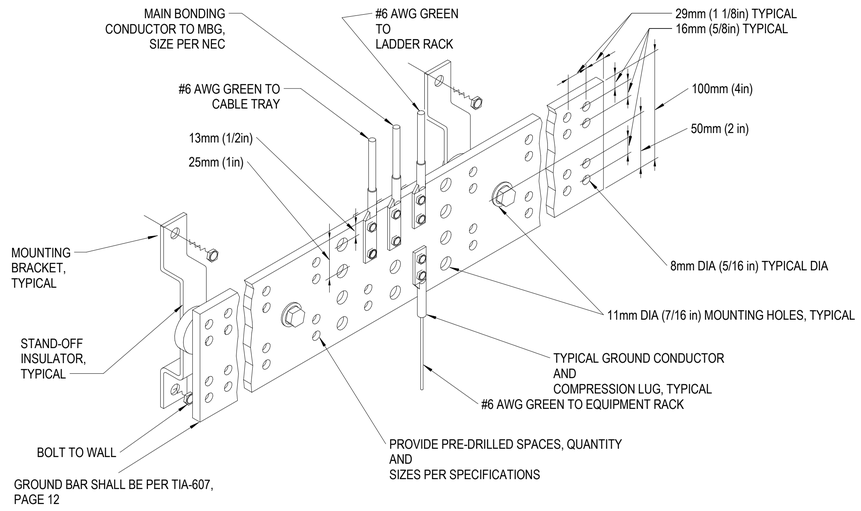

TELECOMMUNICATIONS PRIMARY BUSBAR (PBB) AND SECONDARY (SBB)

SCALE:NTS

C3

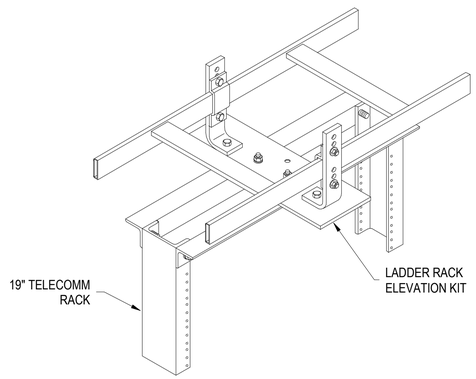

LADDER TYPE CABLE RUNWAY RACK MOUNTING

SCALE:NTS

A3

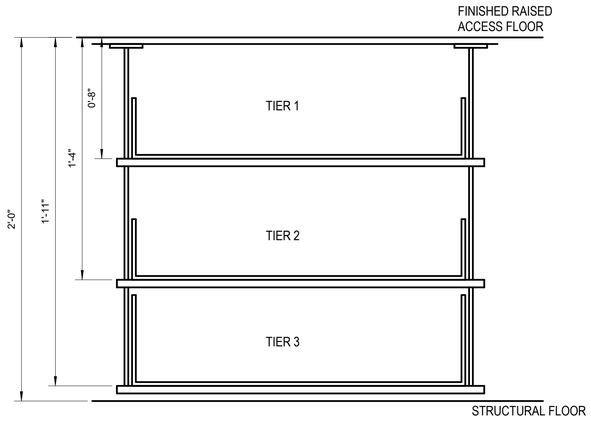

NOTE: SEE SHEET TU113 FOR TRAY SIZE

TELECOM TRAY TIER DETAIL

SCALE:NTS

A4

APPR	DATE	SYM	DESCRIPTION

NAVFAC

SEAL

W.M. Jordan COMPANY – A JOINT VENTURE –

Michael Baker INTERNATIONAL
100 AIRSIDE DRIVE
MOON TOWNSHIP, PA 15108
A/E INFO

APPROVED

FOR COMMANDER NAVFAC

ACTIVITY
MARINE CORPS BASE CAMP LEJEUNE

SATISFACTORY TO DATE

DES JTE | DRW ETH | CHK JMG

PM

BRANCH MANAGER

CHIEF ENG/ARCH

FIRE PROTECTION

DEPARTMENT OF THE NAVY
NAVAL FACILITIES ENGINEERING COMMAND ~ MID-ATLANTIC
ROICC FLORENCE CAMP LEJEUNE
MCB CAMP LEJEUNE

NAVAL FACILITIES ENGINEERING COMMAND ~ MID-ATLANTIC
JACKSONVILLE, NC

JACKSONVILLE, NC
P1338 II MEF SIMULATION/TRAINING CENTER
REPLACEMENT

TELECOMMUNICATIONS - DETAILS

SCALE: AS NOTED

EPROJECT NO.: 1590892

CONSTR. CONTR. NO.
N40085-20-C-0059

NAVFAC DRAWING NO.

SHEET OF

T-503

DP2 SUBMISSION – P1338 BUILDING - PRE-FINAL SUBMISSION

PLOTTED: 6/10/2021 9:28:26 AM

FILE NAME: BIM 360://HF PACKAGE 3/P1338 MEF SIM CTR-1590892-E.rvt

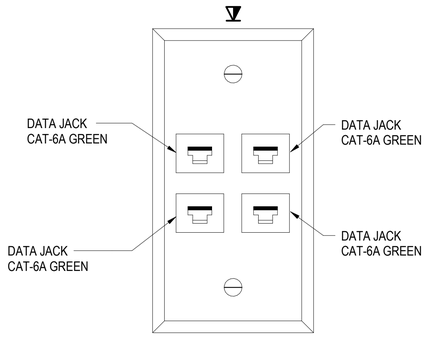

TELECOMMUNICATIONS QUAD OUTLET — C1

SCALE:NTS

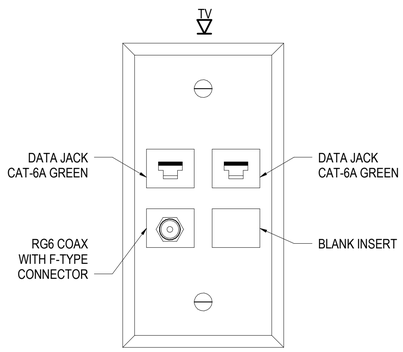

WALL MOUNTED DISPLAY OUTLET — C2

SCALE:NTS

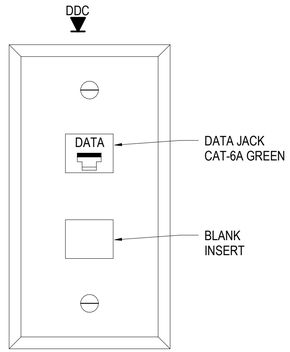

DDC OUTLET — C3

SCALE:NTS

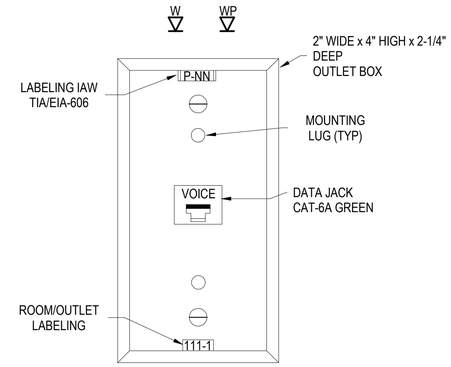

WALL PHONE OUTLET — C4

SCALE:NTS

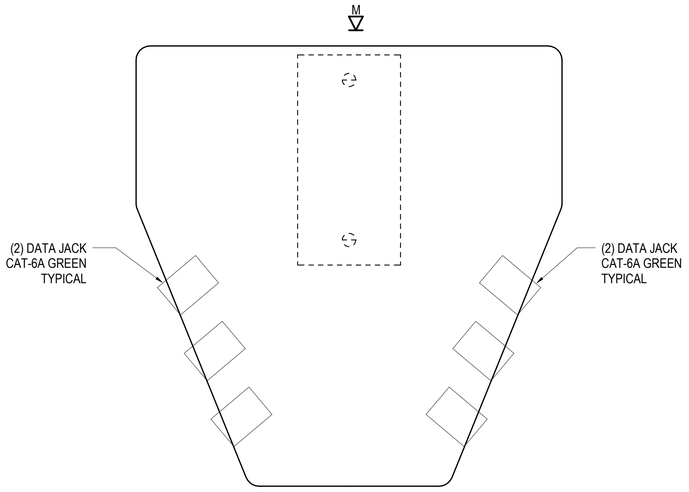

MULTI-USER TELECOM OUTLET ASSEMBLY (MUTOA), 12-PORT — A1

SCALE:NTS

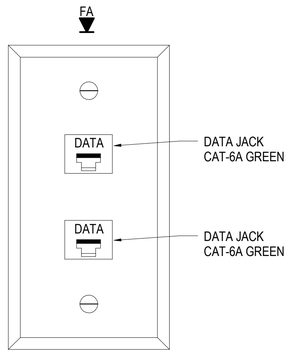

FIRE ALARM INTERFACE OUTLET — A2

SCALE:NTS

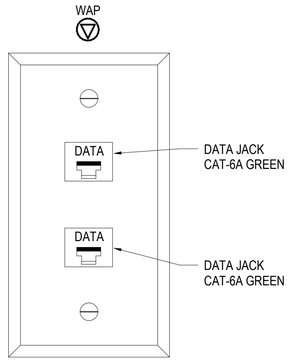

WAP ICT OUTLET FOR ENCLOSURE — A3

SCALE:NTS

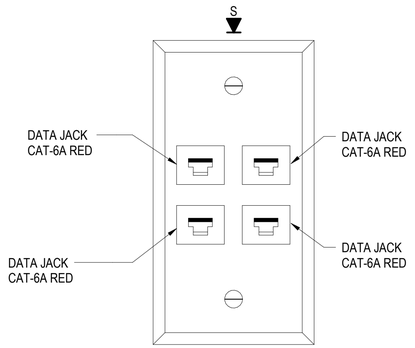

TELECOMMUNICATIONS QUAD OUTLET - SIPRNET — A4

SCALE:NTS

APPR	DATE	DESCRIPTION	SYM

NAVFAC

SEAL

W.M. Jordan COMPANY — A JOINT VENTURE —

Michael Baker INTERNATIONAL

100 AIRSIDE DRIVE
MOON TOWNSHIP, PA 15108 — A/E INFO

APPROVED

FOR COMMANDER NAVFAC

ACTIVITY
MARINE CORPS BASE
CAMP LEJEUNE

SATISFACTORY TO DATE

DES JTE | DRW ETH | CHK JMG

PM

BRANCH MANAGER

CHIEF ENG/ARCH

FIRE PROTECTION

DEPARTMENT OF THE NAVY
NAVAL FACILITIES ENGINEERING COMMAND
ROICC FLORENCE CAMP LEJEUNE
MCB CAMP LEJEUNE

NAVAL FACILITIES ENGINEERING COMMAND – MID-ATLANTIC
JACKSONVILLE, NC

JACKSONVILLE, NC
P1338 II MEF SIMULATION/TRAINING CENTER
REPLACEMENT

TELECOMMUNICATIONS - DETAILS

SCALE: AS NOTED

EPROJECT NO.: 1590892

CONSTR. CONTR. NO.
N40085-20-C-0059

NAVFAC DRAWING NO.

SHEET OF

T-504

DP2 SUBMISSION – P1338 BUILDING - PRE-FINAL SUBMISSION

PLOTTED: 6/10/2021 9:28:27 AM

FILE NAME: BIM 360://HF PACKAGE 3/P1338 MEF SIM CTR-1590892-E.rvt

RACK 1 FRONT	RACK 2 FRONT	RACK 3 (IG1) FRONT	RACK 4 (IG2) FRONT	RACK 5 FRONT	RACK 6 FRONT
FOPP	FOPP	FOPP	FOPP	FOPP	FOPP
48 PORT CAT6A PP	48 PORT CAT6A PP	CISCO 826 (GFGI)	CISCO 826 (GFGI)	48 PORT CAT6A PP	48 PORT CAT6A PP
1u WIRE MGMT	1u WIRE MGMT			1u WIRE MGMT	1u WIRE MGMT
SWITCH (GFGI)	SWITCH (GFGI)	NTP SERVER (GFGI)	NTP SERVER (GFGI)	SWITCH (GFGI)	SWITCH (GFGI)
48 PORT CAT6A PP	48 PORT CAT6A PP			48 PORT CAT6A PP	48 PORT CAT6A PP
1u WIRE MGMT	1u WIRE MGMT	DELL S4048 (GFGI)	DELL S4048 (GFGI)	1u WIRE MGMT	1u WIRE MGMT
SWITCH (GFGI)	SWITCH (GFGI)	DELL 570F (GFGI)	DELL 570F (GFGI)	SWITCH (GFGI)	SWITCH (GFGI)
48 PORT CAT6A PP	48 PORT CAT6A PP	DELL 570F (GFGI)	DELL 570F (GFGI)	48 PORT CAT6A PP	48 PORT CAT6A PP
1u WIRE MGMT	1u WIRE MGMT	DELL 570F (GFGI)	DELL 570F (GFGI)	1u WIRE MGMT	1u WIRE MGMT
SWITCH (GFGI)	SWITCH (GFGI)	DELL 570F (GFGI)	DELL 570F (GFGI)	SWITCH (GFGI)	SWITCH (GFGI)
48 PORT CAT6A PP	48 PORT CAT6A PP	DELL 570F (GFGI)	DELL 570F (GFGI)	48 PORT CAT6A PP	48 PORT CAT6A PP
1u WIRE MGMT	1u WIRE MGMT	DELL 570F (GFGI)	DELL 570F (GFGI)	1u WIRE MGMT	1u WIRE MGMT
SWITCH (GFGI)	SWITCH (GFGI)	DELL 570F (GFGI)	DELL 570F (GFGI)	SWITCH (GFGI)	SWITCH (GFGI)
48 PORT CAT6A PP	48 PORT CAT6A PP	KVM (GFGI)	KVM (GFGI)	48 PORT CAT6A PP	48 PORT CAT6A PP
1u WIRE MGMT	1u WIRE MGMT	KVM (GFGI)	KVM (GFGI)	1u WIRE MGMT	1u WIRE MGMT
SWITCH (GFGI)	SWITCH (GFGI)			SWITCH (GFGI)	SWITCH (GFGI)
48 PORT CAT6A PP	48 PORT CAT6A PP	DELL S4048 (GFGI)	DELL S4048 (GFGI)	48 PORT CAT6A PP	48 PORT CAT6A PP
1u WIRE MGMT	1u WIRE MGMT	DELL 570F (GFGI)	DELL 570F (GFGI)	1u WIRE MGMT	1u WIRE MGMT
SWITCH (GFGI)	SWITCH (GFGI)	DELL 570F (GFGI)	DELL 570F (GFGI)	SWITCH (GFGI)	SWITCH (GFGI)
48 PORT CAT6A PP	48 PORT CAT6A PP	DELL 570F (GFGI)	DELL 570F (GFGI)	48 PORT CAT6A PP	48 PORT CAT6A PP
1u WIRE MGMT	1u WIRE MGMT	DELL 570F (GFGI)	DELL 570F (GFGI)	1u WIRE MGMT	1u WIRE MGMT
SWITCH (GFGI)	SWITCH (GFGI)	DELL 570F (GFGI)	DELL 570F (GFGI)	SWITCH (GFGI)	SWITCH (GFGI)
19" FREE-STANDING RACK (84" TALL)	19" FREE-STANDING RACK (84" TALL)	19" FREE-STANDING RACK (84" TALL)	19" FREE-STANDING RACK (84" TALL)	19" FREE-STANDING RACK (84" TALL)	19" FREE-STANDING RACK (84" TALL)
~6000W	~6000W	~7000W	~7000W	~6000W	~6000W

TELECOM RM 133 - CACCTUS (C)

SCALE:NTS

B1

NOTE:
PROVIDE AND INSTALL 48-STRAND OM4 MULTIMODE OPTICAL FIBER CABLING BETWEEN SERVER RACK AND SWITCH RACKS FOR EACH NETWORK ENCLAVE (MTWS, CACCTUS, TIE, SIPR, MCEN).

RACK 1 FRONT	RACK 2 FRONT	RACK 3 FRONT	RACK 4 FRONT	RACK 5 FRONT
FOPP	FOPP	FOPP	FOPP	FOPP
48 PORT CAT6A PP	48 PORT CAT6A PP		48 PORT CAT6A PP	48 PORT CAT6A PP
1u WIRE MGMT	1u WIRE MGMT		1u WIRE MGMT	1u WIRE MGMT
48 PORT CAT6A PP	48 PORT CAT6A PP		48 PORT CAT6A PP	48 PORT CAT6A PP
1u WIRE MGMT	1u WIRE MGMT		1u WIRE MGMT	1u WIRE MGMT
48 PORT CAT6A PP	48 PORT CAT6A PP		48 PORT CAT6A PP	48 PORT CAT6A PP
1u WIRE MGMT	1u WIRE MGMT		1u WIRE MGMT	1u WIRE MGMT
48 PORT CAT6A PP	48 PORT CAT6A PP		48 PORT CAT6A PP	48 PORT CAT6A PP
1u WIRE MGMT	1u WIRE MGMT		1u WIRE MGMT	1u WIRE MGMT
48 PORT CAT6A PP	48 PORT CAT6A PP		48 PORT CAT6A PP	48 PORT CAT6A PP
1u WIRE MGMT	1u WIRE MGMT		1u WIRE MGMT	1u WIRE MGMT
19" FREE-STANDING RACK (84" TALL)	19" FREE-STANDING RACK (84" TALL)		19" FREE-STANDING RACK (84" TALL)	19" FREE-STANDING RACK (84" TALL)
~6000W	~6000W		~6000W	~6000W

TELECOM RM 133 - TIE (C)

SCALE:NTS

A3

NO.	DESCRIPTION	DATE	APPR

NAVFAC

SEAL

IRQ Jordan Company – A JOINT VENTURE –

Michael Baker INTERNATIONAL
100 AIRSIDE DRIVE
MOON TOWNSHIP, PA 15108
A/E INFO

APPROVED

FOR COMMANDER NAVFAC

ACTIVITY
MARINE CORPS BASE
CAMP LEJEUNE

SATISFACTORY TO DATE

DES	JTE	DRW	ETH	CHK	JMG

PM

BRANCH MANAGER

CHIEF ENG/ARCH

FIRE PROTECTION

DEPARTMENT OF THE NAVY
NAVAL FACILITIES ENGINEERING COMMAND
ROICC FLORENCE CAMP LEJEUNE
MCB CAMP LEJEUNE

NAVAL FACILITIES ENGINEERING COMMAND – MID-ATLANTIC
JACKSONVILLE, NC

JACKSONVILLE, NC
P1338 II MEF SIMULATION/TRAINING CENTER
REPLACEMENT

TELECOMMUNICATIONS - DETAILS

SCALE: AS NOTED
EPROJECT NO.: 1590892
CONSTR. CONTR. NO.
N40085-20-C-0059
NAVFAC DRAWING NO.
SHEET OF

T-505

DP2 SUBMISSION – P1338 BUILDING - PRE-FINAL SUBMISSION

PLOTTED: 6/10/2021 9:28:29 AM

FILE NAME: BIM 360:/HF PACKAGE 3/P1338 MEF SIM CTR-1590892-E.rvt

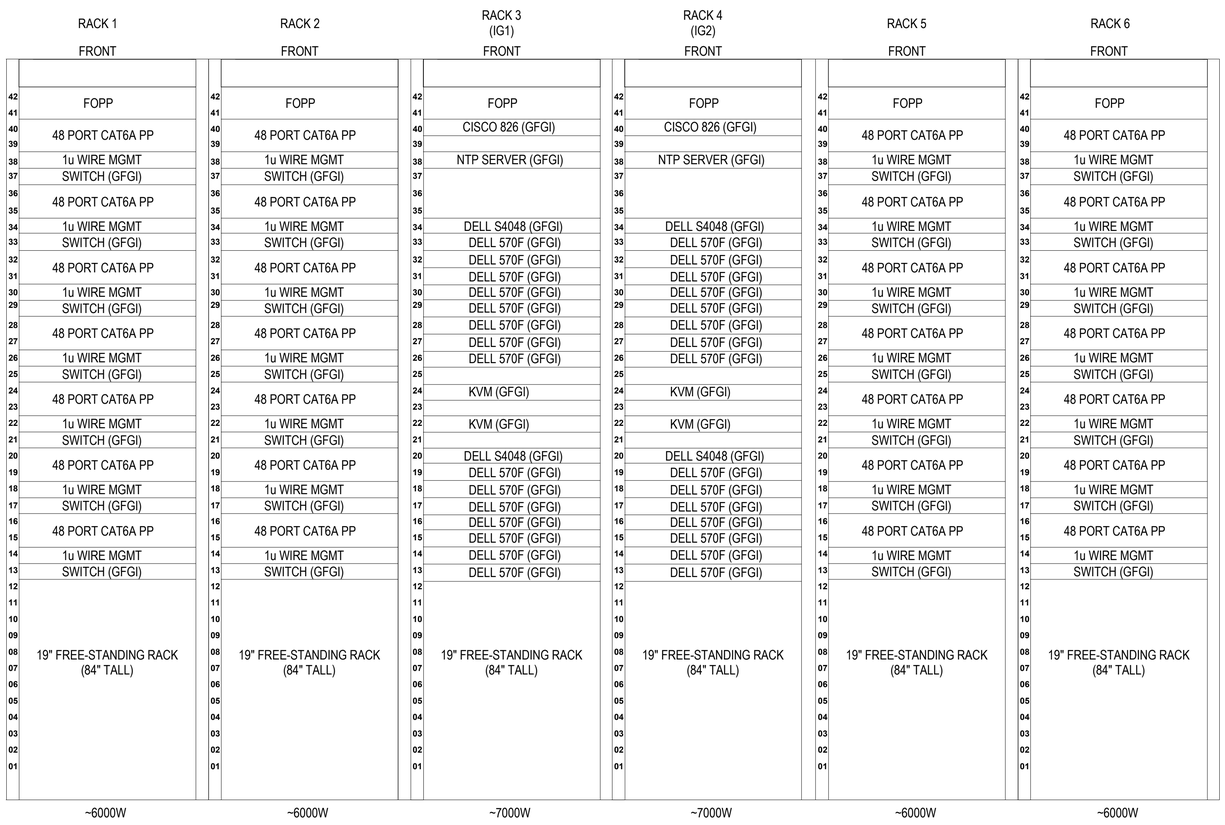

TELECOM RM 133 - MTWS (C)

SCALE:NTS

B1

NOTE:
PROVIDE AND INSTALL 48-STRAND OM4 MULTIMODE OPTICAL FIBER CABLING BETWEEN SERVER RACK AND SWITCH RACKS FOR EACH NETWORK ENCLAVE (MTWS, CACCTUS, TIE, SIPR, MCEN).

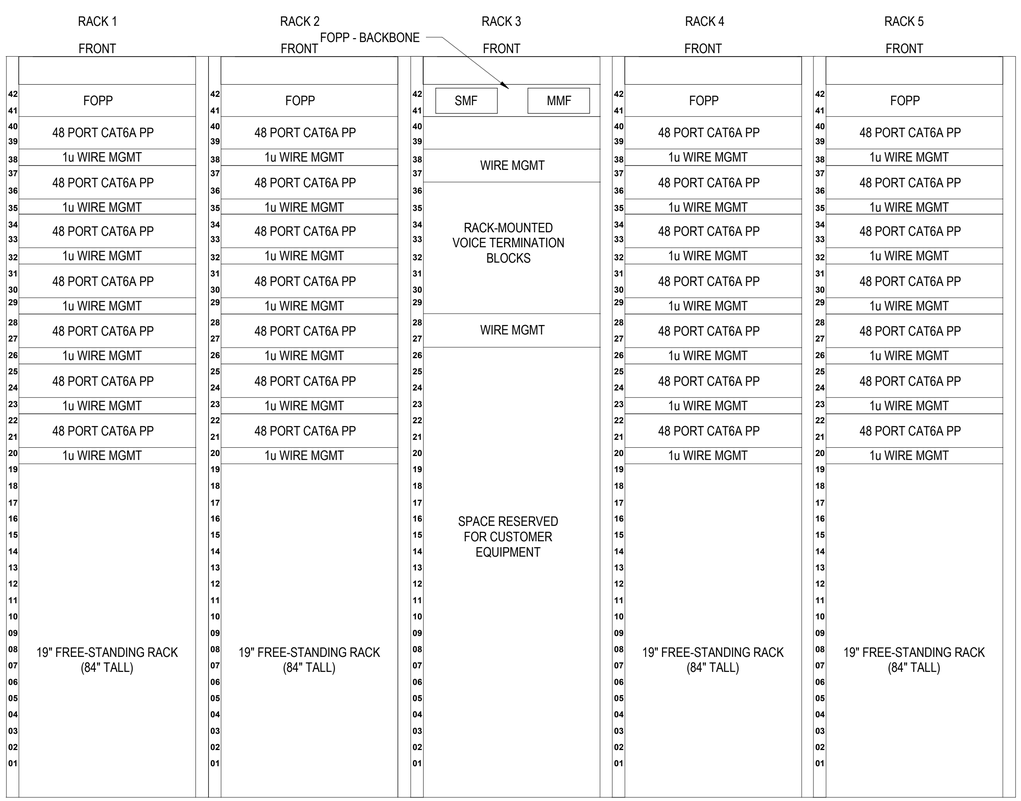

TELECOM RM 133 - TIE (U)

SCALE:NTS

A3

		APPR
		DATE
		DESCRIPTION
		SYM

NAVFAC

SEAL

RQ W.M. Jordan COMPANY ~A JOINT VENTURE~

Michael Baker INTERNATIONAL
100 AIRSIDE DRIVE
MOON TOWNSHIP, PA 15108
A/E INFO

APPROVED

FOR COMMANDER NAVFAC

ACTIVITY
MARINE CORPS BASE
CAMP LEJEUNE

SATISFACTORY TO DATE

DES	JTE	DRW	ETH	CHK	JMG

PM

BRANCH MANAGER

CHIEF ENG/ARCH

FIRE PROTECTION

DEPARTMENT OF THE NAVY
NAVAL FACILITIES ENGINEERING COMMAND
ROICC FLORENCE CAMP LEJEUNE
MCB CAMP LEJEUNE

NAVAL FACILITIES ENGINEERING COMMAND ~ MID-ATLANTIC
JACKSONVILLE, NC

JACKSONVILLE, NC
P1338 II MEF SIMULATION/TRAINING CENTER
REPLACEMENT

TELECOMMUNICATIONS - DETAILS

SCALE:	AS NOTED
EPROJECT NO.:	1590892
CONSTR. CONTR. NO.	N40085-20-C-0059
NAVFAC DRAWING NO.	
SHEET	OF

T-506

DP2 SUBMISSION – P1338 BUILDING - PRE-FINAL SUBMISSION

PLOTTED: 6/10/2021 9:28:31 AM

FILE NAME: BIM 360://HF PACKAGE 3/P1338 MEF SIM CTR-1590892-E.rvt

RACK 1 FRONT	RACK 2 FRONT	RACK 3 (IG1) FRONT	RACK 4 (IG2) FRONT	RACK 5 FRONT	RACK 6 FRONT
FOPP	FOPP	FOPP	FOPP	FOPP	FOPP
48 PORT CAT6A PP	48 PORT CAT6A PP	CISCO 826 (GFGI)	CISCO 826 (GFGI)	48 PORT CAT6A PP	48 PORT CAT6A PP
1u WIRE MGMT	1u WIRE MGMT	NTP SERVER (GFGI)	NTP SERVER (GFGI)	1u WIRE MGMT	1u WIRE MGMT
SWITCH (GFGI)	SWITCH (GFGI)			SWITCH (GFGI)	SWITCH (GFGI)
48 PORT CAT6A PP	48 PORT CAT6A PP	DELL S4048 (GFGI)	DELL S4048 (GFGI)	48 PORT CAT6A PP	48 PORT CAT6A PP
1u WIRE MGMT	1u WIRE MGMT	DELL 570F (GFGI)	DELL 570F (GFGI)	1u WIRE MGMT	1u WIRE MGMT
SWITCH (GFGI)	SWITCH (GFGI)	DELL 570F (GFGI)	DELL 570F (GFGI)	SWITCH (GFGI)	SWITCH (GFGI)
48 PORT CAT6A PP	48 PORT CAT6A PP	DELL 570F (GFGI)	DELL 570F (GFGI)	48 PORT CAT6A PP	48 PORT CAT6A PP
1u WIRE MGMT	1u WIRE MGMT	DELL 570F (GFGI)	DELL 570F (GFGI)	1u WIRE MGMT	1u WIRE MGMT
SWITCH (GFGI)	SWITCH (GFGI)	DELL 570F (GFGI)	DELL 570F (GFGI)	SWITCH (GFGI)	SWITCH (GFGI)
48 PORT CAT6A PP	48 PORT CAT6A PP	DELL 570F (GFGI)	DELL 570F (GFGI)	48 PORT CAT6A PP	48 PORT CAT6A PP
1u WIRE MGMT	1u WIRE MGMT	DELL 570F (GFGI)	DELL 570F (GFGI)	1u WIRE MGMT	1u WIRE MGMT
SWITCH (GFGI)	SWITCH (GFGI)			SWITCH (GFGI)	SWITCH (GFGI)
48 PORT CAT6A PP	48 PORT CAT6A PP	KVM (GFGI)	KVM (GFGI)	48 PORT CAT6A PP	48 PORT CAT6A PP
1u WIRE MGMT	1u WIRE MGMT	KVM (GFGI)	KVM (GFGI)	1u WIRE MGMT	1u WIRE MGMT
SWITCH (GFGI)	SWITCH (GFGI)			SWITCH (GFGI)	SWITCH (GFGI)
48 PORT CAT6A PP	48 PORT CAT6A PP	DELL S4048 (GFGI)	DELL S4048 (GFGI)	48 PORT CAT6A PP	48 PORT CAT6A PP
1u WIRE MGMT	1u WIRE MGMT	DELL 570F (GFGI)	DELL 570F (GFGI)	1u WIRE MGMT	1u WIRE MGMT
SWITCH (GFGI)	SWITCH (GFGI)	DELL 570F (GFGI)	DELL 570F (GFGI)	SWITCH (GFGI)	SWITCH (GFGI)
48 PORT CAT6A PP	48 PORT CAT6A PP	DELL 570F (GFGI)	DELL 570F (GFGI)	48 PORT CAT6A PP	48 PORT CAT6A PP
1u WIRE MGMT	1u WIRE MGMT	DELL 570F (GFGI)	DELL 570F (GFGI)	1u WIRE MGMT	1u WIRE MGMT
SWITCH (GFGI)	SWITCH (GFGI)	DELL 570F (GFGI)	DELL 570F (GFGI)	SWITCH (GFGI)	SWITCH (GFGI)
19" FREE-STANDING RACK (84" TALL)	19" FREE-STANDING RACK (84" TALL)	19" FREE-STANDING RACK (84" TALL)	19" FREE-STANDING RACK (84" TALL)	19" FREE-STANDING RACK (84" TALL)	19" FREE-STANDING RACK (84" TALL)
~6000W	~6000W	~7000W	~7000W	~6000W	~6000W

TELECOM RM 133 - CACCTUS (U)

SCALE:NTS

B1

NOTE:
PROVIDE AND INSTALL 48-STRAND OM4 MULTIMODE OPTICAL FIBER CABLING BETWEEN SERVER RACK AND SWITCH RACKS FOR EACH NETWORK ENCLAVE (MTWS, CACCTUS, TIE, SIPR, MCEN).

RACK 1 FRONT	RACK 2 FRONT	RACK 3 FRONT	RACK 4 FRONT	RACK 5 FRONT
FOPP	FOPP	FOPP	FOPP	FOPP
48 PORT CAT6A PP	48 PORT CAT6A PP		48 PORT CAT6A PP	48 PORT CAT6A PP
1u WIRE MGMT	1u WIRE MGMT		1u WIRE MGMT	1u WIRE MGMT
48 PORT CAT6A PP	48 PORT CAT6A PP		48 PORT CAT6A PP	48 PORT CAT6A PP
1u WIRE MGMT	1u WIRE MGMT		1u WIRE MGMT	1u WIRE MGMT
48 PORT CAT6A PP	48 PORT CAT6A PP		48 PORT CAT6A PP	48 PORT CAT6A PP
1u WIRE MGMT	1u WIRE MGMT		1u WIRE MGMT	1u WIRE MGMT
48 PORT CAT6A PP	48 PORT CAT6A PP		48 PORT CAT6A PP	48 PORT CAT6A PP
1u WIRE MGMT	1u WIRE MGMT		1u WIRE MGMT	1u WIRE MGMT
48 PORT CAT6A PP	48 PORT CAT6A PP		48 PORT CAT6A PP	48 PORT CAT6A PP
1u WIRE MGMT	1u WIRE MGMT		1u WIRE MGMT	1u WIRE MGMT
19" FREE-STANDING RACK (84" TALL)	19" FREE-STANDING RACK (84" TALL)		19" FREE-STANDING RACK (84" TALL)	19" FREE-STANDING RACK (84" TALL)
~6000W	~6000W		~6000W	~6000W

TELECOM RM 133 - SIPR (C)

SCALE:NTS

A3

NO.	DESCRIPTION	DATE	APPR

SEAL

ROIC JV W.M. Jordan COMPANY ~A JOINT VENTURE~

Michael Baker INTERNATIONAL
100 AIRSIDE DRIVE
MOON TOWNSHIP, PA 15108
A/E INFO

APPROVED

FOR COMMANDER NAVFAC

ACTIVITY
MARINE CORPS BASE
CAMP LEJEUNE

SATISFACTORY TO DATE

DES	JTE	DRW	ETH	CHK	JMG

PM

BRANCH MANAGER

CHIEF ENG/ARCH

FIRE PROTECTION

DEPARTMENT OF THE NAVY
NAVAL FACILITIES ENGINEERING COMMAND
ROICC FLORENCE CAMP LEJEUNE
MCB CAMP LEJEUNE

NAVAL FACILITIES ENGINEERING COMMAND ~ MID-ATLANTIC
JACKSONVILLE, NC

P1338 II MEF SIMULATION/TRAINING CENTER
REPLACEMENT
JACKSONVILLE, NC

TELECOMMUNICATIONS - DETAILS

SCALE: AS NOTED
EPROJECT NO.: 1590892
CONSTR. CONTR. NO.
N40085-20-C-0059
NAVFAC DRAWING NO.
SHEET OF

T-507

DP2 SUBMISSION – P1338 BUILDING - PRE-FINAL SUBMISSION

PLOTTED: 6/10/2021 9:28:34 AM

FILE NAME: BIM 360://HF PACKAGE 3/P1338 MEF SIM CTR-1590892-E.rvt

RACK 1 FRONT	RACK 2 FRONT	RACK 3 (IG1) FRONT	RACK 4 (IG2) FRONT	RACK 5 FRONT	RACK 6 FRONT
42 FOPP	42 FOPP	42 FOPP	42 FOPP	42 FOPP	42 FOPP
41	41	41	41	41	41
40 48 PORT CAT6A PP	40 48 PORT CAT6A PP	40 CISCO 826 (GFGI)	40 CISCO 826 (GFGI)	40 48 PORT CAT6A PP	40 48 PORT CAT6A PP
39	39	39	39	39	39
38 1u WIRE MGMT	38 1u WIRE MGMT	38 NTP SERVER (GFGI)	38 NTP SERVER (GFGI)	38 1u WIRE MGMT	38 1u WIRE MGMT
37 SWITCH (GFGI)	37 SWITCH (GFGI)	37	37	37 SWITCH (GFGI)	37 SWITCH (GFGI)
36 48 PORT CAT6A PP	36 48 PORT CAT6A PP	36	36	36 48 PORT CAT6A PP	36 48 PORT CAT6A PP
35	35	35	35	35	35
34 1u WIRE MGMT	34 1u WIRE MGMT	34 DELL S4048 (GFGI)	34 DELL S4048 (GFGI)	34 1u WIRE MGMT	34 1u WIRE MGMT
33 SWITCH (GFGI)	33 SWITCH (GFGI)	33 DELL 570F (GFGI)	33 DELL 570F (GFGI)	33 SWITCH (GFGI)	33 SWITCH (GFGI)
32 48 PORT CAT6A PP	32 48 PORT CAT6A PP	32 DELL 570F (GFGI)	32 DELL 570F (GFGI)	32 48 PORT CAT6A PP	32 48 PORT CAT6A PP
31	31	31 DELL 570F (GFGI)	31 DELL 570F (GFGI)	31	31
30 1u WIRE MGMT	30 1u WIRE MGMT	30 DELL 570F (GFGI)	30 DELL 570F (GFGI)	30 1u WIRE MGMT	30 1u WIRE MGMT
29 SWITCH (GFGI)	29 SWITCH (GFGI)	29 DELL 570F (GFGI)	29 DELL 570F (GFGI)	29 SWITCH (GFGI)	29 SWITCH (GFGI)
28 48 PORT CAT6A PP	28 48 PORT CAT6A PP	28 DELL 570F (GFGI)	28 DELL 570F (GFGI)	28 48 PORT CAT6A PP	28 48 PORT CAT6A PP
27	27	27 DELL 570F (GFGI)	27 DELL 570F (GFGI)	27	27
26 1u WIRE MGMT	26 1u WIRE MGMT	26 DELL 570F (GFGI)	26 DELL 570F (GFGI)	26 1u WIRE MGMT	26 1u WIRE MGMT
25 SWITCH (GFGI)	25 SWITCH (GFGI)	25	25	25 SWITCH (GFGI)	25 SWITCH (GFGI)
24 48 PORT CAT6A PP	24 48 PORT CAT6A PP	24 KVM (GFGI)	24 KVM (GFGI)	24 48 PORT CAT6A PP	24 48 PORT CAT6A PP
23	23	23	23	23	23
22 1u WIRE MGMT	22 1u WIRE MGMT	22 KVM (GFGI)	22 KVM (GFGI)	22 1u WIRE MGMT	22 1u WIRE MGMT
21 SWITCH (GFGI)	21 SWITCH (GFGI)	21	21	21 SWITCH (GFGI)	21 SWITCH (GFGI)
20 48 PORT CAT6A PP	20 48 PORT CAT6A PP	20 DELL S4048 (GFGI)	20 DELL S4048 (GFGI)	20 48 PORT CAT6A PP	20 48 PORT CAT6A PP
19	19	19 DELL 570F (GFGI)	19 DELL 570F (GFGI)	19	19
18 1u WIRE MGMT	18 1u WIRE MGMT	18 DELL 570F (GFGI)	18 DELL 570F (GFGI)	18 1u WIRE MGMT	18 1u WIRE MGMT
17 SWITCH (GFGI)	17 SWITCH (GFGI)	17 DELL 570F (GFGI)	17 DELL 570F (GFGI)	17 SWITCH (GFGI)	17 SWITCH (GFGI)
16 48 PORT CAT6A PP	16 48 PORT CAT6A PP	16 DELL 570F (GFGI)	16 DELL 570F (GFGI)	16 48 PORT CAT6A PP	16 48 PORT CAT6A PP
15	15	15 DELL 570F (GFGI)	15 DELL 570F (GFGI)	15	15
14 1u WIRE MGMT	14 1u WIRE MGMT	14 DELL 570F (GFGI)	14 DELL 570F (GFGI)	14 1u WIRE MGMT	14 1u WIRE MGMT
13 SWITCH (GFGI)	13 SWITCH (GFGI)	13 DELL 570F (GFGI)	13 DELL 570F (GFGI)	13 SWITCH (GFGI)	13 SWITCH (GFGI)
12	12	12	12	12	12
11	11	11	11	11	11
10	10	10	10	10	10
09	09	09	09	09	09
08 19" FREE-STANDING RACK (84" TALL)	08 19" FREE-STANDING RACK (84" TALL)	08 19" FREE-STANDING RACK (84" TALL)	08 19" FREE-STANDING RACK (84" TALL)	08 19" FREE-STANDING RACK (84" TALL)	08 19" FREE-STANDING RACK (84" TALL)
07	07	07	07	07	07
06	06	06	06	06	06
05	05	05	05	05	05
04	04	04	04	04	04
03	03	03	03	03	03
02	02	02	02	02	02
01	01	01	01	01	01
~6000W	~6000W	~7000W	~7000W	~6000W	~6000W

TELECOM RM 133 - MTWS (U)

SCALE:NTS

B1

NOTE:
PROVIDE AND INSTALL 48-STRAND OM4 MULTIMODE OPTICAL FIBER CABLING BETWEEN SERVER RACK AND SWITCH RACKS FOR EACH NETWORK ENCLAVE (MTWS, CACCTUS, TIE, SIPR, MCEN).

FOPP - BACKBONE

RACK 1 FRONT	RACK 2 FRONT	RACK 3 FRONT	RACK 4 FRONT	RACK 5 FRONT
42 FOPP	42 FOPP	42 SMF MMF	42 FOPP	42 FOPP
41	41	41	41	41
40 48 PORT CAT6A PP	40 48 PORT CAT6A PP	40	40 48 PORT CAT6A PP	40 48 PORT CAT6A PP
39	39	39	39	39
38 1u WIRE MGMT	38 1u WIRE MGMT	38 WIRE MGMT	38 1u WIRE MGMT	38 1u WIRE MGMT
37 48 PORT CAT6A PP	37 48 PORT CAT6A PP	37	37 48 PORT CAT6A PP	37 48 PORT CAT6A PP
36	36	36	36	36
35 1u WIRE MGMT	35 1u WIRE MGMT	35	35 1u WIRE MGMT	35 1u WIRE MGMT
34 48 PORT CAT6A PP	34 48 PORT CAT6A PP	34 RACK-MOUNTED	34 48 PORT CAT6A PP	34 48 PORT CAT6A PP
33	33	33 VOICE TERMINATION	33	33
32 1u WIRE MGMT	32 1u WIRE MGMT	32 BLOCKS	32 1u WIRE MGMT	32 1u WIRE MGMT
31 48 PORT CAT6A PP	31 48 PORT CAT6A PP	31	31 48 PORT CAT6A PP	31 48 PORT CAT6A PP
30	30	30	30	30
29 1u WIRE MGMT	29 1u WIRE MGMT	29	29 1u WIRE MGMT	29 1u WIRE MGMT
28 48 PORT CAT6A PP	28 48 PORT CAT6A PP	28 WIRE MGMT	28 48 PORT CAT6A PP	28 48 PORT CAT6A PP
27	27	27	27	27
26 1u WIRE MGMT	26 1u WIRE MGMT	26	26 1u WIRE MGMT	26 1u WIRE MGMT
25 48 PORT CAT6A PP	25 48 PORT CAT6A PP	25	25 48 PORT CAT6A PP	25 48 PORT CAT6A PP
24	24	24	24	24
23 1u WIRE MGMT	23 1u WIRE MGMT	23	23 1u WIRE MGMT	23 1u WIRE MGMT
22 48 PORT CAT6A PP	22 48 PORT CAT6A PP	22	22 48 PORT CAT6A PP	22 48 PORT CAT6A PP
21	21	21	21	21
20 1u WIRE MGMT	20 1u WIRE MGMT	20	20 1u WIRE MGMT	20 1u WIRE MGMT
19	19	19	19	19
18	18	18	18	18
17	17	17	17	17
16	16	16	16	16
15	15	15	15	15
14	14	14	14	14
13	13	13	13	13
12	12	12	12	12
11	11	11	11	11
10	10	10	10	10
09	09	09	09	09
08 19" FREE-STANDING RACK (84" TALL)	08 19" FREE-STANDING RACK (84" TALL)	08 SPACE RESERVED FOR CUSTOMER EQUIPMENT	08 19" FREE-STANDING RACK (84" TALL)	08 19" FREE-STANDING RACK (84" TALL)
07	07	07	07	07
06	06	06	06	06
05	05	05	05	05
04	04	04	04	04
03	03	03	03	03
02	02	02	02	02
01	01	01	01	01
~6000W	~6000W		~6000W	~6000W

TELECOM RM 133 - MCEN (U)

SCALE:NTS

A3

APPR		
DATE		
DESCRIPTION		
SYM		

NAVFAC

SEAL

RQ W.M. Jordan COMPANY ~A JOINT VENTURE~

Michael Baker INTERNATIONAL
100 AIRSIDE DRIVE
MOON TOWNSHIP, PA 15108 A/E INFO

APPROVED

FOR COMMANDER NAVFAC

ACTIVITY
MARINE CORPS BASE
CAMP LEJEUNE

SATISFACTORY TO DATE

DES	JTE	DRW	ETH	CHK	JMG

PM

BRANCH MANAGER

CHIEF ENG/ARCH

FIRE PROTECTION

DEPARTMENT OF THE NAVY
NAVAL FACILITIES ENGINEERING COMMAND
ROICC FLORENCE CAMP LEJEUNE
MCB CAMP LEJEUNE

NAVAL FACILITIES ENGINEERING COMMAND ~ MID-ATLANTIC
JACKSONVILLE, NC

JACKSONVILLE, NC
P1338 II MEF SIMULATION/TRAINING CENTER
REPLACEMENT

TELECOMMUNICATIONS - DETAILS

SCALE:	AS NOTED
EPROJECT NO.:	1590892
CONSTR. CONTR. NO.	N40085-20-C-0059
NAVFAC DRAWING NO.	
SHEET	OF

T-508

DP2 SUBMISSION – P1338 BUILDING - PRE-FINAL SUBMISSION

PLOTTED: 6/10/2021 9:28:36 AM

FILE NAME: BIM 360://HF PACKAGE 3/P1338 MEF SIM CTR-1590892-E.rvt

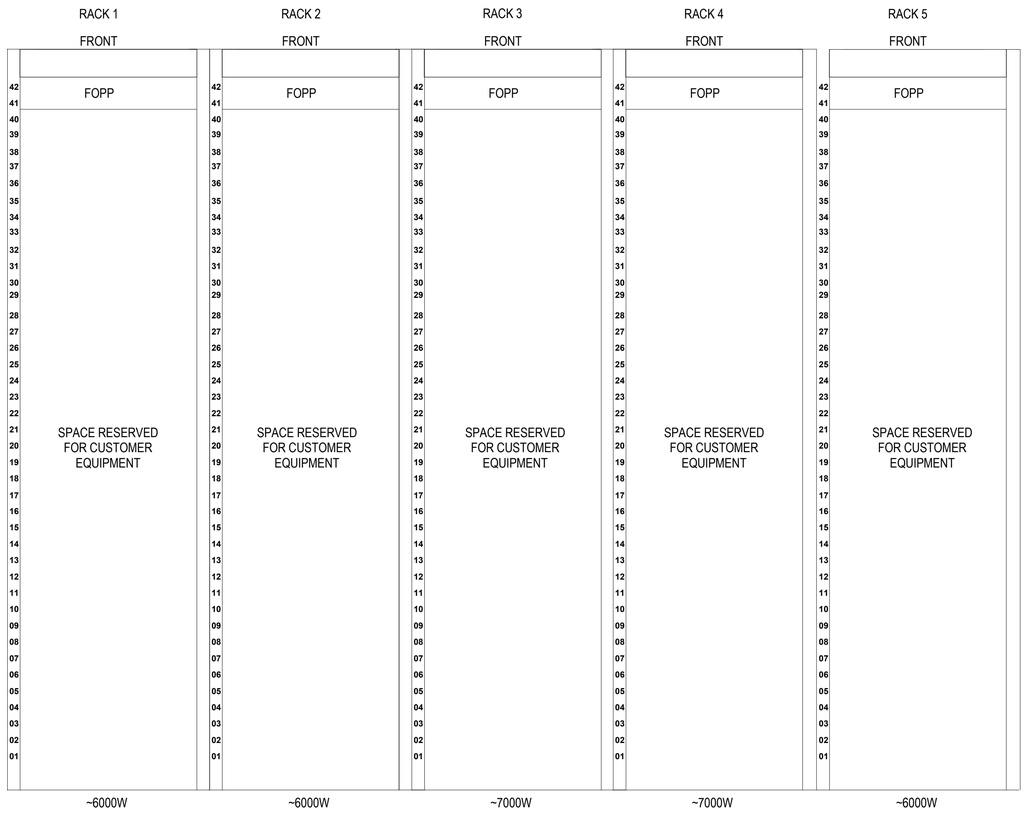

SIM CONTROL SECURE VAULT - RM304B

SCALE: 6" = 1'-0"

T-403 B1

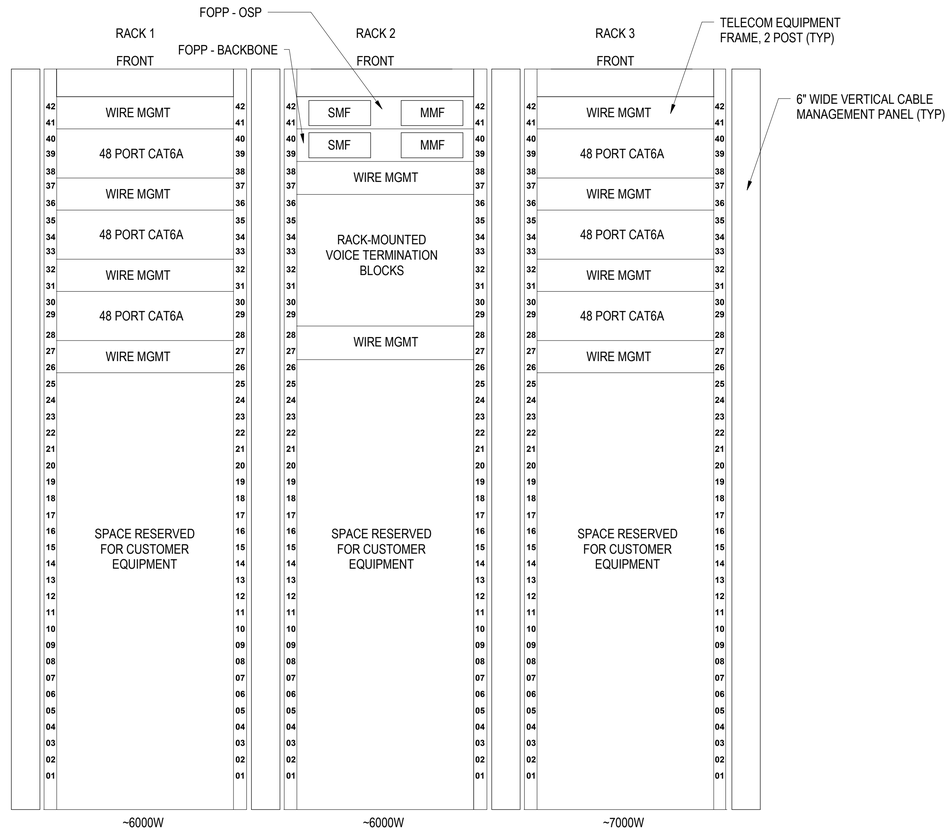

TELECOM RM 115

SCALE:NTS

B3

APPR			
DATE			
DESCRIPTION			
SYM			

SEAL

W.M. Jordan COMPANY – A JOINT VENTURE –

Michael Baker INTERNATIONAL

100 AIRSIDE DRIVE
MOON TOWNSHIP, PA 15108 A/E INFO

APPROVED

FOR COMMANDER NAVFAC

ACTIVITY
MARINE CORPS BASE
CAMP LEJEUNE

SATISFACTORY TO DATE

DES JTE | DRW ETH | CHK JMG

PM

BRANCH MANAGER

CHIEF ENG/ARCH

FIRE PROTECTION

DEPARTMENT OF THE NAVY
NAVAL FACILITIES ENGINEERING COMMAND
ROICC FLORENCE CAMP LEJEUNE
MCB CAMP LEJEUNE

NAVAL FACILITIES ENGINEERING COMMAND ~ MID-ATLANTIC
JACKSONVILLE, NC

JACKSONVILLE, NC
P1338 II MEF SIMULATION/TRAINING CENTER
REPLACEMENT

TELECOMMUNICATIONS - DETAILS

SCALE: AS NOTED

EPROJECT NO.: 1590892

CONSTR. CONTR. NO.
N40085-20-C-0059

NAVFAC DRAWING NO.

SHEET OF

T-509

DP2 SUBMISSION – P1338 BUILDING - PRE-FINAL SUBMISSION

PLOTTED: 6/10/2021 9:28:38 AM

FILE NAME: BIM 360://HF PACKAGE 3/P1338 MEF SIM CTR-1590892-E.rvt

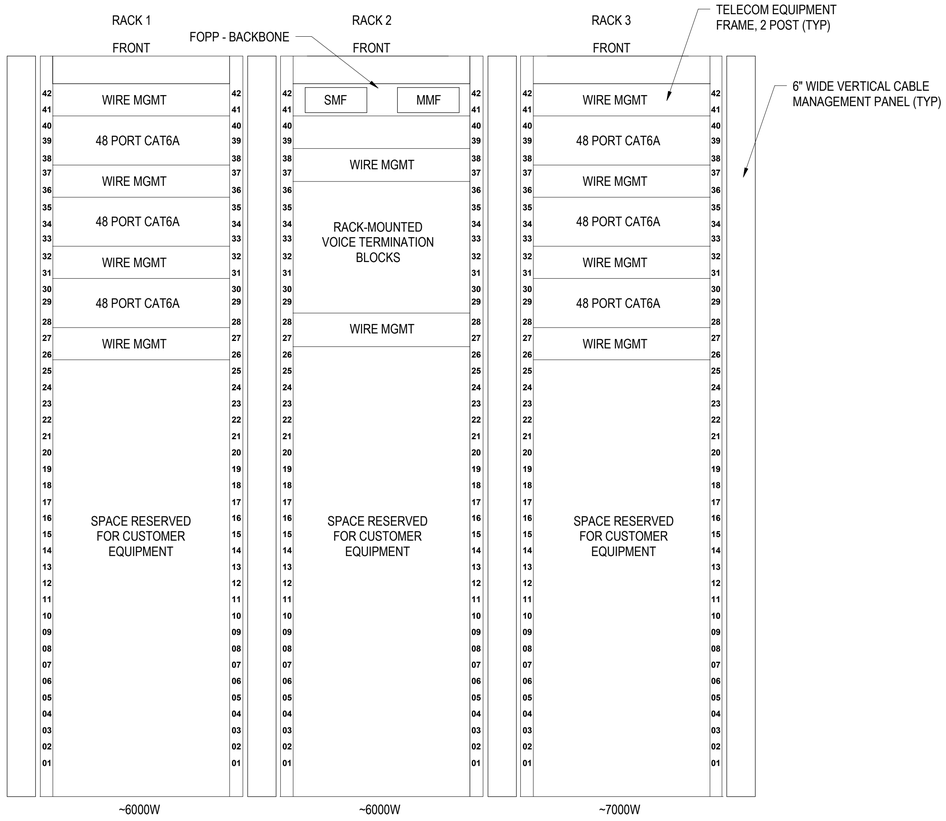

TELECOM RM 208

SCALE:NTS

B1

APPR	DATE	DESCRIPTION	SYM

SEAL

IRQ WM Jordan COMPANY – A JOINT VENTURE –

Michael Baker INTERNATIONAL

100 AIRSIDE DRIVE
MOON TOWNSHIP, PA 15108 A/E INFO

APPROVED

FOR COMMANDER NAVFAC

ACTIVITY
MARINE CORPS BASE
CAMP LEJEUNE

SATISFACTORY TO DATE

DES JTE | DRW ETH | CHK JMG

PM

BRANCH MANAGER

CHIEF ENG/ARCH

FIRE PROTECTION

DEPARTMENT OF THE NAVY
NAVAL FACILITIES ENGINEERING COMMAND
ROICC FLORENCE CAMP LEJEUNE
MCB CAMP LEJEUNE

NAVAL FACILITIES ENGINEERING COMMAND ~ MID-ATLANTIC
JACKSONVILLE, NC

P1338 II MEF SIMULATION/TRAINING CENTER
REPLACEMENT
JACKSONVILLE, NC

TELECOMMUNICATIONS - DETAILS

SCALE: AS NOTED

EPROJECT NO.: 1590892

CONSTR. CONTR. NO.
N40085-20-C-0059

NAVFAC DRAWING NO.

SHEET OF

T-510

DP2 SUBMISSION – P1338 BUILDING - PRE-FINAL SUBMISSION

PLOTTED: 6/10/2021 9:28:39 AM

FILE NAME: BIM 360://HF PACKAGE 3/P1338 MEF SIM CTR-1590892-E.rvt

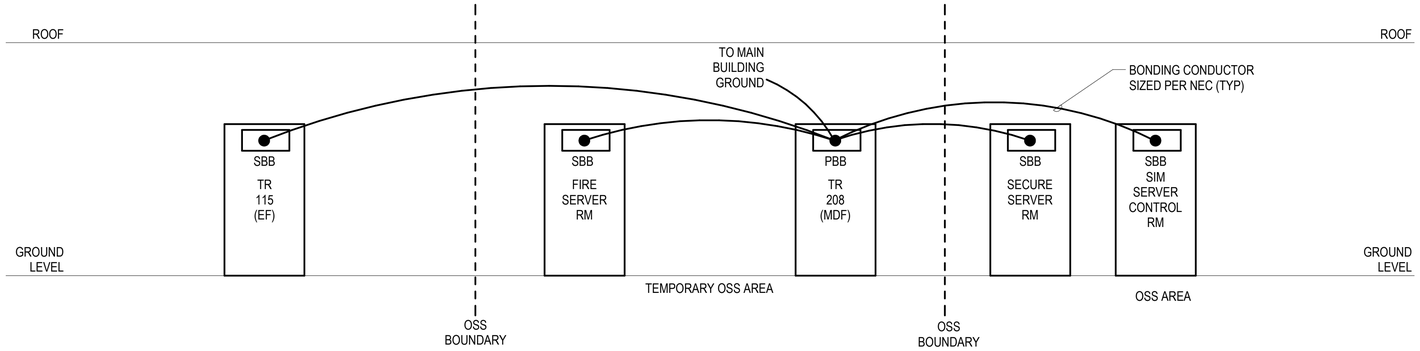

TELECOM GROUNDING LOGICAL DIAGRAM

SCALE:NTS

C1

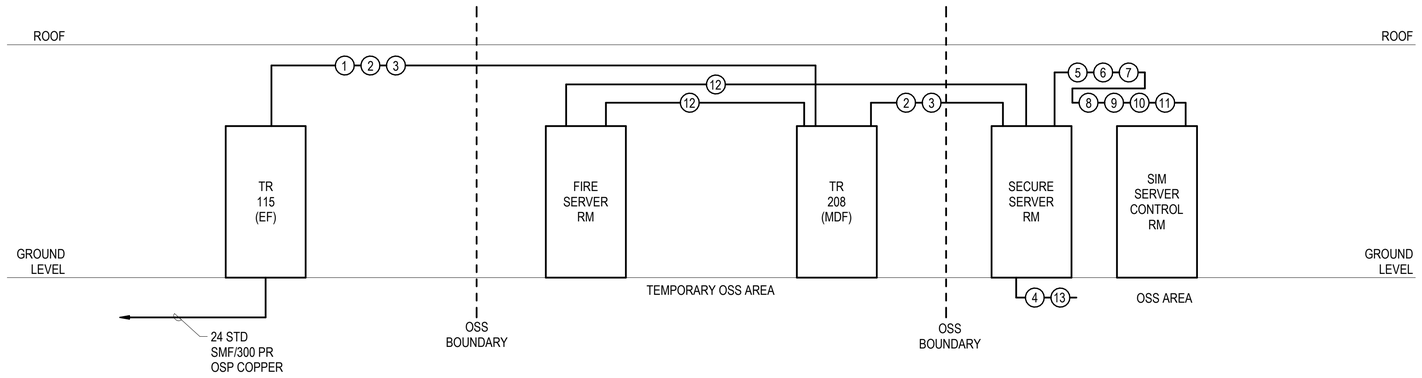

TELECOM BACKBONE CABLING LOGICAL DIAGRAM

SCALE:NTS

B1

BACKBONE CABLING LEGEND					
	FROM	TO	RISER CAT3	FIBER SM OS2/MM OM3	CAT6A
1	TR115	TR208	100	24SM/24MM	
2	TR115	SERVER RM MCEN	200	24SM/24MM	
3	TR115	SIM SECURE COMM		24SM/24MM	
4	SERVER RM MCEN	YARD POP UP	100 (OSP)		
5	SERVER RM MCEN	SERVER RM SIPR		12SM/12MM	12
6	SIM SECURE COMM	SERVER RM MTWS (U)		12SM/12MM	12
7	SIM SECURE COMM	SERVER RM MTWS (C)		12SM/12MM	12
8	SIM SECURE COMM	SERVER RM CACCTUS (U)		12SM/12MM	12
9	SIM SECURE COMM	SERVER RM CACCTUS (C)		12SM/12MM	12
10	SIM SECURE COMM	SERVER RM TIE (U)		12SM/12MM	12
11	SIM SECURE COMM	SERVER RM TIE (C)		12SM/12MM	12
12	SIM SECURE COMM	FIRE SERVER RM		12SM/12MM	12
13	SIM SECURE COMM	YARD POP UP		12SM/12MM (OSP)	

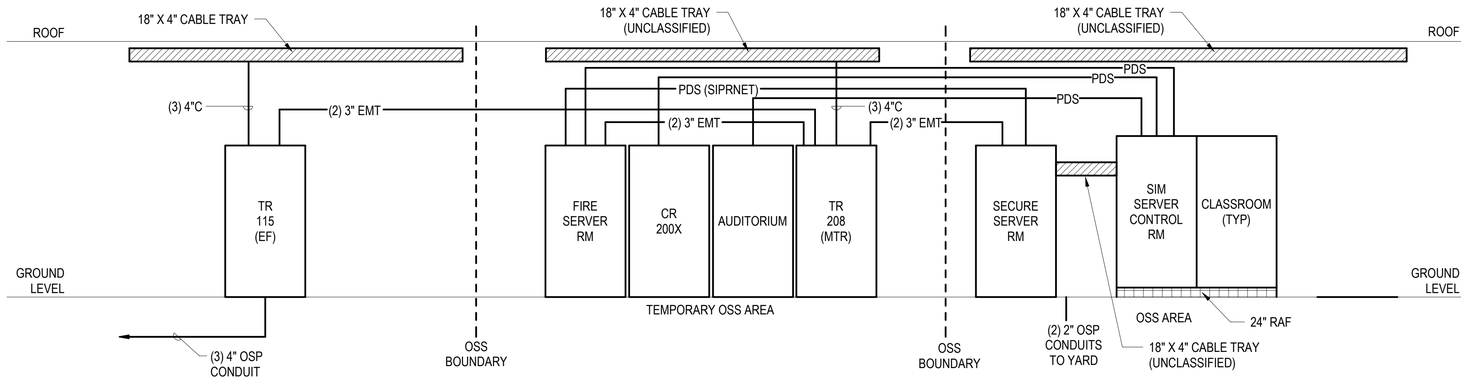

TELECOM PATHWAY LOGICAL DIAGRAM

SCALE:NTS

A1

APPR			
DATE			
DESCRIPTION			
SYM			

NAVFAC

SEAL

RQ Jordan COMPANY – A JOINT VENTURE –

Michael Baker INTERNATIONAL

100 AIRSIDE DRIVE
MOON TOWNSHIP, PA 15108

A/E INFO

APPROVED

FOR COMMANDER NAVFAC

ACTIVITY
MARINE CORPS BASE
CAMP LEJEUNE

SATISFACTORY TO DATE

DES JTE | DRW ETH | CHK JMG

PM

BRANCH MANAGER

CHIEF ENG/ARCH

FIRE PROTECTION

DEPARTMENT OF THE NAVY
NAVAL FACILITIES ENGINEERING COMMAND – MID-ATLANTIC
ROICC FLORENCE CAMP LEJEUNE
MCB CAMP LEJEUNE

NAVAL FACILITIES ENGINEERING COMMAND
JACKSONVILLE, NC
P1338 II MEF SIMULATION/TRAINING CENTER
REPLACEMENT
JACKSONVILLE, NC

TELECOMMUNICATIONS - DIAGRAMS

SCALE: AS NOTED

EPROJECT NO.: 1590892

CONSTR. CONTR. NO.
N40085-20-C-0059

NAVFAC DRAWING NO.

SHEET OF

T-601

DP2 SUBMISSION – P1338 BUILDING - PRE-FINAL SUBMISSION

PLOTTED: 6/10/2021 9:29:41 AM

FILE NAME: BIM 360://HF PACKAGE 3/P1338 MEF SIM CTR-1590892-E.rvt



A1 **SECURITY - FIRST FLOOR PLAN - AREA A**

SCALE: 1/8" = 1'-0"

GENERAL NOTES

1 SEE SHEET T-001 FOR TELECOMMUNICATIONS NOTES, SYMBOLS, AND ABBREVIATIONS.

KEYPLAN

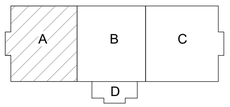

0 4'-0" 8'-0" 16'-0"

SCALE: 0'-0 1/8" = 1'-0"

N

SYM	DESCRIPTION	DATE	APPR

NAVFAC

SEAL

RQ W.M. Jordan COMPANY – A JOINT VENTURE –

Michael Baker INTERNATIONAL

100 AIRSIDE DRIVE
MOON TOWNSHIP, PA 15108 A/E INFO

APPROVED

FOR COMMANDER NAVFAC

ACTIVITY
MARINE CORPS BASE CAMP LEJEUNE

SATISFACTORY TO DATE

DES JTE DRW ETH CHK JMG

PM

BRANCH MANAGER

CHIEF ENG/ARCH

FIRE PROTECTION

DEPARTMENT OF THE NAVY
NAVAL FACILITIES ENGINEERING COMMAND
NAVAL FACILITIES ENGINEERING COMMAND ~ MID-ATLANTIC
ROICC FLORENCE CAMP LEJEUNE JACKSONVILLE, NC
MCB CAMP LEJEUNE JACKSONVILLE, NC

P1338 II MEF SIMULATION/TRAINING CENTER
REPLACEMENT

SECURITY - FIRST FLOOR PLAN - AREA A

SCALE: AS NOTED

EPROJECT NO.: 1590892

CONSTR. CONTR. NO.
N40085-20-C-0059

NAVFAC DRAWING NO.

SHEET OF

TY111

DP2 SUBMISSION – P1338 BUILDING - PRE-FINAL SUBMISSION

PLOTTED: 6/10/2021 9:28:56 AM

FILE NAME: BIM 360://HF PACKAGE 3/P1338 MEF SIM CTR-1590892-E.rvt

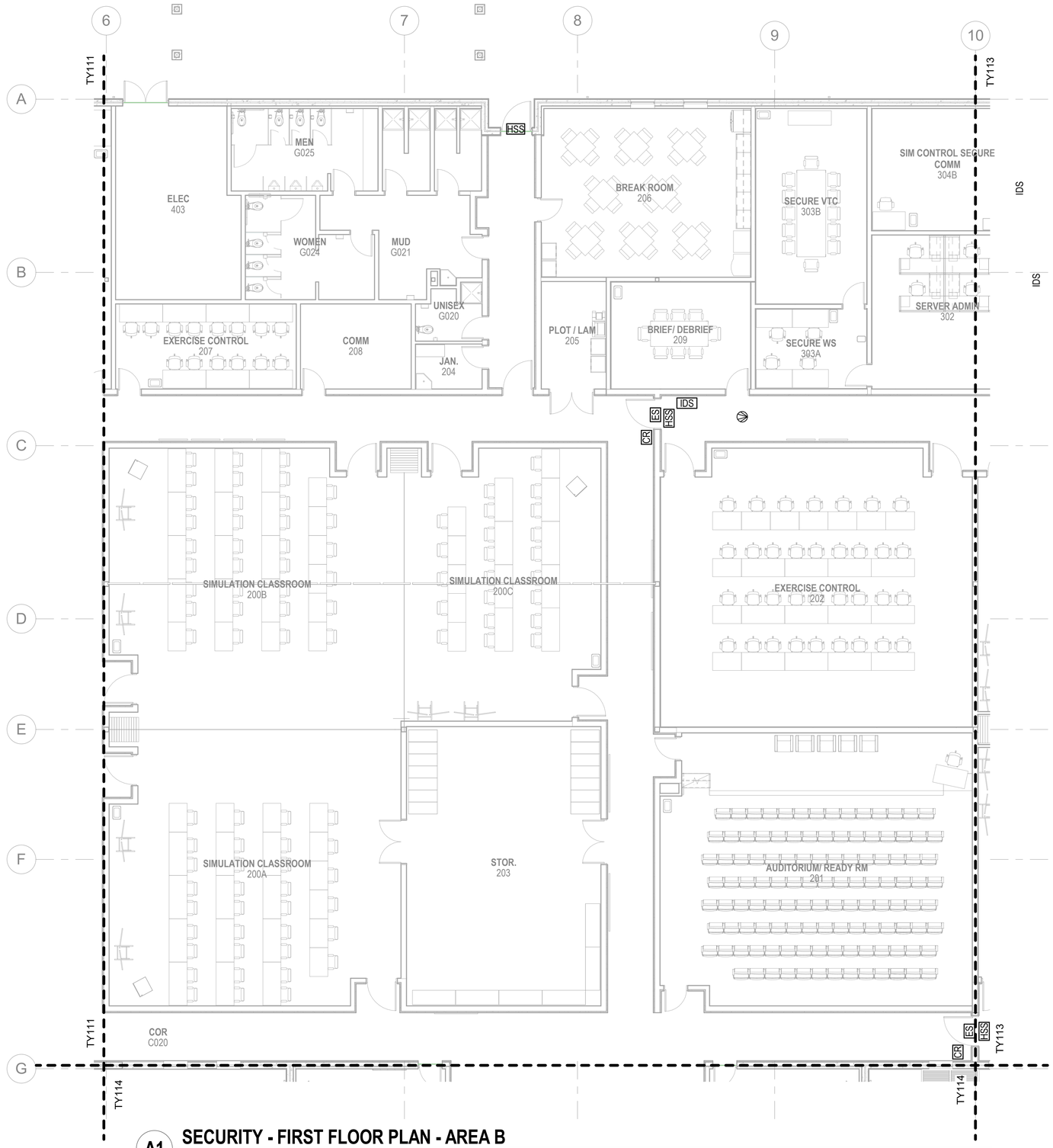

A1 SECURITY - FIRST FLOOR PLAN - AREA B

SCALE: 1/8" = 1'-0"

GENERAL NOTES

1 SEE SHEET T-001 FOR TELECOMMUNICATIONS NOTES, SYMBOLS, AND ABBREVIATIONS.

KEYPLAN

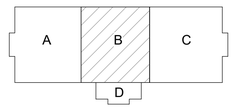

0 4'-0" 8'-0" 16'-0"

SCALE: 0'-0 1/8" = 1'-0"

N

APPR | DATE | DESCRIPTION | SYM

SEAL

RQ W.M. Jordan COMPANY – A JOINT VENTURE –

Michael Baker INTERNATIONAL

100 AIRSIDE DRIVE
MOON TOWNSHIP, PA 15108 A/E INFO

APPROVED

FOR COMMANDER NAVFAC

ACTIVITY
MARINE CORPS BASE
CAMP LEJEUNE

SATISFACTORY TO DATE

DES JTE | DRW ETH | CHK JMG

PM

BRANCH MANAGER

CHIEF ENG/ARCH

FIRE PROTECTION

DEPARTMENT OF THE NAVY
NAVAL FACILITIES ENGINEERING COMMAND
ROICC FLORENCE CAMP LEJEUNE

NAVAL FACILITIES ENGINEERING COMMAND ~ MID-ATLANTIC
JACKSONVILLE, NC

MCB CAMP LEJEUNE
JACKSONVILLE, NC
P1338 II MEF SIMULATION/TRAINING CENTER
REPLACEMENT

SECURITY - FIRST FLOOR PLAN - AREA B

SCALE: AS NOTED

EPROJECT NO.: 1590892

CONSTR. CONTR. NO.
N40085-20-C-0059

NAVFAC DRAWING NO.

SHEET OF

TY112

PLOTTED: 6/10/2021 9:28:59 AM

FILE NAME: BIM 360://HF PACKAGE 3/P1338 MEF SIM CTR-1590892-E.rvt

DP2 SUBMISSION – P1338 BUILDING - PRE-FINAL SUBMISSION

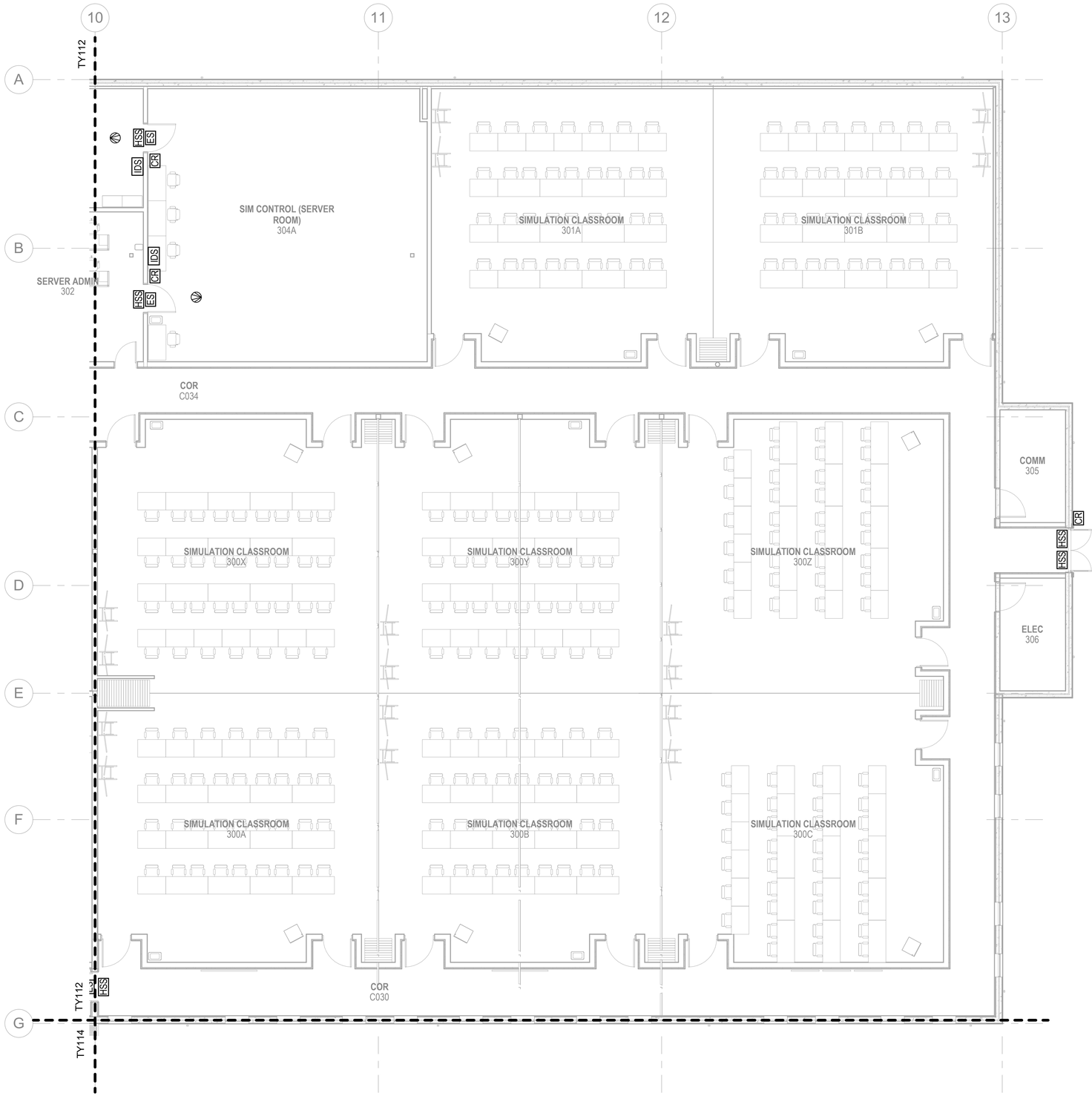

A1 SECURITY - FIRST FLOOR PLAN - AREA C

SCALE: 1/8" = 1'-0"

GENERAL NOTES

1 SEE SHEET T-001 FOR TELECOMMUNICATIONS NOTES, SYMBOLS, AND ABBREVIATIONS.

KEYPLAN

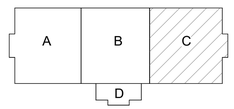

0 4'-0" 8'-0" 16'-0"

SCALE: 0'-0 1/8" = 1'-0"

N

APPR	DATE	DESCRIPTION	SYM

NAVFAC

SEAL

RQ W.M. Jordan COMPANY – A JOINT VENTURE –

Michael Baker INTERNATIONAL

100 AIRSIDE DRIVE
MOON TOWNSHIP, PA 15108 A/E INFO

APPROVED

FOR COMMANDER NAVFAC

ACTIVITY
MARINE CORPS BASE
CAMP LEJEUNE

SATISFACTORY TO DATE

DES	JTE	DRW	ETH	CHK	JMG

PM

BRANCH MANAGER

CHIEF ENG/ARCH

FIRE PROTECTION

DEPARTMENT OF THE NAVY
NAVAL FACILITIES ENGINEERING COMMAND
ROICC FLORENCE CAMP LEJEUNE
MCB CAMP LEJEUNE

NAVAL FACILITIES ENGINEERING COMMAND – MID-ATLANTIC
JACKSONVILLE, NC

JACKSONVILLE, NC

P1338 II MEF SIMULATION/TRAINING CENTER
REPLACEMENT

SECURITY - FIRST FLOOR PLAN - AREA C

SCALE:	AS NOTED
EPROJECT NO.:	1590892
CONSTR. CONTR. NO.	N40085-20-C-0059
NAVFAC DRAWING NO.	
SHEET	OF

TY113

DP2 SUBMISSION – P1338 BUILDING - PRE-FINAL SUBMISSION

PLOTTED: 6/10/2021 9:29:01 AM

FILE NAME: BIM 360://HF PACKAGE 3/P1338 MEF SIM CTR-1590892-E.rvt

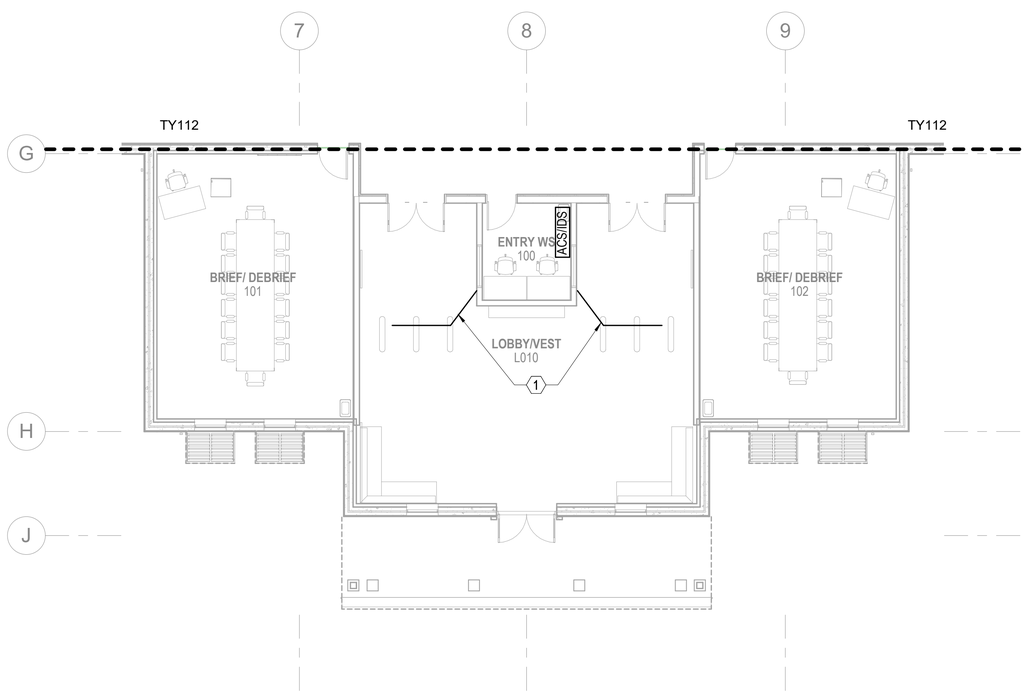

A1 SECURITY - FIRST FLOOR PLAN - AREA D

SCALE: 1/8" = 1'-0"

GENERAL NOTES

1 SEE SHEET T-001 FOR TELECOMMUNICATIONS NOTES, SYMBOLS, AND ABBREVIATIONS.

KEYNOTES

1 COORDINATE UNDERFLOOR CONDUIT LOCATIONS TO TURNSTILES WITH EQUIPMENT MANUFACTURER. CONDUITS TO STUB UP INTO ENTRY VESTIBULE WORK AREA.

KEYPLAN

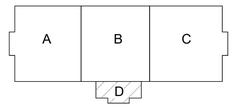

0 4'-0" 8'-0" 16'-0"

SCALE: 0'-0 1/8" = 1'-0"

N

APPR	DATE	DESCRIPTION	SYM

SEAL

IRQ W.M. Jordan COMPANY – A JOINT VENTURE –

Michael Baker INTERNATIONAL

100 AIRSIDE DRIVE
MOON TOWNSHIP, PA 15108 A/E INFO

APPROVED

FOR COMMANDER NAVFAC

ACTIVITY
MARINE CORPS BASE
CAMP LEJEUNE

SATISFACTORY TO DATE

DES	JTE	DRW	ETH	CHK	JMG

PM

BRANCH MANAGER

CHIEF ENG/ARCH

FIRE PROTECTION

DEPARTMENT OF THE NAVY
NAVAL FACILITIES ENGINEERING COMMAND
ROICC FLORENCE CAMP LEJEUNE

NAVAL FACILITIES ENGINEERING COMMAND ~ MID-ATLANTIC
JACKSONVILLE, NC

MCB CAMP LEJEUNE

JACKSONVILLE, NC

P1338 II MEF SIMULATION/TRAINING CENTER
REPLACEMENT

SECURITY - FIRST FLOOR PLAN - AREA D

SCALE:	AS NOTED
EPROJECT NO.:	1590892
CONSTR. CONTR. NO.	N40085-20-C-0059
NAVFAC DRAWING NO.	
SHEET	OF

TY114

PLOTTED: 6/10/2021 9:29:04 AM

FILE NAME: BIM 360://HF PACKAGE 3/P1338 MEF SIM CTR-1590892-E.rvt

DP2 SUBMISSION – P1338 BUILDING - PRE-FINAL SUBMISSION

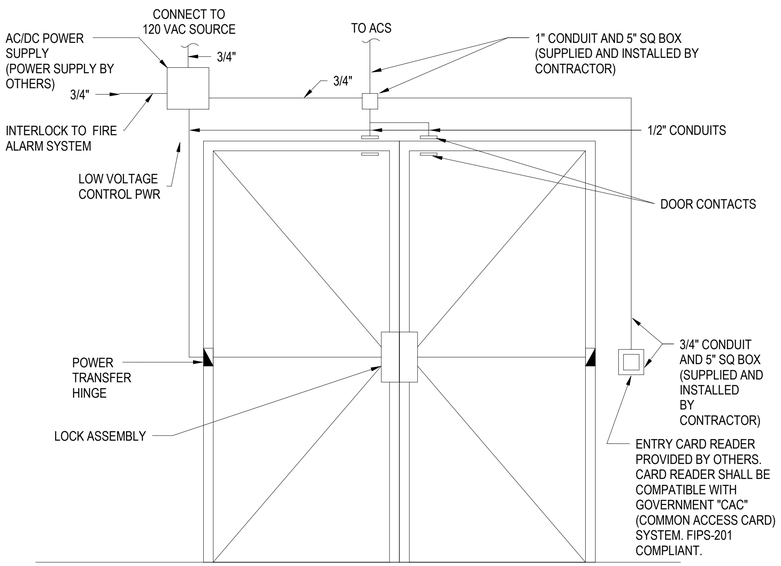

DOUBLE DOOR ACCESS CONTROLS SYSTEM

SCALE:NTS

C1

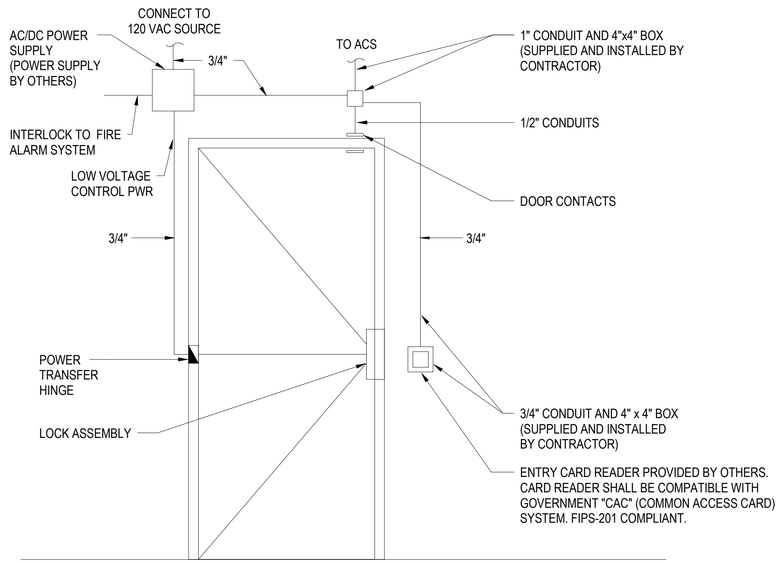

SINGLE DOOR ACCESS CONTROLS SYSTEM

SCALE:NTS

C3

APPR | DATE | DESCRIPTION | SYM

SEAL

W.M. Jordan COMPANY – A JOINT VENTURE –

Michael Baker INTERNATIONAL

100 AIRSIDE DRIVE
MOON TOWNSHIP, PA 15108 A/E INFO

APPROVED

FOR COMMANDER NAVFAC

ACTIVITY
MARINE CORPS BASE
CAMP LEJEUNE

SATISFACTORY TO DATE

DES JTE | DRW ETH | CHK JMG

PM

BRANCH MANAGER

CHIEF ENG/ARCH

FIRE PROTECTION

DEPARTMENT OF THE NAVY
NAVAL FACILITIES ENGINEERING COMMAND
ROICC FLORENCE CAMP LEJEUNE

NAVAL FACILITIES ENGINEERING COMMAND ~ MID-ATLANTIC
JACKSONVILLE, NC

MCB CAMP LEJEUNE

JACKSONVILLE, NC

P1338 II MEF SIMULATION/TRAINING CENTER

REPLACEMENT

SECURITY - DETAILS

SCALE: AS NOTED

EPROJECT NO.: 1590892

CONSTR. CONTR. NO.
N40085-20-C-0059

NAVFAC DRAWING NO.

SHEET OF

TY501

DP2 SUBMISSION – P1338 BUILDING - PRE-FINAL SUBMISSION

PLOTTED: 6/10/2021 9:29:05 AM

FILE NAME: BIM 360://HF PACKAGE 3/P1338 MEF SIM CTR-1590892-E.rvt

ABBREVIATIONS

A/E	ARCHITECT/ENGINEER
AAP	ALARM ANNUNCIATOR PANEL
ADA	AMERICANS WITH DISABILITIES ACT
AFC	ABOVE FINISHED CEILING
AFF	ABOVE FINISHED FLOOR
AFG	ABOVE FINISHED GRADE
AHJ	AUTHORITY HAVING JURISDICTION
ARCH	ARCHITECT
AV	AUDIOVISUAL
AVC	AUDIOVISUAL CONTRACTOR
AWG	AMERICAN WIRE GAUGE
BCT	BONDING CONDUCTOR FOR TELECOMMUNICATIONS
BFF	BELOW FINISH FLOOR
BICSI	BUILDING INDUSTRY CONSULTING SERVICE INTERNATIONAL
C	CAMERA
CAT	CATEGORY
CATV	CABLE TELEVISION
CCTV	CLOSED CIRCUIT TELEVISION
CD	CONSTRUCTION DOCUMENTS
CLG	CEILING
CONTR	CONTRACTOR
CT	CABLE TRAY
DEMO	DEMOLITION
DIA	DIAGRAM
EC	ELECTRICAL CONTRACTOR
EQ	EQUIPMENT GROUND
ELEC	ELECTRICAL
EMER	EMERGENCY
ENCL	ENCLOSURE
FT	FEET
FP	FIRE PROTECTION
GND	GROUND
GC	GENERAL CONTRACTOR
HT	HEIGHT
IN	INCHES
J-BOX	JUNCTION BOX
LAN	LOCAL AREA NETWORK
LV	LOW VOLTAGE
M	MICROPHONE
MECH	MECHANICAL
MIN	MINIMUM
NEC	NATIONAL ELECTRICAL CODE
NTS	NOT TO SCALE
PS	PROJECTION SCREEN
PT	POKE THRU
PTZ	PAN / TILT / ZOOM
PWR	POWER
QTY	QUANTITY
RCDD	REGISTERED COMMUNICATIONS DISTRIBUTION DESIGNER
RCP	REFLECTED CEILING PLAN
RECPT	RECEPTACLE
REQD	REQUIRED
RM	ROOM
RS	ROOM SCHEDULER
RU	RACK UNIT
S	SPEAKER
SB	SPECIALTY BACK BOX
TB	TELECOMMUNICATIONS BACKBOARD
TBB	TELECOMMUNICATIONS BONDING BACKBONE
TE	TELECOMMUNICATIONS ENCLOSURE
TC	TELECOMMUNICATIONS CONTRACTOR
TGB	TELECOMMUNICATIONS GROUNDING BUSBAR
TMGB	TELECOMMUNICATIONS MAIN GROUNDING BUSBAR
TV	TELEVISION
TP	TOUCH PANEL
UL	UNDERWRITERS LABORATORY
UON	UNLESS OTHERWISE NOTED
UPS	UNINTERRUPTIBLE POWER SUPPLY
UTIL	UTILITY

AUDIOVISUAL SYMBOLS

CEILING MOUNTED DEVICES

- CEILING CONDUIT PENETRATION
- (AV) X — CEILING MOUNTED AUDIOVISUAL PULL BOX. MOUNT 18" AFC, UNLESS OTHERWISE NOTED. "X" INDICATES NUMBER OF GANGS.
- CEILING MOUNTED DUPLEX AC POWER RECEPTACLE. 120V, 20A, UNLESS OTHERWISE NOTED
- (P) — CEILING MOUNTED AC POWER PULL BOX
- HORIZONTAL CONDUIT
- CABLE TRAY
- P/AV X — CEILING MOUNTED BACK BOX FOR POWER, DATA AND AUDIOVISUAL. "X" INDICATES TYPE OF BOX, SEE MANUFACTURER LIST FOR DETAILS
- (C) — CEILING MOUNTED CAMERA. PROVIDED BY AVC.
- (S) — CEILING MOUNTED SPEAKER. PROVIDED BY AVC.
- (M) — CEILING MOUNTED MICROPHONE. PROVIDED BY AVC.

FLOOR MOUNTED DEVICES

- FLOOR CONDUIT PENETRATION
- AV X — FLOOR BOX FOR POWER, DATA AND AUDIOVISUAL. SEE SYMBOL NOTES FOR BOX TYPE
- AV / PT X — POKE-THRU FOR POWER, DATA AND AUDIOVISUAL. SEE SYMBOL NOTES FOR BOX TYPE
- AUDIOVISUAL EQUIPMENT RACK
- FLOOR BOX/POKE-THRU DUPLEX AC POWER RECEPTACLE 120V, 20A, UNLESS OTHERWISE NOTED
- FLOOR BOX/POKE-THRU DOUBLE DUPLEX AC POWER RECEPTACLE 120V, 20A, UNLESS OTHERWISE NOTED

MISCELLANEOUS ITEMS

- X / TA-XXX — SINGLE WALL ELEVATION MARKER
- X / X TA-XXX X / X — MULTI WALL ELEVATION MARKER
- X / TA-XXX — ROOM SECTION MARKER
- X / TA-XXX — ROOM RISER MARKER

AUDIOVISUAL SYMBOLS CONTINUED

WALL MOUNTED DEVICES

- WALL MOUNTED DUPLEX AC POWER RECEPTACLE 120V, 20A, UNLESS OTHERWISE NOTED.
- WALL MOUNTED DOUBLE DUPLEX AC POWER RECEPTACLE 120V, 20A, UNLESS OTHERWISE NOTED.
- (P) — WALL MOUNTED AC POWER PULL BOX
- WALL MOUNTED CLOCK AC POWER RECEPTACLE 120V, 20A, UNLESS OTHERWISE NOTED.
- (C) — WALL MOUNTED CAMERA. PROVIDED BY AVC.
- (S) — WALL MOUNTED SPEAKER. PROVIDED BY AVC.
- AV X — WALL MOUNTED FLAT PANEL DISPLAY BACK BOX FOR POWER, DATA AND AUDIOVISUAL. "X" INDICATES TYPE OF BOX, SEE MANUFACTURER LIST FOR DETAILS.
- AV X — WALL MOUNTED AUDIOVISUAL DEVICE. "X" INDICATES NUMBER OF GANGS.

AUDIOVISUAL SPECIALTY INFRASTRUCTURE SYMBOL NOTES

FLOOR BOX CONFIGURATION

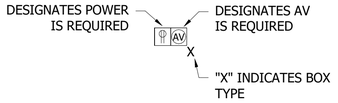

POKE-THRU CONFIGURATION

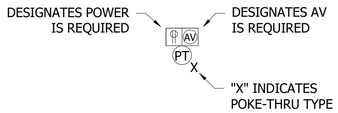

FLAT PANEL DISPLAY BACK BOX CONFIGURATION

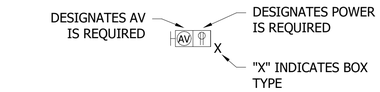

GENERAL NOTES

1. ALL WALL MOUNTED OUTLETS ARE TO BE MOUNTED AT 18" AFF UNLESS OTHERWISE NOTED.
2. INSTANCE BELOW IS TYPICAL OF TWO BOXES ON THE SAME VERTICAL PLANE.

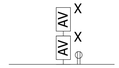

3. ALL POWER RECEPTACLES AND TELECOMMUNICATIONS OUTLETS ARE FOR AV REFERENCE ONLY. REFER TO ELECTRICAL AND TELECOMMUNICATIONS DRAWINGS FOR FINAL LOCATIONS.
4. THE AUDIOVISUAL CONTRACTOR SHALL BE RESPONSIBLE FOR CONSTRUCTION SAFETY. THE ARCHITECT AND/OR ENGINEER WILL ASSUME NO RESPONSIBILITY FOR WORKMAN'S OR PEDESTRIAN'S SAFETY.
5. NOTHING CONTAINED IN THE CONTRACT DOCUMENTS SHALL BE CONSTRUCTED TO CONFLICT WITH ANY NATIONAL, STATE, MUNICIPAL, OR LOCAL LAW OR REGULATIONS.
6. THE WORK UNDER THIS CONTRACT SHALL INCLUDE THE FURNISHING OF ALL NECESSARY MATERIALS, TOOLS, AND LABOR FOR A COMPLETE AND WORKING INSTALLATION AS DEFINED BY THE PLANS AND SPECIFICATIONS.
7. THE AUDIOVISUAL CONTRACTOR AT THE SITE SHALL VERIFY ALL DIMENSIONS AND EXISTING CONDITIONS PERTAINING TO THE INSTALLATION OF THE AUDIOVISUAL SYSTEMS. WHEN THE CONTRACTOR UNCOVERS CONDITIONS NOT INDICATED ON THE PLANS OR IN THE SPECIFICATIONS, THEY SHALL NOTIFY THE ARCHITECT AND/OR ENGINEER PRIOR TO PROCEEDING WITH ANY WORK. FAILURE TO NOTIFY WILL MAKE THE CONTRACTOR RESPONSIBLE FOR ALL COSTS AND CONSEQUENCES OF SUCH FAILURE.
8. CONTRACTOR SHALL CLEAN UP ALL DEBRIS AT THE END OF EACH WORK DAY.
9. ALL CONDUITS RUN IN EXPOSED AREAS SHALL BE MOUNTED TIGHT TO THE UNDERSIDE OF THE STRUCTURAL STEEL.
10. COORDINATE EXACT LOCATIONS OF EQUIPMENT WITH OTHER CONSTRUCTION TRADES
11. EXACT LOCATIONS OF FLOOR BOXES, SHALL BE COORDINATED WITH FURNITURE AND EQUIPMENT PLANS.
12. ALL DEVICES SHOWN ON THE EXTERIOR OF THE BUILDING SHALL BE WEATHERPROOF TYPE.

MANUFACTURERS LIST

TYPE	MANUFACTURER	MODEL	DETAIL
A	FSR	PWB-100	A3/TA502
B	CHIEF	PAC526	A2/TA501
C	FLOOR BOX	REFER TO ELECTRICAL	-

INDUSTRY STANDARDS

AUDIOVISUAL INSTALLATION SHALL COMPLY WITH THE MOST CURRENT VERSION OF THE FOLLOWING STANDARDS:

AMERICANS WITH DISABILITIES ACT, 2010

ANSI/ASA S12.60; ACOUSTICAL PERFORMANCE CRITERIA, DESIGN REQUIREMENTS, AND GUIDELINES FOR SCHOOLS

ANSI/INFOCOMM 2M-2010, STANDARD GUIDE FOR AUDIOVISUAL SYSTEMS DESIGN AND COORDINATION PROCESS (PROJECT MANAGEMENT PROCESS)

ANSI/INFOCOMM 3M-2011 PROJECTED IMAGE SYSTEM CONTRAST RATIO

ANSI/INFOCOMM 4: 2012 AUDIOVISUAL SYSTEMS ENERGY MANAGEMENT

ANSI/INFOCOMM V202.01:2016, DISPLAY IMAGE SIZE FOR 2D CONTENT IN AUDIOVISUAL SYSTEMS

AV DESIGN REFERENCE MANUAL, FROM INFOCOMM INTERNATIONAL

AV 9000:2012 QUALITY MANAGEMENT SYSTEM CONDUIT, PATHWAY, AND DEDICATED EQUIPMENT ROOM CONSIDERATIONS

AUDIOVISUAL SYSTEM DESIGN AND COORDINATION COMPONENTS, FROM INFOCOMM INTERNATIONAL

ANSI/TIA-568.0-D - GENERIC TELECOMMUNICATIONS CABLING FOR CUSTOMER PREMISES, 2015

ANSI/TIA-568.1-D - COMMERCIAL BUILDING TELECOMMUNICATIONS CABLING STANDARD, 2015

ANSI/TIA-568-C.2 - BALANCED TWISTED-PAIR TELECOMMUNICATIONS CABLING AND COMPONENTS STANDARD, 2009

ANSI/TIA-568.3-D - OPTICAL FIBER CABLING COMPONENTS STANDARD, 2016

ANSI/TIA-568.4-D - BROADBAND COAXIAL CABLING AND COMPONENTS STANDARD, 2017

ANSI/TIA-569-D - TELECOMMUNICATIONS PATHWAYS AND SPACES, 2015

ANSI/TIA/EIA-598-D - OPTICAL FIBER CABLE COLOR CODING, 2014

ANSI/TIA-606-B - ADMINISTRATION STANDARD FOR COMMERCIAL TELECOMMUNICATIONS INFRASTRUCTURE, 2012

ANSI/TIA-607-C - COMMERCIAL BUILDING GROUNDING (EARTHING) AND BONDING REQUIREMENTS FOR TELECOMMUNICATIONS, 2015

DAVIS AND DAVIS, 1987 "SOUND SYSTEM ENGINEERING"

GIDDINGS, 1990, " AUDIO SYSTEMS DESIGN AND INSTALLATION

INFOCOMM, AV/IT INFRASTRUCTURE GUIDELINES FOR HIGHER EDUCATION

NFPA 70 - NATIONAL ELECTRICAL CODE (NEC)

NFPA 72 - NATIONAL FIRE ALARM AND SIGNALING CODE

NFPA 75 - STANDARD FOR THE PROTECTION OF INFORMATION TECHNOLOGY EQUIPMENT

NFPA 76 - STANDARD FOR THE FIRE PROTECTION OF TELECOMMUNICATIONS FACILITIES

APPR | DATE | DESCRIPTION | SYM

NAVFAC

PRELIMINARY NOT FOR CONSTRUCTION

SEAL

IRQ WM Jordan COMPANY ~A JOINT VENTURE~

Michael Baker INTERNATIONAL
100 AIRSIDE DRIVE
MOON TOWNSHIP, PA 15108 A/E INFO

APPROVED

FOR COMMANDER NAVFAC

ACTIVITY
MARINE CORPS BASE CAMP LEJEUNE

SATISFACTORY TO DATE

DES AS	DRW AV	CHK BM

PM

BRANCH MANAGER

CHIEF ENG/ARCH

FIRE PROTECTION

DEPARTMENT OF THE NAVY
NAVAL FACILITIES ENGINEERING COMMAND ~ MID-ATLANTIC
ROICC FLORENCE CAMP LEJEUNE
MCB CAMP LEJEUNE
JACKSONVILLE, NC
JACKSONVILLE, NC
P1338F II MEF SIMULATION/TRAINING CENTER REPLACEMENT
AUDIOVISUAL - SYMBOLS AND NOTES

SCALE: AS NOTED
EPROJECT NO.:
CONSTR. CONTR. NO. N40085-20-C-0059
NAVFAC DRAWING NO.
SHEET OF

TA001

DP2 SUBMISSION – P1338 BUILDING PRE-FINAL SUBMISSION

PLOTTED: 6/9/2021 6:52:10 AM

FILE NAME: BIM 360://HF PACKAGE 3/P1338_MEF SIM CTR-1590892-T.rvt

FLAT PANEL TYPE SCHEDULE

TYPE	DIAGONAL SIZE	MAKE	MODEL	ORIENTATION	POWER CONSUMPTION	DISPLAY WIDTH	DISPLAY HEIGHT	DISPLAY DEPTH	WEIGHT	BACKING	INTERACTIVE	NOTES
FPD-A	55"	PANASONIC	TH-55CQE1	LANDSCAPE	135 W	48 3/4"	28"	3 3/16"	36 LBS	36"H X 48"W	NO	FURNISHED & INSTALLED BY AVC
FPD-B	75"	PANASONIC	TH-75CQE1	LANDSCAPE	250 W	66 5/16"	38 1/16"	3 15/16"	82 LBS	48"H X 72"W	NO	FURNISHED & INSTALLED BY AVC
FPD-C	98"	PANASONIC	TH-98CQE1	LANDSCAPE	650 W	87 1/4"	50"	3 9/16"	220 LBS	48"H X 86"W	NO	FURNISHED & INSTALLED BY AVC

FLAT PANEL ROOM SCHEDULE

ROOM NUMBER	TYPE	QUANITY
101	FPD-C	1
102	FPD-C	1
200A	FPD-C	1
200B	FPD-C	1
200C	FPD-C	1
202	FPD-B	2
207	FPD-B	2
209	FPD-B	1
300A	FPD-C	1
300B	FPD-C	1
300C	FPD-C	1
300X	FPD-C	1
300Y	FPD-C	1
300Z	FPD-C	1
301A	FPD-C	1
301B	FPD-C	1
303B	FPD-B	2
L010	FPD-A	1

SYM | DESCRIPTION | DATE | APPR

NAVFAC

PRELIMINARY
NOT FOR CONSTRUCTION

SEAL

RQ W.M. Jordan COMPANY
– A JOINT VENTURE –

Michael Baker
INTERNATIONAL
100 AIRSIDE DRIVE
MOON TOWNSHIP, PA 15108
A/E INFO

APPROVED

FOR COMMANDER NAVFAC

ACTIVITY
MARINE CORPS BASE
CAMP LEJEUNE

SATISFACTORY TO DATE

DES AS | DRW AV | CHK BM

PM

BRANCH MANAGER

CHIEF ENG/ARCH

FIRE PROTECTION

DEPARTMENT OF THE NAVY
NAVAL FACILITIES ENGINEERING COMMAND
NAVAL FACILITIES ENGINEERING COMMAND ~ MID-ATLANTIC
ROICC FLORENCE CAMP LEJEUNE
JACKSONVILLE, NC
MCB CAMP LEJEUNE
JACKSONVILLE, NC
P1338F II MEF SIMULATION/TRAINING CENTER
REPLACEMENT

AUDIOVISUAL - SCHEDULES

SCALE: AS NOTED

EPROJECT NO.:

CONSTR. CONTR. NO.
N40085-20-C-0059

NAVFAC DRAWING NO.

SHEET OF

TA002

DP2 SUBMISSION – P1338 BUILDING PRE-FINAL SUBMISSION

UNCLASSIFIED

PLOTTED: 6/9/2021 6:52:10 AM

FILE NAME: BIM 360://HF PACKAGE 3/P1338_MEF SIM CTR-1590892-T.rvt



KEYNOTE LEGEND

1	PROVIDE FSR PWB-100-WHT-C USED TO COVER FSR PWB-100-B.

KEYPLAN

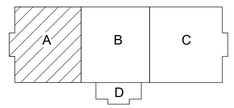

0 48" 96" 192"

SCALE: 1/8" = 12"

AUDIOVISUAL - FLOOR PLAN - AREA A

SCALE: 1/8" = 1'-0"

A4

APPR	DATE	DESCRIPTION	SYM

NAVFAC

PRELIMINARY
NOT FOR CONSTRUCTION

SEAL

IRQ WM Jordan COMPANY ~A JOINT VENTURE~

Michael Baker
INTERNATIONAL

100 AIRSIDE DRIVE
MOON TOWNSHIP, PA 15108

A/E INFO

APPROVED

FOR COMMANDER NAVFAC

ACTIVITY
MARINE CORPS BASE
CAMP LEJEUNE

SATISFACTORY TO DATE

DES AS | DRW AV | CHK BM

PM

BRANCH MANAGER

CHIEF ENG/ARCH

FIRE PROTECTION

DEPARTMENT OF THE NAVY
NAVAL FACILITIES ENGINEERING COMMAND
ROICC FLORENCE CAMP LEJEUNE
MCB CAMP LEJEUNE

NAVAL FACILITIES ENGINEERING COMMAND ~ MID-ATLANTIC
JACKSONVILLE, NC

JACKSONVILLE, NC
P1338F II MEF SIMULATION/TRAINING CENTER
REPLACEMENT

AUDIOVISUAL - FLOOR PLAN - AREA A

SCALE: AS NOTED

EPROJECT NO.:

CONSTR. CONTR. NO.
N40085-20-C-0059

NAVFAC DRAWING NO.

SHEET OF

TA111

DP2 SUBMISSION – P1338 BUILDING PRE-FINAL SUBMISSION

PLOTTED: 6/9/2021 6:52:12 AM

FILE NAME: BIM 360://HF PACKAGE 3/P1338_MEF SIM CTR-15908892-T.rvt

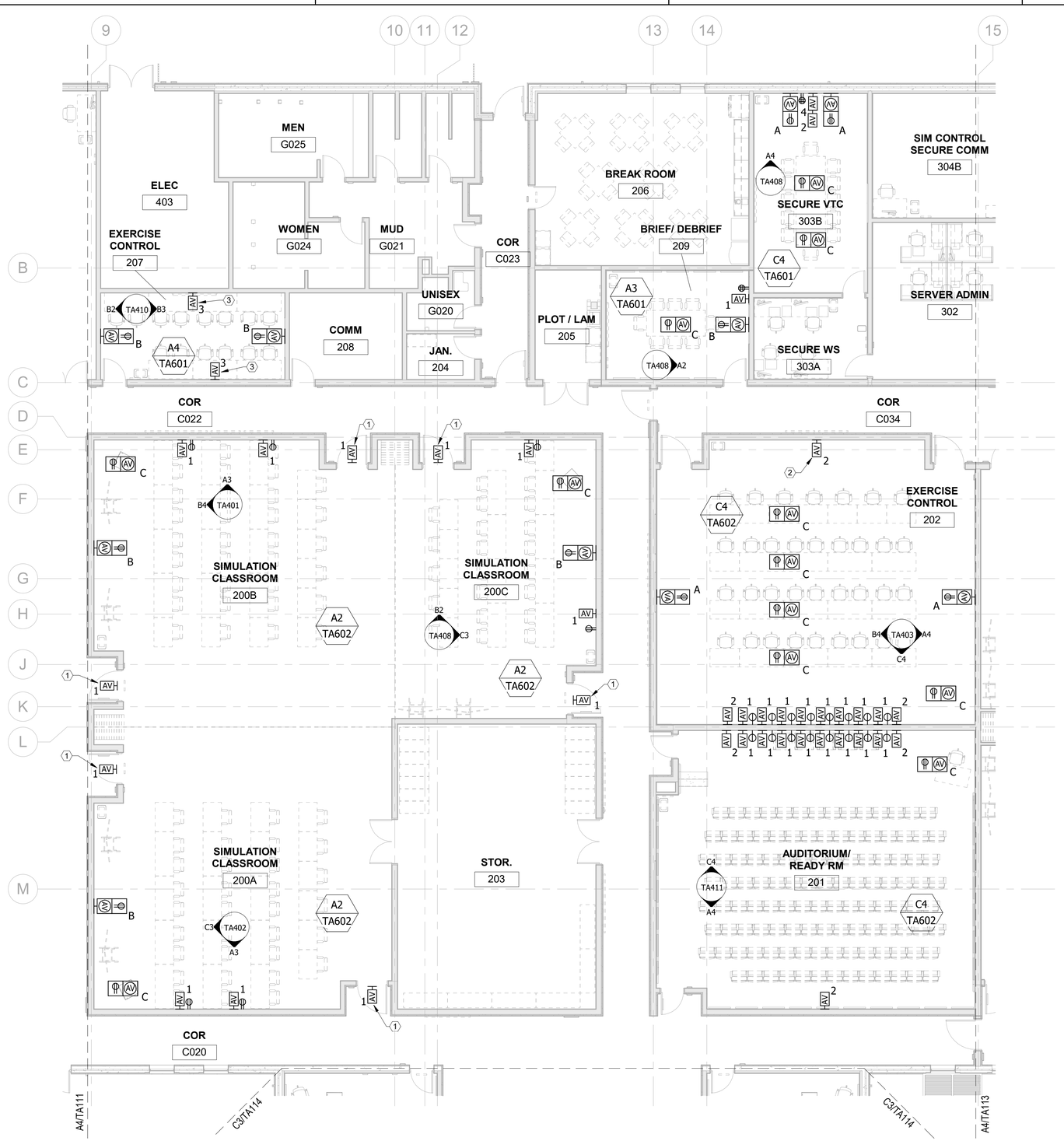

AUDIOVISUAL - FLOOR PLAN - AREA B

SCALE: 1/8" = 1'-0"

A3

KEYNOTE LEGEND

1	ONE GANG AV BACK BOX FOR ROOM AVAILABILITY SIGNAGE. MOUNT CENTERED ON DOOR, AT 92" AFF.
2	114" AFF
3	18" AFF, COORDINATE FINAL LOCATION WITH ELECTRICAL AND TELECOM PRIOR TO INSTALLATION.

KEYPLAN

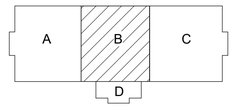

0 48" 96" 192"

SCALE: 1/8" = 12"

N

SYM	DESCRIPTION	DATE	APPR

NAVFAC

PRELIMINARY NOT FOR CONSTRUCTION

SEAL

RQ W.M. Jordan COMPANY – A JOINT VENTURE –

Michael Baker INTERNATIONAL

100 AIRSIDE DRIVE
MOON TOWNSHIP, PA 15108

A/E INFO

APPROVED

FOR COMMANDER NAVFAC

ACTIVITY
MARINE CORPS BASE CAMP LEJEUNE

SATISFACTORY TO DATE

DES AS | DRW AV | CHK BM

PM

BRANCH MANAGER

CHIEF ENG/ARCH

FIRE PROTECTION

DEPARTMENT OF THE NAVY
NAVAL FACILITIES ENGINEERING COMMAND
NAVAL FACILITIES ENGINEERING COMMAND ~ MID-ATLANTIC
ROICC FLORENCE CAMP LEJEUNE
JACKSONVILLE, NC

MCB CAMP LEJEUNE
JACKSONVILLE, NC

P1338F II MEF SIMULATION/TRAINING CENTER REPLACEMENT

AUDIOVISUAL - FLOOR PLAN - AREA B

SCALE: AS NOTED

EPROJECT NO.:

CONSTR. CONTR. NO.
N40085-20-C-0059

NAVFAC DRAWING NO.

SHEET OF

TA112

DP2 SUBMISSION – P1338 BUILDING PRE-FINAL SUBMISSION

PLOTTED: 6/9/2021 6:52:15 AM

FILE NAME: BIM 360://HF PACKAGE 3/P1338_MEF SIM CTR-1590892-T.rvt



KEYNOTE LEGEND

1	ONE GANG AV BACK BOX FOR ROOM AVAILABILITY SIGNAGE. MOUNT CENTERED ON DOOR, AT 92" AFF.

KEYPLAN

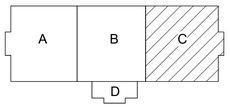

SCALE: 1/8" = 12"

AUDIOVISUAL - FLOOR PLAN - AREA C

SCALE: 1/8" = 1'-0"

A4

PLOTTED: 6/9/2021 6:52:17 AM

FILE NAME: BIM 360://HF PACKAGE 3/P1338_MEF SIM CTR-1590892-T.rvt

APPR | DATE | DESCRIPTION | SYM

NAVFAC

PRELIMINARY NOT FOR CONSTRUCTION

SEAL

IRQ W.M. Jordan COMPANY ~A JOINT VENTURE~

Michael Baker INTERNATIONAL

100 AIRSIDE DRIVE
MOON TOWNSHIP, PA 15108 A/E INFO

APPROVED

FOR COMMANDER NAVFAC

ACTIVITY
MARINE CORPS BASE CAMP LEJEUNE

SATISFACTORY TO DATE

DES AS | DRW AV | CHK BM

PM

BRANCH MANAGER

CHIEF ENG/ARCH

FIRE PROTECTION

DEPARTMENT OF THE NAVY
NAVAL FACILITIES ENGINEERING COMMAND
ROIOC FLORENCE CAMP LEJEUNE
MCB CAMP LEJEUNE

NAVAL FACILITIES ENGINEERING COMMAND ~ MID-ATLANTIC
JACKSONVILLE, NC

JACKSONVILLE, NC
P1338F II MEF SIMULATION/TRAINING CENTER REPLACEMENT

AUDIOVISUAL - FLOOR PLAN - AREA C

SCALE: AS NOTED

EPROJECT NO.:

CONSTR. CONTR. NO.
N40085-20-C-0059

NAVFAC DRAWING NO.

SHEET OF

TA113

DP2 SUBMISSION – P1338 BUILDING PRE-FINAL SUBMISSION

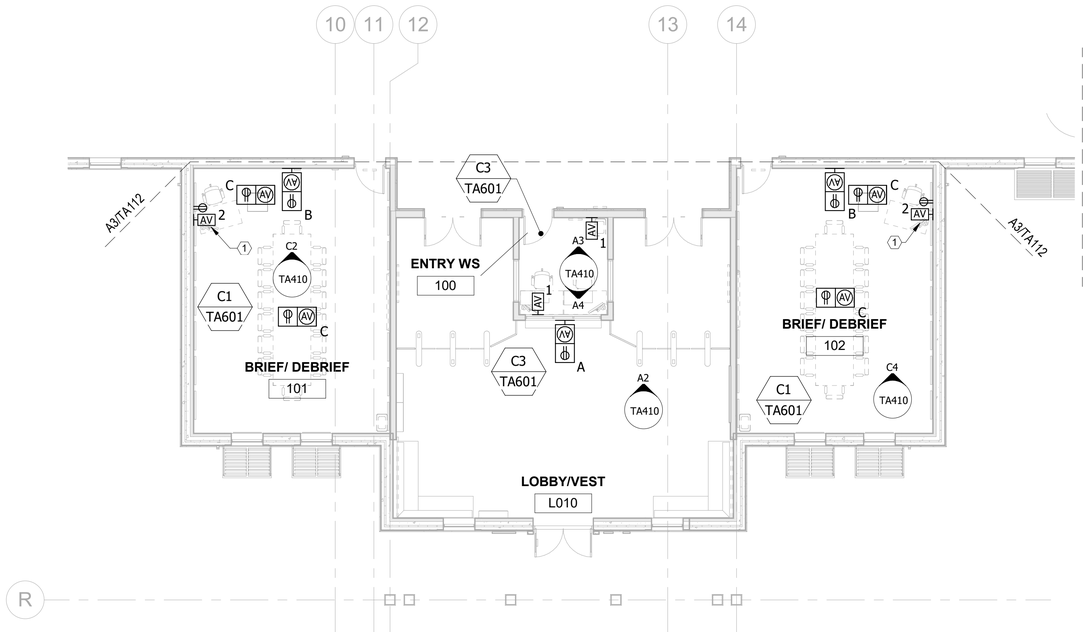

AUDIOVISUAL - FLOOR PLAN - AREA D

SCALE: 1/8" = 1'-0"

C3

KEYNOTE LEGEND

1	18" AFF, COORDINATE FINAL LOCATION WITH ELECTRICAL AND TELECOM PRIOR TO INSTALLATION.

KEYPLAN

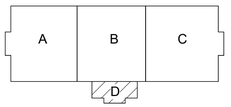

0 48" 96" 192"

SCALE: 1/8" = 12"

N

APPR | DATE | DESCRIPTION | SYM

NAVFAC

PRELIMINARY
NOT FOR CONSTRUCTION

SEAL

RQ W.M. Jordan COMPANY ~A JOINT VENTURE~

Michael Baker INTERNATIONAL

100 AIRSIDE DRIVE
MOON TOWNSHIP, PA 15108 A/E INFO

APPROVED

FOR COMMANDER NAVFAC

ACTIVITY
MARINE CORPS BASE
CAMP LEJEUNE

SATISFACTORY TO DATE

DES AS | DRW AV | CHK BM

PM

BRANCH MANAGER

CHIEF ENG/ARCH

FIRE PROTECTION

DEPARTMENT OF THE NAVY
NAVAL FACILITIES ENGINEERING COMMAND
ROICC FLORENCE CAMP LEJEUNE
MCB CAMP LEJEUNE

NAVAL FACILITIES ENGINEERING COMMAND ~ MID-ATLANTIC
JACKSONVILLE, NC

JACKSONVILLE, NC
P1338F II MEF SIMULATION/TRAINING CENTER
REPLACEMENT

AUDIOVISUAL - FLOOR PLAN - AREA D

SCALE: AS NOTED

EPROJECT NO.:

CONSTR. CONTR. NO.
N40085-20-C-0059

NAVFAC DRAWING NO.

SHEET OF

TA114

DP2 SUBMISSION – P1338 BUILDING PRE-FINAL SUBMISSION

PLOTTED: 6/9/2021 6:52:18 AM

FILE NAME: BIM 360://HF PACKAGE 3/P1338_MEF SIM CTR-1590892-T.rvt



AUDIOVISUAL - REFLECTED CEILING PLAN - AREA B

SCALE: 1/8" = 1'-0"

A3

KEYPLAN

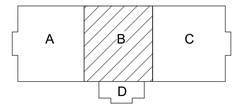

0 48" 96" 192"

SCALE: 1/8" = 12"

N

SYM	DESCRIPTION	DATE	APPR

NAVFAC

PRELIMINARY
NOT FOR CONSTRUCTION

SEAL

RQ W.M. Jordan COMPANY
- A JOINT VENTURE -

Michael Baker
INTERNATIONAL
100 AIRSIDE DRIVE
MOON TOWNSHIP, PA 15108
A/E INFO

APPROVED

FOR COMMANDER NAVFAC

ACTIVITY
MARINE CORPS BASE
CAMP LEJEUNE

SATISFACTORY TO DATE

DES AS | DRW AV | CHK BM

PM

BRANCH MANAGER

CHIEF ENG/ARCH

FIRE PROTECTION

DEPARTMENT OF THE NAVY
NAVAL FACILITIES ENGINEERING COMMAND
NAVAL FACILITIES ENGINEERING COMMAND ~ MID-ATLANTIC
ROICC FLORENCE CAMP LEJEUNE
JACKSONVILLE, NC

MCB CAMP LEJEUNE
JACKSONVILLE, NC

P1338F II MEF SIMULATION/TRAINING CENTER
REPLACEMENT

AUDIOVISUAL - REFLECTED CEILING PLAN - AREA B

SCALE: AS NOTED

EPROJECT NO.:

CONSTR. CONTR. NO.
N40085-20-C-0059

NAVFAC DRAWING NO.

SHEET OF

TR112

DP2 SUBMISSION – P1338 BUILDING PRE-FINAL SUBMISSION

PLOTTED: 6/9/2021 6:52:38 AM

FILE NAME: BIM 360://HF PACKAGE 3/P1338_MEF SIM CTR-1590892-T.rvt

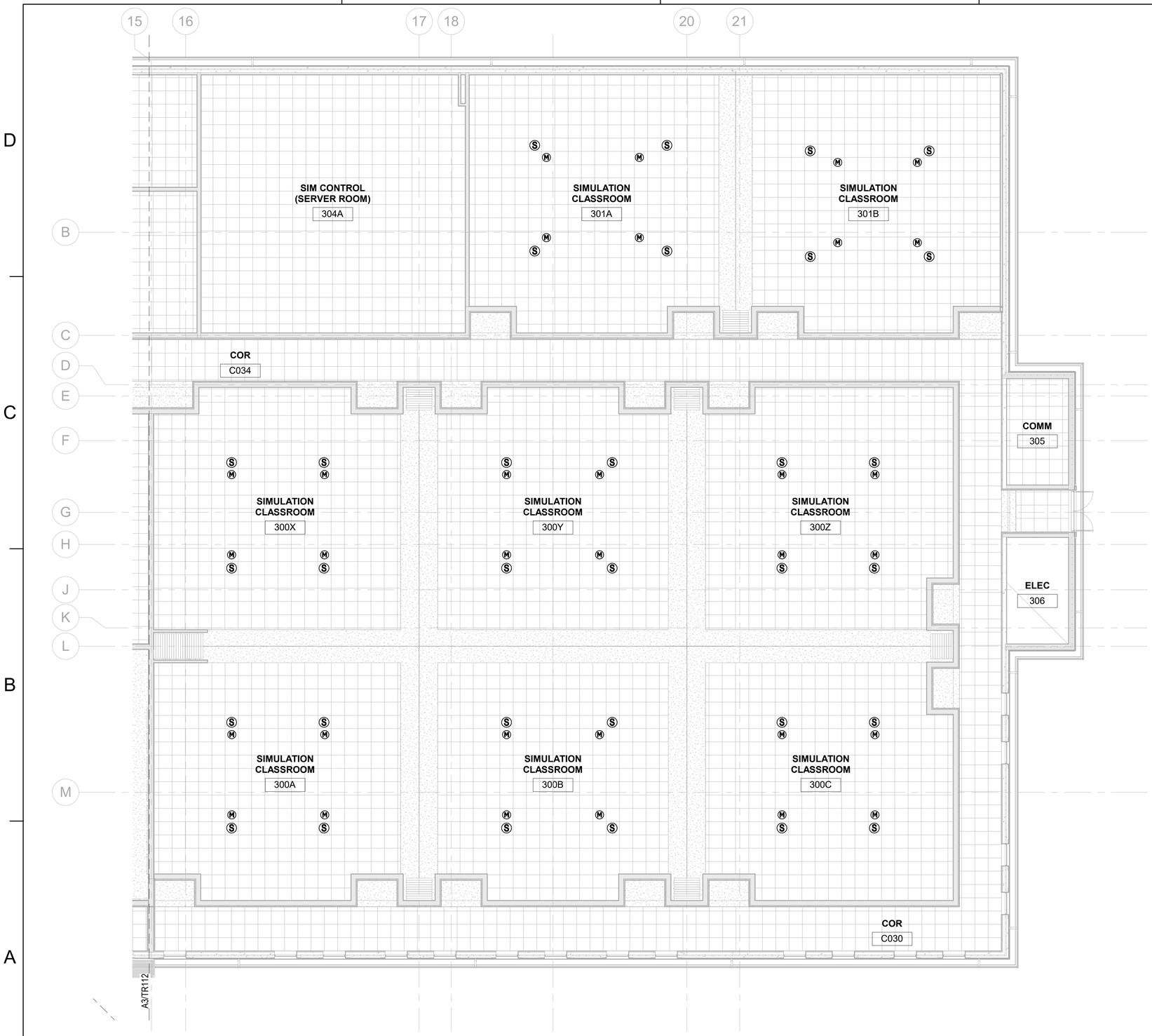

AUDIOVISUAL - REFLECTED CEILING PLAN - AREA C

SCALE: 1/8" = 1'-0"

A4

KEYPLAN

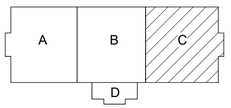

0 48" 96" 192"

SCALE: 1/8" = 12"

N

APPR	
DATE	
DESCRIPTION	
SYM	

NAVFAC

PRELIMINARY NOT FOR CONSTRUCTION

SEAL

IRQ WM Jordan COMPANY ~A JOINT VENTURE~

Michael Baker INTERNATIONAL

100 AIRSIDE DRIVE
MOON TOWNSHIP, PA 15108 A/E INFO

APPROVED

FOR COMMANDER NAVFAC

ACTIVITY
MARINE CORPS BASE CAMP LEJEUNE

SATISFACTORY TO DATE

DES AS | DRW AV | CHK BM

PM

BRANCH MANAGER

CHIEF ENG/ARCH

FIRE PROTECTION

DEPARTMENT OF THE NAVY
NAVAL FACILITIES ENGINEERING COMMAND
ROICC FLORENCE CAMP LEJEUNE

NAVAL FACILITIES ENGINEERING COMMAND ~ MID-ATLANTIC
JACKSONVILLE, NC

MCB CAMP LEJEUNE
JACKSONVILLE, NC
P1338F II MEF SIMULATION/TRAINING CENTER REPLACEMENT

AUDIOVISUAL - REFLECTED CEILING PLAN - AREA C

SCALE: AS NOTED

EPROJECT NO.:

CONSTR. CONTR. NO.
N40085-20-C-0059

NAVFAC DRAWING NO.

SHEET OF

TR113

DP2 SUBMISSION – P1338 BUILDING PRE-FINAL SUBMISSION

PLOTTED: 6/9/2021 6:52:40 AM

FILE NAME: BIM 360://HF PACKAGE 3/P1338_MEF SIM CTR-1590892-T.rvt



AUDIOVISUAL - REFLECTED CEILING PLAN - AREA D

SCALE: 1/8" = 1'-0"

C3

KEYPLAN

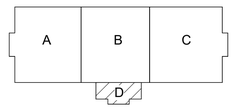



SCALE: 1/8" = 12"

N

APPR	DATE	DESCRIPTION	SYM

NAVFAC

PRELIMINARY
NOT FOR CONSTRUCTION

SEAL

IRQ WM Jordan COMPANY ~A JOINT VENTURE~

Michael Baker
INTERNATIONAL

100 AIRSIDE DRIVE
MOON TOWNSHIP, PA 15108 A/E INFO

APPROVED

FOR COMMANDER NAVFAC

ACTIVITY
MARINE CORPS BASE
CAMP LEJEUNE

SATISFACTORY TO DATE

DES AS	DRW AV	CHK BM

PM

BRANCH MANAGER

CHIEF ENG/ARCH

FIRE PROTECTION

DEPARTMENT OF THE NAVY
NAVAL FACILITIES ENGINEERING COMMAND
ROICC FLORENCE CAMP LEJEUNE
MCB CAMP LEJEUNE

NAVAL FACILITIES ENGINEERING COMMAND ~ MID-ATLANTIC
JACKSONVILLE, NC

JACKSONVILLE, NC
P1338F II MEF SIMULATION/TRAINING CENTER
REPLACEMENT

AUDIOVISUAL - REFLECTED CEILING PLAN - AREA D

SCALE:	AS NOTED
EPROJECT NO.:	
CONSTR. CONTR. NO.	N40085-20-C-0059
NAVFAC DRAWING NO.	
SHEET	OF

TR114

DP2 SUBMISSION – P1338 BUILDING PRE-FINAL SUBMISSION

PLOTTED: 6/9/2021 6:52:40 AM

FILE NAME: BIM 360://HF PACKAGE 3/P1338_MEF SIM CTR-1590892-T.rvt

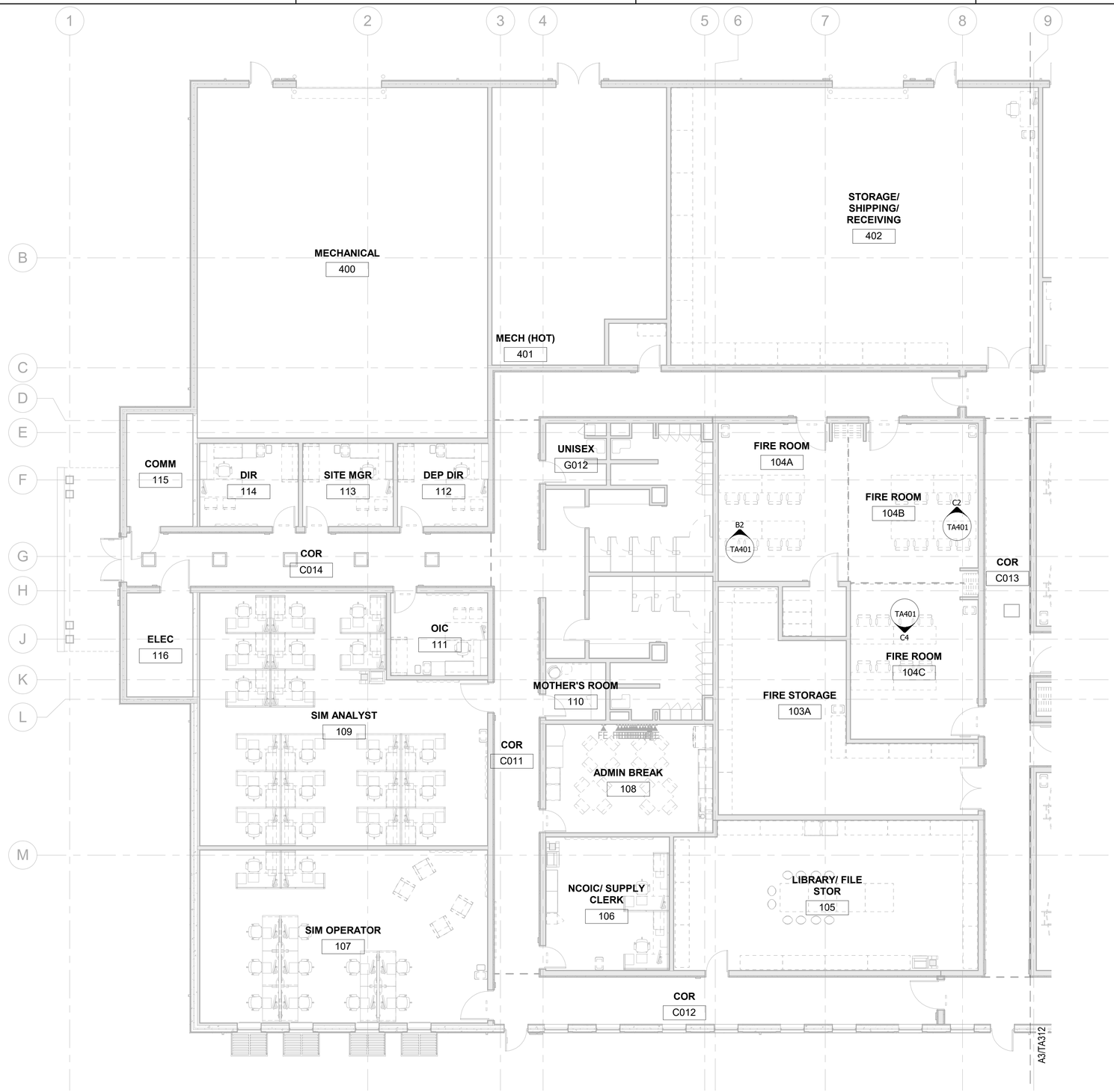

EQUIPMENT - FLOOR PLAN - AREA A

SCALE: 1/8" = 1'-0"

A4

KEYPLAN

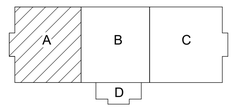

0 48" 96" 192"

SCALE: 1/8" = 12"

N

APPR	
DATE	
DESCRIPTION	
SYM	

NAVFAC

PRELIMINARY
NOT FOR CONSTRUCTION

SEAL

IRQ Jordan COMPANY ~A JOINT VENTURE~

Michael Baker
INTERNATIONAL

100 AIRSIDE DRIVE
MOON TOWNSHIP, PA 15108

A/E INFO

APPROVED

FOR COMMANDER NAVFAC

ACTIVITY
MARINE CORPS BASE
CAMP LEJEUNE

SATISFACTORY TO DATE

DES AS | DRW AV | CHK BM

PM

BRANCH MANAGER

CHIEF ENG/ARCH

FIRE PROTECTION

DEPARTMENT OF THE NAVY
NAVAL FACILITIES ENGINEERING COMMAND
ROICC FLORENCE CAMP LEJEUNE

NAVAL FACILITIES ENGINEERING COMMAND ~ MID-ATLANTIC
JACKSONVILLE, NC

MCB CAMP LEJEUNE
JACKSONVILLE, NC

P1338F II MEF SIMULATION/TRAINING CENTER
REPLACEMENT

EQUIPMENT - FLOOR PLAN - AREA A

SCALE: AS NOTED

EPROJECT NO.:

CONSTR. CONTR. NO.
N40085-20-C-0059

NAVFAC DRAWING NO.

SHEET OF

TA311

DP2 SUBMISSION – P1338 BUILDING PRE-FINAL SUBMISSION

PLOTTED: 6/9/2021 6:52:19 AM

FILE NAME: BIM 360://HF PACKAGE 3/P1338_MEF SIM CTR-15908892-T.rvt

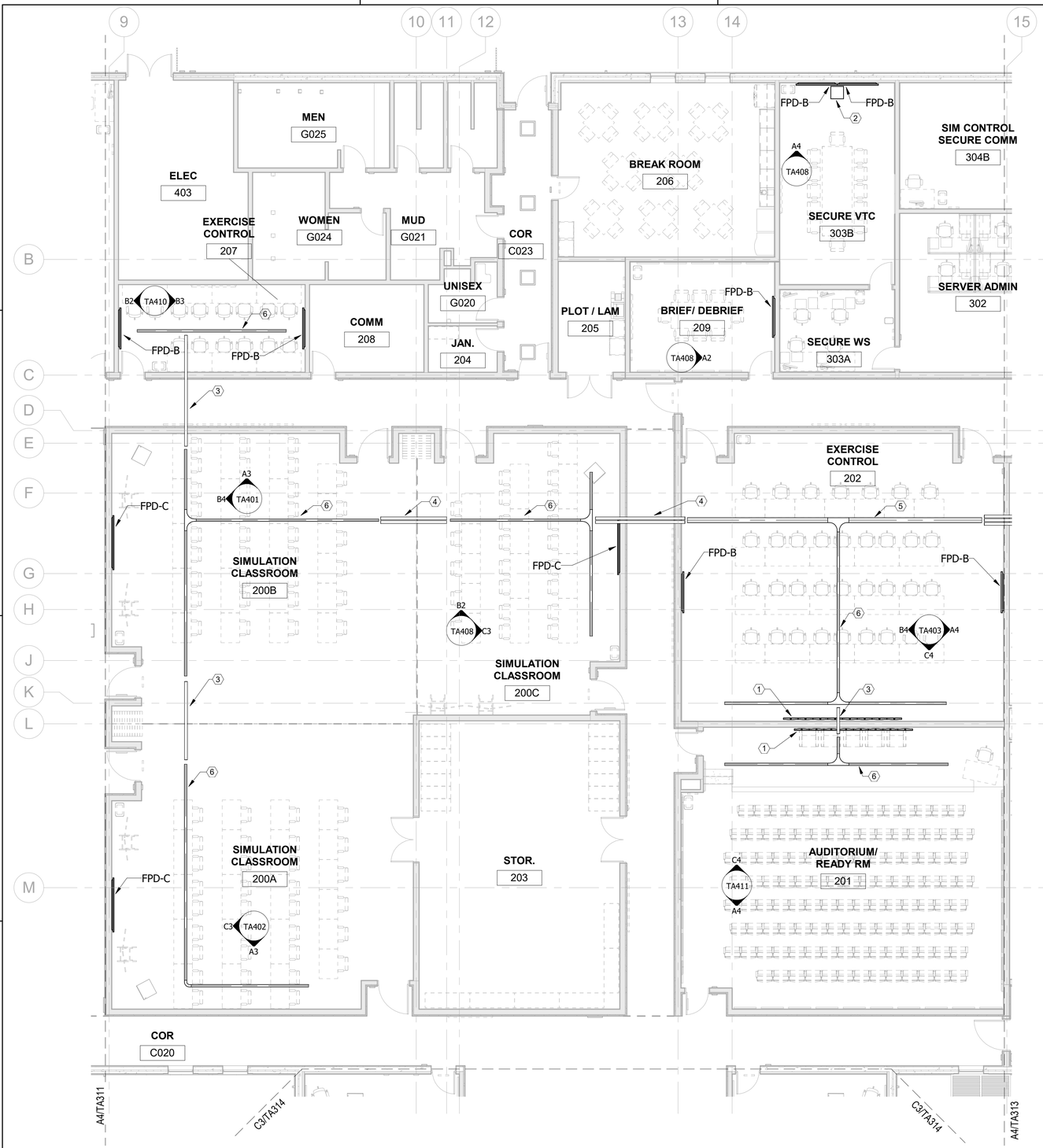

KEYNOTE LEGEND

1	LED VIDEO WALL, PROVIDED BY AVC.
2	AUDIOVISUAL EQUIPMENT RACK, PROVIDED BY AVC.
3	PROVIDE ONE (1) 4" CONDUIT SLEEVES FOR HORIZONTAL CABLE DISTRIBUTION, REFER TO TELECOM DRAWINGS FOR INSTALLATION DETAILS.
4	PROVIDE TWO (2) 4" CONDUIT SLEEVES FOR HORIZONTAL CABLE DISTRIBUTION, REFER TO TELECOM DRAWINGS FOR INSTALLATION DETAILS.
5	PROVIDE 8" X 4" WIRE-BASKET TYPE CABLE TRAY MOUNTED ABOVE ACCESSIBLE CEILING; COORDINATE TRAY PLACEMENT WITH OTHER TRADES.
6	PROVIDE 4" X 4" WIRE-BASKET TYPE CABLE TRAY MOUNTED ABOVE ACCESSIBLE CEILING; COORDINATE TRAY PLACEMENT WITH OTHER TRADES.

KEYPLAN

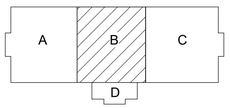

0 48" 96" 192"

SCALE: 1/8" = 12"

N

EQUIPMENT - FLOOR PLAN - AREA B

SCALE: 1/8" = 1'-0"

A3

APPR			
DATE			
DESCRIPTION			
SYM			

NAVFAC

PRELIMINARY NOT FOR CONSTRUCTION

SEAL

RQ W.M. Jordan COMPANY – A JOINT VENTURE –

Michael Baker INTERNATIONAL

100 AIRSIDE DRIVE
MOON TOWNSHIP, PA 15108 A/E INFO

APPROVED

FOR COMMANDER NAVFAC

ACTIVITY
MARINE CORPS BASE CAMP LEJEUNE

SATISFACTORY TO DATE

DES AS | DRW AV | CHK BM

PM

BRANCH MANAGER

CHIEF ENG/ARCH

FIRE PROTECTION

DEPARTMENT OF THE NAVY
NAVAL FACILITIES ENGINEERING COMMAND
ROICC FLORENCE CAMP LEJEUNE

NAVAL FACILITIES ENGINEERING COMMAND – MID-ATLANTIC
JACKSONVILLE, NC

MCB CAMP LEJEUNE
JACKSONVILLE, NC

P1338F II MEF SIMULATION/TRAINING CENTER REPLACEMENT

EQUIPMENT - FLOOR PLAN - AREA B

SCALE: AS NOTED

EPROJECT NO.:

CONSTR. CONTR. NO.
N40085-20-C-0059

NAVFAC DRAWING NO.

SHEET OF

TA312

DP2 SUBMISSION – P1338 BUILDING PRE-FINAL SUBMISSION

PLOTTED: 6/9/2021 6:52:22 AM

FILE NAME: BIM 360://HF PACKAGE 3/P1338_MEF SIM CTR-15R0892-T.rvt

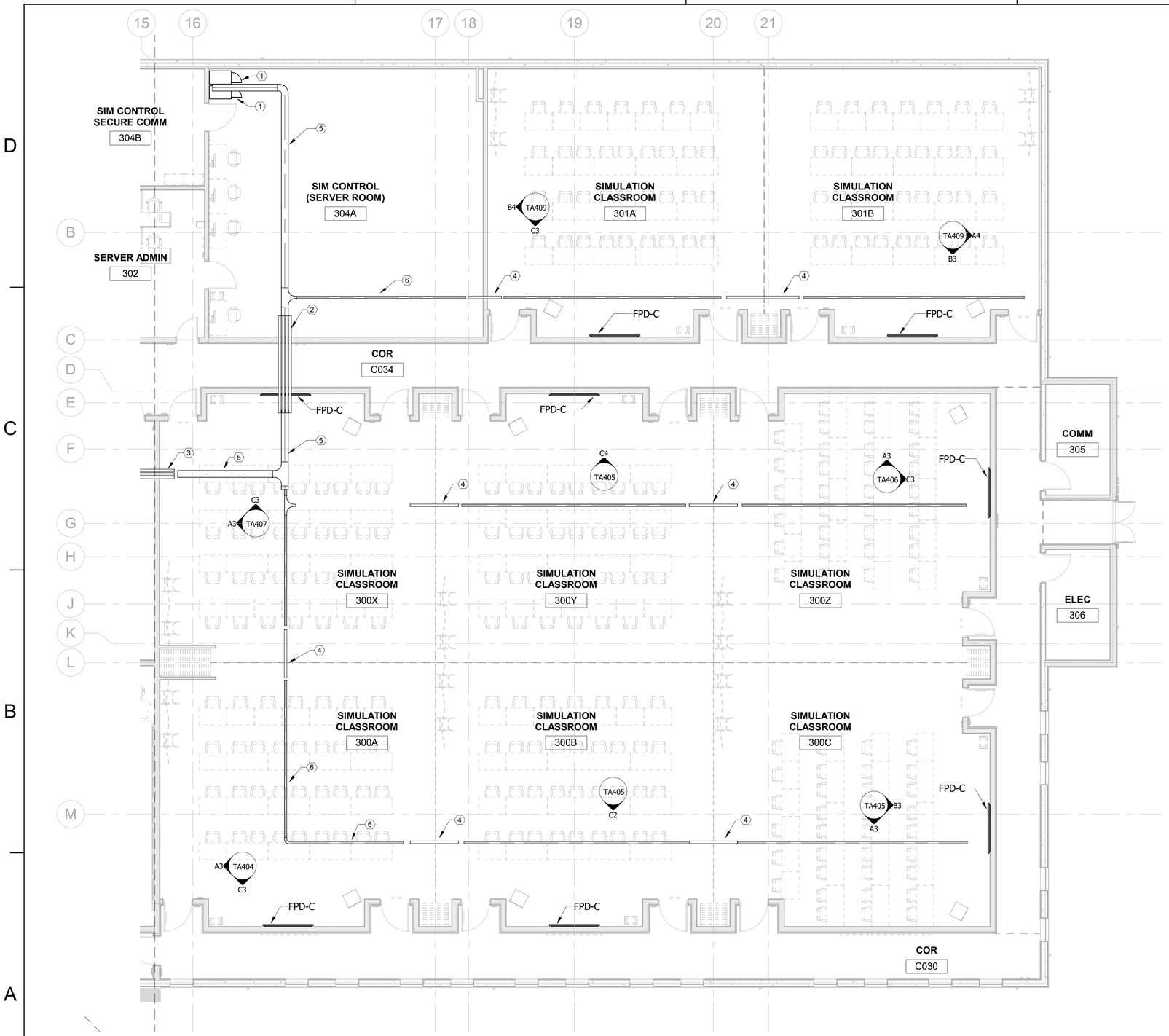

KEYNOTE LEGEND

1	AUDIOVISUAL EQUIPMENT RACK, PROVIDED BY AVC.
2	PROVIDE FOUR (4) 4" CONDUIT SLEEVES FOR HORIZONTAL CABLE DISTRIBUTION, REFER TO TELECOM DRAWINGS FOR INSTALLATION DETAILS.
3	PROVIDE THREE (3) 4" CONDUIT SLEEVES FOR HORIZONTAL CABLE DISTRIBUTION, REFER TO TELECOM DRAWINGS FOR INSTALLATION DETAILS.
4	PROVIDE ONE (1) 4" CONDUIT SLEEVES FOR HORIZONTAL CABLE DISTRIBUTION, REFER TO TELECOM DRAWINGS FOR INSTALLATION DETAILS.
5	PROVIDE 12" X 4" WIRE-BASKET TYPE CABLE TRAY MOUNTED ABOVE ACCESSIBLE CEILING; COORDINATE TRAY PLACEMENT WITH OTHER TRADES.
6	PROVIDE 4" X 4" WIRE-BASKET TYPE CABLE TRAY MOUNTED ABOVE ACCESSIBLE CEILING; COORDINATE TRAY PLACEMENT WITH OTHER TRADES.

KEYPLAN

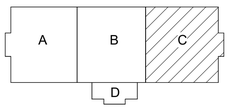

0 48" 96" 192"

SCALE: 1/8" = 12"

N

EQUIPMENT - FLOOR PLAN - AREA C

SCALE: 1/8" = 1'-0"

A4

APPR	
DATE	
DESCRIPTION	
SYM	

NAVFAC

PRELIMINARY NOT FOR CONSTRUCTION

SEAL

RQ W.M. Jordan COMPANY ~A JOINT VENTURE~

Michael Baker INTERNATIONAL

100 AIRSIDE DRIVE
MOON TOWNSHIP, PA 15108

A/E INFO

APPROVED

FOR COMMANDER NAVFAC

ACTIVITY
MARINE CORPS BASE CAMP LEJEUNE

SATISFACTORY TO DATE

DES AS | DRW AV | CHK BM

PM

BRANCH MANAGER

CHIEF ENG/ARCH

FIRE PROTECTION

DEPARTMENT OF THE NAVY
NAVAL FACILITIES ENGINEERING COMMAND
ROICC FLORENCE CAMP LEJEUNE

NAVAL FACILITIES ENGINEERING COMMAND ~ MID-ATLANTIC
JACKSONVILLE, NC

MCB CAMP LEJEUNE
JACKSONVILLE, NC

P1338F II MEF SIMULATION/TRAINING CENTER REPLACEMENT

EQUIPMENT - FLOOR PLAN - AREA C

SCALE: AS NOTED

EPROJECT NO.:

CONSTR. CONTR. NO.
N40085-20-C-0059

NAVFAC DRAWING NO.

SHEET OF

TA313

DP2 SUBMISSION – P1338 BUILDING PRE-FINAL SUBMISSION

PLOTTED: 6/9/2021 6:52:24 AM

FILE NAME: BIM 360://HF PACKAGE 3/P1338_MEF SIM CTR-15908892-T.rvt

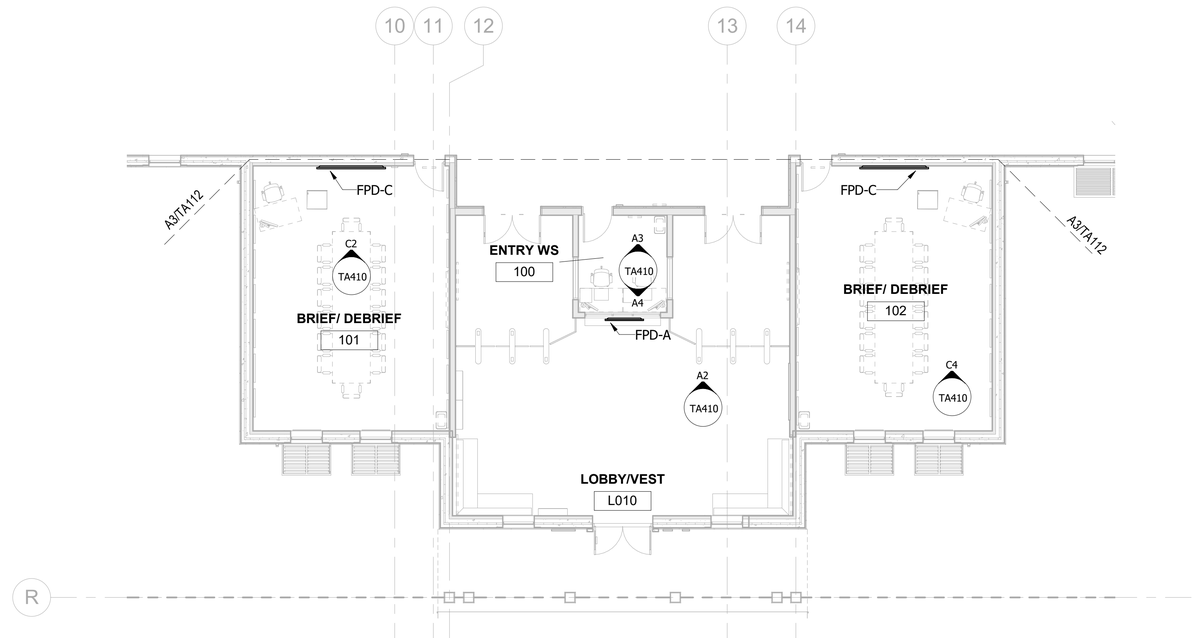

EQUIPMENT - FLOOR PLAN - AREA D

SCALE: 1/8" = 1'-0"

C3

KEYPLAN

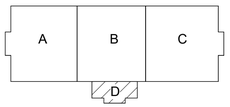

0 48" 96" 192"

SCALE: 1/8" = 12"

N

APPR	DATE	DESCRIPTION	SYM

NAVFAC

PRELIMINARY NOT FOR CONSTRUCTION

SEAL

IRQ W.M. Jordan COMPANY ~A JOINT VENTURE~

Michael Baker INTERNATIONAL

100 AIRSIDE DRIVE
MOON TOWNSHIP, PA 15108 A/E INFO

APPROVED

FOR COMMANDER NAVFAC

ACTIVITY
MARINE CORPS BASE
CAMP LEJEUNE

SATISFACTORY TO DATE

DES AS	DRW AV	CHK BM

PM

BRANCH MANAGER

CHIEF ENG/ARCH

FIRE PROTECTION

DEPARTMENT OF THE NAVY
NAVAL FACILITIES ENGINEERING COMMAND
ROICC FLORENCE CAMP LEJEUNE
MCB CAMP LEJEUNE

NAVAL FACILITIES ENGINEERING COMMAND ~ MID-ATLANTIC
JACKSONVILLE, NC

JACKSONVILLE, NC
P1338F II MEF SIMULATION/TRAINING CENTER
REPLACEMENT

EQUIPMENT - FLOOR PLAN - AREA D

SCALE: AS NOTED

EPROJECT NO.:

CONSTR. CONTR. NO.
N40085-20-C-0059

NAVFAC DRAWING NO.

SHEET OF

TA314

DP2 SUBMISSION – P1338 BUILDING PRE-FINAL SUBMISSION

PLOTTED: 6/9/2021 6:52:24 AM

FILE NAME: BIM 360://HF PACKAGE 3/P1338_MEF SIM CTR-1590892-T.rvt

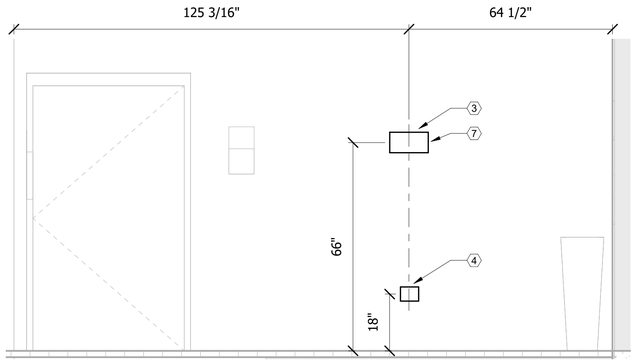

FIRE ROOM 104B
SCALE: 1/2" = 1'-0"
C2

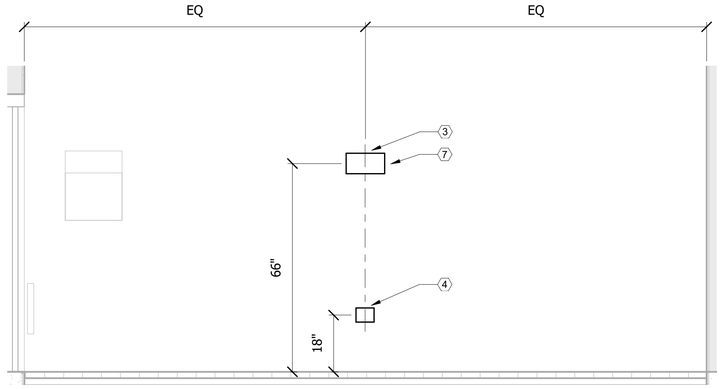

FIRE ROOM 104C
SCALE: 1/2" = 1'-0"
C4

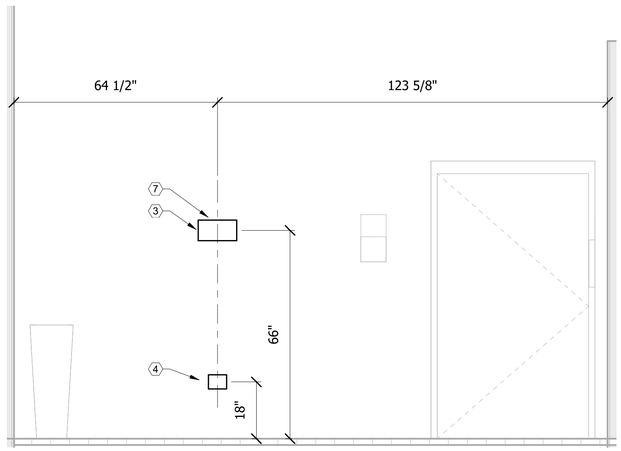

FIRE ROOM 104A
SCALE: 1/2" = 1'-0"
B2

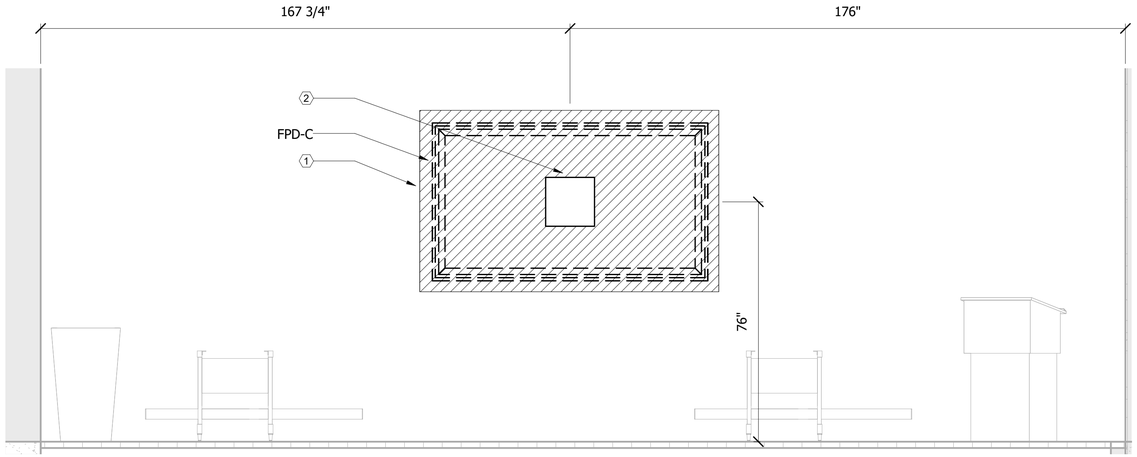

SIMULATION CLASSROOM 200B
SCALE: 1/2" = 1'-0"
TA112
B4

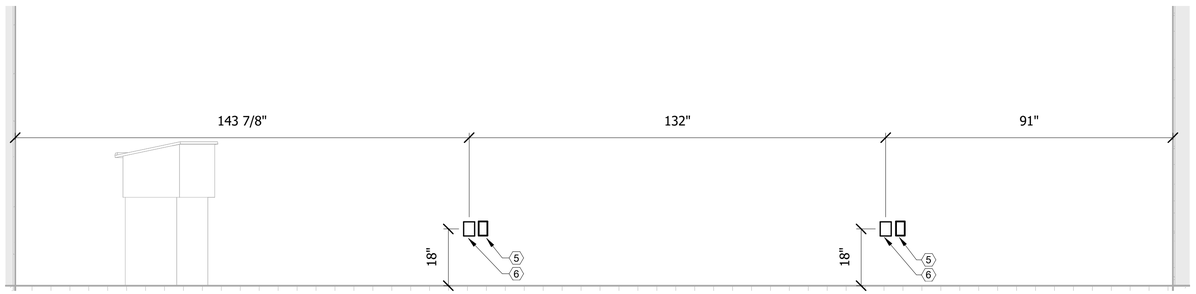

SIMULATION CLASSROOM 200B
SCALE: 1/2" = 1'-0"
A3

0 12" 24" 48"
SCALE: 1/2" = 12"

KEYNOTE LEGEND

1	BACKING TO SUPPORT FIVE TIMES WEIGHT OF DISPLAY AND MOUNT
2	CHIEF PAC 526 (DUPLEX, 2D) SEE DETAIL A2/TA501
3	FSR PWB-100 (DUPLEX, 2D) SEE DETAIL A3/TA502
4	TWO GANG AV BACK BOX
5	DUPLEX RECEPTACLE
6	ONE GANG AV BACK BOX
7	PROVIDE FSR PWB-100-WHT-C USED TO COVER FSR PWB-100-B.

SYM	DESCRIPTION	DATE	APPR

NAVFAC

PRELIMINARY NOT FOR CONSTRUCTION

SEAL

IRQ W.M. Jordan COMPANY ~A JOINT VENTURE~

Michael Baker INTERNATIONAL
100 AIRSIDE DRIVE
MOON TOWNSHIP, PA 15108
A/E INFO

APPROVED

FOR COMMANDER NAVFAC

ACTIVITY
MARINE CORPS BASE
CAMP LEJEUNE

SATISFACTORY TO DATE

DES AS | DRW AV | CHK BM

PM

BRANCH MANAGER

CHIEF ENG/ARCH

FIRE PROTECTION

DEPARTMENT OF THE NAVY
NAVAL FACILITIES ENGINEERING COMMAND ~ MID-ATLANTIC
ROICC FLORENCE CAMP LEJEUNE
MCB CAMP LEJEUNE

NAVAL FACILITIES ENGINEERING COMMAND
JACKSONVILLE, NC

JACKSONVILLE, NC
P1338F II MEF SIMULATION/TRAINING CENTER
REPLACEMENT

AUDIOVISUAL - ELEVATIONS

SCALE: AS NOTED
EPROJECT NO.:
CONSTR. CONTR. NO.
N40085-20-C-0059
NAVFAC DRAWING NO.
SHEET OF

TA401

DP2 SUBMISSION – P1338 BUILDING PRE-FINAL SUBMISSION

PLOTTED: 6/9/2021 6:52:26 AM

FILE NAME: BIM 360://HF PACKAGE 3/P1338_MEF SIM CTR-15908921.rvt

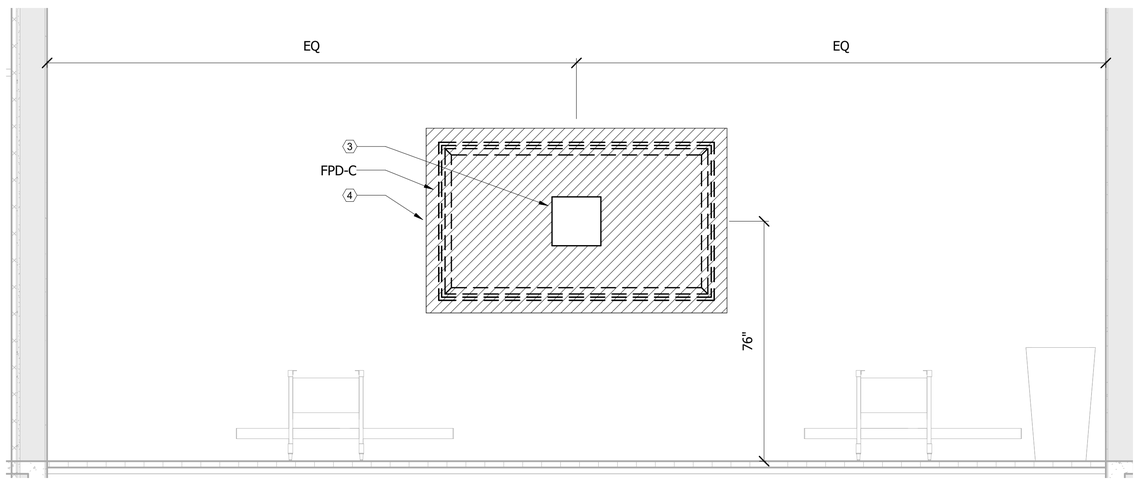

SIMULATION CLASSROOM 200A

SCALE: 1/2" = 1'-0"

C3

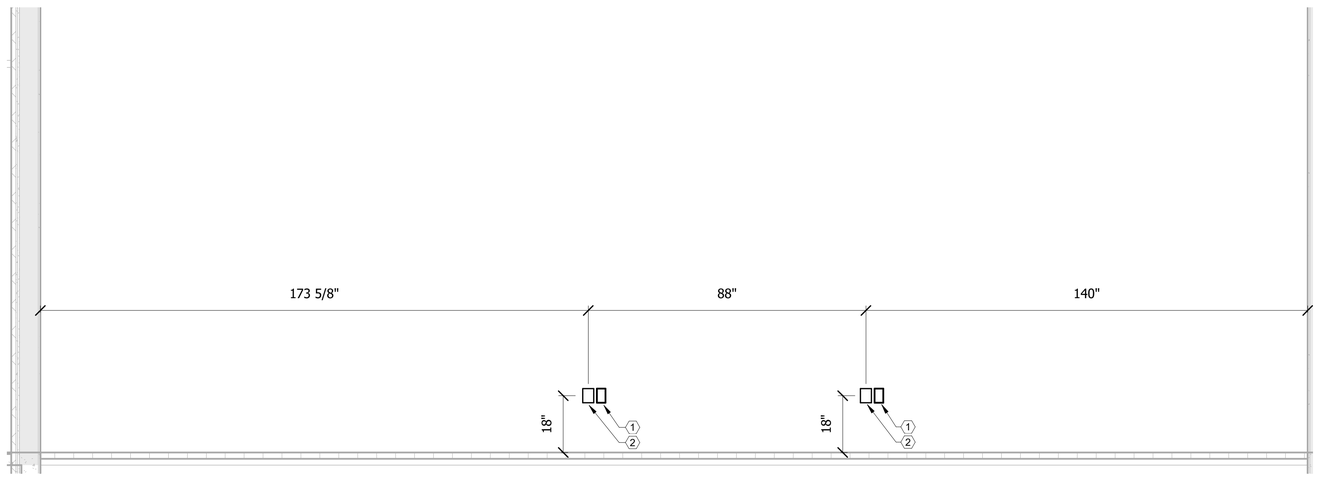

SIMULATION CLASSROOM 200A

SCALE: 1/2" = 1'-0"

A3

KEYNOTE LEGEND

1	DUPLEX RECEPTACLE
2	ONE GANG AV BACK BOX
3	CHIEF PAC 526 (DUPLEX, 2D) SEE DETAIL A2/TA501
4	BACKING TO SUPPORT FIVE TIMES WEIGHT OF DISPLAY AND MOUNT

0 12" 24" 48"

SCALE: 1/2" = 12"

SYM	DESCRIPTION	DATE	APPR

PRELIMINARY NOT FOR CONSTRUCTION

SEAL

IRQ Wm. Jordan COMPANY ~A JOINT VENTURE~

Michael Baker INTERNATIONAL

100 AIRSIDE DRIVE
MOON TOWNSHIP, PA 15108 A/E INFO

APPROVED

FOR COMMANDER NAVFAC

ACTIVITY
MARINE CORPS BASE
CAMP LEJEUNE

SATISFACTORY TO DATE

DES AS | DRW AV | CHK BM

PM

BRANCH MANAGER

CHIEF ENG/ARCH

FIRE PROTECTION

DEPARTMENT OF THE NAVY
NAVAL FACILITIES ENGINEERING COMMAND ~ MID-ATLANTIC
ROICC FLORENCE CAMP LEJEUNE

NAVAL FACILITIES ENGINEERING COMMAND
JACKSONVILLE, NC

MCB CAMP LEJEUNE

JACKSONVILLE, NC
P1338F II MEF SIMULATION/TRAINING CENTER
REPLACEMENT

AUDIOVISUAL - ELEVATIONS

SCALE: AS NOTED

EPROJECT NO.:

CONSTR. CONTR. NO.
N40085-20-C-0059

NAVFAC DRAWING NO.

SHEET OF

TA402

DP2 SUBMISSION – P1338 BUILDING PRE-FINAL SUBMISSION

PLOTTED: 6/9/2021 6:52:26 AM

FILE NAME: BIM 360://HF PACKAGE 3/P1338_MEF SIM CTR-1590892-T.rvt

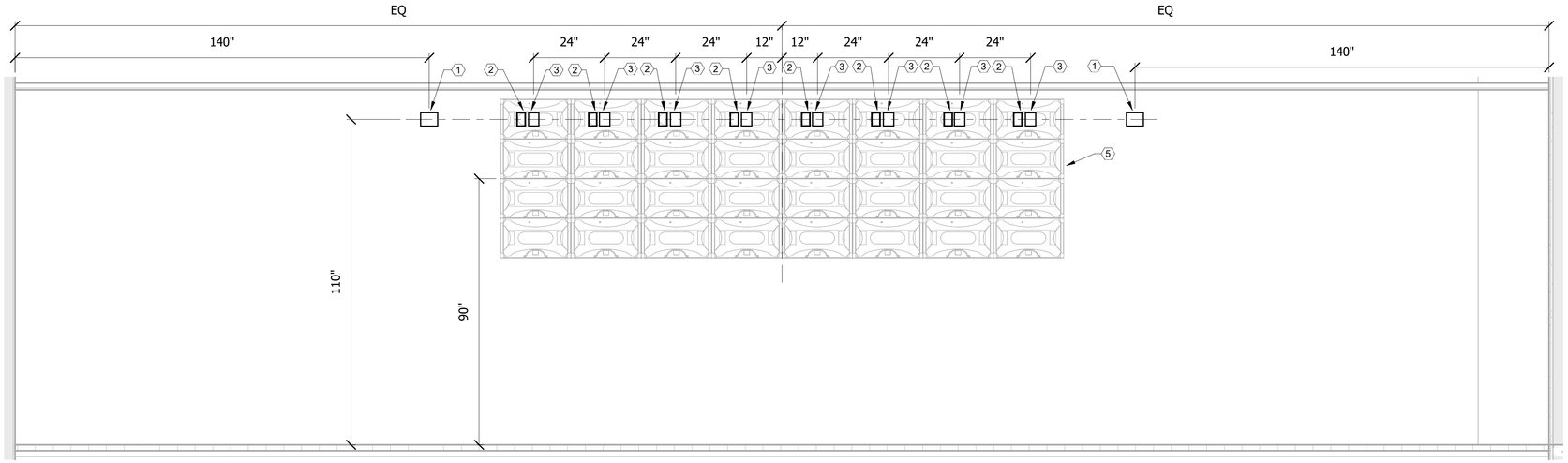

EXERCISE CONTROL 202

SCALE: 1/2" = 1'-0"

C4

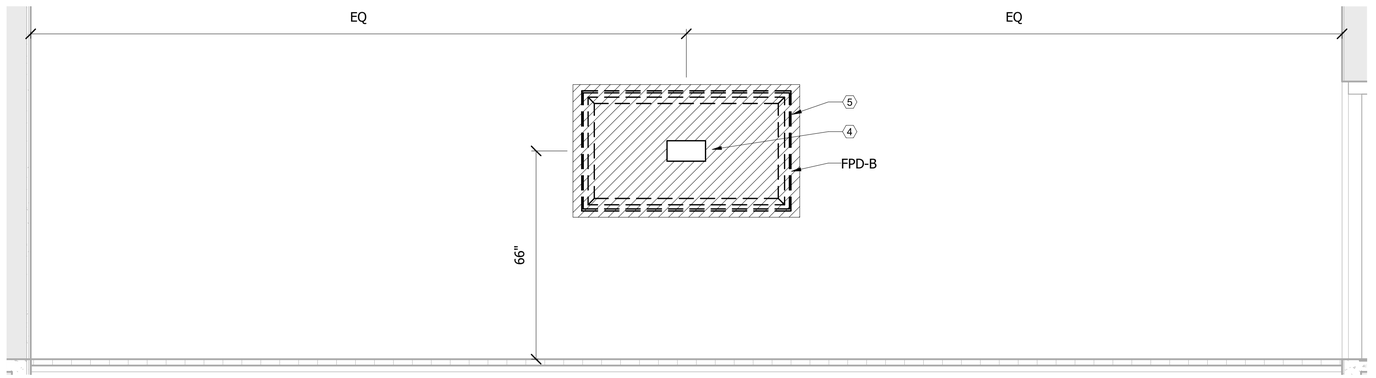

EXERCISE CONTROL 202

SCALE: 1/2" = 1'-0"

B4

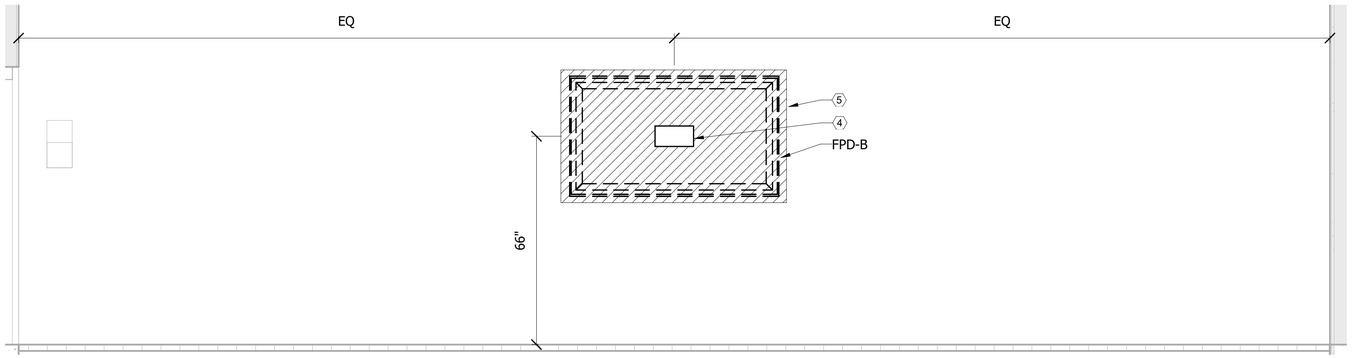

EXERCISE CONTROL 202

SCALE: 1/2" = 1'-0"

A4

KEYNOTE LEGEND

1	TWO GANG AV BACK BOX FOR WALL MOUNTED CAMERAS
2	RECESSED CLOCK RECEPTACLE
3	ONE GANG AV BACK BOX
4	FSR PWB-100 (DUPLEX, 2D) SEE DETAIL A3/TA502
5	BACKING TO SUPPORT FIVE TIMES WEIGHT OF DISPLAY AND MOUNT

0 12" 24" 48"

SCALE: 1/2" = 12"

APPR | DATE | DESCRIPTION | SYM

PRELIMINARY NOT FOR CONSTRUCTION

SEAL

IRQ WM Jordan COMPANY – A JOINT VENTURE –

Michael Baker INTERNATIONAL

100 AIRSIDE DRIVE
MOON TOWNSHIP, PA 15108 A/E INFO

APPROVED

FOR COMMANDER NAVFAC

ACTIVITY
MARINE CORPS BASE
CAMP LEJEUNE

SATISFACTORY TO DATE

DES AS | DRW AV | CHK BM

PM

BRANCH MANAGER

CHIEF ENG/ARCH

FIRE PROTECTION

DEPARTMENT OF THE NAVY
NAVAL FACILITIES ENGINEERING COMMAND
ROICC FLORENCE CAMP LEJEUNE
MCB CAMP LEJEUNE

NAVAL FACILITIES ENGINEERING COMMAND – MID-ATLANTIC
JACKSONVILLE, NC

JACKSONVILLE, NC
P1338F II MEF SIMULATION/TRAINING CENTER
REPLACEMENT

AUDIOVISUAL - ELEVATIONS

SCALE: AS NOTED

EPROJECT NO.:

CONSTR. CONTR. NO.
N40085-20-C-0059

NAVFAC DRAWING NO.

SHEET OF

TA403

DP2 SUBMISSION – P1338 BUILDING PRE-FINAL SUBMISSION

PLOTTED: 6/9/2021 6:52:27 AM

FILE NAME: BIM 360://HF PACKAGE 3/P1338_MEF SIM CTR-1590892-T.rvt

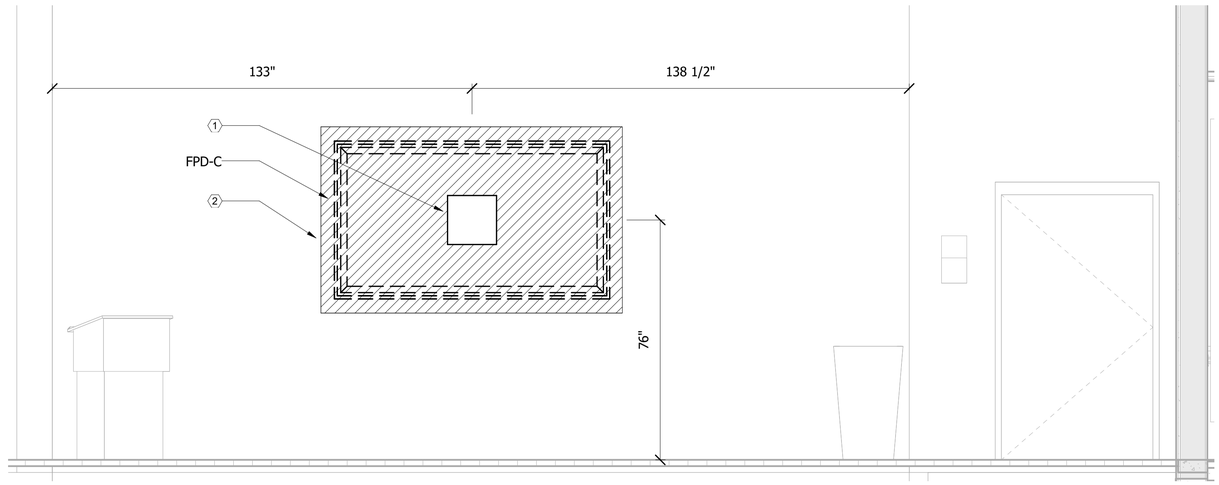

SIMULATION CLASSROOM 300A

SCALE: 1/2" = 1'-0"

C3

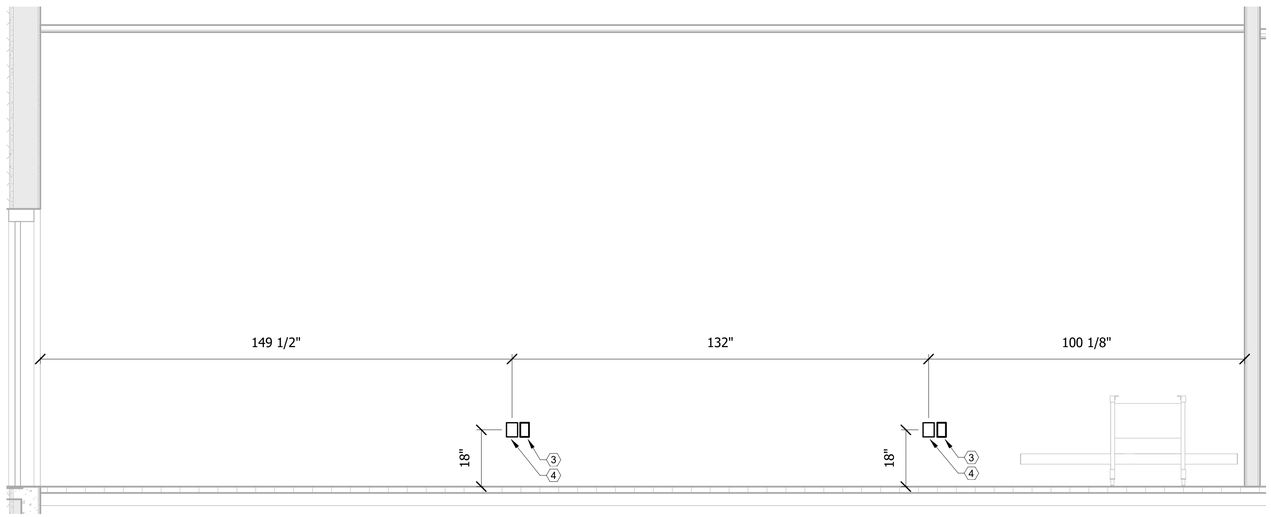

SIMULATION CLASSROOM 300A

SCALE: 1/2" = 1'-0"

A3

KEYNOTE LEGEND

1	CHIEF PAC 526 (DUPLEX, 2D) SEE DETAIL A2/TA501
2	BACKING TO SUPPORT FIVE TIMES WEIGHT OF DISPLAY AND MOUNT
3	DUPLEX RECEPTACLE
4	ONE GANG AV BACK BOX

0 12" 24" 48"

SCALE: 1/2" = 12"

SYM	DESCRIPTION	DATE	APPR

NAVFAC

PRELIMINARY NOT FOR CONSTRUCTION

SEAL

IRQ W.M. Jordan COMPANY ~A JOINT VENTURE~

Michael Baker INTERNATIONAL

100 AIRSIDE DRIVE
MOON TOWNSHIP, PA 15108 A/E INFO

APPROVED

FOR COMMANDER NAVFAC

ACTIVITY
MARINE CORPS BASE
CAMP LEJEUNE

SATISFACTORY TO DATE

DES AS	DRW AV	CHK BM

PM

BRANCH MANAGER

CHIEF ENG/ARCH

FIRE PROTECTION

DEPARTMENT OF THE NAVY
NAVAL FACILITIES ENGINEERING COMMAND
ROICC FLORENCE CAMP LEJEUNE
MCB CAMP LEJEUNE

NAVAL FACILITIES ENGINEERING COMMAND ~ MID-ATLANTIC
JACKSONVILLE, NC

JACKSONVILLE, NC
P1338F II MEF SIMULATION/TRAINING CENTER
REPLACEMENT

AUDIOVISUAL - ELEVATIONS

SCALE: AS NOTED

EPROJECT NO.:

CONSTR. CONTR. NO.
N40085-20-C-0059

NAVFAC DRAWING NO.

SHEET OF

TA404

DP2 SUBMISSION – P1338 BUILDING PRE-FINAL SUBMISSION

PLOTTED: 6/9/2021 6:52:28 AM

FILE NAME: BIM 360://HF PACKAGE 3/P1338_MEF SIM CTR-15908892-T.rvt

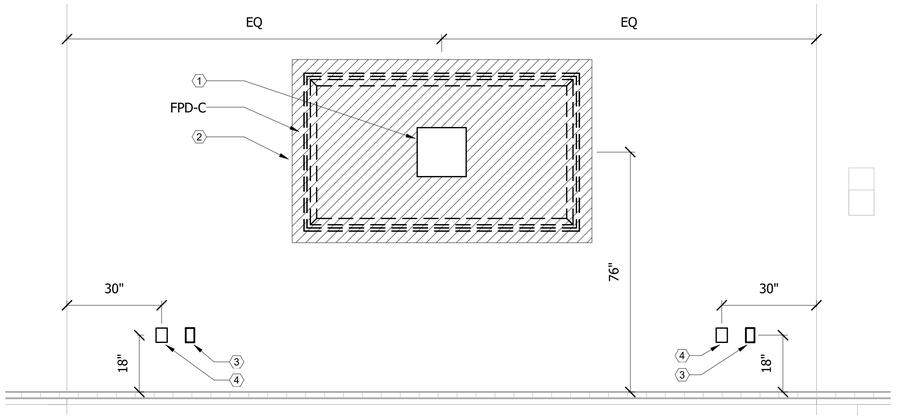

SIMULATION CLASSROOM 300B C2

SCALE: 1/2" = 1'-0"

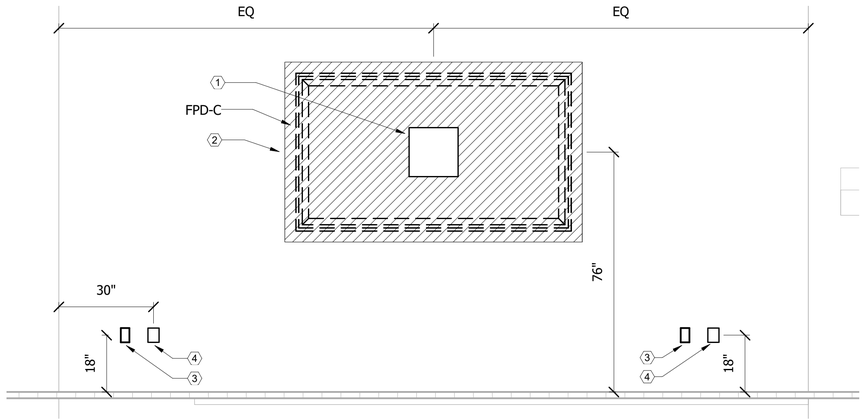

SIMULATION CLASSROOM 300Y C4

SCALE: 1/2" = 1'-0"

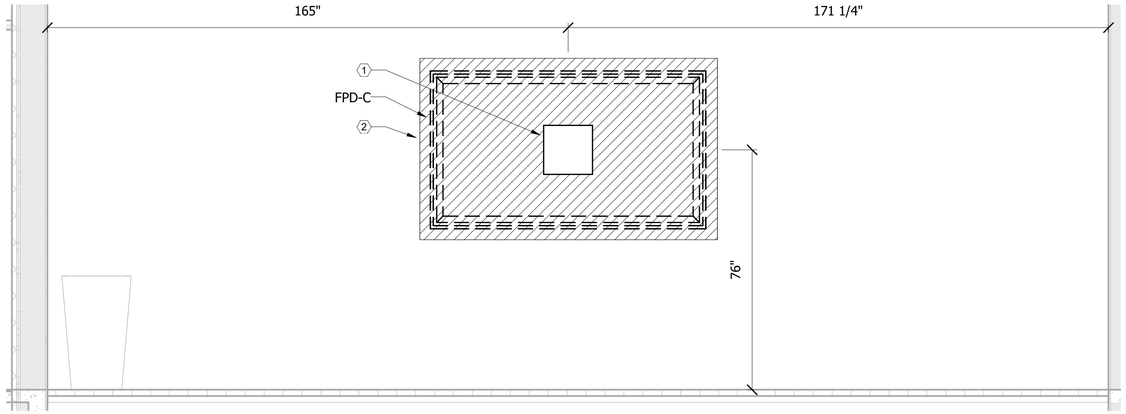

SIMULATION CLASSROOM 300C B3

SCALE: 1/2" = 1'-0"

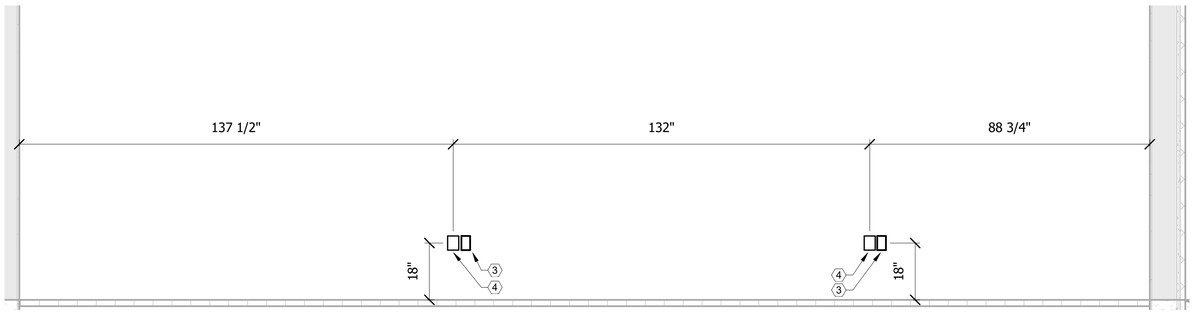

SIMULATION CLASSROOM 300C A3

SCALE: 1/2" = 1'-0"

KEYNOTE LEGEND

1	CHIEF PAC 526 (DUPLEX, 2D) SEE DETAIL A2/TA501
2	BACKING TO SUPPORT FIVE TIMES WEIGHT OF DISPLAY AND MOUNT
3	DUPLEX RECEPTACLE
4	ONE GANG AV BACK BOX

0 12" 24" 48"

SCALE: 1/2" = 12"

APPR | DATE | DESCRIPTION | SYM

NAVFAC

PRELIMINARY NOT FOR CONSTRUCTION

SEAL

IRQ WM Jordan COMPANY ~A JOINT VENTURE~

Michael Baker INTERNATIONAL

100 AIRSIDE DRIVE
MOON TOWNSHIP, PA 15108 A/E INFO

APPROVED

FOR COMMANDER NAVFAC

ACTIVITY
MARINE CORPS BASE CAMP LEJEUNE

SATISFACTORY TO DATE

DES AS | DRW AV | CHK BM

PM

BRANCH MANAGER

CHIEF ENG/ARCH

FIRE PROTECTION

DEPARTMENT OF THE NAVY
NAVAL FACILITIES ENGINEERING COMMAND
ROICC FLORENCE CAMP LEJEUNE

NAVAL FACILITIES ENGINEERING COMMAND ~ MID-ATLANTIC
JACKSONVILLE, NC

MCB CAMP LEJEUNE
JACKSONVILLE, NC
P1338F II MEF SIMULATION/TRAINING CENTER REPLACEMENT

AUDIOVISUAL - ELEVATIONS

SCALE: AS NOTED

EPROJECT NO.:

CONSTR. CONTR. NO.
N40085-20-C-0059

NAVFAC DRAWING NO.

SHEET OF

TA405

DP2 SUBMISSION – P1338 BUILDING PRE-FINAL SUBMISSION

PLOTTED: 6/8/2021 6:52:29 AM

FILE NAME: BIM 360://HF PACKAGE 3/P1338_MEF SIM CTR-15908927.rvt

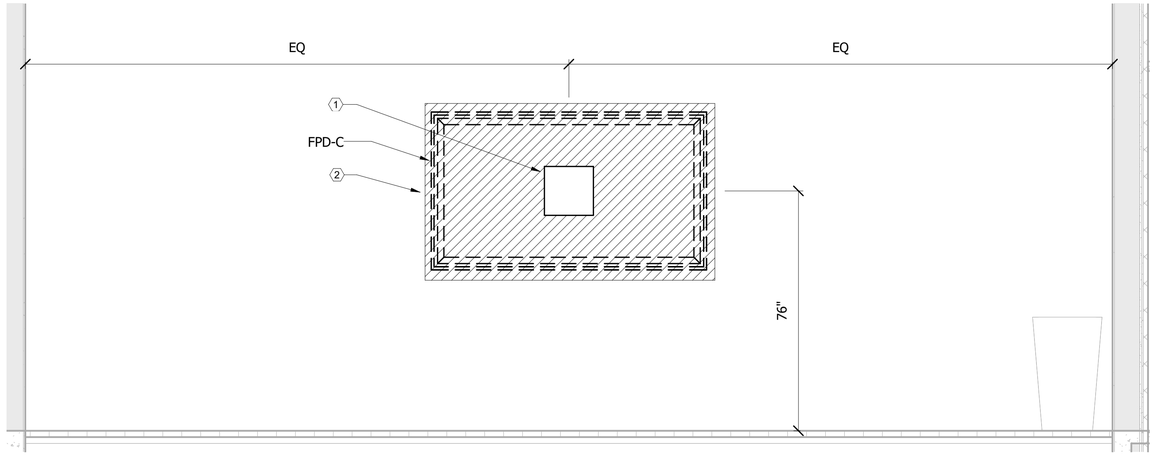

SIMULATION CLASSROOM 300Z

SCALE: 1/2" = 1'-0"

C3

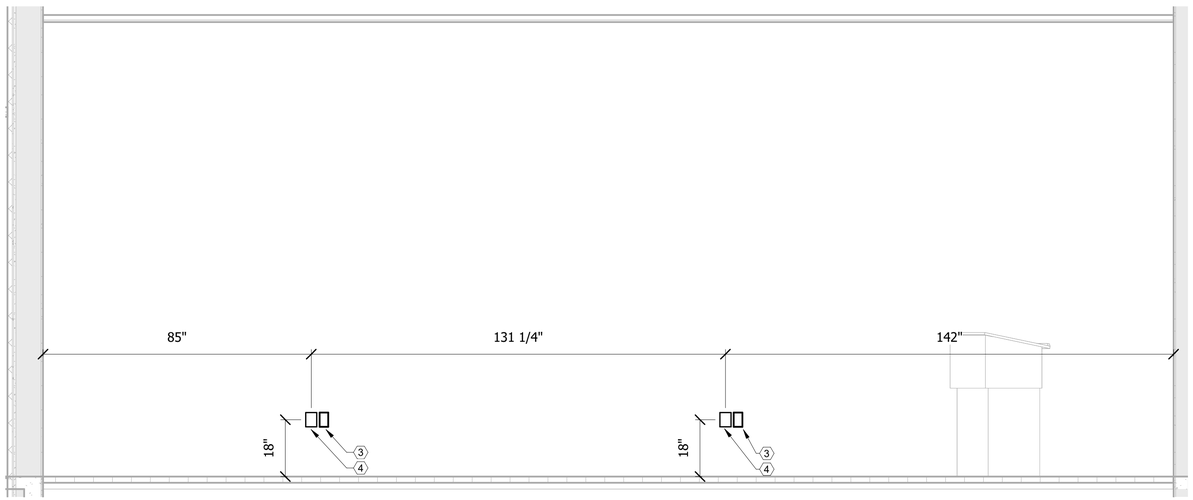

SIMULATION CLASSROOM 300Z

SCALE: 1/2" = 1'-0"

A3

KEYNOTE LEGEND

1	CHIEF PAC 526 (DUPLEX, 2D) SEE DETAIL A2/TA501
2	BACKING TO SUPPORT FIVE TIMES WEIGHT OF DISPLAY AND MOUNT
3	DUPLEX RECEPTACLE
4	ONE GANG AV BACK BOX

0 12" 24" 48"

SCALE: 1/2" = 12"

APPR | DATE | NO. | DESCRIPTION

PRELIMINARY NOT FOR CONSTRUCTION

SEAL

IRQ W.M. Jordan COMPANY ~A JOINT VENTURE~

Michael Baker INTERNATIONAL

100 AIRSIDE DRIVE
MOON TOWNSHIP, PA 15108 A/E INFO

APPROVED

FOR COMMANDER NAVFAC

ACTIVITY
MARINE CORPS BASE
CAMP LEJEUNE

SATISFACTORY TO DATE

DES AS | DRW AV | CHK BM

PM

BRANCH MANAGER

CHIEF ENG/ARCH

FIRE PROTECTION

DEPARTMENT OF THE NAVY
NAVAL FACILITIES ENGINEERING COMMAND
ROICC FLORENCE CAMP LEJEUNE
MCB CAMP LEJEUNE

NAVAL FACILITIES ENGINEERING COMMAND ~ MID-ATLANTIC
JACKSONVILLE, NC

JACKSONVILLE, NC
P1338F II MEF SIMULATION/TRAINING CENTER
REPLACEMENT

AUDIOVISUAL - ELEVATIONS

SCALE: AS NOTED

EPROJECT NO.:

CONSTR. CONTR. NO.
N40085-20-C-0059

NAVFAC DRAWING NO.

SHEET OF

TA406

DP2 SUBMISSION – P1338 BUILDING PRE-FINAL SUBMISSION

PLOTTED: 6/9/2021 6:52:30 AM

FILE NAME: BIM 360://HF PACKAGE 3/P1338_MEF SIM CTR-15908892-T.rvt

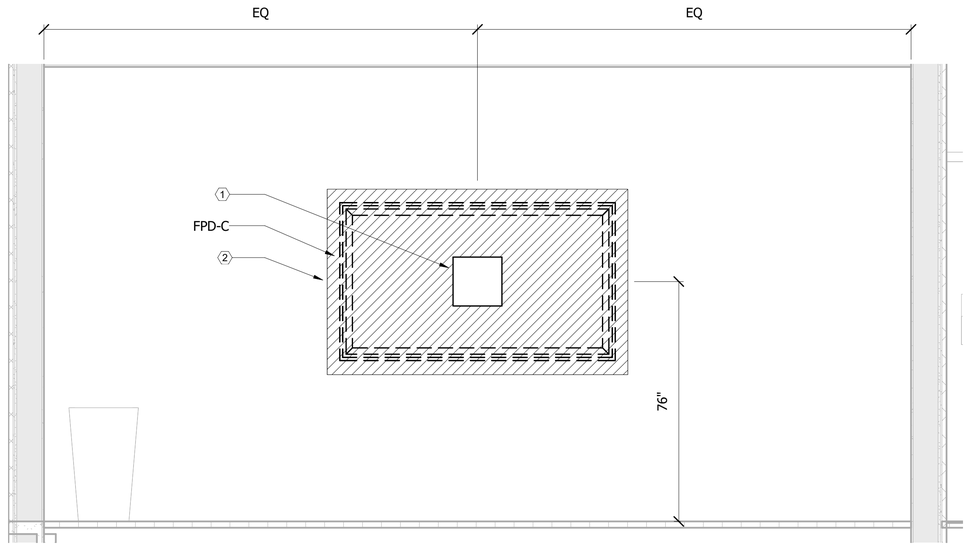

SIMULATION CLASSROOM 300X

SCALE: 1/2" = 1'-0"

TA113 C3

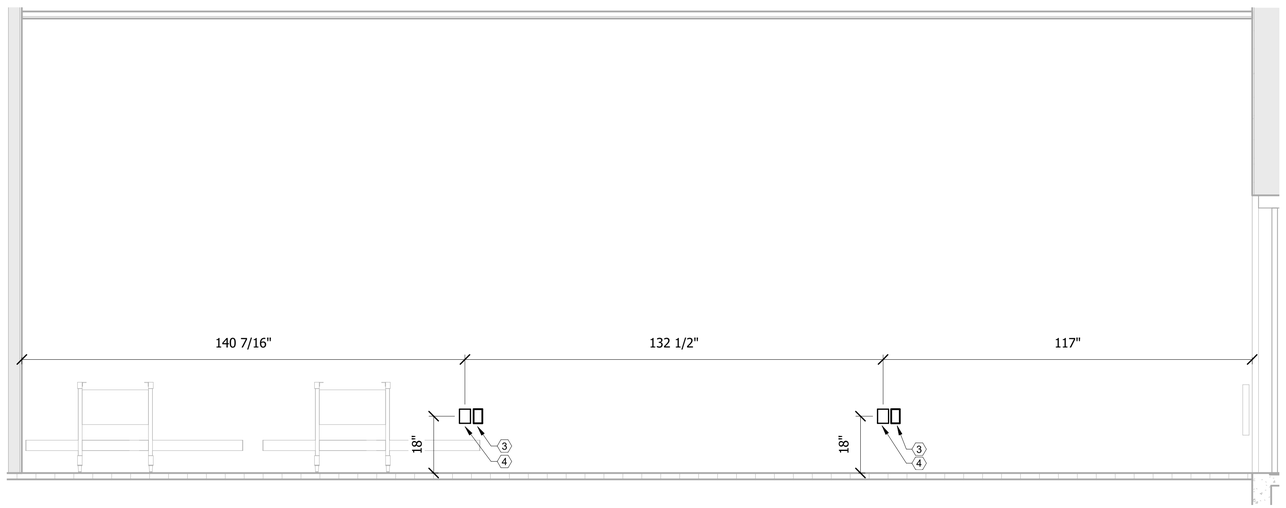

SIMULATION CLASSROOM 300X

SCALE: 1/2" = 1'-0"

A3

KEYNOTE LEGEND

1	CHIEF PAC 526 (DUPLEX, 2D) SEE DETAIL A2/TA501
2	BACKING TO SUPPORT FIVE TIMES WEIGHT OF DISPLAY AND MOUNT
3	DUPLEX RECEPTACLE
4	ONE GANG AV BACK BOX

0 12" 24" 48"

SCALE: 1/2" = 12"

APPR | DATE | DESCRIPTION | SYM

NAVFAC

PRELIMINARY NOT FOR CONSTRUCTION

SEAL

IRQ W.M. Jordan COMPANY ~A JOINT VENTURE~

Michael Baker INTERNATIONAL

100 AIRSIDE DRIVE
MOON TOWNSHIP, PA 15108 A/E INFO

APPROVED

FOR COMMANDER NAVFAC

ACTIVITY
MARINE CORPS BASE
CAMP LEJEUNE

SATISFACTORY TO DATE

DES AS | DRW AV | CHK BM

PM

BRANCH MANAGER

CHIEF ENG/ARCH

FIRE PROTECTION

DEPARTMENT OF THE NAVY
NAVAL FACILITIES ENGINEERING COMMAND
ROICC FLORENCE CAMP LEJEUNE
MCB CAMP LEJEUNE

NAVAL FACILITIES ENGINEERING COMMAND ~ MID-ATLANTIC
JACKSONVILLE, NC

JACKSONVILLE, NC
P1338F II MEF SIMULATION/TRAINING CENTER
REPLACEMENT

AUDIOVISUAL - ELEVATIONS

SCALE: AS NOTED

EPROJECT NO.:

CONSTR. CONTR. NO.
N40085-20-C-0059

NAVFAC DRAWING NO.

SHEET OF

TA407

DP2 SUBMISSION – P1338 BUILDING PRE-FINAL SUBMISSION

PLOTTED: 6/9/2021 6:52:30 AM

FILE NAME: BIM 360://HF PACKAGE 3/P1338_MEF SIM CTR-15908892-T.rvt

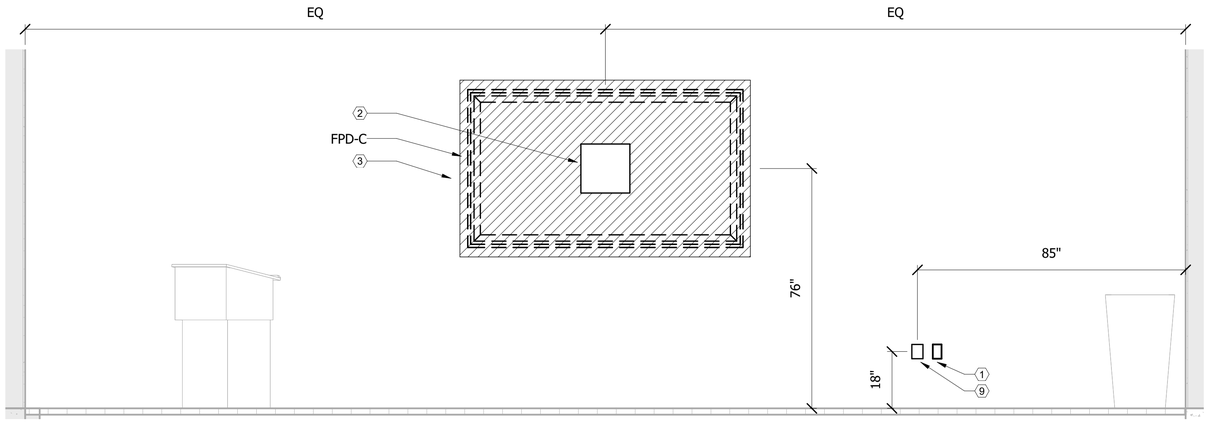

SIMULATION CLASSROOM 200C

SCALE: 1/2" = 1'-0"

C3

KEYNOTE LEGEND

1	DUPLEX RECEPTACLE
2	CHIEF PAC 526 (DUPLEX, 2D) SEE DETAIL A2/TA501
3	BACKING TO SUPPORT FIVE TIMES WEIGHT OF DISPLAY AND MOUNT
4	ONE GANG AV BACK BOX
5	QUAD RECEPTACLE
6	FSR PWB-100 (DUPLEX, 2D) SEE DETAIL A3/TA502
7	FOUR GANG AV BACK BOX
8	TWO GANG AV BACK BOX FOR WALL MOUNTED CAMERAS
9	ONE GANG AV BACK BOX

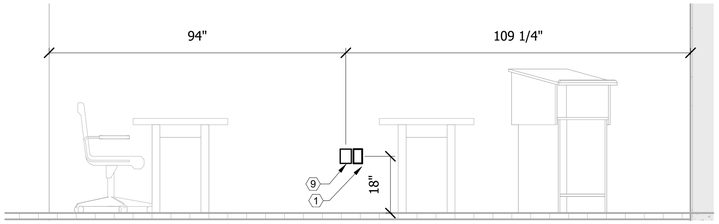

SIMULATION CLASSROOM 200C

SCALE: 1/2" = 1'-0"

B2

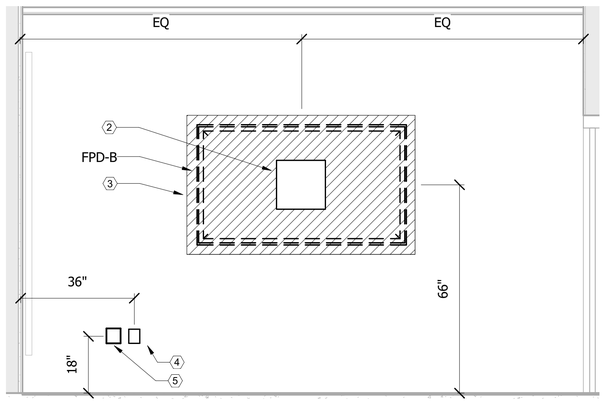

BRIEF/DEBRIEF 209

SCALE: 1/2" = 1'-0"

A2

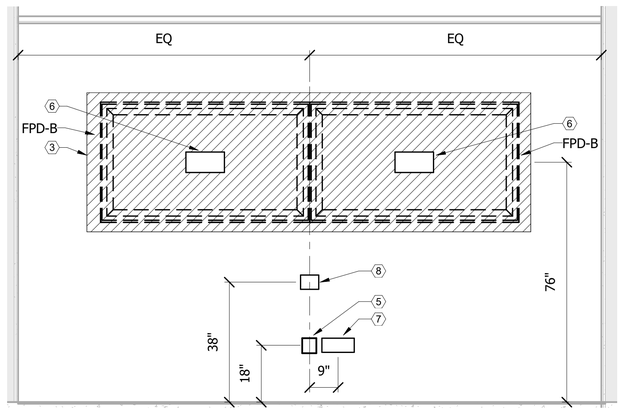

SECURE VTC 303B

SCALE: 1/2" = 1'-0"

A4

0 12" 24" 48"

SCALE: 1/2" = 12"

NO.	DESCRIPTION	DATE	APPR

NAVFAC

PRELIMINARY NOT FOR CONSTRUCTION

SEAL

RQ Wm. Jordan COMPANY ~A JOINT VENTURE~

Michael Baker INTERNATIONAL

100 AIRSIDE DRIVE
MOON TOWNSHIP, PA 15108 A/E INFO

APPROVED

FOR COMMANDER NAVFAC

ACTIVITY
MARINE CORPS BASE
CAMP LEJEUNE

SATISFACTORY TO DATE

DES AS	DRW AV	CHK BM

PM

BRANCH MANAGER

CHIEF ENG/ARCH

FIRE PROTECTION

DEPARTMENT OF THE NAVY
NAVAL FACILITIES ENGINEERING COMMAND
ROIOC FLORENCE CAMP LEJEUNE
MCB CAMP LEJEUNE

NAVAL FACILITIES ENGINEERING COMMAND ~ MID-ATLANTIC
JACKSONVILLE, NC

JACKSONVILLE, NC
P1338F II MEF SIMULATION/TRAINING CENTER
REPLACEMENT

AUDIOVISUAL - ELEVATIONS

SCALE: AS NOTED

EPROJECT NO.:

CONSTR. CONTR. NO.
N40085-20-C-0059

NAVFAC DRAWING NO.

SHEET OF

TA408

DP2 SUBMISSION – P1338 BUILDING PRE-FINAL SUBMISSION

PLOTTED: 6/9/2021 6:52:31 AM

FILE NAME: BIM 360://HF PACKAGE 3/P1338_MEF SIM CTR-1590892-T.rvt

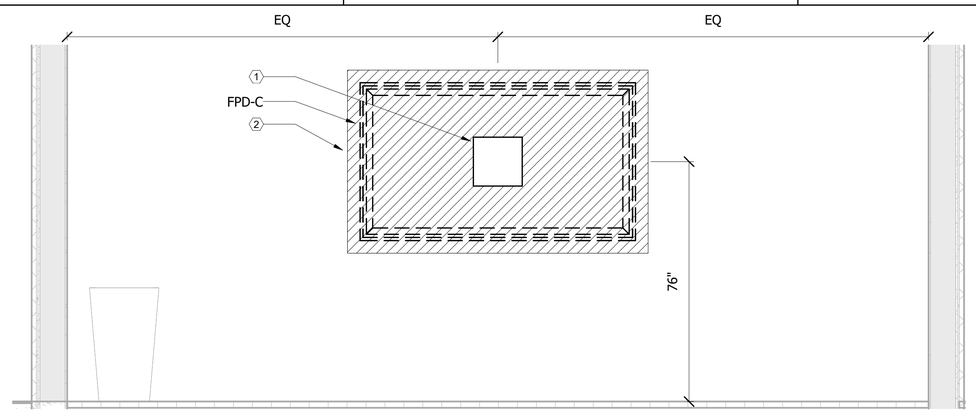

SIMULATION CLASSROOM 301A

SCALE: 1/2" = 1'-0"

TA113 C3

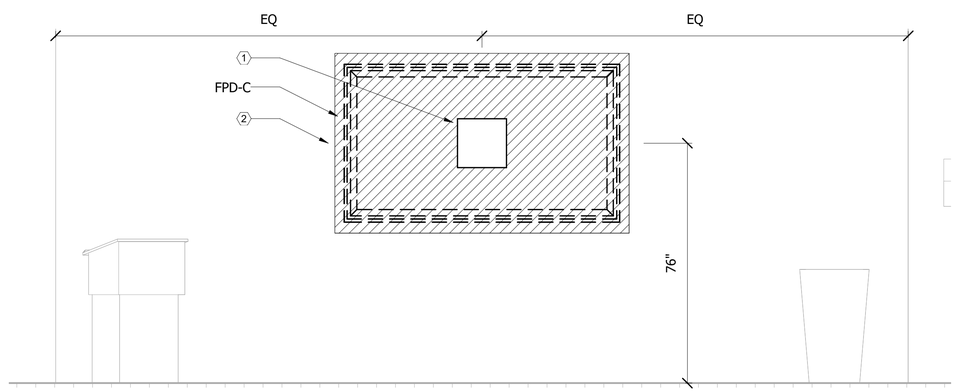

SIMULATION CLASSROOM 301B

SCALE: 1/2" = 1'-0"

TA113 B3

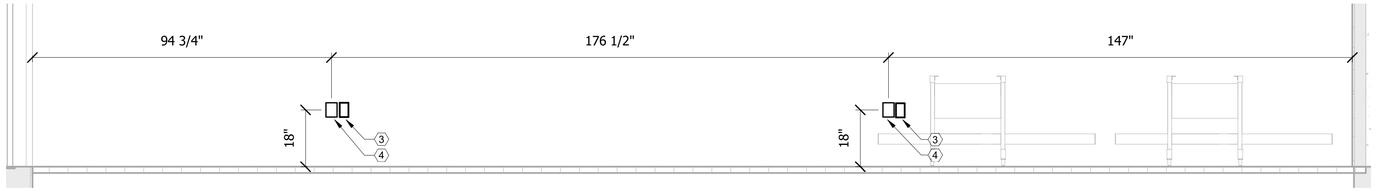

SIMULATION CLASSROOM 301A

SCALE: 1/2" = 1'-0"

B4

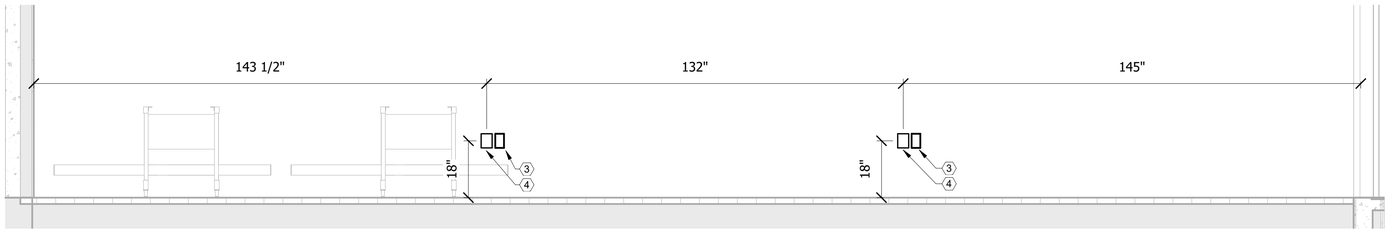

SIMULATION CLASSROOM 301B

SCALE: 1/2" = 1'-0"

A4

KEYNOTE LEGEND

1	CHIEF PAC 526 (DUPLEX, 2D) SEE DETAIL A2/TA501
2	BACKING TO SUPPORT FIVE TIMES WEIGHT OF DISPLAY AND MOUNT
3	DUPLEX RECEPTACLE
4	ONE GANG AV BACK BOX

SYM | DESCRIPTION | DATE | APPR

NAVFAC

PRELIMINARY NOT FOR CONSTRUCTION

SEAL

IRQ W.M. Jordan COMPANY ~A JOINT VENTURE~

Michael Baker INTERNATIONAL

100 AIRSIDE DRIVE
MOON TOWNSHIP, PA 15108 A/E INFO

APPROVED

FOR COMMANDER NAVFAC

ACTIVITY
MARINE CORPS BASE
CAMP LEJEUNE

SATISFACTORY TO DATE

DES AS | DRW AV | CHK BM

PM

BRANCH MANAGER

CHIEF ENG/ARCH

FIRE PROTECTION

DEPARTMENT OF THE NAVY
NAVAL FACILITIES ENGINEERING COMMAND
ROICC FLORENCE CAMP LEJEUNE
MCB CAMP LEJEUNE

NAVAL FACILITIES ENGINEERING COMMAND ~ MID-ATLANTIC
JACKSONVILLE, NC

JACKSONVILLE, NC
P1338F II MEF SIMULATION/TRAINING CENTER REPLACEMENT

AUDIOVISUAL - ELEVATIONS

SCALE: AS NOTED

EPROJECT NO.:

CONSTR. CONTR. NO.
N40085-20-C-0059

NAVFAC DRAWING NO.

SHEET OF

TA409

0 12" 24" 48"
SCALE: 1/2" = 12"

DP2 SUBMISSION – P1338 BUILDING PRE-FINAL SUBMISSION

PLOTTED: 6/9/2021 6:52:32 AM

FILE NAME: BIM 360://HF PACKAGE 3/P1338_MEF SIM CTR-1590892-T.rvt

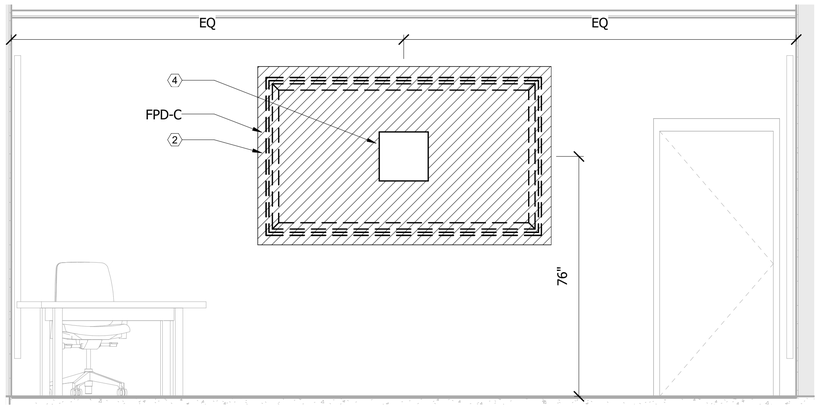

BRIEF/DEBRIEF 101
SCALE: 1/2" = 1'-0"
TA114
C2

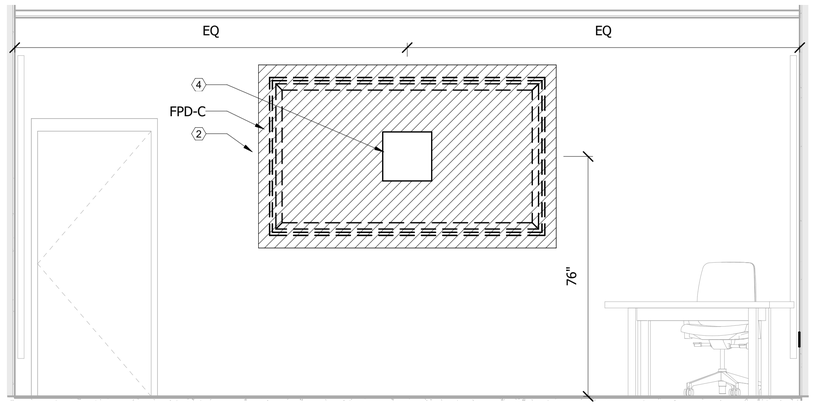

BRIEF/DEBRIEF 102
SCALE: 1/2" = 1'-0"
TA114
C4

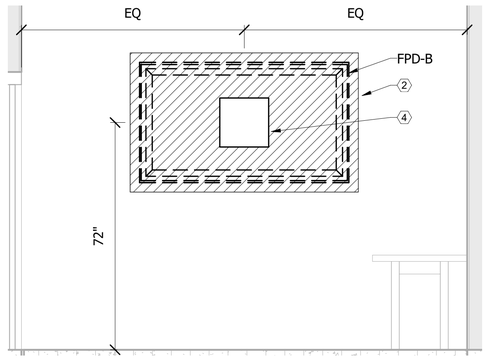

EXERCISE CONTROL 207
SCALE: 1/2" = 1'-0"
TA112
B2

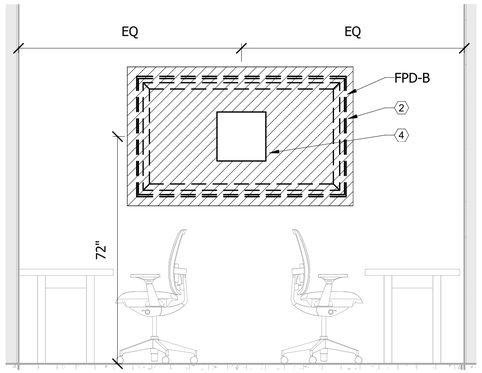

EXERCISE CONTROL 207
SCALE: 1/2" = 1'-0"
TA112
B3

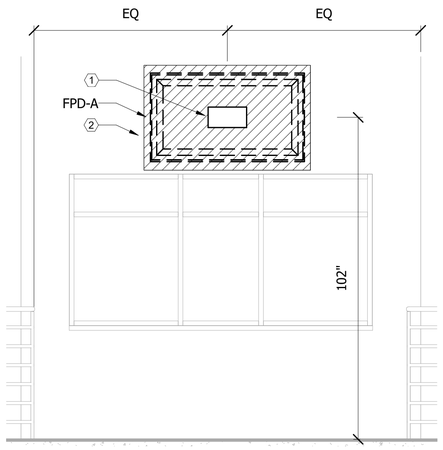

LOBBY/VEST L010
SCALE: 1/2" = 1'-0"
TA114
A2

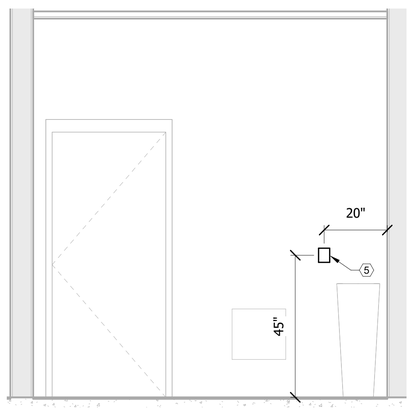

ENTRY WS 100
SCALE: 1/2" = 1'-0"
TA114
A3

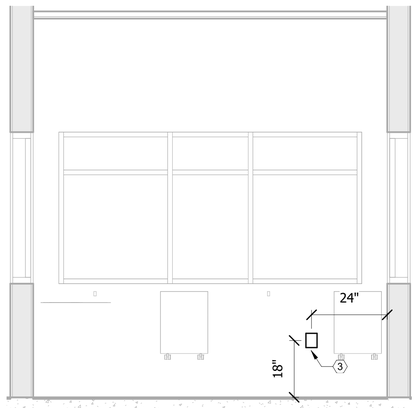

ENTRY WS 100
SCALE: 1/2" = 1'-0"
TA114
A4

KEYNOTE LEGEND

1	FSR PWB-100 (DUPLEX, 2D) SEE DETAIL A3/TA502
2	BACKING TO SUPPORT FIVE TIMES WEIGHT OF DISPLAY AND MOUNT
3	ONE GANG AV BACK BOX
4	CHIEF PAC 526 (DUPLEX, 2D) SEE DETAIL A2/TA501
5	ONE GANG AV BACK BOX FOR AV KEYPAD

0 12" 24" 48"
SCALE: 1/2" = 12"

SYM	DESCRIPTION	DATE	APPR

NAVFAC

PRELIMINARY
NOT FOR CONSTRUCTION
SEAL

RQ W.M. Jordan COMPANY
– A JOINT VENTURE –

Michael Baker
INTERNATIONAL
100 AIRSIDE DRIVE
MOON TOWNSHIP, PA 15108
A/E INFO

APPROVED

FOR COMMANDER NAVFAC

ACTIVITY
MARINE CORPS BASE
CAMP LEJEUNE

SATISFACTORY TO DATE

DES AS | DRW AV | CHK BM

PM

BRANCH MANAGER

CHIEF ENG/ARCH

FIRE PROTECTION

DEPARTMENT OF THE NAVY
NAVAL FACILITIES ENGINEERING COMMAND
NAVAL FACILITIES ENGINEERING COMMAND ~ MID-ATLANTIC
ROICC FLORENCE CAMP LEJEUNE
JACKSONVILLE, NC
MCB CAMP LEJEUNE
JACKSONVILLE, NC
P1338F II MEF SIMULATION/TRAINING CENTER
REPLACEMENT
AUDIOVISUAL - ELEVATIONS

SCALE: AS NOTED
EPROJECT NO.:
CONSTR. CONTR. NO.
N40085-20-C-0059
NAVFAC DRAWING NO.
SHEET OF
TA410

DP2 SUBMISSION – P1338 BUILDING PRE-FINAL SUBMISSION

PLOTTED: 6/9/2021 6:52:34 AM

FILE NAME: BIM 360://HF PACKAGE 3/P1338_MEF SIM CTR-1590892-T.rvt

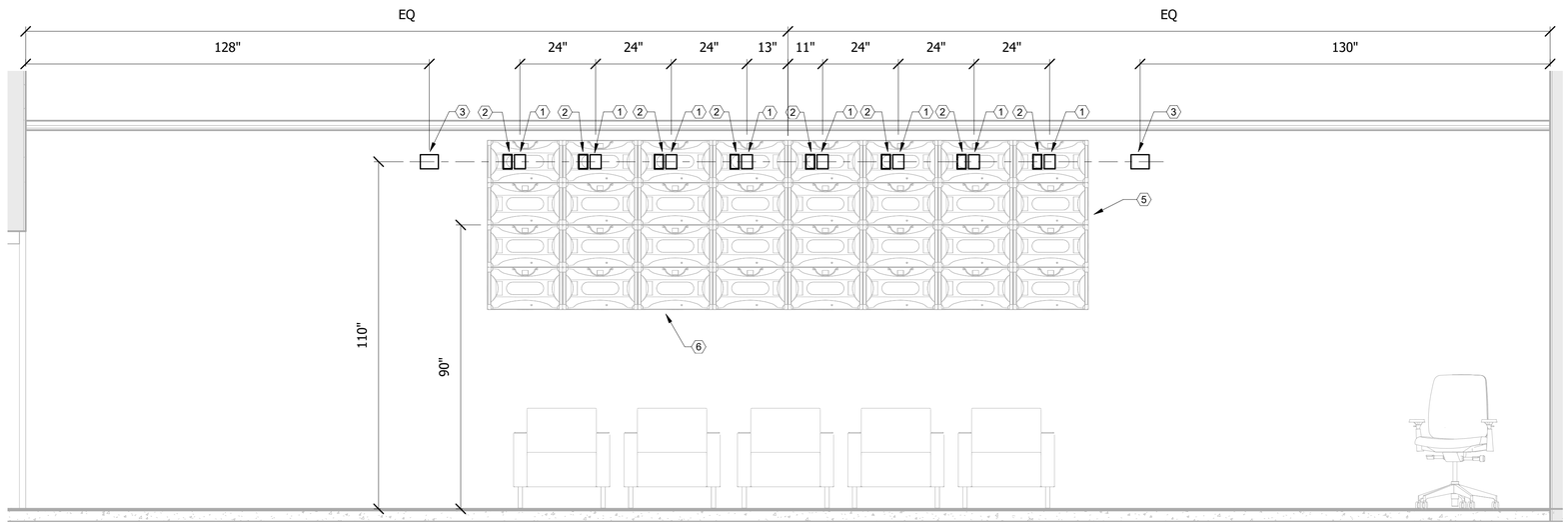

AUDITORIUM/READY ROOM 201

SCALE: 1/2" = 1'-0"

C4

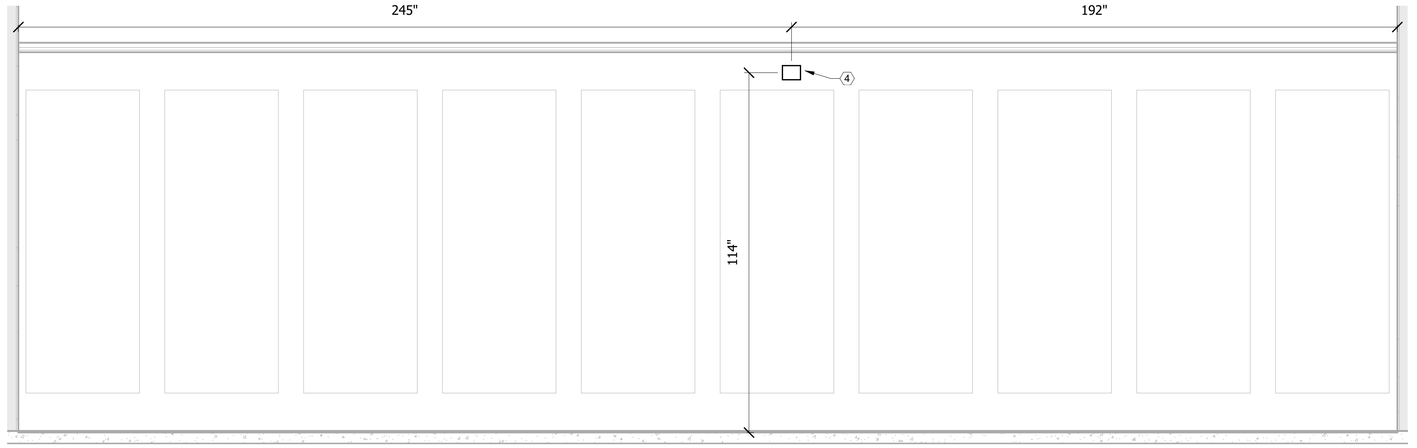

AUDITORIUM/READY ROOM 201

SCALE: 1/2" = 1'-0"

A4

KEYNOTE LEGEND

1	ONE GANG AV BACK BOX
2	RECESSED CLOCK RECEPTACLE
3	TWO GANG AV BACK BOX FOR WALL MOUNTED CAMERAS
4	TWO GANG AV BACK BOX
5	BACKING TO SUPPORT FIVE TIMES WEIGHT OF DISPLAY AND MOUNT
6	COORDINATE FINAL LOCATION WITH INTERIORS PRIOR TO INSTALLATION

0 12" 24" 48"

SCALE: 1/2" = 12"

APPR | DATE | DESCRIPTION | SYM

SEAL

NAVAL FACILITIES ENGINEERING COMMAND
NAVAL FACILITIES ENGINEERING COMMAND ~ MID-ATLANTIC
JACKSONVILLE, NC
ROICC FLORENCE CAMP LEJEUNE
MCB CAMP LEJEUNE
JACKSONVILLE, NC
P1338F II MEF SIMULATION/TRAINING CENTER
REPLACEMENT
AUDIOVISUAL - ELEVATIONS

DEPARTMENT OF THE NAVY

SCALE: AS NOTED

EPROJECT NO.: 1590892

CONSTR. CONTR. NO.
N40085-20-C-0059

NAVFAC DRAWING NO.

SHEET OF

TA411

A/E INFO
100 AIRSIDE DRIVE
MOON TOWNSHIP, PA 15108

APPROVED

FOR COMMANDER NAVFAC

ACTIVITY
MARINE CORPS BASE
CAMP LEJEUNE

SATISFACTORY TO DATE

DES	DRW	CHK

PM

BRANCH MANAGER

CHIEF ENG/ARCH

FIRE PROTECTION

DP2 SUBMISSION – P1338 BUILDING - PRE-FINAL SUBMISSION

PLOTTED: 6/9/2021 6:52:35 AM

FILE NAME: BIM 360://HF PACKAGE 3/P1338_MEF SIM CTR-1590892-T.rvt

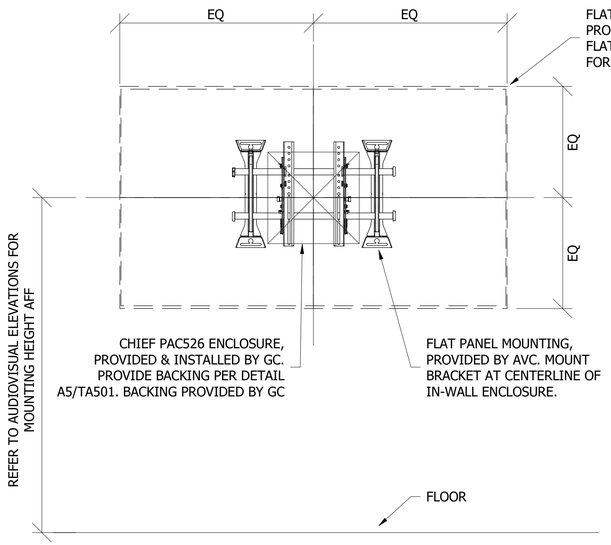

CHIEF PAC 526 FLAT PANEL DISPLAY BRACKET DETAIL

SCALE: NTS

C2

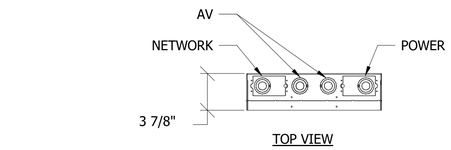

TOP VIEW

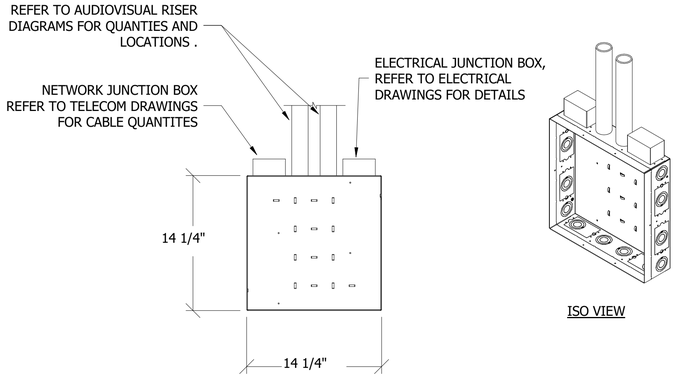

ISO VIEW

FRONT VIEW

CHIEF PAC 526 AV WALL BOX

SCALE: NTS

A2

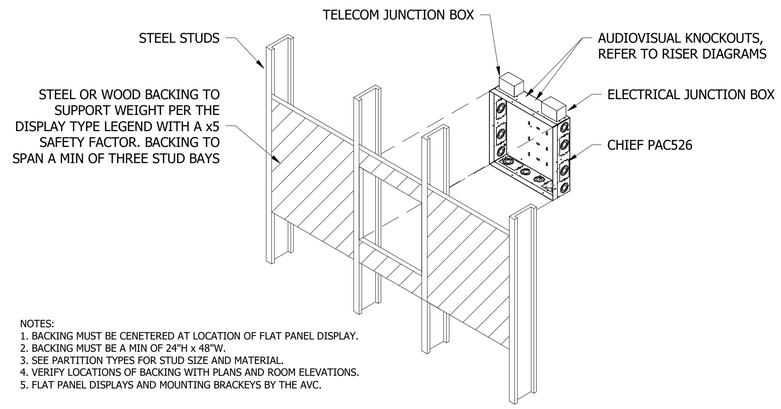

NOTES:
1. BACKING MUST BE CENETERED AT LOCATION OF FLAT PANEL DISPLAY.
2. BACKING MUST BE A MIN OF 24"H x 48"W.
3. SEE PARTITION TYPES FOR STUD SIZE AND MATERIAL.
4. VERIFY LOCATIONS OF BACKING WITH PLANS AND ROOM ELEVATIONS.
5. FLAT PANEL DISPLAYS AND MOUNTING BRACKEYS BY THE AVC.

CHIEF PAC 526 BACKING DETAIL

SCALE: NTS

A5

APPR	DATE	DESCRIPTION	SYM

NAVFAC

PRELIMINARY NOT FOR CONSTRUCTION

SEAL

IRQ W.M. Jordan COMPANY ~A JOINT VENTURE~

Michael Baker INTERNATIONAL

100 AIRSIDE DRIVE
MOON TOWNSHIP, PA 15108 A/E INFO

APPROVED

FOR COMMANDER NAVFAC

ACTIVITY
MARINE CORPS BASE CAMP LEJEUNE

SATISFACTORY TO DATE

DES AS | DRW AV | CHK BM

PM

BRANCH MANAGER

CHIEF ENG/ARCH

FIRE PROTECTION

DEPARTMENT OF THE NAVY
NAVAL FACILITIES ENGINEERING COMMAND
ROICC FLORENCE CAMP LEJEUNE
MCB CAMP LEJEUNE

NAVAL FACILITIES ENGINEERING COMMAND ~ MID-ATLANTIC
JACKSONVILLE, NC

JACKSONVILLE, NC
P1338F II MEF SIMULATION/TRAINING CENTER REPLACEMENT

AUDIOVISUAL - DETAILS

SCALE: AS NOTED

EPROJECT NO.:

CONSTR. CONTR. NO.
N40085-20-C-0059

NAVFAC DRAWING NO.

SHEET OF

TA501

DP2 SUBMISSION – P1338 BUILDING PRE-FINAL SUBMISSION

PLOTTED: 6/9/2021 6:52:35 AM

FILE NAME: BIM 360://HF PACKAGE 3/P1338_MEF SIM CTR-15f90892-7.rvt

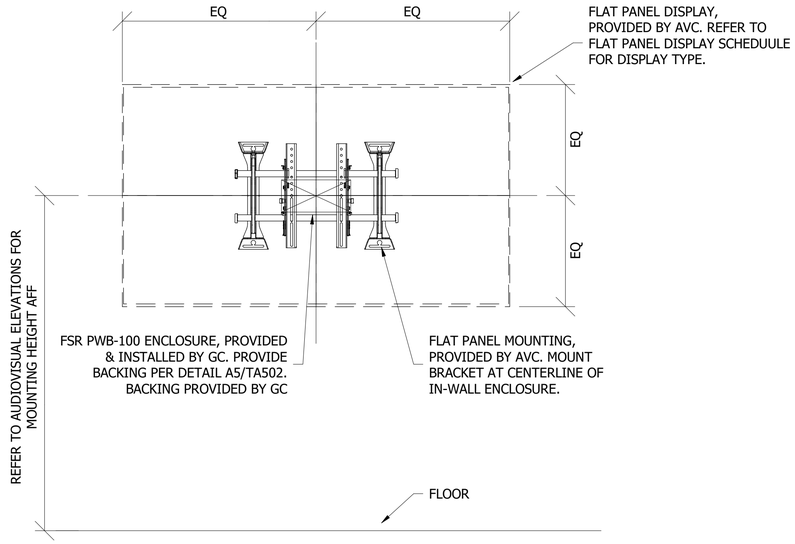

FSR PWB-100 FLAT PANEL DISPLAY BRACKET DETAIL

SCALE: NTS

C3

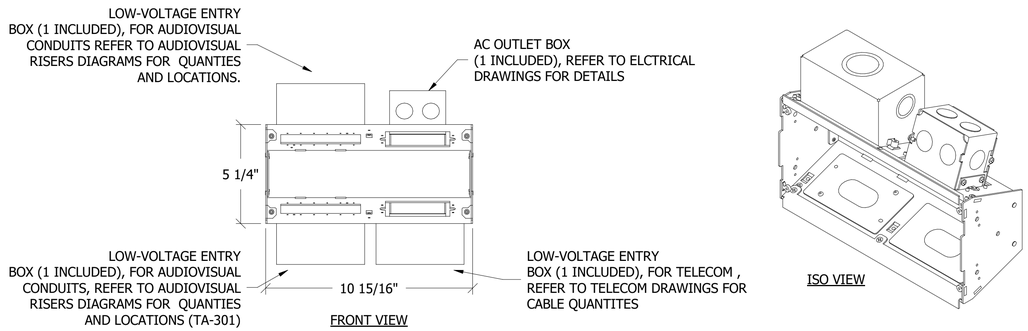

FSR PWB-100 DETAIL

SCALE: NTS

A3

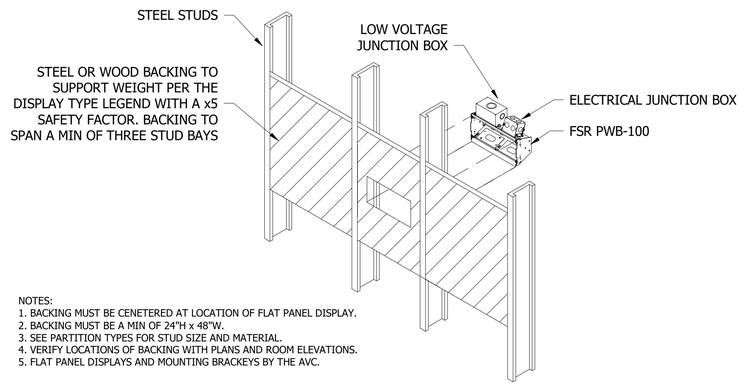

NOTES:
1. BACKING MUST BE CENETERED AT LOCATION OF FLAT PANEL DISPLAY.
2. BACKING MUST BE A MIN OF 24"H x 48"W.
3. SEE PARTITION TYPES FOR STUD SIZE AND MATERIAL.
4. VERIFY LOCATIONS OF BACKING WITH PLANS AND ROOM ELEVATIONS.
5. FLAT PANEL DISPLAYS AND MOUNTING BRACKEYS BY THE AVC.

FSR PWB-100 BACKING DETAIL

SCALE: NTS

A5

SYM	DESCRIPTION	DATE	APPR

NAVFAC

SEAL

RQ W.M. Jordan COMPANY – A JOINT VENTURE –

Michael Baker INTERNATIONAL
100 AIRSIDE DRIVE
MOON TOWNSHIP, PA 15108
A/E INFO

APPROVED

FOR COMMANDER NAVFAC

ACTIVITY
MARINE CORPS BASE CAMP LEJEUNE

SATISFACTORY TO DATE

DES	DRW	CHK
PM		
BRANCH MANAGER		
CHIEF ENG/ARCH		
FIRE PROTECTION		

DEPARTMENT OF THE NAVY
NAVAL FACILITIES ENGINEERING COMMAND
NAVAL FACILITIES ENGINEERING COMMAND ~ MID-ATLANTIC
ROICC FLORENCE CAMP LEJEUNE
JACKSONVILLE, NC
MCB CAMP LEJEUNE
JACKSONVILLE, NC
P1338F II MEF SIMULATION/TRAINING CENTER REPLACEMENT
AUDIOVISUAL - DETAILS

SCALE: AS NOTED
EPROJECT NO.: 1590892
CONSTR. CONTR. NO. N40085-20-C-0059
NAVFAC DRAWING NO.
SHEET OF

TA502

DP2 SUBMISSION – P1338 BUILDING -,PRE-FINAL SUBMISSION

PLOTTED: 6/9/2021 6:52:36 AM

FILE NAME: BIM 360://HF PACKAGE 3/P1338_MEF SIM CTR-1590892-T.rvt

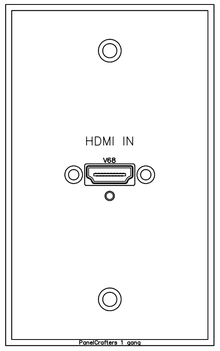

1 ONE GANG FACE PLATE
Scale: NTS

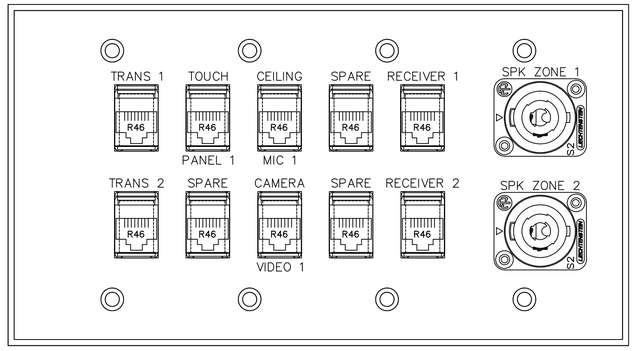

2 SECURE VTC 303B FACE PLATE
Scale: NTS

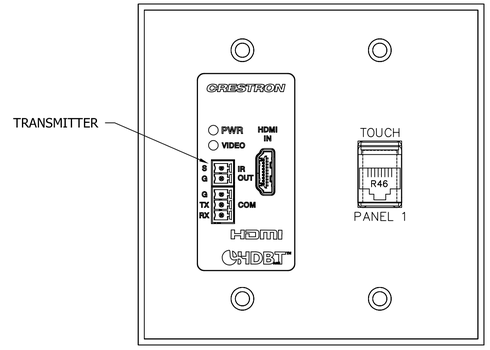

3 TWO GANG FACE PLATE
Scale: NTS

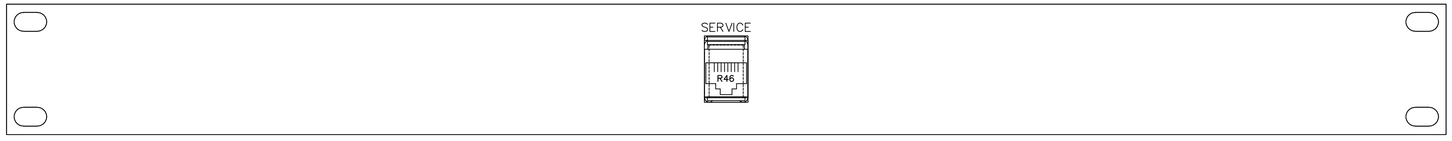

4 SERVICE PLATE
Scale: NTS

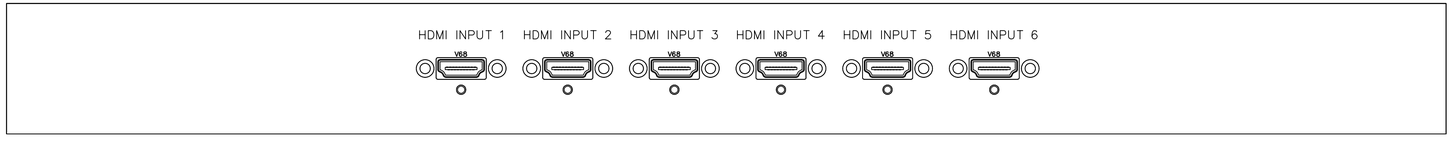

5 HDMI RACK PANEL
Scale: NTS

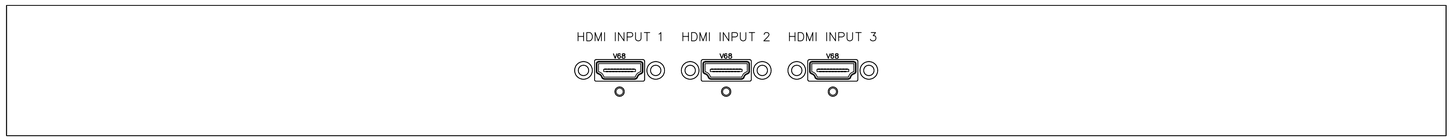

6 HDMI RACK PANEL
Scale: NTS

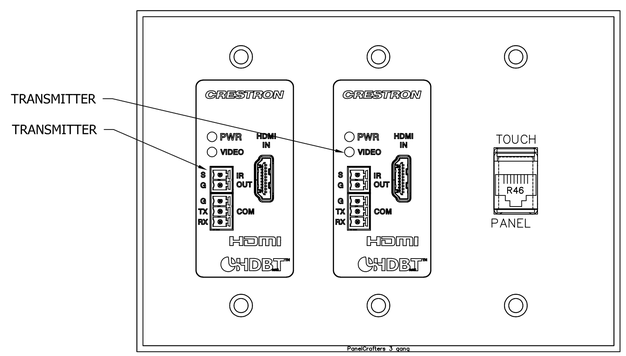

7 EXERCISE CONTROL 207 (QTY 2)
Scale: NTS

APPR | DATE | DESCRIPTION | NUM

NAVFAC

PRELIMINARY NOT FOR CONSTRUCTION

SEAL

RQ Jordan COMPANY – A JOINT VENTURE –

Michael Baker INTERNATIONAL
100 AIRSIDE DRIVE
MOON TOWNSHIP, PA 15108
A/E INFO

APPROVED

FOR COMMANDER NAVFAC

ACTIVITY
MARINE CORPS BASE
CAMP LEJEUNE

SATISFACTORY TO DATE	DD/MM/YY		
DES AS	DRW AV	CHK BM	
PM	XXX		
BRANCH MANAGER	XXX		
CHIEF ENG/ARCH	XXX		
FIRE PROTECTION	XXX		

DEPARTMENT OF THE NAVY
NAVAL FACILITIES ENGINEERING COMMAND
ROICC FLORENCE CAMP LEJEUNE
MCB CAMP LEJEUNE

NAVAL FACILITIES ENGINEERING COMMAND – MID-ATLANTIC
JACKSONVILLE, NC

JACKSONVILLE, NC
P1338F II MEF SIMULATION/TRAINING CENTER
REPLACEMENT

AUDIOVISUAL - - DETAILS

SCALE:	NTS
EPROJECT NO.:	
CONSTR. CONTR. NO.	N40085-20-C-0059
NAVFAC DRAWING NO.	
SHEET	OF

TA503

DP2 SUBMISSION – P1338 BUILDING RRE-FINAL SUBMISSION

PLOTTED: 5/19/2021 3:28:30 PM

FILE NAME: BIM 360://HF PACKAGE 3/P1338_MEF SIM CTR-1590892-T.rvt

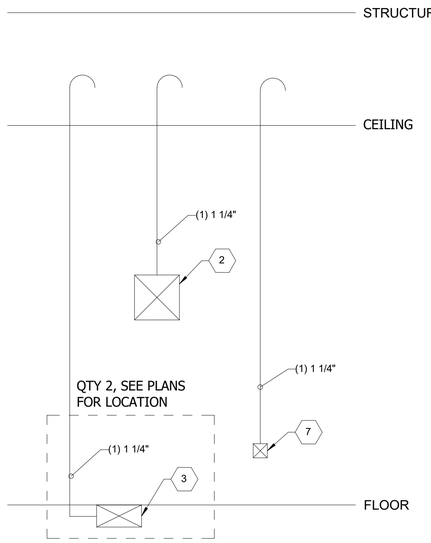

BRIEF/DEBRIEF 101 & 102 — C1
SCALE: NTS

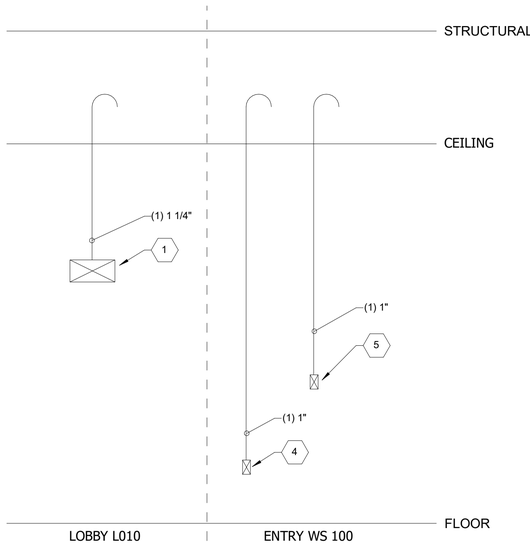

LOBBY L010 & ENTRY WS 100 — C3
SCALE: NTS

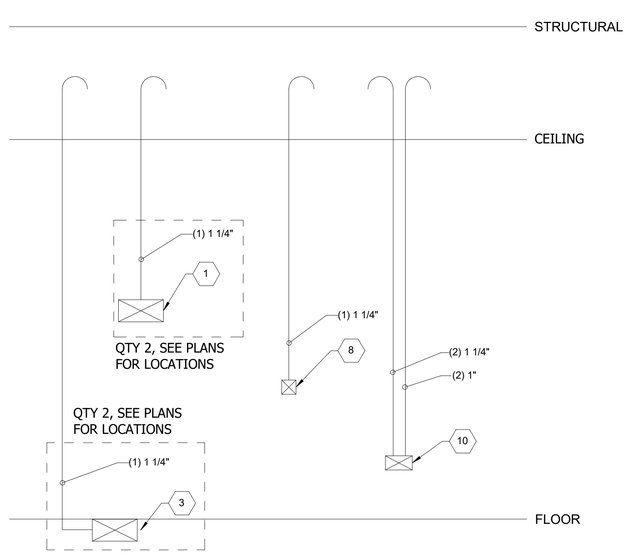

SECURE VTC 303B — C4
SCALE: NTS

DEVICE SCHEDULE	
TAG	DESCRIPTION
1	FSR PWB-100
2	CHIEF PAC BOX 526
3	FLOOR BOX, REFER TO ELECTRICAL
4	ONE GANG AV BACK BOX
5	ONE GANG AV BACK BOX FOR AV KEYPAD
6	ONE GANG AV BACK BOX FOR ROOM AVAILABILITY SIGN
7	TWO GANG AV BACK BOX
8	TWO GANG AV BACK BOX FOR WALL MOUNTED CAMERA
9	THREE GANG AV BACK BOX
10	FOUR GANG AV BACK BOX
11	AV EQUIPMENT RACK PROVIDED BY AVC
12	CONDUIT, REFER TO EQUIPMENT PLANS FOR SIZE AND LOCATION
13	WIRE-BASKET, REFER TO EQUIPMENT PLANS FOR SIZE AND LOCATION

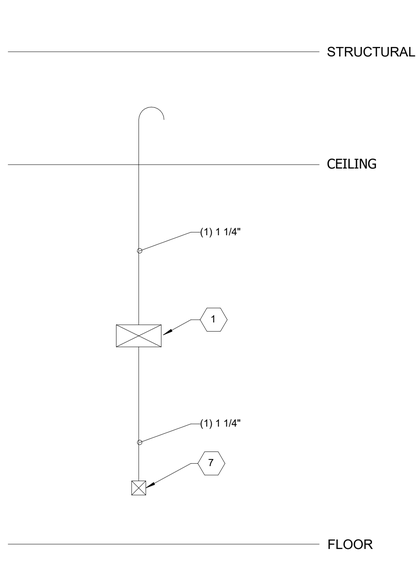

FIRE ROOM 104 A,B,C — A2
SCALE: NTS

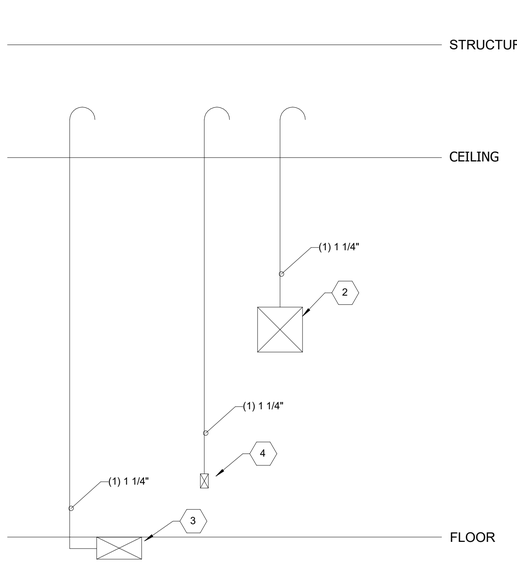

BRIEF/DEBRIEF 209 — A3
SCALE: NTS

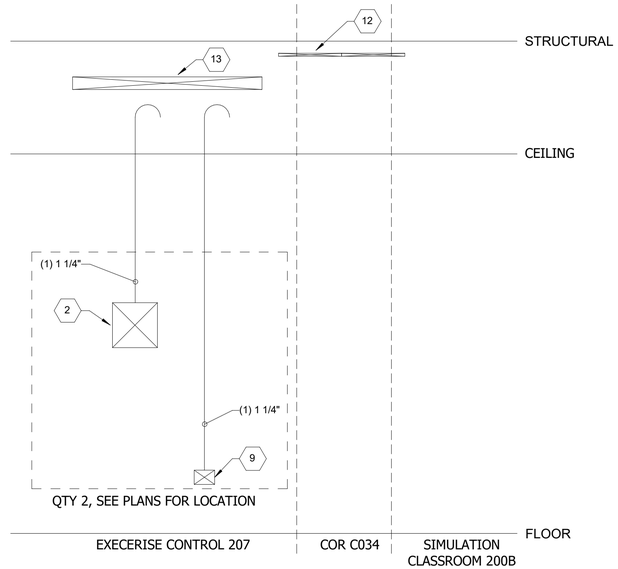

EXECERISE CONTROL 207 — A4
SCALE: NTS

APPR			
DATE			
DESCRIPTION			
SYM			

NAVFAC

PRELIMINARY NOT FOR CONSTRUCTION

SEAL

RQ Jordan COMPANY ~A JOINT VENTURE~

Michael Baker INTERNATIONAL

100 AIRSIDE DRIVE
MOON TOWNSHIP, PA 15108 — A/E INFO

APPROVED

FOR COMMANDER NAVFAC

ACTIVITY
MARINE CORPS BASE CAMP LEJEUNE

SATISFACTORY TO DATE

DES	DRW	CHK
AS	AV	BM

PM

BRANCH MANAGER

CHIEF ENG/ARCH

FIRE PROTECTION

DEPARTMENT OF THE NAVY
NAVAL FACILITIES ENGINEERING COMMAND
ROICC FLORENCE CAMP LEJEUNE
MCB CAMP LEJEUNE

NAVAL FACILITIES ENGINEERING COMMAND ~ MID-ATLANTIC
JACKSONVILLE, NC

JACKSONVILLE, NC
P1338F II MEF SIMULATION/TRAINING CENTER REPLACEMENT

AUDIOVISUAL - RISER DIAGRAMS

SCALE: AS NOTED

EPROJECT NO.:

CONSTR. CONTR. NO.
N40085-20-C-0059

NAVFAC DRAWING NO.

SHEET OF

TA601

DP2 SUBMISSION – P1338 BUILDING PRE-FINAL SUBMISSION

PLOTTED: 6/9/2021 6:52:37 AM

FILE NAME: BIM 360://HF PACKAGE 3/P1338_MEF SIM CTR-15R0892-T.rvt

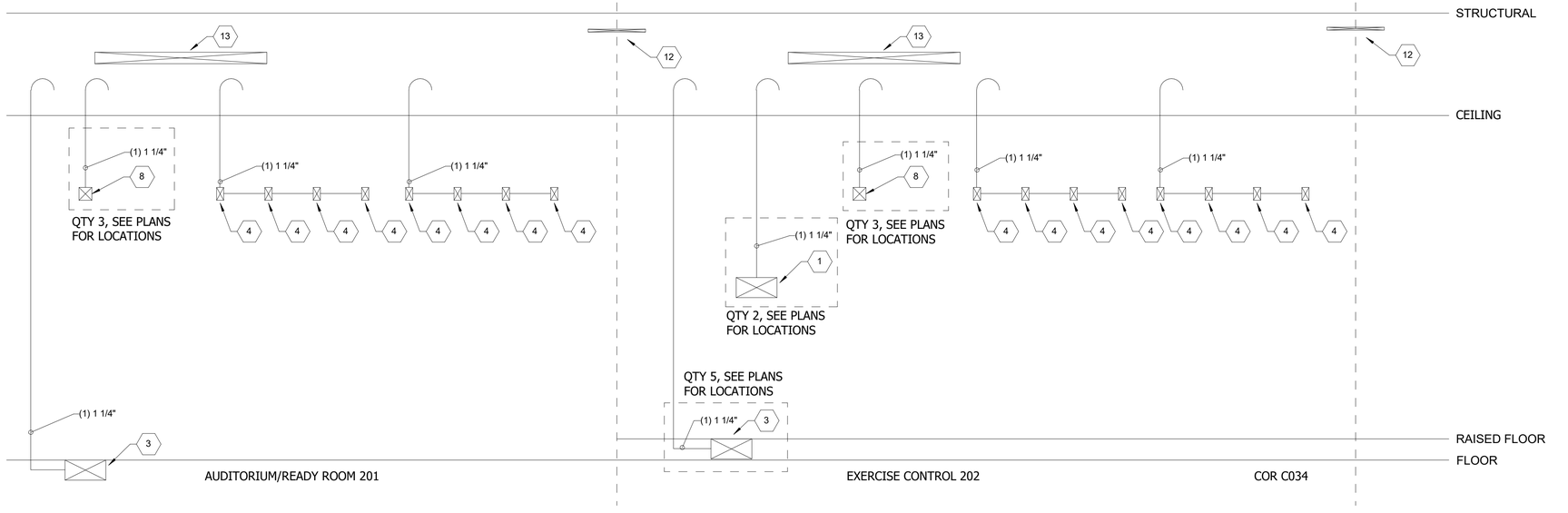

AUDITORIUM/READY ROOM 201 AND EXERCISE CONTROL 202

SCALE: NTS

C4

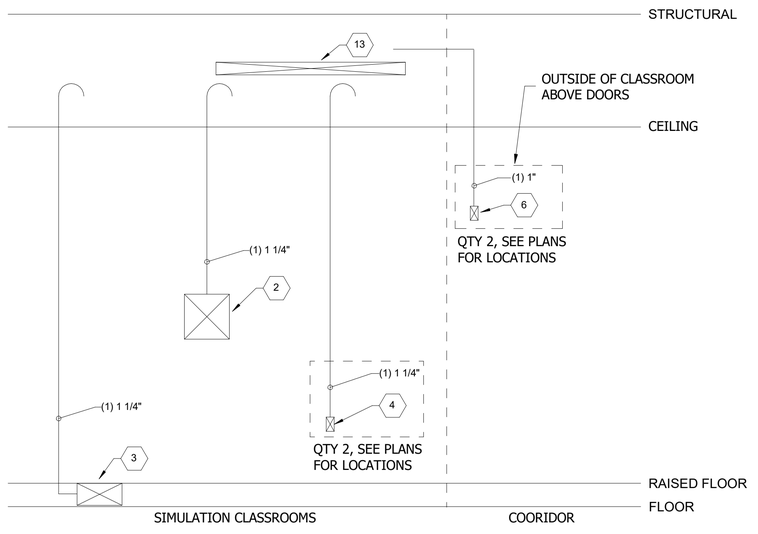

SIMULATION CLASSROOMS

SCALE: NTS

A2

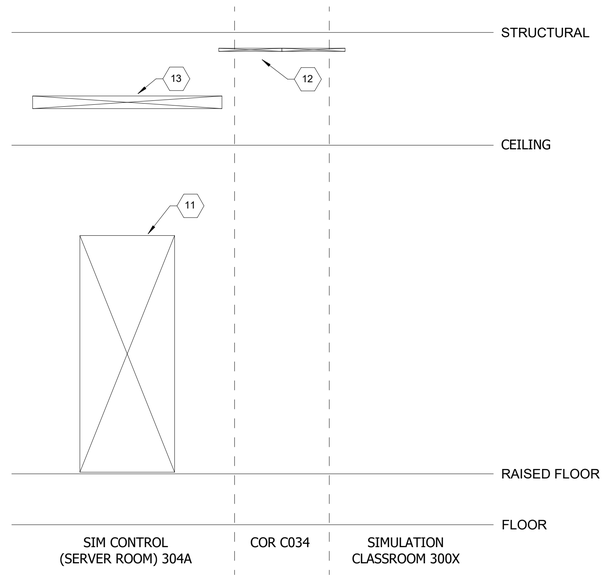

SIM CONTROL (SERVER ROOM) 304A

SCALE: NTS

A4

DEVICE SCHEDULE

TAG	DESCRIPTION
1	FSR PWB-100
2	CHIEF PAC BOX 526
3	FLOOR BOX, REFER TO ELECTRICAL
4	ONE GANG AV BACK BOX
5	ONE GANG AV BACK BOX FOR AV KEYPAD
6	ONE GANG AV BACK BOX FOR ROOM AVAILABILITY SIGN
7	TWO GANG AV BACK BOX
8	TWO GANG AV BACK BOX FOR WALL MOUNTED CAMERA
9	THREE GANG AV BACK BOX
10	FOUR GANG AV BACK BOX
11	AV EQUIPMENT RACK PROVIDED BY AVC
12	CONDUIT, REFER TO EQUIPMENT PLANS FOR SIZE AND LOCATION
13	WIRE-BASKET, REFER TO EQUIPMENT PLANS FOR SIZE AND LOCATION

SYM	DESCRIPTION	DATE	APPR

NAVFAC

PRELIMINARY NOT FOR CONSTRUCTION

SEAL

IRQ Joint Venture — Wm. Jordan Company

Michael Baker INTERNATIONAL

100 AIRSIDE DRIVE
MOON TOWNSHIP, PA 15108 A/E INFO

APPROVED

FOR COMMANDER NAVFAC

ACTIVITY
MARINE CORPS BASE CAMP LEJEUNE

SATISFACTORY TO DATE

DES AS | DRW AV | CHK BM

PM

BRANCH MANAGER

CHIEF ENG/ARCH

FIRE PROTECTION

DEPARTMENT OF THE NAVY
NAVAL FACILITIES ENGINEERING COMMAND
ROICC FLORENCE CAMP LEJEUNE

NAVAL FACILITIES ENGINEERING COMMAND ~ MID-ATLANTIC
JACKSONVILLE, NC

MCB CAMP LEJEUNE
JACKSONVILLE, NC

P1338F II MEF SIMULATION/TRAINING CENTER REPLACEMENT

AUDIOVISUAL - RISER DIAGRAMS

SCALE: AS NOTED

EPROJECT NO.:

CONSTR. CONTR. NO.
N40085-20-C-0059

NAVFAC DRAWING NO.

SHEET OF

TA602

DP2 SUBMISSION – P1338 BUILDING PRE-FINAL SUBMISSION

PLOTTED: 6/9/2021 6:52:37 AM

FILE NAME: BIM 360://HF PACKAGE 3/P1338_MEF SIM CTR-15R0892-T.rvt

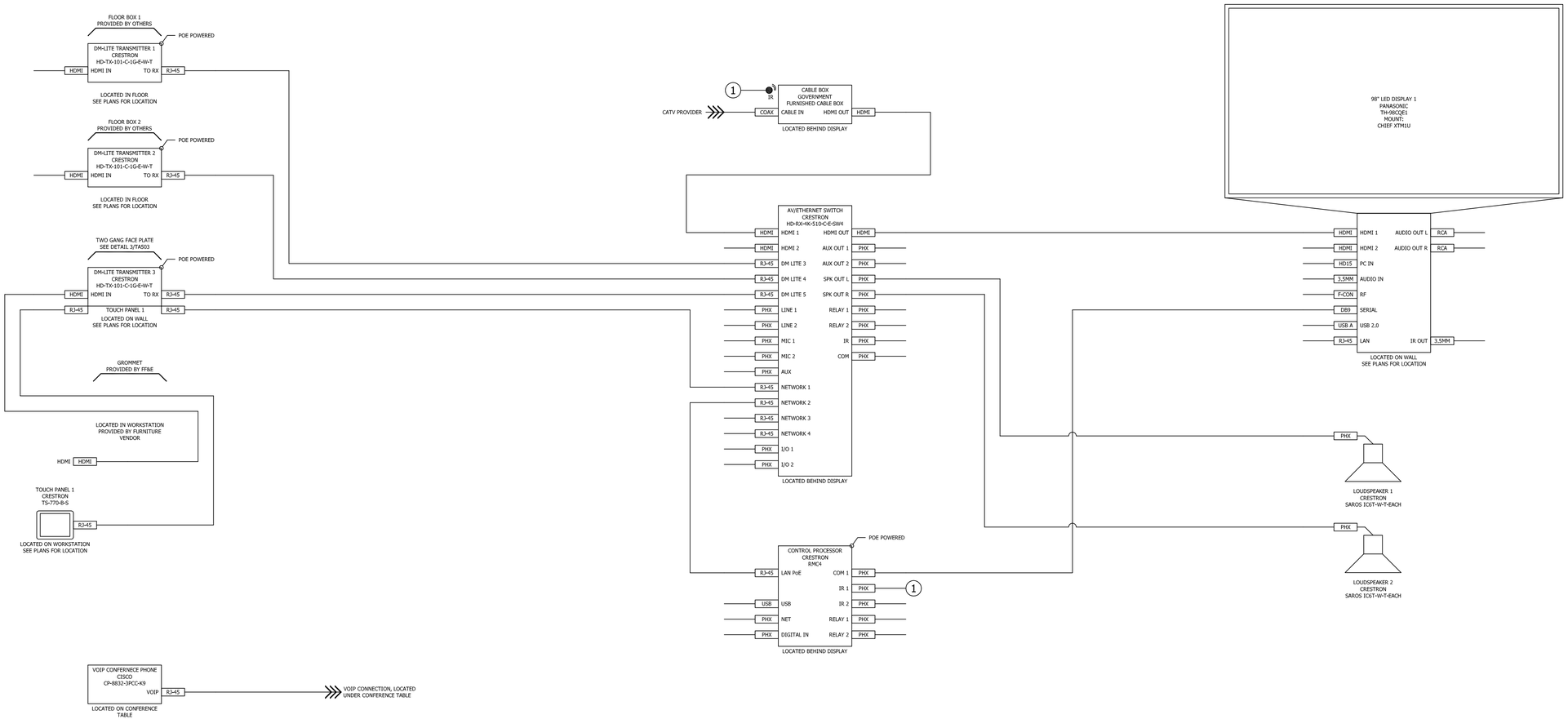

STM	DESCRIPTION	DATE	APPR

NAVFAC

PRELIMINARY
NOT FOR CONSTRUCTION

SEAL

RQ WNJ Jordan COMPANY
- A JOINT VENTURE -

Michael Baker
INTERNATIONAL

100 AIRSIDE DRIVE
MOON TOWNSHIP, PA 15108 A/E INFO

APPROVED

FOR COMMANDER NAVFAC

ACTIVITY
MARINE CORPS BASE
CAMP LEJEUNE

SATISFACTORY TO DATE DD/MM/YY

DES	AS	DRW	AV	CHK	BM

PM	XXX
BRANCH MANAGER	XXX
CHIEF ENG/ARCH	XXX
FIRE PROTECTION	XXX

DEPARTMENT OF THE NAVY
NAVAL FACILITIES ENGINEERING COMMAND
ROICC FLORENCE CAMP LEJEUNE

NAVAL FACILITIES ENGINEERING COMMAND ~ MID-ATLANTIC
JACKSONVILLE, NC

MCB CAMP LEJEUNE
JACKSONVILLE, NC
P1338F II MEF SIMULATION/TRAINING CENTER
REPLACEMENT

BRIEF/DEBRIEF 101 SYSTEM DRAWING

SCALE: NTS

EPROJECT NO.:

CONSTR. CONTR. NO.
N40085-20-C-0059

NAVFAC DRAWING NO.

SHEET OF

TA801

DP2 SUBMISSION – P1338 BUILDING BRE-FINAL SUBMISSION

PLOTTED: 5/19/2021 3:28:30 PM

FILE NAME: BIM 360://NF PACKAGE 3/P1338_MEF SIM CTR-1590892-T.rvt

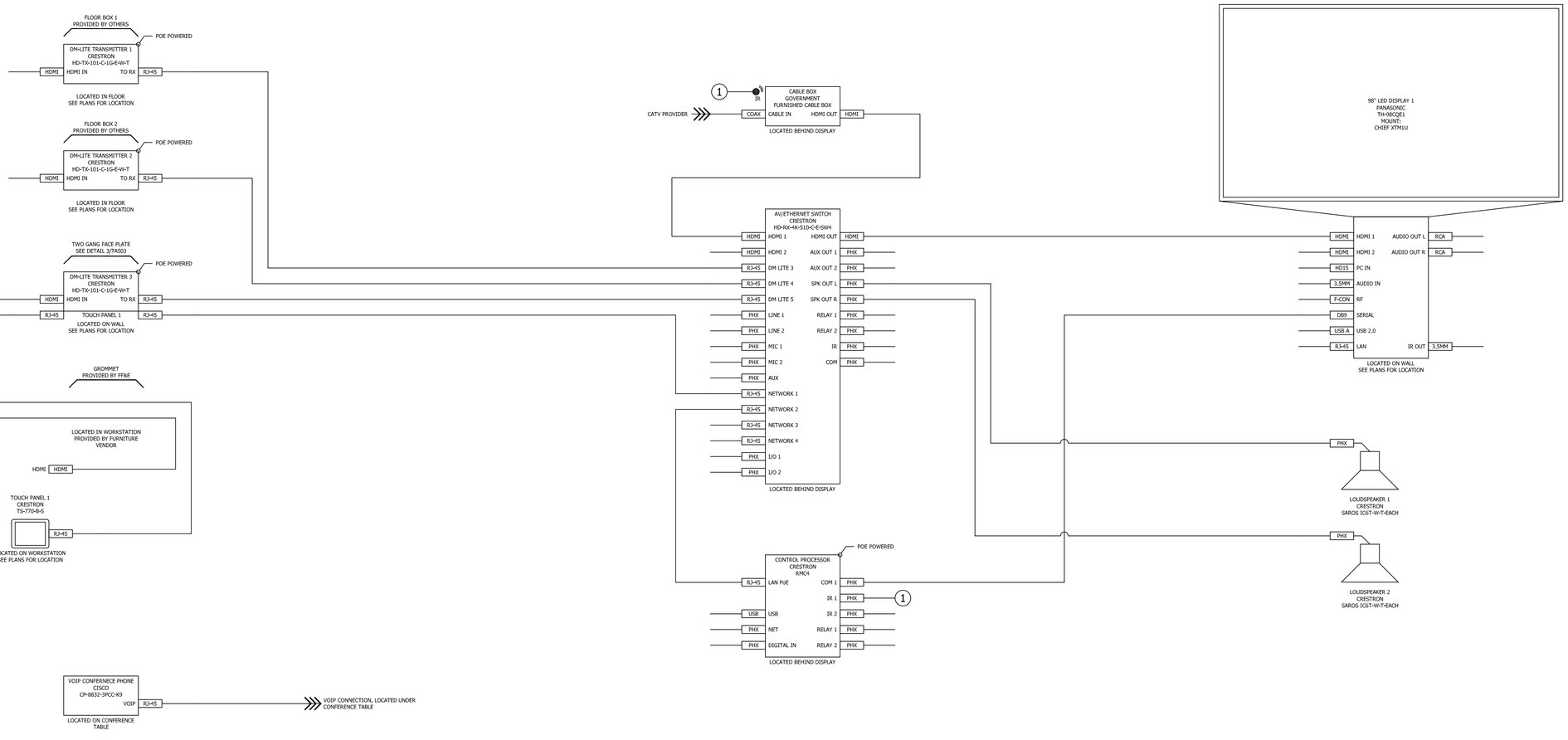

MK	DESCRIPTION	DATE	APPR

NAVFAC

PRELIMINARY
NOT FOR CONSTRUCTION

SEAL

RQ WNJ Jordan COMPANY
– A JOINT VENTURE –

Michael Baker
INTERNATIONAL

100 AIRSIDE DRIVE
MOON TOWNSHIP, PA 15108

A/E INFO

APPROVED

FOR COMMANDER NAVFAC

ACTIVITY
MARINE CORPS BASE
CAMP LEJEUNE

SATISFACTORY TO DATE DD/MM/YY

DES	AS	DRW	AV	CHK	BM

PM	XXX
BRANCH MANAGER	XXX
CHIEF ENG/ARCH	XXX
FIRE PROTECTION	XXX

DEPARTMENT OF THE NAVY
NAVAL FACILITIES ENGINEERING COMMAND
ROICC FLORENCE CAMP LEJEUNE

NAVAL FACILITIES ENGINEERING COMMAND ~ MID-ATLANTIC
JACKSONVILLE, NC

MCB CAMP LEJEUNE
JACKSONVILLE, NC
P1338F II MEF SIMULATION/TRAINING CENTER
REPLACEMENT

BRIEF/DEBRIEF 102 SYSTEM DRAWING

SCALE: NTS

EPROJECT NO.:

CONSTR. CONTR. NO.
N40085-20-C-0059

NAVFAC DRAWING NO.

SHEET OF

TA802

DP2 SUBMISSION – P1338 BUILDING BRE-FINAL SUBMISSION

PLOTTED: 5/19/2021 3:28:30 PM

FILE NAME: BIM 360://NF PACKAGE 3/P1338_MEF SIM CTR-1590892-T.rvt

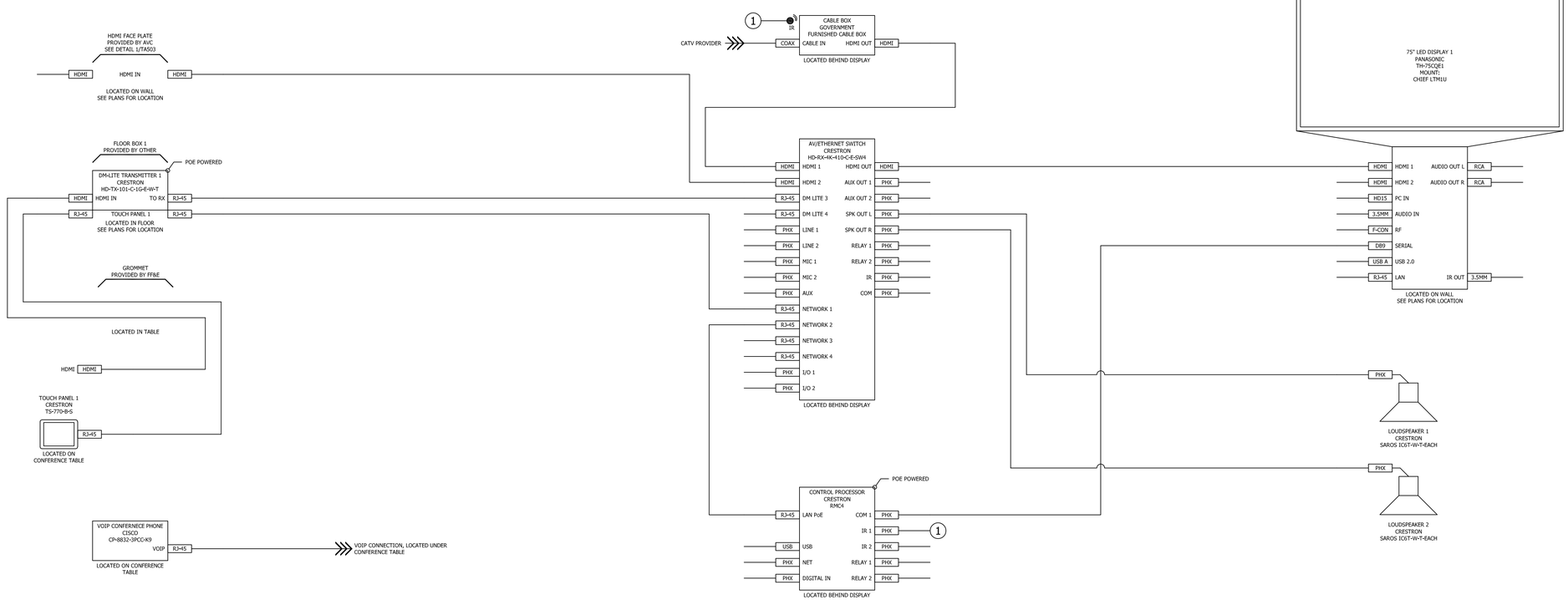

SYM	DESCRIPTION	DATE	APPR

NAVFAC

PRELIMINARY
NOT FOR CONSTRUCTION

SEAL

RQ W.M. Jordan COMPANY
- A JOINT VENTURE -

Michael Baker
INTERNATIONAL
100 AIRSIDE DRIVE
MOON TOWNSHIP, PA 15108
A/E INFO

APPROVED

FOR COMMANDER NAVFAC

ACTIVITY
MARINE CORPS BASE
CAMP LEJEUNE

SATISFACTORY TO DATE DD/MM/YY

DES AS	DRW AV	CHK BM	
PM	XXX		
BRANCH MANAGER	XXX		
CHIEF ENG/ARCH	XXX		
FIRE PROTECTION	XXX		

DEPARTMENT OF THE NAVY
NAVAL FACILITIES ENGINEERING COMMAND
NAVAL FACILITIES ENGINEERING COMMAND ~ MID-ATLANTIC
ROICC FLORENCE CAMP LEJEUNE
JACKSONVILLE, NC
MCB CAMP LEJEUNE
JACKSONVILLE, NC
P1338F II MEF SIMULATION/TRAINING CENTER
REPLACEMENT
BRIEF/DEBRIEF 209 SYSTEM DRAWING

SCALE: NTS
EPROJECT NO.:
CONSTR. CONTR. NO.
N40085-20-C-0059
NAVFAC DRAWING NO.
SHEET OF

TA803

DP2 SUBMISSION – P1338 BUILDING PRE-FINAL SUBMISSION

FILE NAME: BIM 360://HF PACKAGE 3/P1338_MEF SIM CTR-1590892-T.rvt
PLOTTED: 5/19/2021 3:26:30 PM

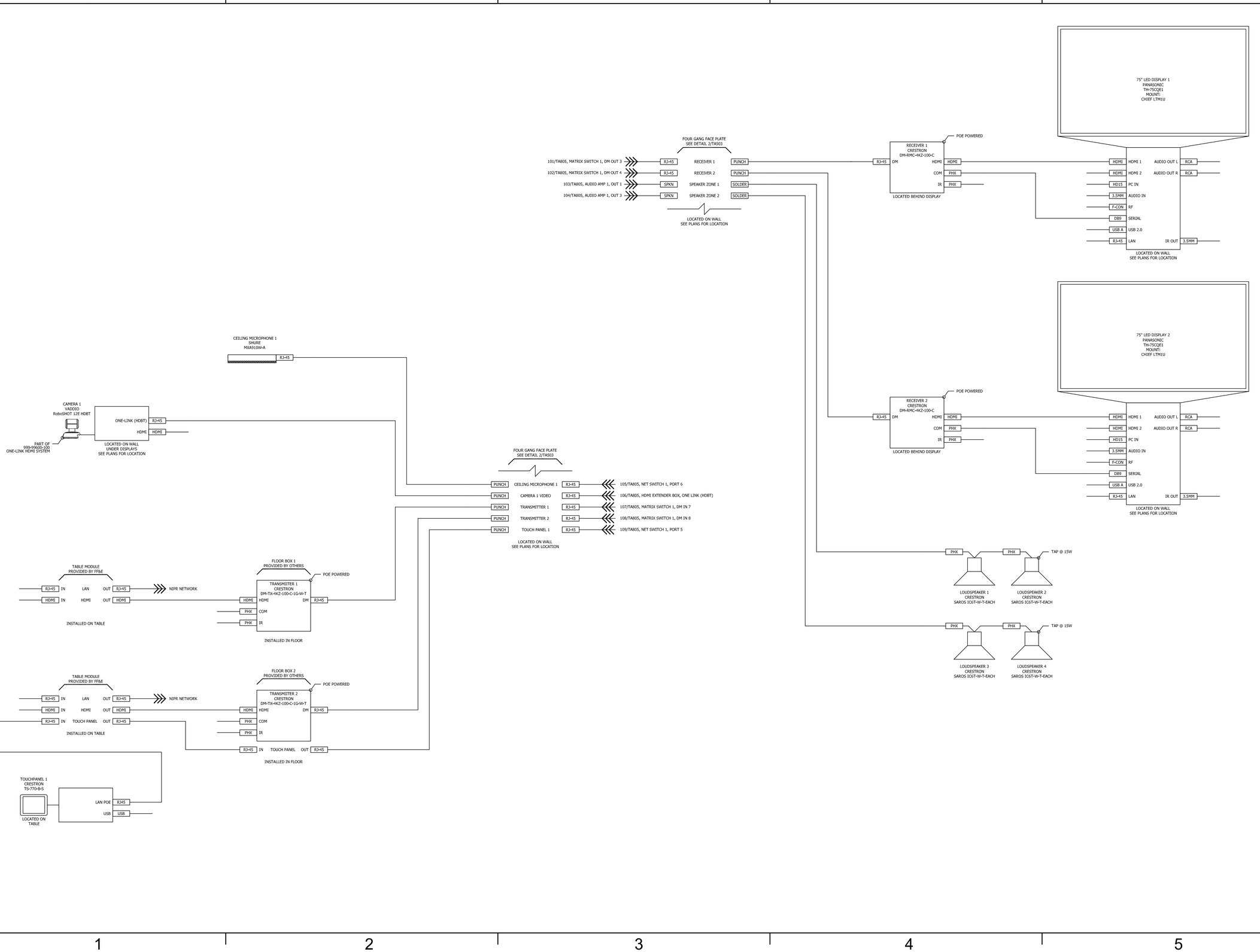

APPR	DATE	DESCRIPTION	MK'S

NAVFAC

PRELIMINARY
NOT FOR CONSTRUCTION

SEAL

WNJ Jordan COMPANY
- A JOINT VENTURE -

Michael Baker
INTERNATIONAL
100 AIRSIDE DRIVE
MOON TOWNSHIP, PA 15108
A/E INFO

APPROVED

FOR COMMANDER NAVFAC

ACTIVITY
MARINE CORPS BASE
CAMP LEJEUNE

SATISFACTORY TO DATE	DD/MM/YY		
DES AS	DRW AV	CHK BM	
PM		XXX	
BRANCH MANAGER		XXX	
CHIEF ENG/ARCH		XXX	
FIRE PROTECTION		XXX	

DEPARTMENT OF THE NAVY
NAVAL FACILITIES ENGINEERING COMMAND
ROICC FLORENCE CAMP LEJEUNE

NAVAL FACILITIES ENGINEERING COMMAND ~ MID-ATLANTIC
JACKSONVILLE, NC

MCB CAMP LEJEUNE
JACKSONVILLE, NC
P1338F II MEF SIMULATION/TRAINING CENTER
REPLACEMENT

SECURE VTC 303B SYSTEM DRAWING

SCALE:	NTS
EPROJECT NO.:	
CONSTR. CONTR. NO.	N40085-20-C-0059
NAVFAC DRAWING NO.	
SHEET	OF

TA804

DP2 SUBMISSION – P1338 BUILDING RE-FINAL SUBMISSION

PLOTTED: 5/19/2021 3:28:30 PM

FILE NAME: BIM 360://NF PACKAGE 3/P1338_MEF SIM CTR-1590892-T.rvt

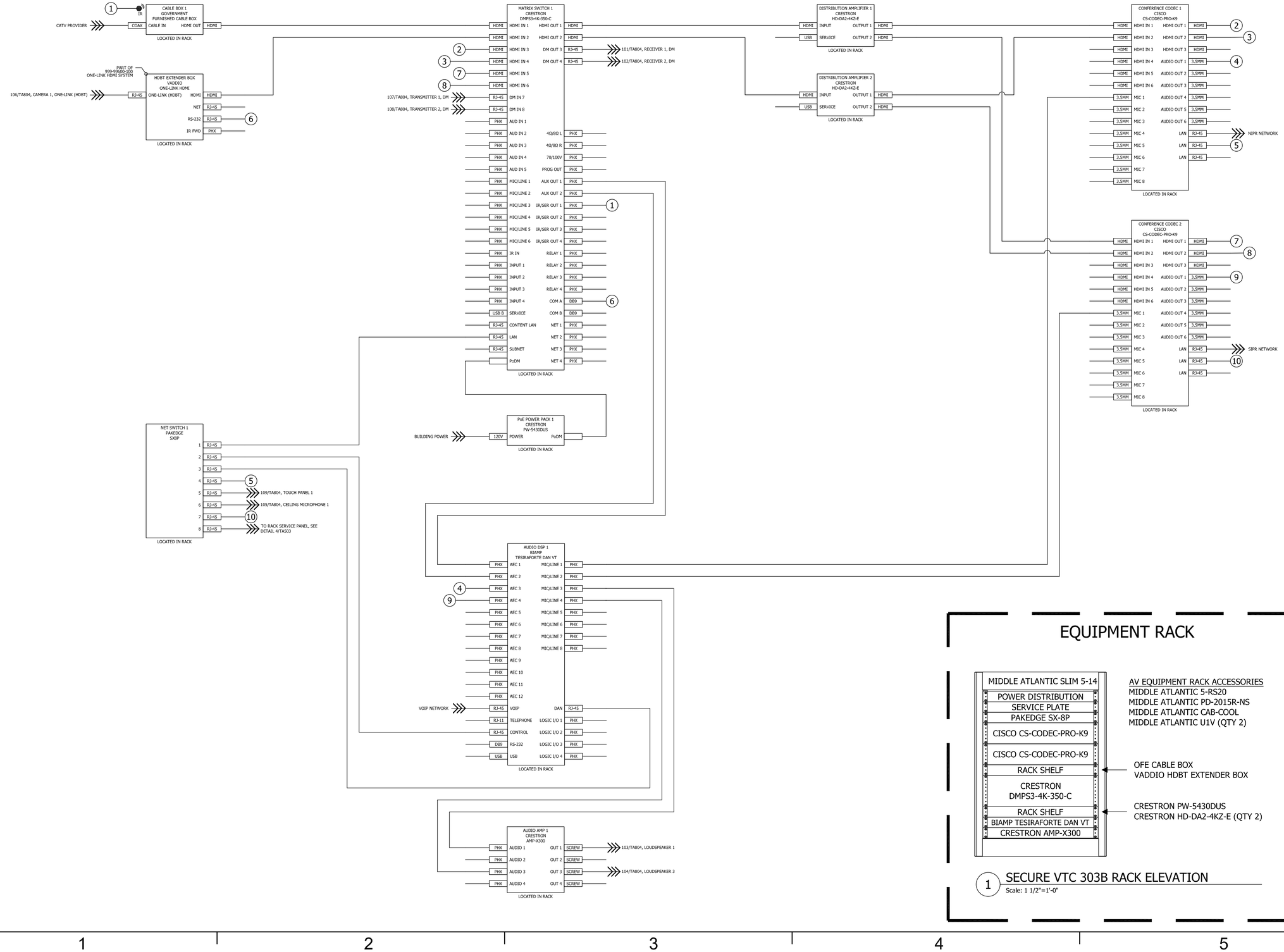

EQUIPMENT RACK

AV EQUIPMENT RACK ACCESSORIES
MIDDLE ATLANTIC 5-RS20
MIDDLE ATLANTIC PD-2015R-NS
MIDDLE ATLANTIC CAB-COOL
MIDDLE ATLANTIC U1V (QTY 2)

OFE CABLE BOX
VADDIO HDBT EXTENDER BOX

CRESTRON PW-5430DUS
CRESTRON HD-DA2-4KZ-E (QTY 2)

1 SECURE VTC 303B RACK ELEVATION
Scale: 1 1/2"=1'-0"

APPR	DATE	DESCRIPTION	STM

NAVFAC

PRELIMINARY
NOT FOR CONSTRUCTION

SEAL

RQ WNM Jordan COMPANY
– A JOINT VENTURE –

Michael Baker
INTERNATIONAL
100 AIRSIDE DRIVE
MOON TOWNSHIP, PA 15108
A/E INFO

APPROVED

FOR COMMANDER NAVFAC

ACTIVITY
MARINE CORPS BASE
CAMP LEJEUNE

SATISFACTORY TO DATE DD/MM/YY

DES AS	DRW AV	CHK BM
PM		XXX
BRANCH MANAGER		XXX
CHIEF ENG/ARCH		XXX
FIRE PROTECTION		XXX

DEPARTMENT OF THE NAVY
NAVAL FACILITIES ENGINEERING COMMAND – MID-ATLANTIC
JACKSONVILLE, NC
ROICC FLORENCE CAMP LEJEUNE
MCB CAMP LEJEUNE

JACKSONVILLE, NC
P1338F II MEF SIMULATION/TRAINING CENTER
REPLACEMENT

SECURE VTC 303B SYSTEM DRAWING

SCALE: NTS
EPROJECT NO.:
CONSTR. CONTR. NO.
N40085-20-C-0059
NAVFAC DRAWING NO.
SHEET OF

TA805

DP2 SUBMISSION – P1338 BUILDING RE-FINAL SUBMISSION

PLOTTED: 5/19/2021 3:26:30 PM

FILE NAME: BIM 360://MF PACKAGE 3/P1338_MEF SIM CTR-1590892-T.rvt

ENTRY WS 100

DECORA WALL PLATE
PROVIDED BY AVC

POE POWERED

DM-LITE TRANSMITTER
CRESTRON
HD-TX-101-C-1G-E-W-T

HDMI — HDMI IN — TO RX — RJ-45

LOCATED ON WALL
SEE PLANS FOR LOCATION

AV KEYPAD
CRESTRON
MPC3-101-B

POWER/CONTROL — RJ-45

LOCATED ON WALL
SEE PLANS FOR LOCATION

POE POWERED

LOBBY/VEST L010

2X1 DM SWITCHER RECIEVER
CRESTRON
HD-RX-201-C-E

LOCAL POWER

HDMI	HDMI IN	HDMI OUT	HDMI
RJ-45	FROM TX	AUDIO OUT L	PHX
		AUDIO OUT R	PHX
		IR OUT	PHX
		COM	PHX
		LAN	RJ-45

LOCATED BEHIND DISPLAY

55" LED DISPLAY
PANASONIC
TH-55CQ1U
MOUNT:
CHIEF MTM1U

HDMI	HDMI 1	AUDIO OUT L	RCA
HDMI	HDMI 2	AUDIO OUT R	RCA
HD15	PC IN		
3.5MM	AUDIO IN		
F-CON	RF		
DB9	SERIAL		
USB A	USB 2.0		
RJ-45	LAN	IR OUT	3.5MM

LOCATED ON WALL
SEE PLANS FOR LOCATION

NETWORK SWITCH
CRESTRON
CEN-SW-POE-5

LOCAL POWER

RJ-45	UPLINK
RJ-45	1
RJ-45	2
RJ-45	3
RJ-45	4

LOCATED BEHIND DISPLAY

PLOTTED: 5/19/2021 3:26:30 PM

FILE NAME: BIM 360://HF PACKAGE 3/P1338_MEF SIM CTR-1590892-T.rvt

NO.	DESCRIPTION	DATE	APPR

NAVFAC

PRELIMINARY
NOT FOR CONSTRUCTION

SEAL

RQ Jordan COMPANY
- A JOINT VENTURE -

Michael Baker
INTERNATIONAL
100 AIRSIDE DRIVE
MOON TOWNSHIP, PA 15108
A/E INFO

APPROVED

FOR COMMANDER NAVFAC

ACTIVITY
MARINE CORPS BASE
CAMP LEJEUNE

SATISFACTORY TO DATE	DD/MM/YY		
DES AS	DRW AV	CHK BM	
PM	XXX		
BRANCH MANAGER	XXX		
CHIEF ENG/ARCH	XXX		
FIRE PROTECTION	XXX		

DEPARTMENT OF THE NAVY
NAVAL FACILITIES ENGINEERING COMMAND
ROICC FLORENCE CAMP LEJEUNE

NAVAL FACILITIES ENGINEERING COMMAND ~ MID-ATLANTIC
JACKSONVILLE, NC

MCB CAMP LEJEUNE
JACKSONVILLE, NC
P1338F II MEF SIMULATION/TRAINING CENTER
REPLACEMENT

LOBBY/VEST L010 SYSTEM DRAWING

SCALE:	NTS
EPROJECT NO.:	
CONSTR. CONTR. NO.	N40085-20-C-0059
NAVFAC DRAWING NO.	
SHEET	OF

TA806

DP2 SUBMISSION – P1338 BUILDING RRE-FINAL SUBMISSION

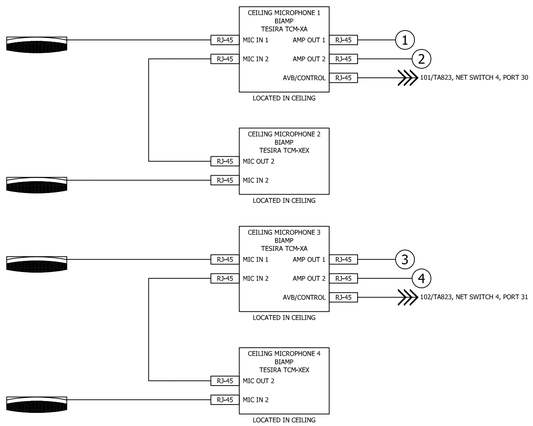

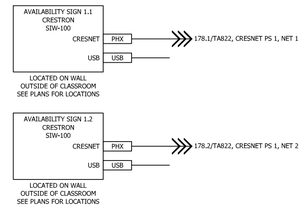

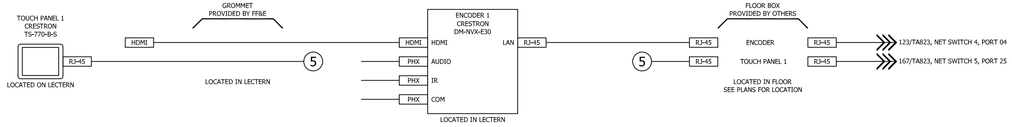

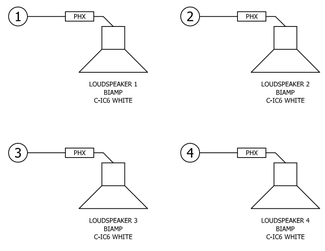

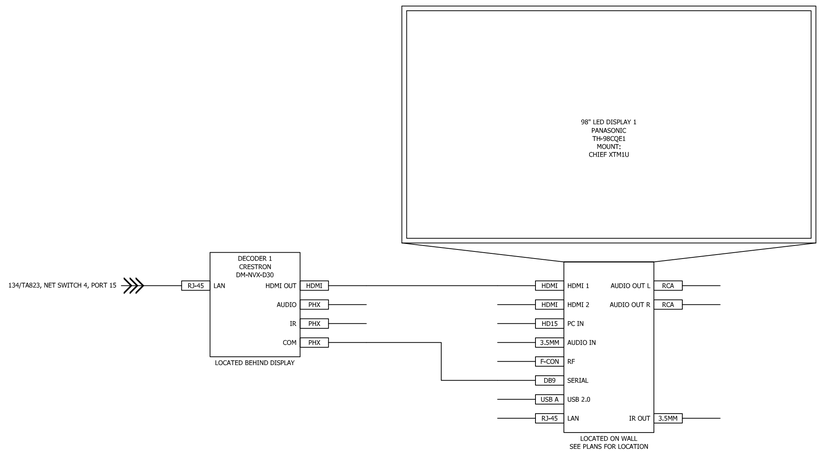

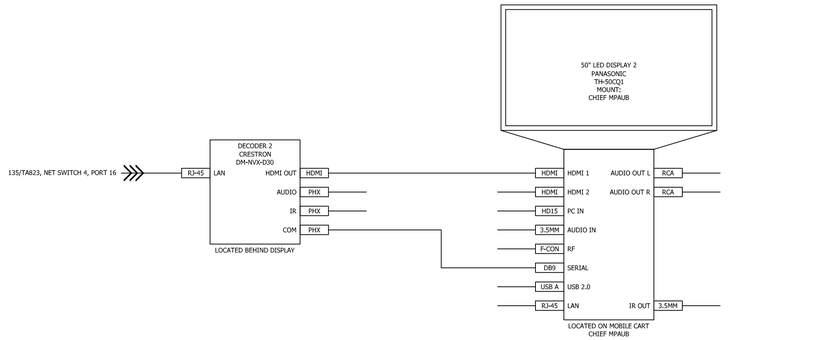

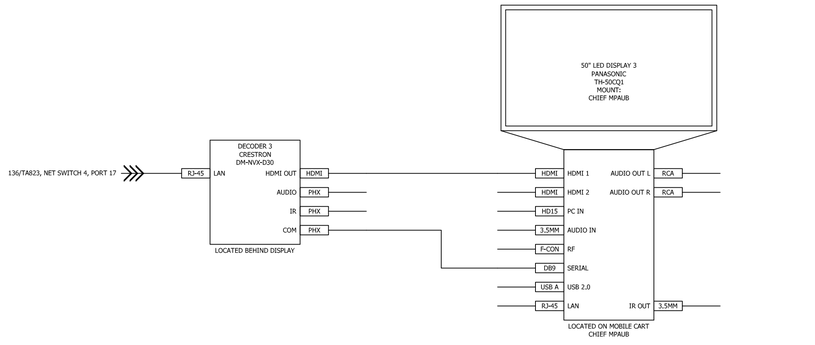

NO.	DESCRIPTION	DATE	APPR

NAVFAC

PRELIMINARY
NOT FOR CONSTRUCTION

SEAL

RQ Jordan COMPANY – A JOINT VENTURE –

Michael Baker INTERNATIONAL
100 AIRSIDE DRIVE
MOON TOWNSHIP, PA 15108
A/E INFO

APPROVED

FOR COMMANDER NAVFAC

ACTIVITY
MARINE CORPS BASE
CAMP LEJEUNE

SATISFACTORY TO DATE DD/MM/YY

DES	AS	DRW	AV	CHK	BM

PM	XXX
BRANCH MANAGER	XXX
CHIEF ENG/ARCH	XXX
FIRE PROTECTION	XXX

DEPARTMENT OF THE NAVY
NAVAL FACILITIES ENGINEERING COMMAND
ROICC FLORENCE CAMP LEJEUNE

NAVAL FACILITIES ENGINEERING COMMAND ~ MID-ATLANTIC
JACKSONVILLE, NC

MCB CAMP LEJEUNE
JACKSONVILLE, NC
P1338F II MEF SIMULATION/TRAINING CENTER
REPLACEMENT

SIMULATION CLASSROOM 200A SYSTEM DRAWING

SCALE:	NTS
EPROJECT NO.:	
CONSTR. CONTR. NO.	N40085-20-C-0059
NAVFAC DRAWING NO.	
SHEET	OF

TA807

DP2 SUBMISSION – P1338 BUILDING RPE-FINAL SUBMISSION

PLOTTED: 5/19/2021 3:26:30 PM

FILE NAME: BIM 360://NF PACKAGE 3/P1338_MEF SIM CTR-1590892-T.rvt

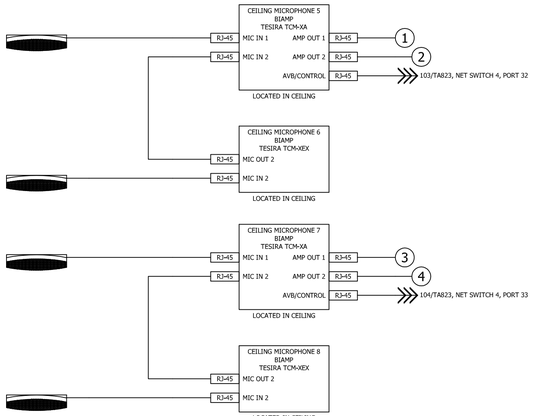

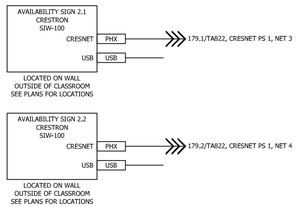

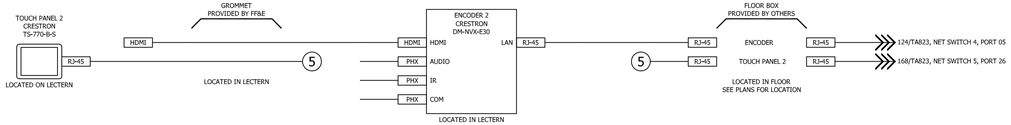

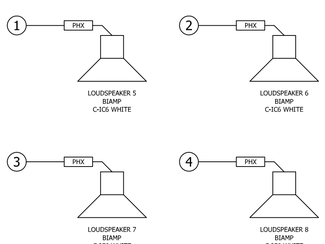

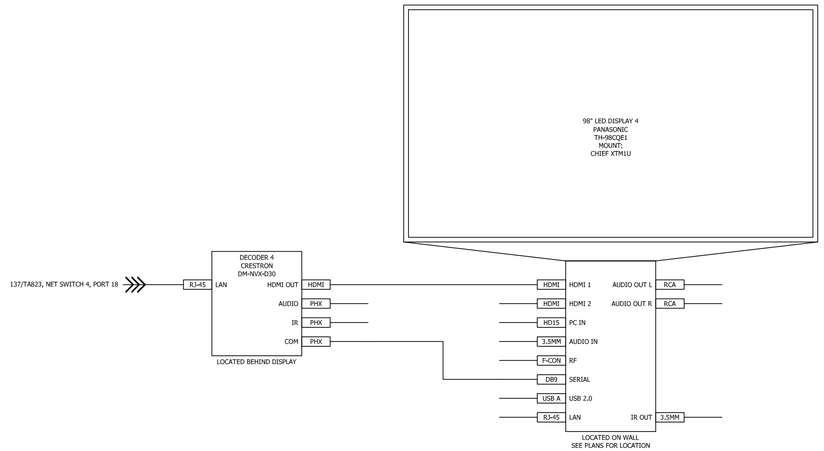

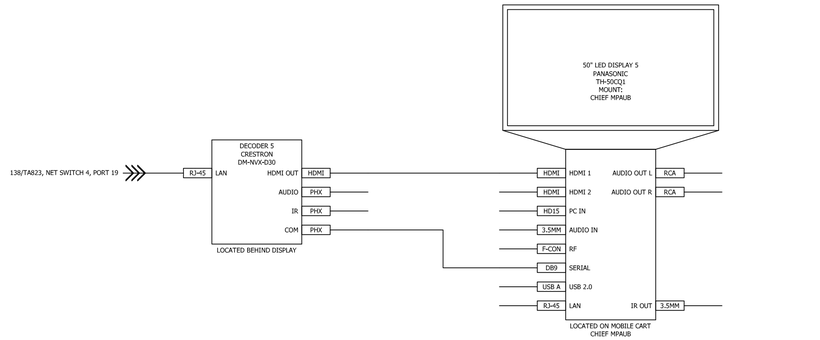

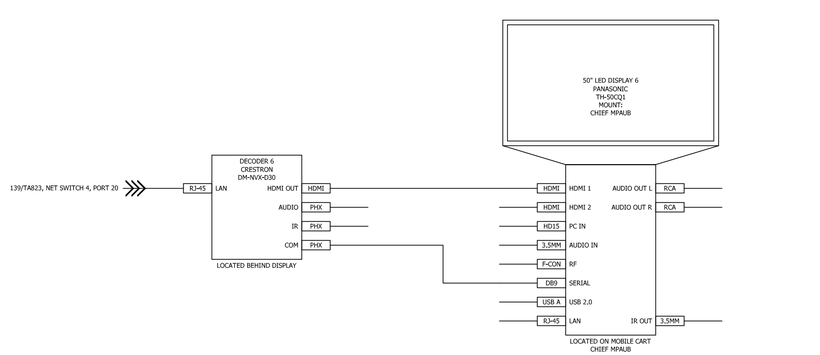

NUM	DESCRIPTION	DATE	APPR

PRELIMINARY
NOT FOR CONSTRUCTION

SEAL

RQ WNJ Jordan COMPANY – A JOINT VENTURE –

Michael Baker INTERNATIONAL
100 AIRSIDE DRIVE
MOON TOWNSHIP, PA 15108
A/E INFO

APPROVED

FOR COMMANDER NAVFAC

ACTIVITY
MARINE CORPS BASE
CAMP LEJEUNE

SATISFACTORY TO DATE DD/MM/YY

DES	AS	DRW	AV	CHK	BM
PM					XXX
BRANCH MANAGER					XXX
CHIEF ENG/ARCH					XXX
FIRE PROTECTION					XXX

DEPARTMENT OF THE NAVY
NAVAL FACILITIES ENGINEERING COMMAND
ROICC FLORENCE CAMP LEJEUNE
MCB CAMP LEJEUNE

NAVAL FACILITIES ENGINEERING COMMAND – MID-ATLANTIC
JACKSONVILLE, NC

P1338F II MEF SIMULATION/TRAINING CENTER REPLACEMENT

SIMULATION CLASSROOM 200B SYSTEM DRAWING

DP2 SUBMISSION – P1338 BUILDING RE-FINAL SUBMISSION

SCALE:	NTS
EPROJECT NO.:	
CONSTR. CONTR. NO.	N40085-20-C-0059
NAVFAC DRAWING NO.	
SHEET	OF

TA808

PLOTTED: 5/19/2021 3:28:30 PM

FILE NAME: BIM 360://HF PACKAGE 3/P1338_MEF SIM CTR-1590892-T.rvt

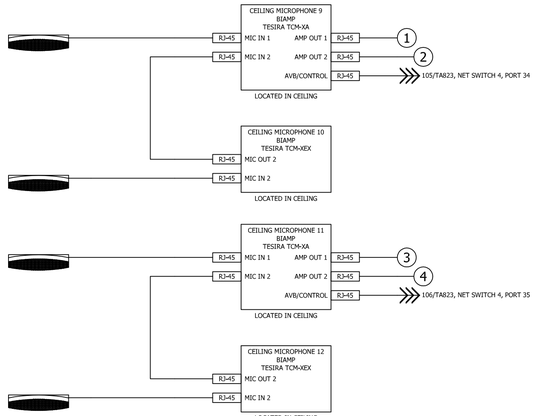



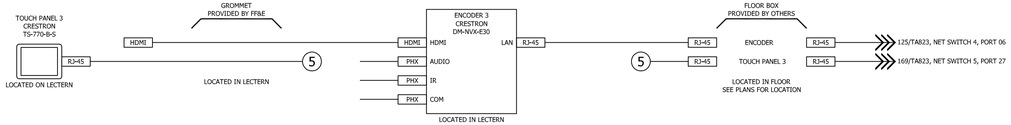

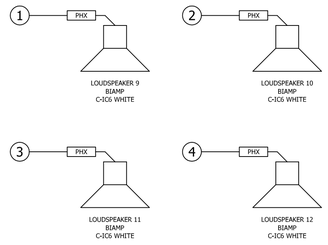

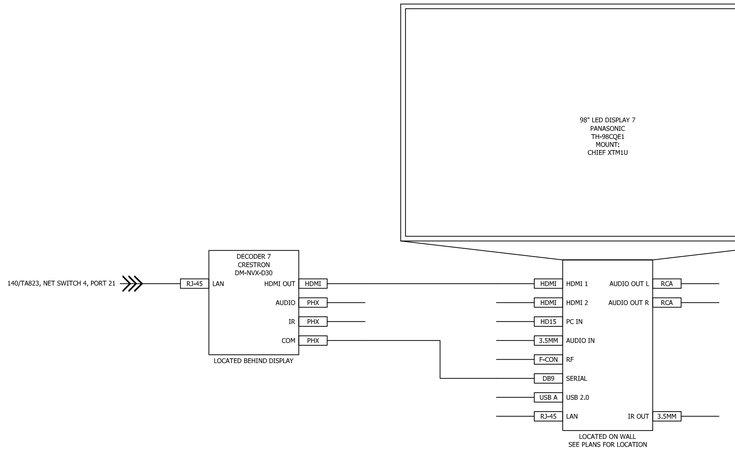

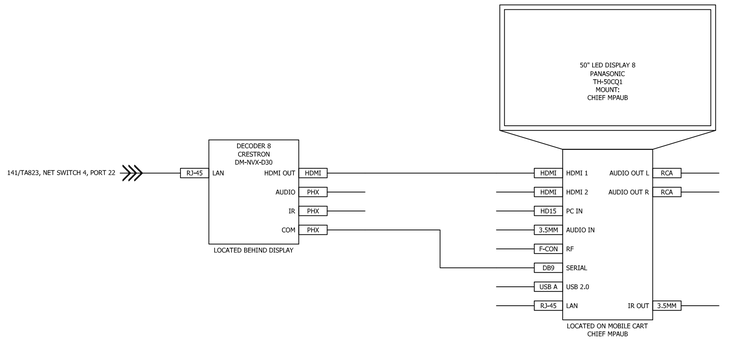

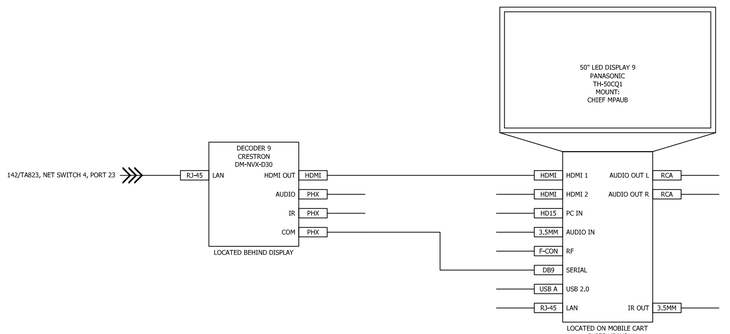

APPR	DATE	DESCRIPTION	NUM

PRELIMINARY
NOT FOR CONSTRUCTION

SEAL

WNJ Jordan COMPANY – A JOINT VENTURE –

Michael Baker INTERNATIONAL
100 AIRSIDE DRIVE
MOON TOWNSHIP, PA 15108
A/E INFO

APPROVED

FOR COMMANDER NAVFAC

ACTIVITY
MARINE CORPS BASE
CAMP LEJEUNE

SATISFACTORY TO DATE	DD/MM/YY
DES AS	DRW AV CHK BM
PM	XXX
BRANCH MANAGER	XXX
CHIEF ENG/ARCH	XXX
FIRE PROTECTION	XXX

DEPARTMENT OF THE NAVY
NAVAL FACILITIES ENGINEERING COMMAND
ROICC FLORENCE CAMP LEJEUNE
MCB CAMP LEJEUNE

NAVAL FACILITIES ENGINEERING COMMAND ~ MID-ATLANTIC
JACKSONVILLE, NC

JACKSONVILLE, NC
P1338F II MEF SIMULATION/TRAINING CENTER
REPLACEMENT

SIMULATION CLASSROOM 200C SYSTEM DRAWING

SCALE:	NTS
EPROJECT NO.:	
CONSTR. CONTR. NO.	N40085-20-C-0059
NAVFAC DRAWING NO.	
SHEET	OF

TA809

DP2 SUBMISSION – P1338 BUILDING PRE-FINAL SUBMISSION

PLOTTED: 5/19/2021 3:26:30 PM

FILE NAME: BIM 360://HF PACKAGE 3/P1338_MEF SIM CTR-1590892-T.rvt

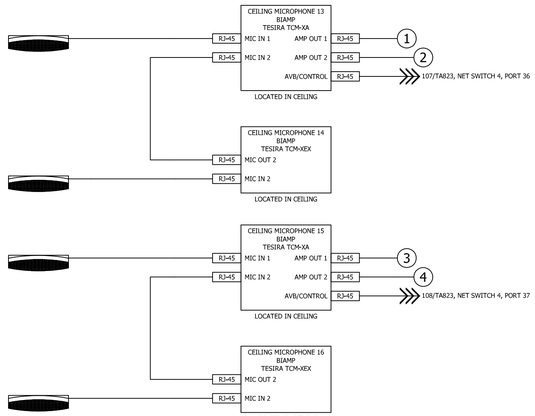

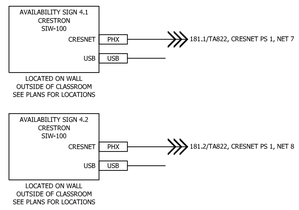

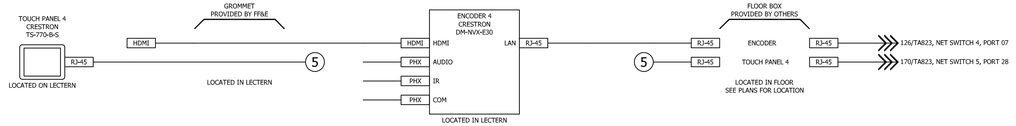

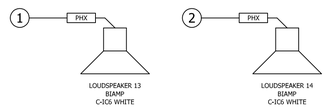

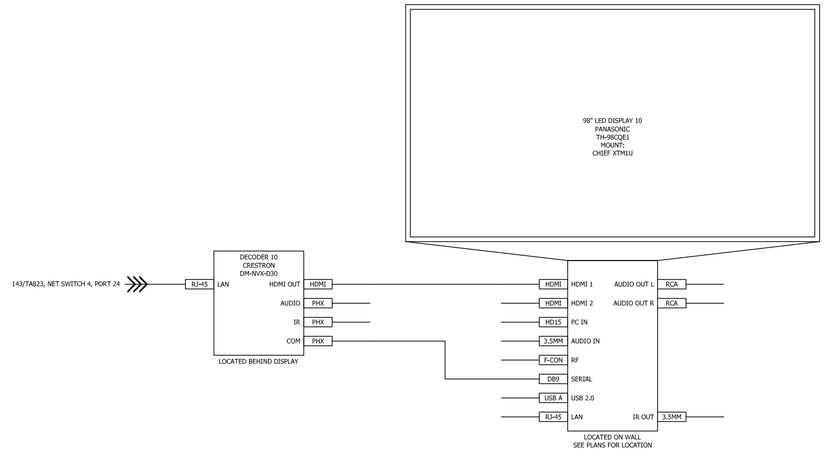

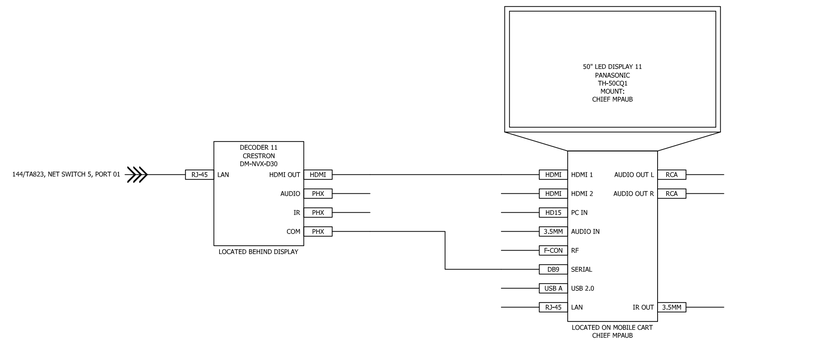

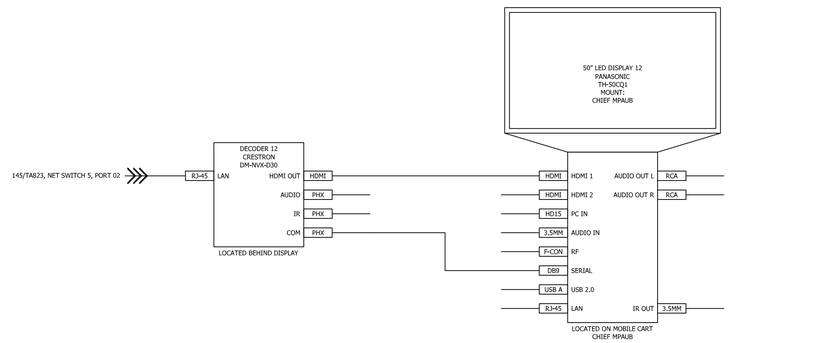

NO.	DESCRIPTION	DATE	APPR

PRELIMINARY
NOT FOR CONSTRUCTION

SEAL

Michael Baker INTERNATIONAL
100 AIRSIDE DRIVE
MOON TOWNSHIP, PA 15108
A/E INFO

APPROVED

FOR COMMANDER NAVFAC

ACTIVITY
MARINE CORPS BASE
CAMP LEJEUNE

SATISFACTORY TO DATE	DD/MM/YY		
DES AS	DRW AV	CHK BM	
PM	XXX		
BRANCH MANAGER	XXX		
CHIEF ENG/ARCH	XXX		
FIRE PROTECTION	XXX		

DEPARTMENT OF THE NAVY
NAVAL FACILITIES ENGINEERING COMMAND ~ MID-ATLANTIC
ROICC FLORENCE CAMP LEJEUNE
NAVAL FACILITIES ENGINEERING COMMAND ~ MID-ATLANTIC
JACKSONVILLE, NC
MCB CAMP LEJEUNE
JACKSONVILLE, NC
P1338F II MEF SIMULATION/TRAINING CENTER
REPLACEMENT

SIMULATION CLASSROOM 300A SYSTEM DRAWING

SCALE:	NTS
EPROJECT NO.:	
CONSTR. CONTR. NO.	N40085-20-C-0059
NAVFAC DRAWING NO.	
SHEET	OF

TA810

DP2 SUBMISSION – P1338 BUILDING PRE-FINAL SUBMISSION

PLOTTED: 5/19/2021 3:26:30 PM

FILE NAME: BIM 360://HF PACKAGE 3/P1338_MEF SIM CTR-1590892-T.rvt

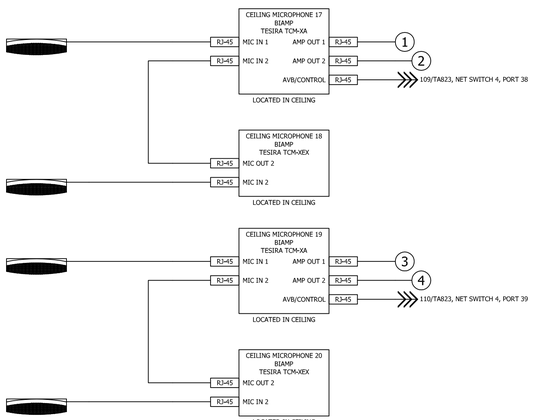

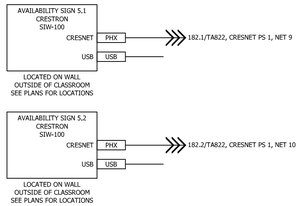

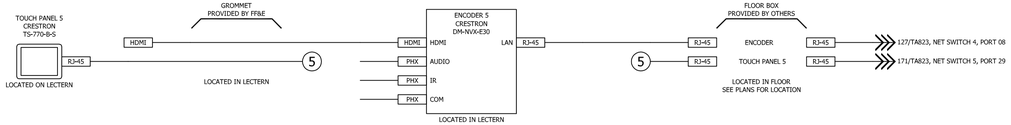

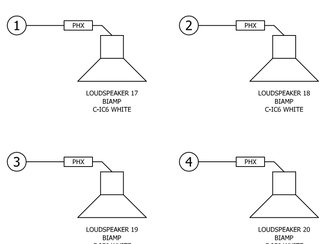

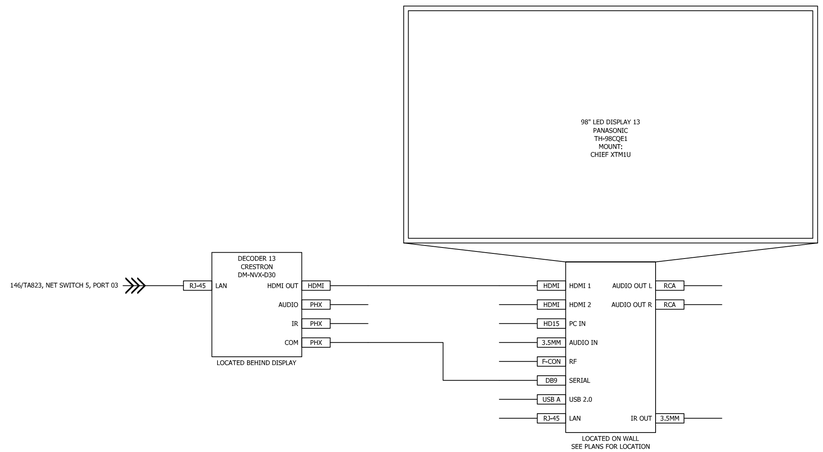

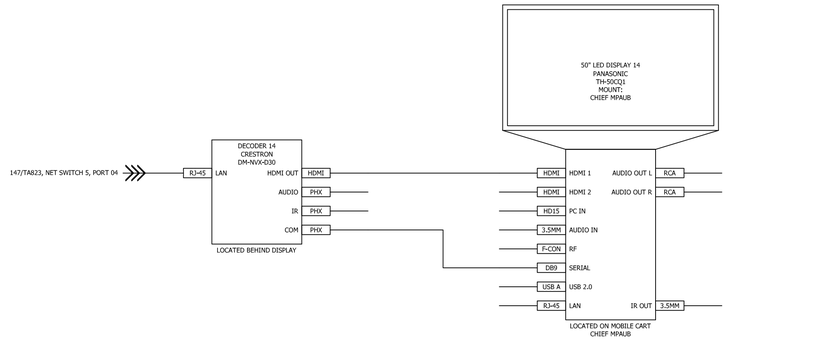

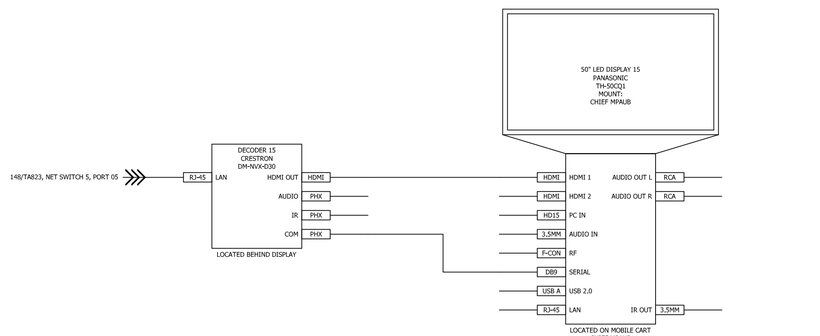

NO.	DESCRIPTION	DATE	APPR

NAVFAC

PRELIMINARY
NOT FOR CONSTRUCTION

SEAL

RQ Jordan COMPANY – A JOINT VENTURE –

Michael Baker INTERNATIONAL
100 AIRSIDE DRIVE
MOON TOWNSHIP, PA 15108
A/E INFO

APPROVED

FOR COMMANDER NAVFAC

ACTIVITY
MARINE CORPS BASE
CAMP LEJEUNE

SATISFACTORY TO DATE DD/MM/YY

DES	AS	DRW	AV	CHK	BM
PM					XXX
BRANCH MANAGER					XXX
CHIEF ENG/ARCH					XXX
FIRE PROTECTION					XXX

DEPARTMENT OF THE NAVY
NAVAL FACILITIES ENGINEERING COMMAND
ROICC FLORENCE CAMP LEJEUNE
MCB CAMP LEJEUNE

NAVAL FACILITIES ENGINEERING COMMAND – MID-ATLANTIC
JACKSONVILLE, NC

JACKSONVILLE, NC
P1338F II MEF SIMULATION/TRAINING CENTER REPLACEMENT

SIMULATION CLASSROOM 300B SYSTEM DRAWING

SCALE: NTS
EPROJECT NO.:
CONSTR. CONTR. NO.
N40085-20-C-0059
NAVFAC DRAWING NO.
SHEET OF

TA811

DP2 SUBMISSION – P1338 BUILDING RE-FINAL SUBMISSION

PLOTTED: 5/19/2021 3:28:30 PM

FILE NAME: BIM 360://HF PACKAGE 3/P1338_MEF SIM CTR-1590892-T.rvt

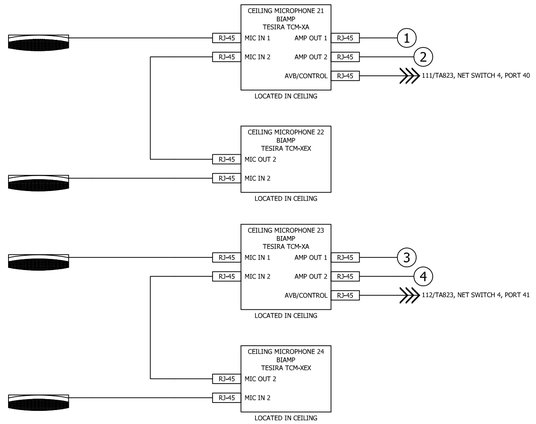

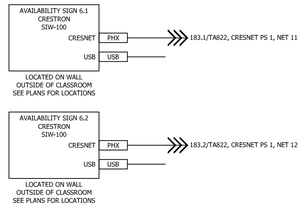

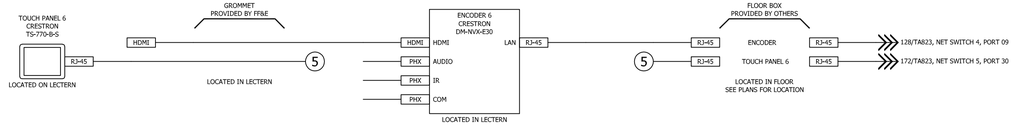

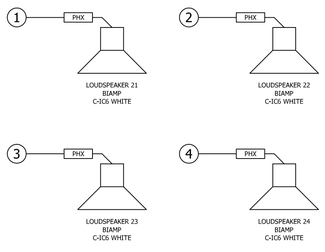

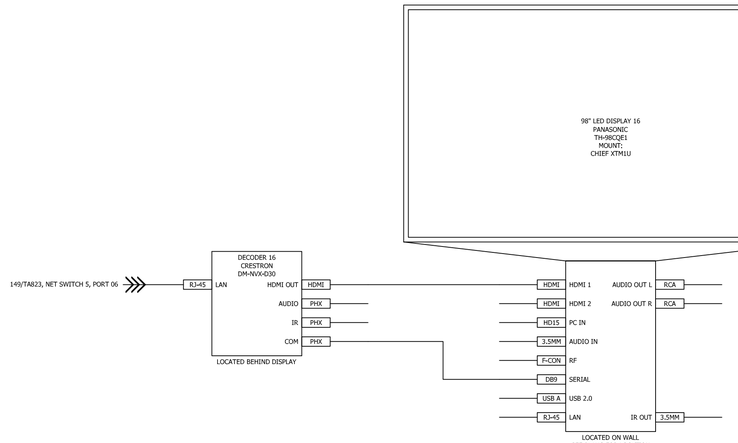

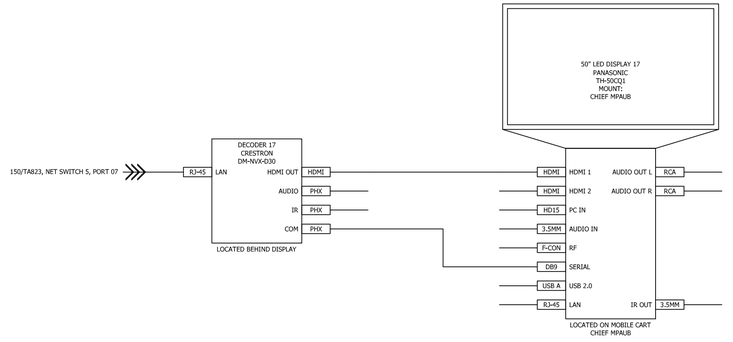

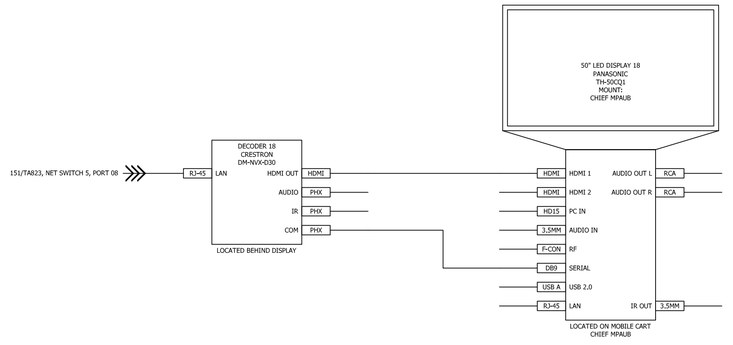

APPR	DATE	DESCRIPTION	STM

NAVFAC

PRELIMINARY
NOT FOR CONSTRUCTION

SEAL

RQ WNJ Jordan COMPANY
– A JOINT VENTURE –

Michael Baker
INTERNATIONAL
100 AIRSIDE DRIVE
MOON TOWNSHIP, PA 15108
A/E INFO

APPROVED

FOR COMMANDER NAVFAC

ACTIVITY
MARINE CORPS BASE
CAMP LEJEUNE

SATISFACTORY TO DATE	DD/MM/YY
DES AS	DRW AV CHK BM
PM	XXX
BRANCH MANAGER	XXX
CHIEF ENG/ARCH	XXX
FIRE PROTECTION	XXX

DEPARTMENT OF THE NAVY
NAVAL FACILITIES ENGINEERING COMMAND
ROICC FLORENCE CAMP LEJEUNE

NAVAL FACILITIES ENGINEERING COMMAND ~ MID-ATLANTIC
JACKSONVILLE, NC

MCB CAMP LEJEUNE
JACKSONVILLE, NC
P1338F II MEF SIMULATION/TRAINING CENTER
REPLACEMENT

SIMULATION CLASSROOM 300C SYSTEM DRAWING

SCALE:	NTS
EPROJECT NO.:	
CONSTR. CONTR. NO.	N40085-20-C-0059
NAVFAC DRAWING NO.	
SHEET	OF

TA812

DP2 SUBMISSION – P1338 BUILDING RE-FINAL SUBMISSION

PLOTTED: 5/19/2021 3:26:30 PM

FILE NAME: BIM 360://HF PACKAGE 3/P1338_MEF SIM CTR-1590892-T.rvt

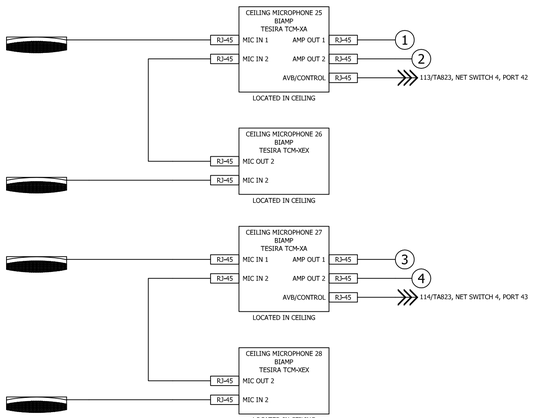

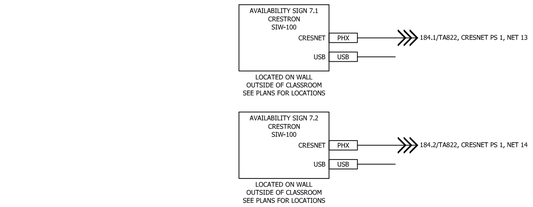

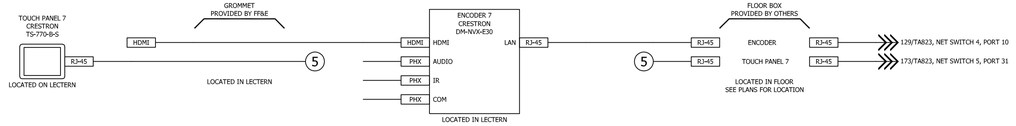

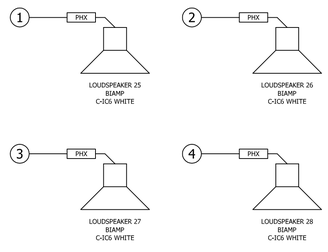

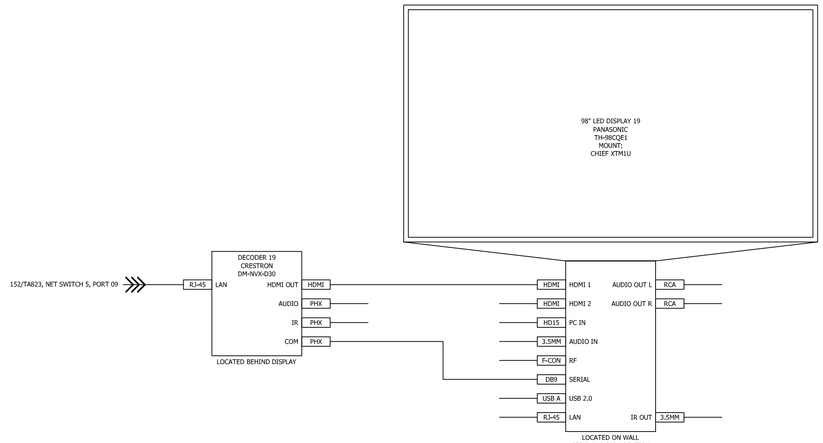

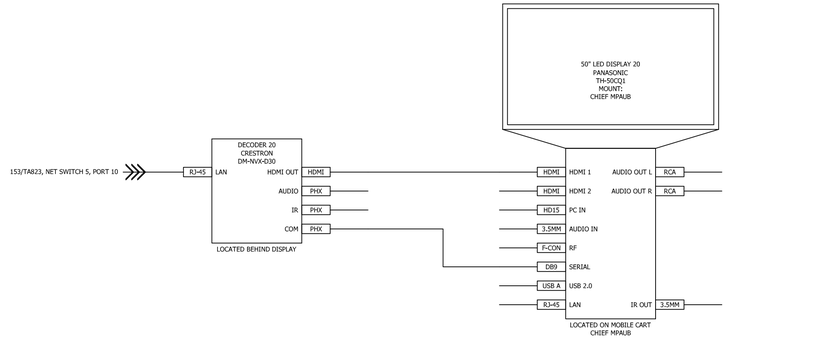

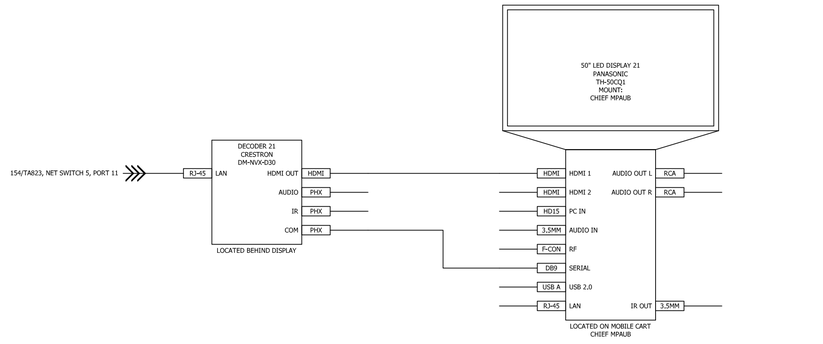

APPR	DATE	DESCRIPTION	STM

NAVFAC

PRELIMINARY
NOT FOR CONSTRUCTION

SEAL

RQ WNJ Jordan COMPANY
– A JOINT VENTURE –

Michael Baker
INTERNATIONAL
100 AIRSIDE DRIVE
MOON TOWNSHIP, PA 15108
A/E INFO

APPROVED

FOR COMMANDER NAVFAC

ACTIVITY
MARINE CORPS BASE
CAMP LEJEUNE

SATISFACTORY TO DATE	DD/MM/YY
DES AS	DRW AV CHK BM
PM	XXX
BRANCH MANAGER	XXX
CHIEF ENG/ARCH	XXX
FIRE PROTECTION	XXX

DEPARTMENT OF THE NAVY
NAVAL FACILITIES ENGINEERING COMMAND
ROICC FLORENCE CAMP LEJEUNE

NAVAL FACILITIES ENGINEERING COMMAND ~ MID-ATLANTIC
JACKSONVILLE, NC

MCB CAMP LEJEUNE
JACKSONVILLE, NC
P1338F II MEF SIMULATION/TRAINING CENTER
REPLACEMENT

SIMULATION CLASSROOM 300X SYSTEM DRAWING

SCALE:	NTS
EPROJECT NO.:	
CONSTR. CONTR. NO.	N40085-20-C-0059
NAVFAC DRAWING NO.	
SHEET	OF

TA813

DP2 SUBMISSION – P1338 BUILDING RE-FINAL SUBMISSION

PLOTTED: 5/19/2021 3:26:30 PM

FILE NAME: BIM 360://HF PACKAGE 3/P1338_MEF SIM CTR-1590892-T.rvt

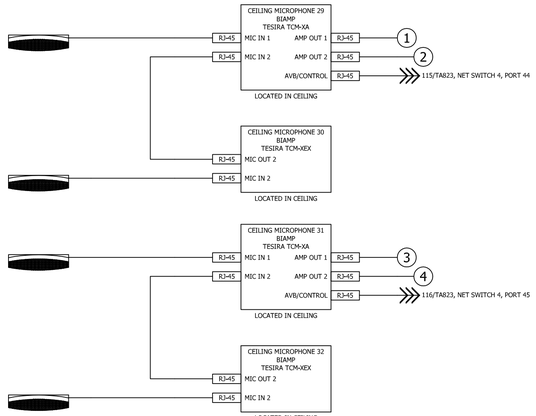

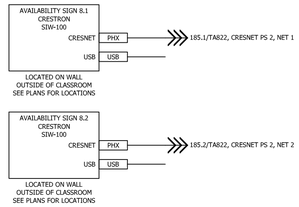

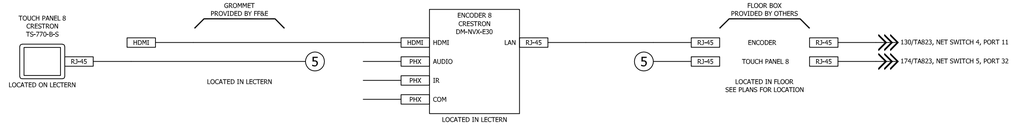

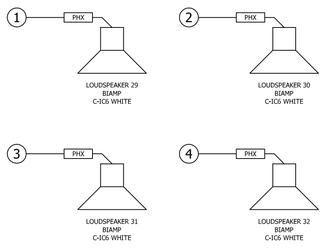

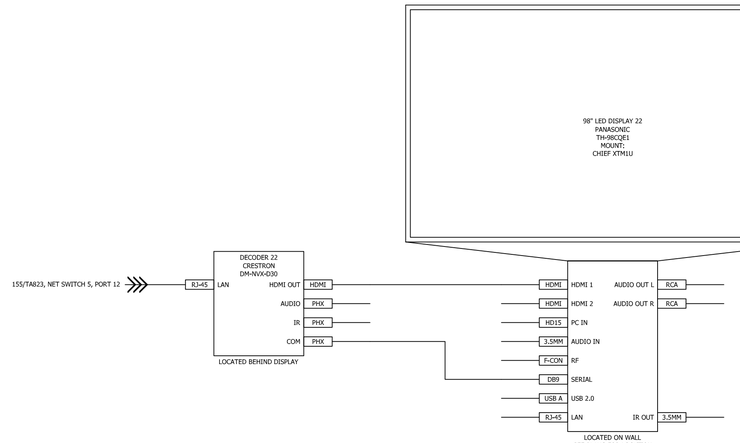

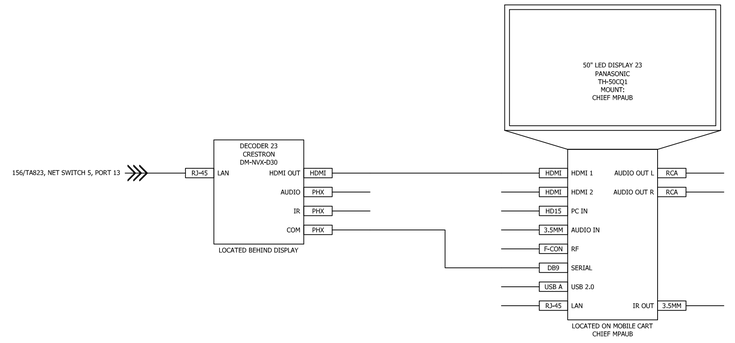

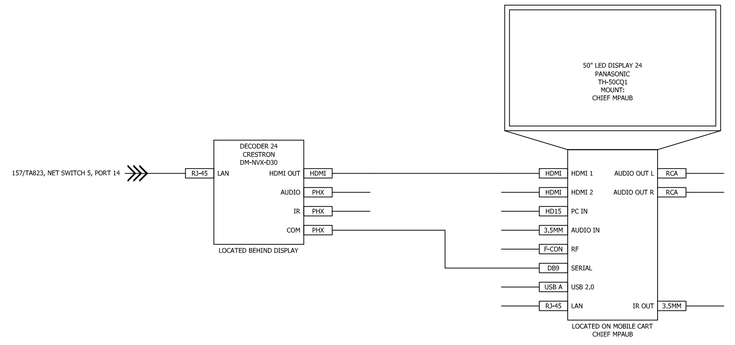

APPR	DATE	DESCRIPTION	NUM

NAVFAC

PRELIMINARY
NOT FOR CONSTRUCTION

SEAL

RQ WNJ Jordan COMPANY
– A JOINT VENTURE –

Michael Baker
INTERNATIONAL
100 AIRSIDE DRIVE
MOON TOWNSHIP, PA 15108
A/E INFO

APPROVED

FOR COMMANDER NAVFAC

ACTIVITY
MARINE CORPS BASE
CAMP LEJEUNE

SATISFACTORY TO DATE	DD/MM/YY
DES AS	DRW AV CHK BM
PM	XXX
BRANCH MANAGER	XXX
CHIEF ENG/ARCH	XXX
FIRE PROTECTION	XXX

DEPARTMENT OF THE NAVY
NAVAL FACILITIES ENGINEERING COMMAND
ROICC FLORENCE CAMP LEJEUNE

NAVAL FACILITIES ENGINEERING COMMAND ~ MID-ATLANTIC
JACKSONVILLE, NC

MCB CAMP LEJEUNE
JACKSONVILLE, NC
P1338F II MEF SIMULATION/TRAINING CENTER
REPLACEMENT

SIMULATION CLASSROOM 300Y SYSTEM DRAWING

SCALE:	NTS
EPROJECT NO.:	
CONSTR. CONTR. NO.	N40085-20-C-0059
NAVFAC DRAWING NO.	
SHEET	OF

TA814

DP2 SUBMISSION – P1338 BUILDING RE-FINAL SUBMISSION

PLOTTED: 5/19/2021 3:26:30 PM

FILE NAME: BIM 360://NF PACKAGE 3/P1338_MEF SIM CTR-1590892-T.rvt

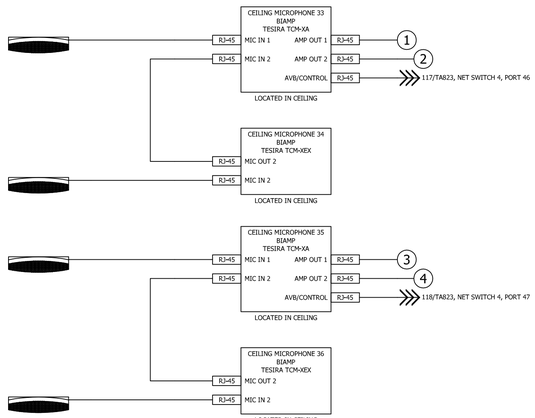

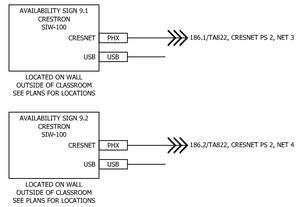

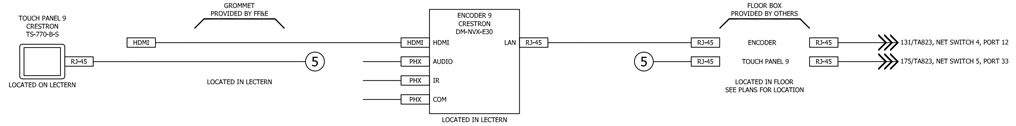

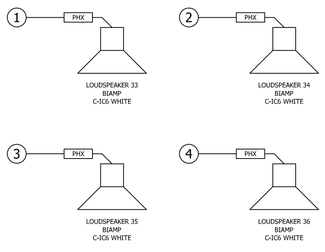

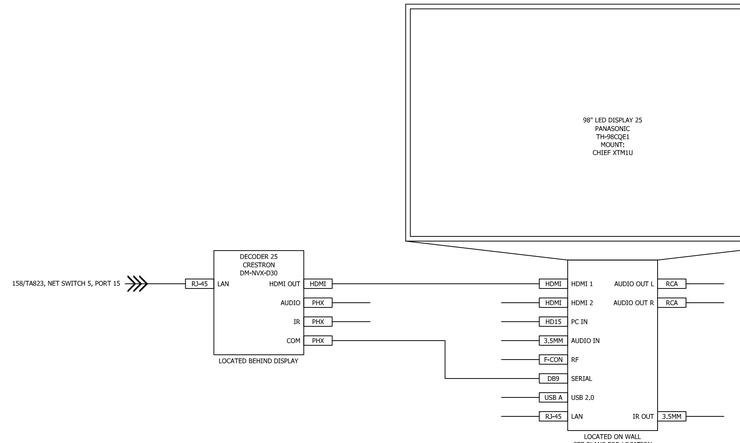

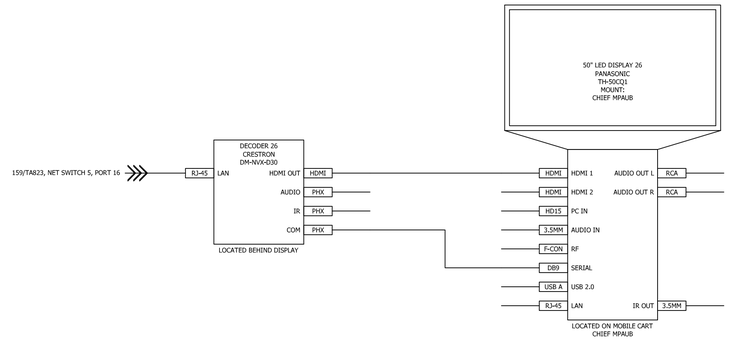

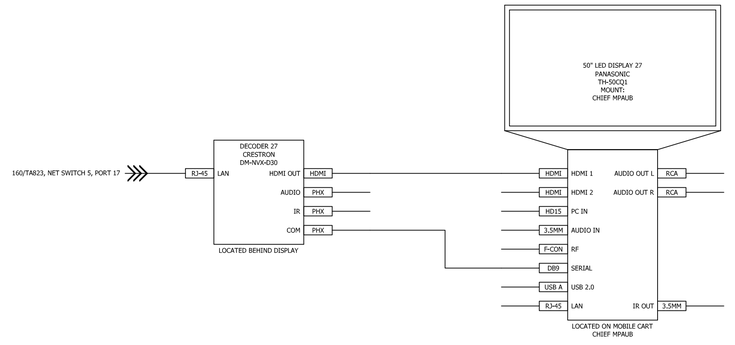

APPR	DATE	DESCRIPTION	STM

NAVFAC

PRELIMINARY
NOT FOR CONSTRUCTION

SEAL

RQ WNJ Jordan COMPANY
– A JOINT VENTURE –

Michael Baker
INTERNATIONAL
100 AIRSIDE DRIVE
MOON TOWNSHIP, PA 15108

A/E INFO

APPROVED

FOR COMMANDER NAVFAC

ACTIVITY
MARINE CORPS BASE
CAMP LEJEUNE

SATISFACTORY TO DATE	DD/MM/YY
DES AS / DRW AV / CHK BM	
PM	XXX
BRANCH MANAGER	XXX
CHIEF ENG/ARCH	XXX
FIRE PROTECTION	XXX

DEPARTMENT OF THE NAVY
NAVAL FACILITIES ENGINEERING COMMAND
ROICC FLORENCE CAMP LEJEUNE

NAVAL FACILITIES ENGINEERING COMMAND ~ MID-ATLANTIC
JACKSONVILLE, NC

MCB CAMP LEJEUNE
JACKSONVILLE, NC
P1338F II MEF SIMULATION/TRAINING CENTER
REPLACEMENT

SIMULATION CLASSROOM 300Z SYSTEM DRAWING

SCALE:	NTS
EPROJECT NO.:	
CONSTR. CONTR. NO.	N40085-20-C-0059
NAVFAC DRAWING NO.	
SHEET	OF

TA815

DP2 SUBMISSION – P1338 BUILDING RE-FINAL SUBMISSION

PLOTTED: 5/19/2021 3:26:30 PM

FILE NAME: BIM 360://HF PACKAGE 3/P1338_MEF SIM CTR-1590892-T.rvt

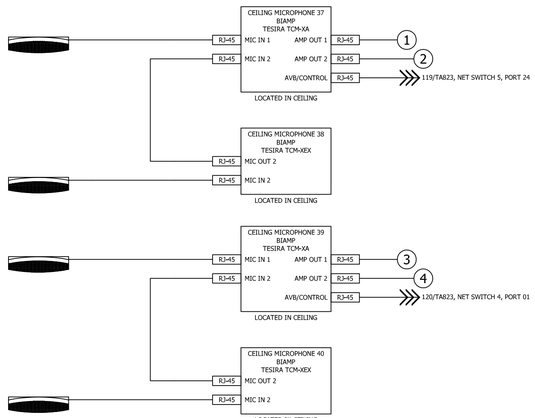

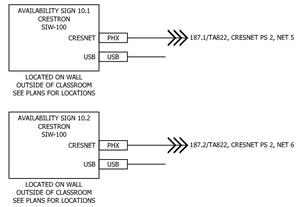

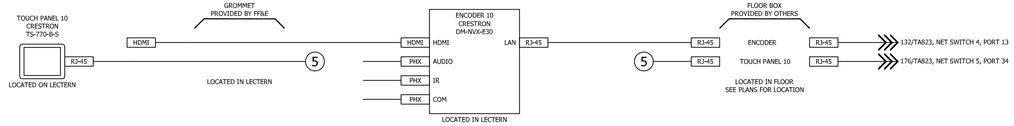

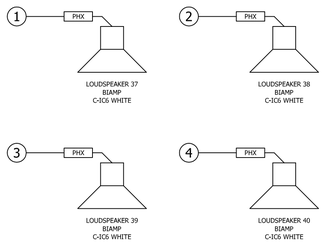

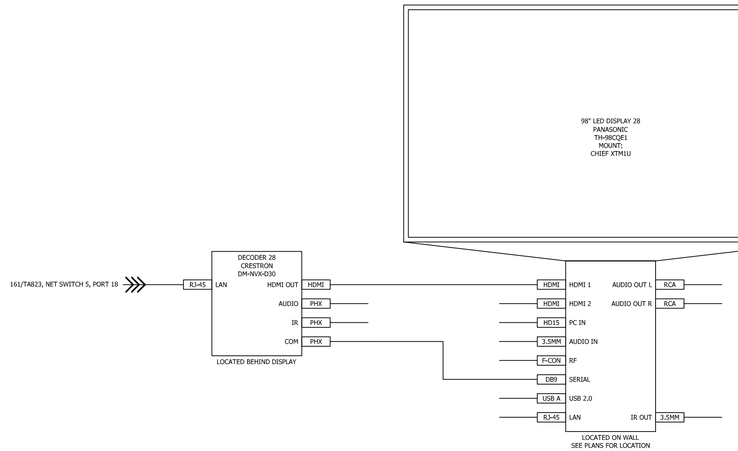

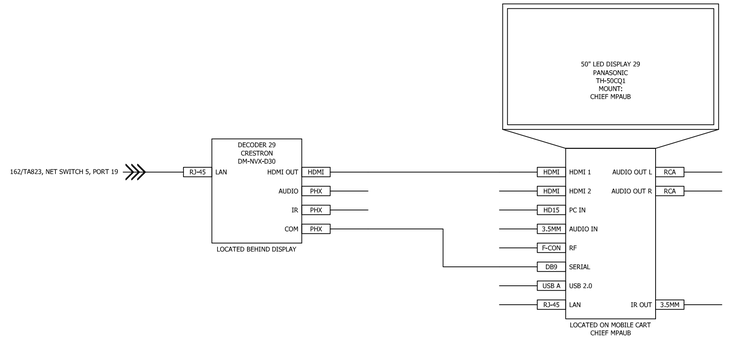

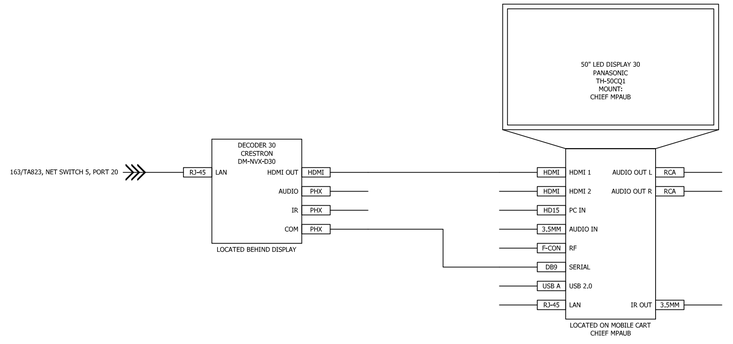

APPR	DATE	DESCRIPTION	NUM

NAVFAC

PRELIMINARY
NOT FOR CONSTRUCTION

SEAL

RQ WNJ Jordan COMPANY
– A JOINT VENTURE –

Michael Baker
INTERNATIONAL

100 AIRSIDE DRIVE
MOON TOWNSHIP, PA 15108

A/E INFO

APPROVED

FOR COMMANDER NAVFAC

ACTIVITY
MARINE CORPS BASE
CAMP LEJEUNE

SATISFACTORY TO DATE DD/MM/YY

DES	AS	DRW	AV	CHK	BM

PM	XXX
BRANCH MANAGER	XXX
CHIEF ENG/ARCH	XXX
FIRE PROTECTION	XXX

DEPARTMENT OF THE NAVY
NAVAL FACILITIES ENGINEERING COMMAND
ROICC FLORENCE CAMP LEJEUNE

NAVAL FACILITIES ENGINEERING COMMAND ~ MID-ATLANTIC
JACKSONVILLE, NC

MCB CAMP LEJEUNE
JACKSONVILLE, NC
P1338F II MEF SIMULATION/TRAINING CENTER
REPLACEMENT

SIMULATION CLASSROOM 301A SYSTEM DRAWING

SCALE:	NTS
EPROJECT NO.:	
CONSTR. CONTR. NO.	N40085-20-C-0059
NAVFAC DRAWING NO.	
SHEET	OF

TA816

DP2 SUBMISSION – P1338 BUILDING RPE-FINAL SUBMISSION

PLOTTED: 5/19/2021 3:26:30 PM

FILE NAME: BIM 360://NF PACKAGE 3/P1338_MEF SIM CTR-1590892-T.rvt

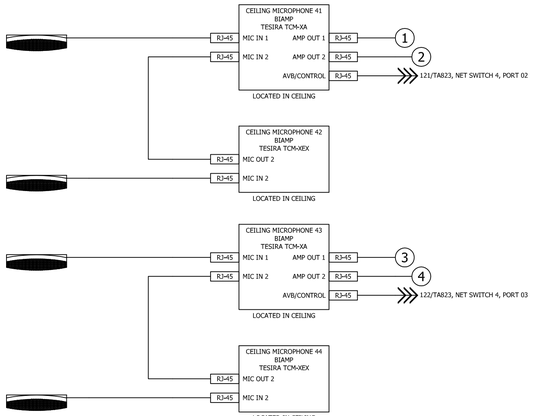

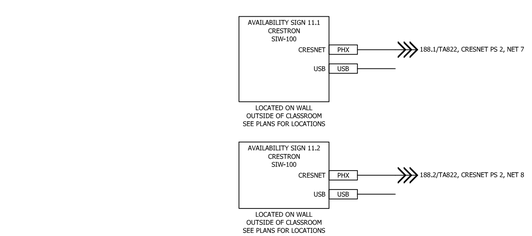

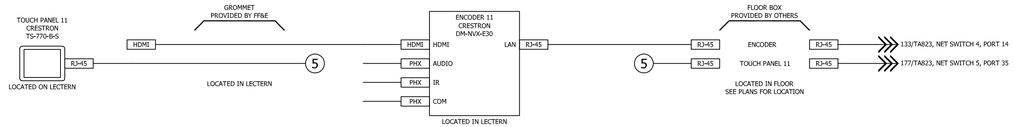

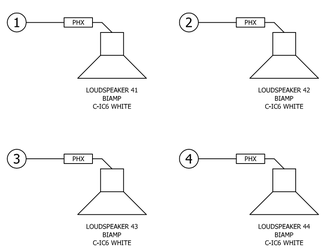

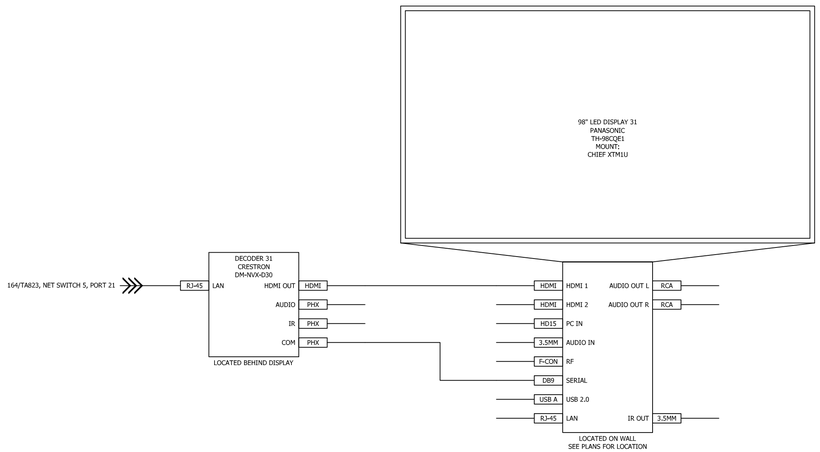

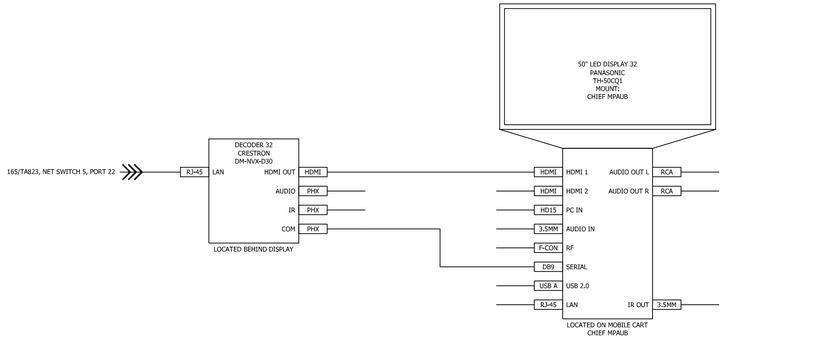

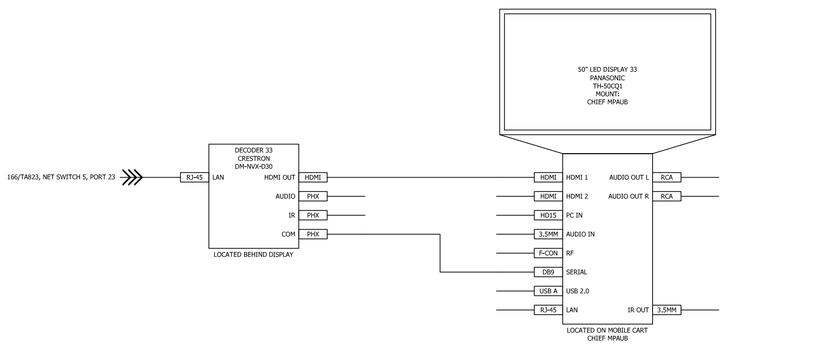

APPR	DATE	DESCRIPTION	NUM

NAVFAC

PRELIMINARY
NOT FOR CONSTRUCTION

SEAL

RQ WNJ Jordan COMPANY
– A JOINT VENTURE –

Michael Baker
INTERNATIONAL
100 AIRSIDE DRIVE
MOON TOWNSHIP, PA 15108
A/E INFO

APPROVED

FOR COMMANDER NAVFAC

ACTIVITY
MARINE CORPS BASE
CAMP LEJEUNE

SATISFACTORY TO DATE DD/MM/YY

DES	AS	DRW	AV	CHK	BM

PM	XXX
BRANCH MANAGER	XXX
CHIEF ENG/ARCH	XXX
FIRE PROTECTION	XXX

DEPARTMENT OF THE NAVY
NAVAL FACILITIES ENGINEERING COMMAND
ROICC FLORENCE CAMP LEJEUNE
MCB CAMP LEJEUNE

NAVAL FACILITIES ENGINEERING COMMAND ~ MID-ATLANTIC
JACKSONVILLE, NC

JACKSONVILLE, NC
P1338F II MEF SIMULATION/TRAINING CENTER
REPLACEMENT

SIMULATION CLASSROOM 301B SYSTEM DRAWING

SCALE: NTS
EPROJECT NO.:
CONSTR. CONTR. NO.
N40085-20-C-0059
NAVFAC DRAWING NO.
SHEET OF

TA817

DP2 SUBMISSION – P1338 BUILDING REF-FINAL SUBMISSION

PLOTTED: 5/19/2021 3:26:30 PM

FILE NAME: BIM 360://HF PACKAGE 3/P1338_MEF SIM CTR-1590892-T.rvt

CEILING MICROPHONE 45
SHURE
MXA910W-A
RJ-45 — 189/TA823, NET SWITCH 5, PORT 36

CEILING MICROPHONE 46
SHURE
MXA910W-A
RJ-45 — 190/TA823, NET SWITCH 5, PORT 37

CEILING MICROPHONE 47
SHURE
MXA910W-A
RJ-45 — 191/TA823, NET SWITCH 5, PORT 38

CEILING MICROPHONE 48
SHURE
MXA910W-A
RJ-45 — 192/TA823, NET SWITCH 5, PORT 39

237/TA823, AUDIO AMP 1, SPEAKER OUT 1 — PHX — PHX — PHX — TAP @ 15W
- LOUDSPEAKER 45 CRESTRON SAROS IC6T-W-T-EACH
- LOUDSPEAKER 46 CRESTRON SAROS IC6T-W-T-EACH
- LOUDSPEAKER 47 CRESTRON SAROS IC6T-W-T-EACH

238/TA823, AUDIO AMP 1, SPEAKER OUT 3 — PHX — PHX — PHX — TAP @ 15W
- LOUDSPEAKER 48 CRESTRON SAROS IC6T-W-T-EACH
- LOUDSPEAKER 49 CRESTRON SAROS IC6T-W-T-EACH
- LOUDSPEAKER 50 CRESTRON SAROS IC6T-W-T-EACH

241/TA822, VIDEO WALL CNTRL 1, OUTPUT 1 — LOCAL POWER
242/TA822, VIDEO WALL CNTRL 1, OUTPUT 2 — LOCAL POWER
243/TA822, VIDEO WALL CNTRL 1, OUTPUT 3 — LOCAL POWER
244/TA822, VIDEO WALL CNTRL 1, OUTPUT 4 — LOCAL POWER
245/TA822, VIDEO WALL CNTRL 1, OUTPUT 5 — LOCAL POWER
246/TA822, VIDEO WALL CNTRL 1, OUTPUT 6 — LOCAL POWER
247/TA822, VIDEO WALL CNTRL 1, OUTPUT 7 — LOCAL POWER
248/TA822, VIDEO WALL CNTRL 1, OUTPUT 8 — LOCAL POWER

VIDEO WALL DISPLAY 1 PLANAR TVF 1.2	VIDEO WALL DISPLAY 5 PLANAR TVF 1.2	VIDEO WALL DISPLAY 9 PLANAR TVF 1.2	VIDEO WALL DISPLAY 13 PLANAR TVF 1.2	VIDEO WALL DISPLAY 17 PLANAR TVF 1.2	VIDEO WALL DISPLAY 21 PLANAR TVF 1.2	VIDEO WALL DISPLAY 25 PLANAR TVF 1.2	VIDEO WALL DISPLAY 29 PLANAR TVF 1.2
VIDEO WALL DISPLAY 2 PLANAR TVF 1.2	VIDEO WALL DISPLAY 6 PLANAR TVF 1.2	VIDEO WALL DISPLAY 10 PLANAR TVF 1.2	VIDEO WALL DISPLAY 14 PLANAR TVF 1.2	VIDEO WALL DISPLAY 18 PLANAR TVF 1.2	VIDEO WALL DISPLAY 22 PLANAR TVF 1.2	VIDEO WALL DISPLAY 26 PLANAR TVF 1.2	VIDEO WALL DISPLAY 30 PLANAR TVF 1.2
VIDEO WALL DISPLAY 3 PLANAR TVF 1.2	VIDEO WALL DISPLAY 7 PLANAR TVF 1.2	VIDEO WALL DISPLAY 11 PLANAR TVF 1.2	VIDEO WALL DISPLAY 15 PLANAR TVF 1.2	VIDEO WALL DISPLAY 19 PLANAR TVF 1.2	VIDEO WALL DISPLAY 23 PLANAR TVF 1.2	VIDEO WALL DISPLAY 27 PLANAR TVF 1.2	VIDEO WALL DISPLAY 31 PLANAR TVF 1.2
VIDEO WALL DISPLAY 4 PLANAR TVF 1.2	VIDEO WALL DISPLAY 8 PLANAR TVF 1.2	VIDEO WALL DISPLAY 12 PLANAR TVF 1.2	VIDEO WALL DISPLAY 16 PLANAR TVF 1.2	VIDEO WALL DISPLAY 20 PLANAR TVF 1.2	VIDEO WALL DISPLAY 24 PLANAR TVF 1.2	VIDEO WALL DISPLAY 28 PLANAR TVF 1.2	VIDEO WALL DISPLAY 32 PLANAR TVF 1.2

WORKSTATION

21.5" TOUCH DISPLAY CRESTRON TSD-220-B
- HDMI — HDMI — LOCATED ON WORKSTATION
- USB — USB A — LOCATED ON WORKSTATION

GROMMET PROVIDED BY FF&E

1RU PATCH PANEL SEE DETAIL 5/TA503 PROVIDED BY AVC
- HDMI INPUT 1 — HDMI — HDMI
- HDMI INPUT 2 — HDMI — HDMI
- HDMI INPUT 3 — HDMI — HDMI
- HDMI INPUT 4 — HDMI — HDMI
- HDMI INPUT 5 — HDMI — HDMI
- HDMI INPUT 6 — HDMI — HDMI

LOCATED IN WORKSTATION

CARD CHASSIS 6 CRESTRON DMF-CI-8
- ENCODER CARD 14 CRESTRON DM-NVX-E30C — HDMI — LAN — RJ-45; AUDIO — PHX
- ENCODER CARD 15 CRESTRON DM-NVX-E30C — HDMI — LAN — RJ-45; AUDIO — PHX
- ENCODER CARD 16 CRESTRON DM-NVX-E30C — HDMI — LAN — RJ-45; AUDIO — PHX
- ENCODER CARD 17 CRESTRON DM-NVX-E30C — HDMI — LAN — RJ-45; AUDIO — PHX
- ENCODER CARD 18 CRESTRON DM-NVX-E30C — HDMI — LAN — RJ-45; AUDIO — PHX
- ENCODER CARD 19 CRESTRON DM-NVX-E30C — HDMI — LAN — RJ-45; AUDIO — PHX
- DECODER CARD 25 CRESTRON DM-NVX-D30C — (1) RJ-45 — LAN; HDMI — HDMI; AUDIO — PHX

LOCATED IN WORKSTATION

NET SWITCH 1 EXTREME NETWORKS X440-G2-12T-10GE4
- RJ-45 1
- RJ-45 2
- RJ-45 3
- RJ-45 4
- RJ-45 5
- RJ-45 6
- (1) RJ-45 7
- (2) RJ-45 8
- RJ-45 9
- RJ-45 10
- RJ-45 11
- RJ-45 12

LOCATED IN WORKSTATION

DIGITAL GRAPHICS ENGINE CRESTRON DM-DGE-200-C
- HDMI — HDMI IN 1; HDMI OUT — HDMI
- RJ-45 — CONSOLE SERIAL; USB — USB
- RJ-45 — DM IN; IR 1 — PHX
- PHX — COM; IR 2 — PHX
- USB A — HOST USB 2.0
- (2) RJ-45 — LAN

LOCATED IN WORKSTATION

CAMERA 1
1 BEYOND
AUTOTRACKER 3
- SDI 1 — BNC — 229/TA822, CAMERA AUTO MIXER 1, SDI 1
- SDI 2 — BNC — 230/TA822, CAMERA AUTO MIXER 1, SDI 2
- RS-232/RS-485 — VISCA
- ETHERNET — RJ-45 — 223/TA821, NETWORK SWITCH 6, PORT 07

LOCATED ON WALL SEE PLANS FOR LOCATION

CAMERA 2
1 BEYOND
PTZ-IP20
PART OF 1 BEYOND AUTOMATE SELECT PRO SYSTEM
- SDI — SDI — 231/TA822, CAMERA AUTO MIXER 1, SDI 3
- RS-232 — PS2
- LAN — RJ-45 — 224/TA821, NETWORK SWITCH 6, PORT 08

LOCATED ON WALL SEE PLANS FOR LOCATION

CAMERA 3
1 BEYOND
PTZ-IP20
PART OF 1 BEYOND AUTOMATE SELECT PRO SYSTEM
- SDI — SDI — 232/TA822, CAMERA AUTO MIXER 1, SDI 4
- RS-232 — PS2
- LAN — RJ-45 — 225/TA821, NETWORK SWITCH 6, PORT 09

LOCATED ON WALL SEE PLANS FOR LOCATION

FLOOR BOX 1 PROVIDED BY OTHERS
- RJ-45 — WORKSTATION — RJ-45 — 206/TA821, NET SWITCH 3, PORT 46

LOCATED IN FLOOR LOCATED UNDER WORKSTATION SEE PLANS FOR LOCATION

FLOOR BOX 2 PROVIDED BY OTHERS
TRANSMITTER 1 CRESTRON DM-TX-4KZ-100-C-1G
- HDMI — HDMI; DM — RJ-45 — 212/TA821, CARD CHASSIS 2, ENCODER CARD 9, DM INPUT
- PHX — COM
- PHX — IR

LOCATED IN FLOOR LOCATED UNDER LECTERN SEE PLANS FOR LOCATION

NO.	DESCRIPTION	DATE	APPR

NAVFAC

PRELIMINARY NOT FOR CONSTRUCTION

SEAL

RQ WMJ Jordan COMPANY – A JOINT VENTURE –

Michael Baker INTERNATIONAL
100 AIRSIDE DRIVE
MOON TOWNSHIP, PA 15108
A/E INFO

APPROVED

FOR COMMANDER NAVFAC

ACTIVITY
MARINE CORPS BASE
CAMP LEJEUNE

SATISFACTORY TO DATE	DD/MM/YY		
DES	AS	DRW AV	CHK BM
PM	XXX		
BRANCH MANAGER	XXX		
CHIEF ENG/ARCH	XXX		
FIRE PROTECTION	XXX		

DEPARTMENT OF THE NAVY
NAVAL FACILITIES ENGINEERING COMMAND
ROICC FLORENCE / CAMP LEJEUNE
NAVAL FACILITIES ENGINEERING COMMAND – MID-ATLANTIC
JACKSONVILLE, NC
MCB CAMP LEJEUNE
JACKSONVILLE, NC
P1338F II MEF SIMULATION/TRAINING CENTER REPLACEMENT
AUDITORIUM/ READY ROOM 201 SYSTEM DRAWING

SCALE:	NTS
EPROJECT NO.:	
CONSTR. CONTR. NO.	N40085-20-C-0059
NAVFAC DRAWING NO.	
SHEET	OF

TA818

DP2 SUBMISSION – P1338 BUILDING RE-FINAL SUBMISSION

PLOTTED: 5/19/2021 3:28:30 PM

FILE NAME: BIM 360://HF PACKAGE 3/P1338_MEF SIM CTR-1590892-Tr4

CEILING MICROPHONE 49
SHURE
MXA910W-A
RJ-45 → 193/TA823, NET SWITCH 5, PORT 40

CEILING MICROPHONE 50
SHURE
MXA910W-A
RJ-45 → 194/TA823, NET SWITCH 5, PORT 41

CEILING MICROPHONE 51
SHURE
MXA910W-A
RJ-45 → 195/TA823, NET SWITCH 5, PORT 42

CEILING MICROPHONE 52
SHURE
MXA910W-A
RJ-45 → 196/TA823, NET SWITCH 5, PORT 43

CAMERA 4
1 BEYOND
AUTOTRACKER 3
SDI 1 BNC → 233/TA822, CAMERA AUTO MIXER 2, SDI 1
SDI 2 BNC → 234/TA822, CAMERA AUTO MIXER 2, SDI 2
RS-232/RS-485 VISCA
ETHERNET RJ-45 → 226/TA821, NETWORK SWITCH 6, PORT 10
LOCATED ON WALL
SEE PLANS FOR LOCATION

CAMERA 5
1 BEYOND
PTZ-IP20
PART OF 1 BEYOND AUTOMATE SELECT PRO SYSTEM
SDI SDI → 235/TA822, CAMERA AUTO MIXER 2, SDI 3
RS-232 PS2
LAN RJ-45 → 227/TA821, NETWORK SWITCH 6, PORT 11
LOCATED ON WALL
SEE PLANS FOR LOCATION

CAMERA 6
1 BEYOND
PTZ-IP20
PART OF 1 BEYOND AUTOMATE SELECT PRO SYSTEM
SDI SDI → 236/TA822, CAMERA AUTO MIXER 2, SDI 4
RS-232 PS2
LAN RJ-45 → 228/TA821, NETWORK SWITCH 6, PORT 12
LOCATED ON WALL
SEE PLANS FOR LOCATION

239/TA823, AUDIO AMP 2, SPEAKER OUT 1 → PHX → PHX → PHX → TAP @ 15W
LOUDSPEAKER 51 CRESTRON SAROS IC6T-W-T-EACH
LOUDSPEAKER 52 CRESTRON SAROS IC6T-W-T-EACH
LOUDSPEAKER 53 CRESTRON SAROS IC6T-W-T-EACH

240/TA823, AUDIO AMP 2, SPEAKER OUT 3 → PHX → PHX → PHX → TAP @ 15W
LOUDSPEAKER 54 CRESTRON SAROS IC6T-W-T-EACH
LOUDSPEAKER 55 CRESTRON SAROS IC6T-W-T-EACH
LOUDSPEAKER 56 CRESTRON SAROS IC6T-W-T-EACH

LOCAL POWER → 249/TA822, VIDEO WALL CNTRL 2, OUTPUT 1
LOCAL POWER → 250/TA822, VIDEO WALL CNTRL 2, OUTPUT 2
LOCAL POWER → 251/TA822, VIDEO WALL CNTRL 2, OUTPUT 3
LOCAL POWER → 252/TA822, VIDEO WALL CNTRL 2, OUTPUT 4
253/TA822, VIDEO WALL CNTRL 2, OUTPUT 5 → LOCAL POWER
254/TA822, VIDEO WALL CNTRL 2, OUTPUT 6 → LOCAL POWER
255/TA822, VIDEO WALL CNTRL 2, OUTPUT 7 → LOCAL POWER
256/TA822, VIDEO WALL CNTRL 2, OUTPUT 8 → LOCAL POWER

VIDEO WALL DISPLAY 1 PLANAR TVF 1.2	VIDEO WALL DISPLAY 5 PLANAR TVF 1.2	VIDEO WALL DISPLAY 9 PLANAR TVF 1.2	VIDEO WALL DISPLAY 13 PLANAR TVF 1.2	VIDEO WALL DISPLAY 17 PLANAR TVF 1.2	VIDEO WALL DISPLAY 21 PLANAR TVF 1.2	VIDEO WALL DISPLAY 25 PLANAR TVF 1.2	VIDEO WALL DISPLAY 29 PLANAR TVF 1.2
VIDEO WALL DISPLAY 2 PLANAR TVF 1.2	VIDEO WALL DISPLAY 6 PLANAR TVF 1.2	VIDEO WALL DISPLAY 10 PLANAR TVF 1.2	VIDEO WALL DISPLAY 14 PLANAR TVF 1.2	VIDEO WALL DISPLAY 18 PLANAR TVF 1.2	VIDEO WALL DISPLAY 22 PLANAR TVF 1.2	VIDEO WALL DISPLAY 26 PLANAR TVF 1.2	VIDEO WALL DISPLAY 30 PLANAR TVF 1.2
VIDEO WALL DISPLAY 3 PLANAR TVF 1.2	VIDEO WALL DISPLAY 7 PLANAR TVF 1.2	VIDEO WALL DISPLAY 11 PLANAR TVF 1.2	VIDEO WALL DISPLAY 15 PLANAR TVF 1.2	VIDEO WALL DISPLAY 19 PLANAR TVF 1.2	VIDEO WALL DISPLAY 23 PLANAR TVF 1.2	VIDEO WALL DISPLAY 27 PLANAR TVF 1.2	VIDEO WALL DISPLAY 31 PLANAR TVF 1.2
VIDEO WALL DISPLAY 4 PLANAR TVF 1.2	VIDEO WALL DISPLAY 8 PLANAR TVF 1.2	VIDEO WALL DISPLAY 12 PLANAR TVF 1.2	VIDEO WALL DISPLAY 16 PLANAR TVF 1.2	VIDEO WALL DISPLAY 20 PLANAR TVF 1.2	VIDEO WALL DISPLAY 24 PLANAR TVF 1.2	VIDEO WALL DISPLAY 28 PLANAR TVF 1.2	VIDEO WALL DISPLAY 32 PLANAR TVF 1.2

75" LED DISPLAY 34
PANASONIC
TH-75CQE1
MOUNT:
CHIEF LTM1U

217/TA821, NET SWITCH 3, PORT 20 → RJ-45 LAN
DECODER 34
CRESTRON
DM-NVX-D30
LOCATED BEHIND DISPLAY
HDMI OUT HDMI → HDMI 1
AUDIO PHX → HDMI 2
IR PHX → PC IN
COM PHX → AUDIO IN
RF
SERIAL
USB 2.0
LAN
AUDIO OUT L RCA
AUDIO OUT R RCA
IR OUT 3.5MM
LOCATED ON WALL
SEE PLANS FOR LOCATION

75" LED DISPLAY 35
PANASONIC
TH-75CQE1
MOUNT:
CHIEF LTM1U

218/TA821, NET SWITCH 3, PORT 21 → RJ-45 LAN
DECODER 35
CRESTRON
DM-NVX-D30
LOCATED BEHIND DISPLAY
HDMI OUT HDMI → HDMI 1
AUDIO PHX → HDMI 2
IR PHX → PC IN
COM PHX → AUDIO IN
RF
SERIAL
USB 2.0
LAN
AUDIO OUT L RCA
AUDIO OUT R RCA
IR OUT 3.5MM
LOCATED ON WALL
SEE PLANS FOR LOCATION

WORKSTATION

21.5" TOUCH DISPLAY
CRESTRON
TSD-220-B
HDMI HDMI
USB USB A
LOCATED ON WORKSTATION

HDMI
GROMMET
PROVIDED BY FF&E
LOCATED IN WORKSTATION

1RU PATCH PANEL
SEE DETAIL 6/TA503
PROVIDED BY AVC
HDMI INPUT 1 HDMI
HDMI INPUT 2 HDMI
HDMI INPUT 3 HDMI
LOCATED IN WORKSTATION

DIGITAL GRAPHICS ENGINE
CRESTRON
DM-DGE-200-C
1 HDMI IN 1 HDMI OUT HDMI
RJ-45 CONSOLE SERIAL USB USB
RJ-45 DM IN IR 1 PHX
PHX COM IR 2 PHX
USB A HOST USB 2.0
2 RJ-45 LAN
LOCATED IN WORKSTATION

CARD CHASSIS 7
CRESTRON
DMF-CI-8
ENCODER CARD 20
CRESTRON
DM-NVX-E30C
HDMI HDMI LAN RJ-45
PHX AUDIO
ENCODER CARD 21
CRESTRON
DM-NVX-E30C
HDMI HDMI LAN RJ-45
PHX AUDIO
ENCODER CARD 22
CRESTRON
DM-NVX-E30C
HDMI HDMI LAN RJ-45
PHX AUDIO
DECODER CARD 26
CRESTRON
DM-NVX-D30C
RJ-45 LAN HDMI HDMI 1
AUDIO PHX
LOCATED IN WORKSTATION

NET SWITCH 2
EXTREME NETWORKS
X440-G2-12T-10GE4
2 RJ-45 1
RJ-45 2
RJ-45 3
RJ-45 4
RJ-45 5
RJ-45 6
RJ-45 7
RJ-45 8
RJ-45 9
RJ-45 10
RJ-45 11
RJ-45 12
LOCATED IN WORKSTATION

FLOOR BOX 1
PROVIDED BY OTHERS
RJ-45 WORKSTATION RJ-45 → 207/TA821, NET SWITCH 3, PORT 47
LOCATED IN FLOOR
LOCATED UNDER WORKSTATION
SEE PLANS FOR LOCATION

APPR	DATE	DESCRIPTION	MLS

NAVFAC

PRELIMINARY
NOT FOR CONSTRUCTION

SEAL

WNJ Jordan COMPANY – A JOINT VENTURE –

Michael Baker
INTERNATIONAL
100 AIRSIDE DRIVE
MOON TOWNSHIP, PA 15108 A/E INFO

APPROVED

FOR COMMANDER NAVFAC

ACTIVITY
MARINE CORPS BASE
CAMP LEJEUNE

SATISFACTORY TO DATE	DD/MM/YY		
DES AS	DRW AV	CHK BM	
PM	XXX		
BRANCH MANAGER	XXX		
CHIEF ENG/ARCH	XXX		
FIRE PROTECTION	XXX		

DEPARTMENT OF THE NAVY
NAVAL FACILITIES ENGINEERING COMMAND
ROICC FLORENCE CAMP LEJEUNE

NAVAL FACILITIES ENGINEERING COMMAND ~ MID-ATLANTIC
JACKSONVILLE, NC

MCB CAMP LEJEUNE
JACKSONVILLE, NC
P1338F II MEF SIMULATION/TRAINING CENTER
REPLACEMENT

EXERCISE CONTROL 202 SYSTEM DRAWING

SCALE:	NTS
EPROJECT NO.:	
CONSTR. CONTR. NO.	N40085-20-C-0059
NAVFAC DRAWING NO.	
SHEET	OF

TA819

DP2 SUBMISSION – P1338 BUILDING RE-FINAL SUBMISSION

PLOTTED: 5/19/2021 3:26:30 PM

FILE NAME: BIM 360://MEF PACKAGE 3/P1338_MEF SIM CTR-1590892-T.rvt

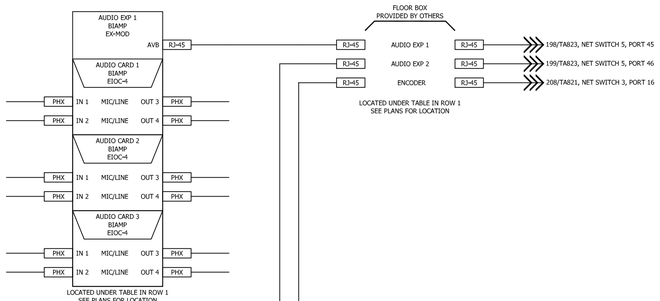

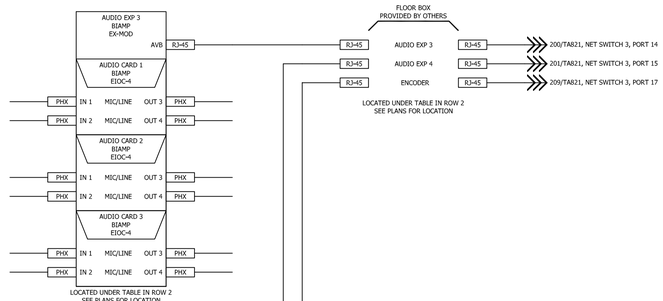

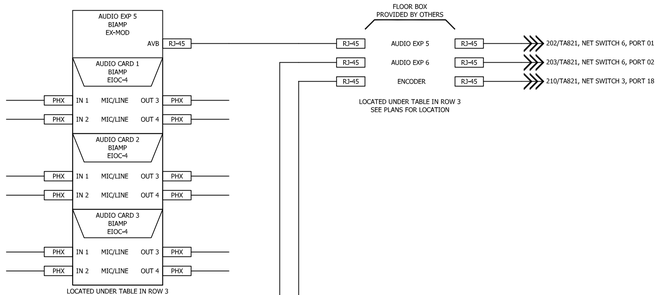

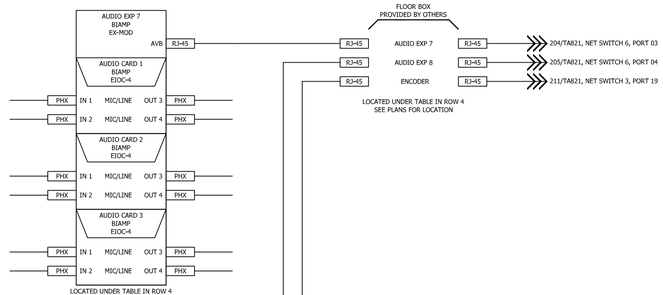

APPR	DATE	DESCRIPTION	NUM

NAVFAC

PRELIMINARY
NOT FOR CONSTRUCTION

SEAL

RQ Jordan COMPANY
- A JOINT VENTURE -

Michael Baker
INTERNATIONAL

100 AIRSIDE DRIVE
MOON TOWNSHIP, PA 15108 — A/E INFO

APPROVED

FOR COMMANDER NAVFAC

ACTIVITY
MARINE CORPS BASE
CAMP LEJEUNE

SATISFACTORY TO DATE	DD/MM/YY
DES AS / DRW AV / CHK BM	
PM	XXX
BRANCH MANAGER	XXX
CHIEF ENG/ARCH	XXX
FIRE PROTECTION	XXX

DEPARTMENT OF THE NAVY
NAVAL FACILITIES ENGINEERING COMMAND
ROICC FLORENCE CAMP LEJEUNE

NAVAL FACILITIES ENGINEERING COMMAND ~ MID-ATLANTIC
JACKSONVILLE, NC

MCB CAMP LEJEUNE
JACKSONVILLE, NC
P1338F II MEF SIMULATION/TRAINING CENTER
REPLACEMENT
EXERCISE CONTROL 202 SYSTEM DRAWING

SCALE:	NTS
EPROJECT NO.:	
CONSTR. CONTR. NO.	N40085-20-C-0059
NAVFAC DRAWING NO.	
SHEET	OF

TA820

DP2 SUBMISSION – P1338 BUILDING RE-FINAL SUBMISSION

PLOTTED: 5/19/2021 3:26:30 PM

FILE NAME: BIM 360://HF PACKAGE 3/P1338_MEF SIM CTR-1590892-T.rvt

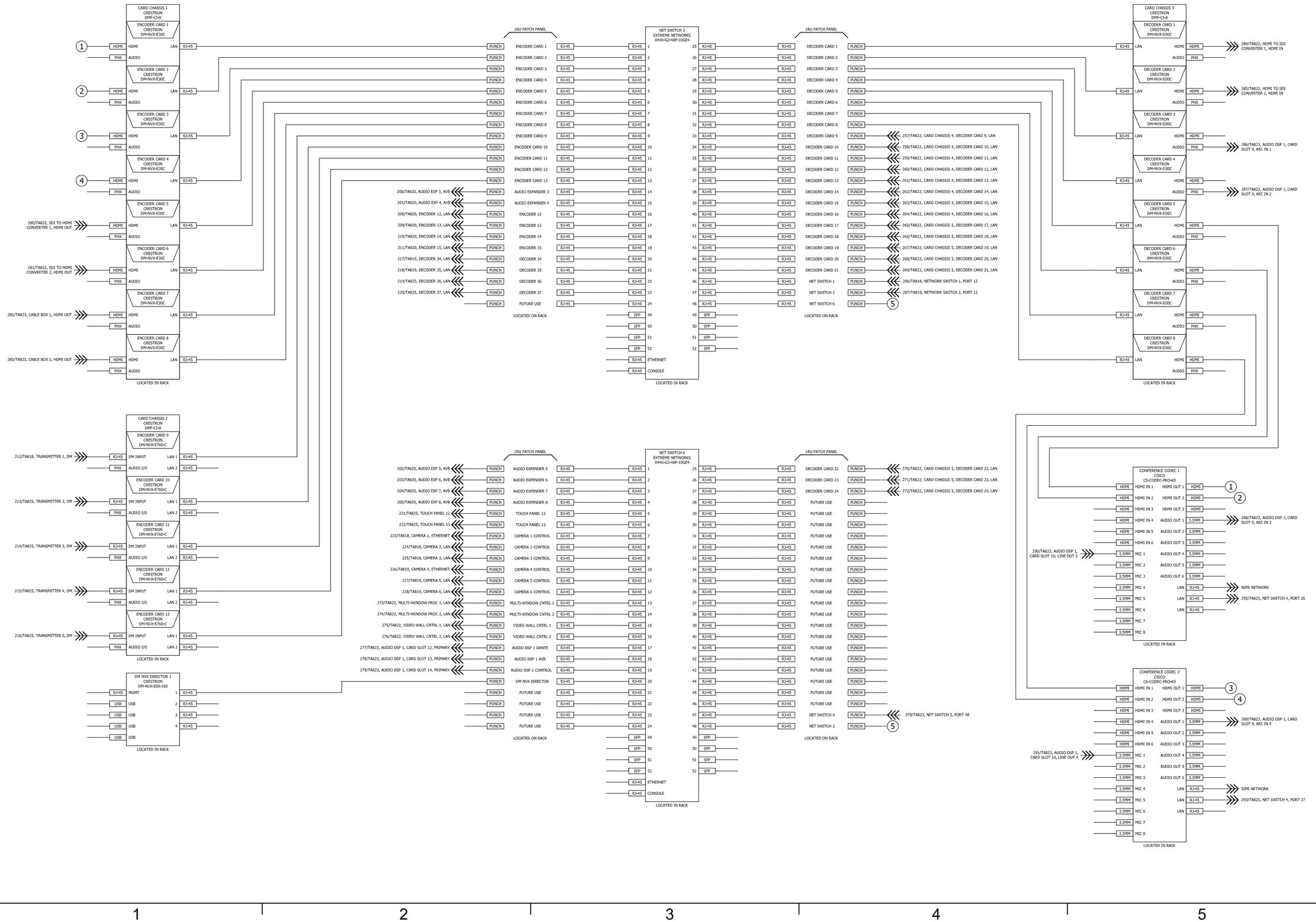

APPR
DATE
DESCRIPTION
SYM

NAVFAC

PRELIMINARY NOT FOR CONSTRUCTION

SEAL

RQ Jordan COMPANY – A JOINT VENTURE –

Michael Baker INTERNATIONAL
100 AIRSIDE DRIVE
MOON TOWNSHIP, PA 15108
A/E INFO

APPROVED

FOR COMMANDER NAVFAC

ACTIVITY
MARINE CORPS BASE
CAMP LEJEUNE

SATISFACTORY TO DATE DD/MM/YY

DES	AS	DRW AV	CHK BM
PM			XXX
BRANCH MANAGER			XXX
CHIEF ENG/ARCH			XXX
FIRE PROTECTION			XXX

DEPARTMENT OF THE NAVY
NAVAL FACILITIES ENGINEERING COMMAND
ROICC FLORENCE CAMP LEJEUNE

NAVAL FACILITIES ENGINEERING COMMAND – MID-ATLANTIC
JACKSONVILLE, NC

MCB CAMP LEJEUNE
JACKSONVILLE, NC
P1338F II MEF SIMULATION/TRAINING CENTER REPLACEMENT
SIM CONTROL 304A SYSTEM DRAWING

SCALE: NTS
EPROJECT NO.:
CONSTR. CONTR. NO.
N40085-20-C-0059
NAVFAC DRAWING NO.
SHEET OF

TA821

DP2 SUBMISSION – P1338 BUILDING RE-FINAL SUBMISSION

PLOTTED: 5/19/2021 3:26:30 PM

FILE NAME: BIM 360://HF PACKAGE 3-P1338_MEF SIM CTR-1590892-T.rvt

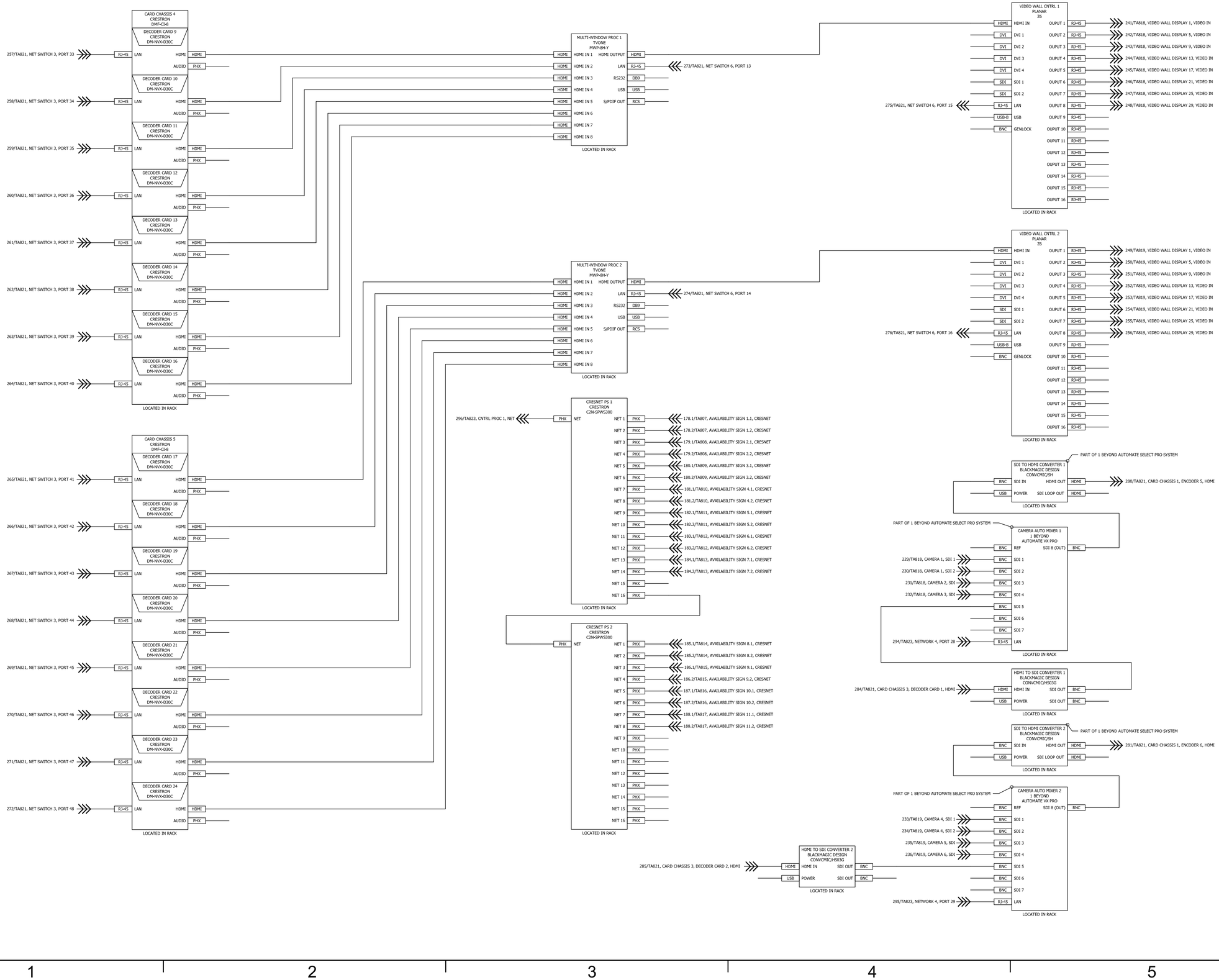

APPR | DATE | DESCRIPTION | NUS | STM

NAVFAC

PRELIMINARY
NOT FOR CONSTRUCTION

SEAL

RQ WNJ Jordan COMPANY
– A JOINT VENTURE –

Michael Baker
INTERNATIONAL
100 AIRSIDE DRIVE
MOON TOWNSHIP, PA 15108
A/E INFO

APPROVED

FOR COMMANDER NAVFAC

ACTIVITY
MARINE CORPS BASE
CAMP LEJEUNE

SATISFACTORY TO DATE DD/MM/YY

DES	AS	DRW	AV	CHK	BM
PM				XXX	
BRANCH MANAGER				XXX	
CHIEF ENG/ARCH				XXX	
FIRE PROTECTION				XXX	

DEPARTMENT OF THE NAVY
NAVAL FACILITIES ENGINEERING COMMAND
NAVAL FACILITIES ENGINEERING COMMAND – MID-ATLANTIC
JACKSONVILLE, NC
ROICC FLORENCE CAMP LEJEUNE
MCB CAMP LEJEUNE
JACKSONVILLE, NC
JACKSONVILLE CENTER
P1338F II MEF SIMULATION/TRAINING CENTER
REPLACEMENT
SIM CONTROL 304A SYSTEM DRAWING

SCALE: NTS
EPROJECT NO.:
CONSTR. CONTR. NO.
N40085-20-C-0059
NAVFAC DRAWING NO.
SHEET OF

TA822

DP2 SUBMISSION – P1338 BUILDING RE-FINAL SUBMISSION

PLOTTED: 5/19/2021 3:26:30 PM

FILE NAME: BIM 360://MF PACKAGE 3/P1338_MEF SIM CTR-1590802-T.rvt

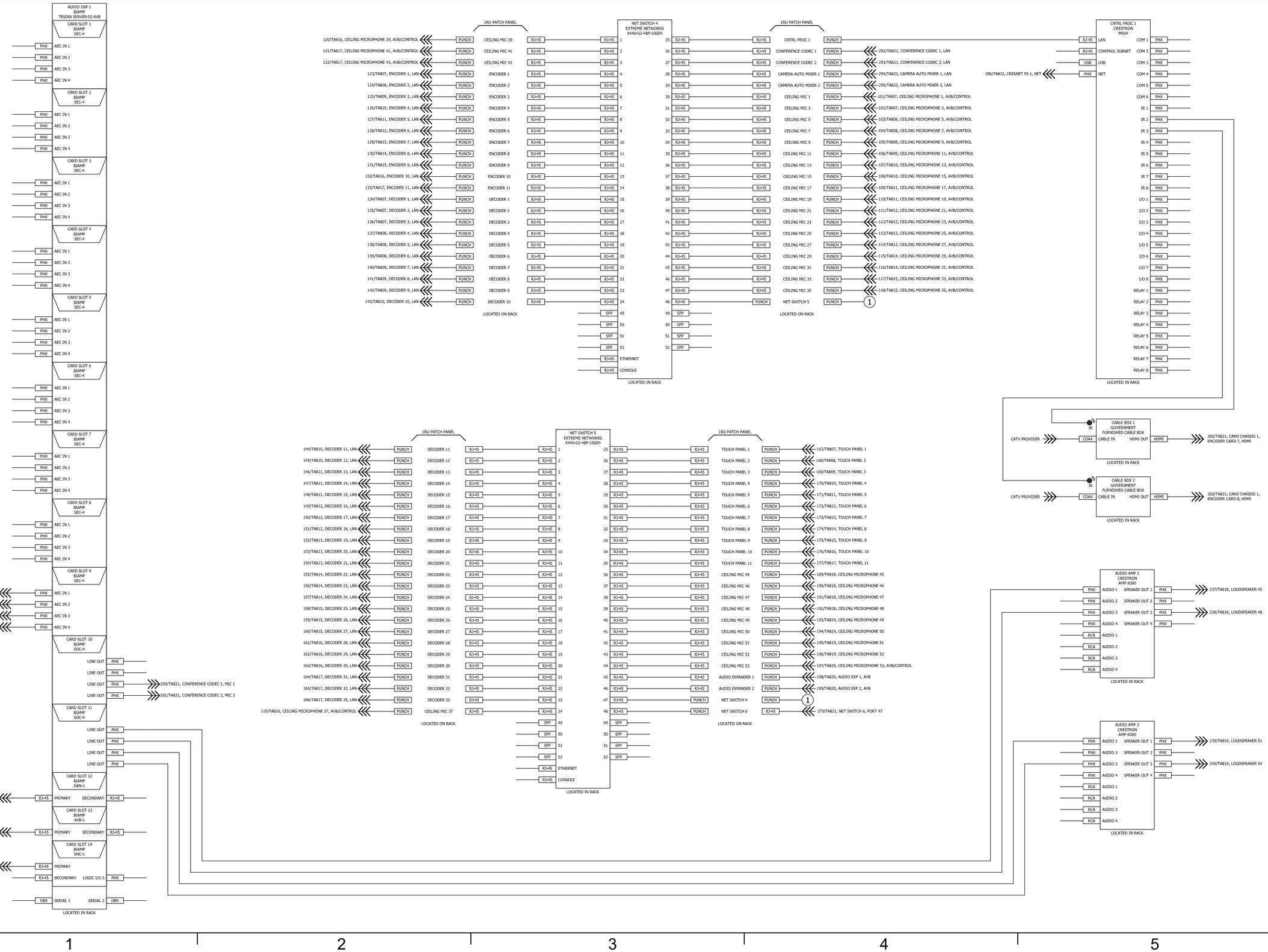

PLOTTED: 5/19/2021 3:26:30 PM

FILE NAME: BIM 360://HF PACKAGE 3/P1338_MEF SIM CTR-1590892-T.rvt

APPR | DATE | DESCRIPTION | NUS | STM

SEAL

PRELIMINARY
NOT FOR CONSTRUCTION

Michael Baker INTERNATIONAL
100 AIRSIDE DRIVE
MOON TOWNSHIP, PA 15108
A/E INFO

APPROVED

FOR COMMANDER NAVFAC

ACTIVITY
MARINE CORPS BASE
CAMP LEJEUNE

SATISFACTORY TO DATE	DD/MM/YY		
DES	AS	DRW AV	CHK BM
PM	XXX		
BRANCH MANAGER	XXX		
CHIEF ENG/ARCH	XXX		
FIRE PROTECTION	XXX		

DEPARTMENT OF THE NAVY
NAVAL FACILITIES ENGINEERING COMMAND
ROICC FLORENCE CAMP LEJEUNE
MCB CAMP LEJEUNE

NAVAL FACILITIES ENGINEERING COMMAND – MID-ATLANTIC
JACKSONVILLE, NC

JACKSONVILLE, NC

P1338F II MEF SIMULATION/TRAINING CENTER REPLACEMENT

SIM CONTROL 304A SYSTEM DRAWING

SCALE: NTS
EPROJECT NO.:
CONSTR. CONTR. NO. N40085-20-C-0059
NAVFAC DRAWING NO.
SHEET OF

TA823

DP2 SUBMISSION – P1338 BUILDING REF-FINAL SUBMISSION

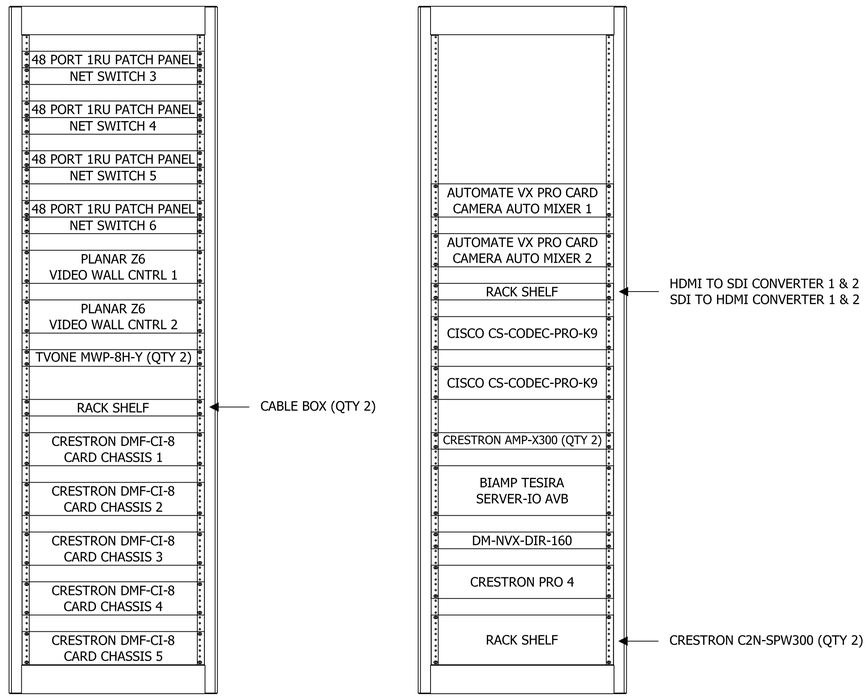

1 SIM CONTROL 304A
Scale: 1 1/2"=1'-0"

MARK	DESCRIPTION	DATE	APPR

NAVFAC

PRELIMINARY
NOT FOR CONSTRUCTION

SEAL

RQ Jordan COMPANY – A JOINT VENTURE –

Michael Baker INTERNATIONAL
100 AIRSIDE DRIVE
MOON TOWNSHIP, PA 15108 A/E INFO

APPROVED

FOR COMMANDER NAVFAC

ACTIVITY
MARINE CORPS BASE
CAMP LEJEUNE

SATISFACTORY TO DATE DD/MM/YY

DES AS	DRW AV	CHK BM
PM		XXX
BRANCH MANAGER		XXX
CHIEF ENG/ARCH		XXX
FIRE PROTECTION		XXX

DEPARTMENT OF THE NAVY
NAVAL FACILITIES ENGINEERING COMMAND
ROICC FLORENCE CAMP LEJEUNE

NAVAL FACILITIES ENGINEERING COMMAND ~ MID-ATLANTIC
JACKSONVILLE, NC

MCB CAMP LEJEUNE
JACKSONVILLE, NC
P1338F II MEF SIMULATION/TRAINING CENTER
REPLACEMENT

SIM CONTROL 304A SYSTEM DRAWING

SCALE: NTS
EPROJECT NO.:
CONSTR. CONTR. NO.
N40085-20-C-0059
NAVFAC DRAWING NO.
SHEET OF

TA824

DP2 SUBMISSION – P1338 BUILDING PRE-FINAL SUBMISSION

PLOTTED: 5/19/2021 3:26:30 PM

FILE NAME: BIM 360://HF PACKAGE 3/P1338_MEF SIM CTR-1590892-T.rvt

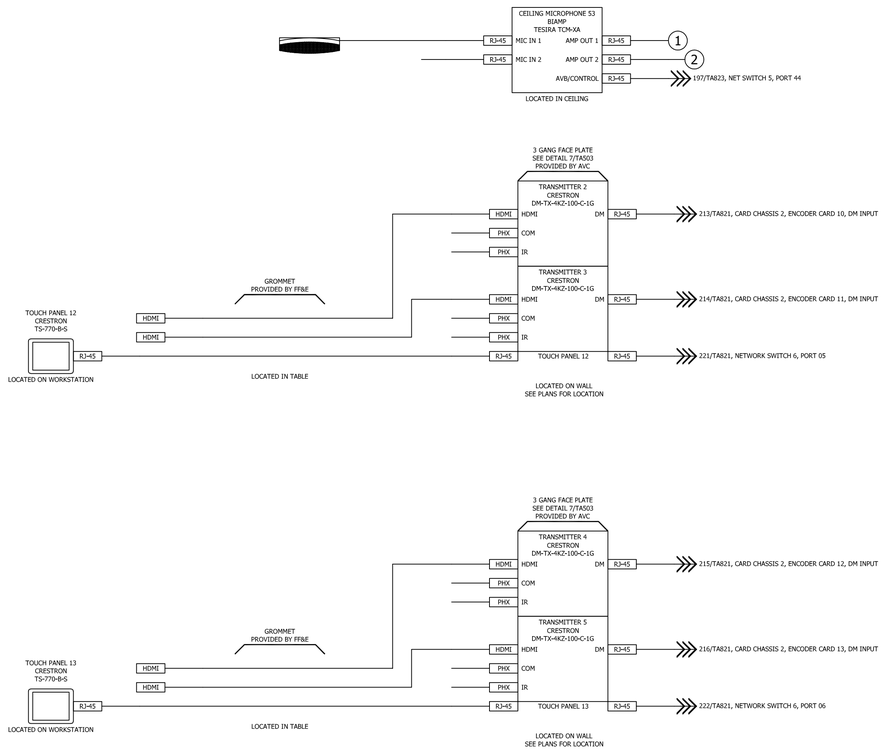

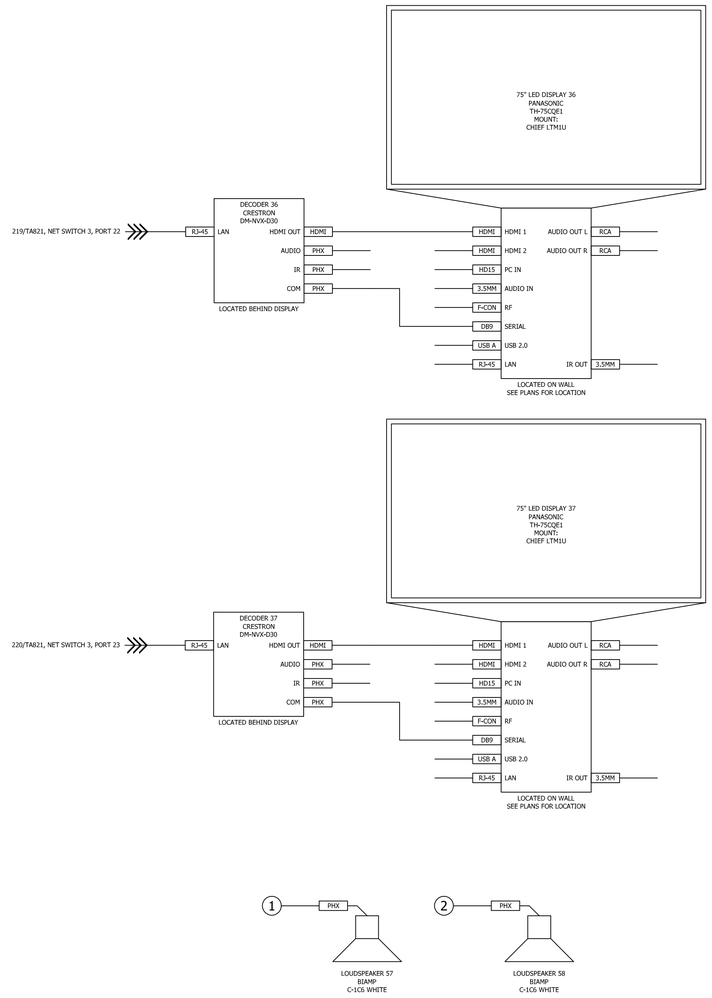

NO.	DESCRIPTION	DATE	APPR

NAVFAC

PRELIMINARY
NOT FOR CONSTRUCTION

SEAL

RQ Jordan COMPANY – A JOINT VENTURE –

Michael Baker
INTERNATIONAL
100 AIRSIDE DRIVE
MOON TOWNSHIP, PA 15108
A/E INFO

APPROVED

FOR COMMANDER NAVFAC

ACTIVITY
MARINE CORPS BASE
CAMP LEJEUNE

SATISFACTORY TO DATE	DD/MM/YY		
DES	AS	DRW	AV
CHK	BM		
PM	XXX		
BRANCH MANAGER	XXX		
CHIEF ENG/ARCH	XXX		
FIRE PROTECTION	XXX		

DEPARTMENT OF THE NAVY
NAVAL FACILITIES ENGINEERING COMMAND
ROICC FLORENCE CAMP LEJEUNE

NAVAL FACILITIES ENGINEERING COMMAND ~ MID-ATLANTIC
JACKSONVILLE, NC

MCB CAMP LEJEUNE
JACKSONVILLE, NC
P1338F II MEF SIMULATION/TRAINING CENTER
REPLACEMENT

EXERCISE CONTROL 207 SYSTEM DRAWING

SCALE: NTS

EPROJECT NO.:

CONSTR. CONTR. NO.
N40085-20-C-0059

NAVFAC DRAWING NO.

SHEET OF

TA825

DP2 SUBMISSION – P1338 BUILDING RFI-FINAL SUBMISSION

PLOTTED: 5/19/2021 3:26:30 PM

FILE NAME: BIM 360://MF PACKAGE 3/P1338_MEF SIM CTR-1590892-T.rvt