COMPUTER ROOM AIR CONDITIONER (CRAC) SYSTEM - SEQUENCE OF OPERATION

1. GENERAL:
   THE SYSTEM SERVING THE SIM CONTROL SERVER ROOM SHALL CONSIST OF 3 CRAC UNITS OPERATING IN AN N+1 FASHION, WITH NO MORE THAN 2 CRAC UNITS OPERATING AT ANY GIVEN TIME. CRAC UNIT CONTROLLERS SHALL BE INTERCONNECTED AND CONTROLLED BY THE CRAC MANUFACTUER'S INTEGRAL CONTROL SEQUENCE TO MODULATE AND STAGE 2 ACTIVE UNITS TO MEET ROOM TEMPERATURE AND HUMIDITY REQUIRMENTS WHILE THE THIRD UNIT IS IN STANDBY MODE. MANUFACTURER'S CONTROLS SHALL ROTATE ACTIVE / STANDBY UNIT STATUS BETWEEN THE THREE UNITS ON A WEEKLY (ADJUSTABLE) BASIS TO MAINTAIN EQUAL RUNTIMES.

2. RUN CONDITIONS:
   THE CRAC SYSTEM SHALL OPERATE CONTINUOUSLY AND SHALL MAINTAIN THE SPACE AT A MAXIMUM 78°F TEMPERATURE AND MAXIMUM HUMIDITY LEVEL (55°F DEWPOINT).
   PROVIDE ALARMS AS FOLLOWS:
   - HIGH ZONE TEMPERATURE: IF THE ZONE TEMPERATURE IS GREATER THAN THE SPACE SETPOINT BY 5°F (ADJ.)
   - LOW ZONE TEMPERATURE: IF THE ZONE TEMPERATURE IS LESS THAN 65° (ADJ.)
   - HIGH ZONE HUMIDITY: IF THE ZONE DEWPOINT EXCEEDS 59°F
   - LOW ZONE HUMIDITY: IF THE ZONE DEWPOINT FALLS BELOW 42°F
   - HIGH UNIT DISCHARGE AIR TEMPERATURE: IF THE DISCHARGE AIR TEMPERATURE EXCEEDS 120°F (ADJ.)
   - LOW UNIT DISCHARGE AIR TEMPERATURE: IF THE DISCHARGE AIR TEMPERATURE IS LESS THAN 40°F (ADJ.)

3. ATFP / SMOKE DETECTION SHUTDOWN:
   UNITS SERVING INFORMATION TECHNOLOGY AND COMMUNICATIONS EQUIPMENT SHALL CONTINUE TO OPERATE UPON A BUILDING WIDE FIRE ALARM OR ATFP HVAC SHUTDOWN INITIATION.

4. FAN / FAN STATUS:
   THE ACTIVE CRAC UNIT FANS SHALL OPERATE CONTINUOUSLY WHEN THE UNIT IS COMMANDED TO RUN, UNLESS SHUTDOWN ON INTERNAL SAFETIES.
   THE UNIT CONTROLLER SHALL MONITOR THE FAN STATUS AND PROVIDE ALARMS AS FOLLOWS:
   - FAN FAILURE: COMMANDED ON, BUT THE STATUS IS OFF
   - FAN IN HAND: COMMANDED OFF, BUT THE FAN IS ON
   - FAN RUNTIME EXCEEDED: FAN STATUS RUNTIME EXCEEDS A USER DEFINABLE LIMIT (ADJ.)

5. FILTER DIFFERENTIAL PRESSURE MONITOR:
   THE CRAC UNIT CONTROLLER SHALL MONITOR THE DIFFERENTIAL PRESSURE ACROSS THE FILTER; THIS INFORMATION SHALL BE AVAILABLE ON THE UNIT CONTROLLER INTERFACE AND PROVIDED TO THE DDC SYSTEM FOR INFORMATIONAL PURPOSES ONLY. CAMP LEJEUNE MECHANICAL POLICIES DO NOT DESIRE FILTER ALARMS (FILTER SHALL BE CHANGED ON REGULAR MAINTENANCE INTERVALS).

6. COOLING COIL ISOLATION (2-WAY) AND MODULATING FLOW (3-WAY) CONTROL VALVES:
   2-WAY UNIT ISOLATION VALVES: THE TWO ACTIVE CRAC UNITS SHALL HAVE THEIR CHILLED WATER SYSTEM COIL ISOLATION VALVES OPEN TO FLOW FROM THE CONSTANT VOLUME CHILLED WATER PUMPING SYSTEM, WHILE THE STANDBY (N+1 REDUNDANT) UNIT'S ISOLATION VALVE SHALL BE CLOSED IN ORDER TO MAINTAIN THE CONSTANT CHILLED WATER FLOW SYSTEM BALANCE (SERVICE TO TWO ACTIVE CRAC UNITS).

   3-WAY MODULATING CHILLED WATER CONTROL VALVES: THE TWO ACTIVE CRAC UNIT'S FACTORY INSTALLED 3-WAY CONTROL VALVES SHALL MODULATE TO CONTROL CHILLED WATER FLOW TO THE CRAC UNIT COOLING COILS AS REQUIRED FOR COOLING AND HUMIDITY CONTROL; REMAINDER OF FLOW SHALL BYPASS THE CHILLED WATER COIL.

7. HEATING COIL CONTROL VALVES (REHEAT/DEHUMIDIFICATION):
   THE FACTORY INSTALLED 2-WAY CONTROL VALVE SHALL MODULATE THE FLOW OF HOT WATER FOR AUTOMATIC SENSISBLE REHEATING MODE DURING THE DEHUMIDIFICATION CYCLE AND AUTOMATIC HEATING MODE AS REQUIRED THROUGH THE CRAC UNIT FACTORY CONTROLLER.

8. HUMIDITY CONTROL:
   THE CRAC UNIT'S INTERNAL MICROPROCESSOR/CONTROLLER SHALL DETERMINE THE MOISUTRE CONTENT OF THE ROOM AIR AND PREVENT UNNESSARY HUMIDIFICATION AND DEHUMIDIFICATION CYCLES BY RESPONDING TO CHANGES IN DEWPOINT TEMPERATURE. ON A RISE IN SPACE HUMIDITY ABOVE UPPER LIMIT SETPOINT OF 55°F DEWPOINT THE DEHUMIDIFCATION CYCLE SHALL BE ENABLED, UPOIN A FALL IN SPACE HUMIDITY BELOW 55° DEWPOINT THE DEHUMDIFICATION CYCLE SHALL BE DISABLED. ON A FALL IN SPACE HUMIDITY BELOW LOWER LIMIT SETPOINT OF 42°F DEWPOINT, THE HUMIDIFICATION CYCLE SHALL BE ENABLED UNTIL SPACE REACHES SETPOINT.

9. DEHUMIDIFICATION CYCLE:
   EACH CRAC UNIT SHALL BE PROVIDED WITH A CHILLED WATER / HOT WATER BASED DEHUMIDIFICATION CYCLE TO CONDENSE EXCESS MOISTURE ON THE COOLING COIL TO DISCHARGE THROUGH THE CONDENSATE DRAIN, WITH HOT WATER REHEATING PROVIDED TO OFFSET EXCESS SENSIBLE COOLING INCURRED DURING THE DEHUMDIFICATION CYCLE TO PREVENT SUBCOOLING OF THE SPACE BEYOND 5°F (ADJUSTABLE) BELOW THE ROOM TEMPERATURE SETPOINT. CRAC SYSTEM CONTROLLER SHALL ENABLE/MODULATE DEHUMIDIFICATION CYCLE AS REQUIRED TO MAINTAIN SPACE HUMIDITY LEVELS AT OR BELOW 55°F DEWPOINT.

10. HUMIDIFICATION CYCLE:
    EACH CRAC UNIT SHALL BE PROVIDED WITH A FACTORY INSTALLED SELF-CONTAINED ATMOSPHERIC STEAM GENERATOR UTILIZING BUILDING POTABLE WATER. CRAC SYSTEM CONTROLLER SHALL ENABLE/MODULATE STEAM SUPPLY TO MAINTAIN SPACE HUMIDITY LEVELS ABOVE 42°F DEWPOINT PER TIA-569.

CRAC (COMPUTER ROOM AIR CONDITIONER) - POINT LIST

POINT NUMBER	SYSTEM POINT DESCRIPTION	COLOR GRAPHIC	ANALOG INPUT (AI): TEMPERATURE	RELATIVE HUMIDITY	PRESSURE	% OPEN/CLOSE	ANALOG OUTPUT (AO): % OPEN/CLOSE	FAN % MODULATION (ECM)	DIGITAL (BINARY) INPUT (BI): STATUS ON/OFF	DIGITAL OUTPUT (BO): OFF/ON (ENABLE)	OPEN/CLOSE	START/STOP	SYSTEM FEATURES ALARMS: SENSOR FAIL	COMM. FAIL	PROGRAMS: TIME SCHEDULING	ALARM INSTRUCT	AUTOMATIC RESTART	NOTES
	CRAC UNIT CONTROLLER(S)	●											●	●	●	●	●	1
	SYSTEM GRAPHIC	●																
01	ZONE TEMPERATURE		●										●					
02	ZONE HUMIDITY			●									●					
03	RETURN AIR TEMPERATURE		●															
04	RETURN AIR HUMIDITY			●														
05	FILTER DIFFERENTIAL PRESSURE				●													
06	CHW COOLING VALVE (3-WAY)						●											
07	CHW ISOLATION VALVE (2-WAY)									●								
08	HW REHEAT VALVE						●											
09	SUPPLY FAN STATUS								●									
10	SUPPLY FAN START/STOP											●						
11	SUPPLY FAN ECM SETPOINT				●													
12	SUPPLY FAN ECM FAULT								●									
13	SUPPY FAN PRESSSURE				●													
14	DISCHARGE AIR TEMPERATURE		●															
15	DISCHARGE AIR HUMIDITY			●														
##	RESERVED FOR FUTURE																	

1. NOT ALL FACTORY PROVIDED CONTROL POINTS INDICATED - REFER TO CRAC UNIT IOM AND PROJECT SPECIFICATIONS FOR COMPLETE INTERNAL UNIT CONTROL DEVICES AND SEQUENCES INCLUDING INTEGRAL HUMIDIFIER CONTROL; SUBFLOOR WATER DETECTION, ETC.

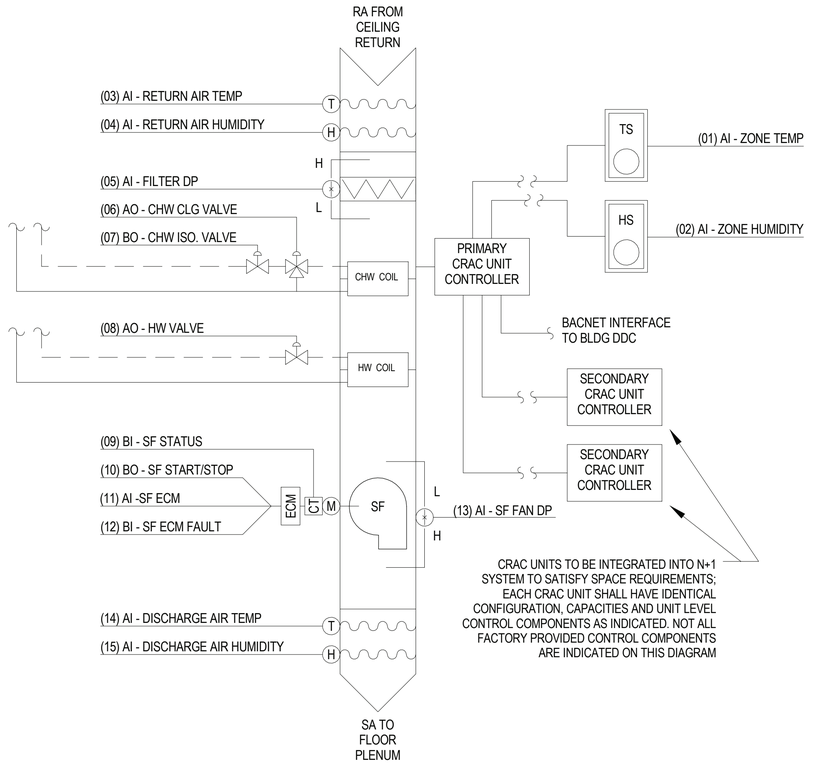

CRAC SYSTEM - CONTROL DIAGRAM

SCALE: NTS

A2

APPR | DATE | DESCRIPTION | SYM

NAVFAC

PRELIMINARY NOT FOR CONSTRUCTION

SEAL

IRQ WM Jordan COMPANY – A JOINT VENTURE –

Michael Baker INTERNATIONAL
100 AIRSIDE DRIVE
MOON TOWNSHIP, PA 15108
A/E INFO

APPROVED

FOR COMMANDER NAVFAC

ACTIVITY
MARINE CORPS BASE CAMP LEJEUNE

SATISFACTORY TO DATE

DES	DRW	CHK

PM

BRANCH MANAGER

CHIEF ENG/ARCH

FIRE PROTECTION

DEPARTMENT OF THE NAVY
NAVAL FACILITIES ENGINEERING COMMAND ~ MID-ATLANTIC
JACKSONVILLE, NC
ROICC FLORENCE CAMP LEJEUNE
MCB CAMP LEJEUNE
JACKSONVILLE, NC
P1338 II MEF SIMULATION/TRAINING CENTER REPLACEMENT
MECHANICAL - CONTROLS

SCALE: AS NOTED

EPROJECT NO.: 1590892

CONSTR. CONTR. NO.
N40085-20-C-0059

NAVFAC DRAWING NO.

SHEET OF

M-812

DP2 SUBMISSION – P1338 BUILDING - PRE-FINAL SUBMISSION

PLOTTED: 6/10/2021 3:34:42 PM

FILE NAME: BIM 360://HF PACKAGE 3/P1338 MEF SIM CTR-1590892-M.rvt

ELECTRICAL ROOM FAN FORCED VENTILATION COOLING / ELECTRIC HEATING - SEQUENCE OF OPERATION

1. ROOM TO BE THERMOSTATICALLY CONTROLLED BY COMMON THERMOSTAT CONNECTED TO THE DDC SYSTEM FOR SPACE HEATING AND EXHAUST BASED FORCED OUTSIDE AIR VENTILATION COOLING TO MAINTAIN TEMPERATURES WITH 10°F OF AMBIENT OUTDOOR CONDITIONS.
2. ON RISE IN SPACE TEMPERATURE ABOVE 80°F (ADJ.) DAMPERS ASSOCIATED WITH THE ROOM INTAKE AND EXHAUST LOUVERS SHALL OPEN AND THE EXHAUST FAN SHALL OPERATE CONTINUOUSLY. UPON FALL IN SPACE TEMPERATURE BELOW 80°F (ADJ.) THE REVERSE SHALL OCCUR.
3. UPON FALL IN SPACE TEMPERATURE BELOW HEATING SETPOINT OF 55°F (ADJ.), ELECTRIC UNIT/WALL HEATER SERVING SPACE SHALL ENERGIZE BY STARTING FAN AND ELECTRIC HEATING COIL TO MAINTAIN SPACE HEATING SETPOINT. UPON RISE IN TEMPERATURE ABOVE 55°F (ADJ.), THE REVERSE SHALL OCCUR. WHERE ELECTRIC HEATERS PROVIDED WITH INTEGRAL THERMOSTATIC CONTROL, SET SUC CONTROL AT 55°; PROVIDE ALARM TO DDC SYSTEM OF SPACE TEMPERATURE FALLS BELOW 50°.

SPLIT DX HEAT PUMP - SEQUENCE OF OPERATION

1. REMOTE CONTROL PANEL BY UNIT/SYSTEM MANUFACTURER SHALL BE WALL MOUNTED AND CONTROL COOLING AND HEATING MODES OF OPERATION. TEMPERATURE AND HUMIDITY SENSORS SHALL BE INTEGRAL TO THE CONTROL PANEL (IF AVAILABLE FROM MANUFACTURER) OR MOUNTED SEPARATELY ADJACENT TO THE CONTROL PANEL BY THE CONTROLS CONTRACTOR.
2. MANUFACTUER'S CONTROL PANEL SHALL INCLUDE AUTOMATIC UNIT SWITCHING OPERATIONS (HEATING / COOLING) AND DISPLAY NORMAL FUNCTIONS, MALFUNCTIONS AND SERVICE DIAGNOSTICS ON AN INTEGRAL LCD DISPLAY. BACNET INTERFACE MODULE SHALL BE PROVIDED (IF AVAILABLE FROM MANUFACTURER) TO INTEGRATE INTO BUILDING DDC SYSTEM.
3. ALARM CONDITIONS, IN ADDITION TO BEING DISPLAYED ON THE LOCAL LCD CONTROL PANEL SHALL BE RELAYED TO THE DDC SYSTEM. IF BACNET INTERFACE IS AVAILABLE, ALARM SPECIFICS SHALL BE SENT TO THE DDC SYSTEM, OTHERWISE A BASIC ALARM RELAY SHALL BE PROVIDED TO SIGNAL AN ALARM CONDITION TO THE DDC TO ALERT BUILDING OPERATOR OF CONDITION.
4. THE UNIT SHALL OPERATE CONTINUOUSLY. THE HEATING TEMPERATURE SETPOINT (HEAT PUMPS) IS 68° F DB (ADJ). THE COOLING TEMPERATURE SETPOINT IS 78°F DB (ADJ). ALARMS SHALL BE PROVIDED WHEN SPACE TEMPERATURE CONDITIONS FALL OUTSIDE THE HEATING (HEAT PUMPS ONLY) AND COOLING SETPOINTS BY 5°F OR WHEN SPACE HUMIDITY EXCEEDS 65%. ALL ALARM POINTS SHALL BE ADJUSTABLE.
5. CONTROL CONTRACTOR SHALL PROVIDE ALL INTERCONNECTING WIRING, RELAYS AND CONNECTIONS BETWEEN MANUFACTURER'S CONTROL PANEL, INDOOR UNIT AND OUTDOOR CONDENSING UNIT AND INTERFACE TO BUILDING DDC SYSTEM.

EXHAUST FAN / VENTILATION DAMPERS / ELECTRIC UNIT HEATER SYSTEM POINT LIST

POINT NUMBER	SYSTEM POINT DESCRIPTION		ANALOG			DIGITAL (BINARY)		SYSTEM FEATURES				NOTES
			INPUT (AI)		OUTPUT(AO)	INPUT (BI)	OUTPUT (BO)	ALARMS			PROGRAMS	
	EXHAUST FAN / VENTILATION COOLING & ASSOCIATED LOUVERS / ELECTRIC HEATERS	COLOR GRAPHIC	TEMPERATURE		SETPOINT ADJ	STATUS	START/STOP	FAILURE	IN HAND	RUNTIME EXCEEDED	LOW ANALOG	TREND - START/STOP	TREND - STATUS	TREND - OPEN/CLOSED	TREND - HEATER	
1	ZONE TEMP	●	●								●					
2	HEATING SETPOINT*	●			●						●					1
3	COOLING (VENTILATION) SETPOINT	●			●											
4	EXHAUST FAN STATUS	●				●		●	●	●		●	●			
5	EXHAUST FAN START/STOP	●					●									
6	EXHAUST DAMPER	●					●							●		
7	OUTDOOR AIR DAMPER	●					●							●		
8	UNIT HEATER FAN START/STOP*	●					●								●	1
9	UNIT HEATER ELECTRIC COIL*	●						●								1
-	-															
##	RESERVED FOR FUTURE															

DUCTLESS MINI-SPLIT COOLING/ HEAT PUMP SYSTEMS (SSAC / SSCU & SSHP / HPCU) POINT LIST

POINT NUMBER	SYSTEM POINT DESCRIPTION		ANALOG				DIGITAL (BINARY)		SYSTEM FEATURES			NOTES
			INPUT (AI)		OUTPUT (AO)		INPUT (BI)	OUTPUT (BO)	ALARMS		PROGRAMS	
	SPLIT DX HEAT PUMP	COLOR GRAPHIC	TEMPERATURE	RELATIVE HUMIDITY	TEMPERATURE		UNIT STATUS		HIGH ANALOG	LOW ANALOG	TREND	
	DDC SYSTEM BACNET INTERFACE	●										
	SYSTEM GRAPHIC	●										
1	SYSTEM STATUS						●				●	
2	CONDENSING UNIT STATUS						●				●	
3	SPACE TEMPERATURE		●								●	
4	SPACE HUMIDITY			●								
5	COOLING SETPOINT				●							
6	HEATING SETPOINT				●							
7	ZONE TEMP ALARM - COOLING		●						●			
8	ZONE TEMP ALARM - HEATING		●							●		
9	ZONE HIGH HUMIDITY ALARM			●					●			
-	-											
##	RESERVED FOR FUTURE											

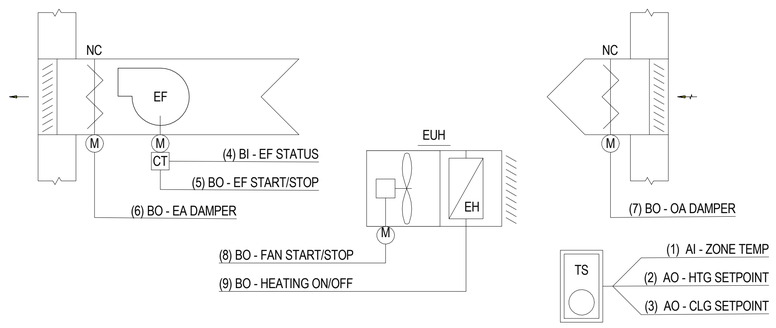

ELECTRICAL ROOM CONTROL DIAGRAM
(EF-02, 03, & 04, EWH-01, 02 / EUH-01)
SCALE: NTS
A1

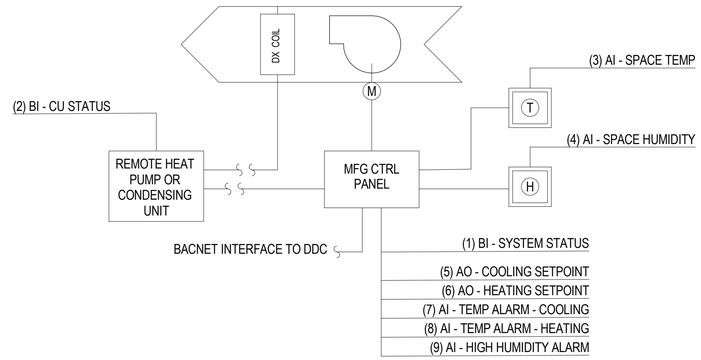

SPLIT DX HEAT PUMP - CONTROL DIAGRAM
SCALE: NTS
A3

APPR	DATE	DESCRIPTION	SYM

NAVFAC

PRELIMINARY
NOT FOR CONSTRUCTION

SEAL

IRQ W.M. Jordan COMPANY – A JOINT VENTURE –

Michael Baker INTERNATIONAL
100 AIRSIDE DRIVE
MOON TOWNSHIP, PA 15108
A/E INFO

APPROVED

FOR COMMANDER NAVFAC

ACTIVITY
MARINE CORPS BASE
CAMP LEJEUNE

SATISFACTORY TO DATE

DES	DRW	CHK

PM
BRANCH MANAGER
CHIEF ENG/ARCH
FIRE PROTECTION

DEPARTMENT OF THE NAVY
NAVAL FACILITIES ENGINEERING COMMAND – MID-ATLANTIC
JACKSONVILLE, NC
ROICC FLORENCE CAMP LEJEUNE
MCB CAMP LEJEUNE

JACKSONVILLE, NC
P1338 II MEF SIMULATION/TRAINING CENTER REPLACEMENT
MECHANICAL - CONTROLS

SCALE: AS NOTED
EPROJECT NO.: 1590892
CONSTR. CONTR. NO.
N40085-20-C-0059
NAVFAC DRAWING NO.
SHEET OF

M-813

DP2 SUBMISSION – P1338 BUILDING - PRE-FINAL SUBMISSION

PLOTTED: 6/10/2021 3:34:45 PM
FILE NAME: BIM 360://HF PACKAGE 3/P1338 MEF SIM CTR-1590892-M.rvt

COLD MECHANICAL ROOM HYDRONIC HEATING AND DEHUMIDIFICATION - SEQUENCE OF OPERATION

1. ROOM TO BE DEHUMIDIFIED BY DEHUMIDIFIER INTERNAL CONTROLS. UPON RISE IN RELATIVE HUMIDITY ABOVE 55°F DEWPOINT (ADJ.), DEHUMIDIFIER TO TURN ON AND OPERATE CONTINUOUSLY. UPON FALL IN DEWPOINT BELOW 55°F DEWPOINT (ADJ.), THE REVERSE SHALL OCCUR.
2. ZONE HUMIDITY SENSOR TO SEND ROOM HUMIDITY LEVEL TO DDC SYSTEM. UPON RISE IN HUMIDITY LEVEL ABOVE 65°F DEWPOINT (ADJ.), ALARM SHALL BE GENERATED.
3. UPON FALL IN SPACE TEMPERATURE BELOW HEATING SETPOINT OF 55°F (ADJ.), HYDRONIC UNIT HEATER SERVING SPACE SHALL ENERGIZE BY STARTING FAN AND FULLY OPENING HOT WATER VALVE TO MAINTAIN SPACE HEATING SETPOINT. UPON RISE IN TEMPERATURE ABOVE 55°F (ADJ.), THE REVERSE SHALL OCCUR.

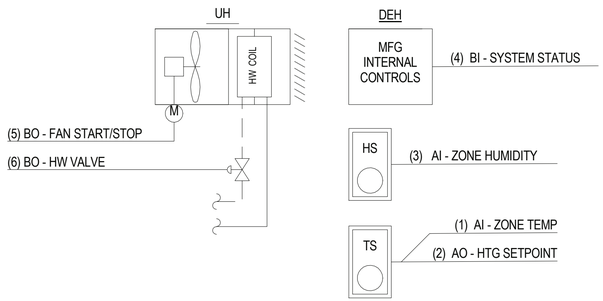

MECHANICAL ROOM 400 CONTROL DIAGRAM (UH-02, DEH-01)

SCALE: NTS

C1

HYDRONIC UNIT HEATER / DEHUMIDIFIER (UH / DEH) POINTS LIST

POINT NUMBER	SYSTEM POINT DESCRIPTION: HYDRONIC UNIT HEATERS AND DEHUMIDIFIER	COLOR GRAPHIC	ANALOG INPUT (AI): TEMPERATURE	ANALOG INPUT (AI): HUMIDITY	ANALOG OUTPUT(AO): SETPOINT ADJ	DIGITAL (BINARY) INPUT (BI): STATUS	DIGITAL (BINARY) OUTPUT (BO): START/STOP	DIGITAL (BINARY) OUTPUT (BO): POSITION	SYSTEM FEATURES ALARMS: FAILURE	ALARMS: IN HAND	ALARMS: RUNTIME EXCEEDED	ALARMS: LOW ANALOG	PROGRAMS: TREND - START/STOP	PROGRAMS: TREND - STATUS	PROGRAMS: TREND - HEATER	NOTES
1	ZONE TEMP	●	●									●				
2	HEATING SETPOINT	●			●											
3	AI - ZONE HUMIDITY	●		●								●				
4	BI - SYSTEM STATUS	●				●			●	●				●		
5	UNIT HEATER FAN START/STOP	●					●								●	
6	UNIT HEATER HW VALVE	●						●								
-	-															
##	RESERVED FOR FUTURE															

MECHANICAL ROOM 401 FAN FORCED VENTILATION COOLING/HYDRONIC HEATING - SEQUENCE OF OPERATION

1. ROOM TO BE THERMOSTATICALLY CONTROLLED BY COMMON THERMOSTAT CONNECTED TO THE DDC SYSTEM FOR SPACE HEATING AND SUPPLY BASED FORCED OUTSIDE AIR VENTILATION COOLING TO MAINTAIN TEMPERATURES WITH 10°F OF AMBIENT OUTDOOR CONDITIONS.
2. ON RISE IN SPACE TEMPERATURE ABOVE 80°F (ADJ.) DAMPERS ASSOCIATED WITH THE ROOM INTAKE AND EXHAUST LOUVERS SHALL OPEN AND THE SUPPLY FAN SHALL OPERATE CONTINUOUSLY. UPON FALL IN SPACE TEMPERATURE BELOW 80°F (ADJ.), THE REVERSE SHALL OCCUR.
3. UPON FALL IN SPACE TEMPERATURE BELOW HEATING SETPOINT OF 55°F (ADJ.), HYDRONIC UNIT HEATER SERVING SPACE SHALL ENERGIZE BY STARTING FAN AND OPENING HOT WATER VALVE TO MAINTAIN SPACE HEATING SETPOINT. UPON RISE IN TEMPERATURE ABOVE 55°F (ADJ.), THE REVERSE SHALL OCCUR.

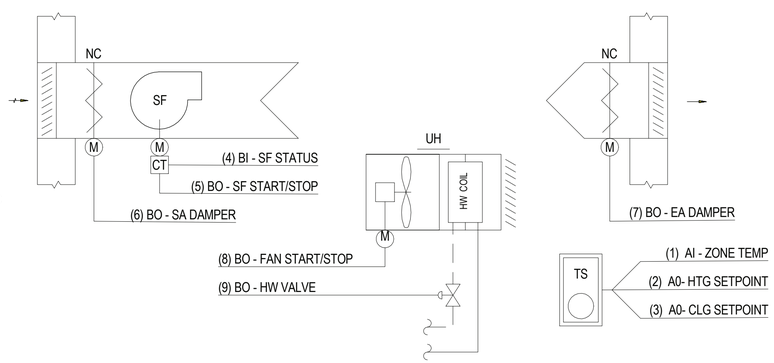

MECHANICAL ROOM 401 (HOT) CONTROL DIAGRAM (SF-01, UH-01)

SCALE: NTS

B1

SUPPLY FAN / VENTILATION DAMPERS / UNIT HEATER SYSTEM POINT LIST

POINT NUMBER	SYSTEM POINT DESCRIPTION: EXHAUST FAN / VENTILATION COOLING & ASSOCIATED LOUVERS / HYDRONIC HEATERS	COLOR GRAPHIC	ANALOG INPUT (AI): TEMPERATURE	ANALOG OUTPUT(AO): SETPOINT ADJ	ANALOG OUTPUT(AO): POSITION / % OPEN	DIGITAL (BINARY) INPUT (BI): STATUS	DIGITAL (BINARY) OUTPUT (BO): START/STOP	DIGITAL (BINARY) OUTPUT (BO): OPEN/CLOSED	SYSTEM FEATURES ALARMS: FAILURE	ALARMS: IN HAND	ALARMS: RUNTIME EXCEEDED	ALARMS: LOW ANALOG	PROGRAMS: TREND - START/STOP	PROGRAMS: TREND - STATUS	PROGRAMS: TREND - OPEN/CLOSED	PROGRAMS: TREND - HEATER	NOTES
1	ZONE TEMP	●	●									●					
2	HEATING SETPOINT	●		●													
3	COOLING (VENTILATION) SETPOINT	●		●													
4	SUPPLY FAN STATUS	●				●			●	●	●		●	●			
5	SUPPLY FAN START/STOP	●					●										
6	SUPPLY DAMPER	●						●							●		
7	EXHAUST AIR DAMPER	●						●							●		
8	UNIT HEATER FAN START/STOP	●					●									●	
9	UNIT HEATER HW VALVE	●					●										
-	-																
##	RESERVED FOR FUTURE																

EXHAUST FAN (EF-01) - SEQUENCE OF OPERATION

1. THE FAN SHALL RUN DURING OCCUPLIED HOURS IN IN CONJUNCTION WITH AHU-02, UNLESS SHUTDOWN ON SAFETIES.
2. THE FAN SHALL SHUTDOWN, THE ASSOCIATED EXHAUST DAMPER SHALL CLOSE, AND AN ALARM SHALL BE GENERATED UPON RECEIVING AN ATFP SHUTDOWN SIGNAL.
3. THE CONTROLLER SHALL MONITOR THE FAN STATUS.
4. ALARMS SHALL BE PROVIDED AS FOLLOWS:
   - FAN FAILURE: COMMANDED ON, BUT THE STATUS IS OFF.
   - FAN IN HAND: COMMANDED OFF, BUT THE STATUS IS ON.
   - FAN RUNTIME EXCEEDED: FAN STATUS RUNTIME EXCEEDS A USER DEFINABLE LIMIT (ADJ.).

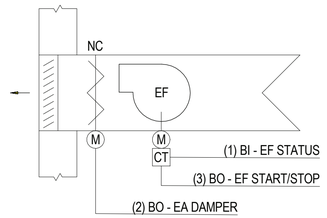

MECHANICAL ROOM 401 (HOT) CONTROL DIAGRAM (SF-01, UH-01)

SCALE: NTS

A1

EXHAUST FAN EF-01 & DAMPER POINT LIST

POINT NUMBER	SYSTEM POINT DESCRIPTION: EXHAUST FAN / ASSOCIATED LOUVER	COLOR GRAPHIC	DIGITAL (BINARY) INPUT (BI): STATUS	DIGITAL (BINARY) OUTPUT (BO): START/STOP	DIGITAL (BINARY) OUTPUT (BO): OPEN/CLOSED	SYSTEM FEATURES ALARMS: FAILURE	ALARMS: IN HAND	ALARMS: RUNTIME EXCEEDED	ALARMS: LOW ANALOG	PROGRAMS: TREND - START/STOP	PROGRAMS: TREND - STATUS	PROGRAMS: TREND - OPEN/CLOSED	NOTES
1	EXHAUST FAN	●	●	●		●	●	●		●	●		
2	EXHAUST DAMPER	●			●							●	
3	FAN START/STOP	●		●									
-	-												
##	RESERVED FOR FUTURE												

APPR | DATE | DESCRIPTION | SYM

NAVFAC

PRELIMINARY NOT FOR CONSTRUCTION

SEAL

IRQ W.M. Jordan COMPANY – A JOINT VENTURE –

Michael Baker INTERNATIONAL
100 AIRSIDE DRIVE
MOON TOWNSHIP, PA 15108
A/E INFO

APPROVED

FOR COMMANDER NAVFAC

ACTIVITY
MARINE CORPS BASE
CAMP LEJEUNE

SATISFACTORY TO DATE

DES	DRW	CHK
PM		
BRANCH MANAGER		
CHIEF ENG/ARCH		
FIRE PROTECTION		

DEPARTMENT OF THE NAVY
NAVAL FACILITIES ENGINEERING COMMAND
ROICC FLORENCE CAMP LEJEUNE
MCB CAMP LEJEUNE

NAVAL FACILITIES ENGINEERING COMMAND ~ MID-ATLANTIC
JACKSONVILLE, NC

JACKSONVILLE, NC
P1338 II MEF SIMULATION/TRAINING CENTER REPLACEMENT
MECHANICAL - CONTROLS

SCALE: AS NOTED
EPROJECT NO.: 1590892
CONSTR. CONTR. NO.: N40085-20-C-0059
NAVFAC DRAWING NO.
SHEET OF

M-814

DP2 SUBMISSION – P1338 BUILDING -,-PRE-FINAL SUBMISSION

PLOTTED: 6/10/2021 3:34:48 PM

FILE NAME: BIM 360://HF PACKAGE 3P\1338 MEF SIM CTR-1590892-M.rvt

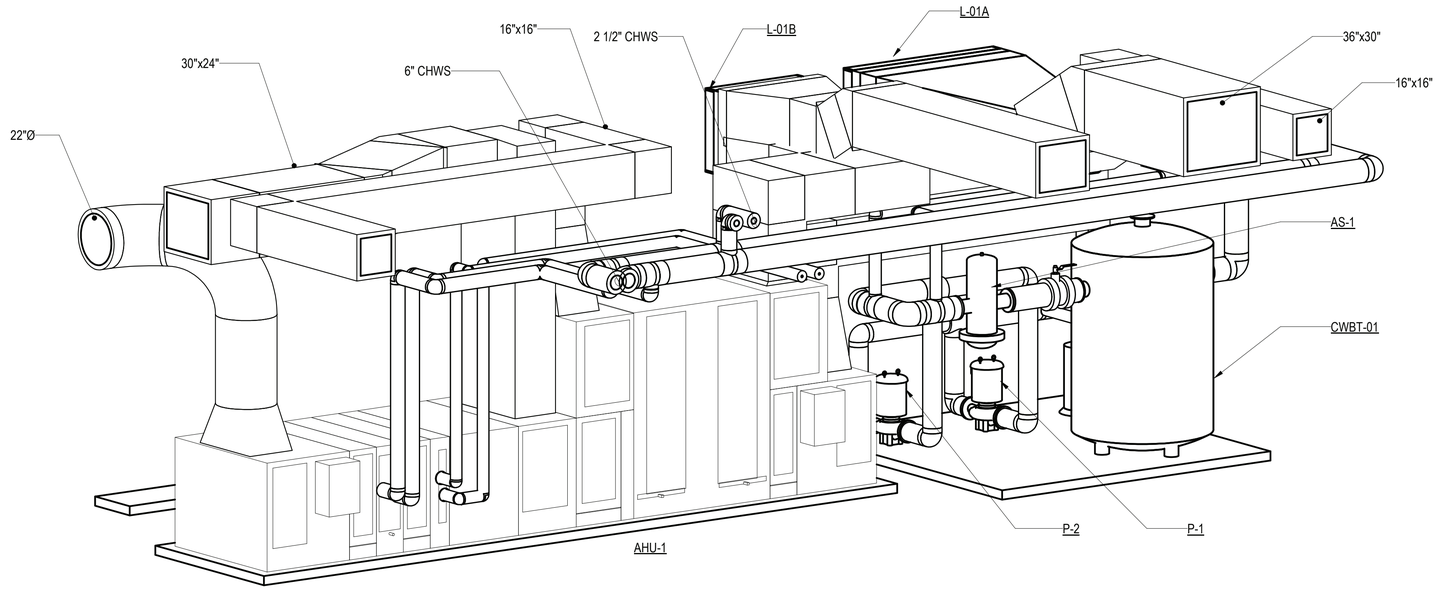

C1 AHU-01 ISOMETRIC

SCALE: NOT TO SCALE

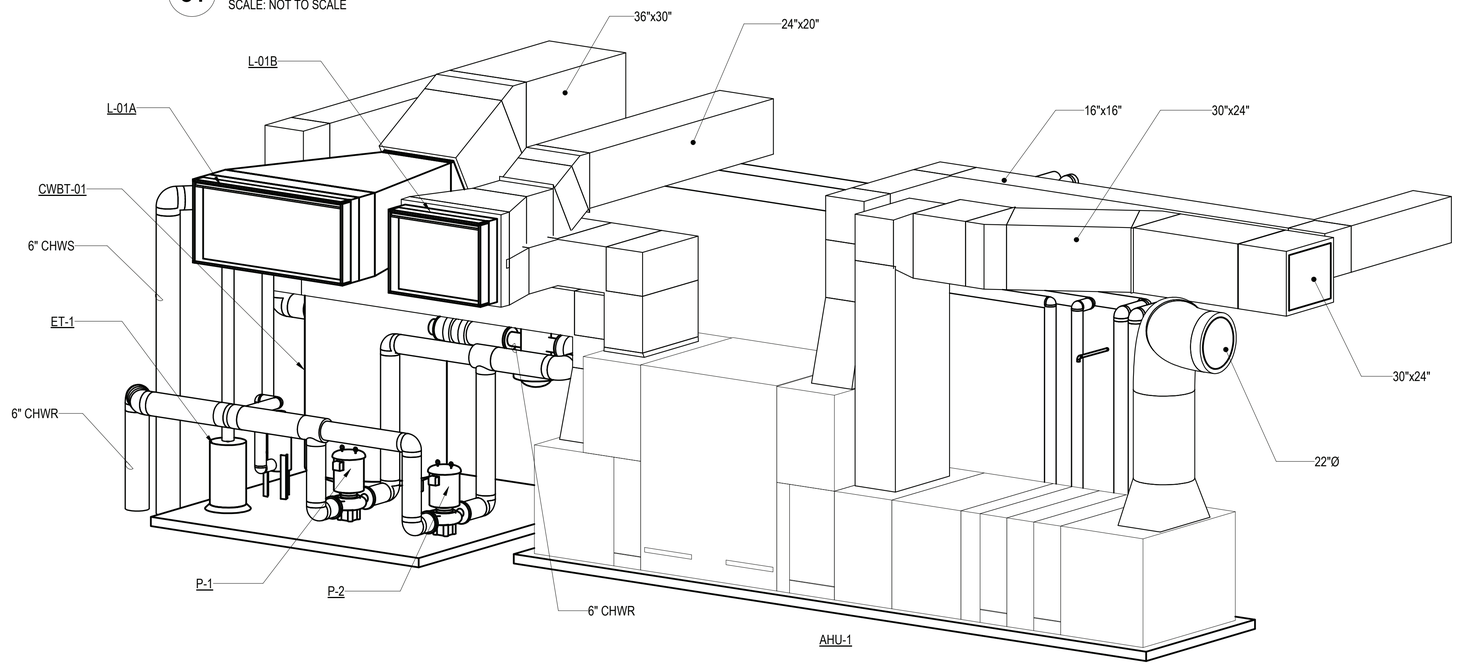

A1 AHU-01 ISOMETRIC

SCALE: NOT TO SCALE

SYM	DESCRIPTION	DATE	APPR

NAVFAC

PRELIMINARY NOT FOR CONSTRUCTION

SEAL

IRQ WM Jordan COMPANY – A JOINT VENTURE –

Michael Baker INTERNATIONAL

100 AIRSIDE DRIVE
MOON TOWNSHIP, PA 15108 A/E INFO

APPROVED

FOR COMMANDER NAVFAC

ACTIVITY
MARINE CORPS BASE
CAMP LEJEUNE

SATISFACTORY TO DATE

DES	DRW	CHK

PM

BRANCH MANAGER

CHIEF ENG/ARCH

FIRE PROTECTION

DEPARTMENT OF THE NAVY
NAVAL FACILITIES ENGINEERING COMMAND
ROICC FLORENCE CAMP LEJEUNE
MCB CAMP LEJEUNE

NAVAL FACILITIES ENGINEERING COMMAND – MID-ATLANTIC
JACKSONVILLE, NC

JACKSONVILLE, NC
P1338 II MEF SIMULATION/TRAINING CENTER
REPLACEMENT

MECHANICAL ISOMETRIC VIEWS

SCALE: AS NOTED

EPROJECT NO.: 1590892

CONSTR. CONTR. NO.
N40085-20-C-0059

NAVFAC DRAWING NO.

SHEET OF

M-901

DP2 SUBMISSION – P1338 BUILDING - PRE-FINAL SUBMISSION

PLOTTED: 6/10/2021 3:34:52 PM

FILE NAME: BIM 360://HF PACKAGE 3/P1338 MEF SIM CTR-1590892-M.rvt

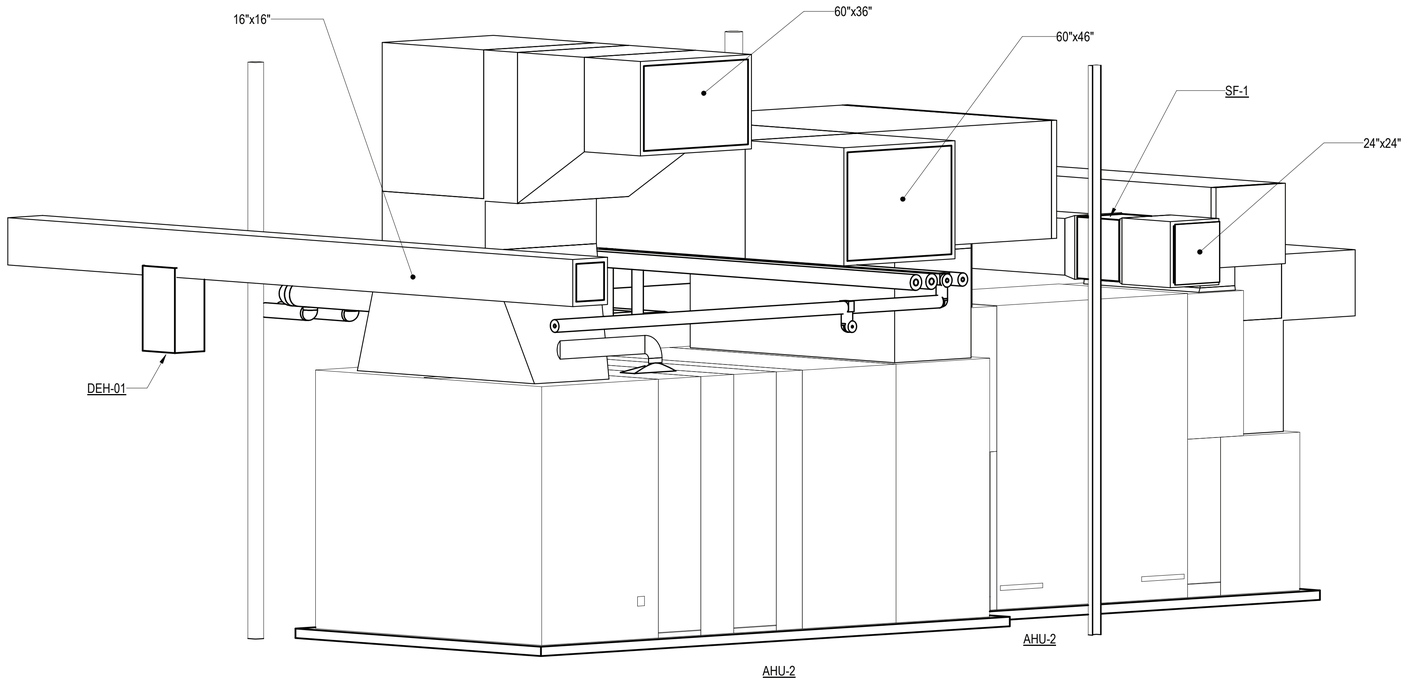

C1 AHU-02 ISOMETRIC

SCALE: NOT TO SCALE

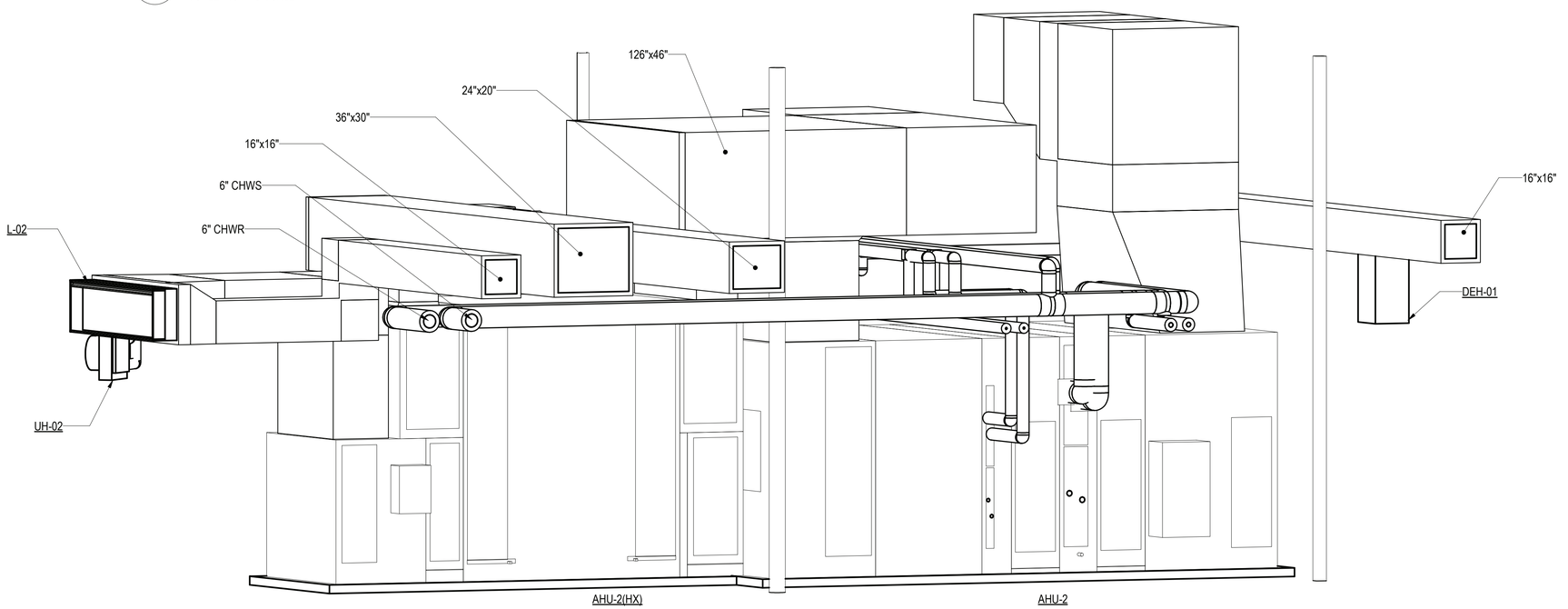

A1 AHU-02 ISOMETRIC

SCALE: NOT TO SCALE

PLOTTED: 6/10/2021 3:34:56 PM

FILE NAME: BIM 360://HF PACKAGE 3/P1338 MEF SIM CTR-1590892-M.rvt

APPR	DATE	SYM	DESCRIPTION

NAVFAC

PRELIMINARY NOT FOR CONSTRUCTION

SEAL

RQ W.M. Jordan COMPANY – A JOINT VENTURE –

Michael Baker INTERNATIONAL

100 AIRSIDE DRIVE
MOON TOWNSHIP, PA 15108 A/E INFO

APPROVED

FOR COMMANDER NAVFAC

ACTIVITY
MARINE CORPS BASE
CAMP LEJEUNE

SATISFACTORY TO DATE

DES	DRW	CHK

PM

BRANCH MANAGER

CHIEF ENG/ARCH

FIRE PROTECTION

DEPARTMENT OF THE NAVY
NAVAL FACILITIES ENGINEERING COMMAND
ROICC FLORENCE CAMP LEJEUNE
MCB CAMP LEJEUNE

NAVAL FACILITIES ENGINEERING COMMAND ~ MID-ATLANTIC
JACKSONVILLE, NC

JACKSONVILLE, NC
P1338 II MEF SIMULATION/TRAINING CENTER
REPLACEMENT

MECHANICAL ISOMETRIC VIEWS

SCALE: AS NOTED

EPROJECT NO.: 1590892

CONSTR. CONTR. NO.
N40085-20-C-0059

NAVFAC DRAWING NO.

SHEET OF

M-902

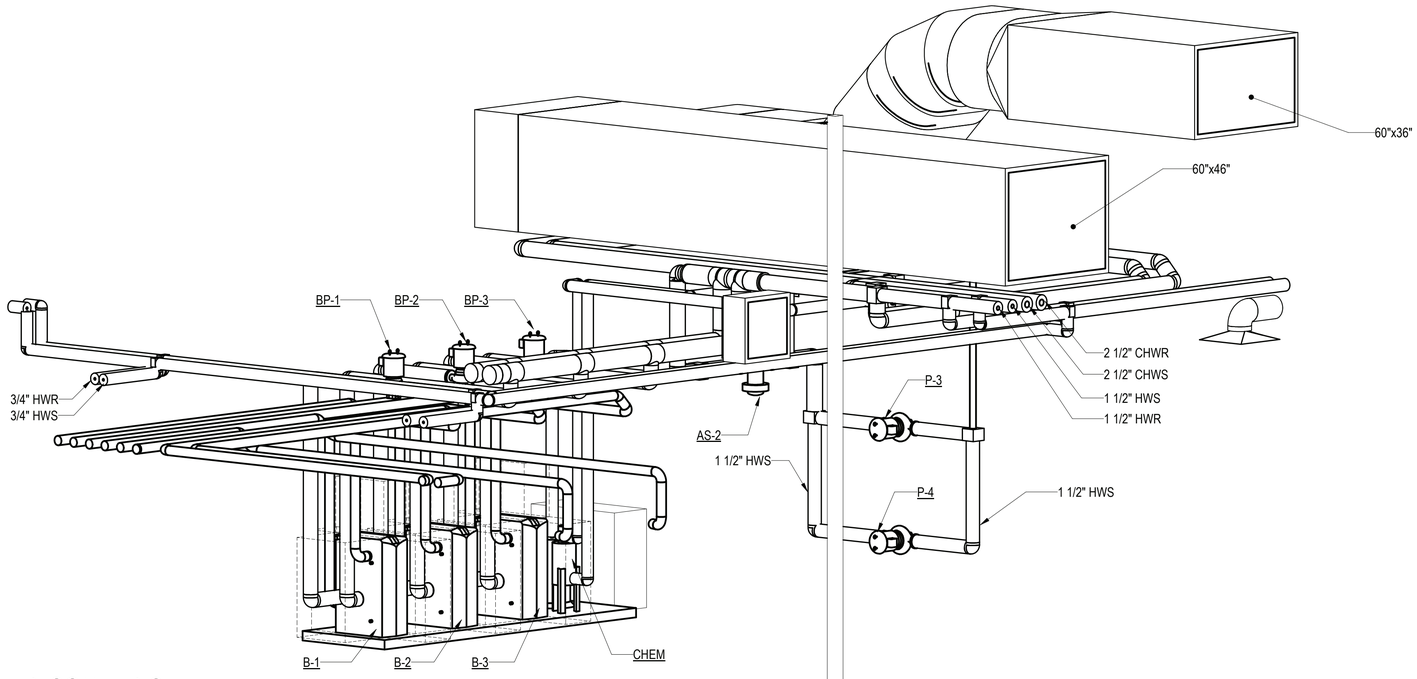

BOILER ISOMETRIC

SCALE:

C1

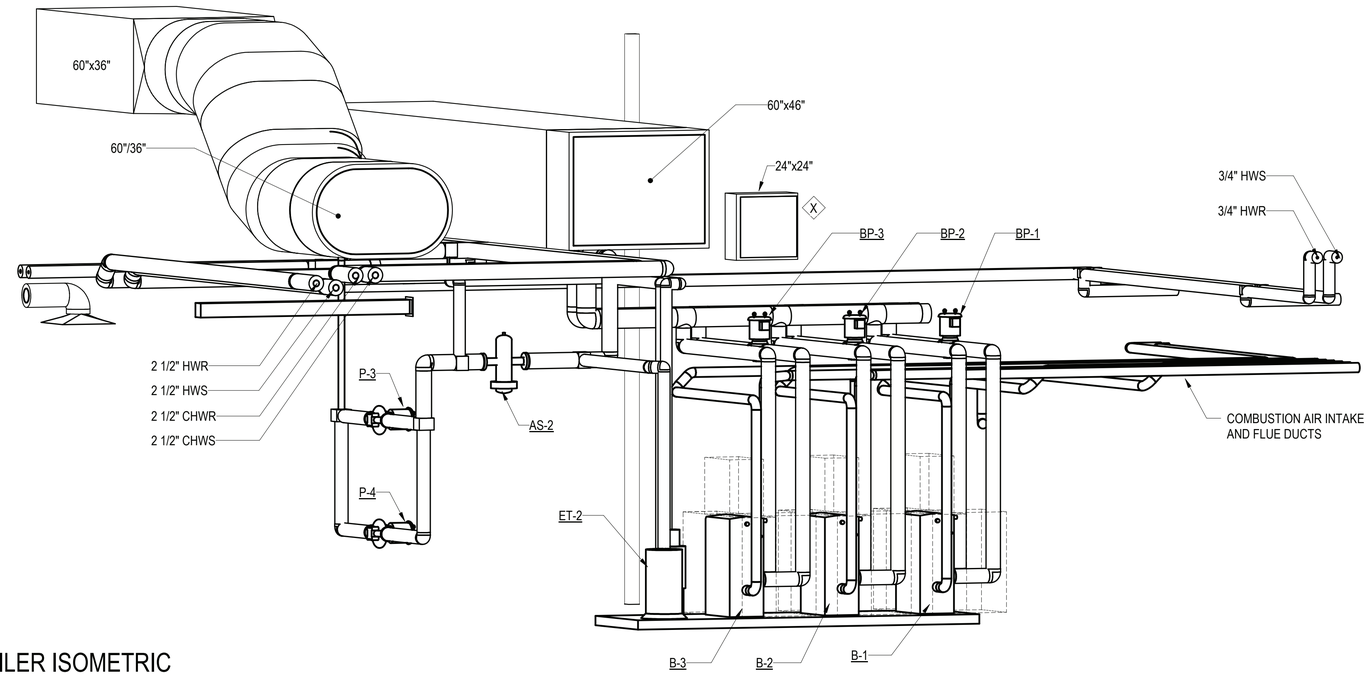

BOILER ISOMETRIC

SCALE:

A1

APPR	DATE	SYM	DESCRIPTION

NAVFAC

PRELIMINARY
NOT FOR CONSTRUCTION

SEAL

IRQ WM Jordan COMPANY
~ A JOINT VENTURE ~

Michael Baker
INTERNATIONAL

100 AIRSIDE DRIVE
MOON TOWNSHIP, PA 15108 A/E INFO

APPROVED

FOR COMMANDER NAVFAC

ACTIVITY
MARINE CORPS BASE
CAMP LEJEUNE

SATISFACTORY TO DATE

DES	DRW	CHK

PM

BRANCH MANAGER

CHIEF ENG/ARCH

FIRE PROTECTION

DEPARTMENT OF THE NAVY
NAVAL FACILITIES ENGINEERING COMMAND
ROICC FLORENCE CAMP LEJEUNE
MCB CAMP LEJEUNE

NAVAL FACILITIES ENGINEERING COMMAND ~ MID-ATLANTIC
JACKSONVILLE, NC

JACKSONVILLE, NC
P1338 II MEF SIMULATION/TRAINING CENTER
REPLACEMENT

MECHANICAL ISOMETRIC VIEWS

SCALE: AS NOTED

EPROJECT NO.: 1590892

CONSTR. CONTR. NO.
N40085-20-C-0059

NAVFAC DRAWING NO.

SHEET OF

M-903

DP2 SUBMISSION – P1338 BUILDING - PRE-FINAL SUBMISSION

PLOTTED: 6/10/2021 3:35:00 PM

FILE NAME: BIM 360://HF PACKAGE 3/P1338 MEF SIM CTR-1590892-M.rvt

SYMBOL — POWER

SYMBOL	
LP2A-1,3	HOME RUN TO PANELBOARD LETTERS AND NUMBERS DESIGNATE PANEL AND CIRCUITS. PROVIDE ONE PHASE CONDUCTOR, ONE NEUTRAL CONDUCTOR , AND ONE EQUIPMENT GROUNDING CONDUCTOR FOR SINGLE POLE CIRCUIT BREAKER CIRCUITS. PROVIDE TWO PHASE CONDUCTORS AND ONE EQUIPMENT GROUNDING CONDUCTOR FOR TWO POLE CIRCUIT BREAKER CIRCUITS. PROVIDE THREE PHASE CONDUCTORS AND ONE EQUIPMENT GROUNDING CONDUCTOR FOR THREE POLE CIRCUIT BREAKER CIRCUITS.
	CONDUIT AND CABLE, CONCEALED IN FINISHED SPACES, EXPOSED ELSEWHERE.
	CONDUIT AND CABLE, BELOW GRADE OR SLAB.
EU	UNDERGROUND DUCTBANK: EU = DENOTES ELECTRICAL GAS = DENOTES GAS LINE OE = DENOTES OVERHEAD ELECTRIC LINE T = DENOTES TELECOMMUNICATIONS
	CONDUIT TURNED UP.
	CONDUIT TURNED DOWN.
TW	GROUND ROD TEST WELL
	GROUND ROD
	EXOTHERMIC WELD.
	CLAMP CONNECTOR
	BOLTED CONNECTION
	AIR TERMINAL
	GROUND / GROUND ROD / GEC
	LIGHTNING PROTECTION MAIN CONDUCTOR
G	BARE COPPER GROUNDING CONDUCTOR.
	GROUNDING BUSBAR
S Xa	WALL SWITCH UNLESS OTHERWISE NOTED MOUNTED 48"AFF. "X" REPRESENTS TYPE. "a" REPRESENTS LIGHTS SWITCHED.
	LV4 = 4 BUTTON LOW VOLTAGE SWITCH WITH RAISE/LOWER AND ON/OFF LV8 = 8 BUTTON LOW VOLTAGE SWITCH WITH RAISE/LOWER AND ON/OFF AND 4 ZONES TS = TIME SWITCH D = LOW VOLTAGE DIMMER K = KEY OPERATED LV = LOW VOLTAGE SWITCH
	SINGLE, DUPLEX, 4-PLEX RECEPTACLE, MOUNTED 18"AFF UON. WP = WATERPROOF SP = SURGE SUPPRESSION TR = TAMPER RESISTANT AC = MOUNTED ABOVE COUNTER
	SPECIAL PURPOSE RECEPTACLE, SIZE AND TYPE AS SHOWN ON THE DRAWING.
	GFI DUPLEX RECEPTACLE.
	DUPLEX RECEPTACLE. FLUSH FLOOR MOUNTED, UNLESS OTHERWISE NOTED.
	DUPLEX RECEPTACLE. CEILING MOUNTED, UNLESS OTHERWISE NOTED.
	DUPLEX RECEPTACLE WITH TWO 5VDC USB PORTS, ONE TYPE A USB PORT AND ONE TYPE B USB PORT.
PB	PULLBOX SIZE PER NEC UNLESS OTHERWISE NOTED.
T	TRANSFORMER.
	JUNCTION BOX SIZE PER NEC UNLESS OTHERWISE NOTED.
	EQUIPMENT CONNECTION POINT.
	PANELBOARD SURFACE OR FLUSH MOUNTED AS INDICATED.
VFD	VARIABLE FREQUENCY DRIVE.
	MOTOR CONNECTION.
M	SINGLE POLE MANUAL MOTOR STARTER, WITH THERMAL OVERLOAD PROTECTION.
100/3/3R	NON-FUSIBLE DISCONNECT. "100/3" DENOTES 100A, 3P, '3R'.
200/3/150	FUSIBLE DISCONNECT SWITCH. "200/3/150" DENOTES 200A, 3P, WITH 150A FUSES.
100/3/3R	ENCLOSED THERMAL MAGNETIC CIRCUIT BREAKER INDIVIDUALLY MOUNTED. "100/3" DENOTES 100A, 3P, 3R (NOTATION TYPICAL).
	MAGNETIC MOTOR STARTER INDIVIDUALLY MOUNTED.
100/3	FUSIBLE DISCONNECT SWITCH TYPE COMBINATION MAGNETIC MOTOR STARTER, CIRCUIT NUMBER AS SHOWN ON THE DRAWINGS. INDIVIDUALLY MOUNTED 54 IN. ABOVE FINISHED FLOOR.
	MOTOR CIRCUIT PROTECTOR TYPE COMBINATION MAGNETIC MOTOR STARTER, CIRCUIT NUMBERS AS SHOWN ON THE DRAWINGS. INDIVIDUALLY MOUNTED 54 IN. ABOVE FINISHED FLOOR.
	SURFACE METAL RACEWAY, (SMR) COORDINATE SIZE WITH SPECIFICATION, MOUNTED ABOVE COUNTER TOP, UNLESS OTHERWISE NOTED.
FB1	MULTISERVICE FLOOR BOX, . SEE E-502 FOR MORE INFORMATION.
FB2	MULTISERVICE FLOOR BOX, . SEE E-502 FOR MORE INFORMATION.
PT1	MULTISERVICE POKE THRU WITH QUADRUPLEX SOCKET AND GROUND. SEE MTF-T001 FOR TELECOMMUNICATIONS INFORMATION.
	EMERGENCY PUSH BUTTON
	PUSH BUTTON CONTROLLER

SYMBOL — FLOORBOXES

SYMBOL	
	FLOORBOX LOCATION, TRAINING SIMULATION SYSTEM – UNCLASSIFIED; INSTALLED IN RAISED ACCESS FLOOR. INSTALL EIGHT (8) CATEGORY 6A UTP PLENUM-RATED, GREEN JACKET COPPER CABLES FROM TERMINATING RACK IN SIM SERVER ROOM TO FLOORBOX LOCATION. SEE DETAIL SHEET E-502 FOR TERMINATION DETAILS.
	FLOORBOX LOCATION, TRAINING SIMULATION SYSTEM – CLASSIFIED; INSTALLED IN RAISED ACCESS FLOOR. INSTALL EIGHT (8) CATEGORY 6A UTP PLENUM-RATED, RED JACKET COPPER CABLES FROM TERMINATING RACK IN SIM SERVER ROOM TO FLOORBOX LOCATION. SEE DETAIL SHEET E-502 FOR TERMINATION DETAILS.

SYMBOL — GENERAL

SYMBOL	
X	SHEET KEYNOTE X = KEYNOTE NUMBER

SYMBOL — LIGHTING

SYMBOL	
A LP1-2b	STRIP LIGHTING FIXTURE. "LP1"=PANELBOARD, "2"=CIRCUIT NUMBER, "b"=SWITCH LETTER, "A"=FIXTURE TYPE LETTER. SEE LIGHTING FIXTURE SCHEDULE FOR DETAILS.
A LP1-2b	LIGHTING FIXTURE. "LP1"=PANELBOARD, "2"=CIRCUIT NUMBER, "b"=SWITCH LETTER, "A"=FIXTURE TYPE LETTER.
A LP1-2b	LIGHTING FIXTURE. "LP1"=PANELBOARD, "2"=CIRCUIT NUMBER, "b"=SWITCH LETTER, "A"=FIXTURE TYPE LETTER. SHADING DENOTES FIXTURE IS PROVIDED WITH EMERGENCY BATTERY BALLAST/DRIVER CONNECTED TO UNSWITCHED SENSING CIRCUIT WIRE.
A LP1-2	LIGHTING FIXTURE. "LP1"=PANELBOARD, "2"=CIRCUIT NUMBER, "A"=FIXTURE TYPE LETTER. FULL SHADING DENOTES FIXTURE IS UNSWITCHED AND PROVIDED WITH EMERGENCY BATTERY BALLAST/DRIVER.
	PENDANT MOUNTED LIGHTING FIXTURE.
	PENDANT MOUNTED STRIP LIGHTING FIXTURE
	CEILING MOUNTED LIGHTING FIXTURE.
	WALL MOUNTED LIGHTING FIXTURE.
	SITE LIGHTING ASSEMBLY.
	TWIN SITE LIGHTING ASSEMBLY.
PC	PHOTOCELL. COMPATIBLE WITH LIGHTING CONTROL PANEL.
	CEILING MOUNTED EXIT SIGN, DRAWINGS INDICATE SINGLE OR DOUBLE FACED WITH DIRECTIONAL ARROWS..
	WALL MOUNTED EXIT SIGN, DRAWINGS INDICATE SINGLE OR DOUBLE FACED WITH DIRECTIONAL ARROWS. MOUNT 8'-0"AFF.
W LP1-12	EMERGENCY LIGHTING MASTER UNIT, BATTERY POWERED. CONNECT TO UNSWITCHED PORTION OF LOCAL LIGHTING CIRCUIT. LP1 DENOTES PANELBOARD DESIGNATION. 12 DENOTES CIRCUIT NUMBER. W DENOTES FIXTURE TYPE LETTER.
	WALL SWITCH DUAL TECH, LOW VOLTAGE VACANCY SENSOR
D	WALL SWITCH DUAL TECH, LOW VOLTAGE VACANCY SENSOR - WITH DIMMING
OS	WALL SWITCH DUAL TECH, LOW VOLTAGE OCCUPANCY SENSOR
	CEILING MOUNTED, DUAL TECH LOW VOLTAGE OCCUPANCY SENSOR
	CEILING MOUNTED, LOW VOLTAGE ULTRASONIC CORRIDOR OCCUPANCY SENSOR
	CEILING MOUNTED DUAL TECH LOW VOLTAGE VACANCY SENSOR
R	DENOTES CEILING SENSOR WITH AUXILARY RELAY FOR TIE IN/ INTERFACE WITH VAV BOX.
P	SMART POWER PACK, EQUAL TO nLIGHT. - PROVIDE WITH DIMMING
LCP	LIGHTING CONTROL CONTACTOR PANEL.
DC	DOOR CONTACT LIGHT SWITCH.
LVS	LOW VOLTAGE SWITCH

SYMBOL — PHASING

SYMBOL	
	NEW CONSTRUCTION
	DEMOLITION
	EXISTING TO REMAIN
RR RR RR	REMOVE AND RELOCATE
ER ER ER	EXISTING RELOCATED

GENERAL NOTES

1. THIS IS A STANDARD LEGEND SHEET. NOT ALL SYMBOLS OR ABBREVIATIONS MAY APPEAR ON DRAWINGS.
2. MOUNTING DEVICES AND EQUIPMENT PER SPECIFICATIONS UNLESS OTHERWISE NOTED.
3. ENCLOSURES SHALL BE NEMA 1 UNLESS OTHERWISE NOTED. 3R=NEMA 3R, 4X=NEMA 4X, WP=WEATHERPROOF, AND XP=EXPLOSION PROOF.
4. PROVIDE GROUND CONDUCTOR FOR ALL BRANCH, FEED, AND EQUIPMENT CIRCUITS SIZED PER NEC, UNLESS OTHERWISE INDICATED.
5. WHERE MULTIPLE CIRCUITS ARE COMBINED IN A SINGLE RACEWAY THE CONTRACTOR SHALL DETERMINE THE EXACT NUMBER OF CONDUCTORS, ROUTING, AND SIZE OF THE RACEWAY. SIZE THE WIRE AMPACITY IN ACCORDANCE WITH THE NEC.
6. CONTRACTOR SHALL COORDINATE ALL CONDUIT PENETRATIONS AND PROVIDE CONDUIT SEALS IN HAZARDOUS LOCATION. PENETRATION SEALS, EXPANSION/VIBRATION ISOLATION FITTINGS AS APPLICABLE.
7. ELECTRICAL CONTRACTOR IS RESPONSIBLE TO MAINTAIN AIR BARRIER INTEGRITY FOR ELECTRICAL RACEWAY PENETRATION.
8. ALL WIRING FOR LIGHTING AND POWER CIRCUITS SHALL BE NO. 12 AWG MINIMUM.
9. ALL WIRING FOR CONTROL SHALL BE NO. 14 MINIMUM.
10. ALL CONDUIT SHALL BE MINIMUM 3/4" FOR POWER, MINIMUM 1" FOR DATA/COMM.
11. THE WIRE SIZE FROM A 20 AMPERE, SINGLE POLE, 120 VOLT CIRCUIT BREAKER MOUNTED IN A LIGHTING PANELBOARD TO THE LOAD SHALL BE AS FOLLOWS: NO. 12 AWG WIRE UP TO 100 FEET RUN; NO. 10 AWG WIRE; 101 FEET RUN UP TO 200 FEET RUN; NO. 8 AWG WIRE 201 FEET RUN UP TO 300 FEET RUN.
12. SELF CONTAINED UNIT EQUIPMENT SERVING EXIT AND EGRESS LIGHTING SYSTEMS SHALL BE CONNECTED TO THE UNSWITCHED PORTION OF THE LOCAL LIGHTING CIRCUIT IN COMPLIANCE WITH NEC 700.12 (F).
13. CONTRACTOR SHALL COMPLY WITH ALL CONTRACT REQUIREMENTS AND ALL APPLICABLE CODES, LAWS, AND REGULATIONS, INCLUDING NATIONAL ELECTRICAL CODE, OSHA, AND NATIONAL ELECTRICAL SAFETY CODE.
14. THIS SPECIFICATION AND THE DRAWINGS ARE NOT INTENDED TO SHOW ALL DETAILS, WIRING, BOXES, COVERS, FITTINGS, AND SPECIAL CONSTRUCTION WHICH MAY BE NECESSARY OR REQUIRED. THIS CONTRACTOR SHALL FURNISH, INSTALL, AND CONNECT ALL REQUIRED WORK IN ORDER TO MAKE THE INSTALLATION COMPLETE AS INDICATED BY THIS SPECIFICATION AND THE DRAWINGS. "PROVIDE" SHALL MEAN FURNISH AND INSTALL COMPLETE. "APPROVED" SHALL MEAN APPROVED BY OWNER'S REPRESENTATIVE. "DIRECTED" SHALL MEAN DIRECTED BY THE OWNER'S REPRESENTATIVE.
15. THE DRAWINGS ARE DIAGRAMMATIC AND DO NOT SHOW EXACT ROUTES OF WIRING AND EXACT LOCATION OF EQUIPMENT. CONTRACTOR SHALL BECOME FAMILIAR WITH JOB CONDITIONS AND SHALL ARRANGE ALL WORK TO AVOID CONFLICTS. ALL FINAL LOCATIONS OF NEW CONDUITS, OUTLETS, AND EQUIPMENT SHALL BE SUBJECT TO APPROVAL.
16. PROVIDE ALL ITEMS INDICATED ON DRAWINGS AND REQUIRED BY SPECIFICATIONS, INCLUDING: ALL SUPPORTS, HARDWARE AND ACCESSORIES, BRANCH CIRCUIT WIRING, AND DEVICES.
17. PRIOR TO EXECUTION OF THIS CONTRACT, THIS CONTRACTOR SHALL HAVE VISITED THE SITE (BY APPOINTMENT) AND SHALL HAVE EXAMINED ALL EXISTING CONDITIONS WHICH MAY AFFECT HIS WORK. SUBMISSION OF A BID SHALL BE CONSIDERED INDICATIVE THAT THIS CONTRACTOR HAS VISITED THE SITE AND HAS DETERMINED ALL EXISTING CONDITIONS WHICH MAY AFFECT THE CONTRACT WORK AND HAS INCLUDED ALL COSTS RELATED TO SITE CONDITIONS IN THE AMOUNT BID.
18. PROVIDE ARC FLASH LABELING IAW NEC 110.16.
19. ALL LISTED MATERIALS AND EQUIPMENT ARE INDICATIVE OF COMPLETE AND WHOLE UNITS (UNLESS SPECIFICALLY INDICATED TO THE CONTRARY) AND SHALL BE FURNISHED AS SUCH.
20. ALL CONSTRUCTION UNDER THIS CONTRACT SHALL BE INSTALLED IN A NEAT AND WORKMANLIKE MANNER BY MECHANICS SKILLED IN THE TRADE. THE CONTRACTOR SHALL REMOVE AND REPLACE ALL WORK WHICH IS NOT INSTALLED AS APPROVED.
21. UNLESS NOTED OTHERWISE, ALL MATERIALS AND EQUIPMENT SHALL BE NEW, APPROVED QUALITY, SPECIFICATION GRADE, AND LISTED BY UNDERWRITER'S LABORATORIES OF NATIONAL BOARD OF FIRE UNDERWRITERS.
22. ALL CUTTING REQUIRED FOR THE INSTALLATION OF ELECTRICAL CONSTRUCTION UNDER THIS CONTRACT SHALL BE ACCOMPLISHED IN SUCH MANNER AS NOT TO CAUSE STRUCTURAL OR ARCHITECTURAL DAMAGE TO BUILDING OR LEAVE UNSIGHTLY SURFACES. THIS CONTRACTOR SHALL BE RESPONSIBLE FOR PATCHING TO PROVIDE A NEAT AND FINISHED SURFACE EQUAL TO SURROUNDING UNDISTURBED SURFACES WHEREVER CUTTING, PATCHING, DAMAGE OR REMOVAL OF EQUIPMENT IS PERFORMED UNDER THIS CONTRACT. ALL PATCHING AND RESTORING OF SURFACES SHALL BE PERFORMED BY WORKMEN SKILLED IN THE TRADE INVOLVED AND SHALL BE SUBJECT TO APPROVAL.
23. PROVIDE ROUGH-IN CONNECTIONS FOR ALL OFOI/OFCI EQUIPMENT INCLUDING BUT NOT LIMITED TO PRINTER, COPIER, FAX MACHINES, INTERCOM, CAMERAS, PROJECTORS, PODIUMS, SMARTBOARDS, FLAT SCREEN MONITORS, FURNITURE SYSTEMS, AND SECURITY SYSTEMS.
24. THE ELECTRICAL CONTRACTOR SHALL REVIEW REQUIREMENTS FOR THE INSTALLATION OF ELECTRICAL PORTIONS OF WORK INDICATED ON THE CONSTRUCTION DOCUMENTS OF OTHER TRADES AND INCLUDE REQUIREMENTS IN BIDDING THIS CONTRACT.

SYMBOL — SINGLE-LINE DIAGRAM

SYMBOL	
	SINGLE LINE DIAGRAM THERMAL-MAGNETIC CIRCUIT BREAKER.
	SINGLE LINE DIAGRAM COMBINATION MOTOR STARTER WITH MOTOR CIRCUIT PROTECTOR (MCP) AND THERMAL OVERLOAD (OL).
	SINGLE LINE DIAGRAM NON-FUSED DISCONNECT SWITCH.
	SINGLE LINE DIAGRAM FUSED DISCONNECT SWITCH.
	SINGLE LINE DIAGRAM TRANSFORMER
VFD	VARIABLE FREQUENCY DRIVE WITH INTERNAL OVERCURRENT DISCONNECT DEVICE.
	WOOD UTILITY POLE
	ATS
	GROUNDING ELECTRODE
G	GENERATOR
M	SINGLE LINE DIAGRAM METER

ABBREVIATIONS

A	AMPS	XFMR	TRANSFORMER
AFF	ABOVE FINISHED FLOOR	XP	EXPLOSION PROOF
AFG	ABOVE FINISHED GROUND		
AHU	AIR HANDLING UNIT		
AIC	CURRENT INTERRUPTER CAPACITY		
ATS	AUTOMATIC TRANSFER SWITCH		
AWG	AMERICAN WIRE GAUGE		
BFC	BELOW FINISHED CEILING		
BRKR	CIRCUIT BREAKER		
C	CONDUIT		
CB	CIRCUIT BREAKER		
CFCI	CONTRACTOR FURNISHED CONTRACTOR INSTALLED		
CPR	COPIER		
CRAC	COMPUTER ROOM AIR CONDITIONER		
CRCU	COMPUTER ROOM CONDENSING UNIT		
CT	CONTROL TRANSFORMERS		
DB	DIRECT BURIED		
DIA	DIAMETER		
DP	DISTRIBUTION PANEL		
DWG	DRAWING		
EGC	EQUIPMENT GROUNDING CONDUCTOR		
EMT	ELECTRICAL METALLIC TUBING		
ER	EXISTING RELOCATED		
ERU	ENERGY RECOVERY UNIT		
ETR	EXISTING TO REMAIN		
EWC	ELECTRIC WATER COOLER		
EXST	EXISTING		
FB	FLOOR BOX		
GEC	GROUNDING ELECTRODE CONDUCTOR		
GFP	GROUND FAULT PROTECTION		
GND	GROUND		
GRD	GROUND		
GRS	GALVANIZED RIGID STEEL		
IAW	IN ACCORDANCE WITH		
IDS	INTRUSION DETECTION SYSTEM		
IMC	INTERMEDIATE METALLIC CONDUIT		
KVA	KILO VOLT AMPS		
KW	KILO WATT		
LCP	LIGHTING CONTROL PANEL		
LED	LIGHT EMITTING DIODE		
LP	LIGHTING PANEL		
MC	MECHANICAL CONTRACTOR		
MCP	MOTOR CIRCUIT PROTECTOR		
MCS	MOLDED CASE SWITCH		
MEP	MECHANICAL EQUIPMENT PANEL		
MIN	MINIMUM		
MLO	MAIN LUG ONLY		
MTD	MOUNTED		
MUA	MAKE UP AIR UNIT		
NEC	NATIONAL ELECTRIC CODE		
NEMA	NATIONAL ELECTRICAL MANUFACTURERS ASSOCIATION		
NESC	NATIONAL ELECTRICAL SAFETY CODE		
NFPA	NATIONAL FIRE PROTECTION ASSOCIATION		
NIC	NOT IN CONTRACT		
NO	NUMBER		
NP	NIPRNET SENDER		
NS	SIPRNET SENDER		
NTS	NOT TO SCALE		
OEM	ORIGINAL EQUIPMENT MANUFACTURER		
OFCI	OWNER FURNISHED CONTRACTOR INSTALLED		
OFOI	OWNER FURNISHED OWNER INSTALLED		
OL	THERMAL OVERLOAD		
OSHA	OCCUPATIONAL SAFETY AND HEALTH ADMINISTRATION		
OSP	OUTSIDE PLANT		
P	POLE		
PH	PHASE		
PIV	POST INDICATOR VALVE		
PP	POWER PANEL		
PSI	POUNDS PER SQUARE INCH		
PT	POTENTIAL TRANSFORMERS		
PVC	POLYVINYL CHLORIDE		
QTY	QUANTITY		
RCD	RESIDUAL CURRENT DEVICE		
RECEPT	RECEPTACLE		
RR	REMOVE AND RELOCATE		
RGS	RIGID GALVANIZED STEEL CONDUIT		
RMC	RIGID METAL CONDUIT		
RS	RIGID STEEL		
SCH	SCHEDULE		
SDP	STANDBY DISTRIBUTION PANEL		
SGP	SINGLE GROUND POINT		
SLP	STANDBY LIGHTING PANEL		
SP	SIPRNET PRINTER		
SPD	SURGE PROTECTION DEVICE		
SPP	STANDBY POWER PANEL		
SS	SIPRNET SENDER		
SW	SWITCHED		
T	TRANSFORMER		
TV	TELEVISION		
TW	TEST WELL		
TX	TRANSFORMER		
TYP	TYPICAL		
U/G	UNDERGROUND		
UON	UNLESS OTHERWISE NOTED		
V	VOLTS		
VAV	VARIABLE AIR VOLUME		
VDC	VOLTS DIRECT CURRENT		
VFD	VARIABLE FREQUENCY DRIVE		
W	WATTS OR WIRE		
WP	WEATHERPROOF		

APPR	DATE	DESCRIPTION	SYM

NAVFAC

SEAL

WNH Jordan COMPANY – A JOINT VENTURE –

Michael Baker INTERNATIONAL
100 AIRSIDE DRIVE, MOON TOWNSHIP, PA 15108 — A/E INFO

APPROVED

FOR COMMANDER NAVFAC

ACTIVITY
MARINE CORPS BASE CAMP LEJEUNE

SATISFACTORY TO DATE

DES	DRW	CHK
SD	LAK	YPS

PM

BRANCH MANAGER

CHIEF ENG/ARCH

FIRE PROTECTION

DEPARTMENT OF THE NAVY
NAVAL FACILITIES ENGINEERING COMMAND – MID-ATLANTIC
JACKSONVILLE, NC
ROICC FLORENCE CAMP LEJEUNE
MCB CAMP LEJEUNE
JACKSONVILLE, NC
P1338 II MEF SIMULATION/TRAINING CENTER
REPLACEMENT
ELECTRICAL - NOTES, SYMBOLS, AND ABBREVIATIONS

SCALE: AS NOTED

EPROJECT NO.: 1590892

CONSTR. CONTR. NO.
N40085-20-C-0059

NAVFAC DRAWING NO.

SHEET OF

E-001

DP2 SUBMISSION - P1338 BUILDING -PRE-FINAL SUBMISSION

PLOTTED: 6/10/2021 5:41:52 PM

FILE NAME: BIM 360:/HF PACKAGE 3/P1338 MEF SIM CTR-1590892-E.rvt

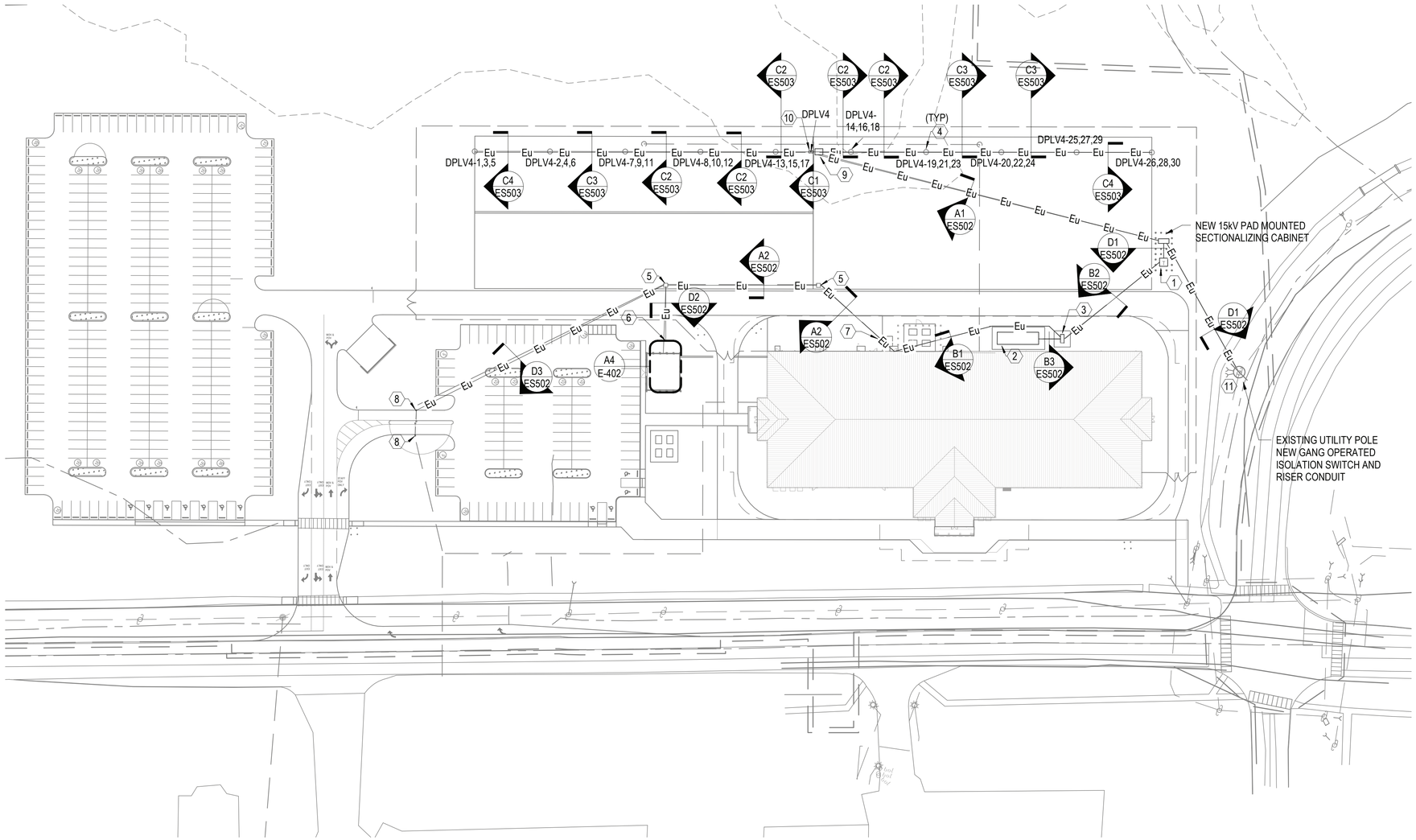

ELECTRICAL - SITE UTILITY PLAN

SCALE: 1" = 60'-0"

0 30'-0" 60'-0" 120'-0"

SCALE: 0'-1" = 60'-0"

N

GENERAL NOTES

1 SEE SHEET E-001 FOR ELECTRICAL NOTES, SYMBOLS, AND ABBREVIATIONS.
2 DEPTH OF DUCTBANKS SHALL BE COORDINATED WITH OTHER UTILITIES.

KEYNOTES

1 12.47kV-480Y/277V, 3PH, 4W, 60Hz, OIL FILLED UTILITY TRANSFORMER, OVER A PRECAST TRANSFORMER PAD. FOR ADDITIONAL INFORMATION SEE SPECIFICATIONS AND DRAWING E-602.
2 480Y/277V, DIESEL GENERATOR WITH SUBBASE FUEL TANK AND CONCRETE PAD. SEE ADDITIONAL INFORMATION ON DRAWING E-502. FOR ADDITIONAL INFORMATION SEE SPECIFICATIONS AND DRAWINGS E-502 / E-602.
3 AUTOMATIC TRANSFER SWITCH EQUIPPED WITH MAINTENANCE BYPASS SWITCH. FOR ADDITIONAL INFORMATION SEE SPECFICATIONS AND DRAWING E-602.
4 POWER PEDESTAL WITH HEAVY-DUTY NEMA 4X STAINLESS STEEL AND FUSED DISCONNECT SWITCH. COORDINATE FINAL POWER LOCATIONS WITH FINAL PEDESTAL LOCATION.
5 TYPE 4 TRAFFIC/AIRFIELD RATED HANDHOLE FOR POWER. COORDINATE HANDHOLE LOCATIONS WITH FINAL POWER LOCATIONS. SEE DETAIL UG-5 ON ES505.
6 CONTRACTOR TO COORDINATE FINAL TERMINATION POINT FOR ELECTRICAL CONNECTIONS BEFORE RUNNING CONDUIT.
7 RUN CHILLER CONDUITS UNDER ELECTRICAL ROOM SLAB AND STUB UP AT SWITCHBOARD LOCATION. SEE DRAWING E-401 FOR SWITCHBOARD LOCATION.
8 TYPE 5 COMPOSITE / FIBERGLASS, NON TRAFFIC RATED HANDHOLE FOR POWER AND COMM TO VEHICLE LIFT GATES. COORDINATE HANDHOLE LOCATION WITH FINAL POWER LOCATIONS FOR LIFT GATES. SEE DETAIL UG-6 ON ES505.
9 12.47kV-208Y/120V, 3PH, 4W, 60Hz, OIL FILLED UTILITY TRANSFORMER, OVER A PRECAST TRANSFORMER PAD TO SERVE DISTRIBUTION PANELBOARD FEEDING POWER PEDESTALS. FOR ADDITIONAL INFORMATION SEE SPECIFICATIONS AND DRAWING E-602.
10 800A, NEMA 4X STAINLESS STEEL, 208/120V DISTRIBUTION PANELBOARD FOR POWER PEDESTAL CONNECTIONS.
11 SEE NAVFAC STANDARD OVERHEAD TEMPLATES ON SHEET ES504.

APPR	DATE	DESCRIPTION	SYM

NAVFAC

SEAL

WJM Jordan COMPANY ~ A JOINT VENTURE ~

Michael Baker INTERNATIONAL
100 AIRSIDE DRIVE
MOON TOWNSHIP, PA 15108 A/E INFO

APPROVED

FOR COMMANDER NAVFAC

ACTIVITY
MARINE CORPS BASE
CAMP LEJEUNE

SATISFACTORY TO DATE

DES SD | DRW LAK | CHK YPS

PM

BRANCH MANAGER

CHIEF ENG/ARCH

FIRE PROTECTION

DEPARTMENT OF THE NAVY
NAVAL FACILITIES ENGINEERING COMMAND
ROICC FLORENCE CAMP LEJEUNE
MCB CAMP LEJEUNE

NAVAL FACILITIES ENGINEERING COMMAND ~ MID-ATLANTIC
JACKSONVILLE, NC

JACKSONVILLE, NC
P1338 II MEF SIMULATION/TRAINING CENTER
REPLACEMENT

ELECTRICAL - SITE UTILITY PLAN

SCALE: AS NOTED
EPROJECT NO.: 1590892
CONSTR. CONTR. NO.
N40085-20-C-0059
NAVFAC DRAWING NO.
SHEET OF

ES101

DP2 SUBMISSION – P1338 BUILDING -,-PRE-FINAL SUBMISSION

PLOTTED: 6/10/2021 5:44:32 PM

FILE NAME: BIM 360://HF PACKAGE 3/P1338 MEF SIM CTR-1590892-E.rvt

GENERAL NOTES

1 SEE SHEET E-001 FOR ELECTRICAL NOTES, SYMBOLS, AND ABBREVIATIONS.
2 SEE SHEET E-601 FOR LIGHTING FIXTURE SCHEDULE.
3 DUCTBANKS UNDER PAVEMENT SHALL BE CONCRETE ENCASED.

KEYNOTES

1 SITE LIGHTING HAND HOLE, SIZE PER NEC.
2 MOUNT FIXTURE 8'-0" ABOVE FINISHED GRADE.

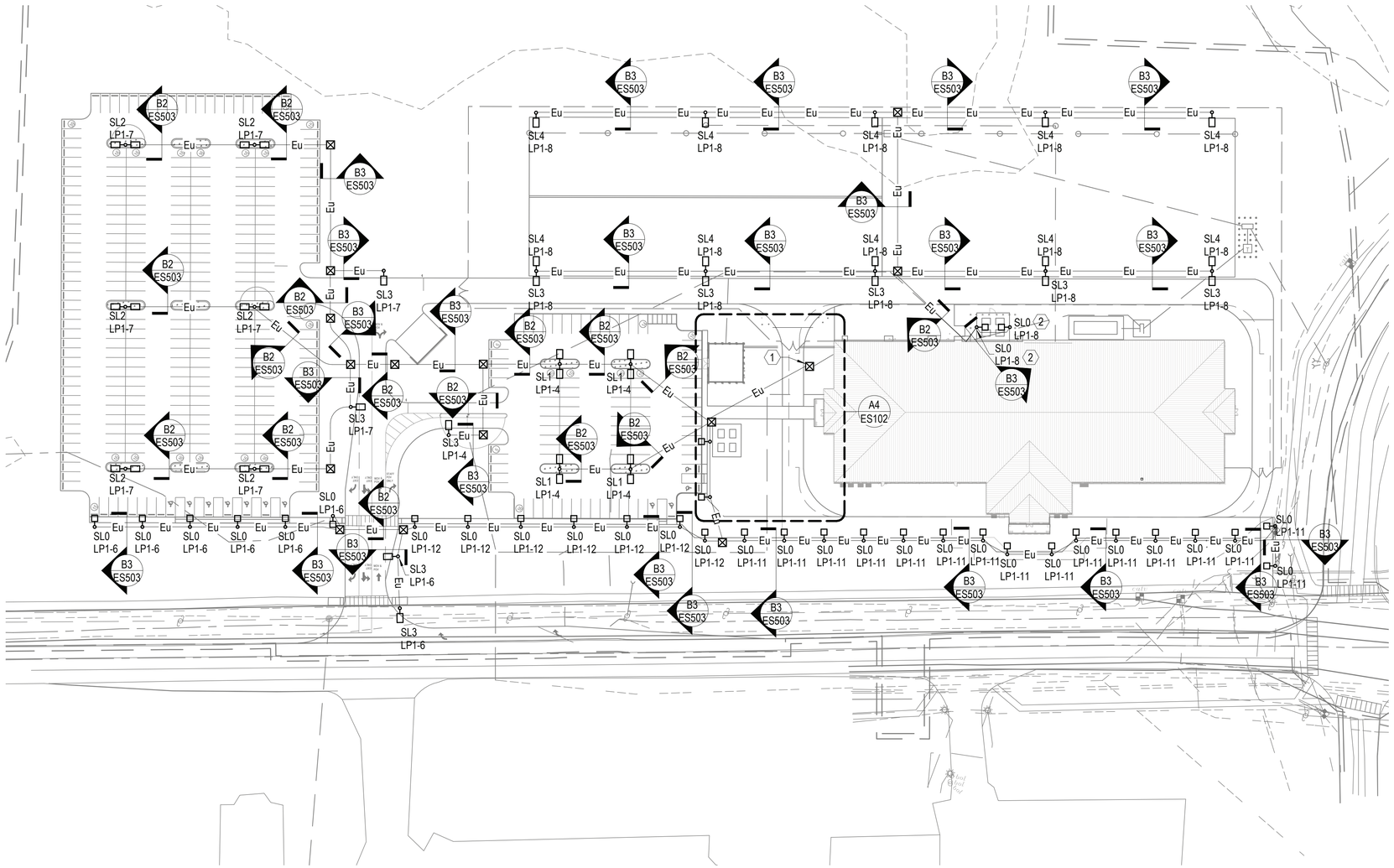

ELECTRICAL - SITE LIGHTING PLAN

SCALE: 1" = 60'-0"

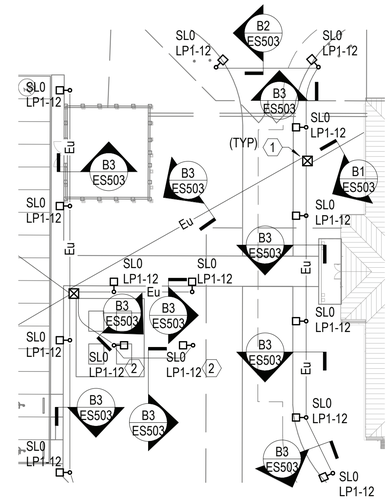

A4 ELECTRICAL - SITE LIGHTING PLAN

SCALE: 1" = 30'-0" (ES102)

0 30'-0" 60'-0" 120'-0"

SCALE: 0'-1" = 60'-0"

N

NO.	DESCRIPTION	DATE	APPR

NAVFAC

SEAL

IRQ Jordan COMPANY – A JOINT VENTURE –

Michael Baker INTERNATIONAL
100 AIRSIDE DRIVE
MOON TOWNSHIP, PA 15108 A/E INFO

APPROVED

FOR COMMANDER NAVFAC

ACTIVITY
MARINE CORPS BASE
CAMP LEJEUNE

SATISFACTORY TO DATE

DES SD | DRW LAK | CHK YPS

PM

BRANCH MANAGER

CHIEF ENG/ARCH

FIRE PROTECTION

DEPARTMENT OF THE NAVY
NAVAL FACILITIES ENGINEERING COMMAND
ROICC FLORENCE CAMP LEJEUNE
MCB CAMP LEJEUNE

NAVAL FACILITIES ENGINEERING COMMAND ~ MID-ATLANTIC
JACKSONVILLE, NC

JACKSONVILLE, NC
P1338 II MEF SIMULATION/TRAINING CENTER
REPLACEMENT
ELECTRICAL - SITE LIGHTING PLAN

SCALE: AS NOTED
EPROJECT NO.: 1590892
CONSTR. CONTR. NO.
N40085-20-C-0059
NAVFAC DRAWING NO.
SHEET OF

ES102

DP2 SUBMISSION – P1338 BUILDING - PRE-FINAL SUBMISSION

PLOTTED: 6/10/2021 5:44:39 PM

FILE NAME: BIM 360://HF PACKAGE 3/P1338 MEF SIM CTR-1590892-E.rvt

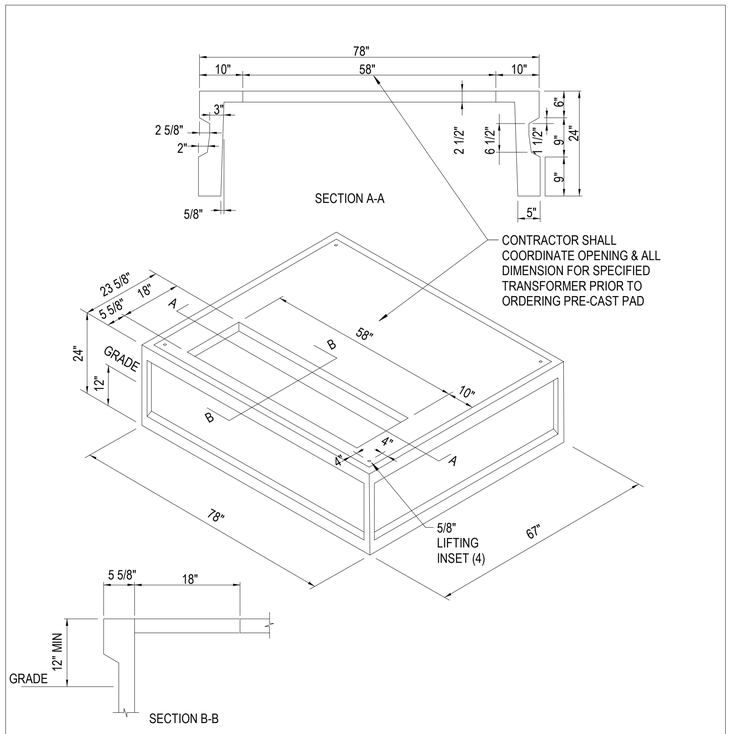

PRECAST TRANSFORMER PAD DETAIL

SKETCH DATE	APRIL 2015	STYLE

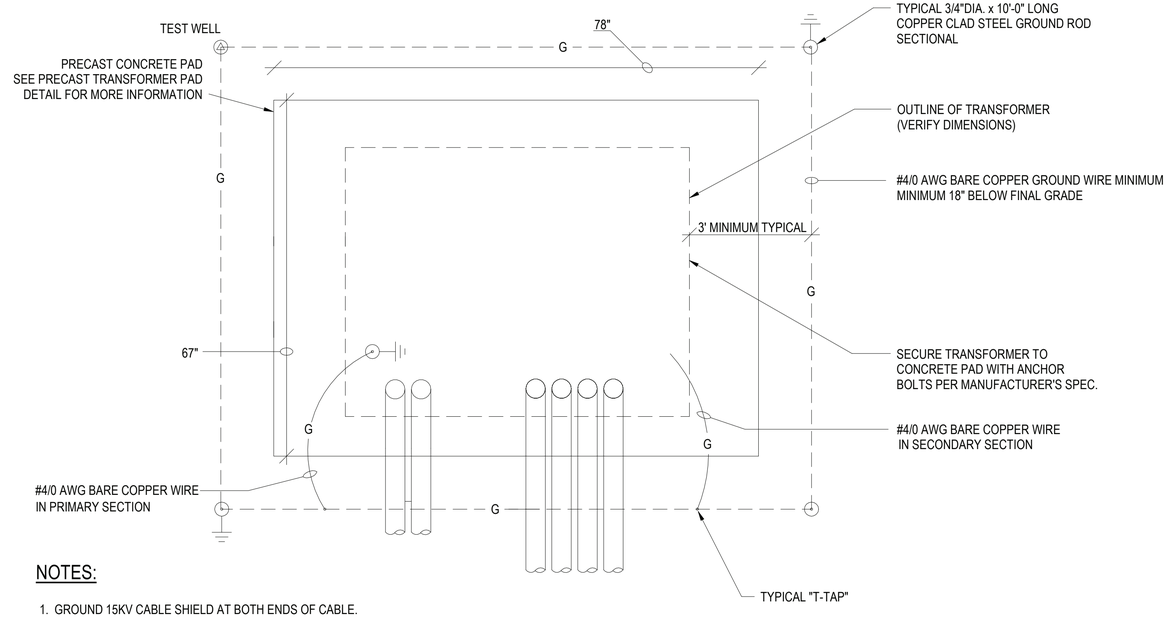

NOTES:

1. GROUND 15KV CABLE SHIELD AT BOTH ENDS OF CABLE.
2. FINAL CONNECTIONS TO EXISTING PRIMARY SYSTEM SHALL BE MADE BY CONTRACTOR AFTER INSPECTION BY THE BASE EXTERIOR ELECTRICAL SHOP. ALL MATERIALS REQUIRED SHALL BE PROVIDED BY CONTRACTOR.
3. PROVIDE WINDOWS IN PAD PER TRANSFORMER MANUFACTURER'S RECOMMENDATIONS.

PRECAST TRANSFORMER PAD GROUNDING DETAIL

SCALE: 12" = 1'-0" — C3

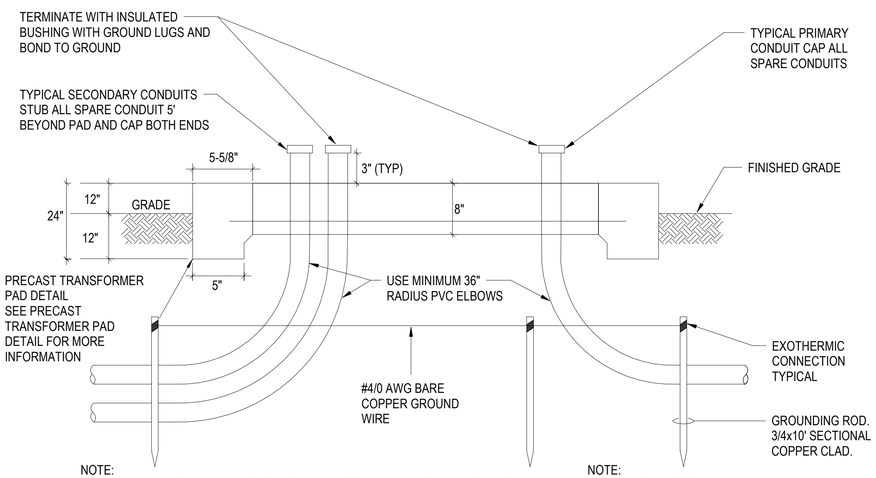

PRECAST TRANSFORMER PAD GROUNDING SECTION

SCALE: 12" = 1'-0" — A1

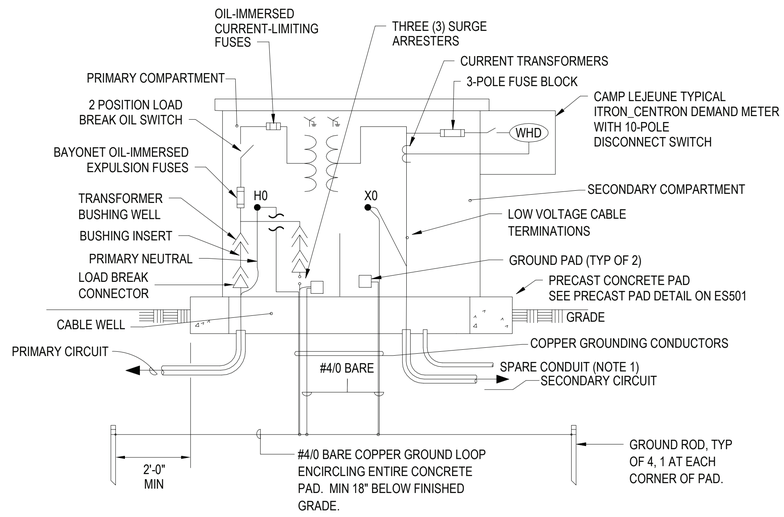

NOTE 1:PROVIDE ONE 2" SPARE CONDUIT STUBBED-OUT FIVE FEET FROM PAD. COORDINATE WITH ACTIVITY FOR ADDITIONAL METERING INPUT (GAS, STEAM OR WATER SYSTEMS).

PAD MOUNTED TRANSFORMER DETAIL

SCALE: 12" = 1'-0" — A3

APPR | DATE | DESCRIPTION | SYM

NAVFAC

SEAL

IRQ Joint Venture — W.M. Jordan Company

Michael Baker INTERNATIONAL
100 AIRSIDE DRIVE
MOON TOWNSHIP, PA 15108 — A/E INFO

APPROVED

FOR COMMANDER NAVFAC

ACTIVITY
MARINE CORPS BASE CAMP LEJEUNE

SATISFACTORY TO DATE

DES SD | DRW LAK | CHK YPS

PM

BRANCH MANAGER

CHIEF ENG/ARCH

FIRE PROTECTION

DEPARTMENT OF THE NAVY
NAVAL FACILITIES ENGINEERING COMMAND
ROICC FLORENCE CAMP LEJEUNE
MCB CAMP LEJEUNE

NAVAL FACILITIES ENGINEERING COMMAND ~ MID-ATLANTIC
JACKSONVILLE, NC

JACKSONVILLE, NC
P1338 II MEF SIMULATION/TRAINING CENTER
REPLACEMENT

ELECTRICAL - SITE DETAILS

SCALE: AS NOTED

EPROJECT NO.: 1590892

CONSTR. CONTR. NO.
N40085-20-C-0059

NAVFAC DRAWING NO.

SHEET OF

ES501

DP2 SUBMISSION – P1338 BUILDING -PRE-FINAL SUBMISSION

PLOTTED: 6/10/2021 5:44:40 PM

FILE NAME: BIM 360://HF PACKAGE 3/P1338 MEF SIM CTR-1590892-E.rvt

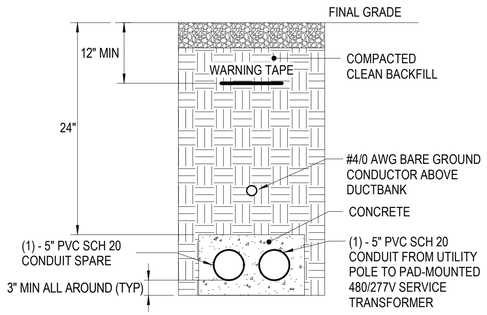

2-WAY CONCRETE ENCASED DUCTBANK

SCALE:NTS ES101 D1

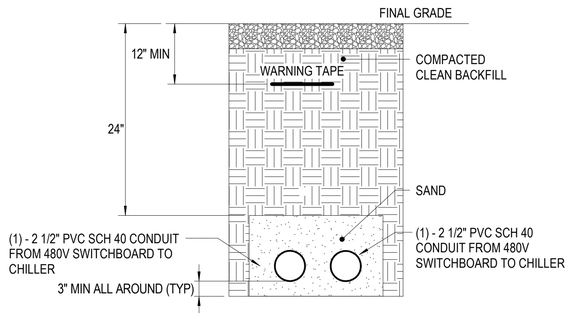

2-WAY DUCTBANK - CHILLER

SCALE:NTS ES101 D2

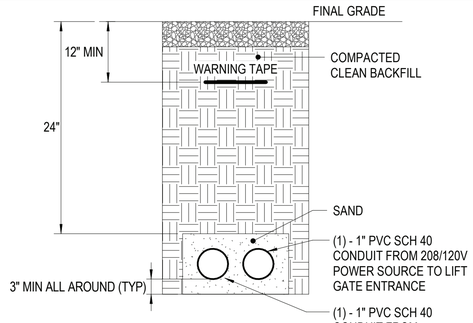

2-WAY DUCTBANK - LIFT GATE

SCALE:NTS ES101 D3

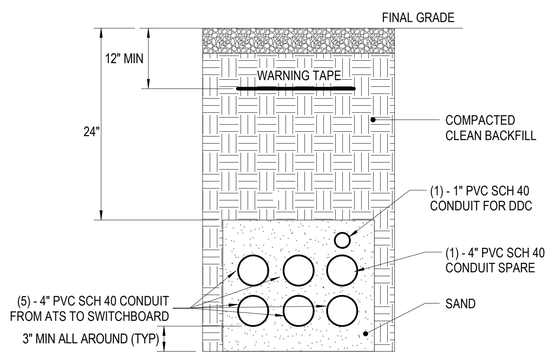

7-WAY DUCTBANK

SCALE:NTS ES101 B1

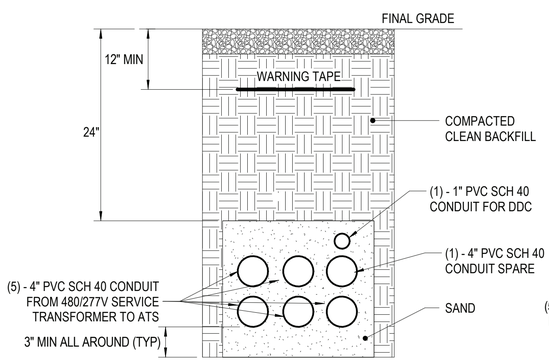

7-WAY DUCTBANK (A)

SCALE:NTS ES101 B2

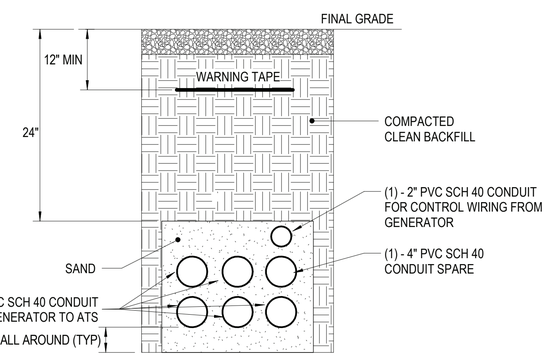

7-WAY DUCTBANK - GENERATOR

SCALE:NTS ES101 B3

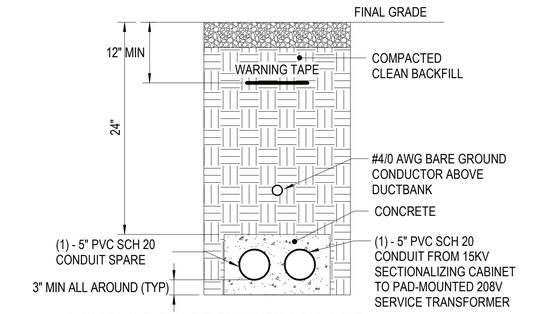

2-WAY CONCRETE ENCASED DUCTBANK (B)

SCALE:1 : 15 ES101 A1

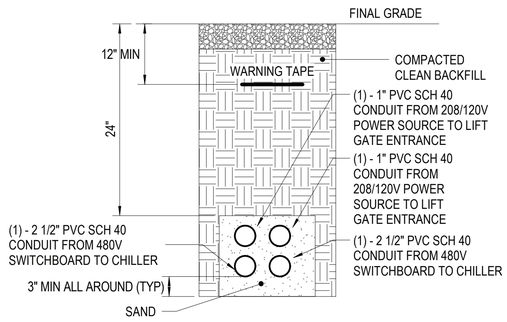

5-WAY DUCTBANK(B)

SCALE:1 : 15 ES101 A2

APPR	
DATE	
DESCRIPTION	
SYM	

NAVFAC

SEAL

RQ Jordan COMPANY – A JOINT VENTURE –

Michael Baker INTERNATIONAL

100 AIRSIDE DRIVE
MOON TOWNSHIP, PA 15108 A/E INFO

APPROVED

FOR COMMANDER NAVFAC

ACTIVITY
MARINE CORPS BASE CAMP LEJEUNE

SATISFACTORY TO DATE

DES SD | DRW LAK | CHK YPS

PM

BRANCH MANAGER

CHIEF ENG/ARCH

FIRE PROTECTION

DEPARTMENT OF THE NAVY
NAVAL FACILITIES ENGINEERING COMMAND ~ MID-ATLANTIC
ROICC FLORENCE CAMP LEJEUNE JACKSONVILLE, NC
MCB CAMP LEJEUNE
P1338 II MEF SIMULATION/TRAINING CENTER
REPLACEMENT
JACKSONVILLE, NC
ELECTRICAL - SITE DETAILS

SCALE: AS NOTED

EPROJECT NO.: 1590892

CONSTR. CONTR. NO.
N40085-20-C-0059

NAVFAC DRAWING NO.

SHEET OF

ES502

DP2 SUBMISSION – P1338 BUILDING –PRE-FINAL SUBMISSION

PLOTTED: 6/10/2021 5:44:41 PM

FILE NAME: BIM 360://HF PACKAGE 3/P1338 MEF SIM CTR-1590892-E.rvt

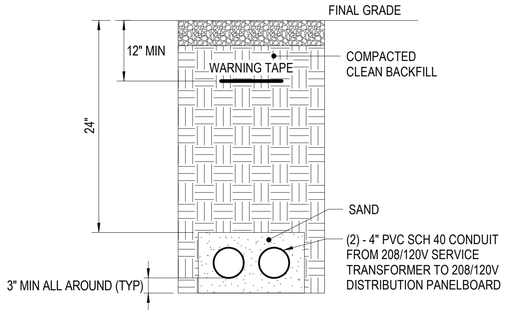

2-WAY DUCTBANK (A) — C1
SCALE:NTS — ES101

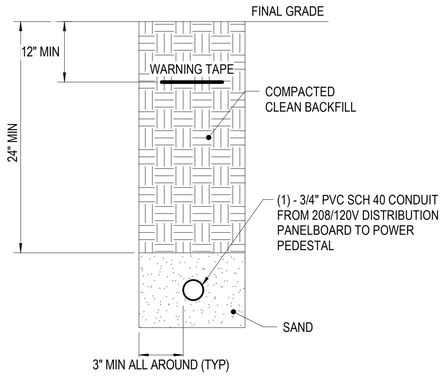

1-WAY DUCTBANK — C2
SCALE:NTS — ES101

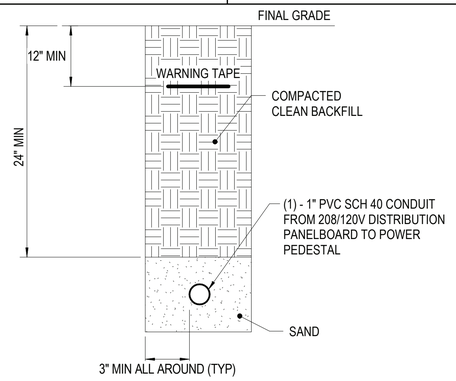

1-WAY DUCTBANK(A) — C3
SCALE:NTS — ES101

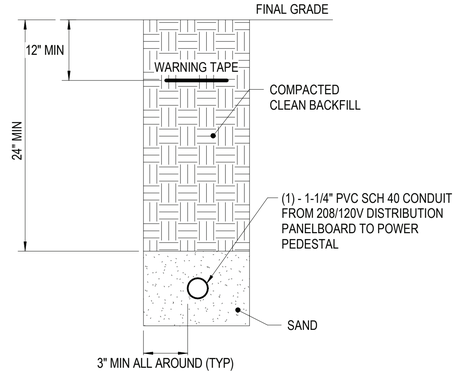

1-WAY DUCTBANK(B) — C4
SCALE:NTS — ES101

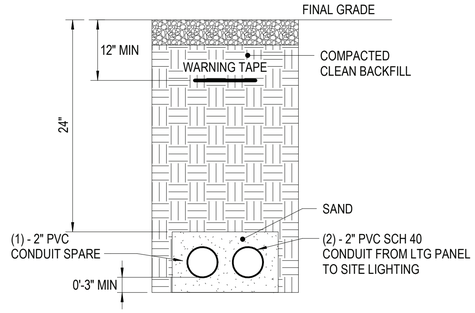

2-WAY DUCTBANK - SITE LIGHTING — B1
SCALE:NTS — ES102

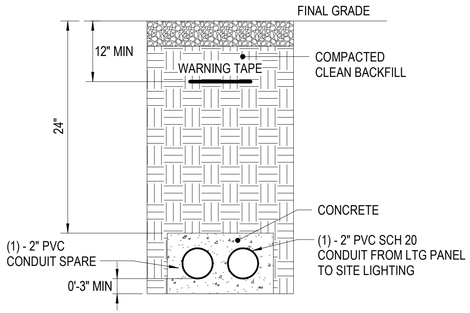

2-WAY CONCRETE ENCASED DUCTBANK - SITE LIGHTING — B2
SCALE:NTS — ES102

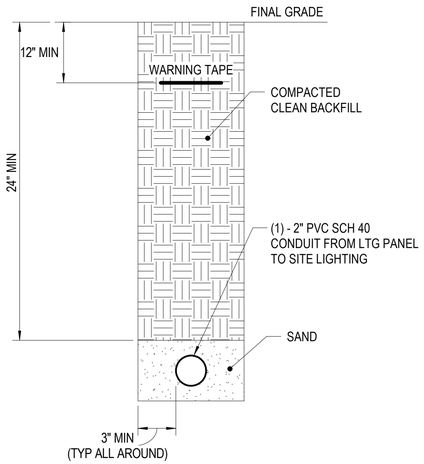

1-WAY DUCTBANK - SITE LIGHTING — B3
SCALE:NTS — ES102

SYM	DESCRIPTION	DATE	APPR

NAVFAC

SEAL

RQ W.M. Jordan COMPANY – A JOINT VENTURE –

Michael Baker INTERNATIONAL
100 AIRSIDE DRIVE
MOON TOWNSHIP, PA 15108
A/E INFO

APPROVED

FOR COMMANDER NAVFAC

ACTIVITY
MARINE CORPS BASE CAMP LEJEUNE

SATISFACTORY TO DATE

DES SD | DRW LAK | CHK YPS

PM

BRANCH MANAGER

CHIEF ENG/ARCH

FIRE PROTECTION

DEPARTMENT OF THE NAVY
NAVAL FACILITIES ENGINEERING COMMAND
NAVAL FACILITIES ENGINEERING COMMAND ~ MID-ATLANTIC
ROICC FLORENCE CAMP LEJEUNE
JACKSONVILLE, NC
MCB CAMP LEJEUNE
JACKSONVILLE, NC

P1338 II MEF SIMULATION/TRAINING CENTER
REPLACEMENT
ELECTRICAL - SITE DETAILS

SCALE: AS NOTED
EPROJECT NO.: 1590892
CONSTR. CONTR. NO.
N40085-20-C-0059
NAVFAC DRAWING NO.
SHEET OF

ES503

DP2 SUBMISSION – P1338 BUILDING - PRE-FINAL SUBMISSION

PLOTTED: 6/10/2021 5:44:43 PM

FILE NAME: BIM 360://HF PACKAGE 3/P1338 MEF SIM CTR-1590892-E.rvt

POLE LINE MATERIAL LIST

1. FLAT STEEL BRACE (TWO PIECES)
2. MACHINE BOLT, 3/8" X LENGTH NEEDED WITH WASHER, NUT AND LOCKWASHER
3. 8' WOOD CROSSARM WITH CROSS SECTION DIMENSIONS OF 3 1/2" X 4 1/2"
4. MACHINE BOLT, 5/8" X LENGTH NEEDED WITH WASHER, NUT AND LOCKWASHER
5. TIMBER CONNECTOR
6. LAGSCREW, 1/2" X 4"
7. ANGLE STEEL BRACE (TWO PIECES)
8. MACHINE BOLT, 1/2" X LENGTH NEEDED, WITH WASHER, NUT & LOCKWASHER
9. DEADEND BOX
10. STEEL PIN
11. PIN INSULATOR
12. GRID GAIN, USED ONLY WHEN THERE IS NO POLE GAIN
13. ANGLE STEEL BRACE (ONE PIECE)
14. 10' WOOD CROSSARM WITH CROSS SECTION DIMENSIONS OF 3 1/2" X 4 1/2"
15. 5/8" EYE NUT
16. 5/8" EYE BOLT, LENGTH AS NEEDED, WITH WASHER, NUT & LOCKWASHER
17. EXTENSION LINK
18. BELL TYPE SUSPENSION INSULATOR WITH CONNECTING HARDWARE
19. STRAIN CLAMP
20. STEEL ANGLE PIN
21. CLUSTER MOUNTING BRACKET, STEEL
22. TRANSFORMER GROUNDING CONNECTION
23. STIRRUP
24. SECONDARY LEAD SUPPORT BRACKET
25. ADAPTER PLATE FOR CLUSTER MOUNTING
26. CLEVIS BRACKET FOR SPOOL INSULATOR
27. SPOOL INSULATOR
28. U BOLT CLAMP
29. PREFORMED GUY GRIP
30. GUY HOOK
31. GUY STRAIN INSULATOR
32. GUY WIRE, SIZE AS SPECIFIED
33. #4 WP CU. SOFT DRAWN GROUND WIRE
34. GROUND CLAMP
35. CONDUIT COUPLING
36. CONDUIT BEND
37. INSULATED BUSHING
38. PERFORATED STRAPPING, 1-1/2" WIDE
39. HOT LINE CLAMP
40. GANG OPERATED ISOLATION SWITCH, AS SPECIFIED
41. SURGE ARRESTER, AS SPECIFIED
42. POLE TOP PIN (RIDGE PIN) - 24 INCHES LONG
43. CROSSARM ANGLE PIN
44. ANGLE POLE TOP PIN
45. WEATHERPROOF SOFT DRAWN WIRE-SIZE
    (a) T0 MATCH OR EXCEED AMPACITY OF CONNECTING CABLE, OR
    (b) AT 125% OF TRANSFORMER FULL LOAD CURRENT, BUT NOT LESS THAN NO. 4 AWG

POLE LINE MATERIAL LIST

SKETCH DATE:	JUNE 2002	STYLE:	OH-1.5

POLE LINE MATERIAL LIST

46. TRI-MOUNT BRACKET
47. TERMINATOR
48. MOUNTING BRACKET
49. CABLE GRIP HANGER
50. HOSE CLAMP
51. STUD, 3/4" X 1-3/4"
52. LINE POST INSULATOR
53. TRIPLE INSULATOR BRACKET
54. ANGLE CLAMP
55. INSULATOR, LINE POST CLAMP
56. 4' CROSSARM
57. CROSSARM GAIN BRACKET
58. PULLEY BRACKET
59. WEDGE CLAMP
60. MIDSPAN SERVICE CLAMP
61. STUD, 7"
62. SADDLE, ANGLE
63. SADDLE CROSSARM
64. FITTING, POLE TOP
65. CONNECTOR
66. SUSPENSION CLAMP
67. TIE, SERVICE CABLE
68. 54" FIBERGLASS STRAIN INSULATOR
69. PVC RISER SHIELD
70. PVC EXTENSION SHIELD
71. PVC BACK PLATE
72. 8' WOOD CROSSARM WITH CROSS SECTION DIMENSIONS OF 4 3/4" X 5 3/4"
73. 10' WOOD CROSSARM WITH CROSS SECTION DIMENSIONS OF 4 3/4" X 5 3/4"
74. BACK-UP CURRENT LIMITING FUSE

SKETCH DATE:	JUNE 2002	STYLE:	OH1.5A

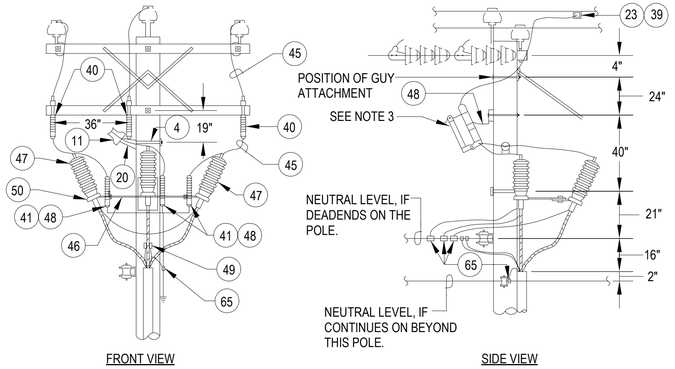

FRONT VIEW — SIDE VIEW

NOTES
1. MODIFY POSITION OF TERMINAL ON DEADENDS TO BE UNDER THE CONDUCTORS AND THE CUTOUTS ON THE BACKSIDE OF CROSSARM. POLE RISER MUST BE OFFSET TO CLEAR NEUTRAL CLEVIS BRACKET.
2. CONNECT BOTTOM LEAD OF ARRESTER DIRECTLY TO POLE GROUND. INTERCONNECT CABLE INSULATION SHIELD DRAIN WIRES AND CONDUIT RISER GROUND TO MULTI-GROUNDED NEUTRAL (IF EXISTING) AND POLE GROUND.
3. PROVIDE GANG OPERATED ISOLATION SWITCH. COORDINATE WITH SPECIFIC DESIGN REQUIREMENTS PROVIDED.

U.G. TERMINAL (0-25kV)

SKETCH DATE:	JUNE 2002	STYLE:	OH-31

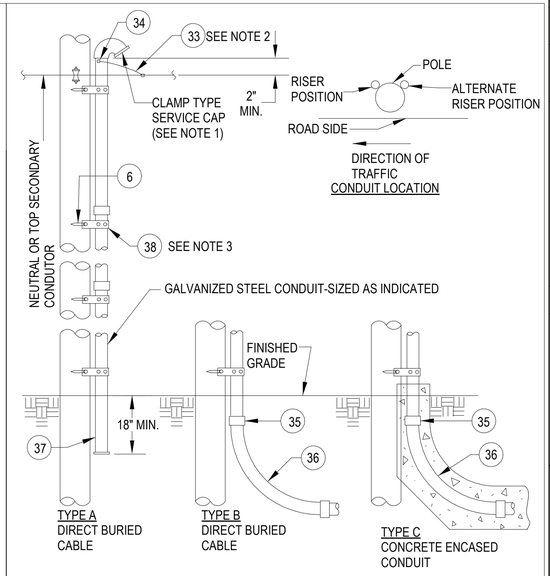

TYPE A DIRECT BURIED CABLE — TYPE B DIRECT BURIED CABLE — TYPE C CONCRETE ENCASED CONDUIT

NOTES
1. ON CONDUIT RISER FOR PRIMARY CIRCUITS, ELIMINATE SERVICE CAP AND PROVIDE GROUNDING TYPE INSULATON BUSHING.
2. BOND CONDUIT TO POLE GROUND AND SYSTEM NEUTRAL (IF EXISTING). SEE GROUNDING NOTES ON SKETCH OH-41.
3. SPACE STRAPS AT MAXIMUM OF 4' INTERVALS.

CONDUIT RISER (SIZE & TYPE AS INDICATED)

SKETCH DATE:	JUNE 2002	STYLE:	OH-35

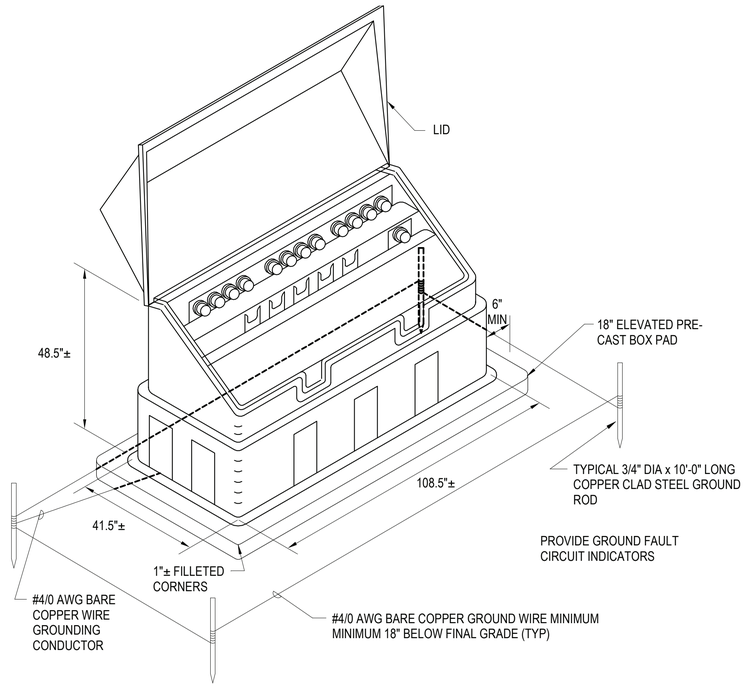

TYPICAL SECTIONALIZING CABINET

SCALE:NTS

A2

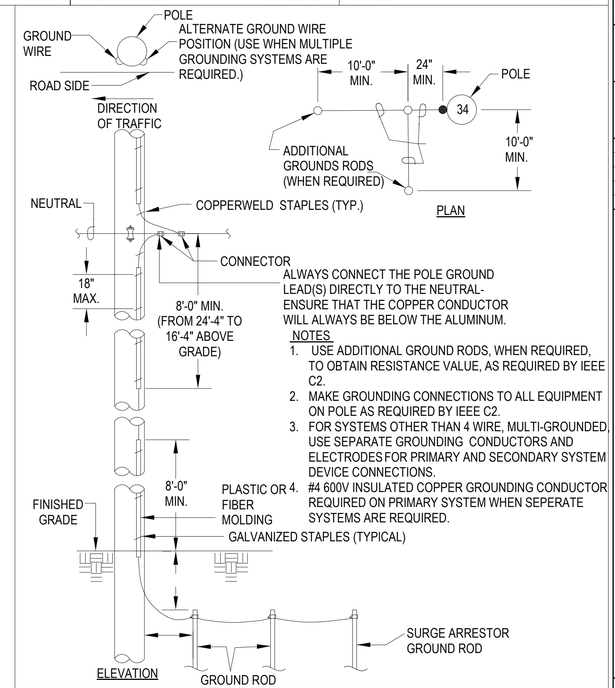

GROUND

SKETCH DATE:	JUNE 2002	STYLE:	OH-41

APPR | DATE | SYM | DESCRIPTION

NAVFAC

SEAL

WNJ Jordan COMPANY – A JOINT VENTURE –

Michael Baker INTERNATIONAL
100 AIRSIDE DRIVE
MOON TOWNSHIP, PA 15108
A/E INFO

APPROVED

FOR COMMANDER NAVFAC

ACTIVITY
MARINE CORPS BASE CAMP LEJEUNE

SATISFACTORY TO DATE

DES	SD	DRW	LAK	CHK	YPS

PM

BRANCH MANAGER

CHIEF ENG/ARCH

FIRE PROTECTION

DEPARTMENT OF THE NAVY
NAVAL FACILITIES ENGINEERING COMMAND
ROICC FLORENCE CAMP LEJEUNE
MCB CAMP LEJEUNE

NAVAL FACILITIES ENGINEERING COMMAND ~ MID-ATLANTIC
JACKSONVILLE, NC

JACKSONVILLE, NC
P1338 II MEF SIMULATION/TRAINING CENTER
REPLACEMENT

ELECTRICAL - SITE DETAILS

SCALE:	AS NOTED
EPROJECT NO.:	1590892
CONSTR. CONTR. NO.	N40085-20-C-0059
NAVFAC DRAWING NO.	
SHEET	OF

ES504

DP2 SUBMISSION – P1338 BUILDING -,PRE-FINAL SUBMISSION

PLOTTED: 6/10/2021 5:44:45 PM

FILE NAME: BIM 360://HF PACKAGE 3/P1338 MEF SIM CTR-1590892-E.rvt

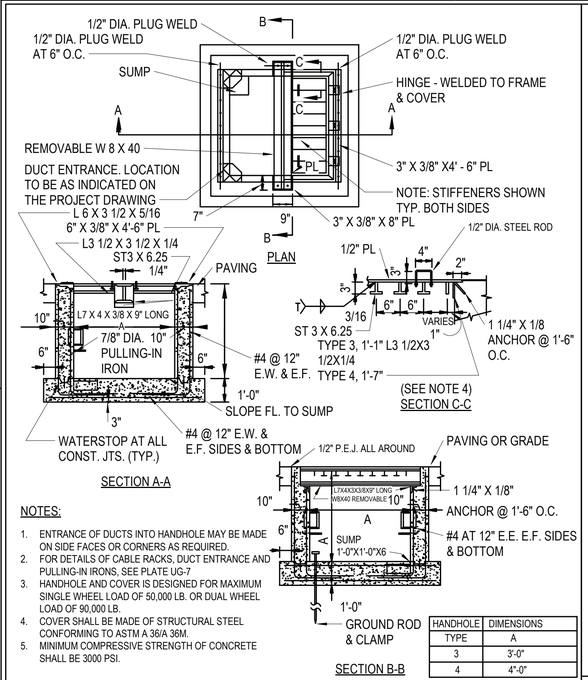

NOTES:

1. ENTRANCE OF DUCTS INTO HANDHOLE MAY BE MADE ON SIDE FACES OR CORNERS AS REQUIRED.
2. FOR DETAILS OF CABLE RACKS, DUCT ENTRANCE AND PULLING-IN IRONS, SEE PLATE UG-7
3. HANDHOLE AND COVER IS DESIGNED FOR MAXIMUM SINGLE WHEEL LOAD OF 50,000 LB. OR DUAL WHEEL LOAD OF 90,000 LB.
4. COVER SHALL BE MADE OF STRUCTURAL STEEL CONFORMING TO ASTM A 36/A 36M.
5. MINIMUM COMPRESSIVE STRENGTH OF CONCRETE SHALL BE 3000 PSI.

HANDHOLE TYPE	DIMENSIONS A
3	3'-0"
4	4'-0"

STANDARD ELECTRICAL HANDHOLE (TRAFFIC/AIRFIELD) TYPES 3 & 4

SKETCH DATE:	JUNE 2002	STYLE:	UG - 5

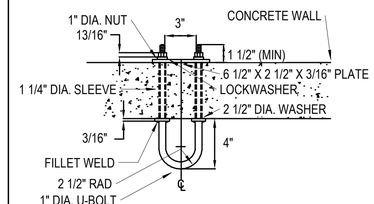

NOTE:
ALL METAL PARTS SHALL BE HOT DIP GALVANIZED

DETAIL OF PULLING-IN IRON

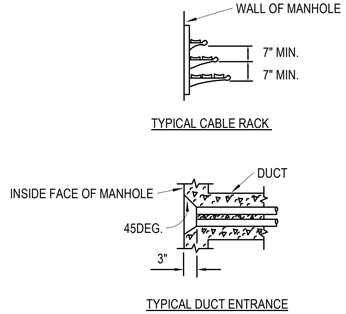

DETAILS (PULLING-IN IRONS, CABLE RACK AND DUCT ENTRANCE)

SKETCH DATE:	JUNE 2002	STYLE:	UG - 7

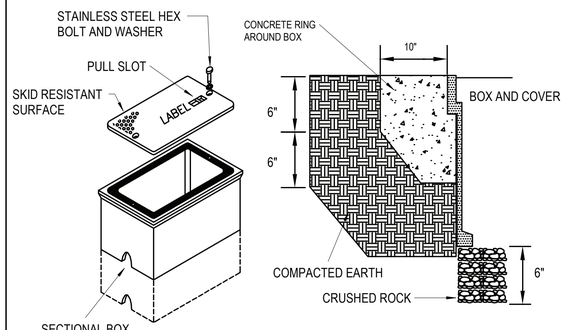

TYPE	HANDHOLE SIZING
5	12" X 12" X 24" DEEP
6	12" X 18" X 24" DEEP
7	12" X 24" X 24" DEEP
8	24" X 36" X 24" DEEP
9	30" X 48" X 24" DEEP

HANDHOLE REQUIREMENTS

1. HOUSING SHALL BE A POLYMER CONCRETE REINFORCED WITH A HEAVY WEAVE FIBERGLASS REINFORCING WITH COMPRESSIVE STRENGTH OF NO LESS THAN 10,000 PSI.
2. COVER AND BOX SHALL WITHSTAND A SERVICE LOAD OF NO LESS THAN 15,000 LBS OVER A 10" X 10" AREA.
3. PROVIDE STAINLESS STEEL BOLTS AND INSERTS.
4. PROVIDE WITH (2) 2 1/2" MOUSEHOLES.
5. PROVIDE LABEL "ELECTRICAL" FOR POWER HANDHOLES OR "TELEPHONE" FOR TELEPHONE HEANDHOLES, OR AS INDICATED

STANDARD ELECTRICAL HANDHOLE (NONTRAFFIC)(COMPOSITE/FIBERGLASS) TYPES 5, 6, 7, 8, & 9

SKETCH DATE:	JUNE 2002	STYLE:	UG - 6

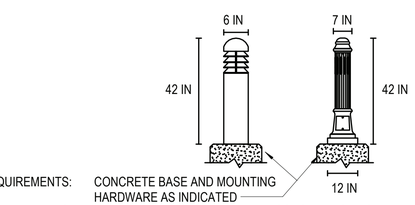

1. HOUSING - EXTRUDED OR HEAVY- DUTY DIE-CAST ALUMINUM; CONCRETE OPTIONAL. ALL EXPOSED HARDWARE SHALL BE STAINLESS STEEL.
2. FINISH - MULTI-STAGE PRE-TREATMENT, FINISHED WITH BAKED-ON POLYESTER POWDER COAT. FINISH SHALL PASS 2500 HOUR SALT SPRAY TEST PER ASTM B117. CONCRETE MODEL SHALL HAVE OPTIONAL IMPREGNATED COLOR AND SMOOTH OR AGGREGATE FINSIH AS INDICATED.
3. BALLAST/DRIVER - TYPE A - CLASS P, HIGH POWER FACTOR, PROGRAMMED START, ELECTRONIC TYPE FOR COMPACT FLUORESCENT LIGHT SOURCE.
   TYPE B - ENCAPSULATED, CWA, HIGH POWER FACTOR, COIL AND CORE OR ELECTRONIC FOR METAL HALIDE LIGHT SOURCE (PROVIDE PULSE START WHEN AVAILABLE)
   TYPE C - CLASS 1, CONSTANT CURRENT, ELECTRONIC DRIVER FOR LED LIGHT SOURCE
4. OPTICAL ASSEMBLY - TYPES A AND B - ANODIZED, SPECULAR ALUMINUM WIH ACRYLIC OR TEMPERED GLASS LENS FOR METAL HALIDE AND CFL.
   TYPE C - DIRECTIONAL LED ASSEMBLIES FOR MAXIMUM BEAM ANGLE PROJECTION THROUGH LOUVERS OR OPENINGS IN LUMINAIRE BODY. PROVIDE NEMA TYPE I, III, OR V DISTRIBUTION AS INDICATED.
5. LIGHT SOURCE - COMPACT FLUORESCENT, METAL HALIDE OR LED.
6. CERTIFICATION - UL AND/OR ETL LISTED FOR WET LOCATION AND RoHS COMPLIANT.
7. OPTIONS - CLEAR OR FROSTED LENS, HOUSE SIDE SHIELD FOR 90 OR 180 DEGREE COVERAGE.
8. OTHER - THE ABOVE SKETCH IS A NON-PROPRIETARY GRAPHIC REPRESENTATION OF A LUMINAIRE THAT MAY MEET THE SPECIFICATION REQUIREMENTS AND IS NOT INTENDED TO INDICATE A CERYAIN MANUFACTURER'S PREFERENCE. ALL DIMENSIONS ARE NOMINAL AND VARY PER MANUFACTURER.

DECORATIVE BOLLARD

REVISED:	MARCH 2013	LUMINAIRE PLATE:	XL-12

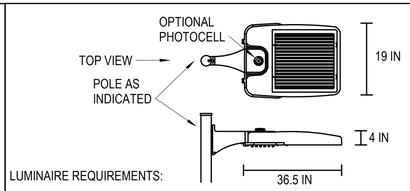

1. HOUSING - DIE-CAST ALUMINUM OR DIE-CAST AND EXTRUDED ALUMINUM WITH INTEGRAL, SELF CLEANING HEAT SINK FINS, RIBS, OR EQUIVALENT PASSIVE COOLING MECHANISM. HEAT SINK SHALL BE INCORPORATED DIRECTLY INTO HOUSING TO ENSURE MAXIMUM HEAT TRANSFER AND DISSIPATION.
2. FINISH - MULTI-STAGE PRE-TREATMENT, FINISHED WITH BAKED-ON POLYESTER POWDER COAT. FINISH SHALL PASS 2500 HOUR SALT SPRAY TEST PER ASTM B117 FINISH COLORS INCLUDE DARK BRONZE, SILVER, OR BLACK WITH CUSTOM COLORS AVAILABLE.
3. POWER SUPPLY/LED DRIVER - PROVIDE IN SEPERATE COMPARTMENT ACCESSIBLE WITHOUT THE USE OF HAND TOOLS. CLASS 1 DRIVER SHALL OPERATE AT 120/277V, 50/60HZ; OTHER VOLTAGES OPTIONAL. POWER FACTOR GREATER THAN 0.9 AND THD LESS THAN 20% AT FULL LOAD. MINIMUM EFFICACY SHALL BE 60 LM/W AT MAXIMUM 60mA OPERATING CURRENT.
4. LED OPTICAL ASSEMBLY - NUMBER OF LED ARRAYS SHALL VARY TO ACCOMODATE DESIRED LUMINAIRE OUTPUT. PROVIDE WITH EQUIVALENT NEMA TYPE III, IV OR V DISTRIBUTION AS INDICATED. BUG UPLIGHT RATING OF UO, WITH BACKLIGHT AND GLARE RATINGS AS DETERMINED BY LIGTING ZONE INSTALLED. MINIMUM COLOR RENDERING INDEX (CRI) SHALL BE 70 FOR CORRELATED COLOR TEMPERATURE (CCT) OF 4000 K TO 4500 DEGREES K.
5. SURGE PROTECTION - 6 kV MINIMUM, COMPLAINT WITH ANSI C62.41.2.
6. CERTIFICATION - UL AND/OR ETL LISTED, MINIMUM IP65 RATED PER ANSI/IEC 60529, AND RoHS COMPLIANT.
7. OPTIONS - PHOTOCELL AND RECEPTACLE, SHORTING CAP, BIRD SPIKES, AND 0-10 VOLT DIMMING
8. OTHER - THE ABOVE SKETCH IS A NON-PROPRIETARY GRAPHIC REPRESENTATION OF A LUMINAIRE THAT MAY MEET THE SPECIFICATION REQUIREMENTS AND IS NOT INTENDED TO INDICATE A CERTAIN MANUFACTURER'S PREFERENCE. ALL DIMENSIONS ARE NOMINAL AND VARY PER MANUFACTURER.

LED AREA LUMINAIRE

REVISED:	MARCH 2013	LUMINAIRE PLATE:	XL-03

APPR	DATE	DESCRIPTION	SYM

NAVFAC

SEAL

W.M. Jordan COMPANY – A JOINT VENTURE –

Michael Baker INTERNATIONAL
100 AIRSIDE DRIVE
MOON TOWNSHIP, PA 15108
A/E INFO

APPROVED

FOR COMMANDER NAVFAC

ACTIVITY
MARINE CORPS BASE CAMP LEJEUNE

SATISFACTORY TO DATE

DES	SD	DRW	LAK	CHK	YPS

PM

BRANCH MANAGER

CHIEF ENG/ARCH

FIRE PROTECTION

DEPARTMENT OF THE NAVY
NAVAL FACILITIES ENGINEERING COMMAND ~ MID-ATLANTIC
ROICC FLORENCE CAMP LEJEUNE
MCB CAMP LEJEUNE
JACKSONVILLE, NC

NAVAL FACILITIES ENGINEERING COMMAND ~ MID-ATLANTIC
JACKSONVILLE, NC

P1338 II MEF SIMULATION/TRAINING CENTER
REPLACEMENT

ELECTRICAL - SITE DETAILS

SCALE: AS NOTED

EPROJECT NO.: 1590892

CONSTR. CONTR. NO.
N40085-20-C-0059

NAVFAC DRAWING NO.

SHEET OF

ES505

DP2 SUBMISSION – P1338 BUILDING -PRE-FINAL SUBMISSION

PLOTTED: 6/10/2021 5:44:48 PM

FILE NAME: BIM 360://HF PACKAGE 3/P1338 MEF SIM CTR-1590892-E.rvt

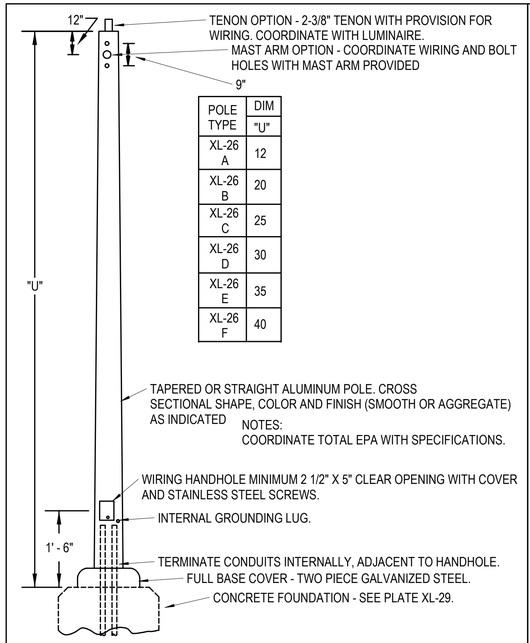

POLE TYPE	DIM "U"
XL-26 A	12
XL-26 B	20
XL-26 C	25
XL-26 D	30
XL-26 E	35
XL-26 F	40

ANCHOR BASE ALUMINUM POLE

REVISED: MARCH 2013 | LUMINAIRE PLATE: XL - 28

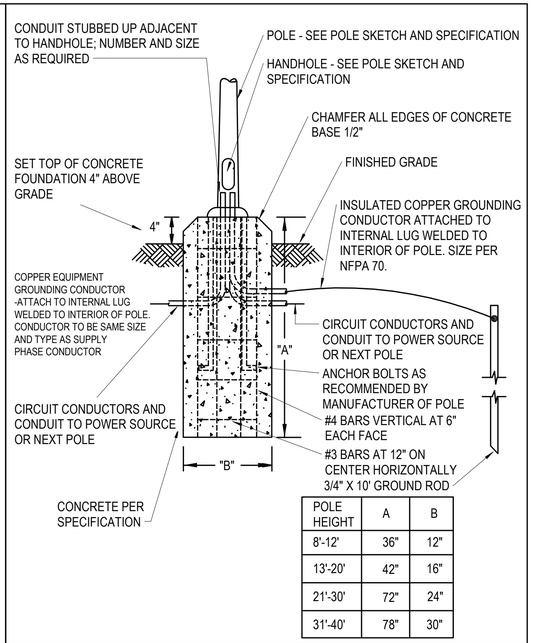

POLE HEIGHT	A	B
8'-12'	36"	12"
13'-20'	42"	16"
21'-30'	72"	24"
31'-40'	78"	30"

ANCHOR BASE POLE FOUNDATION

REVISED: MARCH 2013 | LUMINAIRE PLATE: XL - 29

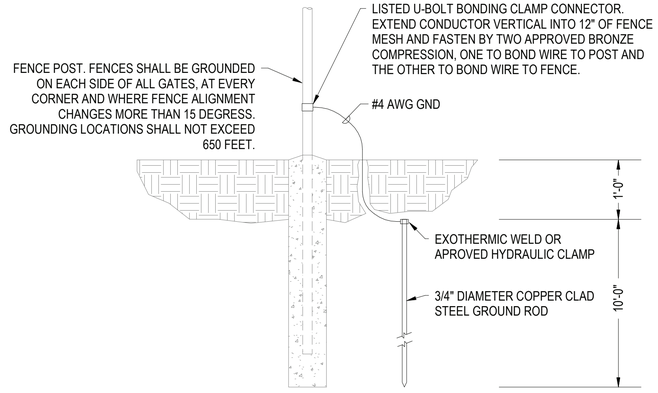

NOTES:
1. PLACE GROUND ROD NOT CLOSER THAN 2 FEET FROM FENCE POST AND NOT MORE THAN 8 FEET FROM FENCE POST.
2. EACH GATE SECTION SHALL BE BONDED TO ITS GATEPOST BY 1 1/8" X 1" FLEXIBLE BRAIDED COPPER STRAP AND GROUND POST CLAMPS.

FENCE GROUNDING DETAIL

SCALE:NTS

C4

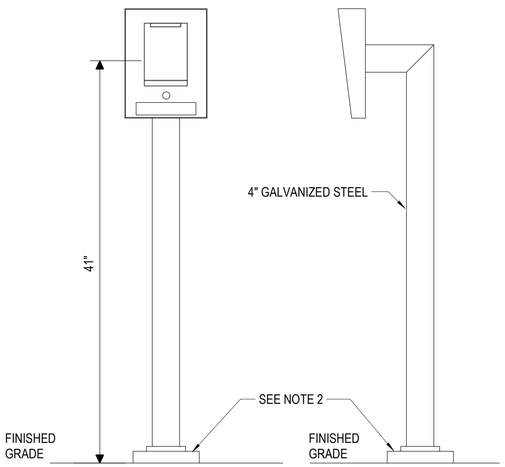

NOTES:
1. CONTRACTROR SHALL PLACE CARD READER SUCH THAT THE FACE OF THE READERS ARE NO LESS THAN 6" FROM THE FACE OF CURB, OR IF GIVEN, AT A DISTANCE SPECIFIED BY THE MANUFACTURER.
2. PROVIDE CONCRETE PAD OR SET IN CONCRETE FOR PEDESTAL INSTALLATION.

ACS PEDESTAL SECURITY DETAIL

SCALE:NTS

A1

APPR	DATE	DESCRIPTION	SYM

SEAL

W.M. Jordan COMPANY – A JOINT VENTURE –

Michael Baker INTERNATIONAL

100 AIRSIDE DRIVE
MOON TOWNSHIP, PA 15108 A/E INFO

APPROVED

FOR COMMANDER NAVFAC

ACTIVITY
MARINE CORPS BASE CAMP LEJEUNE

SATISFACTORY TO DATE

DES SD | DRW LAK | CHK YPS

PM

BRANCH MANAGER

CHIEF ENG/ARCH

FIRE PROTECTION

DEPARTMENT OF THE NAVY
NAVAL FACILITIES ENGINEERING COMMAND
ROICC FLORENCE CAMP LEJEUNE
MCB CAMP LEJEUNE

NAVAL FACILITIES ENGINEERING COMMAND ~ MID-ATLANTIC
JACKSONVILLE, NC

JACKSONVILLE, NC
P1338 II MEF SIMULATION/TRAINING CENTER
REPLACEMENT

ELECTRICAL - SITE DETAILS

SCALE: AS NOTED

EPROJECT NO.: 1590892

CONSTR. CONTR. NO.
N40085-20-C-0059

NAVFAC DRAWING NO.

SHEET OF

ES506

DP2 SUBMISSION – P1338 BUILDING -PRE-FINAL SUBMISSION

PLOTTED: 6/10/2021 5:44:49 PM

FILE NAME: BIM 360://HF PACKAGE 3/P1338 MEF SIM CTR-1590892-E.rvt

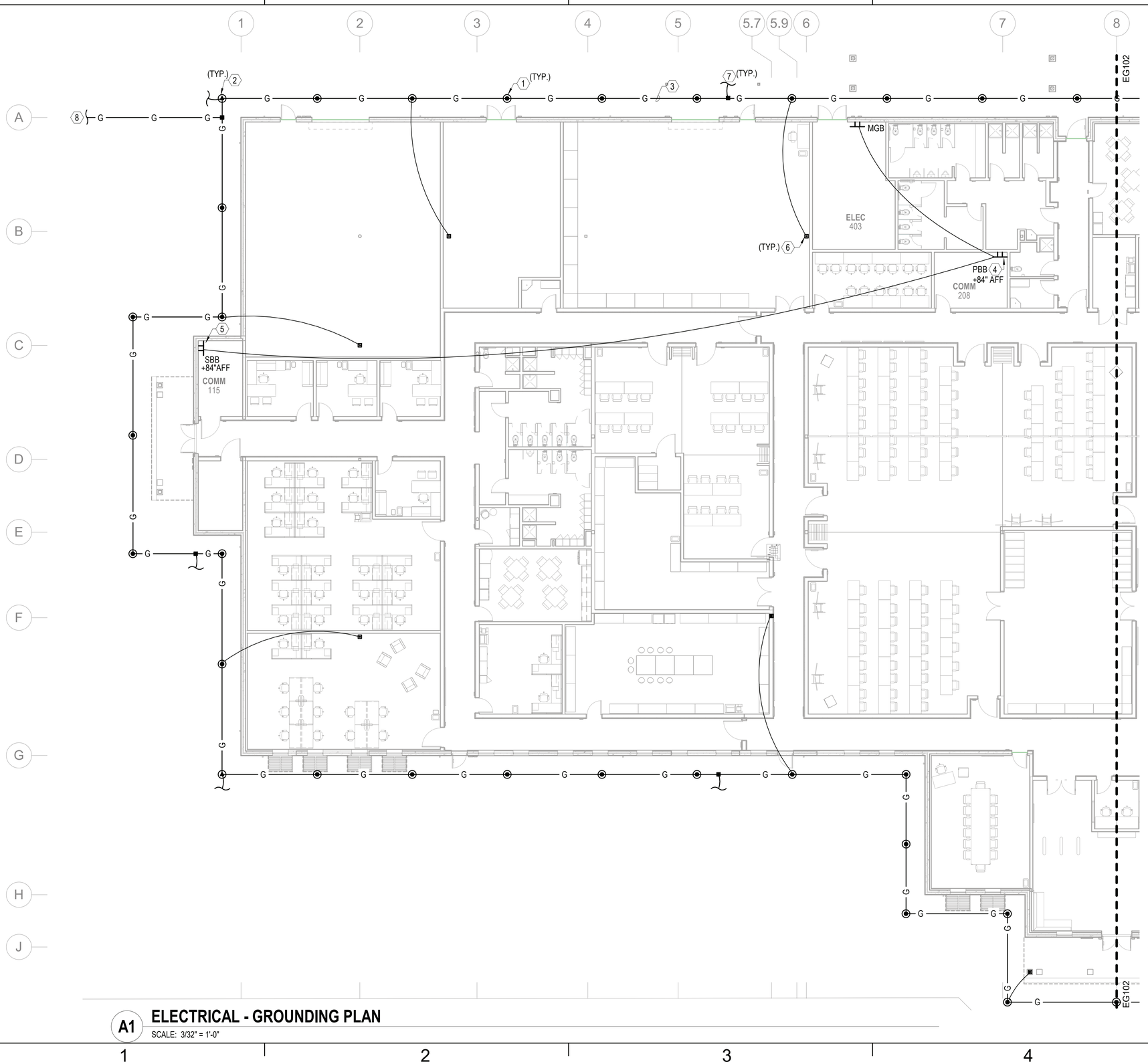

GENERAL NOTES

1. SEE SHEET E-001 FOR ELECTRICAL NOTES, SYMBOLS, AND ABBREVIATIONS.
2. SEE SHEET EG501 FOR GROUNDING DETAILS
3. SEE SHEETS EG103 AND EG104 FOR LIGHTNING PROTECTION PLAN

KEYNOTES

1. 3/4" DIAMETER BY 10' LONG COPPER CLAD GROUND ROD.
2. GROUND TEST WELL STATION. SEE DETAIL C4 ON SHEET EG501.
3. #4/0 AWG BARE COPPER GROUND LOOP INSTALLED 3' MINIMUM TO 10' MAXIMUM FROM BUILDING FOUNDATION AND BEYOND THE BUILDING PERIMETER.
4. PROVIDE CONNECTION TO MAIN GROUNDING BUS (MGB) IN ELECTRICAL ROOM 403 WITH #4/0 AWG BARE COPPER GEC. SEE DETAIL 1 ON SHEET EG501.
5. TELECOMMUNICATION SECONDARY GROUNDING BUSBAR (SBB) TO BE CONNECTED TO TELECOMMUNICATION PRIMARY GROUNDING BUSBAR (PBB) IN ROOM 208. #4/0 AWG BARE COPPER GROUNDING WIRE TO BE USED FOR CONNECTION.
6. EXOTHERMIC WELD CONNECTION TO BUILDING STEEL.
7. DOWN CONDUCTOR CONNECTION FROM ROOF LIGHTNING PROTECTION SYSTEM. DOWN CONDUCTORS SHALL RUN DOWN THE EXTERIOR OF THE BUILDING WALLS, PROTECTED BY SCH. 40 PVC CONDUIT. COORDINATE WITH LIGHTNING PROTECTION PLANS ON SHEETS EG103 AND EG104.
8. #4/0 AWG BARE COPPER GROUND CABLE RUN LENGTH OF NEW FENCE. TIE FENCE POST TO GROUND WIRE VIA GROUND ROD. SEE DETAIL A2 ON SHEET ES506.

A1 **ELECTRICAL - GROUNDING PLAN**
SCALE: 3/32" = 1'-0"

0 8'-0" 16'-0" 32'-0"
SCALE: 0'-0 3/32" = 1'-0"

APPR | DATE | DESCRIPTION | SYM

SEAL

RQ WM Jordan COMPANY – A JOINT VENTURE –

Michael Baker INTERNATIONAL
100 AIRSIDE DRIVE
MOON TOWNSHIP, PA 15108 A/E INFO

APPROVED

FOR COMMANDER NAVFAC

ACTIVITY
MARINE CORPS BASE
CAMP LEJEUNE

SATISFACTORY TO DATE

DES SD | DRW LAK | CHK YPS

PM

BRANCH MANAGER

CHIEF ENG/ARCH

FIRE PROTECTION

DEPARTMENT OF THE NAVY
NAVAL FACILITIES ENGINEERING COMMAND
ROICC FLORENCE CAMP LEJEUNE
MCB CAMP LEJEUNE

NAVAL FACILITIES ENGINEERING COMMAND – MID-ATLANTIC
JACKSONVILLE, NC

JACKSONVILLE, NC
P1338 II MEF SIMULATION/TRAINING CENTER
REPLACEMENT

ELECTRICAL - GROUNDING PLAN

SCALE: AS NOTED
EPROJECT NO.: 1590892
CONSTR. CONTR. NO.
N40085-20-C-0059
NAVFAC DRAWING NO.
SHEET OF

EG101

DP2 SUBMISSION – P1338 BUILDING - PRE-FINAL SUBMISSION

PLOTTED: 6/10/2021 5:42:45 PM

FILE NAME: BIM 360://HF PACKAGE 3/P1338 MEF SIM CTR-1590892-E.rvt

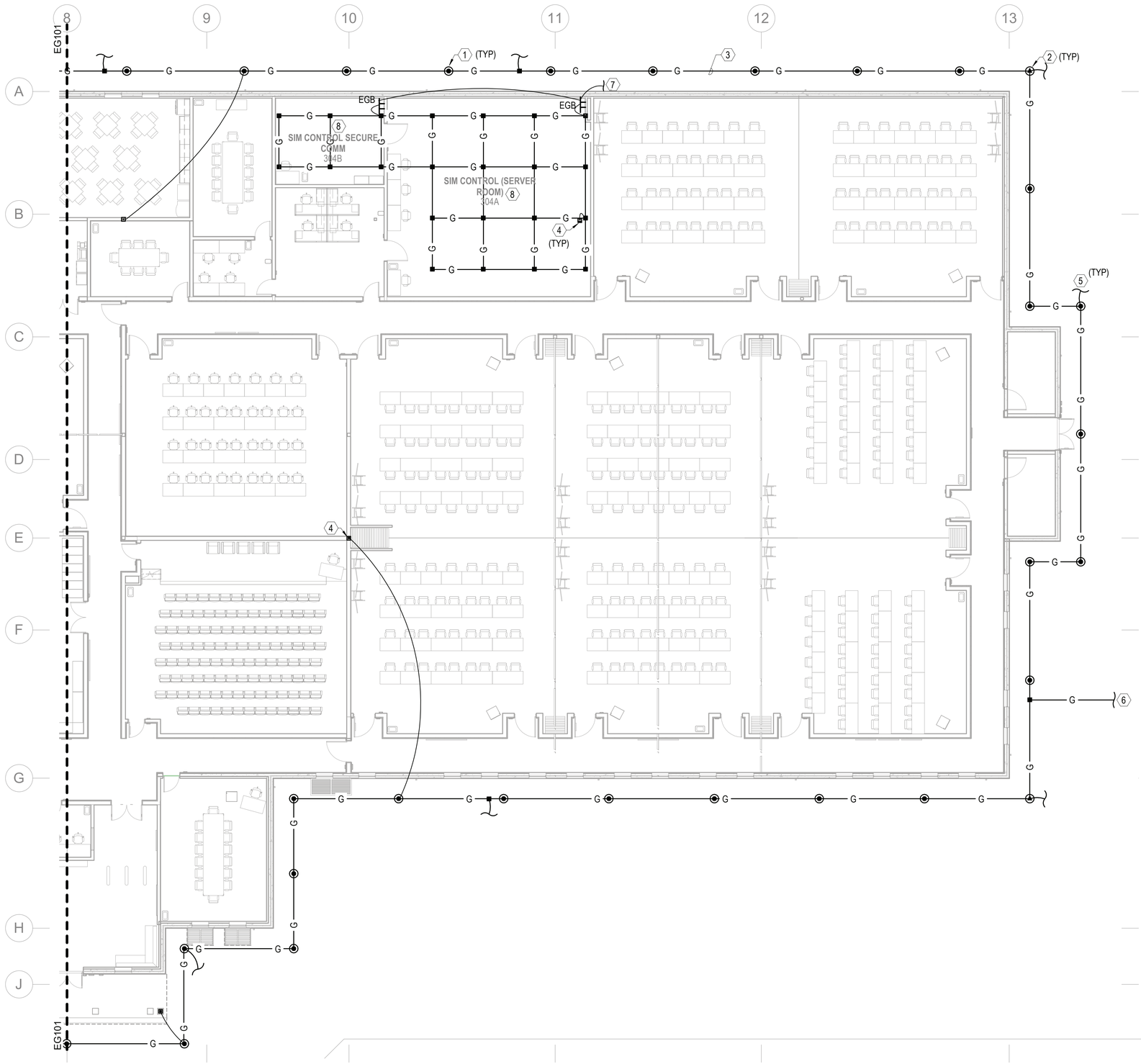

A1 ELECTRICAL - GROUNDING PLAN

SCALE: 3/32" = 1'-0"

GENERAL NOTES

1. SEE SHEET E-001 FOR ELECTRICAL NOTES, SYMBOLS, AND ABBREVIATIONS.
2. SEE SHEET EG501 FOR GROUNDING DETAILS
3. SEE SHEETS EG103 AND EG104 FOR LIGHTNING PROTECTION PLAN

KEYNOTES

1. 3/4" DIAMETER BY 10' LONG COPPER CLAD GROUND ROD.
2. GROUND TEST WELL STATION. SEE DETAIL C4 ON SHEET EG501.
3. #4/0 AWG BARE COPPER GROUND LOOP INSTALLED 3' MINIMUM TO 10' MAXIMUM FROM BUILDING FOUNDATION AND BEYOND THE BUILDING PERIMETER.
4. EXOTHERMIC WELD CONNECTION TO BUILDING STEEL.
5. DOWN CONDUCTOR CONNECTION FROM ROOF LIGHTNING PROTECTION SYSTEM. DOWN CONDUCTORS SHALL RUN DOWN THE EXTERIOR OF THE BUILDING WALLS, PROTECTED BY SCH. 40 PVC CONDUIT. COORDINATE WITH LIGHTNING PROTECTION PLANS ON SHEETS EG103 AND EG104.
6. #4/0 AWG BARE COPPER GROUND CABLE RUN LENGTH OF NEW FENCE. TIE FENCE POST TO GROUND WIRE VIA GROUND ROD. SEE DETAIL A2 ON SHEET ES506.
7. PROVIDE CONNECTION TO MAIN GROUNDING BUS (MGB) IN ELECTRICAL ROOM 403 WITH #4/0 AWG BARE COPPER GEC. SEE DETAIL 1 ON SHEET EG501.
8. #4/0 AWG BARE COPPER GROUND BONDING CONNECTION TO TELECOMMUNICATION RACKS IN RM 304A AND 304B. COORDINATE FINAL LOCATION OF TELECOMMUNICATION RACKS.

0 8'-0" 16'-0" 32'-0"

SCALE: 0'-0 3/32" = 1'-0"

APPR	DATE	DESCRIPTION	SYM

NAVFAC

SEAL

IRQ WM Jordan COMPANY – A JOINT VENTURE –

Michael Baker INTERNATIONAL

100 AIRSIDE DRIVE
MOON TOWNSHIP, PA 15108 A/E INFO

APPROVED

FOR COMMANDER NAVFAC

ACTIVITY
MARINE CORPS BASE CAMP LEJEUNE

SATISFACTORY TO DATE

DES SD	DRW LAK	CHK YPS

PM

BRANCH MANAGER

CHIEF ENG/ARCH

FIRE PROTECTION

DEPARTMENT OF THE NAVY
NAVAL FACILITIES ENGINEERING COMMAND ~ MID-ATLANTIC
ROICC FLORENCE CAMP LEJEUNE
MCB CAMP LEJEUNE

NAVAL FACILITIES ENGINEERING COMMAND ~ MID-ATLANTIC
JACKSONVILLE, NC

JACKSONVILLE, NC

P1338 II MEF SIMULATION/TRAINING CENTER
REPLACEMENT

ELECTRICAL - GROUNDING PLAN

SCALE:	AS NOTED
EPROJECT NO.:	1590892
CONSTR. CONTR. NO.	N40085-20-C-0059
NAVFAC DRAWING NO.	
SHEET	OF

EG102

DP2 SUBMISSION – P1338 BUILDING - PRE-FINAL SUBMISSION

PLOTTED: 6/10/2021 5:42:48 PM

FILE NAME: BIM 360://HF PACKAGE 3/P1338 MEF SIM CTR-1590892-E.rvt

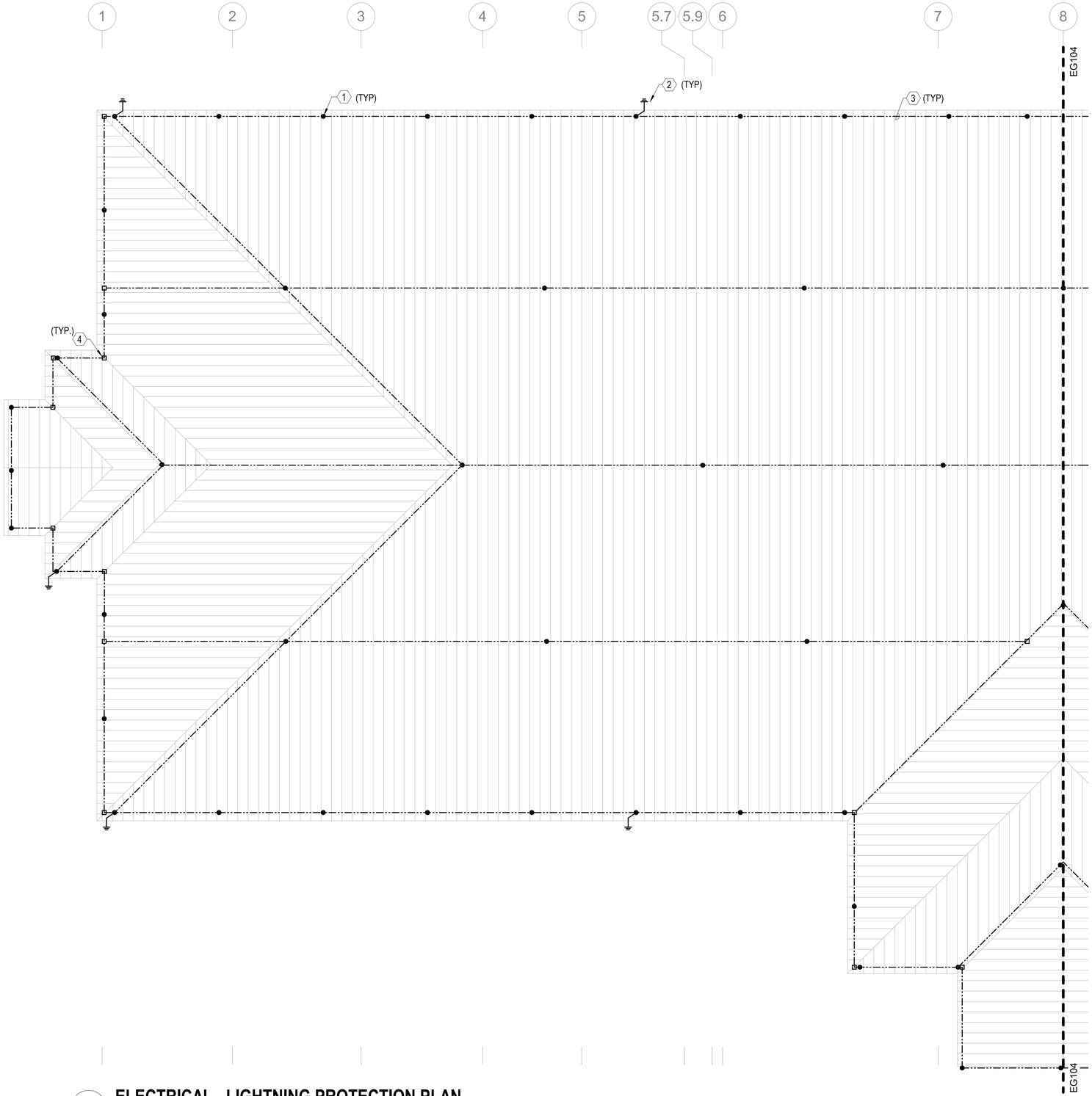

GENERAL NOTES

1. SEE SHEET E-001 FOR ELECTRICAL NOTES, SYMBOLS, AND ABBREVIATIONS.
2. SEE SHEETS EG101 AND EG102 FOR GROUNDING PLANS
3. SEE SHEET EG501 FOR LIGHTNING PROTECTION DETAILS
4. LIGHTNING PROTECTION DESIGN AND INSTALLATION SHALL MEET THE REQUIREMENTS OF NFPA 780 AND UL96. DESIGN SHALL BE LPI MASTER LABEL CERTIFIED.

KEYNOTES

1. 5/8" BY 10" SOLID ALUMINUM AIR TERMINAL.
2. #4/0 AWG BARE STRANDED CLASS 1 ALUMINUM DOWN CONDUCTOR CONSISTING OF STRANDS OF #13 AWG ALUMINUM. CONCEAL DOWN CONDUCTORS. PROVIDE APPROPRIATE ALUMINUM TO COPPER BIMETALLIC CONNECTORS AS REQUIRED FOR CONNECTION TO COPPER CLAD GROUND ROD. COORDINATE CONNECTION WITH GROUNDING PLAN ON SHEET EG101 AND EG102.
3. #4/0 AWG BARE STRANDED CLASS 1 ALUMINUM LIGHTNING PROTECTION MAIN CONDUCTOR CONSISTING OF STRANDS OF #13 AWG ALUMINUM.
4. ALUMINUM TO ALUMINUM CLAMP CONNECTOR.

A1 ELECTRICAL - LIGHTNING PROTECTION PLAN

SCALE: 3/32" = 1'-0"

0 8'-0" 16'-0" 32'-0" N

SCALE: 0'-0 3/32" = 1'-0"

APPR	DATE	DESCRIPTION	SYM

SEAL

RQ W.M. Jordan COMPANY – A JOINT VENTURE –

Michael Baker INTERNATIONAL

100 AIRSIDE DRIVE
MOON TOWNSHIP, PA 15108 A/E INFO

APPROVED

FOR COMMANDER NAVFAC

ACTIVITY
MARINE CORPS BASE
CAMP LEJEUNE

SATISFACTORY TO DATE

DES	DRW	CHK
SD	LAK	YPS

PM

BRANCH MANAGER

CHIEF ENG/ARCH

FIRE PROTECTION

DEPARTMENT OF THE NAVY
NAVAL FACILITIES ENGINEERING COMMAND
ROICC FLORENCE CAMP LEJEUNE

NAVAL FACILITIES ENGINEERING COMMAND – MID-ATLANTIC
JACKSONVILLE, NC

MCB CAMP LEJEUNE
JACKSONVILLE, NC
P1338 II MEF SIMULATION/TRAINING CENTER
REPLACEMENT

ELECTRICAL - LIGHTNING PROTECTION PLAN

SCALE: AS NOTED

EPROJECT NO.: 1590892

CONSTR. CONTR. NO.
N40085-20-C-0059

NAVFAC DRAWING NO.

SHEET OF

EG103

DP2 SUBMISSION – P1338 BUILDING - PRE-FINAL SUBMISSION

PLOTTED: 6/10/2021 5:42:51 PM

FILE NAME: BIM 360://HF PACKAGE 3/P1338 MEF SIM CTR-1590892-E.rvt

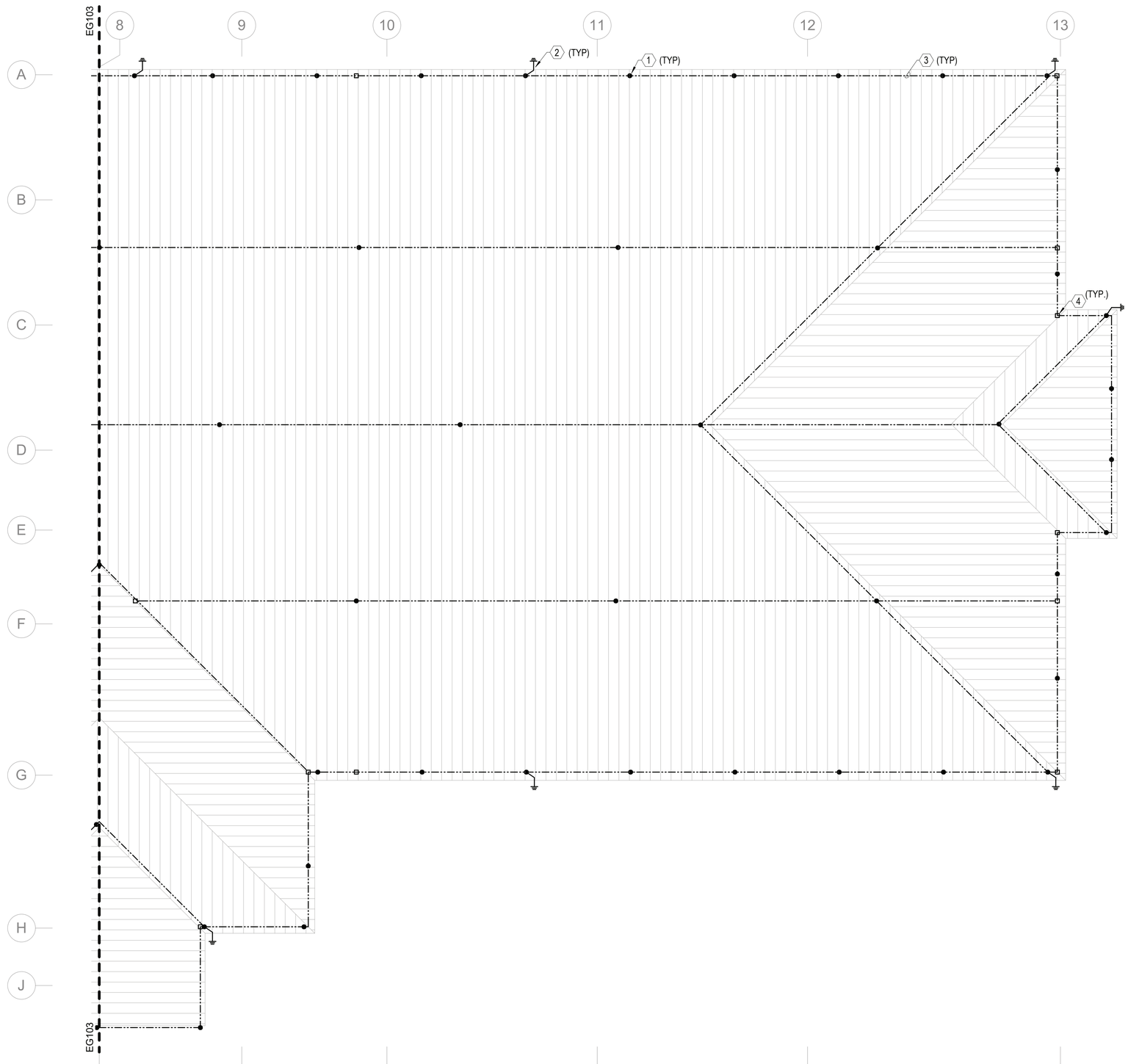

A1 ELECTRICAL - LIGHTNING PROTECTION PLAN

SCALE: 3/32" = 1'-0"

GENERAL NOTES

1. SEE SHEET E-001 FOR ELECTRICAL NOTES, SYMBOLS, AND ABBREVIATIONS.
2. SEE SHEETS EG101 AND EG102 FOR GROUNDING PLANS
3. SEE SHEET EG501 FOR LIGHTNING PROTECTION DETAILS
4. LIGHTNING PROTECTION DESIGN AND INSTALLATION SHALL MEET THE REQUIREMENTS OF NFPA 780 AND UL96. DESIGN SHALL BE LPI MASTER LABEL CERTIFIED.

KEYNOTES

1. 5/8" BY 10" SOLID ALUMINUM AIR TERMINAL.
2. #4/0 AWG BARE STRANDED CLASS 1 ALUMINUM DOWN CONDUCTOR CONSISTING OF STRANDS OF #13 AWG ALUMINUM. CONCEAL DOWN CONDUCTORS. PROVIDE APPROPRIATE ALUMINUM TO COPPER BIMETALLIC CONNECTORS AS REQUIRED FOR CONNECTION TO COPPER CLAD GROUND ROD. COORDINATE CONNECTION WITH GROUNDING PLAN ON SHEET EG101 AND EG102.
3. #4/0 AWG BARE STRANDED CLASS 1 ALUMINUM LIGHTNING PROTECTION MAIN CONDUCTOR CONSISTING OF STRANDS OF #13 AWG ALUMINUM.
4. ALUMINUM TO ALUMINUM CLAMP CONNECTOR.

0 8'-0" 16'-0" 32'-0"

SCALE:0'-0 3/32" = 1'-0"

N

SYM	DESCRIPTION	DATE	APPR

NAVFAC

SEAL

IRQ WM Jordan COMPANY – A JOINT VENTURE –

Michael Baker INTERNATIONAL

100 AIRSIDE DRIVE
MOON TOWNSHIP, PA 15108 A/E INFO

APPROVED

FOR COMMANDER NAVFAC

ACTIVITY
MARINE CORPS BASE
CAMP LEJEUNE

SATISFACTORY TO DATE

DES SD | DRW LAK | CHK YPS

PM

BRANCH MANAGER

CHIEF ENG/ARCH

FIRE PROTECTION

DEPARTMENT OF THE NAVY
NAVAL FACILITIES ENGINEERING COMMAND ~ MID-ATLANTIC
JACKSONVILLE, NC
NAVAL FACILITIES ENGINEERING COMMAND
ROICC FLORENCE CAMP LEJEUNE
MCB CAMP LEJEUNE

P1338 II MEF SIMULATION/TRAINING CENTER
REPLACEMENT
JACKSONVILLE, NC

ELECTRICAL - LIGHTNING PROTECTION PLAN

SCALE: AS NOTED

EPROJECT NO.: 1590892

CONSTR. CONTR. NO.
N40085-20-C-0059

NAVFAC DRAWING NO.

SHEET OF

EG104

DP2 SUBMISSION – P1338 BUILDING - PRE-FINAL SUBMISSION

PLOTTED: 6/10/2021 5:42:53 PM

FILE NAME: BIM 360://HF PACKAGE 3/P1338 MEF SIM CTR-1590892-E.rvt

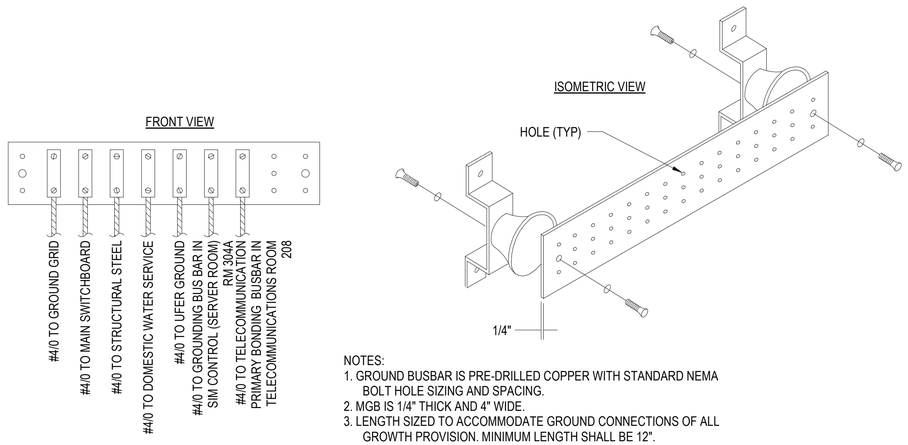

NOTES:
1. GROUND BUSBAR IS PRE-DRILLED COPPER WITH STANDARD NEMA BOLT HOLE SIZING AND SPACING.
2. MGB IS 1/4" THICK AND 4" WIDE.
3. LENGTH SIZED TO ACCOMMODATE GROUND CONNECTIONS OF ALL GROWTH PROVISION. MINIMUM LENGTH SHALL BE 12".

ELECTRICAL MAIN GROUNDING BUSBAR

SCALE:NTS

REF EG101 - EG102

C1

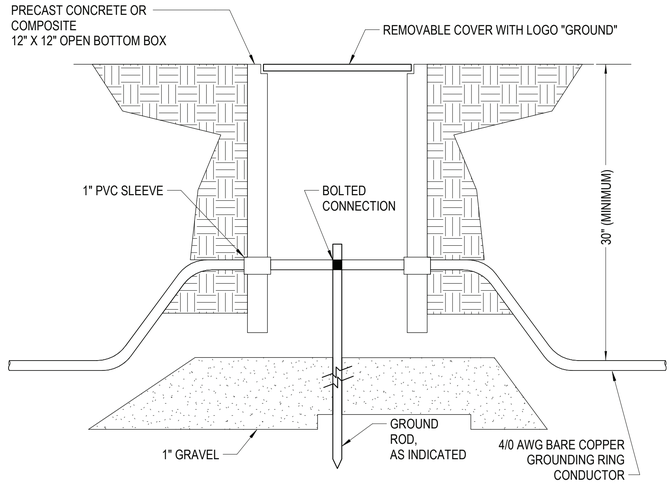

GROUND ROD TEST WELL

SCALE:NTS

REF EG101 - EG102

C4

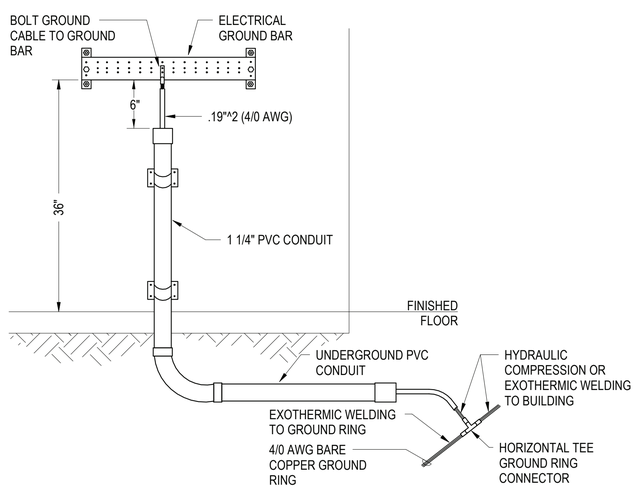

ELECTRICAL GROUND BAR AND GROUND RING CONNECTIONS

SCALE:NTS

REF EG101 - EG102

A1

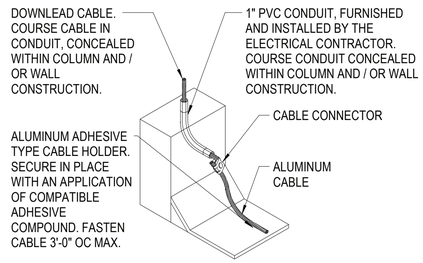

CONCEALED DOWNLEAD TO LOWER ROOF

SCALE:NTS

REF EG103 - EG104

A3

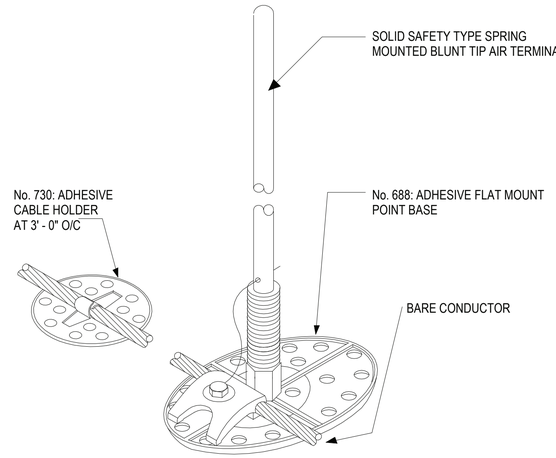

AIR TERMINALS & CABLE HOLDERS

SCALE:NTS

REF EG103 - EG104

A4

SYM	DESCRIPTION	DATE	APPR

NAVFAC

SEAL

RQ W.M. Jordan COMPANY – A JOINT VENTURE –

Michael Baker INTERNATIONAL
100 AIRSIDE DRIVE
MOON TOWNSHIP, PA 15108
A/E INFO

APPROVED

FOR COMMANDER NAVFAC

ACTIVITY
MARINE CORPS BASE CAMP LEJEUNE

SATISFACTORY TO DATE

DES SD | DRW LAK | CHK YPS

PM

BRANCH MANAGER

CHIEF ENG/ARCH

FIRE PROTECTION

DEPARTMENT OF THE NAVY
NAVAL FACILITIES ENGINEERING COMMAND
NAVAL FACILITIES ENGINEERING COMMAND ~ MID-ATLANTIC
ROICC FLORENCE CAMP LEJEUNE
JACKSONVILLE, NC

MCB CAMP LEJEUNE
P1338 II MEF SIMULATION/TRAINING CENTER
REPLACEMENT

ELECTRICAL - GROUNDING DETAILS

SCALE: AS NOTED

EPROJECT NO.: 1590892

CONSTR. CONTR. NO. N40085-20-C-0059

NAVFAC DRAWING NO. 12826285

SHEET OF

EG501

DP2 SUBMISSION – P1338 BUILDING - PRE-FINAL SUBMISSION

PLOTTED: 6/10/2021 5:42:54 PM

FILE NAME: BIM 360://HF PACKAGE 3/P1338 MEF SIM CTR-1590892-E.rvt

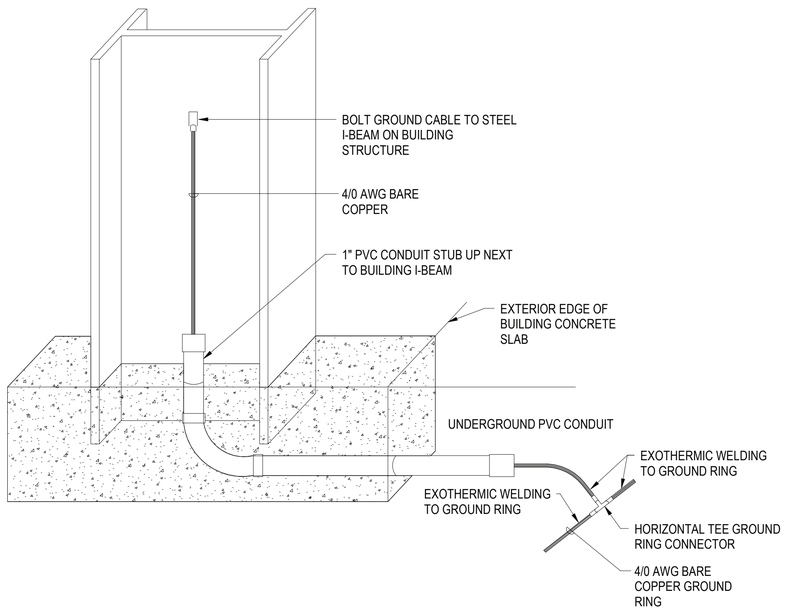

BUILDING GROUND AND GROUND RING CONNECTIONS

C1

SCALE:NTS

REF EG101 - EG102

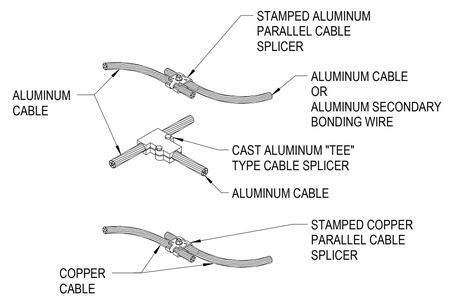

TYPICAL CABLE SPLICERS

C3

SCALE:NTS

REF EG101 - EG102

SYM	DESCRIPTION	DATE	APPR

NAVFAC

SEAL

RQ W.M. Jordan COMPANY – A JOINT VENTURE –

Michael Baker INTERNATIONAL

100 AIRSIDE DRIVE
MOON TOWNSHIP, PA 15108

A/E INFO

APPROVED

FOR COMMANDER NAVFAC

ACTIVITY
MARINE CORPS BASE CAMP LEJEUNE

SATISFACTORY TO DATE

DES SD | DRW LAK | CHK YPS

PM

BRANCH MANAGER

CHIEF ENG/ARCH

FIRE PROTECTION

DEPARTMENT OF THE NAVY
NAVAL FACILITIES ENGINEERING COMMAND ~ MID-ATLANTIC
ROICC FLORENCE CAMP LEJEUNE
NAVAL FACILITIES ENGINEERING COMMAND
JACKSONVILLE, NC

MCB CAMP LEJEUNE
JACKSONVILLE, NC

P1338 II MEF SIMULATION/TRAINING CENTER
REPLACEMENT

ELECTRICAL - GROUNDING DETAILS

SCALE: AS NOTED

EPROJECT NO.: 1590892

CONSTR. CONTR. NO.
N40085-20-C-0059

NAVFAC DRAWING NO.
12826285

SHEET OF

EG502

DP2 SUBMISSION – P1338 BUILDING - PRE-FINAL SUBMISSION

UNCLASSIFIED

PLOTTED: 6/10/2021 5:42:55 PM

FILE NAME: BIM 360://HF PACKAGE 3/P1338 MEF SIM CTR-1590892-E.rvt

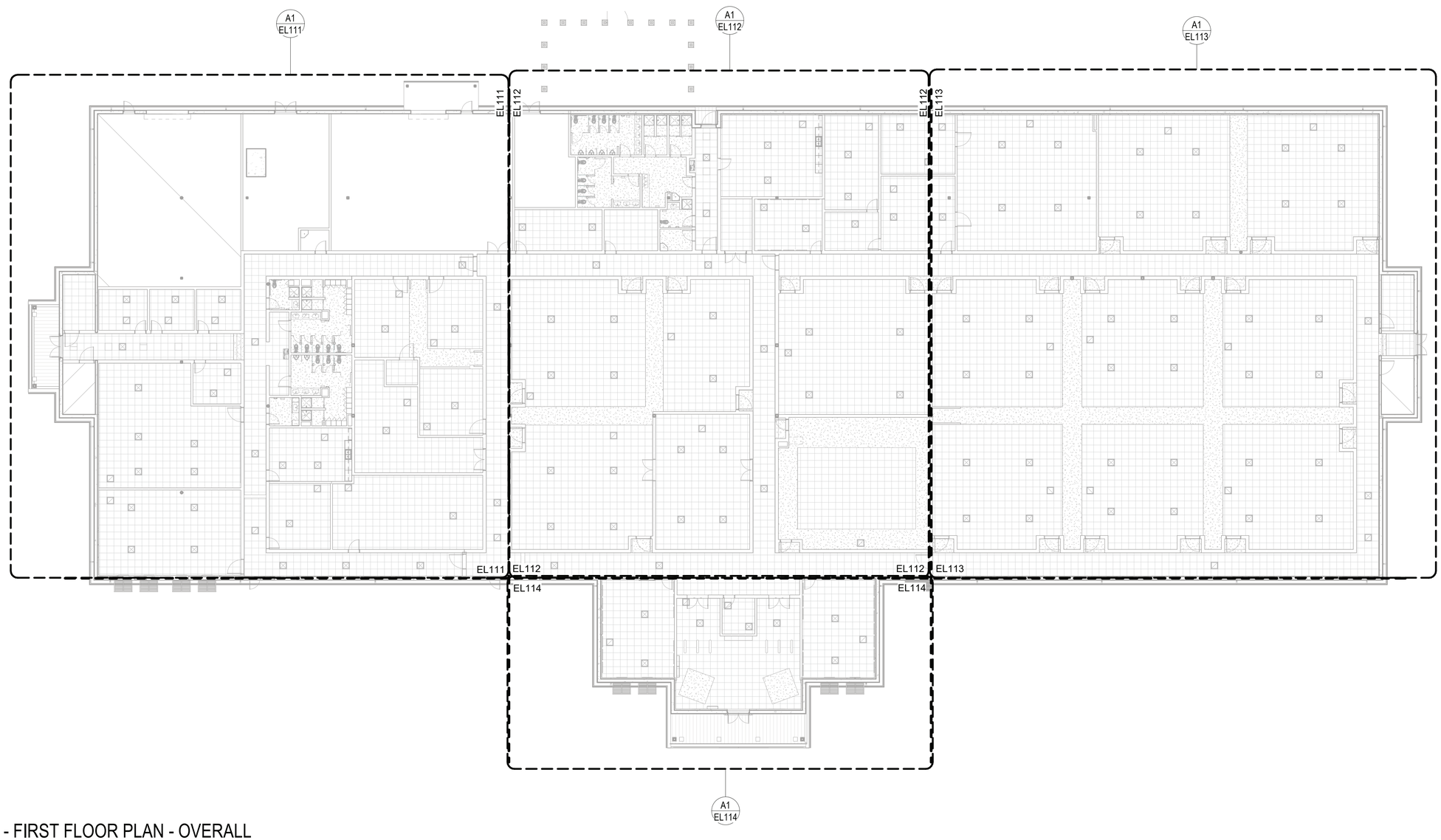

LIGHTING - FIRST FLOOR PLAN - OVERALL

SCALE: 1/16" = 1'-0"

KEYPLAN

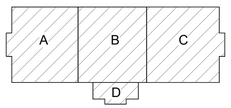

0 8'-0" 16'-0" 32'-0"

SCALE: 0'-0 1/16" = 1'-0"

N

			APPR
			DATE
			DESCRIPTION
			SYM

SEAL

WJM Jordan COMPANY – A JOINT VENTURE –

Michael Baker INTERNATIONAL

100 AIRSIDE DRIVE
MOON TOWNSHIP, PA 15108 A/E INFO

APPROVED

FOR COMMANDER NAVFAC

ACTIVITY
MARINE CORPS BASE
CAMP LEJEUNE

SATISFACTORY TO DATE

DES SD	DRW LAK	CHK YPS

PM

BRANCH MANAGER

CHIEF ENG/ARCH

FIRE PROTECTION

DEPARTMENT OF THE NAVY
NAVAL FACILITIES ENGINEERING COMMAND
ROICC FLORENCE CAMP LEJEUNE

NAVAL FACILITIES ENGINEERING COMMAND ~ MID-ATLANTIC
JACKSONVILLE, NC

MCB CAMP LEJEUNE
JACKSONVILLE, NC

P1338 II MEF SIMULATION/TRAINING CENTER
REPLACEMENT

LIGHTING - FIRST FLOOR PLAN - OVERALL

SCALE:	AS NOTED
EPROJECT NO.:	1590892
CONSTR. CONTR. NO.	N40085-20-C-0059
NAVFAC DRAWING NO.	
SHEET	OF

EL110

DP2 SUBMISSION – P1338 BUILDING - PRE-FINAL SUBMISSION

PLOTTED: 6/10/2021 5:43:09 PM

FILE NAME: BIM 360://HF PACKAGE 3/P1338 MEF SIM CTR-1590892-E.rvt

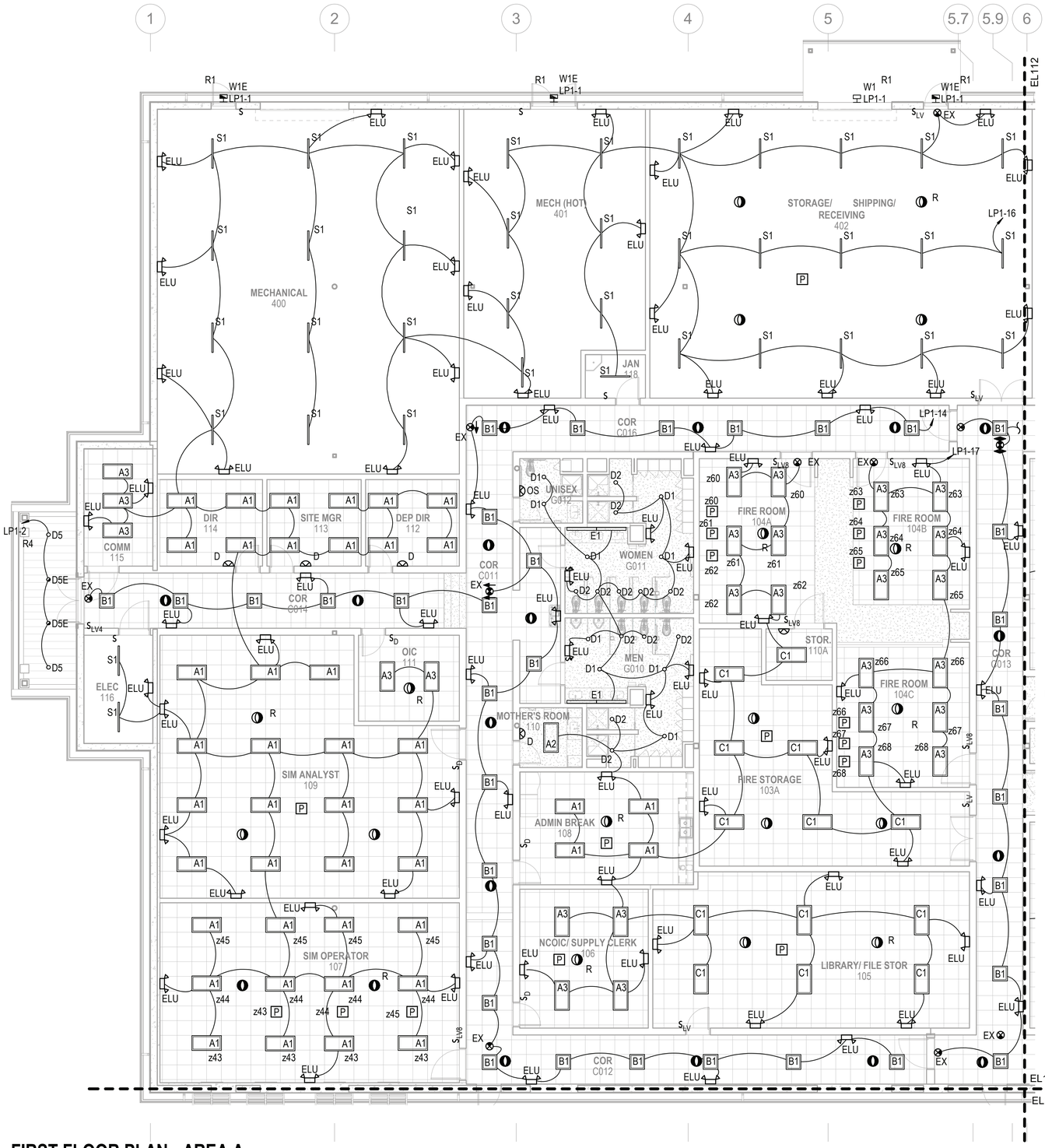

A1 LIGHTING - FIRST FLOOR PLAN - AREA A

SCALE: 1/8" = 1'-0" (EL110)

GENERAL NOTES

1. SEE SHEET E-001 FOR ELECTRICAL NOTES, SYMBOLS, AND ABBREVIATIONS.
2. SEE SHEET E-601 FOR LIGHTING FIXTURE SCHEDULE.
3. THE WIRING SHOWN ON THE LIGHTING PLANS INDICATE FIXTURES WHICH ARE ON THE SAME CIRCUIT, NOT THE ACTUAL WIRING. CONTRACTOR SHALL ADHERE TO THE SWITCH DESIGNATIONS AND LIGHTING CONTROL DIAGRAMS FOR THE ACTUAL WIRING.
4. CONNECT EXIT SIGN AND EMERGENCY LIGHTING UNITS AHEAD OF THE SWITCH/SENSOR TO THE NORMAL LIGHTING CICUIT THAT IS LOCATED IN THE SAME AREA/ROOM IN WHICH THOSE EXIT AND EMERGENCY LUMINAIRES ARE SERVING.

SYM	DESCRIPTION	DATE	APPR

NAVFAC

SEAL

IRQ Jordan COMPANY – A JOINT VENTURE –

Michael Baker INTERNATIONAL
100 AIRSIDE DRIVE
MOON TOWNSHIP, PA 15108 A/E INFO

APPROVED

FOR COMMANDER NAVFAC

ACTIVITY
MARINE CORPS BASE
CAMP LEJEUNE

SATISFACTORY TO DATE

DES SD	DRW LAK	CHK YPS

PM

BRANCH MANAGER

CHIEF ENG/ARCH

FIRE PROTECTION

DEPARTMENT OF THE NAVY
NAVAL FACILITIES ENGINEERING COMMAND
ROICC FLORENCE CAMP LEJEUNE

NAVAL FACILITIES ENGINEERING COMMAND – MID-ATLANTIC
JACKSONVILLE, NC

MCB CAMP LEJEUNE
JACKSONVILLE, NC
P1338 II MEF SIMULATION/TRAINING CENTER
REPLACEMENT
LIGHTING - FIRST FLOOR PLAN - AREA A

SCALE: AS NOTED

EPROJECT NO.: 1590892

CONSTR. CONTR. NO.
N40085-20-C-0059

NAVFAC DRAWING NO.

SHEET OF

EL111

KEYPLAN

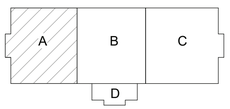

0 4'-0" 8'-0" 16'-0"
SCALE: 0'-0 1/8" = 1'-0"

N

DP2 SUBMISSION – P1338 BUILDING - PRE-FINAL SUBMISSION

PLOTTED: 6/10/2021 5:43:24 PM

FILE NAME: BIM 360://HF PACKAGE 3/P1338 MEF SIM CTR-1590892-E.rvt

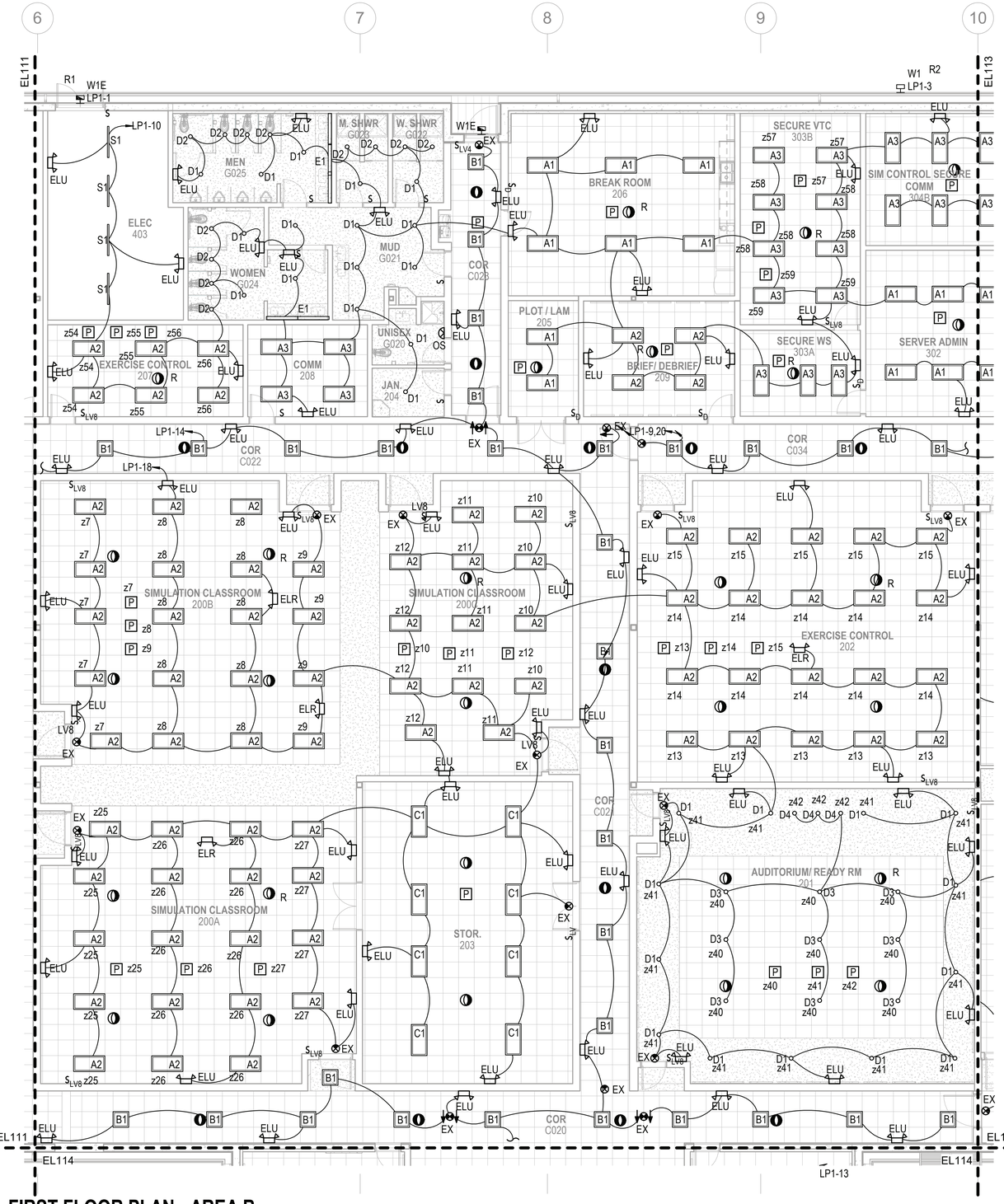

A1 LIGHTING - FIRST FLOOR PLAN - AREA B

SCALE: 1/8" = 1'-0" (EL110)

GENERAL NOTES

1. SEE SHEET E-001 FOR ELECTRICAL NOTES, SYMBOLS, AND ABBREVIATIONS.
2. SEE SHEET E-601 FOR LIGHTING FIXTURE SCHEDULE.
3. THE WIRING SHOWN ON THE LIGHTING PLANS INDICATE FIXTURES WHICH ARE ON THE SAME CIRCUIT, NOT THE ACTUAL WIRING. CONTRACTOR SHALL ADHERE TO THE SWITCH DESIGNATIONS AND LIGHTING CONTROL DIAGRAMS FOR THE ACTUAL WIRING.
4. CONNECT EXIT SIGN AND EMERGENCY LIGHTING UNITS AHEAD OF THE SWITCH/SENSOR TO THE NORMAL LIGHTING CICUIT THAT IS LOCATED IN THE SAME AREA/ROOM IN WHICH THOSE EXIT AND EMERGENCY LUMINAIRES ARE SERVING.

KEYPLAN

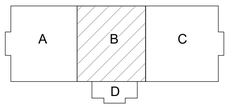

SCALE: 0'-0 1/8" = 1'-0"

APPR	DATE	SYM	DESCRIPTION

SEAL

IRQ WNM Jordan COMPANY – A JOINT VENTURE –

Michael Baker INTERNATIONAL

100 AIRSIDE DRIVE
MOON TOWNSHIP, PA 15108 A/E INFO

APPROVED

FOR COMMANDER NAVFAC

ACTIVITY
MARINE CORPS BASE CAMP LEJEUNE

SATISFACTORY TO DATE

DES SD | DRW LAK | CHK YPS

PM

BRANCH MANAGER

CHIEF ENG/ARCH

FIRE PROTECTION

DEPARTMENT OF THE NAVY
NAVAL FACILITIES ENGINEERING COMMAND ~ MID-ATLANTIC
ROICC FLORENCE CAMP LEJEUNE
MCB CAMP LEJEUNE

NAVAL FACILITIES ENGINEERING COMMAND
JACKSONVILLE, NC

JACKSONVILLE, NC
P1338 II MEF SIMULATION/TRAINING CENTER
REPLACEMENT

LIGHTING - FIRST FLOOR PLAN - AREA B

SCALE: AS NOTED

EPROJECT NO.: 1590892

CONSTR. CONTR. NO.
N40085-20-C-0059

NAVFAC DRAWING NO.

SHEET OF

EL112

DP2 SUBMISSION – P1338 BUILDING - PRE-FINAL SUBMISSION

PLOTTED: 6/10/2021 5:43:39 PM

FILE NAME: BIM 360://HF PACKAGE 3/P1338 MEF SIM CTR-1590892-E.rvt

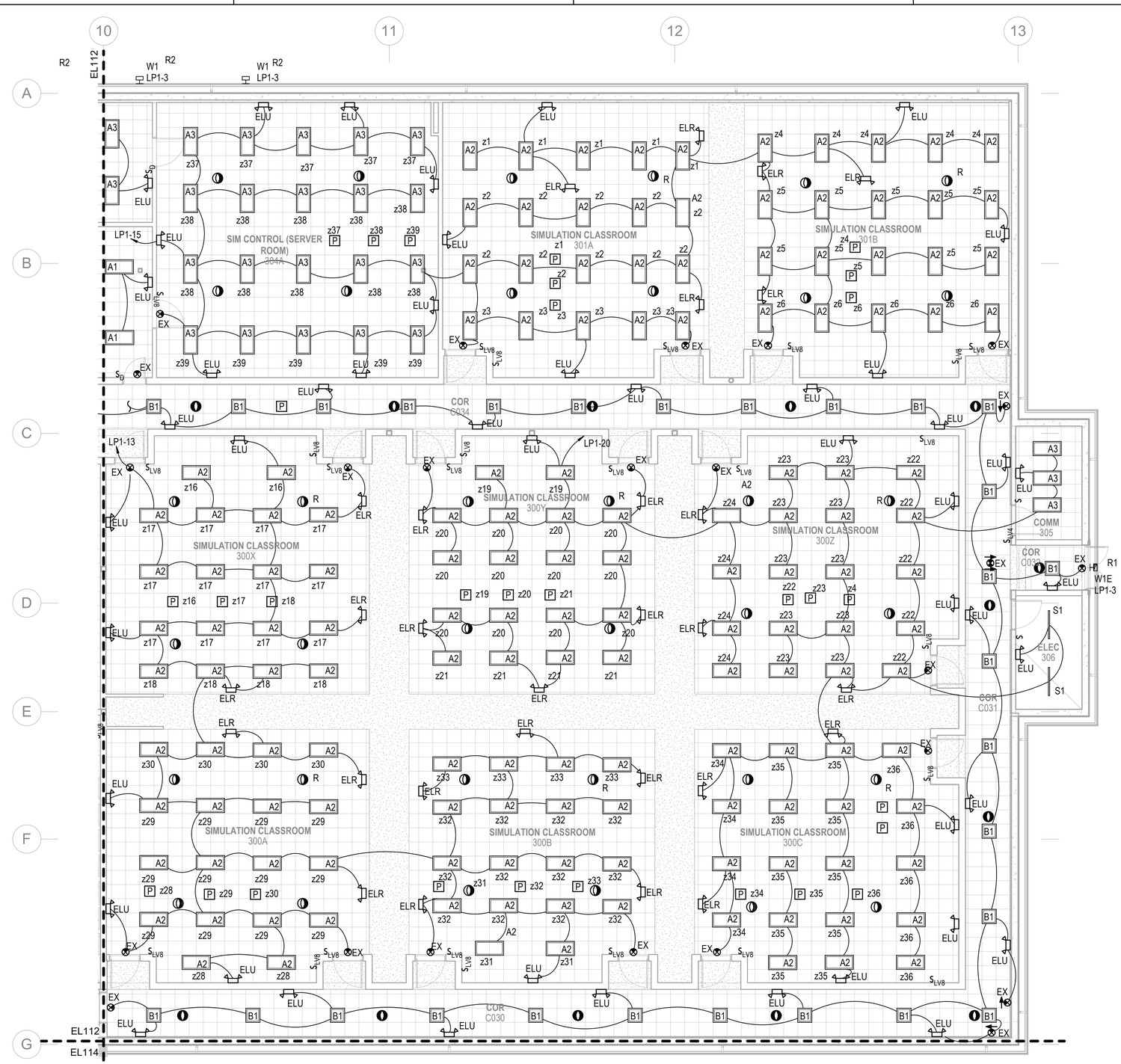

A1 LIGHTING - FIRST FLOOR PLAN - AREA C

SCALE: 1/8" = 1'-0" (EL110)

GENERAL NOTES

1. SEE SHEET E-001 FOR ELECTRICAL NOTES, SYMBOLS, AND ABBREVIATIONS.
2. SEE SHEET E-601 FOR LIGHTING FIXTURE SCHEDULE.
3. THE WIRING SHOWN ON THE LIGHTING PLANS INDICATE FIXTURES WHICH ARE ON THE SAME CIRCUIT, NOT THE ACTUAL WIRING. CONTRACTOR SHALL ADHERE TO THE SWITCH DESIGNATIONS AND LIGHTING CONTROL DIAGRAMS FOR THE ACTUAL WIRING.
4. CONNECT EXIT SIGN AND EMERGENCY LIGHTING UNITS AHEAD OF THE SWITCH/SENSOR TO THE NORMAL LIGHTING CICUIT THAT IS LOCATED IN THE SAME AREA/ROOM IN WHICH THOSE EXIT AND EMERGENCY LUMINAIRES ARE SERVING.

KEYPLAN

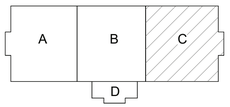

0 4'-0" 8'-0" 16'-0"

SCALE: 0'-0 1/8" = 1'-0"

N

SYM	DESCRIPTION	DATE	APPR

NAVFAC

SEAL

RQ W.M. Jordan COMPANY - A JOINT VENTURE -

Michael Baker INTERNATIONAL
100 AIRSIDE DRIVE
MOON TOWNSHIP, PA 15108
A/E INFO

APPROVED

FOR COMMANDER NAVFAC

ACTIVITY
MARINE CORPS BASE CAMP LEJEUNE

SATISFACTORY TO DATE

DES SD | DRW LAK | CHK YPS

PM

BRANCH MANAGER

CHIEF ENG/ARCH

FIRE PROTECTION

DEPARTMENT OF THE NAVY
NAVAL FACILITIES ENGINEERING COMMAND
NAVAL FACILITIES ENGINEERING COMMAND ~ MID-ATLANTIC
ROICC FLORENCE CAMP LEJEUNE
JACKSONVILLE, NC
MCB CAMP LEJEUNE
JACKSONVILLE, NC

P1338 II MEF SIMULATION/TRAINING CENTER
REPLACEMENT

LIGHTING - FIRST FLOOR PLAN - AREA C

SCALE: AS NOTED

EPROJECT NO.: 1590892

CONSTR. CONTR. NO.
N40085-20-C-0059

NAVFAC DRAWING NO.

SHEET OF

EL113

DP2 SUBMISSION – P1338 BUILDING - PRE-FINAL SUBMISSION

FILE NAME: BIM 360://HF PACKAGE 3/P1338 MEF SIM CTR-1590892-E.rvt

PLOTTED: 6/10/2021 5:43:45 PM

GENERAL NOTES

1. SEE SHEET E-001 FOR ELECTRICAL NOTES, SYMBOLS, AND ABBREVIATIONS.
2. SEE SHEET E-601 FOR LIGHTING FIXTURE SCHEDULE.
3. THE WIRING SHOWN ON THE LIGHTING PLANS INDICATE FIXTURES WHICH ARE ON THE SAME CIRCUIT, NOT THE ACTUAL WIRING. CONTRACTOR SHALL ADHERE TO THE SWITCH DESIGNATIONS AND LIGHTING CONTROL DIAGRAMS FOR THE ACTUAL WIRING.
4. CONNECT EXIT SIGN AND EMERGENCY LIGHTING UNITS AHEAD OF THE SWITCH/SENSOR TO THE NORMAL LIGHTING CICUIT THAT IS LOCATED IN THE SAME AREA/ROOM IN WHICH THOSE EXIT AND EMERGENCY LUMINAIRES ARE SERVING.

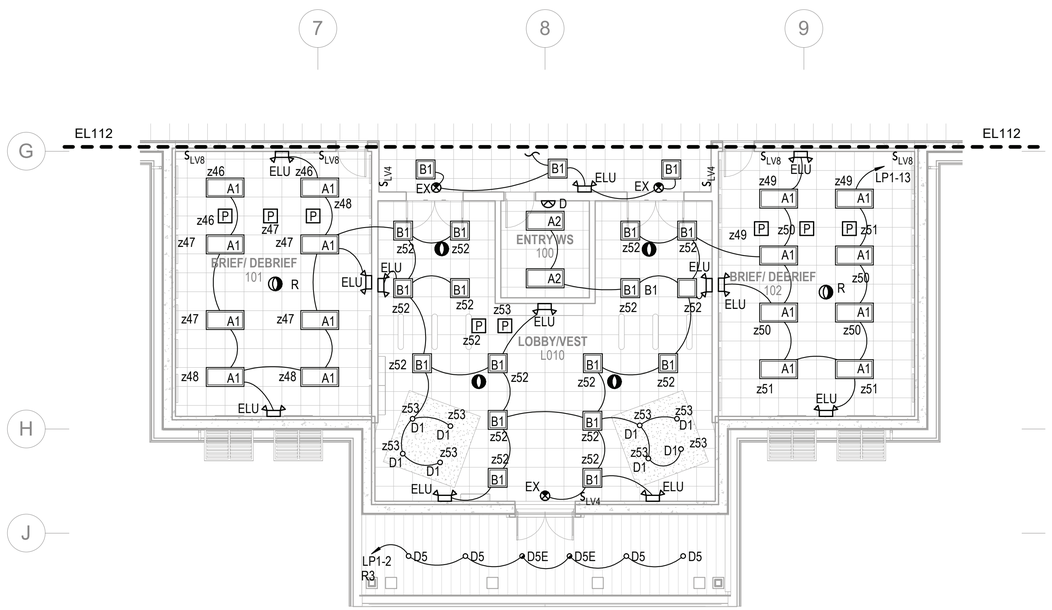

A1 LIGHTING - FIRST FLOOR PLAN - AREA D

SCALE: 1/8" = 1'-0" (EL110)

KEYPLAN

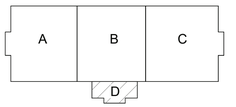

0 4'-0" 8'-0" 16'-0"

SCALE: 0'-0 1/8" = 1'-0"

N

			APPR
			DATE
			DESCRIPTION
			SYM

SEAL

W.M. Jordan COMPANY – A JOINT VENTURE –

Michael Baker INTERNATIONAL

100 AIRSIDE DRIVE
MOON TOWNSHIP, PA 15108 A/E INFO

APPROVED

FOR COMMANDER NAVFAC

ACTIVITY
MARINE CORPS BASE
CAMP LEJEUNE

SATISFACTORY TO DATE

DES SD | DRW LAK | CHK YPS

PM

BRANCH MANAGER

CHIEF ENG/ARCH

FIRE PROTECTION

DEPARTMENT OF THE NAVY
NAVAL FACILITIES ENGINEERING COMMAND
ROICC FLORENCE CAMP LEJEUNE
MCB CAMP LEJEUNE

NAVAL FACILITIES ENGINEERING COMMAND – MID-ATLANTIC
JACKSONVILLE, NC

JACKSONVILLE, NC
P1338 II MEF SIMULATION/TRAINING CENTER
REPLACEMENT

LIGHTING - FIRST FLOOR PLAN - AREA D

SCALE: AS NOTED

EPROJECT NO.: 1590892

CONSTR. CONTR. NO.
N40085-20-C-0059

NAVFAC DRAWING NO.

SHEET OF

EL114

DP2 SUBMISSION – P1338 BUILDING -_PRE-FINAL SUBMISSION

PLOTTED: 6/10/2021 5:43:49 PM

FILE NAME: BIM 360://HF PACKAGE 3/P1338 MEF SIM CTR-1590892-E.rvt

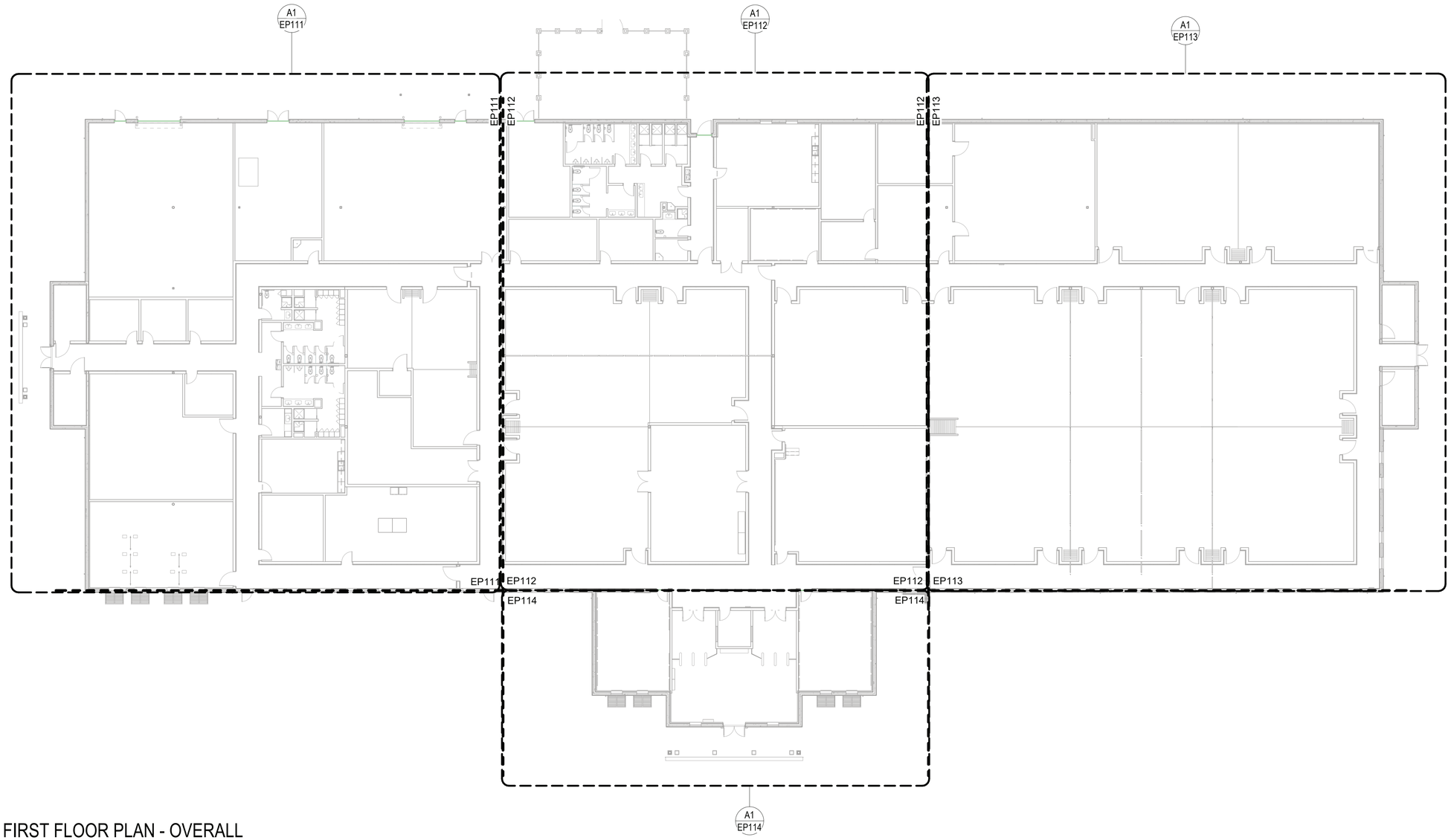

POWER - FIRST FLOOR PLAN - OVERALL

SCALE: 1/16" = 1'-0"

KEYPLAN

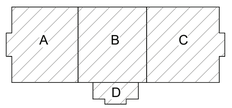

0 8'-0" 16'-0" 32'-0"

SCALE: 0'-0 1/16" = 1'-0"

N

APPR	DATE	DESCRIPTION	SYM

NAVFAC

SEAL

RQ W.M. Jordan COMPANY – A JOINT VENTURE –

Michael Baker INTERNATIONAL

100 AIRSIDE DRIVE
MOON TOWNSHIP, PA 15108 A/E INFO

APPROVED

FOR COMMANDER NAVFAC

ACTIVITY
MARINE CORPS BASE
CAMP LEJEUNE

SATISFACTORY TO DATE

DES SD | DRW LAK | CHK YPS

PM

BRANCH MANAGER

CHIEF ENG/ARCH

FIRE PROTECTION

DEPARTMENT OF THE NAVY
NAVAL FACILITIES ENGINEERING COMMAND
ROICC FLORENCE CAMP LEJEUNE
MCB CAMP LEJEUNE

NAVAL FACILITIES ENGINEERING COMMAND – MID-ATLANTIC
JACKSONVILLE, NC

JACKSONVILLE, NC
P1338 II MEF SIMULATION/TRAINING CENTER
REPLACEMENT

POWER - FIRST FLOOR PLAN - OVERALL

SCALE: AS NOTED

EPROJECT NO.: 1590892

CONSTR. CONTR. NO.
N40085-20-C-0059

NAVFAC DRAWING NO.

SHEET OF

EP110

DP2 SUBMISSION – P1338 BUILDING - PRE-FINAL SUBMISSION

PLOTTED: 6/10/2021 5:43:52 PM

FILE NAME: BIM 360://HF PACKAGE 3/P1338 MEF SIM CTR-1590892-E.rvt

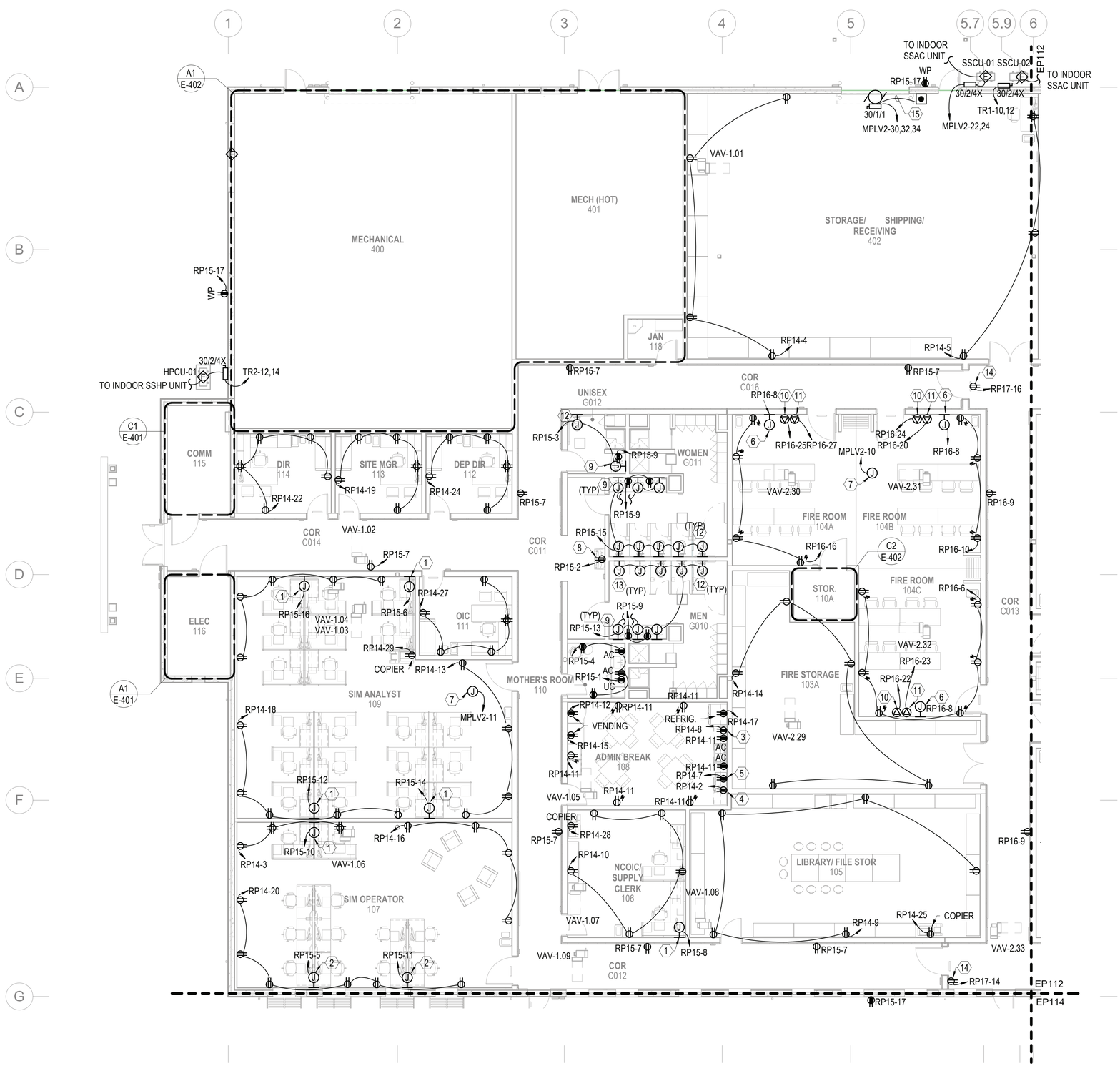

A1 POWER - FIRST FLOOR PLAN - AREA A

SCALE: 1/8" = 1'-0" (EP110)

GENERAL NOTES

1. SEE SHEET E-001 FOR ELECTRICAL NOTES, SYMBOLS, AND ABBREVIATIONS.
2. ALL FLOORBOX AND JUNCTION BOX LOCATIONS ARE APPROXIMATE. FINAL LOCATIONS BASED ON EQUIPMENT AND FURNITURE FINAL LOCATIONS.

KEYNOTES

1. JUNCTION BOX FOR FURNITURE WHIP. COORDINATE AND INSTALL PER MANUFACTURER'S RECOMMENDATIONS.
2. JUNCTION BOX FOR FURNITURE POWER BAR. COORDINATE AND INSTALL PER MANUFACTURER'S RECOMMENDATIONS.
3. RECEPTACLE FOR MICROWAVE ON SHELF ABOVE COUNTERTOP, MOUNT RECEPTACLE AT 60" AFF.
4. GFCI RECEPTACLE ABOVE COUNTER DEDICATED FOR COFFEE POT.
5. GFCI RECEPTACLE ABOVE COUNTER DEDICATED FOR MICROWAVE.
6. DEDICATED RECEPTACLE FOR AV FLAT PANEL. RECEPTACLE TO BE INSTALLED IN AV WALL BOX. REFERENCE TA-SERIES DRAWINGS FOR DETAILS, MOUNTING HEIGHT, AND LOCATION.
7. JUNCTION BOX FOR VAV LOW VOLTAGE POWER. COORDINATE LOCATION AND QUANTITY WITH MECHANICAL INSTALLATION.
8. RECEPTACLE FOR ELECTRIC WATER COOLER. COORDINATE LOCATION WITH MANUFACTURER'S RECOMMENDATIONS.
9. HARD-WIRED 120V CONNECTION FOR LAVATORY INFRARED FLUSH VALVE. COORDINATE FINAL LOCATION WITH INSTALLATION OF LAVATORY. INSTALL PER MANUFACTURER'S RECOMMENDATIONS.
10. NEMA L5-30R TWIST LOCK RECEPTACLE. COORDINATE FINAL LOCATION AND MOUNTING HEIGHT WITH USER.
11. NEMA 5-20R RECEPTACLE. COORDINATE FINAL LOCATION AND MOUNTING HEIGHT WITH USER.
12. HARD-WIRED 120V CONNECTION FOR WATER CLOSET INFRARED FLUSH VALVE. COORDINATE FINAL LOCATION WITH INSTALLATION OF WATER CLOSET. INSTALL PER MANUFACTURER'S RECOMMENDATIONS.
13. HARD-WIRED 120V CONNECTION FOR URINAL INFRARED FLUSH VALVE. COORDINATE FINAL LOCATION WITH INSTALLATION OF URINAL. INSTALL PER MANUFACTURER'S RECOMMENDATIONS.
14. DEDICATED DUPLEX RECEPTACLE FOR SYNCHRONIZED CLOCK SYSTEM. COORDINATE FINAL HEIGHT AND LOCATION WITH INSTALLATION OF CLOCK.
15. CONDUIT BY ELECTRICAL CONTRACTOR. LOW VOLTAGE WIRING BY OTHERS.

KEYPLAN

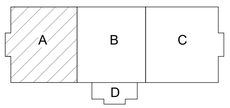

0 4'-0" 8'-0" 16'-0"

SCALE: 0'-0 1/8" = 1'-0"

N

APPR	DATE	DESCRIPTION	SYM

SEAL

RQ W.M. Jordan COMPANY – A JOINT VENTURE –

Michael Baker INTERNATIONAL
100 AIRSIDE DRIVE
MOON TOWNSHIP, PA 15108
A/E INFO

APPROVED

FOR COMMANDER NAVFAC

ACTIVITY: MARINE CORPS BASE CAMP LEJEUNE

SATISFACTORY TO DATE

DES SD | DRW LAK | CHK YPS

PM

BRANCH MANAGER

CHIEF ENG/ARCH

FIRE PROTECTION

DEPARTMENT OF THE NAVY
NAVAL FACILITIES ENGINEERING COMMAND
ROICC FLORENCE CAMP LEJEUNE
MCB CAMP LEJEUNE

NAVAL FACILITIES ENGINEERING COMMAND ~ MID-ATLANTIC
JACKSONVILLE, NC

JACKSONVILLE, NC
P1338 II MEF SIMULATION/TRAINING CENTER
REPLACEMENT

POWER - FIRST FLOOR PLAN - AREA A

SCALE: AS NOTED

EPROJECT NO.: 1590892

CONSTR. CONTR. NO.
N40085-20-C-0059

NAVFAC DRAWING NO.

SHEET OF

EP111

DP2 SUBMISSION – P1338 BUILDING - PRE-FINAL SUBMISSION

PLOTTED: 6/10/2021 5:43:56 PM

FILE NAME: BIM 360://HF PACKAGE 3/P1338 MEF SIM CTR-1590892-E.rvt

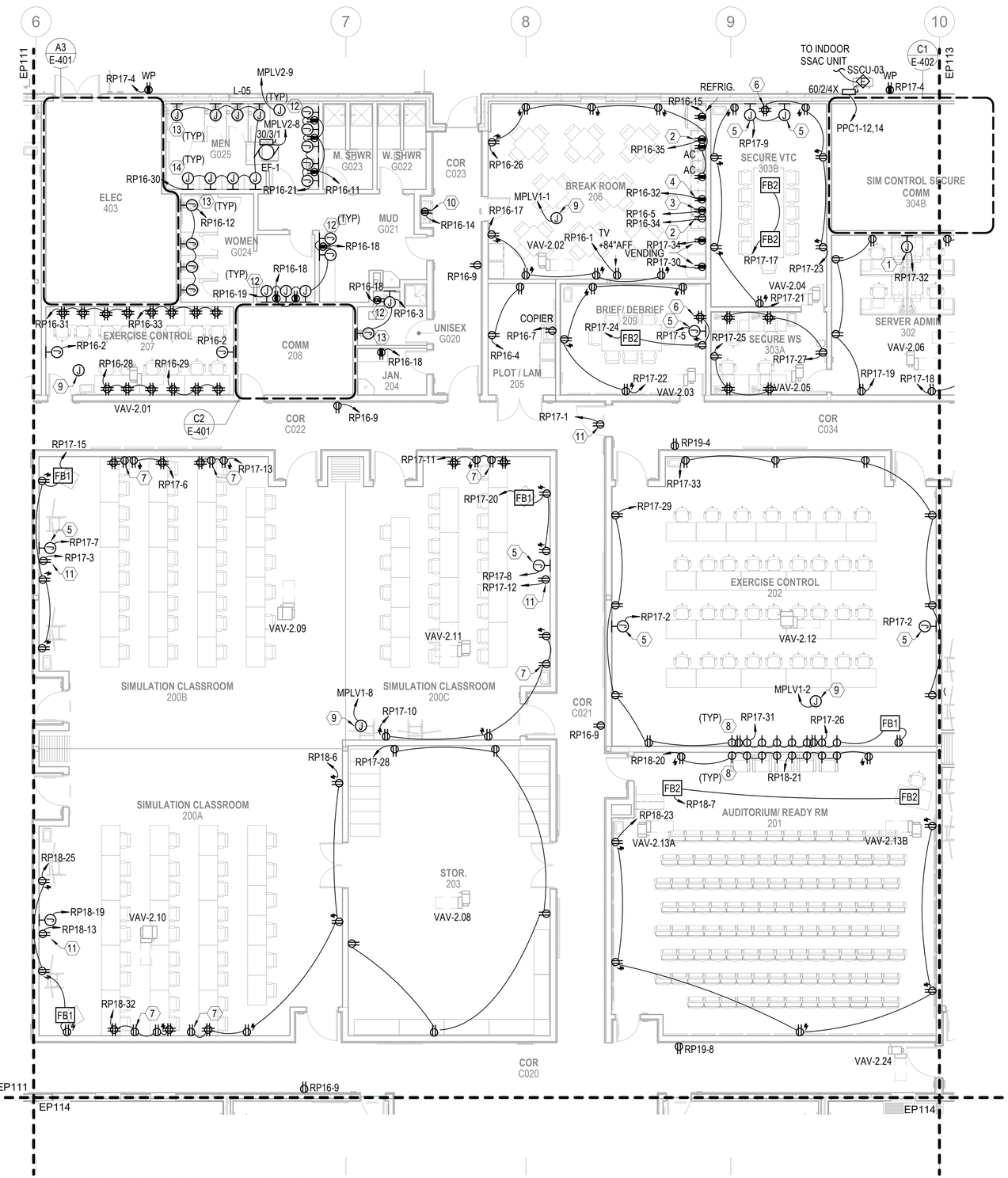

GENERAL NOTES

1. SEE SHEET E-001 FOR ELECTRICAL NOTES, SYMBOLS, AND ABBREVIATIONS.
2. ALL FLOORBOX AND JUNCTION BOX LOCATIONS ARE APPROXIMATE. FINAL LOCATIONS BASED ON EQUIPMENT AND FURNITURE FINAL LOCATIONS.

KEYNOTES

1. JUNCTION BOX FOR FURNITURE WHIP. COORDINATE AND INSTALL PER MANUFACTURER'S RECOMMENDATIONS.
2. RECEPTACLE FOR MICROWAVE ON SHELF ABOVE COUNTERTOP, MOUNT RECEPTACLE AT 60" AFF.
3. GFCI RECEPTACLE ABOVE COUNTER DEDICATED FOR COFFEE POT.
4. GFCI RECEPTACLE ABOVE COUNTER DEDICATED FOR MICROWAVE.
5. DEDICATED RECEPTACLE FOR AV FLAT PANEL. RECEPTACLE TO BE INSTALLED IN AV WALL BOX. REFERENCE TA-SERIES DRAWINGS FOR DETAILS, MOUNTING HEIGHT, AND LOCATION.
6. AV RECESSED QUAD RECEPTACLE. COORDINATE MOUNTING HEIGHT AND LOCATION WITH AV INSTALLATION.
7. AV RECESSED DUPLEX RECETACLE. COORDINATE MOUNTING HEIGHT AND LOCATION WITH AV INSTALLATION.
8. AV RECESSED CLOCK RECEPTACLE. COORDINATE MOUNTING HEIGHT AND LOCATION WITH AV INSTALLATION.
9. JUNCTION BOX FOR VAV LOW VOLTAGE POWER. COORDINATE LOCATION AND QUANTITY WITH MECHANICAL INSTALLATION.
10. RECEPTACLE FOR ELECTRIC WATER COOLER. COORDINATE LOCATION WITH MANUFACTURER'S RECOMMENDATIONS.
11. DEDICATED DUPLEX RECEPTACLE FOR SYNCHRONIZED CLOCK SYSTEM. COORDINATE FINAL HEIGHT AND LOCATION WITH INSTALLATION OF CLOCK.
12. HARD-WIRED 120V CONNECTION FOR LAVATORY INFRARED FLUSH VALVE. COORDINATE FINAL LOCATION WITH INSTALLATION OF LAVATORY. INSTALL PER MANUFACTURER'S RECOMMENDATIONS.
13. HARD-WIRED 120V CONNECTION FOR WATER CLOSET INFRARED FLUSH VALVE. COORDINATE FINAL LOCATION WITH INSTALLATION OF WATER CLOSET. INSTALL PER MANUFACTURER'S RECOMMENDATIONS.
14. HARD-WIRED 120V CONNECTION FOR URINAL INFRARED FLUSH VALVE. COORDINATE FINAL LOCATION WITH INSTALLATION OF URINAL. INSTALL PER MANUFACTURER'S RECOMMENDATIONS.

KEYPLAN

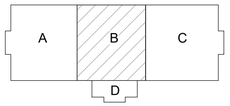

SCALE: 0'-0 1/8" = 1'-0"

A1 POWER - FIRST FLOOR PLAN - AREA B

SCALE: 1/8" = 1'-0" (EP110)

APPR	
DATE	
DESCRIPTION	
SYM	

NAVFAC

SEAL

W.M. Jordan COMPANY – A JOINT VENTURE –

Michael Baker INTERNATIONAL

100 AIRSIDE DRIVE MOON TOWNSHIP, PA 15108 A/E INFO

APPROVED

FOR COMMANDER NAVFAC

ACTIVITY: MARINE CORPS BASE CAMP LEJEUNE

SATISFACTORY TO DATE

DES SD | DRW LAK | CHK YPS

PM

BRANCH MANAGER

CHIEF ENG/ARCH

FIRE PROTECTION

DEPARTMENT OF THE NAVY
NAVAL FACILITIES ENGINEERING COMMAND ~ MID-ATLANTIC
ROICC FLORENCE CAMP LEJEUNE
MCB CAMP LEJEUNE

JACKSONVILLE, NC

P1338 II MEF SIMULATION/TRAINING CENTER

REPLACEMENT

POWER - FIRST FLOOR PLAN - AREA B

SCALE:	AS NOTED
EPROJECT NO.:	1590892
CONSTR. CONTR. NO.	N40085-20-C-0059
NAVFAC DRAWING NO.	
SHEET	OF

EP112

DP2 SUBMISSION – P1338 BUILDING - PRE-FINAL SUBMISSION

PLOTTED: 6/10/2021 5:44:01 PM

FILE NAME: BIM 360://MF PACKAGE 3/P1338 MEF SIM CTR-1590892-E.rvt

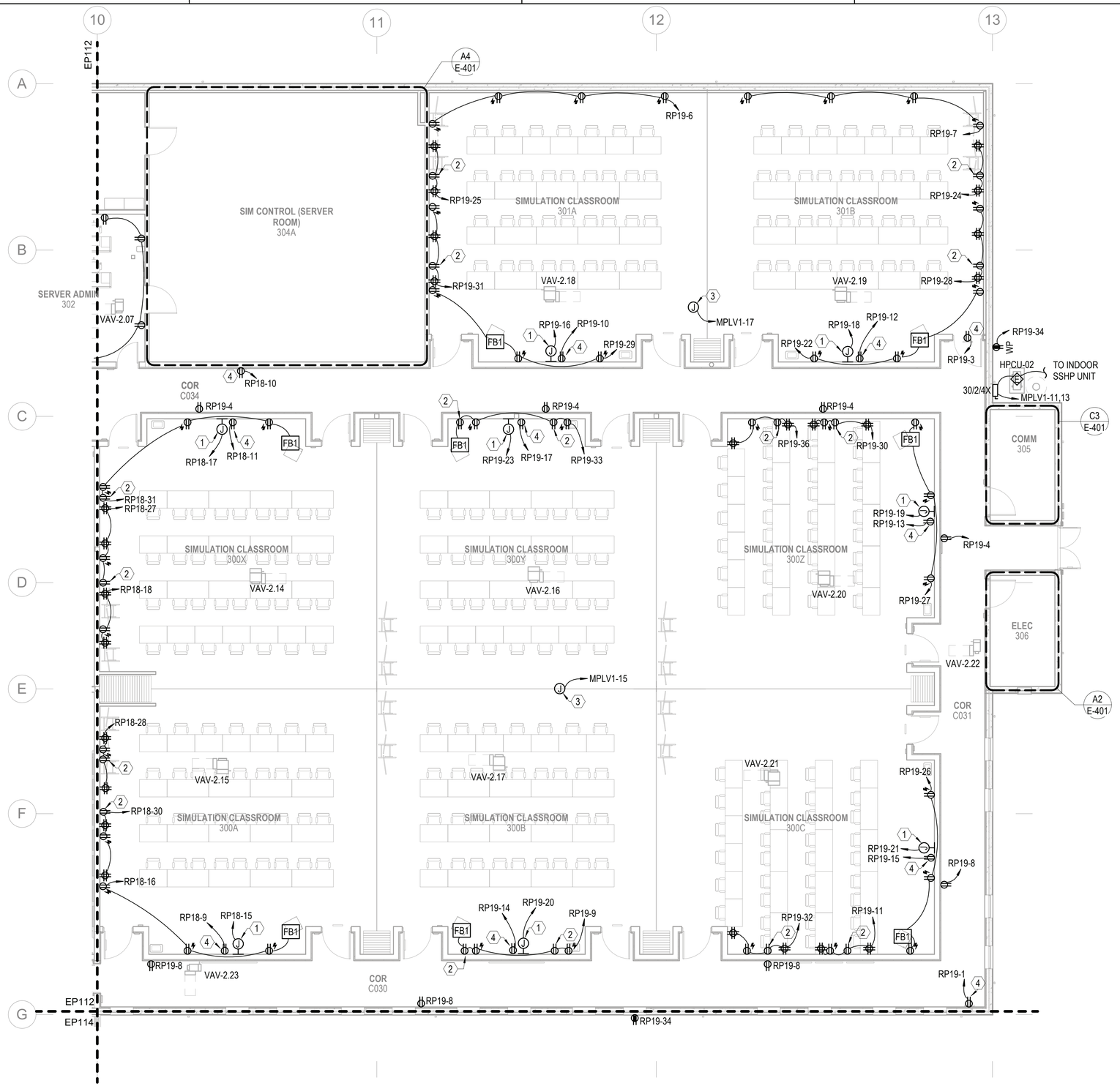

GENERAL NOTES

1. SEE SHEET E-001 FOR ELECTRICAL NOTES, SYMBOLS, AND ABBREVIATIONS.
2. ALL FLOORBOX AND JUNCTION BOX LOCATIONS ARE APPROXIMATE. FINAL LOCATIONS BASED ON EQUIPMENT AND FURNITURE FINAL LOCATIONS.

KEYNOTES

1. DEDICATED RECEPTACLE FOR AV FLAT PANEL. RECEPTACLE TO BE INSTALLED IN AV WALL BOX. REFERENCE TA-SERIES DRAWINGS FOR DETAILS, MOUNTING HEIGHT, AND LOCATION.
2. AV RECESSED DUPLEX RECETACLE. COORDINATE MOUNTING HEIGHT AND LOCATION WITH AV INSTALLATION.
3. JUNCTION BOX FOR VAV LOW VOLTAGE POWER. COORDINATE LOCATION AND QUANTITY WITH MECHANICAL INSTALLATION.
4. DEDICATED DUPLEX RECEPTACLE FOR SYNCHRONIZED CLOCK SYSTEM. COORDINATE FINAL HEIGHT AND LOCATION WITH INSTALLATION OF CLOCK.

KEYPLAN

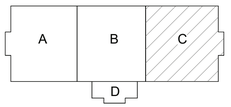

0 4'-0" 8'-0" 16'-0"

SCALE:0'-0 1/8" = 1'-0"

N

A1 POWER - FIRST FLOOR PLAN - AREA C

SCALE: 1/8" = 1'-0" (EP110)

APPR	DATE	DESCRIPTION	SYM

SEAL

RQ WM Jordan COMPANY – A JOINT VENTURE –

Michael Baker INTERNATIONAL

100 AIRSIDE DRIVE
MOON TOWNSHIP, PA 15108 A/E INFO

APPROVED

FOR COMMANDER NAVFAC

ACTIVITY
MARINE CORPS BASE CAMP LEJEUNE

SATISFACTORY TO DATE

DES SD | DRW LAK | CHK YPS

PM

BRANCH MANAGER

CHIEF ENG/ARCH

FIRE PROTECTION

DEPARTMENT OF THE NAVY
NAVAL FACILITIES ENGINEERING COMMAND
ROICC FLORENCE CAMP LEJEUNE
MCB CAMP LEJEUNE

NAVAL FACILITIES ENGINEERING COMMAND ~ MID-ATLANTIC
JACKSONVILLE, NC

JACKSONVILLE, NC
P1338 II MEF SIMULATION/TRAINING CENTER
REPLACEMENT

POWER - FIRST FLOOR PLAN - AREA C

SCALE: AS NOTED

EPROJECT NO.: 1500892

CONSTR. CONTR. NO.
N40085-20-C-0059

NAVFAC DRAWING NO.

SHEET OF

EP113

DP2 SUBMISSION – P1338 BUILDING -PRE-FINAL SUBMISSION

PLOTTED: 6/10/2021 5:44:05 PM

FILE NAME: BIM 360://HF PACKAGE 3/P1338 MEF SIM CTR-1500892-E.rvt

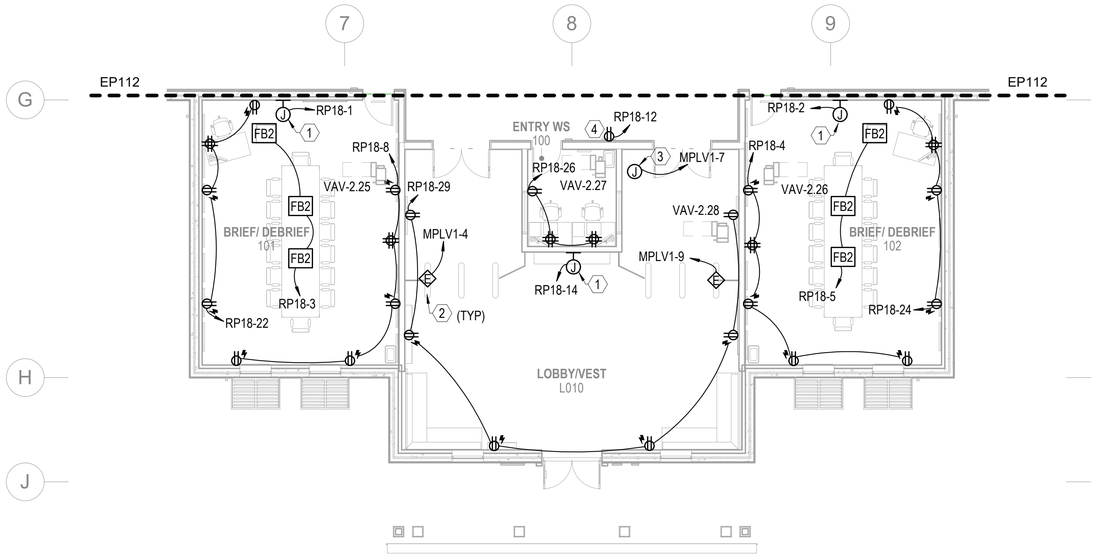

A1 POWER - FIRST FLOOR PLAN - AREA D

SCALE: 1/8" = 1'-0" (EP110)

GENERAL NOTES

1 SEE SHEET E-001 FOR ELECTRICAL NOTES, SYMBOLS, AND ABBREVIATIONS.

2 ALL FLOORBOX AND JUNCTION BOX LOCATIONS ARE APPROXIMATE. FINAL LOCATIONS BASED ON EQUIPMENT AND FURNITURE FINAL LOCATIONS.

KEYNOTES

1 DEDICATED RECEPTACLE FOR AV FLAT PANEL. RECEPTACLE TO BE INSTALLED IN AV WALL BOX. REFERENCE TA-SERIES DRAWINGS FOR DETAILS, MOUNTING HEIGHT, AND LOCATION.

2 POWER ELECTRICAL CONNECTION FOR TURNSTILE CONTROL GATE REMOTE POWER SUPPLY. COORDINATE FINAL POWER LOCATION WITH FINAL LOCATION OF REMOTE POWER SUPPLY. INSTALL PER MANUFACTURER'S RECOMMENDATIONS.

3 JUNCTION BOX FOR VAV LOW VOLTAGE POWER. COORDINATE LOCATION AND QUANTITY WITH MECHANICAL INSTALLATION.

4 DEDICATED DUPLEX RECEPTACLE FOR SYNCHRONIZED CLOCK SYSTEM. COORDINATE FINAL HEIGHT AND LOCATION WITH INSTALLATION OF CLOCK.

KEYPLAN

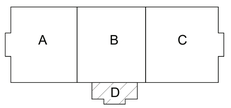

0 4'-0" 8'-0" 16'-0"

SCALE: 0'-0 1/8" = 1'-0"

N

SYM	DESCRIPTION	DATE	APPR

SEAL

RQ WM Jordan COMPANY – A JOINT VENTURE –

Michael Baker INTERNATIONAL
100 AIRSIDE DRIVE
MOON TOWNSHIP, PA 15108
A/E INFO

APPROVED

FOR COMMANDER NAVFAC

ACTIVITY
MARINE CORPS BASE
CAMP LEJEUNE

SATISFACTORY TO DATE

DES SD | DRW LAK | CHK YPS

PM

BRANCH MANAGER

CHIEF ENG/ARCH

FIRE PROTECTION

DEPARTMENT OF THE NAVY
NAVAL FACILITIES ENGINEERING COMMAND
ROICC FLORENCE CAMP LEJEUNE
MCB CAMP LEJEUNE

NAVAL FACILITIES ENGINEERING COMMAND – MID-ATLANTIC
JACKSONVILLE, NC

JACKSONVILLE, NC
P1338 II MEF SIMULATION/TRAINING CENTER
REPLACEMENT

POWER - FIRST FLOOR PLAN - AREA D

SCALE: AS NOTED

EPROJECT NO.: 1590892

CONSTR. CONTR. NO.
N40085-20-C-0059

NAVFAC DRAWING NO.

SHEET OF

EP114

DP2 SUBMISSION – P1338 BUILDING - PRE-FINAL SUBMISSION

PLOTTED: 6/10/2021 5:44:08 PM

FILE NAME: BIM 360://HF PACKAGE 3/P1338 MEF SIM CTR-1590892-E.rvt

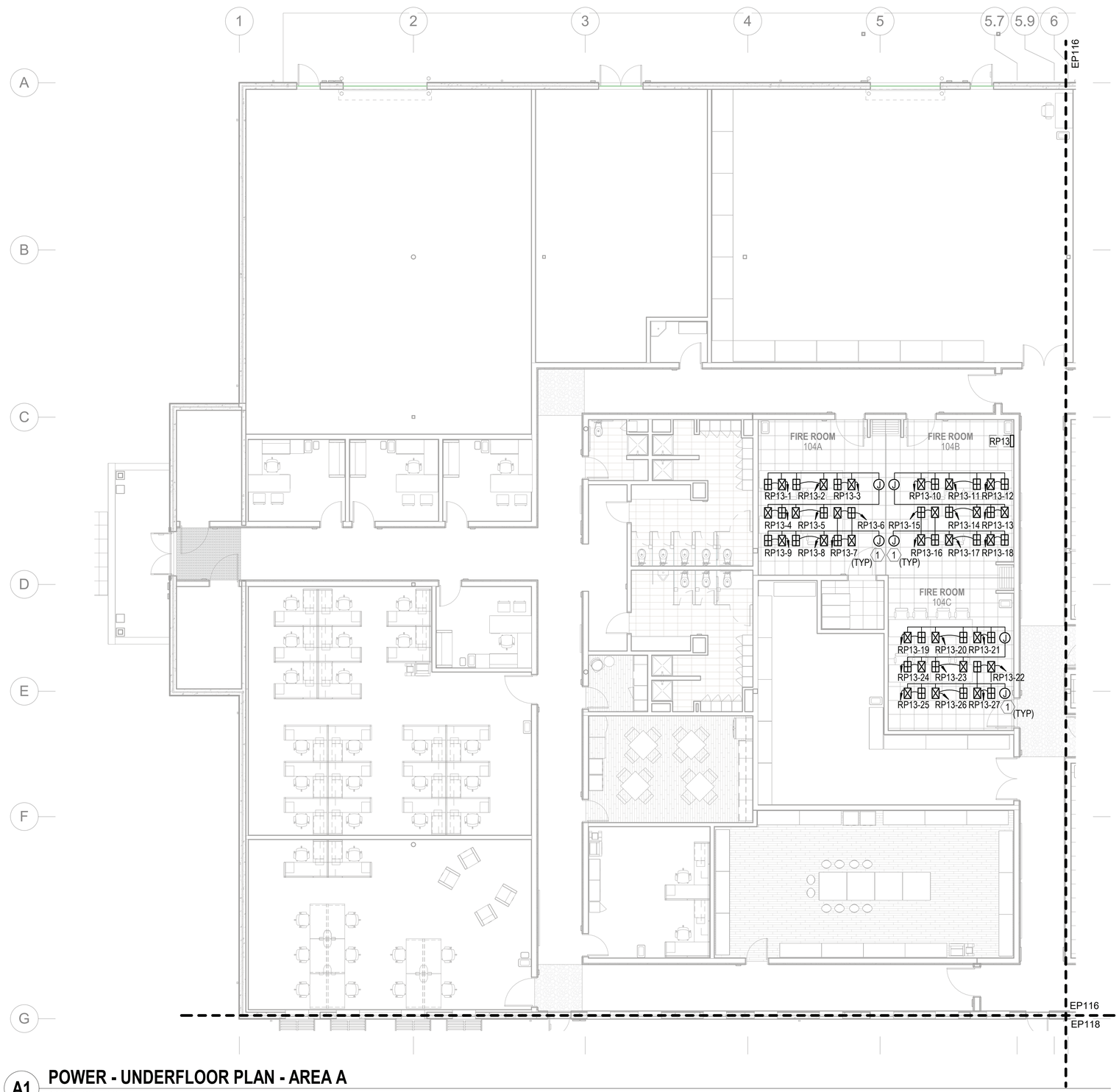

A1 POWER - UNDERFLOOR PLAN - AREA A

SCALE: 1/8" = 1'-0"

GENERAL NOTES

1 SEE SHEET E-001 FOR ELECTRICAL NOTES, SYMBOLS, AND ABBREVIATIONS.
2 ALL FLOORBOX AND JUNCTION BOX LOCATIONS ARE APPROXIMATE. FINAL LOCATIONS BASED ON EQUIPMENT AND FURNITURE FINAL LOCATIONS.

KEYNOTES

1 UNDERFLOOR MODULAR POWER MAIN DISTRIBUTION BOX. PREWIRED WITH HOME RUN CABLE BACK TO DESIGNATED RP PANEL WITHIN THE ROOM SERVING. COORDINATE FINAL LOCATION WITH INSTALLATION OF RAISED ACCESS FLOORING AND TELECOMMUNICATIONS CABLE TRAY. INSTALL PER MANUFACTURER'S RECOMMENDATIONS. FOR MORE INFORMATION SEE SPECIFICATIONS AND DETAILS ON SHEETS E-502 AND E-503.

KEYPLAN

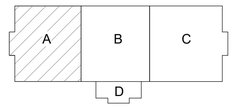

0 4'-0" 8'-0" 16'-0"
SCALE: 0'-0 1/8" = 1'-0"

N

SYM	DESCRIPTION	DATE	APPR

SEAL

IRQ WM Jordan COMPANY – A JOINT VENTURE –

Michael Baker INTERNATIONAL
100 AIRSIDE DRIVE
MOON TOWNSHIP, PA 15108
A/E INFO

APPROVED

FOR COMMANDER NAVFAC

ACTIVITY
MARINE CORPS BASE CAMP LEJEUNE

SATISFACTORY TO DATE

DES SD | DRW LAK | CHK YPS

PM

BRANCH MANAGER

CHIEF ENG/ARCH

FIRE PROTECTION

DEPARTMENT OF THE NAVY
NAVAL FACILITIES ENGINEERING COMMAND
ROICC FLORENCE CAMP LEJEUNE
MCB CAMP LEJEUNE

NAVAL FACILITIES ENGINEERING COMMAND ~ MID-ATLANTIC
JACKSONVILLE, NC

P1338 II MEF SIMULATION/TRAINING CENTER
REPLACEMENT
JACKSONVILLE, NC

POWER - UNDERFLOOR PLAN - AREA A

SCALE: AS NOTED
EPROJECT NO.: 1590892
CONSTR. CONTR. NO.
N40085-20-C-0059
NAVFAC DRAWING NO.
SHEET OF

EP115

DP2 SUBMISSION – P1338 BUILDING - PRE-FINAL SUBMISSION

PLOTTED: 6/10/2021 5:44:12 PM

FILE NAME: BIM 360://HF PACKAGE 3/P1338 MEF SIM CTR-1590892-E.rvt

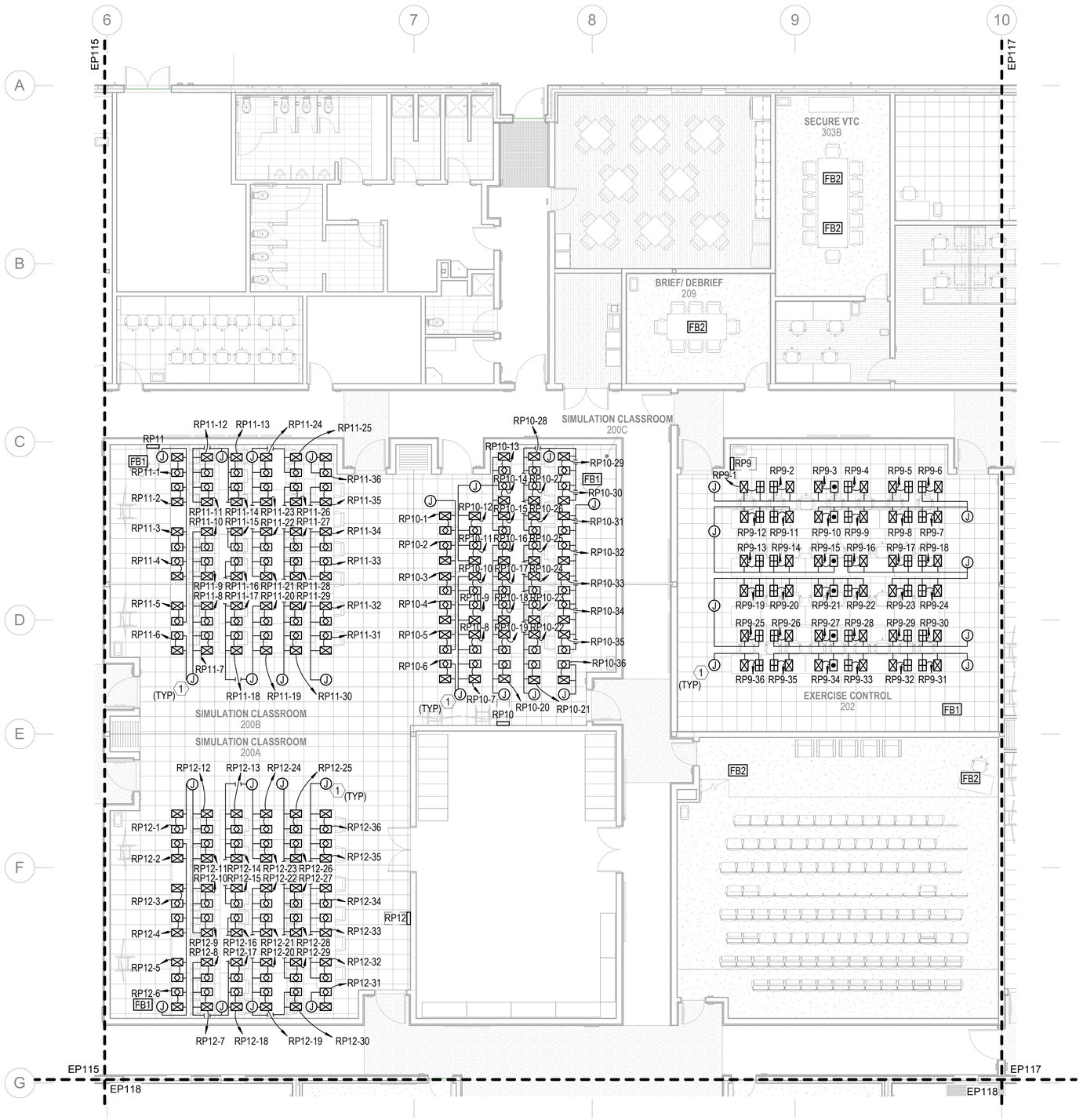

A1 POWER - UNDERFLOOR PLAN - AREA B

SCALE: 1/8" = 1'-0"

GENERAL NOTES

1 SEE SHEET E-001 FOR ELECTRICAL NOTES, SYMBOLS, AND ABBREVIATIONS.

2 ALL FLOORBOX AND JUNCTION BOX LOCATIONS ARE APPROXIMATE. FINAL LOCATIONS BASED ON EQUIPMENT AND FURNITURE FINAL LOCATIONS.

KEYNOTES

1 UNDERFLOOR MODULAR POWER MAIN DISTRIBUTION BOX. PREWIRED WITH HOME RUN CABLE BACK TO DESIGNATED RP PANEL WITHIN THE ROOM SERVING. COORDINATE FINAL LOCATION WITH INSTALLATION OF RAISED ACCESS FLOORING AND TELECOMMUNICATIONS CABLE TRAY. INSTALL PER MANUFACTURER'S RECOMMENDATIONS. FOR MORE INFORMATION SEE SPECIFICATIONS AND DETAILS ON SHEETS E-502 AND E-503.

KEYPLAN

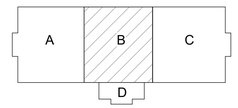

0 4'-0" 8'-0" 16'-0"

SCALE: 0'-0 1/8" = 1'-0"

N

APPR	DATE	DESCRIPTION	SYM

SEAL

RQ WM Jordan COMPANY – A JOINT VENTURE –

Michael Baker INTERNATIONAL

100 AIRSIDE DRIVE
MOON TOWNSHIP, PA 15108 A/E INFO

APPROVED

FOR COMMANDER NAVFAC

ACTIVITY
MARINE CORPS BASE
CAMP LEJEUNE

SATISFACTORY TO DATE

DES SD | DRW LAK | CHK YPS

PM

BRANCH MANAGER

CHIEF ENG/ARCH

FIRE PROTECTION

DEPARTMENT OF THE NAVY
NAVAL FACILITIES ENGINEERING COMMAND
ROICC FLORENCE CAMP LEJEUNE
MCB CAMP LEJEUNE

NAVAL FACILITIES ENGINEERING COMMAND – MID-ATLANTIC
JACKSONVILLE, NC

JACKSONVILLE, NC
P1338 II MEF SIMULATION/TRAINING CENTER
REPLACEMENT

POWER - UNDERFLOOR PLAN - AREA B

SCALE: AS NOTED

EPROJECT NO.: 1590892

CONSTR. CONTR. NO.
N40085-20-C-0059

NAVFAC DRAWING NO.

SHEET OF

EP116

DP2 SUBMISSION – P1338 BUILDING - PRE-FINAL SUBMISSION

PLOTTED: 6/10/2021 5:44:18 PM

FILE NAME: BIM 360://HF PACKAGE 3/P1338 MEF SIM CTR-1590892-E.rvt

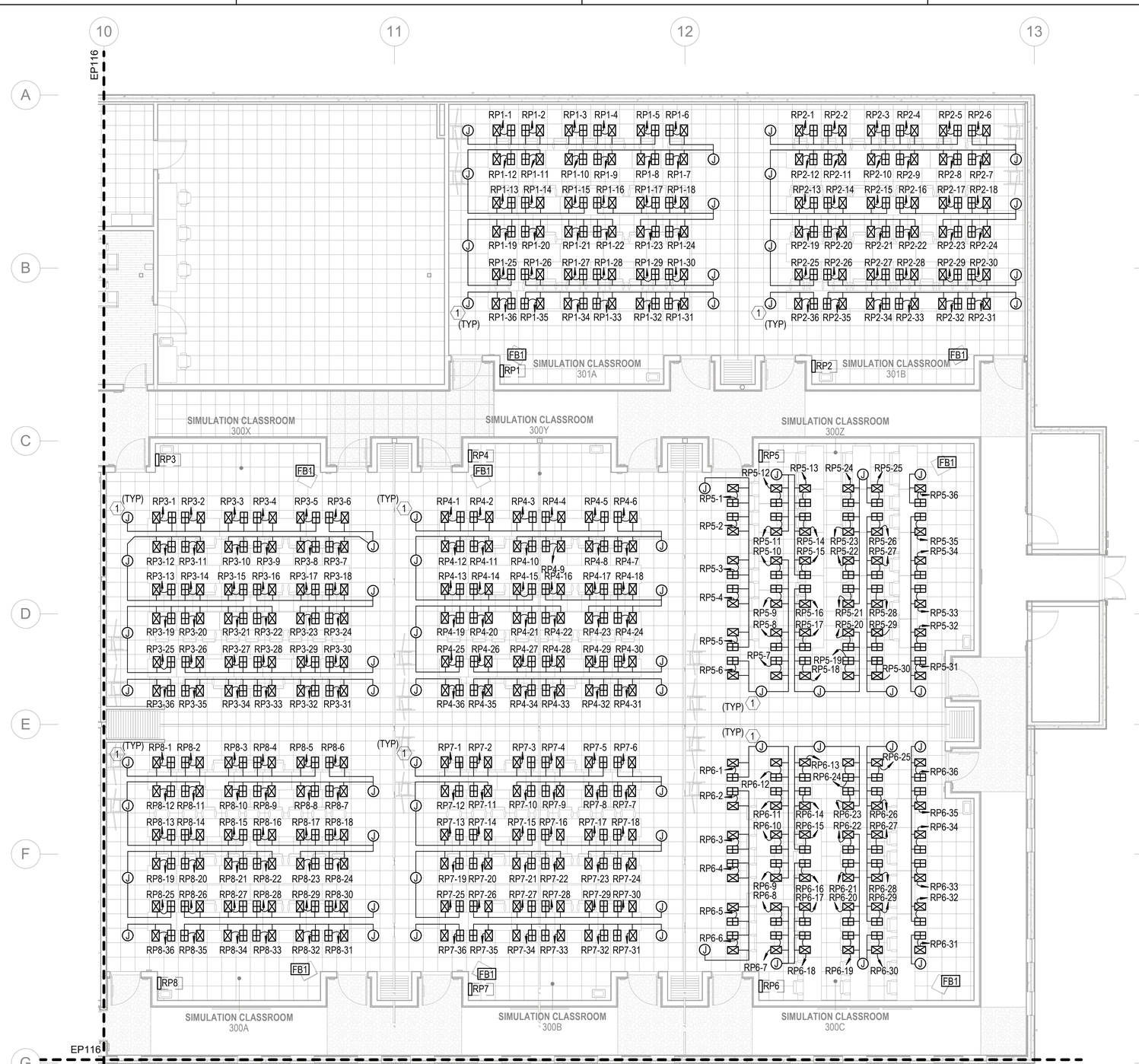

A1 POWER - UNDERFLOOR PLAN - AREA C

SCALE: 1/8" = 1'-0"

GENERAL NOTES

1 SEE SHEET E-001 FOR ELECTRICAL NOTES, SYMBOLS, AND ABBREVIATIONS.
2 ALL FLOORBOX AND JUNCTION BOX LOCATIONS ARE APPROXIMATE. FINAL LOCATIONS BASED ON EQUIPMENT AND FURNITURE FINAL LOCATIONS.

KEYNOTES

1 UNDERFLOOR MODULAR POWER MAIN DISTRIBUTION BOX. PREWIRED WITH HOME RUN CABLE BACK TO DESIGNATED RP PANEL WITHIN THE ROOM SERVING. COORDINATE FINAL LOCATION WITH INSTALLATION OF RAISED ACCESS FLOORING AND TELECOMMUNICATIONS CABLE TRAY. INSTALL PER MANUFACTURER'S RECOMMENDATIONS. FOR MORE INFORMATION SEE SPECIFICATIONS AND DETAILS ON SHEETS E-502 AND E-503.

KEYPLAN

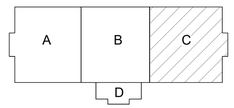

0 4'-0" 8'-0" 16'-0"

SCALE: 0'-0 1/8" = 1'-0"

N

NO.	SYM	DESCRIPTION	DATE	APPR

NAVFAC

SEAL

RQ W.M. Jordan COMPANY – A JOINT VENTURE –

Michael Baker INTERNATIONAL
100 AIRSIDE DRIVE
MOON TOWNSHIP, PA 15108 A/E INFO

APPROVED

FOR COMMANDER NAVFAC

ACTIVITY
MARINE CORPS BASE
CAMP LEJEUNE

SATISFACTORY TO DATE

DES	SD	DRW	LAK	CHK	YPS

PM

BRANCH MANAGER

CHIEF ENG/ARCH

FIRE PROTECTION

DEPARTMENT OF THE NAVY
NAVAL FACILITIES ENGINEERING COMMAND
ROICC FLORENCE CAMP LEJEUNE
MCB CAMP LEJEUNE

NAVAL FACILITIES ENGINEERING COMMAND – MID-ATLANTIC
JACKSONVILLE, NC

JACKSONVILLE, NC
P1338 II MEF SIMULATION/TRAINING CENTER
REPLACEMENT

POWER - UNDERFLOOR PLAN - AREA C

SCALE: AS NOTED
EPROJECT NO.: 1590892
CONSTR. CONTR. NO.
N40085-20-C-0059
NAVFAC DRAWING NO.
SHEET OF

EP117

DP2 SUBMISSION – P1338 BUILDING - PRE-FINAL SUBMISSION

PLOTTED: 6/10/2021 5:44:24 PM

FILE NAME: BIM 360://HF PACKAGE 3/P1338 MEF SIM CTR-1590892-E.rvt

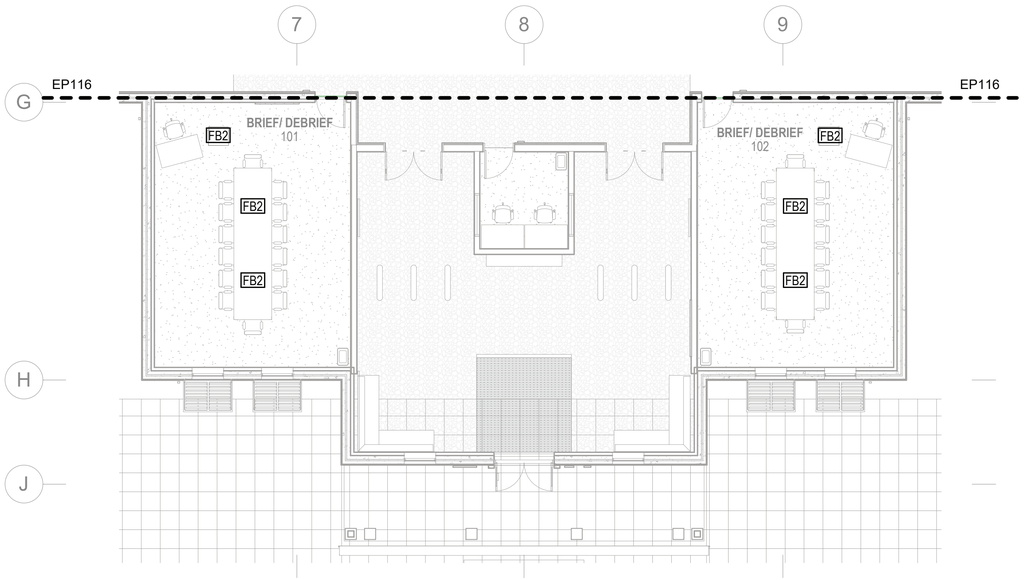

A1 POWER - UNDERFLOOR PLAN - AREA D

SCALE: 1/8" = 1'-0"

GENERAL NOTES

1 SEE SHEET E-001 FOR ELECTRICAL NOTES, SYMBOLS, AND ABBREVIATIONS.
2 ALL FLOORBOX AND JUNCTION BOX LOCATIONS ARE APPROXIMATE. FINAL LOCATIONS BASED ON EQUIPMENT AND FURNITURE FINAL LOCATIONS.

KEYPLAN

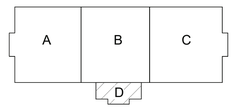



SCALE: 0'-0 1/8" = 1'-0"

NO.	DESCRIPTION	DATE	APPR

NAVFAC

SEAL

RQ WM Jordan COMPANY – A JOINT VENTURE –

Michael Baker INTERNATIONAL

100 AIRSIDE DRIVE
MOON TOWNSHIP, PA 15108 A/E INFO

APPROVED

FOR COMMANDER NAVFAC

ACTIVITY
MARINE CORPS BASE
CAMP LEJEUNE

SATISFACTORY TO DATE

DES SD | DRW LAK | CHK YPS

PM

BRANCH MANAGER

CHIEF ENG/ARCH

FIRE PROTECTION

DEPARTMENT OF THE NAVY
NAVAL FACILITIES ENGINEERING COMMAND
ROICC FLORENCE CAMP LEJEUNE

NAVAL FACILITIES ENGINEERING COMMAND ~ MID-ATLANTIC
JACKSONVILLE, NC

MCB CAMP LEJEUNE

P1338 II MEF SIMULATION/TRAINING CENTER
REPLACEMENT
JACKSONVILLE, NC

POWER - UNDERFLOOR PLAN - AREA D

SCALE: AS NOTED

EPROJECT NO.: 1590892

CONSTR. CONTR. NO.
N40085-20-C-0059

NAVFAC DRAWING NO.

SHEET OF

EP118

DP2 SUBMISSION – P1338 BUILDING - PRE-FINAL SUBMISSION

PLOTTED: 6/10/2021 5:44:27 PM

FILE NAME: BIM 360://HF PACKAGE 3/P1338 MEF SIM CTR-1590892-E.rvt

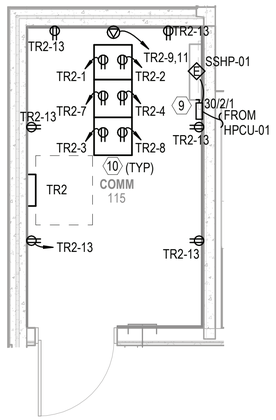

POWER - ENLARGED PLAN C1
SCALE: 1/4" = 1'-0" EP111

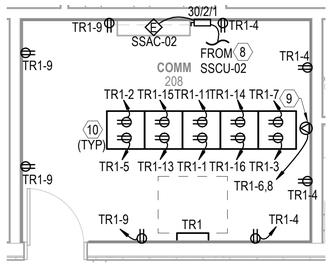

POWER - ENLARGED PLAN C2
SCALE: 1/4" = 1'-0" EP111

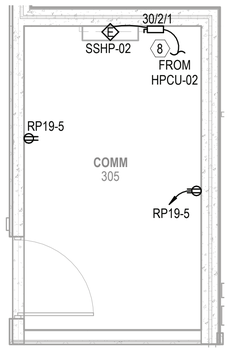

POWER - ENLARGED PLAN C3
SCALE: 1/4" = 1'-0" EP111

KEYNOTES

1. AV RECESSED QUAD RECEPTACLE. COORDINATE MOUNTING HEIGHT AND LOCATION WITH AV INSTALLATION.
2. NEMA L5-30P PLUG FOR 3KVA UPS INPUT CONNECTION.
3. NEMA L5-15P PLUG FOR 1KVA UPS INPUT CONNECTION.
4. POWER ELECTRICAL CONNECTION FOR HARDWIRE INPUT TO 10KVA UPS.
5. NEMA L6-30R RECEPTACLE FOR 2KVA UPS INPUT CONNECTION.
6. PROVIDE 4-INCH THICK CONCRETE PAD WITH CHAMFERED EDGES FOR FLOOR MOUNTED EQUIPMENT. EXTEND PAD 6-INCH BEYOND EDGE OF EQUIPMENT.
7. PROVIDE FIRE-RESISTANT, HEAT-INSULATING BARRIER. COORDINATE WITH FINAL LOCATION OF TRANSFORMER.
8. INDOOR UNIT POWERED BY OUTDOOR UNIT. CONTROL WIRING BETWEEN INDOOR AND OUTDOOR UNITS BY MECHANICAL CONTRACTOR. CONDUIT AND POWER WIRING BETWEEN INDOOR AND OUTDOOR UNITS BY ELECTRICAL CONTRACTOR. SEE MECH. SCHEDULES FOR ADDITIONAL INFORMATION.
9. L6-30R TWIST LOCK RECEPTACLE - 208V, 1PH, 30A. RECEPTACLE MUST BE INSTALLED 6" ABOVE AND 6" BEHIND TELECOM RACKS ON ITS OWN DEDICATED STRUCTURE.
10. TWO (2) DEDICATED 20AMP DUPLEX RECEPTACLES PER TELECOMMUNICATIONS RACK. COORDINATE MOUNTING AND INSTALLATION OF THE RECEPTACLES WITH THE ACTIVITY.
11. TWO (2) DEDICATED 20AMP DUPLEX RECEPTACLES PER SERVER RACK. COORDINATE MOUNTING AND INSTALLATION OF THE RECEPTACLES WITH THE ACTIVITY.
12. CEILING MOUNTED JUNCTION BOX FOR POWER TO LOUVER TRANSFORMERS. 120V POWER SHALL BE PROVIDED BY THE EC TO EACH TRANSFORMER. LOW VOLTAGE WIRING FROM THE TRANSFORMER TO THE LOUVER IS BY OTHERS. COORDINATE LOCATION AND QUANTITY WITH MECHANICAL INSTALLATION.
13. EMERGENCY POWER OFF (EPO) BOX. EACH EPO BOX HAS AN EIGHT (8) CIRCUIT CAPACITY WITH ONE CIRCUIT BEING REQUIRED FOR EACH UPS. USE THE SAME BRANCH CIRCUIT FOR ALL EPO BOXES IN THE ROOM. SEE DETAILS ON SHEETS E-504 AND E-505 FOR MORE INFORMATION. INSTALL PER MANUFACTURER'S RECOMMENDATIONS.

GENERAL NOTES

1. SEE SHEET E-001 FOR ELECTRICAL NOTES, SYMBOLS, AND ABBREVIATIONS.
2. ALL FLOORBOX AND JUNCTION BOX LOCATIONS ARE APPROXIMATE. FINAL LOCATIONS BASED ON EQUIPMENT AND FURNITURE FINAL LOCATIONS.

POWER - ENLARGED PLAN A1
SCALE: 1/4" = 1'-0" EP111

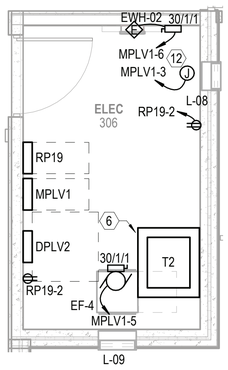

POWER - ENLARGED PLAN A2
SCALE: 1/4" = 1'-0" EP111

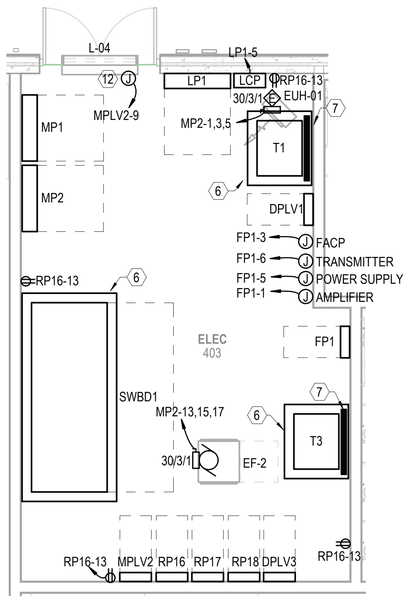

POWER - ENLARGED PLAN A3
SCALE: 1/4" = 1'-0" EP111

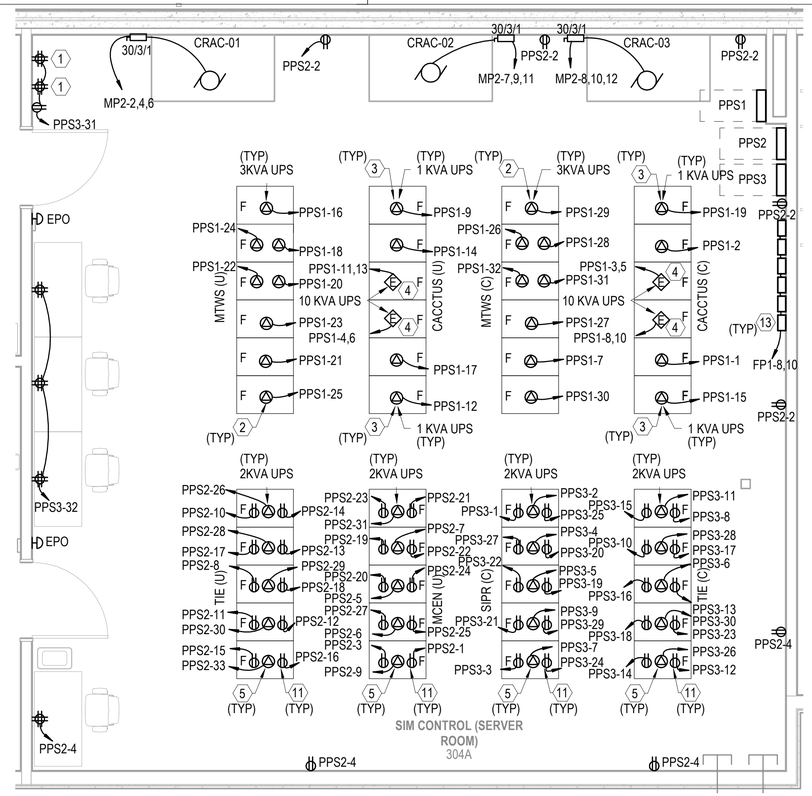

POWER - ENLARGED PLAN A4
SCALE: 1/4" = 1'-0" EP111

0 2'-0" 4'-0" 8'-0"
SCALE:0'-0 1/4" = 1'-0"

N

NO.	DESCRIPTION	DATE	APPR
SYM			

SEAL

Michael Baker INTERNATIONAL
100 AIRSIDE DRIVE
MOON TOWNSHIP, PA 15108
A/E INFO

APPROVED

FOR COMMANDER NAVFAC

ACTIVITY
MARINE CORPS BASE CAMP LEJEUNE

SATISFACTORY TO DATE

DES SD | DRW LAK | CHK YPS

PM

BRANCH MANAGER

CHIEF ENG/ARCH

FIRE PROTECTION

NAVAL FACILITIES ENGINEERING COMMAND ~ MID-ATLANTIC
JACKSONVILLE, NC

DEPARTMENT OF THE NAVY
NAVAL FACILITIES ENGINEERING COMMAND
ROICC FLORENCE CAMP LEJEUNE
MCB CAMP LEJEUNE

JACKSONVILLE, NC
P1338 II MEF SIMULATION/TRAINING CENTER
REPLACEMENT
ELECTRICAL - ENLARGED PLANS

SCALE: AS NOTED
EPROJECT NO.: 1590892
CONSTR. CONTR. NO.
N40085-20-C-0059
NAVFAC DRAWING NO.
SHEET OF
E-401

DP2 SUBMISSION – P1338 BUILDING - PRE-FINAL SUBMISSION

PLOTTED: 6/10/2021 5:41:59 PM
FILE NAME: BIM 360://HF PACKAGE 3/P1338 MEF SIM CTR-1590892-E.rvt

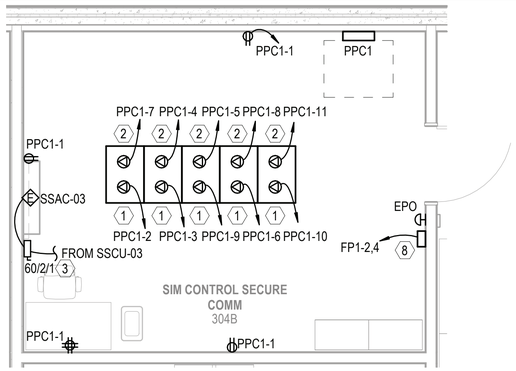

POWER - ENLARGED PLAN

SCALE: 1/4" = 1'-0" EP111 C1

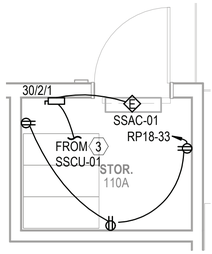

POWER - ENLARGED PLAN

SCALE: 1/4" = 1'-0" EP111 C2

KEYNOTES

1. NEMA L5-30R RECEPTACLE FOR TELECOMMUNICATIONS RACK. MOUNT RECEPTACLE ABOVE TELECOMMUNICATIONS RACK.
2. NEMA 5-20R RECEPTACLE FOR TELECOMMUNICATIONS RACK. MOUNT RECEPTACLE ABOVE TELECOMMUNICATIONS RACK.
3. INDOOR UNIT POWERED BY OUTDOOR UNIT. CONTROL WIRING BETWEEN INDOOR AND OUTDOOR UNITS BY MECHANICAL CONTRACTOR. CONDUIT AND POWER WIRING BETWEEN INDOOR AND OUTDOOR UNITS BY ELECTRICAL CONTRACTOR. SEE MECH. SCHEDULES FOR ADDITIONAL INFORMATION.
4. PROVIDE EMERGENCY POWER OFF MUSHROOM STYLE PUSH OFF/PULL ON WITH CLEAR COVER. PROVIDE LABEL FOR SWITCH: "EMERGENCY BOILER SHUT OFF SWITCH. PULL TO RESET." COMPLY WITH ALL ASME CSD-1 REQUIREMENTS. CONFIRM LOCATION WITH AUTHORITY HAVING JURISDICTION (AHJ) FOR APPROVAL PRIOR TO INSTALLING.
5. CONDUIT BY ELECTRICAL CONTRACTOR. LOW VOLTAGE WIRING BY OTHERS.
6. PROVIDE 120V POWER CONNECTION FOR DDC CONTROLLER. COORDINATE EXACT LOCATION WITH MECHANICAL/CONTROLS CONTRACTOR PRIOR TO ROUGH IN.
7. CEILING MOUNTED JUNCTION BOX FOR POWER TO LOUVER TRANSFORMERS. 120V POWER SHALL BE PROVIDED BY THE EC TO EACH TRANSFORMER. LOW VOLTAGE WIRING FROM THE TRANSFORMER TO THE LOUVER IS BY OTHERS. COORDINATE LOCATION AND QUANTITY WITH MECHANICAL INSTALLATION.
8. EMERGENCY POWER OFF (EPO) BOX. EACH EPO BOX HAS AN EIGHT (8) CIRCUIT CAPACITY WITH ONE CIRCUIT BEING REQUIRED FOR EACH UPS. USE THE SAME BRANCH CIRCUIT FOR ALL EPO BOXES IN THE ROOM. SEE DETAILS ON SHEETS E-504 AND E-505 FOR MORE INFORMATION. INSTALL PER MANUFACTURER'S RECOMMENDATIONS.
9. PUMPS ARE VERTICALLY STACKED. COORDINATE WITH INSTALLATION OF THE PUMPS.
10. ELECTRICAL CONNECTION FOR CHILLER HEAT TRACING CONTROL PANEL. COORDINATE EXACT POWER CONNECTION LOCATION WITH MECHANICAL DRAWINGS PRIOR TO ROUGH IN. PROVIDE 20A BREAKER WITH 30mA GROUND FAULT TRIP. ALL WIRING AND INSTALLATION PER MANUFACTURER'S RECOMMENDATIONS.

GENERAL NOTES

1. SEE SHEET E-001 FOR ELECTRICAL NOTES, SYMBOLS, AND ABBREVIATIONS.
2. ALL FLOORBOX AND JUNCTION BOX LOCATIONS ARE APPROXIMATE. FINAL LOCATIONS BASED ON EQUIPMENT AND FURNITURE FINAL LOCATIONS.

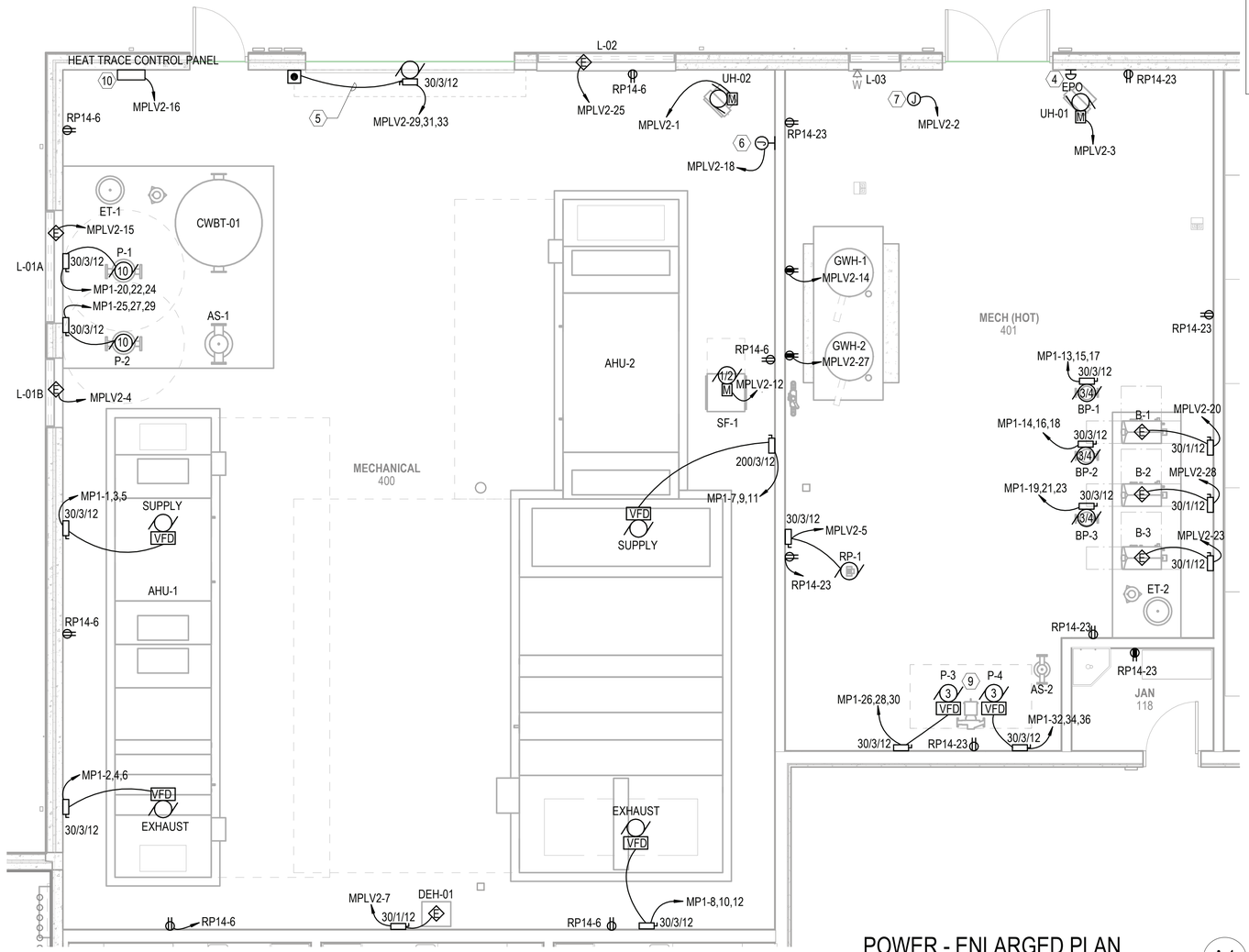

POWER - ENLARGED PLAN

SCALE: 1/4" = 1'-0" EP111 A1

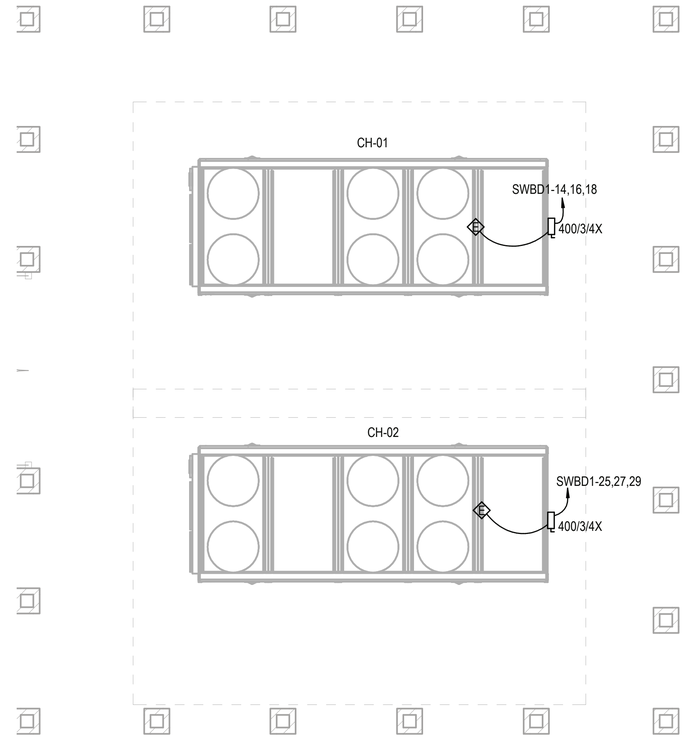

POWER - ENLARGED PLAN

SCALE: 1/4" = 1'-0" ES101 A4

SCALE: 0'-0 1/4" = 1'-0"

APPR			
DATE			
DESCRIPTION			
SYM			

SEAL

Michael Baker INTERNATIONAL
100 AIRSIDE DRIVE
MOON TOWNSHIP, PA 15108
A/E INFO

APPROVED

FOR COMMANDER NAVFAC

ACTIVITY
MARINE CORPS BASE
CAMP LEJEUNE

SATISFACTORY TO DATE

DES SD | DRW LAK | CHK YPS

PM

BRANCH MANAGER

CHIEF ENG/ARCH

FIRE PROTECTION

DEPARTMENT OF THE NAVY
NAVAL FACILITIES ENGINEERING COMMAND
ROICC FLORENCE CAMP LEJEUNE
MCB CAMP LEJEUNE

NAVAL FACILITIES ENGINEERING COMMAND ~ MID-ATLANTIC
JACKSONVILLE, NC

JACKSONVILLE, NC
P1338 II MEF SIMULATION/TRAINING CENTER
REPLACEMENT

ELECTRICAL - ENLARGED PLANS

SCALE: AS NOTED
EPROJECT NO.: 1590892
CONSTR. CONTR. NO.
N40085-20-C-0059
NAVFAC DRAWING NO.
SHEET OF
E-402

PLOTTED: 6/10/2021 5:42:04 PM
FILE NAME: BIM 360://HF PACKAGE 3/P1338 MEF SIM CTR-1590892-E.rvt

DP2 SUBMISSION – P1338 BUILDING - PRE-FINAL SUBMISSION

FIXTURE: A1, A2, A3, B1, C1

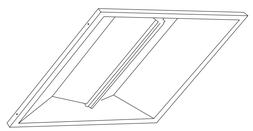

LUMINAIRE REQUIREMENTS:

1. HOUSING - DIE-FORMED, COLD ROLLED STEEL, WITH ONE-PIECE LOWER REFLECTOR HAVING TEXTURED, HIGH REFLECTANCE, WHITE POLYESTER POWDER-COATED FINISH. OPTIONAL SIZES OF 1FT x 4FT, 2FT x 2FT, AND 2FT x 4FT AVAILABLE.
2. LIGHT SOURCE - UPWARD-FACING LEDS WITH DIFFUSE LENS TO ELIMINATE DIRECT VIEW OF LIGHT SOURCE. 4000K COLOR TEMPERATURE UON, MAXIMUM BINNING TOLERANCE OF A 4-STEP MCADAM ELLIPSE, MINIMUM EFFICACY OF 90 LUMENS/WATT, WITH A MINIMUM CRI OF 82. INITIAL LUMEN OUTPUT AS INDICATED IN LUMINAIRE SCHEDULE.
3. DRIVER - REPLACEABLE, INTEGRAL, HIGH-EFFICIENCY DRIVER WITH MINIMUM 0.9 PF, OPERATING VOLTAGE OF 120-277V, THERMAL MANAGEMENT, < 20% TOTAL HARMONIC DISTORTION. STEP-DIMMABLE OR FULLY DIMMABLE AS INDICATED IN LUMINAIRE SCHEDULE.
4. CERTIFICATION - UL 1598, DAMP LOCATION, DLC QUALIFIED, AND ROHS COMPLIANT. COMPLIES WITH LM79, LM80 AND TM21 TESTING STANDARDS. IC RATED WHEN INDICATED.
5. MOUNTING - RECESSED IN SUSPENDED ACOUSTICAL TILE OR HARD CEILING.
6. THIS SKETCH IS A NON-PROPRIETARY GRAPHIC REPRESENTATION OF A LUMINAIRE THAT MAY MEET THE SPECIFICATION REQUIREMENTS. IT IS NOT INTENDED TO INDICATE A CERTAIN MANUFACTURER OR PREFERENCE.

DIRECT/INDIRECT LED TROFFER

REVISED:	APRIL 2016	LIGHTING PLATE:	NL-1

FIXTURE: E1, S1

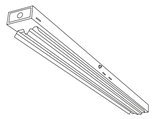

LUMINAIRE REQUIREMENTS:

1. HOUSING - DIE-FORMED, COLD-ROLLED STEEL, WITH REINFORCEMENT RIBS FOR RIGIDITY AND SPECULAR ALUMINUM OR HIGHLY-REFLECTIVE PAINTED STEEL REFLECTORS. OPTIONAL LENGTHS OF 4FT OR 8FT.
2. FINISH - MULTI-STAGE PHOSPHATE BONDING TREATMENT FINISHED WITH HIGH-REFLECTANCE, WHITE POLYESTER POWDER COAT, PAINTED AFTER FABRICATION.
3. LIGHT SOURCE - SOLID STATE LEDS WITH MINIMUM 50K HOURS RATED LIFE AT L70, 4000K CCT UON, MINIMUM 80 CRI, MAXIMUM 4-STEP MCADAM ELLIPSE BINNING TOLERANCE FOR COLOR CONSISTENCY, AND MINIMUM EFFICACY OF 100 LUMENS/WATT. INITIAL LUMEN OUTPUT AS INDICATED IN LUMINAIRE SCHEDULE.
4. DRIVER - REPLACEABLE, INTEGRAL, HIGH-EFFICIENCY DRIVER WITH MINIMUM 0.9 PF, OPERATING VOLTAGE OF 120-277V, THERMAL MANAGEMENT, < 20% TOTAL HARMONIC DISTORTION. ON-OFF CONTROL, STEP-DIMMABLE OR FULLY DIMMABLE AS INDICATED.
5. CERTIFICATION - UL 1598, DAMP LOCATION, DLC QUALIFIED, AND ROHS COMPLIANT. COMPLIES WITH LM79, LM80 AND TM21 TESTING STANDARDS. UL 924 WHEN EQUIPPED WITH EMERGENCY BATTERY BACK-UP.
6. MOUNTING - SURFACE ON CEILING OR SUSPENDED
7. OPTIONS - WIRE GUARD, CHAIN, STEM OR SWIVEL STEM HANGERS.
8. THIS SKETCH IS A NON-PROPRIETARY GRAPHIC REPRESENTATION OF A LUMINAIRE THAT MAY MEET THE SPECIFICATION REQUIREMENTS. IT IS NOT INTENDED TO INDICATE A CERTAIN MANUFACTURER OR PREFERENCE.

LED INDUSTRIAL STRIP

REVISED:	APRIL 2016	LIGHTING PLATE:	NL-7

FIXTURE: D1, D2, D3, D4, D5

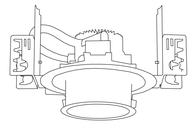

LUMINAIRE REQUIREMENTS:

1. HOUSING - DIE-FORMED, COLD-ROLLED STEEL, OR FORGED ALUMINUM WITH HEAT SINK. DRIVER MUST BE ACCESSIBLE FROM BOTTOM OF LUMINAIRE. PROVIDE T-BAR HANGERS FOR INSTALLATION IN ACOUSTICAL TILE CEILINGS OR TABS WHEN MOUNTING IN HARD CEILINGS.
2. REFLECTOR AND TRIM - SPECIFICATION GRADE, LOW IRRIDESCENT, SPECULAR ALUMINUM REFLECTOR WITH METALLIC OR PAINTED TRIM RING.
3. LIGHT SOURCE - SOLID STATE LEDS WITH MINIMUM 50K HOURS RATED LIFE AT L70, 4000K CCT UON, MINIMUM 80 CRI, MAXIMUM 4-STEP MCADAM ELLIPSE BINNING TOLERANCE FOR COLOR CONSISTENCY, AND MINIMUM EFFICACY OF 90 LUMENS/WATT. INITIAL LUMEN OUTPUT AS INDICATED IN LUMINAIRE SCHEDULE.
4. DRIVER - REPLACEABLE, INTEGRAL, HIGH-EFFICIENCY DRIVER WITH MINIMUM 0.9 PF, OPERATING VOLTAGE OF 120-277V, THERMAL MANAGEMENT, < 20% TOTAL HARMONIC DISTORTION. ON-OFF CONTROL, STEP-DIMMABLE OR FULLY DIMMABLE AS INDICATED.
5. CERTIFICATION - UL 1598, DAMP LOCATION, DLC QUALIFIED, AND ROHS COMPLIANT. COMPLIES WITH LM79, LM80 AND TM21 TESTING STANDARDS. UL 924 WHEN EQUIPPED WITH EMERGENCY BATTERY BACK-UP.
6. MOUNTING - RECESSED IN HARD OR ACOUSTICAL TILE CEILING.
7. OPTIONS - EMERGENCY BATTERY BACK-UP, WALL-WASH TRIM, IC RATED FOR DIRECT CONTACT WITH INSULATION, VARIOUS APERTURE DIAMETERS, AND VARIOUS GLASS LENSES.
8. THIS SKETCH IS A NON-PROPRIETARY GRAPHIC REPRESENTATION OF A LUMINAIRE THAT MAY MEET THE SPECIFICATION REQUIREMENTS. IT IS NOT INTENDED TO INDICATE A CERTAIN MANUFACTURER OR PREFERENCE.

LED RECESSED DOWNLIGHT

REVISED:	APRIL 2016	LIGHTING PLATE:	NL-19

FIXTURE: W1

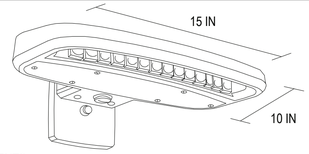

LUMINAIRE REQUIREMENTS:

1. HOUSING - DIE-CAST OR EXTRUDED ALUMINUM WITH INTEGRAL PASSIVE COOLING MECHANISM. HEAT SINK SHALL BE INCORPORATED DIRECTLY INTO HOUSING OR DRIVER COMPARTMENT TO ENSURE MAXIMUM HEAT TRANSFER AND DISSIPATION.
2. FINISH - MULTI-STAGE PRE-TREATMENT, FINISHED WITH BAKED-ON POLYESTER POWDER COAT. FINISH SHALL PASS 2500 HOUR SALT SPRAY TEST PER ASTM B117. STANDARD FINISH IS DARK BRONZE, WITH OTHER CUSTOM COLORS AVAILABLE.
3. POWER SUPPLY/LED DRIVER - CLASS 1 DRIVER SHALL OPERATE AT 120/277 VOLTS, 50/60 HZ, WITH OTHER VOLTAGES OPTIONAL; POWER FACTOR GREATER THAN 0.9 AND THD LESS THAN 20% AT FULL LOAD. MINIMUM EFFICACY SHALL BE 60 LM/W AT MAXIMUM 600mA OPERATING CURRENT.
4. LED OPTICAL ASSEMBLY - PRECISION MOLDED ACRYLIC LENS PROVIDED FOR MULTIPLE HIGH-POWERED LEDS PRODUCING NEMA TYPE III DISTRIBUTION OR AS OTHERWISE INDICATED. BUG UPLIGHT RATING OF U0, WITH GLARE RATING AS DETERMINED BY LIGHTING ZONE INSTALLED. MINIMUM COLOR RENDERING INDEX (CRI) SHALL BE 70 FOR CORRELATED COLOR TEMPERATURE (CCT) OF 4000-4500 DEGREES K.
5. CERTIFICATION - UL AND/OR ETL LISTED FOR DAMP OR WET LOCATIONS AS INDICATED, AND RoHS COMPLIANT.
6. OPTIONS - VARIOUS LUMEN OUTPUT RATING AS INDICATED, PHOTOCELL, AND 0-10 VOLT DIMMING DRIVER.
7. OTHER - THE ABOVE SKETCH IS A NON-PROPRIETY GRAPHIC REPRESENTATION OF A LUMINAIRE THAT MAY MEET THE SPECIFICATION REQUIREMENTS AND IS NOT INTENDED TO INDICATE A CERTAIN MANUFACTURER'S PREFERENCE. ALL DIMENSIONS ARE NOMINAL AND VARY PER MANUFACTURER.

LED WALL PACK

REVISED:	MARCH 2013	LIGHTING PLATE:	XL-17

FIXTURE: EX

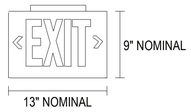

LUMINAIRE REQUIREMENTS:

1. HOUSING - HIGH-IMPACT, UV-STABILIZED, INJECTION-MOLDED THERMOPLASTIC. SINGLE OR DOUBLE-FACED AS INDICATED.
2. LETTERS/CHEVRONS - MINIMUM 6" HIGH WITH 3/4" STROKE. RED OR GREEN LETTERS AS INDICATED. PROVIDE CHEVRONS AS INDICATED EITHER LEFT, RIGHT, OR BOTH DIRECTIONS AS INDICATED. CHEVRONS PUNCHED OUT THROUGH HOUSING AS REQUIRED.
3. EMERGENCY PACK - SOLID-STATE, CONSTANT-CURRENT TYPE BATTERY CHARGER WITH MAINTENANCE-FREE, NICKEL-CADMIUM BATTERY, AC-ON INDICATOR LAMP AND TEST SWITCH.
4. MOUNTING - UNIVERSAL MOUNTING KIT FOR CEILING, WALL, OR END OF FIXTURE MOUNTING.
5. ILLUMINATION - PROVIDED BY RED, GREEN, OR WHITE HIGH-OUTPUT LEDS INSIDE OF FIXTURE HOUSING. PROVIDE POLYSTYRENE DIFFUSER IN COLOR INDICATED WITH FREQUENCY-MATCHED SILKSCREEN COATING FOR MAXIMUM LED LIGHT OUTPUT.
6. CERTIFICATION - UL LISTED AND CERTIFIED FOR DAMP LOCATIONS.

LED EXIT SIGN

REVISED:	AUGUST 2004	LIGHTING PLATE:	NL-63

FIXTURE: ELU

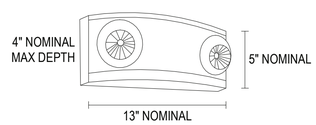

LUMINAIRE REQUIREMENTS:

1. HOUSING - UV STABLE, FLAME-RATED, HIGH-IMPACT THERMOPLASTIC IN WHITE OR BLACK TEXTURED FINISH.
2. INTERNAL COMPONENTS - FULLY AUTOMATIC, SOLID STATE, CONSTANT VOLTAGE, CURRENT-LIMITED BATTERY CHARGER; MAINTENANCE-FREE LEAD-ACID BATTERY; AND BUILT-IN OVERLOAD AND LOW-VOLTAGE BATTERY PROTECTION.
3. EXTERIOR HOUSING INDICATORS - LED AC-ON INDICATOR AND INTEGRAL TEST SWITCH.
4. LAMP HEADS - UV STABLE, FLAME RATED POLYCARBONATE THERMOPLASTIC. MR16 HALOGEN LAMPS SHALL BE 5 WATTS, HIGH-OUTPUT, OR AS INDICATED IN LIGHTING FIXTURE SCHEDULE.
5. MOUNTING - DIRECTLY TO 4" OCTAGONAL OR SQUARE OUTLET BOX.
6. CERTIFICATION - UL LISTED AND LABELED. COMLIES WITH UL 924 AND NFPA 101 REQUIREMENTS. LISTED FOR DAMP LOCATIONS.
7. OPTIONS - VOLTMETER, VANDEL-RESISTANT SHIELD, SELF-DIAGNOSTIC/TESTING ELECTRONICS, AND WIRE GUARD

DECORATIVE EMERGENCY LIGHTING UNIT

REVISED:	AUGUST 2004	LIGHTING PLATE:	NL-67

APPR | DATE | DESCRIPTION | SYM

SEAL

WNM Jordan COMPANY – A JOINT VENTURE –

Michael Baker INTERNATIONAL

100 AIRSIDE DRIVE
MOON TOWNSHIP, PA 15108 A/E INFO

APPROVED

FOR COMMANDER NAVFAC

ACTIVITY
MARINE CORPS BASE
CAMP LEJEUNE

SATISFACTORY TO DATE

DES SD | DRW LAK | CHK YPS

PM

BRANCH MANAGER

CHIEF ENG/ARCH

FIRE PROTECTION

DEPARTMENT OF THE NAVY
NAVAL FACILITIES ENGINEERING COMMAND
ROICC FLORENCE CAMP LEJEUNE
MCB CAMP LEJEUNE

NAVAL FACILITIES ENGINEERING COMMAND ~ MID-ATLANTIC
JACKSONVILLE, NC

JACKSONVILLE, NC
P1338 II MEF SIMULATION/TRAINING CENTER
REPLACEMENT

ELECTRICAL - DETAILS

SCALE: AS NOTED

EPROJECT NO.: 1590892

CONSTR. CONTR. NO.
N40085-20-C-0059

NAVFAC DRAWING NO.

SHEET OF

E-501

DP2 SUBMISSION – P1338 BUILDING - PRE-FINAL SUBMISSION

PLOTTED: 6/10/2021 5:42:05 PM

FILE NAME: BIM 360://HF PACKAGE 3/P1338 MEF SIM CTR-1590892-E.rvt

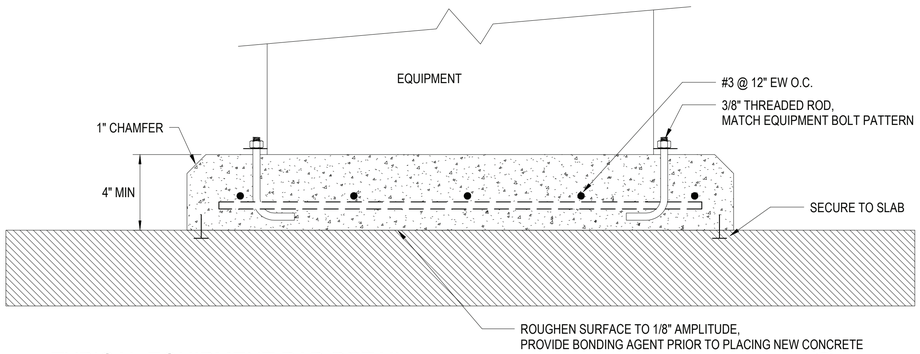

TYPICAL EQUIPMENT PAD DETAIL

SCALE:NTS

C1

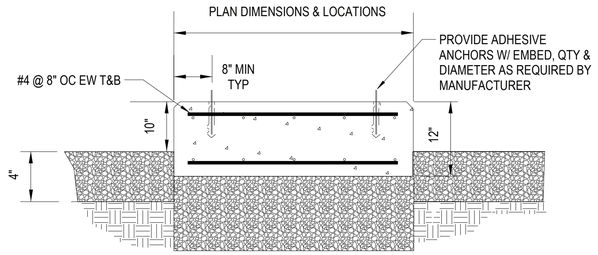

GENERATOR PAD DETAIL

SCALE:NTS

C3

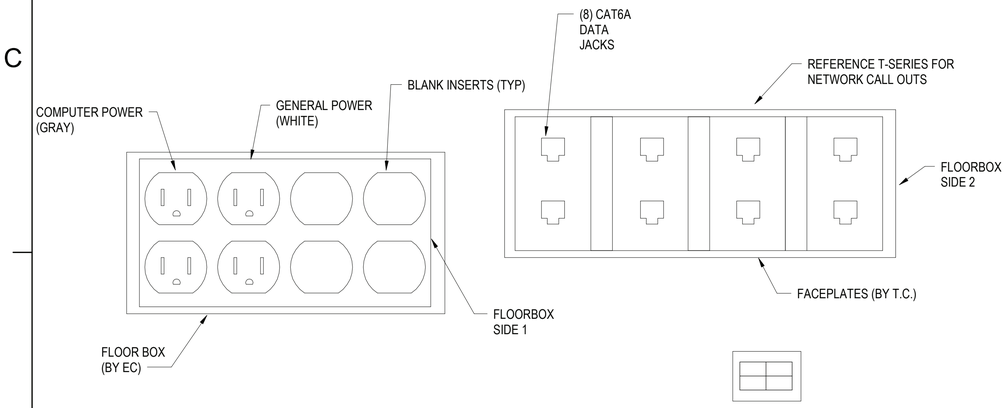

TYPICAL FLOORBOX FACEPLATES - CLASSIFIED

SCALE:NTS

B1

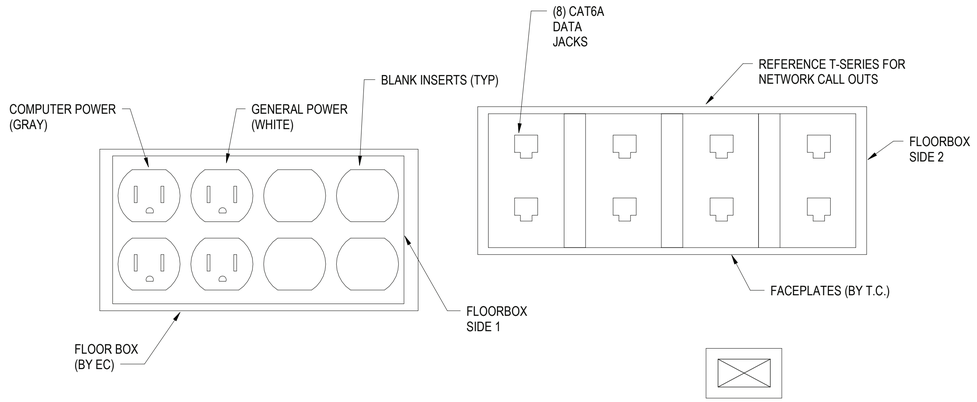

TYPICAL FLOORBOX FACEPLATES - UNCLASSIFIED

SCALE:NTS

B3

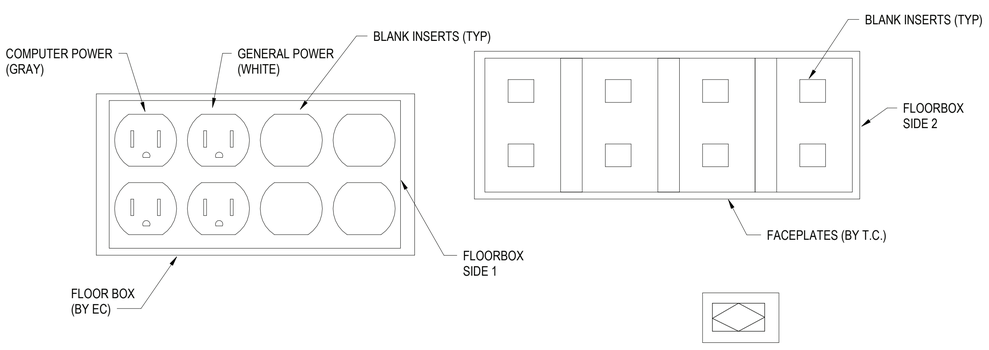

TYPICAL FLOORBOX FACEPLATES - POWER ONLY

SCALE:NTS

A1

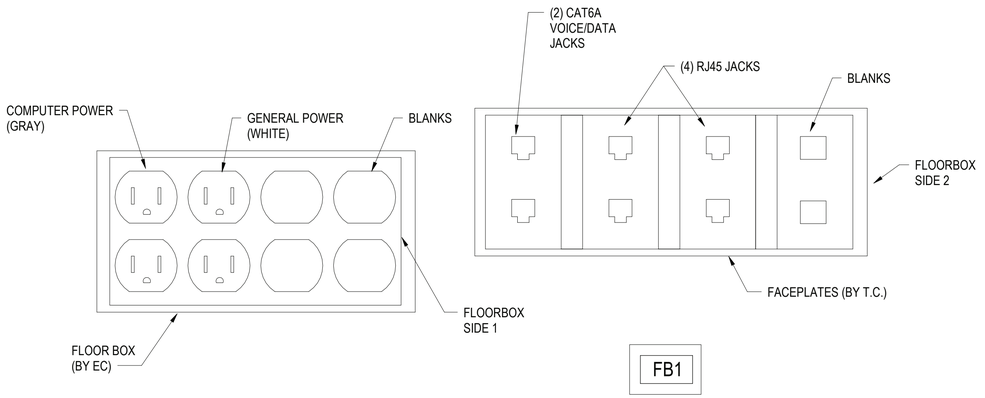

TYPICAL FLOORBOX FACEPLATES - FB1

SCALE:NTS

A3

APPR	DATE	DESCRIPTION	SYM

SEAL

WNM Jordan COMPANY ~ A JOINT VENTURE ~

Michael Baker INTERNATIONAL

100 AIRSIDE DRIVE
MOON TOWNSHIP, PA 15108 A/E INFO

APPROVED

FOR COMMANDER NAVFAC

ACTIVITY
MARINE CORPS BASE
CAMP LEJEUNE

SATISFACTORY TO DATE

DES SD | DRW LAK | CHK YPS

PM

BRANCH MANAGER

CHIEF ENG/ARCH

FIRE PROTECTION

DEPARTMENT OF THE NAVY
NAVAL FACILITIES ENGINEERING COMMAND ~ MID-ATLANTIC
JACKSONVILLE, NC
ROICC FLORENCE CAMP LEJEUNE
MCB CAMP LEJEUNE

JACKSONVILLE, NC
P1338 II MEF SIMULATION/TRAINING CENTER
REPLACEMENT
ELECTRICAL - DETAILS

SCALE: AS NOTED

EPROJECT NO.: 1590892

CONSTR. CONTR. NO.
N40085-20-C-0059

NAVFAC DRAWING NO.

SHEET OF

E-502

DP2 SUBMISSION – P1338 BUILDING - PRE-FINAL SUBMISSION

PLOTTED: 6/10/2021 5:42:06 PM

FILE NAME: BIM 360://HF PACKAGE 3/P1338 MEF SIM CTR-1590892-E.rvt

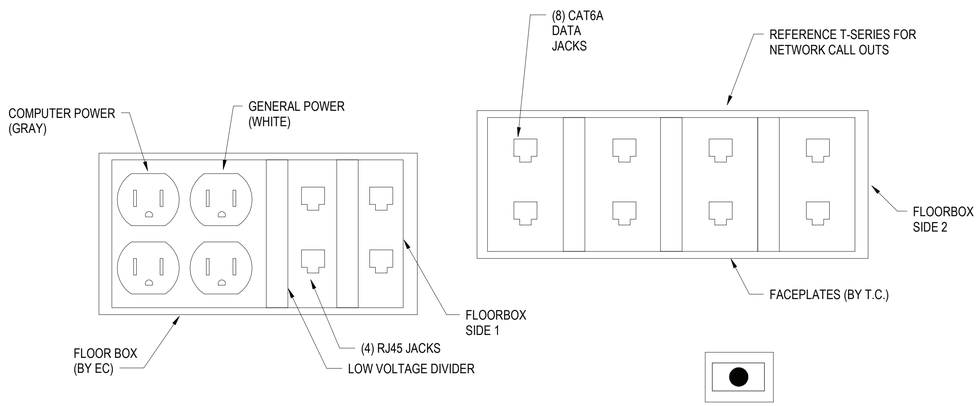

TYPICAL FLOORBOX FACEPLATES - CLASSIFIED WITH AV

SCALE:NTS

C1

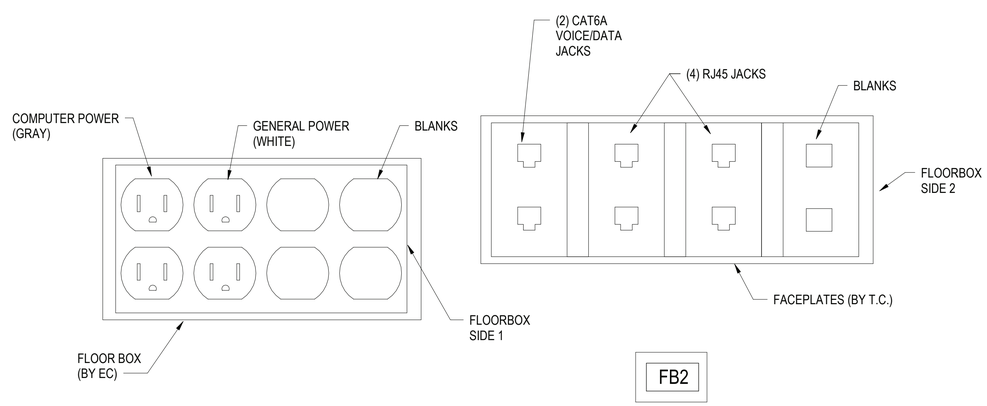

TYPICAL FLOORBOX FACEPLATES - SLAB ON GRADE

SCALE:NTS

C3

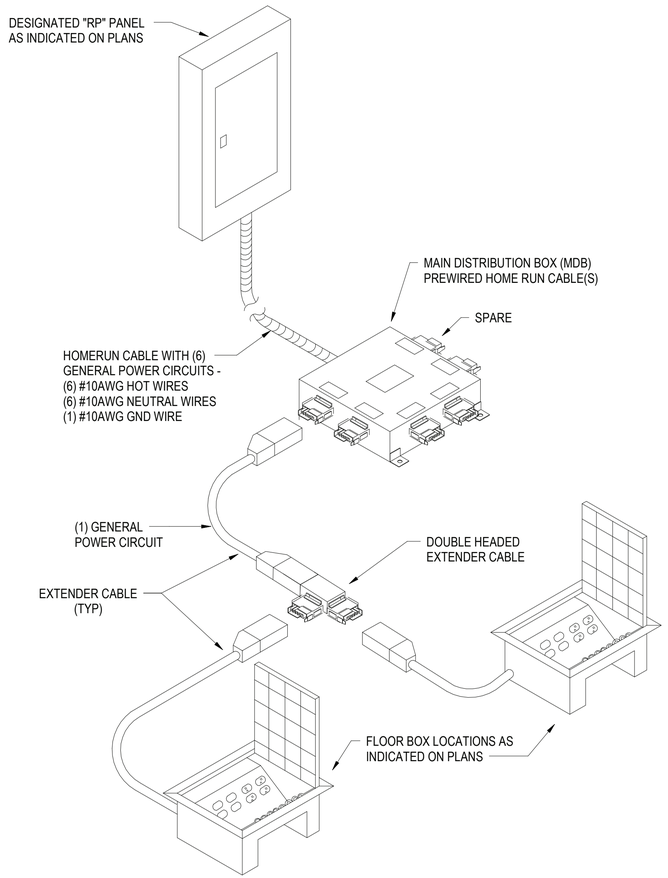

TYPICAL MODULAR POWER DISTRIBUTION SYSTEM

SCALE:NTS

A1

SYM	DESCRIPTION	DATE	APPR

NAVFAC

SEAL

RQ W.M. Jordan COMPANY - A JOINT VENTURE -

Michael Baker INTERNATIONAL

100 AIRSIDE DRIVE
MOON TOWNSHIP, PA 15108

A/E INFO

APPROVED

FOR COMMANDER NAVFAC

ACTIVITY
MARINE CORPS BASE CAMP LEJEUNE

SATISFACTORY TO DATE

DES SD | DRW LAK | CHK YPS

PM

BRANCH MANAGER

CHIEF ENG/ARCH

FIRE PROTECTION

DEPARTMENT OF THE NAVY
NAVAL FACILITIES ENGINEERING COMMAND
NAVAL FACILITIES ENGINEERING COMMAND ~ MID-ATLANTIC
ROICC FLORENCE CAMP LEJEUNE
JACKSONVILLE, NC
MCB CAMP LEJEUNE
JACKSONVILLE, NC

P1338 II MEF SIMULATION/TRAINING CENTER
REPLACEMENT

ELECTRICAL - DETAILS

SCALE: AS NOTED

EPROJECT NO.: 1590892

CONSTR. CONTR. NO.
N40085-20-C-0059

NAVFAC DRAWING NO.

SHEET OF

E-503

DP2 SUBMISSION – P1338 BUILDING - PRE-FINAL SUBMISSION

PLOTTED: 6/10/2021 5:42:07 PM

FILE NAME: BIM 360://HF PACKAGE 3/P1338 MEF SIM CTR-1590892-E.rvt

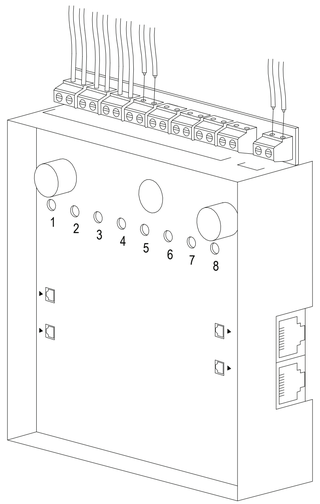

EMERGENCY POWER OFF (EPO) BOX - WIRING TERMINALS (INTERNAL)

SCALE:NTS

C1

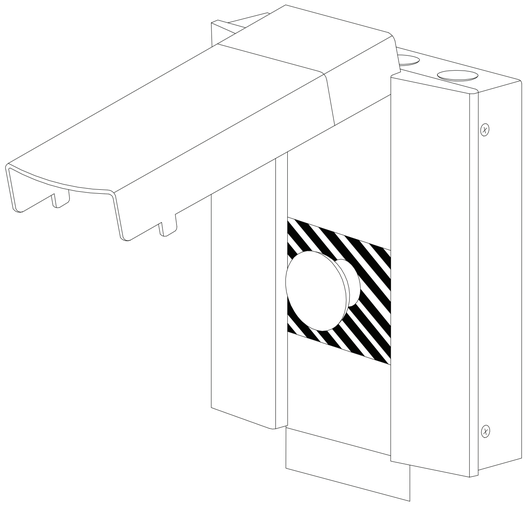

EMERGENCY POWER OFF (EPO) SYSTEM - SWITCH

SCALE:NTS

A1

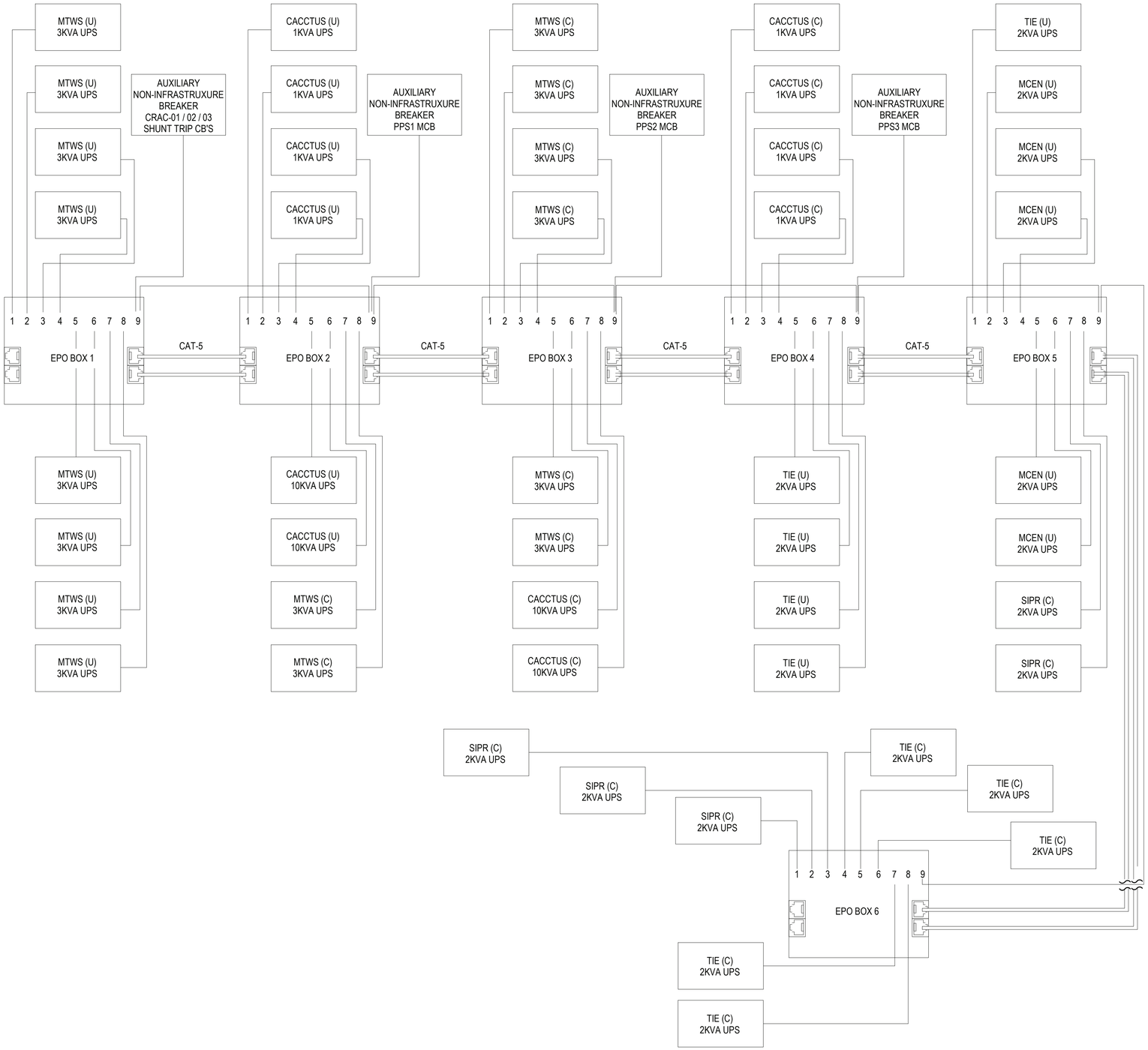

EMERGENCY POWER OFF (EPO) SYSTEM - WIRING DIAGRAM (SERVER ROOM)

SCALE:NTS

A3

APPR	DATE	DESCRIPTION	SYM

NAVFAC

SEAL

IRQ W.M. Jordan COMPANY – A JOINT VENTURE –

Michael Baker INTERNATIONAL

100 AIRSIDE DRIVE
MOON TOWNSHIP, PA 15108

A/E INFO

APPROVED

FOR COMMANDER NAVFAC

ACTIVITY
MARINE CORPS BASE CAMP LEJEUNE

SATISFACTORY TO DATE

DES	SD	DRW	LAK	CHK	YPS

PM

BRANCH MANAGER

CHIEF ENG/ARCH

FIRE PROTECTION

DEPARTMENT OF THE NAVY
NAVAL FACILITIES ENGINEERING COMMAND
ROICC FLORENCE CAMP LEJEUNE

NAVAL FACILITIES ENGINEERING COMMAND ~ MID-ATLANTIC
JACKSONVILLE, NC

MCB CAMP LEJEUNE
P1338 II MEF SIMULATION/TRAINING CENTER
REPLACEMENT
JACKSONVILLE, NC

ELECTRICAL - DETAILS

SCALE: AS NOTED

EPROJECT NO.: 1590892

CONSTR. CONTR. NO.
N40085-20-C-0059

NAVFAC DRAWING NO.

SHEET OF

E-504

DP2 SUBMISSION – P1338 BUILDING - PRE-FINAL SUBMISSION

PLOTTED: 6/10/2021 5:42:08 PM

FILE NAME: BIM 360://HF PACKAGE 3/P1338 MEF SIM CTR-1590892-E.rvt

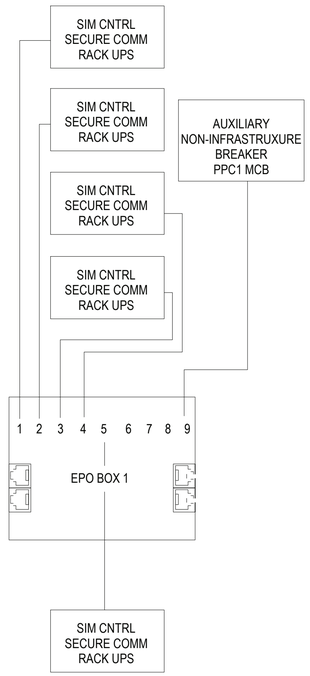

EMERGENCY POWER OFF (EPO) SYSTEM - WIRING DIAGRAM (SECURE COMM) B1

SCALE:NTS

SYM	DESCRIPTION	DATE	APPR

NAVFAC

SEAL

RQ W.M. Jordan COMPANY - A JOINT VENTURE -

Michael Baker INTERNATIONAL

100 AIRSIDE DRIVE
MOON TOWNSHIP, PA 15108 A/E INFO

APPROVED

FOR COMMANDER NAVFAC

ACTIVITY
MARINE CORPS BASE
CAMP LEJEUNE

SATISFACTORY TO DATE

DES SD DRW LAK CHK YPS

PM

BRANCH MANAGER

CHIEF ENG/ARCH

FIRE PROTECTION

DEPARTMENT OF THE NAVY
NAVAL FACILITIES ENGINEERING COMMAND
NAVAL FACILITIES ENGINEERING COMMAND ~ MID-ATLANTIC
ROICC FLORENCE CAMP LEJEUNE JACKSONVILLE, NC
MCB CAMP LEJEUNE JACKSONVILLE, NC

P1338 II MEF SIMULATION/TRAINING CENTER
REPLACEMENT

ELECTRICAL - DETAILS

SCALE: AS NOTED

EPROJECT NO.: 1590892

CONSTR. CONTR. NO.
N40085-20-C-0059

NAVFAC DRAWING NO.

SHEET OF

E-505

DP2 SUBMISSION – P1338 BUILDING - PRE-FINAL SUBMISSION

PLOTTED: 6/10/2021 5:42:09 PM

FILE NAME: BIM 360://HF PACKAGE 3/P1338 MEF SIM CTR-1590892-E.rvt

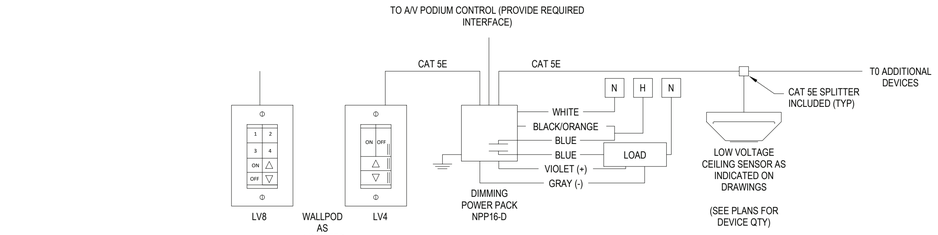

ZONING FOR 8 BUTTON SWITCHES
1. PROVIDE CONTROL OF UP TO 4 ZONES OF LIGHT (3 ZONES FOR CLASSROOMS).
2. PROVIDE WITH RAISE/LOWER AND ON/OFF.
3. AFTER 15 MINUTES OF NO OCCUPANCY, LIGHT FIXTURES SHALL TURN OFF.
4. TYPICAL APPLICATION: AS INDICATED ON DRAWINGS.
5. PROVIDE INTERFACE FOR LIGHTING CONTROL FROM A/V PODIUM CONTROL, AT ALL PODIUM LOCATIONS.

OPERATION SEQUENCE
1. LIGHT FIXTURES SHALL AUTOMATICALLY TURN ON TO 50% FOR OCCUPANCY.
2. LIGHT FIXTURE SHALL CONTINUOUSLY DIM / BRIGHTEN BASED UPON INPUT FROM THE DIMMER.
3. AFTER 15 MINUTES OF NO OCCUPANCY, LIGHT FIXTURES SHALL TURN OFF.
4. TYPICAL APPLICATION: AS INDICATED ON DRAWINGS.

CEILING OCCUPANCY / VACANCY SENSOR - DIMMING
SCALE:NTS — C1

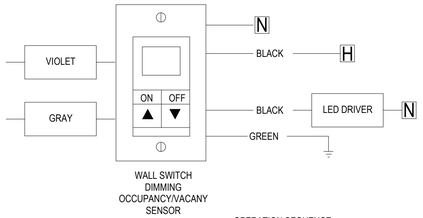

OPERATION SEQUENCE
1. LIGHT FIXTURES SHALL AUTOMATICALLY TURN ON TO 50% FOR OCCUPANCY
2. LIGHT FIXTURE SHALL CONTINUOUSLY DIM / BRIGHTEN BASED UPON INPUT FROM THE DIMMER.
3. AFTER 15 MINUTES OF NO OCCUPANCY, LIGHT FIXTURES SHALL TURN OFF.
4. TYPICAL APPLICATION: AS INDICATED ON DRAWINGS

WALL SWITCH OCCUPANCY / VACANCY SENSOR - DIMMING
SCALE:NTS — C3

GENERAL NOTES
1. ALL LIGHTING CONTROL BUTTONS TO BE ENGRAVED FOR REQUIRED FUNCTIONALITY .
2. FINAL SCENE PRESET TO BE DESIGNATED BY OWNER.
3. ALL CATE 5E CABLES NEED TO BE CHECKED WITH A CAT5E METER FOR PROPER TERMINATION OF RJ45 CONNECTORS.
4. PROVIDE INTERFACE FOR LIGHTING CONTROL AT A/V PODIUM CONTROL, AT ALL PODIUM LOCATIONS.

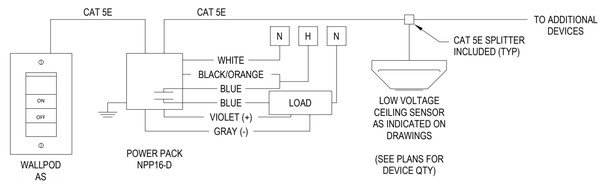

OPERATION SEQUENCE
1. AFTER 15 MINUTES OF NO OCCUPANCY, LIGHT FIXTURES SHALL TURN OFF.
2. TYPICAL APPLICATION: AS INDICATED ON DRAWINGS.
3. FINAL SCENE PRESET (DIMMING) TO BE AS SELECTED BY OWNER.

CEILING OCCUPANCY / VACANCY SENSOR - NON DIMMING
SCALE:NTS — B3

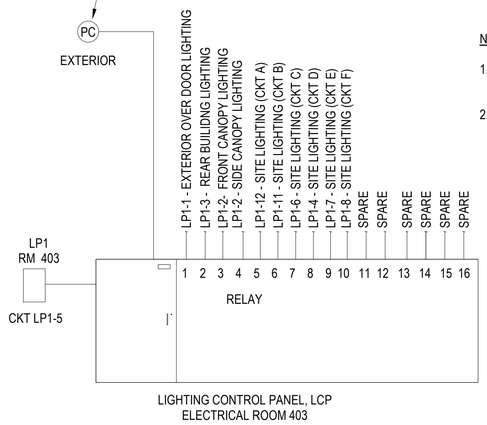

NOTES:
1. SEGREGATE CIRCUITS IN PANEL PER MANUFACTURER RECOMMENDATIONS IN ORDER TO MEET ALL APPLICABLE CODES AND STANDARDS.
2. EXTERIOR BUILDING LIGHTS ARE TO HAVE TIMED ON/OFF WITH PHOTOCELL OVERRIDE.

TYPICAL EXTERIOR LTG CONTROL WIRING DIAGRAM
SCALE:NTS — A1

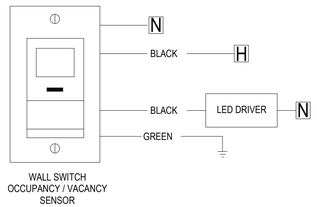

OPERATION SEQUENCE
1. LIGHT FIXTURES SHALL AUTOMATICALLY TURN ON TO 100%.
2. AFTER 15 MINUTES OF NO OCCUPANCY, LIGHT FIXTURES SHALL TURN OFF.
3. TYPICAL APPLICATION: AS INDICATED ON DRAWINGS

WALL SWITCH OCCUPANCY / VACANCY SENSOR - NON-DIMMING
SCALE:NTS — A3

APPR	
DATE	
DESCRIPTION	
SYM	

NAVFAC

SEAL

W.M. Jordan COMPANY – A JOINT VENTURE –

Michael Baker INTERNATIONAL
100 AIRSIDE DRIVE
MOON TOWNSHIP, PA 15108
A/E INFO

APPROVED

FOR COMMANDER NAVFAC

ACTIVITY
MARINE CORPS BASE CAMP LEJEUNE

SATISFACTORY TO DATE

DES SD | DRW LAK | CHK YPS

PM

BRANCH MANAGER

CHIEF ENG/ARCH

FIRE PROTECTION

DEPARTMENT OF THE NAVY
NAVAL FACILITIES ENGINEERING COMMAND – MID-ATLANTIC
ROICC FLORENCE CAMP LEJEUNE
MCB CAMP LEJEUNE

NAVAL FACILITIES ENGINEERING COMMAND – MID-ATLANTIC
JACKSONVILLE, NC

JACKSONVILLE, NC
P1338 II MEF SIMULATION/TRAINING CENTER
REPLACEMENT

ELECTRICAL - LIGHTING CONTROL DIAGRAMS

SCALE: AS NOTED

EPROJECT NO.: 1590892

CONSTR. CONTR. NO.
N40085-20-C-0059

NAVFAC DRAWING NO.

SHEET OF

E-506

DP2 SUBMISSION – P1338 BUILDING -PRE-FINAL SUBMISSION

PLOTTED: 6/10/2021 5:42:10 PM

FILE NAME: BIM 360://HF PACKAGE 3/P1338 MEF SIM CTR-1590892-E.rvt

LIGHTING FIXTURE SCHEDULE

TYPE	DESCRIPTION	MOUNTING	MANUFACTURER / CATALOG #	LAMP TYPE	LAMP QTY	INPUT WATTAGE	VOLTAGE	REMARKS
A1	2' x 4' LED TROFFER	RECESSED	LITHONIA LIGHTING 2BLT4 40L ADPT LP835 / OR APPROVED EQUAL	LED 82 CRI, 4000 LUMENS 3500K CCT	---	31	MVOLT	
A2	2' x 4' LED TROFFER	RECESSED	LITHONIA LIGHTING 2BLT4 48L ADP LP835/ OR APPROVED EQUAL	LED 82 CRI, 4800 LUMENS 3500K CCT	---	38	MVOLT	
A3	2' x 4' LED TROFFER	RECESSED	LITHONIA LIGHTING 2BLT4 60L ADP LP835/ OR APPROVED EQUAL	LED 82 CRI, 6000 LUMENS 3500K CCT	---	46	MVOLT	
B1	2' x 2' LED TROFFER	RECESSED	LITHONIA LIGHTING 2BLT2 20L ADP LP835/ OR APPROVED EQUAL	LED 82 CRI, 2000 LUMENS 3500K CCT	---	16	MVOLT	
C1	2' x 4' LED RECESSED FLAT PANEL	RECESSED	LITHONIA LIGHTING EPANL 2X4 3000LM 80CRI 35K / OR APPROVED EQUAL	LED 80 CRI, 3000 LUMENS 3500K CCT	---	26	MVOLT	
D1	6" RECESSED DOWNLIGHT	RECESSED	LITHONIA LIGHTING LDN6 35/15 LO6AR LD/ OR APPROVED EQUAL	LED 80 CRI, 1500 LUMENS 3500K CCT	---	18	MVOLT	
D2	6" RECESSED DOWNLIGHT	RECESSED	LITHONIA LIGHTING LDN6 35/05 LO6AR LD/ OR APPROVED EQUAL	LED 80 CRI, 500 LUMENS 3500K CCT	---	6	MVOLT	
D3	6" RECESSED DOWNLIGHT	RECESSED	LITHONIA LIGHTING LDN6 35/30 LO6AR LD/ OR APPROVED EQUAL	LED 80 CRI, 3000 LUMENS 3500K CCT	---	35	MVOLT	
D4	6" RECESSED DOWNLIGHT WALL WASH	RECESSED	LITHONIA LIGHTING/ LDN6 35/50 LW6WR/ OR APPROVED EQUAL	LED 80 CRI, 5000 LUMENS 3500K CCT	---	1	MVOLT	
D5	6" RECESSED DOWNLIGHT - WET LOCATION LISTED FOR UNDER CANOPY	RECESSED	LITHONIA LIGHTING LDN6 40/10 LO6AR LD/ OR APPROVED EQUAL	LED 80 CRI, 1000 LUMENS 4000K CCT	---	10	MVOLT	
D5E	6" RECESSED DOWNLIGHT - WET LOCATION LISTED FOR UNDER CANOPY W/ 90 MINUTE BATTERY BACKUP	RECESSED	LITHONIA LIGHTING LDN6 40/10 LO6AR LD/ OR APPROVED EQUAL	LED 80 CRI, 1000 LUMENS 4000K CCT	---	10	MVOLT	
E1	4' FLUSHED LED STRIP LIGHT	RECESSED	MARK ARCHITECTURAL LIGHTING SL4L 4 FLP 80 CRI 35K 400LMF/ OR APPROVED EQUAL	LED 80CRI, 400 LUMENS PER FT 3500K CCT	---	14	MVOLT	LENGTH AS REQUIRED-CONTINUOUS FLUSH LED STRIP LIGHT - PROVIDE WALL TO WALL INSTALLATION WITH EQUAL LENGTH FIXTURES. PROVIDE 1 PIECE FIXTURE FOR LENGTHS UP TO 12 FOOT
ELR	RECESSED EMERGENCY LIGHTING UNIT WITH LED LAMPS	RECESSED	LITHONIA LIGHTING ELR2 / OR APPROVED EQUAL	LED	---	16W	MVOLT	PROVIDE WITH 90 MINUTE BATTERY FOR EMERGENCY BACKUP POWER.
ELU	EMERGENCY LIGHTING UNIT W/ AIMABLE REMOTE HEADS MINIMUM 200 LUMENS PER HEAD	WALL	LITHONIA LIGHTING ELM2L / OR APPROVED EQUAL	LED	---	3W PER LAMP	MVOLT	MOUNT FIXTURE AT 7'-0" AFF UNLESS OTHERWISE NOTED. PROVIDE WITH 90 MINUTE BATTERY FOR EMERGENCY BACKUP POWER.
EX	LOW PROFILE SNAP TOGETHER QUICK MOUNT DESIGN. FLAME RATED, UV STABLE ABS THERMOPLASTIC HOUSING. UNIVERSAL MOUNTING, CANOPY PROVIDED. POP OUT SHEVRON DIRECTIONAL INDICATIONS EASILY REMOVED AS REQUIRED. MOUNTS TO STANDARD 4 INCH SQUARE OUTLET BOX.	UNIVERSAL	LITHONIA LIGHTING LE R ELN SD SERIES OR APPROVED EQUAL	LED	---	5	120	
S1	4' SUSPENDED LED STRIP LIGHT	SUSPENDED	LITHONIA LIGHTING ZL1N L48 5000LM FST MVOLT 40K 80 CRI/ OR APPROVED EQUAL	LED 80CRI, 5000 LUMENS 4000K CCT	---	34	MVOLT	MOUNT FIXTURES AT 10'-0" AFF. UNLESS OTHERWISE NOTED.
SL0	SITE LIGHTING TYPE VLS DISTRIBUTION	POLE	LITHONIA LIGHTING DSX0-LED-P1-40K-VLS-MVOLT-RPA-PER-DMG-PIRHN-FAO OR APPROVED EQUAL	LED 80 CRI, 4329 LUMENS 4000K CCT	---	56	277	MOUNT FIXTURE 12' ABOVE FINISHED GRADE UNLESS OTHERWISE NOTED.
SL1	SITE LIGHTING TYPE VS DISTRIBUTION	POLE BACK TO BACK	LITHONIA LIGHTING RSX1-LED-P1-40K-R5S-MVOLT-RPA-PE-DMG-PIRHN OR APPROVED EQUAL	LED 80 CRI, 7479 LUMENS EACH 4000K CCT	---	51 EACH	277	MOUNT FIXTURE 39' ABOVE FINISHED GRADE.
SL2	SITE LIGHTING TYPE VS DISTRIBUTION	POLE BACK TO BACK	LITHONIA LIGHTING RSX1-LED-P2-40K-R5S-MVOLT-RPA-PE-DMG-PIRHN OR APPROVED EQUAL	LED 80 CRI, 10374 LUMENS EACH 4000K CCT	---	72 EACH	277	MOUNT FIXTURE 39' ABOVE FINISHED GRADE.
SL3	SITE LIGHTING TYPE II DISTRIBUTION	POLE	LITHONIA LIGHTING RSX2-LED-P1-40K-R2-MVOLT-RPA-PE-DMG-PIRHN OR APPROVED EQUAL	LED 80 CRI, 11031 LUMENS 4000K CCT	---	73	277	MOUNT FIXTURE 39' ABOVE FINISHED GRADE.
SL4	SITE LIGHTING TYPE IV DISTRIBUTION	POLE	LITHONIA LIGHTING RSX2-LED-P2-40K-R4-MVOLT-RPA-PE-DMG-PIRHN OR APPROVED EQUAL	LED 80 CRI, 17427 LUMENS 4000K CCT	---	111	277	MOUNT FIXTURE 39' ABOVE FINISHED GRADE.
W1	EXTERIOR WALL PACK.	EXTERIOR WALL	LITHONIA LIGHTING WST LED P1 40K VW MVOLT OR APPROVED EQUAL	LED 70 CRI, 1500 LUMENS 4000K CCT	---	12	MVOLT	
W1E	EXTERIOR WALL PACK - PROVIDE WITH 90 MINUTE BATTERY BACKUP	EXTERIOR WALL	LITHONIA LIGHTING WST LED P1 40K VW MVOLT OR APPROVED EQUAL	LED 70 CRI, 1500 LUMENS 4000K CCT	---	12	MVOLT	

APPR | DATE | DESCRIPTION | SYM

NAVFAC

SEAL

W.M. Jordan COMPANY – A JOINT VENTURE –

Michael Baker INTERNATIONAL

100 AIRSIDE DRIVE
MOON TOWNSHIP, PA 15108 A/E INFO

APPROVED

FOR COMMANDER NAVFAC

ACTIVITY
MARINE CORPS BASE
CAMP LEJEUNE

SATISFACTORY TO DATE

DES SD | DRW LAK | CHK YPS

PM

BRANCH MANAGER

CHIEF ENG/ARCH

FIRE PROTECTION

DEPARTMENT OF THE NAVY
NAVAL FACILITIES ENGINEERING COMMAND
ROICC FLORENCE CAMP LEJEUNE

NAVAL FACILITIES ENGINEERING COMMAND ~ MID-ATLANTIC
JACKSONVILLE, NC

MCB CAMP LEJEUNE
JACKSONVILLE, NC
P1338 II MEF SIMULATION/TRAINING CENTER
REPLACEMENT

ELECTRICAL - LIGHTING FIXTURE SCHEDULE

SCALE: AS NOTED

EPROJECT NO.: 1590892

CONSTR. CONTR. NO.
N40085-20-C-0059

NAVFAC DRAWING NO.

SHEET OF

E-601

N

DP2 SUBMISSION – P1338 BUILDING - PRE-FINAL SUBMISSION

PLOTTED: 6/10/2021 5:42:12 PM

FILE NAME: BIM 360://HF PACKAGE 3/P1338 MEF SIM CTR-1590892-E.rvt

EXISTING OVERHEAD
12.47kV
UTILITY SERVICE

NEW RISER WITH 15kV TERMINATIONS, 10kV SURGE SUPPRESSORS, AND NEW FUSED CUTOUT WITH 100A FUSE

MV1

SC

MV1

PRIMARY NETURAL

SURGE ARRESTOR

LOAD BREAK CONNECTOR

BUSHING INSERT

TRANSFORMER BUSHING

HO

OIL-IMMERSED CURRENT LIMITING FUSE

2 POSITION LOAD OIL SWITCH

BAYONET OIL-IMMERSED CURRENT LIMITING FUSE

TRN1 1000 KVA
PAD MOUNTED
12470V - 480/277V
3PH, 4W, 60Hz -
5.32% IMPEDANCE

WHD WATTHOUR DEMAND METER

3-POLE FUSE BLOCK

2004

MV1

PRIMARY NETURAL

SURGE ARRESTOR

LOAD BREAK CONNECTOR

BUSHING INSERT

TRANSFORMER BUSHING

HO

OIL-IMMERSED CURRENT LIMITING FUSE

2 POSITION LOAD OIL SWITCH

BAYONET OIL-IMMERSED CURRENT LIMITING FUSE

TRN2 225 KVA
PAD MOUNTED
12470V - 208/120V
3PH, 4W, 60Hz -
2.87% IMPEDANCE

WHD WATTHOUR DEMAND METER

3-POLE FUSE BLOCK

STANDBY GENERATOR
1500kW
480/277V, 3PH, 4W
COASTAL RATED WEATHERPROOF
ALUMINUM ENCLOSURE

GEN

#3/0 GND

2000A
3P, LSIG

2000A
3P, LSIG

2004a

#4/0 AWG G.E.C.

NEMA 4X, 3PH, 4W
2000A ATS
WITH MAINTENANCE
BYPASS

2004a

804

OUTDOOR TRAINING AREA

DPLV4
208/120V, 800A BUS - 30kAIC
SERVICE ENTRANCE RATED NEMA 4X

800AT
800AF
3P, LSI

50A 3P — 53b — 60A 3P NEMA 4X — PEDESTAL
50A 3P — 53a — 60A 3P NEMA 4X — PEDESTAL
50A 3P — 60A 3P NEMA 4X — PEDESTAL
50A 3P — 60A 3P NEMA 4X — PEDESTAL
50A 3P — 60A 3P NEMA 4X — PEDESTAL
50A 3P — 60A 3P NEMA 4X — PEDESTAL
50A 3P — 53 — 60A 3P NEMA 4X — PEDESTAL
50A 3P — 60A 3P NEMA 4X — PEDESTAL
50A 3P — 53a — 60A 3P NEMA 4X — PEDESTAL
50A 3P — 53b — 60A 3P NEMA 4X — PEDESTAL

53

P1338 MEF Simulation Training Center

SWBD1 - 2000A BUS,
480Y/277V 3PH, 4W - 42kAIC
SERVICE ENTRANCE RATED
ELEC 403

2000AT
2000AF
3P, 100% RATED
LSIG

1 — 100A 3P — 104 — LP1 100A MLO 22kAIC — SPD 1 — ELEC 403
1 — SPD

250AT 250AF 3P, LSI — 253 — 400A 3P NEMA 4X — 253 — CHILLER-01
250AT 250AF 3P, LSI — 253 — 400A 3P NEMA 4X — 253 — CHILLER-02

225A 3P — 229 — MP1 225A MLO 22kAIC — ELEC 403

100A 3P — 104 — MP2 100A MLO 22kAIC — ELEC 403

400AT 400AF 3P, LSI — 403

400AT 400AF 3P, LSI — 403

225AF 225AT 3P, LSI — 228

ELEC 306
XFMR T2 150KVA DRY TYPE
PRIMARY 480V DELTA
SECONDARY 208Y/120-3P-4W

604

ELEC 306
DPLV2
600A BUS
208/120V - 10kAIC

600AT
600AF
3P, LSI

150A 3P — 150A 3P — 150A 3P — 150A 3P — 150A 3P — 150A 3P — 150A 3P — 150A 3P — 154 — 100A 3P — 100A 3P — 104

RP1 150A MCB 10kAIC — RM 301A
RP2 150A MCB 10kAIC — RM 301B
RP3 150A MCB 10kAIC — RM 300X
RP4 150A MCB 10kAIC — RM 300Y
RP5 150A MCB 10kAIC — RM 300Z
RP6 150A MCB 10kAIC — RM 300C
RP7 150A MCB 10kAIC — RM 300B
RP8 150A MCB 10kAIC — RM 300A
RP19 100A MLO 10kAIC — ELEC 306
MPLV1 100A MLO 10kAIC — ELEC 306

XFMR T1 225KVA
K-13, DRY TYPE
PRIMARY 480V DELTA
SECONDARY 208Y/120-3P-4W
ELEC 403

805

ELEC 403
DPLV1
800A BUS
208/120V - 18kAIC

800AT
800AF
3P, LSI

1 — SPD
100A 3P — 105 — TR1 100A MCB 10kAIC — SPD 1 — COMM 208
100A 3P — 105 — TR2 100A MCB 10kAIC — SPD 1 — COMM 115
150A 3P — 155 — PPC1 150A MCB 10kAIC — SPD 1 — RM 304B
400AT 400AF 3P, LSI — 405 — PPS1 400A MCB LSI 10kAIC — SPD 1 — RM 304A
125A 3P — PPS2 125A MCB 10kAIC — SPD 1 — RM 304A
125A 3P — 129a — PPS3 125A MCB 10kAIC — SPD 1 — RM 304A

XFMR T3 225KVA DRY TYPE
PRIMARY 480V DELTA
SECONDARY 208Y/120-3P-4W
ELEC 403

804

ELEC 403
DPLV3
800A BUS
208/120V - 18kAIC

800AT
800AF
3P, LSI

50A 3P — 54 — FP1 50A MLO 10kAIC — ELEC 403
150A 3P — RP9 150A MCB 10kAIC — RM 202
150A 3P — RP10 150A MCB 10kAIC — RM 200C
150A 3P — RP11 150A MCB 10kAIC — RM 200B
150A 3P — RP12 150A MCB 10kAIC — RM 200A
150A 3P — RP13 150A MCB 10kAIC — RM 104B
150A 3P — RP16 150A MLO 10kAIC — ELEC 403
125A 3P — RP17 125A MLO 10kAIC — ELEC 403
125A 3P — 129 — RP18 125A MLO 10kAIC — ELEC 403
150A 3P — 154 — MPLV2 150A MLO 10kAIC — ELEC 403
200A 3P — 204

RP14 200A MCB 10kAIC 100A — ELEC 116
RP15 100A MLO 10kAIC — 104 — ELEC 116

CLASSIFIED AREA

NON-CLASSIFIED AREA

LEGEND:

PPS(X) - SERVER ROOM POWER PANEL #X
PPC(X) - COMPUTER ROOM POWER PANEL #X
TR(X) - TELECOM POWER PANEL #X
DPLV(X) - LOW VOLTAGE DIST. PANEL #X
LP(X) - LIGHTING PANEL #X
RP(X) - RECEPTACLE PANEL #X
MP(X) - MECHANICAL PANEL #X
MPLV(X) - LOW VOLTAGE MECHANICAL PANEL #X
SWBD1 - SWITCHBOARD

GENERAL NOTES:

1. SEE FEEDER SCHEDULE ON SHEET E-603 FOR WIRE AND CONDUIT INFORMATION
2. ALL TR, PPC, AND PPS PANELS MUST HAVE A 200% RATED NEUTRAL BUS
3. PROVIDE SWBD1 WITH AN ARC ENERGY REDUCTION SYSTEM IN ACCORDANCE NEC ARTICLE 240.

KEYNOTES:

1 SIZED PER MANUFACTURER'S RECOMMENDATIONS

ELECTRICAL - SINGLE LINE DIAGRAM

SCALE:NTS

A1

PLOTTED: 6/10/2021 5:42:15 PM

FILE NAME: BIM 360://HF PACKAGE 3/P1338 MEF SIM CTR-1590892-E.rvt

APPR | DATE | SYM | DESCRIPTION

NAVFAC

SEAL

W.M. Jordan COMPANY – A JOINT VENTURE –

Michael Baker INTERNATIONAL
100 AIRSIDE DRIVE
MOON TOWNSHIP, PA 15108
A/E INFO

APPROVED

FOR COMMANDER NAVFAC

ACTIVITY
MARINE CORPS BASE
CAMP LEJEUNE

SATISFACTORY TO DATE

DES SD | DRW LAK | CHK YPS

PM

BRANCH MANAGER

CHIEF ENG/ARCH

FIRE PROTECTION

DEPARTMENT OF THE NAVY
NAVAL FACILITIES ENGINEERING COMMAND
ROICC FLORENCE CAMP LEJEUNE
MCB CAMP LEJEUNE

NAVAL FACILITIES ENGINEERING COMMAND ~ MID-ATLANTIC
JACKSONVILLE, NC

JACKSONVILLE, NC
P1338 II MEF SIMULATION/TRAINING CENTER
REPLACEMENT

ELECTRICAL - SINGLE LINE DIAGRAM

SCALE: AS NOTED
EPROJECT NO.: 1590892
CONSTR. CONTR. NO.
N40085-20-C-0059
NAVFAC DRAWING NO.
SHEET OF
E-602

DP2 SUBMISSION – P1338 BUILDING -,-PRE-FINAL SUBMISSION

FEEDER SCHEDULE

53	(3) #6 AWG AND (1) #10 AWG GND IN 3/4" CONDUIT
53a	(3) #4 AWG AND (1) #8 AWG GND IN 1" CONDUIT
53b	(3) #3 AWG AND (1) #6 AWG GND IN 1-1/4" CONDUIT
54	(4) #6 AWG AND (1) #10 AWG GND IN 1" CONDUIT
104	(4) #1 AWG AND (1) #8 AWG GND IN 1-1/2" CONDUIT
105	(5) #1 AWG AND (1) #8 AWG GND IN 2" CONDUIT
129	(4) #1 AWG AND (1) #6 AWG GND IN 1-1/2" CONDUIT
129a	(5) #1/0 AWG AND (1) #4 AWG GND IN 2" CONDUIT
154	(4) #1/0 AWG AND (1) #6 AWG GND IN 1-1/2" CONDUIT
155	(5) #1/0 AWG AND (1) #6 AWG GND IN 2" CONDUIT
204	(4) #3/0 AWG AND (1) #6 AWG GND IN 2" CONDUIT
228	(3) #4/0 AWG AND (1) #4 AWG GND IN 2-1/2" CONDUIT
228a	(3) 250 kcmil AND (1) #4 AWG GND IN 2-1/2" CONDUIT
229	(4) #4/0 AWG AND (1) #4 AWG GND IN 2-1/2" CONDUIT
253	(3) 250 kcmil AND (1) #4 AWG GND IN 2-1/2" CONDUIT
403	(3) 600 kcmil AND (1) #3 AWG GND IN 3" CONDUIT
405	(5) 600 kcmil AND (1) #3 AWG GND IN 4" CONDUIT
603	TWO 3" CONDUITS, EACH WITH (3) 350 kcmil AND (1) #1 AWG GND
604	TWO 3" CONDUITS, EACH WITH (4) 350 kcmil AND (1) #1 AWG GND
804	TWO 4" CONDUITS, EACH WITH (4) 600 kcmil AND (1) #1/0 AWG GND
805	TWO 4" CONDUITS, EACH WITH (5) 600 kcmil AND (1) #1/0 AWG GND
2004	FIVE 4" CONDUITS, EACH WITH (4) 600 kcmil + (1) 4" CONDUIT SPARE
2004a	FIVE 4" CONDUITS, EACH WITH (4) 600 kcmil AND (1) #4/0 AWG GND + (1) 4" CONDUIT SPARE
MV1	TWO 5" CONDUITS, ONE WITH (4) #2 AWG, 15kV, MV-105 TYPE CABLE, 133% EPR TYPE INSULATION WITH JACKET. PROVIDE WITH FULL SIZED CONCENTRIC NEUTRAL AND WITH ONE 5" CONDUIT WILL BE A SPARE WITH NO WIRING IN A CONCRETE ENCASED DUCTBANK.

APPR | DATE | DESCRIPTION | SYM

SEAL

IRQ W.M. Jordan COMPANY ~ A JOINT VENTURE ~

Michael Baker INTERNATIONAL

100 AIRSIDE DRIVE
MOON TOWNSHIP, PA 15108 A/E INFO

APPROVED

FOR COMMANDER NAVFAC

ACTIVITY
MARINE CORPS BASE
CAMP LEJEUNE

SATISFACTORY TO DATE

DES SD | DRW LAK | CHK YPS

PM

BRANCH MANAGER

CHIEF ENG/ARCH

FIRE PROTECTION

DEPARTMENT OF THE NAVY
NAVAL FACILITIES ENGINEERING COMMAND
ROICC FLORENCE CAMP LEJEUNE

NAVAL FACILITIES ENGINEERING COMMAND ~ MID-ATLANTIC
JACKSONVILLE, NC

MCB CAMP LEJEUNE

JACKSONVILLE, NC
P1338 II MEF SIMULATION/TRAINING CENTER
REPLACEMENT

ELECTRICAL - SINGLE LINE DIAGRAM

SCALE: AS NOTED

EPROJECT NO.: 1590892

CONSTR. CONTR. NO.
N40085-20-C-0059

NAVFAC DRAWING NO.

SHEET OF

E-603

DP2 SUBMISSION – P1338 BUILDING - PRE-FINAL SUBMISSION

PLOTTED: 6/10/2021 5:42:16 PM

FILE NAME: BIM 360://HF PACKAGE 3/P1338 MEF SIM CTR-1590892-E.rvt

GENERAL NOTES

1 SEE SHEET E-001 FOR ELECTRICAL NOTES, SYMBOLS, AND ABBREVIATIONS.
2 * SEE E-603 FOR WIRE SIZES NOT INDICATED IN PANEL SCHEDULES.

PANEL SWBD1

FED FROM:
LOCATION: ELEC 403
MOUNT: FLOOR

2000 A MAIN CIRCUIT BREAKER
3PH 4WIRE 480Y/277V
42K AIC
GROUND BAR

CKT	LOAD SERVED	WIRE	BRKR	PL	A		B		C		PL	BRKR	WIRE	LOAD SERVED	CKT
1	LP1	1	100	3	9.01	41.01					3	225	4	MP1	2
3	--	--	--	--			8.93	41.01			--	--	--	--	4
5	--	--	--	--					8.85	41.01	--	--	--	--	6
7	MP2	1	100	3	16.73	80.64					3	225	4	T2	8
9	--	--	--	--			16.73	81.44			--	--	--	--	10
11	--	--	--	--					16.73	81.06	--	--	--	--	12
13	T1	*	400	3	67.50	50.77					3	250	*	CHILLER CH-01	14
15	--	--	--	--			65.84	50.77			--	--	--	--	16
17	--	--	--	--					69.10	50.77	--	--	--	--	18
19	T3	*	400	3	99.31	0.00					3	225	--	SPARE	20
21	--	--	--	--			97.41	0.00			--	--	--	--	22
23	--	--	--	--					96.72	0.00	--	--	--	--	24
25	CHILLER CH-02	*	250	3	50.77	0.00					3	600	--	SPARE	26
27	--	--	--	--			50.77	0.00			--	--	--	--	28
29	--	--	--	--					50.77	0.00	--	--	--	--	30
31	SURGE PROTECTIVE DEVICE	--	30	3	0.00	0.00					--	--	--	PROVISIONED SPACE	32
33	--	--	--	--			0.00	0.00			--	--	--	PROVISIONED SPACE	34
35	--	--	--	--					0.00	0.00	--	--	--	PROVISIONED SPACE	36
37	PROVISIONED SPACE	--	--	--	0.00	0.00					--	--	--	PROVISIONED SPACE	38
39	PROVISIONED SPACE	--	--	--			0.00	0.00			--	--	--	PROVISIONED SPACE	40
41	PROVISIONED SPACE	--	--	--					0.00	0.00	--	--	--	PROVISIONED SPACE	42
				TOTAL	415.7		412.9		415.0		KVA				
					1502.0		1490.6		1499.4		AMPS				
				CONNECTED LOAD	1243.7		KVA		1495.9		AMPS				
NEC ARTICLE 220				DEMAND LOAD	849.9		KVA		1022.3		AMPS				

Load Classification	Connected Load	Demand Factor	Estimated Demand	Panel Totals	
Equipment	210548 VA	100.00%	210548 VA		
Power	2360 VA	100.00%	2360 VA	**Total Conn. Load:**	1243667 VA
RECEPT	475120 VA	51.05%	242560 VA	**Total Est. Demand:**	849932 VA
LTG	26801 VA	75.00%	20101 VA	**Total Conn.:**	1496 A
Water Heater	720 VA	100.00%	720 VA	**Total Est. Demand:**	1022 A
UFC-MOTOR-25%	25362 VA	25.00%	6341 VA		
UFC-MOTOR-30%	41582 VA	30.00%	12475 VA		
UFC-HVAC-70%	146632 VA	70.00%	102642 VA		
UFC-HEATER-80%	7162 VA	80.00%	5730 VA		
UFC-CHILLER-80%	304619 VA	80.00%	243695 VA		
FIRE PROTECTION - 100%	2760 VA	100.00%	2760 VA		

PANEL DPLV1

FED FROM: T1
LOCATION: ELEC 403
MOUNT: SURFACE

800 A MAIN CIRCUIT BREAKER
3PH 4WIRE 208Y/120V
18K AIC
GROUND BAR

CKT	LOAD SERVED	WIRE	BRKR	PL	A		B		C		PL	BRKR	WIRE	LOAD SERVED	CKT
1	PPS1	*	400	3	32.00	8.16					3	125	1	PPS2	2
3	--	--	--	--			32.00	8.16			--	--	--	--	4
5	--	--	--	--					32.00	9.08	--	--	--	--	6
7	TR1	1	100	3	3.40	2.72					3	100	1	TR2	8
9	--	--	--	--			3.56	2.86			--	--	--	--	10
11	--	--	--	--					4.44	3.42	--	--	--	--	12
13	PPC1	1/0	150	3	11.98	9.24					3	125	1	PPS3	14
15	--	--	--	--			12.00	7.26			--	--	--	--	16
17	--	--	--	--					11.08	9.08	--	--	--	--	18
19	SURGE PROTECTIVE DEVICE	--	30	3	0.00	0.00					3	100	--	SPARE	20
21	--	--	--	--			0.00	0.00			--	--	--	--	22
23	--	--	--	--					0.00	0.00	--	--	--	--	24
25	PROVISIONED SPACE	--	--	--	0.00	0.00					--	--	--	PROVISIONED SPACE	26
27	PROVISIONED SPACE	--	--	--			0.00	0.00			--	--	--	PROVISIONED SPACE	28
29	PROVISIONED SPACE	--	--	--					0.00	0.00	--	--	--	PROVISIONED SPACE	30
31	PROVISIONED SPACE	--	--	--	0.00	0.00					--	--	--	PROVISIONED SPACE	32
33	PROVISIONED SPACE	--	--	--			0.00	0.00			--	--	--	PROVISIONED SPACE	34
35	PROVISIONED SPACE	--	--	--					0.00	0.00	--	--	--	PROVISIONED SPACE	36
37	PROVISIONED SPACE	--	--	--	0.00	0.00					--	--	--	PROVISIONED SPACE	38
39	PROVISIONED SPACE	--	--	--			0.00	0.00			--	--	--	PROVISIONED SPACE	40
41	PROVISIONED SPACE	--	--	--					0.00	0.00	--	--	--	PROVISIONED SPACE	42
				TOTAL	67.5		65.8		69.1		KVA				
					564.6		548.7		577.9		AMPS				
				CONNECTED LOAD	202.4		KVA		561.9		AMPS				
NEC ARTICLE 220				DEMAND LOAD	194.6		KVA		540.3		AMPS				

Load Classification	Connected Load	Demand Factor	Estimated Demand	Panel Totals	
Equipment	173200 VA	100.00%	173200 VA		
RECEPT	20080 VA	74.90%	15040 VA	**Total Conn. Load:**	202432 VA
UFC-HVAC-70%	9152 VA	70.00%	6406 VA	**Total Est. Demand:**	194646 VA
				Total Conn.:	562 A
				Total Est. Demand:	540 A

PANEL DPLV2

FED FROM: T2
LOCATION: ELEC 306
MOUNT: SURFACE

600 A MAIN CIRCUIT BREAKER
3PH 4WIRE 208Y/120V
10K AIC
GROUND BAR

CKT	LOAD SERVED	WIRE	BRKR	PL	A		B		C		PL	BRKR	WIRE	LOAD SERVED	CKT
1	MPLV1	1	100	3	4.10	8.28					3	150	1/0	RP1	2
3	--	--	--	--			4.18	8.64			--	--	--	--	4
5	--	--	--	--					4.16	8.64	--	--	--	--	6
7	RP2	1/0	150	3	8.64	8.64					3	150	1/0	RP3	8
9	--	--	--	--			8.64	8.64			--	--	--	--	10
11	--	--	--	--					8.64	8.64	--	--	--	--	12
13	RP4	1/0	150	3	8.64	8.64					3	150	1/0	RP5	14
15	--	--	--	--			8.64	8.64			--	--	--	--	16
17	--	--	--	--					8.64	8.64	--	--	--	--	18
19	RP6	1/0	150	3	8.64	8.64					3	150	1/0	RP7	20
21	--	--	--	--			8.64	8.64			--	--	--	--	22
23	--	--	--	--					8.64	8.64	--	--	--	--	24
25	RP8	1/0	150	3	8.64	7.78					3	100	1	RP19	26
27	--	--	--	--			8.64	8.14			--	--	--	--	28
29	--	--	--	--					8.64	7.78	--	--	--	--	30
31	SPARE	--	150	3	0.00	0.00					3	150	--	SPARE	32
33	--	--	--	--			0.00	0.00			--	--	--	--	34
35	--	--	--	--					0.00	0.00	--	--	--	--	36
37	PROVISIONED SPACE	--	--	--	0.00	0.00					--	--	--	PROVISIONED SPACE	38
39	PROVISIONED SPACE	--	--	--			0.00	0.00			--	--	--	PROVISIONED SPACE	40
41	PROVISIONED SPACE	--	--	--					0.00	0.00	--	--	--	PROVISIONED SPACE	42
				TOTAL	80.6		81.4		81.1		KVA				
					672.0		679.2		676.0		AMPS				
				CONNECTED LOAD	243.1		KVA		674.9		AMPS				
NEC ARTICLE 220				DEMAND LOAD	127.3		KVA		353.3		AMPS				

Load Classification	Connected Load	Demand Factor	Estimated Demand	Panel Totals	
Equipment	2880 VA	100.00%	2880 VA		
RECEPT	230700 VA	52.17%	120350 VA	**Total Conn. Load:**	243134 VA
UFC-MOTOR-25%	6176 VA	25.00%	1544 VA	**Total Est. Demand:**	127294 VA
UFC-HVAC-70%	1830 VA	70.00%	1281 VA	**Total Conn.:**	675 A
UFC-HEATER-80%	1548 VA	80.00%	1238 VA	**Total Est. Demand:**	353 A

PANEL DPLV3

FED FROM: T3
LOCATION: ELEC 403
MOUNT: SURFACE

800 A MAIN CIRCUIT BREAKER
3PH 4WIRE 208Y/120V
18K AIC
GROUND BAR

CKT	LOAD SERVED	WIRE	BRKR	PL	A		B		C		PL	BRKR	WIRE	LOAD SERVED	CKT
1	FP1	6	50	3	0.78	7.20					3	150	1/0	RP13	2
3	--	--	--	--			1.14	6.48			--	--	--	--	4
5	--	--	--	--					1.20	5.76	--	--	--	--	6
7	MPLV2	1/0	150	3	12.45	8.97					3	125	1	RP18	8
9	--	--	--	--			10.61	8.67			--	--	--	--	10
11	--	--	--	--					11.70	8.03	--	--	--	--	12
13	RP17	1	125	3	8.64	10.93					3	150	1/0	RP16	14
15	--	--	--	--			8.60	10.85			--	--	--	--	16
17	--	--	--	--					8.35	10.98	--	--	--	--	18
19	RP14	3/0	200	3	15.79	8.64					3	150	1/0	RP10	20
21	--	--	--	--			16.50	8.64			--	--	--	--	22
23	--	--	--	--					16.14	8.64	--	--	--	--	24
25	RP11	1/0	150	3	8.64	8.64					3	150	1/0	RP12	26
27	--	--	--	--			8.64	8.64			--	--	--	--	28
29	--	--	--	--					8.64	8.64	--	--	--	--	30
31	RP9	1/0	150	3	8.64	0.00					3	200	--	SPARE	32
33	--	--	--	--			8.64	0.00			--	--	--	--	34
35	--	--	--	--					8.64	0.00	--	--	--	--	36
37	SPARE	--	150	3	0.00	0.00					--	--	--	PROVISIONED SPACE	38
39	--	--	--	--			0.00	0.00			--	--	--	PROVISIONED SPACE	40
41	--	--	--	--					0.00	0.00	--	--	--	PROVISIONED SPACE	42
				TOTAL	99.3		97.4		96.7		KVA				
					828.5		812.6		806.0		AMPS				
				CONNECTED LOAD	293.4		KVA		814.5		AMPS				
NEC ARTICLE 220				DEMAND LOAD	167.9		KVA		466.1		AMPS				

Load Classification	Connected Load	Demand Factor	Estimated Demand	Panel Totals	
Equipment	34468 VA	100.00%	34468 VA		
Power	2360 VA	100.00%	2360 VA	**Total Conn. Load:**	293439 VA
RECEPT	224340 VA	52.23%	117170 VA	**Total Est. Demand:**	167911 VA
Water Heater	720 VA	100.00%	720 VA	**Total Conn.:**	815 A
UFC-MOTOR-25%	16360 VA	25.00%	4090 VA	**Total Est. Demand:**	466 A
UFC-MOTOR-30%	6332 VA	30.00%	1900 VA		
UFC-HVAC-70%	4359 VA	70.00%	3052 VA		
UFC-HEATER-80%	1740 VA	80.00%	1392 VA		
FIRE PROTECTION - 100%	2760 VA	100.00%	2760 VA		

APPR | DATE | DESCRIPTION | SYM

NAVFAC

SEAL

RQ Jordan JV — A JOINT VENTURE

Michael Baker INTERNATIONAL
100 AIRSIDE DRIVE
MOON TOWNSHIP, PA 15108
A/E INFO

APPROVED
FOR COMMANDER NAVFAC

ACTIVITY
MARINE CORPS BASE
CAMP LEJEUNE

SATISFACTORY TO DATE
DES SD | DRW LAK | CHK YPS
PM
BRANCH MANAGER
CHIEF ENG/ARCH
FIRE PROTECTION

DEPARTMENT OF THE NAVY
NAVAL FACILITIES ENGINEERING COMMAND ~ MID-ATLANTIC
ROICC FLORENCE CAMP LEJEUNE
NAVAL FACILITIES ENGINEERING COMMAND
JACKSONVILLE, NC
MCB CAMP LEJEUNE
JACKSONVILLE, NC
P1338 II MEF SIMULATION/TRAINING CENTER
REPLACEMENT
ELECTRICAL - PANEL SCHEDULES

SCALE: AS NOTED
EPROJECT NO.: 1590892
CONSTR. CONTR. NO.
N40085-20-C-0059
NAVFAC DRAWING NO.
SHEET OF
E-604

DP2 SUBMISSION – P1338 BUILDING –PRE-FINAL SUBMISSION

PLOTTED: 6/10/2021 5:42:18 PM
FILE NAME: BIM 360://HF PACKAGE 3/P1338 MEF SIM CTR-1590892-E.rvt

GENERAL NOTES

1 SEE SHEET E-001 FOR ELECTRICAL NOTES, SYMBOLS, AND ABBREVIATIONS.
2 * SEE E-603 FOR WIRE SIZES NOT INDICATED IN PANEL SCHEDULES.

PANEL DPLV4

800 A MAIN CIRCUIT BREAKER
3PH 4WIRE 208Y/120V
30K AIC
GROUND BAR

FED FROM:
LOCATION:
MOUNT: FLOOR

CKT	LOAD SERVED	WIRE	BRKR	PL	A		B		C		PL	BRKR	WIRE	LOAD SERVED	CKT
1	PEDESTAL 1	3	50	3	4.80	4.80					3	50	4	PEDESTAL 2	2
3	--	--	--	--			4.80	4.80			--	--	--	--	4
5	--	--	--	--					4.80	4.80	--	--	--	--	6
7	PEDESTAL 3	6	50	3	4.80	4.80					3	50	6	PEDESTAL 4	8
9	--	--	--	--			4.80	4.80			--	--	--	--	10
11	--	--	--	--					4.80	4.80	--	--	--	--	12
13	PEDESTAL 5	6	50	3	4.80	4.80					3	50	6	PEDESTAL 6	14
15	--	--	--	--			4.80	4.80			--	--	--	--	16
17	--	--	--	--					4.80	4.80	--	--	--	--	18
19	PEDESTAL 7	6	50	3	4.80	4.80					3	50	4	PEDESTAL 8	20
21	--	--	--	--			4.80	4.80			--	--	--	--	22
23	--	--	--	--					4.80	4.80	--	--	--	--	24
25	PEDESTAL 9	4	50	3	4.80	4.80					3	50	3	PEDESTAL 10	26
27	--	--	--	--			4.80	4.80			--	--	--	--	28
29	--	--	--	--					4.80	4.80	--	--	--	--	30
31	SPARE	--	50	3	0.00	0.00					3	50	--	SPARE	32
33	--	--	--	--			0.00	0.00			--	--	--	--	34
35	--	--	--	--					0.00	0.00	--	--	--	--	36
37	PROVISIONED SPACE	--	--	--	0.00	0.00					--	--	--	PROVISIONED SPACE	38
39	PROVISIONED SPACE	--	--	--			0.00	0.00			--	--	--	PROVISIONED SPACE	40
41	PROVISIONED SPACE	--	--	--					0.00	0.00	--	--	--	PROVISIONED SPACE	42
			TOTAL		48.0		48.0		48.0		KVA				
					400.3		400.3		400.3		AMPS				
			CONNECTED LOAD		144.1		KVA		400.0		AMPS				
NEC ARTICLE 220			DEMAND LOAD		144.1		KVA		400.0		AMPS				

Load Classification	Connected Load	Demand Factor	Estimated Demand	Panel Totals	
Equipment	144107 VA	100.00%	144107 VA		
				Total Conn. Load:	144107 VA
				Total Est. Demand:	144107 VA
				Total Conn.:	400 A
				Total Est. Demand:	400 A

PANEL LP1

100 A MAIN LUG ONLY
3PH 4WIRE 480Y/277V
22K AIC
GROUND BAR

FED FROM: SWBD1
LOCATION: ELEC 403
MOUNT: SURFACE

CKT	LOAD SERVED	WIRE	BRKR	PL	A		B		C		PL	BRKR	WIRE	LOAD SERVED	CKT
1	LTG BUILDING MOUNTED	12	20	1	0.06	0.10					1	20	12	LTG - EXTERIOR CANOPIES	2
3	LTG BUILDING MOUNTED	12	20	1			0.06	0.35			1	20	10	SITE LIGHTING (CKT D)	4
5	LCP RM 403	12	20	1					0.10	0.55	1	20	10	SITE LIGHTING (CKT C)	6
7	SITE LIGHTING (CKT E)	6	20	1	0.55	1.17					1	20	4	SITE LIGHTING (CKT F)	8
9	LTG COR C030	12	20	1			0.61	2.41			1	20	12	LTG RM 304B, 303B, 303A, 302, 209, 205, 206, 204, G020,...	10
11	SITE LIGHTING (CKT B)	10	20	1					1.10	1.52	1	20	10	SITE LIGHTING (CKT A)	12
13	LTG RM 300B, 300A, 300Y, 300X	12	20	1	3.30	1.26					1	20	12	LTG RM C020, C022, C021, C023	14
15	LTG RM 301A, 301B, 304A	12	20	1			2.62	2.89			1	20	12	LTG RM 402, 401, 400, 118	16
17	LTG RM 106, 105, 108, G011, G012, G010, 110	12	20	1					1.91	3.68	1	20	12	LTG RM 202, 201, 203, 200B, 200A, 200C	18
19	SPARE	--	20	1	0.00	2.56					1	20	12	LTG RM 300C, 300Z, C032, C034, C031, C030, 306	20
21	SPARE	--	20	1			0.00	0.00			3	30	--	SURGE PROTECTIVE DEVICE	22
23	SPARE	--	20	1					0.00	0.00	--	--	--	--	24
25	PROVISIONED SPACE	--	--	--	0.00	0.00					--	--	--	--	26
27	PROVISIONED SPACE	--	--	--			0.00	0.00			--	--	--	PROVISIONED SPACE	28
29	PROVISIONED SPACE	--	--	--					0.00	0.00	--	--	--	PROVISIONED SPACE	30
			TOTAL		9.0		8.9		8.9		KVA				
					32.6		32.3		32.0		AMPS				
			CONNECTED LOAD		26.8		KVA		32.2		AMPS				
NEC ARTICLE 220			DEMAND LOAD		20.1		KVA		24.2		AMPS				

Load Classification	Connected Load	Demand Factor	Estimated Demand	Panel Totals	
LTG	26801 VA	75.00%	20101 VA		
				Total Conn. Load:	26801 VA
				Total Est. Demand:	20101 VA
				Total Conn.:	32 A
				Total Est. Demand:	24 A

PANEL MP1

225 A MAIN LUG ONLY
3PH 4WIRE 480Y/277V
22K AIC
GROUND BAR

FED FROM: SWBD1
LOCATION: ELEC 403
MOUNT: SURFACE

CKT	LOAD SERVED	WIRE	BRKR	PL	A		B		C		PL	BRKR	WIRE	LOAD SERVED	CKT
1	AHU-01 (SUPPLY FAN) RM MECHANICAL 400	10	30	3	3.88	0.94					3	15	12	AHU-01 (EXHASUT FAN) RM MECHANICAL 400	2
3	--	--	--	--			3.88	0.94			--	--	--	--	4
5	--	--	--	--					3.88	0.94	--	--	--	--	6
7	AHU-02 (SUPPLY FAN) RM MECHANICAL 400	2/0	175	3	22.17	2.27					3	15	12	AHU-02 (EXHASUT FAN) RM MECHANICAL 400	8
9	--	--	--	--			22.17	2.27			--	--	--	--	10
11	--	--	--	--					22.17	2.27	--	--	--	--	12
13	BP-1 RM MECH (HOT) 401	12	20	3	0.44	0.44					3	20	12	BP-2 RM MECH (HOT) 401	14
15	--	--	--	--			0.44	0.44			--	--	--	--	16
17	--	--	--	--					0.44	0.44	--	--	--	--	18
19	BP-3 RM MECH (HOT) 401	12	20	3	0.44	3.88					3	20	12	P-01 RM MECHANICAL 400	20
21	--	--	--	--			0.44	3.88			--	--	--	--	22
23	--	--	--	--					0.44	3.88	--	--	--	--	24
25	P-02 MECHANICAL 400	12	20	3	3.88	1.33					3	20	12	P-03 RM MECH (HOT) 401	26
27	--	--	--	--			3.88	1.33			--	--	--	--	28
29	--	--	--	--					3.88	1.33	--	--	--	--	30
31	SPARE	--	20	3	0.00	1.33					3	20	12	P-04 RM MECH (HOT) 401	32
33	--	--	--	--			0.00	1.33			--	--	--	--	34
35	--	--	--	--					0.00	1.33	--	--	--	--	36
37	PROVISIONED SPACE	--	--	--	0.00	0.00					3	20	--	SPARE	38
39	PROVISIONED SPACE	--	--	--			0.00	0.00			--	--	--	--	40
41	PROVISIONED SPACE	--	--	--					0.00	0.00	--	--	--	--	42
			TOTAL		41.0		41.0		41.0		KVA				
					148.1		148.1		148.1		AMPS				
			CONNECTED LOAD		123.0		KVA		148.0		AMPS				
NEC ARTICLE 220			DEMAND LOAD		72.0		KVA		86.6		AMPS				

Load Classification	Connected Load	Demand Factor	Estimated Demand	Panel Totals	
UFC-MOTOR-30%	35250 VA	30.00%	10575 VA		
UFC-HVAC-70%	87792 VA	70.00%	61454 VA		
				Total Conn. Load:	123042 VA
				Total Est. Demand:	72029 VA
				Total Conn.:	148 A
				Total Est. Demand:	87 A

PROVIDE SHUNT TRIP CIRCUIT BREAKER ON CIRCUITS FEEDING CRAC UNITS.

PANEL MP2

100 A MAIN LUG ONLY
3PH 4WIRE 480Y/277V
22K AIC
GROUND BAR

FED FROM: SWBD1
LOCATION: ELEC 403
MOUNT: SURFACE

CKT	LOAD SERVED	WIRE	BRKR	PL	A		B		C		PL	BRKR	WIRE	LOAD SERVED	CKT
1	EUH-01 RM ELEC 402	12	20	3	1.29	4.83					3	25	10	CRAC-01 RM SIM CONTROL (SERVER ROOM) 304A	2
3	--	--	--	--			1.29	4.83			--	--	--	--	4
5	--	--	--	--					1.29	4.83	--	--	--	--	6
7	CRAC-02 RM SIM CONTROL (SERVER ROOM) 304A	10	25	3	4.83	4.83					3	25	10	CRAC-03 RM SIM CONTROL (SERVER ROOM) 304A	8
9	--	--	--	--			4.83	4.83			--	--	--	--	10
11	--	--	--	--					4.83	4.83	--	--	--	--	12
13	EF-02 RM ELEC 403	12	20	3	0.94	0.00					3	25	--	SPARE	14
15	--	--	--	--			0.94	0.00			--	--	--	--	16
17	--	--	--	--					0.94	0.00	--	--	--	--	18
19	PROVISIONED SPACE	--	--	--	0.00	0.00					--	--	--	PROVISIONED SPACE	20
21	PROVISIONED SPACE	--	--	--			0.00	0.00			--	--	--	PROVISIONED SPACE	22
23	PROVISIONED SPACE	--	--	--					0.00	0.00	--	--	--	PROVISIONED SPACE	24
25	PROVISIONED SPACE	--	--	--	0.00	0.00					--	--	--	PROVISIONED SPACE	26
27	PROVISIONED SPACE	--	--	--			0.00	0.00			--	--	--	PROVISIONED SPACE	28
29	PROVISIONED SPACE	--	--	--					0.00	0.00	--	--	--	PROVISIONED SPACE	30
31	PROVISIONED SPACE	--	--	--	0.00	0.00					--	--	--	PROVISIONED SPACE	32
33	PROVISIONED SPACE	--	--	--			0.00	0.00			--	--	--	PROVISIONED SPACE	34
35	PROVISIONED SPACE	--	--	--					0.00	0.00	--	--	--	PROVISIONED SPACE	36
37	PROVISIONED SPACE	--	--	--	0.00	0.00					--	--	--	PROVISIONED SPACE	38
39	PROVISIONED SPACE	--	--	--			0.00	0.00			--	--	--	PROVISIONED SPACE	40
41	PROVISIONED SPACE	--	--	--					0.00	0.00	--	--	--	PROVISIONED SPACE	42
			TOTAL		16.7		16.7		16.7		KVA				
					60.4		60.4		60.4		AMPS				
			CONNECTED LOAD		50.2		KVA		60.4		AMPS				
NEC ARTICLE 220			DEMAND LOAD		34.3		KVA		41.2		AMPS				

Load Classification	Connected Load	Demand Factor	Estimated Demand	Panel Totals	
UFC-MOTOR-25%	2826 VA	25.00%	707 VA		
UFC-HVAC-70%	43498 VA	70.00%	30449 VA	Total Conn. Load:	50198 VA
UFC-HEATER-80%	3874 VA	80.00%	3099 VA	Total Est. Demand:	34255 VA
				Total Conn.:	60 A
				Total Est. Demand:	41 A

GENERAL NOTES

1 SEE SHEET E-001 FOR ELECTRICAL NOTES, SYMBOLS, AND ABBREVIATIONS.
2 * SEE E-603 FOR WIRE SIZES NOT INDICATED IN PANEL SCHEDULES.

PANEL MPLV1

FED FROM: DPLV2
LOCATION: ELEC 306
MOUNT: SURFACE

100 A MAIN LUG ONLY
3PH 4WIRE 208Y/120V
10K AIC
GROUND BAR

CKT	LOAD SERVED	WIRE	BRKR	PL	A		B		C		PL	BRKR	WIRE	LOAD SERVED	CKT
1	J-BOX VAV 24V POWER RM BREAK ROOM 206	12	20	1	0.18	1.00					1	20	12	J-BOX VAV 24V POWER RM EXERCISE CONTROL 202	2
3	LOUVER LOW VOLTAGE POWER ELEC 306	12	20	1			0.30	1.44			1	15	12	LEFT TURNSTILE GATE POWER SUPPLY	4
5	EF-04 RM ELEC 306	12	20	1					0.70	1.55	1	20	12	EWH-02 RM ELEC 306	6
7	J-BOX VAV 24V POWER RM LOBBY/VEST L010	12	20	1	1.00	1.00					1	20	12	J-BOX VAV 24V POWER RM SIM. CLASSROOM 200C	8
9	RIGHT TURNSTILE GATE POWER SUPPLY	15	20	1			1.44	0.00			--	--	--	PROVISIONED SPACE	10
11	HPCU-02	10	30	2					0.92	0.00	--	--	--	PROVISIONED SPACE	12
13	--	--	--	--	0.92	0.00					--	--	--	PROVISIONED SPACE	14
15	J-BOX VAV 24V POWER RM SIM. CLASSROOM 300Y	12	20	1			1.00	0.00			--	--	--	PROVISIONED SPACE	16
17	J-BOX VAV 24V POWER RM SIM. CLASSROOM 301A	12	20	1					1.00	0.00	--	--	--	PROVISIONED SPACE	18
19	PROVISIONED SPACE	--	--	--	0.00	0.00					--	--	--	PROVISIONED SPACE	20
21	PROVISIONED SPACE	--	--	--			0.00	0.00			--	--	--	PROVISIONED SPACE	22
23	PROVISIONED SPACE	--	--	--					0.00	0.00	--	--	--	PROVISIONED SPACE	24
25	PROVISIONED SPACE	--	--	--	0.00	0.00					--	--	--	PROVISIONED SPACE	26
27	PROVISIONED SPACE	--	--	--			0.00	0.00			--	--	--	PROVISIONED SPACE	28
29	PROVISIONED SPACE	--	--	--					0.00	0.00	--	--	--	PROVISIONED SPACE	30
31	PROVISIONED SPACE	--	--	--	0.00	0.00					--	--	--	PROVISIONED SPACE	32
33	PROVISIONED SPACE	--	--	--			0.00	0.00			--	--	--	PROVISIONED SPACE	34
35	PROVISIONED SPACE	--	--	--					0.00	0.00	--	--	--	PROVISIONED SPACE	36
37	PROVISIONED SPACE	--	--	--	0.00	0.00					1	20	--	SPARE	38
39	PROVISIONED SPACE	--	--	--			0.00	0.00			1	20	--	SPARE	40
41	PROVISIONED SPACE	--	--	--					0.00	0.00	1	20	--	SPARE	42
				TOTAL	4.1		4.2		4.2		KVA				
					34.1		34.9		34.7		AMPS				
				CONNECTED LOAD	12.4		KVA		34.5		AMPS				
NEC ARTICLE 220				DEMAND LOAD	6.9		KVA		19.3		AMPS				

Load Classification	Connected Load	Demand Factor	Estimated Demand	Panel Totals	
Equipment	2880 VA	100.00%	2880 VA		
UFC-MOTOR-25%	6176 VA	25.00%	1544 VA	Total Conn. Load:	12434 VA
UFC-HVAC-70%	1830 VA	70.00%	1281 VA	Total Est. Demand:	6944 VA
UFC-HEATER-80%	1548 VA	80.00%	1238 VA	Total Conn.:	35 A
				Total Est. Demand:	19 A

PANEL MPLV2

FED FROM: DPLV3
LOCATION: ELEC 403
MOUNT: SURFACE

150 A MAIN LUG ONLY
3PH 4WIRE 208Y/120V
10K AIC
GROUND BAR

CKT	LOAD SERVED	WIRE	BRKR	PL	A		B		C		PL	BRKR	WIRE	LOAD SERVED	CKT
1	UH-01 RM MECHANICAL 400	12	20	1	0.10	0.50					1	20	12	J-BOX LOUVER 24V POWER MECH (HOT) 401	2
3	UH-02 RM MECH (HOT) 401	12	20	1			0.10	0.86			1	20	12	LOUVER L-01B RM MECHANICAL 400	4
5	RP-1 RM MECH (HOT) 401	12	20	1					0.42	0.70	1	20	12	EF-3 RM ELEC 116	6
7	DEHUMIDIFIER DEH-01 RM MECHANICAL 400	12	20	1	0.77	1.18					1	20	12	EF-1 RM MEN G025	8
9	J-BOX LOUVER 24V POWER ELEC 116/403/	12	20	1			0.90	1.00			1	20	12	J-BOX VAV 24V POWER RM FIRE ROOM 104B	10
11	J-BOX VAV 24V POWER RM 109	12	20	1					1.00	1.18	1	20	12	SF-1 RM MECHANICAL 400	12
13	EWH-01 RM ELEC 116	12	20	1	1.55	0.36					1	20	12	GWH-1 MECH (HOT) 401	14
15	LOUVERS L-01A RM MECHANICAL 400	12	20	1			0.86	2.00			1	20	12	CHILLER HEAT TRACE CNTRL PANEL RM MECHANICAL...	16
17	GENERATOR JACKET WATER HEATER WITH PUMP	4	60	2					4.26	0.36	1	20	12	J-BOX FOR DDC CONTROLLER MECHANICAL 400	18
19	--	--	--	--	4.26	0.59					1	15	12	BOILER B-01 RM MECH (HOT) 401	20
21	GENERATOR CHARGER	12	20	1			1.92	0.92			2	25	10	SSCU-01	22
23	BOILER B-03 RM MECH (HOT) 401	12	15	1					0.59	0.92	--	--	--	--	24
25	LOUVER L-02 RM MECHANICAL 400	12	20	1	0.86	1.18					1	20	12	LIFT GATE CIRCUIT 2	26
27	GWH-2 MECH (HOT) 401	12	20	1			0.36	0.59			1	15	12	BOILER B-02 RM MECH (HOT) 401	28
29	OH ROLL UP DOOR RM MECHANICAL 400	12	20	3					0.55	0.55	3	20	12	OH ROLL UP DOOR RM STORAGE/SHIP/RECEIVING 402	30
31	--	--	--	--	0.55	0.55					--	--	--	--	32
33	--	--	--	--			0.55	0.55			--	--	--	--	34
35	SPARE	--	15	1					0.00	1.18	1	20	12	LIFT GATE CIRCUIT 1	36
37	SPARE	--	20	1	0.00	0.00					1	20	--	SPARE	38
39	SPARE	--	20	1			0.00	0.00			1	20	--	SPARE	40
41	SPARE	--	20	1					0.00	0.00	1	20	--	SPARE	42
				TOTAL	12.4		10.6		11.7		KVA				
					105.1		88.4		98.9		AMPS				
				CONNECTED LOAD	34.8		KVA		96.5		AMPS				
NEC ARTICLE 220				DEMAND LOAD	22.1		KVA		61.3		AMPS				

Load Classification	Connected Load	Demand Factor	Estimated Demand	Panel Totals	
Equipment	10448 VA	100.00%	10448 VA		
Power	2360 VA	100.00%	2360 VA	Total Conn. Load:	34759 VA
Water Heater	720 VA	100.00%	720 VA	Total Est. Demand:	22071 VA
UFC-MOTOR-25%	8800 VA	25.00%	2200 VA	Total Conn.:	96 A
UFC-MOTOR-30%	6332 VA	30.00%	1900 VA	Total Est. Demand:	61 A
UFC-HVAC-70%	4359 VA	70.00%	3052 VA		
UFC-HEATER-80%	1740 VA	80.00%	1392 VA		

PANEL FP1

FED FROM: DPLV3
LOCATION: ELEC 403
MOUNT: SURFACE

50 A MAIN LUG ONLY
3PH 4WIRE 208Y/120V
10K AIC
GROUND BAR

CKT	LOAD SERVED	WIRE	BRKR	PL	A		B		C		PL	BRKR	WIRE	LOAD SERVED	CKT
1	AMPLIFIER RM 403	12	20	1	0.60	0.03					2	20	12	EPO BOX SIM CONTROL SECURE COMM 304B	2
3	FACP RM 403	12	20	1			0.96	0.03			--	--	--	--	4
5	POWER SUPPLY RM 403	12	20	1					0.60	0.60	1	20	12	TRANSMITTER PANEL RM 403	6
7	PROVISIONED SPACE	--	--	--	0.00	0.15					2	20	12	EPO BOXES SIM CONTROL (SERVER ROOM) 304A	8
9	PROVISIONED SPACE	--	--	--			0.00	0.15			--	--	--	--	10
11	PROVISIONED SPACE	--	--	--					0.00	0.00	--	--	--	PROVISIONED SPACE	12
13	PROVISIONED SPACE	--	--	--	0.00	0.00					--	--	--	PROVISIONED SPACE	14
15	PROVISIONED SPACE	--	--	--			0.00	0.00			--	--	--	PROVISIONED SPACE	16
17	PROVISIONED SPACE	--	--	--					0.00	0.00	--	--	--	PROVISIONED SPACE	18
19	PROVISIONED SPACE	--	--	--	0.00	0.00					--	--	--	PROVISIONED SPACE	20
21	PROVISIONED SPACE	--	--	--			0.00	0.00			--	--	--	PROVISIONED SPACE	22
23	PROVISIONED SPACE	--	--	--					0.00	0.00	--	--	--	PROVISIONED SPACE	24
25	PROVISIONED SPACE	--	--	--	0.00	0.00					--	--	--	PROVISIONED SPACE	26
27	PROVISIONED SPACE	--	--	--			0.00	0.00			--	--	--	PROVISIONED SPACE	28
29	PROVISIONED SPACE	--	--	--					0.00	0.00	--	--	--	PROVISIONED SPACE	30
				TOTAL	0.8		1.1		1.2		KVA				
					6.5		9.9		10.5		AMPS				
				CONNECTED LOAD	3.1		KVA		8.6		AMPS				
NEC ARTICLE 220				DEMAND LOAD	3.1		KVA		8.6		AMPS				

Load Classification	Connected Load	Demand Factor	Estimated Demand	Panel Totals	
Equipment	350 VA	100.00%	350 VA		
FIRE PROTECTION - 100%	2760 VA	100.00%	2760 VA	Total Conn. Load:	3110 VA
				Total Est. Demand:	3110 VA
				Total Conn.:	9 A
				Total Est. Demand:	9 A

APPR | DATE | DESCRIPTION | SYM

SEAL

DEPARTMENT OF THE NAVY
NAVAL FACILITIES ENGINEERING COMMAND
ROICC FLORENCE CAMP LEJEUNE
MCB CAMP LEJEUNE

NAVAL FACILITIES ENGINEERING COMMAND ~ MID-ATLANTIC
JACKSONVILLE, NC

P1338 II MEF SIMULATION/TRAINING CENTER
REPLACEMENT
JACKSONVILLE, NC

ELECTRICAL - PANEL SCHEDULES

Michael Baker INTERNATIONAL
100 AIRSIDE DRIVE
MOON TOWNSHIP, PA 15108
A/E INFO

APPROVED
FOR COMMANDER NAVFAC
ACTIVITY
MARINE CORPS BASE
CAMP LEJEUNE
SATISFACTORY TO DATE
DES SD | DRW LAK | CHK YPS
PM
BRANCH MANAGER
CHIEF ENG/ARCH
FIRE PROTECTION

SCALE: AS NOTED
EPROJECT NO.: 1590892
CONSTR. CONTR. NO.
N40085-20-C-0059
NAVFAC DRAWING NO.
SHEET OF

E-606

DP2 SUBMISSION – P1338 BUILDING - PRE-FINAL SUBMISSION

PLOTTED: 6/10/2021 5:42:23 PM
FILE NAME: BIM 360://HF PACKAGE 3/P1338 MEF SIM CTR-1590892-E.rvt

GENERAL NOTES

1 SEE SHEET E-001 FOR ELECTRICAL NOTES, SYMBOLS, AND ABBREVIATIONS.
2 * SEE E-603 FOR WIRE SIZES NOT INDICATED IN PANEL SCHEDULES.

PANEL RP1

FED FROM: DPLV2
LOCATION: SIMULATION CLASSROOM 301A
MOUNT: RECESSED

150 A MAIN CIRCUIT BREAKER
3PH 4WIRE 208Y/120V
10K AIC
GROUND BAR

CKT	LOAD SERVED	WIRE	BRKR	PL	A		B		C		PL	BRKR	WIRE	LOAD SERVED	CKT
1	FLOOR BOXES RM 301A	10	20	1	0.72	0.72					1	20	10	FLOOR BOXES RM 301A	2
3	FLOOR BOXES RM 301A	10	20	1			0.72	0.72			1	20	10	FLOOR BOXES RM 301A	4
5	FLOOR BOXES RM 301A	10	20	1					0.72	0.72	1	20	10	FLOOR BOXES RM 301A	6
7	FLOOR BOXES RM 301A	10	20	1	0.72	0.36					1	20	10	FLOOR BOXES RM 301A	8
9	FLOOR BOXES RM 301A	10	20	1			0.72	0.72			1	20	10	FLOOR BOXES RM 301A	10
11	FLOOR BOXES RM 301A	10	20	1					0.72	0.72	1	20	10	FLOOR BOXES RM 301A	12
13	FLOOR BOXES RM 301A	10	20	1	0.72	0.72					1	20	10	FLOOR BOXES RM 301A	14
15	FLOOR BOXES RM 301A	10	20	1			0.72	0.72			1	20	10	FLOOR BOXES RM 301A	16
17	FLOOR BOXES RM 301A	10	20	1					0.72	0.72	1	20	10	FLOOR BOXES RM 301A	18
19	FLOOR BOXES RM 301A	10	20	1	0.72	0.72					1	20	10	FLOOR BOXES RM 301A	20
21	FLOOR BOXES RM 301A	10	20	1			0.72	0.72			1	20	10	FLOOR BOXES RM 301A	22
23	FLOOR BOXES RM 301A	10	20	1					0.72	0.72	1	20	10	FLOOR BOXES RM 301A	24
25	FLOOR BOXES RM 301A	10	20	1	0.72	0.72					1	20	10	FLOOR BOXES RM 301A	26
27	FLOOR BOXES RM 301A	10	20	1			0.72	0.72			1	20	10	FLOOR BOXES RM 301A	28
29	FLOOR BOXES RM 301A	10	20	1					0.72	0.72	1	20	10	FLOOR BOXES RM 301A	30
31	FLOOR BOXES RM 301A	10	20	1	0.72	0.72					1	20	10	FLOOR BOXES RM 301A	32
33	FLOOR BOXES RM 301A	10	20	1			0.72	0.72			1	20	10	FLOOR BOXES RM 301A	34
35	FLOOR BOXES RM 301A	10	20	1					0.72	0.72	1	20	10	FLOOR BOXES RM 301A	36
37	SPARE	--	20	1	0.00	0.00					1	20	--	SPARE	38
39	SPARE	--	20	1			0.00	0.00			1	20	--	SPARE	40
41	SPARE	--	20	1					0.00	0.00	1	20	--	SPARE	42
				TOTAL	8.3		8.6		8.6		KVA				
					69.0		72.5		72.5		AMPS				
				CONNECTED LOAD	25.6		KVA		70.9		AMPS				
NEC ARTICLE 220				DEMAND LOAD	17.8		KVA		49.4		AMPS				

Load Classification	Connected Load	Demand Factor	Estimated Demand	Panel Totals	
RECEPT	25560 VA	69.56%	17780 VA		
				Total Conn. Load:	25560 VA
				Total Est. Demand:	17780 VA
				Total Conn.:	71 A
				Total Est. Demand:	49 A

PANEL RP2

FED FROM: DPLV2
LOCATION: SIMULATION CLASSROOM 301B
MOUNT: RECESSED

150 A MAIN CIRCUIT BREAKER
3PH 4WIRE 208Y/120V
10K AIC
GROUND BAR

CKT	LOAD SERVED	WIRE	BRKR	PL	A		B		C		PL	BRKR	WIRE	LOAD SERVED	CKT
1	FLOOR BOXES RM 301B	10	20	1	0.72	0.72					1	20	10	FLOOR BOXES RM 301B	2
3	FLOOR BOXES RM 301B	10	20	1			0.72	0.72			1	20	10	FLOOR BOXES RM 301B	4
5	FLOOR BOXES RM 301B	10	20	1					0.72	0.72	1	20	10	FLOOR BOXES RM 301B	6
7	FLOOR BOXES RM 301B	10	20	1	0.72	0.72					1	20	10	FLOOR BOXES RM 301B	8
9	FLOOR BOXES RM 301B	10	20	1			0.72	0.72			1	20	10	FLOOR BOXES RM 301B	10
11	FLOOR BOXES RM 301B	10	20	1					0.72	0.72	1	20	10	FLOOR BOXES RM 301B	12
13	FLOOR BOXES RM 301B	10	20	1	0.72	0.72					1	20	10	FLOOR BOXES RM 301B	14
15	FLOOR BOXES RM 301B	10	20	1			0.72	0.72			1	20	10	FLOOR BOXES RM 301B	16
17	FLOOR BOXES RM 301B	10	20	1					0.72	0.72	1	20	10	FLOOR BOXES RM 301B	18
19	FLOOR BOXES RM 301B	10	20	1	0.72	0.72					1	20	10	FLOOR BOXES RM 301B	20
21	FLOOR BOXES RM 301B	10	20	1			0.72	0.72			1	20	10	FLOOR BOXES RM 301B	22
23	FLOOR BOXES RM 301B	10	20	1					0.72	0.72	1	20	10	FLOOR BOXES RM 301B	24
25	FLOOR BOXES RM 301B	10	20	1	0.72	0.72					1	20	10	FLOOR BOXES RM 301B	26
27	FLOOR BOXES RM 301B	10	20	1			0.72	0.72			1	20	10	FLOOR BOXES RM 301B	28
29	FLOOR BOXES RM 301B	10	20	1					0.72	0.72	1	20	10	FLOOR BOXES RM 301B	30
31	FLOOR BOXES RM 301B	10	20	1	0.72	0.72					1	20	10	FLOOR BOXES RM 301B	32
33	FLOOR BOXES RM 301B	10	20	1			0.72	0.72			1	20	10	FLOOR BOXES RM 301B	34
35	FLOOR BOXES RM 301B	10	20	1					0.72	0.72	1	20	10	FLOOR BOXES RM 301B	36
37	SPARE	--	20	1	0.00	0.00					1	20	--	SPARE	38
39	SPARE	--	20	1			0.00	0.00			1	20	--	SPARE	40
41	SPARE	--	20	1					0.00	0.00	1	20	--	SPARE	42
				TOTAL	8.6		8.6		8.6		KVA				
					72.0		72.0		72.0		AMPS				
				CONNECTED LOAD	25.9		KVA		71.9		AMPS				
NEC ARTICLE 220				DEMAND LOAD	18.0		KVA		49.9		AMPS				

Load Classification	Connected Load	Demand Factor	Estimated Demand	Panel Totals	
RECEPT	25920 VA	69.29%	17960 VA		
				Total Conn. Load:	25920 VA
				Total Est. Demand:	17960 VA
				Total Conn.:	72 A
				Total Est. Demand:	50 A

PANEL RP3

FED FROM: DPLV2
LOCATION: SIMULATION CLASSROOM 300X
MOUNT: RECESSED

150 A MAIN CIRCUIT BREAKER
3PH 4WIRE 208Y/120V
10K AIC
GROUND BAR

CKT	LOAD SERVED	WIRE	BRKR	PL	A		B		C		PL	BRKR	WIRE	LOAD SERVED	CKT
1	FLOOR BOXES RM 300X	10	20	1	0.72	0.72					1	20	10	FLOOR BOXES RM 300X	2
3	FLOOR BOXES RM 300X	10	20	1			0.72	0.72			1	20	10	FLOOR BOXES RM 300X	4
5	FLOOR BOXES RM 300X	10	20	1					0.72	0.72	1	20	10	FLOOR BOXES RM 300X	6
7	FLOOR BOXES RM 300X	10	20	1	0.72	0.72					1	20	10	FLOOR BOXES RM 300X	8
9	FLOOR BOXES RM 300X	10	20	1			0.72	0.72			1	20	10	FLOOR BOXES RM 300X	10
11	FLOOR BOXES RM 300X	10	20	1					0.72	0.72	1	20	10	FLOOR BOXES RM 300X	12
13	FLOOR BOXES RM 300X	10	20	1	0.72	0.72					1	20	10	FLOOR BOXES RM 300X	14
15	FLOOR BOXES RM 300X	10	20	1			0.72	0.72			1	20	10	FLOOR BOXES RM 300X	16
17	FLOOR BOXES RM 300X	10	20	1					0.72	0.72	1	20	10	FLOOR BOXES RM 300X	18
19	FLOOR BOXES RM 300X	10	20	1	0.72	0.72					1	20	10	FLOOR BOXES RM 300X	20
21	FLOOR BOXES RM 300X	10	20	1			0.72	0.72			1	20	10	FLOOR BOXES RM 300X	22
23	FLOOR BOXES RM 300X	10	20	1					0.72	0.72	1	20	10	FLOOR BOXES RM 300X	24
25	FLOOR BOXES RM 300X	10	20	1	0.72	0.72					1	20	10	FLOOR BOXES RM 300X	26
27	FLOOR BOXES RM 300X	10	20	1			0.72	0.72			1	20	10	FLOOR BOXES RM 300X	28
29	FLOOR BOXES RM 300X	10	20	1					0.72	0.72	1	20	10	FLOOR BOXES RM 300X	30
31	FLOOR BOXES RM 300X	10	20	1	0.72	0.72					1	20	10	FLOOR BOXES RM 300X	32
33	FLOOR BOXES RM 300X	10	20	1			0.72	0.72			1	20	10	FLOOR BOXES RM 300X	34
35	FLOOR BOXES RM 300X	10	20	1					0.72	0.72	1	20	10	FLOOR BOXES RM 300X	36
37	SPARE	--	20	1	0.00	0.00					1	20	--	SPARE	38
39	SPARE	--	20	1			0.00	0.00			1	20	--	SPARE	40
41	SPARE	--	20	1					0.00	0.00	1	20	--	SPARE	42
				TOTAL	8.6		8.6		8.6		KVA				
					72.0		72.0		72.0		AMPS				
				CONNECTED LOAD	25.9		KVA		71.9		AMPS				
NEC ARTICLE 220				DEMAND LOAD	18.0		KVA		49.9		AMPS				

Load Classification	Connected Load	Demand Factor	Estimated Demand	Panel Totals	
RECEPT	25920 VA	69.29%	17960 VA		
				Total Conn. Load:	25920 VA
				Total Est. Demand:	17960 VA
				Total Conn.:	72 A
				Total Est. Demand:	50 A

PANEL RP4

FED FROM: DPLV2
LOCATION: SIMULATION CLASSROOM 300Y
MOUNT: RECESSED

150 A MAIN CIRCUIT BREAKER
3PH 4WIRE 208Y/120V
10K AIC
GROUND BAR

CKT	LOAD SERVED	WIRE	BRKR	PL	A		B		C		PL	BRKR	WIRE	LOAD SERVED	CKT
1	FLOOR BOXES RM 300Y	10	20	1	0.72	0.72					1	20	10	FLOOR BOXES RM 300Y	2
3	FLOOR BOXES RM 300Y	10	20	1			0.72	0.72			1	20	10	FLOOR BOXES RM 300Y	4
5	FLOOR BOXES RM 300Y	10	20	1					0.72	0.72	1	20	10	FLOOR BOXES RM 300Y	6
7	FLOOR BOXES RM 300Y	10	20	1	0.72	0.72					1	20	10	FLOOR BOXES RM 300Y	8
9	FLOOR BOXES RM 300Y	10	20	1			0.72	0.72			1	20	10	FLOOR BOXES RM 300Y	10
11	FLOOR BOXES RM 300Y	10	20	1					0.72	0.72	1	20	10	FLOOR BOXES RM 300Y	12
13	FLOOR BOXES RM 300Y	10	20	1	0.72	0.72					1	20	10	FLOOR BOXES RM 300Y	14
15	FLOOR BOXES RM 300Y	10	20	1			0.72	0.72			1	20	10	FLOOR BOXES RM 300Y	16
17	FLOOR BOXES RM 300Y	10	20	1					0.72	0.72	1	20	10	FLOOR BOXES RM 300Y	18
19	FLOOR BOXES RM 300Y	10	20	1	0.72	0.72					1	20	10	FLOOR BOXES RM 300Y	20
21	FLOOR BOXES RM 300Y	10	20	1			0.72	0.72			1	20	10	FLOOR BOXES RM 300Y	22
23	FLOOR BOXES RM 300Y	10	20	1					0.72	0.72	1	20	10	FLOOR BOXES RM 300Y	24
25	FLOOR BOXES RM 300Y	10	20	1	0.72	0.72					1	20	10	FLOOR BOXES RM 300Y	26
27	FLOOR BOXES RM 300Y	10	20	1			0.72	0.72			1	20	10	FLOOR BOXES RM 300Y	28
29	FLOOR BOXES RM 300Y	10	20	1					0.72	0.72	1	20	10	FLOOR BOXES RM 300Y	30
31	FLOOR BOXES RM 300Y	10	20	1	0.72	0.72					1	20	10	FLOOR BOXES RM 300Y	32
33	FLOOR BOXES RM 300Y	10	20	1			0.72	0.72			1	20	10	FLOOR BOXES RM 300Y	34
35	FLOOR BOXES RM 300Y	10	20	1					0.72	0.72	1	20	10	FLOOR BOXES RM 300Y	36
37	SPARE	--	20	1	0.00	0.00					1	20	--	SPARE	38
39	SPARE	--	20	1			0.00	0.00			1	20	--	SPARE	40
41	SPARE	--	20	1					0.00	0.00	1	20	--	SPARE	42
				TOTAL	8.6		8.6		8.6		KVA				
					72.0		72.0		72.0		AMPS				
				CONNECTED LOAD	25.9		KVA		71.9		AMPS				
NEC ARTICLE 220				DEMAND LOAD	18.0		KVA		49.9		AMPS				

Load Classification	Connected Load	Demand Factor	Estimated Demand	Panel Totals	
RECEPT	25920 VA	69.29%	17960 VA		
				Total Conn. Load:	25920 VA
				Total Est. Demand:	17960 VA
				Total Conn.:	72 A
				Total Est. Demand:	50 A

APPR | DATE | DESCRIPTION | SYM

NAVFAC

SEAL

WNJ Jordan COMPANY – A JOINT VENTURE –

Michael Baker INTERNATIONAL
100 AIRSIDE DRIVE
MOON TOWNSHIP, PA 15108 A/E INFO

APPROVED

FOR COMMANDER NAVFAC

ACTIVITY
MARINE CORPS BASE
CAMP LEJEUNE

SATISFACTORY TO DATE

DES SD | DRW LAK | CHK YPS

PM

BRANCH MANAGER

CHIEF ENG/ARCH

FIRE PROTECTION

NAVAL FACILITIES ENGINEERING COMMAND ~ MID-ATLANTIC
JACKSONVILLE, NC

DEPARTMENT OF THE NAVY
NAVAL FACILITIES ENGINEERING COMMAND
ROICC FLORENCE CAMP LEJEUNE
MCB CAMP LEJEUNE

JACKSONVILLE, NC
P1338 II MEF SIMULATION/TRAINING CENTER
REPLACEMENT

ELECTRICAL - PANEL SCHEDULES

SCALE: AS NOTED
EPROJECT NO.: 1590892
CONSTR. CONTR. NO.
N40085-20-C-0059
NAVFAC DRAWING NO.
SHEET OF

E-607

DP2 SUBMISSION – P1338 BUILDING - PRE-FINAL SUBMISSION

PLOTTED: 6/10/2021 5:42:25 PM

FILE NAME: BIM 360://HF PACKAGE 3/P1338 MEF SIM CTR-1590892-E.rvt

GENERAL NOTES

1 SEE SHEET E-001 FOR ELECTRICAL NOTES, SYMBOLS, AND ABBREVIATIONS.
2 * SEE E-603 FOR WIRE SIZES NOT INDICATED IN PANEL SCHEDULES.

PANEL RP5

FED FROM: DPLV2
LOCATION: SIMULATION CLASSROOM 300Z
MOUNT: RECESSED

150 A MAIN CIRCUIT BREAKER
3PH 4WIRE 208Y/120V
10K AIC
GROUND BAR

CKT	LOAD SERVED	WIRE	BRKR	PL	A		B		C		PL	BRKR	WIRE	LOAD SERVED	CKT
1	FLOOR BOXES RM 300Z	10	20	1	0.72	0.72					1	20	10	FLOOR BOXES RM 300Z	2
3	FLOOR BOXES RM 300Z	10	20	1			0.72	0.72			1	20	10	FLOOR BOXES RM 300Z	4
5	FLOOR BOXES RM 300Z	10	20	1					0.72	0.72	1	20	10	FLOOR BOXES RM 300Z	6
7	FLOOR BOXES RM 300Z	10	20	1	0.72	0.72					1	20	10	FLOOR BOXES RM 300Z	8
9	FLOOR BOXES RM 300Z	10	20	1			0.72	0.72			1	20	10	FLOOR BOXES RM 300Z	10
11	FLOOR BOXES RM 300Z	10	20	1					0.72	0.72	1	20	10	FLOOR BOXES RM 300Z	12
13	FLOOR BOXES RM 300Z	10	20	1	0.72	0.72					1	20	10	FLOOR BOXES RM 300Z	14
15	FLOOR BOXES RM 300Z	10	20	1			0.72	0.72			1	20	10	FLOOR BOXES RM 300Z	16
17	FLOOR BOXES RM 300Z	10	20	1					0.72	0.72	1	20	10	FLOOR BOXES RM 300Z	18
19	FLOOR BOXES RM 300Z	10	20	1	0.72	0.72					1	20	10	FLOOR BOXES RM 300Z	20
21	FLOOR BOXES RM 300Z	10	20	1			0.72	0.72			1	20	10	FLOOR BOXES RM 300Z	22
23	FLOOR BOXES RM 300Z	10	20	1					0.72	0.72	1	20	10	FLOOR BOXES RM 300Z	24
25	FLOOR BOXES RM 300Z	10	20	1	0.72	0.72					1	20	10	FLOOR BOXES RM 300Z	26
27	FLOOR BOXES RM 300Z	10	20	1			0.72	0.72			1	20	10	FLOOR BOXES RM 300Z	28
29	FLOOR BOXES RM 300Z	10	20	1					0.72	0.72	1	20	10	FLOOR BOXES RM 300Z	30
31	FLOOR BOXES RM 300Z	10	20	1	0.72	0.72					1	20	10	FLOOR BOXES RM 300Z	32
33	FLOOR BOXES RM 300Z	10	20	1			0.72	0.72			1	20	10	FLOOR BOXES RM 300Z	34
35	FLOOR BOXES RM 300Z	10	20	1					0.72	0.72	1	20	10	FLOOR BOXES RM 300Z	36
37	SPARE	--	20	1	0.00	0.00					1	20	--	SPARE	38
39	SPARE	--	20	1			0.00	0.00			1	20	--	SPARE	40
41	SPARE	--	20	1					0.00	0.00	1	20	--	SPARE	42
			TOTAL		8.6		8.6		8.6		KVA				
					72.0		72.0		72.0		AMPS				
			CONNECTED LOAD		25.9		KVA		71.9		AMPS				
NEC ARTICLE 220			DEMAND LOAD		18.0		KVA		49.9		AMPS				

Load Classification	Connected Load	Demand Factor	Estimated Demand	Panel Totals	
RECEPT	25920 VA	69.29%	17960 VA		
				Total Conn. Load:	25920 VA
				Total Est. Demand:	17960 VA
				Total Conn.:	72 A
				Total Est. Demand:	50 A

PANEL RP6

FED FROM: DPLV2
LOCATION: SIMULATION CLASSROOM 300C
MOUNT: RECESSED

150 A MAIN CIRCUIT BREAKER
3PH 4WIRE 208Y/120V
10K AIC
GROUND BAR

CKT	LOAD SERVED	WIRE	BRKR	PL	A		B		C		PL	BRKR	WIRE	LOAD SERVED	CKT
1	FLOOR BOXES RM 300C	10	20	1	0.72	0.72					1	20	10	FLOOR BOXES RM 300C	2
3	FLOOR BOXES RM 300C	10	20	1			0.72	0.72			1	20	10	FLOOR BOXES RM 300C	4
5	FLOOR BOXES RM 300C	10	20	1					0.72	0.72	1	20	10	FLOOR BOXES RM 300C	6
7	FLOOR BOXES RM 300C	10	20	1	0.72	0.72					1	20	10	FLOOR BOXES RM 300C	8
9	FLOOR BOXES RM 300C	10	20	1			0.72	0.72			1	20	10	FLOOR BOXES RM 300C	10
11	FLOOR BOXES RM 300C	10	20	1					0.72	0.72	1	20	10	FLOOR BOXES RM 300C	12
13	FLOOR BOXES RM 300C	10	20	1	0.72	0.72					1	20	10	FLOOR BOXES RM 300C	14
15	FLOOR BOXES RM 300C	10	20	1			0.72	0.72			1	20	10	FLOOR BOXES RM 300C	16
17	FLOOR BOXES RM 300C	10	20	1					0.72	0.72	1	20	10	FLOOR BOXES RM 300C	18
19	FLOOR BOXES RM 300C	10	20	1	0.72	0.72					1	20	10	FLOOR BOXES RM 300C	20
21	FLOOR BOXES RM 300C	10	20	1			0.72	0.72			1	20	10	FLOOR BOXES RM 300C	22
23	FLOOR BOXES RM 300C	10	20	1					0.72	0.72	1	20	10	FLOOR BOXES RM 300C	24
25	FLOOR BOXES RM 300C	10	20	1	0.72	0.72					1	20	10	FLOOR BOXES RM 300C	26
27	FLOOR BOXES RM 300C	10	20	1			0.72	0.72			1	20	10	FLOOR BOXES RM 300C	28
29	FLOOR BOXES RM 300C	10	20	1					0.72	0.72	1	20	10	FLOOR BOXES RM 300C	30
31	FLOOR BOXES RM 300C	10	20	1	0.72	0.72					1	20	10	FLOOR BOXES RM 300C	32
33	FLOOR BOXES RM 300C	10	20	1			0.72	0.72			1	20	10	FLOOR BOXES RM 300C	34
35	FLOOR BOXES RM 300C	10	20	1					0.72	0.72	1	20	10	FLOOR BOXES RM 300C	36
37	SPARE	--	20	1	0.00	0.00					1	20	--	SPARE	38
39	SPARE	--	20	1			0.00	0.00			1	20	--	SPARE	40
41	SPARE	--	20	1					0.00	0.00	1	20	--	SPARE	42
			TOTAL		8.6		8.6		8.6		KVA				
					72.0		72.0		72.0		AMPS				
			CONNECTED LOAD		25.9		KVA		71.9		AMPS				
NEC ARTICLE 220			DEMAND LOAD		18.0		KVA		49.9		AMPS				

Load Classification	Connected Load	Demand Factor	Estimated Demand	Panel Totals	
RECEPT	25920 VA	69.29%	17960 VA		
				Total Conn. Load:	25920 VA
				Total Est. Demand:	17960 VA
				Total Conn.:	72 A
				Total Est. Demand:	50 A

PANEL RP7

FED FROM: DPLV2
LOCATION: SIMULATION CLASSROOM 300B
MOUNT: RECESSED

150 A MAIN CIRCUIT BREAKER
3PH 4WIRE 208Y/120V
10K AIC
GROUND BAR

CKT	LOAD SERVED	WIRE	BRKR	PL	A		B		C		PL	BRKR	WIRE	LOAD SERVED	CKT
1	FLOOR BOXES RM 300B	10	20	1	0.72	0.72					1	20	10	FLOOR BOXES RM 300B	2
3	FLOOR BOXES RM 300B	10	20	1			0.72	0.72			1	20	10	FLOOR BOXES RM 300B	4
5	FLOOR BOXES RM 300B	10	20	1					0.72	0.72	1	20	10	FLOOR BOXES RM 300B	6
7	FLOOR BOXES RM 300B	10	20	1	0.72	0.72					1	20	10	FLOOR BOXES RM 300B	8
9	FLOOR BOXES RM 300B	10	20	1			0.72	0.72			1	20	10	FLOOR BOXES RM 300B	10
11	FLOOR BOXES RM 300B	10	20	1					0.72	0.72	1	20	10	FLOOR BOXES RM 300B	12
13	FLOOR BOXES RM 300B	10	20	1	0.72	0.72					1	20	10	FLOOR BOXES RM 300B	14
15	FLOOR BOXES RM 300B	10	20	1			0.72	0.72			1	20	10	FLOOR BOXES RM 300B	16
17	FLOOR BOXES RM 300B	10	20	1					0.72	0.72	1	20	10	FLOOR BOXES RM 300B	18
19	FLOOR BOXES RM 300B	10	20	1	0.72	0.72					1	20	10	FLOOR BOXES RM 300B	20
21	FLOOR BOXES RM 300B	10	20	1			0.72	0.72			1	20	10	FLOOR BOXES RM 300B	22
23	FLOOR BOXES RM 300B	10	20	1					0.72	0.72	1	20	10	FLOOR BOXES RM 300B	24
25	FLOOR BOXES RM 300B	10	20	1	0.72	0.72					1	20	10	FLOOR BOXES RM 300B	26
27	FLOOR BOXES RM 300B	10	20	1			0.72	0.72			1	20	10	FLOOR BOXES RM 300B	28
29	FLOOR BOXES RM 300B	10	20	1					0.72	0.72	1	20	10	FLOOR BOXES RM 300B	30
31	FLOOR BOXES RM 300B	10	20	1	0.72	0.72					1	20	10	FLOOR BOXES RM 300B	32
33	FLOOR BOXES RM 300B	10	20	1			0.72	0.72			1	20	10	FLOOR BOXES RM 300B	34
35	FLOOR BOXES RM 300B	10	20	1					0.72	0.72	1	20	10	FLOOR BOXES RM 300B	36
37	SPARE	--	20	1	0.00	0.00					1	20	--	SPARE	38
39	SPARE	--	20	1			0.00	0.00			1	20	--	SPARE	40
41	SPARE	--	20	1					0.00	0.00	1	20	--	SPARE	42
			TOTAL		8.6		8.6		8.6		KVA				
					72.0		72.0		72.0		AMPS				
			CONNECTED LOAD		25.9		KVA		71.9		AMPS				
NEC ARTICLE 220			DEMAND LOAD		18.0		KVA		49.9		AMPS				

Load Classification	Connected Load	Demand Factor	Estimated Demand	Panel Totals	
RECEPT	25920 VA	69.29%	17960 VA		
				Total Conn. Load:	25920 VA
				Total Est. Demand:	17960 VA
				Total Conn.:	72 A
				Total Est. Demand:	50 A

PANEL RP8

FED FROM: DPLV2
LOCATION: SIMULATION CLASSROOM 300A
MOUNT: RECESSED

150 A MAIN CIRCUIT BREAKER
3PH 4WIRE 208Y/120V
10K AIC
GROUND BAR

CKT	LOAD SERVED	WIRE	BRKR	PL	A		B		C		PL	BRKR	WIRE	LOAD SERVED	CKT
1	FLOOR BOXES RM 300A	10	20	1	0.72	0.72					1	20	10	FLOOR BOXES RM 300A	2
3	FLOOR BOXES RM 300A	10	20	1			0.72	0.72			1	20	10	FLOOR BOXES RM 300A	4
5	FLOOR BOXES RM 300A	10	20	1					0.72	0.72	1	20	10	FLOOR BOXES RM 300A	6
7	FLOOR BOXES RM 300A	10	20	1	0.72	0.72					1	20	10	FLOOR BOXES RM 300A	8
9	FLOOR BOXES RM 300A	10	20	1			0.72	0.72			1	20	10	FLOOR BOXES RM 300A	10
11	FLOOR BOXES RM 300A	10	20	1					0.72	0.72	1	20	10	FLOOR BOXES RM 300A	12
13	FLOOR BOXES RM 300A	10	20	1	0.72	0.72					1	20	10	FLOOR BOXES RM 300A	14
15	FLOOR BOXES RM 300A	10	20	1			0.72	0.72			1	20	10	FLOOR BOXES RM 300A	16
17	FLOOR BOXES RM 300A	10	20	1					0.72	0.72	1	20	10	FLOOR BOXES RM 300A	18
19	FLOOR BOXES RM 300A	10	20	1	0.72	0.72					1	20	10	FLOOR BOXES RM 300A	20
21	FLOOR BOXES RM 300A	10	20	1			0.72	0.72			1	20	10	FLOOR BOXES RM 300A	22
23	FLOOR BOXES RM 300A	10	20	1					0.72	0.72	1	20	10	FLOOR BOXES RM 300A	24
25	FLOOR BOXES RM 300A	10	20	1	0.72	0.72					1	20	10	FLOOR BOXES RM 300A	26
27	FLOOR BOXES RM 300A	10	20	1			0.72	0.72			1	20	10	FLOOR BOXES RM 300A	28
29	FLOOR BOXES RM 300A	10	20	1					0.72	0.72	1	20	10	FLOOR BOXES RM 300A	30
31	FLOOR BOXES RM 300A	10	20	1	0.72	0.72					1	20	10	FLOOR BOXES RM 300A	32
33	FLOOR BOXES RM 300A	10	20	1			0.72	0.72			1	20	10	FLOOR BOXES RM 300A	34
35	FLOOR BOXES RM 300A	10	20	1					0.72	0.72	1	20	10	FLOOR BOXES RM 300A	36
37	SPARE	--	20	1	0.00	0.00					1	20	--	SPARE	38
39	SPARE	--	20	1			0.00	0.00			1	20	--	SPARE	40
41	SPARE	--	20	1					0.00	0.00	1	20	--	SPARE	42
			TOTAL		8.6		8.6		8.6		KVA				
					72.0		72.0		72.0		AMPS				
			CONNECTED LOAD		25.9		KVA		71.9		AMPS				
NEC ARTICLE 220			DEMAND LOAD		18.0		KVA		49.9		AMPS				

Load Classification	Connected Load	Demand Factor	Estimated Demand	Panel Totals	
RECEPT	25920 VA	69.29%	17960 VA		
				Total Conn. Load:	25920 VA
				Total Est. Demand:	17960 VA
				Total Conn.:	72 A
				Total Est. Demand:	50 A

APPR | DATE | DESCRIPTION | SYM

NAVFAC

SEAL

WM Jordan COMPANY – A JOINT VENTURE –

Michael Baker INTERNATIONAL
100 AIRSIDE DRIVE
MOON TOWNSHIP, PA 15108 A/E INFO

APPROVED

FOR COMMANDER NAVFAC

ACTIVITY
MARINE CORPS BASE
CAMP LEJEUNE

SATISFACTORY TO DATE

DES SD | DRW LAK | CHK YPS

PM

BRANCH MANAGER

CHIEF ENG/ARCH

FIRE PROTECTION

DEPARTMENT OF THE NAVY
NAVAL FACILITIES ENGINEERING COMMAND
ROICC FLORENCE CAMP LEJEUNE
MCB CAMP LEJEUNE

NAVAL FACILITIES ENGINEERING COMMAND – MID-ATLANTIC
JACKSONVILLE, NC

JACKSONVILLE, NC
P1338 II MEF SIMULATION/TRAINING CENTER
REPLACEMENT

ELECTRICAL - PANEL SCHEDULES

SCALE: AS NOTED

EPROJECT NO.: 1590892

CONSTR. CONTR. NO.
N40085-20-C-0059

NAVFAC DRAWING NO.

SHEET OF

E-608

DP2 SUBMISSION – P1338 BUILDING - PRE-FINAL SUBMISSION

PLOTTED: 6/10/2021 5:42:28 PM

FILE NAME: BIM 360://HF PACKAGE 3/P1338 MEF SIM CTR-1590892-E.rvt

GENERAL NOTES

1 SEE SHEET E-001 FOR ELECTRICAL NOTES, SYMBOLS, AND ABBREVIATIONS.
2 * SEE E-603 FOR WIRE SIZES NOT INDICATED IN PANEL SCHEDULES.

PANEL RP9

FED FROM: DPLV3
LOCATION: EXERCISE CONTROL 202
MOUNT: RECESSED

150 A MAIN CIRCUIT BREAKER
3PH 4WIRE 208Y/120V
10K AIC
GROUND BAR

CKT	LOAD SERVED	WIRE	BRKR	PL	A		B		C		PL	BRKR	WIRE	LOAD SERVED	CKT
1	FLOOR BOXES RM 202	10	20	1	0.72	0.72					1	20	10	FLOOR BOXES RM 202	2
3	FLOOR BOXES RM 202	10	20	1			0.72	0.72			1	20	10	FLOOR BOXES RM 202	4
5	FLOOR BOXES RM 202	10	20	1					0.72	0.72	1	20	10	FLOOR BOXES RM 202	6
7	FLOOR BOXES RM 202	10	20	1	0.72	0.72					1	20	10	FLOOR BOXES RM 202	8
9	FLOOR BOXES RM 202	10	20	1			0.72	0.72			1	20	10	FLOOR BOXES RM 202	10
11	FLOOR BOXES RM 202	10	20	1					0.72	0.72	1	20	10	FLOOR BOXES RM 202	12
13	FLOOR BOXES RM 202	10	20	1	0.72	0.72					1	20	10	FLOOR BOXES RM 202	14
15	FLOOR BOXES RM 202	10	20	1			0.72	0.72			1	20	10	FLOOR BOXES RM 202	16
17	FLOOR BOXES RM 202	10	20	1					0.72	0.72	1	20	10	FLOOR BOXES RM 202	18
19	FLOOR BOXES RM 202	10	20	1	0.72	0.72					1	20	10	FLOOR BOXES RM 202	20
21	FLOOR BOXES RM 202	10	20	1			0.72	0.72			1	20	10	FLOOR BOXES RM 202	22
23	FLOOR BOXES RM 202	10	20	1					0.72	0.72	1	20	10	FLOOR BOXES RM 202	24
25	FLOOR BOXES RM 202	10	20	1	0.72	0.72					1	20	10	FLOOR BOXES RM 202	26
27	FLOOR BOXES RM 202	10	20	1			0.72	0.72			1	20	10	FLOOR BOXES RM 202	28
29	FLOOR BOXES RM 202	10	20	1					0.72	0.72	1	20	10	FLOOR BOXES RM 202	30
31	FLOOR BOXES RM 202	10	20	1	0.72	0.72					1	20	10	FLOOR BOXES RM 202	32
33	FLOOR BOXES RM 202	10	20	1			0.72	0.72			1	20	10	FLOOR BOXES RM 202	34
35	FLOOR BOXES RM 202	10	20	1					0.72	0.72	1	20	10	FLOOR BOXES RM 202	36
37	SPARE	--	20	1	0.00	0.00					1	20	--	SPARE	38
39	SPARE	--	20	1			0.00	0.00			1	20	--	SPARE	40
41	SPARE	--	20	1					0.00	0.00	1	20	--	SPARE	42
			TOTAL		8.6		8.6		8.6		KVA				
					72.0		72.0		72.0		AMPS				
			CONNECTED LOAD		25.9		KVA		71.9		AMPS				
NEC ARTICLE 220			DEMAND LOAD		18.0		KVA		49.9		AMPS				

Load Classification	Connected Load	Demand Factor	Estimated Demand
RECEPT	25920 VA	69.29%	17960 VA

Panel Totals	
Total Conn. Load:	25920 VA
Total Est. Demand:	17960 VA
Total Conn.:	72 A
Total Est. Demand:	50 A

PANEL RP10

FED FROM: DPLV3
LOCATION: SIMULATION CLASSROOM 200C
MOUNT: RECESSED

150 A MAIN CIRCUIT BREAKER
3PH 4WIRE 208Y/120V
10K AIC
GROUND BAR

CKT	LOAD SERVED	WIRE	BRKR	PL	A		B		C		PL	BRKR	WIRE	LOAD SERVED	CKT
1	FLOOR BOXES RM 200C	10	20	1	0.72	0.72					1	20	10	FLOOR BOXES RM 200C	2
3	FLOOR BOXES RM 200C	10	20	1			0.72	0.72			1	20	10	FLOOR BOXES RM 200C	4
5	FLOOR BOXES RM 200C	10	20	1					0.72	0.72	1	20	10	FLOOR BOXES RM 200C	6
7	FLOOR BOXES RM 200C	10	20	1	0.72	0.72					1	20	10	FLOOR BOXES RM 200C	8
9	FLOOR BOXES RM 200C	10	20	1			0.72	0.72			1	20	10	FLOOR BOXES RM 200C	10
11	FLOOR BOXES RM 200C	10	20	1					0.72	0.72	1	20	10	FLOOR BOXES RM 200C	12
13	FLOOR BOXES RM 200C	10	20	1	0.72	0.72					1	20	10	FLOOR BOXES RM 200C	14
15	FLOOR BOXES RM 200C	10	20	1			0.72	0.72			1	20	10	FLOOR BOXES RM 200C	16
17	FLOOR BOXES RM 200C	10	20	1					0.72	0.72	1	20	10	FLOOR BOXES RM 200C	18
19	FLOOR BOXES RM 200C	10	20	1	0.72	0.72					1	20	10	FLOOR BOXES RM 200C	20
21	FLOOR BOXES RM 200C	10	20	1			0.72	0.72			1	20	10	FLOOR BOXES RM 200C	22
23	FLOOR BOXES RM 200C	10	20	1					0.72	0.72	1	20	10	FLOOR BOXES RM 200C	24
25	FLOOR BOXES RM 200C	10	20	1	0.72	0.72					1	20	10	FLOOR BOXES RM 200C	26
27	FLOOR BOXES RM 200C	10	20	1			0.72	0.72			1	20	10	FLOOR BOXES RM 200C	28
29	FLOOR BOXES RM 200C	10	20	1					0.72	0.72	1	20	10	FLOOR BOXES RM 200C	30
31	FLOOR BOXES RM 200C	10	20	1	0.72	0.72					1	20	10	FLOOR BOXES RM 200C	32
33	FLOOR BOXES RM 200C	10	20	1			0.72	0.72			1	20	10	FLOOR BOXES RM 200C	34
35	FLOOR BOXES RM 200C	10	20	1					0.72	0.72	1	20	10	FLOOR BOXES RM 200C	36
37	SPARE	--	20	1	0.00	0.00					1	20	--	SPARE	38
39	SPARE	--	20	1			0.00	0.00			1	20	--	SPARE	40
41	SPARE	--	20	1					0.00	0.00	1	20	--	SPARE	42
			TOTAL		8.6		8.6		8.6		KVA				
					72.0		72.0		72.0		AMPS				
			CONNECTED LOAD		25.9		KVA		71.9		AMPS				
NEC ARTICLE 220			DEMAND LOAD		18.0		KVA		49.9		AMPS				

Load Classification	Connected Load	Demand Factor	Estimated Demand
RECEPT	25920 VA	69.29%	17960 VA

Panel Totals	
Total Conn. Load:	25920 VA
Total Est. Demand:	17960 VA
Total Conn.:	72 A
Total Est. Demand:	50 A

PANEL RP11

FED FROM: DPLV3
LOCATION: SIMULATION CLASSROOM 200B
MOUNT: RECESSED

150 A MAIN CIRCUIT BREAKER
3PH 4WIRE 208Y/120V
10K AIC
GROUND BAR

CKT	LOAD SERVED	WIRE	BRKR	PL	A		B		C		PL	BRKR	WIRE	LOAD SERVED	CKT
1	FLOOR BOXES RM 200B	10	20	1	0.72	0.72					1	20	10	FLOOR BOXES RM 200B	2
3	FLOOR BOXES RM 200B	10	20	1			0.72	0.72			1	20	10	FLOOR BOXES RM 200B	4
5	FLOOR BOXES RM 200B	10	20	1					0.72	0.72	1	20	10	FLOOR BOXES RM 200B	6
7	FLOOR BOXES RM 200B	10	20	1	0.72	0.72					1	20	10	FLOOR BOXES RM 200B	8
9	FLOOR BOXES RM 200B	10	20	1			0.72	0.72			1	20	10	FLOOR BOXES RM 200B	10
11	FLOOR BOXES RM 200B	10	20	1					0.72	0.72	1	20	10	FLOOR BOXES RM 200B	12
13	FLOOR BOXES RM 200B	10	20	1	0.72	0.72					1	20	10	FLOOR BOXES RM 200B	14
15	FLOOR BOXES RM 200B	10	20	1			0.72	0.72			1	20	10	FLOOR BOXES RM 200B	16
17	FLOOR BOXES RM 200B	10	20	1					0.72	0.72	1	20	10	FLOOR BOXES RM 200B	18
19	FLOOR BOXES RM 200B	10	20	1	0.72	0.72					1	20	10	FLOOR BOXES RM 200B	20
21	FLOOR BOXES RM 200B	10	20	1			0.72	0.72			1	20	10	FLOOR BOXES RM 200B	22
23	FLOOR BOXES RM 200B	10	20	1					0.72	0.72	1	20	10	FLOOR BOXES RM 200B	24
25	FLOOR BOXES RM 200B	10	20	1	0.72	0.72					1	20	10	FLOOR BOXES RM 200B	26
27	FLOOR BOXES RM 200B	10	20	1			0.72	0.72			1	20	10	FLOOR BOXES RM 200B	28
29	FLOOR BOXES RM 200B	10	20	1					0.72	0.72	1	20	10	FLOOR BOXES RM 200B	30
31	FLOOR BOXES RM 200B	10	20	1	0.72	0.72					1	20	10	FLOOR BOXES RM 200B	32
33	FLOOR BOXES RM 200B	10	20	1			0.72	0.72			1	20	10	FLOOR BOXES RM 200B	34
35	FLOOR BOXES RM 200B	10	20	1					0.72	0.72	1	20	10	FLOOR BOXES RM 200B	36
37	SPARE	--	20	1	0.00	0.00					1	20	--	SPARE	38
39	SPARE	--	20	1			0.00	0.00			1	20	--	SPARE	40
41	SPARE	--	20	1					0.00	0.00	1	20	--	SPARE	42
			TOTAL		8.6		8.6		8.6		KVA				
					72.0		72.0		72.0		AMPS				
			CONNECTED LOAD		25.9		KVA		71.9		AMPS				
NEC ARTICLE 220			DEMAND LOAD		18.0		KVA		49.9		AMPS				

Load Classification	Connected Load	Demand Factor	Estimated Demand
RECEPT	25920 VA	69.29%	17960 VA

Panel Totals	
Total Conn. Load:	25920 VA
Total Est. Demand:	17960 VA
Total Conn.:	72 A
Total Est. Demand:	50 A

PANEL RP12

FED FROM: DPLV3
LOCATION: SIMULATION CLASSROOM 200A
MOUNT: RECESSED

150 A MAIN CIRCUIT BREAKER
3PH 4WIRE 208Y/120V
10K AIC
GROUND BAR

CKT	LOAD SERVED	WIRE	BRKR	PL	A		B		C		PL	BRKR	WIRE	LOAD SERVED	CKT
1	FLOOR BOXES RM 200A	10	20	1	0.72	0.72					1	20	10	FLOOR BOXES RM 200A	2
3	FLOOR BOXES RM 200A	10	20	1			0.72	0.72			1	20	10	FLOOR BOXES RM 200A	4
5	FLOOR BOXES RM 200A	10	20	1					0.72	0.72	1	20	10	FLOOR BOXES RM 200A	6
7	FLOOR BOXES RM 200A	10	20	1	0.72	0.72					1	20	10	FLOOR BOXES RM 200A	8
9	FLOOR BOXES RM 200A	10	20	1			0.72	0.72			1	20	10	FLOOR BOXES RM 200A	10
11	FLOOR BOXES RM 200A	10	20	1					0.72	0.72	1	20	10	FLOOR BOXES RM 200A	12
13	FLOOR BOXES RM 200A	10	20	1	0.72	0.72					1	20	10	FLOOR BOXES RM 200A	14
15	FLOOR BOXES RM 200A	10	20	1			0.72	0.72			1	20	10	FLOOR BOXES RM 200A	16
17	FLOOR BOXES RM 200A	10	20	1					0.72	0.72	1	20	10	FLOOR BOXES RM 200A	18
19	FLOOR BOXES RM 200A	10	20	1	0.72	0.72					1	20	10	FLOOR BOXES RM 200A	20
21	FLOOR BOXES RM 200A	10	20	1			0.72	0.72			1	20	10	FLOOR BOXES RM 200A	22
23	FLOOR BOXES RM 200A	10	20	1					0.72	0.72	1	20	10	FLOOR BOXES RM 200A	24
25	FLOOR BOXES RM 200A	10	20	1	0.72	0.72					1	20	10	FLOOR BOXES RM 200A	26
27	FLOOR BOXES RM 200A	10	20	1			0.72	0.72			1	20	10	FLOOR BOXES RM 200A	28
29	FLOOR BOXES RM 200A	10	20	1					0.72	0.72	1	20	10	FLOOR BOXES RM 200A	30
31	FLOOR BOXES RM 200A	10	20	1	0.72	0.72					1	20	10	FLOOR BOXES RM 200A	32
33	FLOOR BOXES RM 200A	10	20	1			0.72	0.72			1	20	10	FLOOR BOXES RM 200A	34
35	FLOOR BOXES RM 200A	10	20	1					0.72	0.72	1	20	10	FLOOR BOXES RM 200A	36
37	SPARE	--	20	1	0.00	0.00					1	20	--	SPARE	38
39	SPARE	--	20	1			0.00	0.00			1	20	--	SPARE	40
41	SPARE	--	20	1					0.00	0.00	1	20	--	SPARE	42
			TOTAL		8.6		8.6		8.6		KVA				
					72.0		72.0		72.0		AMPS				
			CONNECTED LOAD		25.9		KVA		71.9		AMPS				
NEC ARTICLE 220			DEMAND LOAD		18.0		KVA		49.9		AMPS				

Load Classification	Connected Load	Demand Factor	Estimated Demand
RECEPT	25920 VA	69.29%	17960 VA

Panel Totals	
Total Conn. Load:	25920 VA
Total Est. Demand:	17960 VA
Total Conn.:	72 A
Total Est. Demand:	50 A

APPR | DATE | SYM | DESCRIPTION

SEAL

W.M. Jordan COMPANY – A JOINT VENTURE –

Michael Baker INTERNATIONAL
100 AIRSIDE DRIVE
MOON TOWNSHIP, PA 15108 A/E INFO

APPROVED
FOR COMMANDER NAVFAC
ACTIVITY
MARINE CORPS BASE CAMP LEJEUNE
SATISFACTORY TO DATE
DES SD | DRW LAK | CHK YPS
PM
BRANCH MANAGER
CHIEF ENG/ARCH
FIRE PROTECTION

NAVAL FACILITIES ENGINEERING COMMAND
NAVAL FACILITIES ENGINEERING COMMAND ~ MID-ATLANTIC
JACKSONVILLE, NC
DEPARTMENT OF THE NAVY
ROICC FLORENCE CAMP LEJEUNE
MCB CAMP LEJEUNE
P1338 II MEF SIMULATION/TRAINING CENTER
REPLACEMENT
JACKSONVILLE, NC
ELECTRICAL - PANEL SCHEDULES

SCALE: AS NOTED
EPROJECT NO.: 1590892
CONSTR. CONTR. NO.
N40085-20-C-0059
NAVFAC DRAWING NO.
SHEET OF

E-609

DP2 SUBMISSION – P1338 BUILDING - PRE-FINAL SUBMISSION

PLOTTED: 6/10/2021 5:42:31 PM
FILE NAME: BIM 360://HF PACKAGE 3/P1338 MEF SIM CTR-1590892-E.rvt

GENERAL NOTES

1 SEE SHEET E-001 FOR ELECTRICAL NOTES, SYMBOLS, AND ABBREVIATIONS.
2 * SEE E-603 FOR WIRE SIZES NOT INDICATED IN PANEL SCHEDULES.

PANEL RP13

FED FROM: DPLV3
LOCATION: FIRE ROOM 104B
MOUNT: RECESSED

150 A MAIN CIRCUIT BREAKER
3PH 4WIRE 208Y/120V
10K AIC
GROUND BAR

CKT	LOAD SERVED	WIRE	BRKR	PL	A		B		C		PL	BRKR	WIRE	LOAD SERVED	CKT
1	FLOOR BOXES RM 104A	10	20	1	0.72	0.72					1	20	10	FLOOR BOXES RM 104A	2
3	FLOOR BOXES RM 104A	10	20	1			0.72	0.72			1	20	10	FLOOR BOXES RM 104A	4
5	FLOOR BOXES RM 104A	10	20	1					0.72	0.72	1	20	10	FLOOR BOXES RM 104A	6
7	FLOOR BOXES RM 104A	10	20	1	0.72	0.72					1	20	10	FLOOR BOXES RM 104A	8
9	FLOOR BOXES RM 104A	10	20	1			0.72	0.72			1	20	10	FLOOR BOXES RM 104B	10
11	FLOOR BOXES RM 104B	10	20	1					0.72	0.72	1	20	10	FLOOR BOXES RM 104B	12
13	FLOOR BOXES RM 104B	10	20	1	0.72	0.72					1	20	10	FLOOR BOXES RM 104B	14
15	FLOOR BOXES RM 104B	10	20	1			0.72	0.72			1	20	10	FLOOR BOXES RM 104B	16
17	FLOOR BOXES RM 104B	10	20	1					0.72	0.72	1	20	10	FLOOR BOXES RM 104B	18
19	FLOOR BOXES RM 104C	10	20	1	0.72	0.72					1	20	10	FLOOR BOXES RM 104C	20
21	FLOOR BOXES RM 104C	10	20	1			0.72	0.72			1	20	10	FLOOR BOXES RM 104C	22
23	FLOOR BOXES RM 104C	10	20	1					0.72	0.72	1	20	10	FLOOR BOXES RM 104C	24
25	FLOOR BOXES RM 104C	10	20	1	0.72	0.72					1	20	10	FLOOR BOXES RM 104C	26
27	FLOOR BOXES RM 104C	10	20	1			0.72	0.00			1	20	--	SPARE	28
29	SPARE	--	20	1					0.00	0.00	1	20	--	SPARE	30
31	SPARE	--	20	1	0.00	0.00					1	20	--	SPARE	32
33	SPARE	--	20	1			0.00	0.00			1	20	--	SPARE	34
35	PROVISIONED SPACE	--	--	--					0.00	0.00	--	--	--	PROVISIONED SPACE	36
37	PROVISIONED SPACE	--	--	--	0.00	0.00					--	--	--	PROVISIONED SPACE	38
39	PROVISIONED SPACE	--	--	--			0.00	0.00			--	--	--	PROVISIONED SPACE	40
41	PROVISIONED SPACE	--	--	--					0.00	0.00	--	--	--	PROVISIONED SPACE	42
			TOTAL		7.2		6.5		5.8		KVA				
					60.9		54.9		48.0		AMPS				
			CONNECTED LOAD		19.4		KVA		54.0		AMPS				
NEC ARTICLE 220			DEMAND LOAD		14.7		KVA		40.9		AMPS				

Load Classification	Connected Load	Demand Factor	Estimated Demand	Panel Totals	
RECEPT	19440 VA	75.72%	14720 VA		
				Total Conn. Load:	19440 VA
				Total Est. Demand:	14720 VA
				Total Conn.:	54 A
				Total Est. Demand:	41 A

PANEL RP14

FED FROM: DPLV3
LOCATION: ELEC 116
MOUNT: SURFACE

200 A MAIN CIRCUIT BREAKER
3PH 4WIRE 208Y/120V
10K AIC
GROUND BAR

CKT	LOAD SERVED	WIRE	BRKR	PL	A		B		C		PL	BRKR	WIRE	LOAD SERVED	CKT
1	RECEPT ELEC 116	12	20	1	0.36	0.85					1	20	12	COFFEE MAKER RM 108	2
3	RECEPT RM 107	12	20	1			0.54	0.72			1	20	12	RECEPT RM 402	4
5	RECEPT RM 402	12	20	1					0.72	1.08	1	20	12	RECEPT RM 400	6
7	MICROWAVE RM 108	12	20	1	1.65	1.65					1	20	12	MICROWAVE RM 108	8
9	RECEPT RM 105	12	20	1			0.90	0.90			1	20	12	RECEPT RM 106	10
11	RECEPT RM 108	12	20	1					1.26	1.44	1	20	12	VENDING MACHINE RM 108	12
13	RECEPT RM 109	12	20	1	0.72	0.90					1	20	12	RECEPT RM 103A	14
15	VENDING MACHINE RM 108	12	20	1			1.44	0.72			1	20	12	RECEPT RM 107	16
17	REFRIG RM 108	12	20	1					0.72	0.90	1	20	12	RECEPT RM 109	18
19	RECEPT RM 113	12	20	1	1.08	1.08					1	20	12	RECEPT RM 107	20
21	RECEPT RM 109	12	20	1			0.90	1.08			1	20	12	RECEPT RM 114	22
23	RECEPT RM 401 / RM 118	12	20	1					1.26	1.08	1	20	12	RECEPT RM 112	24
25	COPIER RM 105	12	20	1	1.20	0.00					--	--	--	PROVISIONED SPACE	26
27	RECEPT RM 111	12	20	1			1.08	1.20			1	20	12	COPIER RM 106	28
29	COPIER RM 109	12	20	1					1.20	6.48	3	100	1	RP15	30
31	SPARE	--	20	1	0.00	6.30					--	--	--	--	32
33	SPARE	--	20	1			0.00	7.02			--	--	--	--	34
35	SPARE	--	20	1					0.00	0.00	1	20	--	SPARE	36
37	PROVISIONED SPACE	--	--	--	0.00	0.00					1	20	--	SPARE	38
39	PROVISIONED SPACE	--	--	--			0.00	0.00			1	20	--	SPARE	40
41	PROVISIONED SPACE	--	--	--					0.00	0.00	1	20	--	SPARE	42
			TOTAL		15.8		16.5		16.1		KVA				
					131.6		137.9		134.9		AMPS				
			CONNECTED LOAD		48.4		KVA		134.4		AMPS				
NEC ARTICLE 220			DEMAND LOAD		34.5		KVA		95.8		AMPS				

Load Classification	Connected Load	Demand Factor	Estimated Demand	Panel Totals	
Equipment	12250 VA	100.00%	12250 VA		
RECEPT	32940 VA	65.18%	21470 VA		
UFC-MOTOR-25%	3240 VA	25.00%	810 VA		
				Total Conn. Load:	48430 VA
				Total Est. Demand:	34530 VA
				Total Conn.:	134 A
				Total Est. Demand:	96 A

PANEL RP15

FED FROM: RP14
LOCATION: ELEC 116
MOUNT: SURFACE

100 A MAIN LUG ONLY
3PH 4WIRE 208Y/120V
10K AIC
GROUND BAR

CKT	LOAD SERVED	WIRE	BRKR	PL	A		B		C		PL	BRKR	WIRE	LOAD SERVED	CKT
1	REFRIG RM 110	12	20	1	0.18	0.72					1	20	12	ELEC WATER COOLER COR. C011	2
3	LAVATORY / WATER CLOSET RM G012	12	20	1			0.36	0.72			1	20	12	RECEPT MOTHER'S ROOM 110	4
5	SYSTEMS FURNITURE RM 107	10	30	1					2.16	0.72	1	20	12	SYSTEMS FURNITURE RM 109	6
7	RECEPT COR. C011 / COR. C012 / COR. C014 / COR. C016	12	20	1	1.26	0.72					1	20	12	SYSTEMS FURNITURE RM 106	8
9	RECEPT RM G011, G010, G012	12	20	1			0.90	0.72			1	20	12	SYSTEMS FURNITURE RM 107	10
11	SYSTEMS FURNITURE RM 107	12	20	1					1.44	2.16	1	30	10	SYSTEMS FURNITURE RM 109	12
13	LAVATORY / URINAL / WATER CLOSET RM G010	12	20	1	1.44	2.16					1	30	10	SYSTEMS FURNITURE RM 109	14
15	LAVATORY / WATER CLOSET RM G011	12	20	1			1.44	2.16			1	30	10	SYSTEMS FURNITURE RM 109	16
17	RECEPT EXTERIOR	12	20	1					0.54	0.00	1	30	--	SPARE	18
19	SPARE	--	20	1	0.00	0.00					1	30	--	SPARE	20
21	SPARE	--	20	1			0.00	0.00			--	--	--	PROVISIONED SPACE	22
23	PROVISIONED SPACE	--	--	--					0.00	0.00	--	--	--	PROVISIONED SPACE	24
25	PROVISIONED SPACE	--	--	--	0.00	0.00					--	--	--	PROVISIONED SPACE	26
27	PROVISIONED SPACE	--	--	--			0.00	0.00			--	--	--	PROVISIONED SPACE	28
29	PROVISIONED SPACE	--	--	--					0.00	0.00	--	--	--	PROVISIONED SPACE	30
			TOTAL		6.5		6.3		7.0		KVA				
					54.2		52.5		58.7		AMPS				
			CONNECTED LOAD		19.8		KVA		55.0		AMPS				
NEC ARTICLE 220			DEMAND LOAD		14.5		KVA		40.4		AMPS				

Load Classification	Connected Load	Demand Factor	Estimated Demand	Panel Totals	
Equipment	900 VA	100.00%	900 VA		
RECEPT	15660 VA	81.93%	12830 VA		
UFC-MOTOR-25%	3240 VA	25.00%	810 VA		
				Total Conn. Load:	19800 VA
				Total Est. Demand:	14540 VA
				Total Conn.:	55 A
				Total Est. Demand:	40 A

PANEL RP16

FED FROM: DPLV3
LOCATION: ELEC 403
MOUNT: SURFACE

150 A MAIN LUG ONLY
3PH 4WIRE 208Y/120V
10K AIC
GROUND BAR

CKT	LOAD SERVED	WIRE	BRKR	PL	A		B		C		PL	BRKR	WIRE	LOAD SERVED	CKT
1	RECEPT TV RM 206	12	20	1	0.18	0.50					1	20	12	AV FLAT PANELS RM 207	2
3	LAVATORY / WATER CLOSET RM G020	12	20	1			0.36	0.36			1	20	12	RECEPT RM 205	4
5	COFFEE POT RM 206	12	20	1					0.85	1.08	1	20	12	RECEPT FIRE ROOM 104C	6
7	COPIER RM 205	12	20	1	1.20	0.54					1	20	12	AV FLAT PANELS RM 104A, 104B, 104C	8
9	RECEPT CORR C013, C020, C021, C022, C023	12	20	1			1.08	0.54			1	20	12	RECEPT FIRE ROOM 104B	10
11	RECEPT RM G025	12	20	1					0.54	0.72	1	20	12	WATER CLOSET RM G024	12
13	RECEPT RM 403	12	20	1	0.72	0.72					1	20	12	ELEC WATER COOLER COR C023	14
15	REFRIG RM 206	12	20	1			0.72	0.72			1	20	12	RECEPT FIRE ROOM 104A	16
17	RECEPT RM 206	12	20	1					0.72	0.90	1	20	12	RECEPT RM 204, G024, G020, G021	18
19	LAVATORY RM G021, G024	12	20	1	0.90	1.00					1	20	12	RECEPT FIRE ROOM 104B	20
21	LAVATORY RM G025	12	20	1			0.90	1.00			1	30	10	RECEPT FIRE ROOM 104C	22
23	RECEPT FIRE ROOM 104C	12	20	1					1.00	1.00	1	30	10	RECEPT FIRE ROOM 104B	24
25	RECEPT FIRE ROOM 104A	10	30	1	1.00	1.08					1	20	12	RECEPT RM 206	26
27	RECEPT FIRE ROOM 104A	12	20	1			1.00	1.08			1	20	12	RECEPT RM 207	28
29	RECEPT RM 207	12	20	1					1.08	1.44	1	20	12	URINAL / WATER CLOSET RM G025	30
31	RECEPT RM 207	12	20	1	1.44	1.65					1	20	12	MICROWAVE RM 206	32
33	RECEPT RM 207	12	20	1			1.44	1.65			1	20	12	MICROWAVE RM 206	34
35	MICROWAVE RM 206	12	20	1					1.65	0.00	1	20	--	SPARE	36
37	SPARE	--	20	1	0.00	0.00					1	20	--	SPARE	38
39	SPARE	--	20	1			0.00	0.00			1	20	--	SPARE	40
41	SPARE	--	20	1					0.00	0.00	1	20	--	SPARE	42
			TOTAL		10.9		10.9		11.0		KVA				
					91.2		90.4		91.6		AMPS				
			CONNECTED LOAD		32.8		KVA		90.9		AMPS				
NEC ARTICLE 220			DEMAND LOAD		24.5		KVA		68.1		AMPS				

Load Classification	Connected Load	Demand Factor	Estimated Demand	Panel Totals	
Equipment	8440 VA	100.00%	8440 VA		
RECEPT	20000 VA	75.00%	15000 VA		
UFC-MOTOR-25%	4320 VA	25.00%	1080 VA		
				Total Conn. Load:	32760 VA
				Total Est. Demand:	24520 VA
				Total Conn.:	91 A
				Total Est. Demand:	68 A

APPR | DATE | DESCRIPTION | SYM

NAVFAC

SEAL

WNJ Jordan COMPANY – A JOINT VENTURE –

Michael Baker INTERNATIONAL
100 AIRSIDE DRIVE
MOON TOWNSHIP, PA 15108 A/E INFO

APPROVED
FOR COMMANDER NAVFAC
ACTIVITY
MARINE CORPS BASE
CAMP LEJEUNE
SATISFACTORY TO DATE
DES SD | DRW LAK | CHK YPS
PM
BRANCH MANAGER
CHIEF ENG/ARCH
FIRE PROTECTION

NAVAL FACILITIES ENGINEERING COMMAND – MID-ATLANTIC
JACKSONVILLE, NC
DEPARTMENT OF THE NAVY
NAVAL FACILITIES ENGINEERING COMMAND
ROICC FLORENCE CAMP LEJEUNE
MCB CAMP LEJEUNE
JACKSONVILLE, NC
P1338 II MEF SIMULATION/TRAINING CENTER
REPLACEMENT
ELECTRICAL - PANEL SCHEDULES

SCALE: AS NOTED
EPROJECT NO.: 1590892
CONSTR. CONTR. NO.
N40085-20-C-0059
NAVFAC DRAWING NO.
SHEET OF
E-610

DP2 SUBMISSION – P1338 BUILDING - PRE-FINAL SUBMISSION

PLOTTED: 6/10/2021 5:42:34 PM
FILE NAME: BIM 360://HF PACKAGE 3/P1338 MEF SIM CTR-1590892-E.rvt

GENERAL NOTES

1 SEE SHEET E-001 FOR ELECTRICAL NOTES, SYMBOLS, AND ABBREVIATIONS.
2 * SEE E-603 FOR WIRE SIZES NOT INDICATED IN PANEL SCHEDULES.

PANEL RP17

FED FROM: DPLV3
LOCATION: ELEC 403
MOUNT: SURFACE

125 A MAIN LUG ONLY
3PH 4WIRE 208Y/120V
10K AIC
GROUND BAR

CKT	LOAD SERVED	WIRE	BRKR	PL	A		B		C		PL	BRKR	WIRE	LOAD SERVED	CKT
1	RECEPT COR C022	12	20	1	0.18	0.50					1	20	12	AV FLAT PANELS RM 202	2
3	RECEPT TIMEZONE CLOCK 200B	12	20	1			0.18	0.36			1	20	12	RECEPT EXTERIOR	4
5	AV FLAT PANEL RM 209	12	20	1					0.25	1.08	1	20	12	RECEPT RM 200B	6
7	AV FLAT PANEL RM 200B	12	20	1	0.65	0.65					1	20	12	AV FLAT PANEL RM 200C	8
9	AV FLAT PANELS RM 303B	12	20	1			0.50	0.72			1	20	12	RECEPT RM 200C	10
11	RECEPT RM 200C	12	20	1					1.08	0.18	1	20	12	RECEPT TIMEZONE CLOCK RM 200C	12
13	RECEPT RM 200B	12	20	1	0.72	0.18					1	20	12	RECEPT TIMEZONE CLOCK COR C020	14
15	RECEPT RM 200B	12	20	1			0.90	0.18			1	20	12	RECEPT TIMEZONE CLOCK COR C022	16
17	RECEPT RM 303B	12	20	1					0.72	0.72	1	20	12	RECEPT RM 302	18
19	RECEPT RM 302	12	20	1	0.72	0.72					1	20	12	RECEPT RM 200C	20
21	RECEPT RM 303B	12	20	1			0.72	0.72			1	20	12	RECEPT RM 209	22
23	RECEPT RM 303B	12	20	1					0.90	0.90	1	20	12	RECEPT RM 209	24
25	RECEPT RM 303A	12	20	1	0.90	0.90					1	20	12	RECEPT RM 202	26
27	RECEPT RM 303A	12	20	1			0.90	0.90			1	20	12	RECEPT RM 203	28
29	RECEPT RM 202	12	20	1					1.08	1.44	1	20	12	VENDING MACHINE RM 206	30
31	RECEPT RM 202	12	20	1	1.08	1.44					1	20	12	SYSTEMS FURNITURE RM 302	32
33	RECEPT RM 202	12	20	1			1.08	1.44			1	20	12	VENDING MACHINE RM 206	34
35	PROVISIONED SPACE	--	--	--					0.00	0.00	1	20	--	SPARE	36
37	SPARE	--	20	1	0.00	0.00					1	20	--	SPARE	38
39	SPARE	--	20	1			0.00	0.00			1	20	--	SPARE	40
41	SPARE	--	20	1					0.00	0.00	1	20	--	SPARE	42
			TOTAL		8.6		8.6		8.4		KVA				
					72.3		72.0		69.6		AMPS				
			CONNECTED LOAD		25.6		KVA		71.0		AMPS				
NEC ARTICLE 220			DEMAND LOAD		19.2		KVA		53.4		AMPS				

Load Classification	Connected Load	Demand Factor	Estimated Demand	Panel Totals	
Equipment	2880 VA	100.00%	2880 VA		
RECEPT	22710 VA	72.02%	16355 VA	**Total Conn. Load:**	25590 VA
				Total Est. Demand:	19235 VA
				Total Conn.:	71 A
				Total Est. Demand:	53 A

PANEL RP18

FED FROM: DPLV3
LOCATION: ELEC 403
MOUNT: SURFACE

125 A MAIN LUG ONLY
3PH 4WIRE 208Y/120V
10K AIC
GROUND BAR

CKT	LOAD SERVED	WIRE	BRKR	PL	A		B		C		PL	BRKR	WIRE	LOAD SERVED	CKT
1	AV FLAT PANEL RM 101	12	20	1	0.65	0.65					1	20	12	AV FLAT PANEL RM 102	2
3	RECEPT RM 101	12	20	1			1.08	1.08			1	20	12	RECEPT RM 102	4
5	RECEPT RM 102	12	20	1					1.08	1.08	1	20	12	RECEPT RM 200A	6
7	RECEPT RM 201	12	20	1	0.72	1.08					1	20	12	RECEPT RM 101	8
9	RECEPT TIMEZONE CLOCK RM 300A	12	20	1			0.18	0.18			1	20	12	RECEPT TIMEZONE CLOCK COR 034	10
11	RECEPT TIMEZONE CLOCK RM 300X	12	20	1					0.18	0.18	1	20	12	RECEPT TIMEZONE CLOCK COR C020	12
13	RECEPT TIMEZONE CLOCK RM 200A	12	20	1	0.18	0.18					1	20	12	AV FLAT PANEL RM L010	14
15	AV FLAT PANEL RM 300A	12	20	1			0.65	0.90			1	20	12	RECEPT RM 300A	16
17	AV FLAT PANEL RM 300X	12	20	1					0.65	0.90	1	20	12	RECEPT RM 300X	18
19	AV FLAT PANEL RM 200A	12	20	1	0.65	0.90					1	20	12	RECEPT RM 201	20
21	RECEPT RM 201	12	20	1			0.90	0.90			1	20	12	RECEPT RM 101	22
23	RECEPT RM 201	12	20	1					0.90	0.90	1	20	12	RECEPT RM 102	24
25	RECEPT RM 200A	12	20	1	0.90	0.90					1	20	12	RECEPT RM 100	26
27	RECEPT RM 300X	12	20	1			1.08	1.08			1	20	12	RECEPT RM 300A	28
29	RECEPT RM L010	12	20	1					1.08	1.08	1	20	12	RECEPT RM 300A	30
31	RECEPT RM 300X	12	20	1	1.08	1.08					1	20	12	RECEPT RM 200A	32
33	RECEPT STOR. 110A	12	20	1			0.54	0.10			1	20	12	SHUNT TRIP CIRCUIT RM 304A / RM 304B	34
35	PROVISIONED SPACE	--	--	--					0.00	0.00	1	20	--	SPARE	36
37	SPARE	--	20	1	0.00	0.00					1	20	--	SPARE	38
39	SPARE	--	20	1			0.00	0.00			1	20	--	SPARE	40
41	SPARE	--	20	1					0.00	0.00	1	20	--	SPARE	42
			TOTAL		9.0		8.7		8.0		KVA				
					75.6		73.1		66.9		AMPS				
			CONNECTED LOAD		25.7		KVA		71.3		AMPS				
NEC ARTICLE 220			DEMAND LOAD		17.9		KVA		49.6		AMPS				

Load Classification	Connected Load	Demand Factor	Estimated Demand	Panel Totals	
Equipment	100 VA	100.00%	100 VA		
RECEPT	25570 VA	69.55%	17785 VA	**Total Conn. Load:**	25670 VA
				Total Est. Demand:	17885 VA
				Total Conn.:	71 A
				Total Est. Demand:	50 A

PANEL RP19

FED FROM: DPLV2
LOCATION: ELEC 306
MOUNT: SURFACE

100 A MAIN LUG ONLY
3PH 4WIRE 208Y/120V
10K AIC
GROUND BAR

CKT	LOAD SERVED	WIRE	BRKR	PL	A		B		C		PL	BRKR	WIRE	LOAD SERVED	CKT
1	RECEPT TIMEZONE CLOCK COR C030	12	20	1	0.18	0.36					1	20	12	RECEPT RM 306	2
3	RECEPT TIMEZONE CLOCK COR C034	12	20	1			0.18	0.90			1	20	12	RECEPT COR C031, C034	4
5	RECEPT RM 305	12	20	1					0.36	0.72	1	20	12	RECEPT RM 301A	6
7	RECEPT RM 301B	12	20	1	0.72	0.90					1	20	12	RECEPT COR C020, C030, C031	8
9	RECEPT RM 300B	12	20	1			1.08	0.18			1	20	12	RECEPT TIMEZONE CLOCK RM 301A	10
11	RECEPT RM 300C	12	20	1					1.08	0.18	1	20	12	RECEPT TIMEZONE CLOCK RM 301B	12
13	RECEPT TIMEZONE CLOCK RM 300Z	12	20	1	0.18	0.18					1	20	12	RECEPT TIMEZONE CLOCK RM 300B	14
15	RECEPT TIMEZONE CLOCK RM 300C	12	20	1			0.18	0.65			1	20	12	AV FLAT PANEL RM 301A	16
17	RECEPT TIMEZONE CLOCK RM 300Y	12	20	1					0.18	0.65	1	20	12	AV FLAT PANEL RM 301B	18
19	AV FLAT PANEL RM 300Z	12	20	1	0.65	0.65					1	20	12	AV FLAT PANEL RM 300B	20
21	AV FLAT PANEL RM 300C	12	20	1			0.65	0.90			1	20	12	RECEPT RM 301B	22
23	AV FLAT PANEL RM 300Y	12	20	1					0.65	0.90	1	20	12	RECEPT RM 301B	24
25	RECEPT RM 301A	12	20	1	0.90	0.90					1	20	12	RECEPT RM 300C	26
27	RECEPT RM 300Z	12	20	1			0.90	1.08			1	20	12	RECEPT RM 301B	28
29	RECEPT RM 301A	12	20	1					0.90	1.08	1	20	12	RECEPT SIMULATION CLASSROOM 300Z	30
31	RECEPT RM 301A	12	20	1	1.08	1.08					1	20	12	RECEPT RM 300C	32
33	RECEPT RM 300Y	12	20	1			1.08	0.36			1	20	12	RECEPT EXTERIOR	34
35	SPARE	--	20	1					0.00	1.08	1	20	12	RECEPT RM 300Z	36
37	SPARE	--	20	1	0.00	0.00					1	20	--	SPARE	38
39	SPARE	--	20	1			0.00	0.00			1	20	--	SPARE	40
41	SPARE	--	20	1					0.00	0.00	1	20	--	SPARE	42
			TOTAL		7.8		8.1		7.8		KVA				
					64.8		67.8		64.8		AMPS				
			CONNECTED LOAD		23.7		KVA		65.8		AMPS				
NEC ARTICLE 220			DEMAND LOAD		16.9		KVA		46.8		AMPS				

Load Classification	Connected Load	Demand Factor	Estimated Demand	Panel Totals	
RECEPT	23700 VA	71.10%	16850 VA		
				Total Conn. Load:	23700 VA
				Total Est. Demand:	16850 VA
				Total Conn.:	66 A
				Total Est. Demand:	47 A

APPR | DATE | SYM | DESCRIPTION

NAVFAC

SEAL

WNM Jordan COMPANY – A JOINT VENTURE –

Michael Baker INTERNATIONAL
100 AIRSIDE DRIVE
MOON TOWNSHIP, PA 15108
A/E INFO

APPROVED
FOR COMMANDER NAVFAC

ACTIVITY
MARINE CORPS BASE
CAMP LEJEUNE

SATISFACTORY TO DATE
DES SD | DRW LAK | CHK YPS
PM
BRANCH MANAGER
CHIEF ENG/ARCH
FIRE PROTECTION

DEPARTMENT OF THE NAVY
NAVAL FACILITIES ENGINEERING COMMAND ~ MID-ATLANTIC
ROICC FLORENCE CAMP LEJEUNE
MCB CAMP LEJEUNE

NAVAL FACILITIES ENGINEERING COMMAND ~ MID-ATLANTIC
JACKSONVILLE, NC

P1338 II MEF SIMULATION/TRAINING CENTER
REPLACEMENT
JACKSONVILLE, NC

ELECTRICAL - PANEL SCHEDULES

SCALE: AS NOTED
EPROJECT NO.: 1590892
CONSTR. CONTR. NO.
N40085-20-C-0059
NAVFAC DRAWING NO.
SHEET OF

E-611

DP2 SUBMISSION – P1338 BUILDING - PRE-FINAL SUBMISSION

PLOTTED: 6/10/2021 5:42:36 PM
FILE NAME: BIM 360://HF PACKAGE 3/P1338 MEF SIM CTR-1590892-E.rvt

GENERAL NOTES

1 SEE SHEET E-001 FOR ELECTRICAL NOTES, SYMBOLS, AND ABBREVIATIONS.
2 * SEE E-603 FOR WIRE SIZES NOT INDICATED IN PANEL SCHEDULES.

PANEL TR1

FED FROM: DPLV1
LOCATION: COMM 208
MOUNT: SURFACE

100 A MAIN CIRCUIT BREAKER
3PH 4WIRE 208Y/120V
10K AIC
GROUND BAR

CKT	LOAD SERVED	WIRE	BRKR	PL	A		B		C		PL	BRKR	WIRE	LOAD SERVED	CKT
1	RECEPT TELECOM RACK RM 208	12	20	1	0.18	0.18					1	20	12	RECEPT TELECOM RACK RM 208	2
3	RECEPT TELECOM RACK RM 208	12	20	1			0.18	0.72			1	20	12	RECEPT RM 208	4
5	RECEPT TELECOM RACK RM 208	12	20	1					0.18	2.50	2	30	10	TELECOM RACK RM 208	6
7	RECEPT TELECOM RACK RM 208	12	20	1	0.18	2.50					--	--	--	--	8
9	RECEPT RM 208	12	20	1			0.72	1.58			2	25	10	SSCU-02	10
11	RECEPT TELECOM RACK RM 208	12	20	1					0.18	1.58	--	--	--	--	12
13	RECEPT TELECOM RACK RM 208	12	20	1	0.18	0.18					1	20	12	RECEPT TELECOM RACK RM 208	14
15	RECEPT TELECOM RACK RM 208	12	20	1			0.18	0.18			1	20	12	RECEPT TELECOM RACK RM 208	16
17	SURGE PROTECTIVE DEVICE	--	20	3					0.00	0.00	1	20	--	SPARE	18
19	--	--	--	--	0.00	0.00					1	20	--	SPARE	20
21	--	--	--	--			0.00	0.00			1	20	--	SPARE	22
23	SPARE	--	20	2					0.00	0.00	--	--	--	PROVISIONED SPACE	24
25	--	--	--	--	0.00	0.00					--	--	--	PROVISIONED SPACE	26
27	SPARE	--	20	1			0.00	0.00			--	--	--	PROVISIONED SPACE	28
29	PROVISIONED SPACE	--	--	--					0.00	0.00	--	--	--	PROVISIONED SPACE	30
				TOTAL	3.4		3.6		4.4		KVA				
					28.3		29.9		37.2		AMPS				
				CONNECTED LOAD	11.4		KVA		31.6		AMPS				
NEC ARTICLE 220				DEMAND LOAD	10.5		KVA		29.0		AMPS				

Load Classification	Connected Load	Demand Factor	Estimated Demand	Panel Totals	
RECEPT	8240 VA	100.00%	8240 VA		
UFC-HVAC-70%	3162 VA	70.00%	2213 VA	Total Conn. Load:	11402 VA
				Total Est. Demand:	10453 VA
				Total Conn.:	32 A
				Total Est. Demand:	29 A

PANEL TR2

FED FROM: DPLV1
LOCATION: COMM 115
MOUNT: SURFACE

100 A MAIN CIRCUIT BREAKER
3PH 4WIRE 208Y/120V
10K AIC
GROUND BAR

CKT	LOAD SERVED	WIRE	BRKR	PL	A		B		C		PL	BRKR	WIRE	LOAD SERVED	CKT
1	RECEPT TELECOM RACK RM 115	12	20	1	0.18	0.18					1	20	12	RECEPT TELECOM RACK RM 115	2
3	RECEPT TELECOM RACK RM 115	12	20	1			0.18	0.18			1	20	12	RECEPT TELECOM RACK RM 115	4
5	SPARE	--	20	1					0.00	0.00	1	20	--	SPARE	6
7	RECEPT TELECOM RACK RM 115	12	20	1	0.18	0.18					1	20	12	RECEPT TELECOM RACK RM 115	8
9	TELECOM RACK RM 115	10	30	2			2.50	0.00			1	20	--	SPARE	10
11	--	--	--	--					2.50	0.92	2	25	10	HPCU-01	12
13	RECEPT RM 115	12	20	1	1.08	0.92					--	--	--	--	14
15	SPARE	--	20	2			0.00	0.00			3	20	--	SURGE PROTECTIVE DEVICE	16
17	--	--	--	--					0.00	0.00	--	--	--	--	18
19	PROVISIONED SPACE	--	--	--	0.00	0.00					--	--	--	--	20
21	PROVISIONED SPACE	--	--	--			0.00	0.00			--	--	--	PROVISIONED SPACE	22
23	PROVISIONED SPACE	--	--	--					0.00	0.00	--	--	--	PROVISIONED SPACE	24
25	PROVISIONED SPACE	--	--	--	0.00	0.00					--	--	--	PROVISIONED SPACE	26
27	PROVISIONED SPACE	--	--	--			0.00	0.00			--	--	--	PROVISIONED SPACE	28
29	PROVISIONED SPACE	--	--	--					0.00	0.00	--	--	--	PROVISIONED SPACE	30
				TOTAL	2.7		2.9		3.4		KVA				
					22.6		24.0		28.6		AMPS				
				CONNECTED LOAD	9.0		KVA		25.0		AMPS				
NEC ARTICLE 220				DEMAND LOAD	8.4		KVA		23.4		AMPS				

Load Classification	Connected Load	Demand Factor	Estimated Demand	Panel Totals	
RECEPT	7160 VA	100.00%	7160 VA		
UFC-HVAC-70%	1830 VA	70.00%	1281 VA	Total Conn. Load:	8990 VA
				Total Est. Demand:	8441 VA
				Total Conn.:	25 A
				Total Est. Demand:	23 A

PROVIDE 150A MCB FOR PANEL
PPC1 WITH SHUNT TRIP

PANEL PPC1

FED FROM: DPLV1
LOCATION: SIM CONTROL SECURE COMM 304B
MOUNT: SURFACE

150 A MAIN CIRCUIT BREAKER
3PH 4WIRE 208Y/120V
10K AIC
GROUND BAR

CKT	LOAD SERVED	WIRE	BRKR	PL	A		B		C		PL	BRKR	WIRE	LOAD SERVED	CKT
1	RECEPT RM 304B	12	20	1	0.90	3.00					1	30	10	RECEPT TELECOME RACK RM 304B	2
3	RECEPT TELECOME RACK RM 304B	10	30	1			3.00	3.00			1	20	12	RECEPT TELECOME RACK RM 304B	4
5	RECEPT TELECOME RACK RM 304B	12	20	1					3.00	3.00	1	30	10	RECEPT TELECOME RACK RM 304B	6
7	RECEPT TELECOME RACK RM 304B	12	20	1	3.00	3.00					1	20	12	RECEPT TELECOME RACK RM 304B	8
9	RECEPT TELECOME RACK RM 304B	10	30	1			3.00	3.00			1	30	10	RECEPT TELECOME RACK RM 304B	10
11	RECEPT TELECOME RACK RM 304B	12	20	1					3.00	2.08	2	30	10	SSCU-03	12
13	SURGE PROTECTIVE DEVICE	--	20	3	0.00	2.08					--	--	--	--	14
15	--	--	--	--			0.00								16
17	--	--	--	--					0.00	0.00	1	20	--	SPARE	18
19	SPARE	--	30	1	0.00	0.00					1	20	--	SPARE	20
21	SPARE	--	30	1			0.00	0.00			1	20	--	SPARE	22
23	SPARE	--	20	1					0.00	0.00	--	--	--	PROVISIONED SPACE	24
25	SPARE	--	20	1	0.00	0.00					--	--	--	PROVISIONED SPACE	26
27	PROVISIONED SPACE	--	--	--			0.00	0.00			--	--	--	PROVISIONED SPACE	28
29	PROVISIONED SPACE	--	--	--					0.00	0.00	--	--	--	PROVISIONED SPACE	30
				TOTAL	12.0		12.0		11.1		KVA				
					101.0		101.2		92.3		AMPS				
				CONNECTED LOAD	35.1		KVA		97.3		AMPS				
NEC ARTICLE 220				DEMAND LOAD	33.8		KVA		93.9		AMPS				

Load Classification	Connected Load	Demand Factor	Estimated Demand	Panel Totals	
Equipment	30000 VA	100.00%	30000 VA		
RECEPT	900 VA	100.00%	900 VA	Total Conn. Load:	35060 VA
UFC-HVAC-70%	4160 VA	70.00%	2912 VA	Total Est. Demand:	33812 VA
				Total Conn.:	97 A
				Total Est. Demand:	94 A

PROVIDE 400A MCB FOR PANEL
PPS1 WITH SHUNT TRIP

PANEL PPS1

FED FROM: DPLV1
LOCATION: SIM CONTROL (SERVER ROOM) 304A
MOUNT: SURFACE

400 A MAIN CIRCUIT BREAKER
3PH 4WIRE 208Y/120V
10K AIC
GROUND BAR

CKT	LOAD SERVED	WIRE	BRKR	PL	A		B		C		PL	BRKR	WIRE	LOAD SERVED	CKT
1	CACCTUS (C) UPS RM 304A	12	15	1	1.00	1.00					1	15	12	CACCTUS (C) UPS RM 304A	2
3	CACCTUS (C) UPS RM 304A	4	70	2			5.00	5.00			2	70	4	CACCTUS (U) UPS RM 304A	4
5	--	--	--	--					5.00	5.00	--	--	--	--	6
7	MTWS (C) UPS RM 304A	10	30	1	3.00	5.00					2	70	4	CACCTUS (C) UPS RM 304A	8
9	CACCTUS (U) UPS RM 304A	12	15	1			1.00	5.00			--	--	--	--	10
11	CACCTUS (U) UPS RM 304A	4	70	2					5.00	1.00	1	15	12	CACCTUS (U) UPS RM 304A	12
13	--	--	--	--	5.00	1.00					1	15	12	CACCTUS (U) UPS RM 304A	14
15	CACCTUS (C) UPS RM 304A	12	15	1			1.00	3.00			1	30	10	MTWS (U) UPS RM 304A	16
17	CACCTUS (U) UPS RM 304A	12	15	1					1.00	3.00	1	30	10	MTWS (U) UPS RM 304A	18
19	CACCTUS (C) UPS RM 304A	12	15	1	1.00	3.00					1	30	10	MTWS (U) UPS RM 304A	20
21	MTWS (U) UPS RM 304A	10	30	1			3.00	3.00			1	30	10	MTWS (U) UPS RM 304A	22
23	MTWS (U) UPS RM 304A	10	30	1					3.00	3.00	1	30	10	MTWS (U) UPS RM 304A	24
25	MTWS (U) UPS RM 304A	10	30	1	3.00	3.00					1	30	10	MTWS (C) UPS RM 304A	26
27	MTWS (C) UPS RM 304A	10	30	1			3.00	3.00			1	30	10	MTWS (C) UPS RM 304A	28
29	MTWS (C) UPS RM 304A	10	30	1					3.00	3.00	1	30	10	MTWS (C) UPS RM 304A	30
31	MTWS (C) UPS RM 304A	10	30	1	3.00	3.00					1	30	10	MTWS (C) UPS RM 304A	32
33	SPARE	--	30	1			0.00	0.00			1	30	--	SPARE	34
35	SPARE	--	15	1					0.00	0.00	1	30	--	SPARE	36
37	SPARE	--	15	1	0.00	0.00					3	20	--	SURGE PROTECTIVE DEVICE	38
39	SPARE	--	70	2			0.00	0.00			--	--	--	--	40
41	--	--	--	--					0.00	0.00	--	--	--	--	42
				TOTAL	32.0		32.0		32.0		KVA				
					266.7		266.7		266.7		AMPS				
				CONNECTED LOAD	96.0		KVA		266.5		AMPS				
NEC ARTICLE 220				DEMAND LOAD	96.0		KVA		266.5		AMPS				

Load Classification	Connected Load	Demand Factor	Estimated Demand	Panel Totals	
Equipment	96000 VA	100.00%	96000 VA		
				Total Conn. Load:	96000 VA
				Total Est. Demand:	96000 VA
				Total Conn.:	266 A
				Total Est. Demand:	266 A

APPR | DATE | DESCRIPTION | SYM

NAVFAC

SEAL

WM Jordan COMPANY ~ A JOINT VENTURE ~

Michael Baker INTERNATIONAL
100 AIRSIDE DRIVE
MOON TOWNSHIP, PA 15108 A/E INFO

APPROVED
FOR COMMANDER NAVFAC
ACTIVITY
MARINE CORPS BASE
CAMP LEJEUNE
SATISFACTORY TO DATE
DES SD | DRW LAK | CHK YPS
PM
BRANCH MANAGER
CHIEF ENG/ARCH
FIRE PROTECTION

DEPARTMENT OF THE NAVY
NAVAL FACILITIES ENGINEERING COMMAND
ROICC FLORENCE CAMP LEJEUNE
MCB CAMP LEJEUNE

NAVAL FACILITIES ENGINEERING COMMAND ~ MID-ATLANTIC
JACKSONVILLE, NC

JACKSONVILLE, NC
P1338 II MEF SIMULATION/TRAINING CENTER
REPLACEMENT

ELECTRICAL - PANEL SCHEDULES

SCALE: AS NOTED
EPROJECT NO.: 1590892
CONSTR. CONTR. NO.
N40085-20-C-0059
NAVFAC DRAWING NO.
SHEET OF
E-612

DP2 SUBMISSION – P1338 BUILDING - PRE-FINAL SUBMISSION

PLOTTED: 6/10/2021 5:42:39 PM
FILE NAME: BIM 360://MEF PACKAGE 3/P1338 MEF SIM CTR-1590892-E.rvt

GENERAL NOTES

1 SEE SHEET E-001 FOR ELECTRICAL NOTES, SYMBOLS, AND ABBREVIATIONS.
2 * SEE E-603 FOR WIRE SIZES NOT INDICATED IN PANEL SCHEDULES.

PROVIDE 125A MCB FOR PANEL
PPS2 WITH SHUNT TRIP

FED FROM: DPLV1
LOCATION: SIM CONTROL (SERVER ROOM) 304A
MOUNT: SURFACE

PANEL PPS2

125 A MAIN CIRCUIT BREAKER
3PH 4WIRE 208Y/120V
10K AIC
GROUND BAR

CKT	LOAD SERVED	WIRE	BRKR	PL	A		B		C		PL	BRKR	WIRE	LOAD SERVED	CKT
1	RECEPT MCEN (U) RACK RM 304A	12	20	1	0.18	0.90					1	20	12	RECEPT RM 304A	2
3	RECEPT MCEN (U) RACK RM 304A	12	20	1			0.18	0.90			1	20	12	RECEPT RM 304A	4
5	MCEN (U) UPS RM 304A	10	30	1					2.00	2.00	1	30	10	MCEN (U) UPS RM 304A	6
7	MCEN (U) UPS RM 304A	10	30	1	2.00	0.18					1	20	12	RECEPT TIE (U) RACK RM 304A	8
9	MCEN (U) UPS RM 304A	10	30	1			2.00	0.18			1	20	12	RECEPT TIE (U) RACK RM 304A	10
11	RECEPT TIE (U) RACK RM 304A	12	20	1					0.18	0.18	1	20	12	RECEPT TIE (U) RACK RM 304A	12
13	RECEPT TIE (U) RACK RM 304A	12	20	1	0.18	0.18					1	20	12	RECEPT TIE (U) RACK RM 304A	14
15	RECEPT TIE (U) RACK RM 304A	12	20	1			0.18	0.18			1	20	12	RECEPT TIE (U) RACK RM 304A	16
17	RECEPT TIE (U) RACK RM 304A	12	20	1					0.18	0.18	1	20	12	RECEPT TIE (U) RACK RM 304A	18
19	RECEPT MCEN (U) RACK RM 304A	12	20	1	0.18	0.18					1	20	12	RECEPT MCEN (U) RACK RM 304A	20
21	RECEPT MCEN (U) RACK RM 304A	12	20	1			0.18	0.18			1	20	12	RECEPT MCEN (U) RACK RM 304A	22
23	RECEPT MCEN (U) RACK RM 304A	12	20	1					0.18	0.18	1	20	12	RECEPT MCEN (U) RACK RM 304A	24
25	RECEPT MCEN (U) RACK RM 304A	12	20	1	0.18	2.00					1	30	10	TIE (U) UPS RM 304A	26
27	RECEPT MCEN (U) RACK RM 304A	12	20	1			0.18	2.00			1	30	10	TIE (U) UPS RM 304A	28
29	TIE (U) UPS RM 304A	10	30	1					2.00	2.00	1	30	10	TIE (U) UPS RM 304A	30
31	MCEN (U) UPS RM 304A	10	30	1	2.00	0.00					3	20	--	SURGE PROTECTIVE DEVICE	32
33	TIE (U) UPS RM 304A	10	30	1			2.00	0.00			--	--	--	--	34
35	SPARE	--	20	1					0.00	0.00	--	--	--	--	36
37	SPARE	--	20	1	0.00	0.00					1	30	--	SPARE	38
39	SPARE	--	20	1			0.00	0.00			1	30	--	SPARE	40
41	SPARE	--	20	1					0.00	0.00	1	30	--	SPARE	42
			TOTAL		8.2		8.2		9.1		KVA				
					68.0		68.0		75.7		AMPS				
			CONNECTED LOAD		25.4		KVA		70.5		AMPS				
NEC ARTICLE 220			DEMAND LOAD		25.4		KVA		70.5		AMPS				

Load Classification	Connected Load	Demand Factor	Estimated Demand	Panel Totals	
Equipment	23600 VA	100.00%	23600 VA		
RECEPT	1800 VA	100.00%	1800 VA	Total Conn. Load:	25400 VA
				Total Est. Demand:	25400 VA
				Total Conn.:	71 A
				Total Est. Demand:	71 A

PROVIDE 125A MCB FOR PANEL
PPS3 WITH SHUNT TRIP

FED FROM: DPLV1
LOCATION: SIM CONTROL (SERVER ROOM) 304A
MOUNT: SURFACE

PANEL PPS3

125 A MAIN CIRCUIT BREAKER
3PH 4WIRE 208Y/120V
10K AIC
GROUND BAR

CKT	LOAD SERVED	WIRE	BRKR	PL	A		B		C		PL	BRKR	WIRE	LOAD SERVED	CKT
1	RECEPT SIPR (C) RACK RM 304A	12	20	1	0.18	2.00					1	30	10	SIPR (C) UPS RM 304A	2
3	RECEPT SIPR (C) RACK RM 304A	12	20	1			0.18	2.00			1	30	10	SIPR (C) UPS RM 304A	4
5	SIPR (C) UPS RM 304A	10	30	1					2.00	2.00	1	30	10	TIE (C) UPS RM 304A	6
7	SIPR (C) UPS RM 304A	10	30	1	2.00	0.18					1	20	12	RECEPT TIE (C) RACK RM 304A	8
9	SIPR (C) UPS RM 304A	10	30	1			2.00	0.18			1	20	12	RECEPT TIE (C) RACK RM 304A	10
11	TIE (C) UPS RM 304A	10	30	1					2.00	0.18	1	20	12	RECEPT TIE (C) RACK RM 304A	12
13	RECEPT TIE (C) RACK RM 304A	12	20	1	0.18	0.18					1	20	12	RECEPT TIE (C) RACK RM 304A	14
15	RECEPT TIE (C) RACK RM 304A	12	20	1			0.18	0.18			1	20	12	RECEPT TIE (C) RACK RM 304A	16
17	RECEPT TIE (C) RACK RM 304A	12	20	1					0.18	0.18	1	20	12	RECEPT TIE (C) RACK RM 304A	18
19	RECEPT SIPR (C) RACK RM 304A	12	20	1	0.18	0.18					1	20	12	RECEPT SIPR (C) RACK RM 304A	20
21	RECEPT SIPR (C) RACK RM 304A	12	20	1			0.18	0.18			1	20	12	RECEPT SIPR (C) RACK RM 304A	22
23	RECEPT TIE (C) RACK RM 304A	12	20	1					0.18	0.18	1	20	12	RECEPT SIPR (C) RACK RM 304A	24
25	RECEPT SIPR (C) RACK RM 304A	12	20	1	0.18	2.00					1	30	10	TIE (C) UPS RM 304A	26
27	RECEPT SIPR (C) RACK RM 304A	12	20	1			0.18	2.00			1	30	10	TIE (C) UPS RM 304A	28
29	RECEPT SIPR (C) RACK RM 304A	12	20	1					0.18	2.00	1	30	10	TIE (C) UPS RM 304A	30
31	RECEPT RM 304A	12	20	1	0.90	1.08					1	20	12	RECEPT RM 304A	32
33	SURGE PROTECTIVE DEVICE	--	20	3			0.00	0.00			1	30	--	SPARE	34
35	--	--	--	--					0.00	0.00	1	20	--	SPARE	36
37	--	--	--	--	0.00	0.00					1	20	--	SPARE	38
39	SPARE	--	30	1			0.00	0.00			1	20	--	SPARE	40
41	SPARE	--	30	1					0.00	0.00	1	20	--	SPARE	42
			TOTAL		9.2		7.3		9.1		KVA				
					79.3		60.5		78.0		AMPS				
			CONNECTED LOAD		25.6		KVA		71.0		AMPS				
NEC ARTICLE 220			DEMAND LOAD		25.6		KVA		71.0		AMPS				

Load Classification	Connected Load	Demand Factor	Estimated Demand	Panel Totals	
Equipment	23600 VA	100.00%	23600 VA		
RECEPT	1980 VA	100.00%	1980 VA	Total Conn. Load:	25580 VA
				Total Est. Demand:	25580 VA
				Total Conn.:	71 A
				Total Est. Demand:	71 A

APPR | DATE | DESCRIPTION | SYM

NAVFAC

SEAL

WNJ Jordan COMPANY – A JOINT VENTURE –

Michael Baker INTERNATIONAL
100 AIRSIDE DRIVE
MOON TOWNSHIP, PA 15108 A/E INFO

APPROVED
FOR COMMANDER NAVFAC
ACTIVITY
MARINE CORPS BASE
CAMP LEJEUNE
SATISFACTORY TO DATE
DES SD | DRW LAK | CHK YPS
PM
BRANCH MANAGER
CHIEF ENG/ARCH
FIRE PROTECTION

DEPARTMENT OF THE NAVY
NAVAL FACILITIES ENGINEERING COMMAND
ROICC FLORENCE CAMP LEJEUNE
MCB CAMP LEJEUNE

NAVAL FACILITIES ENGINEERING COMMAND ~ MID-ATLANTIC
JACKSONVILLE, NC

JACKSONVILLE, NC
P1338 II MEF SIMULATION/TRAINING CENTER
REPLACEMENT

ELECTRICAL - PANEL SCHEDULES

SCALE: AS NOTED
EPROJECT NO.: 1590892
CONSTR. CONTR. NO.
N40085-20-C-0059
NAVFAC DRAWING NO.
SHEET OF

E-613

DP2 SUBMISSION – P1338 BUILDING - PRE-FINAL SUBMISSION

PLOTTED: 6/10/2021 5:42:41 PM
FILE NAME: BIM 360://HF PACKAGE 3/P1338 MEF SIM CTR-1590892-E.rvt

SYMBOL — TELECOMMUNICATIONS DESCRIPTION

APPLICABLE TO ALL OUTLETS LISTED BELOW:

TERMINATIONS SHALL BE PERFORMED USING PIN/PAIR ASSIGNMENTS IN ACCORDANCE WITH THE T568A PIN-OUT SEQUENCE USING 8-PIN 8 CONDUCTOR (8P8C) RJ45 TYPE CONNECTORS RATED FOR THE CATEGORY OF THE INSTALLED CABLE; COLOR SHALL MATCH THE U/UTP OUTER JACKET.

TELECOMMUNICATIONS OUTLETS, 8P8C RJ45 TYPE CONNECTOR
ALL UTP CABLES SHALL HAVE GREEN PLENUM RATED OUTER JACKET

STANDARD WORK AREA OUTLET, MOUNTED AT 18" AFF UON: FOUR (4) CATEGORY 6A UTP COPPER CABLES TO SERVING TR, TERMINATE ON RACK MOUNTED PATCH PANELS. SEE DETAILS FOR ADDITIONAL INFORMATION.

DDC — DIRECT DIGITAL CONTROL (DDC) OUTLET, MOUNTED AT 18" AFF UON: TWO (2) CATEGORY 6A UTP COPPER CABLE TO SERVING TR, TERMINATE ON RACK MOUNTED PATCH PANELS. SEE DETAILFOR ADDITIONAL INFORMATION.

W WP — WALL MOUNTED TELEPHONE OUTLET, MOUNTED AT 48" AFF UON: ONE (1) CATEGORY 6A UTP COPPER CABLE TO SERVING TR, TERMINATE ON RACK MOUNTED PATCH PANELS. SEE DETAIL FOR ADDITIONAL INFORMATION.

TV — CATV OUTLET, MOUNTED AT 72" AFF; TWO (2) CATEGORY 6A UTP COPPER CABLES AND ONE (1) RG-6 DUAL-SHIELD COAXIAL COPPER CABLES TO SERVING TR, TERMINATE CATEGORY 6 UTP CABLES ON RACK MOUNTED PATCH PANELS. TERMINATE RG-6 COAXIAL COPPER CABLE ON WALL AREA DESIGNATED FOR CATV.

M — MULTI-USER TELECOM OUTLET ASSEMBLY (MUTOA), MOUNTED AT COUNTER HEIGHT; TWELVE (12) CATEGORY 6A UTP COPPER CABLES TO SERVICE TR, TERMINATE ON RACK MOUNTED PATCH PANELS. "C" DENOTES CLASSIFIED, "U" DENOTES UNCLASSIFIED.

WAP — WIRELESS ACCESS POINT (WAP) OUTLET, MOUNTED TWO (2) CATEGORY-6A U/UTP OUTLETS), LOCATED 12" ABOVE DROPPED CEILING

STANDARD WORK ARE OUTLET, FLOORBOX MOUNTED; FOUR (4) CATEGORY 6A UTP COPPER CABLES TO SERVING TR, TERMINATE ON RACK MOUNTED PATCH PANELS. COORDINATE WITH ELECTRICAL AND AUDIOVISUAL FOR FLOORBOX LOCATIONS.

S — STANDARD WORK ARE OUTLET, SIPRNET, FOUR (4) CATEGORY 6 UTP COPPER CABLES, RED JACKET, TO SECURE ROOM; TERMINATE ON WALL MOUNTED RACK IN SECURE ROOM, INSTALL TO DESIGNATED WORK AREAS IN PDS, PER CNSSI 7003.

FA — FIRE ALARM SYSTEM PHONE INTERFACE OUTLET, COORDINATE MOUNTING HEIGHT WITH FIRE ALARM EQUIPMENT INSTALLER: TWO (2) CATEGORY 6A UTP COPPER CABLE TO SERVING TR, TERMINATE ON RACK MOUNTED PATCH PANELS. SEE FACEPLATE DETAILS FOR ADDITONAL INFORMATION.

SEU — SECURE EQUIPMENT ENCLOSURE; WALL MOUNTED 42" X 30" HIGH- SECURITY, LOCKABLE CABLE TERMINATION CABINET; COMPLIANT WITH CNSSI 7003.

FB1 — MULTISERVICE FLOOR BOX, SEE E-502 FOR MORE INFORMATION.

FB2 — MULTISERVICE FLOOR BOX, SEE E-502 FOR MORE INFORMATION.

FO — FIBER OPTIC HANDHOLE (EXISTING)

FLOORBOX LOCATION, TRAINING SIMULATION SYSTEM – UNCLASSIFIED; INSTALLED IN RAISED ACCESS FLOOR. INSTALL EIGHT (8) CATEGORY 6A UTP PLENUM-RATED, GREEN JACKET COPPER CABLES FROM TERMINATING RACK IN SIM SERVER ROOM TO FLOORBOX LOCATION. SEE DETAIL SHEET T-5xx FOR TERMINATION DETAILS. SEE E-001 FOR ELECTRICAL INFORMATION.

FLOORBOX LOCATION, TRAINING SIMULATION SYSTEM – CLASSIFIED; INSTALLED IN RAISED ACCESS FLOOR. INSTALL EIGHT (8) CATEGORY 6A UTP PLENUM-RATED, RED JACKET COPPER CABLES FROM TERMINATING RACK IN SIM SERVER ROOM TO FLOORBOX LOCATION. SEE DETAIL SHEET T-5xx FOR TERMINATION DETAILS. SEE E-001 FOR ELECTRICAL INFORMATION.

OTHER SYMBOLS:

PA — CEILING MOUNTED PA SYSTEM SPEAKER

PA — WALL MOUNTED PA SYSTEM SPEAKER

GROUNDING BUSBAR, TMGB OR TGB AS INDICATED ON PLANS

SYMBOL — TELECOMMUNICATIONS DESCRIPTION

SECURITY SYMBOLS:

IDS — INTRUSION DETECTION SYSTEM CONTROL PANEL

WALL-MOUNTED PASSIVE INFRARED SENSOR (PIR)

CEILING-MOUNTED PASSIVE INFRARED SENSOR (PIR)

HORIZONTAL CONDUIT RUN FROM TELECOMMUNICATION ROOMS TO RESPECTIVE AREAS AS INDICATED ON PLANS

CR — ACCESS CONTROL SYSTEM / INTRUSION DETECTION SYSTEM CARD READER

ES — ELECTRIC STRIKE

HSS — HIGH SECURITY BALANCED MAGNETIC SWITCH

KP — KEYPAD FOR ACCESS CONTROL SYSTEM / INTRUSION DETECTION SYSTEM

REX — REQUEST-TO-EXIT SENSOR

1DC — SINGLE DOOR TCP/IP ACS/IDS CONTROLLER MOUNTED ABOVE ACCESSIBLE CEILING ON SECURE SIDE OF DOOR WITH TWO CATEGORY-6 U/UTP CABLE TO MAIN ACS/IDS CONTROLLER PANEL

2DC — 2-DOOR TCP/IP ACS/IDS CONTROLLER MOUNTED ABOVE ACCESSIBLE CEILING ON SECURE SIDE OF DOOR WITH TWO CATEGORY-6 U/UTP CABLE TO MAIN ACS/IDS CONTROLLER PANEL

4DC — 4-DOOR TCP/IP ACS/IDS CONTROLLER MOUNTED ABOVE ACCESSIBLE CEILING ON SECURE SIDE OF DOOR WITH TWO CATEGORY-6 U/UTP CABLE TO MAIN ACS/IDS CONTROLLER PANEL

SECURITY CAMERA, FIXED

PTZ — SECURITY CAMERA WITH PAN, TILT, ZOOM CAPABILITIES

TELECOMMUNICATIONS STANDARDS

TELECOMMUNICATIONS INSTALLATION SHALL COMPLY WITH THE MOST CURRENT VERSION OF THE FOLLOWING STANDARDS:

AMERICANS WITH DISABILITIES ACT AND ARCHITECTURAL BARRIERS ACT ACCESSIBILITY GUIDELINES (UFAS/ADAAG), 2011

ANSI/TIA-568.0-D - GENERIC TELECOMMUNICATIONS CABLING FOR CUSTOMER PREMISES

ANSI/TIA-568.1-D - COMMERCIAL BUILDING TELECOMMUNICATIONS CABLING STANDARD

ANSI/TIA-568-C.2 - BALANCED TWISTED-PAIR TELECOMMUNICATIONS CABLING AND COMPONENTS STANDARD

ANSI/TIA-568.3-D - OPTICAL FIBER CABLING COMPONENTS STANDARD

ANSI/TIA-568.4-D - BROADBAND COAXIAL CABLING AND COMPONENTS STANDARD

ANSI/TIA-569-D - TELECOMMUNICATIONS PATHWAYS AND SPACES

ANSI/TIA-598-D - OPTICAL FIBER CABLE COLOR CODING.

ANSI/TIA-606-B - ADMINISTRATION STANDARD FOR COMMERCIAL TELECOMMUNICATIONS INFRASTRUCTURE

ANSI/TIA-607-C - COMMERCIAL BUILDING GROUNDING (EARTHING) AND BONDING REQUIREMENTS FOR TELECOMMUNICATIONS

ANSI/TIA-758-B - CUSTOMER-OWNED OUTSIDE PLANT TELECOMMUNICATIONS INFRASTRUCTURE STANDARD

ANSI/TIA-1152, 1152-A - REQUIREMENTS FOR FIELD TEST INSTRUMENTS AND MEASUREMENTS FOR BALANCED TWISTED-PAIR CABLING

TIA-526-7 - MEASUREMENT OF OPTICAL POWER LOSS OF INSTALLED SINGLE-MODE FIBER CABLE PLANT

TIA-526-14-C - OPTICAL POWER LOSS MEASUREMENTS OF INSTALLED MULTIMODE FIBER CABLE PLANT

NFPA 70 - NATIONAL ELECTRICAL CODE (NEC)

NFPA 75 - STANDARD FOR THE PROTECTION OF INFORMATION TECHNOLOGY EQUIPMENT

NFPA 76 - STANDARD FOR THE FIRE PROTECTION OF TELECOMMUNICATIONS FACILITIES

NFPA 780 - STANDARD FOR THE INSTALLATION OF LIGHTNING PROTECTION SYSTEMS

TELECOMMUNICATIONS STANDARDS CONT

UFC-3-580-01 CA - TELECOMMUNICATIONS INTERIOR INFRASTRUCTURE PLANNING AND DESIGN

UFC 4-020-04A - ELECTRONIC SECURITY SYSTEMS : SECURITY ENGINEERING

UFC 4-021-02 - ELECTRONIC SECURITY SYSTEMS

MIL-HDBK-232A - RED/BLACK ENGINEERING-INSTALLATION GUIDELINES

MIL-HDBK-419A – GROUNDING, BONDING, AND SHIELDING FOR ELECTRONIC EQUIPMENT AND FACILITIES

MIL-HDBK-1012/3 - TELECOMMUNICATIONS PREMISES DISTRIBUTION PLANNING, DESIGN, AND ESTIMATING

TM 5-853-4 - SECURITY ENGINEERING ELECTRONIC SECURITY SYSTEMS

IEC/TR 61602 ED. 1.0 B, 1996 - CONNECTORS USED IN THE FIELD OF AUDIO, VIDEO AND AUDIOVISUAL ENGINEERING

IEC 61883-1 ED. 3.0 EN, 2008 - CONSUMER AUDIO/VIDEO EQUIPMENT - DIGITAL INTERFACE - PART 1: GENERAL

IEC 61883-6 ED. 2.0 EN, 2005 - CONSUMER AUDIO/VIDEO EQUIPMENT - DIGITAL INTERFACE - PART 6: AUDIO AND MUSIC DATA TRANSMISSION PROTOCOL

IEC 61938 ED. 1.0 B, 1996 - AUDIO, VIDEO AND AUDIOVISUAL SYSTEMS - INTERCONNECTIONS AND MATCHING VALUES – PREFERRED MATCHING VALUES OF ANALOGUE SIGNALS

IEC 62075 ED. 1.0 B, 2008 - AUDIO/VIDEO, INFORMATION AND COMMUNICATION TECHNOLOGY EQUIPMENT – ENVIRONMENTALLY CONSCIOUS DESIGN

IEC 62087-BD ED. 2.0 EN, 2008 - METHODS OF MEASUREMENT FOR THE POWER CONSUMPTION OF AUDIO, VIDEO AND RELATED EQUIPMENT

NFPA 262 - STANDARD METHOD OF TEST FOR FLAME TRAVEL AND SMOKE OF WIRES AND CABLES FOR USE IN AIR-HANDLING SPACES

BICSI - BUILDING INDUSTRIES CONSULTING SERVICES INTERNATIONAL (TDMM), 13TH ED., 2014, TELECOMMUNICATIONS DISTRIBUTION METHODS MANUAL 13TH EDITION.

CAMP LEJEUNE GUIDE SPECIFICATIONS, (CLGS) 27 10 00

CAMP LEJEUNE GUIDE SPECIFICATIONS, (CLGS) 33 82 00

CAMP LEJEUNE GUIDE SPECIFICATIONS, (CLGS) 33 82 00

TELECOMMUNICATIONS GENERAL NOTES

1. THIS IS A STANDARD LEGEND SHEET. NOT ALL SYMBOLS OR ABBREVIATIONS MAY APPEAR ON DRAWINGS.
2. REFER TO DIVISIONS 26, 27, 28 AND 33 SPECIFICATIONS FOR TELECOMMUNICATION SYSTEM ITEMS.
3. MOUNTING DEVICES AND EQUIPMENT PER SPECIFICATIONS UNLESS OTHERWISE NOTED.
4. MOUNTING HEIGHTS, UNLESS OTHERWISE NOTED, ARE TO CENTER LINE OF DEVICE.
5. THE CONTRACTOR SHALL DETERMINE THE EXACT ROUTING OF RACEWAYS.
6. THE CONTRACTOR SHALL COORDINATE ALL RACEWAY PENETRATIONS AND PROVIDE FIREPROOFING AS APPLICABLE.
7. THE MAXIMUM PERMANENT HORIZONTAL LINK DISTANCE SHALL NOT EXCEED 295' AND THE MAXIMUM HORIZONTAL CHANNEL (LINK PLUS WORKSTATION CABLES AND PATCH CORDS) SHALL BE 328'.
8. ALL HORIZONTAL VOICE AND DATA CABLING SHALL BE CATEGORY-6 INSTALLED IN A MINIMUM 1-1/4" CONDUIT UNLESS NOTED OTHERWISE FROM TELECOMM OUTLET LOCATIONS TO THE CABLE TRAY.
9. ALL HORIZONTAL AND BACKBONE CABLING SHALL BE PLENUM RATED WITH THE EXCEPTION OF CABLING INSTALLED IN UNDERGROUND CONDUITS.
10. CATEGORY-6A CABLING SHALL BE TERMINATED ON 8-PIN, 8-CONDUCTOR (RJ-45) CONNECTORS USING PIN/PAIR ASSIGNMENTS IN ACCORDANCE WITH T568A PIN-OUT SEQUENCE.
11. CATEGORY-6A JACKS SHALL BE THE SAME COLOR AS CORRESPONDING HORIZONTAL VOICE AND DATA CABLING. CATEGORY-6 JACKS SHALL BE THE SAME MANUFACTURER AS THE PATCH PANELS.
12. PROVIDE CATEGORY-6, 8-PIN, 8-CONDUCTOR MODULAR TO 8-PIN, 8-CONDUCTOR MODULAR, PATCH CABLES IN QUANTITIES AND LENGTHS SUCH THAT ALL WORKSTATION CABLES ARE CONNECTED.
13. OPTICAL FIBER CABLES SHALL BE TERMINATED WITH DUPLEX SC-TYPE CONNECTORS.
14. ALL TELECOMMUNICATIONS RACKS AND SUPPORTING STRUCTURES (CABLE TRAYS, LADDER RACKS, CONDUITS, AND BASKETS) WITHIN A TR MUST BE BONDED TO THE TR SIGNAL GROUND RING OR BUS BAR (TGB OR TMGB) AS DEFINED IN ANSI/TIA-569-D AND IN ANSI/TIA-607-B.
15. CABLE TRAY SHALL BE WALL MOUNTED (PREFERABLE) OR TRAPEZE MOUNTED. CENTER HUNG CABLE TRAY IS NOT ALLOWED. CABLE TRAY SHALL NOT BE USED TO SUPPORT OTHER ITEMS, CONDUIT, CABLE TRAY, PIPING OF UTILITIES. CABLE TRAY SUPPORTS SHALL BE PER NEMA STANDARDS PUBLICATION VE 2 - METAL CABLE TRAY INSTALLATION GUIDELINES.
16. PROVIDE ACCESS PANELS IN NON LAY-IN CEILINGS SUCH THAT NO POINT IN THE CABLE TRAY SYSTEM IS MORE THAN 20' FROM AN ACCESS POINT.
17. PROVIDE A MINIMUM OF 12" OF CLEARANCE ABOVE THE TOP OF CABLE TRAYS AND A MINIMUM OF 3" CLEARANCE BELOW CABLE TRAYS.
18. COMPLY WITH ANSI/TIA-569-D TELECOMMUNICATION PATHWAYS AND SPACES.
19. USE ONLY COPPER CONDUCTORS FOR GROUND CONNECTIONS. THE USE OF ALUMINUM CONDUCTORS IS NOT ALLOWED.
20. PROVIDE CABLE INSTALLED IN UNDERGROUND CONDUITS LISTED FOR USE IN WET LOCATIONS. PLENUM RATED CABLE SHALL NOT BE INSTALLED IN ANY UNDERGROUND CONDUIT.
21. LABEL ALL CABLE TERMINATIONS AND BOTH ENDS OF ALL CABLES IN ACCORDANCE WITH UFC 3-580-01 AND ANSI/TIA-606-B.
22. PROVIDE AS-BUILT DOCUMENTATION INCLUDING COMPLETE TEST RESULT REPORTS, FLOOR PLANS SHOWING USER WORKSTATIONS WITH CABLING LABELING, AND BACKBONE CABLE SCHEMATIC AND LABELING IN AN ELECTRONIC FORMAT (PDF) OR OTHER APPROVED FORMAT AND A PRINTED HARDCOPY. TEST RESULTS SHALL BE SUPPLIED ELECTRONICALLY TO THE PROJECT RCDD AND CORPS PROJECT ENGINEER/ARCHITECT IN THE TEST PROGRAM NATIVE FORMAT.
23. ANY MOTOR, TRANSFORMER, OR OTHER ELECTRICAL DEVICE GREATER THAN 5 KVA SHALL HAVE A MINIMUM OF A 4' BUFFER FROM ANY WALL OF THE EF, TER, OR TR(S).

TELECOMMUNICATIONS ABBREVIATIONS

110	110 PUNCHDOWN BLOCKS
8P8C	8-PIN, 8-CONDUCTOR
ACS	ACCESS CONTROL SYSTEM
AFF	ABOVE FINISHED FLOOR
AHJ	AUTHORITY HAVING JURISDICTION
ANSI	AMERICAN NATIONAL STANDARDS INSTITUTE
AWG	AMERICAN WIRE GAUGE
BBC	BACKBONE BONDING CONDUCTOR
BCT	BONDING CONDUCTOR FOR TELECOMMUNICATIONS
C	CONDUIT(S)
CAA	CONTROLLED ACCESS AREA
CAT 6	CABLING ETL VERIFIED TO ANSI/TIA-568-C.2 CATEGORY 6
CATV	CABLE TELEVISION
CCH	CLOSET CONNECTOR HOUSING
CCTV	CLOSED-CIRCUIT TELEVISION
CFCI	CONTRACTOR FURNISHED CONTRACTOR INSTALLED
CP	CONSOLIDATION POINT
DB	DIRECT BURIED
DDC	DIRECT DIGITAL CONTROL
DIA	DIAMETER
DWG	DRAWING
ER	EXISTING RELOCATED
EMT	ELECTRICAL METALLIC TUBING
ETR	EXISTING TO REMAIN
EXIST	EXISTING
FB	FLOOR BOX
FT	FEET
GFGI	GOVERNMENT FURNISHED GOVERNMENT INSTALLED
GND	GROUND
GRC	GALVANIZED RIGID CONDUIT
GRS	GALVANIZED RIGID STEEL
IAW	IN ACCORDANCE WITH
IDS	INTRUSION DETECTION SYSTEM
IN	INCHES
LCA	LIMITED CONTROL ACCESS
MC	MECHANICAL CONTRACTOR
MIN	MINIMUM
MTD	MOUNTED
NEC	NATIONAL ELECTRICAL CODE
NEMA	NATIONAL ELECTRICAL MANUFACTURERS ASSOCIATION
NESC	NATIONAL ELECTRICAL SAFETY CODE
NFPA	NATIONAL FIRE PROTECTION ASSOCIATION
NIC	NOT IN CONTRACT
NTS	NOT TO SCALE
OEM	ORIGINAL EQUIPMENT MANUFACTURER
OFCI	OWNER FURNISHED CONTRACTOR INSTALLED
OFOI	OWNER FURNISHED OWNER INSTALLED
OSHA	OCCUPATIONAL SAFETY AND HEALTH ADMINISTRATION
PA	PUBLIC ADDRESS
PBB	PRIMARY BONDING BUSBAR
PE	POLYETHYLENE
PET	PROTECTED ENTRANCE TERMINALS
PDU	POWER DISTRIBUTION UNIT
POTS	PLAIN OLD TELEPHONE SERVICE (SWITCHED TELEPHONE LINE)
PSI	POUNDS PER SQUARE INCH
PTZ	PAN / TILT / ZOOM
QTY	QUANTITY
RBB	RACK BONDING BUSBAR
RBC	RACK BONDING CONDUCTOR
RMC	RIGID METAL CONDUIT
RR	REMOVE AND RELOCATE
RU	RACK UNIT
SBB	SECONDARY BONDING BUSBAR
SCH	SCHEDULE
STP	SHIELDED TWISTED PAIR
TBB	TELECOMMUNICATIONS BONDING BACKBONE
TBC	TELECOMMUNICATIONS BONDING CONDUCTOR
TE	TELECOMMUNICATIONS ENCLOSURE
TEBC	TELECOMMUNICATIONS EQUIPMENT BONDING CONDUCTOR
TEF	TELECOMMUNICATIONS ENTRANCE FACILITY
TGB	TELECOMMUNICATIONS GROUNDING BUSBAR
TMGB	TELECOMMUNICATIONS MAIN GROUNDING BUSBAR
TYP	TYPICAL
U/G	UNDERGROUND
UON	UNLESS OTHERWISE NOTED
U/UTP	UNSCREENED/UNSHIELDED TWISTED PAIR CABLE
VoIP	VOICE OVER INTERNET PROTOCOL
WP	WEATHERPROOF
XP	EXPLOSION PROOF

APPR | DATE | SYM | DESCRIPTION

NAVFAC

SEAL

RQ WM Jordan COMPANY – A JOINT VENTURE –

Michael Baker INTERNATIONAL
100 AIRSIDE DRIVE
MOON TOWNSHIP, PA 15108 — A/E INFO

APPROVED

FOR COMMANDER NAVFAC

ACTIVITY
MARINE CORPS BASE
CAMP LEJEUNE

SATISFACTORY TO DATE

DES	DRW	CHK
JTE	ETH	JMG

PM

BRANCH MANAGER

CHIEF ENG/ARCH

FIRE PROTECTION

DEPARTMENT OF THE NAVY
NAVAL FACILITIES ENGINEERING COMMAND ~ MID-ATLANTIC
ROICC FLORENCE CAMP LEJEUNE — JACKSONVILLE, NC
MCB CAMP LEJEUNE — JACKSONVILLE, NC

P1338 II MEF SIMULATION/TRAINING CENTER
REPLACEMENT

TELECOMMUNICATIONS SYMBOLS, SCHEDULES, & NOTES

SCALE: AS NOTED
EPROJECT NO.: 1590892
CONSTR. CONTR. NO.
N40085-20-C-0059
NAVFAC DRAWING NO.
SHEET OF

T-001

DP2 SUBMISSION – P1338 BUILDING - PRE-FINAL SUBMISSION

PLOTTED: 6/10/2021 9:27:39 AM

FILE NAME: BIM 360://HF PACKAGE 3/P1338 MEF SIM CTR-1590892-E.rvt

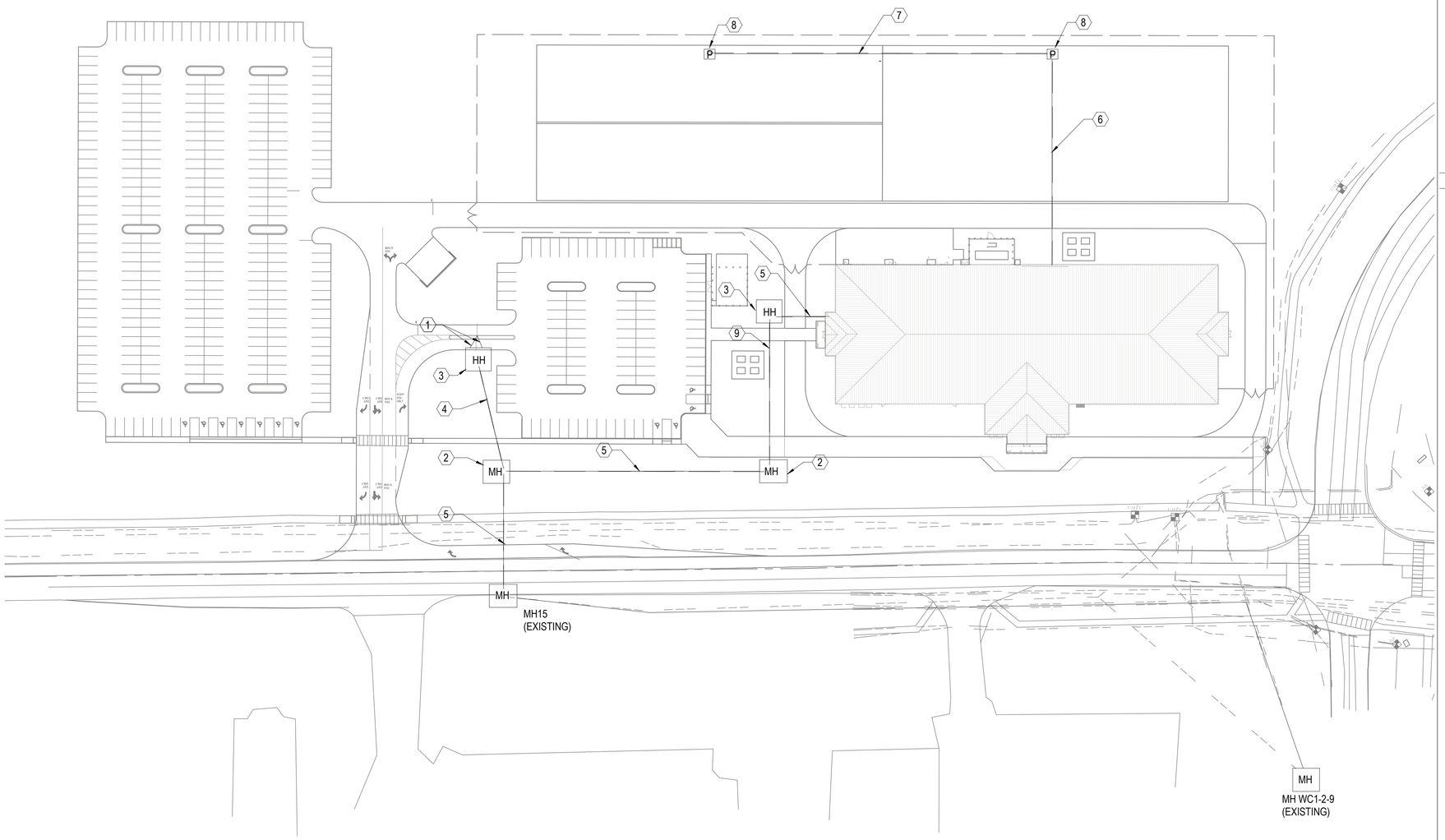

GENERAL NOTES

1 SEE SHEET E-001 FOR ELECTRICAL NOTES, SYMBOLS, AND ABBREVIATIONS.

2 PROVIDE AND INSTALL ONE (1) NEW 24-STRAND SINGLEMODE OSP OPTICAL FIBER CABLE FROM MH15 TO NEW FACILITY EF VIA NEW DUCTBANK SYSTEM, AND ONE (1) 300-PAIR OSP PE39 COPPER CABLE FROM EXISTING MH WC1-2-9 TO NEW FACILITY EF VIA NEW DUCTBANK SYSTEM. COORDINATE WITH GOVERNMENT FOR PLACING, SPLICING, TERMINATION, AND CUTOVER REQUIREMENTS.

3 PROVIDE AND INSTALL ONE (1) NEW 24-STRAND SINGLEMODE OSP OPTICAL FIBER CABLE, AND ONE (1) 100-PAIR PE-93 OSP COPPER CABLE FROM TELECOM ROOM TR208 TO NEW PEDESTAL LOCATIONS AT BUILDING EXTERIOR; COORDINATE TERMINATION LOCATIONS WITH BASE COMMUNICATIONS.

4 PRESERVE AND PROTECT RORP211-5 AND DIRECT BURIED CABLING TO FORP211-5.

5 PRESERVE AND PROTECT HH211-5-4, CABLING AND DUCTBANK FROM HH211-5-4 TO 1248.

KEYNOTES

1 NEW 2-WAY 2" CONDUIT DUCTBANK FROM NEW SITE MANHOLE TO ROADWAY MEDIAN LOCATION; COORDINATE EXACT CONDUIT STUB UP LOCATION WITH PROPOSED CARD READER LOCATION.

2 NEW 4'x4'x4' PRECAST CONCRETE COMMUNICATION VAULT

3 NEW 2'x3' CONCRETE POLYMER HANDHOLE

4 NEW 2-WAY 4" CONDUIT DUCTBANK FROM NEW SITE MANHOLE TO NEW HANDHOLE

5 NEW 6-WAY 4" CONDUIT DUCTBANK FROM MH15 TO NEW SITE MANHOLE, WITH THREE (3) 3" 3-DUCT FABRIC INNERDUCT INSTALLED IN THREE CONDUITS

6 NEW 2-WAY 2" CONDUIT DUCTBANK FROM BUILDING TELECOM ROOM TR208 TO PEDESTAL LOCATION; ONE CONDUIT WITH ONE (1) 3" 3-DUCT FABRIC INNERDUCT INSTALLED IN ONE CONDUIT

7 NEW 2-WAY 2" CONDUIT DUCTBANK BETWEEN NEW PEDESTAL LOCATIONS; ONE CONDUIT WITH ONE (1) 1" 3-DUCT FABRIC INNERDUCT INSTALLED IN ONE CONDUIT

8 NEW TELECOMMUNICATIONS PEDESTAL LOCATION

9 NEW 3-WAY 4" CONDUIT DUCTBANK FROM MH15 TO NEW SITE MANHOLE, WITH THREE (3) 3" 3-DUCT FABRIC INNERDUCT INSTALLED IN ONE CONDUIT

TELECOMMUNICATIONS - SITE UTILITY PLAN

SCALE: 1" = 60'-0"

0 30'-0" 60'-0" 120'-0"

SCALE:0'-1" = 60'-0"

N

APPR	DATE	DESCRIPTION	SYM

NAVFAC

SEAL

WNM Jordan COMPANY – A JOINT VENTURE –

Michael Baker INTERNATIONAL

100 AIRSIDE DRIVE
MOON TOWNSHIP, PA 15108 A/E INFO

APPROVED

FOR COMMANDER NAVFAC

ACTIVITY
MARINE CORPS BASE
CAMP LEJEUNE

SATISFACTORY TO DATE

DES JTE | DRW ETH | CHK JMG

PM

BRANCH MANAGER

CHIEF ENG/ARCH

FIRE PROTECTION

DEPARTMENT OF THE NAVY
NAVAL FACILITIES ENGINEERING COMMAND
ROICC FLORENCE CAMP LEJEUNE
MCB CAMP LEJEUNE

NAVAL FACILITIES ENGINEERING COMMAND – MID-ATLANTIC
JACKSONVILLE, NC

JACKSONVILLE, NC
P1338 II MEF SIMULATION/TRAINING CENTER
REPLACEMENT

TELECOMMUNICATIONS - SITE PLAN

SCALE: AS NOTED

EPROJECT NO.: 1590892

CONSTR. CONTR. NO.
N40085-20-C-0059

NAVFAC DRAWING NO.

SHEET OF

TS101

DP2 SUBMISSION – P1338 BUILDING - PRE-FINAL SUBMISSION

PLOTTED: 6/10/2021 9:28:46 AM

FILE NAME: BIM 360://HF PACKAGE 3/P1338 MEF SIM CTR-1590892-E.rvt

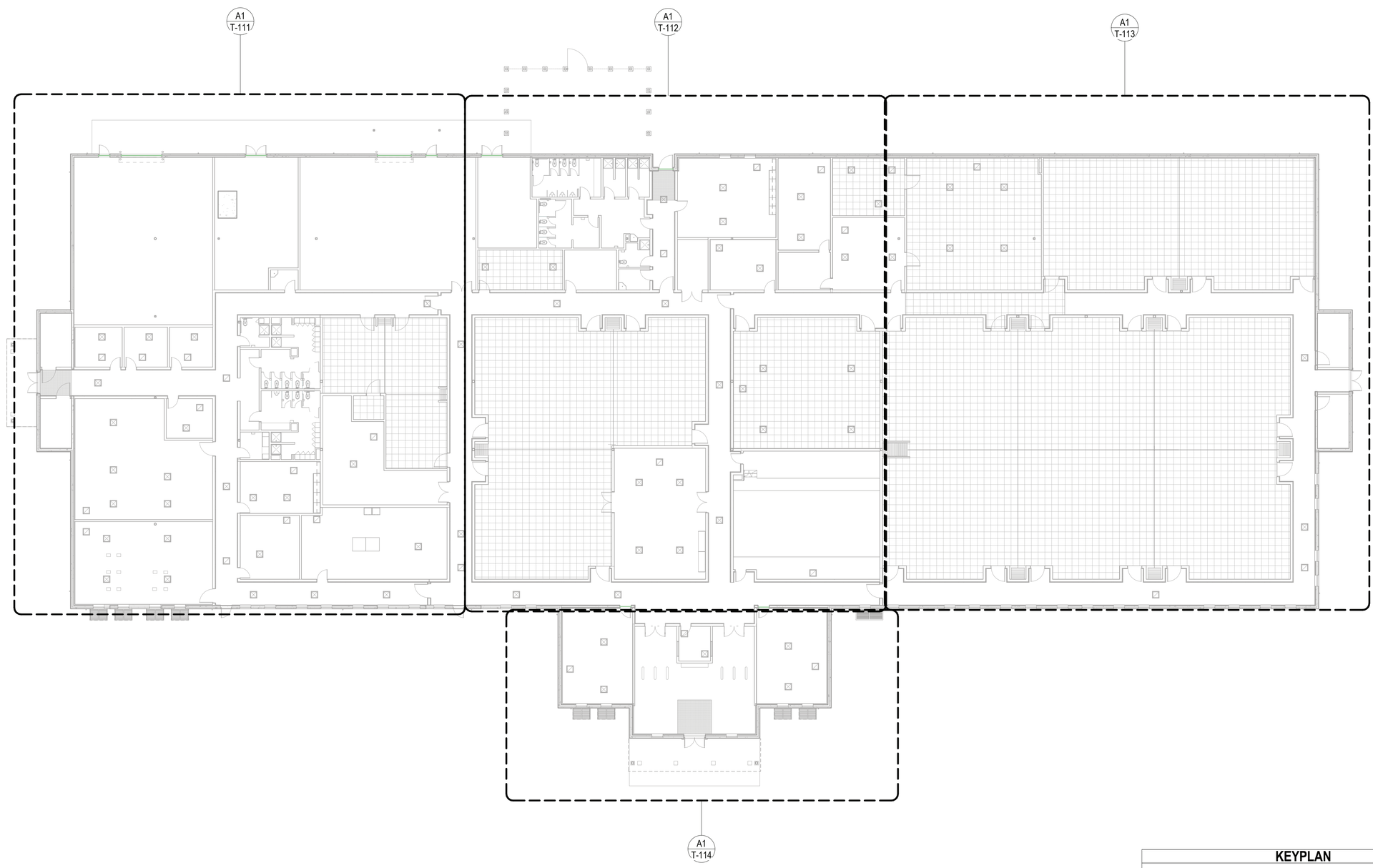

TELECOMMUNICATIONS - FLOOR PLAN OVERALL

SCALE: 1/16" = 1'-0"

KEYPLAN

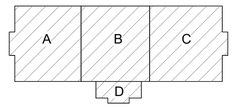

0 8'-0" 16'-0" 32'-0"

SCALE: 0'-0 1/16" = 1'-0"

N

APPR	DATE	DESCRIPTION	SYM

SEAL

IRQ WM Jordan COMPANY ~ A JOINT VENTURE ~

Michael Baker INTERNATIONAL

100 AIRSIDE DRIVE
MOON TOWNSHIP, PA 15108 A/E INFO

APPROVED

FOR COMMANDER NAVFAC

ACTIVITY
MARINE CORPS BASE
CAMP LEJEUNE

SATISFACTORY TO DATE

DES JTE | DRW ETH | CHK JMG

PM

BRANCH MANAGER

CHIEF ENG/ARCH

FIRE PROTECTION

DEPARTMENT OF THE NAVY
NAVAL FACILITIES ENGINEERING COMMAND
ROICC FLORENCE CAMP LEJEUNE

NAVAL FACILITIES ENGINEERING COMMAND ~ MID-ATLANTIC
JACKSONVILLE, NC

MCB CAMP LEJEUNE
P1338 II MEF SIMULATION/TRAINING CENTER
REPLACEMENT
JACKSONVILLE, NC

TELECOMMUNICATIONS - FLOOR PLAN OVERALL

SCALE:	AS NOTED
EPROJECT NO.:	1590892
CONSTR. CONTR. NO.	N40085-20-C-0059
NAVFAC DRAWING NO.	
SHEET	OF

T-100

DP2 SUBMISSION – P1338 BUILDING -PRE-FINAL SUBMISSION

PLOTTED: 6/10/2021 9:27:43 AM

FILE NAME: BIM 360://HF PACKAGE 3/P1338 MEF SIM CTR-1590892-E.rvt

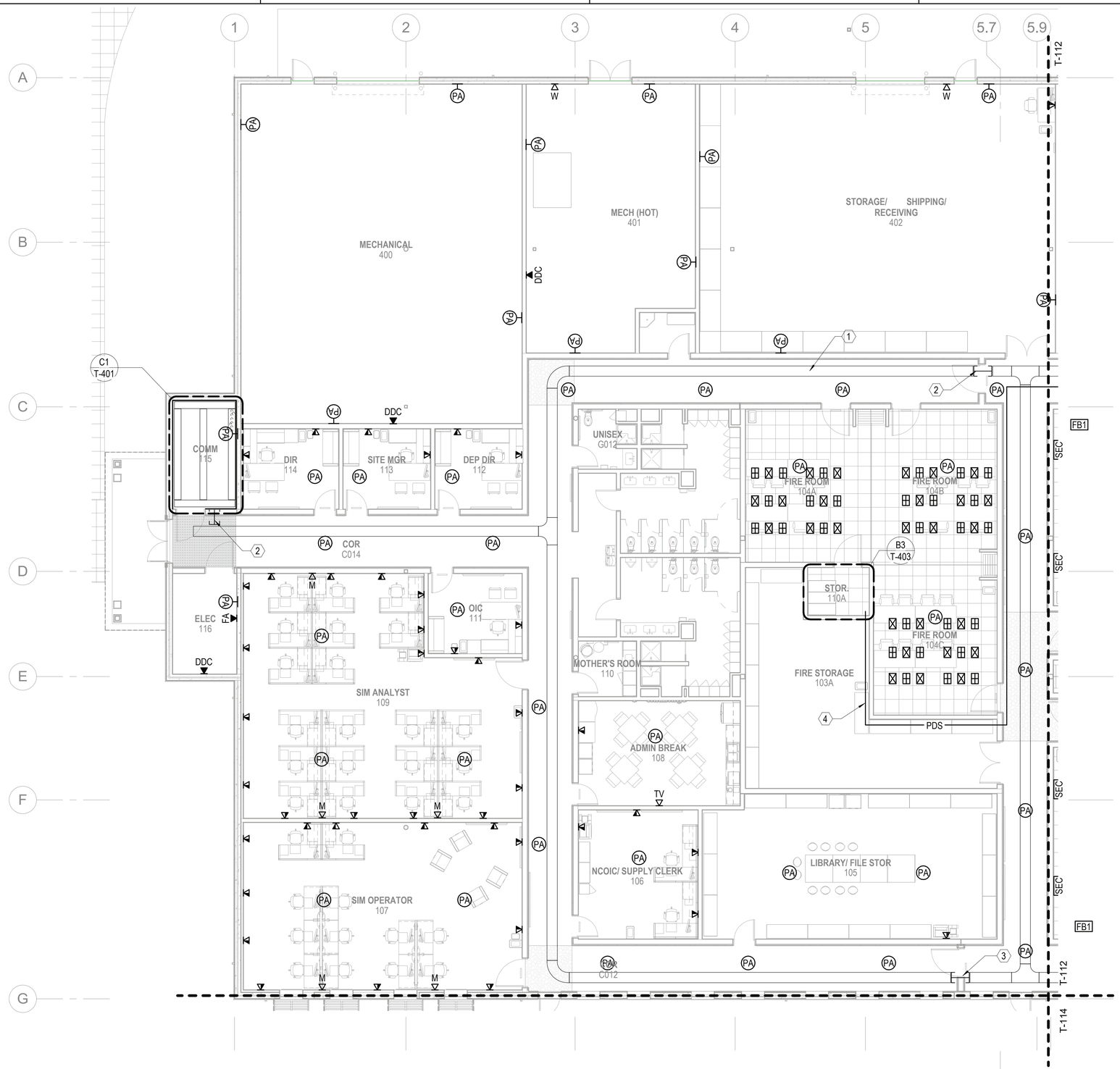

GENERAL NOTES

1 SEE SHEET T-001 FOR TELECOMMUNICATIONS NOTES, SYMBOLS, AND ABBREVIATIONS.

KEYNOTES

1 18" X 4" WIRE-BASKET TYPE CABLE TRAY MOUNTED ABOVE ACCESSIBLE CEILING; COORDINATE TRAY PLACEMENT WITH OTHER TRADES (TYPICAL ALL LOCATIONS)

2 THREE (3) 4" FIRE-RATED PENETRATIONS (TYPICAL ALL LOCATIONS)

3 THREE (3) 4" FIRE-RATED PENETRATIONS (TYPICAL ALL LOCATIONS), WITH NON-CONDUCTIVE DIELECTIC BREAK

4 PROTECTED DISTRIBUTION SYSTEM (PDS) FOR SIPRNET TRANSPORT; COMPLY WITH CNSSI 7003

KEYPLAN

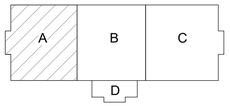

0 4'-0" 8'-0" 16'-0"

SCALE: 0'-0 1/8" = 1'-0"

N

A1 TELECOMMUNICATIONS - FIRST FLOOR PLAN - AREA A

SCALE: 1/8" = 1'-0" (T-100)

APPR | DATE | DESCRIPTION | SYM

SEAL

Michael Baker INTERNATIONAL
100 AIRSIDE DRIVE
MOON TOWNSHIP, PA 15108 A/E INFO

APPROVED

FOR COMMANDER NAVFAC

ACTIVITY
MARINE CORPS BASE
CAMP LEJEUNE

SATISFACTORY TO DATE

DES JTE | DRW ETH | CHK JMG

PM

BRANCH MANAGER

CHIEF ENG/ARCH

FIRE PROTECTION

DEPARTMENT OF THE NAVY
NAVAL FACILITIES ENGINEERING COMMAND ~ MID-ATLANTIC
ROICC FLORENCE CAMP LEJEUNE
NAVAL FACILITIES ENGINEERING COMMAND ~ MID-ATLANTIC
JACKSONVILLE, NC
MCB CAMP LEJEUNE
JACKSONVILLE, NC
P1338 II MEF SIMULATION/TRAINING CENTER
REPLACEMENT
TELECOMMUNICATIONS - FIRST FLOOR PLAN - AREA A

SCALE: AS NOTED

EPROJECT NO.: 1590892

CONSTR. CONTR. NO.
N40085-20-C-0059

NAVFAC DRAWING NO.

SHEET OF

T-111

DP2 SUBMISSION – P1338 BUILDING -PRE-FINAL SUBMISSION

PLOTTED: 6/10/2021 9:39:58 AM

FILE NAME: BIM 360://HF PACKAGE 3/P1338 MEF SIM CTR-1590892-E.rvt

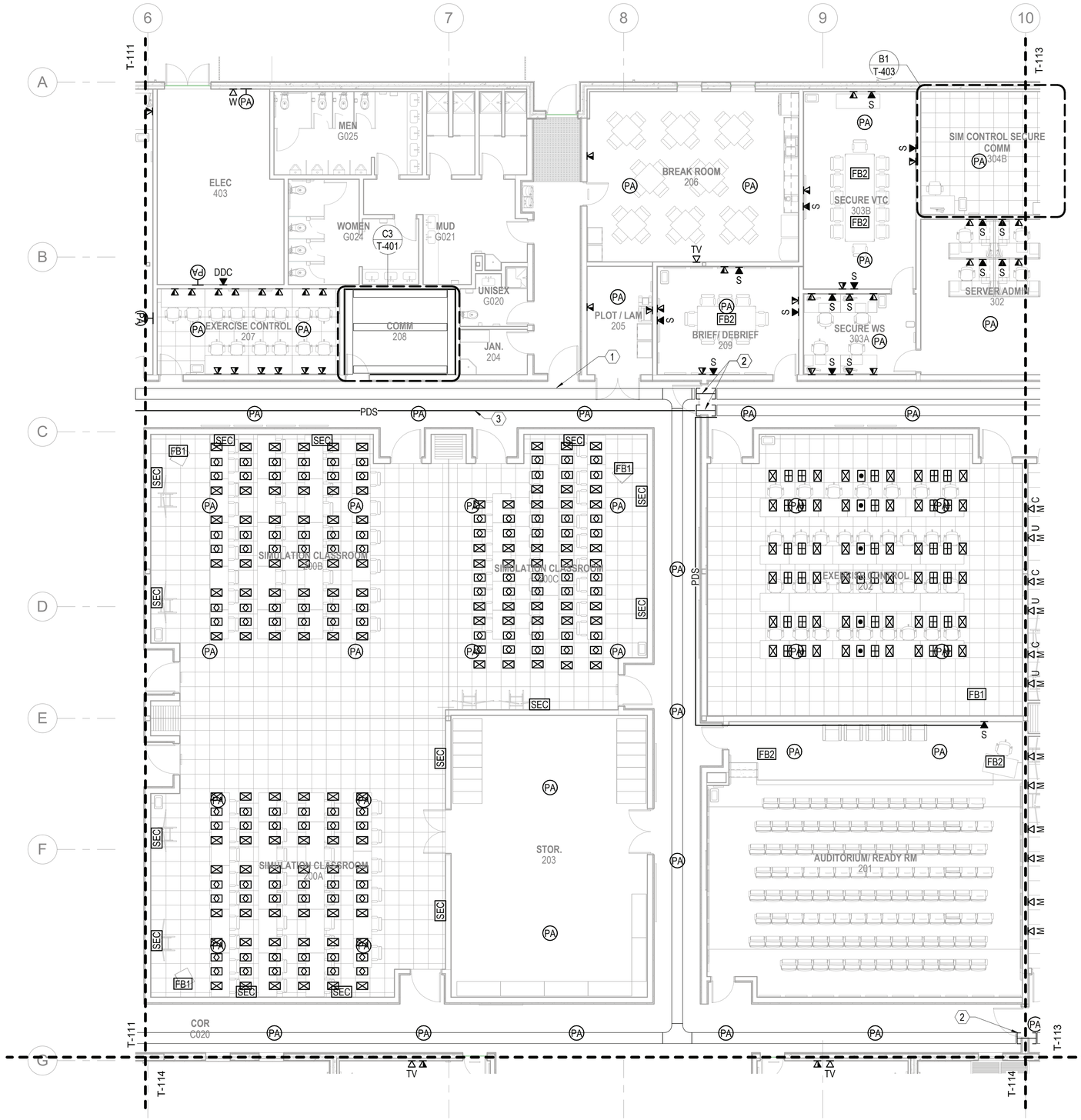

A1 TELECOMMUNICATIONS - FIRST FLOOR PLAN - AREA B

SCALE: 1/8" = 1'-0" (T-100)

GENERAL NOTES

1 SEE SHEET T-001 FOR TELECOMMUNICATIONS NOTES, SYMBOLS, AND ABBREVIATIONS.

KEYNOTES

1 18" X 4" WIRE-BASKET TYPE CABLE TRAY MOUNTED ABOVE ACCESSIBLE CEILING; COORDINATE TRAY PLACEMENT WITH OTHER TRADES (TYPICAL ALL LOCATIONS)

2 THREE (3) 4" FIRE-RATED PENETRATIONS (TYPICAL ALL LOCATIONS), WITH NON-CONDUCTIVE DIELECTIC BREAK

3 PROTECTED DISTRIBUTION SYSTEM (PDS) FOR SIPRNET TRANSPORT; COMPLY WITH CNSSI 7003

KEYPLAN

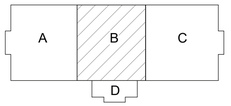

0 4'-0" 8'-0" 16'-0"

SCALE: 0'-0 1/8" = 1'-0"

N

APPR | DATE | DESCRIPTION | SYM

SEAL

W.M. Jordan COMPANY – A JOINT VENTURE –

Michael Baker INTERNATIONAL

100 AIRSIDE DRIVE
MOON TOWNSHIP, PA 15108 A/E INFO

APPROVED

FOR COMMANDER NAVFAC

ACTIVITY
MARINE CORPS BASE
CAMP LEJEUNE

SATISFACTORY TO DATE

DES JTE | DRW ETH | CHK JMG

PM

BRANCH MANAGER

CHIEF ENG/ARCH

FIRE PROTECTION

DEPARTMENT OF THE NAVY
NAVAL FACILITIES ENGINEERING COMMAND
ROICC FLORENCE CAMP LEJEUNE

NAVAL FACILITIES ENGINEERING COMMAND – MID-ATLANTIC
JACKSONVILLE, NC

MCB CAMP LEJEUNE

JACKSONVILLE, NC
P1338 II MEF SIMULATION/TRAINING CENTER
REPLACEMENT

TELECOMMUNICATIONS - FIRST FLOOR PLAN - AREA B

SCALE: AS NOTED

EPROJECT NO.: 1590892

CONSTR. CONTR. NO.
N40085-20-C-0059

NAVFAC DRAWING NO.

SHEET OF

T-112

DP2 SUBMISSION – P1338 BUILDING - PRE-FINAL SUBMISSION

PLOTTED: 6/10/2021 9:28:03 AM

FILE NAME: BIM 360://HF PACKAGE 3/P1338 MEF SIM CTR-1590892-E.rvt

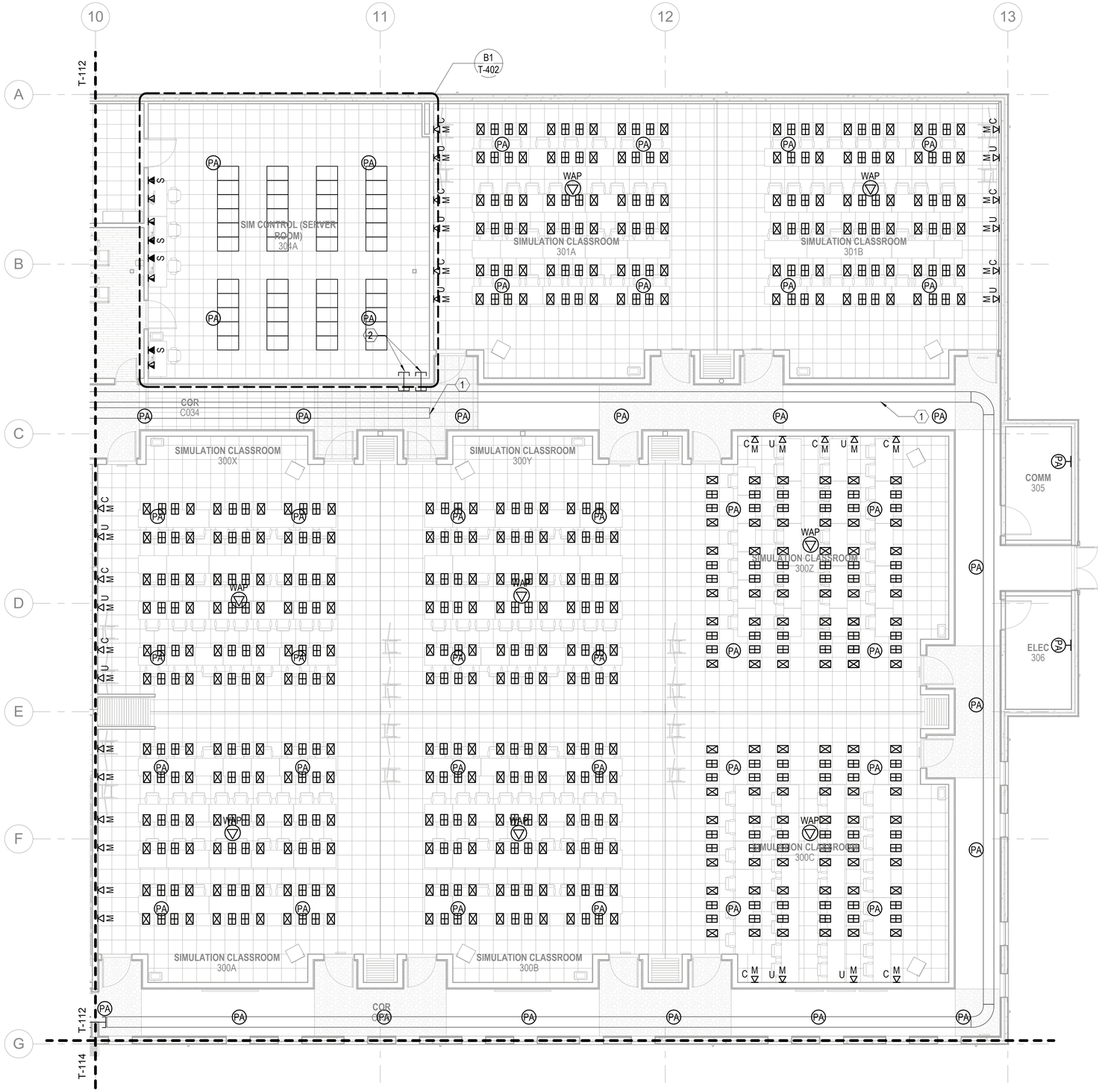

A1 TELECOMMUNICATIONS - FIRST FLOOR PLAN - AREA C

SCALE: 1/8" = 1'-0" (T-100)

GENERAL NOTES

1 SEE SHEET T-001 FOR TELECOMMUNICATIONS NOTES, SYMBOLS, AND ABBREVIATIONS.

KEYNOTES

1 18" X 4" WIRE-BASKET TYPE CABLE TRAY MOUNTED ABOVE ACCESSIBLE CEILING; COORDINATE TRAY PLACEMENT WITH OTHER TRADES (TYPICAL ALL LOCATIONS)

2 THREE (3) 4" FIRE-RATED PENETRATIONS (TYPICAL ALL LOCATIONS)

KEYPLAN

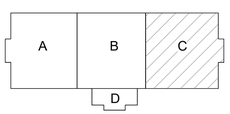

0 4'-0" 8'-0" 16'-0"

SCALE: 0'-0 1/8" = 1'-0"

N

APPR | DATE | DESCRIPTION | SYM

SEAL

RQ WM Jordan COMPANY – A JOINT VENTURE –

Michael Baker INTERNATIONAL

100 AIRSIDE DRIVE
MOON TOWNSHIP, PA 15108 A/E INFO

APPROVED

FOR COMMANDER NAVFAC

ACTIVITY
MARINE CORPS BASE
CAMP LEJEUNE

SATISFACTORY TO DATE

DES	JTE	DRW	ETH	CHK	JMG

PM

BRANCH MANAGER

CHIEF ENG/ARCH

FIRE PROTECTION

DEPARTMENT OF THE NAVY
NAVAL FACILITIES ENGINEERING COMMAND
RO/CC FLORENCE CAMP LEJEUNE

NAVAL FACILITIES ENGINEERING COMMAND ~ MID-ATLANTIC
JACKSONVILLE, NC

MCB CAMP LEJEUNE
JACKSONVILLE, NC
P1338 II MEF SIMULATION/TRAINING CENTER
REPLACEMENT

TELECOMMUNICATIONS - FIRST FLOOR PLAN - AREA C

SCALE: AS NOTED

EPROJECT NO.: 1590892

CONSTR. CONTR. NO.
N40085-20-C-0059

NAVFAC DRAWING NO.

SHEET OF

T-113

DP2 SUBMISSION – P1338 BUILDING - PRE-FINAL SUBMISSION

PLOTTED: 6/10/2021 9:28:08 AM

FILE NAME: BIM 360://HF PACKAGE 3/P1338 MEF SIM CTR-1590892-E.rvt

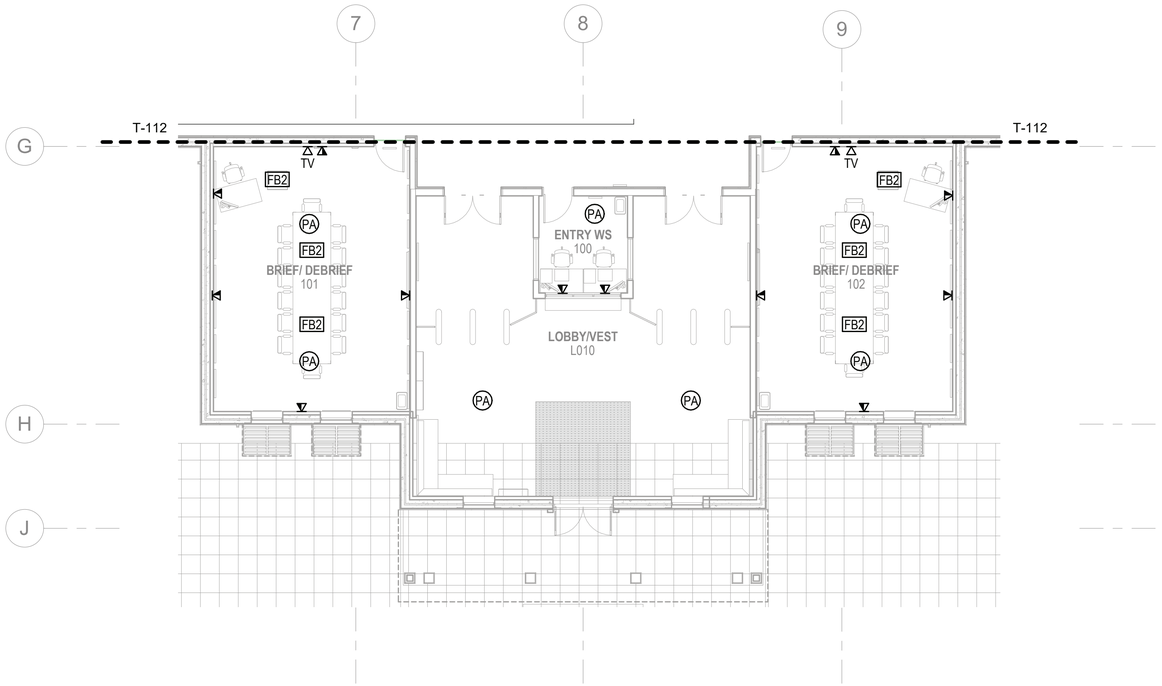

A1 TELECOMMUNICATIONS - FIRST FLOOR PLAN - AREA D

SCALE: 1/8" = 1'-0" (T-100)

GENERAL NOTES

1 SEE SHEET T-001 FOR TELECOMMUNICATIONS NOTES, SYMBOLS, AND ABBREVIATIONS.

KEYPLAN

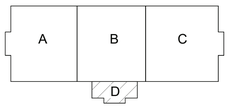

0 4'-0" 8'-0" 16'-0"

SCALE: 0'-0 1/8" = 1'-0"

N

SYM	DESCRIPTION	DATE	APPR

NAVFAC

SEAL

W.M. Jordan COMPANY ~ A JOINT VENTURE ~

Michael Baker INTERNATIONAL

100 AIRSIDE DRIVE
MOON TOWNSHIP, PA 15108 A/E INFO

APPROVED

FOR COMMANDER NAVFAC

ACTIVITY
MARINE CORPS BASE
CAMP LEJEUNE

SATISFACTORY TO DATE

DES JTE | DRW ETH | CHK JMG

PM

BRANCH MANAGER

CHIEF ENG/ARCH

FIRE PROTECTION

DEPARTMENT OF THE NAVY
NAVAL FACILITIES ENGINEERING COMMAND
ROICC FLORENCE CAMP LEJEUNE

NAVAL FACILITIES ENGINEERING COMMAND ~ MID-ATLANTIC
JACKSONVILLE, NC

MCB CAMP LEJEUNE

P1338 II MEF SIMULATION/TRAINING CENTER
REPLACEMENT
JACKSONVILLE, NC

TELECOMMUNICATIONS - FIRST FLOOR PLAN - AREA D

SCALE: AS NOTED

EPROJECT NO.: 1590892

CONSTR. CONTR. NO.
N40085-20-C-0059

NAVFAC DRAWING NO.

SHEET OF

T-114

DP2 SUBMISSION – P1338 BUILDING - PRE-FINAL SUBMISSION

PLOTTED: 6/10/2021 9:28:11 AM

FILE NAME: BIM 360://HF PACKAGE 3/P1338 MEF SIM CTR-1590892-E.rvt

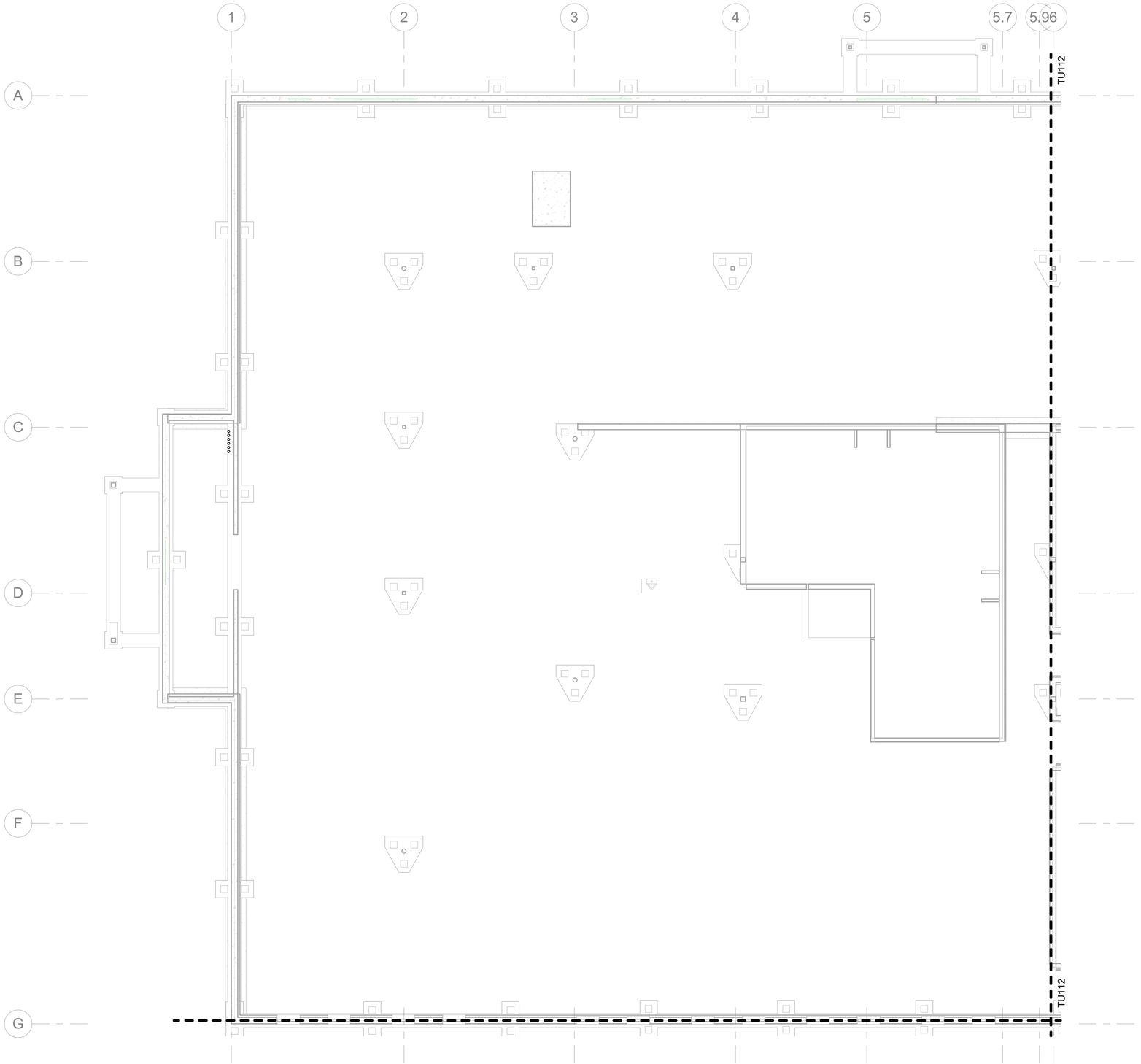

A1 TELECOMMUNICATIONS - UNDERFLOOR PLAN - AREA A

SCALE: 1/8" = 1'-0"

GENERAL NOTES

1 SEE SHEET T-001 FOR TELECOMMUNICATIONS NOTES, SYMBOLS, AND ABBREVIATIONS.

KEYPLAN

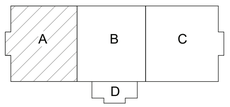

0 4'-0" 8'-0" 16'-0"

SCALE: 0'-0 1/8" = 1'-0"

N

SYM	DESCRIPTION	DATE	APPR

NAVFAC

SEAL

W.M. Jordan COMPANY – A JOINT VENTURE –

Michael Baker INTERNATIONAL

100 AIRSIDE DRIVE
MOON TOWNSHIP, PA 15108 A/E INFO

APPROVED

FOR COMMANDER NAVFAC

ACTIVITY
MARINE CORPS BASE
CAMP LEJEUNE

SATISFACTORY TO DATE

DES JTE	DRW ETH	CHK JMG

PM

BRANCH MANAGER

CHIEF ENG/ARCH

FIRE PROTECTION

DEPARTMENT OF THE NAVY
NAVAL FACILITIES ENGINEERING COMMAND
ROIOC FLORENCE CAMP LEJEUNE

NAVAL FACILITIES ENGINEERING COMMAND ~ MID-ATLANTIC
JACKSONVILLE, NC

MCB CAMP LEJEUNE
JACKSONVILLE, NC

P1338 II MEF SIMULATION/TRAINING CENTER
REPLACEMENT

TELECOMMUNICATIONS - FIRST FLOOR PLAN - AREA A UNDERSLAB

SCALE: AS NOTED

EPROJECT NO.: 1590892

CONSTR. CONTR. NO.
N40085-20-C-0059

NAVFAC DRAWING NO.

SHEET OF

TU111

DP2 SUBMISSION – P1338 BUILDING - PRE-FINAL SUBMISSION

PLOTTED: 6/10/2021 9:28:48 AM

FILE NAME: BIM 360://HF PACKAGE 3/P1338 MEF SIM CTR-1590892-E.rvt

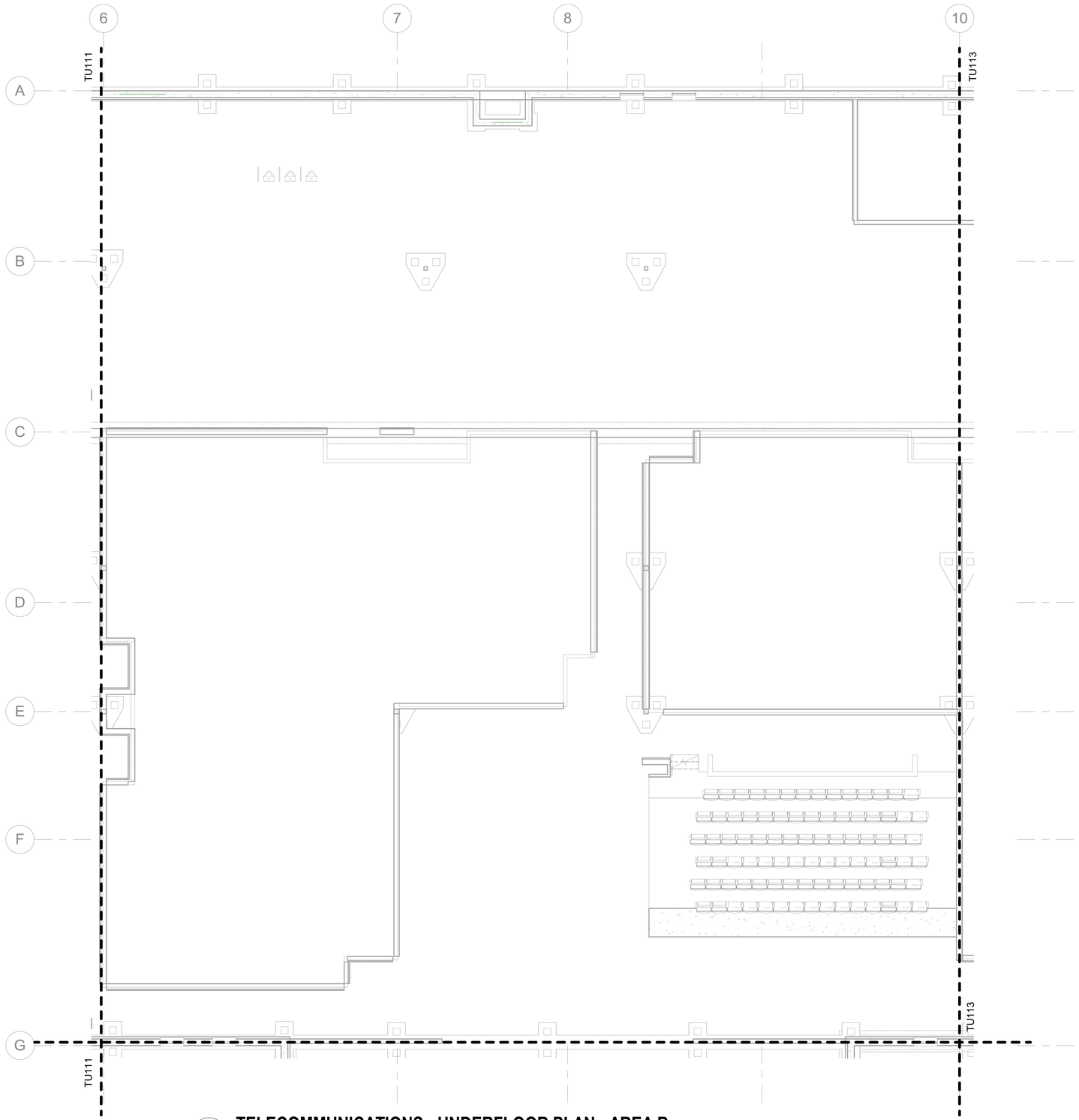

GENERAL NOTES

1 SEE SHEET T-001 FOR TELECOMMUNICATIONS NOTES, SYMBOLS, AND ABBREVIATIONS.

A1 **TELECOMMUNICATIONS - UNDERFLOOR PLAN - AREA B**

SCALE: 1/8" = 1'-0"

KEYPLAN

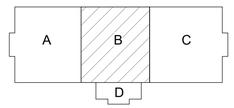

0 4'-0" 8'-0" 16'-0"

SCALE: 0'-0 1/8" = 1'-0"

N

SYM	DESCRIPTION	DATE	APPR

NAVFAC

SEAL

IRQ WM Jordan COMPANY ~ A JOINT VENTURE ~

Michael Baker INTERNATIONAL

100 AIRSIDE DRIVE
MOON TOWNSHIP, PA 15108

A/E INFO

APPROVED

FOR COMMANDER NAVFAC

ACTIVITY
MARINE CORPS BASE
CAMP LEJEUNE

SATISFACTORY TO DATE

DES JTE | DRW ETH | CHK JMG

PM

BRANCH MANAGER

CHIEF ENG/ARCH

FIRE PROTECTION

DEPARTMENT OF THE NAVY
NAVAL FACILITIES ENGINEERING COMMAND
ROICC FLORENCE CAMP LEJEUNE

NAVAL FACILITIES ENGINEERING COMMAND ~ MID-ATLANTIC
JACKSONVILLE, NC

MCB CAMP LEJEUNE
JACKSONVILLE, NC
P1338 II MEF SIMULATION/TRAINING CENTER
REPLACEMENT

TELECOMMUNICATIONS - FIRST FLOOR PLAN - AREA B UNDERSLAB

SCALE: AS NOTED

EPROJECT NO.: 1590892

CONSTR. CONTR. NO.
N40085-20-C-0059

NAVFAC DRAWING NO.

SHEET OF

TU112

DP2 SUBMISSION – P1338 BUILDING -PRE-FINAL SUBMISSION

PLOTTED: 6/10/2021 9:28:50 AM

FILE NAME: BIM 360://HF PACKAGE 3/P1338 MEF SIM CTR-1590892-E.rvt

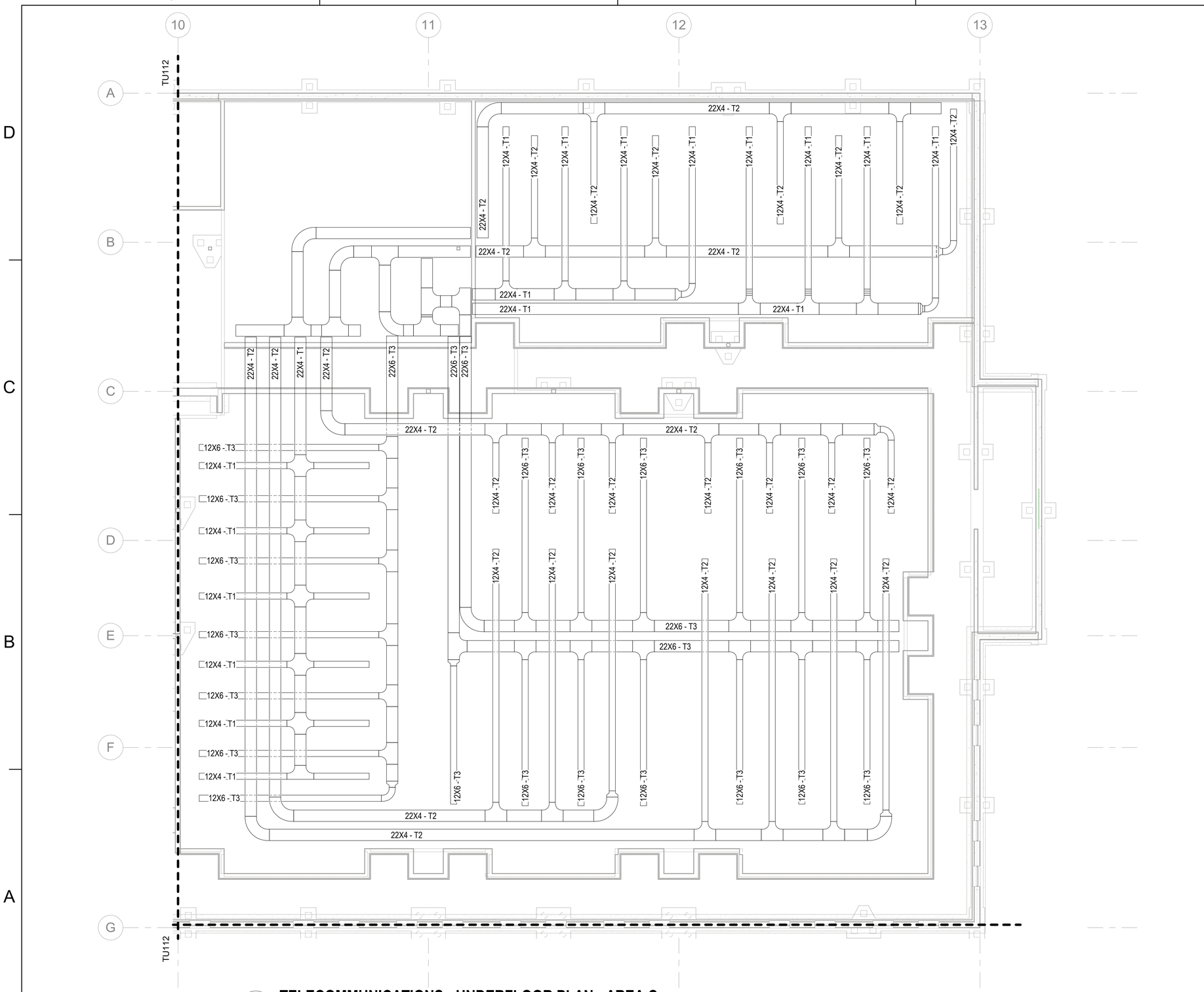

A1 **TELECOMMUNICATIONS - UNDERFLOOR PLAN - AREA C**

SCALE: 1/8" = 1'-0"

GENERAL NOTES

1 SEE SHEET T-001 FOR TELECOMMUNICATIONS NOTES, SYMBOLS, AND ABBREVIATIONS.

KEYPLAN

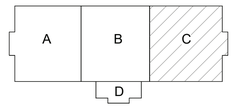

0 4'-0" 8'-0" 16'-0"

SCALE: 0'-0 1/8" = 1'-0"

N

SYM	DESCRIPTION	DATE	APPR

NAVFAC

SEAL

RQ W.M. Jordan COMPANY – A JOINT VENTURE –

Michael Baker INTERNATIONAL

100 AIRSIDE DRIVE
MOON TOWNSHIP, PA 15108

A/E INFO

APPROVED

FOR COMMANDER NAVFAC

ACTIVITY
MARINE CORPS BASE CAMP LEJEUNE

SATISFACTORY TO DATE

DES JTE | DRW ETH | CHK JMG

PM

BRANCH MANAGER

CHIEF ENG/ARCH

FIRE PROTECTION

DEPARTMENT OF THE NAVY
NAVAL FACILITIES ENGINEERING COMMAND
NAVAL FACILITIES ENGINEERING COMMAND ~ MID-ATLANTIC
ROICC FLORENCE CAMP LEJEUNE
JACKSONVILLE, NC

MCB CAMP LEJEUNE
JACKSONVILLE, NC

P1338 II MEF SIMULATION/TRAINING CENTER
REPLACEMENT

TELECOMMUNICATIONS - FIRST FLOOR PLAN - AREA C UNDERSLAB

SCALE: AS NOTED

EPROJECT NO.: 1590892

CONSTR. CONTR. NO.
N40085-20-C-0059

NAVFAC DRAWING NO.

SHEET OF

TU113

DP2 SUBMISSION – P1338 BUILDING - PRE-FINAL SUBMISSION

FILE NAME: BIM 360://HF PACKAGE 3/P1338 MEF SIM CTR-1590892-E.rvt

PLOTTED: 6/10/2021 9:28:53 AM

GENERAL NOTES

1 SEE SHEET T-001 FOR TELECOMMUNICATIONS NOTES, SYMBOLS, AND ABBREVIATIONS.

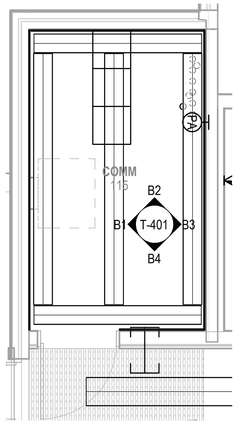

TELECOMMUNICATIONS - ENLARGED ROOM 115
SCALE: 1/4" = 1'-0" T-111 C1

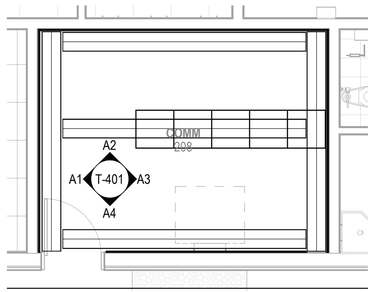

TELECOMMUNICATIONS - ENLARGED ROOM 208
SCALE: 1/4" = 1'-0" T-111 C3

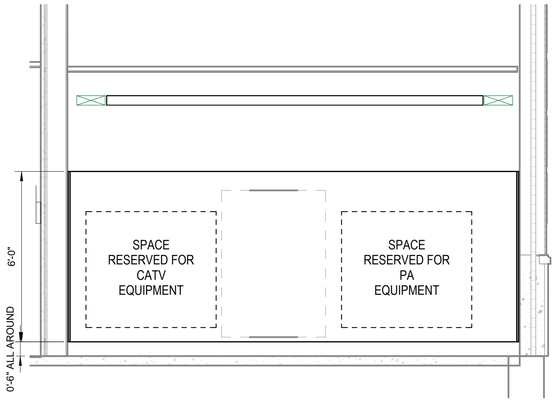

TELECOM RM 115 ELEVATION - DETAIL "B1"
SCALE: 3/8" = 1'-0" T-401 B1

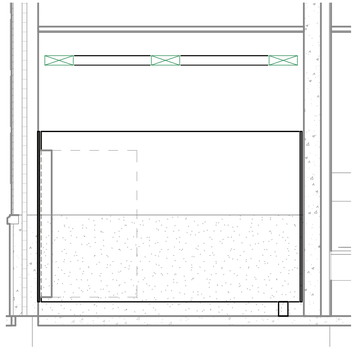

TELECOM RM 115 ELEVATION - DETAIL "B2"
SCALE: 3/8" = 1'-0" T-401 B2

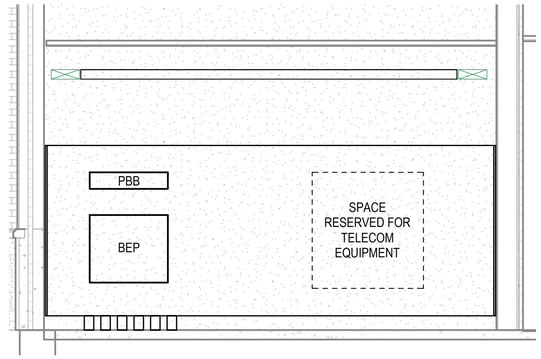

TELECOM RM 115 ELEVATION - DETAIL "B3"
SCALE: 3/8" = 1'-0" T-401 B3

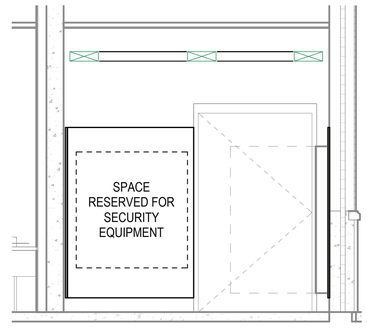

TELECOM RM 115 ELEVATION - DETAIL "B4"
SCALE: 3/8" = 1'-0" T-401 B4

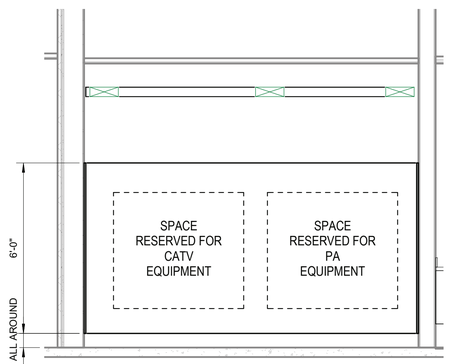

TELECOM RM 208 ELEVATION - DETAIL "A1"
SCALE: 3/8" = 1'-0" T-401 A1

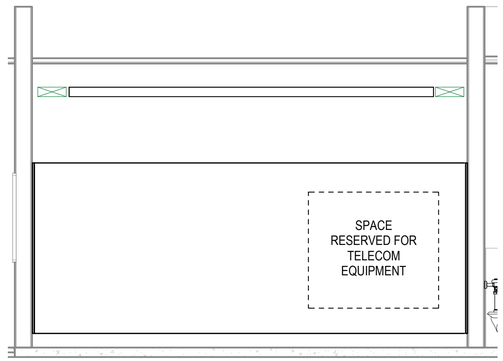

TELECOM RM 208 ELEVATION - DETAIL "A2"
SCALE: 3/8" = 1'-0" T-401 A2

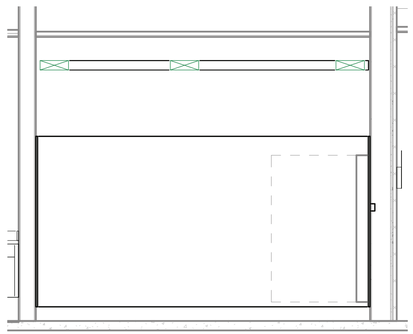

TELECOM RM 208 ELEVATION - DETAIL "A3"
SCALE: 3/8" = 1'-0" T-401 A3

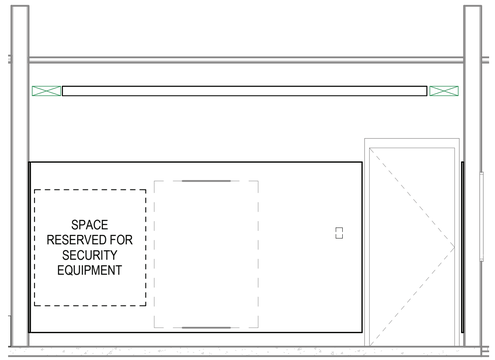

TELECOM RM 208 ELEVATION - DETAIL "A4"
SCALE: 3/8" = 1'-0" T-401 A4

0 2'-0" 4'-0" 8'-0"
SCALE: 0'-0 3/8" = 1'-0"

N

SYM	DESCRIPTION	DATE	APPR

NAVFAC

SEAL

RQ W.M. Jordan COMPANY - A JOINT VENTURE -

Michael Baker INTERNATIONAL
100 AIRSIDE DRIVE
MOON TOWNSHIP, PA 15108 A/E INFO

APPROVED

FOR COMMANDER NAVFAC

ACTIVITY
MARINE CORPS BASE CAMP LEJEUNE

SATISFACTORY TO DATE

DES JTE DRW ETH CHK JMG

PM

BRANCH MANAGER

CHIEF ENG/ARCH

FIRE PROTECTION

DEPARTMENT OF THE NAVY
NAVAL FACILITIES ENGINEERING COMMAND
NAVAL FACILITIES ENGINEERING COMMAND ~ MID-ATLANTIC
ROICC FLORENCE CAMP LEJEUNE JACKSONVILLE, NC
MCB CAMP LEJEUNE JACKSONVILLE, NC
P1338 II MEF SIMULATION/TRAINING CENTER
REPLACEMENT
TELECOMMUNICATIONS - ENLARGED PLANS

SCALE: AS NOTED
EPROJECT NO.: 1590892
CONSTR. CONTR. NO. N40085-20-C-0059
NAVFAC DRAWING NO.
SHEET OF
T-401

DP2 SUBMISSION – P1338 BUILDING - PRE-FINAL SUBMISSION

PLOTTED: 6/10/2021 9:28:16 AM

FILE NAME: BIM 360://HF PACKAGE 3/P1338 MEF SIM CTR-1590892-E.rvt

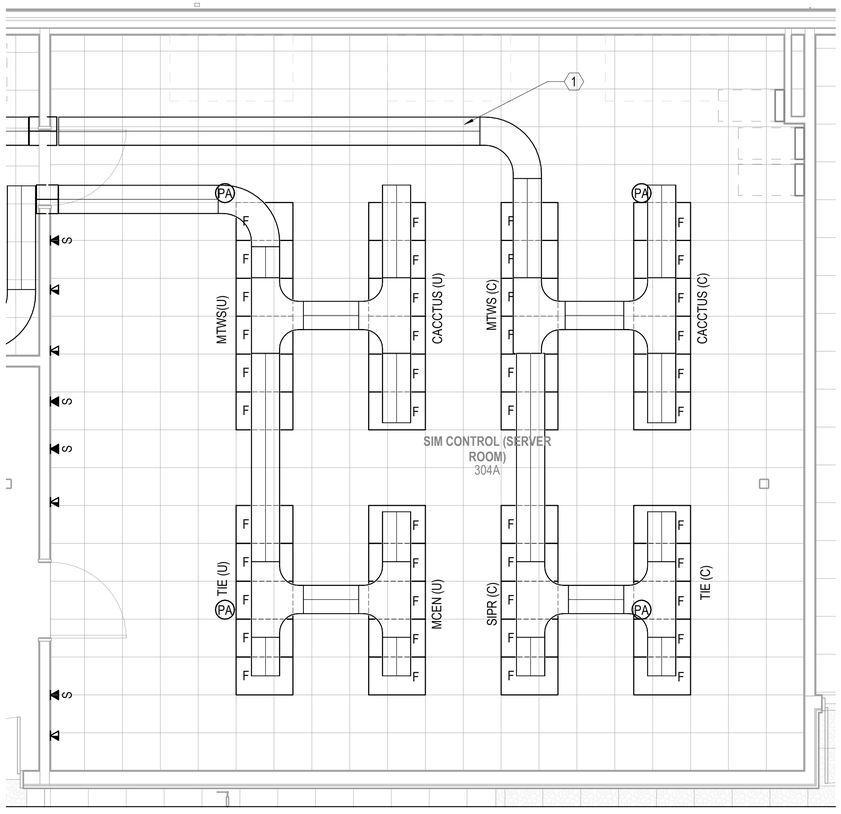

TELECOMMUNICATIONS - ENLARGED ROOM 304A

SCALE: 1/4" = 1'-0"

T-111

B1

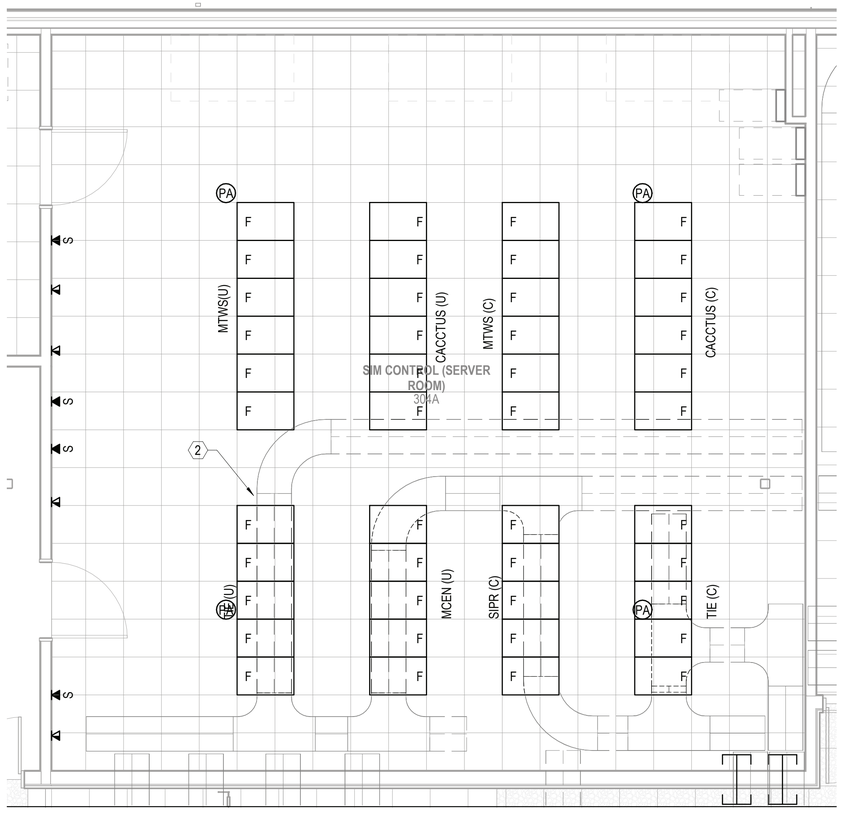

TELECOMMUNICATIONS - ENLARGED ROOM 304A UNDERFLOOR

SCALE: 1/4" = 1'-0"

B3

GENERAL NOTES

1 SEE SHEET T-001 FOR TELECOMMUNICATIONS NOTES, SYMBOLS, AND ABBREVIATIONS.

KEYNOTES

1 18" x 4" WIRE BASKET STYLE CABLE TRAY MOUNTED ABOVE CABINET, WITH RADIUS SPILLOUTS INTO CABINET

2 22" x 6" WIRE BASKET STYLE CABLE TRAY MOUNTED UNDER RASIED ACCESS FLOOR, SECURED TO PEDSTALS PER MANUFACTURER'S RECOMMENDATIONS

0 2'-0" 4'-0" 8'-0"

SCALE: 0'-0 1/4" = 1'-0"

N

SYM	DESCRIPTION	DATE	APPR

NAVFAC

SEAL

RQ W.M. Jordan COMPANY - A JOINT VENTURE -

Michael Baker INTERNATIONAL

100 AIRSIDE DRIVE
MOON TOWNSHIP, PA 15108

A/E INFO

APPROVED

FOR COMMANDER NAVFAC

ACTIVITY
MARINE CORPS BASE CAMP LEJEUNE

SATISFACTORY TO DATE

DES JTE | DRW ETH | CHK JMG

PM

BRANCH MANAGER

CHIEF ENG/ARCH

FIRE PROTECTION

DEPARTMENT OF THE NAVY
NAVAL FACILITIES ENGINEERING COMMAND
NAVAL FACILITIES ENGINEERING COMMAND ~ MID-ATLANTIC
ROICC FLORENCE CAMP LEJEUNE
JACKSONVILLE, NC

MCB CAMP LEJEUNE
JACKSONVILLE, NC
P1338 II MEF SIMULATION/TRAINING CENTER
REPLACEMENT

TELECOMMUNICATIONS - ENLARGED PLANS

SCALE: AS NOTED

EPROJECT NO.: 1590892

CONSTR. CONTR. NO.
N40085-20-C-0059

NAVFAC DRAWING NO.

SHEET OF

T-402

DP2 SUBMISSION – P1338 BUILDING - PRE-FINAL SUBMISSION

UNCLASSIFIED

PLOTTED: 6/10/2021 9:28:19 AM

FILE NAME: BIM 360://HF PACKAGE 3/P1338 MEF SIM CTR-1590892-E.rvt

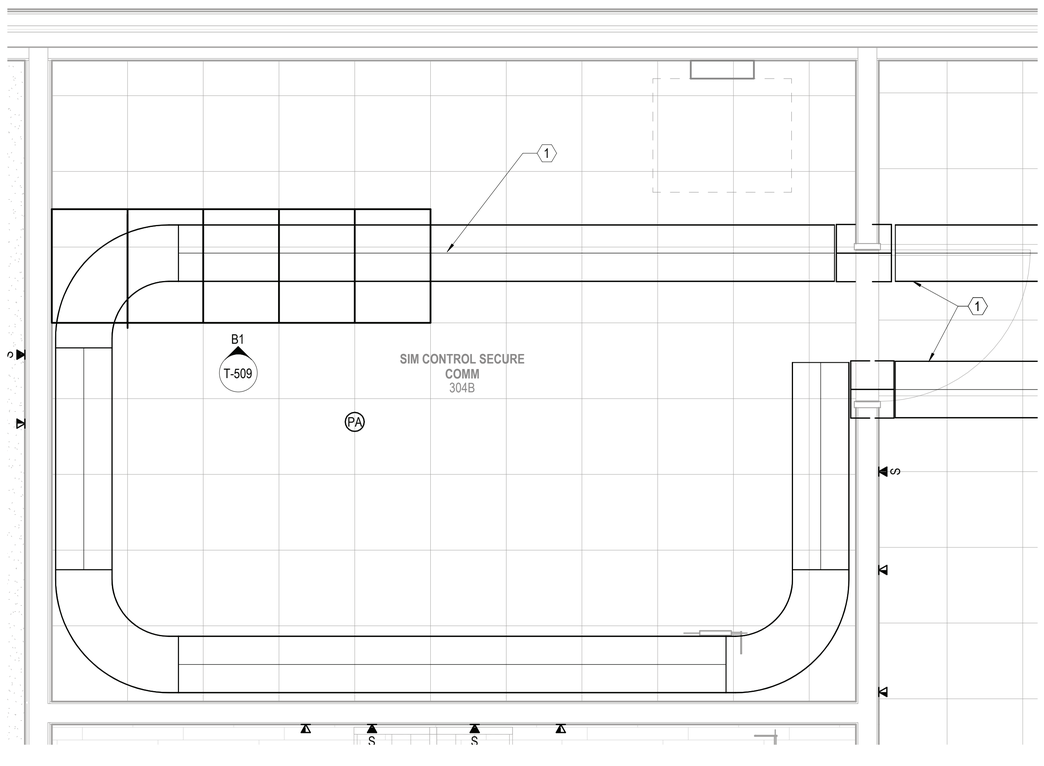

TELECOMMUNICATIONS - ENLARGED ROOM 304B

SCALE: 1/2" = 1'-0"

T-111 B1

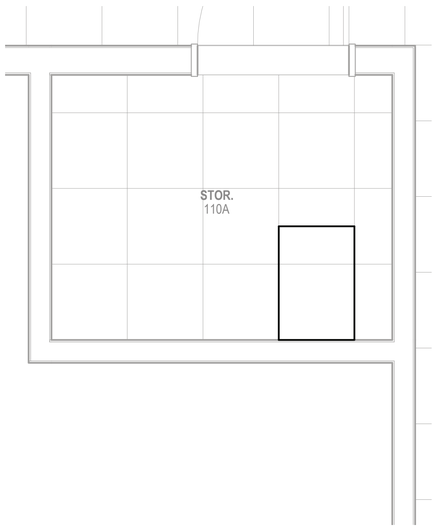

TELECOMMUNICATIONS - ENLARGED ROOM 110A

SCALE: 1/2" = 1'-0"

T-111 B3

GENERAL NOTES

1 SEE SHEET T-001 FOR TELECOMMUNICATIONS NOTES, SYMBOLS, AND ABBREVIATIONS.

KEYNOTES

1 18" X 4" WIRE BASKET STYLE CABLE TRAY MOUNTED ABOVE CABINET, WITH RADIUS SPILLOUTS INTO CABINETS

0 1'-0" 2'-0" 4'-0"

SCALE: 0'-0 1/2" = 1'-0"

N

SYM	DESCRIPTION	DATE	APPR

NAVFAC

SEAL

IRQ W.M. Jordan COMPANY – A JOINT VENTURE –

Michael Baker INTERNATIONAL

100 AIRSIDE DRIVE
MOON TOWNSHIP, PA 15108 A/E INFO

APPROVED

FOR COMMANDER NAVFAC

ACTIVITY
MARINE CORPS BASE
CAMP LEJEUNE

SATISFACTORY TO DATE

DES JTE | DRW ETH | CHK JMG

PM

BRANCH MANAGER

CHIEF ENG/ARCH

FIRE PROTECTION

DEPARTMENT OF THE NAVY
NAVAL FACILITIES ENGINEERING COMMAND
ROICC FLORENCE CAMP LEJEUNE
MCB CAMP LEJEUNE

NAVAL FACILITIES ENGINEERING COMMAND ~ MID-ATLANTIC
JACKSONVILLE, NC

JACKSONVILLE, NC
P1338 II MEF SIMULATION/TRAINING CENTER
REPLACEMENT

TELECOMMUNICATIONS - ENLARGED PLANS

SCALE: AS NOTED

EPROJECT NO.: 1590892

CONSTR. CONTR. NO.
N40085-20-C-0059

NAVFAC DRAWING NO.

SHEET OF

T-403

DP2 SUBMISSION – P1338 BUILDING - PRE-FINAL SUBMISSION

PLOTTED: 6/10/2021 9:28:22 AM

FILE NAME: BIM 360://HF PACKAGE 3/P1338 MEF SIM CTR-1590892-E.rvt

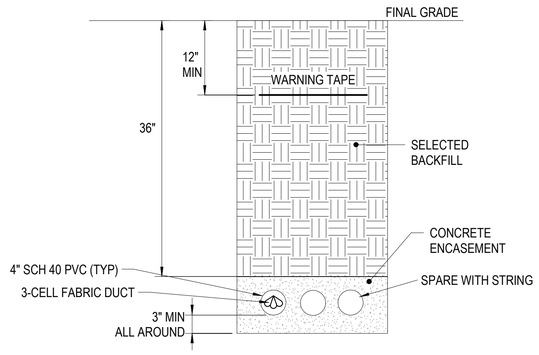

3-WAY 4" CONDUIT CONCRETE ENCASED DUCTBANK

SCALE:NTS

C1

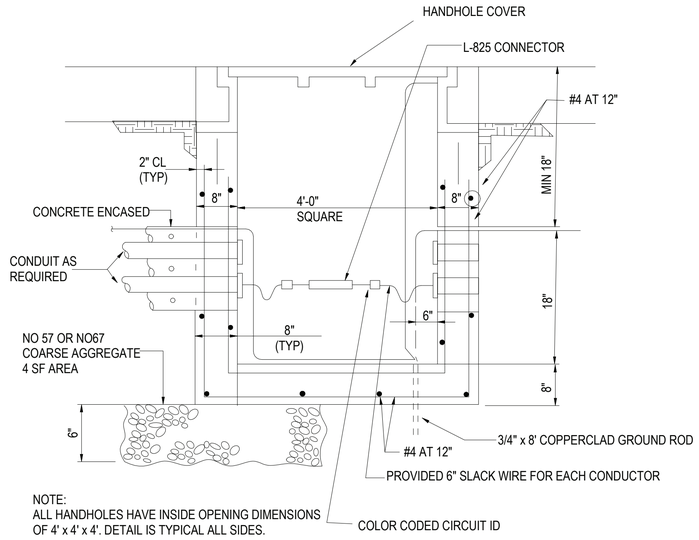

NOTE:
ALL HANDHOLES HAVE INSIDE OPENING DIMENSIONS OF 4' x 4' x 4'. DETAIL IS TYPICAL ALL SIDES.

TYPICAL HANDHOLE DETAIL

SCALE:NTS

C2

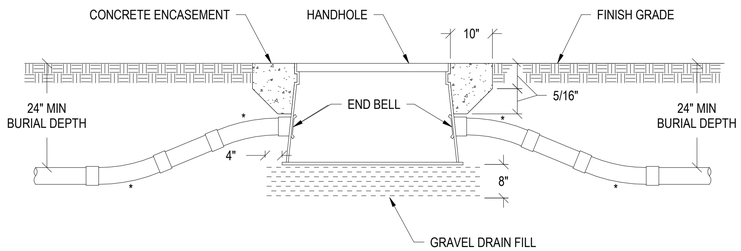

* 22 - 1/2 36" RADIUS SWEEP ELBOW

TYPICAL HANDHOLE ENTRY

SCALE: 12" = 1'-0"

D4

NOTE:
ALL MANHOLES TO HAVE 8' LADDERS

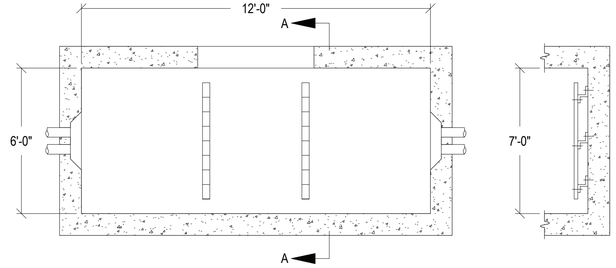

ELEVATION

SECTION A-A

TYPICAL TELECOMMUNICATIONS MANHOLE DETAIL

SCALE: 12" = 1'-0"

B4

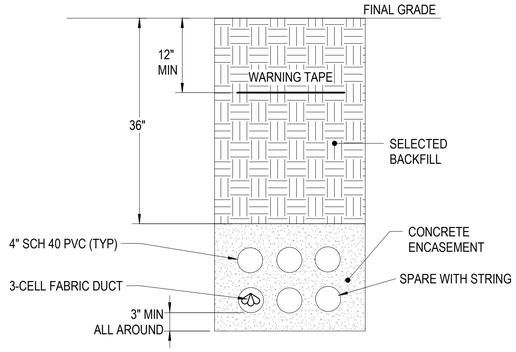

6-WAY 4" CONDUIT CONCRETE ENCASED DUCTBANK

SCALE:NTS

A1

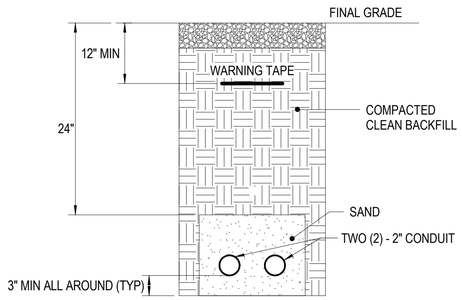

2-WAY 2" CONDUIT CONCRETE ENCASED DUCTBANK

SCALE:NTS

A2

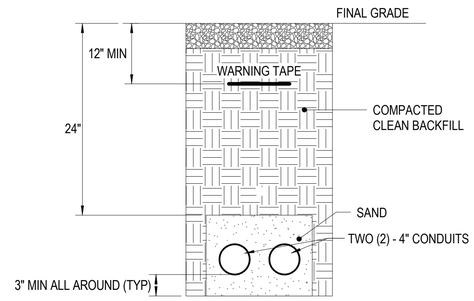

2-WAY 4" CONDUIT CONCRETE ENCASED DUCTBANK

SCALE:NTS

A4

NAVFAC

PRELIMINARY NOT FOR CONSTRUCTION

SEAL

RQC CONSTRUCTION
1620 Faraday Avenue
Carlsbad, CA 92008

Michael Baker INTERNATIONAL

100 AIRSIDE DRIVE
MOON TOWNSHIP, PA 15108

A/E INFO

APPROVED

FOR COMMANDER NAVFAC

ACTIVITY
MARINE CORPS BASE CAMP LEJEUNE

SATISFACTORY TO DATE	DD/MM/YY		
DES	JTE	DRW ETH	CHK JMG
PM	XXX		
BRANCH MANAGER	XXX		
CHIEF ENG/ARCH	XXX		

DEPARTMENT OF THE NAVY
NAVAL FACILITIES ENGINEERING COMMAND
NAVAL FACILITIES ENGINEERING COMMAND MIDLAND
NAVAL STATION - NORFOLK, VA
MCB CAMP LEJEUNE
JACKSONVILLE, NC
P1338 II MEF SIMULATION/TRAINING CENTER
REPLACEMENT
TELECOMMUNICATIONS - DETAILS

SCALE:	AS NOTED
EPROJECT NO.:	1611501
CONSTR. CONTR. NO.	N40085-20-C-0145
NAVFAC DRAWING NO.	
SHEET	OF

T-501

APPR | DATE | DESCRIPTION | SYM

PLOTTED: 6/10/2021 9:28:24 AM

FILE NAME: BIM 360://HF PACKAGE 3/P1338 MEF SIM CTR-1590892-E.rvt

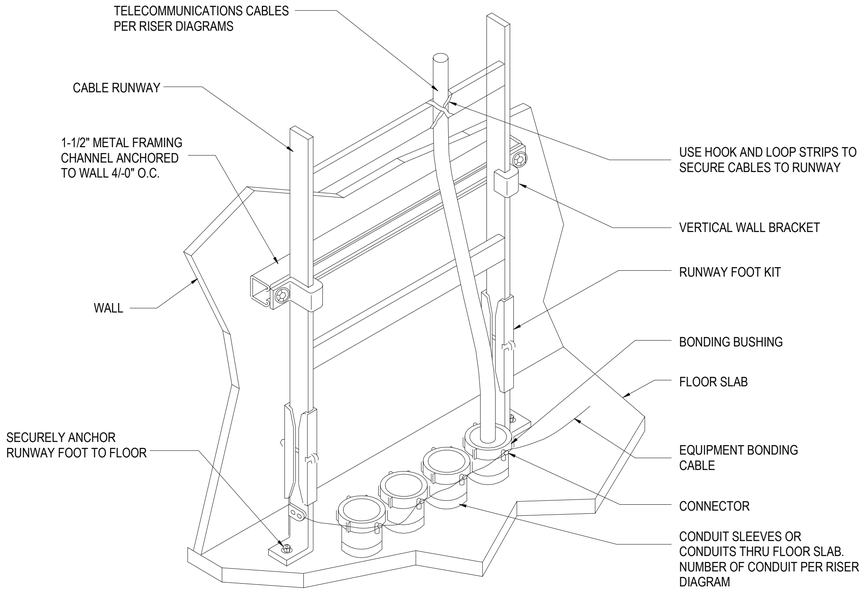

CABLE - VERTICAL RUNWAY MOUNTING

SCALE:NTS

C1

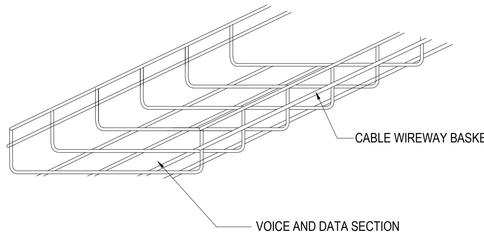

NOTES:

1. PRIMARY PATHWAY CABLE SUPPORTS ARE TO BE USED AS NECESSARY FOR CABLES TO COMPLY WITH THE EIA/TIA REQUIREMENTS FOR CABLE SUPPORT. OTHER ALTERNATIVES MUST BE SUBMITTED TO THE ENGINEER FOR APPROVAL PRIOR TO INSTALLATION.

2. CABLE WIREWAYS SHALL BE MOUNTED ABOVE ACOUSTICAL TILE CEILING IN CORRIDORS. CABLE WIREWAY SHALL BE SUPPORTED WITH UNISTRUT AND THREADED RODS IN A TRAPEZE CONFIGURATION. THREADED RODS SHALL BE SECURELY FASTENED TO STRUCTURE ABOVE. SUPPORT CABLE WIREWAY AT INTERVALS AS REQUIRED AND RECOMMENDED BY THE CABLE WIREWAY MANUFACTURER BASED ON MAXIMUM CAPACITY OF CABLES IN WIREWAY.

3. REFER TO MANUFACTURER'S RECOMMENDATIONS FOR MAX LOADING, APPLICATION REQUIREMENTS, AND SECURING TO STRUCTURE.

4. ALL CABLE SUPPORTS SHALL BE SPECIFICALLY MANUFACTURED TO SUPPORT HIGH SPEED COMMUNICATIONS CABLES.

CABLE - WIRE BASKET (PRIMARY PATHWAY)

SCALE:NTS

C3

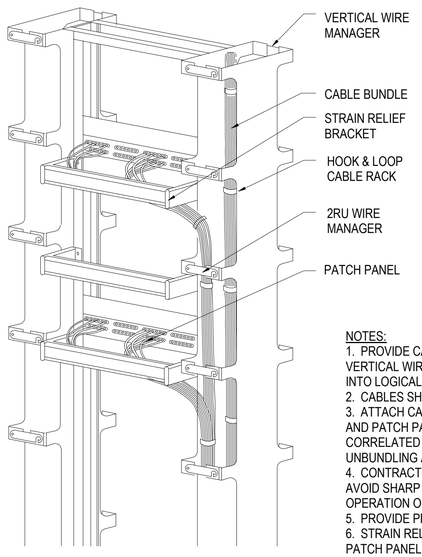

NOTES:

1. PROVIDE CABLE WRAPS ON MINIMUM 12" CENTERS IN VERTICAL WIRE MANAGERS. CABLES SHALL BE BUNDLED INTO LOGICAL GROUPS.
2. CABLES SHALL BE SECURED TO STRAIN RELIEF BRACKET
3. ATTACH CABLE LABEL BETWEEN STRAIN RELIED BRACKET AND PATCH PANEL SO THE LABEL CAN BE READ AND CORRELATED TO PATCH PANEL PORT WITHOUT UNBUNDLING ADJACENT CABLES.
4. CONTRACTOR SHALL ROUTE ALL CABLE BUNDLES TO AVOID SHARP BENDS, AND PINCH POINTS AND ALLOW LATCH OPERATION ON VERTICAL WIRE MANAGER.
5. PROVIDE PROPER QUANTITY OF PATCH PANELS.
6. STRAIN RELIEF BRACKET SHALL BE A MINIMUM OF 6" BEHIND PATCH PANEL.

CABLE STRAIN RELIEF DETAIL

SCALE:NTS

A1

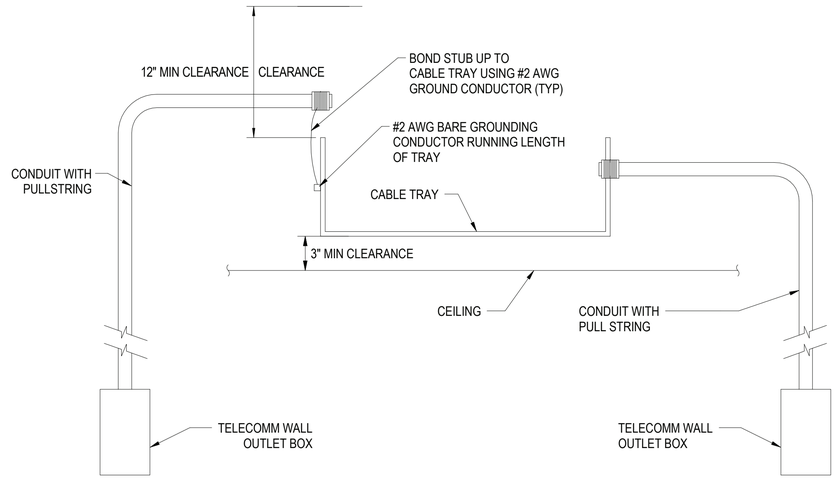

BASKET CABLE TRAY TO OUTLET CONDUIT TRANSITION

SCALE:NTS

A3

APPR | DATE | DESCRIPTION | SYM

NAVFAC

SEAL

IRQ WM Jordan COMPANY – A JOINT VENTURE –

Michael Baker INTERNATIONAL

100 AIRSIDE DRIVE
MOON TOWNSHIP, PA 15108 A/E INFO

APPROVED

FOR COMMANDER NAVFAC

ACTIVITY
MARINE CORPS BASE CAMP LEJEUNE

SATISFACTORY TO DATE

DES JTE | DRW ETH | CHK JMG

PM

BRANCH MANAGER

CHIEF ENG/ARCH

FIRE PROTECTION

DEPARTMENT OF THE NAVY
NAVAL FACILITIES ENGINEERING COMMAND
ROICC FLORENCE CAMP LEJEUNE
MCB CAMP LEJEUNE

NAVAL FACILITIES ENGINEERING COMMAND – MID-ATLANTIC
JACKSONVILLE, NC

JACKSONVILLE, NC
P1338 II MEF SIMULATION/TRAINING CENTER
REPLACEMENT

TELECOMMUNICATIONS - DETAILS

SCALE: AS NOTED

EPROJECT NO.: 1590892

CONSTR. CONTR. NO.
N40085-20-C-0059

NAVFAC DRAWING NO.

SHEET OF

T-502

DP2 SUBMISSION – P1338 BUILDING - PRE-FINAL SUBMISSION

PLOTTED: 6/10/2021 9:28:25 AM

FILE NAME: BIM 360://HF PACKAGE 3/P1338 MEF SIM CTR-1590892-E.rvt

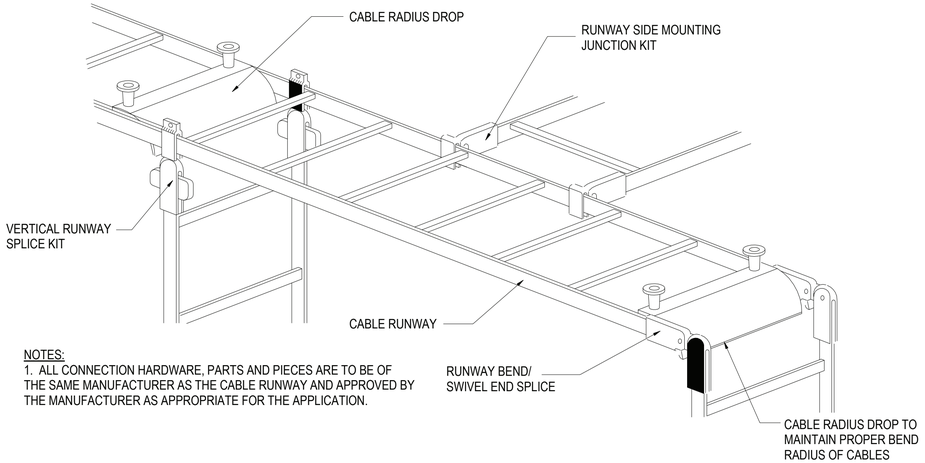

NOTES:
1. ALL CONNECTION HARDWARE, PARTS AND PIECES ARE TO BE OF THE SAME MANUFACTURER AS THE CABLE RUNWAY AND APPROVED BY THE MANUFACTURER AS APPROPRIATE FOR THE APPLICATION.

TYPICAL RUNWAY CONNECTIONS DETAIL
SCALE:NTS — C1

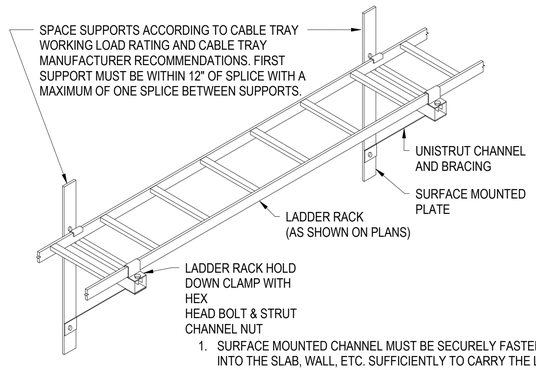

1. SURFACE MOUNTED CHANNEL MUST BE SECURELY FASTENED INTO THE SLAB, WALL, ETC. SUFFICIENTLY TO CARRY THE LOAD OF THE TRAY AND ITS CONTENTS WITH A SAFETY FACTOR OF 3.
2. ALL CHANNEL, TRAY FITTINGS AND ACCESSORIES ARE TO BE GALVANIZED.

LADDER TYPE CABLE RUNWAY WALL MOUNTING DETAIL
SCALE:NTS — B1

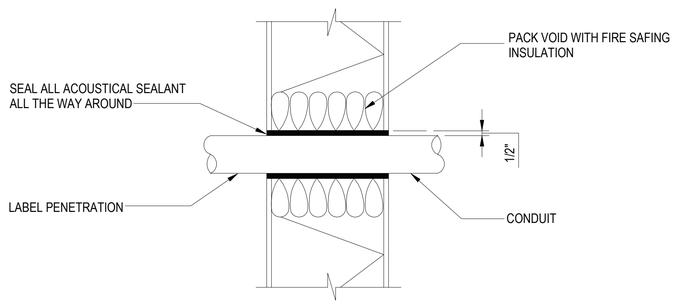

TYPICAL THROUGH WALL CONDUIT PENETRATION
SCALE:NTS — A1

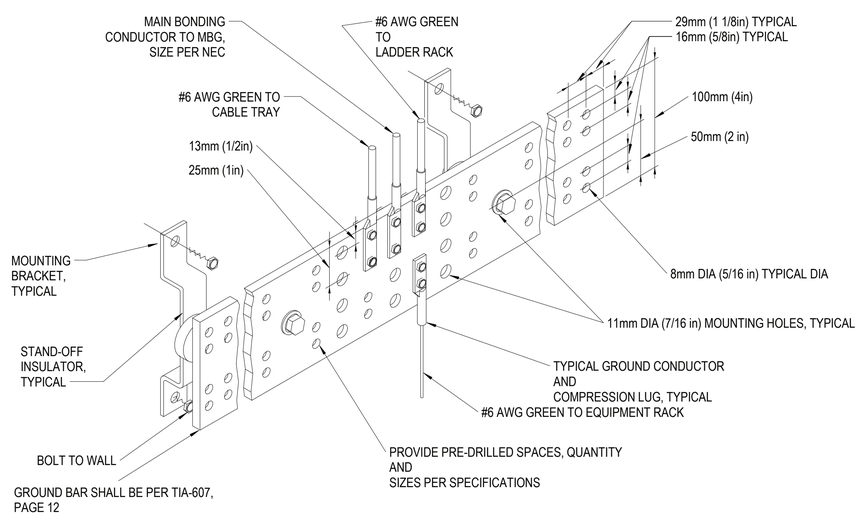

TELECOMMUNICATIONS PRIMARY BUSBAR (PBB) AND SECONDARY (SBB)
SCALE:NTS — C3

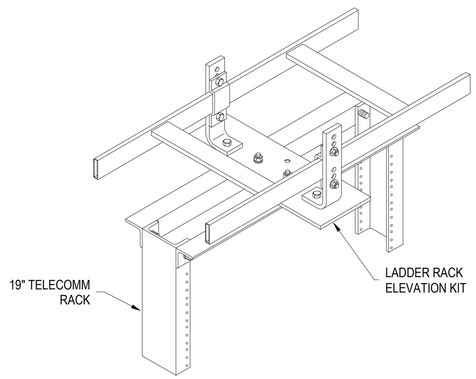

LADDER TYPE CABLE RUNWAY RACK MOUNTING
SCALE:NTS — A3

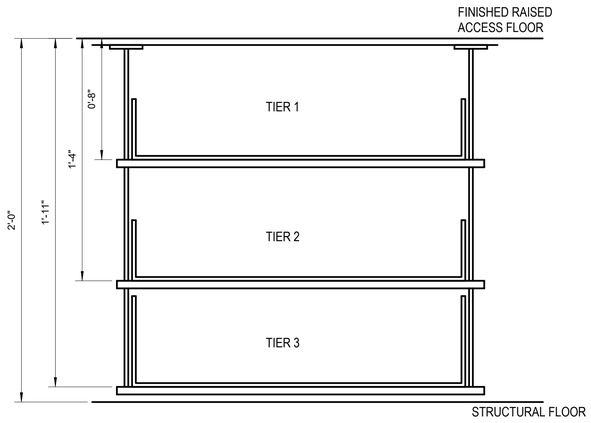

NOTE: SEE SHEET TU113 FOR TRAY SIZE

TELECOM TRAY TIER DETAIL
SCALE:NTS — A4

APPR	DATE	NO.	DESCRIPTION

SEAL

W.M. Jordan COMPANY – A JOINT VENTURE –

Michael Baker INTERNATIONAL
100 AIRSIDE DRIVE
MOON TOWNSHIP, PA 15108 — A/E INFO

APPROVED
FOR COMMANDER NAVFAC
ACTIVITY: MARINE CORPS BASE CAMP LEJEUNE
SATISFACTORY TO DATE
DES JTE | DRW ETH | CHK JMG
PM
BRANCH MANAGER
CHIEF ENG/ARCH
FIRE PROTECTION

DEPARTMENT OF THE NAVY
NAVAL FACILITIES ENGINEERING COMMAND
ROICC FLORENCE CAMP LEJEUNE
MCB CAMP LEJEUNE

NAVAL FACILITIES ENGINEERING COMMAND ~ MID-ATLANTIC
JACKSONVILLE, NC

JACKSONVILLE, NC
P1338 II MEF SIMULATION/TRAINING CENTER
REPLACEMENT

TELECOMMUNICATIONS - DETAILS

SCALE: AS NOTED
EPROJECT NO.: 1590892
CONSTR. CONTR. NO.: N40085-20-C-0059
NAVFAC DRAWING NO.
SHEET OF

T-503

DP2 SUBMISSION – P1338 BUILDING - PRE-FINAL SUBMISSION

PLOTTED: 6/10/2021 9:28:26 AM
FILE NAME: BIM 360://HF PACKAGE 3/P1338 MEF SIM CTR-1590892-E.rvt

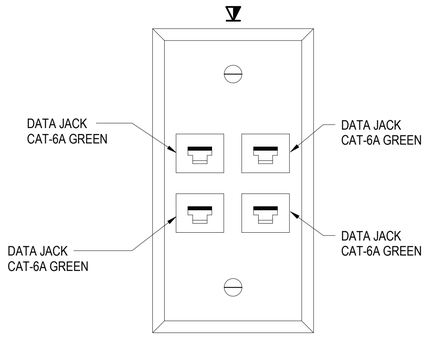

TELECOMMUNICATIONS QUAD OUTLET
SCALE:NTS
C1

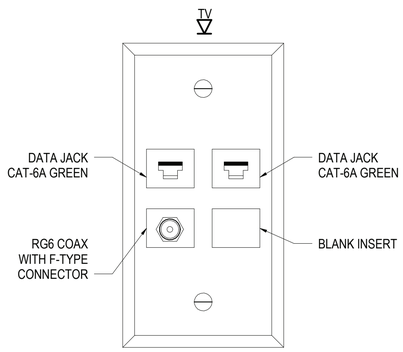

WALL MOUNTED DISPLAY OUTLET
SCALE:NTS
C2

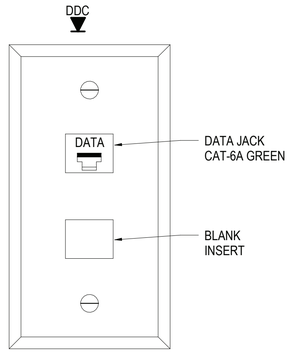

DDC OUTLET
SCALE:NTS
C3

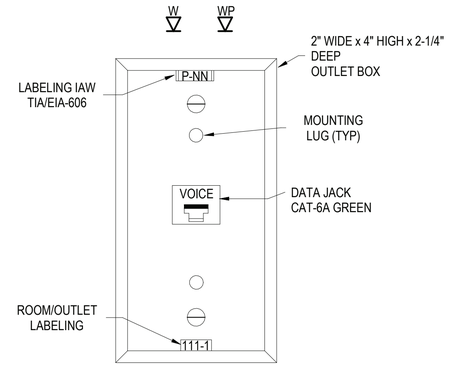

WALL PHONE OUTLET
SCALE:NTS
C4

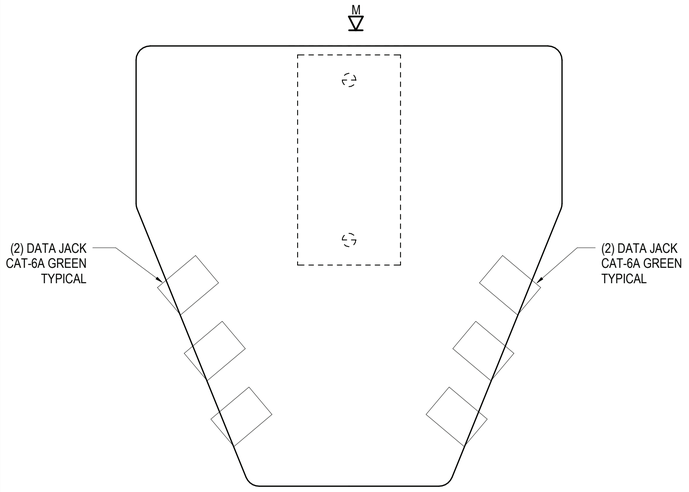

MULTI-USER TELECOM OUTLET ASSEMBLY (MUTOA), 12-PORT
SCALE:NTS
A1

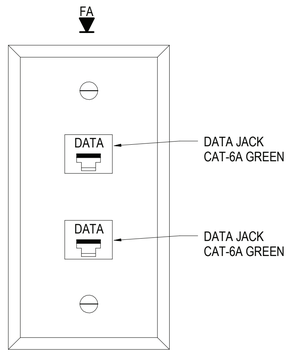

FIRE ALARM INTERFACE OUTLET
SCALE:NTS
A2

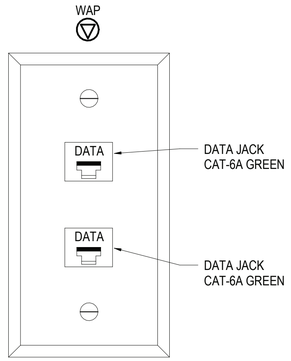

WAP ICT OUTLET FOR ENCLOSURE
SCALE:NTS
A3

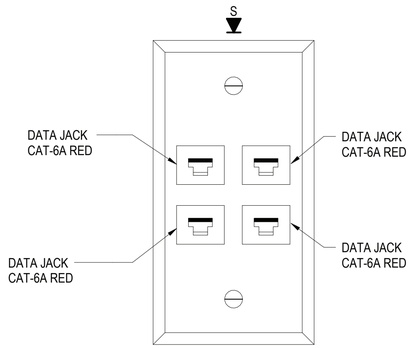

TELECOMMUNICATIONS QUAD OUTLET - SIPRNET
SCALE:NTS
A4

SYM	DESCRIPTION	DATE	APPR

NAVFAC

SEAL

RQ W.M. Jordan COMPANY
- A JOINT VENTURE -

Michael Baker INTERNATIONAL
100 AIRSIDE DRIVE
MOON TOWNSHIP, PA 15108
A/E INFO

APPROVED

FOR COMMANDER NAVFAC

ACTIVITY
MARINE CORPS BASE
CAMP LEJEUNE

SATISFACTORY TO DATE

DES JTE | DRW ETH | CHK JMG

PM

BRANCH MANAGER

CHIEF ENG/ARCH

FIRE PROTECTION

DEPARTMENT OF THE NAVY
NAVAL FACILITIES ENGINEERING COMMAND
NAVAL FACILITIES ENGINEERING COMMAND ~ MID-ATLANTIC
ROICC FLORENCE CAMP LEJEUNE
JACKSONVILLE, NC
MCB CAMP LEJEUNE
JACKSONVILLE, NC
P1338 II MEF SIMULATION/TRAINING CENTER
REPLACEMENT
TELECOMMUNICATIONS - DETAILS

SCALE: AS NOTED
EPROJECT NO.: 1590892
CONSTR. CONTR. NO.
N40085-20-C-0059
NAVFAC DRAWING NO.
SHEET OF
T-504

DP2 SUBMISSION – P1338 BUILDING - PRE-FINAL SUBMISSION

PLOTTED: 6/10/2021 9:28:27 AM

FILE NAME: BIM 360://HF PACKAGE 3/P1338 MEF SIM CTR-1590892-E.rvt

RACK 1 FRONT	RACK 2 FRONT	RACK 3 (IG1) FRONT	RACK 4 (IG2) FRONT	RACK 5 FRONT	RACK 6 FRONT
42	42	42	42	42	42
41 FOPP	41 FOPP	41 FOPP	41 FOPP	41 FOPP	41 FOPP
40	40	40	40	40	40
39 48 PORT CAT6A PP	39 48 PORT CAT6A PP	39 CISCO 826 (GFGI)	39 CISCO 826 (GFGI)	39 48 PORT CAT6A PP	39 48 PORT CAT6A PP
38 1u WIRE MGMT	38 1u WIRE MGMT	38 NTP SERVER (GFGI)	38 NTP SERVER (GFGI)	38 1u WIRE MGMT	38 1u WIRE MGMT
37 SWITCH (GFGI)	37 SWITCH (GFGI)	37	37	37 SWITCH (GFGI)	37 SWITCH (GFGI)
36 48 PORT CAT6A PP	36 48 PORT CAT6A PP	36	36	36 48 PORT CAT6A PP	36 48 PORT CAT6A PP
35	35	35	35	35	35
34 1u WIRE MGMT	34 1u WIRE MGMT	34 DELL S4048 (GFGI)	34 DELL S4048 (GFGI)	34 1u WIRE MGMT	34 1u WIRE MGMT
33 SWITCH (GFGI)	33 SWITCH (GFGI)	33 DELL 570F (GFGI)	33 DELL 570F (GFGI)	33 SWITCH (GFGI)	33 SWITCH (GFGI)
32 48 PORT CAT6A PP	32 48 PORT CAT6A PP	32 DELL 570F (GFGI)	32 DELL 570F (GFGI)	32 48 PORT CAT6A PP	32 48 PORT CAT6A PP
31	31	31 DELL 570F (GFGI)	31 DELL 570F (GFGI)	31	31
30 1u WIRE MGMT	30 1u WIRE MGMT	30 DELL 570F (GFGI)	30 DELL 570F (GFGI)	30 1u WIRE MGMT	30 1u WIRE MGMT
29 SWITCH (GFGI)	29 SWITCH (GFGI)	29 DELL 570F (GFGI)	29 DELL 570F (GFGI)	29 SWITCH (GFGI)	29 SWITCH (GFGI)
28 48 PORT CAT6A PP	28 48 PORT CAT6A PP	28 DELL 570F (GFGI)	28 DELL 570F (GFGI)	28 48 PORT CAT6A PP	28 48 PORT CAT6A PP
27	27	27 DELL 570F (GFGI)	27 DELL 570F (GFGI)	27	27
26 1u WIRE MGMT	26 1u WIRE MGMT	26 DELL 570F (GFGI)	26 DELL 570F (GFGI)	26 1u WIRE MGMT	26 1u WIRE MGMT
25 SWITCH (GFGI)	25 SWITCH (GFGI)	25	25	25 SWITCH (GFGI)	25 SWITCH (GFGI)
24 48 PORT CAT6A PP	24 48 PORT CAT6A PP	24 KVM (GFGI)	24 KVM (GFGI)	24 48 PORT CAT6A PP	24 48 PORT CAT6A PP
23	23	23	23	23	23
22 1u WIRE MGMT	22 1u WIRE MGMT	22 KVM (GFGI)	22 KVM (GFGI)	22 1u WIRE MGMT	22 1u WIRE MGMT
21 SWITCH (GFGI)	21 SWITCH (GFGI)	21	21	21 SWITCH (GFGI)	21 SWITCH (GFGI)
20 48 PORT CAT6A PP	20 48 PORT CAT6A PP	20 DELL S4048 (GFGI)	20 DELL S4048 (GFGI)	20 48 PORT CAT6A PP	20 48 PORT CAT6A PP
19	19	19 DELL 570F (GFGI)	19 DELL 570F (GFGI)	19	19
18 1u WIRE MGMT	18 1u WIRE MGMT	18 DELL 570F (GFGI)	18 DELL 570F (GFGI)	18 1u WIRE MGMT	18 1u WIRE MGMT
17 SWITCH (GFGI)	17 SWITCH (GFGI)	17 DELL 570F (GFGI)	17 DELL 570F (GFGI)	17 SWITCH (GFGI)	17 SWITCH (GFGI)
16 48 PORT CAT6A PP	16 48 PORT CAT6A PP	16 DELL 570F (GFGI)	16 DELL 570F (GFGI)	16 48 PORT CAT6A PP	16 48 PORT CAT6A PP
15	15	15 DELL 570F (GFGI)	15 DELL 570F (GFGI)	15	15
14 1u WIRE MGMT	14 1u WIRE MGMT	14 DELL 570F (GFGI)	14 DELL 570F (GFGI)	14 1u WIRE MGMT	14 1u WIRE MGMT
13 SWITCH (GFGI)	13 SWITCH (GFGI)	13 DELL 570F (GFGI)	13 DELL 570F (GFGI)	13 SWITCH (GFGI)	13 SWITCH (GFGI)
12	12	12	12	12	12
11	11	11	11	11	11
10	10	10	10	10	10
09	09	09	09	09	09
08 07 06 05 04 03 02 01 19" FREE-STANDING RACK (84" TALL)	08 07 06 05 04 03 02 01 19" FREE-STANDING RACK (84" TALL)	08 07 06 05 04 03 02 01 19" FREE-STANDING RACK (84" TALL)	08 07 06 05 04 03 02 01 19" FREE-STANDING RACK (84" TALL)	08 07 06 05 04 03 02 01 19" FREE-STANDING RACK (84" TALL)	08 07 06 05 04 03 02 01 19" FREE-STANDING RACK (84" TALL)
~6000W	~6000W	~7000W	~7000W	~6000W	~6000W

TELECOM RM 133 - CACCTUS (C)

SCALE:NTS

B1

NOTE:
PROVIDE AND INSTALL 48-STRAND OM4 MULTIMODE OPTICAL FIBER CABLING BETWEEN SERVER RACK AND SWITCH RACKS FOR EACH NETWORK ENCLAVE (MTWS, CACCTUS, TIE, SIPR, MCEN).

RACK 1 FRONT	RACK 2 FRONT	RACK 3 FRONT	RACK 4 FRONT	RACK 5 FRONT
42	42	42	42	42
41 FOPP	41 FOPP	41 FOPP	41 FOPP	41 FOPP
40	40	40	40	40
39 48 PORT CAT6A PP	39 48 PORT CAT6A PP	39	39 48 PORT CAT6A PP	39 48 PORT CAT6A PP
38 1u WIRE MGMT	38 1u WIRE MGMT	38	38 1u WIRE MGMT	38 1u WIRE MGMT
37 48 PORT CAT6A PP	37 48 PORT CAT6A PP	37	37 48 PORT CAT6A PP	37 48 PORT CAT6A PP
36	36	36	36	36
35 1u WIRE MGMT	35 1u WIRE MGMT	35	35 1u WIRE MGMT	35 1u WIRE MGMT
34	34	34	34	34
33 48 PORT CAT6A PP	33 48 PORT CAT6A PP	33	33 48 PORT CAT6A PP	33 48 PORT CAT6A PP
32 1u WIRE MGMT	32 1u WIRE MGMT	32	32 1u WIRE MGMT	32 1u WIRE MGMT
31	31	31	31	31
30 48 PORT CAT6A PP	30 48 PORT CAT6A PP	30	30 48 PORT CAT6A PP	30 48 PORT CAT6A PP
29 1u WIRE MGMT	29 1u WIRE MGMT	29	29 1u WIRE MGMT	29 1u WIRE MGMT
28	28	28	28	28
27 48 PORT CAT6A PP	27 48 PORT CAT6A PP	27	27 48 PORT CAT6A PP	27 48 PORT CAT6A PP
26 1u WIRE MGMT	26 1u WIRE MGMT	26	26 1u WIRE MGMT	26 1u WIRE MGMT
25	25	25	25	25
24 48 PORT CAT6A PP	24 48 PORT CAT6A PP	24	24 48 PORT CAT6A PP	24 48 PORT CAT6A PP
23 1u WIRE MGMT	23 1u WIRE MGMT	23	23 1u WIRE MGMT	23 1u WIRE MGMT
22	22	22	22	22
21 48 PORT CAT6A PP	21 48 PORT CAT6A PP	21	21 48 PORT CAT6A PP	21 48 PORT CAT6A PP
20 1u WIRE MGMT	20 1u WIRE MGMT	20	20 1u WIRE MGMT	20 1u WIRE MGMT
19	19	19	19	19
18	18	18	18	18
17	17	17	17	17
16	16	16	16	16
15	15	15	15	15
14	14	14	14	14
13	13	13	13	13
12	12	12	12	12
11	11	11	11	11
10	10	10	10	10
09	09	09	09	09
08 07 06 05 04 03 02 01 19" FREE-STANDING RACK (84" TALL)	08 07 06 05 04 03 02 01 19" FREE-STANDING RACK (84" TALL)	08 07 06 05 04 03 02 01	08 07 06 05 04 03 02 01 19" FREE-STANDING RACK (84" TALL)	08 07 06 05 04 03 02 01 19" FREE-STANDING RACK (84" TALL)
~6000W	~6000W		~6000W	~6000W

TELECOM RM 133 - TIE (C)

SCALE:NTS

A3

APPR	DATE	DESCRIPTION	SYM

SEAL

RQ W.M. Jordan COMPANY ~A JOINT VENTURE~

Michael Baker INTERNATIONAL
100 AIRSIDE DRIVE
MOON TOWNSHIP, PA 15108 A/E INFO

APPROVED

FOR COMMANDER NAVFAC

ACTIVITY
MARINE CORPS BASE
CAMP LEJEUNE

SATISFACTORY TO DATE

DES JTE	DRW ETH	CHK JMG

PM

BRANCH MANAGER

CHIEF ENG/ARCH

FIRE PROTECTION

DEPARTMENT OF THE NAVY
NAVAL FACILITIES ENGINEERING COMMAND
ROICC FLORENCE CAMP LEJEUNE
MCB CAMP LEJEUNE

NAVAL FACILITIES ENGINEERING COMMAND ~ MID-ATLANTIC
JACKSONVILLE, NC

JACKSONVILLE, NC
P1338 II MEF SIMULATION/TRAINING CENTER
REPLACEMENT

TELECOMMUNICATIONS - DETAILS

SCALE: AS NOTED
EPROJECT NO.: 1590892
CONSTR. CONTR. NO.
N40085-20-C-0059
NAVFAC DRAWING NO.
SHEET OF

T-505

DP2 SUBMISSION – P1338 BUILDING - PRE-FINAL SUBMISSION

PLOTTED: 6/10/2021 9:28:29 AM

FILE NAME: BIM 360:/HF PACKAGE 3/P1338 MEF SIM CTR-1590892-E.rvt

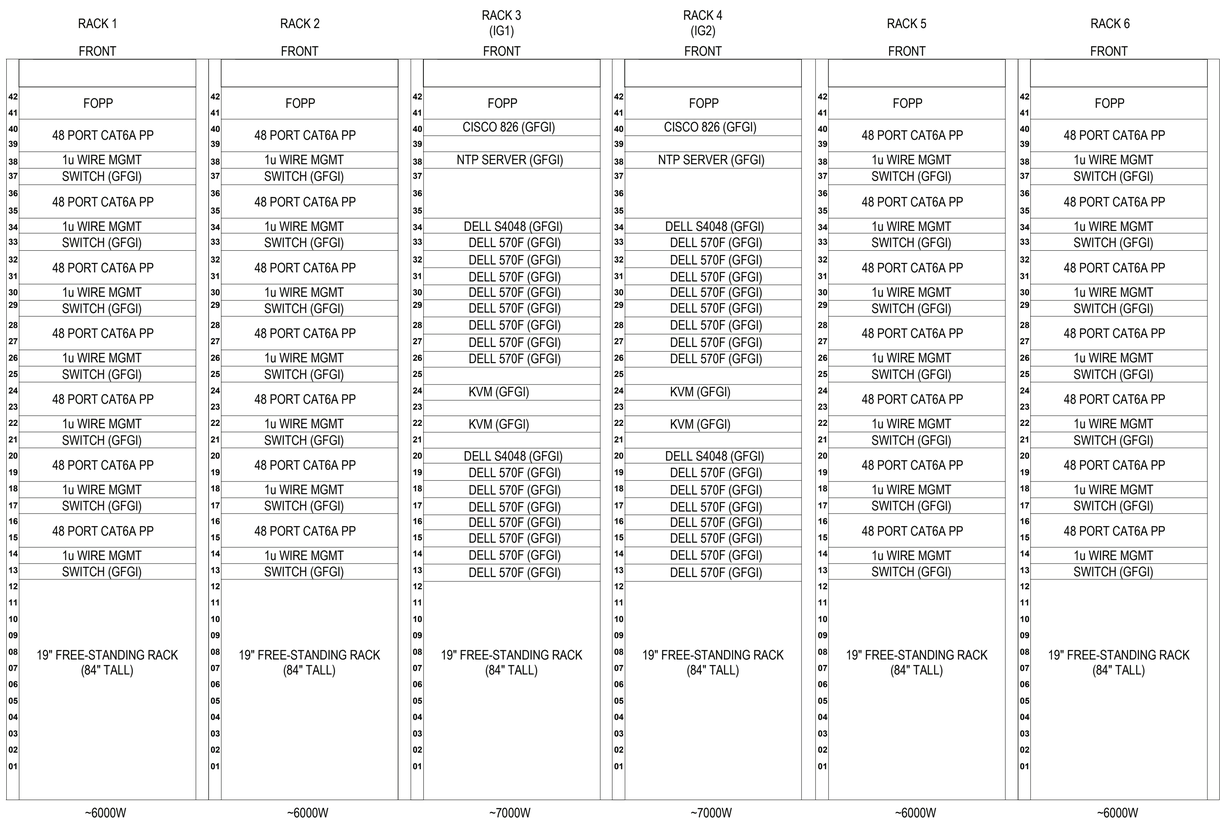

TELECOM RM 133 - MTWS (C)

SCALE:NTS

B1

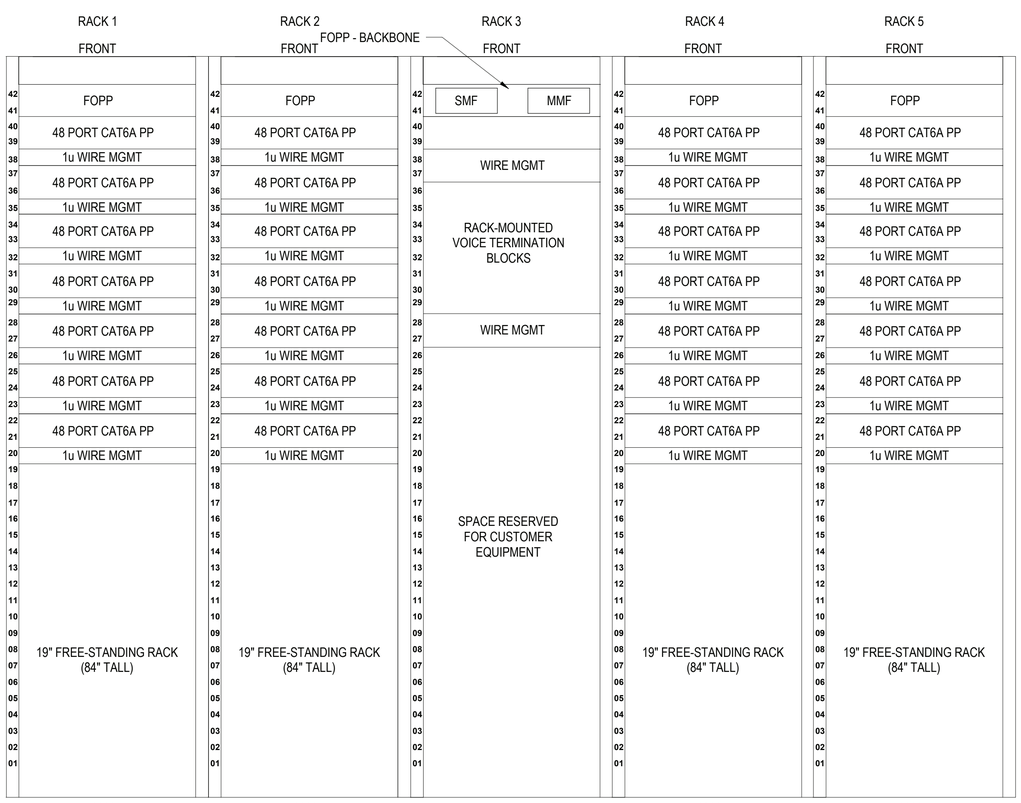

TELECOM RM 133 - TIE (U)

SCALE:NTS

A3

NOTE:
PROVIDE AND INSTALL 48-STRAND OM4 MULTIMODE OPTICAL FIBER CABLING BETWEEN SERVER RACK AND SWITCH RACKS FOR EACH NETWORK ENCLAVE (MTWS, CACCTUS, TIE, SIPR, MCEN).

SYM	DESCRIPTION	DATE	APPR

NAVFAC

SEAL

RQ W.M. Jordan COMPANY – A JOINT VENTURE –

Michael Baker INTERNATIONAL
100 AIRSIDE DRIVE
MOON TOWNSHIP, PA 15108
A/E INFO

APPROVED

FOR COMMANDER NAVFAC

ACTIVITY
MARINE CORPS BASE CAMP LEJEUNE

SATISFACTORY TO DATE

DES JTE | DRW ETH | CHK JMG

PM

BRANCH MANAGER

CHIEF ENG/ARCH

FIRE PROTECTION

DEPARTMENT OF THE NAVY
NAVAL FACILITIES ENGINEERING COMMAND
NAVAL FACILITIES ENGINEERING COMMAND ~ MID-ATLANTIC
ROICC FLORENCE CAMP LEJEUNE
JACKSONVILLE, NC
MCB CAMP LEJEUNE
JACKSONVILLE, NC
P1338 II MEF SIMULATION/TRAINING CENTER
REPLACEMENT
TELECOMMUNICATIONS - DETAILS

SCALE: AS NOTED
EPROJECT NO.: 1590892
CONSTR. CONTR. NO.
N40085-20-C-0059
NAVFAC DRAWING NO.
SHEET OF

T-506

DP2 SUBMISSION – P1338 BUILDING - PRE-FINAL SUBMISSION

PLOTTED: 6/10/2021 9:28:31 AM

FILE NAME: BIM 360://HF PACKAGE 3/P1338 MEF SIM CTR-1590892-E.rvt

	RACK 1	RACK 2	RACK 3 (IG1)	RACK 4 (IG2)	RACK 5	RACK 6
	FRONT	FRONT	FRONT	FRONT	FRONT	FRONT
42	FOPP	FOPP	FOPP	FOPP	FOPP	FOPP
41						
40	48 PORT CAT6A PP	48 PORT CAT6A PP	CISCO 826 (GFGI)	CISCO 826 (GFGI)	48 PORT CAT6A PP	48 PORT CAT6A PP
39						
38	1u WIRE MGMT	1u WIRE MGMT	NTP SERVER (GFGI)	NTP SERVER (GFGI)	1u WIRE MGMT	1u WIRE MGMT
37	SWITCH (GFGI)	SWITCH (GFGI)			SWITCH (GFGI)	SWITCH (GFGI)
36	48 PORT CAT6A PP	48 PORT CAT6A PP			48 PORT CAT6A PP	48 PORT CAT6A PP
35						
34	1u WIRE MGMT	1u WIRE MGMT	DELL S4048 (GFGI)	DELL S4048 (GFGI)	1u WIRE MGMT	1u WIRE MGMT
33	SWITCH (GFGI)	SWITCH (GFGI)	DELL 570F (GFGI)	DELL 570F (GFGI)	SWITCH (GFGI)	SWITCH (GFGI)
32	48 PORT CAT6A PP	48 PORT CAT6A PP	DELL 570F (GFGI)	DELL 570F (GFGI)	48 PORT CAT6A PP	48 PORT CAT6A PP
31			DELL 570F (GFGI)	DELL 570F (GFGI)		
30	1u WIRE MGMT	1u WIRE MGMT	DELL 570F (GFGI)	DELL 570F (GFGI)	1u WIRE MGMT	1u WIRE MGMT
29	SWITCH (GFGI)	SWITCH (GFGI)	DELL 570F (GFGI)	DELL 570F (GFGI)	SWITCH (GFGI)	SWITCH (GFGI)
28	48 PORT CAT6A PP	48 PORT CAT6A PP	DELL 570F (GFGI)	DELL 570F (GFGI)	48 PORT CAT6A PP	48 PORT CAT6A PP
27			DELL 570F (GFGI)	DELL 570F (GFGI)		
26	1u WIRE MGMT	1u WIRE MGMT	DELL 570F (GFGI)	DELL 570F (GFGI)	1u WIRE MGMT	1u WIRE MGMT
25	SWITCH (GFGI)	SWITCH (GFGI)			SWITCH (GFGI)	SWITCH (GFGI)
24	48 PORT CAT6A PP	48 PORT CAT6A PP	KVM (GFGI)	KVM (GFGI)	48 PORT CAT6A PP	48 PORT CAT6A PP
23						
22	1u WIRE MGMT	1u WIRE MGMT	KVM (GFGI)	KVM (GFGI)	1u WIRE MGMT	1u WIRE MGMT
21	SWITCH (GFGI)	SWITCH (GFGI)			SWITCH (GFGI)	SWITCH (GFGI)
20	48 PORT CAT6A PP	48 PORT CAT6A PP	DELL S4048 (GFGI)	DELL S4048 (GFGI)	48 PORT CAT6A PP	48 PORT CAT6A PP
19			DELL 570F (GFGI)	DELL 570F (GFGI)		
18	1u WIRE MGMT	1u WIRE MGMT	DELL 570F (GFGI)	DELL 570F (GFGI)	1u WIRE MGMT	1u WIRE MGMT
17	SWITCH (GFGI)	SWITCH (GFGI)	DELL 570F (GFGI)	DELL 570F (GFGI)	SWITCH (GFGI)	SWITCH (GFGI)
16	48 PORT CAT6A PP	48 PORT CAT6A PP	DELL 570F (GFGI)	DELL 570F (GFGI)	48 PORT CAT6A PP	48 PORT CAT6A PP
15			DELL 570F (GFGI)	DELL 570F (GFGI)		
14	1u WIRE MGMT	1u WIRE MGMT	DELL 570F (GFGI)	DELL 570F (GFGI)	1u WIRE MGMT	1u WIRE MGMT
13	SWITCH (GFGI)	SWITCH (GFGI)	DELL 570F (GFGI)	DELL 570F (GFGI)	SWITCH (GFGI)	SWITCH (GFGI)
12						
11						
10						
09						
08	19" FREE-STANDING RACK (84" TALL)	19" FREE-STANDING RACK (84" TALL)	19" FREE-STANDING RACK (84" TALL)	19" FREE-STANDING RACK (84" TALL)	19" FREE-STANDING RACK (84" TALL)	19" FREE-STANDING RACK (84" TALL)
07						
06						
05						
04						
03						
02						
01						
	~6000W	~6000W	~7000W	~7000W	~6000W	~6000W

TELECOM RM 133 - CACCTUS (U)

SCALE:NTS

B1

	RACK 1	RACK 2	RACK 3	RACK 4	RACK 5
	FRONT	FRONT	FRONT	FRONT	FRONT
42	FOPP	FOPP	FOPP	FOPP	FOPP
41					
40	48 PORT CAT6A PP	48 PORT CAT6A PP		48 PORT CAT6A PP	48 PORT CAT6A PP
39					
38	1u WIRE MGMT	1u WIRE MGMT		1u WIRE MGMT	1u WIRE MGMT
37	48 PORT CAT6A PP	48 PORT CAT6A PP		48 PORT CAT6A PP	48 PORT CAT6A PP
36					
35	1u WIRE MGMT	1u WIRE MGMT		1u WIRE MGMT	1u WIRE MGMT
34	48 PORT CAT6A PP	48 PORT CAT6A PP		48 PORT CAT6A PP	48 PORT CAT6A PP
33					
32	1u WIRE MGMT	1u WIRE MGMT		1u WIRE MGMT	1u WIRE MGMT
31	48 PORT CAT6A PP	48 PORT CAT6A PP		48 PORT CAT6A PP	48 PORT CAT6A PP
30					
29	1u WIRE MGMT	1u WIRE MGMT		1u WIRE MGMT	1u WIRE MGMT
28	48 PORT CAT6A PP	48 PORT CAT6A PP		48 PORT CAT6A PP	48 PORT CAT6A PP
27					
26	1u WIRE MGMT	1u WIRE MGMT		1u WIRE MGMT	1u WIRE MGMT
25	48 PORT CAT6A PP	48 PORT CAT6A PP		48 PORT CAT6A PP	48 PORT CAT6A PP
24					
23	1u WIRE MGMT	1u WIRE MGMT		1u WIRE MGMT	1u WIRE MGMT
22	48 PORT CAT6A PP	48 PORT CAT6A PP		48 PORT CAT6A PP	48 PORT CAT6A PP
21					
20	1u WIRE MGMT	1u WIRE MGMT		1u WIRE MGMT	1u WIRE MGMT
19					
18					
17					
16					
15					
14					
13					
12					
11					
10					
09					
08	19" FREE-STANDING RACK (84" TALL)	19" FREE-STANDING RACK (84" TALL)	19" FREE-STANDING RACK (84" TALL)	19" FREE-STANDING RACK (84" TALL)	19" FREE-STANDING RACK (84" TALL)
07					
06					
05					
04					
03					
02					
01					
	~6000W	~6000W		~6000W	~6000W

TELECOM RM 133 - SIPR (C)

SCALE:NTS

A3

NOTE:
PROVIDE AND INSTALL 48-STRAND OM4 MULTIMODE OPTICAL FIBER CABLING BETWEEN SERVER RACK AND SWITCH RACKS FOR EACH NETWORK ENCLAVE (MTWS, CACCTUS, TIE, SIPR, MCEN).

SYM	DESCRIPTION	DATE	APPR

NAVFAC

SEAL

RQ WM Jordan COMPANY ~ A JOINT VENTURE ~

Michael Baker INTERNATIONAL
100 AIRSIDE DRIVE
MOON TOWNSHIP, PA 15108
A/E INFO

APPROVED

FOR COMMANDER NAVFAC

ACTIVITY
MARINE CORPS BASE
CAMP LEJEUNE

SATISFACTORY TO DATE

DES JTE | DRW ETH | CHK JMG

PM

BRANCH MANAGER

CHIEF ENG/ARCH

FIRE PROTECTION

DEPARTMENT OF THE NAVY
NAVAL FACILITIES ENGINEERING COMMAND ~ MID-ATLANTIC
ROICC FLORENCE CAMP LEJEUNE
MCB CAMP LEJEUNE
JACKSONVILLE, NC

P1338 II MEF SIMULATION/TRAINING CENTER
REPLACEMENT
JACKSONVILLE, NC

TELECOMMUNICATIONS - DETAILS

SCALE: AS NOTED
EPROJECT NO.: 1590892
CONSTR. CONTR. NO.
N40085-20-C-0059
NAVFAC DRAWING NO.
SHEET OF

T-507

DP2 SUBMISSION – P1338 BUILDING - PRE-FINAL SUBMISSION

PLOTTED: 6/10/2021 9:28:34 AM

FILE NAME: BIM 360://HF PACKAGE 3/P1338 MEF SIM CTR-1590892-E.rvt

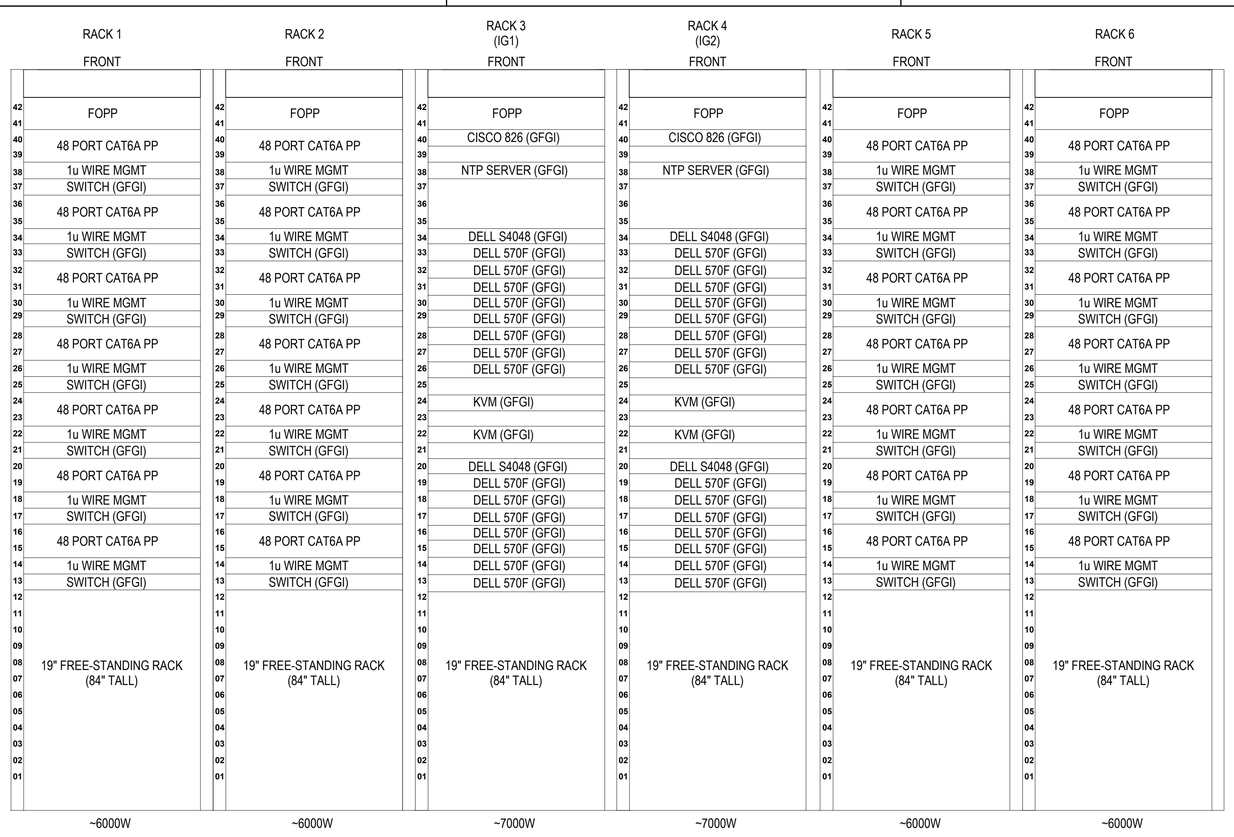

TELECOM RM 133 - MTWS (U)

SCALE:NTS

B1

NOTE:
PROVIDE AND INSTALL 48-STRAND OM4 MULTIMODE OPTICAL FIBER CABLING BETWEEN SERVER RACK AND SWITCH RACKS FOR EACH NETWORK ENCLAVE (MTWS, CACCTUS, TIE, SIPR, MCEN).

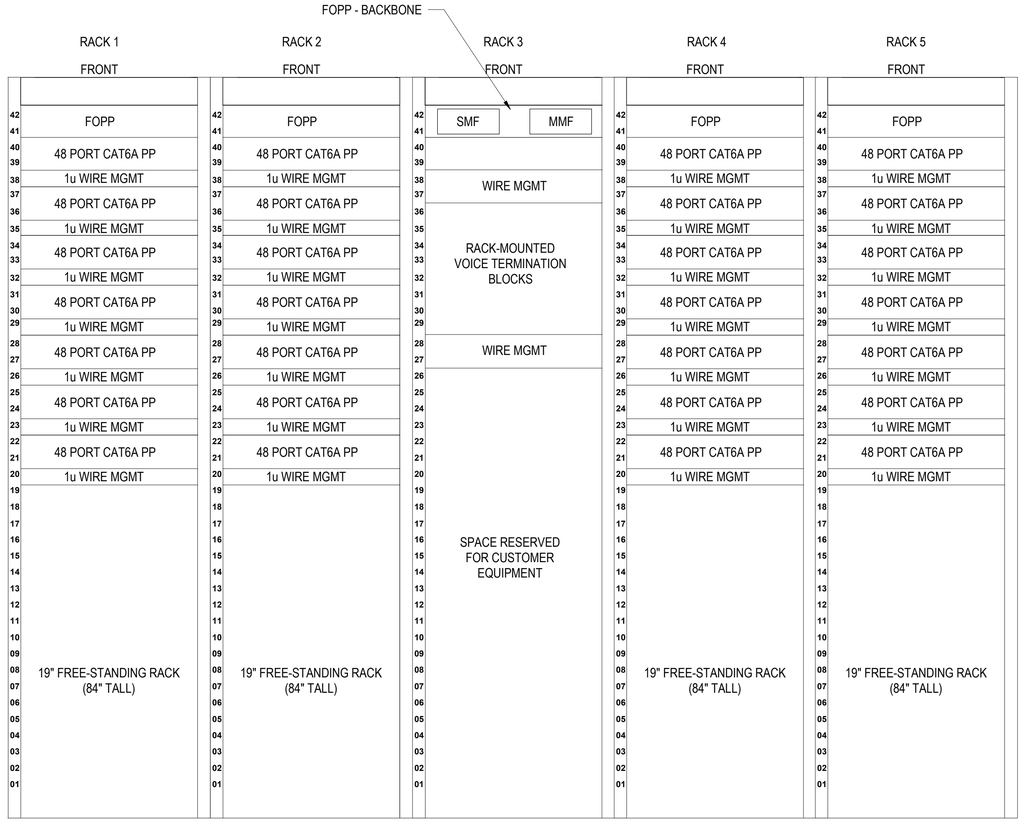

TELECOM RM 133 - MCEN (U)

SCALE:NTS

A3

SYM	DESCRIPTION	DATE	APPR

NAVFAC

SEAL

RQ W.M. Jordan COMPANY - A JOINT VENTURE -

Michael Baker INTERNATIONAL
100 AIRSIDE DRIVE
MOON TOWNSHIP, PA 15108
A/E INFO

APPROVED

FOR COMMANDER NAVFAC

ACTIVITY
MARINE CORPS BASE CAMP LEJEUNE

SATISFACTORY TO DATE

DES JTE | DRW ETH | CHK JMG

PM

BRANCH MANAGER

CHIEF ENG/ARCH

FIRE PROTECTION

DEPARTMENT OF THE NAVY
NAVAL FACILITIES ENGINEERING COMMAND
NAVAL FACILITIES ENGINEERING COMMAND ~ MID-ATLANTIC
ROICC FLORENCE CAMP LEJEUNE
JACKSONVILLE, NC
MCB CAMP LEJEUNE
JACKSONVILLE, NC

P1338 II MEF SIMULATION/TRAINING CENTER
REPLACEMENT

TELECOMMUNICATIONS - DETAILS

SCALE: AS NOTED

EPROJECT NO.: 1590892

CONSTR. CONTR. NO.
N40085-20-C-0059

NAVFAC DRAWING NO.

SHEET OF

T-508

DP2 SUBMISSION – P1338 BUILDING - PRE-FINAL SUBMISSION

UNCLASSIFIED

PLOTTED: 6/10/2021 9:28:36 AM

FILE NAME: BIM 360://HF PACKAGE 3/P1338 MEF SIM CTR-1590892-E.rvt

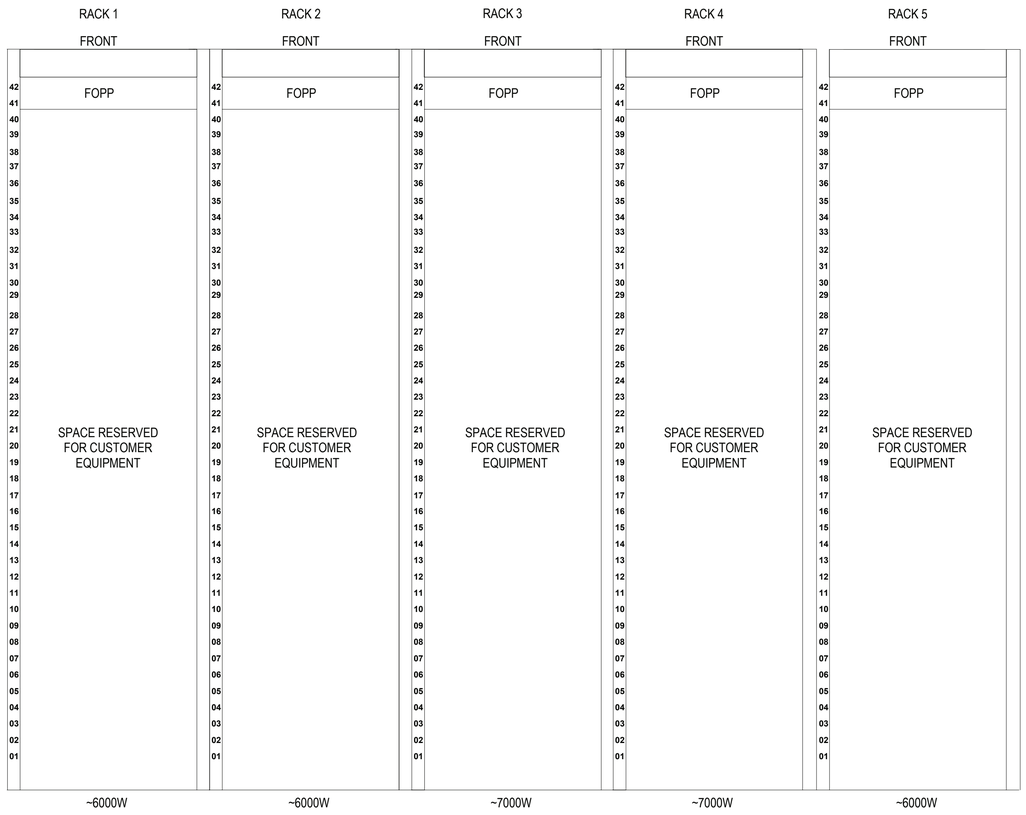

SIM CONTROL SECURE VAULT - RM304B

SCALE: 6" = 1'-0"

T-403 B1

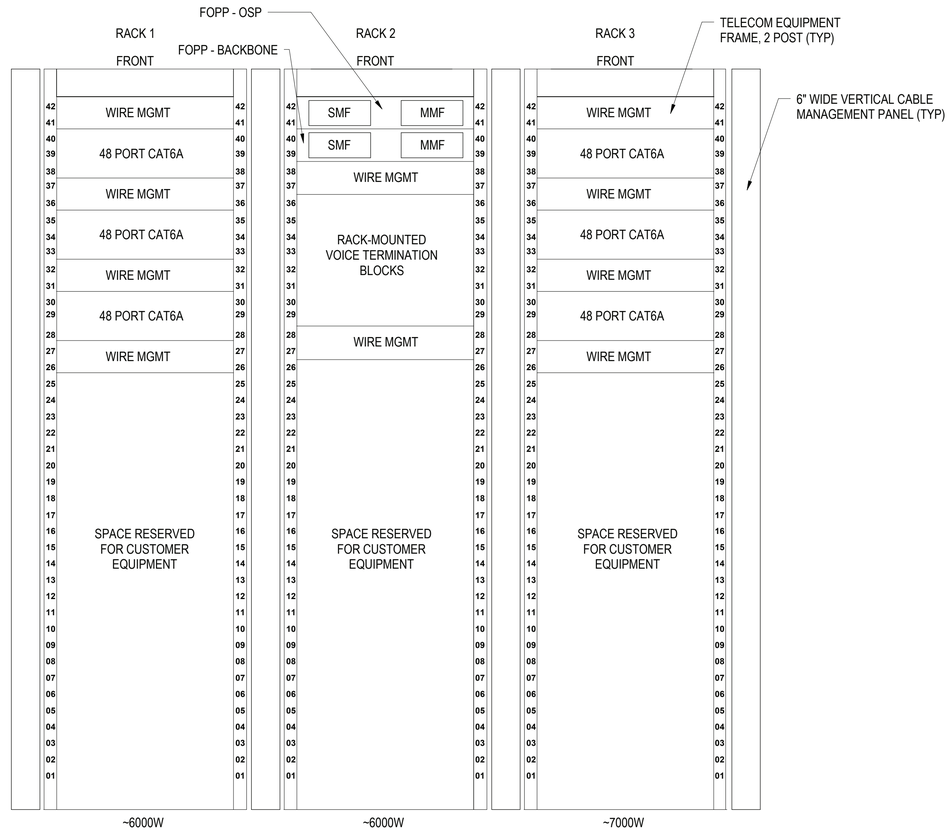

TELECOM RM 115

SCALE:NTS

B3

APPR	DATE	DESCRIPTION	SYM

NAVFAC

SEAL

RQ WM Jordan COMPANY – A JOINT VENTURE –

Michael Baker INTERNATIONAL

100 AIRSIDE DRIVE
MOON TOWNSHIP, PA 15108 A/E INFO

APPROVED

FOR COMMANDER NAVFAC

ACTIVITY
MARINE CORPS BASE
CAMP LEJEUNE

SATISFACTORY TO DATE

DES	DRW	CHK
JTE	ETH	JMG

PM

BRANCH MANAGER

CHIEF ENG/ARCH

FIRE PROTECTION

DEPARTMENT OF THE NAVY
NAVAL FACILITIES ENGINEERING COMMAND
ROICC FLORENCE CAMP LEJEUNE
MCB CAMP LEJEUNE

NAVAL FACILITIES ENGINEERING COMMAND ~ MID-ATLANTIC
JACKSONVILLE, NC

JACKSONVILLE, NC
P1338 II MEF SIMULATION/TRAINING CENTER
REPLACEMENT

TELECOMMUNICATIONS - DETAILS

SCALE: AS NOTED

EPROJECT NO.: 1590892

CONSTR. CONTR. NO.
N40085-20-C-0059

NAVFAC DRAWING NO.

SHEET OF

T-509

DP2 SUBMISSION – P1338 BUILDING - PRE-FINAL SUBMISSION

PLOTTED: 6/10/2021 9:28:38 AM

FILE NAME: BIM 360://HF PACKAGE 3/P1338 MEF SIM CTR-1590892-E.rvt

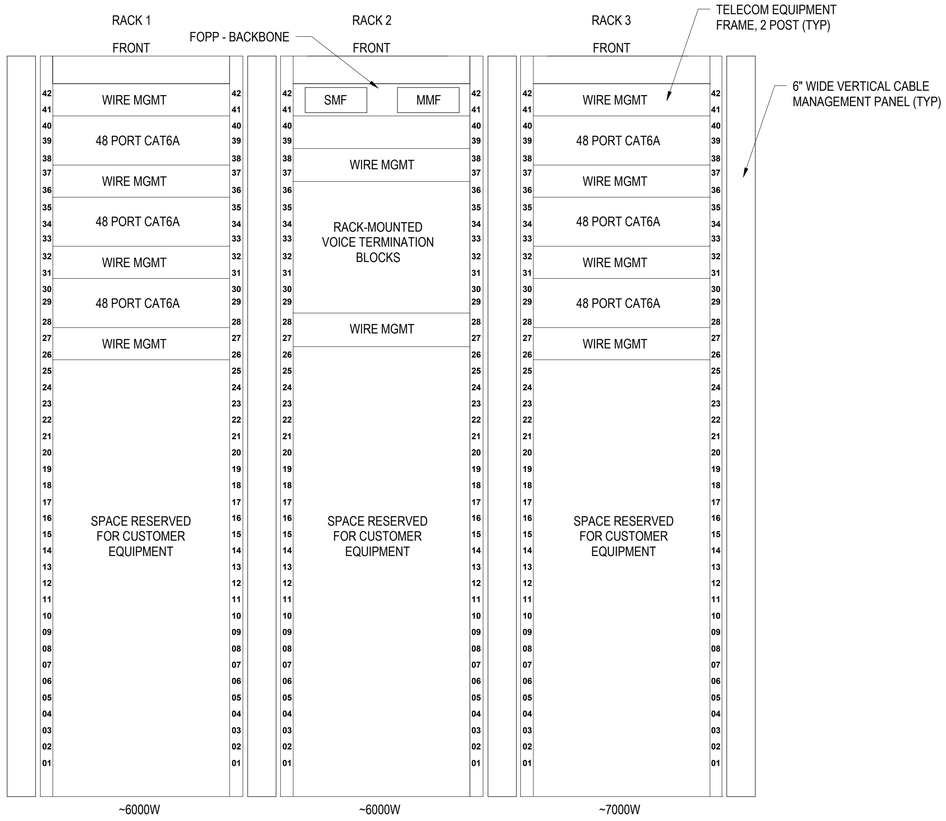

TELECOM RM 208

SCALE:NTS

B1

APPR	
DATE	
DESCRIPTION	
SYM	

SEAL

WNM Jordan COMPANY – A JOINT VENTURE –

Michael Baker INTERNATIONAL

100 AIRSIDE DRIVE
MOON TOWNSHIP, PA 15108 A/E INFO

APPROVED

FOR COMMANDER NAVFAC

ACTIVITY
MARINE CORPS BASE
CAMP LEJEUNE

SATISFACTORY TO DATE

DES JTE | DRW ETH | CHK JMG

PM

BRANCH MANAGER

CHIEF ENG/ARCH

FIRE PROTECTION

DEPARTMENT OF THE NAVY
NAVAL FACILITIES ENGINEERING COMMAND
ROICC FLORENCE CAMP LEJEUNE
MCB CAMP LEJEUNE

NAVAL FACILITIES ENGINEERING COMMAND ~ MID-ATLANTIC
JACKSONVILLE, NC

P1338 II MEF SIMULATION/TRAINING CENTER
REPLACEMENT
JACKSONVILLE, NC

TELECOMMUNICATIONS - DETAILS

SCALE: AS NOTED

EPROJECT NO.: 1590892

CONSTR. CONTR. NO.
N40085-20-C-0059

NAVFAC DRAWING NO.

SHEET OF

T-510

DP2 SUBMISSION – P1338 BUILDING - PRE-FINAL SUBMISSION

PLOTTED: 6/10/2021 9:28:39 AM

FILE NAME: BIM 360://HF PACKAGE 3/P1338 MEF SIM CTR-1590892-E.rvt

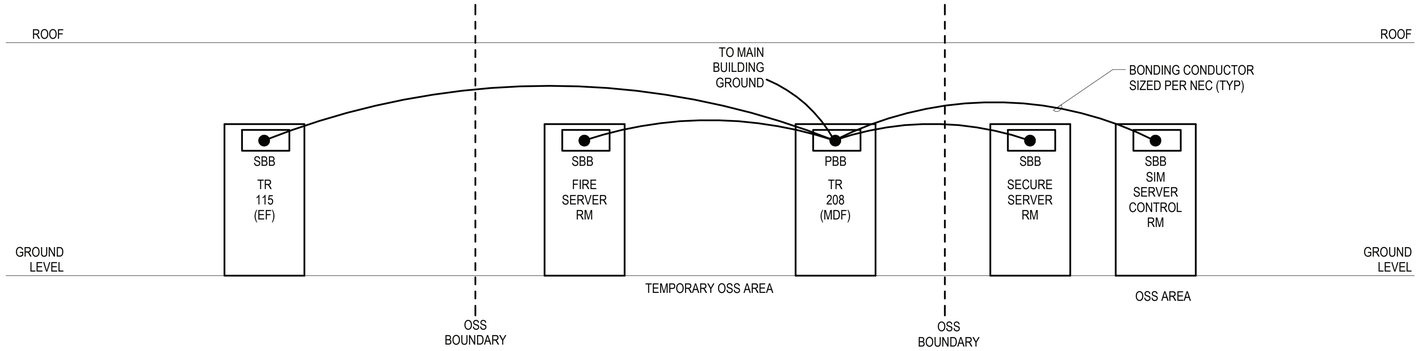

TELECOM GROUNDING LOGICAL DIAGRAM

SCALE:NTS

C1

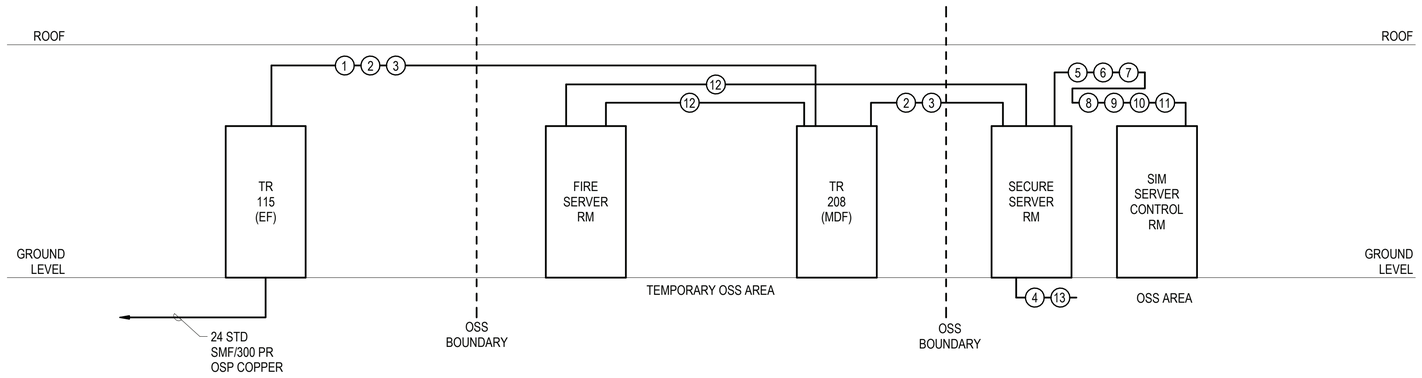

TELECOM BACKBONE CABLING LOGICAL DIAGRAM

SCALE:NTS

B1

BACKBONE CABLING LEGEND					
	FROM	TO	RISER CAT3	FIBER SM OS2/MM OM3	CAT6A
1	TR115	TR208	100	24SM/24MM	
2	TR115	SERVER RM MCEN	200	24SM/24MM	
3	TR115	SIM SECURE COMM		24SM/24MM	
4	SERVER RM MCEN	YARD POP UP	100 (OSP)		
5	SERVER RM MCEN	SERVER RM SIPR		12SM/12MM	12
6	SIM SECURE COMM	SERVER RM MTWS (U)		12SM/12MM	12
7	SIM SECURE COMM	SERVER RM MTWS (C)		12SM/12MM	12
8	SIM SECURE COMM	SERVER RM CACCTUS (U)		12SM/12MM	12
9	SIM SECURE COMM	SERVER RM CACCTUS (C)		12SM/12MM	12
10	SIM SECURE COMM	SERVER RM TIE (U)		12SM/12MM	12
11	SIM SECURE COMM	SERVER RM TIE (C)		12SM/12MM	12
12	SIM SECURE COMM	FIRE SERVER RM		12SM/12MM	12
13	SIM SECURE COMM	YARD POP UP		12SM/12MM (OSP)	

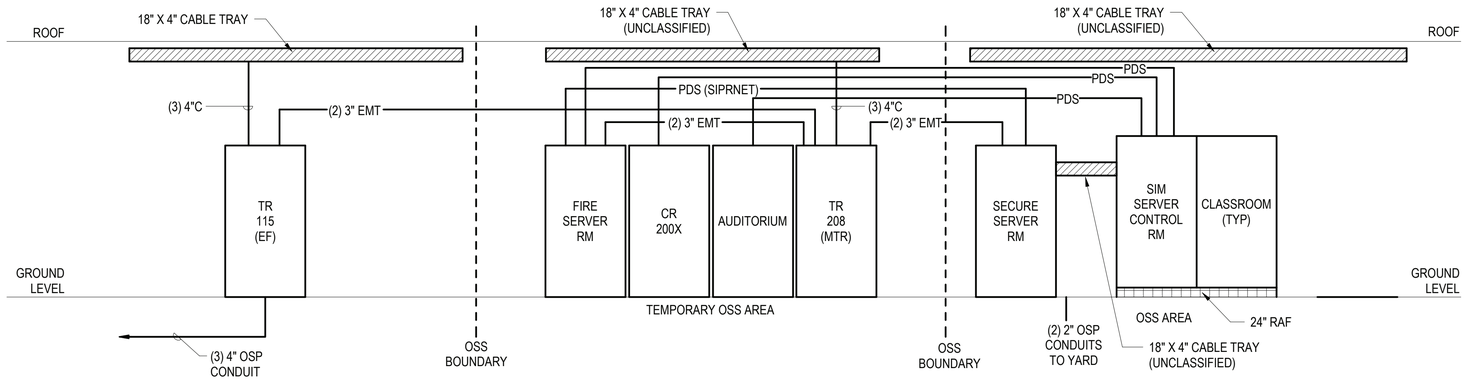

TELECOM PATHWAY LOGICAL DIAGRAM

SCALE:NTS

A1

APPR | DATE | DESCRIPTION | SYM

NAVFAC

SEAL

WNJ Jordan COMPANY – A JOINT VENTURE –

Michael Baker INTERNATIONAL

100 AIRSIDE DRIVE
MOON TOWNSHIP, PA 15108 A/E INFO

APPROVED

FOR COMMANDER NAVFAC

ACTIVITY
MARINE CORPS BASE CAMP LEJEUNE

SATISFACTORY TO DATE

DES JTE | DRW ETH | CHK JMG

PM

BRANCH MANAGER

CHIEF ENG/ARCH

FIRE PROTECTION

DEPARTMENT OF THE NAVY
NAVAL FACILITIES ENGINEERING COMMAND – MID-ATLANTIC
ROICC FLORENCE CAMP LEJEUNE
MCB CAMP LEJEUNE

NAVAL FACILITIES ENGINEERING COMMAND
JACKSONVILLE, NC
JACKSONVILLE, NC

P1338 II MEF SIMULATION/TRAINING CENTER
REPLACEMENT

TELECOMMUNICATIONS - DIAGRAMS

SCALE: AS NOTED

EPROJECT NO.: 1590892

CONSTR. CONTR. NO.
N40085-20-C-0059

NAVFAC DRAWING NO.

SHEET OF

T-601

DP2 SUBMISSION – P1338 BUILDING - PRE-FINAL SUBMISSION

PLOTTED: 6/10/2021 9:29:41 AM

FILE NAME: BIM 360://HF PACKAGE 3/P1338 MEF SIM CTR-1590892-E.rvt



A1 **SECURITY - FIRST FLOOR PLAN - AREA A**

SCALE: 1/8" = 1'-0"

GENERAL NOTES

1 SEE SHEET T-001 FOR TELECOMMUNICATIONS NOTES, SYMBOLS, AND ABBREVIATIONS.

KEYPLAN

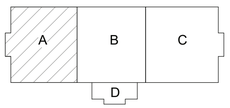

0 4'-0" 8'-0" 16'-0"

SCALE: 0'-0 1/8" = 1'-0"

N

SYM	DESCRIPTION	DATE	APPR

NAVFAC

SEAL

RQ W.M. Jordan COMPANY – A JOINT VENTURE –

Michael Baker INTERNATIONAL

100 AIRSIDE DRIVE
MOON TOWNSHIP, PA 15108 A/E INFO

APPROVED

FOR COMMANDER NAVFAC

ACTIVITY
MARINE CORPS BASE CAMP LEJEUNE

SATISFACTORY TO DATE

DES JTE DRW ETH CHK JMG

PM

BRANCH MANAGER

CHIEF ENG/ARCH

FIRE PROTECTION

DEPARTMENT OF THE NAVY
NAVAL FACILITIES ENGINEERING COMMAND
NAVAL FACILITIES ENGINEERING COMMAND ~ MID-ATLANTIC
ROICC FLORENCE CAMP LEJEUNE JACKSONVILLE, NC
MCB CAMP LEJEUNE JACKSONVILLE, NC

P1338 II MEF SIMULATION/TRAINING CENTER
REPLACEMENT

SECURITY - FIRST FLOOR PLAN - AREA A

SCALE: AS NOTED

EPROJECT NO.: 1590892

CONSTR. CONTR. NO.
N40085-20-C-0059

NAVFAC DRAWING NO.

SHEET OF

TY111

DP2 SUBMISSION – P1338 BUILDING - PRE-FINAL SUBMISSION

PLOTTED: 6/10/2021 9:28:56 AM

FILE NAME: BIM 360://HF PACKAGE 3/P1338 MEF SIM CTR-1590892-E.rvt

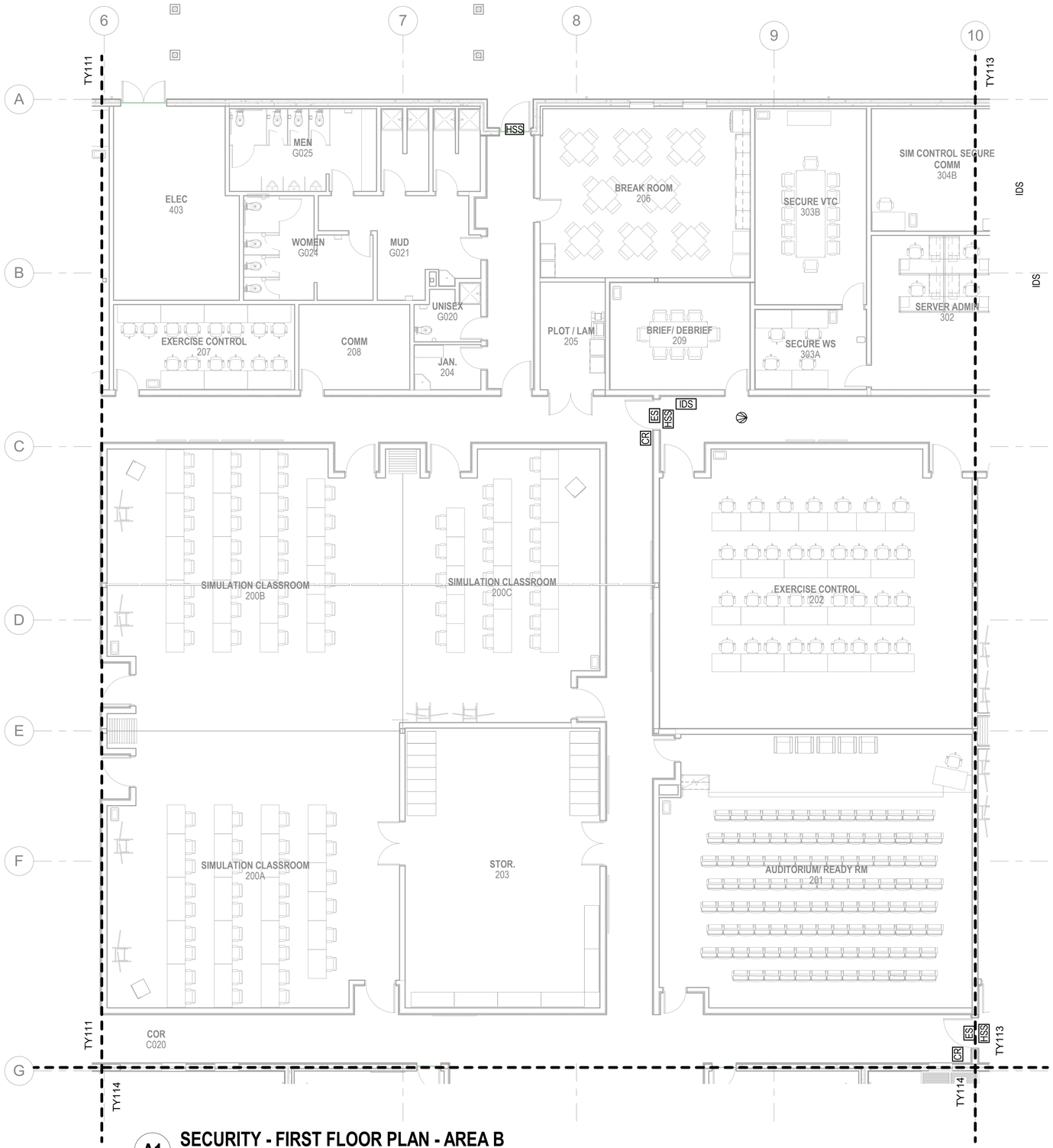

A1 SECURITY - FIRST FLOOR PLAN - AREA B

SCALE: 1/8" = 1'-0"

GENERAL NOTES

1 SEE SHEET T-001 FOR TELECOMMUNICATIONS NOTES, SYMBOLS, AND ABBREVIATIONS.

KEYPLAN

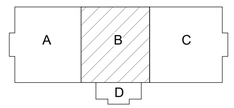

0 4'-0" 8'-0" 16'-0"

SCALE: 0'-0 1/8" = 1'-0"

N

APPR | DATE | DESCRIPTION | SYM

NAVFAC

SEAL

IRQ WM Jordan COMPANY – A JOINT VENTURE –

Michael Baker INTERNATIONAL

100 AIRSIDE DRIVE
MOON TOWNSHIP, PA 15108 A/E INFO

APPROVED

FOR COMMANDER NAVFAC

ACTIVITY
MARINE CORPS BASE
CAMP LEJEUNE

SATISFACTORY TO DATE

DES JTE | DRW ETH | CHK JMG

PM

BRANCH MANAGER

CHIEF ENG/ARCH

FIRE PROTECTION

DEPARTMENT OF THE NAVY
NAVAL FACILITIES ENGINEERING COMMAND
ROICC FLORENCE CAMP LEJEUNE

NAVAL FACILITIES ENGINEERING COMMAND – MID-ATLANTIC
JACKSONVILLE, NC

MCB CAMP LEJEUNE
JACKSONVILLE, NC

P1338 II MEF SIMULATION/TRAINING CENTER
REPLACEMENT

SECURITY - FIRST FLOOR PLAN - AREA B

SCALE: AS NOTED

EPROJECT NO.: 1590892

CONSTR. CONTR. NO.
N40085-20-C-0059

NAVFAC DRAWING NO.

SHEET OF

TY112

PLOTTED: 6/10/2021 9:28:59 AM

FILE NAME: BIM 360://HF PACKAGE 3/P1338 MEF SIM CTR-1590892-E.rvt

DP2 SUBMISSION – P1338 BUILDING - PRE-FINAL SUBMISSION

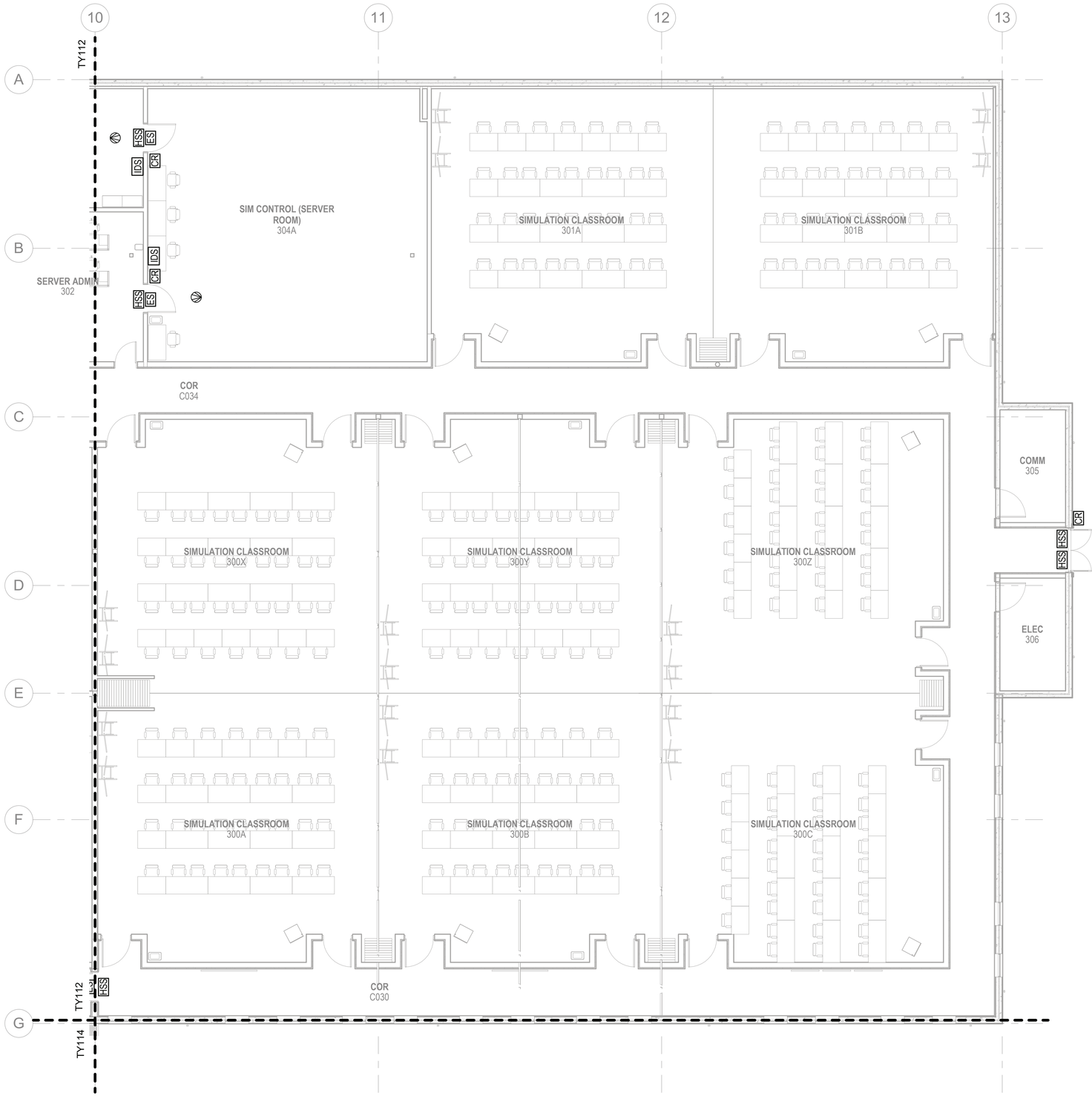

A1 SECURITY - FIRST FLOOR PLAN - AREA C

SCALE: 1/8" = 1'-0"

GENERAL NOTES

1 SEE SHEET T-001 FOR TELECOMMUNICATIONS NOTES, SYMBOLS, AND ABBREVIATIONS.

KEYPLAN

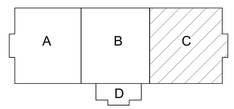

0 4'-0" 8'-0" 16'-0"

SCALE: 0'-0 1/8" = 1'-0"

N

APPR | DATE | DESCRIPTION | SYM

NAVFAC

SEAL

RQ W.M. Jordan COMPANY – A JOINT VENTURE –

Michael Baker INTERNATIONAL

100 AIRSIDE DRIVE
MOON TOWNSHIP, PA 15108 A/E INFO

APPROVED

FOR COMMANDER NAVFAC

ACTIVITY
MARINE CORPS BASE
CAMP LEJEUNE

SATISFACTORY TO DATE

DES JTE | DRW ETH | CHK JMG

PM

BRANCH MANAGER

CHIEF ENG/ARCH

FIRE PROTECTION

DEPARTMENT OF THE NAVY
NAVAL FACILITIES ENGINEERING COMMAND
ROICC FLORENCE CAMP LEJEUNE
MCB CAMP LEJEUNE

NAVAL FACILITIES ENGINEERING COMMAND – MID-ATLANTIC
JACKSONVILLE, NC

JACKSONVILLE, NC
P1338 II MEF SIMULATION/TRAINING CENTER
REPLACEMENT

SECURITY - FIRST FLOOR PLAN - AREA C

SCALE: AS NOTED

EPROJECT NO.: 1590892

CONSTR. CONTR. NO.
N40085-20-C-0059

NAVFAC DRAWING NO.

SHEET OF

TY113

DP2 SUBMISSION – P1338 BUILDING - PRE-FINAL SUBMISSION

PLOTTED: 6/10/2021 9:29:01 AM

FILE NAME: BIM 360://HF PACKAGE 3/P1338 MEF SIM CTR-1590892-E.rvt

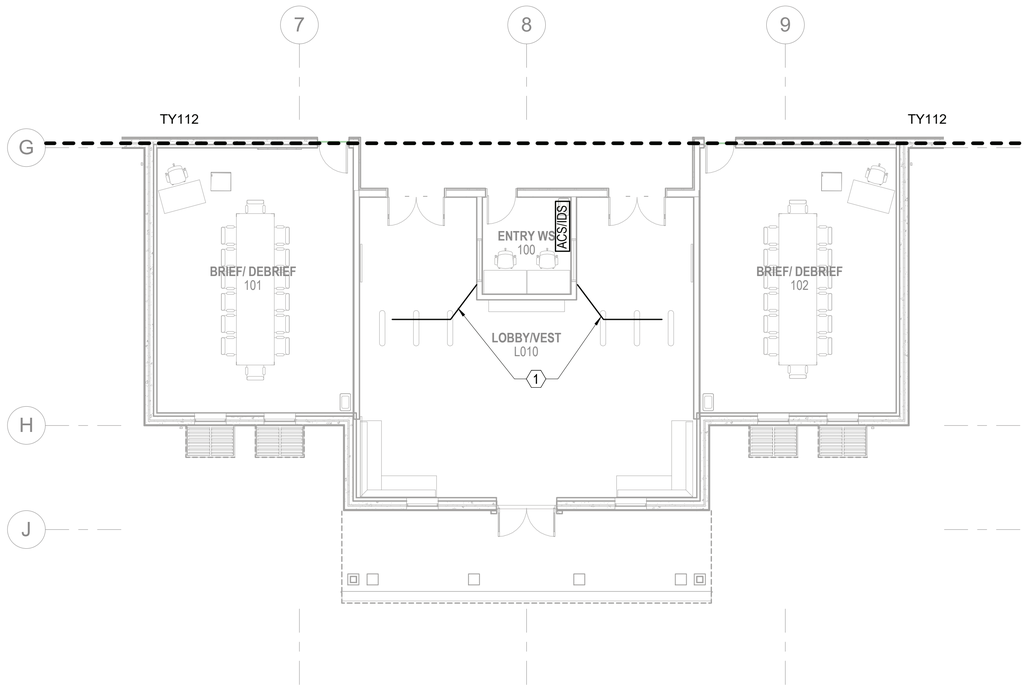

A1 SECURITY - FIRST FLOOR PLAN - AREA D

SCALE: 1/8" = 1'-0"

GENERAL NOTES

1 SEE SHEET T-001 FOR TELECOMMUNICATIONS NOTES, SYMBOLS, AND ABBREVIATIONS.

KEYNOTES

1 COORDINATE UNDERFLOOR CONDUIT LOCATIONS TO TURNSTILES WITH EQUIPMENT MANUFACTURER. CONDUITS TO STUB UP INTO ENTRY VESTIBULE WORK AREA.

KEYPLAN

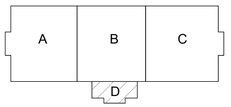

0 4'-0" 8'-0" 16'-0"

SCALE: 0'-0 1/8" = 1'-0"

N

APPR	DATE	DESCRIPTION	SYM

SEAL

IRQ W.M. Jordan COMPANY – A JOINT VENTURE –

Michael Baker INTERNATIONAL

100 AIRSIDE DRIVE
MOON TOWNSHIP, PA 15108 A/E INFO

APPROVED

FOR COMMANDER NAVFAC

ACTIVITY
MARINE CORPS BASE
CAMP LEJEUNE

SATISFACTORY TO DATE

DES	JTE	DRW	ETH	CHK	JMG

PM

BRANCH MANAGER

CHIEF ENG/ARCH

FIRE PROTECTION

DEPARTMENT OF THE NAVY
NAVAL FACILITIES ENGINEERING COMMAND
ROICC FLORENCE CAMP LEJEUNE
MCB CAMP LEJEUNE

NAVAL FACILITIES ENGINEERING COMMAND ~ MID-ATLANTIC
JACKSONVILLE, NC

JACKSONVILLE, NC
P1338 II MEF SIMULATION/TRAINING CENTER
REPLACEMENT

SECURITY - FIRST FLOOR PLAN - AREA D

SCALE:	AS NOTED
EPROJECT NO.:	1550892
CONSTR. CONTR. NO.	N40085-20-C-0059
NAVFAC DRAWING NO.	
SHEET	OF

TY114

DP2 SUBMISSION – P1338 BUILDING - PRE-FINAL SUBMISSION

PLOTTED: 6/10/2021 9:29:04 AM

FILE NAME: BIM 360://HF PACKAGE 3/P1338 MEF SIM CTR-1550892-E.rvt

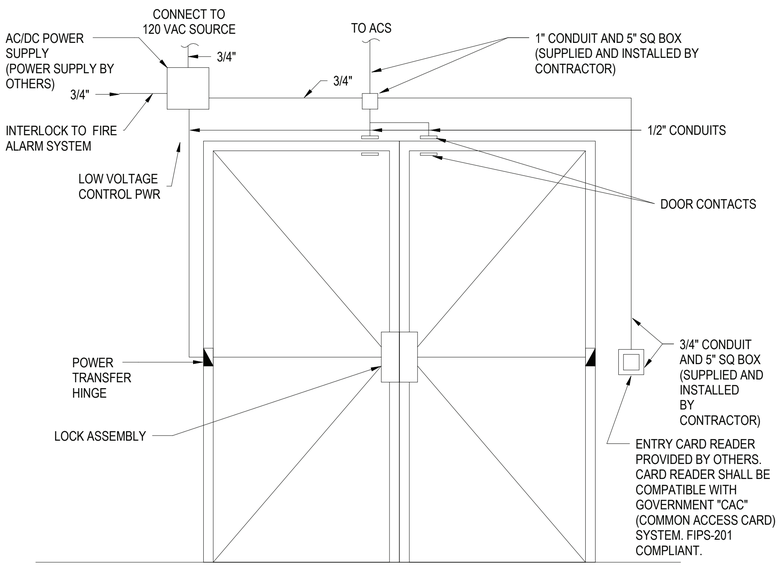

DOUBLE DOOR ACCESS CONTROLS SYSTEM

SCALE:NTS

C1

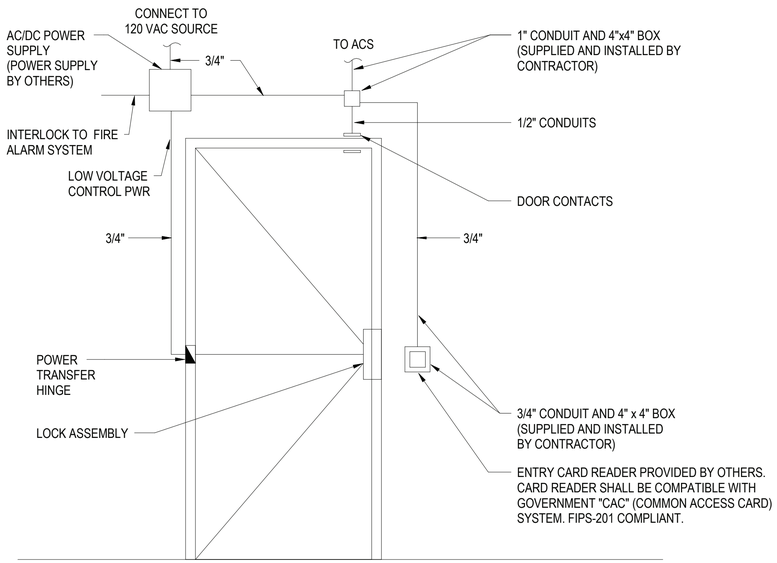

SINGLE DOOR ACCESS CONTROLS SYSTEM

SCALE:NTS

C3

APPR | DATE | DESCRIPTION | SYM

NAVFAC

SEAL

W.M. Jordan COMPANY – A JOINT VENTURE –

Michael Baker INTERNATIONAL

100 AIRSIDE DRIVE
MOON TOWNSHIP, PA 15108 A/E INFO

APPROVED

FOR COMMANDER NAVFAC

ACTIVITY
MARINE CORPS BASE
CAMP LEJEUNE

SATISFACTORY TO DATE

DES JTE | DRW ETH | CHK JMG

PM

BRANCH MANAGER

CHIEF ENG/ARCH

FIRE PROTECTION

DEPARTMENT OF THE NAVY
NAVAL FACILITIES ENGINEERING COMMAND
ROICC FLORENCE CAMP LEJEUNE

NAVAL FACILITIES ENGINEERING COMMAND ~ MID-ATLANTIC
JACKSONVILLE, NC

MCB CAMP LEJEUNE

JACKSONVILLE, NC

P1338 II MEF SIMULATION/TRAINING CENTER

REPLACEMENT

SECURITY - DETAILS

SCALE: AS NOTED

EPROJECT NO.: 1590892

CONSTR. CONTR. NO.
N40085-20-C-0059

NAVFAC DRAWING NO.

SHEET OF

TY501

DP2 SUBMISSION – P1338 BUILDING - PRE-FINAL SUBMISSION

PLOTTED: 6/10/2021 9:29:05 AM

FILE NAME: BIM 360://HF PACKAGE 3/P1338 MEF SIM CTR-1590892-E.rvt

ABBREVIATIONS

A/E	ARCHITECT/ENGINEER
AAP	ALARM ANNUNCIATOR PANEL
ADA	AMERICANS WITH DISABILITIES ACT
AFC	ABOVE FINISHED CEILING
AFF	ABOVE FINISHED FLOOR
AFG	ABOVE FINISHED GRADE
AHJ	AUTHORITY HAVING JURISDICTION
ARCH	ARCHITECT
AV	AUDIOVISUAL
AVC	AUDIOVISUAL CONTRACTOR
AWG	AMERICAN WIRE GAUGE
BCT	BONDING CONDUCTOR FOR TELECOMMUNICATIONS
BFF	BELOW FINISH FLOOR
BICSI	BUILDING INDUSTRY CONSULTING SERVICE INTERNATIONAL
C	CAMERA
CAT	CATEGORY
CATV	CABLE TELEVISION
CCTV	CLOSED CIRCUIT TELEVISION
CD	CONSTRUCTION DOCUMENTS
CLG	CEILING
CONTR	CONTRACTOR
CT	CABLE TRAY
DEMO	DEMOLITION
DIA	DIAGRAM
EC	ELECTRICAL CONTRACTOR
EQ	EQUIPMENT GROUND
ELEC	ELECTRICAL
EMER	EMERGENCY
ENCL	ENCLOSURE
FT	FEET
FP	FIRE PROTECTION
GND	GROUND
GC	GENERAL CONTRACTOR
HT	HEIGHT
IN	INCHES
J-BOX	JUNCTION BOX
LAN	LOCAL AREA NETWORK
LV	LOW VOLTAGE
M	MICROPHONE
MECH	MECHANICAL
MIN	MINIMUM
NEC	NATIONAL ELECTRICAL CODE
NTS	NOT TO SCALE
PS	PROJECTION SCREEN
PT	POKE THRU
PTZ	PAN / TILT / ZOOM
PWR	POWER
QTY	QUANTITY
RCDD	REGISTERED COMMUNICATIONS DISTRIBUTION DESIGNER
RCP	REFLECTED CEILING PLAN
RECPT	RECEPTACLE
REQD	REQUIRED
RM	ROOM
RS	ROOM SCHEDULER
RU	RACK UNIT
S	SPEAKER
SB	SPECIALTY BACK BOX
TB	TELECOMMUNICATIONS BACKBOARD
TBB	TELECOMMUNICATIONS BONDING BACKBONE
TE	TELECOMMUNICATIONS ENCLOSURE
TC	TELECOMMUNICATIONS CONTRACTOR
TGB	TELECOMMUNICATIONS GROUNDING BUSBAR
TMGB	TELECOMMUNICATIONS MAIN GROUNDING BUSBAR
TV	TELEVISION
TP	TOUCH PANEL
UL	UNDERWRITERS LABORATORY
UON	UNLESS OTHERWISE NOTED
UPS	UNINTERRUPTIBLE POWER SUPPLY
UTIL	UTILITY

AUDIOVISUAL SYMBOLS

CEILING MOUNTED DEVICES

- CEILING CONDUIT PENETRATION
- (AV) X — CEILING MOUNTED AUDIOVISUAL PULL BOX. MOUNT 18" AFC, UNLESS OTHERWISE NOTED. "X" INDICATES NUMBER OF GANGS.
- CEILING MOUNTED DUPLEX AC POWER RECEPTACLE. 120V, 20A, UNLESS OTHERWISE NOTED
- (P) — CEILING MOUNTED AC POWER PULL BOX
- HORIZONTAL CONDUIT
- CABLE TRAY
- (P) (AV) X — CEILING MOUNTED BACK BOX FOR POWER, DATA AND AUDIOVISUAL. "X" INDICATES TYPE OF BOX, SEE MANUFACTURER LIST FOR DETAILS
- (C) — CEILING MOUNTED CAMERA. PROVIDED BY AVC.
- (S) — CEILING MOUNTED SPEAKER. PROVIDED BY AVC.
- (M) — CEILING MOUNTED MICROPHONE. PROVIDED BY AVC.

FLOOR MOUNTED DEVICES

- FLOOR CONDUIT PENETRATION
- AV X — FLOOR BOX FOR POWER, DATA AND AUDIOVISUAL. SEE SYMBOL NOTES FOR BOX TYPE
- AV PT X — POKE-THRU FOR POWER, DATA AND AUDIOVISUAL. SEE SYMBOL NOTES FOR BOX TYPE
- AUDIOVISUAL EQUIPMENT RACK
- FLOOR BOX/POKE-THRU DUPLEX AC POWER RECEPTACLE 120V, 20A, UNLESS OTHERWISE NOTED
- FLOOR BOX/POKE-THRU DOUBLE DUPLEX AC POWER RECEPTACLE 120V, 20A, UNLESS OTHERWISE NOTED

MISCELLANEOUS ITEMS

- X / TA-XXX — SINGLE WALL ELEVATION MARKER
- X / X TA-XXX X / X — MULTI WALL ELEVATION MARKER
- X / TA-XXX — ROOM SECTION MARKER
- X / TA-XXX — ROOM RISER MARKER

AUDIOVISUAL SYMBOLS CONTINUED

WALL MOUNTED DEVICES

- WALL MOUNTED DUPLEX AC POWER RECEPTACLE 120V, 20A, UNLESS OTHERWISE NOTED.
- WALL MOUNTED DOUBLE DUPLEX AC POWER RECEPTACLE 120V, 20A, UNLESS OTHERWISE NOTED.
- (P) — WALL MOUNTED AC POWER PULL BOX
- WALL MOUNTED CLOCK AC POWER RECEPTACLE 120V, 20A, UNLESS OTHERWISE NOTED.
- (C) — WALL MOUNTED CAMERA. PROVIDED BY AVC.
- (S) — WALL MOUNTED SPEAKER. PROVIDED BY AVC.
- AV X — WALL MOUNTED FLAT PANEL DISPLAY BACK BOX FOR POWER, DATA AND AUDIOVISUAL. "X" INDICATES TYPE OF BOX, SEE MANUFACTURER LIST FOR DETAILS.
- AV X — WALL MOUNTED AUDIOVISUAL DEVICE. "X" INDICATES NUMBER OF GANGS.

AUDIOVISUAL SPECIALTY INFRASTRUCTURE SYMBOL NOTES

FLOOR BOX CONFIGURATION

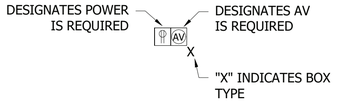

POKE-THRU CONFIGURATION

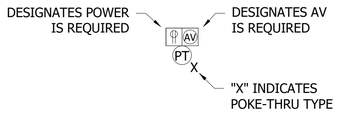

FLAT PANEL DISPLAY BACK BOX CONFIGURATION

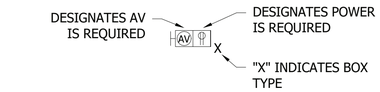

GENERAL NOTES

1. ALL WALL MOUNTED OUTLETS ARE TO BE MOUNTED AT 18" AFF UNLESS OTHERWISE NOTED.
2. INSTANCE BELOW IS TYPICAL OF TWO BOXES ON THE SAME VERTICAL PLANE.

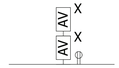

3. ALL POWER RECEPTACLES AND TELECOMMUNICATIONS OUTLETS ARE FOR AV REFERENCE ONLY. REFER TO ELECTRICAL AND TELECOMMUNICATIONS DRAWINGS FOR FINAL LOCATIONS.
4. THE AUDIOVISUAL CONTRACTOR SHALL BE RESPONSIBLE FOR CONSTRUCTION SAFETY. THE ARCHITECT AND/OR ENGINEER WILL ASSUME NO RESPONSIBILITY FOR WORKMAN'S OR PEDESTRIAN'S SAFETY.
5. NOTHING CONTAINED IN THE CONTRACT DOCUMENTS SHALL BE CONSTRUCTED TO CONFLICT WITH ANY NATIONAL, STATE, MUNICIPAL, OR LOCAL LAW OR REGULATIONS.
6. THE WORK UNDER THIS CONTRACT SHALL INCLUDE THE FURNISHING OF ALL NECESSARY MATERIALS, TOOLS, AND LABOR FOR A COMPLETE AND WORKING INSTALLATION AS DEFINED BY THE PLANS AND SPECIFICATIONS.
7. THE AUDIOVISUAL CONTRACTOR AT THE SITE SHALL VERIFY ALL DIMENSIONS AND EXISTING CONDITIONS PERTAINING TO THE INSTALLATION OF THE AUDIOVISUAL SYSTEMS. WHEN THE CONTRACTOR UNCOVERS CONDITIONS NOT INDICATED ON THE PLANS OR IN THE SPECIFICATIONS, THEY SHALL NOTIFY THE ARCHITECT AND/OR ENGINEER PRIOR TO PROCEEDING WITH ANY WORK. FAILURE TO NOTIFY WILL MAKE THE CONTRACTOR RESPONSIBLE FOR ALL COSTS AND CONSEQUENCES OF SUCH FAILURE.
8. CONTRACTOR SHALL CLEAN UP ALL DEBRIS AT THE END OF EACH WORK DAY.
9. ALL CONDUITS RUN IN EXPOSED AREAS SHALL BE MOUNTED TIGHT TO THE UNDERSIDE OF THE STRUCTURAL STEEL.
10. COORDINATE EXACT LOCATIONS OF EQUIPMENT WITH OTHER CONSTRUCTION TRADES
11. EXACT LOCATIONS OF FLOOR BOXES, SHALL BE COORDINATED WITH FURNITURE AND EQUIPMENT PLANS.
12. ALL DEVICES SHOWN ON THE EXTERIOR OF THE BUILDING SHALL BE WEATHERPROOF TYPE.

MANUFACTURERS LIST

TYPE	MANUFACTURER	MODEL	DETAIL
A	FSR	PWB-100	A3/TA502
B	CHIEF	PAC526	A2/TA501
C	FLOOR BOX	REFER TO ELECTRICAL	-

INDUSTRY STANDARDS

AUDIOVISUAL INSTALLATION SHALL COMPLY WITH THE MOST CURRENT VERSION OF THE FOLLOWING STANDARDS:

AMERICANS WITH DISABILITIES ACT, 2010

ANSI/ASA S12.60; ACOUSTICAL PERFORMANCE CRITERIA, DESIGN REQUIREMENTS, AND GUIDELINES FOR SCHOOLS

ANSI/INFOCOMM 2M-2010, STANDARD GUIDE FOR AUDIOVISUAL SYSTEMS DESIGN AND COORDINATION PROCESS (PROJECT MANAGEMENT PROCESS)

ANSI/INFOCOMM 3M-2011 PROJECTED IMAGE SYSTEM CONTRAST RATIO

ANSI/INFOCOMM 4: 2012 AUDIOVISUAL SYSTEMS ENERGY MANAGEMENT

ANSI/INFOCOMM V202.01:2016, DISPLAY IMAGE SIZE FOR 2D CONTENT IN AUDIOVISUAL SYSTEMS

AV DESIGN REFERENCE MANUAL, FROM INFOCOMM INTERNATIONAL

AV 9000:2012 QUALITY MANAGEMENT SYSTEM CONDUIT, PATHWAY, AND DEDICATED EQUIPMENT ROOM CONSIDERATIONS

AUDIOVISUAL SYSTEM DESIGN AND COORDINATION COMPONENTS, FROM INFOCOMM INTERNATIONAL

ANSI/TIA-568.0-D - GENERIC TELECOMMUNICATIONS CABLING FOR CUSTOMER PREMISES, 2015

ANSI/TIA-568.1-D - COMMERCIAL BUILDING TELECOMMUNICATIONS CABLING STANDARD, 2015

ANSI/TIA-568-C.2 - BALANCED TWISTED-PAIR TELECOMMUNICATIONS CABLING AND COMPONENTS STANDARD, 2009

ANSI/TIA-568.3-D - OPTICAL FIBER CABLING COMPONENTS STANDARD, 2016

ANSI/TIA-568.4-D - BROADBAND COAXIAL CABLING AND COMPONENTS STANDARD, 2017

ANSI/TIA-569-D - TELECOMMUNICATIONS PATHWAYS AND SPACES, 2015

ANSI/TIA/EIA-598-D - OPTICAL FIBER CABLE COLOR CODING, 2014

ANSI/TIA-606-B - ADMINISTRATION STANDARD FOR COMMERCIAL TELECOMMUNICATIONS INFRASTRUCTURE, 2012

ANSI/TIA-607-C - COMMERCIAL BUILDING GROUNDING (EARTHING) AND BONDING REQUIREMENTS FOR TELECOMMUNICATIONS, 2015

DAVIS AND DAVIS, 1987 "SOUND SYSTEM ENGINEERING"

GIDDINGS, 1990, " AUDIO SYSTEMS DESIGN AND INSTALLATION

INFOCOMM, AV/IT INFRASTRUCTURE GUIDELINES FOR HIGHER EDUCATION

NFPA 70 - NATIONAL ELECTRICAL CODE (NEC)

NFPA 72 - NATIONAL FIRE ALARM AND SIGNALING CODE

NFPA 75 - STANDARD FOR THE PROTECTION OF INFORMATION TECHNOLOGY EQUIPMENT

NFPA 76 - STANDARD FOR THE FIRE PROTECTION OF TELECOMMUNICATIONS FACILITIES

APPR	DATE	DESCRIPTION	SYM

NAVFAC

PRELIMINARY NOT FOR CONSTRUCTION

SEAL

IRQ WM Jordan COMPANY – A JOINT VENTURE –

Michael Baker INTERNATIONAL
100 AIRSIDE DRIVE
MOON TOWNSHIP, PA 15108 A/E INFO

APPROVED

FOR COMMANDER NAVFAC

ACTIVITY
MARINE CORPS BASE CAMP LEJEUNE

SATISFACTORY TO DATE

DES AS	DRW AV	CHK BM

PM

BRANCH MANAGER

CHIEF ENG/ARCH

FIRE PROTECTION

DEPARTMENT OF THE NAVY
NAVAL FACILITIES ENGINEERING COMMAND
ROICC FLORENCE CAMP LEJEUNE
MCB CAMP LEJEUNE

NAVAL FACILITIES ENGINEERING COMMAND ~ MID-ATLANTIC
JACKSONVILLE, NC

JACKSONVILLE, NC
P1338F II MEF SIMULATION/TRAINING CENTER REPLACEMENT

AUDIOVISUAL - SYMBOLS AND NOTES

SCALE: AS NOTED

EPROJECT NO.:

CONSTR. CONTR. NO.
N40085-20-C-0059

NAVFAC DRAWING NO.

SHEET OF

TA001

DP2 SUBMISSION – P1338 BUILDING PRE-FINAL SUBMISSION

PLOTTED: 6/9/2021 6:52:10 AM

FILE NAME: BIM 360://HF PACKAGE 3/P1338_MEF SIM CTR-1590892-T.rvt

FLAT PANEL TYPE SCHEDULE

TYPE	DIAGONAL SIZE	MAKE	MODEL	ORIENTATION	POWER CONSUMPTION	DISPLAY WIDTH	DISPLAY HEIGHT	DISPLAY DEPTH	WEIGHT	BACKING	INTERACTIVE	NOTES
FPD-A	55"	PANASONIC	TH-55CQE1	LANDSCAPE	135 W	48 3/4"	28"	3 3/16"	36 LBS	36"H X 48"W	NO	FURNISHED & INSTALLED BY AVC
FPD-B	75"	PANASONIC	TH-75CQE1	LANDSCAPE	250 W	66 5/16"	38 1/16"	3 15/16"	82 LBS	48"H X 72"W	NO	FURNISHED & INSTALLED BY AVC
FPD-C	98"	PANASONIC	TH-98CQE1	LANDSCAPE	650 W	87 1/4"	50"	3 9/16"	220 LBS	48"H X 86"W	NO	FURNISHED & INSTALLED BY AVC

FLAT PANEL ROOM SCHEDULE

ROOM NUMBER	TYPE	QUANITY
101	FPD-C	1
102	FPD-C	1
200A	FPD-C	1
200B	FPD-C	1
200C	FPD-C	1
202	FPD-B	2
207	FPD-B	2
209	FPD-B	1
300A	FPD-C	1
300B	FPD-C	1
300C	FPD-C	1
300X	FPD-C	1
300Y	FPD-C	1
300Z	FPD-C	1
301A	FPD-C	1
301B	FPD-C	1
303B	FPD-B	2
L010	FPD-A	1

APPR | DATE | DESCRIPTION | SYM

NAVFAC

PRELIMINARY
NOT FOR CONSTRUCTION

SEAL

RQ W.M. Jordan COMPANY – A JOINT VENTURE –

Michael Baker
INTERNATIONAL
100 AIRSIDE DRIVE
MOON TOWNSHIP, PA 15108
A/E INFO

APPROVED

FOR COMMANDER NAVFAC

ACTIVITY
MARINE CORPS BASE
CAMP LEJEUNE

SATISFACTORY TO DATE

DES AS | DRW AV | CHK BM

PM

BRANCH MANAGER

CHIEF ENG/ARCH

FIRE PROTECTION

DEPARTMENT OF THE NAVY
NAVAL FACILITIES ENGINEERING COMMAND
ROICC FLORENCE CAMP LEJEUNE
MCB CAMP LEJEUNE

NAVAL FACILITIES ENGINEERING COMMAND ~ MID-ATLANTIC
JACKSONVILLE, NC

JACKSONVILLE, NC
P1338F II MEF SIMULATION/TRAINING CENTER
REPLACEMENT

AUDIOVISUAL - SCHEDULES

SCALE: AS NOTED

EPROJECT NO.:

CONSTR. CONTR. NO.
N40085-20-C-0059

NAVFAC DRAWING NO.

SHEET OF

TA002

DP2 SUBMISSION – P1338 BUILDING PRE-FINAL SUBMISSION

FILE NAME: BIM 360://HF PACKAGE 3/P1338_MEF SIM CTR-1590892-T.rvt
PLOTTED: 6/9/2021 6:52:10 AM



KEYNOTE LEGEND

1	PROVIDE FSR PWB-100-WHT-C USED TO COVER FSR PWB-100-B.

KEYPLAN

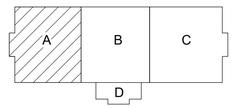

0 48" 96" 192"

SCALE: 1/8" = 12"

AUDIOVISUAL - FLOOR PLAN - AREA A

SCALE: 1/8" = 1'-0"

A4

APPR	DATE	DESCRIPTION	SYM

PRELIMINARY
NOT FOR CONSTRUCTION

SEAL

IRQ WM Jordan COMPANY – A JOINT VENTURE –

Michael Baker INTERNATIONAL

100 AIRSIDE DRIVE
MOON TOWNSHIP, PA 15108 A/E INFO

APPROVED

FOR COMMANDER NAVFAC

ACTIVITY
MARINE CORPS BASE
CAMP LEJEUNE

SATISFACTORY TO DATE

DES AS | DRW AV | CHK BM

PM

BRANCH MANAGER

CHIEF ENG/ARCH

FIRE PROTECTION

DEPARTMENT OF THE NAVY
NAVAL FACILITIES ENGINEERING COMMAND
ROICC FLORENCE CAMP LEJEUNE
MCB CAMP LEJEUNE

NAVAL FACILITIES ENGINEERING COMMAND ~ MID-ATLANTIC
JACKSONVILLE, NC

JACKSONVILLE, NC
P1338F II MEF SIMULATION/TRAINING CENTER
REPLACEMENT

AUDIOVISUAL - FLOOR PLAN - AREA A

SCALE: AS NOTED

EPROJECT NO.:

CONSTR. CONTR. NO.
N40085-20-C-0059

NAVFAC DRAWING NO.

SHEET OF

TA111

DP2 SUBMISSION – P1338 BUILDING PRE-FINAL SUBMISSION

PLOTTED: 6/9/2021 6:52:12 AM

FILE NAME: BIM 360://HF PACKAGE 3/P1338_MEF SIM CTR-15908892-T.rvt

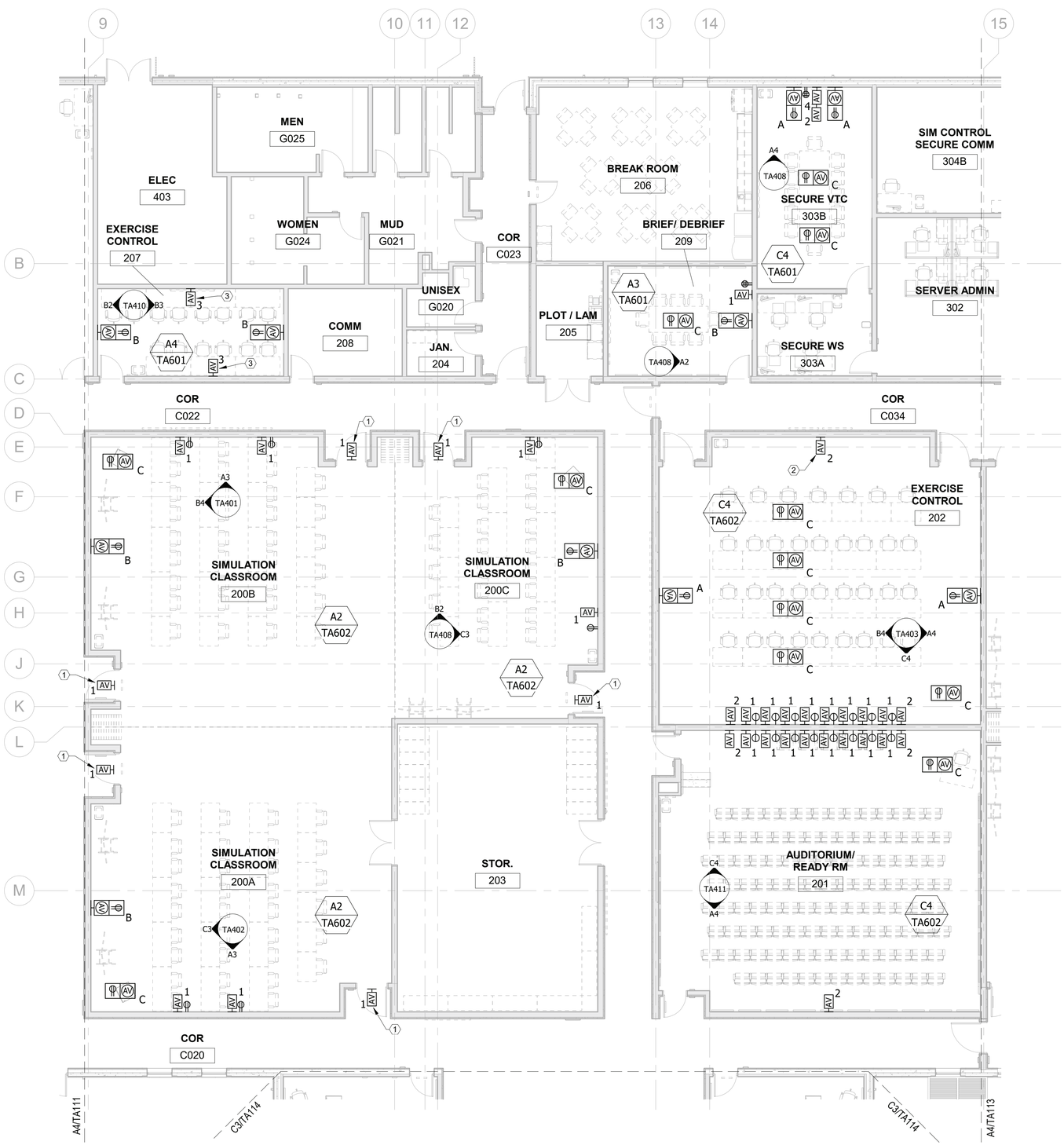

AUDIOVISUAL - FLOOR PLAN - AREA B

SCALE: 1/8" = 1'-0"

A3

KEYNOTE LEGEND

1	ONE GANG AV BACK BOX FOR ROOM AVAILABILITY SIGNAGE. MOUNT CENTERED ON DOOR, AT 92" AFF.
2	114" AFF
3	18" AFF, COORDINATE FINAL LOCATION WITH ELECTRICAL AND TELECOM PRIOR TO INSTALLATION.

KEYPLAN

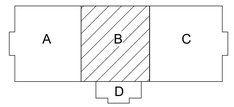

0 48" 96" 192"

SCALE: 1/8" = 12"

N

APPR | DATE | DESCRIPTION | SYM

NAVFAC

PRELIMINARY NOT FOR CONSTRUCTION

SEAL

IRQ W.M. Jordan COMPANY – A JOINT VENTURE –

Michael Baker INTERNATIONAL

100 AIRSIDE DRIVE
MOON TOWNSHIP, PA 15108 A/E INFO

APPROVED

FOR COMMANDER NAVFAC

ACTIVITY
MARINE CORPS BASE CAMP LEJEUNE

SATISFACTORY TO DATE

DES AS	DRW AV	CHK BM

PM

BRANCH MANAGER

CHIEF ENG/ARCH

FIRE PROTECTION

NAVAL FACILITIES ENGINEERING COMMAND
NAVAL FACILITIES ENGINEERING COMMAND – MID-ATLANTIC
JACKSONVILLE, NC

DEPARTMENT OF THE NAVY
NAVAL FACILITIES ENGINEERING COMMAND
ROICC FLORENCE CAMP LEJEUNE
MCB CAMP LEJEUNE

JACKSONVILLE, NC
P1338F II MEF SIMULATION/TRAINING CENTER REPLACEMENT

AUDIOVISUAL - FLOOR PLAN - AREA B

SCALE:	AS NOTED
EPROJECT NO.:	
CONSTR. CONTR. NO.	N40085-20-C-0059
NAVFAC DRAWING NO.	
SHEET	OF

TA112

DP2 SUBMISSION – P1338 BUILDING PRE-FINAL SUBMISSION

PLOTTED: 6/9/2021 6:52:15 AM

FILE NAME: BIM 360://HF PACKAGE 3/P1338_MEF SIM CTR-15908892-T.rvt



KEYNOTE LEGEND

1	ONE GANG AV BACK BOX FOR ROOM AVAILABILITY SIGNAGE. MOUNT CENTERED ON DOOR, AT 92" AFF.

KEYPLAN

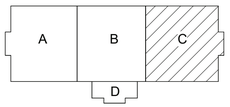

0 48" 96" 192"

SCALE: 1/8" = 12"

N

AUDIOVISUAL - FLOOR PLAN - AREA C

SCALE: 1/8" = 1'-0"

A4

APPR | DATE | DESCRIPTION | SYM

PRELIMINARY NOT FOR CONSTRUCTION

SEAL

RQ W.M. Jordan COMPANY – A JOINT VENTURE –

Michael Baker INTERNATIONAL

100 AIRSIDE DRIVE
MOON TOWNSHIP, PA 15108 A/E INFO

APPROVED

FOR COMMANDER NAVFAC

ACTIVITY
MARINE CORPS BASE CAMP LEJEUNE

SATISFACTORY TO DATE

DES AS | DRW AV | CHK BM

PM

BRANCH MANAGER

CHIEF ENG/ARCH

FIRE PROTECTION

DEPARTMENT OF THE NAVY
NAVAL FACILITIES ENGINEERING COMMAND
ROICC FLORENCE CAMP LEJEUNE

NAVAL FACILITIES ENGINEERING COMMAND ~ MID-ATLANTIC
JACKSONVILLE, NC

MCB CAMP LEJEUNE
JACKSONVILLE, NC
P1338F II MEF SIMULATION/TRAINING CENTER REPLACEMENT

AUDIOVISUAL - FLOOR PLAN - AREA C

SCALE: AS NOTED

EPROJECT NO.:

CONSTR. CONTR. NO.
N40085-20-C-0059

NAVFAC DRAWING NO.

SHEET OF

TA113

DP2 SUBMISSION – P1338 BUILDING PRE-FINAL SUBMISSION

PLOTTED: 6/9/2021 6:52:17 AM

FILE NAME: BIM 360://HF PACKAGE 3/P1338_MEF SIM CTR-1590892-T.rvt

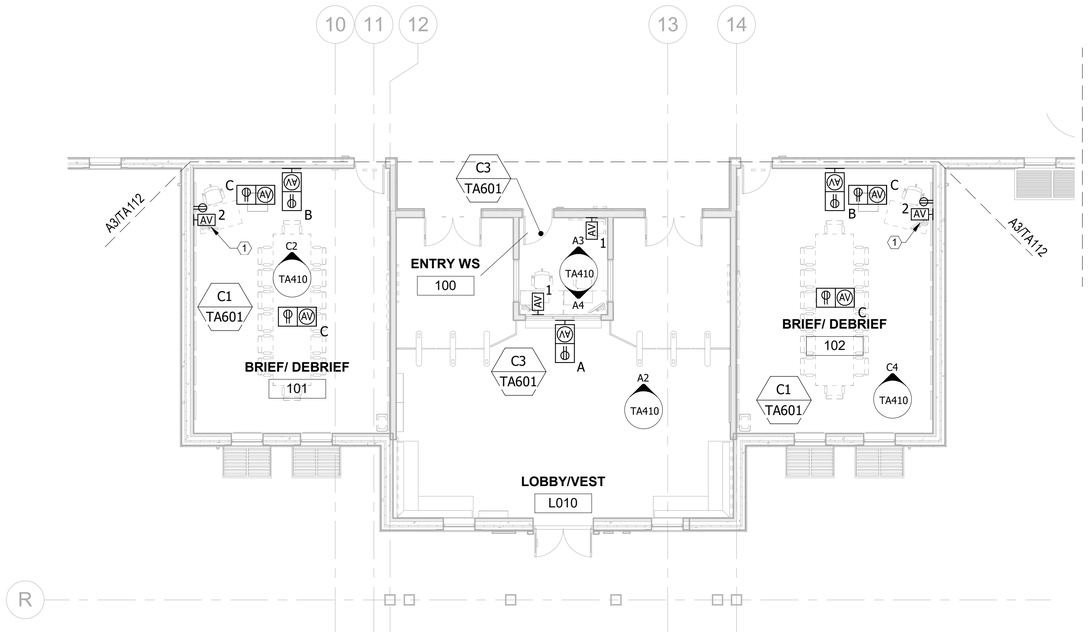

AUDIOVISUAL - FLOOR PLAN - AREA D

SCALE: 1/8" = 1'-0"

C3

KEYNOTE LEGEND

1	18" AFF, COORDINATE FINAL LOCATION WITH ELECTRICAL AND TELECOM PRIOR TO INSTALLATION.

KEYPLAN

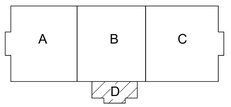

0 48" 96" 192"

SCALE: 1/8" = 12"

N

APPR	DATE	DESCRIPTION	SYM

NAVFAC

PRELIMINARY NOT FOR CONSTRUCTION

SEAL

IRQ W.M. Jordan COMPANY ~ A JOINT VENTURE ~

Michael Baker INTERNATIONAL

100 AIRSIDE DRIVE
MOON TOWNSHIP, PA 15108 A/E INFO

APPROVED

FOR COMMANDER NAVFAC

ACTIVITY
MARINE CORPS BASE
CAMP LEJEUNE

SATISFACTORY TO DATE

DES AS	DRW AV	CHK BM

PM

BRANCH MANAGER

CHIEF ENG/ARCH

FIRE PROTECTION

DEPARTMENT OF THE NAVY
NAVAL FACILITIES ENGINEERING COMMAND
ROICC FLORENCE CAMP LEJEUNE
MCB CAMP LEJEUNE

NAVAL FACILITIES ENGINEERING COMMAND ~ MID-ATLANTIC
JACKSONVILLE, NC

JACKSONVILLE, NC
P1338F II MEF SIMULATION/TRAINING CENTER
REPLACEMENT

AUDIOVISUAL - FLOOR PLAN - AREA D

SCALE:	AS NOTED
EPROJECT NO.:	
CONSTR. CONTR. NO.	N40085-20-C-0059
NAVFAC DRAWING NO.	
SHEET	OF

TA114

DP2 SUBMISSION – P1338 BUILDING PRE-FINAL SUBMISSION

PLOTTED: 6/9/2021 6:52:18 AM

FILE NAME: BIM 360://HF PACKAGE 3/P1338_MEF SIM CTR-1590892-T.rvt



AUDIOVISUAL - REFLECTED CEILING PLAN - AREA B

SCALE: 1/8" = 1'-0"

A3

KEYPLAN

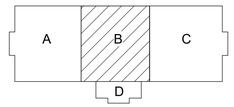

0 48" 96" 192"

SCALE: 1/8" = 12"

N

APPR	
DATE	
DESCRIPTION	
SYM	

NAVFAC

PRELIMINARY
NOT FOR CONSTRUCTION

SEAL

RQ W.M. Jordan COMPANY ~ A JOINT VENTURE ~

Michael Baker INTERNATIONAL

100 AIRSIDE DRIVE
MOON TOWNSHIP, PA 15108

A/E INFO

APPROVED

FOR COMMANDER NAVFAC

ACTIVITY
MARINE CORPS BASE
CAMP LEJEUNE

SATISFACTORY TO DATE

DES AS | DRW AV | CHK BM

PM

BRANCH MANAGER

CHIEF ENG/ARCH

FIRE PROTECTION

DEPARTMENT OF THE NAVY
NAVAL FACILITIES ENGINEERING COMMAND
ROICC FLORENCE CAMP LEJEUNE

NAVAL FACILITIES ENGINEERING COMMAND ~ MID-ATLANTIC
JACKSONVILLE, NC

MCB CAMP LEJEUNE
P1338F II MEF SIMULATION/TRAINING CENTER
REPLACEMENT
JACKSONVILLE, NC

AUDIOVISUAL - REFLECTED CEILING PLAN - AREA B

SCALE: AS NOTED

EPROJECT NO.:

CONSTR. CONTR. NO.
N40085-20-C-0059

NAVFAC DRAWING NO.

SHEET OF

TR112

DP2 SUBMISSION – P1338 BUILDING PRE-FINAL SUBMISSION

PLOTTED: 6/9/2021 6:52:38 AM

FILE NAME: BIM 360://HF PACKAGE 3/P1338_MEF SIM CTR-1590892-T.rvt

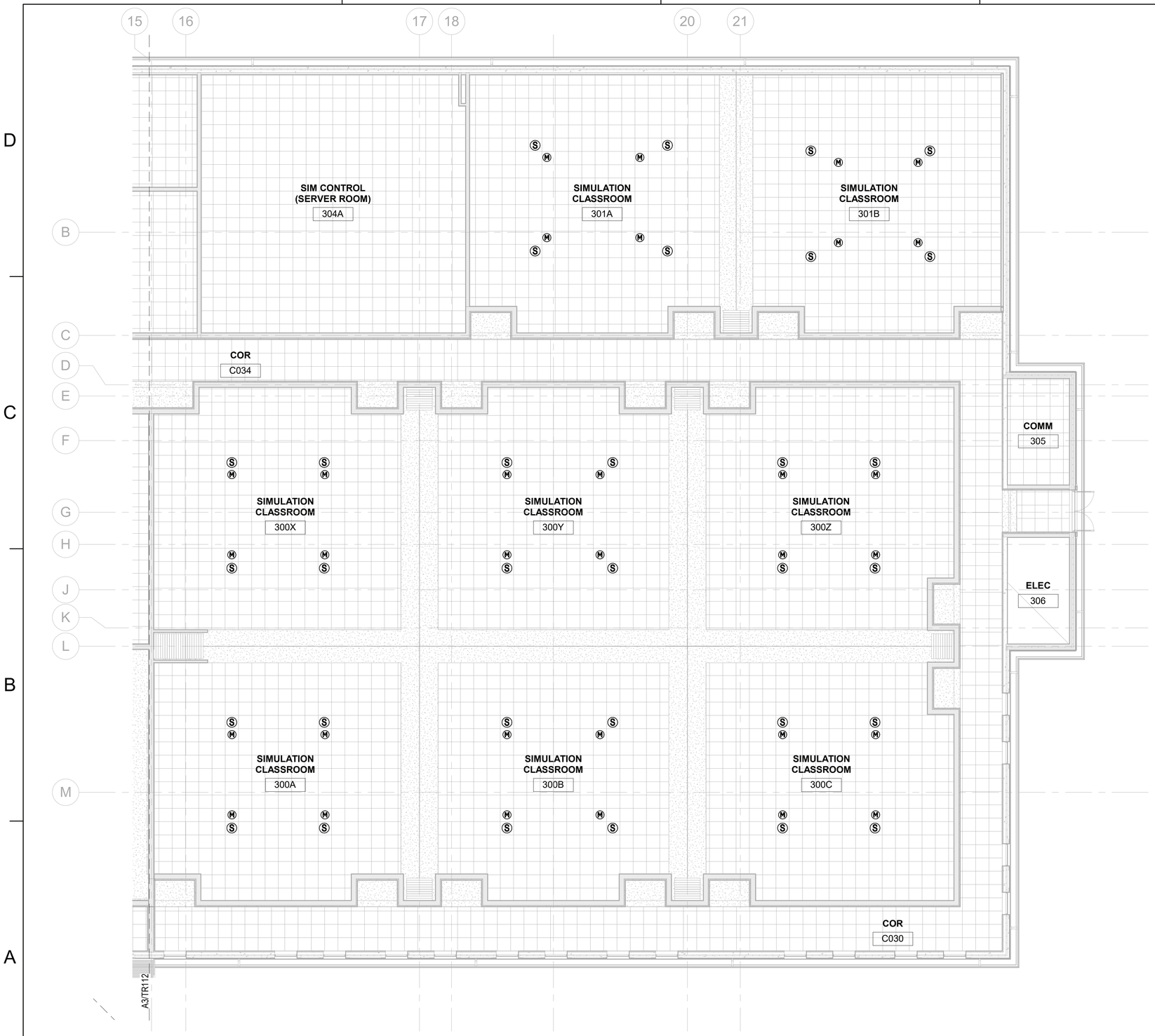

AUDIOVISUAL - REFLECTED CEILING PLAN - AREA C

SCALE: 1/8" = 1'-0"

A4

KEYPLAN

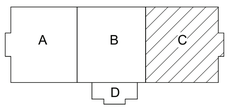

0 48" 96" 192"

SCALE: 1/8" = 12"

N

APPR	
DATE	
DESCRIPTION	
SYM	

NAVFAC

PRELIMINARY NOT FOR CONSTRUCTION

SEAL

IRQ WM Jordan COMPANY ~ A JOINT VENTURE ~

Michael Baker INTERNATIONAL

100 AIRSIDE DRIVE
MOON TOWNSHIP, PA 15108 A/E INFO

APPROVED

FOR COMMANDER NAVFAC

ACTIVITY
MARINE CORPS BASE CAMP LEJEUNE

SATISFACTORY TO DATE

DES AS | DRW AV | CHK BM

PM

BRANCH MANAGER

CHIEF ENG/ARCH

FIRE PROTECTION

DEPARTMENT OF THE NAVY
NAVAL FACILITIES ENGINEERING COMMAND
ROICC FLORENCE CAMP LEJEUNE

NAVAL FACILITIES ENGINEERING COMMAND ~ MID-ATLANTIC
JACKSONVILLE, NC

MCB CAMP LEJEUNE
JACKSONVILLE, NC
P1338F II MEF SIMULATION/TRAINING CENTER REPLACEMENT

AUDIOVISUAL - REFLECTED CEILING PLAN - AREA C

SCALE: AS NOTED

EPROJECT NO.:

CONSTR. CONTR. NO.
N40085-20-C-0059

NAVFAC DRAWING NO.

SHEET OF

TR113

DP2 SUBMISSION – P1338 BUILDING PRE-FINAL SUBMISSION

PLOTTED: 6/9/2021 6:52:40 AM

FILE NAME: BIM 360://HF PACKAGE 3/P1338_MEF SIM CTR-1590892-T.rvt

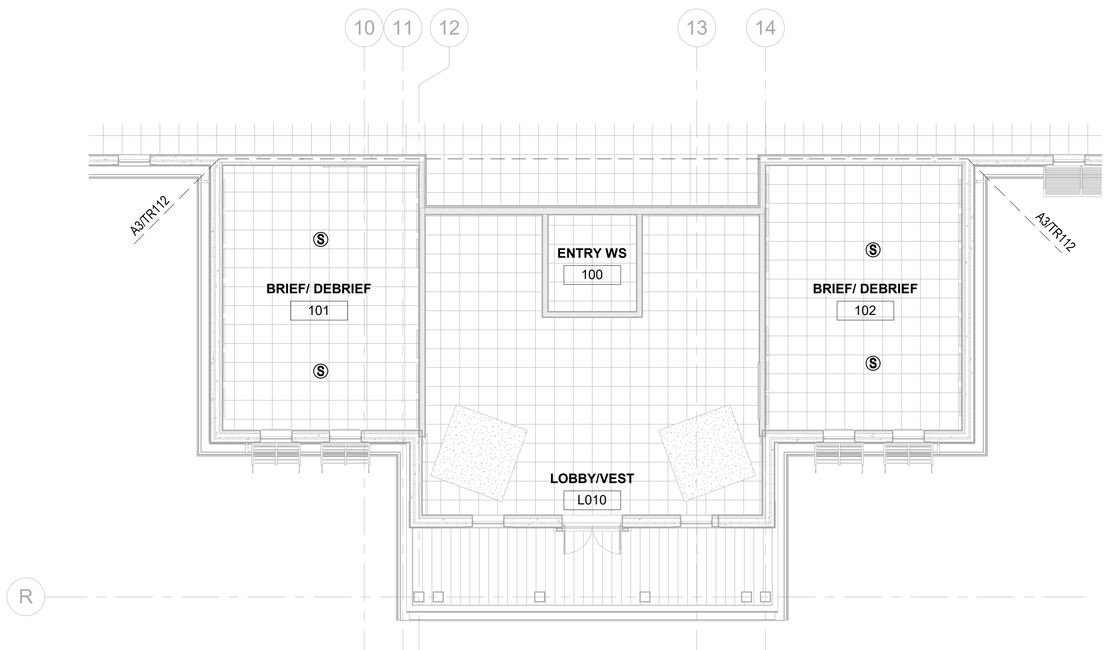

AUDIOVISUAL - REFLECTED CEILING PLAN - AREA D

C3

SCALE: 1/8" = 1'-0"

KEYPLAN

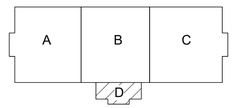

0 48" 96" 192"

SCALE: 1/8" = 12"

N

APPR | DATE | DESCRIPTION | NO'S

NAVFAC

PRELIMINARY
NOT FOR CONSTRUCTION

SEAL

IRQ Jordan COMPANY – A JOINT VENTURE –

Michael Baker INTERNATIONAL

100 AIRSIDE DRIVE
MOON TOWNSHIP, PA 15108 A/E INFO

APPROVED

FOR COMMANDER NAVFAC

ACTIVITY
MARINE CORPS BASE
CAMP LEJEUNE

SATISFACTORY TO DATE

DES AS | DRW AV | CHK BM

PM

BRANCH MANAGER

CHIEF ENG/ARCH

FIRE PROTECTION

DEPARTMENT OF THE NAVY
NAVAL FACILITIES ENGINEERING COMMAND
ROICC FLORENCE CAMP LEJEUNE

NAVAL FACILITIES ENGINEERING COMMAND ~ MID-ATLANTIC
JACKSONVILLE, NC

MCB CAMP LEJEUNE
JACKSONVILLE, NC
P1338F II MEF SIMULATION/TRAINING CENTER
REPLACEMENT

AUDIOVISUAL - REFLECTED CEILING PLAN - AREA D

SCALE: AS NOTED

EPROJECT NO.:

CONSTR. CONTR. NO.
N40085-20-C-0059

NAVFAC DRAWING NO.

SHEET OF

TR114

DP2 SUBMISSION – P1338 BUILDING PRE-FINAL SUBMISSION

PLOTTED: 6/9/2021 6:52:40 AM

FILE NAME: BIM 360://HF PACKAGE 3/P1338_MEF SIM CTR-1590892-T.rvt

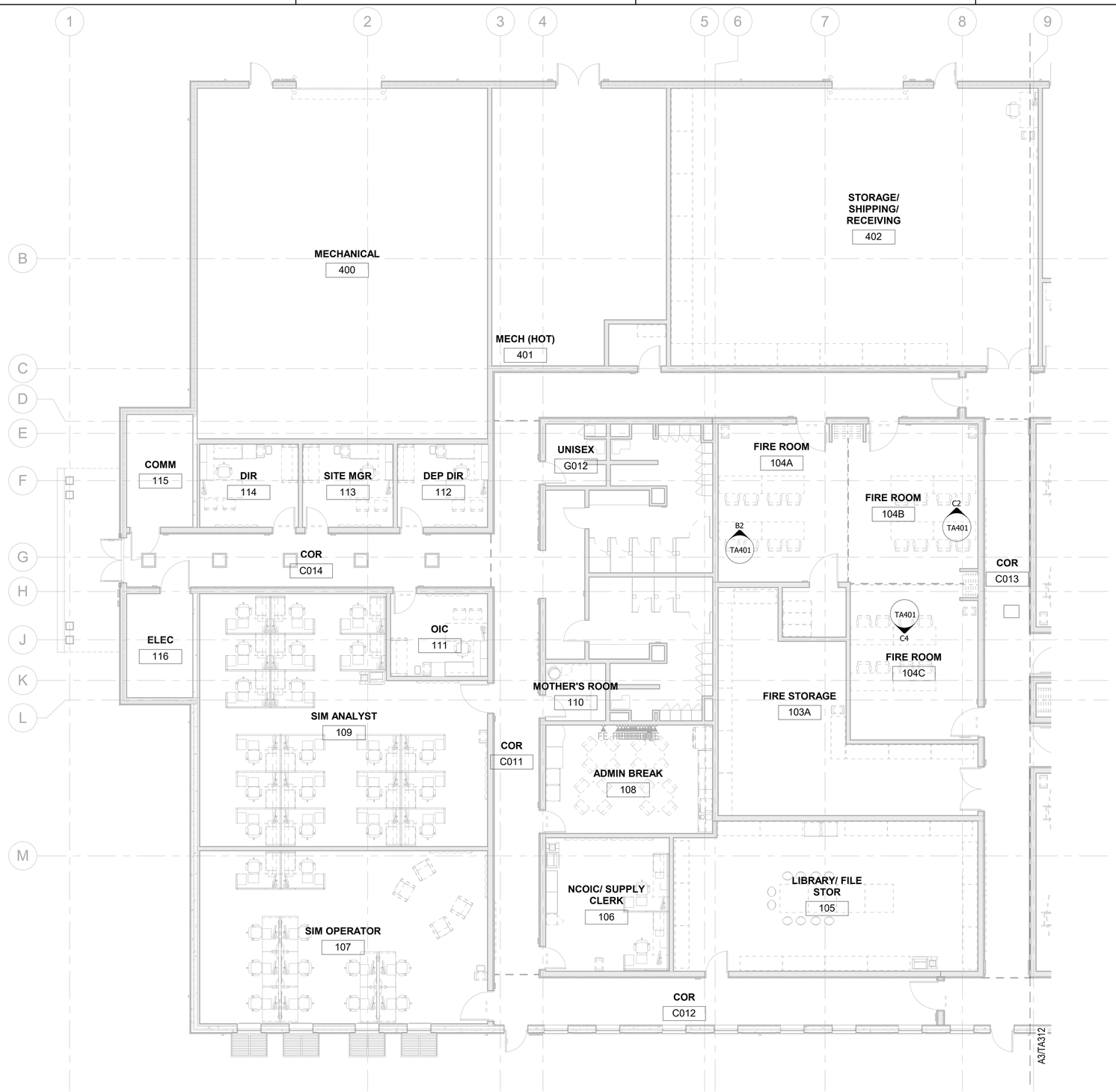

EQUIPMENT - FLOOR PLAN - AREA A

SCALE: 1/8" = 1'-0"

A4

KEYPLAN

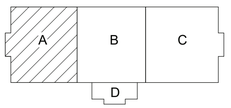

0 48" 96" 192"

SCALE: 1/8" = 12"

N

APPR	
DATE	
DESCRIPTION	
SYM	

NAVFAC

PRELIMINARY
NOT FOR CONSTRUCTION

SEAL

IRQ Jordan COMPANY – A JOINT VENTURE –

Michael Baker
INTERNATIONAL

100 AIRSIDE DRIVE
MOON TOWNSHIP, PA 15108

A/E INFO

APPROVED

FOR COMMANDER NAVFAC

ACTIVITY
MARINE CORPS BASE
CAMP LEJEUNE

SATISFACTORY TO DATE

DES	AS	DRW	AV	CHK	BM

PM

BRANCH MANAGER

CHIEF ENG/ARCH

FIRE PROTECTION

DEPARTMENT OF THE NAVY
NAVAL FACILITIES ENGINEERING COMMAND
ROICC FLORENCE CAMP LEJEUNE
MCB CAMP LEJEUNE

NAVAL FACILITIES ENGINEERING COMMAND – MID-ATLANTIC
JACKSONVILLE, NC

JACKSONVILLE, NC
P1338F II MEF SIMULATION/TRAINING CENTER
REPLACEMENT

EQUIPMENT - FLOOR PLAN - AREA A

SCALE:	AS NOTED
EPROJECT NO.:	
CONSTR. CONTR. NO.	N40085-20-C-0059
NAVFAC DRAWING NO.	
SHEET	OF

TA311

DP2 SUBMISSION – P1338 BUILDING PRE-FINAL SUBMISSION

PLOTTED: 6/9/2021 6:52:19 AM

FILE NAME: BIM 360://HF PACKAGE 3/P1338_MEF SIM CTR-1590892-T.rvt

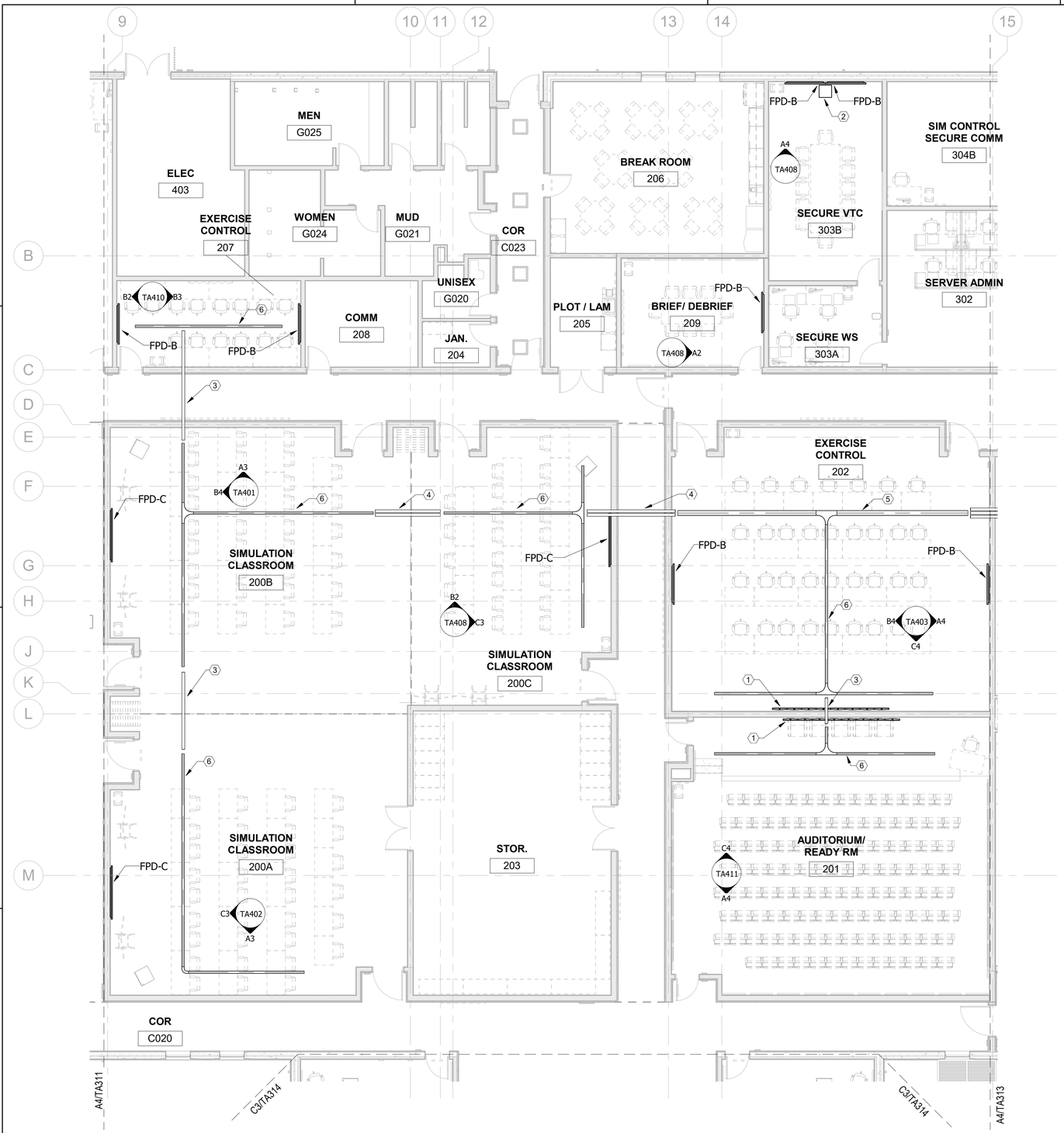

KEYNOTE LEGEND

1	LED VIDEO WALL, PROVIDED BY AVC.
2	AUDIOVISUAL EQUIPMENT RACK, PROVIDED BY AVC.
3	PROVIDE ONE (1) 4" CONDUIT SLEEVES FOR HORIZONTAL CABLE DISTRIBUTION, REFER TO TELECOM DRAWINGS FOR INSTALLATION DETAILS.
4	PROVIDE TWO (2) 4" CONDUIT SLEEVES FOR HORIZONTAL CABLE DISTRIBUTION, REFER TO TELECOM DRAWINGS FOR INSTALLATION DETAILS.
5	PROVIDE 8" X 4" WIRE-BASKET TYPE CABLE TRAY MOUNTED ABOVE ACCESSIBLE CEILING; COORDINATE TRAY PLACEMENT WITH OTHER TRADES.
6	PROVIDE 4" X 4" WIRE-BASKET TYPE CABLE TRAY MOUNTED ABOVE ACCESSIBLE CEILING; COORDINATE TRAY PLACEMENT WITH OTHER TRADES.

KEYPLAN

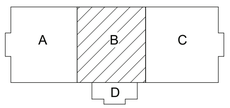

0 48" 96" 192"

SCALE: 1/8" = 12"

N

EQUIPMENT - FLOOR PLAN - AREA B

SCALE: 1/8" = 1'-0"

A3

NO.	DESCRIPTION	DATE	APPR

NAVFAC

PRELIMINARY NOT FOR CONSTRUCTION

SEAL

IRQ W.M. Jordan COMPANY – A JOINT VENTURE –

Michael Baker INTERNATIONAL

100 AIRSIDE DRIVE
MOON TOWNSHIP, PA 15108

A/E INFO

APPROVED

FOR COMMANDER NAVFAC

ACTIVITY
MARINE CORPS BASE CAMP LEJEUNE

SATISFACTORY TO DATE

DES AS | DRW AV | CHK BM

PM

BRANCH MANAGER

CHIEF ENG/ARCH

FIRE PROTECTION

DEPARTMENT OF THE NAVY
NAVAL FACILITIES ENGINEERING COMMAND
ROICC FLORENCE CAMP LEJEUNE

NAVAL FACILITIES ENGINEERING COMMAND – MID-ATLANTIC
JACKSONVILLE, NC

MCB CAMP LEJEUNE
JACKSONVILLE, NC

P1338F II MEF SIMULATION/TRAINING CENTER REPLACEMENT

EQUIPMENT - FLOOR PLAN - AREA B

SCALE: AS NOTED

EPROJECT NO.:

CONSTR. CONTR. NO.
N40085-20-C-0059

NAVFAC DRAWING NO.

SHEET OF

TA312

DP2 SUBMISSION – P1338 BUILDING PRE-FINAL SUBMISSION

PLOTTED: 6/9/2021 6:52:22 AM

FILE NAME: BIM 360://HF PACKAGE 3/P1338_MEF SIM CTR-15908892-T.rvt

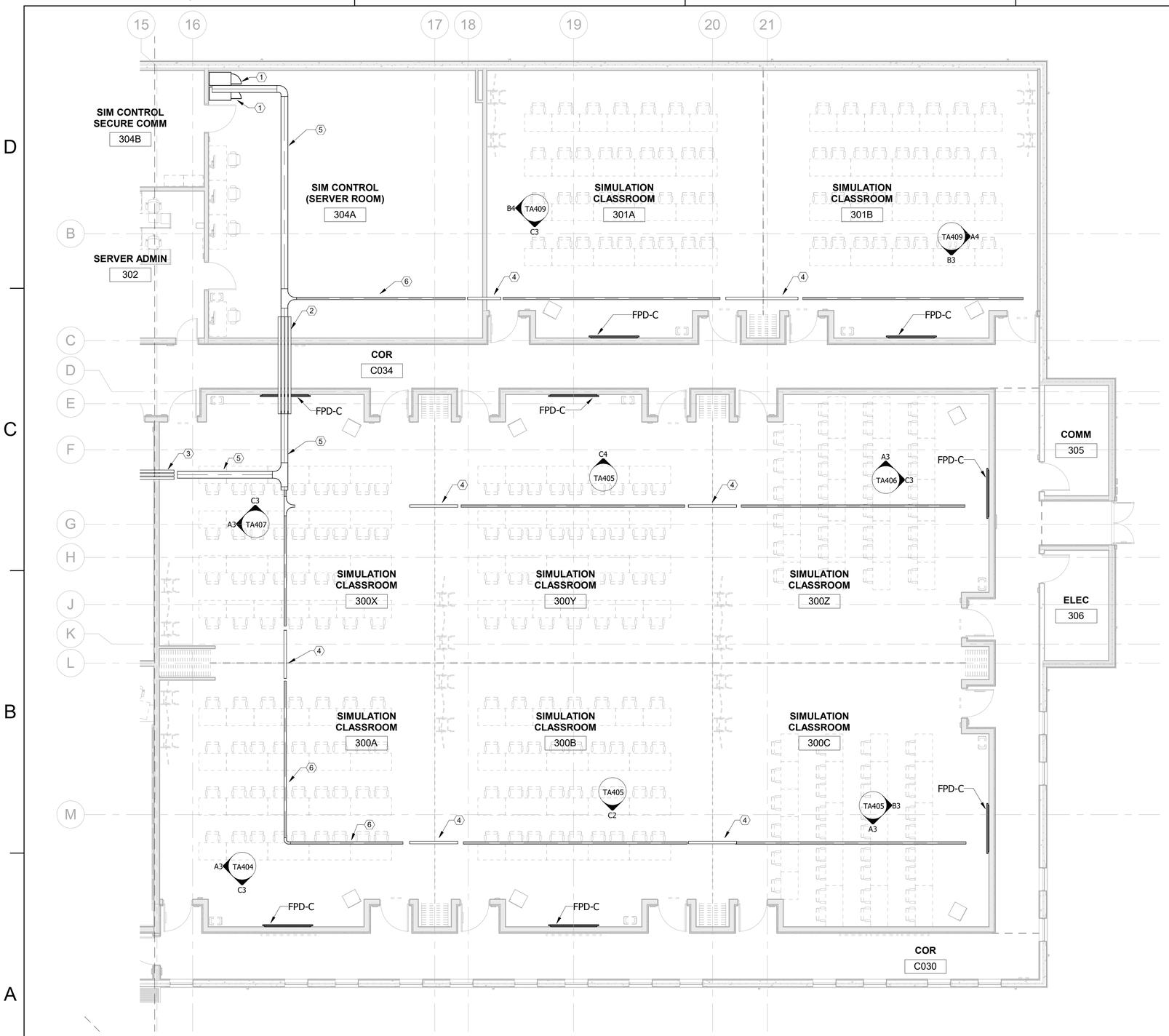

EQUIPMENT - FLOOR PLAN - AREA C

SCALE: 1/8" = 1'-0"

A4

KEYNOTE LEGEND

1	AUDIOVISUAL EQUIPMENT RACK, PROVIDED BY AVC.
2	PROVIDE FOUR (4) 4" CONDUIT SLEEVES FOR HORIZONTAL CABLE DISTRIBUTION, REFER TO TELECOM DRAWINGS FOR INSTALLATION DETAILS.
3	PROVIDE THREE (3) 4" CONDUIT SLEEVES FOR HORIZONTAL CABLE DISTRIBUTION, REFER TO TELECOM DRAWINGS FOR INSTALLATION DETAILS.
4	PROVIDE ONE (1) 4" CONDUIT SLEEVES FOR HORIZONTAL CABLE DISTRIBUTION, REFER TO TELECOM DRAWINGS FOR INSTALLATION DETAILS.
5	PROVIDE 12" X 4" WIRE-BASKET TYPE CABLE TRAY MOUNTED ABOVE ACCESSIBLE CEILING; COORDINATE TRAY PLACEMENT WITH OTHER TRADES.
6	PROVIDE 4" X 4" WIRE-BASKET TYPE CABLE TRAY MOUNTED ABOVE ACCESSIBLE CEILING; COORDINATE TRAY PLACEMENT WITH OTHER TRADES.

KEYPLAN

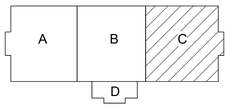

0 48" 96" 192"

SCALE: 1/8" = 12"

N

SYM	DESCRIPTION	DATE	APPR

NAVFAC

PRELIMINARY NOT FOR CONSTRUCTION

SEAL

RQ W.M. Jordan COMPANY - A JOINT VENTURE -

Michael Baker INTERNATIONAL

100 AIRSIDE DRIVE
MOON TOWNSHIP, PA 15108

A/E INFO

APPROVED

FOR COMMANDER NAVFAC

ACTIVITY
MARINE CORPS BASE CAMP LEJEUNE

SATISFACTORY TO DATE

DES AS | DRW AV | CHK BM

PM

BRANCH MANAGER

CHIEF ENG/ARCH

FIRE PROTECTION

DEPARTMENT OF THE NAVY
NAVAL FACILITIES ENGINEERING COMMAND
NAVAL FACILITIES ENGINEERING COMMAND ~ MID-ATLANTIC
ROICC FLORENCE CAMP LEJEUNE
JACKSONVILLE, NC

MCB CAMP LEJEUNE
JACKSONVILLE, NC

P1338F II MEF SIMULATION/TRAINING CENTER REPLACEMENT

EQUIPMENT - FLOOR PLAN - AREA C

SCALE: AS NOTED

EPROJECT NO.:

CONSTR. CONTR. NO.
N40085-20-C-0059

NAVFAC DRAWING NO.

SHEET OF

TA313

DP2 SUBMISSION – P1338 BUILDING PRE-FINAL SUBMISSION

PLOTTED: 6/9/2021 6:52:24 AM

FILE NAME: BIM 360://HF PACKAGE 3/P1338_MEF SIM CTR-1590892-T.rvt

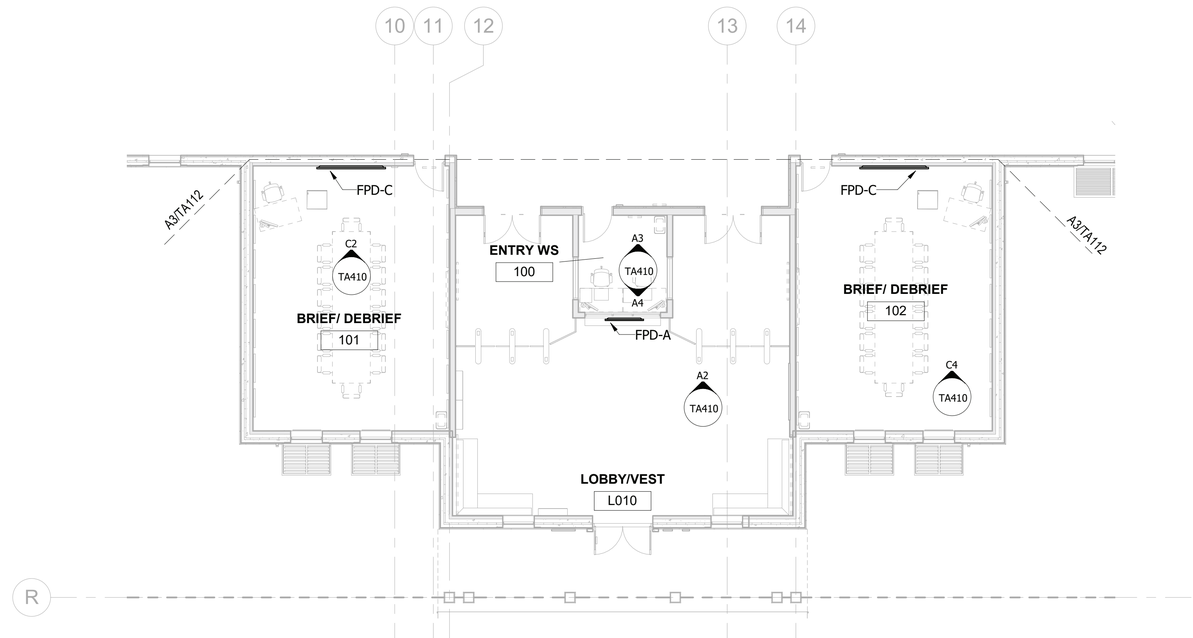

EQUIPMENT - FLOOR PLAN - AREA D

SCALE: 1/8" = 1'-0"

C3

KEYPLAN

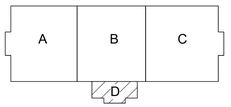

0 48" 96" 192"

SCALE: 1/8" = 12"

N

APPR	DATE	DESCRIPTION	SYM

PRELIMINARY
NOT FOR CONSTRUCTION

SEAL

IRQ W.M. Jordan COMPANY – A JOINT VENTURE –

Michael Baker INTERNATIONAL

100 AIRSIDE DRIVE
MOON TOWNSHIP, PA 15108 A/E INFO

APPROVED

FOR COMMANDER NAVFAC

ACTIVITY
MARINE CORPS BASE
CAMP LEJEUNE

SATISFACTORY TO DATE

DES AS	DRW AV	CHK BM

PM

BRANCH MANAGER

CHIEF ENG/ARCH

FIRE PROTECTION

DEPARTMENT OF THE NAVY
NAVAL FACILITIES ENGINEERING COMMAND
ROICC FLORENCE CAMP LEJEUNE

NAVAL FACILITIES ENGINEERING COMMAND ~ MID-ATLANTIC
JACKSONVILLE, NC

MCB CAMP LEJEUNE
JACKSONVILLE, NC
P1338F II MEF SIMULATION/TRAINING CENTER
REPLACEMENT

EQUIPMENT - FLOOR PLAN - AREA D

SCALE: AS NOTED

EPROJECT NO.:

CONSTR. CONTR. NO.
N40085-20-C-0059

NAVFAC DRAWING NO.

SHEET OF

TA314

DP2 SUBMISSION – P1338 BUILDING PRE-FINAL SUBMISSION

PLOTTED: 6/9/2021 6:52:24 AM

FILE NAME: BIM 360://HF PACKAGE 3/P1338_MEF SIM CTR-1590892-T.rvt

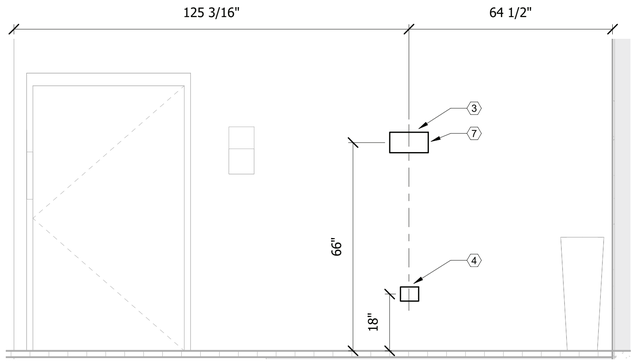

FIRE ROOM 104B
SCALE: 1/2" = 1'-0"
C2

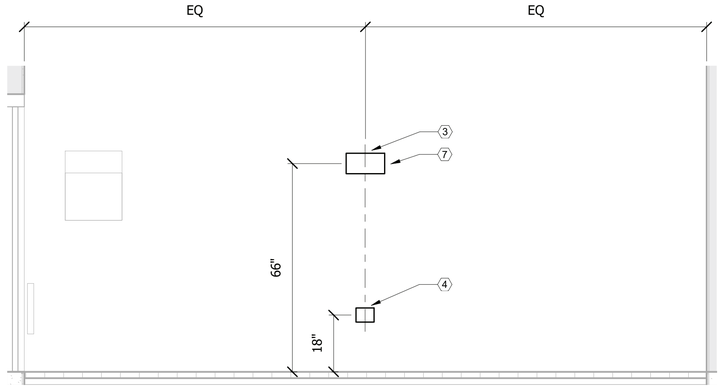

FIRE ROOM 104C
SCALE: 1/2" = 1'-0"
C4

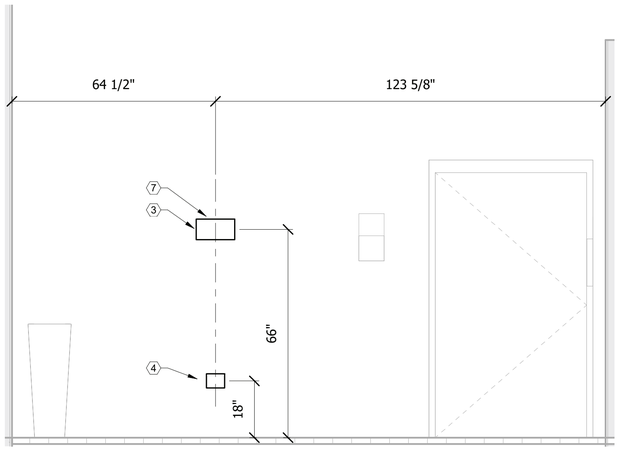

FIRE ROOM 104A
SCALE: 1/2" = 1'-0"
B2

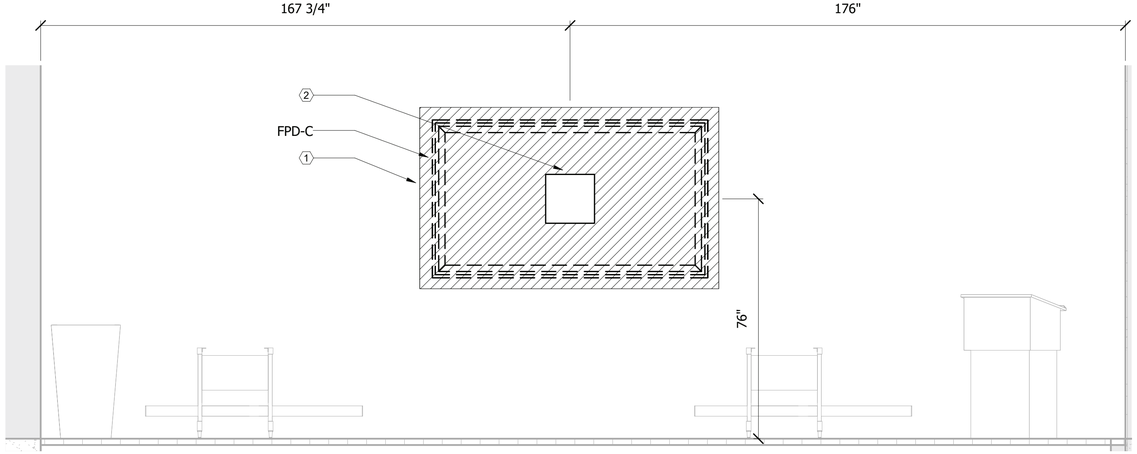

SIMULATION CLASSROOM 200B
SCALE: 1/2" = 1'-0"
TA112
B4

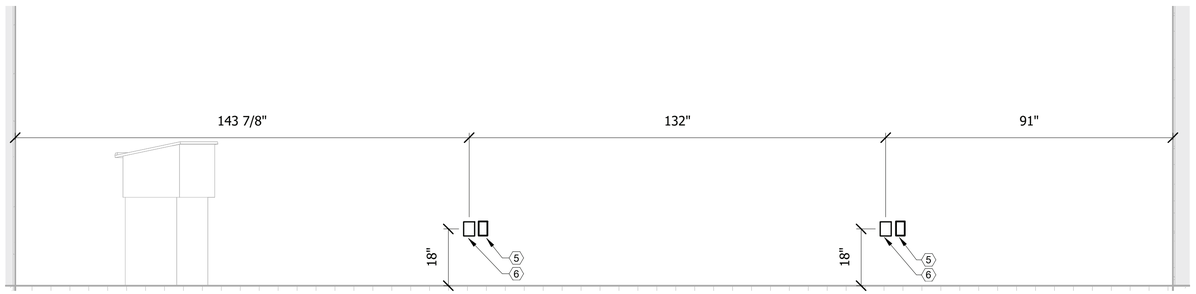

SIMULATION CLASSROOM 200B
SCALE: 1/2" = 1'-0"
A3

0 12" 24" 48"
SCALE: 1/2" = 12"

KEYNOTE LEGEND

1	BACKING TO SUPPORT FIVE TIMES WEIGHT OF DISPLAY AND MOUNT
2	CHIEF PAC 526 (DUPLEX, 2D) SEE DETAIL A2/TA501
3	FSR PWB-100 (DUPLEX, 2D) SEE DETAIL A3/TA502
4	TWO GANG AV BACK BOX
5	DUPLEX RECEPTACLE
6	ONE GANG AV BACK BOX
7	PROVIDE FSR PWB-100-WHT-C USED TO COVER FSR PWB-100-B.

SYM	DESCRIPTION	DATE	APPR

NAVFAC

PRELIMINARY NOT FOR CONSTRUCTION

SEAL

IRQ W.M. Jordan COMPANY ~ A JOINT VENTURE ~

Michael Baker INTERNATIONAL
100 AIRSIDE DRIVE
MOON TOWNSHIP, PA 15108
A/E INFO

APPROVED

FOR COMMANDER NAVFAC

ACTIVITY
MARINE CORPS BASE
CAMP LEJEUNE

SATISFACTORY TO DATE

DES	DRW	CHK
AS	AV	BM

PM

BRANCH MANAGER

CHIEF ENG/ARCH

FIRE PROTECTION

DEPARTMENT OF THE NAVY
NAVAL FACILITIES ENGINEERING COMMAND ~ MID-ATLANTIC
ROICC FLORENCE CAMP LEJEUNE
MCB CAMP LEJEUNE

NAVAL FACILITIES ENGINEERING COMMAND
JACKSONVILLE, NC

JACKSONVILLE, NC
P1338F II MEF SIMULATION/TRAINING CENTER
REPLACEMENT

AUDIOVISUAL - ELEVATIONS

SCALE:	AS NOTED
EPROJECT NO.:	
CONSTR. CONTR. NO.	N40085-20-C-0059
NAVFAC DRAWING NO.	
SHEET	OF

TA401

DP2 SUBMISSION – P1338 BUILDING PRE-FINAL SUBMISSION

PLOTTED: 6/8/2021 6:52:26 AM

FILE NAME: BIM 360://HF PACKAGE 3/P1338_MEF SIM CTR-1590892-T.rvt

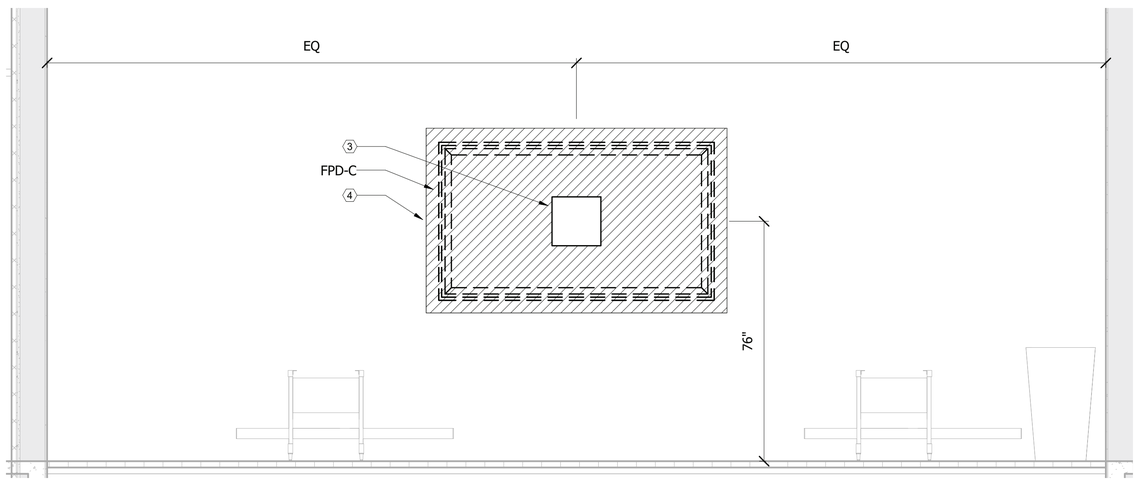

SIMULATION CLASSROOM 200A

SCALE: 1/2" = 1'-0"

C3

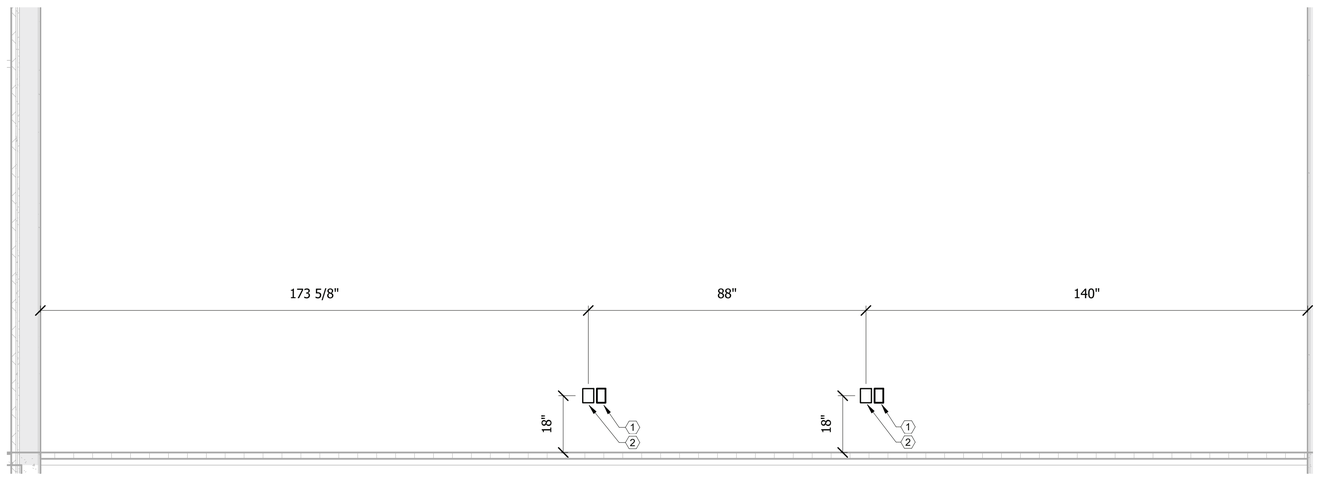

SIMULATION CLASSROOM 200A

SCALE: 1/2" = 1'-0"

A3

KEYNOTE LEGEND

1	DUPLEX RECEPTACLE
2	ONE GANG AV BACK BOX
3	CHIEF PAC 526 (DUPLEX, 2D) SEE DETAIL A2/TA501
4	BACKING TO SUPPORT FIVE TIMES WEIGHT OF DISPLAY AND MOUNT

0 12" 24" 48"

SCALE: 1/2" = 12"

APPR	DATE	DESCRIPTION	SYM

PRELIMINARY NOT FOR CONSTRUCTION

SEAL

IRQ Wm. Jordan COMPANY ~ A JOINT VENTURE ~

Michael Baker INTERNATIONAL

100 AIRSIDE DRIVE
MOON TOWNSHIP, PA 15108 A/E INFO

APPROVED

FOR COMMANDER NAVFAC

ACTIVITY
MARINE CORPS BASE
CAMP LEJEUNE

SATISFACTORY TO DATE

DES AS | DRW AV | CHK BM

PM

BRANCH MANAGER

CHIEF ENG/ARCH

FIRE PROTECTION

DEPARTMENT OF THE NAVY
NAVAL FACILITIES ENGINEERING COMMAND ~ MID-ATLANTIC
ROICC FLORENCE CAMP LEJEUNE
MCB CAMP LEJEUNE

NAVAL FACILITIES ENGINEERING COMMAND
JACKSONVILLE, NC

JACKSONVILLE, NC
P1338F II MEF SIMULATION/TRAINING CENTER
REPLACEMENT

AUDIOVISUAL - ELEVATIONS

SCALE: AS NOTED

EPROJECT NO.:

CONSTR. CONTR. NO.
N40085-20-C-0059

NAVFAC DRAWING NO.

SHEET OF

TA402

DP2 SUBMISSION – P1338 BUILDING PRE-FINAL SUBMISSION

PLOTTED: 6/9/2021 6:52:26 AM

FILE NAME: BIM 360://HF PACKAGE 3/P1338_MEF SIM CTR-1590892-T.rvt

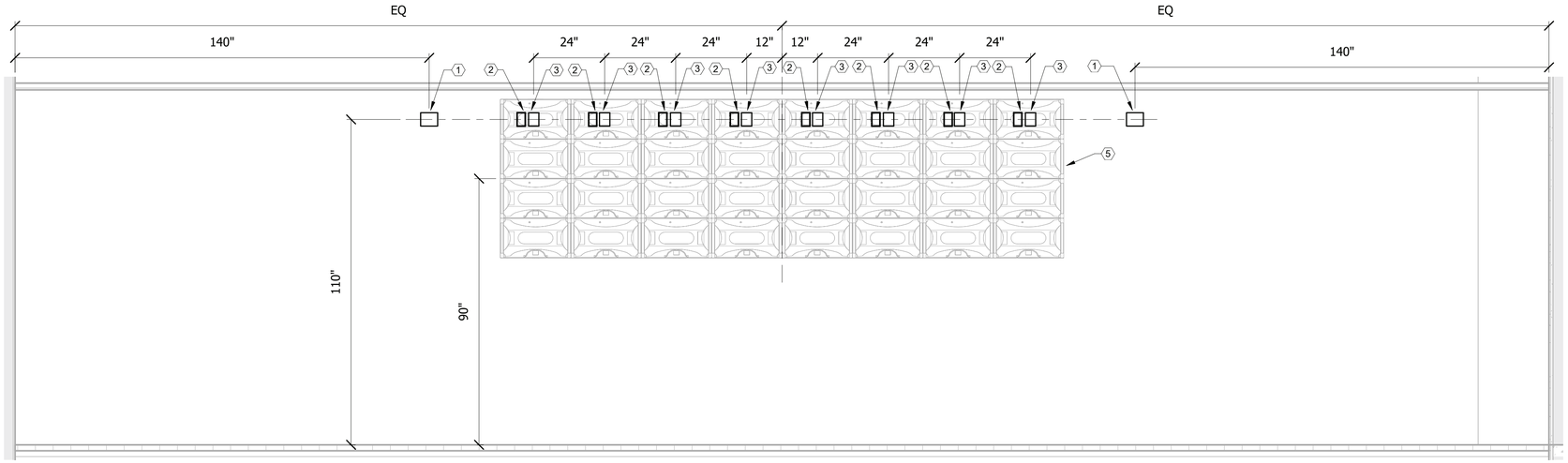

EXERCISE CONTROL 202

SCALE: 1/2" = 1'-0"

C4

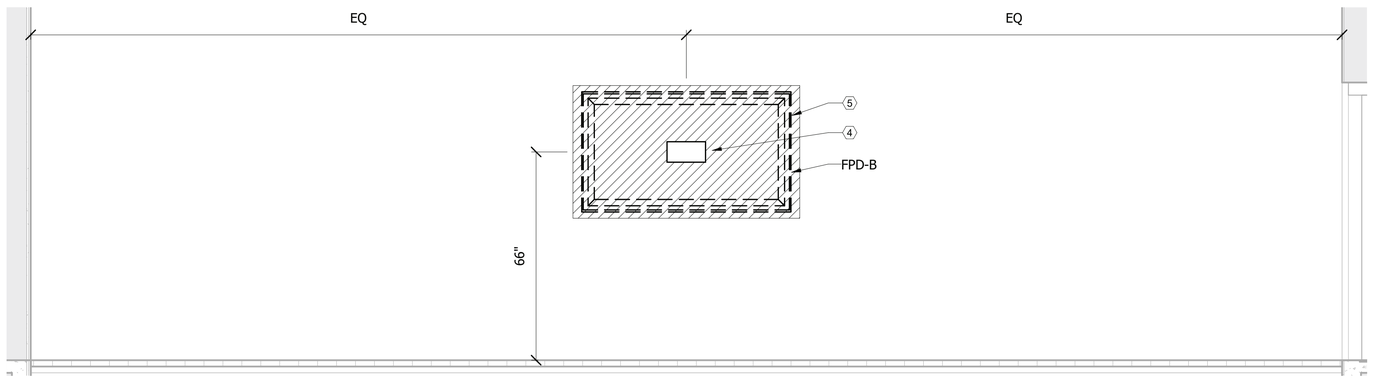

EXERCISE CONTROL 202

SCALE: 1/2" = 1'-0"

B4

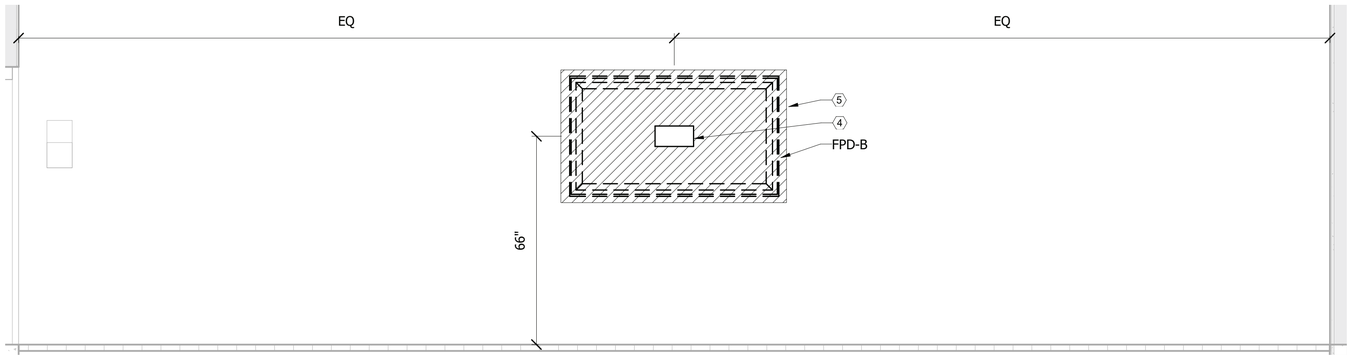

EXERCISE CONTROL 202

SCALE: 1/2" = 1'-0"

A4

KEYNOTE LEGEND

1	TWO GANG AV BACK BOX FOR WALL MOUNTED CAMERAS
2	RECESSED CLOCK RECEPTACLE
3	ONE GANG AV BACK BOX
4	FSR PWB-100 (DUPLEX, 2D) SEE DETAIL A3/TA502
5	BACKING TO SUPPORT FIVE TIMES WEIGHT OF DISPLAY AND MOUNT

APPR | DATE | DESCRIPTION | SYM

NAVFAC

PRELIMINARY NOT FOR CONSTRUCTION

SEAL

IRQ WM Jordan COMPANY – A JOINT VENTURE –

Michael Baker INTERNATIONAL

100 AIRSIDE DRIVE
MOON TOWNSHIP, PA 15108 A/E INFO

APPROVED

FOR COMMANDER NAVFAC

ACTIVITY
MARINE CORPS BASE
CAMP LEJEUNE

SATISFACTORY TO DATE

DES AS | DRW AV | CHK BM

PM

BRANCH MANAGER

CHIEF ENG/ARCH

FIRE PROTECTION

DEPARTMENT OF THE NAVY
NAVAL FACILITIES ENGINEERING COMMAND – MID-ATLANTIC
ROICC FLORENCE CAMP LEJEUNE
MCB CAMP LEJEUNE

NAVAL FACILITIES ENGINEERING COMMAND – MID-ATLANTIC
JACKSONVILLE, NC

JACKSONVILLE, NC

P1338F II MEF SIMULATION/TRAINING CENTER REPLACEMENT

AUDIOVISUAL - ELEVATIONS

SCALE: AS NOTED

EPROJECT NO.:

CONSTR. CONTR. NO.
N40085-20-C-0059

NAVFAC DRAWING NO.

SHEET OF

TA403

0 12" 24" 48"
SCALE: 1/2" = 12"

DP2 SUBMISSION – P1338 BUILDING PRE-FINAL SUBMISSION

PLOTTED: 6/9/2021 6:52:27 AM

FILE NAME: BIM 360://HF PACKAGE 3/P1338_MEF SIM CTR-1590892-T.rvt

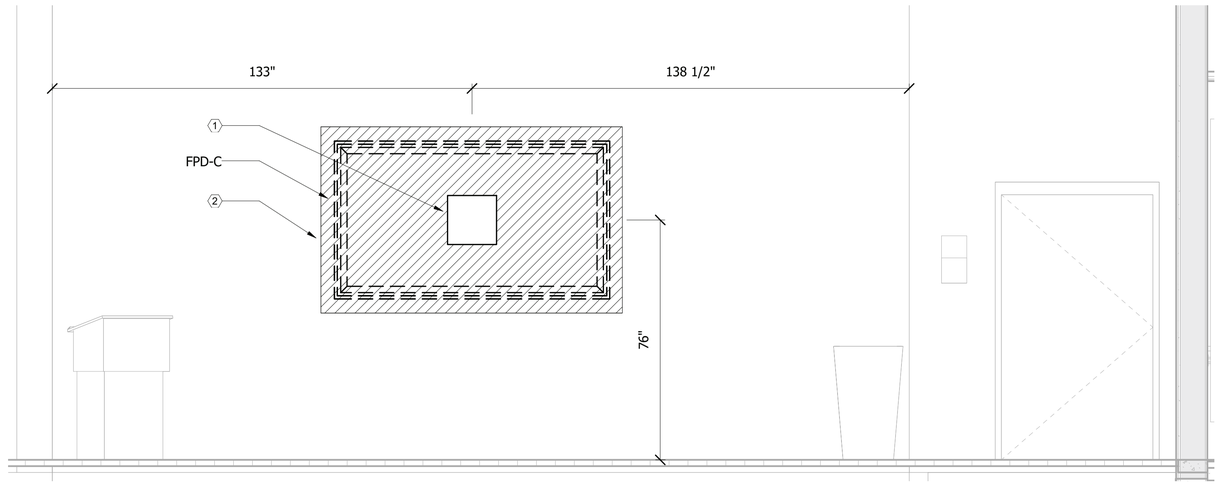

SIMULATION CLASSROOM 300A

SCALE: 1/2" = 1'-0"

C3

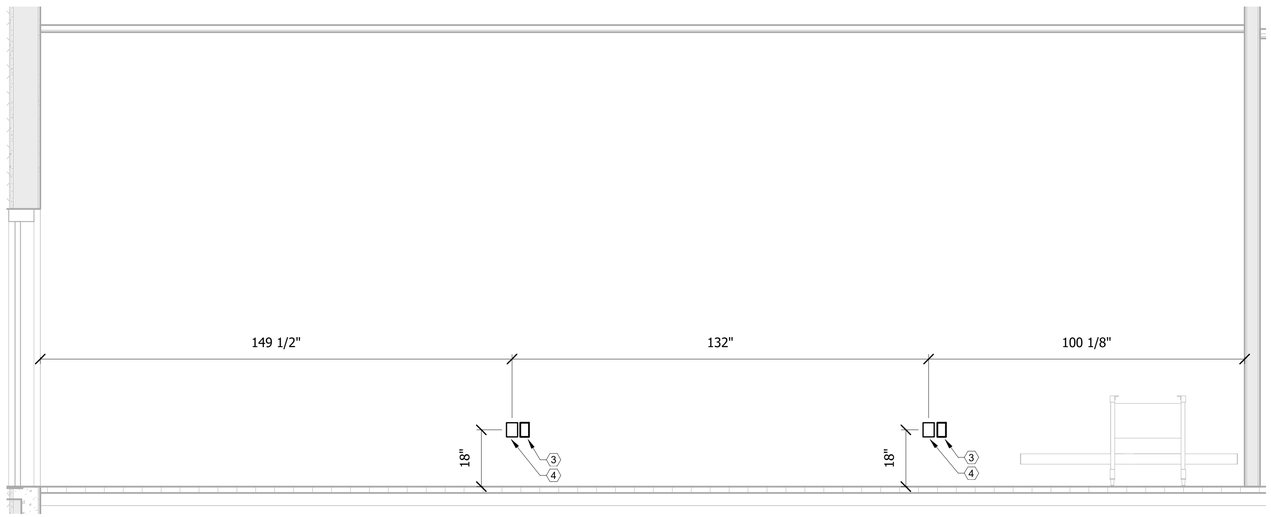

SIMULATION CLASSROOM 300A

SCALE: 1/2" = 1'-0"

A3

KEYNOTE LEGEND

1	CHIEF PAC 526 (DUPLEX, 2D) SEE DETAIL A2/TA501
2	BACKING TO SUPPORT FIVE TIMES WEIGHT OF DISPLAY AND MOUNT
3	DUPLEX RECEPTACLE
4	ONE GANG AV BACK BOX

0 12" 24" 48"

SCALE: 1/2" = 12"

SYM	DESCRIPTION	DATE	APPR

NAVFAC

PRELIMINARY NOT FOR CONSTRUCTION

SEAL

IRQ WM Jordan COMPANY – A JOINT VENTURE –

Michael Baker INTERNATIONAL

100 AIRSIDE DRIVE
MOON TOWNSHIP, PA 15108 A/E INFO

APPROVED

FOR COMMANDER NAVFAC

ACTIVITY
MARINE CORPS BASE
CAMP LEJEUNE

SATISFACTORY TO DATE

DES AS | DRW AV | CHK BM

PM

BRANCH MANAGER

CHIEF ENG/ARCH

FIRE PROTECTION

DEPARTMENT OF THE NAVY
NAVAL FACILITIES ENGINEERING COMMAND
ROICC FLORENCE CAMP LEJEUNE
MCB CAMP LEJEUNE

NAVAL FACILITIES ENGINEERING COMMAND – MID-ATLANTIC
JACKSONVILLE, NC

JACKSONVILLE, NC
P1338F II MEF SIMULATION/TRAINING CENTER
REPLACEMENT

AUDIOVISUAL - ELEVATIONS

SCALE: AS NOTED

EPROJECT NO.:

CONSTR. CONTR. NO.
N40085-20-C-0059

NAVFAC DRAWING NO.

SHEET OF

TA404

DP2 SUBMISSION – P1338 BUILDING PRE-FINAL SUBMISSION

PLOTTED: 6/9/2021 6:52:28 AM

FILE NAME: BIM 360://HF PACKAGE 3/P1338_MEF SIM CTR-15908892-T.rvt

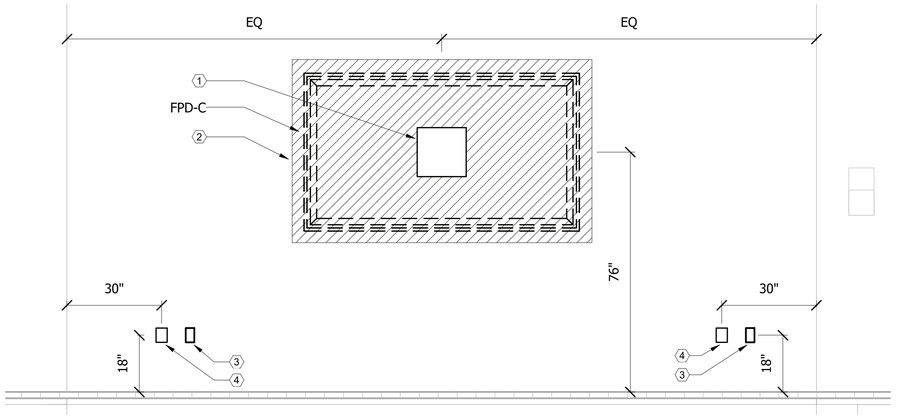

SIMULATION CLASSROOM 300B C2
SCALE: 1/2" = 1'-0"

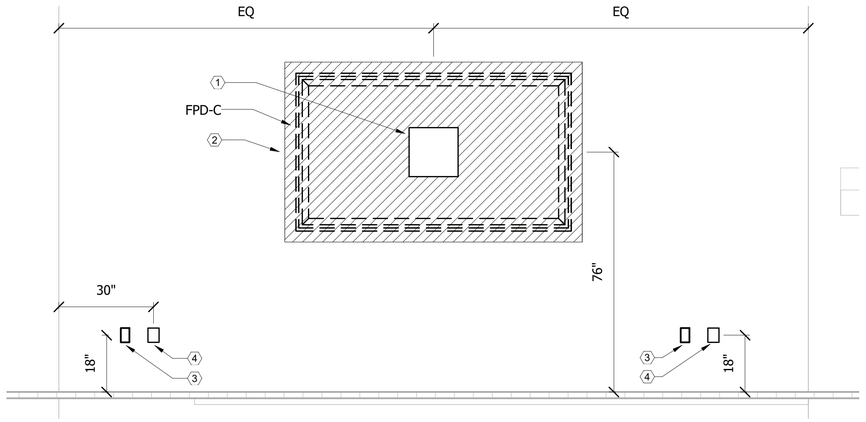

SIMULATION CLASSROOM 300Y C4
SCALE: 1/2" = 1'-0"

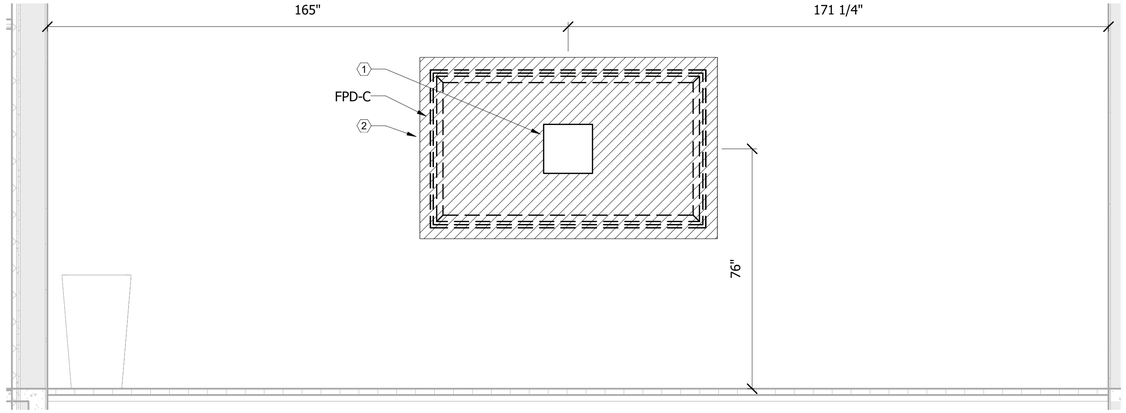

SIMULATION CLASSROOM 300C B3
SCALE: 1/2" = 1'-0"

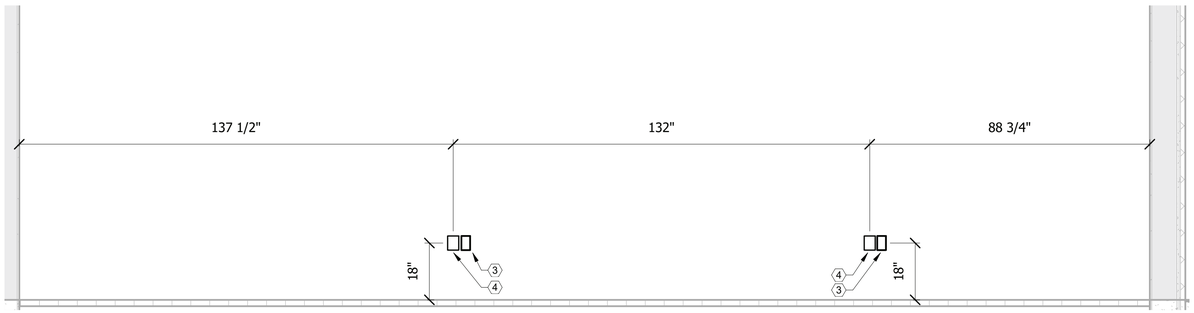

SIMULATION CLASSROOM 300C A3
SCALE: 1/2" = 1'-0"

KEYNOTE LEGEND

1	CHIEF PAC 526 (DUPLEX, 2D) SEE DETAIL A2/TA501
2	BACKING TO SUPPORT FIVE TIMES WEIGHT OF DISPLAY AND MOUNT
3	DUPLEX RECEPTACLE
4	ONE GANG AV BACK BOX

0 12" 24" 48"
SCALE: 1/2" = 12"

APPR | DATE | DESCRIPTION | SYM

PRELIMINARY NOT FOR CONSTRUCTION
SEAL

RQ W.M. Jordan COMPANY – A JOINT VENTURE –

Michael Baker INTERNATIONAL
100 AIRSIDE DRIVE
MOON TOWNSHIP, PA 15108
A/E INFO

APPROVED
FOR COMMANDER NAVFAC
ACTIVITY
MARINE CORPS BASE CAMP LEJEUNE
SATISFACTORY TO DATE
DES AS | DRW AV | CHK BM
PM
BRANCH MANAGER
CHIEF ENG/ARCH
FIRE PROTECTION

DEPARTMENT OF THE NAVY
NAVAL FACILITIES ENGINEERING COMMAND
ROICC FLORENCE CAMP LEJEUNE
NAVAL FACILITIES ENGINEERING COMMAND ~ MID-ATLANTIC
JACKSONVILLE, NC
MCB CAMP LEJEUNE
JACKSONVILLE, NC
P1338F II MEF SIMULATION/TRAINING CENTER REPLACEMENT
AUDIOVISUAL - ELEVATIONS

SCALE: AS NOTED
EPROJECT NO.:
CONSTR. CONTR. NO.
N40085-20-C-0059
NAVFAC DRAWING NO.
SHEET OF
TA405

DP2 SUBMISSION – P1338 BUILDING PRE-FINAL SUBMISSION

PLOTTED: 6/9/2021 6:52:29 AM
FILE NAME: BIM 360://HF PACKAGE 3/P1338_MEF SIM CTR-1590802-T.rvt

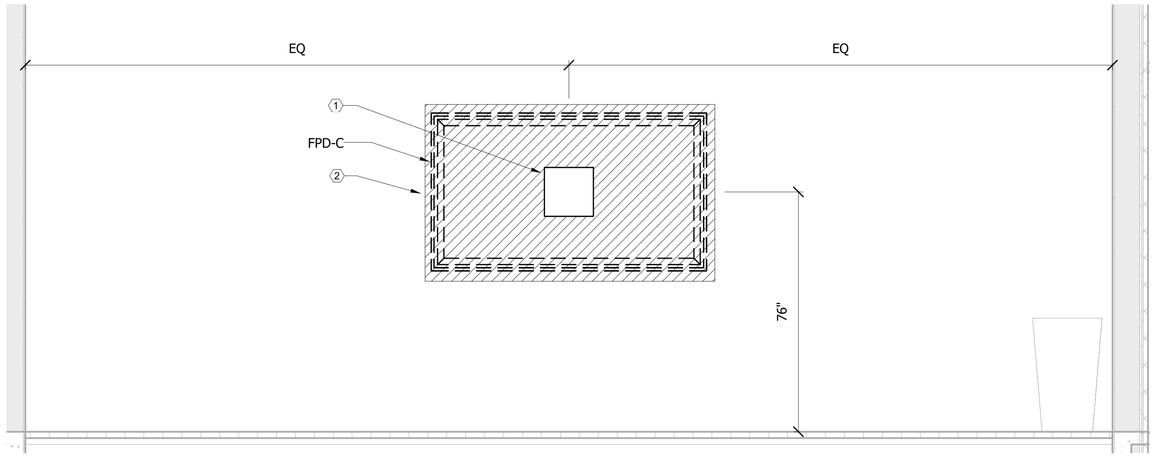

SIMULATION CLASSROOM 300Z

SCALE: 1/2" = 1'-0"

C3

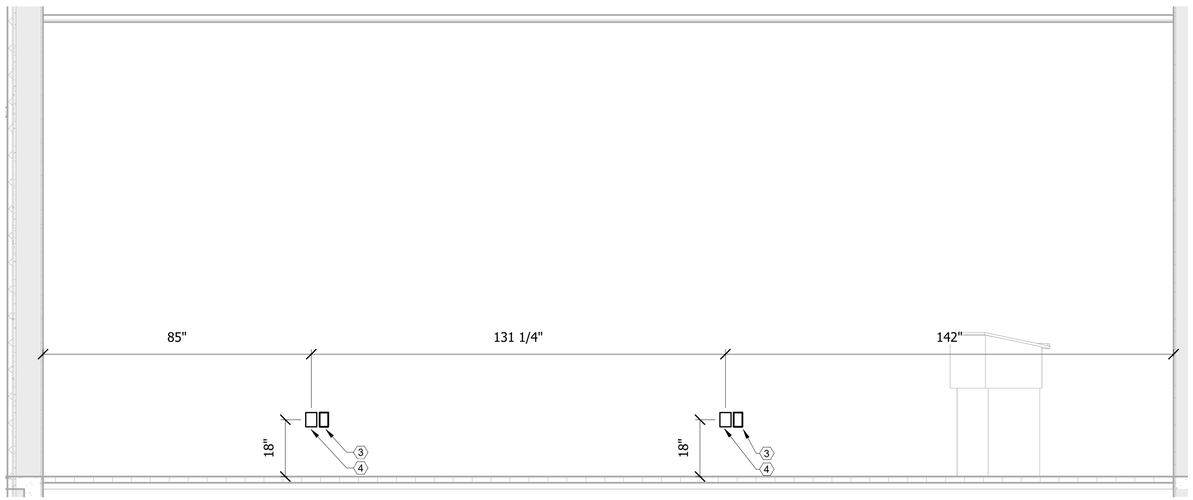

SIMULATION CLASSROOM 300Z

SCALE: 1/2" = 1'-0"

A3

KEYNOTE LEGEND

1	CHIEF PAC 526 (DUPLEX, 2D) SEE DETAIL A2/TA501
2	BACKING TO SUPPORT FIVE TIMES WEIGHT OF DISPLAY AND MOUNT
3	DUPLEX RECEPTACLE
4	ONE GANG AV BACK BOX

0 12" 24" 48"

SCALE: 1/2" = 12"

APPR	DATE	DESCRIPTION	SYM

NAVFAC

PRELIMINARY
NOT FOR CONSTRUCTION

SEAL

RQ W.M. Jordan COMPANY – A JOINT VENTURE –

Michael Baker INTERNATIONAL

100 AIRSIDE DRIVE
MOON TOWNSHIP, PA 15108 A/E INFO

APPROVED

FOR COMMANDER NAVFAC

ACTIVITY
MARINE CORPS BASE
CAMP LEJEUNE

SATISFACTORY TO DATE

DES AS	DRW AV	CHK BM

PM

BRANCH MANAGER

CHIEF ENG/ARCH

FIRE PROTECTION

DEPARTMENT OF THE NAVY
NAVAL FACILITIES ENGINEERING COMMAND
ROICC FLORENCE CAMP LEJEUNE
MCB CAMP LEJEUNE

NAVAL FACILITIES ENGINEERING COMMAND ~ MID-ATLANTIC
JACKSONVILLE, NC

JACKSONVILLE, NC
P1338F II MEF SIMULATION/TRAINING CENTER
REPLACEMENT

AUDIOVISUAL - ELEVATIONS

SCALE: AS NOTED

EPROJECT NO.:

CONSTR. CONTR. NO.
N40085-20-C-0059

NAVFAC DRAWING NO.

SHEET OF

TA406

DP2 SUBMISSION – P1338 BUILDING PRE-FINAL SUBMISSION

PLOTTED: 6/9/2021 6:52:30 AM

FILE NAME: BIM 360://HF PACKAGE 3/P1338_MEF SIM CTR-15908892-T.rvt

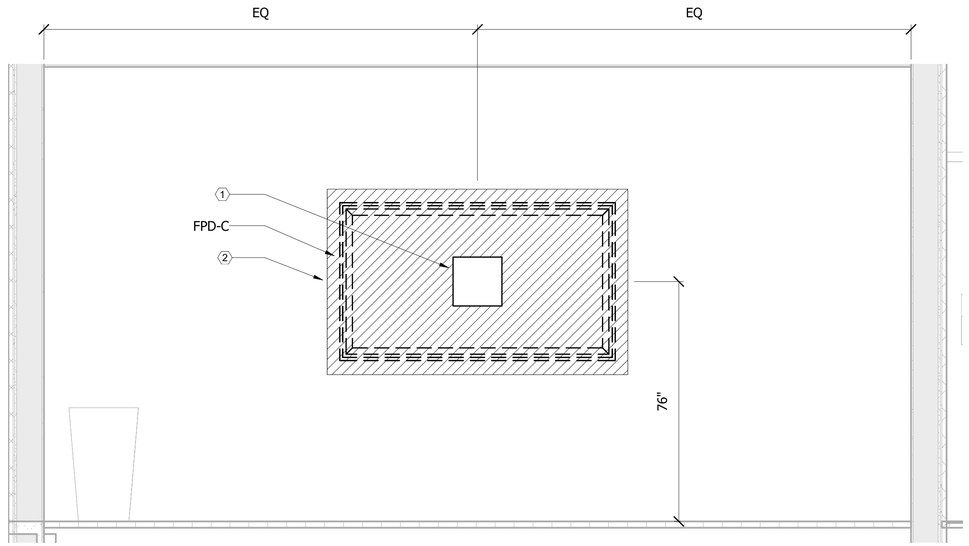

SIMULATION CLASSROOM 300X

SCALE: 1/2" = 1'-0"

TA113 C3

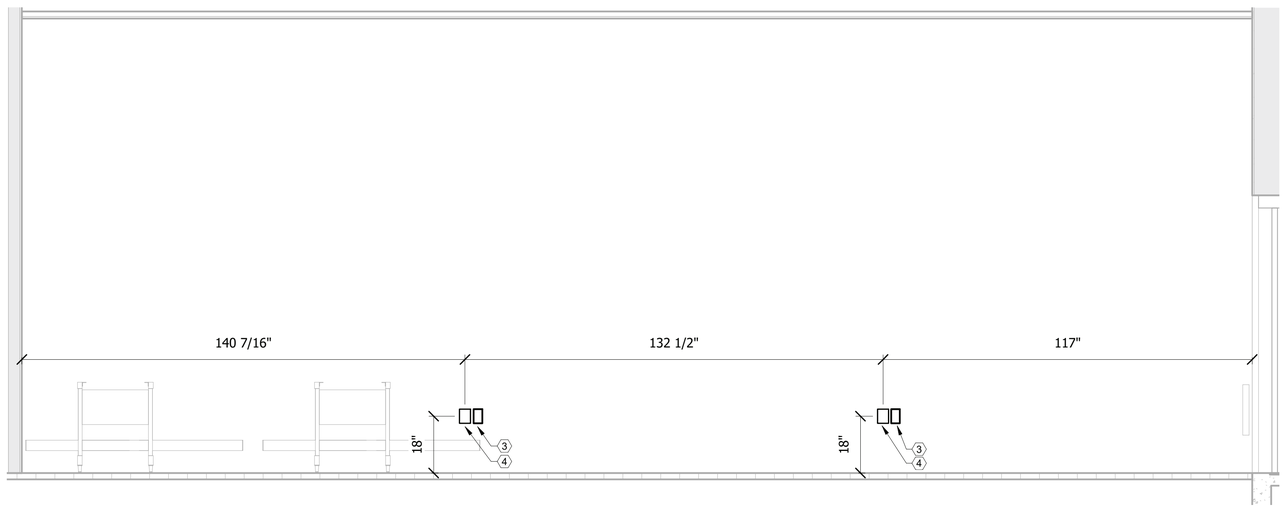

SIMULATION CLASSROOM 300X

SCALE: 1/2" = 1'-0"

A3

KEYNOTE LEGEND

1	CHIEF PAC 526 (DUPLEX, 2D) SEE DETAIL A2/TA501
2	BACKING TO SUPPORT FIVE TIMES WEIGHT OF DISPLAY AND MOUNT
3	DUPLEX RECEPTACLE
4	ONE GANG AV BACK BOX

0 12" 24" 48"

SCALE:1/2" = 12"

APPR | DATE | DESCRIPTION | SYM

NAVFAC

PRELIMINARY NOT FOR CONSTRUCTION

SEAL

IRQ WM Jordan COMPANY – A JOINT VENTURE –

Michael Baker INTERNATIONAL

100 AIRSIDE DRIVE
MOON TOWNSHIP, PA 15108 A/E INFO

APPROVED

FOR COMMANDER NAVFAC

ACTIVITY
MARINE CORPS BASE
CAMP LEJEUNE

SATISFACTORY TO DATE

DES AS | DRW AV | CHK BM

PM

BRANCH MANAGER

CHIEF ENG/ARCH

FIRE PROTECTION

DEPARTMENT OF THE NAVY
NAVAL FACILITIES ENGINEERING COMMAND
ROICC FLORENCE CAMP LEJEUNE
MCB CAMP LEJEUNE

NAVAL FACILITIES ENGINEERING COMMAND ~ MID-ATLANTIC
JACKSONVILLE, NC

JACKSONVILLE, NC
P1338F II MEF SIMULATION/TRAINING CENTER
REPLACEMENT

AUDIOVISUAL - ELEVATIONS

SCALE: AS NOTED

EPROJECT NO.:

CONSTR. CONTR. NO.
N40085-20-C-0059

NAVFAC DRAWING NO.

SHEET OF

TA407

DP2 SUBMISSION – P1338 BUILDING PRE-FINAL SUBMISSION

PLOTTED: 6/9/2021 6:52:30 AM

FILE NAME: BIM 360://HF PACKAGE 3/P1338_MEF SIM CTR-1590892-T.rvt

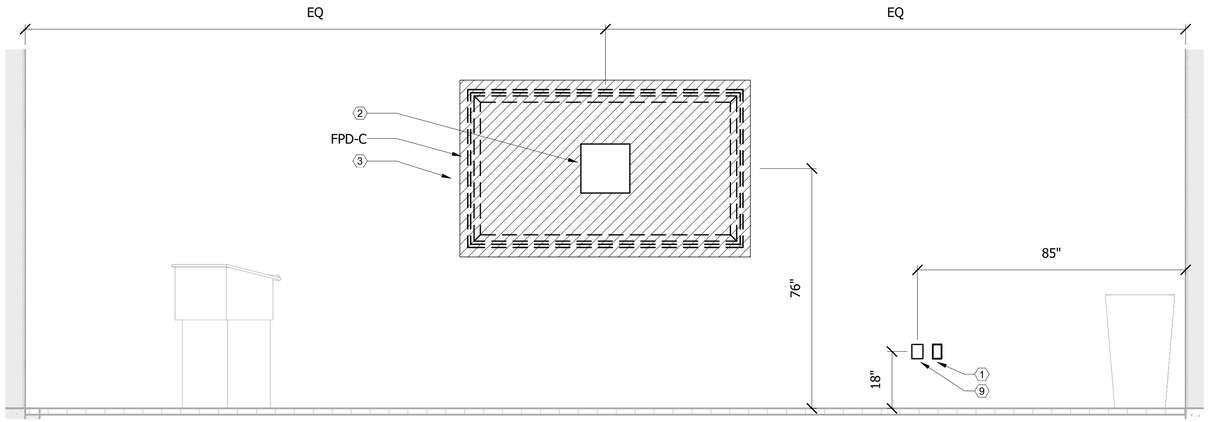

SIMULATION CLASSROOM 200C

SCALE: 1/2" = 1'-0"

C3

KEYNOTE LEGEND

1	DUPLEX RECEPTACLE
2	CHIEF PAC 526 (DUPLEX, 2D) SEE DETAIL A2/TA501
3	BACKING TO SUPPORT FIVE TIMES WEIGHT OF DISPLAY AND MOUNT
4	ONE GANG AV BACK BOX
5	QUAD RECEPTACLE
6	FSR PWB-100 (DUPLEX, 2D) SEE DETAIL A3/TA502
7	FOUR GANG AV BACK BOX
8	TWO GANG AV BACK BOX FOR WALL MOUNTED CAMERAS
9	ONE GANG AV BACK BOX

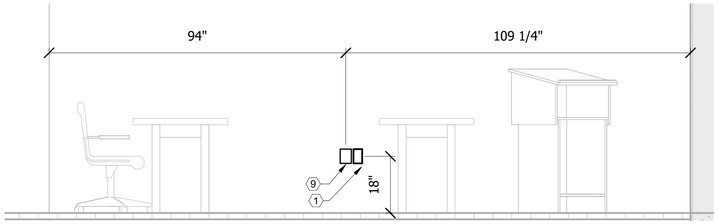

SIMULATION CLASSROOM 200C

SCALE: 1/2" = 1'-0"

B2

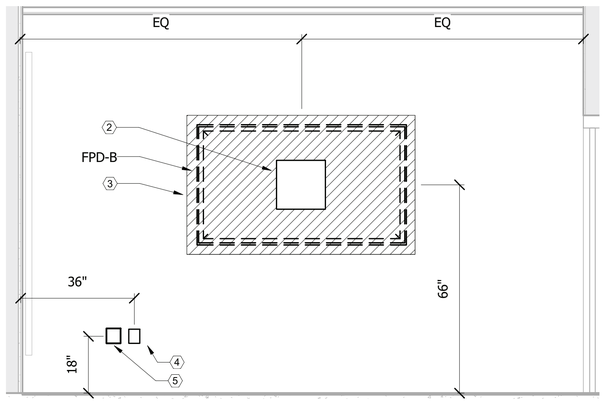

BRIEF/DEBRIEF 209

SCALE: 1/2" = 1'-0"

A2

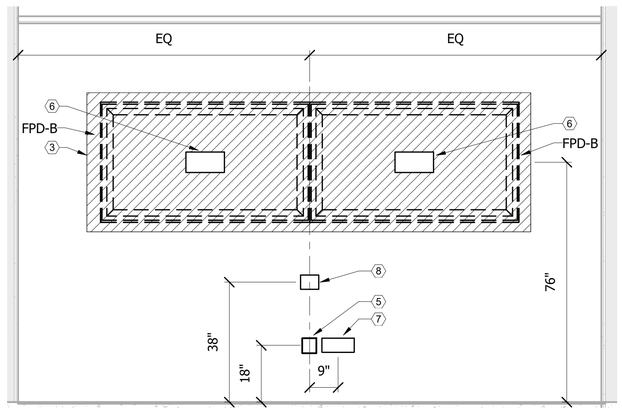

SECURE VTC 303B

SCALE: 1/2" = 1'-0"

A4

0 12" 24" 48"

SCALE: 1/2" = 12"

APPR		
DATE		
DESCRIPTION		
NUM		

NAVFAC

PRELIMINARY NOT FOR CONSTRUCTION

SEAL

IRQ W.M. Jordan COMPANY – A JOINT VENTURE –

Michael Baker INTERNATIONAL

100 AIRSIDE DRIVE
MOON TOWNSHIP, PA 15108 A/E INFO

APPROVED

FOR COMMANDER NAVFAC

ACTIVITY
MARINE CORPS BASE
CAMP LEJEUNE

SATISFACTORY TO DATE

DES AS	DRW AV	CHK BM

PM

BRANCH MANAGER

CHIEF ENG/ARCH

FIRE PROTECTION

DEPARTMENT OF THE NAVY
NAVAL FACILITIES ENGINEERING COMMAND
ROIOC FLORENCE CAMP LEJEUNE
MCB CAMP LEJEUNE

NAVAL FACILITIES ENGINEERING COMMAND ~ MID-ATLANTIC
JACKSONVILLE, NC

JACKSONVILLE, NC
P1338F II MEF SIMULATION/TRAINING CENTER
REPLACEMENT

AUDIOVISUAL - ELEVATIONS

SCALE: AS NOTED

EPROJECT NO.:

CONSTR. CONTR. NO.
N40085-20-C-0059

NAVFAC DRAWING NO.

SHEET OF

TA408

DP2 SUBMISSION – P1338 BUILDING PRE-FINAL SUBMISSION

PLOTTED: 6/9/2021 6:52:31 AM

FILE NAME: BIM 360://HF PACKAGE 3/P1338_MEF SIM CTR-1590892-T.rvt

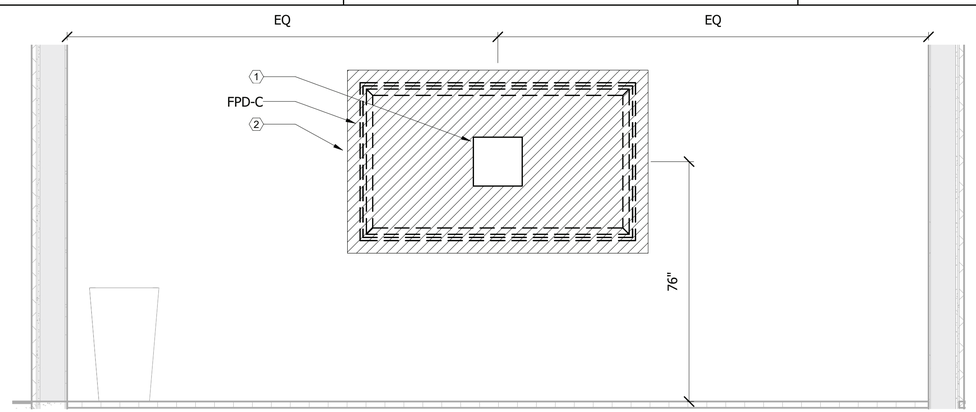

SIMULATION CLASSROOM 301A

SCALE: 1/2" = 1'-0"

TA113 C3

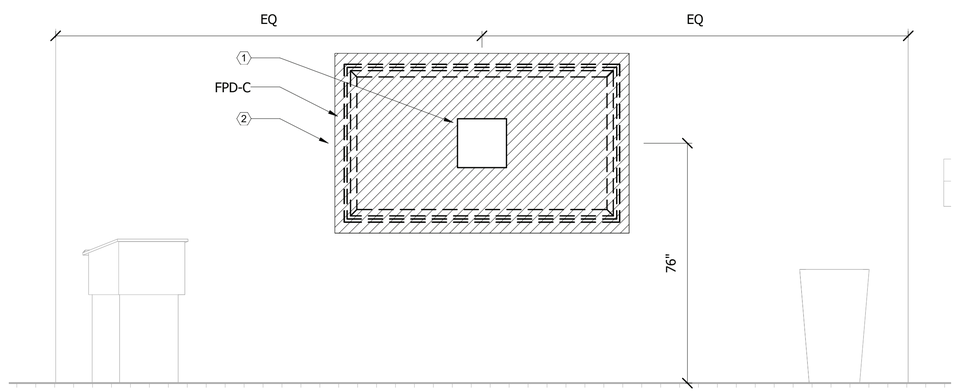

SIMULATION CLASSROOM 301B

SCALE: 1/2" = 1'-0"

TA113 B3

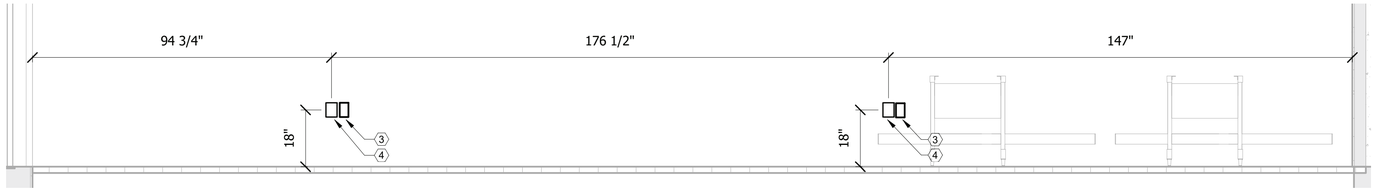

SIMULATION CLASSROOM 301A

SCALE: 1/2" = 1'-0"

B4

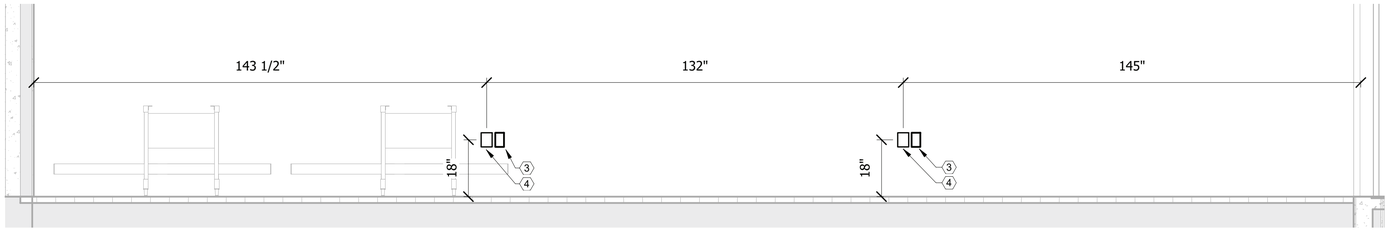

SIMULATION CLASSROOM 301B

SCALE: 1/2" = 1'-0"

A4

KEYNOTE LEGEND

1	CHIEF PAC 526 (DUPLEX, 2D) SEE DETAIL A2/TA501
2	BACKING TO SUPPORT FIVE TIMES WEIGHT OF DISPLAY AND MOUNT
3	DUPLEX RECEPTACLE
4	ONE GANG AV BACK BOX

SYM | DESCRIPTION | DATE | APPR

NAVFAC

PRELIMINARY NOT FOR CONSTRUCTION

SEAL

IRQ W.M. Jordan COMPANY – A JOINT VENTURE –

Michael Baker INTERNATIONAL

100 AIRSIDE DRIVE
MOON TOWNSHIP, PA 15108 A/E INFO

APPROVED

FOR COMMANDER NAVFAC

ACTIVITY
MARINE CORPS BASE
CAMP LEJEUNE

SATISFACTORY TO DATE

DES AS | DRW AV | CHK BM

PM

BRANCH MANAGER

CHIEF ENG/ARCH

FIRE PROTECTION

DEPARTMENT OF THE NAVY
NAVAL FACILITIES ENGINEERING COMMAND ~ MID-ATLANTIC
ROICC FLORENCE CAMP LEJEUNE
MCB CAMP LEJEUNE

NAVAL FACILITIES ENGINEERING COMMAND ~ MID-ATLANTIC
JACKSONVILLE, NC

JACKSONVILLE, NC
P1338F II MEF SIMULATION/TRAINING CENTER REPLACEMENT

AUDIOVISUAL - ELEVATIONS

SCALE: AS NOTED

EPROJECT NO.:

CONSTR. CONTR. NO.
N40085-20-C-0059

NAVFAC DRAWING NO.

SHEET OF

TA409

0 12" 24" 48"
SCALE: 1/2" = 12"

DP2 SUBMISSION – P1338 BUILDING PRE-FINAL SUBMISSION

PLOTTED: 6/9/2021 6:52:32 AM

FILE NAME: BIM 360://HF PACKAGE 3/P1338_MEF SIM CTR-1590892-T.rvt

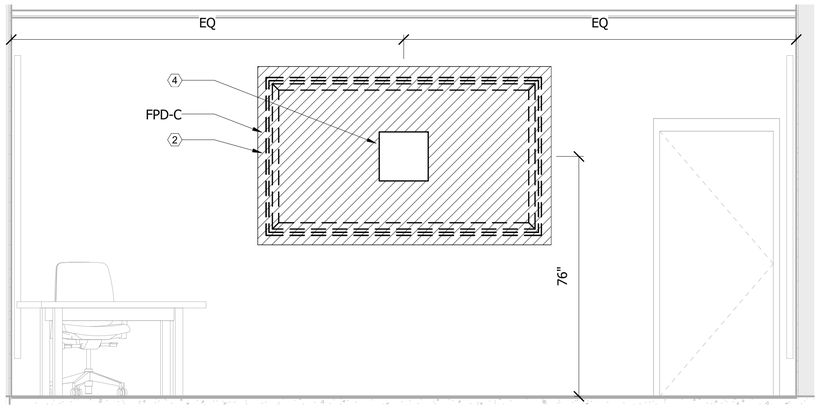

BRIEF/DEBRIEF 101

SCALE: 1/2" = 1'-0"

TA114

C2

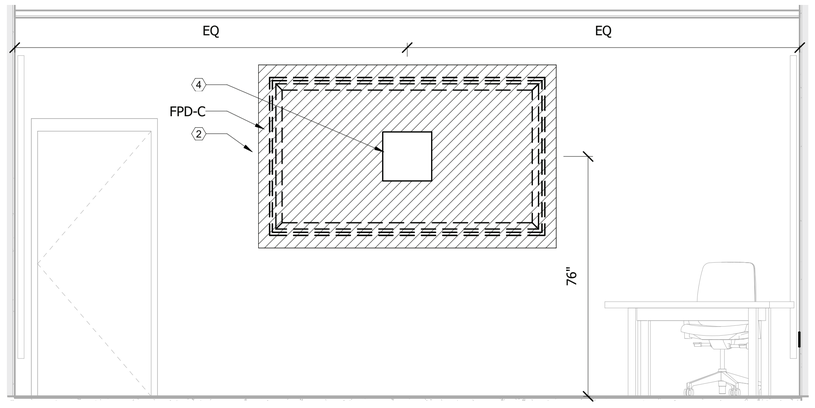

BRIEF/DEBRIEF 102

SCALE: 1/2" = 1'-0"

TA114

C4

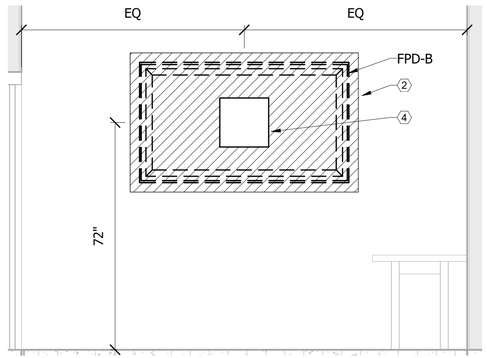

EXERCISE CONTROL 207

SCALE: 1/2" = 1'-0"

TA112

B2

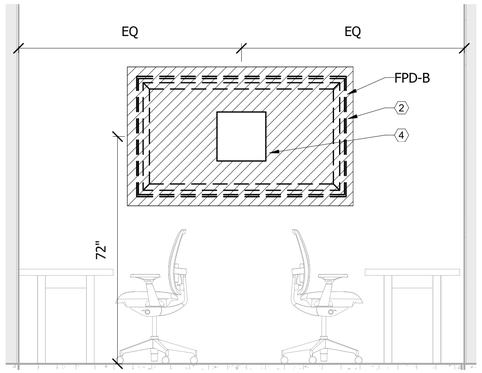

EXERCISE CONTROL 207

SCALE: 1/2" = 1'-0"

TA112

B3

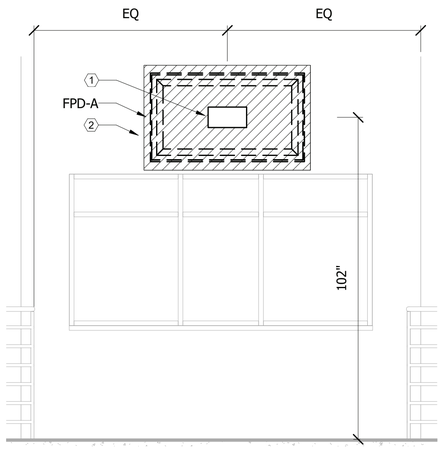

LOBBY/VEST L010

SCALE: 1/2" = 1'-0"

TA114

A2

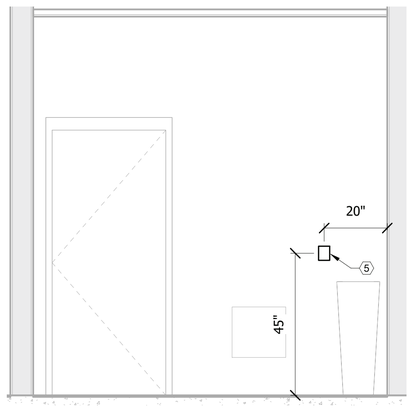

ENTRY WS 100

SCALE: 1/2" = 1'-0"

TA114

A3

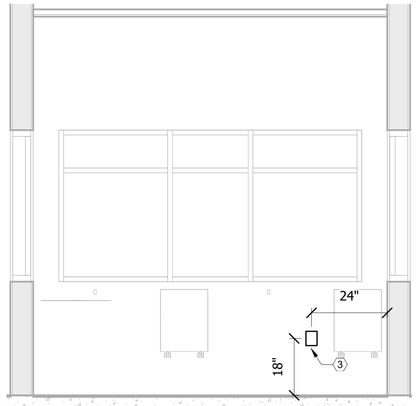

ENTRY WS 100

SCALE: 1/2" = 1'-0"

TA114

A4

KEYNOTE LEGEND

1	FSR PWB-100 (DUPLEX, 2D) SEE DETAIL A3/TA502
2	BACKING TO SUPPORT FIVE TIMES WEIGHT OF DISPLAY AND MOUNT
3	ONE GANG AV BACK BOX
4	CHIEF PAC 526 (DUPLEX, 2D) SEE DETAIL A2/TA501
5	ONE GANG AV BACK BOX FOR AV KEYPAD

SCALE: 1/2" = 12"

APPR | DATE | NO. | DESCRIPTION

NAVFAC

PRELIMINARY NOT FOR CONSTRUCTION

SEAL

IRQ WM Jordan COMPANY – A JOINT VENTURE –

Michael Baker INTERNATIONAL

100 AIRSIDE DRIVE
MOON TOWNSHIP, PA 15108

A/E INFO

APPROVED

FOR COMMANDER NAVFAC

ACTIVITY
MARINE CORPS BASE
CAMP LEJEUNE

SATISFACTORY TO DATE

DES AS	DRW AV	CHK BM

PM

BRANCH MANAGER

CHIEF ENG/ARCH

FIRE PROTECTION

DEPARTMENT OF THE NAVY
NAVAL FACILITIES ENGINEERING COMMAND ~ MID-ATLANTIC
ROICC FLORENCE CAMP LEJEUNE
MCB CAMP LEJEUNE

NAVAL FACILITIES ENGINEERING COMMAND ~ MID-ATLANTIC
JACKSONVILLE, NC

JACKSONVILLE, NC
P1338F II MEF SIMULATION/TRAINING CENTER REPLACEMENT

AUDIOVISUAL - ELEVATIONS

SCALE: AS NOTED

EPROJECT NO.:

CONSTR. CONTR. NO.
N40085-20-C-0059

NAVFAC DRAWING NO.

SHEET OF

TA410

DP2 SUBMISSION – P1338 BUILDING PRE-FINAL SUBMISSION

PLOTTED: 6/9/2021 6:52:34 AM

FILE NAME: BIM 360://HF PACKAGE 3/P1338_MEF SIM CTR-1590892-T.rvt

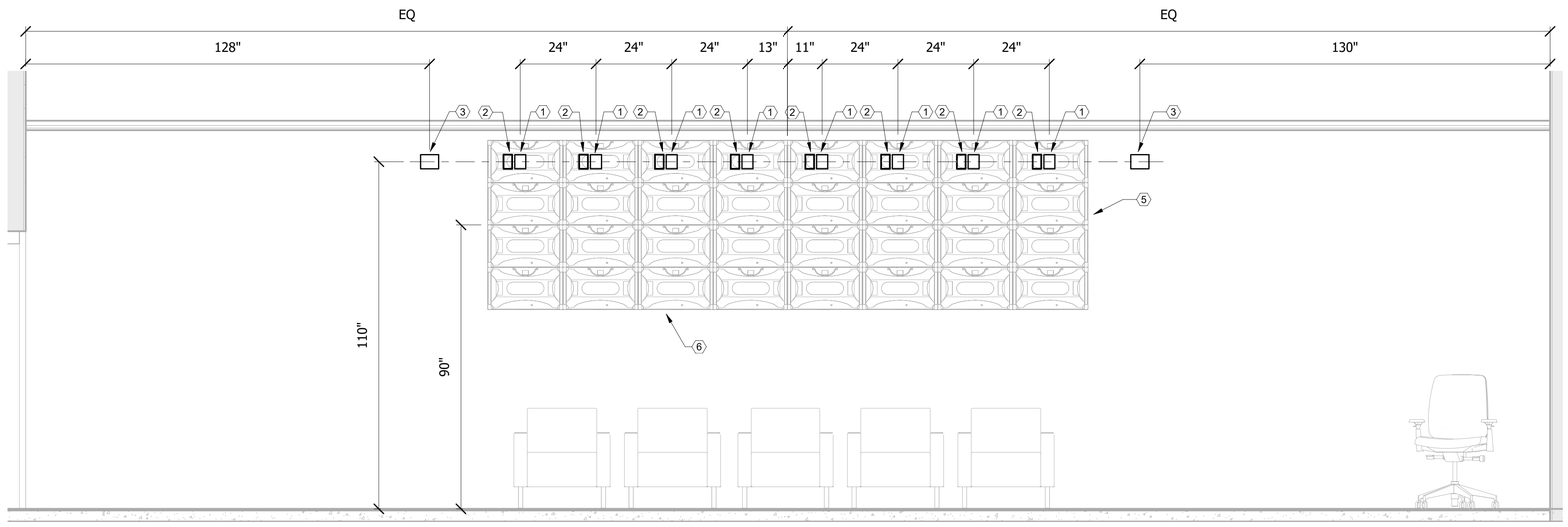

AUDITORIUM/READY ROOM 201

SCALE: 1/2" = 1'-0"

C4

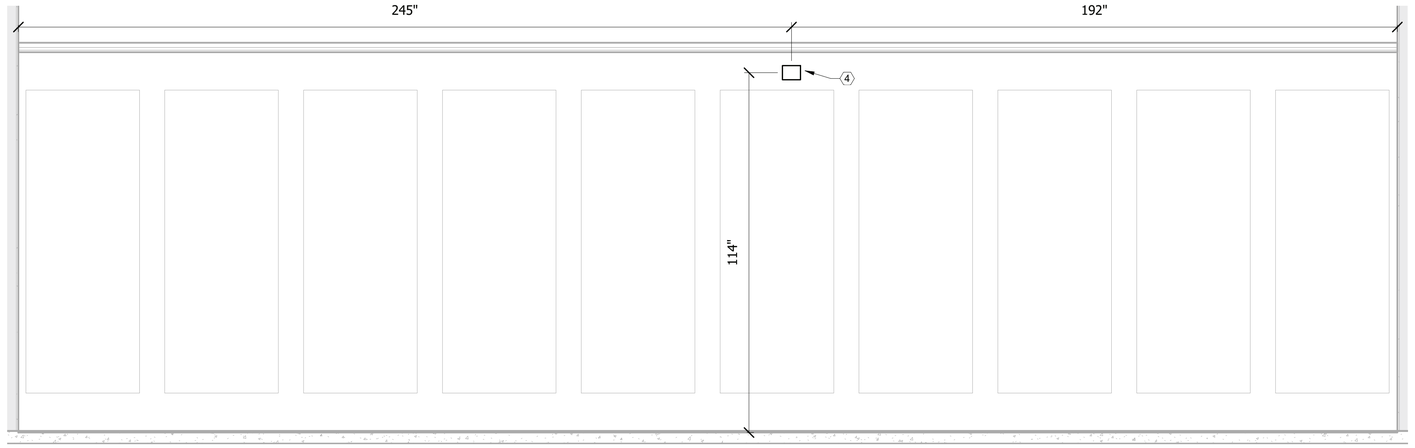

AUDITORIUM/READY ROOM 201

SCALE: 1/2" = 1'-0"

A4

KEYNOTE LEGEND

1	ONE GANG AV BACK BOX
2	RECESSED CLOCK RECEPTACLE
3	TWO GANG AV BACK BOX FOR WALL MOUNTED CAMERAS
4	TWO GANG AV BACK BOX
5	BACKING TO SUPPORT FIVE TIMES WEIGHT OF DISPLAY AND MOUNT
6	COORDINATE FINAL LOCATION WITH INTERIORS PRIOR TO INSTALLATION

0 12" 24" 48"

SCALE: 1/2" = 12"

APPR | DATE | DESCRIPTION | SYM

SEAL

W.M. Jordan COMPANY – A JOINT VENTURE –

Michael Baker INTERNATIONAL

100 AIRSIDE DRIVE
MOON TOWNSHIP, PA 15108 A/E INFO

APPROVED

FOR COMMANDER NAVFAC

ACTIVITY
MARINE CORPS BASE
CAMP LEJEUNE

SATISFACTORY TO DATE

DES	DRW	CHK

PM

BRANCH MANAGER

CHIEF ENG/ARCH

FIRE PROTECTION

DEPARTMENT OF THE NAVY
NAVAL FACILITIES ENGINEERING COMMAND
ROICC FLORENCE CAMP LEJEUNE
MCB CAMP LEJEUNE

NAVAL FACILITIES ENGINEERING COMMAND ~ MID-ATLANTIC
JACKSONVILLE, NC

JACKSONVILLE, NC
P1338F II MEF SIMULATION/TRAINING CENTER
REPLACEMENT

AUDIOVISUAL - ELEVATIONS

SCALE: AS NOTED

EPROJECT NO.: 1590892

CONSTR. CONTR. NO.
N40085-20-C-0059

NAVFAC DRAWING NO.

SHEET OF

TA411

DP2 SUBMISSION – P1338 BUILDING - PRE-FINAL SUBMISSION

PLOTTED: 6/9/2021 6:52:35 AM

FILE NAME: BIM 360://HF PACKAGE 3/P1338_MEF SIM CTR-1590892-T.rvt

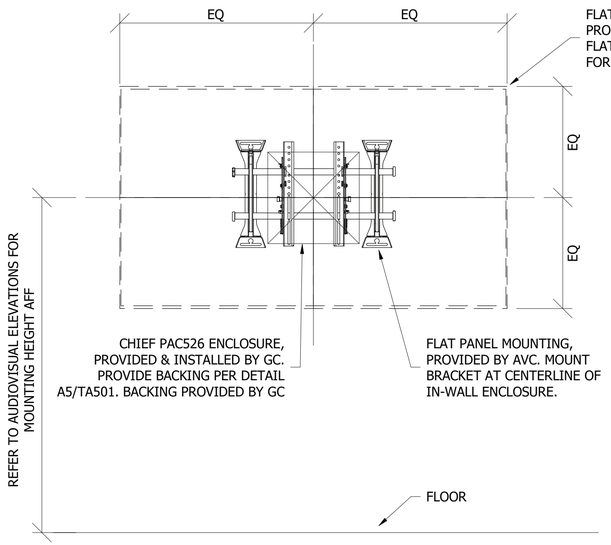

CHIEF PAC 526 FLAT PANEL DISPLAY BRACKET DETAIL

SCALE: NTS

C2

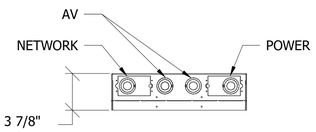

TOP VIEW

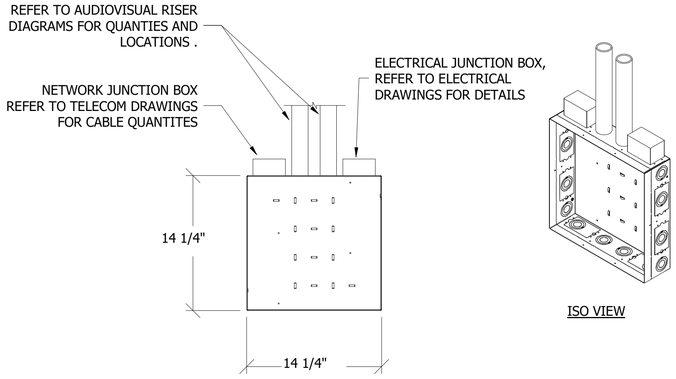

ISO VIEW

FRONT VIEW

CHIEF PAC 526 AV WALL BOX

SCALE: NTS

A2

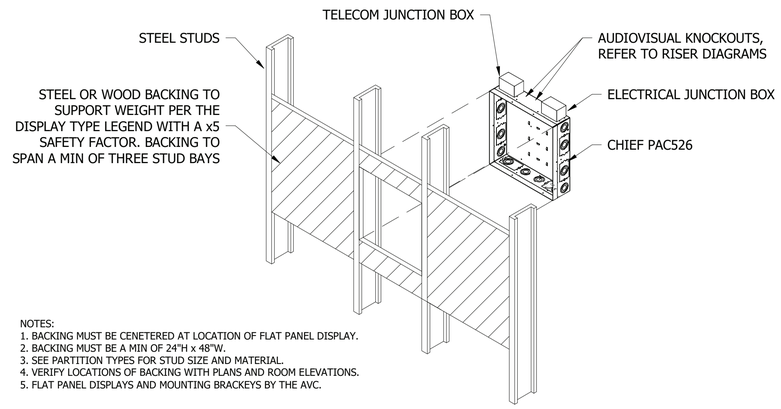

NOTES:
1. BACKING MUST BE CENETERED AT LOCATION OF FLAT PANEL DISPLAY.
2. BACKING MUST BE A MIN OF 24"H x 48"W.
3. SEE PARTITION TYPES FOR STUD SIZE AND MATERIAL.
4. VERIFY LOCATIONS OF BACKING WITH PLANS AND ROOM ELEVATIONS.
5. FLAT PANEL DISPLAYS AND MOUNTING BRACKEYS BY THE AVC.

CHIEF PAC 526 BACKING DETAIL

SCALE: NTS

A5

NO.	DESCRIPTION	DATE	APPR

NAVFAC

PRELIMINARY NOT FOR CONSTRUCTION

SEAL

IRQ WM Jordan COMPANY – A JOINT VENTURE –

Michael Baker INTERNATIONAL

100 AIRSIDE DRIVE
MOON TOWNSHIP, PA 15108 A/E INFO

APPROVED

FOR COMMANDER NAVFAC

ACTIVITY
MARINE CORPS BASE CAMP LEJEUNE

SATISFACTORY TO DATE

DES AS | DRW AV | CHK BM

PM

BRANCH MANAGER

CHIEF ENG/ARCH

FIRE PROTECTION

DEPARTMENT OF THE NAVY
NAVAL FACILITIES ENGINEERING COMMAND
ROICC FLORENCE CAMP LEJEUNE
MCB CAMP LEJEUNE

NAVAL FACILITIES ENGINEERING COMMAND – MID-ATLANTIC
JACKSONVILLE, NC

JACKSONVILLE, NC
P1338F II MEF SIMULATION/TRAINING CENTER REPLACEMENT

AUDIOVISUAL - DETAILS

SCALE: AS NOTED

EPROJECT NO.:

CONSTR. CONTR. NO.
N40085-20-C-0059

NAVFAC DRAWING NO.

SHEET OF

TA501

DP2 SUBMISSION – P1338 BUILDING PRE-FINAL SUBMISSION

PLOTTED: 6/9/2021 6:52:35 AM

FILE NAME: BIM 360://HF PACKAGE 3/P1338_MEF SIM CTR-15R6892-T.rvt

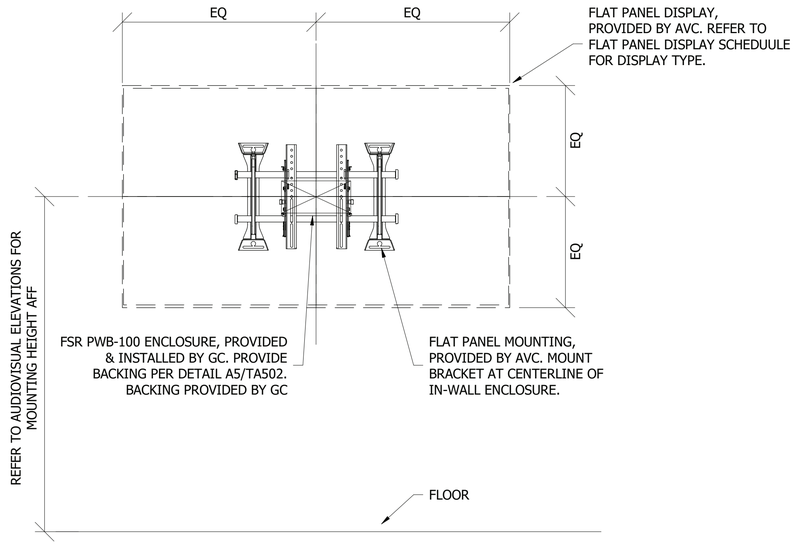

FSR PWB-100 FLAT PANEL DISPLAY BRACKET DETAIL

SCALE: NTS

C3

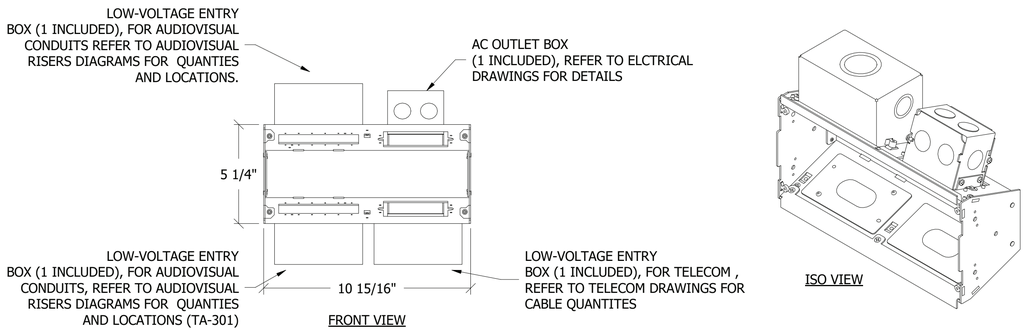

FSR PWB-100 DETAIL

SCALE: NTS

A3

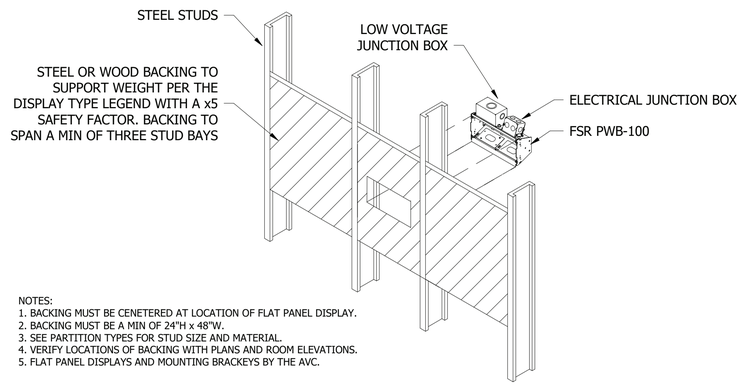

NOTES:
1. BACKING MUST BE CENETERED AT LOCATION OF FLAT PANEL DISPLAY.
2. BACKING MUST BE A MIN OF 24"H x 48"W.
3. SEE PARTITION TYPES FOR STUD SIZE AND MATERIAL.
4. VERIFY LOCATIONS OF BACKING WITH PLANS AND ROOM ELEVATIONS.
5. FLAT PANEL DISPLAYS AND MOUNTING BRACKEYS BY THE AVC.

FSR PWB-100 BACKING DETAIL

SCALE: NTS

A5

APPR | DATE | DESCRIPTION | SYM

NAVFAC

SEAL

IRQ W.M. Jordan COMPANY – A JOINT VENTURE –

Michael Baker INTERNATIONAL

100 AIRSIDE DRIVE
MOON TOWNSHIP, PA 15108
A/E INFO

APPROVED

FOR COMMANDER NAVFAC

ACTIVITY
MARINE CORPS BASE CAMP LEJEUNE

SATISFACTORY TO DATE

DES	DRW	CHK

PM

BRANCH MANAGER

CHIEF ENG/ARCH

FIRE PROTECTION

DEPARTMENT OF THE NAVY
NAVAL FACILITIES ENGINEERING COMMAND
ROICC FLORENCE CAMP LEJEUNE
MCB CAMP LEJEUNE

NAVAL FACILITIES ENGINEERING COMMAND – MID-ATLANTIC
JACKSONVILLE, NC

JACKSONVILLE, NC

P1338F II MEF SIMULATION/TRAINING CENTER REPLACEMENT

AUDIOVISUAL - DETAILS

SCALE: AS NOTED

EPROJECT NO.: 1590892

CONSTR. CONTR. NO.
N40085-20-C-0059

NAVFAC DRAWING NO.

SHEET OF

TA502

DP2 SUBMISSION – P1338 BUILDING - PRE-FINAL SUBMISSION

PLOTTED: 6/9/2021 6:52:36 AM

FILE NAME: BIM 360://HF PACKAGE 3/P1338_MEF SIM CTR-1590892-T.rvt

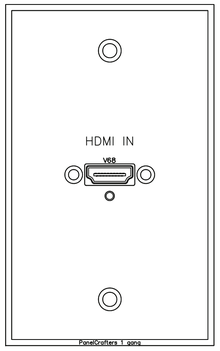

1 ONE GANG FACE PLATE
Scale: NTS

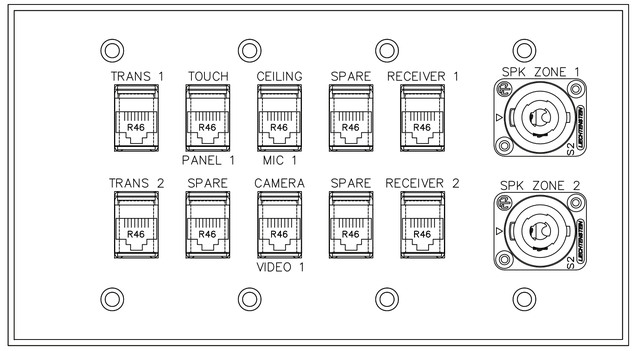

2 SECURE VTC 303B FACE PLATE
Scale: NTS

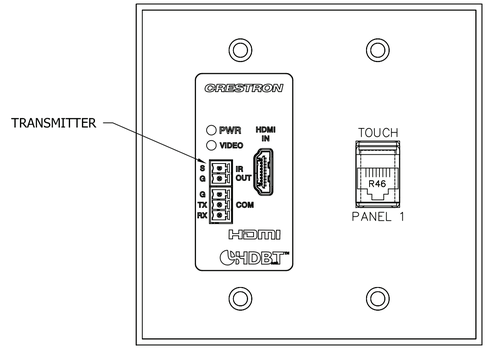

3 TWO GANG FACE PLATE
Scale: NTS

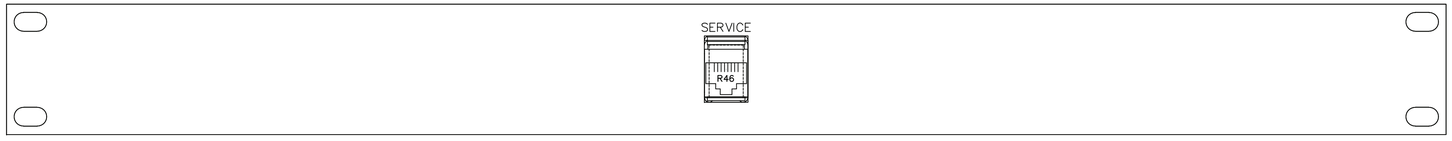

4 SERVICE PLATE
Scale: NTS

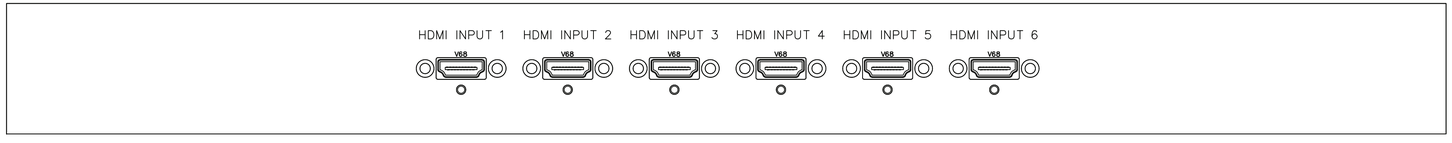

5 HDMI RACK PANEL
Scale: NTS

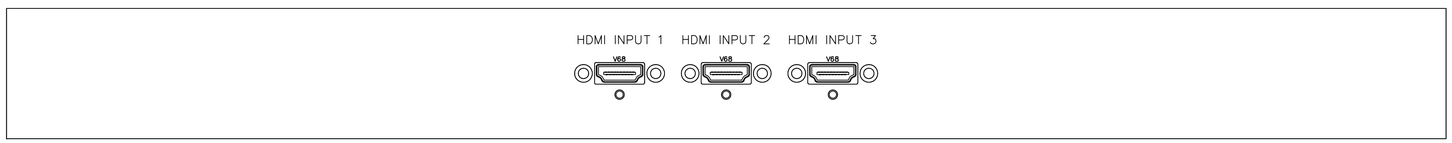

6 HDMI RACK PANEL
Scale: NTS

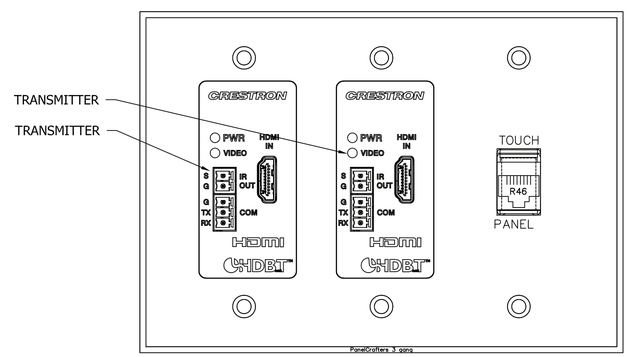

7 EXERCISE CONTROL 207 (QTY 2)
Scale: NTS

APPR | DATE | DESCRIPTION | NUM

NAVFAC

PRELIMINARY NOT FOR CONSTRUCTION

SEAL

RQ Jordan COMPANY – A JOINT VENTURE –

Michael Baker INTERNATIONAL
100 AIRSIDE DRIVE
MOON TOWNSHIP, PA 15108
A/E INFO

APPROVED

FOR COMMANDER NAVFAC

ACTIVITY
MARINE CORPS BASE
CAMP LEJEUNE

SATISFACTORY TO DATE	DD/MM/YY		
DES AS	DRW AV	CHK BM	
PM	XXX		
BRANCH MANAGER	XXX		
CHIEF ENG/ARCH	XXX		
FIRE PROTECTION	XXX		

DEPARTMENT OF THE NAVY
NAVAL FACILITIES ENGINEERING COMMAND
ROICC FLORENCE CAMP LEJEUNE

NAVAL FACILITIES ENGINEERING COMMAND – MID-ATLANTIC
JACKSONVILLE, NC

MCB CAMP LEJEUNE
JACKSONVILLE, NC
P1338F II MEF SIMULATION/TRAINING CENTER
REPLACEMENT

AUDIOVISUAL - - DETAILS

SCALE: NTS
EPROJECT NO.:
CONSTR. CONTR. NO.
N40085-20-C-0059
NAVFAC DRAWING NO.
SHEET OF

TA503

DP2 SUBMISSION – P1338 BUILDING RRE-FINAL SUBMISSION

PLOTTED: 5/19/2021 3:28:30 PM

FILE NAME: BIM 360://HF PACKAGE 3/P1338_MEF SIM CTR-1590892-T.rvt

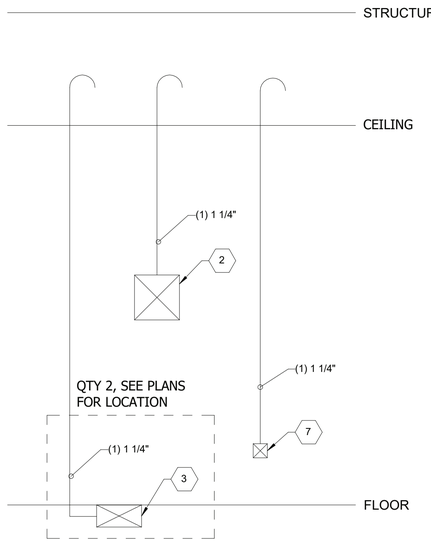

BRIEF/DEBRIEF 101 & 102 — C1
SCALE: NTS

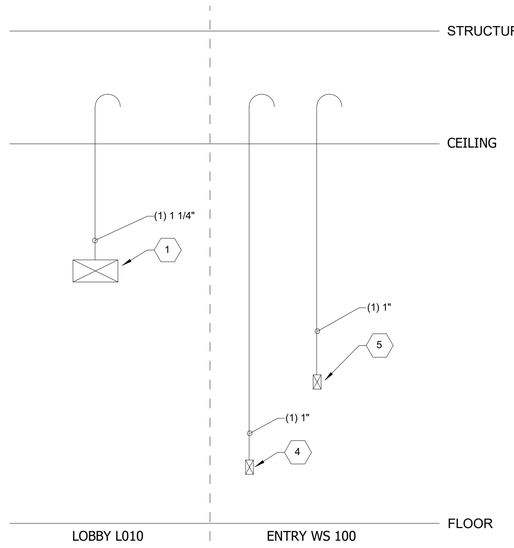

LOBBY L010 & ENTRY WS 100 — C3
SCALE: NTS

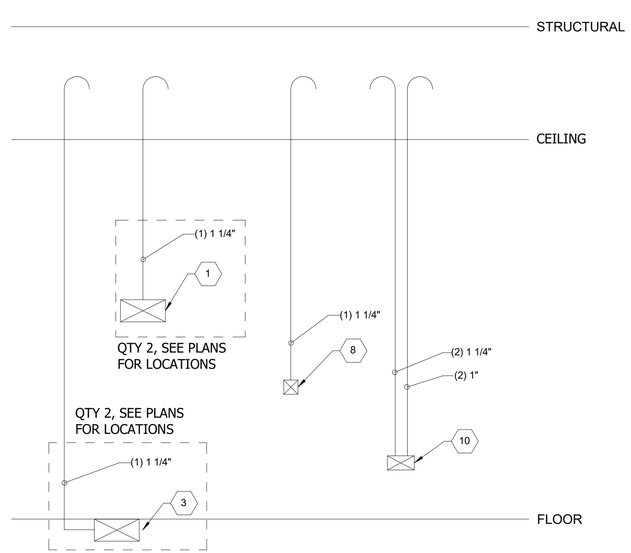

SECURE VTC 303B — C4
SCALE: NTS

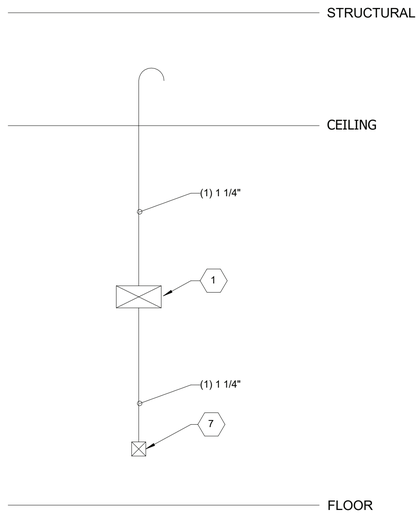

FIRE ROOM 104 A,B,C — A2
SCALE: NTS

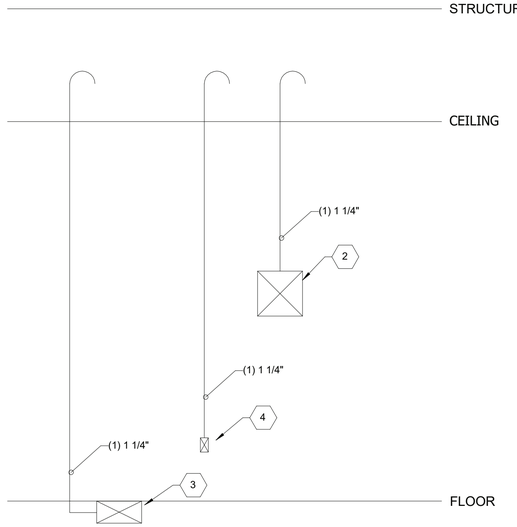

BRIEF/DEBRIEF 209 — A3
SCALE: NTS

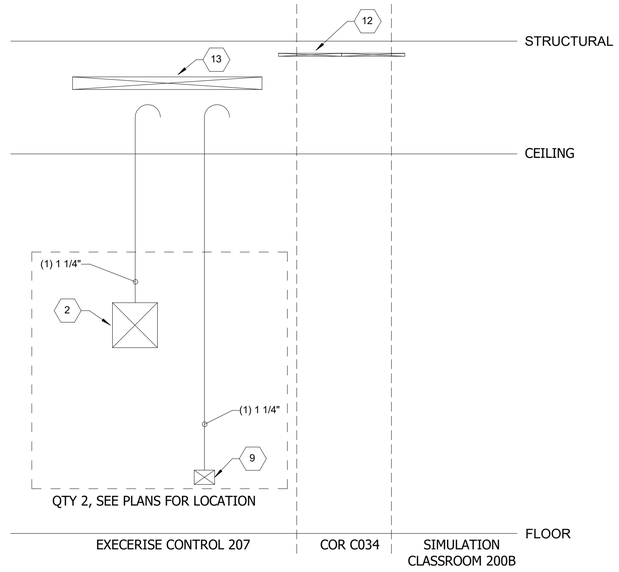

EXECERISE CONTROL 207 — A4
SCALE: NTS

DEVICE SCHEDULE

TAG	DESCRIPTION
1	FSR PWB-100
2	CHIEF PAC BOX 526
3	FLOOR BOX, REFER TO ELECTRICAL
4	ONE GANG AV BACK BOX
5	ONE GANG AV BACK BOX FOR AV KEYPAD
6	ONE GANG AV BACK BOX FOR ROOM AVAILABILITY SIGN
7	TWO GANG AV BACK BOX
8	TWO GANG AV BACK BOX FOR WALL MOUNTED CAMERA
9	THREE GANG AV BACK BOX
10	FOUR GANG AV BACK BOX
11	AV EQUIPMENT RACK PROVIDED BY AVC
12	CONDUIT, REFER TO EQUIPMENT PLANS FOR SIZE AND LOCATION
13	WIRE-BASKET, REFER TO EQUIPMENT PLANS FOR SIZE AND LOCATION

APPR | DATE | DESCRIPTION | SYM

NAVFAC

PRELIMINARY NOT FOR CONSTRUCTION

SEAL

IRQ Jordan COMPANY – A JOINT VENTURE –

Michael Baker INTERNATIONAL

100 AIRSIDE DRIVE
MOON TOWNSHIP, PA 15108 — A/E INFO

APPROVED

FOR COMMANDER NAVFAC

ACTIVITY
MARINE CORPS BASE CAMP LEJEUNE

SATISFACTORY TO DATE

DES AS | DRW AV | CHK BM

PM

BRANCH MANAGER

CHIEF ENG/ARCH

FIRE PROTECTION

DEPARTMENT OF THE NAVY
NAVAL FACILITIES ENGINEERING COMMAND
ROICC FLORENCE CAMP LEJEUNE

NAVAL FACILITIES ENGINEERING COMMAND ~ MID-ATLANTIC
JACKSONVILLE, NC

MCB CAMP LEJEUNE
JACKSONVILLE, NC

P1338F II MEF SIMULATION/TRAINING CENTER REPLACEMENT

AUDIOVISUAL - RISER DIAGRAMS

SCALE: AS NOTED

EPROJECT NO.:

CONSTR. CONTR. NO.
N40085-20-C-0059

NAVFAC DRAWING NO.

SHEET OF

TA601

DP2 SUBMISSION – P1338 BUILDING PRE-FINAL SUBMISSION

PLOTTED: 6/9/2021 6:52:37 AM

FILE NAME: BIM 360://HF PACKAGE 3/P1338_MEF SIM CTR-15908892-T.rvt

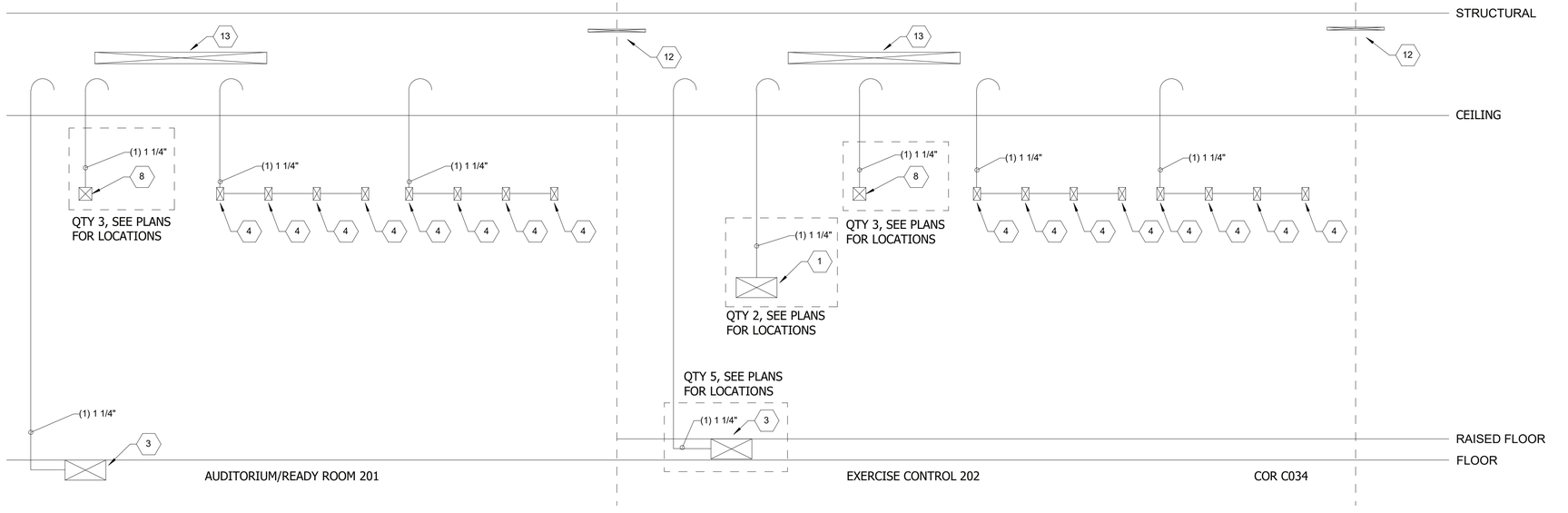

AUDITORIUM/READY ROOM 201 AND EXERCISE CONTROL 202

SCALE: NTS

C4

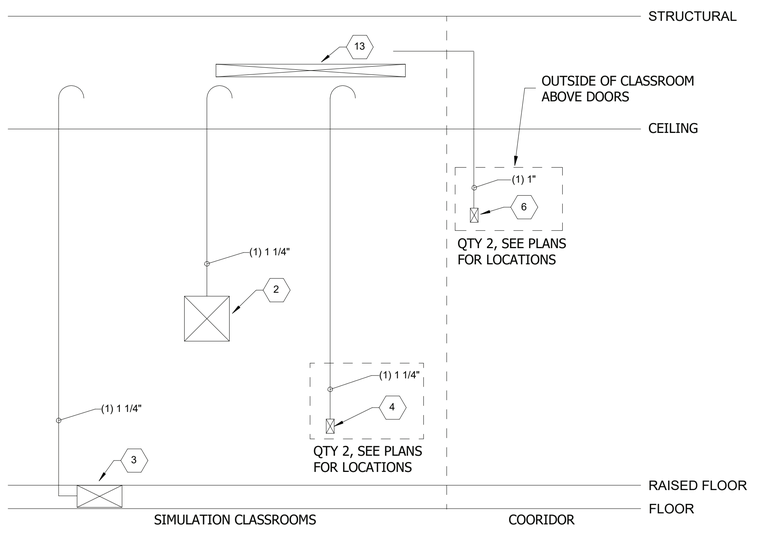

SIMULATION CLASSROOMS

SCALE: NTS

A2

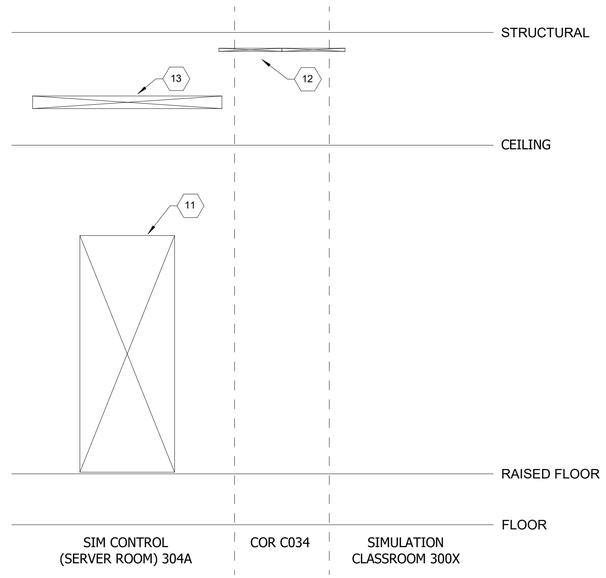

SIM CONTROL (SERVER ROOM) 304A

SCALE: NTS

A4

DEVICE SCHEDULE

TAG	DESCRIPTION
1	FSR PWB-100
2	CHIEF PAC BOX 526
3	FLOOR BOX, REFER TO ELECTRICAL
4	ONE GANG AV BACK BOX
5	ONE GANG AV BACK BOX FOR AV KEYPAD
6	ONE GANG AV BACK BOX FOR ROOM AVAILABILITY SIGN
7	TWO GANG AV BACK BOX
8	TWO GANG AV BACK BOX FOR WALL MOUNTED CAMERA
9	THREE GANG AV BACK BOX
10	FOUR GANG AV BACK BOX
11	AV EQUIPMENT RACK PROVIDED BY AVC
12	CONDUIT, REFER TO EQUIPMENT PLANS FOR SIZE AND LOCATION
13	WIRE-BASKET, REFER TO EQUIPMENT PLANS FOR SIZE AND LOCATION

SYM	DESCRIPTION	DATE	APPR

NAVFAC

PRELIMINARY NOT FOR CONSTRUCTION

SEAL

IRQ Joint Venture — W.M. Jordan Company

Michael Baker INTERNATIONAL

100 AIRSIDE DRIVE
MOON TOWNSHIP, PA 15108

A/E INFO

APPROVED

FOR COMMANDER NAVFAC

ACTIVITY
MARINE CORPS BASE CAMP LEJEUNE

SATISFACTORY TO DATE

DES	DRW	CHK
AS	AV	BM

PM

BRANCH MANAGER

CHIEF ENG/ARCH

FIRE PROTECTION

DEPARTMENT OF THE NAVY
NAVAL FACILITIES ENGINEERING COMMAND
ROICC FLORENCE CAMP LEJEUNE
MCB CAMP LEJEUNE

NAVAL FACILITIES ENGINEERING COMMAND ~ MID-ATLANTIC
JACKSONVILLE, NC

JACKSONVILLE, NC

P1338F II MEF SIMULATION/TRAINING CENTER REPLACEMENT

AUDIOVISUAL - RISER DIAGRAMS

SCALE: AS NOTED

EPROJECT NO.:

CONSTR. CONTR. NO.
N40085-20-C-0059

NAVFAC DRAWING NO.

SHEET OF

TA602

DP2 SUBMISSION – P1338 BUILDING PRE-FINAL SUBMISSION

PLOTTED: 6/9/2021 6:52:37 AM

FILE NAME: BIM 360://HF PACKAGE 3/P1338_MEF SIM CTR-15R0892-T.rvt

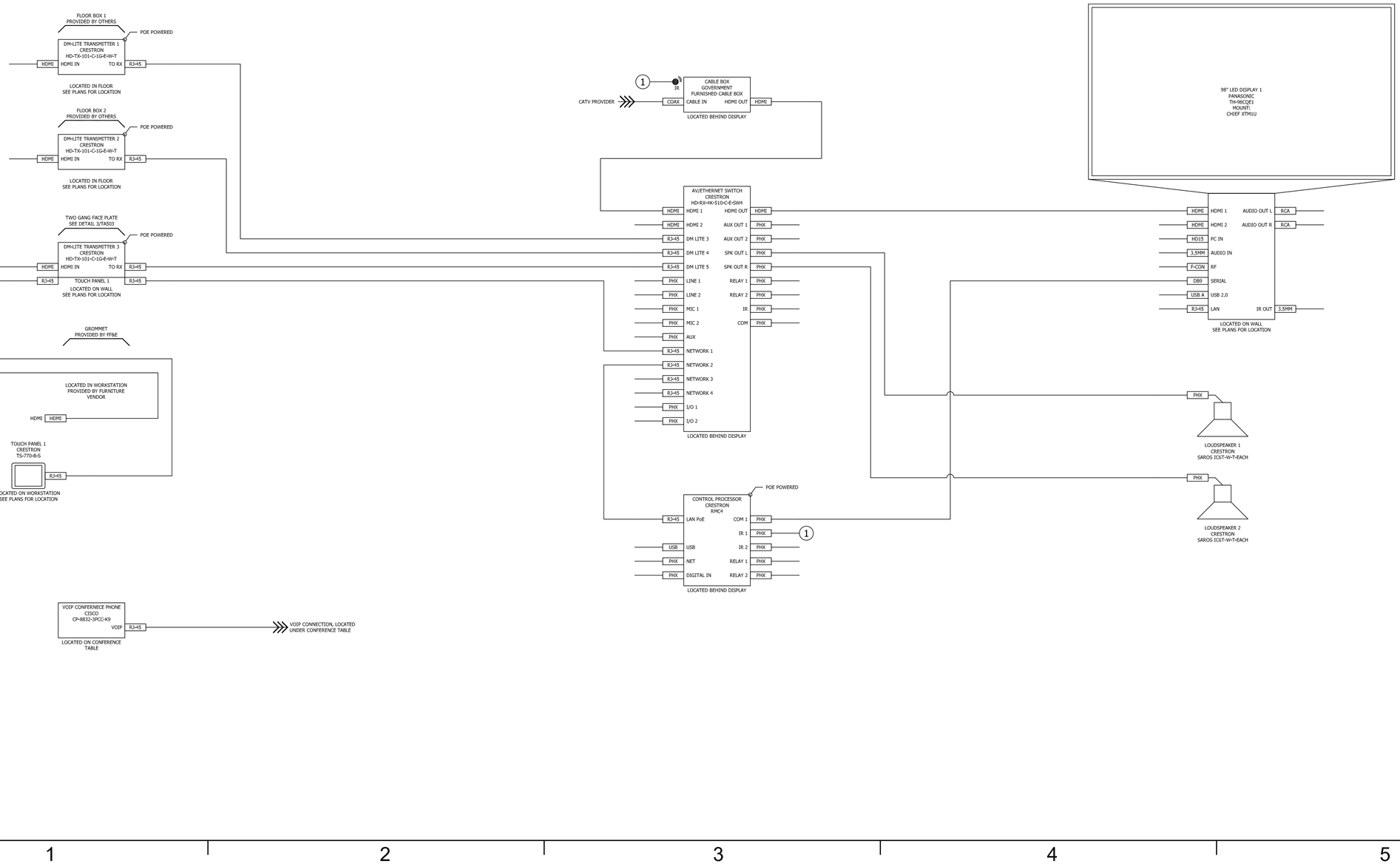

STM	DESCRIPTION	DATE	APPR

NAVFAC

PRELIMINARY
NOT FOR CONSTRUCTION

SEAL

RQ WNJ Jordan COMPANY
– A JOINT VENTURE –

Michael Baker
INTERNATIONAL

100 AIRSIDE DRIVE
MOON TOWNSHIP, PA 15108 A/E INFO

APPROVED

FOR COMMANDER NAVFAC

ACTIVITY
MARINE CORPS BASE
CAMP LEJEUNE

SATISFACTORY TO DATE	DD/MM/YY		
DES AS	DRW AV	CHK BM	
PM	XXX		
BRANCH MANAGER	XXX		
CHIEF ENG/ARCH	XXX		
FIRE PROTECTION	XXX		

DEPARTMENT OF THE NAVY
NAVAL FACILITIES ENGINEERING COMMAND
ROICC FLORENCE CAMP LEJEUNE

NAVAL FACILITIES ENGINEERING COMMAND ~ MID-ATLANTIC
JACKSONVILLE, NC

MCB CAMP LEJEUNE
JACKSONVILLE, NC
P1338F II MEF SIMULATION/TRAINING CENTER
REPLACEMENT

BRIEF/DEBRIEF 101 SYSTEM DRAWING

SCALE: NTS

EPROJECT NO.:

CONSTR. CONTR. NO.
N40085-20-C-0059

NAVFAC DRAWING NO.

SHEET OF

TA801

DP2 SUBMISSION – P1338 BUILDING BRE-FINAL SUBMISSION

PLOTTED: 5/19/2021 3:28:30 PM

FILE NAME: BIM 360://NF PACKAGE 3/P1338_MEF SIM CTR-1590892-T.rvt

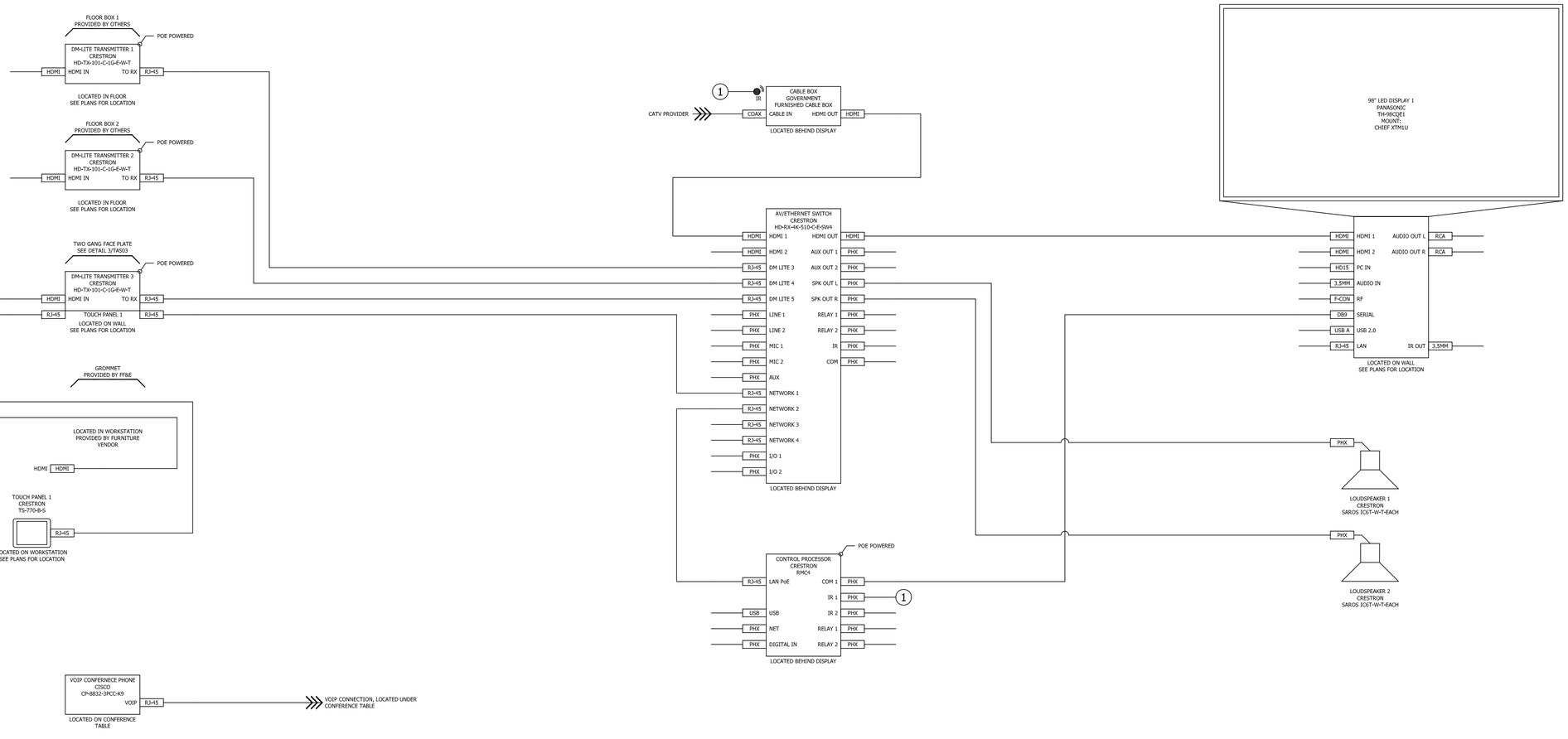

MK	DESCRIPTION	DATE	APPR

NAVFAC

PRELIMINARY
NOT FOR CONSTRUCTION

SEAL

RQ WNJ Jordan COMPANY
– A JOINT VENTURE –

Michael Baker
INTERNATIONAL

100 AIRSIDE DRIVE
MOON TOWNSHIP, PA 15108 A/E INFO

APPROVED

FOR COMMANDER NAVFAC

ACTIVITY
MARINE CORPS BASE
CAMP LEJEUNE

SATISFACTORY TO DATE	DD/MM/YY
DES AS / DRW AV / CHK BM	
PM	XXX
BRANCH MANAGER	XXX
CHIEF ENG/ARCH	XXX
FIRE PROTECTION	XXX

DEPARTMENT OF THE NAVY
NAVAL FACILITIES ENGINEERING COMMAND
ROIOC FLORENCE CAMP LEJEUNE

NAVAL FACILITIES ENGINEERING COMMAND ~ MID-ATLANTIC
JACKSONVILLE, NC

MCB CAMP LEJEUNE
JACKSONVILLE, NC
P1338F II MEF SIMULATION/TRAINING CENTER
REPLACEMENT

BRIEF/DEBRIEF 102 SYSTEM DRAWING

SCALE:	NTS
EPROJECT NO.:	
CONSTR. CONTR. NO.	N40085-20-C-0059
NAVFAC DRAWING NO.	
SHEET	OF

TA802

DP2 SUBMISSION – P1338 BUILDING BRE-FINAL SUBMISSION

PLOTTED: 5/19/2021 3:28:30 PM

FILE NAME: BIM 360://NF PACKAGE 3/P1338_MEF SIM CTR-1590892-T.rvt

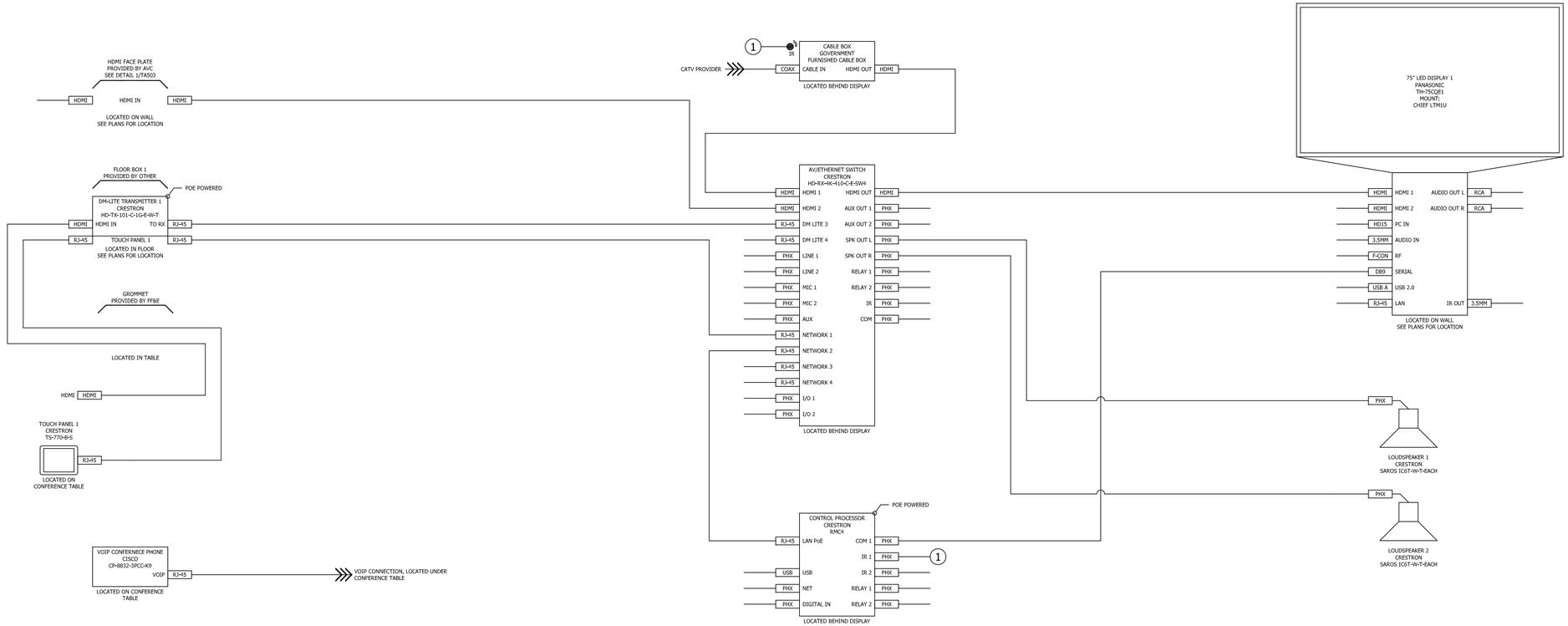

			APPR
			DATE
			DESCRIPTION
			STM

NAVFAC

PRELIMINARY
NOT FOR CONSTRUCTION

SEAL

WNJ Jordan COMPANY
– A JOINT VENTURE –

Michael Baker
INTERNATIONAL

100 AIRSIDE DRIVE
MOON TOWNSHIP, PA 15108 A/E INFO

APPROVED

FOR COMMANDER NAVFAC

ACTIVITY
MARINE CORPS BASE
CAMP LEJEUNE

SATISFACTORY TO DATE DD/MM/YY

DES	AS	DRW AV	CHK BM
PM			XXX
BRANCH MANAGER			XXX
CHIEF ENG/ARCH			XXX
FIRE PROTECTION			XXX

DEPARTMENT OF THE NAVY
NAVAL FACILITIES ENGINEERING COMMAND
ROICC FLORENCE CAMP LEJEUNE
MCB CAMP LEJEUNE

NAVAL FACILITIES ENGINEERING COMMAND ~ MID-ATLANTIC
JACKSONVILLE, NC

JACKSONVILLE, NC

P1338F II MEF SIMULATION/TRAINING CENTER
REPLACEMENT

BRIEF/DEBRIEF 209 SYSTEM DRAWING

DP2 SUBMISSION – P1338 BUILDING PRE-FINAL SUBMISSION

SCALE: NTS

EPROJECT NO.:

CONSTR. CONTR. NO.
N40085-20-C-0059

NAVFAC DRAWING NO.

SHEET OF

TA803

PLOTTED: 5/19/2021 3:26:30 PM

FILE NAME: BIM 360://HF PACKAGE 3/P1338_MEF SIM CTR-1590892-T.rvt

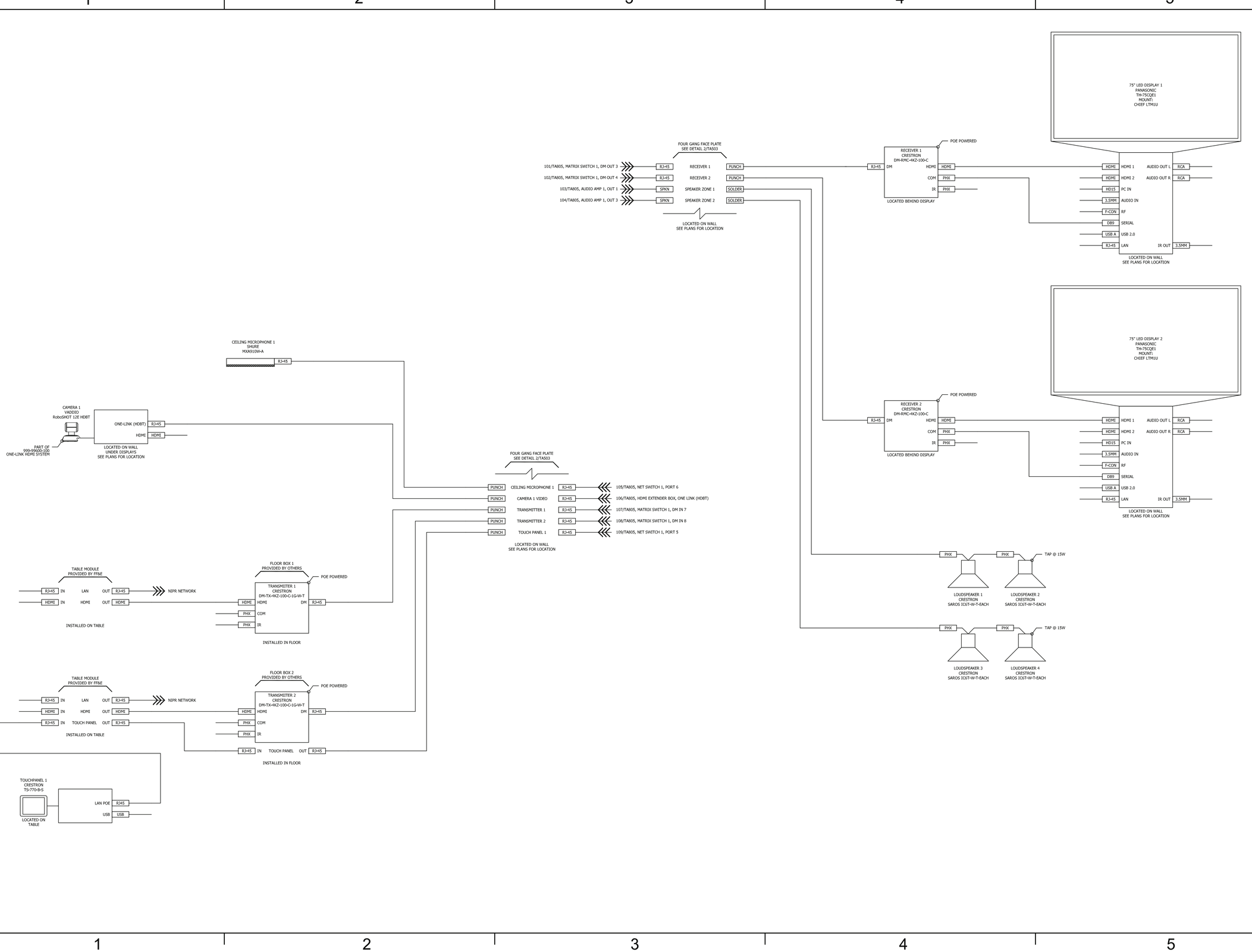

PLOTTED: 5/19/2021 3:28:30 PM

FILE NAME: BIM 360://NF PACKAGE 3/P1338_MEF SIM CTR-1590892-T.rvt

			APPR
			DATE
			DESCRIPTION
			MKS

NAVFAC

PRELIMINARY
NOT FOR CONSTRUCTION

SEAL

WNJ Jordan COMPANY
– A JOINT VENTURE –

Michael Baker
INTERNATIONAL

100 AIRSIDE DRIVE
MOON TOWNSHIP, PA 15108

A/E INFO

APPROVED

FOR COMMANDER NAVFAC

ACTIVITY
MARINE CORPS BASE
CAMP LEJEUNE

SATISFACTORY TO DATE	DD/MM/YY		
DES AS	DRW AV	CHK BM	
PM	XXX		
BRANCH MANAGER	XXX		
CHIEF ENG/ARCH	XXX		
FIRE PROTECTION	XXX		

DEPARTMENT OF THE NAVY
NAVAL FACILITIES ENGINEERING COMMAND
ROICC FLORENCE CAMP LEJEUNE

NAVAL FACILITIES ENGINEERING COMMAND ~ MID-ATLANTIC
JACKSONVILLE, NC

MCB CAMP LEJEUNE
JACKSONVILLE, NC
P1338F II MEF SIMULATION/TRAINING CENTER
REPLACEMENT

SECURE VTC 303B SYSTEM DRAWING

DP2 SUBMISSION – P1338 BUILDING RE-FINAL SUBMISSION

SCALE:	NTS
EPROJECT NO.:	
CONSTR. CONTR. NO.	N40085-20-C-0059
NAVFAC DRAWING NO.	
SHEET	OF

TA804

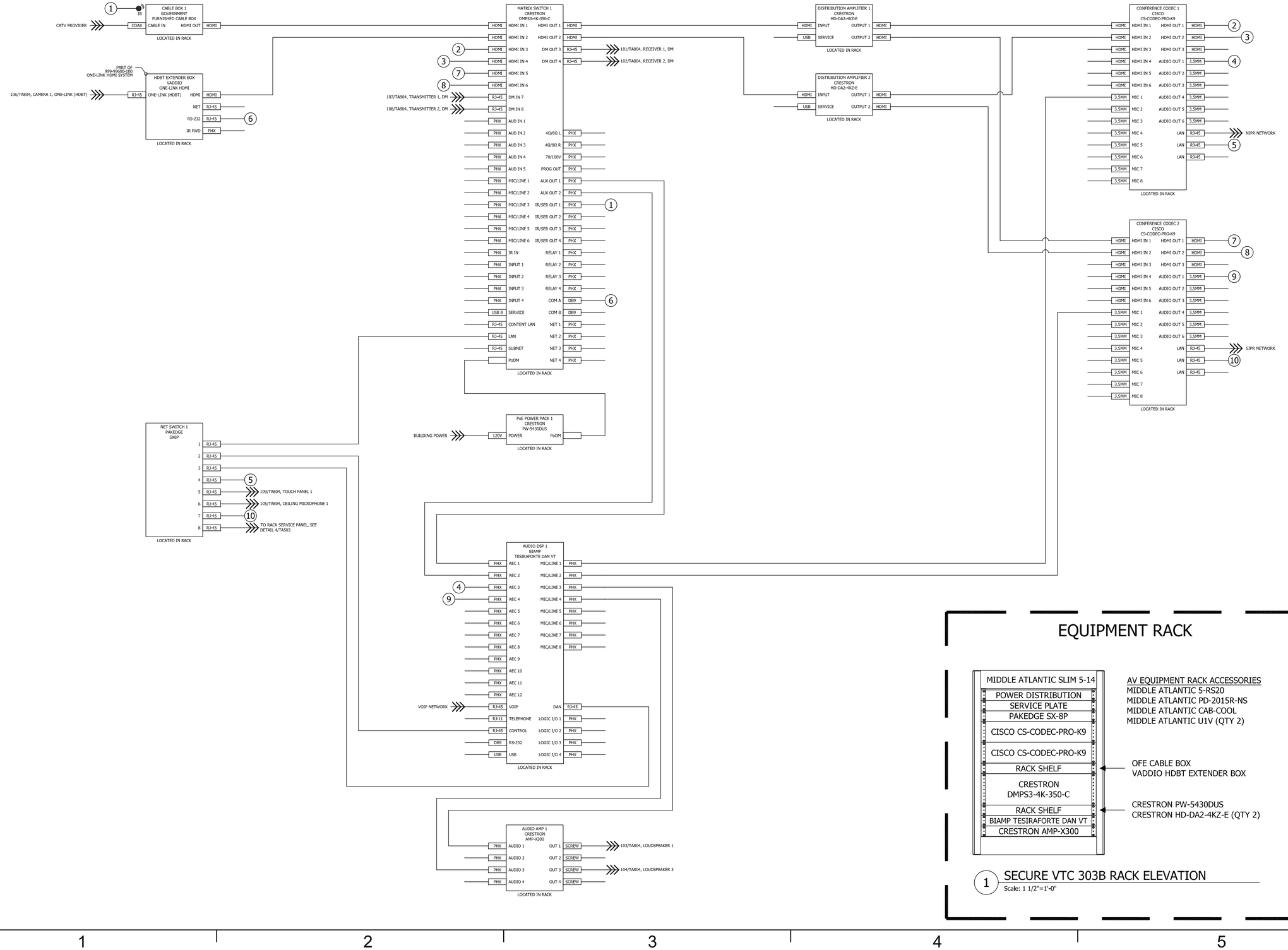

APPR
DATE
DESCRIPTION
STM

NAVFAC

PRELIMINARY
NOT FOR CONSTRUCTION

SEAL

RQ WNM Jordan COMPANY
– A JOINT VENTURE –

Michael Baker
INTERNATIONAL
100 AIRSIDE DRIVE
MOON TOWNSHIP, PA 15108
A/E INFO

APPROVED

FOR COMMANDER NAVFAC

ACTIVITY
MARINE CORPS BASE
CAMP LEJEUNE

SATISFACTORY TO DATE DD/MM/YY

DES AS	DRW AV	CHK BM
PM		XXX
BRANCH MANAGER		XXX
CHIEF ENG/ARCH		XXX
FIRE PROTECTION		XXX

DEPARTMENT OF THE NAVY
NAVAL FACILITIES ENGINEERING COMMAND
ROICC FLORENCE CAMP LEJEUNE

NAVAL FACILITIES ENGINEERING COMMAND – MID-ATLANTIC
JACKSONVILLE, NC

MCB CAMP LEJEUNE
JACKSONVILLE, NC
P1338F II MEF SIMULATION/TRAINING CENTER
REPLACEMENT
SECURE VTC 303B SYSTEM DRAWING

DP2 SUBMISSION – P1338 BUILDING RE-FINAL SUBMISSION

SCALE: NTS
EPROJECT NO.:
CONSTR. CONTR. NO.
N40085-20-C-0059
NAVFAC DRAWING NO.
SHEET OF

TA805

PLOTTED: 5/19/2021 3:26:30 PM
FILE NAME: BIM 360://MF PACKAGE 3/P1338_MEF SIM CTR-15908921-T.rvt

ENTRY WS 100

DECORA WALL PLATE
PROVIDED BY AVC

POE POWERED

DM-LITE TRANSMITTER
CRESTRON
HD-TX-101-C-1G-E-W-T

HDMI — HDMI IN — TO RX — RJ-45

LOCATED ON WALL
SEE PLANS FOR LOCATION

AV KEYPAD
CRESTRON
MPC3-101-B

POWER/CONTROL — RJ-45

LOCATED ON WALL
SEE PLANS FOR LOCATION

POE POWERED

LOBBY/VEST L010

2X1 DM SWITCHER RECIEVER
CRESTRON
HD-RX-201-C-E

LOCAL POWER

HDMI	HDMI IN	HDMI OUT	HDMI
RJ-45	FROM TX	AUDIO OUT L	PHX
		AUDIO OUT R	PHX
		IR OUT	PHX
		COM	PHX
		LAN	RJ-45

LOCATED BEHIND DISPLAY

55" LED DISPLAY
PANASONIC
TH-55CQ1U
MOUNT:
CHIEF MTM1U

HDMI	HDMI 1	AUDIO OUT L	RCA
HDMI	HDMI 2	AUDIO OUT R	RCA
HD15	PC IN		
3.5MM	AUDIO IN		
F-CON	RF		
DB9	SERIAL		
USB A	USB 2.0		
RJ-45	LAN	IR OUT	3.5MM

LOCATED ON WALL
SEE PLANS FOR LOCATION

NETWORK SWITCH
CRESTRON
CEN-SW-POE-5

LOCAL POWER

RJ-45	UPLINK
RJ-45	1
RJ-45	2
RJ-45	3
RJ-45	4

LOCATED BEHIND DISPLAY

PLOTTED: 5/19/2021 3:26:30 PM

FILE NAME: BIM 360://HF PACKAGE 3/P1338_MEF SIM CTR-1590892-T.rvt

NO.	DESCRIPTION	DATE	APPR

NAVFAC

PRELIMINARY
NOT FOR CONSTRUCTION

SEAL

RQ Jordan COMPANY – A JOINT VENTURE –

Michael Baker
INTERNATIONAL

100 AIRSIDE DRIVE
MOON TOWNSHIP, PA 15108

A/E INFO

APPROVED

FOR COMMANDER NAVFAC

ACTIVITY
MARINE CORPS BASE
CAMP LEJEUNE

SATISFACTORY TO DATE DD/MM/YY

DES	AS	DRW AV	CHK BM
PM			XXX
BRANCH MANAGER			XXX
CHIEF ENG/ARCH			XXX
FIRE PROTECTION			XXX

DEPARTMENT OF THE NAVY
NAVAL FACILITIES ENGINEERING COMMAND
ROICC FLORENCE CAMP LEJEUNE

NAVAL FACILITIES ENGINEERING COMMAND – MID-ATLANTIC
JACKSONVILLE, NC

MCB CAMP LEJEUNE
JACKSONVILLE, NC
P1338F II MEF SIMULATION/TRAINING CENTER
REPLACEMENT

LOBBY/VEST L010 SYSTEM DRAWING

SCALE: NTS

EPROJECT NO.:

CONSTR. CONTR. NO.
N40085-20-C-0059

NAVFAC DRAWING NO.

SHEET OF

TA806

DP2 SUBMISSION – P1338 BUILDING RRE-FINAL SUBMISSION

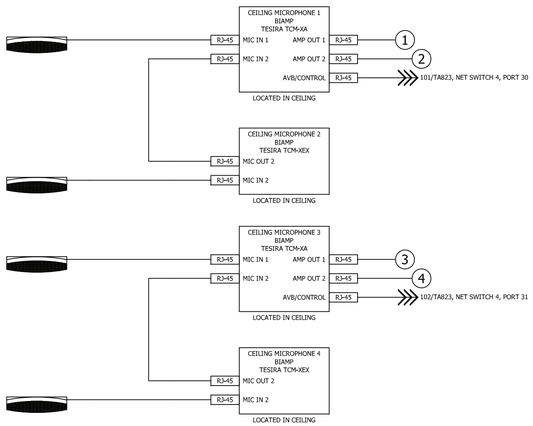

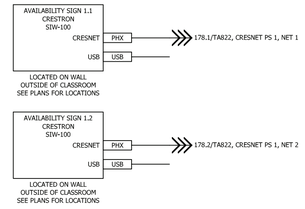

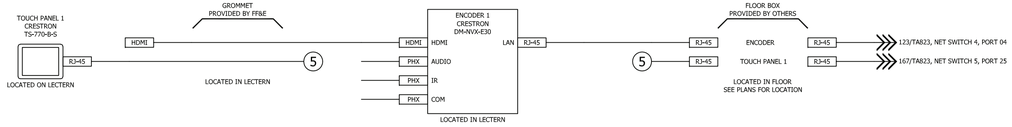

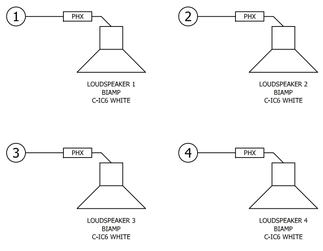

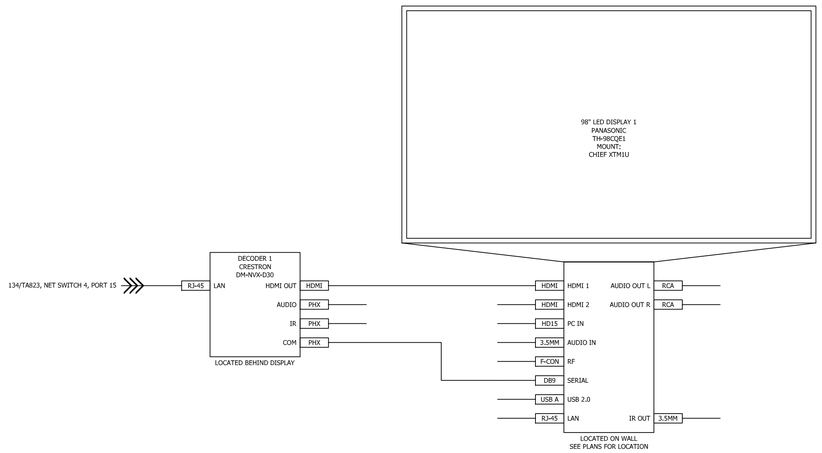

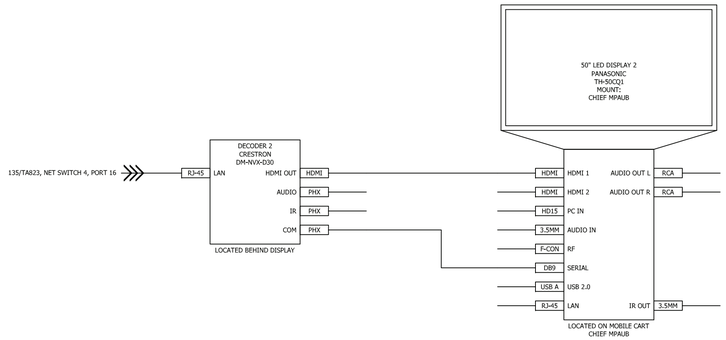

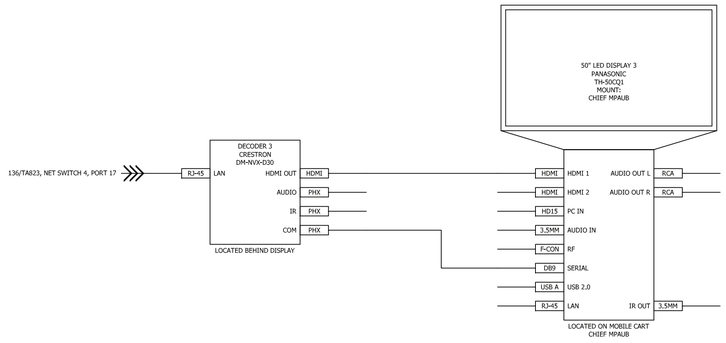

APPR	DATE	DESCRIPTION	STM

NAVFAC

PRELIMINARY
NOT FOR CONSTRUCTION

SEAL

RQ Jordan COMPANY – A JOINT VENTURE –

Michael Baker INTERNATIONAL
100 AIRSIDE DRIVE
MOON TOWNSHIP, PA 15108
A/E INFO

APPROVED

FOR COMMANDER NAVFAC

ACTIVITY
MARINE CORPS BASE
CAMP LEJEUNE

SATISFACTORY TO DATE DD/MM/YY

DES	AS	DRW	AV	CHK	BM
PM			XXX		
BRANCH MANAGER			XXX		
CHIEF ENG/ARCH			XXX		
FIRE PROTECTION			XXX		

DEPARTMENT OF THE NAVY
NAVAL FACILITIES ENGINEERING COMMAND
ROICC FLORENCE CAMP LEJEUNE

NAVAL FACILITIES ENGINEERING COMMAND ~ MID-ATLANTIC
JACKSONVILLE, NC

MCB CAMP LEJEUNE
JACKSONVILLE, NC
P1338F II MEF SIMULATION/TRAINING CENTER
REPLACEMENT

SIMULATION CLASSROOM 200A SYSTEM DRAWING

SCALE: NTS
EPROJECT NO.:
CONSTR. CONTR. NO.
N40085-20-C-0059
NAVFAC DRAWING NO.
SHEET OF

TA807

DP2 SUBMISSION – P1338 BUILDING RE-FINAL SUBMISSION

PLOTTED: 5/19/2021 3:26:30 PM

FILE NAME: BIM 360://HF PACKAGE 3/P1338_MEF SIM CTR-1590892-T.rvt

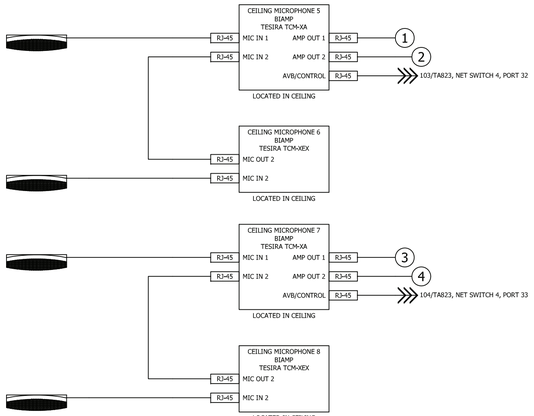

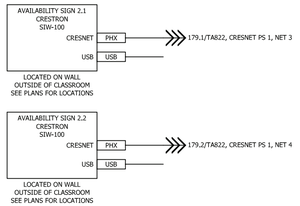

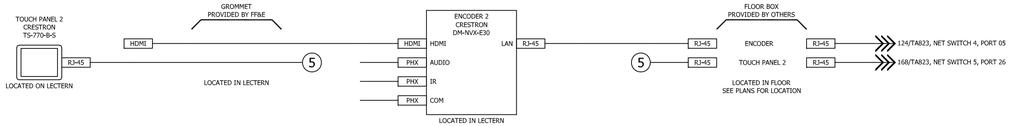

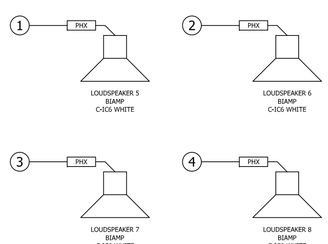

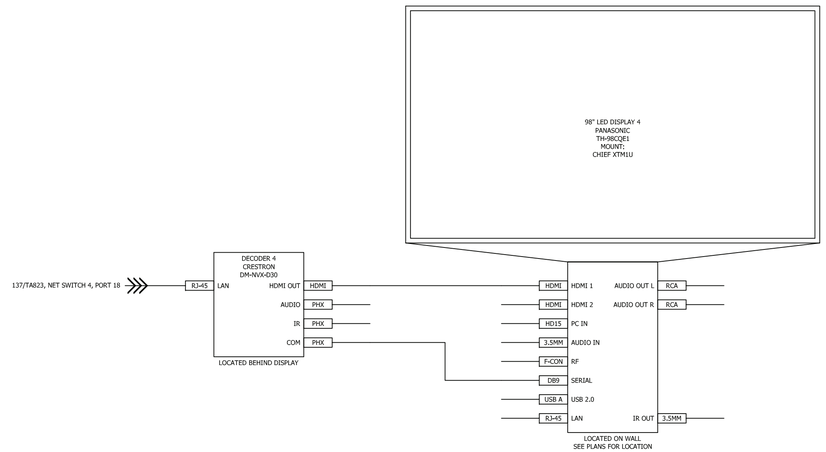

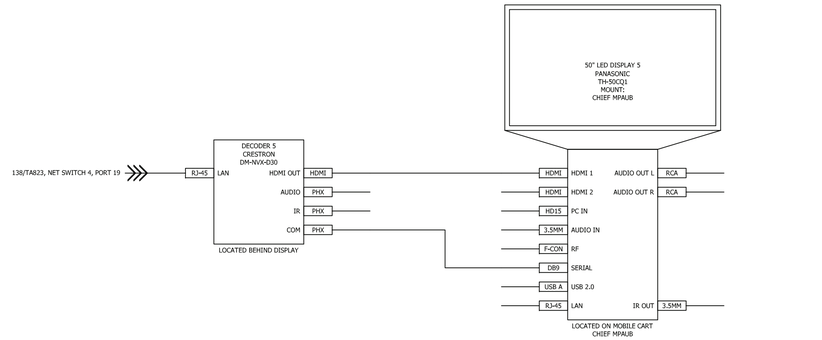

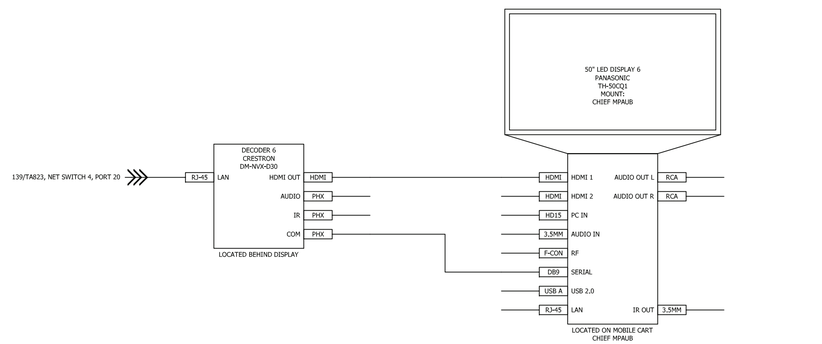

APPR	DATE	DESCRIPTION	STM

NAVFAC

PRELIMINARY
NOT FOR CONSTRUCTION

SEAL

RQ Jordan COMPANY – A JOINT VENTURE –

Michael Baker INTERNATIONAL
100 AIRSIDE DRIVE
MOON TOWNSHIP, PA 15108 A/E INFO

APPROVED

FOR COMMANDER NAVFAC

ACTIVITY
MARINE CORPS BASE
CAMP LEJEUNE

SATISFACTORY TO DATE DD/MM/YY

DES	AS	DRW	AV	CHK	BM
PM					XXX
BRANCH MANAGER					XXX
CHIEF ENG/ARCH					XXX
FIRE PROTECTION					XXX

DEPARTMENT OF THE NAVY
NAVAL FACILITIES ENGINEERING COMMAND
ROICC FLORENCE CAMP LEJEUNE
MCB CAMP LEJEUNE

NAVAL FACILITIES ENGINEERING COMMAND – MID-ATLANTIC
JACKSONVILLE, NC

P1338F II MEF SIMULATION/TRAINING CENTER REPLACEMENT

SIMULATION CLASSROOM 200B SYSTEM DRAWING

DP2 SUBMISSION – P1338 BUILDING RE-FINAL SUBMISSION

SCALE:	NTS
EPROJECT NO.:	
CONSTR. CONTR. NO.	N40085-20-C-0059
NAVFAC DRAWING NO.	
SHEET	OF

TA808

PLOTTED: 5/19/2021 3:28:30 PM

FILE NAME: BIM 360://HF PACKAGE 3/P1338_MEF SIM CTR-1590892-T.rvt

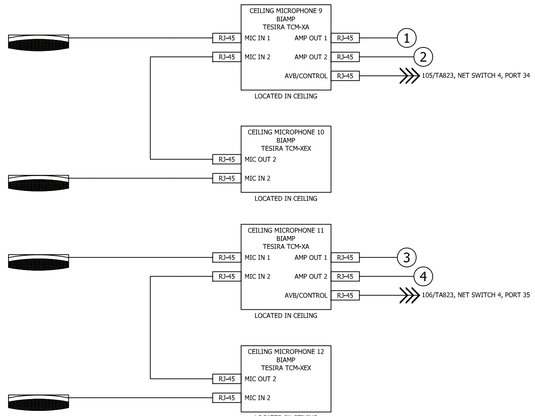



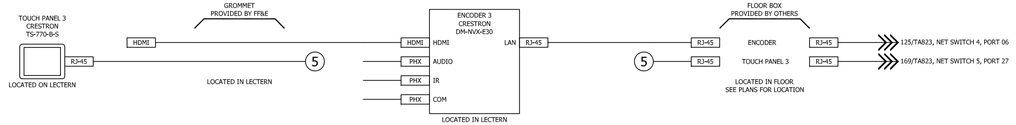

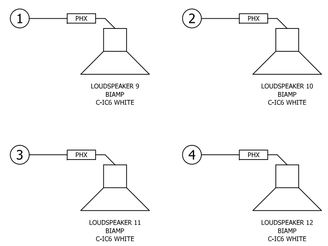

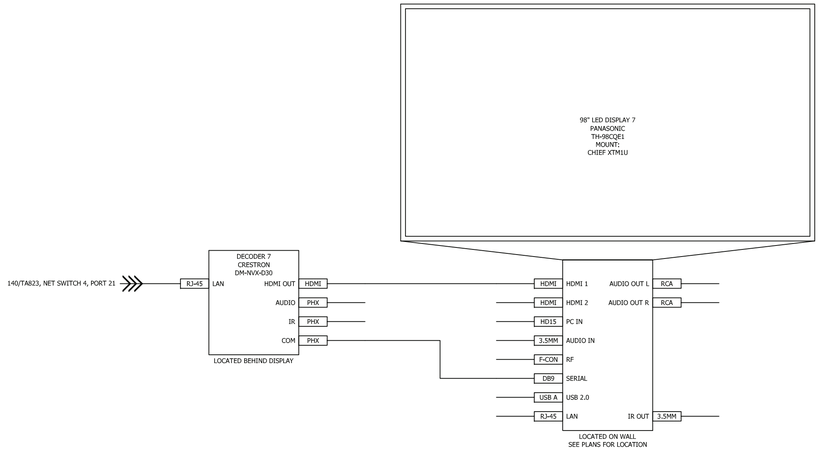

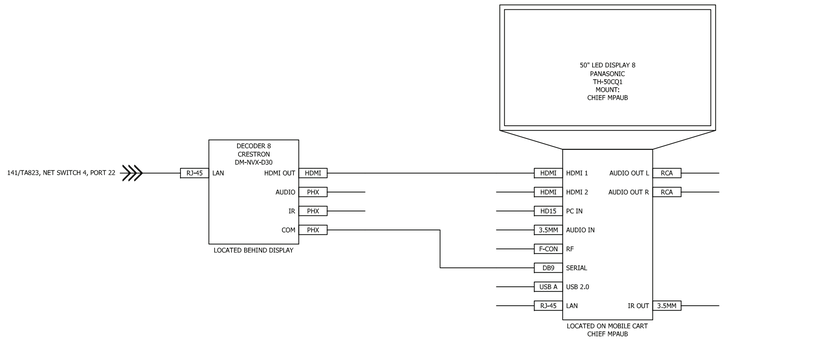

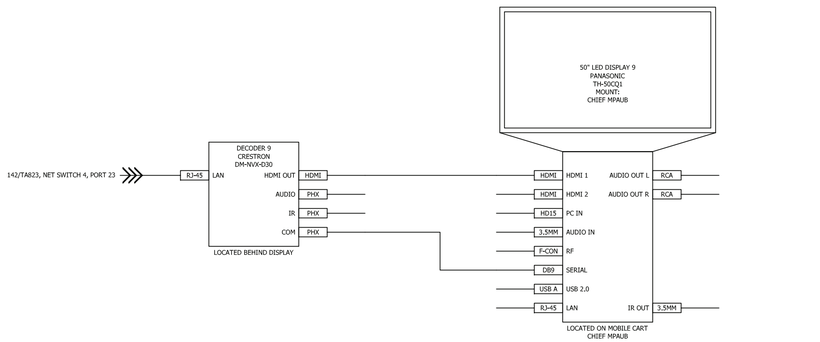

APPR	DATE	DESCRIPTION	STM

NAVFAC

PRELIMINARY
NOT FOR CONSTRUCTION

SEAL

RQ WNJ Jordan COMPANY
– A JOINT VENTURE –

Michael Baker
INTERNATIONAL
100 AIRSIDE DRIVE
MOON TOWNSHIP, PA 15108
A/E INFO

APPROVED

FOR COMMANDER NAVFAC

ACTIVITY
MARINE CORPS BASE
CAMP LEJEUNE

SATISFACTORY TO DATE	DD/MM/YY
DES AS	DRW AV CHK BM
PM	XXX
BRANCH MANAGER	XXX
CHIEF ENG/ARCH	XXX
FIRE PROTECTION	XXX

DEPARTMENT OF THE NAVY
NAVAL FACILITIES ENGINEERING COMMAND
ROICC FLORENCE CAMP LEJEUNE
MCB CAMP LEJEUNE

NAVAL FACILITIES ENGINEERING COMMAND ~ MID-ATLANTIC
JACKSONVILLE, NC

JACKSONVILLE, NC
P1338F II MEF SIMULATION/TRAINING CENTER
REPLACEMENT

SIMULATION CLASSROOM 200C SYSTEM DRAWING

SCALE:	NTS
EPROJECT NO.:	
CONSTR. CONTR. NO.	N40085-20-C-0059
NAVFAC DRAWING NO.	
SHEET	OF

TA809

DP2 SUBMISSION – P1338 BUILDING PRE-FINAL SUBMISSION

PLOTTED: 5/19/2021 3:26:30 PM

FILE NAME: BIM 360://HF PACKAGE 3/P1338_MEF SIM CTR-1590892-T.rvt

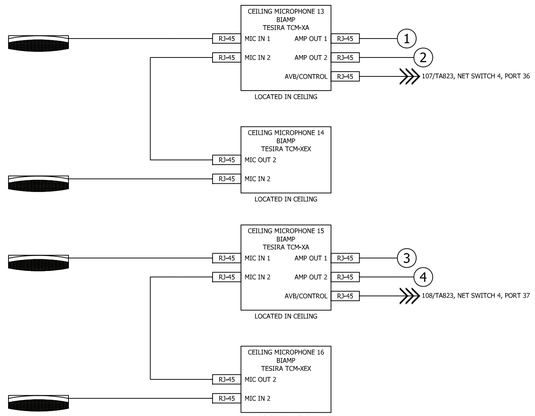

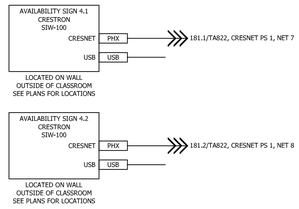

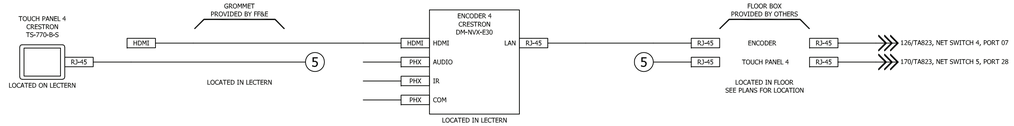

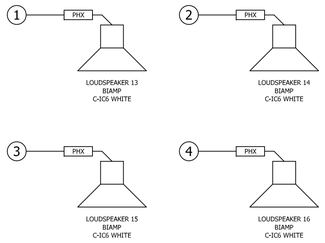

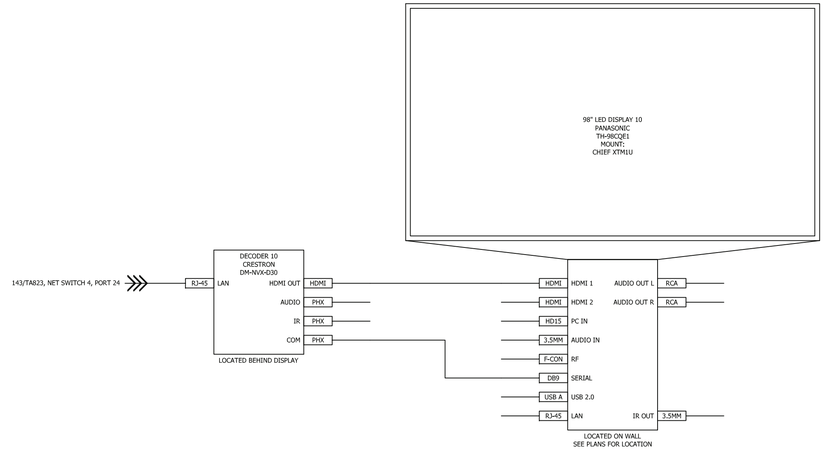

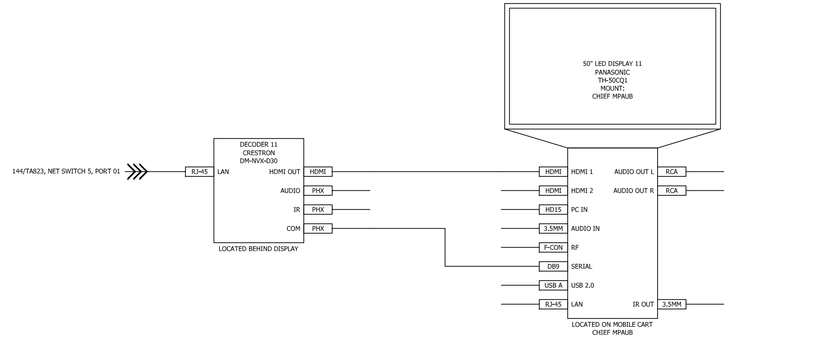

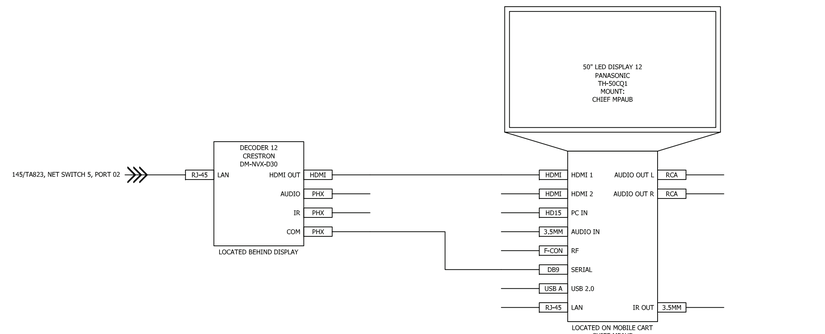

APPR	DATE	DESCRIPTION	STM

NAVFAC

PRELIMINARY
NOT FOR CONSTRUCTION

SEAL

RQ WNJ Jordan COMPANY
– A JOINT VENTURE –

Michael Baker
INTERNATIONAL
100 AIRSIDE DRIVE
MOON TOWNSHIP, PA 15108 A/E INFO

APPROVED

FOR COMMANDER NAVFAC

ACTIVITY
MARINE CORPS BASE
CAMP LEJEUNE

SATISFACTORY TO DATE	DD/MM/YY
DES AS / DRW AV / CHK BM	
PM	XXX
BRANCH MANAGER	XXX
CHIEF ENG/ARCH	XXX
FIRE PROTECTION	XXX

DEPARTMENT OF THE NAVY
NAVAL FACILITIES ENGINEERING COMMAND ~ MID-ATLANTIC
ROICC FLORENCE CAMP LEJEUNE
MCB CAMP LEJEUNE
NAVAL FACILITIES ENGINEERING COMMAND ~ MID-ATLANTIC
JACKSONVILLE, NC
JACKSONVILLE, NC
P1338F II MEF SIMULATION/TRAINING CENTER
REPLACEMENT
SIMULATION CLASSROOM 300A SYSTEM DRAWING

SCALE:	NTS
EPROJECT NO.:	
CONSTR. CONTR. NO.	N40085-20-C-0059
NAVFAC DRAWING NO.	
SHEET	OF

TA810

DP2 SUBMISSION – P1338 BUILDING PRE-FINAL SUBMISSION

PLOTTED: 5/19/2021 3:26:30 PM

FILE NAME: BIM 360://HF PACKAGE 3/P1338_MEF SIM CTR-1590892-T.rvt

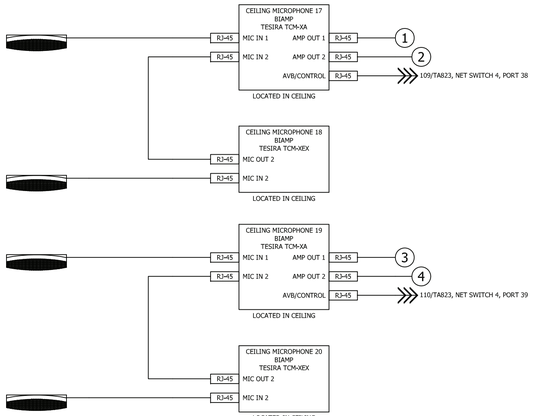

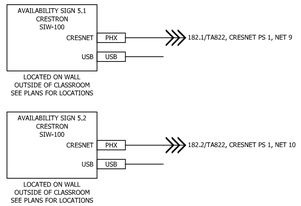

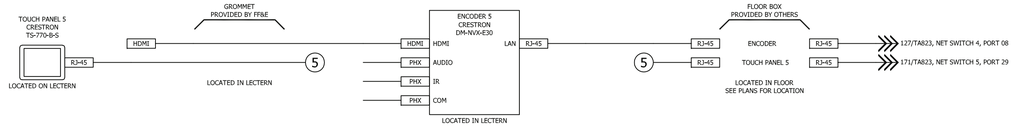

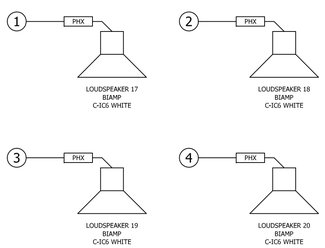

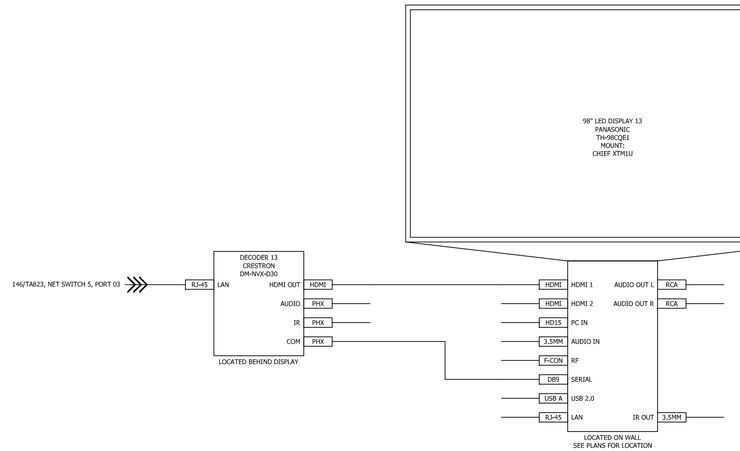

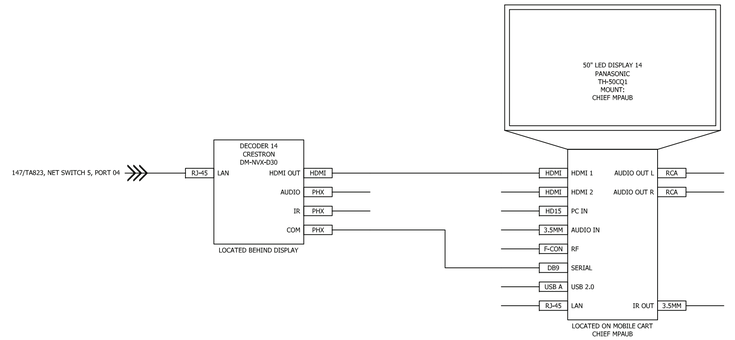

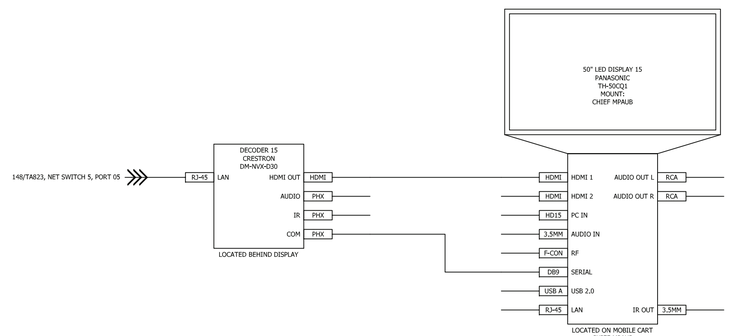

APPR	DATE	DESCRIPTION	STM

NAVFAC

PRELIMINARY
NOT FOR CONSTRUCTION

SEAL

RQ WNJ Jordan COMPANY
– A JOINT VENTURE –

Michael Baker
INTERNATIONAL
100 AIRSIDE DRIVE
MOON TOWNSHIP, PA 15108
A/E INFO

APPROVED

FOR COMMANDER NAVFAC

ACTIVITY
MARINE CORPS BASE
CAMP LEJEUNE

SATISFACTORY TO DATE	DD/MM/YY		
DES AS	DRW AV	CHK BM	
PM	XXX		
BRANCH MANAGER	XXX		
CHIEF ENG/ARCH	XXX		
FIRE PROTECTION	XXX		

DEPARTMENT OF THE NAVY
NAVAL FACILITIES ENGINEERING COMMAND
ROICC FLORENCE CAMP LEJEUNE

NAVAL FACILITIES ENGINEERING COMMAND – MID-ATLANTIC
JACKSONVILLE, NC

MCB CAMP LEJEUNE
JACKSONVILLE, NC
P1338F II MEF SIMULATION/TRAINING CENTER
REPLACEMENT

SIMULATION CLASSROOM 300B SYSTEM DRAWING

SCALE:	NTS
EPROJECT NO.:	
CONSTR. CONTR. NO.	N40085-20-C-0059
NAVFAC DRAWING NO.	
SHEET	OF

TA811

DP2 SUBMISSION – P1338 BUILDING RE-FINAL SUBMISSION

PLOTTED: 5/19/2021 3:28:30 PM

FILE NAME: BIM 360://HF PACKAGE 3/P1338_MEF SIM CTR-1590892-T.rvt

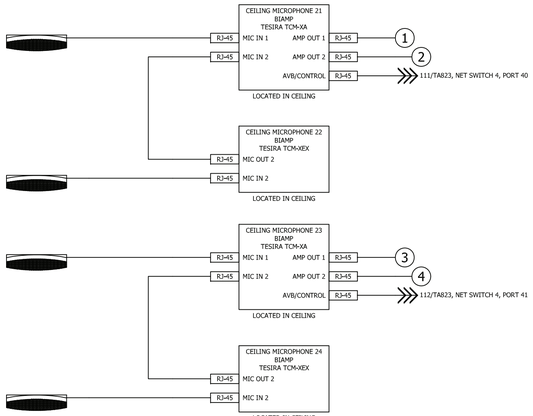

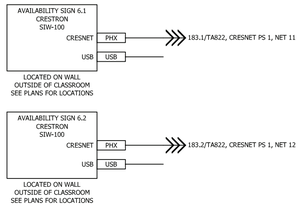

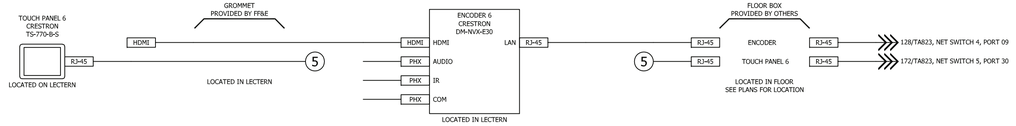

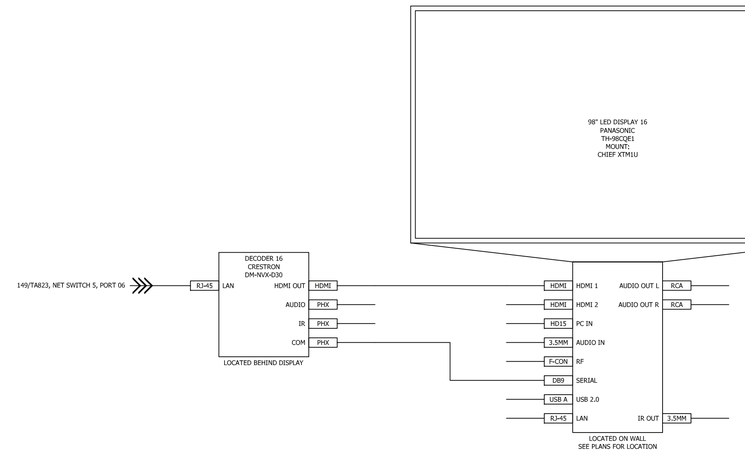

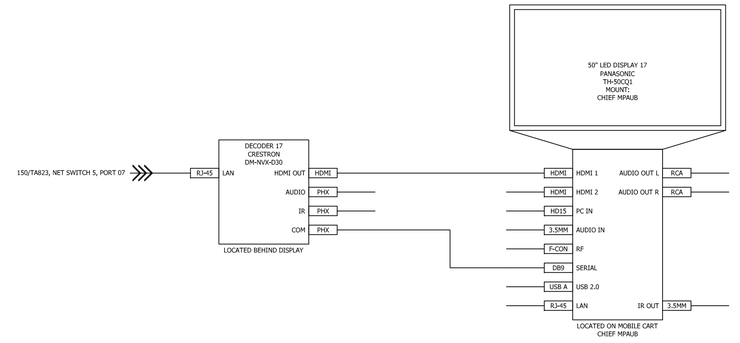

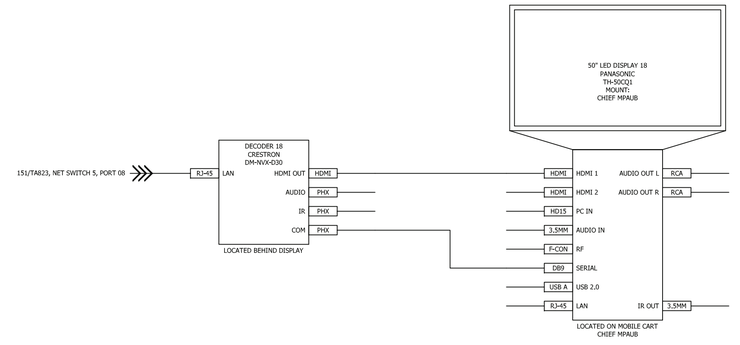

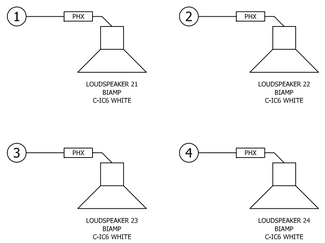

APPR	DATE	DESCRIPTION	NUM

NAVFAC

PRELIMINARY
NOT FOR CONSTRUCTION

SEAL

RQ WNJ Jordan COMPANY
– A JOINT VENTURE –

Michael Baker
INTERNATIONAL
100 AIRSIDE DRIVE
MOON TOWNSHIP, PA 15108
A/E INFO

APPROVED

FOR COMMANDER NAVFAC

ACTIVITY
MARINE CORPS BASE
CAMP LEJEUNE

SATISFACTORY TO DATE	DD/MM/YY
DES AS	DRW AV CHK BM
PM	XXX
BRANCH MANAGER	XXX
CHIEF ENG/ARCH	XXX
FIRE PROTECTION	XXX

DEPARTMENT OF THE NAVY
NAVAL FACILITIES ENGINEERING COMMAND
ROICC FLORENCE CAMP LEJEUNE

NAVAL FACILITIES ENGINEERING COMMAND ~ MID-ATLANTIC
JACKSONVILLE, NC

MCB CAMP LEJEUNE
JACKSONVILLE, NC
P1338F II MEF SIMULATION/TRAINING CENTER
REPLACEMENT

SIMULATION CLASSROOM 300C SYSTEM DRAWING

SCALE:	NTS
EPROJECT NO.:	
CONSTR. CONTR. NO.	N40085-20-C-0059
NAVFAC DRAWING NO.	
SHEET	OF

TA812

DP2 SUBMISSION – P1338 BUILDING RE-FINAL SUBMISSION

PLOTTED: 5/19/2021 3:26:30 PM

FILE NAME: BIM 360://NF PACKAGE 3/P1338_MEF SIM CTR-1590892-T.rvt

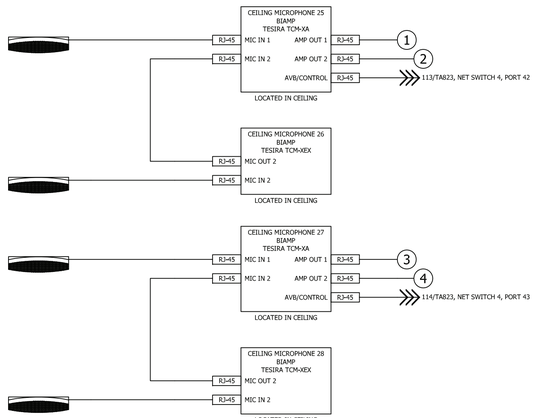

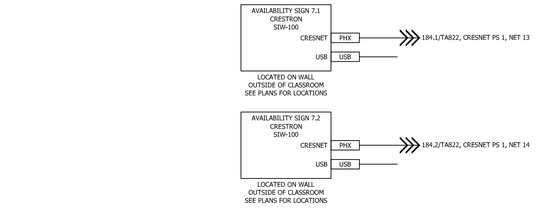

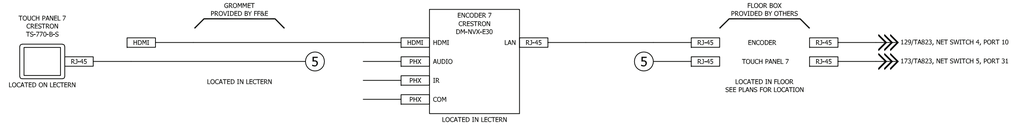

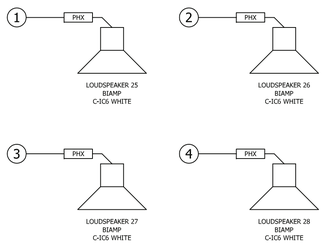

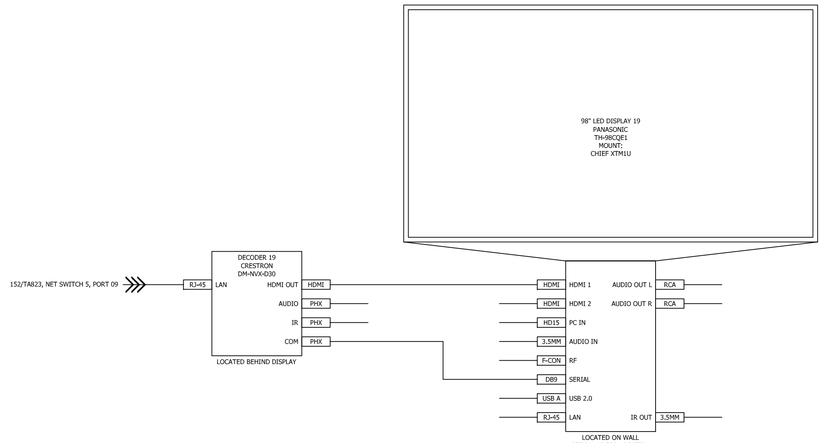

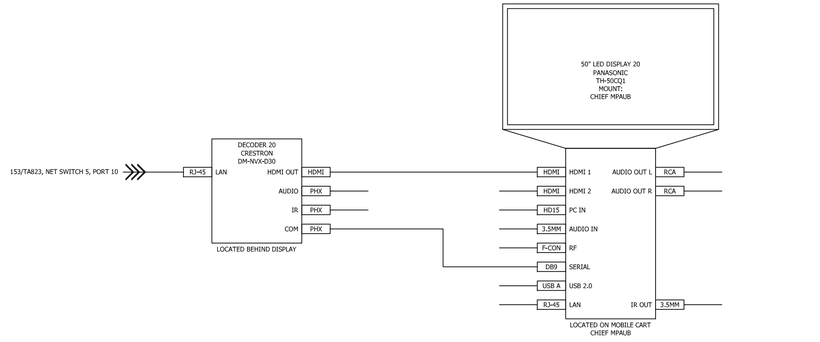

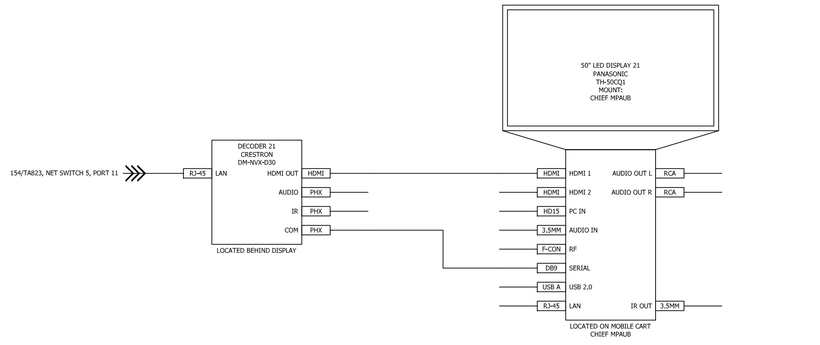

APPR	DATE	DESCRIPTION	STM

NAVFAC

PRELIMINARY
NOT FOR CONSTRUCTION

SEAL

RQ WNJ Jordan COMPANY – A JOINT VENTURE –

Michael Baker
INTERNATIONAL
100 AIRSIDE DRIVE
MOON TOWNSHIP, PA 15108

A/E INFO

APPROVED

FOR COMMANDER NAVFAC

ACTIVITY
MARINE CORPS BASE
CAMP LEJEUNE

SATISFACTORY TO DATE DD/MM/YY

DES	AS	DRW	AV	CHK	BM

PM	XXX
BRANCH MANAGER	XXX
CHIEF ENG/ARCH	XXX
FIRE PROTECTION	XXX

DEPARTMENT OF THE NAVY
NAVAL FACILITIES ENGINEERING COMMAND
ROICC FLORENCE CAMP LEJEUNE

NAVAL FACILITIES ENGINEERING COMMAND ~ MID-ATLANTIC
JACKSONVILLE, NC

MCB CAMP LEJEUNE
JACKSONVILLE, NC
P1338F II MEF SIMULATION/TRAINING CENTER
REPLACEMENT

SIMULATION CLASSROOM 300X SYSTEM DRAWING

SCALE:	NTS
EPROJECT NO.:	
CONSTR. CONTR. NO.	N40085-20-C-0059
NAVFAC DRAWING NO.	
SHEET	OF

TA813

DP2 SUBMISSION – P1338 BUILDING RE-FINAL SUBMISSION

PLOTTED: 5/19/2021 3:26:30 PM

FILE NAME: BIM 360://NF PACKAGE 3/P1338_MEF SIM CTR-1590892-T.rvt

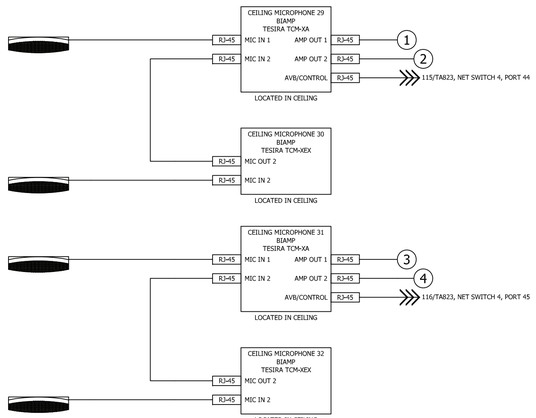

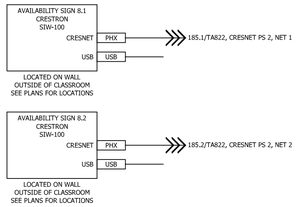

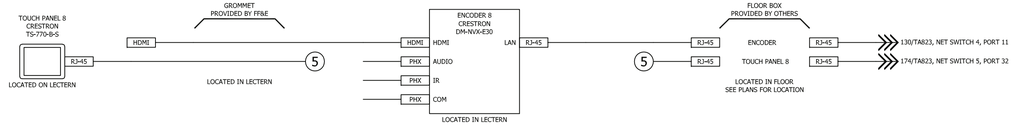

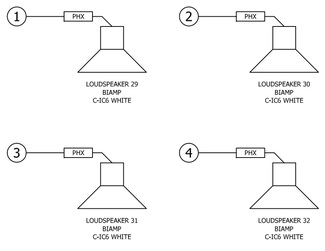

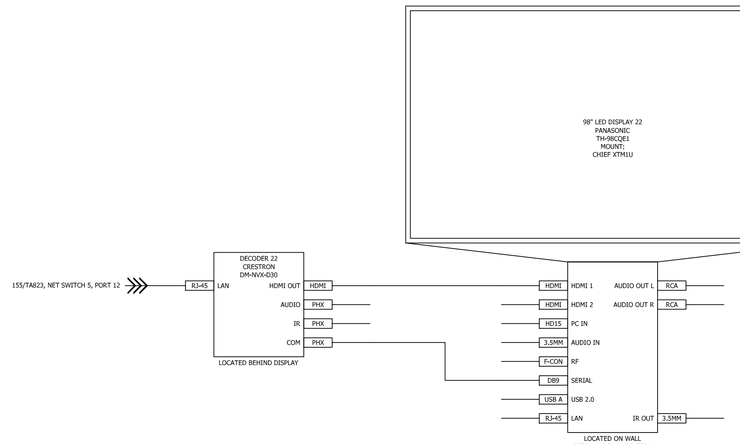

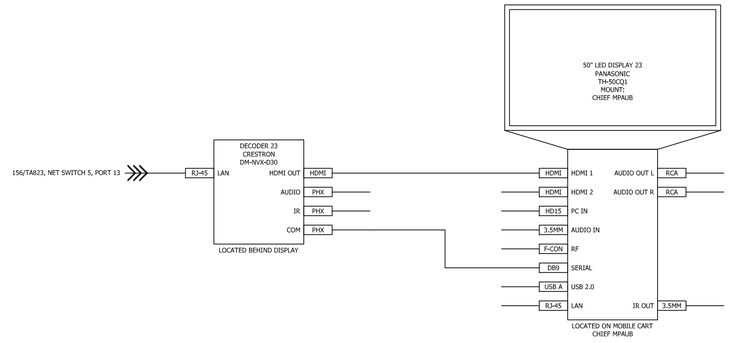

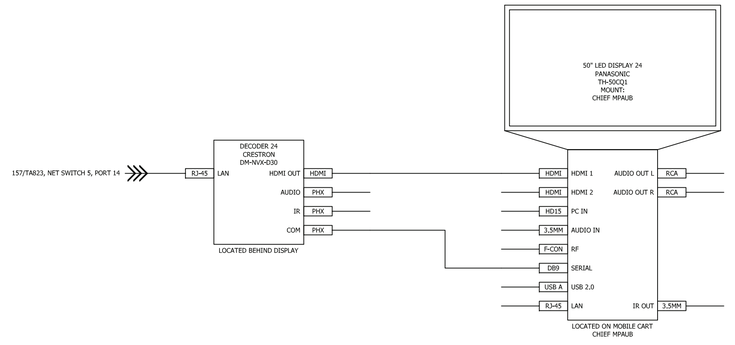

NO.	DESCRIPTION	DATE	APPR

NAVFAC

PRELIMINARY
NOT FOR CONSTRUCTION

SEAL

RQ WNJ Jordan COMPANY – A JOINT VENTURE –

Michael Baker
INTERNATIONAL
100 AIRSIDE DRIVE
MOON TOWNSHIP, PA 15108
A/E INFO

APPROVED

FOR COMMANDER NAVFAC

ACTIVITY
MARINE CORPS BASE
CAMP LEJEUNE

SATISFACTORY TO DATE	DD/MM/YY
DES AS	DRW AV CHK BM
PM	XXX
BRANCH MANAGER	XXX
CHIEF ENG/ARCH	XXX
FIRE PROTECTION	XXX

DEPARTMENT OF THE NAVY
NAVAL FACILITIES ENGINEERING COMMAND
ROICC FLORENCE CAMP LEJEUNE

NAVAL FACILITIES ENGINEERING COMMAND ~ MID-ATLANTIC
JACKSONVILLE, NC

MCB CAMP LEJEUNE
JACKSONVILLE, NC
P1338F II MEF SIMULATION/TRAINING CENTER
REPLACEMENT

SIMULATION CLASSROOM 300Y SYSTEM DRAWING

SCALE:	NTS
EPROJECT NO.:	
CONSTR. CONTR. NO.	N40085-20-C-0059
NAVFAC DRAWING NO.	
SHEET	OF

TA814

DP2 SUBMISSION – P1338 BUILDING RFE-FINAL SUBMISSION

PLOTTED: 5/19/2021 3:26:30 PM

FILE NAME: BIM 360://NIF PACKAGE 3/P1338_MEF SIM CTR-1590892-T.rvt

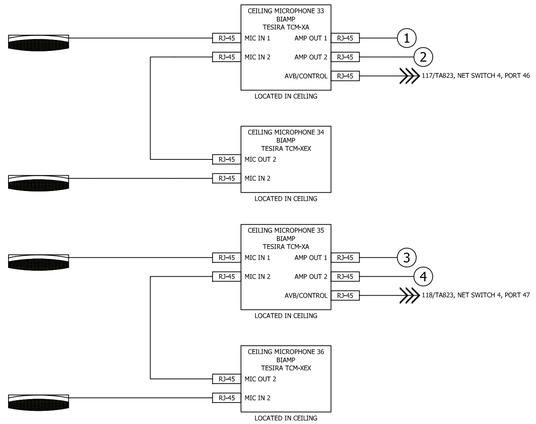

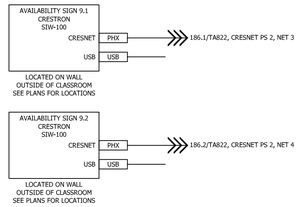

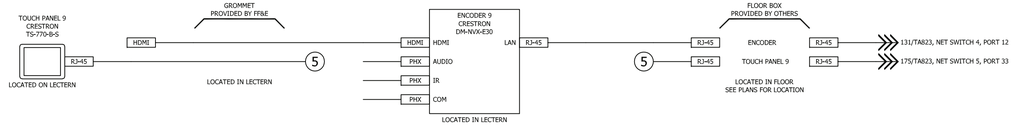

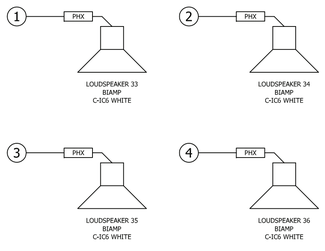

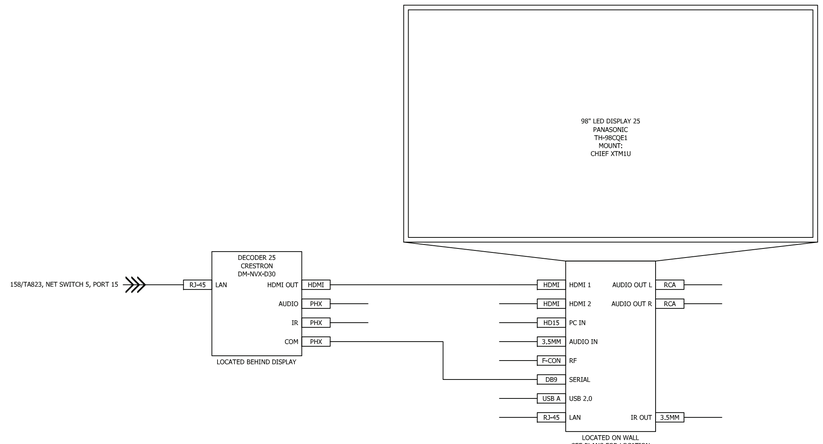

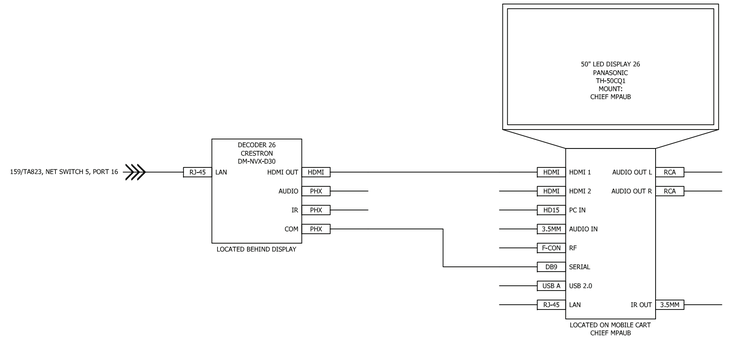

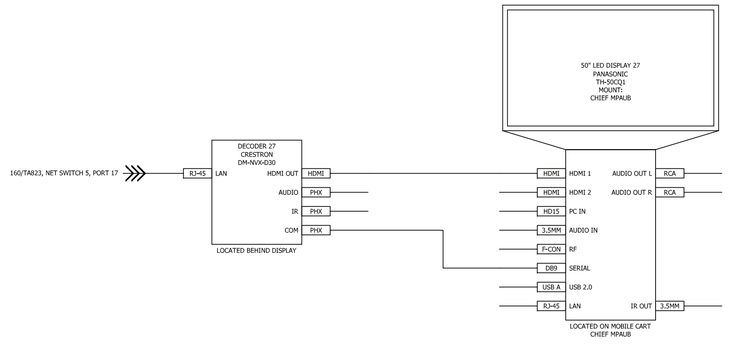

NO.	DESCRIPTION	DATE	APPR

NAVFAC

PRELIMINARY
NOT FOR CONSTRUCTION

SEAL

RQ Jordan COMPANY – A JOINT VENTURE –

Michael Baker INTERNATIONAL
100 AIRSIDE DRIVE
MOON TOWNSHIP, PA 15108
A/E INFO

APPROVED

FOR COMMANDER NAVFAC

ACTIVITY
MARINE CORPS BASE
CAMP LEJEUNE

SATISFACTORY TO DATE DD/MM/YY

DES	AS	DRW	AV	CHK	BM
PM					XXX
BRANCH MANAGER					XXX
CHIEF ENG/ARCH					XXX
FIRE PROTECTION					XXX

DEPARTMENT OF THE NAVY
NAVAL FACILITIES ENGINEERING COMMAND
ROICC FLORENCE CAMP LEJEUNE

NAVAL FACILITIES ENGINEERING COMMAND ~ MID-ATLANTIC
JACKSONVILLE, NC

MCB CAMP LEJEUNE
JACKSONVILLE, NC
P1338F II MEF SIMULATION/TRAINING CENTER
REPLACEMENT

SIMULATION CLASSROOM 300Z SYSTEM DRAWING

SCALE:	NTS
EPROJECT NO.:	
CONSTR. CONTR. NO.	N40085-20-C-0059
NAVFAC DRAWING NO.	
SHEET	OF

TA815

DP2 SUBMISSION – P1338 BUILDING RPE-FINAL SUBMISSION

PLOTTED: 5/19/2021 3:26:30 PM

FILE NAME: BIM 360://NF PACKAGE 3/P1338_MEF SIM CTR-1590892-T.rvt

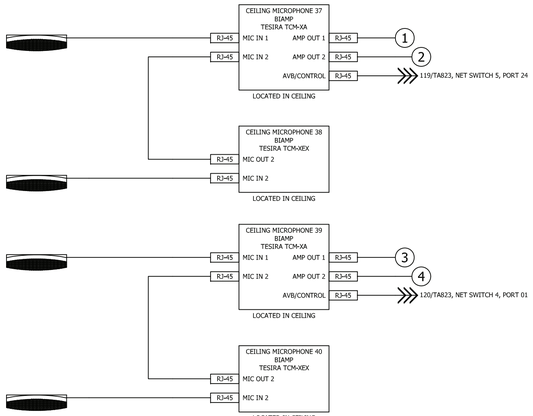

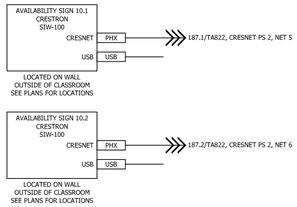

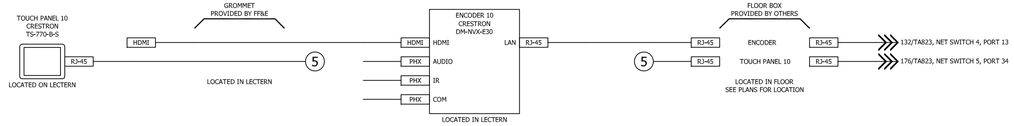

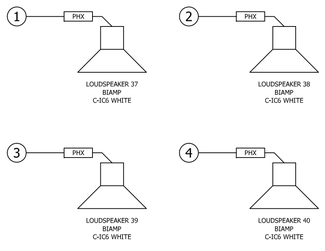

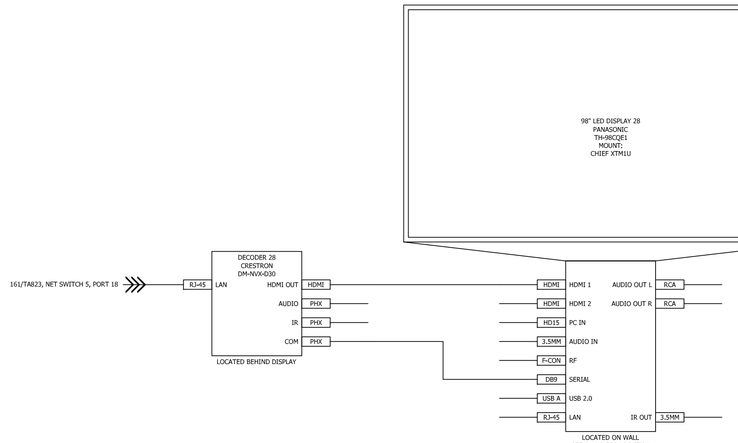

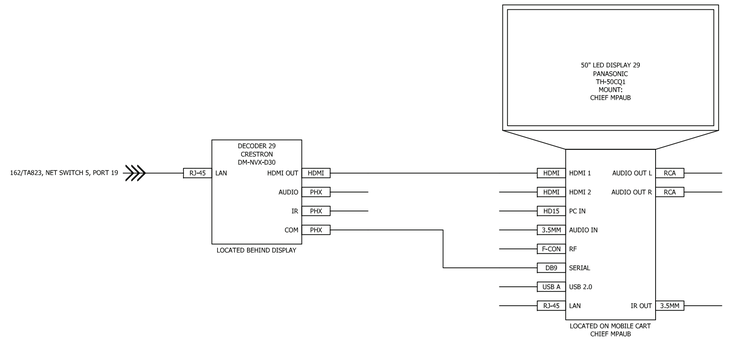

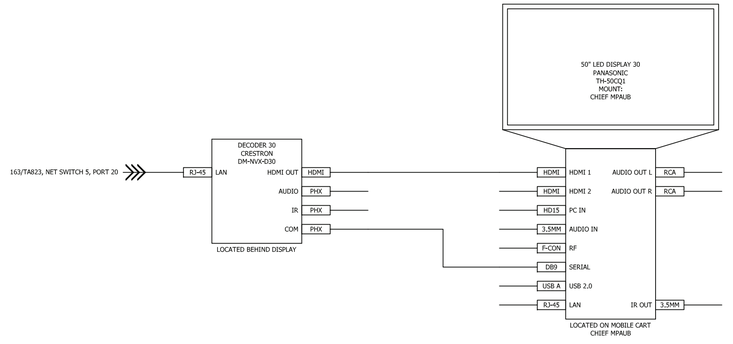

NO.	DESCRIPTION	DATE	APPR

NAVFAC

PRELIMINARY
NOT FOR CONSTRUCTION

SEAL

RQ WNJ Jordan COMPANY
– A JOINT VENTURE –

Michael Baker
INTERNATIONAL
100 AIRSIDE DRIVE
MOON TOWNSHIP, PA 15108

A/E INFO

APPROVED

FOR COMMANDER NAVFAC

ACTIVITY
MARINE CORPS BASE
CAMP LEJEUNE

SATISFACTORY TO DATE	DD/MM/YY
DES AS / DRW AV / CHK BM	
PM	XXX
BRANCH MANAGER	XXX
CHIEF ENG/ARCH	XXX
FIRE PROTECTION	XXX

DEPARTMENT OF THE NAVY
NAVAL FACILITIES ENGINEERING COMMAND
ROICC FLORENCE CAMP LEJEUNE

NAVAL FACILITIES ENGINEERING COMMAND ~ MID-ATLANTIC
JACKSONVILLE, NC

MCB CAMP LEJEUNE
JACKSONVILLE, NC
P1338F II MEF SIMULATION/TRAINING CENTER
REPLACEMENT

SIMULATION CLASSROOM 301A SYSTEM DRAWING

SCALE:	NTS
EPROJECT NO.:	
CONSTR. CONTR. NO.	N40085-20-C-0059
NAVFAC DRAWING NO.	
SHEET	OF

TA816

DP2 SUBMISSION – P1338 BUILDING RFE-FINAL SUBMISSION

PLOTTED: 5/19/2021 3:26:30 PM

FILE NAME: BIM 360://NF PACKAGE 3/P1338_MEF SIM CTR-1590892-T.rvt

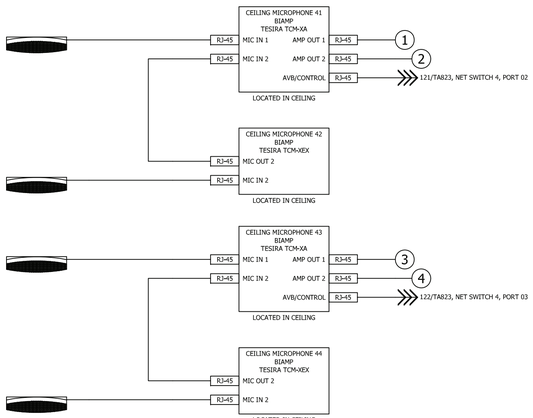

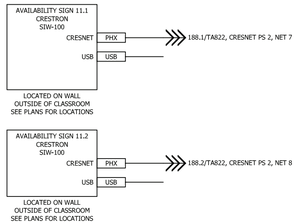

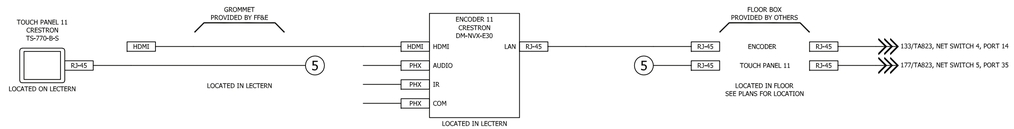

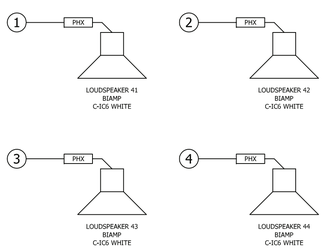

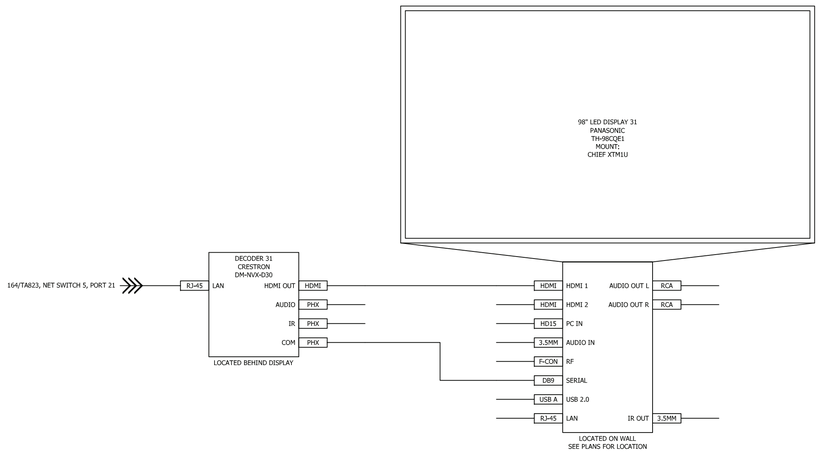

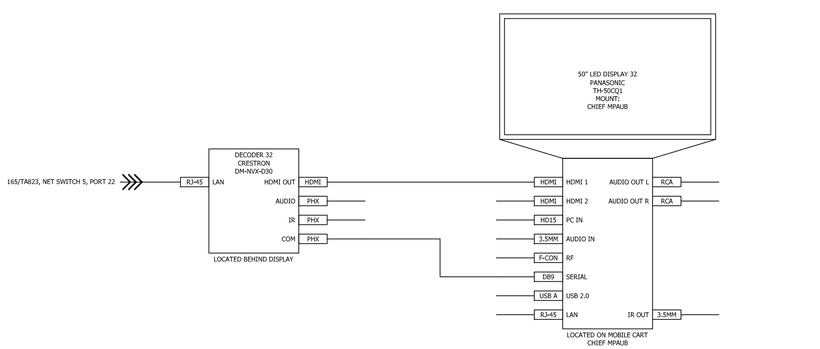

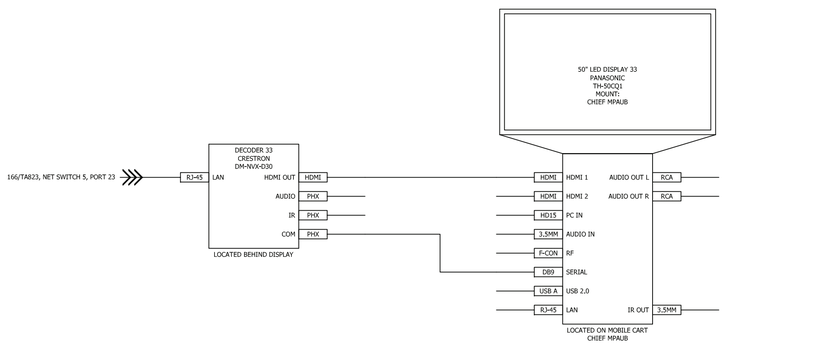

APPR	DATE	DESCRIPTION	NUM

NAVFAC

PRELIMINARY
NOT FOR CONSTRUCTION

SEAL

RQ WNJ Jordan COMPANY
– A JOINT VENTURE –

Michael Baker
INTERNATIONAL
100 AIRSIDE DRIVE
MOON TOWNSHIP, PA 15108
A/E INFO

APPROVED

FOR COMMANDER NAVFAC

ACTIVITY
MARINE CORPS BASE
CAMP LEJEUNE

SATISFACTORY TO DATE DD/MM/YY

DES	AS	DRW	AV	CHK	BM

PM	XXX
BRANCH MANAGER	XXX
CHIEF ENG/ARCH	XXX
FIRE PROTECTION	XXX

DEPARTMENT OF THE NAVY
NAVAL FACILITIES ENGINEERING COMMAND
ROICC FLORENCE CAMP LEJEUNE

NAVAL FACILITIES ENGINEERING COMMAND ~ MID-ATLANTIC
JACKSONVILLE, NC

MCB CAMP LEJEUNE
P1338F II MEF SIMULATION/TRAINING CENTER
REPLACEMENT
JACKSONVILLE, NC

SIMULATION CLASSROOM 301B SYSTEM DRAWING

SCALE: NTS
EPROJECT NO.:
CONSTR. CONTR. NO.
N40085-20-C-0059
NAVFAC DRAWING NO.
SHEET OF

TA817

DP2 SUBMISSION – P1338 BUILDING PRE-FINAL SUBMISSION

PLOTTED: 5/19/2021 3:26:30 PM

FILE NAME: BIM 360://HF PACKAGE 3/P1338_MEF SIM CTR-1590892-T.rvt

CEILING MICROPHONE 45
SHURE
MXA910W-A
RJ-45 → 189/TA823, NET SWITCH 5, PORT 36

CEILING MICROPHONE 46
SHURE
MXA910W-A
RJ-45 → 190/TA823, NET SWITCH 5, PORT 37

CEILING MICROPHONE 47
SHURE
MXA910W-A
RJ-45 → 191/TA823, NET SWITCH 5, PORT 38

CEILING MICROPHONE 48
SHURE
MXA910W-A
RJ-45 → 192/TA823, NET SWITCH 5, PORT 39

237/TA823, AUDIO AMP 1, SPEAKER OUT 1 → PHX → PHX → PHX → TAP @ 15W
- LOUDSPEAKER 45 CRESTRON SAROS IC6T-W-T-EACH
- LOUDSPEAKER 46 CRESTRON SAROS IC6T-W-T-EACH
- LOUDSPEAKER 47 CRESTRON SAROS IC6T-W-T-EACH

238/TA823, AUDIO AMP 1, SPEAKER OUT 3 → PHX → PHX → PHX → TAP @ 15W
- LOUDSPEAKER 48 CRESTRON SAROS IC6T-W-T-EACH
- LOUDSPEAKER 49 CRESTRON SAROS IC6T-W-T-EACH
- LOUDSPEAKER 50 CRESTRON SAROS IC6T-W-T-EACH

LOCAL POWER → 241/TA822, VIDEO WALL CNTRL 1, OUTPUT 1
LOCAL POWER → 242/TA822, VIDEO WALL CNTRL 1, OUTPUT 2
LOCAL POWER → 243/TA822, VIDEO WALL CNTRL 1, OUTPUT 3
LOCAL POWER → 244/TA822, VIDEO WALL CNTRL 1, OUTPUT 4
LOCAL POWER → 245/TA822, VIDEO WALL CNTRL 1, OUTPUT 5
LOCAL POWER → 246/TA822, VIDEO WALL CNTRL 1, OUTPUT 6
LOCAL POWER → 247/TA822, VIDEO WALL CNTRL 1, OUTPUT 7
LOCAL POWER → 248/TA822, VIDEO WALL CNTRL 1, OUTPUT 8

VIDEO WALL DISPLAY 1 PLANAR TVF 1.2	VIDEO WALL DISPLAY 5 PLANAR TVF 1.2	VIDEO WALL DISPLAY 9 PLANAR TVF 1.2	VIDEO WALL DISPLAY 13 PLANAR TVF 1.2	VIDEO WALL DISPLAY 17 PLANAR TVF 1.2	VIDEO WALL DISPLAY 21 PLANAR TVF 1.2	VIDEO WALL DISPLAY 25 PLANAR TVF 1.2	VIDEO WALL DISPLAY 29 PLANAR TVF 1.2
VIDEO WALL DISPLAY 2 PLANAR TVF 1.2	VIDEO WALL DISPLAY 6 PLANAR TVF 1.2	VIDEO WALL DISPLAY 10 PLANAR TVF 1.2	VIDEO WALL DISPLAY 14 PLANAR TVF 1.2	VIDEO WALL DISPLAY 18 PLANAR TVF 1.2	VIDEO WALL DISPLAY 22 PLANAR TVF 1.2	VIDEO WALL DISPLAY 26 PLANAR TVF 1.2	VIDEO WALL DISPLAY 30 PLANAR TVF 1.2
VIDEO WALL DISPLAY 3 PLANAR TVF 1.2	VIDEO WALL DISPLAY 7 PLANAR TVF 1.2	VIDEO WALL DISPLAY 11 PLANAR TVF 1.2	VIDEO WALL DISPLAY 15 PLANAR TVF 1.2	VIDEO WALL DISPLAY 19 PLANAR TVF 1.2	VIDEO WALL DISPLAY 23 PLANAR TVF 1.2	VIDEO WALL DISPLAY 27 PLANAR TVF 1.2	VIDEO WALL DISPLAY 31 PLANAR TVF 1.2
VIDEO WALL DISPLAY 4 PLANAR TVF 1.2	VIDEO WALL DISPLAY 8 PLANAR TVF 1.2	VIDEO WALL DISPLAY 12 PLANAR TVF 1.2	VIDEO WALL DISPLAY 16 PLANAR TVF 1.2	VIDEO WALL DISPLAY 20 PLANAR TVF 1.2	VIDEO WALL DISPLAY 24 PLANAR TVF 1.2	VIDEO WALL DISPLAY 28 PLANAR TVF 1.2	VIDEO WALL DISPLAY 32 PLANAR TVF 1.2

WORKSTATION

21.5" TOUCH DISPLAY
CRESTRON
TSD-220-B
- HDMI
- USB A
LOCATED ON WORKSTATION

HDMI → GROMMET PROVIDED BY FF&E → LOCATED ON WORKSTATION

1RU PATCH PANEL
SEE DETAIL 5/TA503
PROVIDED BY AVC
- HDMI INPUT 1
- HDMI INPUT 2
- HDMI INPUT 3
- HDMI INPUT 4
- HDMI INPUT 5
- HDMI INPUT 6

LOCATED IN WORKSTATION

CARD CHASSIS 6
CRESTRON
DMF-CI-8

ENCODER CARD 14
CRESTRON
DM-NVX-E30C
- HDMI
- LAN → RJ-45
- PHX AUDIO

ENCODER CARD 15
CRESTRON
DM-NVX-E30C
- HDMI
- LAN → RJ-45
- PHX AUDIO

ENCODER CARD 16
CRESTRON
DM-NVX-E30C
- HDMI
- LAN → RJ-45
- PHX AUDIO

ENCODER CARD 17
CRESTRON
DM-NVX-E30C
- HDMI
- LAN → RJ-45
- PHX AUDIO

ENCODER CARD 18
CRESTRON
DM-NVX-E30C
- HDMI
- LAN → RJ-45
- PHX AUDIO

ENCODER CARD 19
CRESTRON
DM-NVX-E30C
- HDMI
- LAN → RJ-45
- PHX AUDIO

DECODER CARD 25
CRESTRON
DM-NVX-D30C
- (1) RJ-45 LAN
- HDMI
- PHX AUDIO

LOCATED IN WORKSTATION

DIGITAL GRAPHICS ENGINE
CRESTRON
DM-DGE-200-C
- HDMI IN 1
- HDMI OUT
- RJ-45 CONSOLE SERIAL
- USB
- RJ-45 DM IN
- IR 1
- PHX COM
- IR 2
- USB A HOST USB 2.0
- (2) RJ-45 LAN

LOCATED IN WORKSTATION

NET SWITCH 1
EXTREME NETWORKS
X440-G2-12T-10GE4
- RJ-45 1
- RJ-45 2
- RJ-45 3
- RJ-45 4
- RJ-45 5
- RJ-45 6
- (1) RJ-45 7
- (2) RJ-45 8
- RJ-45 9
- RJ-45 10
- RJ-45 11
- RJ-45 12

LOCATED IN WORKSTATION

CAMERA 1
1 BEYOND
AUTOTRACKER 3
- SDI 1 BNC → 229/TA822, CAMERA AUTO MIXER 1, SDI 1
- SDI 2 BNC → 230/TA822, CAMERA AUTO MIXER 1, SDI 2
- RS-232/RS-485 VISCA
- ETHERNET RJ-45 → 223/TA821, NETWORK SWITCH 6, PORT 07

LOCATED ON WALL
SEE PLANS FOR LOCATION

CAMERA 2
1 BEYOND
PTZ-IP20
PART OF 1 BEYOND AUTOMATE SELECT PRO SYSTEM
- SDI → 231/TA822, CAMERA AUTO MIXER 1, SDI 3
- RS-232 PS2
- LAN RJ-45 → 224/TA821, NETWORK SWITCH 6, PORT 08

LOCATED ON WALL
SEE PLANS FOR LOCATION

CAMERA 3
1 BEYOND
PTZ-IP20
PART OF 1 BEYOND AUTOMATE SELECT PRO SYSTEM
- SDI → 232/TA822, CAMERA AUTO MIXER 1, SDI 4
- RS-232 PS2
- LAN RJ-45 → 225/TA821, NETWORK SWITCH 6, PORT 09

LOCATED ON WALL
SEE PLANS FOR LOCATION

FLOOR BOX 1
PROVIDED BY OTHERS
- RJ-45 WORKSTATION RJ-45 → 206/TA821, NET SWITCH 3, PORT 46

LOCATED IN FLOOR
LOCATED UNDER WORKSTATION
SEE PLANS FOR LOCATION

FLOOR BOX 2
PROVIDED BY OTHERS

TRANSMITTER 1
CRESTRON
DM-TX-4KZ-100-C-1G
- HDMI
- DM RJ-45 → 212/TA821, CARD CHASSIS 2, ENCODER CARD 9, DM INPUT
- PHX COM
- PHX IR

LOCATED IN FLOOR
LOCATED UNDER LECTERN
SEE PLANS FOR LOCATION

APPR	DATE	DESCRIPTION	MK'S

NAVFAC

PRELIMINARY
NOT FOR CONSTRUCTION

SEAL

RQ WMJ Jordan COMPANY – A JOINT VENTURE –

Michael Baker INTERNATIONAL
100 AIRSIDE DRIVE
MOON TOWNSHIP, PA 15108
A/E INFO

APPROVED

FOR COMMANDER NAVFAC

ACTIVITY
MARINE CORPS BASE
CAMP LEJEUNE

SATISFACTORY TO DATE	DD/MM/YY		
DES	AS	DRW AV	CHK BM
PM	XXX		
BRANCH MANAGER	XXX		
CHIEF ENG/ARCH	XXX		
FIRE PROTECTION	XXX		

DEPARTMENT OF THE NAVY
NAVAL FACILITIES ENGINEERING COMMAND
ROICC FLORENCE / CAMP LEJEUNE

NAVAL FACILITIES ENGINEERING COMMAND – MID-ATLANTIC
JACKSONVILLE, NC

MCB CAMP LEJEUNE
JACKSONVILLE, NC
P1338F II MEF SIMULATION/TRAINING CENTER
REPLACEMENT

AUDITORIUM/ READY ROOM 201 SYSTEM DRAWING

DP2 SUBMISSION – P1338 BUILDING RE-FINAL SUBMISSION

SCALE: NTS
EPROJECT NO.:
CONSTR. CONTR. NO.
N40085-20-C-0059
NAVFAC DRAWING NO.
SHEET OF

TA818

PLOTTED: 5/19/2021 3:28:30 PM
FILE NAME: BIM 360://HF PACKAGE 3/P1338_MEF SIM CTR-1590892-T.rvt

CEILING MICROPHONE 49
SHURE
MXA910W-A
RJ-45 → 193/TA823, NET SWITCH 5, PORT 40

CEILING MICROPHONE 50
SHURE
MXA910W-A
RJ-45 → 194/TA823, NET SWITCH 5, PORT 41

CEILING MICROPHONE 51
SHURE
MXA910W-A
RJ-45 → 195/TA823, NET SWITCH 5, PORT 42

CEILING MICROPHONE 52
SHURE
MXA910W-A
RJ-45 → 196/TA823, NET SWITCH 5, PORT 43

CAMERA 4
1 BEYOND
AUTOTRACKER 3
SDI 1 BNC → 233/TA822, CAMERA AUTO MIXER 2, SDI 1
SDI 2 BNC → 234/TA822, CAMERA AUTO MIXER 2, SDI 2
RS-232/RS-485 VISCA
ETHERNET RJ-45 → 226/TA821, NETWORK SWITCH 6, PORT 10
LOCATED ON WALL
SEE PLANS FOR LOCATION

CAMERA 5
1 BEYOND
PTZ-IP20
PART OF 1 BEYOND AUTOMATE SELECT PRO SYSTEM
SDI SDI → 235/TA822, CAMERA AUTO MIXER 2, SDI 3
RS-232 PS2
LAN RJ-45 → 227/TA821, NETWORK SWITCH 6, PORT 11
LOCATED ON WALL
SEE PLANS FOR LOCATION

CAMERA 6
1 BEYOND
PTZ-IP20
PART OF 1 BEYOND AUTOMATE SELECT PRO SYSTEM
SDI SDI → 236/TA822, CAMERA AUTO MIXER 2, SDI 4
RS-232 PS2
LAN RJ-45 → 228/TA821, NETWORK SWITCH 6, PORT 12
LOCATED ON WALL
SEE PLANS FOR LOCATION

239/TA823, AUDIO AMP 2, SPEAKER OUT 1 → PHX → PHX → PHX → TAP @ 15W
LOUDSPEAKER 51 CRESTRON SAROS IC6T-W-T-EACH
LOUDSPEAKER 52 CRESTRON SAROS IC6T-W-T-EACH
LOUDSPEAKER 53 CRESTRON SAROS IC6T-W-T-EACH

240/TA823, AUDIO AMP 2, SPEAKER OUT 3 → PHX → PHX → PHX → TAP @ 15W
LOUDSPEAKER 54 CRESTRON SAROS IC6T-W-T-EACH
LOUDSPEAKER 55 CRESTRON SAROS IC6T-W-T-EACH
LOUDSPEAKER 56 CRESTRON SAROS IC6T-W-T-EACH

LOCAL POWER → 249/TA822, VIDEO WALL CNTRL 2, OUTPUT 1
LOCAL POWER → 250/TA822, VIDEO WALL CNTRL 2, OUTPUT 2
LOCAL POWER → 251/TA822, VIDEO WALL CNTRL 2, OUTPUT 3
LOCAL POWER → 252/TA822, VIDEO WALL CNTRL 2, OUTPUT 4
LOCAL POWER → 253/TA822, VIDEO WALL CNTRL 2, OUTPUT 5
LOCAL POWER → 254/TA822, VIDEO WALL CNTRL 2, OUTPUT 6
LOCAL POWER → 255/TA822, VIDEO WALL CNTRL 2, OUTPUT 7
LOCAL POWER → 256/TA822, VIDEO WALL CNTRL 2, OUTPUT 8
(each: CH-01 VIDEO IN, SWC POWER)

VIDEO WALL DISPLAY 1 PLANAR TVF 1.2	VIDEO WALL DISPLAY 5 PLANAR TVF 1.2	VIDEO WALL DISPLAY 9 PLANAR TVF 1.2	VIDEO WALL DISPLAY 13 PLANAR TVF 1.2	VIDEO WALL DISPLAY 17 PLANAR TVF 1.2	VIDEO WALL DISPLAY 21 PLANAR TVF 1.2	VIDEO WALL DISPLAY 25 PLANAR TVF 1.2	VIDEO WALL DISPLAY 29 PLANAR TVF 1.2
VIDEO WALL DISPLAY 2 PLANAR TVF 1.2	VIDEO WALL DISPLAY 6 PLANAR TVF 1.2	VIDEO WALL DISPLAY 10 PLANAR TVF 1.2	VIDEO WALL DISPLAY 14 PLANAR TVF 1.2	VIDEO WALL DISPLAY 18 PLANAR TVF 1.2	VIDEO WALL DISPLAY 22 PLANAR TVF 1.2	VIDEO WALL DISPLAY 26 PLANAR TVF 1.2	VIDEO WALL DISPLAY 30 PLANAR TVF 1.2
VIDEO WALL DISPLAY 3 PLANAR TVF 1.2	VIDEO WALL DISPLAY 7 PLANAR TVF 1.2	VIDEO WALL DISPLAY 11 PLANAR TVF 1.2	VIDEO WALL DISPLAY 15 PLANAR TVF 1.2	VIDEO WALL DISPLAY 19 PLANAR TVF 1.2	VIDEO WALL DISPLAY 23 PLANAR TVF 1.2	VIDEO WALL DISPLAY 27 PLANAR TVF 1.2	VIDEO WALL DISPLAY 31 PLANAR TVF 1.2
VIDEO WALL DISPLAY 4 PLANAR TVF 1.2	VIDEO WALL DISPLAY 8 PLANAR TVF 1.2	VIDEO WALL DISPLAY 12 PLANAR TVF 1.2	VIDEO WALL DISPLAY 16 PLANAR TVF 1.2	VIDEO WALL DISPLAY 20 PLANAR TVF 1.2	VIDEO WALL DISPLAY 24 PLANAR TVF 1.2	VIDEO WALL DISPLAY 28 PLANAR TVF 1.2	VIDEO WALL DISPLAY 32 PLANAR TVF 1.2

75" LED DISPLAY 34
PANASONIC
TH-75CQE1
MOUNT:
CHIEF LTM1U

217/TA821, NET SWITCH 3, PORT 20 → RJ-45 LAN
DECODER 34
CRESTRON
DM-NVX-D30
LOCATED BEHIND DISPLAY
HDMI OUT → HDMI 1
AUDIO → PHX → HDMI 2
IR → PHX → PC IN
COM → PHX → AUDIO IN
RF
SERIAL
USB 2.0
RJ-45 LAN → IR OUT 3.5MM
AUDIO OUT L RCA
AUDIO OUT R RCA
LOCATED ON WALL
SEE PLANS FOR LOCATION

75" LED DISPLAY 35
PANASONIC
TH-75CQE1
MOUNT:
CHIEF LTM1U

218/TA821, NET SWITCH 3, PORT 21 → RJ-45 LAN
DECODER 35
CRESTRON
DM-NVX-D30
LOCATED BEHIND DISPLAY
HDMI OUT → HDMI 1
AUDIO → PHX → HDMI 2
IR → PHX → PC IN
COM → PHX → AUDIO IN
RF
SERIAL
USB 2.0
RJ-45 LAN → IR OUT 3.5MM
AUDIO OUT L RCA
AUDIO OUT R RCA
LOCATED ON WALL
SEE PLANS FOR LOCATION

WORKSTATION

21.5" TOUCH DISPLAY
CRESTRON
TSD-220-B
HDMI, USB A
LOCATED ON WORKSTATION

HDMI → GROMMET PROVIDED BY FF&E → LOCATED IN WORKSTATION

1RU PATCH PANEL
SEE DETAIL 6/TA503
PROVIDED BY AVC
HDMI INPUT 1, HDMI INPUT 2, HDMI INPUT 3
LOCATED IN WORKSTATION

DIGITAL GRAPHICS ENGINE
CRESTRON
DM-DGE-200-C
HDMI IN 1, HDMI OUT
CONSOLE SERIAL, USB
DM IN, IR 1
COM, IR 2
HOST USB 2.0
LAN
LOCATED IN WORKSTATION

CARD CHASSIS 7
CRESTRON
DMF-CI-8
ENCODER CARD 20 CRESTRON DM-NVX-E30C
ENCODER CARD 21 CRESTRON DM-NVX-E30C
ENCODER CARD 22 CRESTRON DM-NVX-E30C
DECODER CARD 26 CRESTRON DM-NVX-D30C
HDMI, LAN, AUDIO
LOCATED IN WORKSTATION

NET SWITCH 2
EXTREME NETWORKS
X440-G2-12T-10GE4
RJ-45 1–12
LOCATED IN WORKSTATION

FLOOR BOX 1
PROVIDED BY OTHERS
RJ-45 WORKSTATION RJ-45 → 207/TA821, NET SWITCH 3, PORT 47
LOCATED IN FLOOR
LOCATED UNDER WORKSTATION
SEE PLANS FOR LOCATION

PLOTTED: 5/19/2021 3:26:30 PM
FILE NAME: BIM 360://MEF PACKAGE 3/P1338_MEF SIM CTR-1590892-T.rvt

APPR	DATE	DESCRIPTION	MK'S

SEAL

PRELIMINARY
NOT FOR CONSTRUCTION

RQ WNM Jordan COMPANY – A JOINT VENTURE –

Michael Baker
INTERNATIONAL
100 AIRSIDE DRIVE
MOON TOWNSHIP, PA 15108
A/E INFO

APPROVED
FOR COMMANDER NAVFAC

ACTIVITY
MARINE CORPS BASE
CAMP LEJEUNE

SATISFACTORY TO DATE DD/MM/YY

DES AS	DRW AV	CHK BM
PM	XXX	
BRANCH MANAGER	XXX	
CHIEF ENG/ARCH	XXX	
FIRE PROTECTION	XXX	

DEPARTMENT OF THE NAVY
NAVAL FACILITIES ENGINEERING COMMAND – MID-ATLANTIC
ROICC FLORENCE CAMP LEJEUNE
MCB CAMP LEJEUNE
NAVAL FACILITIES ENGINEERING COMMAND
JACKSONVILLE, NC

JACKSONVILLE, NC
P1338F II MEF SIMULATION/TRAINING CENTER
REPLACEMENT

EXERCISE CONTROL 202 SYSTEM DRAWING

DP2 SUBMISSION – P1338 BUILDING RE-FINAL SUBMISSION

SCALE: NTS
EPROJECT NO.:
CONSTR. CONTR. NO. N40085-20-C-0059
NAVFAC DRAWING NO.
SHEET OF

TA819

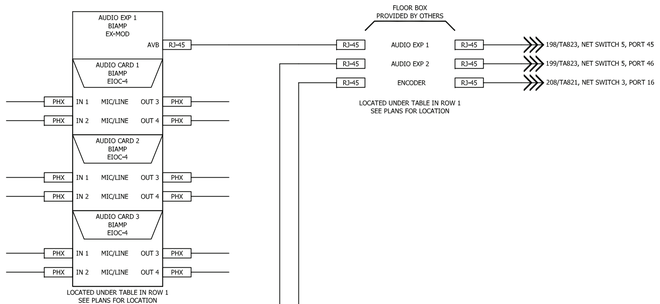

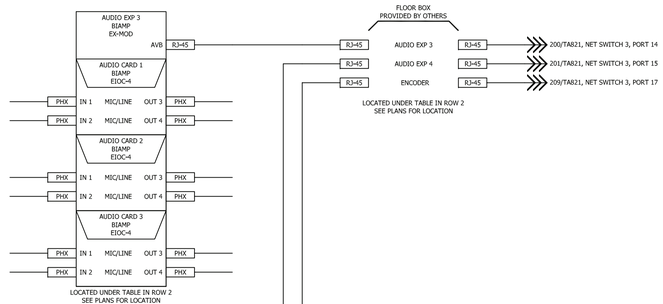

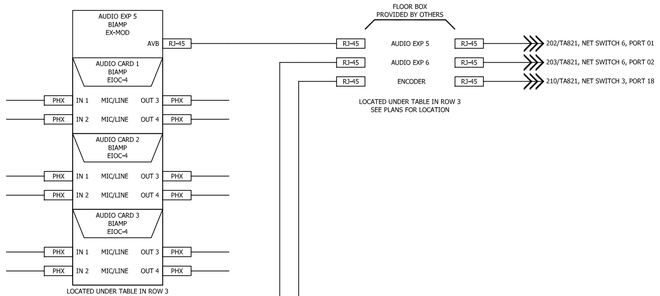

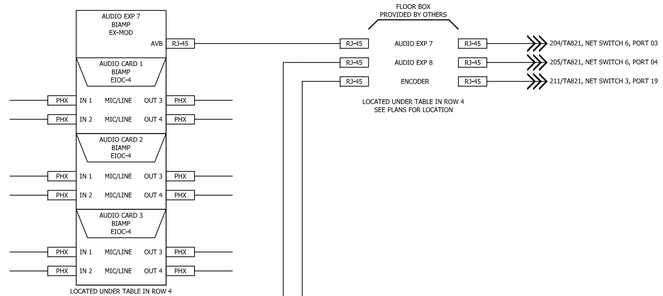

			APPR
			DATE
			DESCRIPTION
			NUM

NAVFAC

PRELIMINARY
NOT FOR CONSTRUCTION

SEAL

RQ Jordan COMPANY
– A JOINT VENTURE –

Michael Baker
INTERNATIONAL
100 AIRSIDE DRIVE
MOON TOWNSHIP, PA 15108
A/E INFO

APPROVED

FOR COMMANDER NAVFAC

ACTIVITY
MARINE CORPS BASE
CAMP LEJEUNE

SATISFACTORY TO DATE DD/MM/YY

DES	AS	DRW	AV
CHK	BM		
PM	XXX		
BRANCH MANAGER	XXX		
CHIEF ENG/ARCH	XXX		
FIRE PROTECTION	XXX		

DEPARTMENT OF THE NAVY
NAVAL FACILITIES ENGINEERING COMMAND
ROICC FLORENCE CAMP LEJEUNE

NAVAL FACILITIES ENGINEERING COMMAND – MID-ATLANTIC
JACKSONVILLE, NC

MCB CAMP LEJEUNE
JACKSONVILLE, NC
P1338F II MEF SIMULATION/TRAINING CENTER
REPLACEMENT

EXERCISE CONTROL 202 SYSTEM DRAWING

SCALE:	NTS
EPROJECT NO.:	
CONSTR. CONTR. NO.	N40085-20-C-0059
NAVFAC DRAWING NO.	
SHEET	OF

TA820

DP2 SUBMISSION – P1338 BUILDING RE-FINAL SUBMISSION

PLOTTED: 5/19/2021 3:26:30 PM

FILE NAME: BIM 360://HF PACKAGE 3/P1338_MEF SIM CTR-1590892-T.rvt

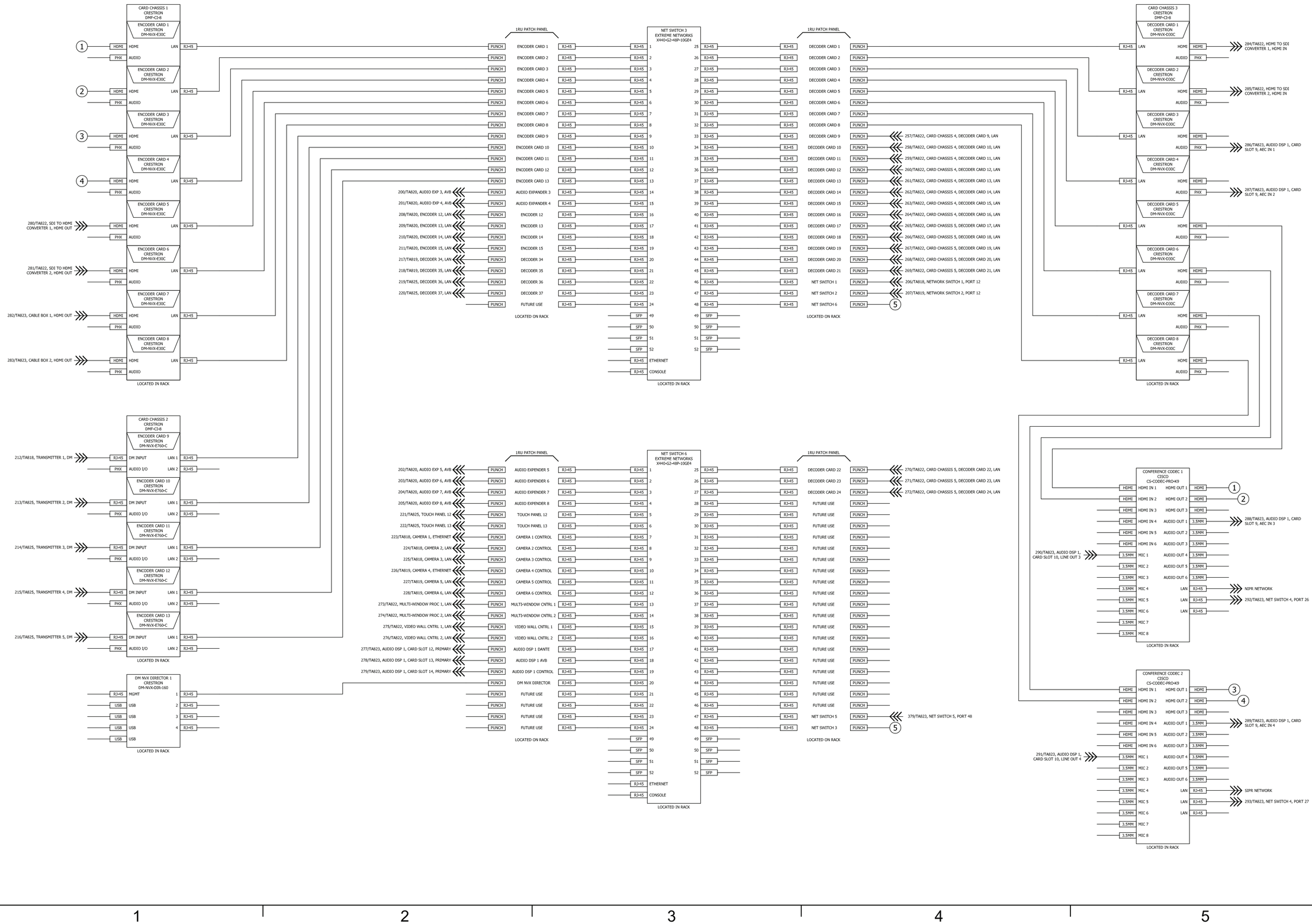

APPR
DATE
DESCRIPTION
SYM

NAVFAC

PRELIMINARY
NOT FOR CONSTRUCTION

SEAL

RQ Jordan COMPANY
A JOINT VENTURE

Michael Baker
INTERNATIONAL
100 AIRSIDE DRIVE
MOON TOWNSHIP, PA 15108
A/E INFO

APPROVED

FOR COMMANDER NAVFAC

ACTIVITY
MARINE CORPS BASE
CAMP LEJEUNE

SATISFACTORY TO DATE DD/MM/YY

DES	AS	DRW AV	CHK BM
PM			XXX
BRANCH MANAGER			XXX
CHIEF ENG/ARCH			XXX
FIRE PROTECTION			XXX

DEPARTMENT OF THE NAVY
NAVAL FACILITIES ENGINEERING COMMAND
ROICC FLORENCE CAMP LEJEUNE

NAVAL FACILITIES ENGINEERING COMMAND ~ MID-ATLANTIC
JACKSONVILLE, NC

MCB CAMP LEJEUNE
JACKSONVILLE, NC
P1338F II MEF SIMULATION/TRAINING CENTER
REPLACEMENT
SIM CONTROL 304A SYSTEM DRAWING

SCALE: NTS
EPROJECT NO.:
CONSTR. CONTR. NO.
N40085-20-C-0059
NAVFAC DRAWING NO.
SHEET OF

TA821

DP2 SUBMISSION – P1338 BUILDING RE-FINAL SUBMISSION

PLOTTED: 5/19/2021 3:26:30 PM
FILE NAME: BIM 360://HF PACKAGE 3-P1338_MEF SIM CTR-1590892-T.rvt

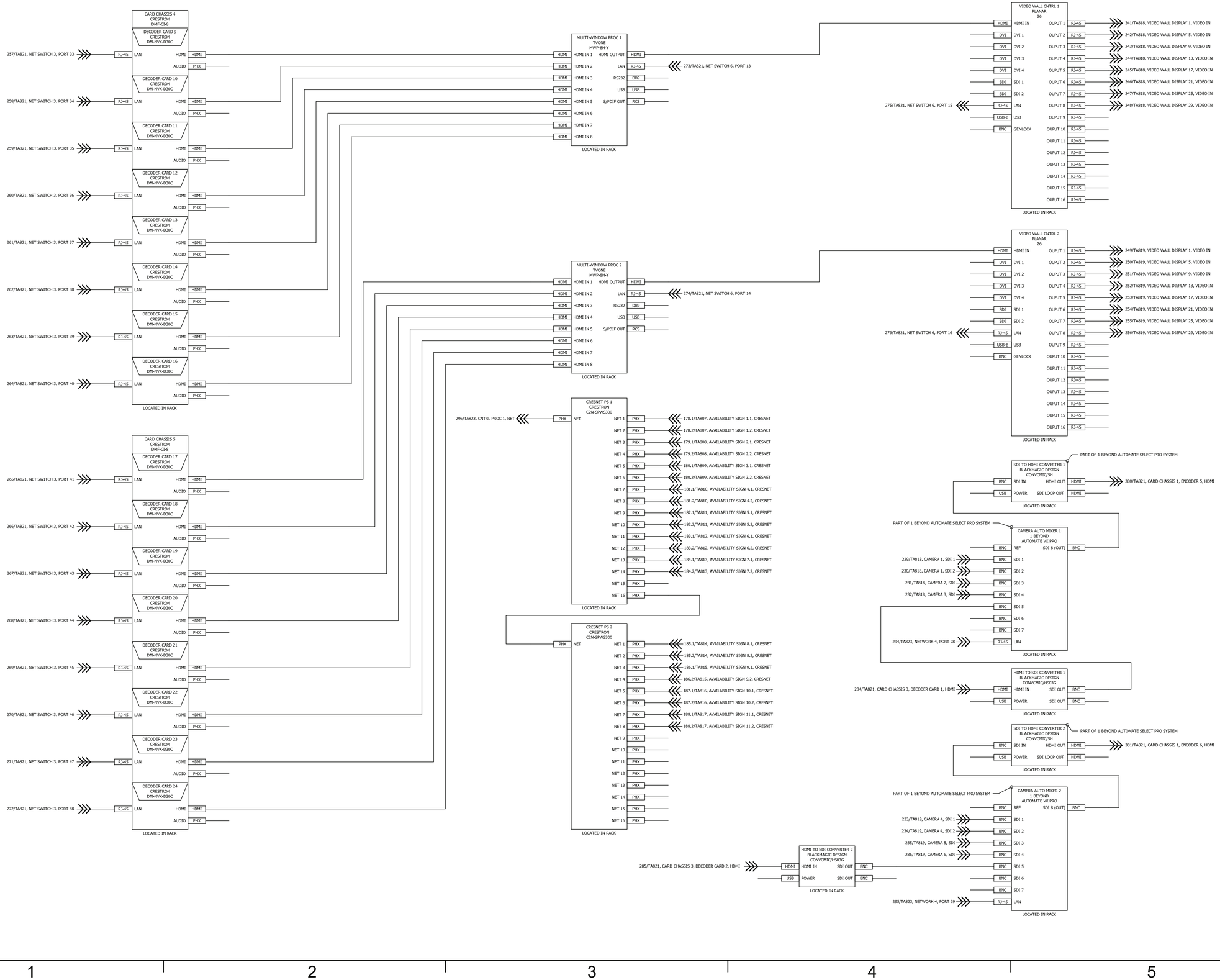

APPR	DATE	DESCRIPTION	NUS

NAVFAC

PRELIMINARY
NOT FOR CONSTRUCTION

SEAL

RQ WNJ Jordan COMPANY
– A JOINT VENTURE –

Michael Baker
INTERNATIONAL
100 AIRSIDE DRIVE
MOON TOWNSHIP, PA 15108
A/E INFO

APPROVED

FOR COMMANDER NAVFAC

ACTIVITY
MARINE CORPS BASE
CAMP LEJEUNE

SATISFACTORY TO DATE DD/MM/YY

DES	AS	DRW	AV	CHK	BM
PM	XXX				
BRANCH MANAGER	XXX				
CHIEF ENG/ARCH	XXX				
FIRE PROTECTION	XXX				

DEPARTMENT OF THE NAVY
NAVAL FACILITIES ENGINEERING COMMAND
ROICC FLORENCE CAMP LEJEUNE
MCB CAMP LEJEUNE

NAVAL FACILITIES ENGINEERING COMMAND – MID-ATLANTIC
JACKSONVILLE, NC

JACKSONVILLE, NC
P1338F II MEF SIMULATION/TRAINING CENTER
REPLACEMENT

SIM CONTROL 304A SYSTEM DRAWING

DP2 SUBMISSION – P1338 BUILDING RE-FINAL SUBMISSION

SCALE:	NTS
EPROJECT NO.:	
CONSTR. CONTR. NO.	N40085-20-C-0059
NAVFAC DRAWING NO.	
SHEET	OF

TA822

PLOTTED: 5/19/2021 3:26:30 PM

FILE NAME: BIM 360://HF PACKAGE 3/P1338_MEF SIM CTR-1590802-T.rvt

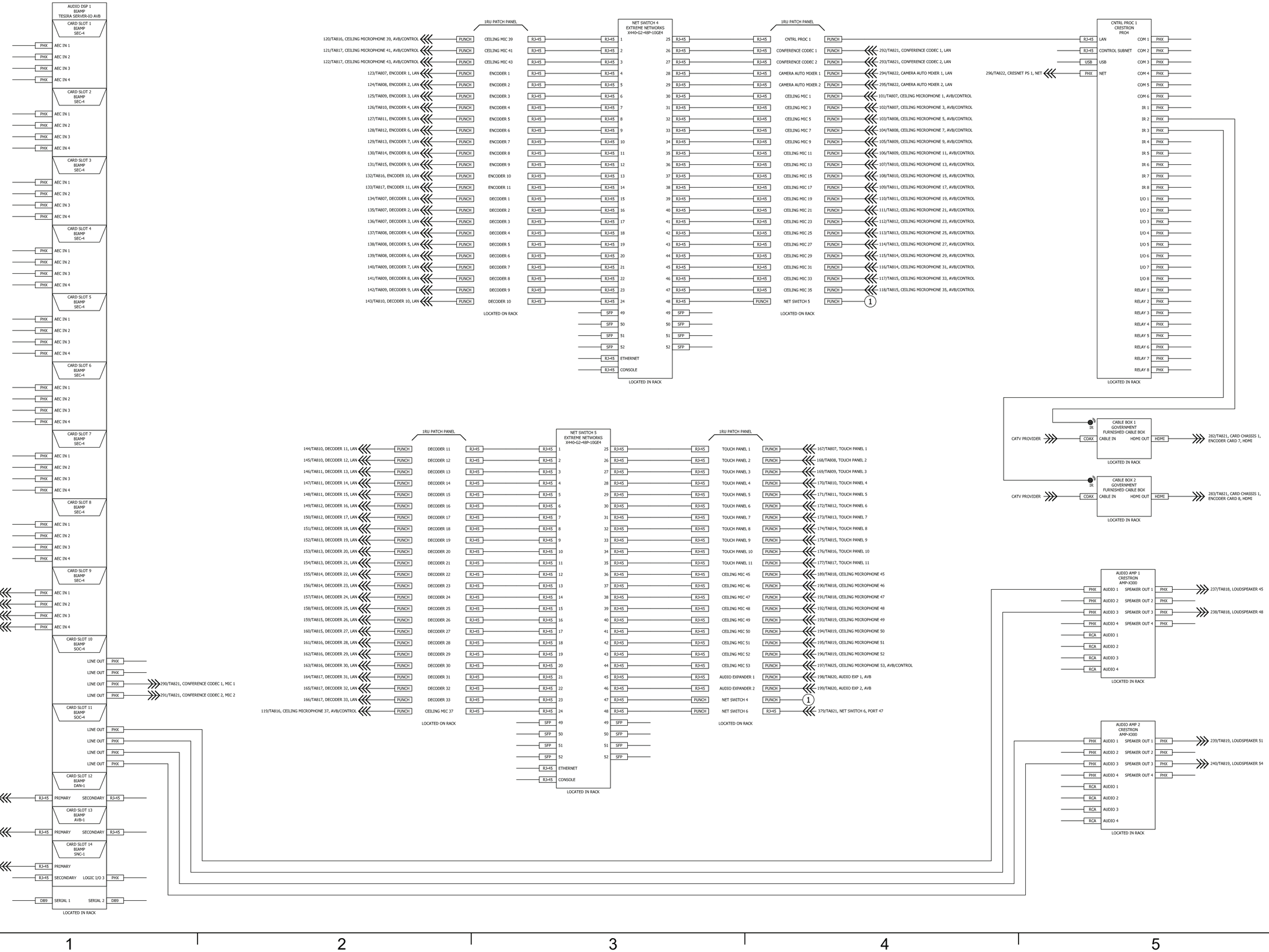

PLOTTED: 5/19/2021 3:26:30 PM

FILE NAME: BIM 360://HF PACKAGE 3/P1338_MEF SIM CTR-1590802-T.rvt

APPR | DATE | DESCRIPTION | NUS | STM

SEAL

PRELIMINARY
NOT FOR CONSTRUCTION

Michael Baker INTERNATIONAL
100 AIRSIDE DRIVE
MOON TOWNSHIP, PA 15108
A/E INFO

APPROVED

FOR COMMANDER NAVFAC

ACTIVITY
MARINE CORPS BASE
CAMP LEJEUNE

SATISFACTORY TO DATE DD/MM/YY

DES	AS	DRW	AV	CHK	BM
PM					XXX
BRANCH MANAGER					XXX
CHIEF ENG/ARCH					XXX
FIRE PROTECTION					XXX

DEPARTMENT OF THE NAVY
NAVAL FACILITIES ENGINEERING COMMAND
ROICC FLORENCE CAMP LEJEUNE
MCB CAMP LEJEUNE

NAVAL FACILITIES ENGINEERING COMMAND – MID-ATLANTIC
JACKSONVILLE, NC

JACKSONVILLE, NC

P1338F II MEF SIMULATION/TRAINING CENTER REPLACEMENT

SIM CONTROL 304A SYSTEM DRAWING

SCALE: NTS
EPROJECT NO.:
CONSTR. CONTR. NO. N40085-20-C-0059
NAVFAC DRAWING NO.
SHEET OF

TA823

DP2 SUBMISSION – P1338 BUILDING REF-FINAL SUBMISSION

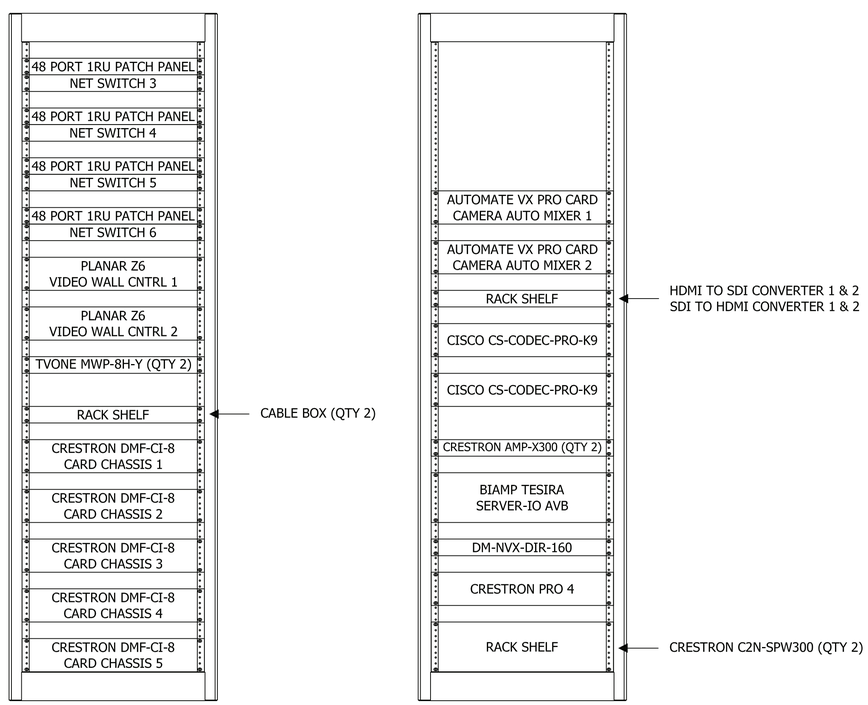

1 SIM CONTROL 304A
Scale: 1 1/2"=1'-0"

SYM	DESCRIPTION	DATE	APPR

NAVFAC

PRELIMINARY
NOT FOR CONSTRUCTION

SEAL

RQ W.M. Jordan COMPANY
- A JOINT VENTURE -

Michael Baker
INTERNATIONAL
100 AIRSIDE DRIVE
MOON TOWNSHIP, PA 15108
A/E INFO

APPROVED

FOR COMMANDER NAVFAC

ACTIVITY
MARINE CORPS BASE
CAMP LEJEUNE

SATISFACTORY TO DATE DD/MM/YY

DES AS	DRW AV	CHK BM	
PM		XXX	
BRANCH MANAGER		XXX	
CHIEF ENG/ARCH		XXX	
FIRE PROTECTION		XXX	

DEPARTMENT OF THE NAVY
NAVAL FACILITIES ENGINEERING COMMAND
ROICC FLORENCE CAMP LEJEUNE
NAVAL FACILITIES ENGINEERING COMMAND ~ MID-ATLANTIC
JACKSONVILLE, NC
MCB CAMP LEJEUNE
JACKSONVILLE, NC
P1338F II MEF SIMULATION/TRAINING CENTER
REPLACEMENT

SIM CONTROL 304A SYSTEM DRAWING

SCALE: NTS
EPROJECT NO.:
CONSTR. CONTR. NO.
N40085-20-C-0059
NAVFAC DRAWING NO.
SHEET OF

TA824

DP2 SUBMISSION – P1338 BUILDING PRE-FINAL SUBMISSION

PLOTTED: 5/19/2021 3:26:30 PM

FILE NAME: BIM 360://HF PACKAGE 3/P1338_MEF SIM CTR-1590892-T.rvt

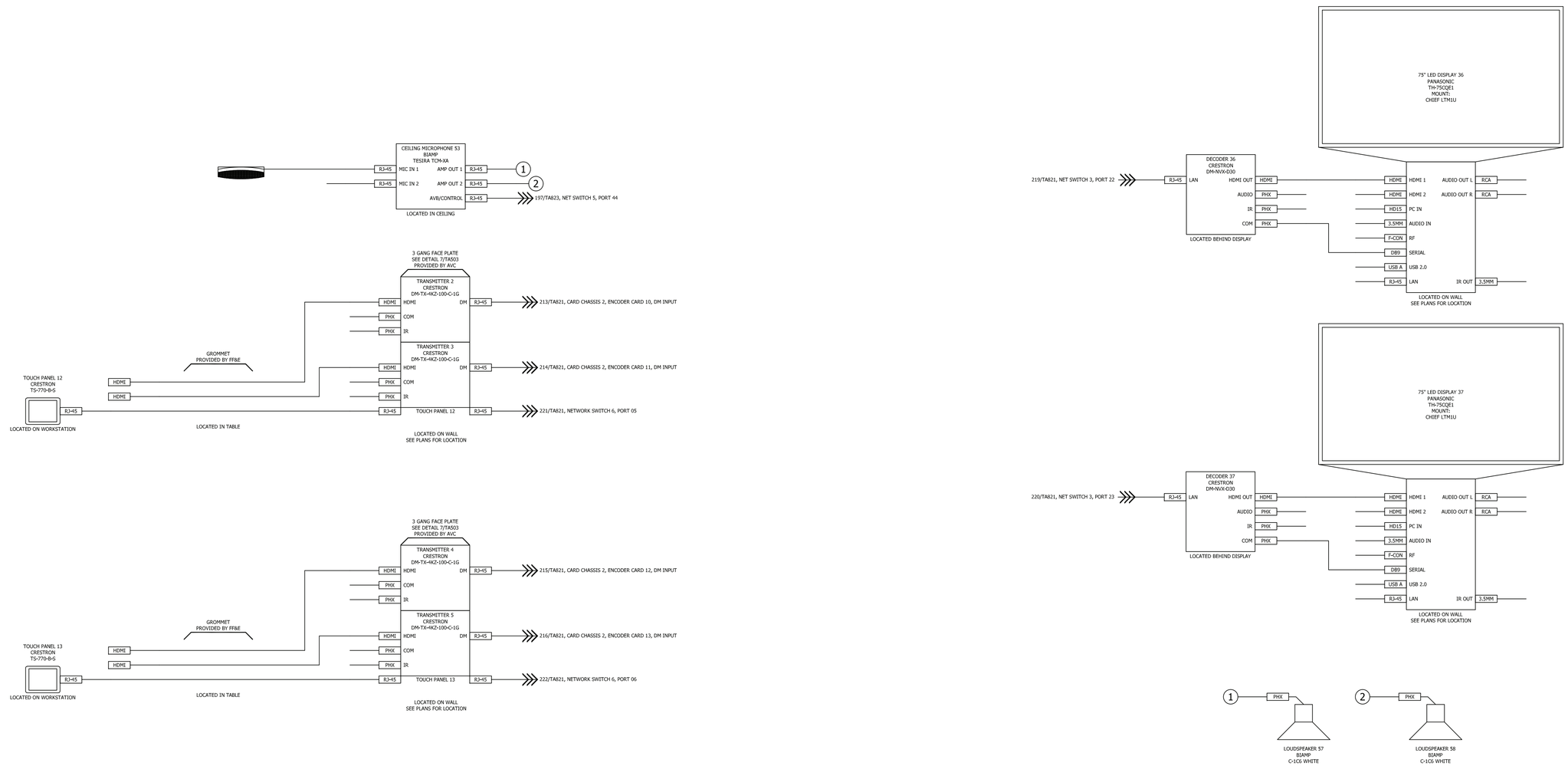

PRELIMINARY
NOT FOR CONSTRUCTION

SEAL

Michael Baker
INTERNATIONAL
100 AIRSIDE DRIVE
MOON TOWNSHIP, PA 15108
A/E INFO

APPROVED

FOR COMMANDER NAVFAC

ACTIVITY
MARINE CORPS BASE
CAMP LEJEUNE

SATISFACTORY TO DATE DD/MM/YY

DES	AS	DRW	AV	CHK	BM
PM					XXX
BRANCH MANAGER					XXX
CHIEF ENG/ARCH					XXX
FIRE PROTECTION					XXX

DEPARTMENT OF THE NAVY
NAVAL FACILITIES ENGINEERING COMMAND
NAVAL FACILITIES ENGINEERING COMMAND ~ MID-ATLANTIC
ROICC FLORENCE CAMP LEJEUNE
JACKSONVILLE, NC

MCB CAMP LEJEUNE
JACKSONVILLE, NC
P1338F II MEF SIMULATION/TRAINING CENTER
REPLACEMENT

EXERCISE CONTROL 207 SYSTEM DRAWING

SCALE: NTS
EPROJECT NO.:
CONSTR. CONTR. NO.
N40085-20-C-0059
NAVFAC DRAWING NO.
SHEET OF

TA825

DP2 SUBMISSION – P1338 BUILDING PRE-FINAL SUBMISSION

FILE NAME: BIM 360://HF PACKAGE 3/P1338_MEF SIM CTR-1590892-T.rvt
PLOTTED: 5/19/2021 3:26:30 PM