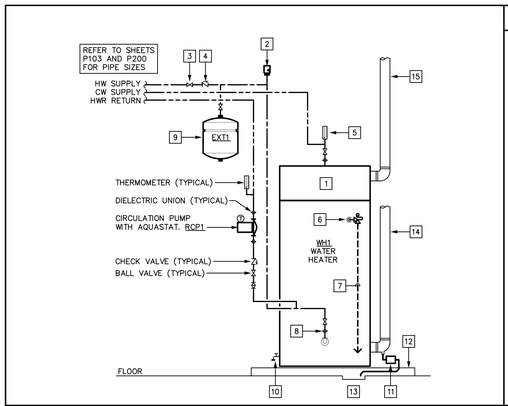

KEYED NOTES

1. HIGH EFFICIENCY GAS FIRE WATER HEATER
2. VACUUM RELIEF VALVE
3. BALL VALVE. TYPICAL.
4. CHECK VALVE. TYPICAL.
5. THERMOMETER. TYPICAL.
6. TEMPERATURE AND PRESSURE RELIEF VALVE (T&P VALVE).
7. T&P VALVE RELIEF DISCHARGE. PIPE FULL SIZE TO SPILL OVER FLOOR DRAIN WITH AIR GAP.
8. UNION, TYPICAL.
9. THERMAL EXPANSION TANK.
10. WATER HEATER DRAIN VALVE.
11. CONDENSATE NEUTRALIZATION KIT. PROVIDED BY WATER HEATER MANUFACTURER.
12. 4" HIGH CONCRETE HOUSEKEEPING PAD. PROVIDED BY GENERAL CONTRACTOR.
13. FLOOR DRAIN OR OTHER APPROVED WASTE RECEPTOR.
14. EXHAUST PIPE. TYPICAL.
15. AIR INTAKE PIPE. TYPICAL.

1 GAS FIRED WATER HEATER PIPING SCHEMATIC (WH1)
NO SCALE

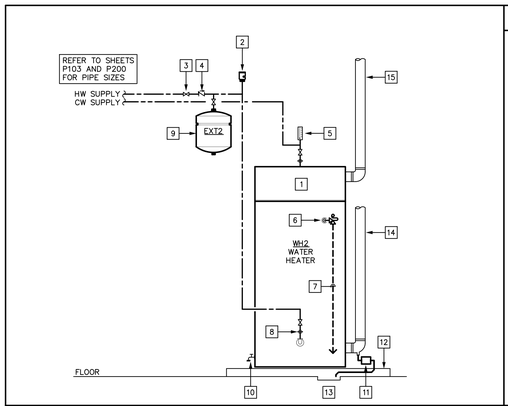

KEYED NOTES

1. HIGH EFFICIENCY GAS FIRE WATER HEATER
2. VACUUM RELIEF VALVE
3. BALL VALVE. TYPICAL.
4. CHECK VALVE. TYPICAL.
5. THERMOMETER. TYPICAL.
6. TEMPERATURE AND PRESSURE RELIEF VALVE (T&P VALVE).
7. T&P VALVE RELIEF DISCHARGE. PIPE FULL SIZE TO SPILL OVER FLOOR DRAIN WITH AIR GAP.
8. UNION, TYPICAL.
9. THERMAL EXPANSION TANK.
10. WATER HEATER DRAIN VALVE.
11. CONDENSATE NEUTRALIZATION KIT. PROVIDED BY WATER HEATER MANUFACTURER.
12. 4" HIGH CONCRETE HOUSEKEEPING PAD. PROVIDED BY GENERAL CONTRACTOR.
13. FLOOR DRAIN OR OTHER APPROVED WASTE RECEPTOR.
14. EXHAUST PIPE. TYPICAL.
15. AIR INTAKE PIPE. TYPICAL.

2 GAS FIRED WATER HEATER PIPING SCHEMATIC (WH2)
NO SCALE

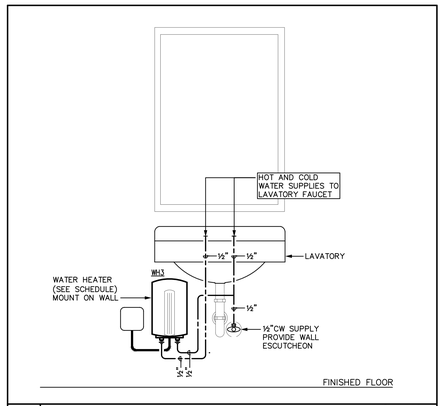

3 TANK-LESS WATER HEATER PIPING SCHEMATIC (WH3)
NO SCALE

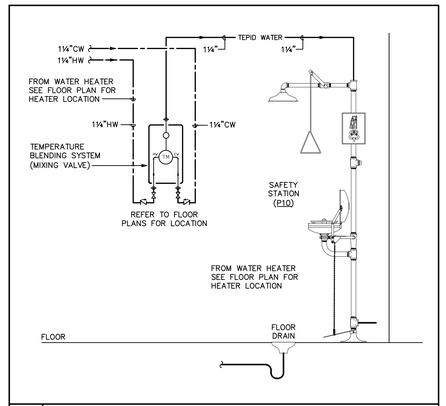

4 SAFETY STATION PIPING SCHEMATIC
NO SCALE

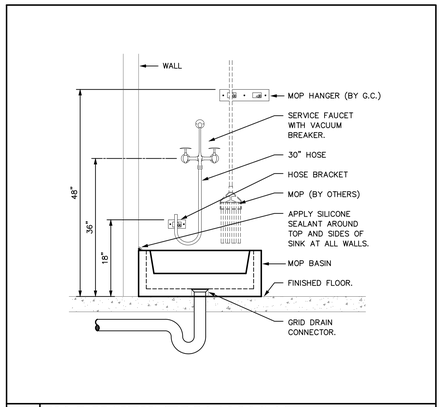

5 MOP BASIN AND ACCESSORIES
NO SCALE

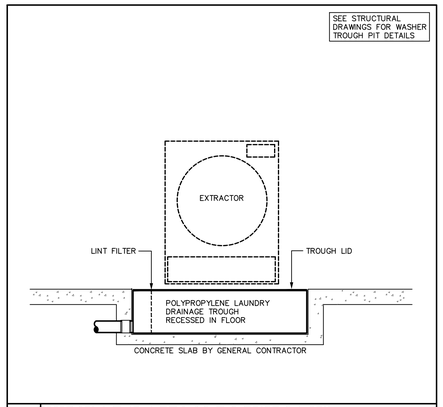

6 WASHER EXTRACTOR DRAIN DETAIL
NO SCALE

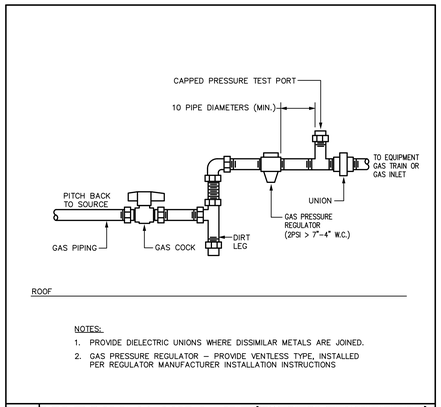

NOTES:
1. PROVIDE DIELECTRIC UNIONS WHERE DISSIMILAR METALS ARE JOINED.
2. GAS PRESSURE REGULATOR – PROVIDE VENTLESS TYPE, INSTALLED PER REGULATOR MANUFACTURER INSTALLATION INSTRUCTIONS

7 GAS CONNECTION DETAIL (TO PLBG EQUIPMENT)
NO SCALE

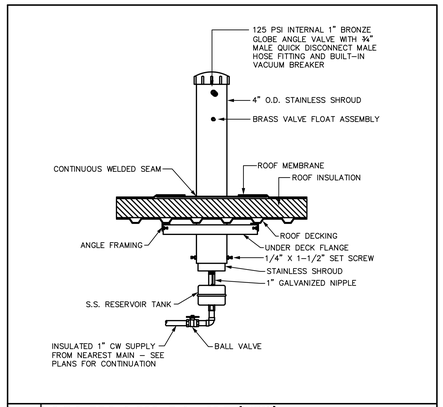

8 ROOF HYDRANT DETAIL (HB3)
NO SCALE

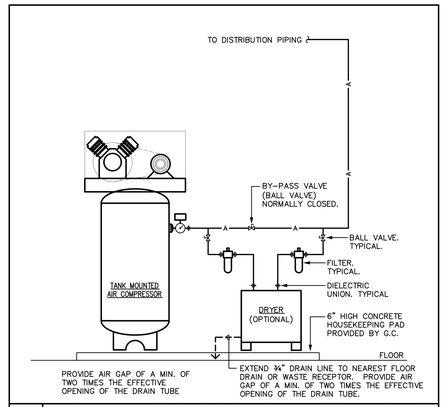

9 AIR COMPRESSOR AND DRYER PIPING SCHEMATIC
NO SCALE

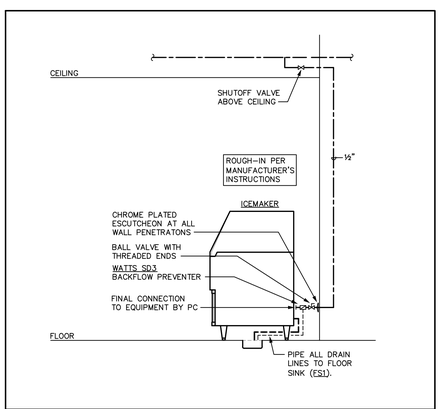

10 ICEMAKER PIPING SCHEMATIC
NO SCALE

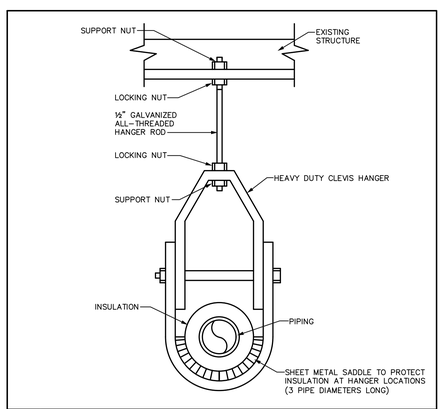

11 PIPE HANGER DETAIL
NO SCALE

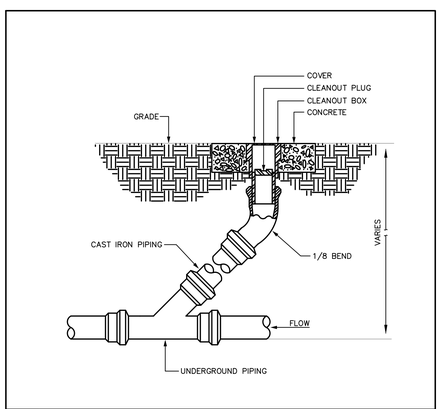

12 YARD CLEANOUT DETAIL
SCALE: NONE

System No. W-L-1054
December 04, 2002
F RATINGS – 1 AND 2 HR (SEE ITEMS 1 AND 3)
T RATING – 0 HR
L RATING AT AMBIENT – LESS THAN 1 CFM/SQ FT
L RATING AT 400 F – 4 CFM/SQ FT

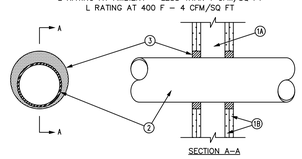

1. WALL ASSEMBLY – THE 1 OR 2 HR FIRE-RATED GYPSUM WALLBOARD/STUD WALL ASSEMBLY SHALL BE CONSTRUCTED OF THE MATERIALS AND IN THE MANNER SPECIFIED IN THE INDIVIDUAL U300 OR U400 SERIES WALL AND PARTITION DESIGNS IN THE UL FIRE RESISTANCE DIRECTORY AND SHALL INCLUDE THE FOLLOWING CONSTRUCTION FEATURES:

   A. STUDS – WALL FRAMING MAY CONSIST OF EITHER WOOD STUDS OR STEEL CHANNEL STUDS. WOOD STUDS TO CONSIST OF NOM 2 BY 4 IN. LUMBER SPACED 16 IN. OC. STEEL STUDS TO BE MIN 2-1/2 IN. WIDE AND SPACED MAX 24 IN. OC. WHEN STEEL STUDS ARE USED AND THE DIAM OF OPENING EXCEEDS THE WIDTH OF STUD CAVITY, THE OPENING SHALL BE FRAMED ON ALL SIDES USING LENGTHS OF STEEL STUD INSTALLED BETWEEN THE VERTICAL STUDS AND SCREW-ATTACHED TO THE STEEL STUDS AT EACH END. THE FRAMED OPENING IN THE WALL SHALL BE 4 TO 6 IN. WIDER AND 4 TO 6 IN. HIGHER THAN THE DIAM OF THE PENETRATING ITEM SUCH THAT, WHEN THE PENETRATING ITEM IS INSTALLED IN THE OPENING, A 2 TO 3 IN. CLEARANCE IS PRESENT BETWEEN THE PENETRATING ITEM AND THE FRAMING ON ALL FOUR SIDES.

   B. GYPSUM BOARD* – 5/8 IN. THICK, 4 FT WIDE WITH SQUARE OR TAPERED EDGES. THE GYPSUM BOARD TYPE, THICKNESS, NUMBER OF LAYERS, FASTENER TYPE AND SHEET ORIENTATION SHALL BE AS SPECIFIED IN THE INDIVIDUAL U300 OR U400 SERIES DESIGN IN THE UL FIRE RESISTANCE DIRECTORY. MAX DIAM OF OPENING IS 32-1/4 IN. FOR STEEL STUD WALLS. MAX DIAM OF OPENING IS 14-1/2 IN. FOR WOOD STUD WALLS.

   THE F RATING OF THE FIRESTOP SYSTEM IS EQUAL TO THE FIRE RATING OF THE WALL ASSEMBLY.

2. THROUGH-PENETRANTS – ONE METALLIC PIPE, CONDUIT OR TUBING TO BE INSTALLED EITHER CONCENTRICALLY OR ECCENTRICALLY WITHIN THE FIRESTOP SYSTEM. THE ANNULAR SPACE SHALL BE MIN 0 IN. TO MAX 2-1/4 IN. PIPE MAY BE INSTALLED WITH CONTINUOUS POINT CONTACT. PIPE, CONDUIT OR TUBING MAY BE INSTALLED AT AN ANGLE NOT GREATER THAN 45 DEGREES FROM PERPENDICULAR. PIPE, CONDUIT OR TUBING TO BE RIGIDLY SUPPORTED ON BOTH SIDES OF WALL ASSEMBLY. THE FOLLOWING TYPES AND SIZES OF METALLIC PIPES, CONDUITS OR TUBING MAY BE USED:

   A. STEEL PIPE – NOM 30 IN DIAM (OR SMALLER) SCHEDULE 10 (OR HEAVIER) STEEL PIPE.
   B. IRON PIPE – NOM 30 IN. DIAM (OR SMALLER) CAST OR DUCTILE IRON PIPE.
   C. CONDUIT – NOM 4 IN DIAM (OR SMALLER) STEEL ELECTRICAL METALLIC TUBING OR 6 IN. DIAM STEEL CONDUIT.
   D. COPPER TUBING – NOM 6 IN. DIAM (OR SMALLER) TYPE L (OR HEAVIER) COPPER TUBING.
   E. COPPER PIPE – NOM 6 IN. DIAM (OR SMALLER) REGULAR (OR HEAVIER) COPPER PIPE.

3. FILL, VOID OR CAVITY MATERIAL* – SEALANT – MIN 5/8 IN. THICKNESS OF FILL MATERIAL APPLIED WITHIN THE ANNULUS, FLUSH WITH BOTH SURFACES OF WALL. AT THE POINT OR CONTINUOUS CONTACT LOCATIONS BETWEEN PIPE AND WALL, A MIN 1/2 IN. DIAM BEAD OF FILL MATERIAL SHALL BE APPLIED AT THE PIPE WALL INTERFACE ON BOTH SURFACES OF WALL.

13 U.L SYSTEM NO W-L-1054 DETAIL
NO SCALE

System No. C-AJ-1155
September 26, 2000
F RATING – 3 HR
T RATING – 0 HR
L RATING AT AMBIENT – LESS THAN 1 CFM/SQ FT
L RATING AT 400 F – 4 CFM/SQ FT

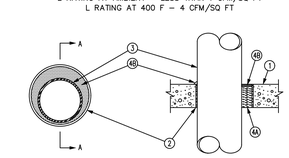

1. FLOOR OR WALL ASSEMBLY – MIN 4-1/2 IN. THICK REINFORCED LIGHTWEIGHT OR NORMAL WEIGHT (100-150 PCF) CONCRETE. WALL MAY ALSO BE CONSTRUCTED OF ANY UL CLASSIFIED CONCRETE BLOCKS*. MAX DIAM OF OPENING IS 26 IN. SEE CONCRETE BLOCKS (CAZT) CATEGORY IN FIRE RESISTANCE DIRECTORY FOR NAMES OF MANUFACTURERS.

2. METALLIC SLEEVE (OPTIONAL) – NOM 24 IN. DIAM (OR SMALLER) SCHEDULE 40 (OR HEAVIER) STEEL PIPE CAST OR GROUTED INTO FLOOR OR WALL ASSEMBLY, FLUSH WITH FLOOR OR WALL ASSEMBLY.

3. THROUGH PENETRANTS – ONE METALLIC PIPE OR TUBING TO BE INSTALLED EITHER CONCENTRICALLY OR ECCENTRICALLY WITHIN THE FIRESTOP SYSTEM. PIPE OR TUBING TO BE RIGIDLY SUPPORTED ON BOTH SIDES OF FLOOR OR WALL ASSEMBLY. THE ANNULAR SPACE SHALL BE MIN 0 IN.(POINT CONTACT) TO MAX 2-1/4 IN. THE FOLLOWING TYPES AND SIZES OF METALLIC PIPES OR TUBING MAY BE USED:

   A. STEEL PIPE – NOM 20 IN. DIAM (OR SMALLER) SCHEDULE 10 (OR HEAVIER) STEEL PIPE.
   B. IRON PIPE – NOM 20 IN. DIAM (OR SMALLER) CAST OR DUCTILE IRON PIPE.
   C. CONDUIT – NOM 4 IN. DIAM (OR SMALLER) STEEL ELECTRICAL METALLIC TUBING OR NOM 6 IN. DIAM (OR SMALLER) STEEL ELECTRICAL METALLIC TUBING OR NOM 6 IN. DIAM (OR SMALLER) STEEL CONDUIT.
   D. COPPER TUBING – NOM 6 IN. DIAM (OR SMALLER) TYPE L (OR HEAVIER) COPPER TUBING.
   E. COPPER PIPE – NOM 6 IN. DIAM (OR SMALLER) REGULAR (OR HEAVIER) COPPER PIPE

4. FIRESTOP SYSTEM – THE FIRESTOP SYSTEM SHALL CONSIST OF THE FOLLOWING:

   A. PACKING MATERIAL – MIN 4 IN. THICKNESS OF MIN 4.0 PCF MINERAL WOOL BATT INSULATION FIRMLY PACKED INTO OPENING AS A PERMANENT FORM. PACKING MATERIAL TO BE RECESSED FROM TOP END OF SLEEVE FOR FLOORS OR FROM BOTH ENDS OF SLEEVE FOR WALLS AS REQUIRED TO ACCOMMODATE THE REQUIRED THICKNESS OF FILL MATERIAL.

   B. FILL, VOID OR CAVITY MATERIAL* – SEALANT – MIN 1/2 IN. THICKNESS OF FILL MATERIAL APPLIED WITHIN THE ANNULUS, FLUSH WITH THE TOP END OF THE SLEEVE FOR FLOORS, OR WITH BOTH ENDS OF THE SLEEVE FOR WALLS. MIN 1/2 IN. THICK BEAD OF ALL MATERIAL TO BE INSTALLED AROUND PIPE AT INTERFACE OF SLEEVE FOR POINT CONTACT INSTALLATIONS.

14 U.L SYSTEM NO C-AJ-1155 DETAIL
NO SCALE

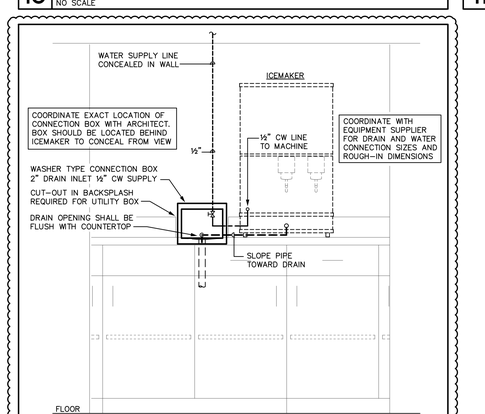

15 COUNTERTOP ICE DISPENSER DETAIL
NO SCALE

3

adwarchitects
environments**for**life
architecture planning interiors
six coliseum centre
2815 coliseum centre drive, suite 500
charlotte, north carolina 28217
t| 704 379 1919
f| 704 379 1920
www.adwarchitects.com

SAMPSON COUNTY 911 & ES FACILITIES

CLINTON, NORTH CAROLINA

CONSTRUCTION DOCUMENTS

PLUMBING DETAILS

DATE	12.04.2020
PROJECT NO	20003

REVISIONS

NUM.	DATE	DESCRIPTION:
3	01-15-2021	REV #3 / ADD #2

THIS DRAWING IS THE PROPERTY OF ADW ARCHITECTS, P.A. AND SHALL NOT BE REPRODUCED OR COPIED IN WHOLE OR IN PART. IT SHALL NOT BE USED ON ANY OTHER PROJECT OR GIVEN TO ANY OTHER COMPANY OR AGENCY WITHOUT THE CONSENT OF ADW ARCHITECTS, P.A.

NORTH CAROLINA PROFESSIONAL 043866 ENGINEER DANIEL A. REVILLA

SEAL 12/04/2020

SHEET NUMBER P003