

SEACOAST HOSPITAL
BED TOWER
50 BED UPFIT / RENOVATION - VOLUME 1

LITTLE RIVER, SOUTH CAROLINA

12.24.2020 0370.45

DHEC PROJECT NUMBER: CON SC-20-95

McLeod Health

DesignStrategies

Planning Architecture Interior Architecture
Landscape Architecture Engineering

130 SOUTH MAIN STREET, GREENVILLE, SOUTH CAROLINA 29601 (864) 527-6500(T) (864) 527-6501(F)

DesignStrategies

Planning
Architecture
Interior Architecture
Landscape Architecture
Engineering

130 South Main Street
Greenville, SC 29601
T (864) 527-6500
F (864) 233-8385

STATE OF SOUTH CAROLINA
DESIGN STRATEGIES, LLC
GREENVILLE, SC
02019
REGISTERED ARCHITECT

REVISIONS

NO	DATE	DESCRIPTION
0	12.24.2020	ISSUED FOR BID

McLeod Health
The Choice for Medical Excellence.

SEACOAST HOSPITAL
50-BED ADDITION

LITTLE RIVER, SC

KEYPLAN

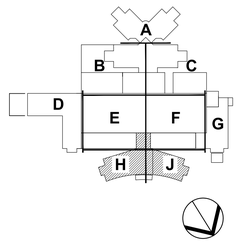

TRUE NORTH

PROJECT NO: **0370.45**
DATE: **12.24.2020**
COPYRIGHT © 2020 **DesignStrategies, LLC**

COVER SHEET

GI000

Note: Code review is for McLeod Medical Center, Seacoast Hospital. Actual construction is upfit of the Bed Tower shell at floor four between the existing building and highway 9.

1.0 Project Information		
1.1 Project Name	**Seacoast Hospital 50 Bed Addition**	
1.2 Location	**4000 Highway 9 East Little River, South Carolina 29566**	
1.3 Building Code	**2018 International Building Code (IBC) 2018 International Fire Code (IFC) 2018 International Existing Building Code (IEBC) 2018 International Mechanical Code (IMC) 2018 International Plumbing Code (IPC) 2018 International Fuel Gas Code (IEC) 2009 International Energy Code (IEC) 20017 ICC ANSI A117.1 Accessbility Standard 2018 NFPA 10 - Standard for Portable Fire Extinguishers 2016 NFPA 13 - Standard for the Installation of Sprinkler Systems 2017 NFPA 70 - National Electrical Code 2016 NFPA 72 - National Fire Alarm and Signaling Code 2018 NFPA 99 - Health Care Facilities Code 2018 NFPA 101 - Life Safety Code 2013 NFPA 110 - Standard for Emergency and Standby Power Systems 2018 FGI Guidelines**	
1.4 Governing Agency	**SCDHEC & Horry County**	
1.5 Description	**Level 04 upfit of existing Bed Tower**	
1.6 Construction	**Steel frame with non-load bearing stud and exterior wall framing with brick veneer and curtain wall.**	
2.0 Building Data		
2.1 Total Building Area	**Level 1 — Existing Building 161,214; New Construction 0; Total 161, 214 Level 2 — Existing Building 96,241; New Construction 0; Total 96,241 Level 3 — Existing Building 29,405; New Construction 0; Total 29,405 Level 4 — Existing Building 0; New Construction 26,232; Total 26,232 Mechanical — Existing 7,080 Total — Existing Building 293,940; New Construction 26,232; Total 320,172**	
2.2 Building Height	**45 feet to highest occupied floor**	
2.3 Number of levels	**Four stories**	
2.4 Distance to Property Line	**Greater than 30' to closest Property Line.**	
2.5 Exterior Openings	**Not required to be protected**	
3.0 Occupancy Classification	**Hospital with Inpatient and Outpatient functions.**	
3.1 Principal Occupancy	**Institutional, I-2.**	
3.2 Automatic Sprinkler System	**Building fully sprinkled.**	
3.3 Automatic Fire Detection	**Fire detection provided in compliance with 407**	
4.0 Construction Requirements		
4.1 Construction Type	**1B**	
4.2 Floor Area Limit	**Unlimited**	
4.3 Height Limit	**4 Stories**	
4.4 Fire Protection	**Non-combustible material. 2-hour structural frame 2-hour bearing walls Non-bearing walls to be rated in compliance w/ IBC 2015 2-hour floor construction. 1-hour roof construction existing and new.**	
5.0 Means of Egess Requirements		
5.1 Stairway Protection	**2 new stairways**	
5.2 Occupant Load (Add to Existing)	**Mix of inpatient sleeping and assembly. Total occupant load 212**	
5.3 Minimum Number of Exits	**Number and placement to comply w/ IBC 2018**	
5.4 Maximum Travel Distance	**200' w/ sprinkler system**	
5.5 Egress Width	**Egress: 0.2 inches per occupant for level travel. 0.3 inches per occupant for stair travel.**	
5.6 Corridor Fire Resistance	**Resist passage of smoke**	
6.0 Fire Protection Systems		
6.1 Automatic Sprinkler System	**Full sprinkler coverage required**	
6.2 Standpipe	**Standpipe provided**	
6.3 Fire Extinguishers	**Provided as required by the IFC**	
6.4 Fire Alarm	**Required**	

B2 CODE REVIEW

1. SEAL EXISTING AND NEW FIRE & SMOKE RATED WALL PENETRATIONS AS REQUIRED TO PROVIDE CONTINUOUS BARRIERS.
2. UNLESS NOTED OR DIMENSIONED OTHERWISE, DOOR FRAMES SHALL BE PLACED AS SHOWN ON THE PLAN – CENTERED IN WALL SECTIONS OR LOCATED 2" FROM THE ADJACENT WALL SYSTEM CORNER TO THE OUTSIDE OF THE DOOR FRAME, OR 4" FROM EXPANSION JOINTS IF PRESENT.
3. EXISTING WALL CONSTRUCTION WHICH DOES NOT COMPLY WITH INDICATED FIRE RATINGS SHOULD BE BROUGHT TO THE ARCHITECT'S ATTENTION.
4. WALLS WHICH INFILL AND EXTEND EXISTING WALLS SHALL BE CONSTRUCTED TO MATCH THOSE EXISTING WALLS. THERE SHALL BE NO CONSTRUCTION JOINT, CHANGE OF PLANE, TEXTURE CHANGE, OR OTHER EVIDENCE OF THE INFILL OR EXTENSION.
5. PATCH AND REPAIR EXISTING CONSTRUCTION AS REQUIRED TO REPAIR EXISTING DAMAGE, RECEIVE NEW FINISHES, AND OTHERWISE MAKE ALL ROOMS READY FOR USE BY THE OWNER. PATCHES AND REPAIRS SHALL MATCH AND BLEND WITH ADJACENT CONSTRUCTION TO CONCEAL EVIDENCE OF THE WORK.
6. ALL DIMENSIONS ARE TO FINISH WALL FACE, DOOR CENTER LINE, OR COLUMN CENTER LINE. LAY OUT INTERIOR AND EXTERIOR PARTITION FRAMING TO PRODUCE FINISHED DIMENSIONS AFTER APPLICATION OF GWB (SINGLE OR MULTI-LAYER) OR OTHER WALL COMPONENTS. DIMENSIONING DISCREPANCIES SHALL BE BROUGHT TO THE ARCHITECT'S ATTENTION.
7. PATCH EXISTING WALL SYSTEM SECTIONS THAT ARE EXPOSED BY DEMOLITION. PATCH WORK SHALL BE PERFORMED TO CONCEAL EVIDENCE OF THE REPAIR.
8. COORDINATE SHORT TERM AND LONG TERM TEMPORARY CONSTRUCTION BARRIERS, DUST CONTROL, CONSTRUCTION AREA NEGATIVE PRESSURIZATION AND HEPA FILTRATION, WALK-OFF MATS, PERIODICAL JOBSITE CLEANING, USE OF CONTROL CUBES OUTSIDE OF THE PROTECTED CONSTRUCTION AREA, AND OTHER INFECTION CONTROL PRACTICES WITH THE HOSPITAL CONSTRUCTION REPRESENTATIVE.
9. COORDINATE CONSTRUCTION PHASING, SEQUENCING, AND UTILITY INTERRUPTIONS WITH THE HOSPITAL SYSTEM CONSTRUCTION REPRESENTATIVE TO ENSURE THE SAFETY OF PATIENTS AND STAFF OUTSIDE OF THE WORK AREA.
10. THE STRUCTURAL GRID AND OTHER KEY PROJECT ELEMENTS ALIGN W/ EXISTING CONSTRUCTION. FIELD VERIFY ALL ELEMENTS AND REPORT RESULTS TO THE ARCHITECT BEFORE FORMING NEW STRUCTURE.
11. ALL WORK IS NEW UNLESS SPECIFICALLY NOTED AS EXISTING.
12. CERTAIN SYSTEMS WITHIN THE PROJECT SERVE THE EXISTING BUILDING. SOME OF THESE SYSTEMS WILL REQUIRE EXTENSION, REPLACEMENT, AND/OR RELOCATION. AS PART OF THE CONSTRUCTION OF THE PROJECT, ALL SYSTEMS BEING AFFECTED WILL REQUIRE PERMANENT NEW CONNECTIONS OR TEMPORARY MODIFICATIONS THAT ALLOW THE HOSPITAL TO REMAIN IN OPERATION. THIS APPLIES TO ALL UTILITY CONNECTIONS BUT ALSO TO THE MAINTENANCE OF THE KITCHEN, BOILERS, EMERGENCY ELECTRICAL SYSTEMS, TELECOMMUNICATION, AND IT SYSTEMS. CONSTRUCTION OF THESE TEMPORARY MEASURES IS A CONTRACTOR RESPONSIBILITY TO BE APPROVED AND COORDINATED WITH THE OWNER.

A1 GENERAL NOTES

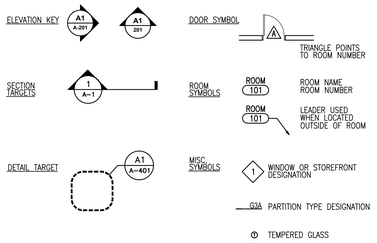

A2 DETAIL KEYING LEGEND

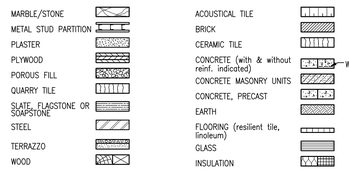

A3 MATERIAL SYMBOLS LEGEND

A4 INDEX OF DRAWINGS

		DATE ISSUED	LATEST REV.
GENERAL:			
GI000	COVER SHEET	12.24.2020	0
GI002	GENERAL NOTES, LEGENDS, CODE REVIEW, AND INDEX OF DRAWINGS	12.24.2020	0
ARCHITECTURAL DRAWINGS:			
LS104–U	LEVEL 4 LIFE SAFETY PLAN	12.24.2020	0
AP104H–U	LEVEL 4 FLOOR PLAN – ZONE H	12.24.2020	0
AP104J–U	LEVEL 4 FLOOR PLAN – ZONE J	12.24.2020	0
AC104H–U	LEVEL 4 REFLECTED CEILING PLAN – ZONE H	12.24.2020	0
AC104J–U	LEVEL 4 REFLECTED CEILING PLAN – ZONE J	12.24.2020	0
AE410	ENLARGED NURSE STATION FLOOR PLAN AND RCP	12.24.2020	0
AE411	ENLARGED PATIENT ROOM FLOOR PLANS AND RCP	12.24.2020	0
AE412	ENLARGED TOILET ROOM PLANS AND TOILET ACCESSORIES	12.24.2020	0
AE420	INTERIOR ELEVATIONS	12.24.2020	0
AE421	INTERIOR ELEVATIONS – LEVEL 4	12.24.2020	0
AE422	ENLARGED PATIENT ROOM ELEVATIONS AND DETAILS	12.24.2020	0
AE530	INTERIOR DETAILS	12.24.2020	0
AE532	INTERIOR DETAILS	12.24.2020	0
AE540	CEILING DETAILS	12.24.2020	0
AE601	DOOR & FRAME SCHEDULE AND HARDWARE NOTES	12.24.2020	0
AE602	DOOR & FRAME SCHEDULE AND HARDWARE NOTES	12.24.2020	0
AE610	PARTITION TYPES	12.24.2020	0
AE611	GYPSUM BOARD DETAILS	12.24.2020	0
AE612	GYPSUM BOARD DETAILS	12.24.2020	0
AE613	UL DESIGN WALLS	12.24.2020	0
AE614	SEISMIC DETAILS	12.24.2020	0
AE615	FIRESTOPPING DETAILS	12.24.2020	0
AE800	TYPICAL MILLWORK DETAILING	12.24.2020	0
AE801	CASEWORK ELEVATIONS	12.24.2020	0
AE810	SPECIAL MILLWORK SECTIONS	12.24.2020	0
AE811	SPECIAL MILLWORK ENLARGED PLANS ELEVATIONS, AND DETAILS	12.24.2020	0
AE812	SPECIAL MILLWORK ENLARGED PLANS ELEVATIONS, AND DETAILS	12.24.2020	0
AE814	INTERIOR DETAILS	12.24.2020	0
INTERIOR DRAWINGS:			
IN001–U	COLOR FINISH SCHEDULE	12.24.2020	0
IN002–U	ROOM FINISH SCHEDULE	12.24.2020	0
IF104H	LEVEL 4 FURNITURE FLOOR PLAN – ZONE H	12.24.2020	0
IF104J	LEVEL 4 FURNITURE FLOOR PLAN – ZONE J	12.24.2020	0
IN104H	LEVEL 4 FLOOR FINISH PLAN – ZONE H	12.24.2020	0
IN104J	LEVEL 4 FLOOR FINISH PLAN – ZONE J	12.24.2020	0
IW104H	LEVEL 4 WALL FINISH PLAN – ZONE H	12.24.2020	0
IW104J	LEVEL 4 WALL FINISH PLAN – ZONE J	12.24.2020	0
EQUIPMENT DRAWINGS:			
EQ104H	LEVEL 4 EQUIPMENT PLAN – ZONE H	12.24.2020	0
EQ104J	LEVEL 4 EQUIPMENT PLAN – ZONE J	12.24.2020	0
MECHANICAL DRAWINGS:			
M–001	LEGEND, ABBREVATIONS, SYMBOLS AND GENERAL NOTES	12.24.2020	0
MH101H–U	LEVEL 1 MECHANICAL HVAC FLOOR PLAN – ZONE H	12.24.2020	0
MH104H–U	LEVEL 4 MECHANICAL HVAC FLOOR PLAN – ZONE H	12.24.2020	0
MH104J–U	LEVEL 4 MECHANICAL HVAC FLOOR PLAN – ZONE J	12.24.2020	0
MP104H–U	LEVEL 4 MECHANICAL PIPING FLOOR PLAN – ZONE H	12.24.2020	0
MP104J–U	LEVEL 4 MECHANICAL PIPING FLOOR PLAN – ZONE J	12.24.2020	0
M–500–U	MECHANICAL DETAILS	12.24.2020	0
M–501–U	MECHANICAL DETAILS	12.24.2020	0
M–600–U	MECHANICAL SCHEDULES	12.24.2020	0
PLUMBING DRAWINGS:			
PL001–U	PLUMBING LEGEND, SCHEDULES, ABBREVIATIONS, SPECIFICATIONS, & NOTES	12.24.2020	0
PL103H–U	LEVEL 3 PLUMBING FLOOR PLAN – ZONE H	12.24.2020	0
PL103J–U	LEVEL 3 PLUMBING FLOOR PLAN – ZONE J	12.24.2020	0
PL104H–U	LEVEL 4 PLUMBING FLOOR PLAN – ZONE H	12.24.2020	0
PL104J–U	LEVEL 4 PLUMBING FLOOR PLAN – ZONE J	12.24.2020	0
PM104H–U	LEVEL 4 MEDGAS FLOOR PLAN – ZONE H	12.24.2020	0
PM104J–U	LEVEL 4 MEDGAS FLOOR PLAN – ZONE J	12.24.2020	0
PP104H–U	LEVEL 4 PLUMBING WATER FLOOR PLAN – ZONE H	12.24.2020	0
PP104J–U	LEVEL 4 PLUMBING WATER FLOOR PLAN – ZONE J	12.24.2020	0
P–500	PLUMBING DETAILS AND RISERS	12.24.2020	0
FIRE PROTECTION DRAWINGS:			
FX001–U	FIRE PROTECTION LEGEND, SCHEDULES, AND NOTES	12.24.2020	0
FX104H–U	LEVEL 4 FIRE PROTECTION FLOOR PLAN – ZONE H	12.24.2020	0
FX104J–U	LEVEL 4 FIRE PROTECTION FLOOR PLAN – ZONE J	12.24.2020	0
ELECTRICAL DRAWINGS:			
E–001	ELECTRICAL NOTES, LEGEND AND SCHEDULES	12.24.2020	0
ED104H&J	LEVEL 4 ELECTRICAL DEMO PLAN ZONE H & J	12.24.2020	0
EL104H–U	LEVEL 4 LIGHTING PLAN – ZONE H	12.24.2020	0
EL104J–U	LEVEL 4 LIGHTING PLAN – ZONE J	12.24.2020	0
EP104H–U	LEVEL 4 POWER PLAN – ZONE H	12.24.2020	0
EP104J–U	LEVEL 4 POWER PLAN – ZONE J	12.24.2020	0
EP105H&J	LEVEL 5 / ROOF PLAN ZONE H & J	12.24.2020	0
EP400	ENLARGED PLANS	12.24.2020	0
EP500	ELECTRICAL DETAILS	12.24.2020	0
EP602	PANEL SCHEDULES	12.24.2020	0
EP604	PANEL SCHEDULES	12.24.2020	0
EP605	PANEL SCHEDULES & SINGLE LINE DIAGRAMS	12.24.2020	0
EP700	ELECTRICAL FEEDER LEGEND AND DETAILS	12.24.2020	0
EP701	ELECTRICAL SINGLE LINE DIAGRAM	12.24.2020	0
EP702	ELECTRICAL SINGLE LINE DIAGRAM	12.24.2020	0
EY104H–U	LEVEL 4 SYSTEMS PLAN – ZONE H	12.24.2020	0
EY104J–U	LEVEL 4 SYSTEMS PLAN – ZONE J	12.24.2020	0
EY700	TELEPHONE ROOM RISER DIAGRAM AND DETAILS	12.24.2020	0

DesignStrategies

Planning
Architecture
Interior Architecture
Landscape Architecture
Engineering

130 South Main Street
Greenville, SC 29601
T (864) 527-6500
F (864) 233-8385

STATE OF SOUTH CAROLINA
DESIGN STRATEGIES, LLC
GREENVILLE, SC
02019
REGISTERED ARCHITECT

REVISIONS

NO	DATE	DESCRIPTION
0	12.24.2020	ISSUED FOR BID

McLeod Health
The Choice for Medical Excellence.

SEACOAST HOSPITAL
50-BED ADDITION

LITTLE RIVER, SC

KEYPLAN

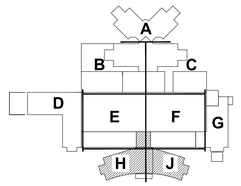

TRUE NORTH

PROJECT NO: **0370.45**
DATE: **12.24.2020**
COPYRIGHT © 2020 **DesignStrategies, LLC**

GENERAL NOTES, LEGENDS, CODE REVIEW, AND INDEX OF DWGS

GI002

LEGEND	
1 HOUR FIRE PARTITION	
2 HOUR FIRE BARRIER	
1 HOUR SMOKE BARRIER	
2 HOUR SMOKE BARRIER	
SMOKE RESISTIVE CONSTRUCTION	
HORIZONTAL EXIT 2 HOUR FIRE/SMOKE BARRIER	HE
STAIR WELL – EXIT THRU BUILDING	
STAIR WELL – EXIT DIRECTLY TO EXTERIOR	
TRAVEL DISTANCE	DISTANCE
FIRE EXTINGUISHER (CHEMICAL-BASED)	4-A, 60B:C
FIRE EXTINGUISHER (WATER-BASED)	2-A, 2½ GAL H20
FIRE HOSE VALVE CABINET	FHVC
EXIT CAPACITY	MAXIMUM PERMITTED CAPACITY (PERSONS) – XX; XX – ACTUAL USE (PERSONS)
SMOKE COMPARTMENT DESIGNATION	2A, 2B, 3A, 3B, 4A, 4B, 5A, 5B, ...
SMOKE COMPARTMENT	DESIGNATION; XX AREA (SQ. FT.); XXXX; XX XXX; OCCUPANT LOAD FACTOR (S.F. PER PERSON); OCCUPANT LOAD (PERSONS)

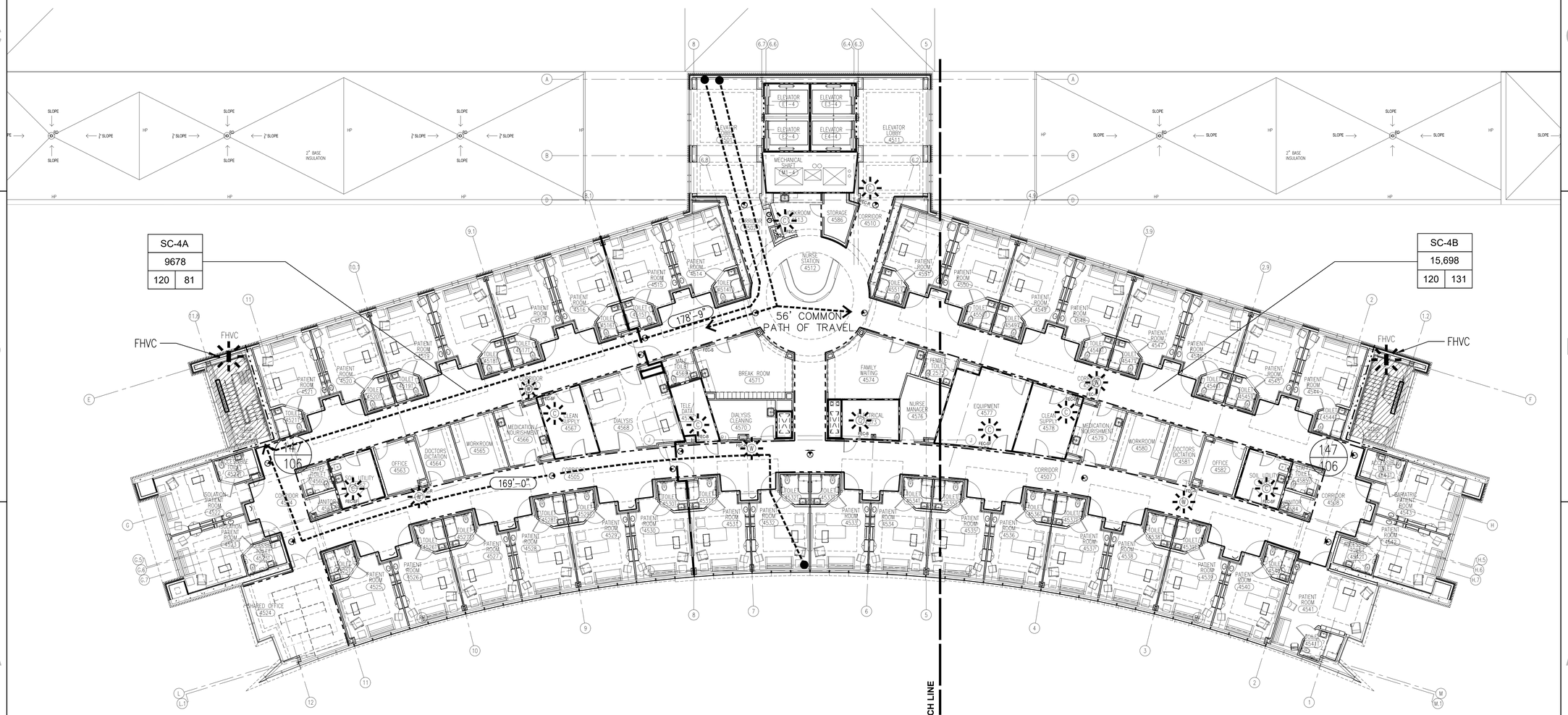

A1 LEVEL 4 LIFE SAFETY PLAN

3/32" = 1'-0"

DesignStrategies

Planning
Architecture
Interior Architecture
Landscape Architecture
Engineering

130 South Main Street
Greenville, SC 29601
T (864) 527-6500
F (864) 233-8385

STATE OF SOUTH CAROLINA
DESIGN STRATEGIES, LLC
GREENVILLE, SC
02019
REGISTERED ARCHITECT

REVISIONS

NO	DATE	DESCRIPTION
0	12.24.2020	ISSUED FOR BID

McLeod Health
The Choice for Medical Excellence.

SEACOAST HOSPITAL
50-BED ADDITION

LITTLE RIVER, SC

KEYPLAN

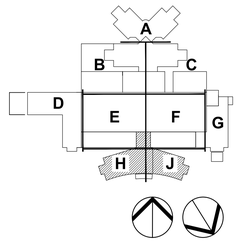

PLAN NORTH
TRUE NORTH

0 10.6666'21.3333' 42.6666'

SCALE: 3/64" = 1'-0"

PROJECT NO: **0370.45**
DATE: **12.24.2020**
COPYRIGHT © 2020 **DesignStrategies, LLC**

LEVEL 4
LIFE SAFETY PLAN

LS104-U



B1 LEVEL 4 FLOOR PLAN - ZONE H

1/8" = 1'-0"

1. SEAL EXISTING AND NEW FIRE & SMOKE RATED WALL PENETRATIONS AS REQUIRED TO PROVIDE CONTINUOUS BARRIERS.
2. PROVIDE BLOCKING IN ALL NEW WALLS TO SUPPORT WALL HUNG CASEWORK AND EQUIPMENT.
3. UNLESS NOTED OR DIMENSIONED OTHERWISE, DOOR FRAMES SHALL BE PLACED AS SHOWN ON THE PLAN – CENTERED IN WALL SECTIONS OR LOCATED 2" FROM THE ADJACENT WALL SYSTEM CORNER TO THE OUTSIDE OF THE DOOR FRAME, OR 4" FROM EXPANSION JOINTS IF PRESENT.
4. EXISTING WALL CONSTRUCTION WHICH DOES NOT COMPLY WITH INDICATED FIRE RATINGS SHOULD BE BROUGHT TO THE ARCHITECT'S ATTENTION.
5. WALLS WHICH INFILL AND EXTEND EXISTING WALLS SHALL BE CONSTRUCTED TO MATCH THOSE EXISTING WALLS. THERE SHALL BE NO CONSTRUCTION JOINT, CHANGE OF PLANE, TEXTURE CHANGE, OR OTHER EVIDENCE OF THE INFILL OR EXTENSION.
6. PATCH AND REPAIR EXISTING CONSTRUCTION AS REQUIRED TO REPAIR EXISTING DAMAGE, RECEIVE NEW FINISHES, AND OTHERWISE MAKE ALL ROOMS READY FOR USE BY THE OWNER. PATCHES AND REPAIRS SHALL MATCH AND BLEND WITH ADJACENT CONSTRUCTION TO CONCEAL EVIDENCE OF THE WORK.
7. ALL DIMENSIONS ARE TO FINISH WALL FACE, OR COLUMN CENTER LINE. DIMENSIONING DISCREPANCIES SHALL BE BROUGHT TO THE ARCHITECT'S ATTENTION.
8. PATCH EXISTING WALL SYSTEM SECTIONS THAT ARE EXPOSED BY DEMOLITION. PATCH WORK SHALL BE PERFORMED TO CONCEAL EVIDENCE OF THE REPAIR.
9. WING WALLS WITHIN ROOMS OR PARTITIONS WHICH DO NOT ENCLOSE SPACE MAY BE TERMINATED 4" ABOVE THE HIGHEST ADJACENT FINISH CEILING; BRACE TO STRUCTURE ABOVE TO PREVENT DEFLECTION AND SWAY.
10. STENCIL FIRE AND SMOKE RATED WALLS THROUGHOUT THE FACILITY; APPLICATION METHOD, TEXT, LETTER SIZE, AND SPACING AS DIRECTED BY DHEC. LABEL FIRE AND SMOKE RATED WALLS THROUGHOUT THE FACILITY. USE EITHER PERMANENT PAINT 2" TALL RED STENCIL LETTERS, OR ADHESIVE LABELS WITH ALL FOUR CORNERS SECURED BY STAPLES. LABEL BOTH SIDES OF WALLS, 20 FEET O.C. MAX., AT LEAST ONE LABEL PER ROOM AND STRAIGHT SECTION OF WALL. LABEL TEXT SHALL MATCH LIFE SAFETY PLAN LEGEND.
11. COORDINATE SHORT TERM AND LONG TERM TEMPORARY CONSTRUCTION BARRIERS, DUST CONTROL, CONSTRUCTION AREA NEGATIVE PRESSURIZATION AND HEPA FILTRATION, WALK-OFF MATS, PERIODICAL JOBSITE CLEANING, USE OF CONTROL CUBES OUTSIDE OF THE PROTECTED CONSTRUCTION AREA, AND OTHER INFECTION CONTROL PRACTICES WITH THE HOSPITAL CONSTRUCTION REPRESENTATIVE.
12. COORDINATE CONSTRUCTION PHASING, SEQUENCING, AND UTILITY INTERRUPTIONS WITH THE HOSPITAL SYSTEM CONSTRUCTION REPRESENTATIVE TO ENSURE THE SAFETY OF PATIENTS AND STAFF OUTSIDE OF THE WORK AREA.
13. STEEL STUD SYSTEM SHALL BE MIN. 20 GAUGE FOR INTERIOR PARTITIONS. TALL STUD ASSEMBLIES SHALL HAVE HEAVIER GAUGE STUDS PER MFR. RECOMMENDATIONS.
14. ALL FIRE EXTINGUISHER CABINETS SHALL BE MOUNTED WITH TOP OF CABINET AT 36" A.F.F. WALL REVEALS SHALL TERMINATE 4" SHORT OF CABINET.
15. PROVIDE MR GYP BD ON FIXTURE SIDE OF WALLS AND PARTITIONS ADJACENT TO PLUMBING FIXTURES.
16. PROVIDE SPECIFIED TILE BACKER SUBSTRATE IN LIEU OF GYP BD WHERE CERAMIC WALL TILE IS INDICATED.
17. REFER TO AE610 FOR PARTITION TYPES.
18. REFER TO AE601 AND AE602 FOR DOOR SCHEDULE AND DETAILS.
19. ALIGN FINISHED FACE OF CONTINUOUS PARTITIONS THAT CHANGE PARTITION TYPES ALONG A STRAIGHT RUN.

D5 GENERAL NOTES

1. STAFF LOCKERS; (60) 12"W x 18"H x 18"D. RECESSED WITH GWB SOFFIT ABOVE. NO SLOPED TOP.
2. NOT USED
3. TV AND MOUNT BY McLEOD; CENTER TV ON WALL HORIZONTALLY MOUNTED @ 5'-0" TO CENTER LINE OF TV VERTICALLY; PROVIDE BLOCKING, POWER AND DATA PER ELECTRICAL PLANS; CONCEAL UTILITIES BEHIND TV. IN THE CASE THAT THERE ARE REVEALS ON THE WALL CENTER THE TV WITHIN THE REVEALS.
4. PATIENT HEADWALL IN THIS ROOM TO HAVE DIALYSIS WALLBOX, REFER TO C4/AE810
5. SYSTEMS FURNITURE BY OWNER

C5 KEYNOTES

B5 WALL TYPE LEGEND

*REFER TO AE610 FOR WALL TYPES

G3***

WALL TYPE

C – CHASE WALL
F – FURRING
G – GYPSUM BOARD
M – MASONRY
S – SHAFT WALL
V – VAULT

MEMBER THICKNESS

GYPSUM BOARD & CHASE WALL
1 – 1 5/8" STUDS
2 – 2 1/2" STUDS
3 – 3 5/8" STUDS
4 – 4" STUDS
6 – 6" STUDS

FURRING
0 – LAMINATED
1 – 7/8" HAT CH
2 – 1 1/2" Z
3 – 3" Z

MASONRY
4 – 4" BLOCK
6 – 6" BLOCK
8 – 8" BLOCK

VARIANTS

1 – ADDITIONAL LAYER OF GWB, ONE SIDE
2 – ADDITIONAL LAYER OF GWB, BOTH SIDES
A – ACOUSTICAL BATT INSULATION
B – REINFORCED MASONRY FOR BLAST
G – FILL SOLID WITH GROUT
L – LEAD LINING
M – SECURITY MESH
R – RESILIENT CHANNELS
X – STOP PARTITION ± 6" ABOVE CEILING
W – CEMENTITIOUS WALL BOARD FOR WET WALL SIDE
S – SEAL TO DECK, SMOKE RESISITIVE
F – FIRE RATED PARTITION, STENCILED ABOVE CEILING

WALL RATING & DEFAULT WALL TYPES

		WALL TYPES (U.N.O)
EXISTING CONSTRUCTION		
NON-RATED PARTITION		G3A
1 HOUR FIRE PARTITION		G3AF
2 HOUR FIRE BARRIER		G32AF
1 HOUR SMOKE BARRIER		G3AF
2 HOUR SMOKE BARRIER		G32AF

EXISTING

FEC-S FIRE EXTINGUISHER CABINET – FULLY RECESSED

FEC-S FIRE EXTINGUISHER CABINET – SEMI RECESSED

FEC-SF FIRE EXTINGUISHER CABINET – SEMI RECESSED (FIRE RATED)

FEC-B FIRE EXTINGUISHER – WALL MOUNTED ON BRACKET (FIRE EXTINGUISHER AND BRACKET BY OWNER. BLOCKING IN WALL BY CONTRACTOR.)

A5 LIFE SAFETY LEGEND

DesignStrategies

Planning
Architecture
Interior Architecture
Landscape Architecture
Engineering

130 South Main Street
Greenville, SC 29601
T (864) 527-6500
F (864) 233-8385

STATE OF SOUTH CAROLINA
DESIGN STRATEGIES, LLC
GREENVILLE, SC
02019
REGISTERED ARCHITECT

REVISIONS

NO	DATE	DESCRIPTION
0	12.24.2020	ISSUED FOR BID

McLeod Health
The Choice for Medical Excellence.

SEACOAST HOSPITAL 50-BED ADDITION

LITTLE RIVER, SC

KEYPLAN

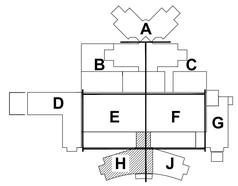

PLAN NORTH
TRUE NORTH

0 4' 8' 16'
SCALE: 1/8" = 1'-0"

PROJECT NO: **0370.45**
DATE: **12.24.2020**
COPYRIGHT © 2020 **DesignStrategies, LLC**

LEVEL 4 FLOOR PLAN - ZONE H

AP104H-U



B1 LEVEL 4 FLOOR PLAN - ZONE J

1/8" = 1'-0"

1. SEAL EXISTING AND NEW FIRE & SMOKE RATED WALL PENETRATIONS AS REQUIRED TO PROVIDE CONTINUOUS BARRIERS.
2. PROVIDE BLOCKING IN ALL NEW WALLS TO SUPPORT WALL HUNG CASEWORK AND EQUIPMENT.
3. UNLESS NOTED OR DIMENSIONED OTHERWISE, DOOR FRAMES SHALL BE PLACED AS SHOWN ON THE PLAN – CENTERED IN WALL SECTIONS OR LOCATED 2" FROM THE ADJACENT WALL SYSTEM CORNER TO THE OUTSIDE OF THE DOOR FRAME, OR 4" FROM EXPANSION JOINTS IF PRESENT.
4. EXISTING WALL CONSTRUCTION WHICH DOES NOT COMPLY WITH INDICATED FIRE RATINGS SHOULD BE BROUGHT TO THE ARCHITECT'S ATTENTION.
5. WALLS WHICH INFILL AND EXTEND EXISTING WALLS SHALL BE CONSTRUCTED TO MATCH THOSE EXISTING WALLS. THERE SHALL BE NO CONSTRUCTION JOINT, CHANGE OF PLANE, TEXTURE CHANGE, OR OTHER EVIDENCE OF THE INFILL OR EXTENSION.
6. PATCH AND REPAIR EXISTING CONSTRUCTION AS REQUIRED TO REPAIR EXISTING DAMAGE, RECEIVE NEW FINISHES, AND OTHERWISE MAKE ALL ROOMS READY FOR USE BY THE OWNER. PATCHES AND REPAIRS SHALL MATCH AND BLEND WITH ADJACENT CONSTRUCTION TO CONCEAL EVIDENCE OF THE WORK.
7. ALL DIMENSIONS ARE TO FINISH WALL FACE, OR COLUMN CENTER LINE. DIMENSIONING DISCREPANCIES SHALL BE BROUGHT TO THE ARCHITECT'S ATTENTION.
8. PATCH EXISTING WALL SYSTEM SECTIONS THAT ARE EXPOSED BY DEMOLITION. PATCH WORK SHALL BE PERFORMED TO CONCEAL EVIDENCE OF THE REPAIR.
9. WING WALLS WITHIN ROOMS OR PARTITIONS WHICH DO NOT ENCLOSE SPACE MAY BE TERMINATED 4" ABOVE THE HIGHEST ADJACENT FINISH CEILING; BRACE TO STRUCTURE ABOVE TO PREVENT DEFLECTION AND SWAY.
10. STENCIL FIRE AND SMOKE RATED WALLS THROUGHOUT THE FACILITY; APPLICATION METHOD, TEXT, LETTER SIZE, AND SPACING AS DIRECTED BY DHEC. LABEL FIRE AND SMOKE RATED WALLS THROUGHOUT THE FACILITY. USE EITHER PERMANENT PAINT 2' TALL RED STENCIL LETTERS, OR ADHESIVE LABELS WITH ALL FOUR CORNERS SECURED BY STAPLES. LABEL BOTH SIDES OF WALLS, 20 FEET O.C. MAX., AT LEAST ONE LABEL PER ROOM AND STRAIGHT SECTION OF WALL. LABEL TEXT SHALL MATCH LIFE SAFETY PLAN LEGEND.
11. COORDINATE SHORT TERM AND LONG TERM TEMPORARY CONSTRUCTION BARRIERS, DUST CONTROL, CONSTRUCTION AREA NEGATIVE PRESSURIZATION AND HEPA FILTRATION, WALK-OFF MATS, PERIODICAL JOBSITE CLEANING, USE OF CONTROL CUBES OUTSIDE OF THE PROTECTED CONSTRUCTION AREA, AND OTHER INFECTION CONTROL PRACTICES WITH THE HOSPITAL CONSTRUCTION REPRESENTATIVE.
12. COORDINATE CONSTRUCTION PHASING, SEQUENCING, AND UTILITY INTERRUPTIONS WITH THE HOSPITAL SYSTEM CONSTRUCTION REPRESENTATIVE TO ENSURE THE SAFETY OF PATIENTS AND STAFF OUTSIDE OF THE WORK AREA.
13. STEEL STUD SYSTEM SHALL BE MIN. 20 GAUGE FOR INTERIOR PARTITIONS. TALL STUD ASSEMBLIES SHALL HAVE HEAVIER GAUGE STUDS PER MFR. RECOMMENDATIONS.
14. ALL FIRE EXTINGUISHER CABINETS SHALL BE MOUNTED WITH TOP OF CABINET AT 36" A.F.F. WALL REVEALS SHALL TERMINATE 4" SHORT OF CABINET.
15. PROVIDE MR GYP BD ON FIXTURE SIDE OF WALLS AND PARTITIONS ADJACENT TO PLUMBING FIXTURES.
16. PROVIDE SPECIFIED TILE BACKER SUBSTRATE IN LIEU OF GYP BD WHERE CERAMIC WALL TILE IS INDICATED.
17. REFER TO AE610 FOR PARTITION TYPES.
18. REFER TO AE601 AND AE602 FOR DOOR SCHEDULE AND DETAILS.
19. ALIGN FINISHED FACE OF CONTINUOUS PARTITIONS THAT CHANGE PARTITION TYPES ALONG A STRAIGHT RUN.

D5 GENERAL NOTES

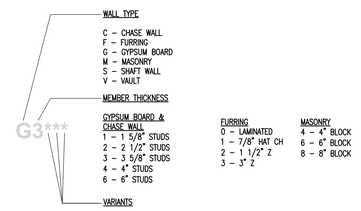

B5 WALL TYPE LEGEND

WALL RATING & DEFAULT WALL TYPES		
		WALL TYPES (U.N.O)
EXISTING CONSTRUCTION		
NON-RATED PARTITION		G3A
1 HOUR FIRE PARTITION		G3AF
2 HOUR FIRE BARRIER		G32AF
1 HOUR SMOKE BARRIER		G3AF
2 HOUR SMOKE BARRIER		G32AF

EXISTING

FEC-R FIRE EXTINGUISHER CABINET – FULLY RECESSED

FEC-S FIRE EXTINGUISHER CABINET – SEMI RECESSED

FEC-SF FIRE EXTINGUISHER CABINET – SEMI RECESSED (FIRE RATED)

FEC-B FIRE EXTINGUISHER – WALL MOUNTED ON BRACKET (FIRE EXTINGUISHER AND BRACKET BY OWNER. BLOCKING IN WALL BY CONTRACTOR.)

A5 LIFE SAFETY LEGEND

DesignStrategies

Planning
Architecture
Interior Architecture
Landscape Architecture
Engineering

130 South Main Street
Greenville, SC 29601
T (864) 527-6500
F (864) 233-8385

STATE OF SOUTH CAROLINA
DESIGN STRATEGIES, LLC
GREENVILLE, SC
02019
REGISTERED ARCHITECT

REVISIONS

NO	DATE	DESCRIPTION
0	12.24.2020	ISSUED FOR BID

McLeod Health
The Choice for Medical Excellence.

SEACOAST HOSPITAL
50-BED ADDITION

LITTLE RIVER, SC

KEYPLAN

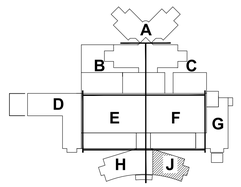

PLAN NORTH
TRUE NORTH

0 4' 8' 16'
SCALE: 1/8" = 1'-0"

PROJECT NO: **0370.45**
DATE: **12.24.2020**
COPYRIGHT © 2020 **DesignStrategies, LLC**

LEVEL 4
FLOOR PLAN - ZONE J

AP104J-U

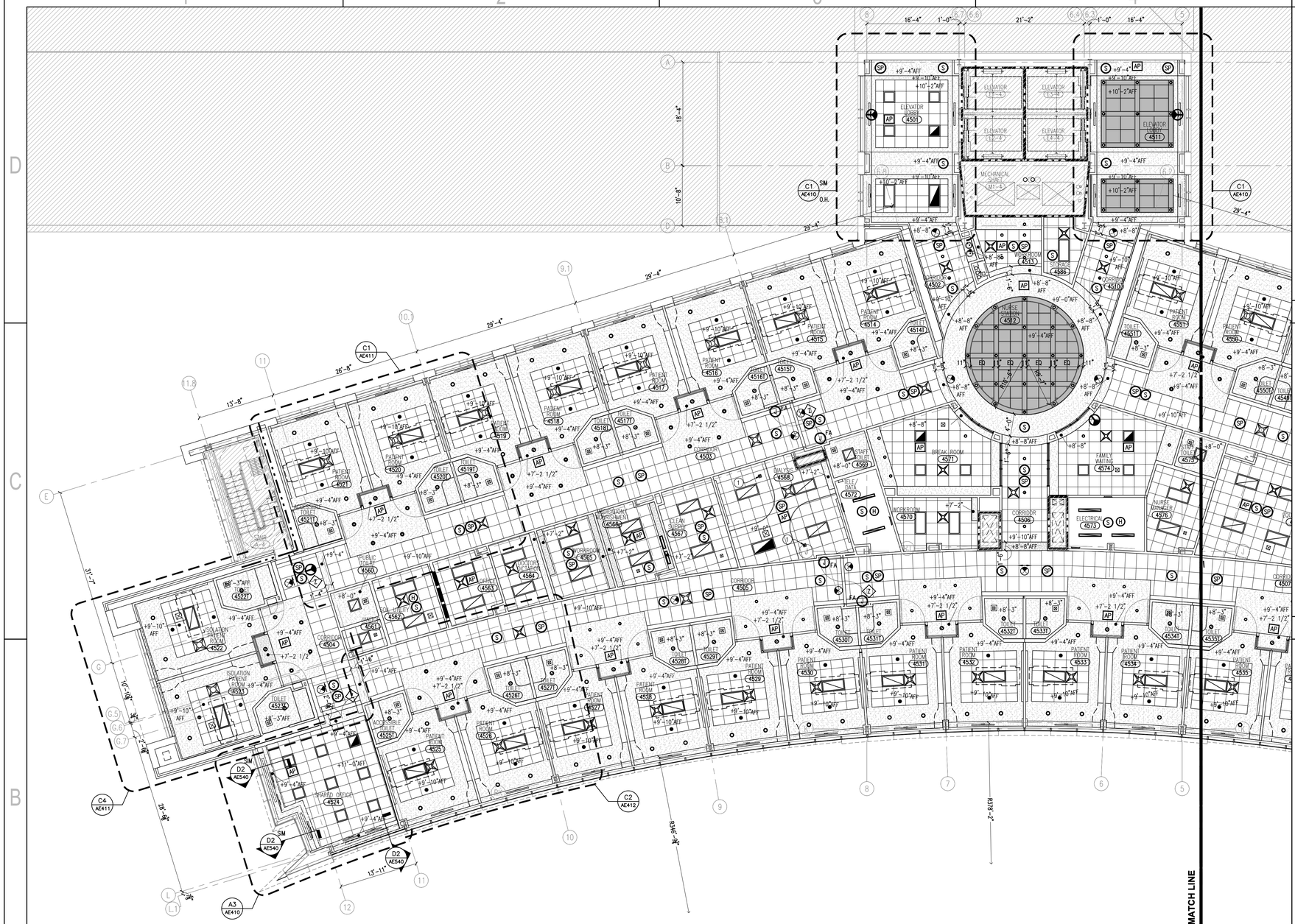

B1 LEVEL 3 REFLECTED CEILING PLAN - ZONE H

1/8" = 1'-0"

1. LOCATE CEILINGS WITHIN ROOMS OR SPACES WITH GRID MEMBER, CEILING TILE, OR GRID INTERSECTION BEING CENTERED WITHIN THE AREA OR ROOM AS INDICATED ON THE PLANS. GRIDS MAY BE SHIFTED SLIGHTLY OFF CENTER AS REQUIRED TO AVOID UNACCEPTABLY NARROW TILES AT WALLS OR EDGES OF GRID SYSTEM.
2. LOCATE CEILING GRID MEMBERS WITHIN CORRIDORS TO ALLOW FOR LIGHT FIXTURES TO BE CENTERED BETWEEN CORRIDOR WALLS. LIGHTS WHICH ARE TO BE PLACED AT CORRIDOR INTERSECTIONS SHALL BE CENTERED WITHIN BOTH DIRECTIONS OF THE INTERSECTION. USE TILE SECTIONS LESS THAN 24" WIDTH ACROSS CORRIDORS AS REQUIRED TO ALLOW FOR CENTERING LIGHT FIXTURES IN THE CORRIDOR INTERSECTIONS AND AVOID UNACCEPTABLY NARROW TILES AT WALLS OR EDGES OF GRID SYSTEM.
3. BRING CEILING DIMENSION OR ARRANGEMENT DISCREPANCIES TO THE ATTENTION OF THE ARCHITECT FOR RESOLUTION.
4. FIELD VERIFY CONDITIONS IN ALL ROOMS, AND CONSULT THE ARCHITECT FOR DIRECTION IN AREAS WHERE A GAP OF LESS THAN 4 INCHES WOULD OCCUR BETWEEN THE GRID AND THE WALL. IN THOSE CASES A 2' X 4' ACOUSTICAL TILE SHOULD BE CUT TO FIT.
5. EDGES OF CUT TEGULAR CEILING TILES SHALL BE ROUTED AND PAINTED TO MATCH FACTORY TEGULAR EDGES.
6. SPRINKLER HEAD LOCATIONS SHALL BE CENTERED IN CEILING TILE, GWB SOFFIT AND WOOD PANELING. FOR AREAS NOT SHOWN CONTRACTOR TO PROPOSE HEAD LAYOUT FOR ARCHITECTS REVIEW; PROVIDE HYDRAULICS AND HEADS TO COVER SPACES PER CODE. HIGH PROFILE GWB CEILINGS AND WOOD PANELING TO HAVE CONCEALED SPRINKLER HEADS, SPRINKLER HEADS IN SUSPENDED CEILINGS TO BE SEMI RECESSED.
7. PROVIDE ACCESS DOORS IN GWB CEILINGS FOR MAINTENANCE OF SYSTEMS ABOVE; COORDINATE LOCATIONS WITH ARCHITECT.
8. ALL WALL AND TALL CABINETS SHALL RECEIVE GWB SOFFITS TO EXTEND THROUGH FINISHED CEILING ABOVE. REFER TO MILLWORK SECTION FOR DETAIL –TIGHT TOLERANCE GWB WORK WILL BE REQUIRED SO THAT THE GWB AND MILLWORK FACES ARE FLUSH WITH EACH OTHER.
9. LOCATE LIGHTS, DIFFUSERS AND OTHER DEVICES PER REFLECTED CEILING PLAN, REFER TO ENGINEERING PLAN FOR SPECIFICATIONS.
10. CROSS CORRIDOR DOORS AND A.C.T. HAVE ZERO TOLERANCE; FIELD VERIFY FLOOR ELEVATION CONDITIONS BEFORE SETTING THE DOOR AND NOTIFY ARCHITECT IF DOOR HEADS WILL NOT FIT TIGHT TO CEILING SYSTEM PERIMETER ANGLE.
11. REFER TO INTERIOR ELEVATIONS FOR CEILING ELEMENT DIMENSIONS AND ALIGNMENTS.
12. TYPICAL CEILING TILE TO BE ACT–1 @ 9'–0" A.F.F., UNLESS NOTED OTHERWISE.

D5 GENERAL NOTES

- WD ACCENT CEILING
- GWB (GYPSUM WALLBOARD) CEILING
- ACCESS PANEL IN GWB CEILING
- RADIAL CEILING PANELS
- 2'x2' SUSPENDED ACOUSTIC PANEL CEILING
- X MARKS TILE >24" CUT FROM 2'X4'
- CERAMIC TILE
- EX/P — EXPOSED, PAINTED
- ACT–# — CEILING TYPE (ACT–1 UNLESS NOTED OTHERWISE)
- 2X4 RECESSED FLUORESCENT LIGHT FIXTURE
- 2X2 RECESSED FLUORESCENT LIGHT FIXTURE
- RECESSED PERIMETER LIGHT FIXTURE
- RECESSED DOWNLIGHT
- PENDANT LIGHTS IN ROOMS WITHOUT CEILINGS
- HVAC SUPPLY DIFFUSER
- HVAC RETURN/EXHAUST GRILLE
- HVAC SLOT DIFFUSER
- ROLLER SHADE
- SP — SPEAKER
- N — NURSE LOCATOR
- EXIT SIGN
- SECURITY CAMERA
- NC — NURSE CALL DOME LIGHT
- AP — ACCESS POINT
- S — SMOKE DETECTOR
- SPRINKLER HEAD; CONCEALED

C5 RCP LEGEND

1. PEERLESS–AV PLCM–UNL–CP–AW ANTIMICROBIAL CEILING MOUNT WITH UNIVERSAL ADAPTER PLATE AND TILT BOX (WHITE). CUT AND RETHREAD POLE SO THAT BOTTOM OF TV WILL BE 7'–2" AFF. ADAPT COVER PLATE WITH SPACERS AND CONCEALED ABOVE–CEILING BLOCKING TO WORK WITH SUSPENDED CEILING SYSTEM. UTILITIES SHALL BE FLUSH WITH AND ALSO ADAPTED TO SUSPENDED CEILING SYSTEM. ALL VISIBLE COMPONENTS SHALL BE WHITE.

B5 KEYNOTES

DesignStrategies

Planning
Architecture
Interior Architecture
Landscape Architecture
Engineering

130 South Main Street
Greenville, SC 29601
T (864) 527-6500
F (864) 233-8385

STATE OF SOUTH CAROLINA — DESIGN STRATEGIES, LLC — GREENVILLE, SC — 02019 — REGISTERED ARCHITECT

REVISIONS

NO	DATE	DESCRIPTION
0	12.24.2020	ISSUED FOR BID

McLeod Health
The Choice for Medical Excellence.

SEACOAST HOSPITAL 50-BED ADDITION

LITTLE RIVER, SC

KEYPLAN

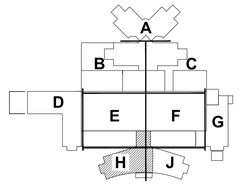

PLAN NORTH — TRUE NORTH

0 4' 8' 16'
SCALE: 1/8" = 1'-0"

PROJECT NO: **0370.45**
DATE: **12.24.2020**
COPYRIGHT © 2020 **DesignStrategies, LLC**

LEVEL 4 REFLECTED CEILING PLAN - ZONE H

AC104H-U

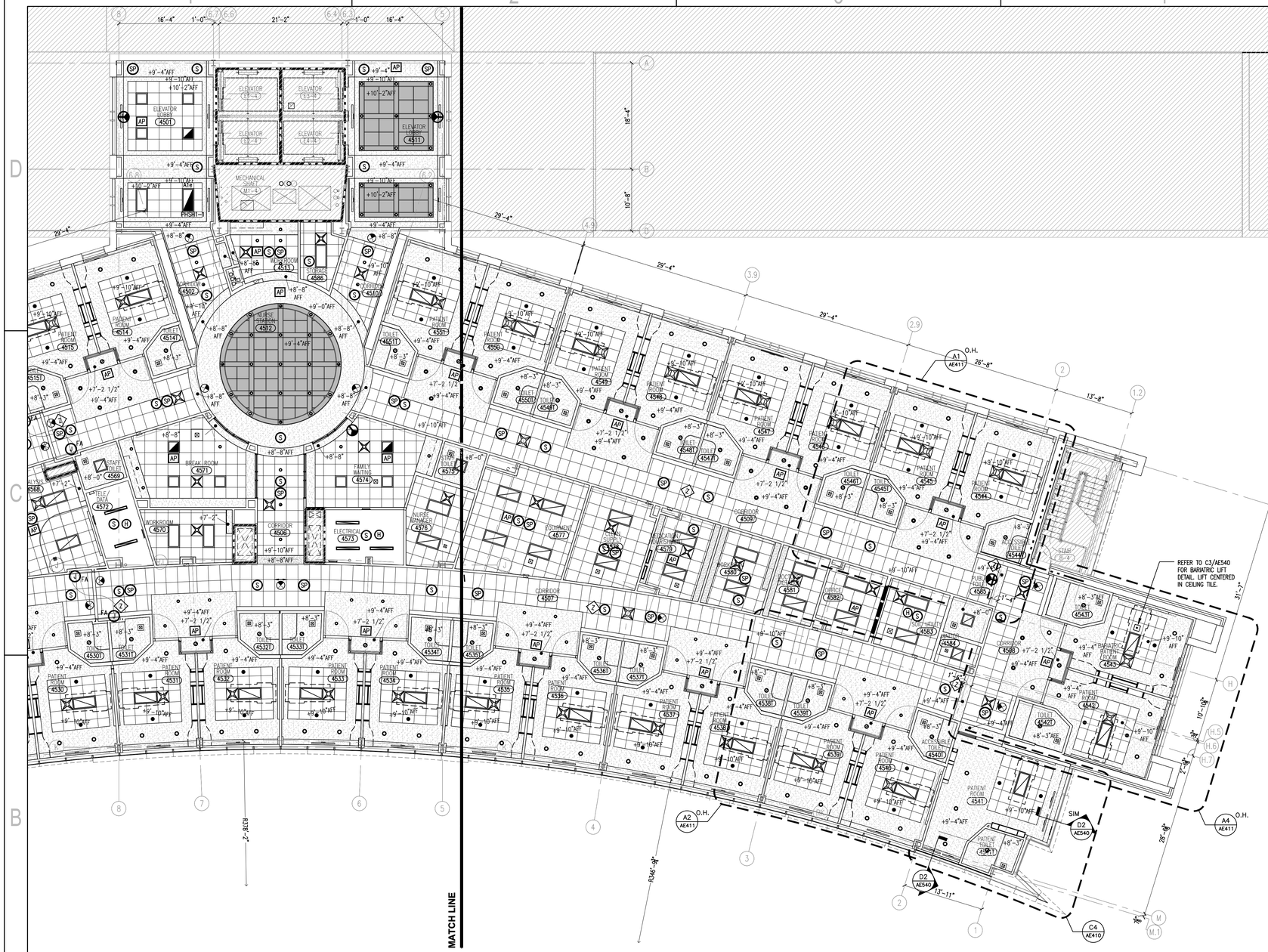

B1 LEVEL 3 REFLECTED CEILING PLAN - ZONE J 1/8" = 1'-0"

1. LOCATE CEILINGS WITHIN ROOMS OR SPACES WITH GRID MEMBER, CEILING TILE, OR GRID INTERSECTION BEING CENTERED WITHIN THE AREA OR ROOM AS INDICATED ON THE PLANS. GRIDS MAY BE SHIFTED SLIGHTLY OFF CENTER AS REQUIRED TO AVOID UNACCEPTABLY NARROW TILES AT WALLS OR EDGES OF GRID SYSTEM.
2. LOCATE CEILING GRID MEMBERS WITHIN CORRIDORS TO ALLOW FOR LIGHT FIXTURES TO BE CENTERED BETWEEN CORRIDOR WALLS. LIGHTS WHICH ARE TO BE PLACED AT CORRIDOR INTERSECTIONS SHALL BE CENTERED WITHIN BOTH DIRECTIONS OF THE INTERSECTION. USE TILE SECTIONS LESS THAN 24" WIDTH ACROSS CORRIDORS AS REQUIRED TO ALLOW FOR CENTERING LIGHT FIXTURES IN THE CORRIDOR INTERSECTIONS AND AVOID UNACCEPTABLY NARROW TILES AT WALLS OR EDGES OF GRID SYSTEM.
3. BRING CEILING DIMENSION OR ARRANGEMENT DISCREPANCIES TO THE ATTENTION OF THE ARCHITECT FOR RESOLUTION.
4. FIELD VERIFY CONDITIONS IN ALL ROOMS, AND CONSULT THE ARCHITECT FOR DIRECTION IN AREAS WHERE A GAP OF LESS THAN 4 INCHES WOULD OCCUR BETWEEN THE GRID AND THE WALL. IN THOSE CASES A 2' X 4' ACOUSTICAL TILE SHOULD BE CUT TO FIT.
5. EDGES OF CUT TEGULAR CEILING TILES SHALL BE ROUTED AND PAINTED TO MATCH FACTORY TEGULAR EDGES.
6. SPRINKLER HEAD LOCATIONS SHALL BE CENTERED IN CEILING TILE, GWB SOFFIT AND WOOD PANELING. FOR AREAS NOT SHOWN CONTRACTOR TO PROPOSE HEAD LAYOUT FOR ARCHITECTS REVIEW; PROVIDE HYDRAULICS AND HEADS TO COVER SPACES PER CODE. HIGH PROFILE GWB CEILINGS AND WOOD PANELING TO HAVE CONCEALED SPRINKLER HEADS, SPRINKLER HEADS IN SUSPENDED CEILINGS TO BE SEMI RECESSED.
7. PROVIDE ACCESS DOORS IN GWB CEILINGS FOR MAINTENANCE OF SYSTEMS ABOVE; COORDINATE LOCATIONS WITH ARCHITECT.
8. ALL WALL AND TALL CABINETS SHALL RECEIVE GWB SOFFITS TO EXTEND THROUGH FINISHED CEILING ABOVE. REFER TO MILLWORK SECTION FOR DETAIL –TIGHT TOLERANCE GWB WORK WILL BE REQUIRED SO THAT THE GWB AND MILLWORK FACES ARE FLUSH WITH EACH OTHER.
9. LOCATE LIGHTS, DIFFUSERS AND OTHER DEVICES PER REFLECTED CEILING PLAN, REFER TO ENGINEERING PLAN FOR SPECIFICATIONS.
10. CROSS CORRIDOR DOORS AND A.C.T. HAVE ZERO TOLERANCE; FIELD VERIFY FLOOR ELEVATION CONDITIONS BEFORE SETTING THE DOOR AND NOTIFY ARCHITECT IF DOOR HEADS WILL NOT FIT TIGHT TO CEILING SYSTEM PERIMETER ANGLE.
11. REFER TO INTERIOR ELEVATIONS FOR CEILING ELEMENT DIMENSIONS AND ALIGNMENTS.
12. TYPICAL CEILING TILE TO BE ACT–1 @ 9'–0" A.F.F., UNLESS NOTED OTHERWISE.

D5 GENERAL NOTES

- WD ACCENT CEILING
- GWB (GYPSUM WALLBOARD) CEILING
- ACCESS PANEL IN GWB CEILING
- RADIAL CEILING PANELS
- 2'x2' SUSPENDED ACOUSTIC PANEL CEILING
- X MARKS TILE >24" CUT FROM 2'X4'
- CERAMIC TILE
- EX/P — EXPOSED, PAINTED
- ACT–# — CEILING TYPE (ACT–1 UNLESS NOTED OTHERWISE)
- 2X4 RECESSED FLUORESCENT LIGHT FIXTURE
- 2X2 RECESSED FLUORESCENT LIGHT FIXTURE
- RECESSED PERIMETER LIGHT FIXTURE
- RECESSED DOWNLIGHT
- PENDANT LIGHTS IN ROOMS WITHOUT CEILINGS
- HVAC SUPPLY DIFFUSER
- HVAC RETURN/EXHAUST GRILLE
- HVAC SLOT DIFFUSER
- ROLLER SHADE
- SP — SPEAKER
- AP — ACCESS POINT
- NURSE LOCATOR
- S — SMOKE DETECTOR
- EXIT SIGN
- SPRINKLER HEAD; CONCEALED
- SECURITY CAMERA
- NURSE CALL DOME LIGHT

C5 RCP LEGEND

DesignStrategies

Planning
Architecture
Interior Architecture
Landscape Architecture
Engineering

130 South Main Street
Greenville, SC 29601
T (864) 527-6500
F (864) 233-8385

STATE OF SOUTH CAROLINA — DESIGN STRATEGIES, LLC — GREENVILLE, SC 02019 — REGISTERED ARCHITECT

REVISIONS

NO	DATE	DESCRIPTION
0	12.24.2020	ISSUED FOR BID

McLeod Health
The Choice for Medical Excellence.

SEACOAST HOSPITAL 50-BED ADDITION

LITTLE RIVER, SC

KEYPLAN

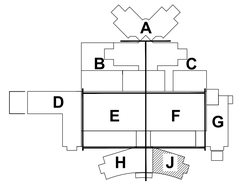

PLAN NORTH — TRUE NORTH

0 4' 8' 16'
SCALE: 1/8" = 1'-0"

PROJECT NO: **0370.45**
DATE: **12.24.2020**
COPYRIGHT © 2020 **DesignStrategies, LLC**

LEVEL 4 REFLECTED CEILING PLAN - ZONE J

AC104J-U

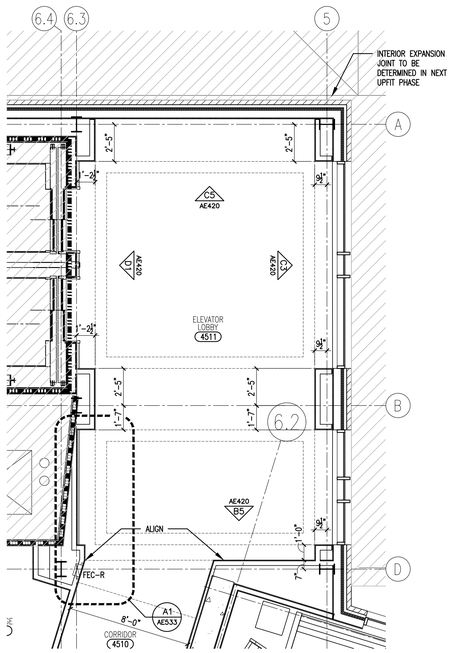

1/4" = 1'-0"

C1 ENLARGED 4TH LEVEL ELEVATOR LOBBY

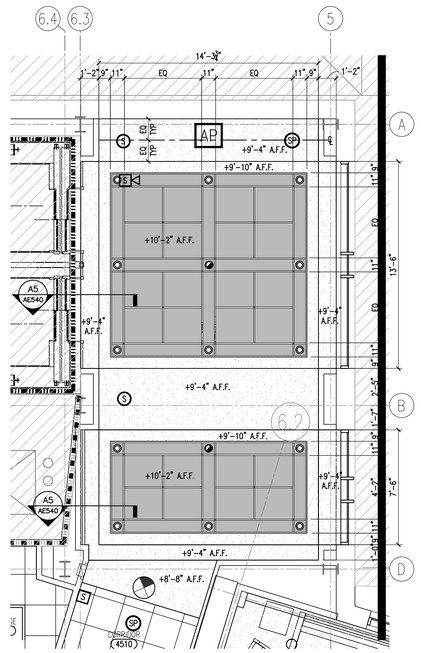

1/4" = 1'-0"

C2 ENLARGED 4TH LEVEL ELEV. LOBBY RCP

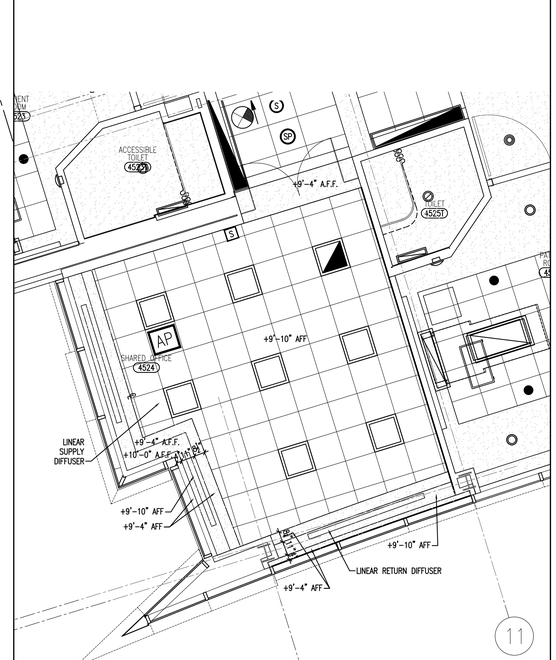

1/4" = 1'-0"

C3 ENLARGED CONFERENCE RCP

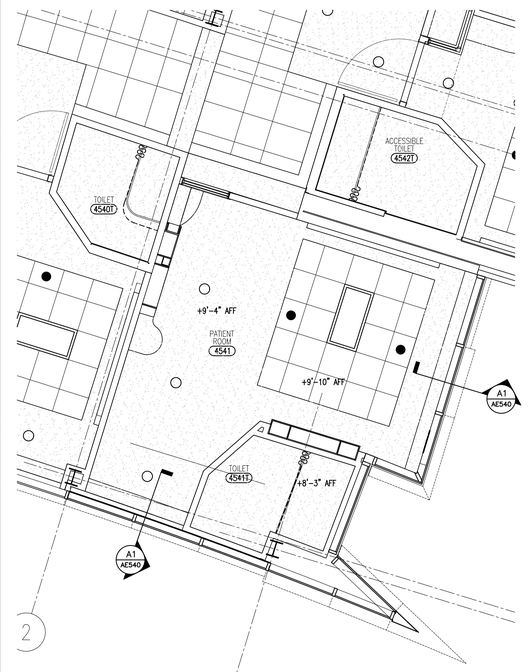

1/4" = 1'-0"

C4 ENLARGED PATIENT ROOM RCP

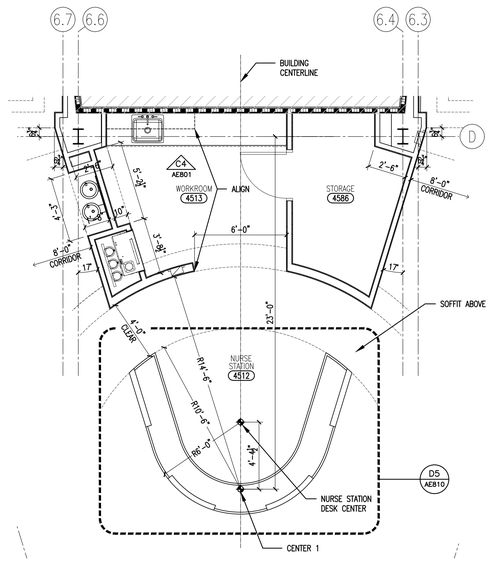

1/4" = 1'-0"

A1 ENLARGED NURSE STATION FLOOR PLAN

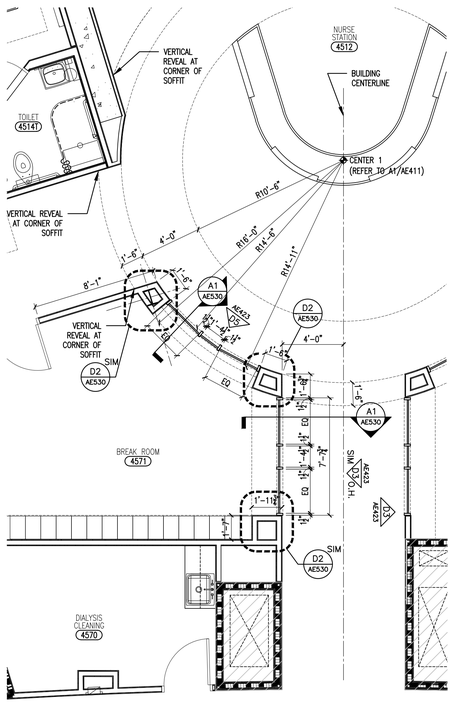

1/4" = 1'-0"

A2 ENLARGED WOOD GRILL FLOOR PLAN

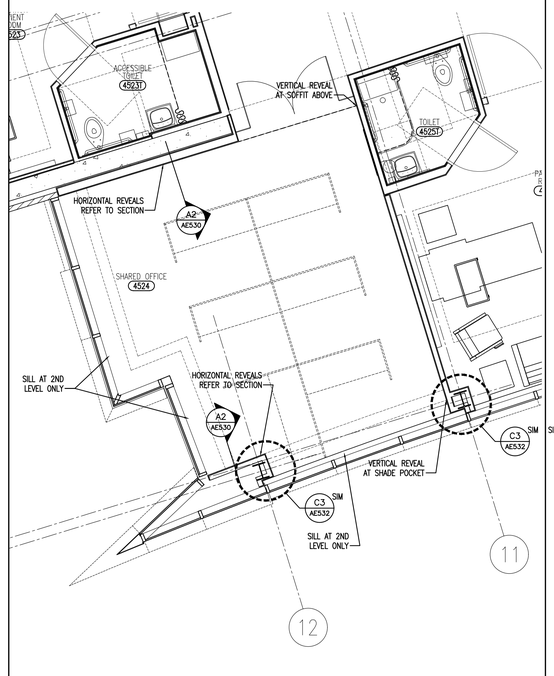

1/4" = 1'-0"

A3 ENLARGED CONFERENCE FLOOR PLAN

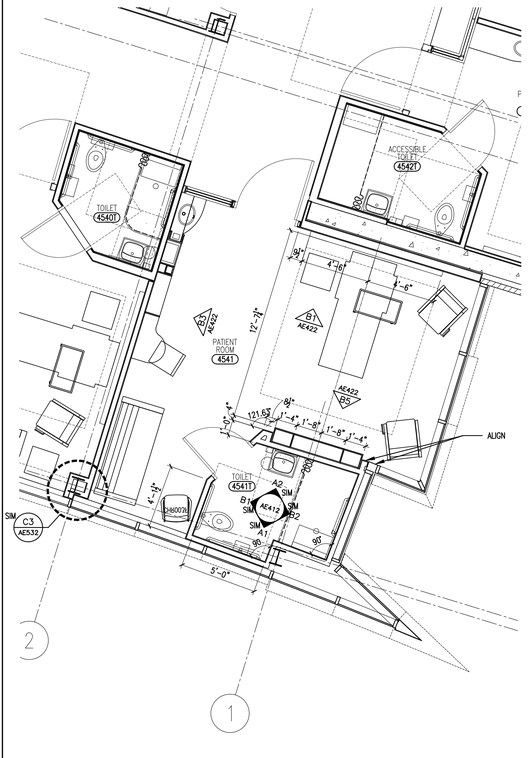

1/4" = 1'-0"

A4 ENLARGED PATIENT ROOM FLOOR PLAN

DesignStrategies

Planning
Architecture
Interior Architecture
Landscape Architecture
Engineering

130 South Main Street
Greenville, SC 29601
T (864) 527-6500
F (864) 233-8385

STATE OF SOUTH CAROLINA
DESIGN STRATEGIES, LLC
GREENVILLE, SC
02019
REGISTERED ARCHITECT

REVISIONS

NO	DATE	DESCRIPTION
0	12.24.2020	ISSUED FOR BID

McLeod Health
The Choice for Medical Excellence.

SEACOAST HOSPITAL
50-BED ADDITION

LITTLE RIVER, SC

KEYPLAN

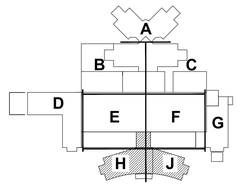

TRUE NORTH

PROJECT NO: **0370.45**
DATE: **12.24.2020**
COPYRIGHT © 2020 **DesignStrategies, LLC**

ENLARGED NURSE STATION FLOOR PLAN AND RCP

AE410

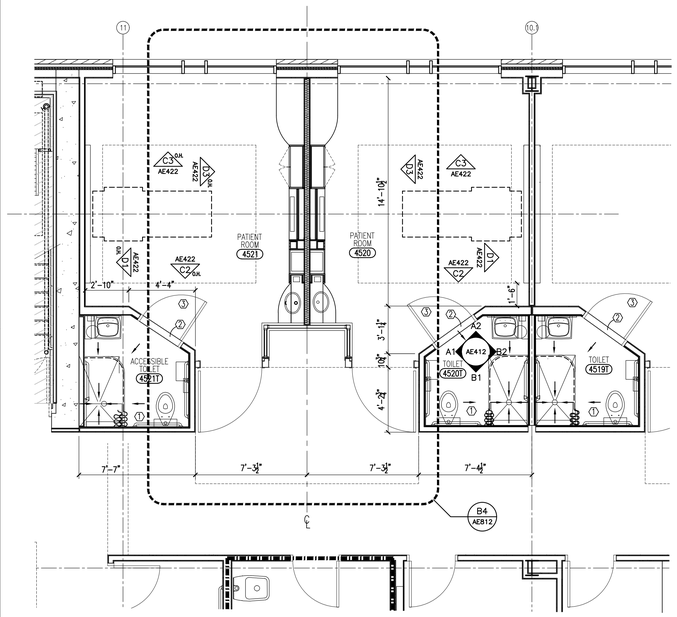

① SLOPE FLUID APPLIED EPOXY FLOORING 2% TO DRAIN WITHIN SHOWER CURTAIN AREA. SLOPE 1% TO DRAIN BETWEEN THE SHOWER CURTAIN AREA AND ROOM WALLS/DOOR BEYOND. SLOPE SHALL BE VERIFIED WITH A CALIBRATED AND HIGH RESOLUTION LEVEL. DO NOT ASSUME THAT THE CONCRETE SUBFLOOR IS FLAT.

② CORIAN SILL SLOPED AWAY FROM SHOWER ROOM FLOOR AT 1:8 PER ANSI A117.1, SET FLUSH WITH FINISH FLOORING IN ROOMS AT BOTH SIDES OF THE DOOR.

③ BUILD UP CONCRETE SUBFLOOR OUTSIDE SHOWER ROOM DOOR IF PATIENT ROOM FLOOR NEEDS TO BE RAISED TO MEET THRESHOLD. TAPER SUBFLOOR GENTLY SO THE SLOPE CANNOT BE PERCEIVED DURING NORMAL ROOM USE.

1/4" = 1'-0"

C1 TYP. ORTHOGONAL ENLARGED PATIENT ROOM FLOOR PLAN

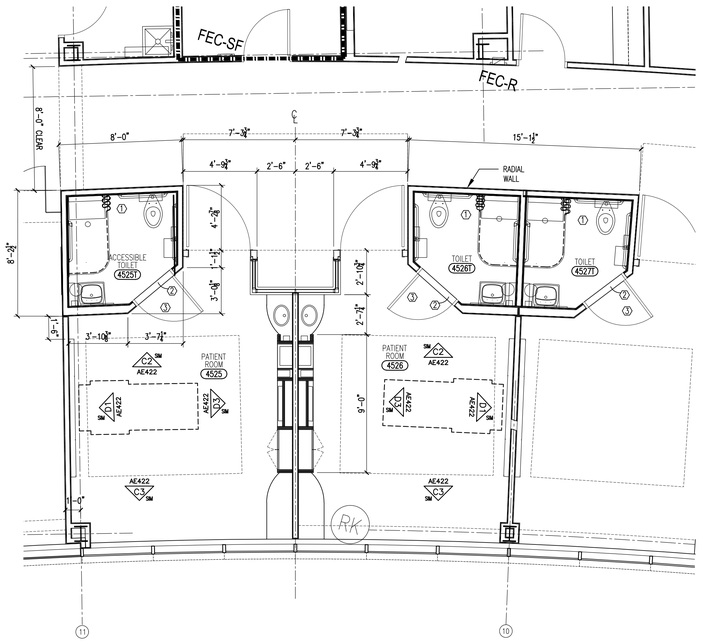

1/4" = 1'-0"

C2 TYP. RADIAL ENLARGED PATIENT ROOM FLOOR PLAN

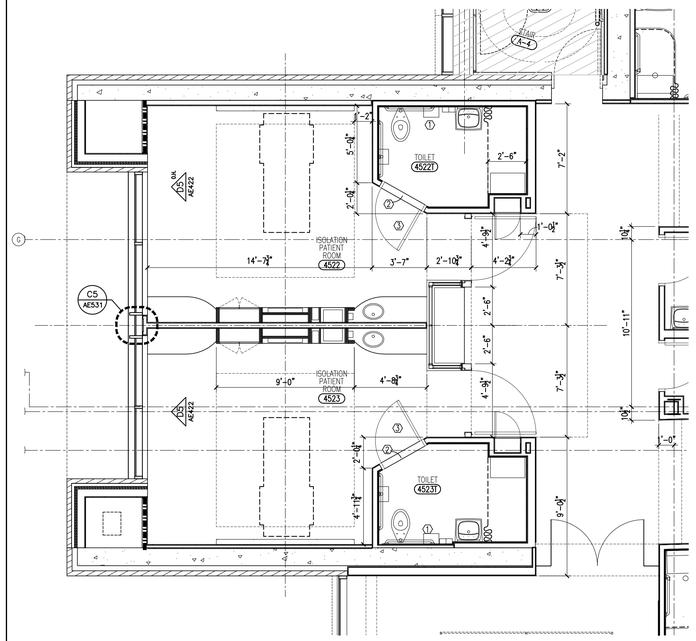

1/4" = 1'-0"

C4 TYP. ADA ENLARGED PATIENT ROOM FLOOR PLAN

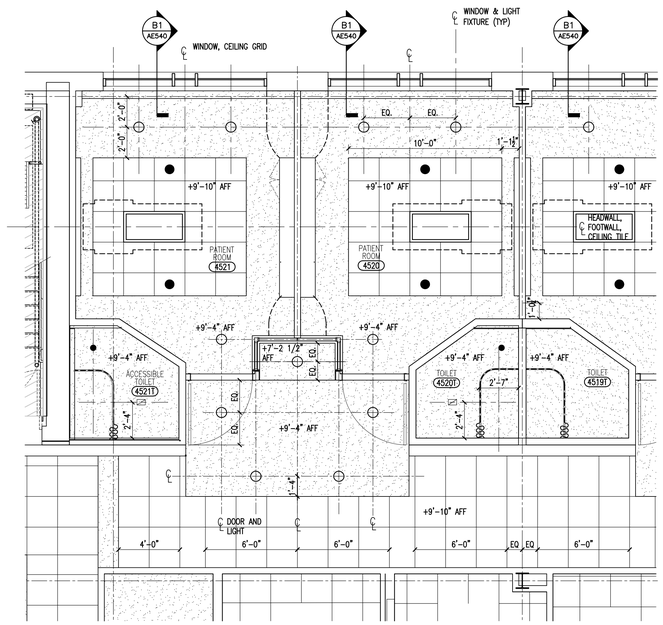

A1 TYP. ORTHOGONAL PATIENT ROOM RCP

1/4" = 1'-0"

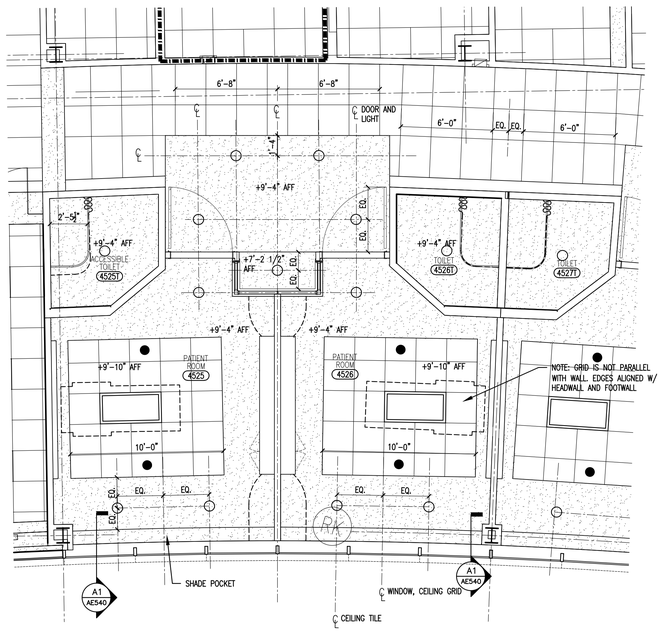

A2 TYP. RADIAL ENLARGED PATIENT ROOM RCP

1/4" = 1'-0"

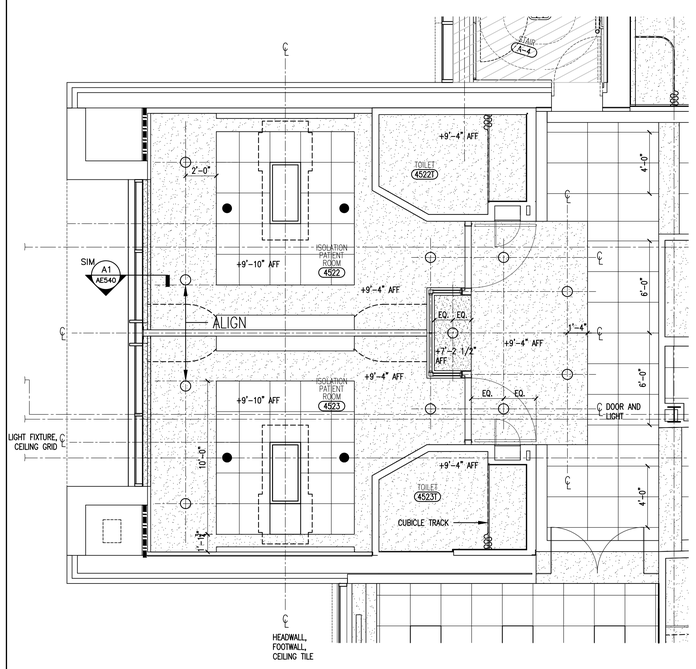

A4 TYP. ADA ENLARGED PATIENT ROOM RCP

1/4" = 1'-0"

DesignStrategies
Planning
Architecture
Interior Architecture
Landscape Architecture
Engineering

130 South Main Street
Greenville, SC 29601
T (864) 527-6500
F (864) 233-8385

STATE OF SOUTH CAROLINA
DESIGN STRATEGIES, LLC
GREENVILLE, SC
02019
REGISTERED ARCHITECT

REVISIONS

NO	DATE	DESCRIPTION
0	12.24.2020	ISSUED FOR BID

McLeod Health
The Choice for Medical Excellence.

SEACOAST HOSPITAL
50-BED ADDITION

LITTLE RIVER, SC

KEYPLAN

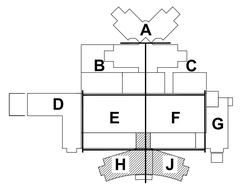

TRUE NORTH

PROJECT NO: **0370.45**
DATE: **12.24.2020**
COPYRIGHT © 2020 **DesignStrategies, LLC**

ENLARGED PATIENT ROOM FLOOR PLANS AND RCP

AE411

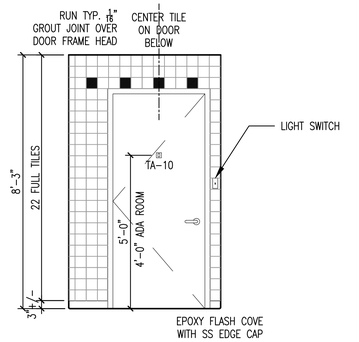

1/2" = 1'-0"

C1 TYP. PATIENT ROOM TOILET ELEV.

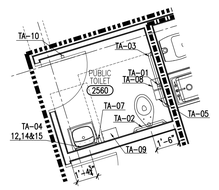

D4 TOILET 1/4" = 1'-0"

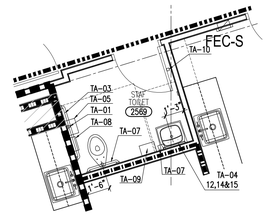

D5 TOILET 1/4" = 1'-0"

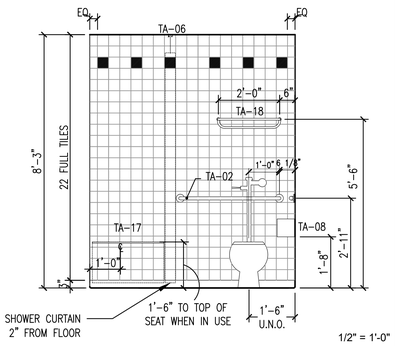

1/2" = 1'-0"

B1 TYP. PATIENT ROOM TOILET ELEV.

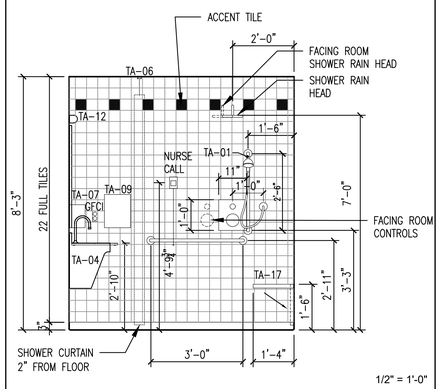

1/2" = 1'-0"

B2 TYP. PATIENT ROOM TOILET ELEV.

SYMBOL	DESCRIPTION	MODEL No.	FURNISH/ INSTALL
TA-01	18" GRAB BAR VERTICAL	ASI 3801 – 18W	C F / C I
TA-02	36" GRAB BAR	ASI 3801 – 36W	C F / C I
TA-03	42" GRAB BAR	ASI 3801 – 42W	C F / C I
TA-04	SINK PLUMBING SHROUD *	SPECIFIED BY PLUMBING; FACTORY CUT FOR LAV.	C F / C I
TA-05	SANITARY NAPKIN DISPOSAL	ASI 0473–A, POWDER COAT WHITE	C F / C I
TA-06	CURTAIN TRACK	OPTITRACK BY INPRO CORPORATION	C F / C I
TA-07	SOAP/ ABHC – SURFACE MTD.	– SEE EQUIPMENT LIST	O F / C I
TA-08	TOILET PAPER DISPENSER – SURFACE MOUNTED	– SEE EQUIPMENT LIST	O F / C I
TA-09	PAPER TOWEL DISPENSER – SURFACE MOUNTED	– SEE EQUIPMENT LIST	O F / C I
TA-10	COAT HOOK	ASI 7340 – W	C F / C I
TA-11	WASTE RECEPTACLE	– SEE EQUIPMENT LIST	O F / O I
TA-12	OVER MIRROR LIGHT *	SPECIFIED BY ELECTRICAL	C F / C I
TA-13	UTILITY SHELF w/ MOP& BROOM HOOKS	BOBRICK B–239	C F / C I
TA-14	FRAMELESS MIRROR	ASI 8287 SIZE AS NOTED	C F / C I
TA-15	PANELMOUNT MIRROR CLIPS	GYFORD PRODUCTIONS SO–APC–100 (4 PER MIRROR)	C F / C I
TA-16	SHELF	AMERICAN SPECIALTIES 20692, 6" DEEP x 18" WIDE POWDERCOATED WHITE	C F / C I
TA-17	SHOWER SEAT	AMERICAN SPECIALTIES 8203–28 W/WHITE POWDERCOAT STAINLESS STEEL	C F / C I
TA-18	HOTEL SHELF	ALLEN + ROTH BRUSHED NICKEL ZINC BATHROOM LOWE'S #13449, POWDERCOAT WHITE	C F / C I

B4 TOILET ACCESSORIES SCHEDULE

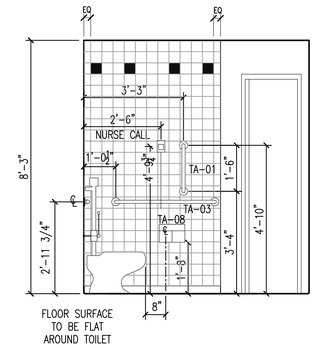

1/2" = 1'-0"

A1 TYP. PATIENT ROOM TOILET ELEV.

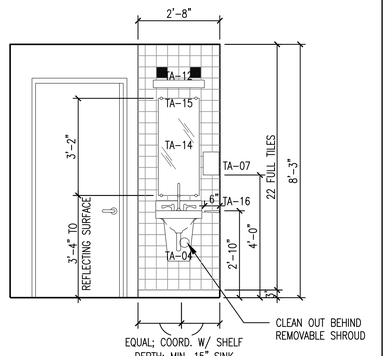

1/2" = 1'-0"

A2 TYP. PATIENT ROOM TOILET ELEV.

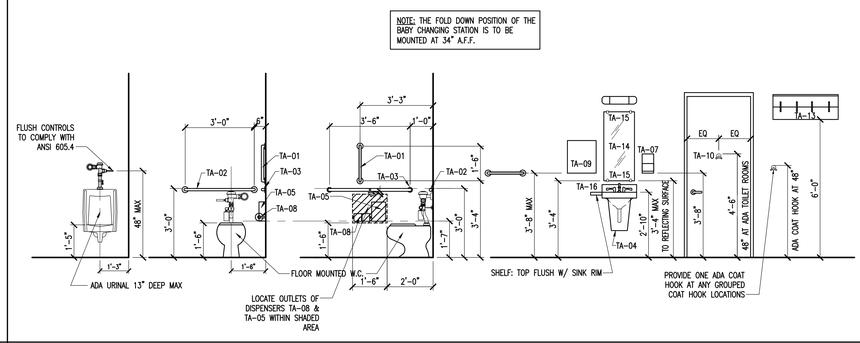

3/8" = 1'-0"

A4 STANDARD MOUNTING HEIGHTS

DesignStrategies

Planning
Architecture
Interior Architecture
Landscape Architecture
Engineering

130 South Main Street
Greenville, SC 29601
T (864) 527-6500
F (864) 233-8385

STATE OF SOUTH CAROLINA
DESIGN STRATEGIES, LLC
GREENVILLE, SC
02019
REGISTERED ARCHITECT

REVISIONS

NO	DATE	DESCRIPTION
0	12.24.2020	ISSUED FOR BID

McLeod Health
The Choice for Medical Excellence.

SEACOAST HOSPITAL 50-BED ADDITION

LITTLE RIVER, SC

KEYPLAN

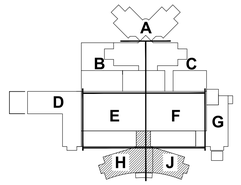

TRUE NORTH

PROJECT NO: 0370.45
DATE: 12.24.2020

COPYRIGHT © 2020 DesignStrategies, LLC

ENLARGED TOILET ROOM PLANS, ELEVATIONS, AND TOILET ACCESSORIES

AE412

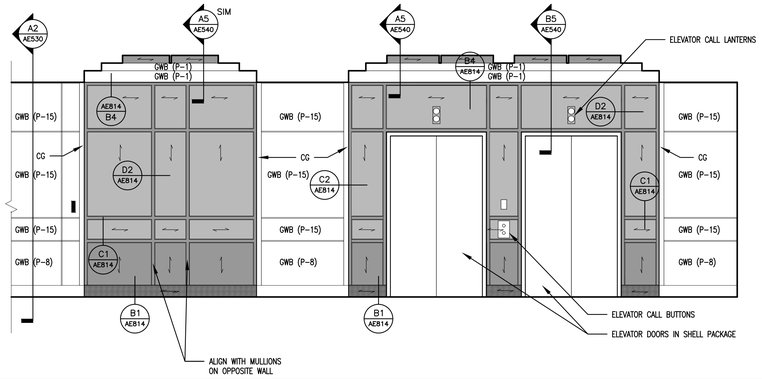

D1 ELEVATOR LOBBY 4511 WEST 3/8" = 1'-0"

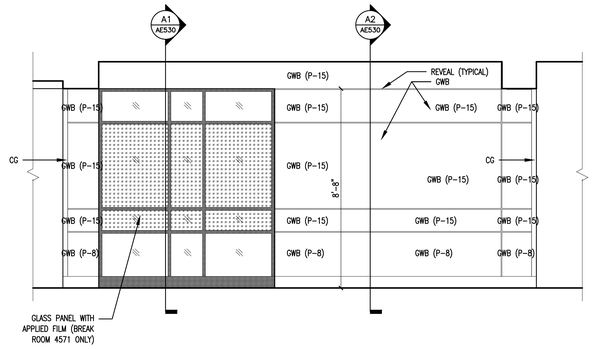

D3 CORRIDOR 4506 EAST 3/8" = 1'-0"

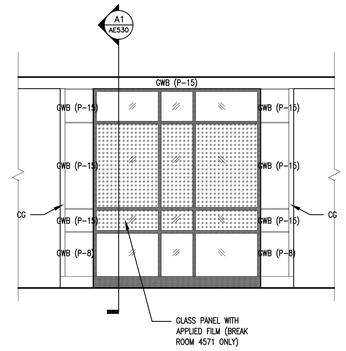

3/8" = 1'-0"

D5 CORRIDOR 4502 SOUTH

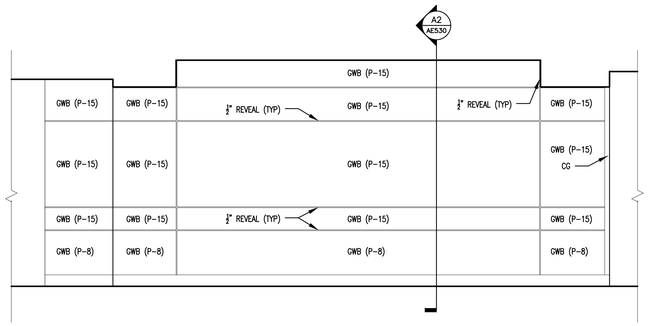

C1 CORRIDOR 4502 WEST (CORRIDOR 4510 EAST SIM. OPP. HD.) 3/8" = 1'-0"

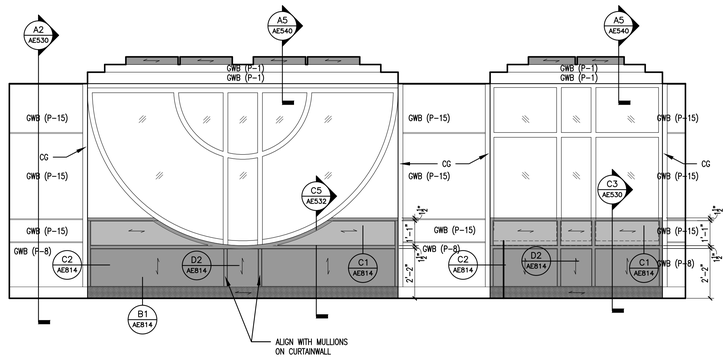

C3 ELEVATOR LOBBY 4511 WEST 3/8" = 1'-0"

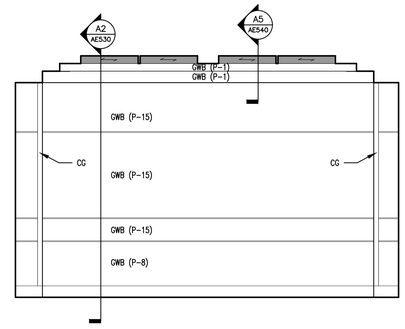

ELEVATOR LOBBY 4501 SIM. O.H.

C5 ELEV. LOBBY 4511 NORTH 3/8" = 1'-0"

B1 NOT USED

B3 NOT USED

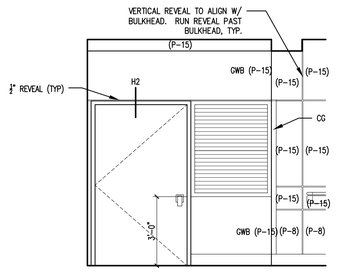

B4 CORRIDOR 4508 SOUTH 3/8" = 1'-0"

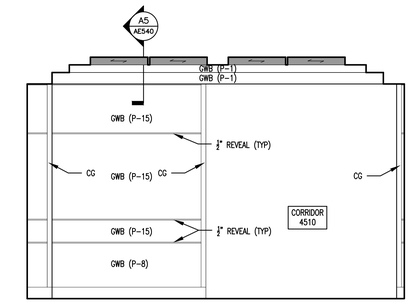

B5 ELEV. LOBBY 4511 SOUTH 3/8" = 1'-0"

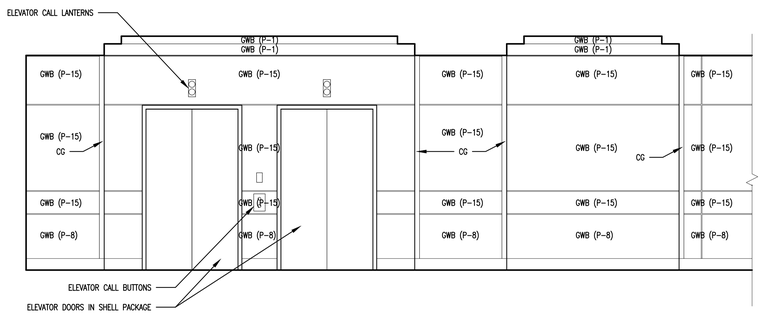

A1 ELEVATOR LOBBY 4501 EAST 3/8" = 1'-0"

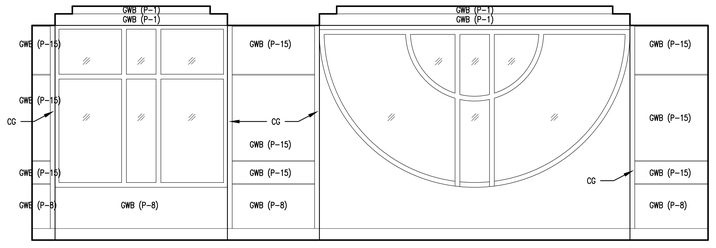

A3 ELEVATOR LOBBY 4501 WEST 3/8" = 1'-0"

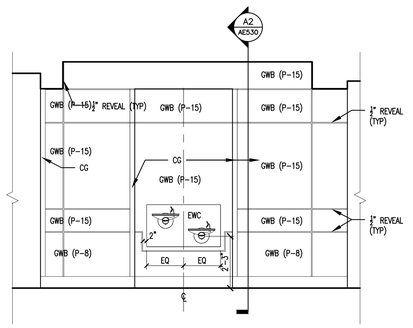

CORRIDOR 4510 SIM. O.H.

A5 CORRIDOR 4502 EAST 3/8" = 1'-0"

DesignStrategies

Planning
Architecture
Interior Architecture
Landscape Architecture
Engineering

130 South Main Street
Greenville, SC 29601
T (864) 527-6500
F (864) 233-8385

STATE OF SOUTH CAROLINA
DESIGN STRATEGIES, LLC
GREENVILLE, SC
02019
REGISTERED ARCHITECT

REVISIONS

NO	DATE	DESCRIPTION
0	12.24.2020	ISSUED FOR BID

McLeod Health
The Choice for Medical Excellence.

SEACOAST HOSPITAL
50-BED ADDITION

LITTLE RIVER, SC

KEYPLAN

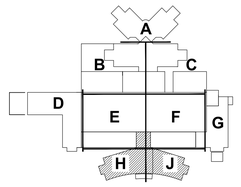

TRUE NORTH

PROJECT NO: 0370.45
DATE: 12.24.2020
COPYRIGHT © 2020 DesignStrategies, LLC

INTERIOR ELEVATIONS

AE420

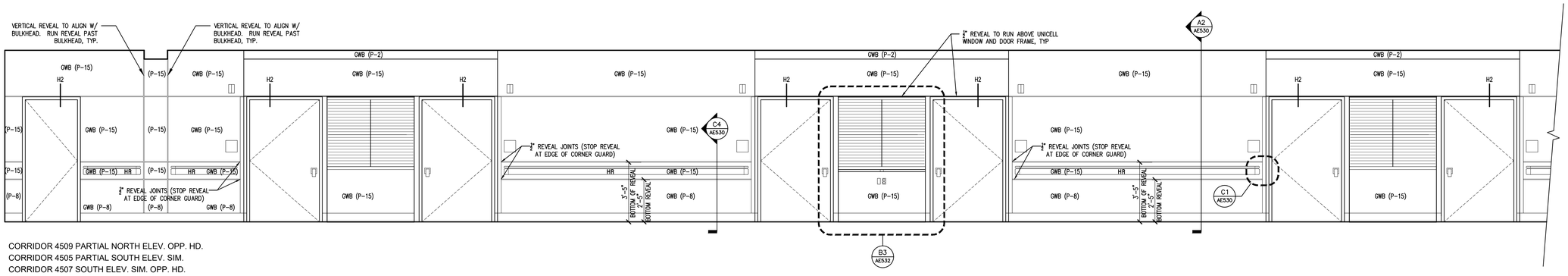

CORRIDOR 4509 PARTIAL NORTH ELEV. OPP. HD.
CORRIDOR 4505 PARTIAL SOUTH ELEV. SIM.
CORRIDOR 4507 SOUTH ELEV. SIM. OPP. HD.

D1 CORRIDOR 4503 PARTIAL NORTH ELEVATION — 3/8" = 1'-0"

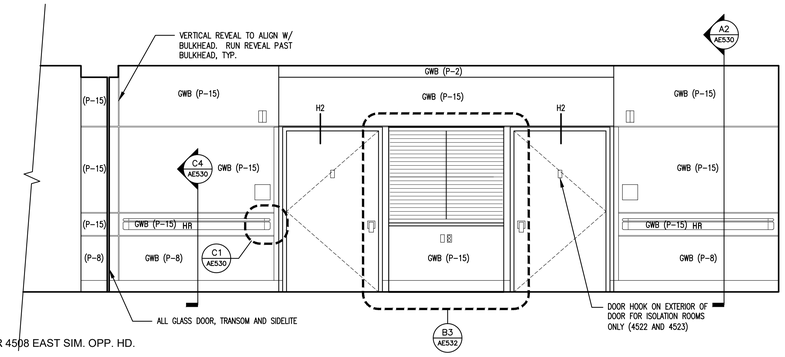

CORRIDOR 4508 EAST SIM. OPP. HD.

C1 CORRIDOR 4504 WEST ELEVATION — 3/8" = 1'-0"

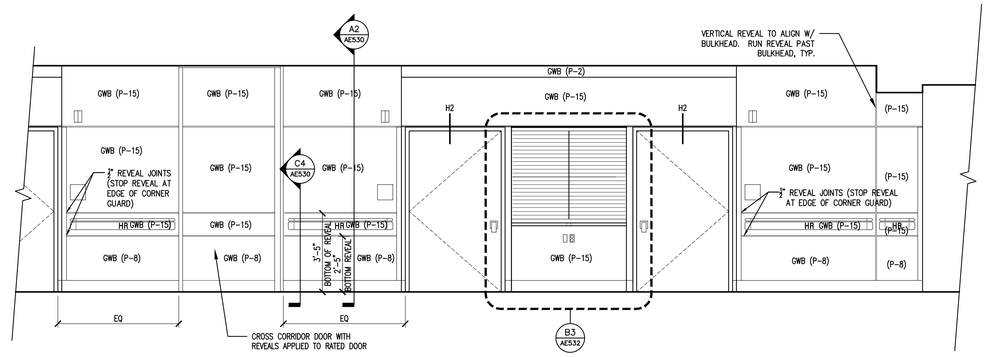

C3 CORRIDOR 4503 PARTIAL NORTH ELEVATION — 3/8" = 1'-0"

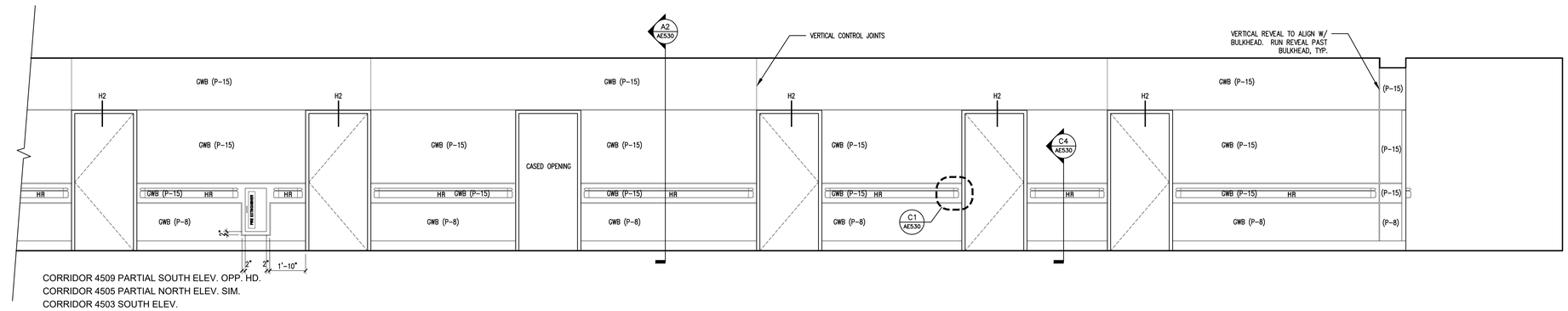

CORRIDOR 4509 PARTIAL SOUTH ELEV. OPP. HD.
CORRIDOR 4505 PARTIAL NORTH ELEV. SIM.
CORRIDOR 4503 SOUTH ELEV.

B1 CORRIDOR 4507 PARTIAL NORTH ELEVATION

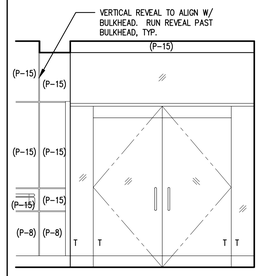

3/8" = 1'-0"

B5 CORR. 4505 SOUTH

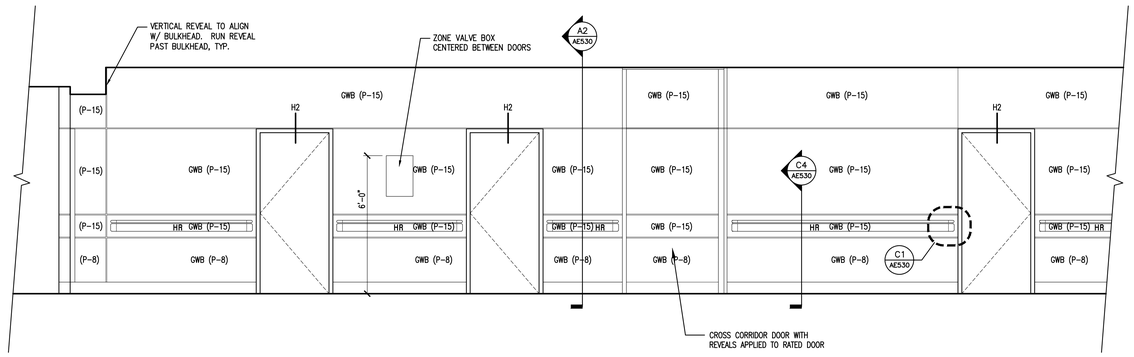

A1 CORRIDOR 4503 PARTIAL SOUTH ELEVATION — 3/8" = 1'-0"

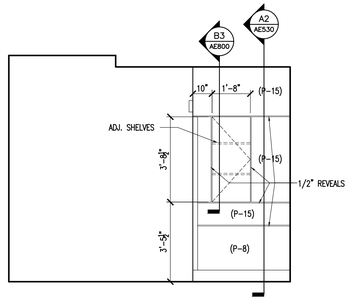

A4 CORR 4504 SOUTH / NORTH — 3/8" = 1'-0"

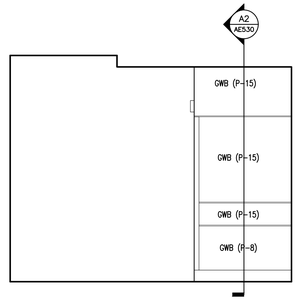

3/8" = 1'-0"

A5 TYP. PAT. RM. ENTRANCE ELEV.

DesignStrategies
Planning
Architecture
Interior Architecture
Landscape Architecture
Engineering

130 South Main Street
Greenville, SC 29601
T (864) 527-6500
F (864) 233-8385

STATE OF SOUTH CAROLINA
DESIGN STRATEGIES, LLC
GREENVILLE, SC
02019
REGISTERED ARCHITECT

REVISIONS

NO	DATE	DESCRIPTION
0	12.24.2020	ISSUED FOR BID

McLeod Health
The Choice for Medical Excellence.

SEACOAST HOSPITAL 50-BED ADDITION

LITTLE RIVER, SC

KEYPLAN

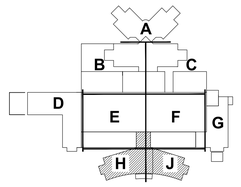

TRUE NORTH

PROJECT NO: **0370.45**
DATE: **12.24.2020**
COPYRIGHT © 2020 **DesignStrategies, LLC**

INTERIOR ELEVATIONS - LEVEL 4

AE421

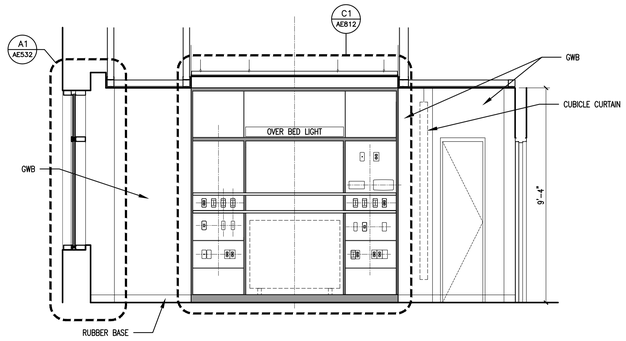

D1 TYP. PATIENT ROOM HEADWALL ELEVATION 3/8" = 1'-0"

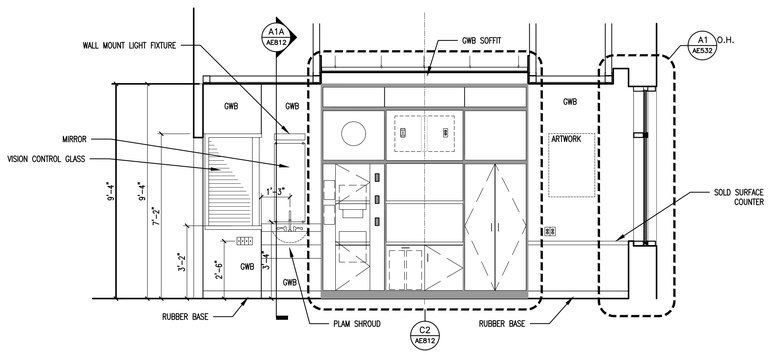

D3 TYP. PATIENT ROOM MILLWORK ELEVATION 3/8" = 1'-0"

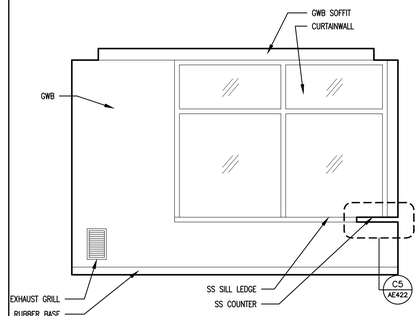

3/8" = 1'-0"

D5 ISOLATION PATIENT ROOM ELEV

3/8" = 1'-0"

C1 TYP. PATIENT ROOM TOILET ELEV.

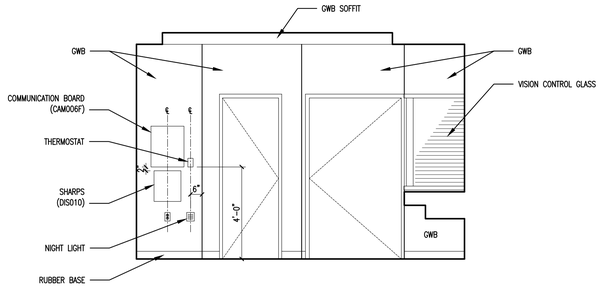

C2 TYP. PATIENT ROOM ELEVATION 3/8" = 1'-0"

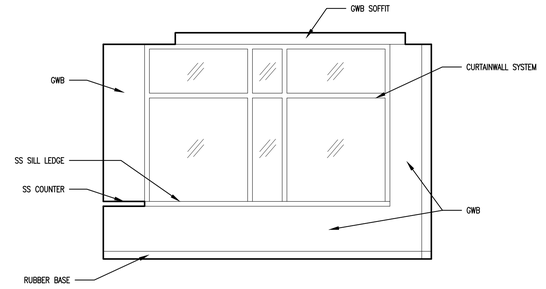

C3 TYP. PATIENT ROOM ELEVATION 3/8" = 1'-0"

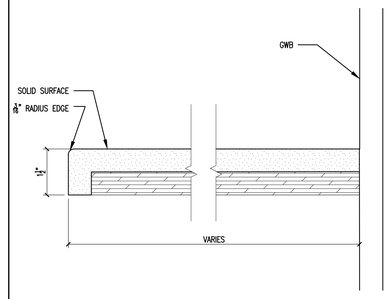

C5 COUNTER SECTION DETAIL 6" = 1'-0"

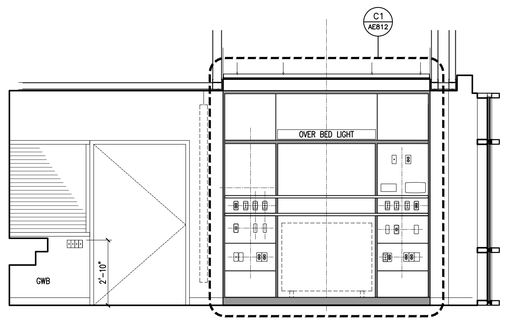

3/8" = 1'-0"

B1 PATIENT ROOM (4541) HEADWALL ELEVATION

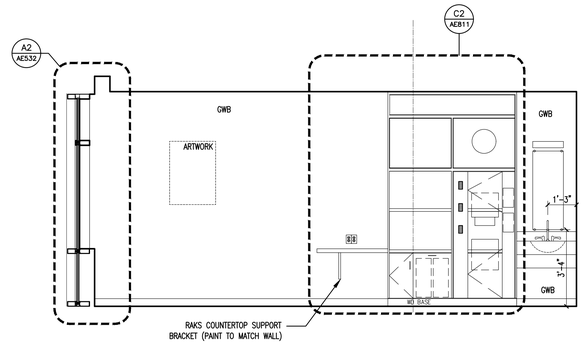

3/8" = 1'-0"

B3 PATIENT ROOM (4541) MILLWORK ELEVATION

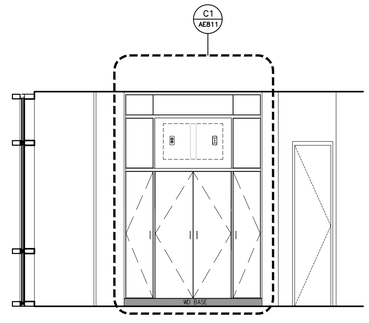

3/8" = 1'-0"

B5 PATIENT ROOM (4541) MILLWORK

DesignStrategies

Planning
Architecture
Interior Architecture
Landscape Architecture
Engineering

130 South Main Street
Greenville, SC 29601
T (864) 527-6500
F (864) 233-8385

STATE OF SOUTH CAROLINA
DESIGN STRATEGIES, LLC
GREENVILLE, SC
02019
REGISTERED ARCHITECT

REVISIONS

NO	DATE	DESCRIPTION
0	12.24.2020	ISSUED FOR BID

McLeod Health
The Choice for Medical Excellence.

SEACOAST HOSPITAL
50-BED ADDITION

LITTLE RIVER, SC

KEYPLAN

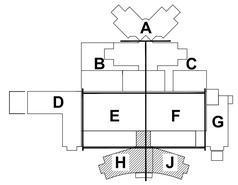

TRUE NORTH

PROJECT NO: **0370.45**
DATE: **12.24.2020**
COPYRIGHT © 2020 **DesignStrategies, LLC**

ENLARGED PATIENT ROOM ELEVATIONS AND DETAILS

AE422

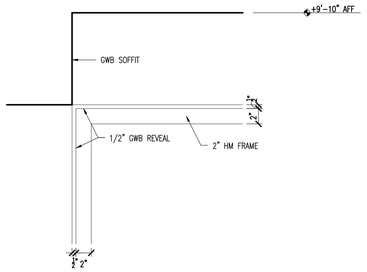

D1 REVEALS AT DOOR HEADS

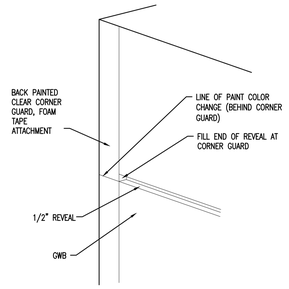

C1 CORNER GUARD DTL AT REVEALS

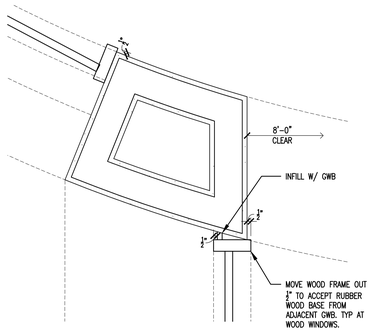

D2 WOOD FRAME AT SILL 1 1/2" = 1'-0"

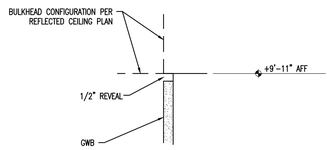

C2 SECTION DETAIL 3"=1'-0"

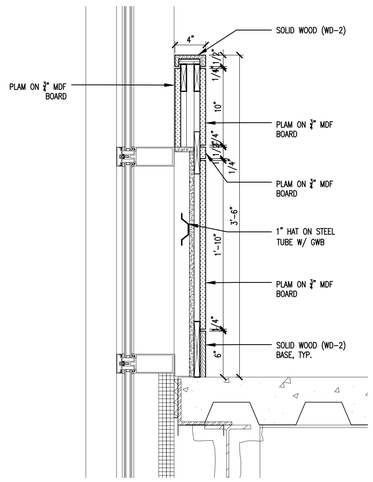

C3 WOOD SILL DTL @ ELEV 1 1/2" = 1'-0"

* REFER TO IW101H, IW101J, IW102H, IW102J, IW103H, IW103J AND ARCHITECTURAL ELEVATIONS FOR LOCATION OF WALL PROTECTION

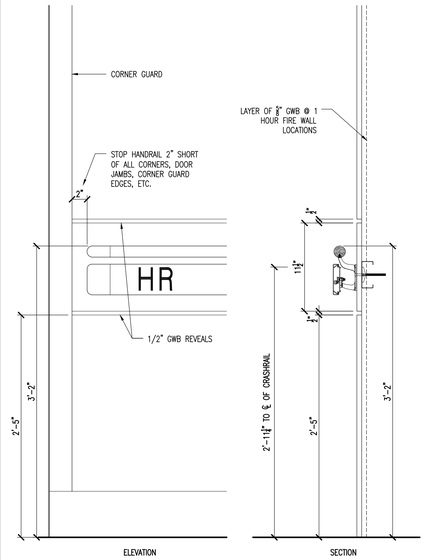

C4 TYPICAL WALL PROTECTION (HANDRAIL)

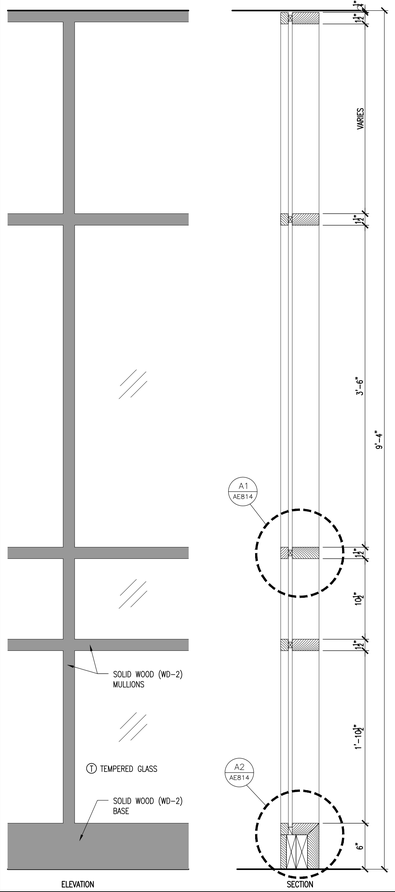

A1 TYPICAL WOOD STOREFRONT 1 1/2" = 1'-0"

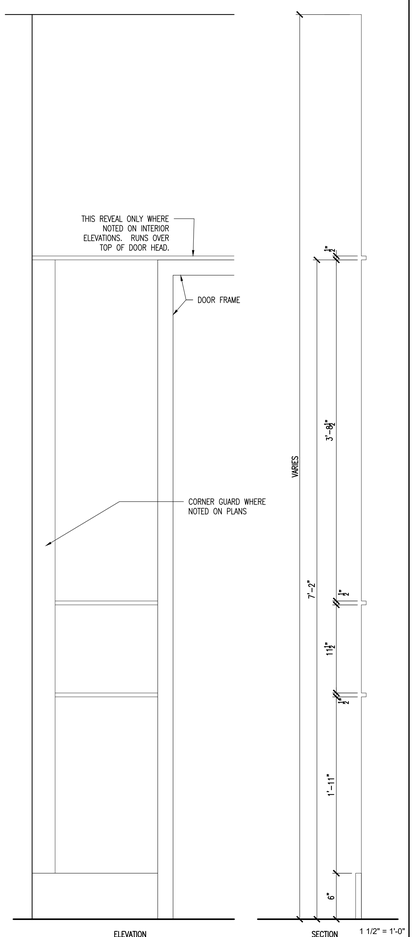

A2 TYP GWB WALL W REVEALS @ 4TH LEVEL 1 1/2" = 1'-0"

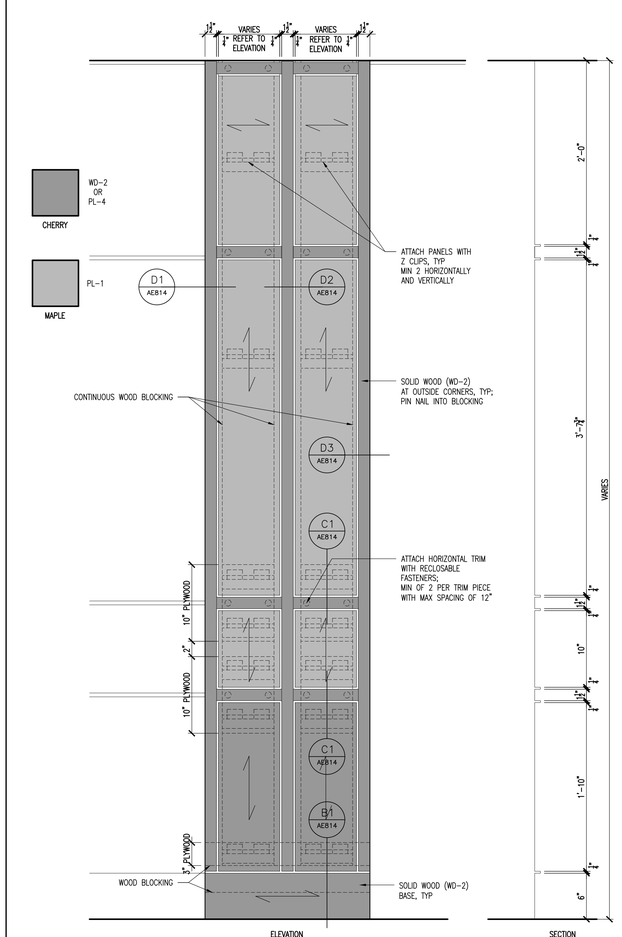

A4 TYPICAL WOOD PANELING 1 1/2" = 1'-0"

DesignStrategies

Planning
Architecture
Interior Architecture
Landscape Architecture
Engineering

130 South Main Street
Greenville, SC 29601
T (864) 527-6500
F (864) 233-8385

STATE OF SOUTH CAROLINA — DESIGN STRATEGIES, LLC — GREENVILLE, SC — 02019 — REGISTERED ARCHITECT

REVISIONS

NO	DATE	DESCRIPTION
0	12.24.2020	ISSUED FOR BID

McLeod Health
The Choice for Medical Excellence.

SEACOAST HOSPITAL 50-BED ADDITION

LITTLE RIVER, SC

KEYPLAN

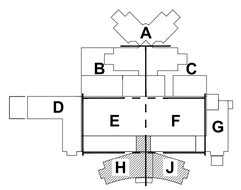

TRUE NORTH

PROJECT NO: **0370.45**
DATE: **12.24.2020**
COPYRIGHT © 2020 **DesignStrategies, LLC**

INTERIOR DETAILS

AE530

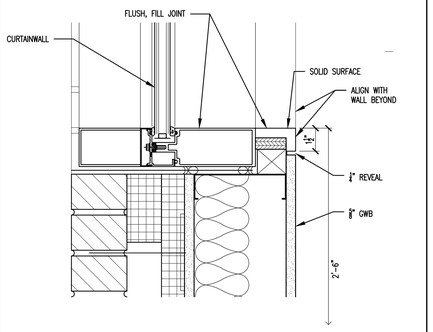

D1 SECTION DETAIL 3"=1'-0"

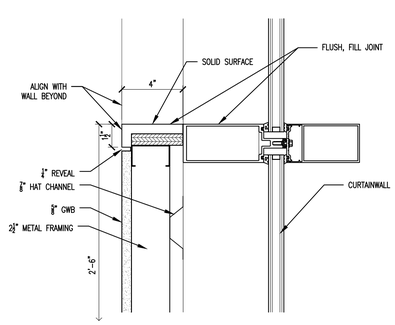

D2 SECTION DETAIL 3"=1'-0"

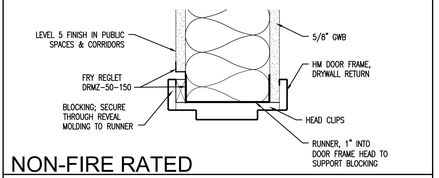

NON-FIRE RATED

D3B HEAD SECTION DETAIL 3"=1'-0"

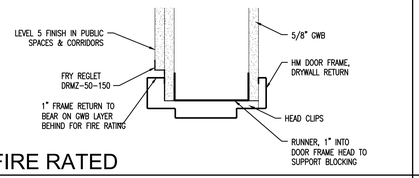

FIRE RATED

D3A HEAD SECTION DETAIL 3"=1'-0"

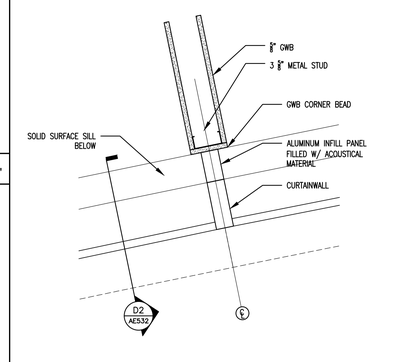

D4 ENLARGED PLAN DETAIL 1 1/2"=1'-0"

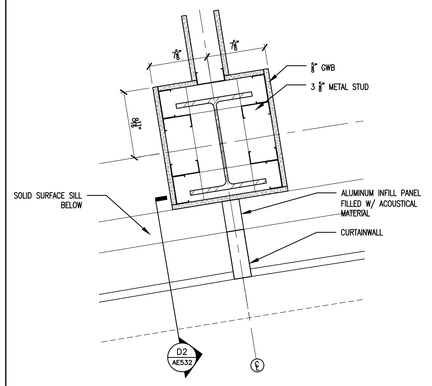

D5 ENLARGED PLAN DETAIL 1 1/2"=1'-0"

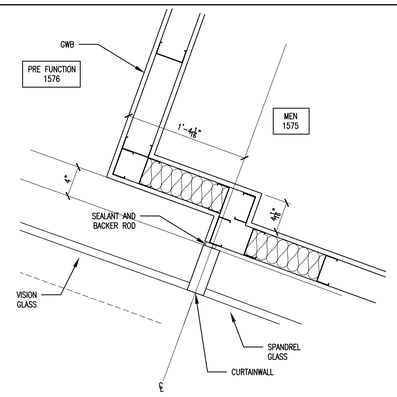

C3 ENLARGED PLAN DETAIL 1 1/2"=1'-0"

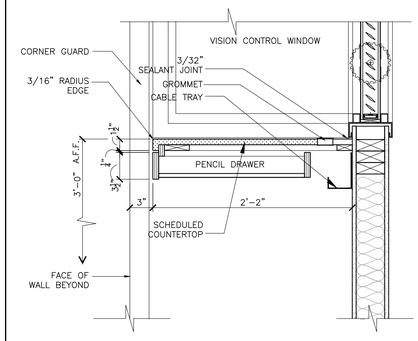

C4 VISION CONTROL WINDOW DETAIL

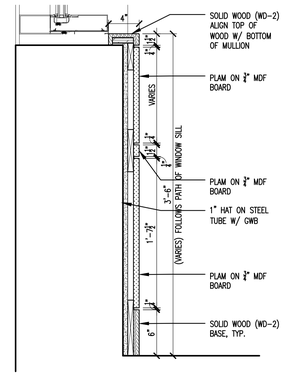

C5 WINDOW SILL DTL @ WOOD

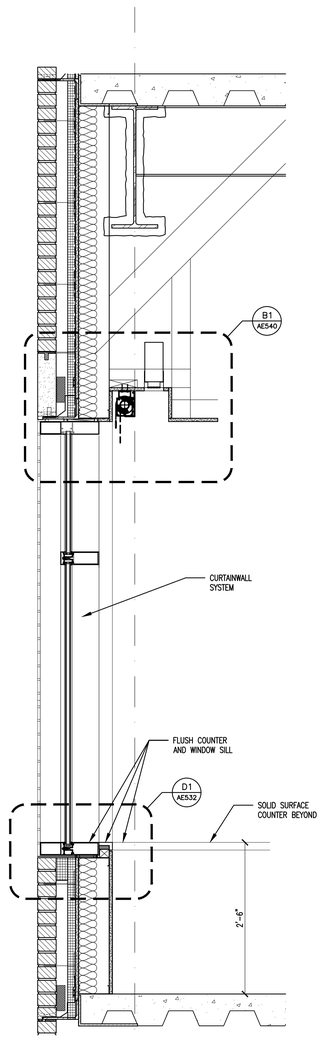

A1 SECTION @ BRICK PAT. RM. 1"=1'-0"

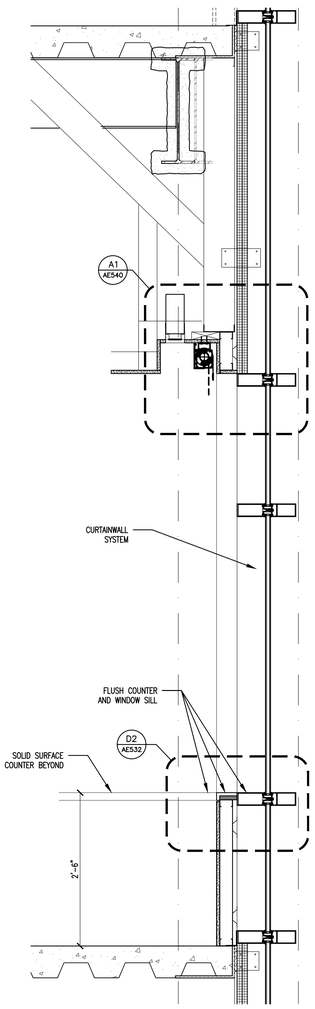

A2 SECTION @ CW PATIENT RM. 1"=1'-0"

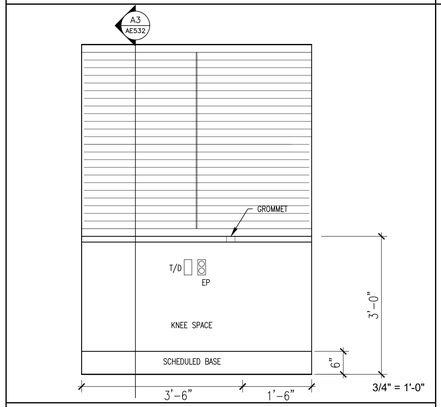

3/4" = 1'-0"

B3 NURSE CARE ELEV. - STANDARD

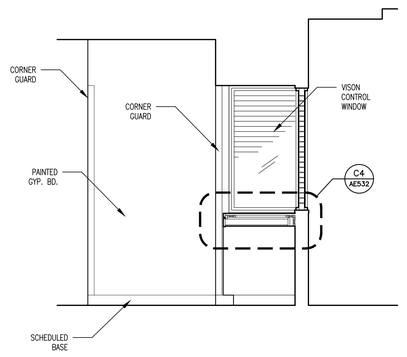

A3 NURSE CARE SECTION 1/2" = 1'-0"

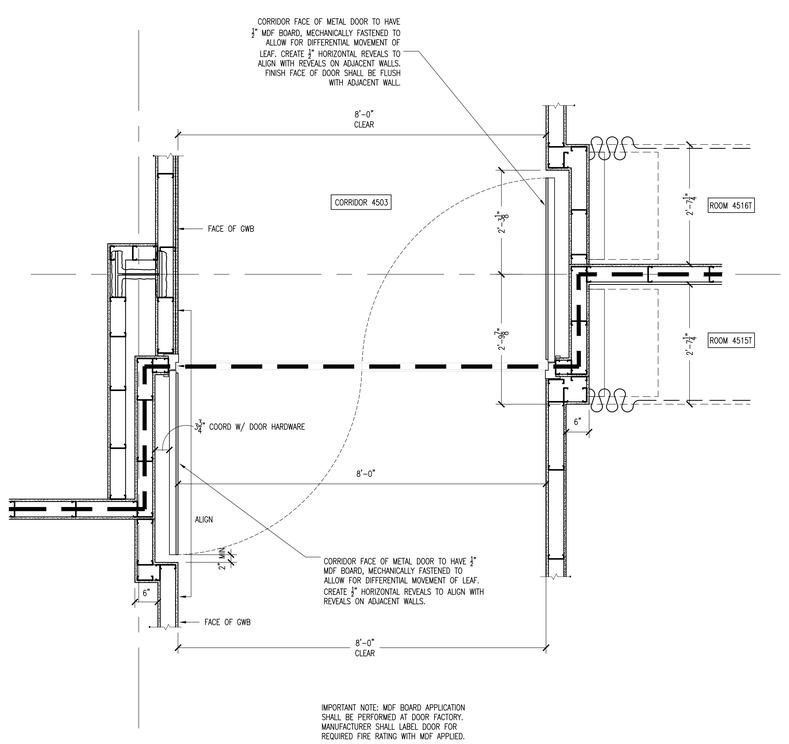

A4 ENLARGED PLAN DETAIL @ CROSS CORRIDOR DOORS 3/4"=1'-0"

DesignStrategies

Planning
Architecture
Interior Architecture
Landscape Architecture
Engineering

130 South Main Street
Greenville, SC 29601
T (864) 527-6500
F (864) 233-8385

STATE OF SOUTH CAROLINA
DESIGN STRATEGIES, LLC
GREENVILLE, SC
02019
REGISTERED ARCHITECT

REVISIONS

NO	DATE	DESCRIPTION
0	12.24.2020	ISSUED FOR BID

McLeod Health
The Choice for Medical Excellence.

SEACOAST HOSPITAL
50-BED ADDITION

LITTLE RIVER, SC

KEYPLAN

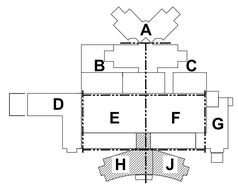

TRUE NORTH TRUE NORTH

0 1" 2" 4"
SCALE: 6" = 1'-0"

PROJECT NO: **0370.45**
DATE: **12.24.2020**
COPYRIGHT © 2020 **DesignStrategies, LLC**

INTERIOR DETAILS

AE532

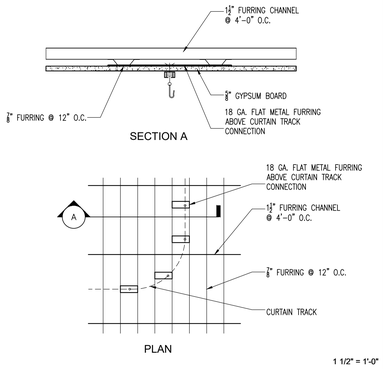

D1 CURTAIN TRACK @ GWB CEILING

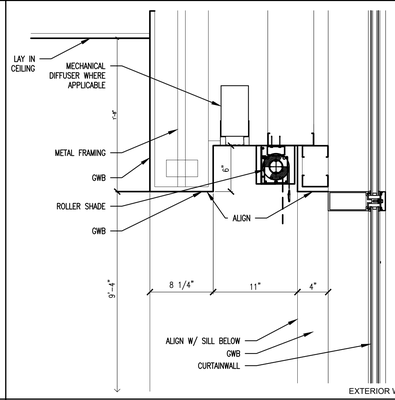

D2 SHADE POCKET 1 1/2" = 1'-0"

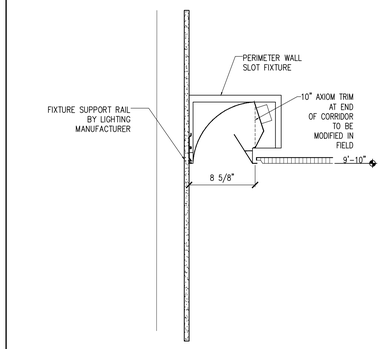

D3 PERIMETER WALL WASH 1 1/2" = 1'-0"

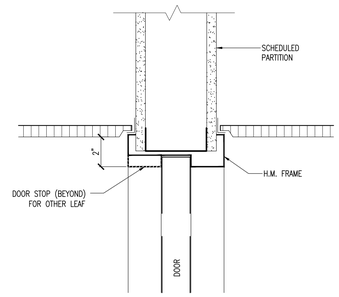

D4 DOUBLE EGRESS DOOR HEAD 3" = 1'-0"

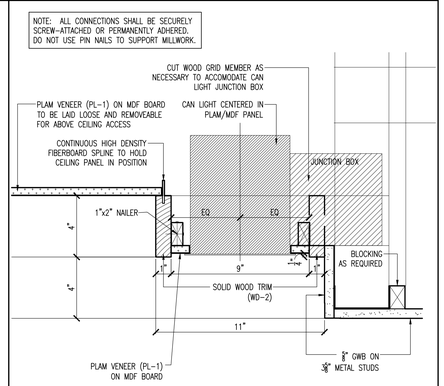

D5 SECTION DETAIL 3" = 1'-0"

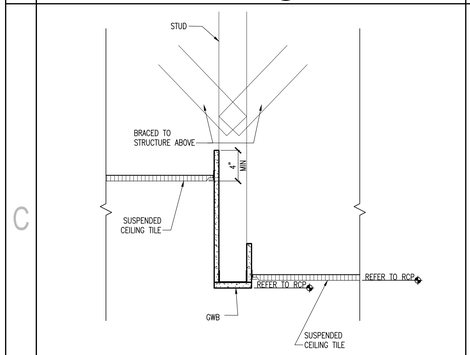

C1 CEILING BREAK DETAIL

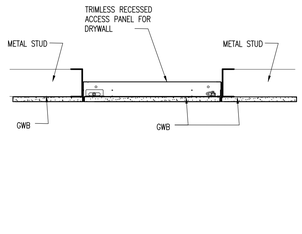

C2 CEILING ACCESS PANEL DETAIL 1 1/2" = 1'-0"

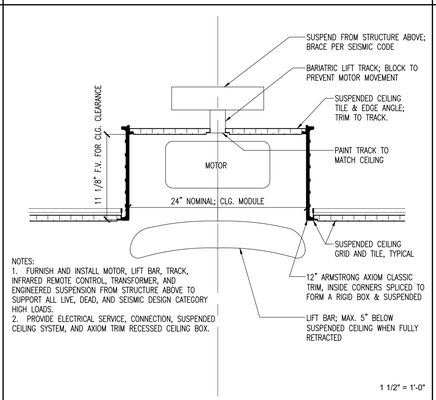

1 1/2" = 1'-0"

C3 BARIATRIC LIFT CEILING DETAIL

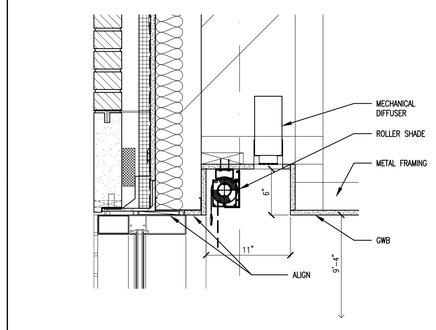

B1 PATIENT RM. SHADE POCKET

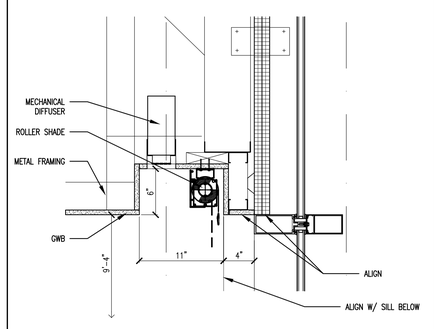

A1 PATIENT RM. SHADE POCKET

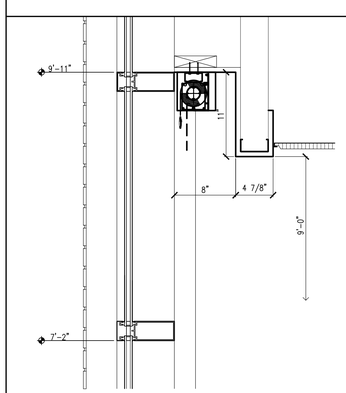

A3 SHADE POCKET 1 1/2" = 1'-0"

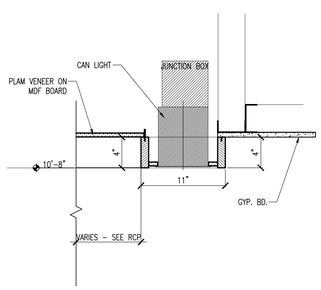

A4 CEILING DETAIL @ FAM. WTG.

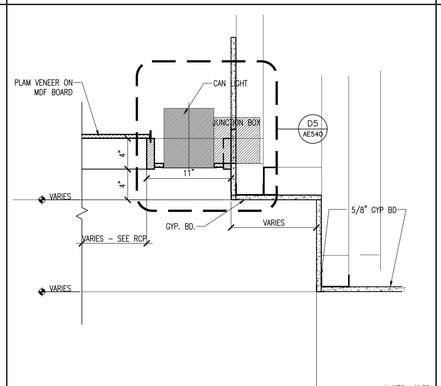

1 1/2" = 1'-0"

A5 CEILING DETAIL @ ELEV. LOBBY

DesignStrategies

Planning
Architecture
Interior Architecture
Landscape Architecture
Engineering

130 South Main Street
Greenville, SC 29601
T (864) 527-6500
F (864) 233-8385

STATE OF SOUTH CAROLINA
DESIGN STRATEGIES, LLC
GREENVILLE, SC
02019
REGISTERED ARCHITECT

REVISIONS

NO	DATE	DESCRIPTION
0	12.24.2020	ISSUED FOR BID

McLeod Health
The Choice for Medical Excellence.

SEACOAST HOSPITAL
50-BED ADDITION

LITTLE RIVER, SC

KEYPLAN

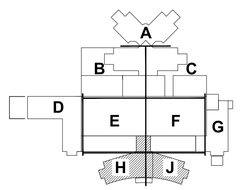

TRUE NORTH

PROJECT NO: **0370.45**
DATE: **12.24.2020**
COPYRIGHT © 2020 **DesignStrategies, LLC**

CEILING DETAILS

AE540

TYPICAL HARDWARE NOTES:

1. HARDWARE SUPPLIER SHALL COORDINATE HARDWARE SELECTIONS AND INSTALLATION PROCEDURES FOR ALL DOORS TO ENSURE PROPER OPERATION OF DOOR AND ALL RELATED COMPONENTS AND COMPATIBILITY WITH RELATED BUILDING SYSTEMS.
2. ALL HARDWARE COMPONENTS ON LABELED DOORS SHALL BE U.L. LABELED.
3. ALL DOOR CLOSERS ARE TO BE MOUNTED ON THE ROOM SIDE OF THE DOOR. WITHIN SUITES OR GROUPS OF ROOMS, THE CLOSERS SHALL BE MOUNTED ON THE INNER MOST ROOM DOOR FACE. WITHIN THE EXIT STAIRS THE CLOSERS SHALL BE MOUNTED AWAY FROM THE CORRIDOR.
4. PROVIDE 16 GA. STRAPPING (BLOCKING) BEHIND WALL STOP.
5. PROVIDE APPROPRIATE FLOORING TRANSITION STRIPS (VINYL BETWEEN CARPET & VCT, MARBLE @ TILE) CENTERED BENEATH DOOR LEAF IN CLOSED POSITION.
6. ALL HARDWARE SHALL COMPLY WITH OWNER'S STANDARDS, MATCH EXISTING HARDWARE ON SIMILAR NEARBY DOORS, AND BE FURNISHED AND INSTALLED WITH ALL ACCESSORIES REQUIRED FOR CORRECT AND DURABLE DOOR OPERATION.
7. DOORS SWINGING OUT INTO EGRESS CORRIDORS SHALL SWING 180 DEGREES TO LIE CLOSE TO CORRIDOR WALL.
8. HINGES SHALL BE HEAVY DUTY BALL BEARING, EXCEPT ON DOORS SMALLER THEN 3'-0" TO PRIVATE OFFICES OR SHALLOW CLOSETS.
9. PROVIDE SWING CLEAR HINGES ON ALL UTILITIES AND EQUIPMENT STORAGE ROOM DOORS.
10. PUSH PLATES FOR SINGLE SLIDE DOORS-LARCO; U-WAY TOUCHLESS SWITCH- 42" A.F.F. TO CENTERLINE
11. CLOSERS FOR HERCULITE DOORS TO BE ADJUSTED WITH LIGHT SPRING PRESSURE AND DAMPING, FOR EASE OF OPERATION.
12. SLIDING ICU STYLE DOORS SHALL BREAKOUT AT ANY POINT IN THEIR TRAVEL, BUT SHALL ONLY HAVE TRACK BENEATH THE INACTIVE LEAF. TRACK SHALL BE RECESSED IN CONCRETE SLAB; FLUSH WITH FINISH FLOOR.

GLAZING LEGEND AS SPECIFIED:
FG = FIRE RATED GLASS
GT = MONOLITHIC TEMPERED CLEAR GLASS
GF = FROSTED GLASS

C3 HARDWARE NOTES

1. HARDWARE SUPPLIER SHALL COORDINATE HARDWARE SELECTIONS AND INSTALLATION PROCEDURES FOR ALL DOORS TO ENSURE PROPER OPERATION OF DOOR AND ALL RELATED COMPONENTS AND COMPATIBILITY WITH RELATED BUILDING SYSTEMS.

2. ALL HARDWARE COMPONENTS ON LABELED DOORS SHALL BE U.L. LABELED.

3. ALL DOOR CLOSERS ARE TO BE MOUNTED ON THE ROOM SIDE OF THE DOOR. WITHIN SUITES OR GROUPS OF ROOMS, THE CLOSERS SHALL BE MOUNTED ON THE INNER MOST ROOM DOOR FACE.

4. PROVIDE 16 GA. BLOCKING BEHIND ALL WALL STOPS.

5. PROVIDE APPROPRIATE FLOORING TRANSITION STRIPS (VINYL BETWEEN CARPET & VCT, MARBLE @ TILE) CENTERED BENEATH DOOR LEAF IN CLOSED POSITION.

6. DOORS SWINGING OUT INTO EGRESS CORRIDORS SHALL SWING 180 DEGREES TO LIE CLOSE TO CORRIDOR WALL. CONTRACTOR TO COORDINATE POSITION OF WALL MOUNTED OBJECTS INCLUDING HAND RAILS, CRASH RAILS, ETC. TO ALLOW FOR FULL 180 DEGREE SWING.

7. ALL DOORS ARE 1¾" THICK U.N.O.

8. HORIZONTAL REVEALS THAT ABUT DOOR FRAME WITHOUT RUNNING AROUND SHALL BE STOPPED FLUSH WITH DOOR FRAME EDGE.

B1 DOOR SCHEDULE LEGEND

DOOR MATERIAL:
WOOD = SOLID CORE WOOD DOOR
HM = HOLLOW METAL
MWK = MILLWORK PANELING ATOP SOLID WOOD DOOR
ALUM = ALUMINUM/GLASS
GLASS = FRAMELESS TEMPERED GLASS
PLAM = PLASTIC LAMINATE FINISHED DOOR

FRAME MATERIAL:
HM = HOLLOW METAL
MWK = WOOD MILLWORK
GWB = FRAMELESS DOOR, STRUCTURAL DOOR HEAD
ALUM = ALUMINUM AROUND ALUMINUM/GLASS DOOR

BUCK: REFER TO BUCK PROFILES ON SHEET AE602. MWK DENOTES MILLWORK BUCK, REFER TO JAMB DETAIL.

REMARKS AND HARDWARE NOTES:
1. ALL GLASS SIDELIGHTS AND TRANSOM.
2. CARD ACCESS.
3. HURRICANE RATED EXTERIOR ALUMINUM/GLASS DOOR ADDED TO EXISTING CURTAIN WALL. GRAY FRAME.
4. SURFACE MOUNTED ALUMINUM/GLASS SLIDING DOOR. INSIDE ROOM.
5. FULL HEIGHT POCKETED CROSS-CORRIDOR DOOR, HEIGHT 2" LESS THAN CEILING. PROVIDE MAGNETIC HOLDER.
6. SWING CLEAR HINGES.
7. SWING CLEAR HINGE AND DELAY ACTION CLOSER WITH CUSH ARM STOP.
8. CASED OPENING.
9. PROVIDE CLEAR VINYL SMOKE SEAL AT JAMB AND HEAD.
10. APPLY MDF PANELS.
11. APPLY PLAM, REFER TO ELEVATIONS

A1 DOOR SCHEDULE LEGEND

A2 DOOR SCHEDULE

DOORS & FRAMES

DOOR NO.	SIZE	DOOR ELEV.	DOOR MAT'L	LABEL	FRAME MAT'L	FRAME ELEV.	DETAILS HEAD	DETAILS JAMB	DETAILS BUCK	HDW SET	REMARKS AND HARDWARE NOTES
4503 A	(2) 4'-0" x 7'-0" LTC	N	HM	20 MIN	HM	F3	H6	J6	B3	28	REMARK 5, 10
4505 A	(2) 4'-0" x 7'-0" LTC	N	HM	20 MIN	HM	F3	H6	J6	B3	28	REMARK 5, 10
4514 A	4'-0" x 7'-0"	F	WOOD	SMOKE	HM	F1	H1	J1	B1	06	REMARK 6
4514T A	3'-0" x 7'-0"	F	WOOD	SMOKE	HM	F1	H1	J1	B1	08	
4515 A	4'-0" x 7'-0"	F	WOOD	SMOKE	HM	F1	H1	J1	B1	06	REMARK 6
4515T A	3'-0" x 7'-0"	F	WOOD	SMOKE	HM	F1	H1	J1	B1	08	
4516 A	4'-0" x 7'-0"	F	WOOD	SMOKE	HM	F1	H1	J1	B1	06	REMARK 6
4516T A	3'-0" x 7'-0"	F	WOOD	SMOKE	HM	F1	H1	J1	B1	08	
4517 A	4'-0" x 7'-0"	F	WOOD	SMOKE	HM	F1	H1	J1	B1	06	REMARK 6
4517T A	3'-0" x 7'-0"	F	WOOD	SMOKE	HM	F1	H1	J1	B1	08	
4518 A	4'-0" x 7'-0"	F	WOOD	SMOKE	HM	F1	H1	J1	B1	06	REMARK 6
4518T A	3'-0" x 7'-0"	F	WOOD	SMOKE	HM	F1	H1	J1	B1	08	
4519 A	4'-0" x 7'-0"	F	WOOD	SMOKE	HM	F1	H1	J1	B1	06	REMARK 6
4519T A	3'-0" x 7'-0"	F	WOOD	SMOKE	HM	F1	H1	J1	B1	08	
4520 A	4'-0" x 7'-0"	F	WOOD	SMOKE	HM	F1	H1	J1	B1	06	REMARK 6
4520T A	3'-0" x 7'-0"	F	WOOD	SMOKE	HM	F1	H1	J1	B1	08	
4521 A	4'-0" x 7'-0"	F	WOOD	SMOKE	HM	F1	H1	J1	B1	06	REMARK 6
4521T A	3'-0" x 7'-0"	F	WOOD	SMOKE	HM	F1	H1	J1	B1	08	
4522 A	4'-0" x 7'-0"	F	WOOD	SMOKE	HM	F1	H1	J1	B1	07	REMARK 6
4522T A	3'-0" x 7'-0"	F	WOOD	SMOKE	HM	F1	H1	J1	B1	08	
4523 A	4'-0" x 7'-0"	F	WOOD	SMOKE	HM	F1	H1	J1	B1	07	REMARK 6
4523T A	3'-0" x 7'-0"	F	WOOD	SMOKE	HM	F1	H1	J1	B1	08	
4524 A	(2) 3'-0" x 7'-0"	G	GLASS	—	GWB	—	—	—	—	GL-02	REMARK 1
4525 A	4'-0" x 7'-0"	F	WOOD	SMOKE	HM	F1	H1	J1	B1	06	REMARK 6
4525T A	3'-0" x 7'-0"	F	WOOD	SMOKE	HM	F1	H1	J1	B1	08	
4526 A	4'-0" x 7'-0"	F	WOOD	SMOKE	HM	F1	H1	J1	B1	06	REMARK 6
4526T A	3'-0" x 7'-0"	F	WOOD	SMOKE	HM	F1	H1	J1	B1	08	
4527 A	4'-0" x 7'-0"	F	WOOD	SMOKE	HM	F1	H1	J1	B1	06	REMARK 6
4527T A	3'-0" x 7'-0"	F	WOOD	SMOKE	HM	F1	H1	J1	B1	08	
4528 A	4'-0" x 7'-0"	F	WOOD	SMOKE	HM	F1	H1	J1	B1	06	REMARK 6
4528T A	3'-0" x 7'-0"	F	WOOD	SMOKE	HM	F1	H1	J1	B1	08	
4529 A	4'-0" x 7'-0"	F	WOOD	SMOKE	HM	F1	H1	J1	B1	06	REMARK 6
4529T A	3'-0" x 7'-0"	F	WOOD	SMOKE	HM	F1	H1	J1	B1	08	
4530 A	4'-0" x 7'-0"	F	WOOD	SMOKE	HM	F1	H1	J1	B1	06	REMARK 6
4530T A	3'-0" x 7'-0"	F	WOOD	SMOKE	HM	F1	H1	J1	B1	08	
4531 A	4'-0" x 7'-0"	F	WOOD	SMOKE	HM	F1	H1	J1	B1	06	REMARK 6
4531T A	3'-0" x 7'-0"	F	WOOD	SMOKE	HM	F1	H1	J1	B1	08	
4532 A	4'-0" x 7'-0"	F	WOOD	SMOKE	HM	F1	H1	J1	B1	06	REMARK 6
4532T A	3'-0" x 7'-0"	F	WOOD	SMOKE	HM	F1	H1	J1	B1	08	
4533 A	4'-0" x 7'-0"	F	WOOD	SMOKE	HM	F1	H1	J1	B1	06	REMARK 6
4533T A	3'-0" x 7'-0"	F	WOOD	SMOKE	HM	F1	H1	J1	B1	08	
4534 A	4'-0" x 7'-0"	F	WOOD	SMOKE	HM	F1	H1	J1	B1	06	REMARK 6
4534T A	3'-0" x 7'-0"	F	WOOD	SMOKE	HM	F1	H1	J1	B1	08	
4535 A	4'-0" x 7'-0"	F	WOOD	SMOKE	HM	F1	H1	J1	B1	06	REMARK 6
4535T A	3'-0" x 7'-0"	F	WOOD	SMOKE	HM	F1	H1	J1	B1	08	
4536 A	4'-0" x 7'-0"	F	WOOD	SMOKE	HM	F1	H1	J1	B1	06	REMARK 6
4536T A	3'-0" x 7'-0"	F	WOOD	SMOKE	HM	F1	H1	J1	B1	08	
4537 A	4'-0" x 7'-0"	F	WOOD	SMOKE	HM	F1	H1	J1	B1	06	REMARK 6
4537T A	3'-0" x 7'-0"	F	WOOD	SMOKE	HM	F1	H1	J1	B1	08	
4538 A	4'-0" x 7'-0"	F	WOOD	SMOKE	HM	F1	H1	J1	B1	06	REMARK 6
4538T A	3'-0" x 7'-0"	F	WOOD	SMOKE	HM	F1	H1	J1	B1	08	
4539 A	4'-0" x 7'-0"	F	WOOD	SMOKE	HM	F1	H1	J1	B1	06	REMARK 6
4539T A	3'-0" x 7'-0"	F	WOOD	SMOKE	HM	F1	H1	J1	B1	08	
4540 A	4'-0" x 7'-0"	F	WOOD	SMOKE	HM	F1	H1	J1	B1	06	REMARK 6
4540T A	3'-0" x 7'-0"	F	WOOD	SMOKE	HM	F1	H1	J1	B1	08	
4541 A	(2) 3'-0" x 7'-0"	G	GLASS	—	GWB	—	—	—	—	GL-02	REMARK 1
4542 A	4'-0" x 7'-0"	F	WOOD	SMOKE	HM	F1	H1	J1	B1	06	REMARK 6
4542T A	3'-0" x 7'-0"	F	WOOD	SMOKE	HM	F1	H1	J1	B1	08	
4543 A	4'-0" x 7'-0"	F	WOOD	SMOKE	HM	F1	H1	J1	B1	06	REMARK 6
4543T A	3'-0" x 7'-0"	F	WOOD	SMOKE	HM	F1	H1	J1	B1	08	
4544 A	4'-0" x 7'-0"	F	WOOD	SMOKE	HM	F1	H1	J1	B1	06	REMARK 6
4544T A	3'-0" x 7'-0"	F	WOOD	SMOKE	HM	F1	H1	J1	B1	08	
4545 A	4'-0" x 7'-0"	F	WOOD	SMOKE	HM	F1	H1	J1	B1	06	REMARK 6
4545T A	3'-0" x 7'-0"	F	WOOD	SMOKE	HM	F1	H1	J1	B1	08	
4546 A	4'-0" x 7'-0"	F	WOOD	SMOKE	HM	F1	H1	J1	B1	06	REMARK 6
4546T A	3'-0" x 7'-0"	F	WOOD	SMOKE	HM	F1	H1	J1	B1	08	
4547 A	4'-0" x 7'-0"	F	WOOD	SMOKE	HM	F1	H1	J1	B1	06	REMARK 6
4547T A	3'-0" x 7'-0"	F	WOOD	SMOKE	HM	F1	H1	J1	B1	08	
4548 A	4'-0" x 7'-0"	F	WOOD	SMOKE	HM	F1	H1	J1	B1	06	REMARK 6
4548T A	3'-0" x 7'-0"	F	WOOD	SMOKE	HM	F1	H1	J1	B1	08	
4549 A	4'-0" x 7'-0"	F	WOOD	SMOKE	HM	F1	H1	J1	B1	06	REMARK 6
4549T A	3'-0" x 7'-0"	F	WOOD	SMOKE	HM	F1	H1	J1	B1	08	
4550 A	4'-0" x 7'-0"	F	WOOD	SMOKE	HM	F1	H1	J1	B1	06	REMARK 6
4550T A	3'-0" x 7'-0"	F	WOOD	SMOKE	HM	F1	H1	J1	B1	08	
4551 A	4'-0" x 7'-0"	F	WOOD	SMOKE	HM	F1	H1	J1	B1	06	REMARK 6
4551T A	3'-0" x 7'-0"	F	WOOD	SMOKE	HM	F1	H1	J1	B1	08	
4560 A	3'-0" x 7'-0"	F	WOOD	SMOKE	HM	F1	H2	J2	B1	09	
4561 A	3'-0" x 7'-0"	F	WOOD	SMOKE	HM	F1	H2	J2	B1	16	
4562 A	3'-0" x 7'-0"	F	WOOD	45 MIN	HM	F1	H2	J2	B1	14	REMARK 7
4562 B	3'-0" x 7'-0"	F	WOOD	45 MIN	HM	F1	H2	J2	B1	14	REMARK 7
4563 A	3'-0" x 7'-0"	F	WOOD	SMOKE	HM	F1	H2	J2	B1	27	
4564 A	3'-0" x 7'-0"	F	WOOD	SMOKE	HM	F1	H2	J2	B1	02	
4564 B	3'-0" x 7'-0"	F	WOOD	SMOKE	HM	F1	H2	J2	B1	02	
4565 A	3'-0" x 7'-0"	—	—	—	HM	F1	SIM H2	SIM J2	B4		REMARK 8
4565 B	3'-0" x 7'-0"	—	—	—	HM	F1	SIM H2	SIM J2	B4		REMARK 8
4566 A	3'-0" x 7'-0"	N	WOOD	SMOKE	HM	F1	H2	J2	B1	17	REMARK 7, 2
4566 B	3'-0" x 7'-0"	N	WOOD	SMOKE	HM	F1	H2	J2	B1	17	REMARK 7, 2
4567 A	3'-6" x 7'-0"	F	WOOD	45 MIN	HM	F1	H2	J2	B1	17	REMARK 7, 2
4567 B	3'-6" x 7'-0"	F	WOOD	45 MIN	HM	F1	H2	J2	B1	17	REMARK 7, 2
4568 A	4'-0" x 7'-0"	N	WOOD	SMOKE	HM	F1	H2	J2	B1		
4568 B	4'-0" x 7'-0"	N	WOOD	SMOKE	HM	F1	H2	J2	B1		
4569 A	3'-0" x 7'-0"	F	WOOD	SMOKE	HM	F1	H2	J2	B1	10	
4570 A	3'-0" x 7'-0"	N	WOOD	SMOKE	HM	F1	H2	J2	B1		
4571 A	3'-0" x 7'-0"	F	WOOD	SMOKE	HM	F1	H2	J2	B1	23	
4572 A	3'-0" x 7'-0"	F	WOOD	45 MIN	HM	F1	H2	J2	B1	11	
4573 A	3'-0" x 7'-0"	F	WOOD	45 MIN	HM	F1	H2	J2	B1	11	
4574 A	3'-0" x 7'-0"	N	WOOD	SMOKE	HM	F1	H2	J2	B1	23	
4575 A	3'-0" x 7'-0"	F	WOOD	SMOKE	HM	F1	H2	J2	B1	10	
4576 A	3'-0" x 7'-0"	F	WOOD	SMOKE	HM	F1	H2	J2	B1	27	
4577 A	3'-6" x 7'-0"	F	WOOD	45 MIN	HM	F1	H2	J2	B1	12	REMARK 7
4577 B	3'-6" x 7'-0"	F	WOOD	45 MIN	HM	F1	H2	J2	B1	12	REMARK 7
4578 A	3'-6" x 7'-0"	F	WOOD	45 MIN	HM	F1	H2	J2	B1	17	REMARK 7, 2
4578 B	3'-6" x 7'-0"	F	WOOD	45 MIN	HM	F1	H2	J2	B1	17	REMARK 7, 2
4579 A	3'-0" x 7'-0"	N	WOOD	SMOKE	HM	F1	H2	J2	B1	17	REMARK 7, 2
4579 B	3'-0" x 7'-0"	N	WOOD	SMOKE	HM	F1	H2	J2	B1	17	REMARK 7, 2
4580 A	3'-0" x 7'-0"	—	—	—	HM	F1	SIM H2	SIM J2	B4		REMARK 8
4580 B	3'-0" x 7'-0"	—	—	—	HM	F1	SIM H2	SIM J2	B4		REMARK 8
4581 A	3'-0" x 7'-0"	F	WOOD	SMOKE	HM	F1	H2	J2	B1	02	
4581 B	3'-0" x 7'-0"	F	WOOD	SMOKE	HM	F1	H2	J2	B1	02	
4582 A	3'-0" x 7'-0"	F	WOOD	SMOKE	HM	F1	H2	J2	B1	27	
4583 A	3'-0" x 7'-0"	F	WOOD	45 MIN	HM	F1	H2	J2	B1	14	
4583 B	3'-0" x 7'-0"	F	WOOD	45 MIN	HM	F1	H2	J2	B1	14	
4584 A	3'-0" x 7'-0"	F	WOOD	SMOKE	HM	F1	H2	J2	B1	16	
4585 A	3'-0" x 7'-0"	F	WOOD	SMOKE	HM	F1	H2	J2	B1	09	
4586 A	3'-0" x 7'-0"	F	WOOD	SMOKE	HM	F1	H2	J2	B1		

DesignStrategies
Planning
Architecture
Interior Architecture
Landscape Architecture
Engineering

130 South Main Street
Greenville, SC 29601
T (864) 527-6500
F (864) 233-8385

STATE OF SOUTH CAROLINA
DESIGN STRATEGIES, LLC
GREENVILLE, SC
02019
REGISTERED ARCHITECT

REVISIONS

NO	DATE	DESCRIPTION
0	12.24.2020	ISSUED FOR BID

McLeod Health
The Choice for Medical Excellence.

SEACOAST HOSPITAL 50-BED ADDITION

LITTLE RIVER, SC

KEYPLAN

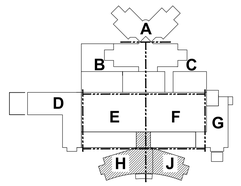

TRUE NORTH

PROJECT NO: **0370.45**
DATE: **12.24.2020**
COPYRIGHT © 2020 **DesignStrategies, LLC**

DOOR & FRAME SCHEDULE AND HARDWARE NOTES

AE601

DesignStrategies

Planning
Architecture
Interior Architecture
Landscape Architecture
Engineering

130 South Main Street
Greenville, SC 29601
T (864) 527-6500
F (864) 233-8385

STATE OF SOUTH CAROLINA
DESIGN STRATEGIES, LLC
GREENVILLE, SC
02019
REGISTERED ARCHITECT

REVISIONS

NO	DATE	DESCRIPTION
0	12.24.2020	ISSUED FOR BID

D1 DOOR ELEVATIONS

1/4" = 1'-0"

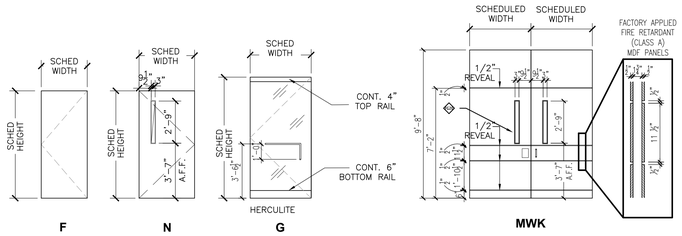

NOTE: REFERENCE SPECIFICATIONS FOR GLAZING TYPE

D4 THRESHOLDS

6" = 1'-0"

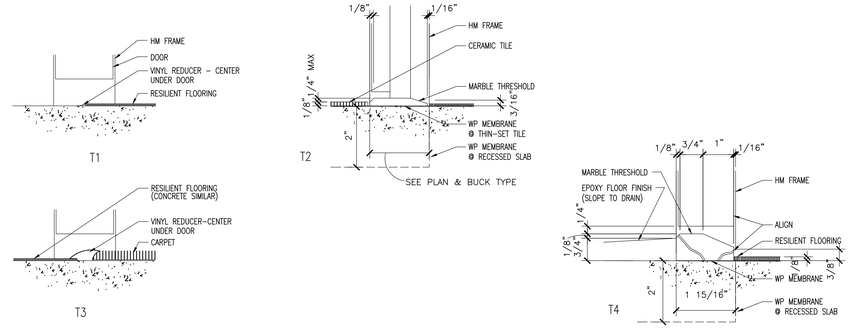

C1 FRAME ELEVATIONS

1/4" = 1'-0"

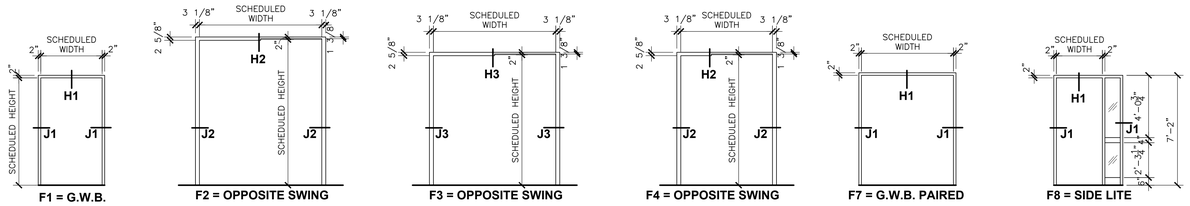

C4 BUCK DETAILS

3" = 1'-0"

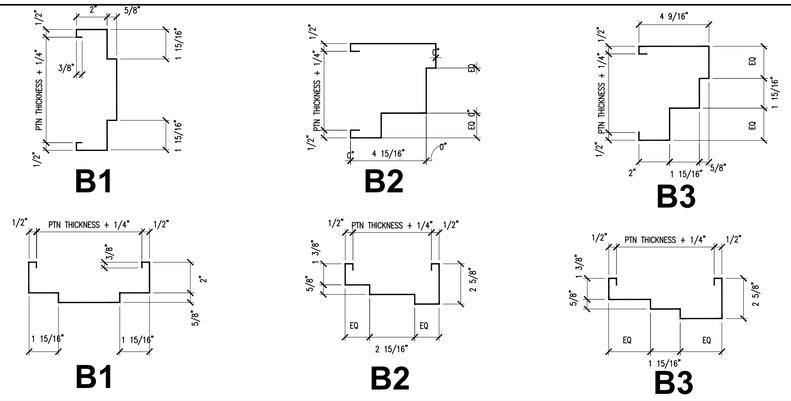

B1 HEAD DETAIL H1

3" = 1'-0"

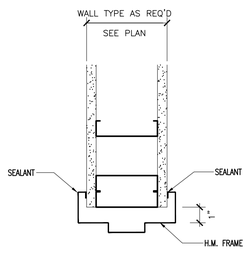

B2 HEAD DETAIL H2 - NON-RATED

3" = 1'-0"

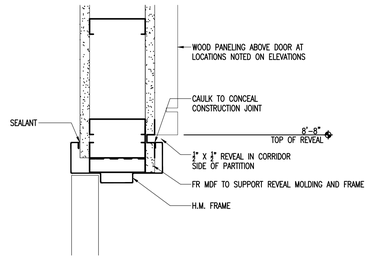

B3 HEAD DETAIL H2 - FIRE RATED

3" = 1'-0"

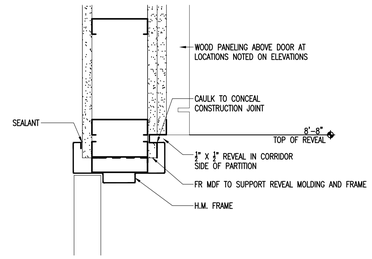

B4 HEAD DETAIL H4

3" = 1'-0"

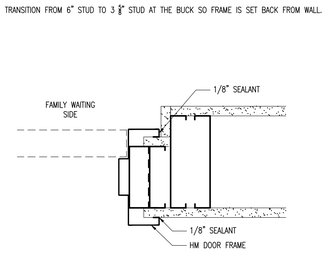

B5 THRESHOLD DETAIL

6" = 1'-0"

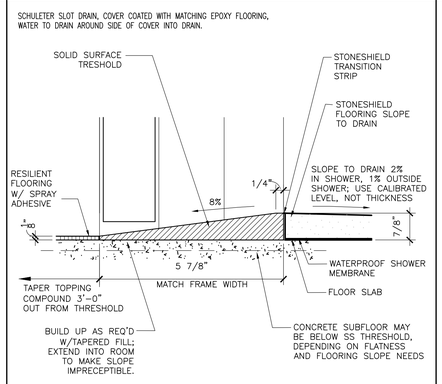

A1 JAMB DETAIL J1

3" = 1'-0"

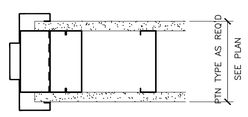

A2 JAMB DETAIL J2 - NON-RATED

3" = 1'-0"

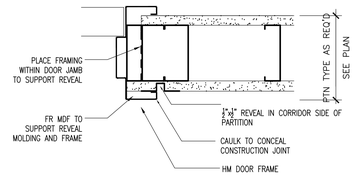

A3 JAMB DETAIL J2 - FIRE RATED

3" = 1'-0"

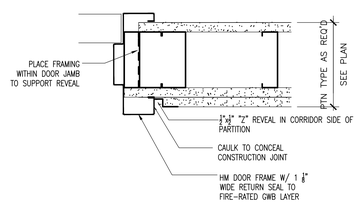

A4 NURSE STATION JAMB DETAIL

3" = 1'-0"

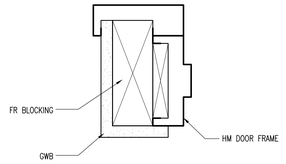

A5 TYPICAL DRAIN DETAIL

6" = 1'-0"

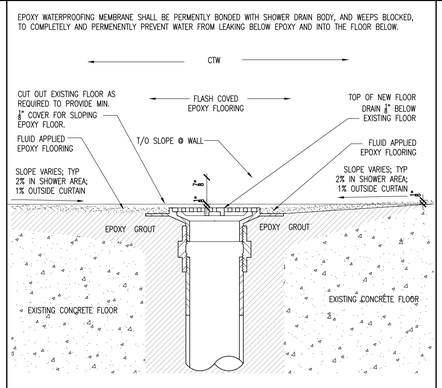

McLeod Health
The Choice for Medical Excellence.

SEACOAST HOSPITAL
50-BED ADDITION

LITTLE RIVER, SC

KEYPLAN

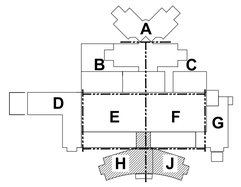

TRUE NORTH

PROJECT NO: **0370.45**
DATE: **12.24.2020**
COPYRIGHT © 2020 **DesignStrategies, LLC**

DOOR & FRAME SCHEDULE AND HARDWARE NOTES

AE602

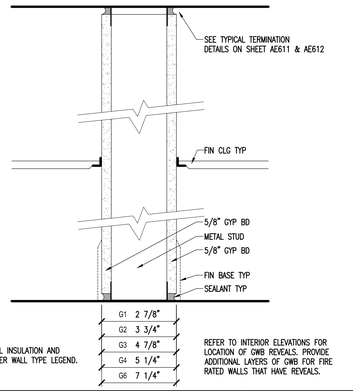

PROVIDE ACOUSTICAL INSULATION AND OTHER FEATURES PER WALL TYPE LEGEND.

REFER TO INTERIOR ELEVATIONS FOR LOCATION OF GWB REVEALS. PROVIDE ADDITIONAL LAYERS OF GWB FOR FIRE RATED WALLS THAT HAVE REVEALS.

G1, G2, G3, G4, G6 | UL# U419

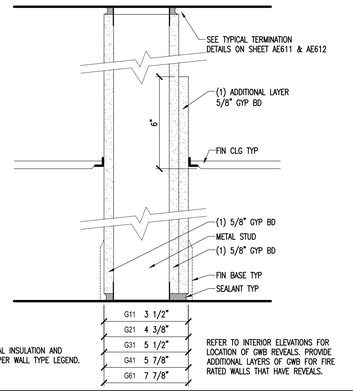

PROVIDE ACOUSTICAL INSULATION AND OTHER FEATURES PER WALL TYPE LEGEND.

REFER TO INTERIOR ELEVATIONS FOR LOCATION OF GWB REVEALS. PROVIDE ADDITIONAL LAYERS OF GWB FOR FIRE RATED WALLS THAT HAVE REVEALS.

G11, G21 G31, G41, G61 | UL# U419

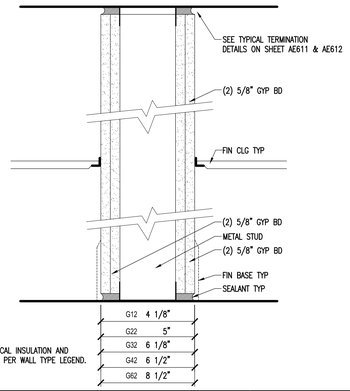

PROVIDE ACOUSTICAL INSULATION AND OTHER FEATURES PER WALL TYPE LEGEND.

G12, G22, G32, G42, G62 | UL# U419

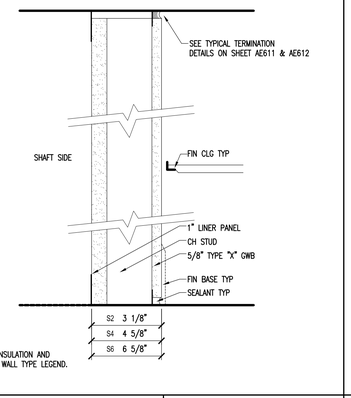

PROVIDE ACOUSTICAL INSULATION AND OTHER FEATURES PER WALL TYPE LEGEND.

S2, S4, S6 | UL# U415 SYS A

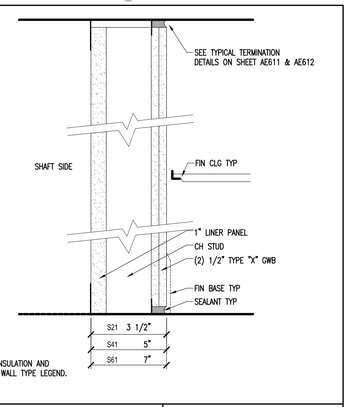

PROVIDE ACOUSTICAL INSULATION AND OTHER FEATURES PER WALL TYPE LEGEND.

S21, S41, S61 | UL# U415 SYS B

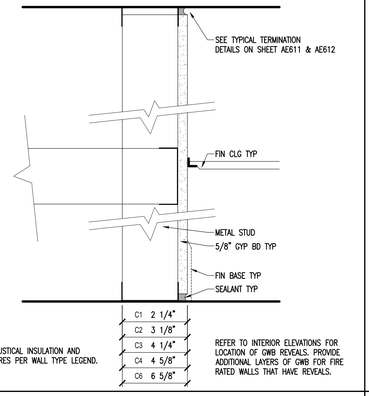

PROVIDE ACOUSTICAL INSULATION AND OTHER FEATURES PER WALL TYPE LEGEND.

REFER TO INTERIOR ELEVATIONS FOR LOCATION OF GWB REVEALS. PROVIDE ADDITIONAL LAYERS OF GWB FOR FIRE RATED WALLS THAT HAVE REVEALS.

C1, C2, C3, C4, C6

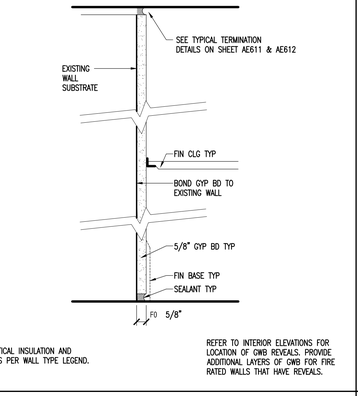

PROVIDE ACOUSTICAL INSULATION AND OTHER FEATURES PER WALL TYPE LEGEND.

REFER TO INTERIOR ELEVATIONS FOR LOCATION OF GWB REVEALS. PROVIDE ADDITIONAL LAYERS OF GWB FOR FIRE RATED WALLS THAT HAVE REVEALS.

F0

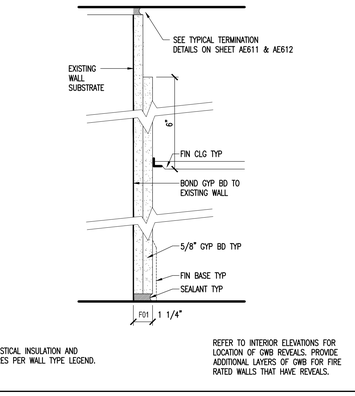

PROVIDE ACOUSTICAL INSULATION AND OTHER FEATURES PER WALL TYPE LEGEND.

REFER TO INTERIOR ELEVATIONS FOR LOCATION OF GWB REVEALS. PROVIDE ADDITIONAL LAYERS OF GWB FOR FIRE RATED WALLS THAT HAVE REVEALS.

F01

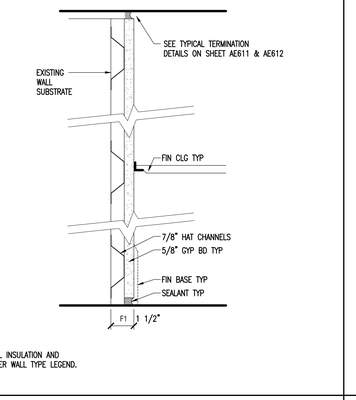

PROVIDE ACOUSTICAL INSULATION AND OTHER FEATURES PER WALL TYPE LEGEND.

F1

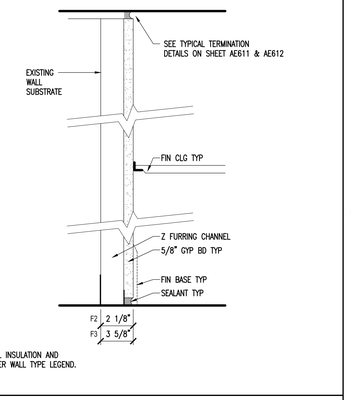

PROVIDE ACOUSTICAL INSULATION AND OTHER FEATURES PER WALL TYPE LEGEND.

F2, F3

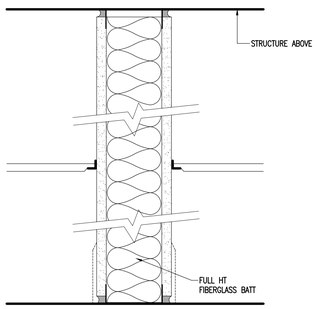

VARIANT "A"

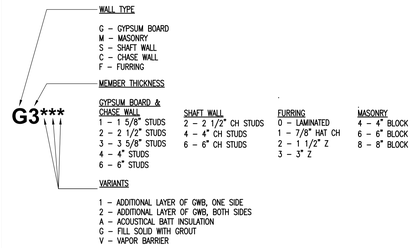

A5 WALL TYPE LEGEND

SCALE: NTS

1 2 3 4 5

DesignStrategies

Planning
Architecture
Interior Architecture
Landscape Architecture
Engineering

130 South Main Street
Greenville, SC 29601
T (864) 527-6500
F (864) 233-8385

STATE OF SOUTH CAROLINA
DESIGN STRATEGIES, LLC
GREENVILLE, SC
02019
REGISTERED ARCHITECT

REVISIONS

NO	DATE	DESCRIPTION
0	12.24.2020	ISSUED FOR BID

McLeod Health
The Choice for Medical Excellence.

SEACOAST HOSPITAL
50-BED ADDITION

LITTLE RIVER, SC

KEYPLAN

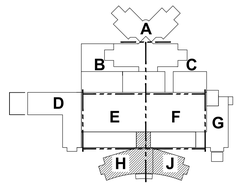

TRUE NORTH TRUE NORTH

0 2" 4" 8"
SCALE: 3" = 1'–0"

PROJECT NO: **0370.45**
DATE: **12.24.2020**
COPYRIGHT © 2020 **DesignStrategies, LLC**

PARTITION TYPES

AE610

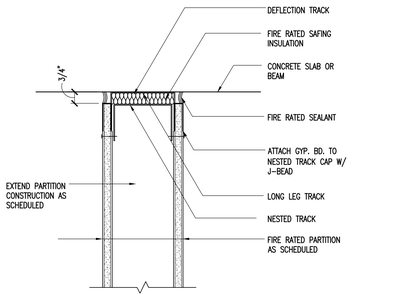

3" = 1'-0"

D1 RATED PARTITION @ STRUCTURE

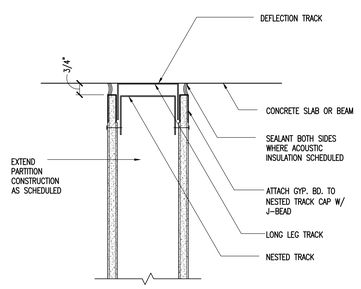

3" = 1'-0"

D2 NON-RATED PART. @ STRUCTURE

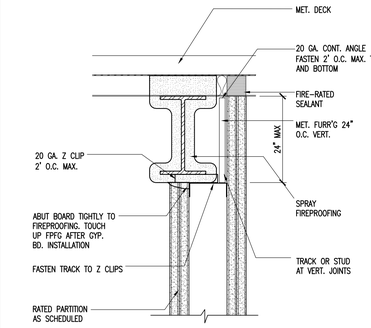

3" = 1'-0"

D3 PARTITION UNDER BEAM

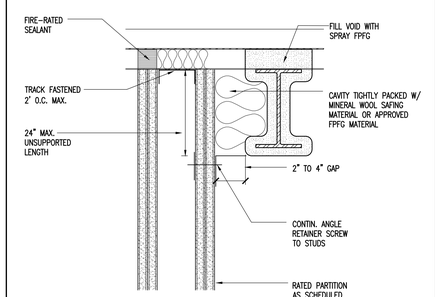

3" = 1'-0"

D4 RATED PART. ADJACENT TO BEAM

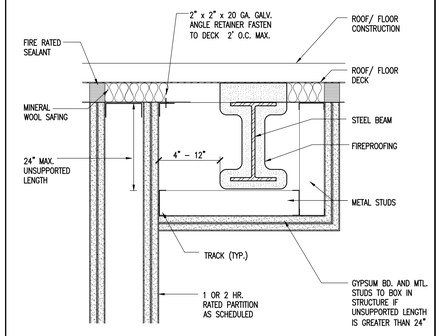

3" = 1'-0"

D5 2HR FIRE WALL W/IN 12" OF BEAM

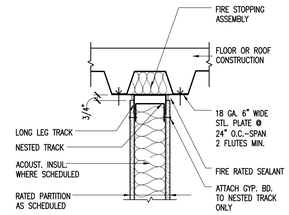

1 1/2" = 1'-0"

C1 TYP HEAD DTL OF RATED PART.

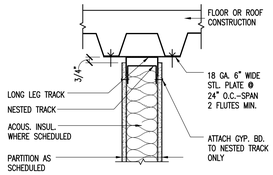

1 1/2" = 1'-0"

C2 TYP HEAD DTL OF UNRATED PART.

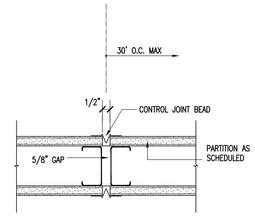

UNRATED

3" = 1'-0"

C3 CONTROL JT @ UNRATED WALLS

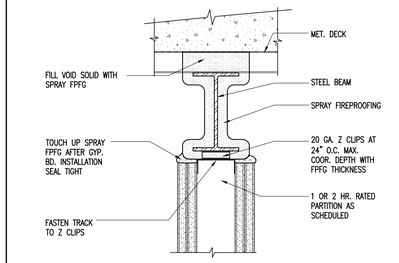

3" = 1'-0"

C4 RATED WALL UNDER BEAM

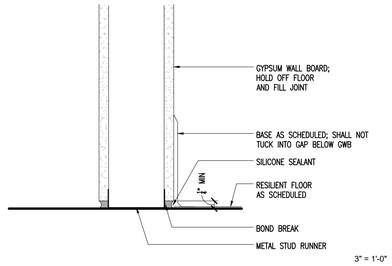

3" = 1'-0"

C5 TYPICAL BASE DETAIL

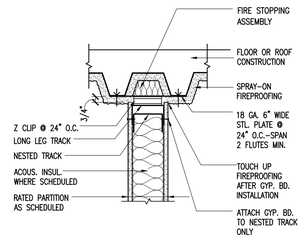

1 1/2" = 1'-0"

B1 TYP. HEAD DTL OF RATED PART.

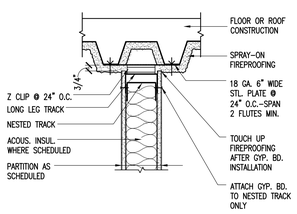

1 1/2" = 1'-0"

B2 TYP. HEAD DTL OF UNRATED PART.

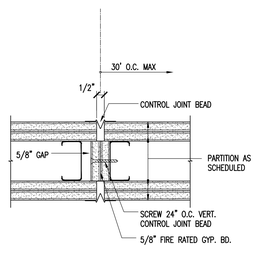

FIRE-RATED

3" = 1'-0"

B3 CONTROL JT. @ RATED WALLS

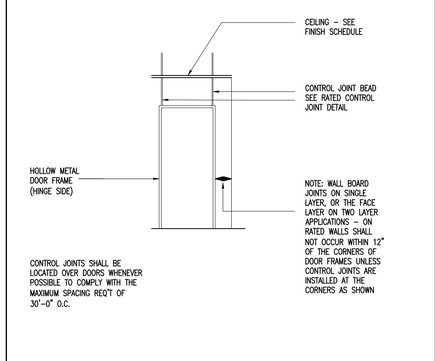

B4 CJ @ FIRE AND/OR SMOKE WALL

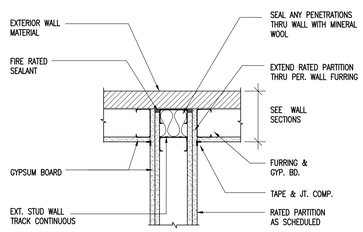

1 1/2" = 1'-0"

B5 PLAN DTL. OF FIRE AND/OR SMOKE WALL @ EXTERIOR WALL

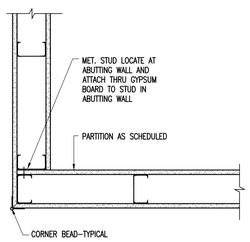

1 1/2" = 1'-0"

A1 PARTITION @ CORNER

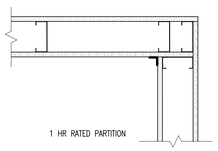

A2 CORNER - 1 HR PARTITION

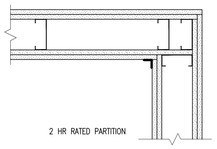

A3 CORNER - 2 HR PARTITION

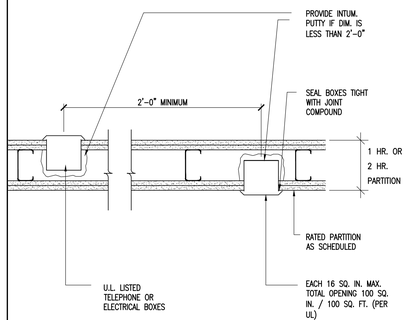

1 1/2" = 1'-0"

A4 ADJACENT ELECTRICAL BOXES

1 2 3 4 5

DesignStrategies

Planning
Architecture
Interior Architecture
Landscape Architecture
Engineering

130 South Main Street
Greenville, SC 29601
T (864) 527-6500
F (864) 233-8385

STATE OF SOUTH CAROLINA
DESIGN STRATEGIES, LLC
GREENVILLE, SC
02019
REGISTERED ARCHITECT

REVISIONS

NO	DATE	DESCRIPTION
0	12.24.2020	ISSUED FOR BID

McLeod Health
The Choice for Medical Excellence.

SEACOAST HOSPITAL
50-BED ADDITION

LITTLE RIVER, SC

KEYPLAN

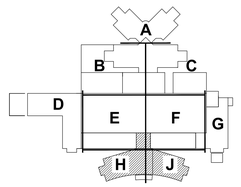

TRUE NORTH TRUE NORTH

0 4" 8" 1'-4"
SCALE: 1 1/2" = 1'-0"

PROJECT NO: **0370.45**
DATE: **12.24.2020**
COPYRIGHT © 2020 **DesignStrategies, LLC**

GYPSUM BOARD DETAILS

AE611

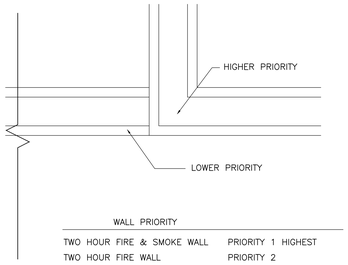

WALL PRIORITY

TWO HOUR FIRE & SMOKE WALL	PRIORITY 1 HIGHEST
TWO HOUR FIRE WALL	PRIORITY 2
TWO HOUR SHAFTWALL	PRIORITY 2
ONE HOUR FIRE & SMOKE WALL	PRIORITY 3
ONE HOUR FIRE WALL	PRIORITY 4
NON-RATED WALL	PRIORITY 5 LOWEST

NOTE: PARTITIONS SHALL BE CONSTRUCTED SUCH THAT HIGHER PRIORITY IS FRAMED BEFORE LOWER PRIORITY. LOWER PRIORITY PARTITIONS SHALL BE FRAMED TIGHT TO, BUT NOT INTERRUPT, HIGHER PRIORITY PARTITION CONSTRUCTION.

D1 PARTITION PRIORITY

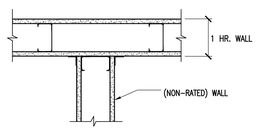

INTERSECTION OF

1 1/2" = 1'-0"

D2 RATED AND NON-RATED WALLS

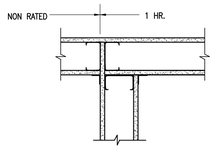

1 1/2" = 1'-0"

D3 RATED & NON RATED PARTITIONS

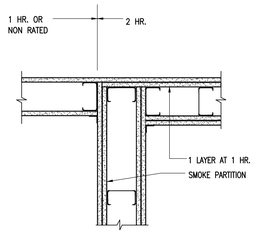

1 1/2" = 1'-0"

D4 INTERSECTION OF RATED WALLS

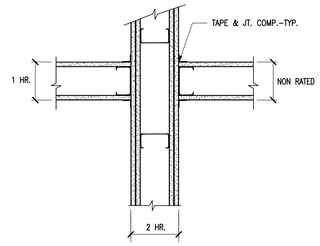

1 1/2" = 1'-0"

D5 INTERSECTION OF RATED WALLS

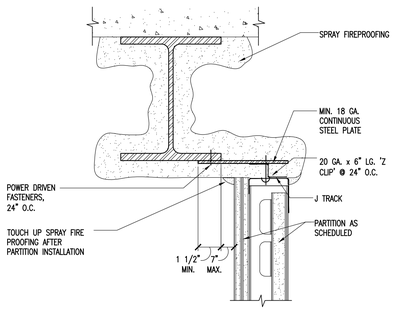

3" = 1'-0"

B1 SHAFTWALL CHASE PLAN DETAIL

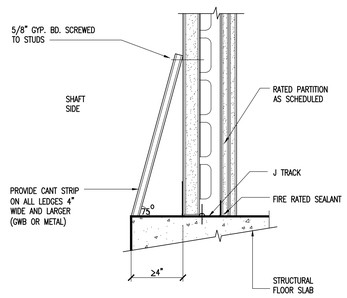

3" = 1'-0"

B2 SHAFT CANTS

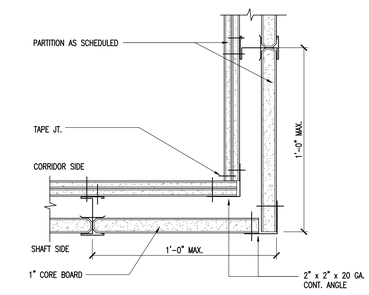

3" = 1'-0"

A1 SHAFTWALL INSIDE CORNER

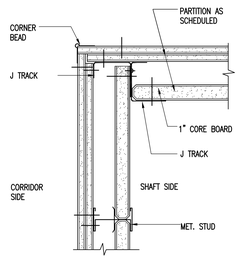

3" = 1'-0"

A2 SHAFTWALL OUTSIDE CORNER

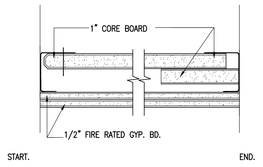

3" = 1'-0"

A3 PLAN DETAILS

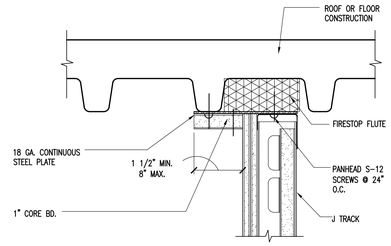

3" = 1'-0"

A3 HEAD @ SHAFTWALL PARTITION

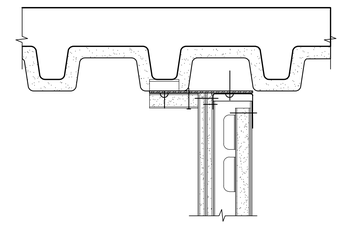

3" = 1'-0"

A3 HEAD @ SW W SPRAY F-PROOF'G

1 2 3 4 5

DesignStrategies

Planning
Architecture
Interior Architecture
Landscape Architecture
Engineering

130 South Main Street
Greenville, SC 29601
T (864) 527-6500
F (864) 233-8385

STATE OF SOUTH CAROLINA
DESIGN STRATEGIES, LLC
GREENVILLE, SC
02019
REGISTERED ARCHITECT

REVISIONS

NO	DATE	DESCRIPTION
0	12.24.2020	ISSUED FOR BID

McLeod Health
The Choice for Medical Excellence.

SEACOAST HOSPITAL
50-BED ADDITION

LITTLE RIVER, SC

KEYPLAN

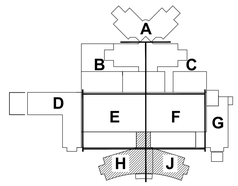

TRUE NORTH TRUE NORTH

0 4" 8" 1'-4"
SCALE: 1 1/2" = 1'-0"

PROJECT NO: **0370.45**
DATE: **12.24.2020**
COPYRIGHT © 2020 **DesignStrategies, LLC**

GYPSUM BOARD DETAILS

AE612

ONLINE CERTIFICATIONS DIRECTORY

BXUV.U419
Fire Resistance Ratings - ANSI/UL 263

Page Bottom

See General Information for Fire Resistance Ratings - ANSI/UL 263

Design No. U419

August 03, 2011

Nonbearing Wall Ratings — 1, 2, 3 or 4 Hr (See Items 4 & 5)

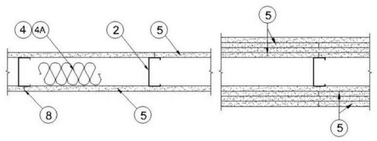

1. **Floor and Ceiling Runners —** (Not shown) — For use with Item 2 - Channel shaped, fabricated from min 25 MSG corrosion-protected steel, min depth to accommodate stud size, with min 1-1/4 in. long legs, attached to floor and ceiling with fasteners 24 in. OC max.

1A. **Framing Members* - Floor and Ceiling Runners —** Not shown - In lieu of Item 1 — For use with Item 2A, proprietary channel shaped, min. 3-5/8 in. deep, fabricated from min. 0.015 in. (min bare metal thickness) galvanized steel, attached to floor and ceiling with fasteners 24 in. OC max. Effective thickness is 0.034 in.

CLARKWESTERN BUILDING SYSTEMS INC — UltraSTEEL®

DIETRICH INDUSTRIES INC — UltraSTEEL®.

1B. **Framing Members* - Floor and Ceiling Runners —** (Not shown - In lieu of Item 1) — For use with Item 2A, proprietary channel shaped, min. 2-1/2 in. deep, fabricated from min. 0.015 in. (min bare metal thickness) galvanized steel, attached to floor and ceiling fasteners 24 in. OC. max. Effective thickness is 0.034 in.

CLARKWESTERN BUILDING SYSTEMS INC — UltraSTEEL®

DIETRICH INDUSTRIES INC — UltraSTEEL®.

1C. **Framing Members* - Floor and Ceiling Runner —** Not shown - In lieu of Item 1 — For use with Item 2C, proprietary channel shaped runners, 3-5/8 in. deep attached to floor and ceiling with fasteners 24 in. OC max.

CALIFORNIA EXPANDED METAL PRODUCTS CO — ViperTrack™

CRACO MFG INC — SmartTrack™

MARINO/WARE, DIV OF WARE INDUSTRIES

INC — Viper25™ Track

TELLING INDUSTRIES L L C — Viper25™ Track

5A. **Gypsum Board* —** (As an alternate to Item 5) — 5/8 in. thick, 24 to 54 in. wide, applied horizontally as the outer layer to one side of the assembly. Secured as described in Item 6.

CGC INC — Type SHX.

UNITED STATES GYPSUM CO — Type FRX-G, SHX.

USG MEXICO S A DE C V — Type SHX.

5B. **Gypsum Board* —** (Not Shown) - As an alternate to Item 5 when used as the base layer on one or both sides of wall when 5/8 in or ¾ in. thick products are specified. For direct attachment only to steel studs Item 2B, (not to be used with Item 3) - Nom 5/8 in. or ¾ in. may be used as alternate to all 5/8 in. or ¾ in. shown in Item 5, Wallboard Protection on Each Side of Wall table. Nom 5/8 in. or ¾ in. thick lead backed gypsum panels with beveled, square or tapered edges, applied vertically. Vertical joints centered over studs and staggered min 1 stud cavity on opposite sides of studs. Gypsum board secured to 20 MSG steel studs Item 2B with 1-1/4 in. long Type S-12 steel screws spaced 8 in. OC at perimeter and 12 in. OC in the field. To be used with Lead Batten Strips (see Item 11) or Lead Discs or Tabs (see Item 12).

RAY-BAR ENGINEERING CORP — Type RB-LBG

5C. **Gypsum Board* —** (For Use With Item 2C) Rating Limited to 1 Hour. 5/8 in. thick, 48 in. wide, Gypsum panels with beveled, square or tapered edges, applied vertically or horizontally. (Vertical Application) - The gypsum board is to be installed on each side of the studs with 1 in. long Type S coated steel screws spaced 8 in. OC starting 4 in. from the edge of the board at the vertical edges and 12 in. OC starting 6 in. from the edge of the board at the center of each board. Gypsum boards are to be secured to the top and bottom track with screws spaced 8 in. OC starting 4 in. from the board edge. Fasteners shall not penetrate through both the stud and the track at the same time. Vertical joints are to be centered over studs and staggered one stud cavity on opposite sides of studs. (Horizontal Application) - The gypsum board is to be installed on each side of the studs with 1 in. long Type S coated steel screws spaced 8 in. OC starting 4 in. from the edge of the board at the vertical edges and 12 in. OC starting 6 in. from the edge of the board at the center of each board. Gypsum boards are to be secured to the top and bottom track with screws spaced 8 in. OC starting 4 in. from the board edge. Fasteners shall not penetrate through both the stud and the track at the same time. All horizontal joints are to be backed as outlined under section VI of Volume 1 in the Fire Resistive Directory.

CGC INC — Type SCX.

UNITED STATES GYPSUM CO — Type SCX.

USG MEXICO S A DE C V — Type SCX.

5D. **Gypsum Board* —** (As an alternate to Item 5) — 5/8 in. thick, 48 in. wide, applied vertically or horizontally. Secured as described in Item 6. For use with Items 1 and 2 only.

UNITED STATES GYPSUM CO — Type USGX.

5E. **Gypsum Board* —** (Not Shown) - (As an alternate to Item 5 when used as the base layer on one or both sides of wall when 1/2 in. or 5/8 in thick products are specified, For direct attachment only to steel studs Item 2B, not to be used with Item 3). Nominal 5/8 in. thick lead backed gypsum panels with beveled, square or tapered edges, applied vertically. Vertical joints centered over studs and staggered min 1 stud cavity on opposite sides of studs. Wallboard secured to studs with 1-1/4 in. long Type S-12 (or No. 6 by 1-1/4 in. long bugle head fine driller) steel screws spaced 8 in. OC at perimeter and 12 in. OC in the field.

NEW ENGLAND LEAD BURNING CO INC, DBA

NELCO — Nelco

5F. **Gypsum Board* —** (As an alternate to Item 5) — For use with Items 1G and 2F and limited to 1 Hour Rating only, Gypsum panels with beveled, square or tapered edges, applied vertically, and fastened to the steel studs with 1 in. long Type S screws spaced 8 in. OC along vertical and bottom edges and 12 in. OC in the field. Vertical joints centered over studs and staggered one stud cavity on opposite sides of studs. Steel stud depth shall be a minimum 3-5/8 in.

UNITED STATES GYPSUM CO — 5/8 in. thick Type SCX.

5G. **Gypsum Board* —** (As an alternate to Item 5) — For use with Items 1G and 2F only, Gypsum panels with beveled, square or tapered edges, applied vertically or horizontally, as specified in the table below and fastened to the steel studs as described in Item 6. Vertical joints centered over studs and staggered one stud cavity on opposite sides of studs. Vertical joints in adjacent layers (multilayer systems) staggered one stud cavity. Horizontal joints need not be backed by steel framing. Horizontal edge joints and horizontal butt joints on opposite sides of studs need not be staggered. Horizontal edge joints and horizontal butt joints in adjacent layers (multilayer systems) staggered a min of 12 in. The thickness and number of layers for the 2 hr, 3 hr and 4 hr ratings are as follows:

1D. **Framing Members* - Floor and Ceiling Runner —** Not shown - In lieu of Item 1 — For use with Item 2D, proprietary channel shaped runners, 1-1/4 in. wide by 3-5/8 in. deep fabricated from min 0.020 in. thick galv steel, attached to floor and ceiling with fasteners spaced 24 in. OC max.

MARINO/WARE, DIV OF WARE INDUSTRIES

INC — Viper20S™ Track, Viper20D™ Track

TELLING INDUSTRIES L L C — Viper20S™ Track, Viper20D™ Track

1E. **Framing Members*— Floor and Ceiling Runners —** (Not shown) — In lieu of Item 1 - Channel shaped, attached to floor and ceiling with fasteners 24 in. OC. max.

ALLSTEEL & GYPSUM PRODUCTS INC — Type SUPREME Framing System

CONSOLIDATED FABRICATORS CORP,

BUILDING PRODUCTS DIV — Type SUPREME Framing System

QUAIL RUN BUILDING MATERIALS INC — Type SUPREME Framing System

SCAFCO STEEL STUD MANUFACTURING CO — Type SUPREME Framing System

STEEL CONSTRUCTION SYSTEMS INC — Type SUPREME Framing System

UNITED METAL PRODUCTS INC — Type SUPREME Framing System

1F. **Floor and Ceiling Runners —** (Not shown)—For use with Item 2B- Channel shaped, fabricated from min 20 MSG corrosion-protected or galv steel, min depth to accommodate stud size, with min 1 in. long legs, attached to floor and ceiling with fasteners spaced max 24 in. OC.

1G. **Framing Members*— Floor and Ceiling Runners —** (Not shown, As an alternate to Item 1) — For use with Item 2F and 5F or 5G only, channel shaped, fabricated from min. 0.015 in. (min bare metal thickness) galvanized steel, attached to floor and ceiling with fasteners 24 in. OC. max.

CLARKWESTERN BUILDING SYSTEMS INC — CW ProTRAK

DIETRICH INDUSTRIES INC — DIETRICH ProTRAK

DMFCWBS L L C — ProTRAK

MBA BUILDING SUPPLIES — ProTRAK

SOUTHEASTERN STUD & COMPONENTS INC — ProTRAK

TELLING INDUSTRIES L L C — TRUE-TRACK™

1H. **Framing Members* - Floor and Ceiling Runner —** Not shown - In lieu of Item 1 — For use with Item 2G, proprietary channel shaped runners, minimum width to accommodate size, with 1- 1/8 in. long legs fabricated from min 0.015 in. (min bare metal thickness) galv steel, attached to floor and ceiling with fasteners spaced 24 in. OC max.

SUPER STUD BUILDING PRODUCTS — The Edge

2. **Steel Studs —** Channel shaped, fabricated from min 25 MSG corrosion-protected steel, min depth as indicated under Item 5, spaced a max of 24 in. OC. Studs to be cut 3/8 to 3/4 in. less than assembly height.

2A. **Framing Members* - Steel Studs —** In lieu of Item 2 - Proprietary channel shaped studs, min. depth as indicated under Item 5, fabricated from min. 0.015 in. (min bare metal thickness) galvanized steel, spaced a max of 24 in. OC. Studs to be cut 3/4 in. less than assembly height. Allowable use of studs is shown in the table below. For direct attachment of gypsum board only. Effective thickness is 0.034 in.

CLARKWESTERN BUILDING SYSTEMS INC — UltraSTEEL®

Gypsum Board Protection on Each Side of Wall

Rating, Hr	Min Stud Depth, in. Item 2F	No. of Layers & Thickness of Panel	Min Thkns of Insulation (Item 4)
2	1-5/8	2 layers, 1/2 in. thick	Optional
2	1-5/8	2 layers, 5/8 in. thick	Optional
3	1-5/8	3 layers, 1/2 in. thick	Optional
3	1-5/8	3 layers, 5/8 in. thick	Optional
4	1-5/8	4 layers, 5/8 in. thick	Optional
4	1-5/8	4 layers, 1/2 in. thick	Optional

CGC INC — 1/2 in. thick Type C, IP-X2 or IPC-AR;, 5/8 in. thick Type AR, C, IP-AR, IP-X1, IP-X2, IPC-AR, SCX, SHX, or; 3/4 in. thick Types IP-X3 or ULTRACODE

UNITED STATES GYPSUM CO — 1/2 in. thick Type C, IP-X2, IPC-AR or; 5/8 in. thick Type SCX, SHX, IP-X1, AR, C, , FRX-G, IP-AR, IP-X2, IPC-AR , 3/4 in. thick Types IP-X3 or ULTRACODE

USG MEXICO S A DE C V — 1/2 in. thick Type C, IP-X2, IPC-AR or; 5/8 in. thick Type AR, C, IP-AR, IP-X1, IP-X2, IPC-AR, SCX, SHX, or; 3/4 in. thick Types IP-X3 or ULTRACODE

5H. **Gypsum Board* —** (Not Shown) - As an alternate to Item 5 when used as the base layer on one or both sides of wall when 5/8 or 3/4 in thick products are specified. For direct attachment only to steel studs Item 2B, (not to be used with Item 3) - Nom 5/8 or 3/4 in. may be used as alternate to all 5/8 or 3/4 in. shown in Item 5, Wallboard Protection on Each Side of Wall table. Nom 5/8 or 3/4 in. thick lead backed gypsum panels with beveled, square or tapered edges, applied vertically. Vertical joints centered over studs and staggered min 1 stud cavity on opposite sides of studs. Gypsum board secured to 20 MSG steel studs Item 2B with 1-1/4 in. long Type S-12 steel screws spaced 8 in. OC at perimeter and 12 in. OC in the field. To be used with Lead Batten Strips (see Item 11A) or Lead Discs (see Item 12A).

MAYCO INDUSTRIES INC — Type X-Ray Shielded Gypsum

5I. **Gypsum Board* —** (As an alternate to Item 5, not for use with Items 1G and 2F) - Nom. 5/8 in. thick gypsum panels with beveled, square or tapered edges installed as described in Item 5.

UNITED STATES GYPSUM CO — Type ULX.

6. **Fasteners —** (Not shown) — For use with Items 2 and 2F - Type S or S-12 steel screws used to attach panels to studs (Item 2) or furring channels (Item 7). **Single layer systems:** 1 in. long for 1/2 and 5/8 in. thick panels or 1-1/4 in. long for 3/4 in. thick panels, spaced 8 in. OC when panels are applied horizontally, or 8 in. OC along vertical and bottom edges and 12 in. OC in the field when panels are applied vertically. **Two layer systems:** First layer- 1 in. long for 1/2 and 5/8 in. thick panels or 1-1/4 in. long for 3/4 in. thick panels, spaced 16 in. OC. Second layer- 1-5/8 in. long for 1/2 in., 5/8 in. thick panels or 2-1/4 in. long for 3/4 in. thick panels, spaced 16 in. OC with screws offset 8 in. from first layer.**Three-layer systems:** First layer- 1 in. long for 1/2 in., 5/8 in. thick panels, spaced 24 in. OC. Second layer- 1-5/8 in. long for 1/2 in., 5/8 in. thick panels, spaced 24 in. OC. Third layer- 2-1/4 in. long for 1/2 in., 5/8 in. thick panels or 2-5/8 in. long for 5/8 in. thick panels, spaced 12 in. OC. Screws offset min 6 in. from layer below. **Four-layer systems:** First layer- 1 in. long for 1/2 in., 5/8 in. thick panels, spaced 24 in. OC. Second layer- 1-5/8 in. long for 1/2 in., 5/8 in. thick panels, spaced 24 in. OC. Third layer- 2-1/4 in. long for 1/2 in. thick panels or 2-5/8 in. long for 5/8 in. thick panels, spaced 24 in. OC. Fourth layer- 2-5/8 in. long for 1/2 in. thick panels or 3 in. long for 5/8 in. thick panels, spaced 12 in. OC. Screws offset min 6 in. from layer below.

6A. **Fasteners —** (Not shown) —For use with Item 2A - Type S or S-12 steel screws used to attach panels to studs (Item 2A). **Single layer systems:** 1 in. long for 1/2 and 5/8 in. thick panels or 1-1/4 in. long for 3/4 in. thick panels, spaced 8-1/2 in. OC with additional screws 1 in. and 2-1/2 in. from edges of the board when panels are horizontally. or 8 in. OC along vertical and bottom edges and 12 in. OC in the field when panels are applied vertically. **Two layer systems applied vertically:** First layer- 1 in. long for 1/2 and 5/8 in. thick panels or 1-1/4 in. long for 3/4 in. thick panels, spaced 16 in. OC. Second layer- 1-5/8 in. long for 1/2 in., 5/8 in. thick panels or 2-1/4 in. long for 3/4 in. thick panels, spaced 16 in. OC with screws offset 8 in. from first layer. **Two layer systems applied horizontally:** First layer- 1 in. long for 1/2 and 5/8 in. thick panels or 1-1/4 in. long for 3/4 in. thick panels, spaced 16 in. OC starting 8 in. from each edge of the board with an additional screw placed 1-1/4 in. from each edge of the board. Second layer- 1-5/8 in. long for 1/2 in., 5/8 in. thick panels or 2-1/4 in. long for 3/4 in. thick panels, spaced 16 in. OC starting 8 in. from each edge of the board with an additional screw placed 1-1/4 in. from each edge of the board with screws offset 8 in. from first layer. **Three-layer systems:** First layer- 1 in. long for 1/2 in., 5/8 in. thick panels, spaced 24 in. OC. Second layer- 1-5/8 in. long for 1/2 in., 5/8 in. thick panels, spaced 24 in. OC. Third layer- 2-1/4 in. long for 1/2 in., 5/8 in. thick panels or 2-5/8 in. long for 5/8 in. thick panels, spaced 12 in. OC. Screws offset min 6 in. from layer below. For all layers, an additional screw shall be placed 1-1/4 in. from each edge of the board. **Four-layer systems:** First layer- 1 in. long for 1/2 in., 5/8 in. thick panels, spaced 24 in. OC. Second layer- 1-5/8 in. long for 1/2 in., 5/8 in. thick panels, spaced 24 in. OC. Third layer- 2-1/4 in. long for 1/2 in. thick panels or 2-5/8 in. long for 5/8 in. thick panels, spaced 24 in. OC. Fourth layer- 2-5/8 in. long for 1/2 in. thick panels or 3 in. long for 5/8 in. thick panels, spaced 12 in. OC. Screws offset min 6 in. from layer below. For all layers, an additional screw shall be placed 1-1/4 in. from each edge of the board.

7. **Furring Channels —** (Optional, not shown, for single or double layer systems) — Resilient furring channels fabricated from min 25 MSG corrosion-protected steel, spaced vertically a max of 24 in. OC. Flange portion attached to each intersecting stud with 1/2 in. long Type S-12 steel screws. Not for use with Item 5A and 5E.

DIETRICH INDUSTRIES INC — UltraSTEEL®.

2B. **Steel Studs —** (As an alternate to Item 2, For use with Items 5B & 5E) Channel shaped, fabricated from min 20 MSG corrosion-protected or galv steel, 3-1/2 in. min depth, spaced a max of 16 in. OC. Studs friction-fit into floor and ceiling runners. Studs to be cut 5/8 to 3/4 in. less than assembly height.

2C. **Framing Members* - Steel Studs —** (As an alternate to Item 2, For use with Items 5C or 5J) - Proprietary channel shaped studs, 3-5/8 in. deep spaced a max of 24 in. OC. Studs to be cut 3/4 in less than the assembly height and installed with a ½ in. gap between the end of the stud and track at the bottom of the wall. For direct attachment of gypsum board only.

CALIFORNIA EXPANDED METAL PRODUCTS CO — ViperStud ™

CRACO MFG INC — SmartStud™

MARINO/WARE, DIV OF WARE INDUSTRIES

INC — Viper25™

TELLING INDUSTRIES L L C — Viper25™

2D. **Framing Members* - Metal Studs —** Not shown - In lieu of Item 2 — For use with Item 1D, proprietary channel shaped steel studs, min depth as indicated under Item 5, spaced a max if 24 in. OC, fabricated from min 0.020 in. thick galv steel. Studs cut 3/8 in. to 3/4 in. less in lengths than assembly heights.

MARINO/WARE, DIV OF WARE INDUSTRIES

INC — Viper20S™, Viper20D™

TELLING INDUSTRIES L L C — Viper20S™, Viper20D™

2E. **Framing Members*— Steel Studs —** In lieu of Item 2 - For Use with Item 1E- Channel shaped studs, min depth as indicated under Item 5, spaced a max of 24 in. OC. Studs to be cut 3/4 in. less than assembly height.

ALLSTEEL & GYPSUM PRODUCTS INC — Type SUPREME Framing System

CONSOLIDATED FABRICATORS CORP,

BUILDING PRODUCTS DIV — Type SUPREME Framing System

QUAIL RUN BUILDING MATERIALS INC — Type SUPREME Framing System

SCAFCO STEEL STUD MANUFACTURING CO — Type SUPREME Framing System

STEEL CONSTRUCTION SYSTEMS INC — Type SUPREME Framing System

UNITED METAL PRODUCTS INC — Type SUPREME Framing System

2F. **Framing Members*— Steel Studs —** (Not shown, As an alternate to Item 2) —For use with Item 1G and 5F or 5G only, channel shaped studs, min depth as indicated under Item 5F, fabricated from min. 0.015 in. (min bare metal thickness) galvanized steel, spaced a max of 24 in. OC. Studs to be cut 3/4 in. less than assembly height.

CLARKWESTERN BUILDING SYSTEMS INC — CW ProSTUD

DIETRICH INDUSTRIES INC — DIETRICH ProSTUD

DMFCWBS L L C — ProSTUD

MBA BUILDING SUPPLIES — ProSTUD

7A. **Framing Members*** — (Not Shown) — (Optional on one or both sides, not shown, for single or double layer systems) — As an alternate to Item 7, furring channels and Steel Framing Members as described below:

a. **Furring Channels —** Formed of No. 25 MSG galv steel. 2-3/8 in. wide by 7/8 in. deep, spaced max. 24 in. OC perpendicular to studs. Channels secured to studs as described in Item b. Gypsum board attached to furring channels as described in Item 6. Not for use with Item 5A and 5E.

b. **Steel Framing Members* —** Used to attach furring channels (Item 7Aa) to studs (Item 2). Clips spaced max. 48 in. OC. RSIC-1 clips secured to studs with No. 8 x 1-1/2 in. minimum self-drilling, S-12 steel screw through the center grommet. RSIC-V clips secured to studs with No. 8 x 9/16 in. minimum self-drilling, S-12 steel screw through the center hole. Furring channels are friction fitted into clips.

PAC INTERNATIONAL INC — Types RSIC-1, RSIC-V.

7B. **Framing Members* —** (Optional, Not Shown) — As an alternate to Item 7, for single or double layer systems, furring channels and Steel Framing Members on only one side of studs as described below:

a. **Furring Channels —** Formed of No. 25 MSG galv steel, spaced 24 in. OC perpendicular to studs. Channels secured to studs as described in Item b. Batts and Blankets placed in stud cavity as described in Item 5. Two layers of gypsum board attached to furring channels as described in Item 5. Not for use with Item 5A and 5E.

b. **Steel Framing Members* —** Used to attach furring channels (Item 7Ba) to one side of studs (Item 2) only. Clips spaced 48 in. OC., and secured to studs with two No. 8 x 2-1/2 in. coarse drywall screws, one through the hole at each end of the clip. Furring channels are friction fitted into clips.

KINETICS NOISE CONTROL INC — Type Isomax

7C. **Framing Members*** — Optional - Not Shown - Used as an alternate method to attach resilient channels (Item 7). Clips attached at each intersection of the resilient channel and the steel studs (Item 2). Resilient channels are friction fitted into clips, and then clips are secured to the steel stud with min. 1 in. long Type S-12 steel screws through the center hole of the clip and the resilient channel flange.

KEENE BUILDING PRODUCTS CO INC — Type RC Assurance.

7D. **Framing Members* —** (Not Shown) — (Optional on one or both sides, not shown, for single or double layer systems) — As an alternate to Item 7, furring channels and Steel Framing Members as described below:

a. **Furring Channels —** Formed of No. 25 MSG galv steel. 2-3/8 in. wide by 7/8 in. deep, spaced max. 24 in. OC perpendicular to studs. Channels secured to studs as described in Item b. Gypsum board attached to furring channels as described in Item 6. Not for use with Item 5A and 5E.

b. **Steel Framing Members* —** Used to attach furring channels (Item 7Aa) to studs (Item 2). Clips spaced max. 48 in. OC. GENIECLIPS secured to studs with No. 8 x 1-1/2 in. minimum self-drilling, S-12 steel screw through the center grommet. Furring channels are friction fitted into clips.

PLITEQ INC — Type GENIECLIP

8. **Joint Tape and Compound —** Vinyl or casein, dry or premixed joint compound applied in two coats to joints and screw heads of outer layers. Paper tape, nom 2 in. wide, embedded in first layer of compound over all joints of outer layer panels. Paper tape and joint compound may be omitted when gypsum panels are supplied with a square edge.

9. **Siding, Brick or Stucco —** (Optional, not shown) — Aluminum, vinyl or steel siding, brick veneer or stucco, meeting the requirements of local code agencies, installed over gypsum panels. Brick veneer attached to studs with corrugated metal wall ties attached to each stud with steel screws, not more than each sixth course of brick.

10. **Caulking and Sealants* —** (Optional, not shown) — A bead of acoustical sealant applied around the partition perimeter for sound control.

UNITED STATES GYPSUM CO — Type AS

11. **Lead Batten Strips —** (Not Shown, For Use With Item 5B) - Lead batten strips, min 1-1/2 in. wide, max 10 ft long with a max thickness of 0.125 in. Strips placed on the interior face of studs and attached from the exterior face of the stud with two 1 in. long Type S-12 pan head steel screws, one at the top of the strip and one at the bottom of the strip. Lead batten strips to have a purity of 99.9% meeting the Federal specification QQ-L-201f, Grade "C". Lead batten strips required behind vertical joints of lead backed gypsum wallboard (Item 5B) and optional at remaining stud locations. Required behind vertical joints.

SOUTHEASTERN STUD & COMPONENTS INC — ProSTUD

TELLING INDUSTRIES L L C — TRUE-STUD™

2G. **Framing Members* - Metal Studs —** Not shown - In lieu of Item 2 — For use with Item 1H, proprietary channel shaped steel studs, minimum width indicated under Item 5, 1-1/4 in. deep fabricated from min 0.015 in. (min bare metal thickness) galvanized steel. Studs 3/8 in. to 3/4 in. less in lengths than assembly heights.

SUPER STUD BUILDING PRODUCTS — The Edge

3. **Wood Structural Panel Sheathing —** (Optional, For use with Item 5 Only.)- (Not Shown) - 4 ft wide, 7/16 in. thick oriented strand board (OSB) or 15/32 in. thick structural 1 sheathing (plywood) complying with DOC PS1 or PS2, or APA Standard PRP-108, manufactured with exterior glue, applied horizontally or vertically to the steel studs. Vertical joints centered on studs, and staggered one stud space from wallboard joints. Attached to studs with flat-head self-drilling tapping screws with a min. head diam. of 0.292 in. at maximum 6 in. OC. in the perimeter and 12 in. OC. in the field. When used, fastener lengths for gypsum panels increased by min. 1/2 in.

4. **Batts and Blankets* —** (Required as indicated under Item 5) — Mineral wool batts, friction fitted between studs and runners. Min nom thickness as indicated under Item 5. See **Batts and Blankets (BKNV or BZJZ) Categories** for names of Classified companies.

4A. **Batts and Blankets* —** (Optional) — Placed in stud cavities, any glass fiber or mineral wool insulation bearing the UL Classification Marking as to Surface Burning Characteristics and/or Fire Resistance. See **Batts and Blankets (BKNV or BZJZ) Categories** for names of Classified companies.

5. **Gypsum Board* —** Gypsum panels with beveled, square or tapered edges, applied vertically or horizontally. Vertical joints centered over studs and staggered one stud cavity on opposite sides of studs. Vertical joints in adjacent layers (multilayer systems) staggered one stud cavity. Horizontal joints need not be backed by steel framing. Horizontal edge joints and horizontal butt joints on opposite sides of studs need not be staggered. Horizontal edge joints and horizontal butt joints in adjacent layers (multilayer systems) staggered a min of 12 in. The thickness and number of layers for the 1 hr, 2 hr, 3 hr and 4 hr ratings are as follows:

Gypsum Board Protection on Each Side of Wall

Rating, Hr	Min Stud Depth, in. Items 2, 2D, 2E, and 2G	Min Stud Depth, in. Item 2A	No. of Layers & Thkns of Panel	Min Thkns of Insulation (Item 4)
1	3-1/2	3-5/8	1 layer, 5/8 in. thick	Optional
1	2-1/2	3-5/8	1 layer, 1/2 in. thick	1-1/2 in.
1	1-5/8	3-5/8	1 layer, 3/4 in. thick	Optional
2	1-5/8	2-1/2	2 layers, 1/2 in. thick	Optional
2	1-5/8	2-1/2	2 layers, 5/8 in. thick	Optional
2	3-1/2	3-5/8	1 layer, 3/4 in. thick	3 in.
3	1-5/8	2-1/2	3 layers, 1/2 in. thick	Optional
3	1-5/8	2-1/2	2 layers, 3/4 in. thick	Optional
3	1-5/8	2-1/2	3 layers, 5/8 in. thick	Optional
4	1-5/8	2-1/2	4 layers, 5/8 in. thick	Optional
4	1-5/8	2-1/2	4 layers, 1/2 in. thick	Optional
4	2-1/2	2-1/2	2 layers, 3/4 in. thick	2 in.

CGC INC — 1/2 in. thick Type C, IP-X2 or IPC-AR; WRC, 5/8 in. thick Type AR, C, IP-AR, IP-X1, IP-X2, IPC-AR, SCX, SHX, WRX or WRC; 3/4 in. thick Types IP-X3 or ULTRACODE

UNITED STATES GYPSUM CO — 1/2 in. thick Type C, IP-X2, IPC-AR or WRC; 5/8 in. thick Type SCX, SHX, WRX, IP-X1, AR, C, WRC, FRX-G, IP-AR, IP-X2, IPC-AR ; 3/4 in. thick Types IP-X3 or ULTRACODE

USG MEXICO S A DE C V — 1/2 in. thick Type C, IP-X2, IPC-AR or WRC; 5/8 in. thick Type AR, C, IP-AR, IP-X1, IP-X2, IPC-AR, SCX, SHX, WRX, WRC or; 3/4 in. thick Types IP-X3 or ULTRACODE

When Item 7B, Steel Framing Members*, is used, Nonbearing Wall Rating is limited to 1 Hr. Min. stud depth is 3-1/2 in., min. thickness of insulation (Item 4) is 3 in., and two layers of gypsum board panels (1/2 in. or 5/8 in. thick) shall be attached to furring channels as described in Item 6. One layer of gypsum board panels (1/2 in. or 5/8 in. thick) attached to opposite side of stud without furring channels as described in Item 6.

11A. **Lead Batten Strips —** (Not Shown, For Use With Item 5H) Lead batten strips, 2 in. wide, max 10 ft long with a max thickness of 0.0625 in. Strips placed on the face of studs and attached to the stud with two min. 1 in. long min. Type S-8 pan head steel screws, one at the top of the strip and one at the bottom of the strip or with one min. 1 in. long min. Type S-8 pan head steel screw at the top of the strip. Lead batten strips to have a purity of 99.9% meeting the Federal specification QQ-L-201f, Grade "C". Lead batten strips required behind vertical joints of lead backed gypsum wallboard (Item 6) and optional at remaining stud locations.

12. **Lead Discs or Tabs —** (Not Shown, For Use With Item 5B) - Used in lieu of or in addition to the lead batten strips (Item 11) or optional at other locations - Max 3/4 in. diam by max 0.125 in. thick lead discs compression fitted or adhered over steel screw heads or max 1/2 in. by 1-1/4 in. by max 0.125 in. thick lead tabs placed on gypsum boards (Item 5B) underneath screw locations prior to the installation of the screws. Lead discs or tabs to have a purity of 99.9% meeting the Federal specification QQ-L-201f, Grade "C".

12A. **Lead Discs —** (Not Shown, for use with Item 5H) Max 5/16 in. diam by max 0.0625 in. thick lead discs compression fitted or adhered over steel screw heads. Lead discs to have a purity of 99.9% meeting the Federal Specification QQ-L-

201f, Grade "C".

13. **Lead Batten Strips —** (Not Shown, For Use With Item 5E) Lead batten strips, 2 in. wide, max 10 ft long with a max thickness of 0.142 in. Strips placed on the face of studs and attached to the stud with two No. 8 x 2-1/2 in. coarse drywall screws, one at the top of the strip and one at the bottom of the strip. Lead batten strips to have a purity of 99.9% meeting the Federal specification QQ-L-201f, Grade "C". Lead batten strips required behind vertical joints of lead backed gypsum wallboard (Item 5B) and optional at remaining stud locations. Required behind vertical joints.

14. **Lead Tabs —** (Not Shown, For Use With Item 5E) 2 in. wide, 5 in. long with a max thickness of 0.142 in. Tabs friction-fit around front face of stud, the stud folded back flange, and the back face of the stud. Tabs required at each location where a screw (that secures the gypsum boards, Item 5E) will penetrate the steel stud. Lead tabs to have a purity of 99.9% meeting the Federal specification QQ-L-201f, Grade "C". Lead tabs may be held in place with standard adhesive tape if necessary.

*Bearing the UL Classification Mark

Last Updated on 2011-08-03

Questions? Print this page Notice of Disclaimer Page Top

Copyright © 2011 Underwriters Laboratories Inc.®

The appearance of a company's name or product in this database does not in itself assure that products so identified have been manufactured under UL's Follow-Up Service. Only those products bearing the UL Mark should be considered to be Listed and covered under UL's Follow-Up Service. Always look for the Mark on the product.

UL permits the reproduction of the material contained in the Online Certification Directory subject to the following conditions: 1. The Guide Information, Designs and/or Listings (files) must be presented in their entirety and in a non-misleading manner, without any manipulation of the data (or drawings). 2. The statement "Reprinted from the Online Certifications Directory with permission from Underwriters Laboratories Inc." must appear adjacent to the extracted material. In addition, the reprinted material must include a copyright notice in the following format: "Copyright © 2011 Underwriters Laboratories Inc.®"

An independent organization working for a safer world with integrity, precision and knowledge.

SCALE: NTS

DesignStrategies
Planning
Architecture
Interior Architecture
Landscape Architecture
Engineering

130 South Main Street
Greenville, SC 29601
T (864) 527-6500
F (864) 233-8385

STATE OF SOUTH CAROLINA
DESIGN STRATEGIES, LLC
GREENVILLE, SC
02019
REGISTERED ARCHITECT

REVISIONS

NO	DATE	DESCRIPTION
0	12.24.2020	ISSUED FOR BID

McLeod Health
The Choice for Medical Excellence.

SEACOAST HOSPITAL
50-BED ADDITION

LITTLE RIVER, SC

KEYPLAN

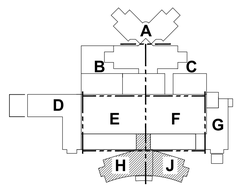

TRUE NORTH TRUE NORTH

PROJECT NO: 0370.45
DATE: 12.24.2020
COPYRIGHT © 2020 DesignStrategies, LLC

UL DESIGN WALLS

AE613

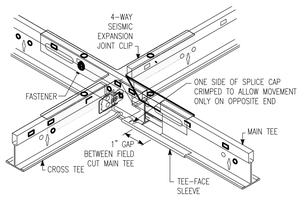

ISOMETRIC DETAIL

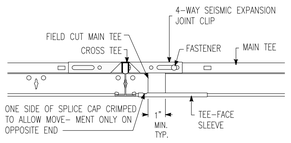

ELEVATION DETAIL

B1 4-WAY SEISMIC EXPANSION JOINT CLIP

SCALE: 1" = 1'-0"

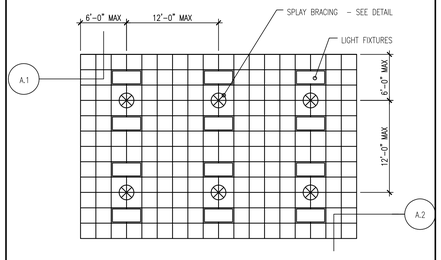

TYPICAL GRID PERIMETER DETAIL LOCATIONS

B3 SEISMIC CEILING LAYOUT

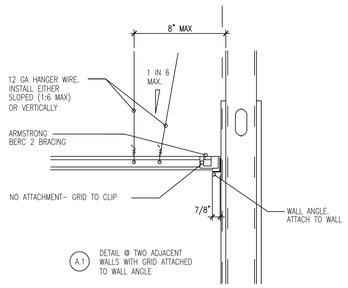

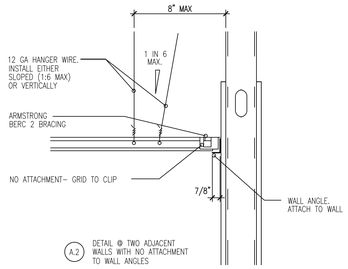

A4 SEISMIC SECTION DETAILS

SEISMIC REQUIREMENTS FOR CEILINGS 144 GSF OR GREATER

CATEGORY	REQUIREMENTS
CONNECTIONS/HANGERS	NOTE: USE HEAVY DUTY GRID
INTERSECTION STRENGTH	180 LBS
HANGERS	#12 @ 4' O.C./#10 @ 5' O.C.
PLUMB	NOT MORE THAN 1 IN 6 OR 10" FROM VERTICAL
CONNECTION DEVICES	MIN. 100LBS.
PERIMETER WIRES - ALL WALLS	MAXIMUM 8" FROM ALL WALLS
SPLAY BRACING	NOTE: USE HEAVY DUTY GRID
4 WIRE CLUSTERS	REQUIRED OVER 1000 SF.
FIRST POINT	MAX. 6' FROM PERIMETER WALLS
SPACING	12' O.C.
CONNECTION STRENGTH	MIN. 200LBS.
COMPRESSION POSTS	REQUIRED (CONDUIT/STEEL STUD)
MOLDING/PARTITIONS	NOTE: USE HEAVY DUTY GRID
MOLDING	7/8"
ATTACHMENT (NO MOVEMENT)	REQUIRED @ 2 ADJACENT WALLS
CLEARANCE (FREE TO MOVE)	3/4" @ 2 ADJACENT WALLS
SPACER BARS	REQUIRED - IF CLIPS NOT USED
PARTITION ATTACHMENT	ALLOWED WITH BRACING, UNDER 2,500 SF.
LIGHTING/FIXTURES	NOTE: USE HEAVY DUTY GRID
LIGHTS LESS THAN 56LBS	2 CONNECTORS/2 SLACK WIRES
LIGHTS GREATER THAN 56LBS	SUSPEND FROM STRUCTURE, NOT GRID
MECHANICAL LESS THAN 20LBS	ATTACHED TO GRID
MECH GREATER THAN 20LBS, LESS THAN 56LBS.	2 SLACK WIRES
MECHANICAL GREATER THAN 56LBS	SUSPEND FROM STRUCTURE, NOT GRID

A5 SEISMIC NOTES

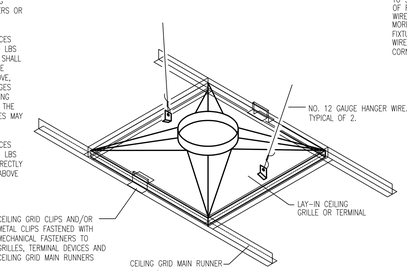

AIR TERMINAL / SERVICES SIESMIC RESTRAINT DETAIL
NO SCALE

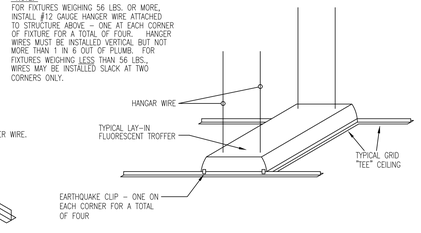

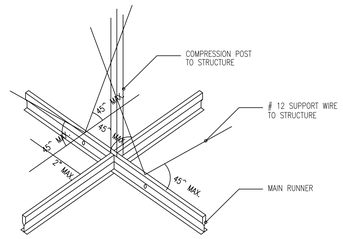

SPLAY BRACING DETAIL

A1 SUSPENDED CEILING SEISMIC DETAILS

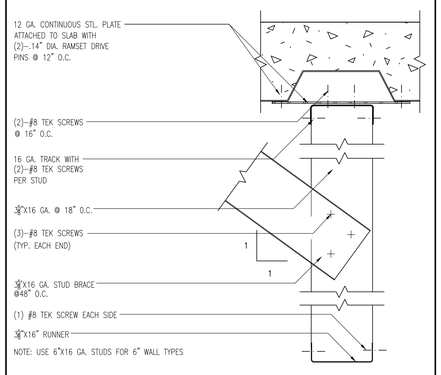

C3 SUSPENDED STEEL STUD

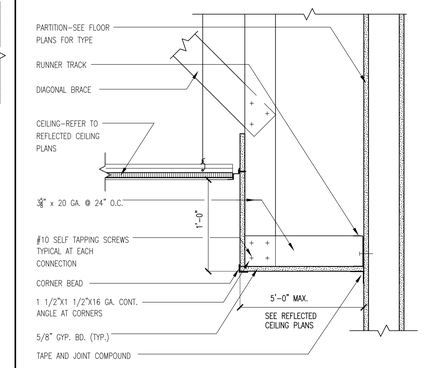

C2 TYPICAL SOFFIT

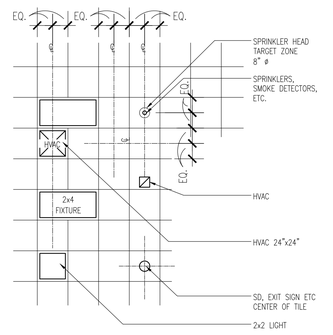

C5 ACOUSTICAL PANEL LAYOUT

DesignStrategies

Planning
Architecture
Interior Architecture
Landscape Architecture
Engineering

130 South Main Street
Greenville, SC 29601
T (864) 527-6500
F (864) 233-8385

STATE OF SOUTH CAROLINA
DESIGN STRATEGIES, LLC
GREENVILLE, SC
02019
REGISTERED ARCHITECT

REVISIONS

NO	DATE	DESCRIPTION
0	12.24.2020	ISSUED FOR BID

McLeod Health
The Choice for Medical Excellence.

SEACOAST HOSPITAL 50-BED ADDITION

LITTLE RIVER, SC

KEYPLAN

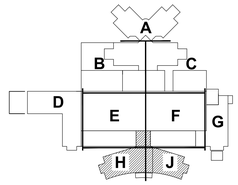

TRUE NORTH TRUE NORTH

PROJECT NO: **0370.45**
DATE: **12.24.2020**
COPYRIGHT © 2020 **DesignStrategies, LLC**

SEISMIC DETAILS

AE614

System No. C–AJ–1140

F RATING = 3–HR.
T RATING = 0–HR.

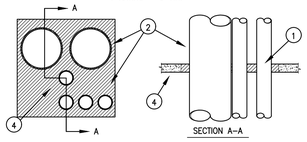

1. FLOOR OR WALL ASSEMBLY – MIN 2–1/2 IN. THICK REINFORCED LIGHTWEIGHT OR NORMAL WEIGHT (100–150 PCF) CONCRETE. WALL MAY ALSO BE CONSTRUCTED OF ANY UL CLASSIFIED CONCRETE BLOCKS *. MAX AREA OF OPENING IS 784 SQ IN. WITH MAX DIMENSION OF 28 IN.
   SEE CONCRETE BLOCKS (CAZT) CATEGORY IN THE FIRE RESISTANCE DIRECTORY FOR NAMES OF MANUFACTURERS.
2. THROUGH PENETRANTS – MIN CLEARANCE BETWEEN PIPES, CONDUITS OR TUBING IS 1 IN. MIN CLEARANCE BETWEEN PIPES, CONDUIT OR TUBING AND PERIPHERY THROUGH OPENING IS 1 IN. PIPE, CONDUIT OR TUBING TO BE RIGIDLY SUPPORTED ON BOTH SIDES OF FLOOR OR WALL ASSEMBLY. THE FOLLOWING TYPES AND SIZES OF METALLIC PIPES, CONDUITS OR TUBING MAY BE USED:
   A. STEEL PIPE – NOM 12 IN. DIAM (OR SMALLER) SCHEDULE 10 (OR HEAVIER) STEEL PIPE.
   B. CONDUIT – NOM 4 IN. DIAM (OR SMALLER) STEEL ELECTRICAL METALLIC TUBING OR STEEL CONDUIT.
   C. COPPER TUBING – NOM 4 IN. DIAM (OR SMALLER) TYPE L (OR HEAVIER) COPPER TUBING.
   D. COPPER PIPE – NOM 4 IN. DIAM (OR SMALLER) REGULAR (OR HEAVIER) COPPER PIPE.
3. FORMS – (NOT SHOWN) – USED AS A FORM TO PREVENT LEAKAGE OF FILL MATERIAL DURING INSTALLATION. FORMS TO BE A RIGID SHEET MATERIAL, CUT TO FIT THE CONTOUR OF THE PENETRATING ITEM AND POSITIONED AS REQUIRED TO ACCOMMODATE THE REQUIRED THICKNESS OF FILL MATERIAL. FORMS MAY BE REMOVED AFTER FILL MATERIAL HAS CURED.
4. FILL, VOID OR CAVITY MATERIAL* – MORTAR – MIN 2–1/2 IN. THICKNESS OF FILL MATERIAL APPLIED WITHIN THE ANNULUS. FILL MATERIAL IS MIXED AT A RATE OF 2.5 PARTS DRY MIX TO ONE PART WATER BY WEIGHT IN ACCORDANCE WITH THE INSTALLATION INSTRUCTIONS SUPPLIED WITH FILL MATERIAL.

*BEARING THE UL CLASSIFICATION MARKING

C1 DETAIL

System No. W–L–1054

F Ratings – 1 and 2 Hr (See Items 1 and 3)
T Rating – 0 Hr
L Rating At Ambient – Less Than 1 CFM/Sq Ft
L Rating At 400 F – 4 CFM/Sq Ft

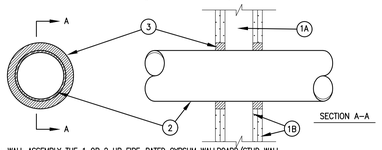

1. WALL ASSEMBLY THE 1 OR 2 HR FIRE–RATED GYPSUM WALLBOARD/STUD WALL ASSEMBLY SHALL BE CONSTRUCTED OF THE MATERIALS AND IN THE MANNER SPECIFIED IN THE INDIVIDUAL U300 OR U400 SERIES WALL AND PARTITION DESIGNS IN THE UL FIRE RESISTANCE DIRECTORY AND SHALL INCLUDE THE FOLLOWING CONSTRUCTION FEATURES:
   A. STUDS WALL FRAMING MAY CONSIST OF STEEL CHANNEL STUDS. STUDS TO BE MIN 2–1/2 IN. WIDE AND SPACED MAX 24 IN. OC. WHEN STEEL STUDS ARE USED AND THE DIAM OF OPENING EXCEEDS THE WIDTH OF STUD CAVITY, THE OPENING SHALL BE FRAMED ON ALL SIDES USING LENGTHS OF STEEL STUD INSTALLED BETWEEN THE VERTICAL STUDS AND SCREW–ATTACHED TO THE STEEL STUDS AT EACH END. THE FRAMED OPENING IN THE WALL SHALL BE 4 TO 6 IN. WIDER AND 4 TO 6 IN. HIGHER THAN THE DIAM OF THE PENETRATING ITEM SUCH THAT, WHEN THE PENETRATING ITEM IS INSTALLED IN THE OPENING, A 2 TO 3 IN. CLEARANCE IS PRESENT BETWEEN THE PENETRATING ITEM AND THE FRAMING ON ALL FOUR SIDES.
   B. GYPSUM BOARD* 5/8 IN. THICK, 4 FT WIDE WITH SQUARE OR TAPERED EDGES. THE GYPSUM WALLBOARD TYPE, THICKNESS, NUMBER OF LAYERS, FASTENER TYPE AND SHEET ORIENTATION SHALL BE AS SPECIFIED IN THE INDIVIDUAL U300 OR U400 SERIES DESIGN IN THE UL FIRE RESISTANCE DIRECTORY. MAX DIAM OF OPENING IS 32–1/4 IN. FOR STEEL STUD WALLS. THE F RATING OF THE FIRESTOP SYSTEM IS EQUAL TO THE FIRE RATING OF THE WALL ASSEMBLY.
2. THROUGH–PENETRANTS ONE METALLIC PIPE, CONDUIT OR TUBING TO BE INSTALLED EITHER CONCENTRICALLY OR ECCENTRICALLY WITHIN THE FIRESTOP SYSTEM. AN ANNULAR SPACE OF MIN 0 IN. TO MAX 2–1/4 IN. IS REQUIRED WITHIN FIRESTOP SYSTEM. PIPE, CONDUIT OR TUBING TO BE RIGIDLY SUPPORTED ON BOTH SIDES OF WALL ASSEMBLY. THE FOLLOWING TYPES AND SIZES OF METALLIC PIPES, CONDUITS OR TUBING MAY BE USED:
   A. STEEL PIPE NOM 30 IN DIAM (OR SMALLER) SCHEDULE 10 (OR HEAVIER) STEEL PIPE.
   B. IRON PIPE NOM 30 IN. DIAM (OR SMALLER) CAST OR DUCTILE IRON PIPE.
   C. CONDUIT NOM 4 IN DIAM (OR SMALLER) STEEL ELECTRICAL METALLIC TUBING OR 6 IN. DIAM STEEL CONDUIT.
   D. COPPER TUBING NOM 6 IN. DIAM (OR SMALLER) TYPE L (OR HEAVIER) COPPER TUBING.
   E. COPPER PIPE NOM 6 IN. DIAM (OR SMALLER) REGULAR (OR HEAVIER) COPPER PIPE.
3. FILL, VOID OR CAVITY MATERIAL* – SEALANT MIN 5/8 IN. OR 1–1/4 IN. THICKNESS OF FILL MATERIAL APPLIED WITHIN THE ANNULUS, FLUSH WITH BOTH SURFACES OF WALL FOR 1 OR 2 HR WALLS, RESPECTIVELY. AT THE POINT CONTACT LOCATION BETWEEN PIPE AND WALL, A MIN 1/2 IN. DIAM BEAD OF FILL MATERIAL SHALL BE APPLIED AT THE PIPE COVERING/WALL INTERFACE ON BOTH SURFACES OF WALL .

*BEARING THE UL CLASSIFICATION MARK

B5 DETAIL

A1 NOT USED

System No. C–AJ–1149

F Rating – 2 Hr
T Rating – 0 Hr
L Rating At Ambient – Less Than 1 CFM/sq ft
L Rating At 400 F – 4 CFM/sq ft

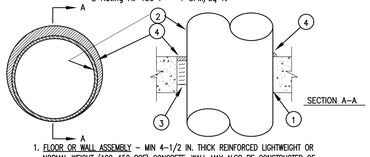

1. FLOOR OR WALL ASSEMBLY – MIN 4–1/2 IN. THICK REINFORCED LIGHTWEIGHT OR NORMAL WEIGHT (100–150 PCF) CONCRETE. WALL MAY ALSO BE CONSTRUCTED OF ANY UL CLASSIFIED CONCRETE BLOCKS *. MAX DIAM OF OPENING IS 12 IN.
   SEE CONCRETE BLOCKS (CAZT) CATEGORY IN THE FIRE RESISTANCE DIRECTORY FOR NAMES OF MANUFACTURERS.
2. THROUGH PENETRANTS – ONE METALLIC PIPE, CONDUIT OR TUBING TO BE INSTALLED WITHIN THE FIRESTOP SYSTEM. PIPE, CONDUIT OR TUBING TO BE RIGIDLY SUPPORTED ON BOTH SIDES OF FLOOR OR WALL ASSEMBLY. THE ANNULAR SPACE SHALL BE 0 IN. (POINT CONTACT) TO MAX 1–1/4 IN. THE FOLLOWING TYPES AND SIZES OF METALLIC PIPES, CONDUITS OR TUBING MAY BE USED:
   A. STEEL PIPE – NOM 10 IN. DIAM (OR SMALLER) SCHEDULE 10 (OR HEAVIER) STEEL PIPE.
   B. CONDUIT – NOM 4 IN. DIAM (OR SMALLER) STEEL ELECTRICAL METALLIC TUBING OR STEEL CONDUIT.
   C. COPPER TUBING – NOM 4 IN. DIAM (OR SMALLER) TYPE L (OR HEAVIER) COPPER TUBING.
   D. COPPER PIPE – NOM 4 IN. DIAM (OR SMALLER) REGULAR (OR HEAVIER) COPPER PIPE.
3. PACKING MATERIAL – MIN 3 IN. THICKNESS OF MIN 4 PCF MINERAL WOOL BATT INSULATION FOR NOM 4 IN. DIAM (AND SMALLER) PIPES, CONDUITS OR TUBINGS AND A MIN 4 IN. THICKNESS OF MIN 4 PCF MINERAL WOOL BATT INSULATION FOR PIPE GREATER THAN NOM 4 IN. DIAM, FIRMLY PACKED INTO OPENING AS A PERMANENT FORM. PACKING MATERIAL TO BE RECESSED FROM TOP SURFACE OF FLOOR OR FROM BOTH SURFACES OF WALL AS REQUIRED TO ACCOMMODATE THE REQUIRED THICKNESS OF FILL MATERIAL.
4. FILL, VOID OR CAVITY MATERIAL* – SEALANT – MIN 1/2 IN. THICKNESS OF FILL MATERIAL APPLIED WITHIN THE ANNULUS, FLUSH WITH TOP SURFACE OF FLOOR OR BOTH SURFACES OF WALL. AT THE POINT OF CONTACT LOCATION BETWEEN PIPE AND CONCRETE, A MIN 1/2 IN. DIAM BEAD OF FILL MATERIAL SHALL BE APPLIED AT THE CONCRETE/PIPE INTERFACE ON THE TOP SURFACE OF FLOOR AND ON BOTH SURFACES OF WALL.

*BEARING THE UL CLASSIFICATION MARKING

C2 DETAIL

System No. W–L–8004

F Rating – 2 Hr
T Rating – 1/4 Hr

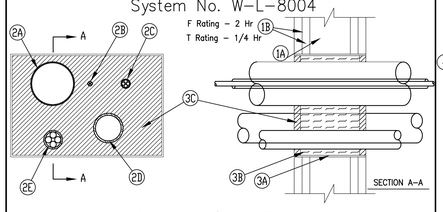

1. WALL ASSEMBLY THE FIRE–RATED GYPSUM WALLBOARD/STUD WALL ASSEMBLY SHALL BE CONSTRUCTED OF THE MATERIALS AND IN THE MANNER SPECIFIED IN THE INDIVIDUAL U300 OR U400 SERIES WALL AND PARTITION DESIGNS IN THE UL FIRE RESISTANCE DIRECTORY AND SHALL INCLUDE THE FOLLOWING CONSTRUCTION FEATURES:
   A. STEEL WIRE MESH NO. 8 STEEL WIRE MESH HAVING A MIN 1 IN. LAP ALONG THE LONGITUDINAL SEAM. LENGTH OF STEEL WIRE MESH TO BE 4–3/4 IN., CENTERED AND FORMED TO FIT PERIPHERY OF THROUGH OPENING. STEEL WIRE MESH IS NOT REQUIRED WHEN ADDITIONAL FRAMING MEMBERS (ITEM NO. 1A) ARE USED.
   B. PACKING MATERIAL MIN 4.0 IN. THICKNESS OF MIN 3.5 PCF MINERAL WOOL BATT INSULATION FIRMLY PACKED INTO OPENING AS A PERMANENT FORM. PACKING MATERIAL TO BE RECESSED FROM BOTH SURFACES OF WALL AS REQUIRED TO ACCOMMODATE THE REQUIRED THICKNESS OF FILL MATERIAL.
   C. FILL, VOID OR CAVITY MATERIAL* – SEALANT MIN 1/2 IN. THICKNESS OF FILL MATERIAL APPLIED WITHIN THE ANNULUS, FLUSH WITH BOTH SURFACES OF WALL.
   *BEARING THE UL CLASSIFICATION MARKING

B5 DETAIL

GENERAL NOTES:
1. IF WALL OR FLOOR RATING IS LOWER THAN RATING OF ASSEMBLY IDENTIFIED, PROVIDE RATING OF ASSEMBLY AT THE HIGHER VALUE OR SUBMIT ALTERNATIVE ASSEMBLY TO EQUAL WALL OR FLOOR RATING IN WHICH PENETRATION IS BEING FIRE–STOPPED.
2. DETAILS PROVIDED ARE HILTI CONSTRUCTION CHEMICALS, DIV. OF HILTI INC––FS–ONE SEALANT UNLESS OTHERWISE NOTED. THESE DETAILS ARE BEING PROVIDED AS A BASIS OF DESIGN. REFER TO SPECIFICATIONS FOR ADDITIONAL REQUIREMENTS AND OTHER APPROVED MANUFACTURERS.

A2 GENERAL NOTES

System No. F–A–1015

F Rating – 2 Hr
T Rating – 0 Hr

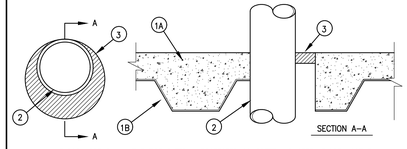

1. FLOOR ASSEMBLY – THE FIRE RATED UNPROTECTED CONCRETE AND STEEL FLOOR ASSEMBLY SHALL BE CONSTRUCTED OF THE MATERIALS AND IN THE MANNER SPECIFIED IN THE INDIVIDUAL D900 SERIES DESIGNS IN THE UL FIRE RESISTANCE DIRECTORY AND AS SUMMARIZED BELOW:
   A. CONCRETE – MIN 2–1/2 IN THICK REINFORCED LIGHTWEIGHT OR NORMAL WEIGHT (100–150 PCF) CONCRETE.
   B. STEEL FLOOR AND FORM UNITS* – COMPOSITE OR NON–COMPOSITE MAX 3 IN. DEEP GALV STEEL FLUTED UNITS AS SPECIFIED IN THE INDIVIDUAL FLOOR–CEILING DESIGN. MAX DIAM OF OPENING IS 14–5/8 IN.
2. THROUGH PENETRANTS – ONE METALLIC TUBING, PIPE OR CONDUIT TO BE INSTALLED WITHIN THE FIRESTOP SYSTEM. PIPE, TUBING OR CONDUIT TO BE RIGIDLY SUPPORTED ON BOTH SIDES OF FLOOR–CEILING ASSEMBLY. THE ANNULAR SPACE BETWEEN PIPE, TUBING OR CONDUIT AND PERIPHERY OF OPENING SHALL BE MIN OF 0 IN. (POINT CONTACT) TO MAX 1–7/8 IN. THE FOLLOWING TYPES AND SIZES OF METALLIC PIPES, TUBING OR CONDUIT MAY BE USED:
   A. STEEL PIPE – NOM 12 IN. DIAM (OR SMALLER) SCHEDULE 10 (OR HEAVIER) STEEL PIPE. PROVIDE ALTERNATE FIRESTOPPING ASSEMBLY FOR CAST IRON IF NOT TESTED IN THIS ASSEMBLY.
   B. CONDUIT – NOM 4 IN. DIAM (OR SMALLER) STEEL ELECTRICAL METALLIC TUBING OR NOM 6 IN. DIAM (OR SMALLER) STEEL CONDUIT.
   C. COPPER TUBE – NOM 6 IN. DIAM (OR SMALLER) TYPE L (OR HEAVIER) COPPER TUBE.
   D. COPPER PIPE – NOM 6 IN. DIAM (OR SMALLER) REGULAR (OR HEAVIER) COPPER PIPE.
3. FILL, VOID OR CAVITY MATERIALS* – SEALANT – MIN 1 IN. THICKNESS OF SEALANT APPLIED WITHIN ANNULAR SPACE, FLUSH WITH TOP SURFACE OF FLOOR. AT THE POINT CONTACT LOCATION, BETWEEN PIPE AND CONCRETE, A MIN 1/2 IN. DIAM BEAD OF FILL MATERIAL SHALL BE APPLIED AT THE CONCRETE/PIPE INTERFACE ON THE TOP SURFACE OF FLOOR.

*BEARING THE UL CLASSIFICATION MARKING

C3 DETAIL

System No. W–L–5029

F Ratings – 1 and 2 Hr (See Item 1)
T Ratings – 1/2, 3/4, 1, 1–1/2 and 1–3/4 Hr (See Item 3)

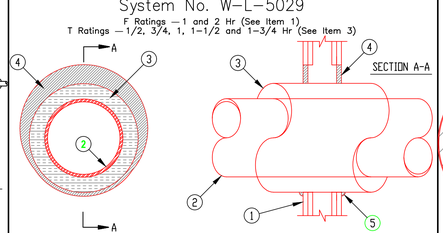

1. Wall Assembly —The 1 or 2 hr fire–rated gypsum board/stud wall assembly shall be constructed of the materials and in the manner specified in the individual U300 or U400 Series Wall and Partition Designs in the UL Fire Resistance Directory and shall include the following construction features:
   A. Studs —Wall framing may consist of either wood studs or steel channel studs. Wood studs to consist of nom 2 by 4 in. lumber spaced 16 in. OC. Steel studs to be min 2–1/2 in. wide and spaced max 24 in. OC.
   B. Gypsum Board* —5/8 in. thick, 4 ft wide, with square or tapered edges. The gypsum board type, thickness, number of layers, fastener type and sheet orientation shall be as specified in the individual Wall and Partition Design. Max diam of opening is 18–5/8 in.
   The hourly F Rating of the firestop system is equal to the hourly fire rating of the wall assembly in which it is installed.
2. Through Penetrants —One metallic pipe or tubing to be centered within the firestop system. Pipe or tubing to be rigidly supported on both sides of wall assembly. The following types and sizes of metallic pipes or tubing may be used:
   A. Steel Pipe —Nom 12 in. diam (or smaller) Schedule 10 (or heavier) steel pipe.
   B. Iron Pipe —Nom 12 in. diam (or smaller) cast or ductile iron pipe.
   C. Copper Tubing —Nom 6 in. diam (or smaller) Type L (or heavier) copper tubing.
   D. Copper Pipe —Nom 6 in. diam (or smaller) Regular (or heavier) copper pipe.
3. Pipe Covering* —Nom 1, 1–1/2 or 2 in. thick hollow cylindrical heavy density (min 3.5 pcf) glass fiber units jacketed on the outside with an all service jacket. Longitudinal joints sealed with metal fasteners or factory–applied self–sealing lap tape. Transverse joints secured with metal fasteners or with butt tape supplied with the product.
   See Pipe and Equipment Covering —Materials (BRGU) category in the Building Material Directory for the names of manufacturers. Any pipe covering material meeting the above specifications and bearing the UL Classification Marking with a Flame Spread Index of 25 or less and a Smoke Developed Index of 50 or less may be used.
   The hourly T Rating of the firestop system is dependent on the hourly fire rating of the wall assembly in which it is installed, the size and type of through penetrant and the pipe covering thickness, as shown in the table below:

Wall Assembly Rating Hr	Through Penetrant		Pipe Covering Thkns In.	Annular Space		T Rating Hr
	Type +	Max Diam In.		Min In.	Max In.	
1	A	4	1	0	1–1/2	1/2
1	B or C	2	1 or 1–1/2	0	1–1/2	1/2
1	A	4	1–1/2	0	1–1/2	1
1	A	12	2	0	1–7/8	3/4
1	B or C	6	2	0	1–7/8	1
2	A	4	1	0	1–1/2	1
2	B or C	4	1 or 1–1/2	0	1–1/2	1
2	B or C	6	2	0	1–7/8	1
2	A	4	1–1/2	0	1–1/2	1–3/4
2	A	12	2	0	1–7/8	1–1/2
2	B or C	6	2	0	1–7/8	1

+Indicates penetrant type as itemized in Item 2.

3A. Pipe Covering* —(Not Shown) —As an alternate to Item 3, max 2 in. thick cylindrical calcium silicate (min 14 pcf) units sized to the outside diam of the pipe or tube may be used. Pipe insulation secured with stainless steel bands or min 8 AWG stainless steel wire spaced max 12 in. OC. When the alternate pipe covering is used, the T Rating shall be determined from the table above.
   See Pipe and Equipment Covering —Materials (BRGU) category in the Building Materials Directory for names of manufacturers. Any pipe covering material meeting the above specifications and bearing the UL Classification Marking with a Flame Spread Index of 25 or less and a Smoke Developed Index of 50 or less may be used.
4. Fill, Void or Cavity Material* —Sealant —Min 5/8 in. thickness of fill material applied within the annulus, flush with both surfaces of wall . At the point contact location between pipe covering and gypsum board, a min 1/2 in. diam bead of fill material shall be applied at the pipe covering/gypsum board interface on both surfaces of wall.

*Bearing the UL Classification Mark

A3 DETAIL

System No. W–L–1176

F Rating – 1 Hr
T Rating – 1/2 Hr

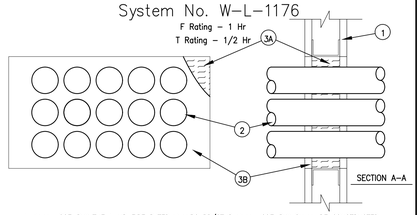

1. WALL ASSEMBLY THE 1 HR FIRE RATED WALLBOARD/STUD WALL ASSEMBLY SHALL BE CONSTRUCTED OF THE MATERIALS AND IN THE MANNER SPECIFIED IN THE INDIVIDUAL U300 OR U400 SERIES WALL AND PARTITION DESIGNS IN THE UL FIRE RESISTANCE DIRECTORY AND SHALL INCLUDE THE FOLLOWING CONSTRUCTION FEATURES.
   A. STUDS WALL FRAMING SHALL CONSIST OF STEEL CHANNEL STUDS. STEEL STUDS TO BE MIN 2–1/2 IN. WIDE AND SPACED MAX 24 IN. OC.
   B. GYPSUM BOARD* ONE LAYER OF NOM 5/8 IN. THICK GYPSUM WALLBOARD, AS SPECIFIED IN THE INDIVIDUAL WALL AND PARTITION. MAX AREA OF OPENING IS 180 SQ IN. WITH MAX DIMENSION OF 18 INCH MAX WIDTH OF OPENINGS.
2. THROUGH PENETRANT ONE OR MORE STEEL ELECTRICAL METALLIC TUBING TO BE INSTALLED WITHIN THE OPENING. THE SPACE BETWEEN TUBING SHALL BE MIN 1/2 IN. AND MAX 5/8 IN. THE SPACE BETWEEN TUBING AND PERIPHERY OF OPENING SHALL BE MIN 1/2 IN. TO MAX 2–3/8 IN. THE FOLLOWING TYPES AND SIZES OF METALLIC TUBE MAY BE USED:
   A. CONDUIT NOM 2 IN. DIAM (OR SMALLER) STEEL ELECTRICAL METALLIC TUBING OR 2 IN. DIAM STEEL CONDUIT.
3. FIRESTOP SYSTEM THE FIRESTOP SYSTEM SHALL CONSIST OF THE FOLLOWING:
   A. PACKING MATERIAL MIN 2–1/2 IN. THICKNESS OF MIN 4 PCF MINERAL WOOL BATT INSULATION, FIRMLY PACKED INTO THE OPENING. MINERAL WOOL TO BE RECESSED FROM BOTH SIDES OF THE ASSEMBLY TO ACCOMMODATE THE REQUIRED THICKNESS OF FILL MATERIAL (ITEM 3B).
   B. FILL, VOID OR CAVITY MATERIAL* – SEALANT MIN 5/8 IN. THICKNESS OF FILL MATERIAL APPLIED WITHIN THE ANNULUS, FLUSH WITH BOTH SURFACES OF WALL.

*BEARING THE UL CLASSIFICATION MARKING

C4 DETAIL

System No. C–AJ–5091

F Rating —2 Hr
T Ratings — 0 and 1 Hr (See Items 2 and 4)

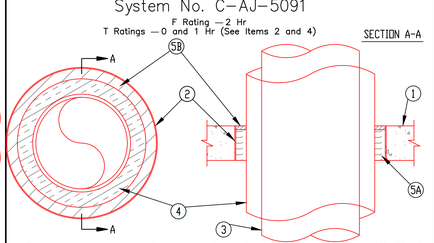

1. Floor or Wall Assembly —Min 4–1/2 in. (114 mm) thick reinforced lightweight or normal weight (100–150 pcf or 1600–2400 kg/m3) concrete. Wall may also be constructed of any UL Classified Concrete Blocks*. Max diam of opening is 19–1/2 in. (495 mm).
   See Concrete Blocks (CAZT) category in the Fire Resistance directory for names of manufacturers.
2. Metallic Sleeve —(Optional) —Nom 20 in. (508 mm) diam (or smaller) Schedule 10 (or heavier) steel sleeve cast or grouted into floor or wall assembly, flush with floor or wall surfaces or extending a max of 3 in. (76 mm) above floor or beyond both surfaces of wall. If the steel sleeve extends beyond the top surface of the floor or both surfaces of the wall, the T Rating of the firestop system is 0 hr.

2A. Sheet Metal Sleeve —(Optional) — Max 6 in. (152 mm) diam, min 26 ga galv steel provided with a 26 ga galv steel square flange spot welded to the sleeve at approximately mid– height, or flush with bottom of sleeve in floors, and sized to be a min of 2 in. (51 mm) larger than the sleeve diam. The sleeve is to be cast in place flush with bottom surface of floor and may extend a max of 1 in. (25 mm) above the top surface of the floor.

2B. Sheet Metal Sleeve —(Optional) — Max 12 in. (305 mm) diam, min 24 ga galv steel provided with a 24 ga galv steel square flange spot welded to the sleeve at approximately mid– height, or flush with bottom of sleeve in floors, and sized to be a min of 2 in. (51 mm) larger than the sleeve diam. The sleeve is to be cast in place flush with bottom surface of floor and may extend a max of 1 in. (25 mm) above the top surface of the floor.

3. Through Penetrants —One metallic pipe or tubing to be installed either concentrically or eccentrically within the firestop system. Pipe or tubing to be rigidly supported on both sides of floor or wall assembly. The following types and sizes of metallic pipes or tubing may be used:
   A. Steel Pipe —Nom 12 in. (305 mm) diam (or smaller) Schedule 10 (or heavier) steel pipe.
   B. Iron Pipe —Nom 12 in. (305 mm) diam (or smaller) cast or ductile iron pipe.
   C. Copper Pipe —Nom 6 in. (152 mm) diam (or smaller) Regular (or heavier) copper pipe.
   D. Copper Tubing —Nom 6 in. (152 mm) diam (or smaller) Type L (or heavier) copper tubing.

4. Pipe Covering —Min 1/2 in. to max 2 in. thick hollow cylindrical heavy density (min 3.5 pcf) glass fiber units jacketed on the outside with an all–service jacket. Longitudinal joints sealed with metal fasteners or factory–applied, self–sealing lap tape. Transverse joints secured with metal fasteners or with butt tape supplied with the product. The annular space between the insulated pipe and the edge of the periphery of the opening shall be min 1/2 in. to a max 2–1/4 in. When thickness of pipe covering is less than 2 in., the T Rating for the firestop system is 0 hr.
   See Pipe Equipment Covering —Materials (BRGU) category in the Building Materials Directory for names of manufacturers. Any pipe covering material meeting the above specifications and bearing the UL Classification Marking with a Flame Spread Index of 25 or less and a Smoke Developed Index of 50 or less may be used.

4A. Pipe Covering —(Not Shown) —As an alternate to Item 4, max 2 in. thick cylindrical calcium silicate (min 14 pcf) units sized to the outside diam of the pipe or tube may be used. Pipe insulation secured with stainless steel bands or min 8 AWG stainless steel wire spaced max 12 in. OC. The annular space shall be min 1/2 in. to max 2–1/4 in. .

5. Firestop System —The firestop system shall consist of the following:
   A. Packing Material —Min 4 in. thickness of min 4 pcf mineral wool batt insulation firmly packed into opening as a permanent form. Packing material to be recessed from top surface of floor or from both surfaces of wall as required to accommodate the required thickness of fill material.
   B. Fill, Void or Cavity Material* —Sealant —Min 1/2 in. thickness of fill material applied within the annulus, flush with top surface of floor or with both surfaces of wall.

*Bearing the UL Classification Mark

A4 DETAIL

System No. F–A–3015

F Rating – 2 Hr
T Rating – 1/4 Hr

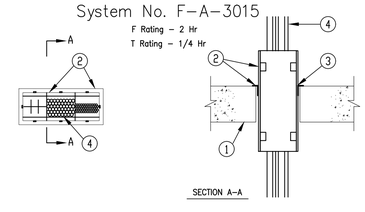

1. FLOOR ASSEMBLY – MIN. 4–1/2 IN. THICK REINFORCED LIGHTWEIGHT OR NORMAL WEIGHT (100–150 PCF) CONCRETE FLOOR. OPENING TO BE MIN 1/4 IN. TO MAX 1/2 IN. LARGER THAN WIDTH AND HEIGHT DIMENSIONS OF FIRESTOP DEVICE MODULE(S).
2. FIRESTOP DEVICE* – ONE, TWO OR THREE FIRESTOP DEVICE MODULES GANGED TOGETHER. EACH FIRESTOP DEVICE MODULE CONSIST OF A 3 BY 3 BY 10–1/2 IN. LONG GALV. STEEL TUBE WITH AN INTUMESCENT MATERIAL LINING. FIRESTOP DEVICE MODULES TO BE INSTALLED IN ACCORDANCE WITH THE ACCOMPANYING INSTALLATION INSTRUCTIONS. THE SPACE BETWEEN THE FIRESTOP DEVICE MODULE(S) AND THE THE PERIPHERY OF THE OPENING SHALL BE MIN. 1/8" IN. TO MAX. 1/4 IN. FIRESTOP DEVICE MODULE(S) SECURED IN PLACE BY BY MEANS OF STEEL RESTRAINT PLATES SIZED TO ACCOMODATE EITHER ONE, TWO OR THREE MODULES. RESTRAINT PLATES PROVIDED WITH A CLOSED CELL SILICONE GASKET AND SIZED TO LAP APPROX. 1/2 IN. ON FLOOR SURFACE. STEEL RESTRAINT PLATES INSTALLED ON BOTH SIDES OF FLOOR AND SECURED TO FIRESTOP DEVICE MODULE(S) WITH STEEL SET SCREWS. EACH FIRESTOP DEVICE MODULE IS TO BE INSTALLED WITH ENDS PROJECTING AN EQUAL DISTANCE BEYOND EACH SURFACE OF THE FLOOR. AS AN OPTION, DEVICES MAY BE CAST INTO THE FLOOR ASSEMBLY. WHEN DEVICE IS CAST IN PLACE, THE RESTRAINT PLATES ARE OPTIONAL.
3. FILL, VOID OR CAVITY MATERIAL* – SEALANT OR PUTTY – PRIOR TO INSTALLATION OF STEEL RESTRAINT PLATES, MIN. 1 IN. THICKNESS OR PUTTY INSTALLED IN ANNULAR SPACE FLUSH WITH TOP SURFACE OF FLOOR.
4. CABLES – WITHIN THE LOADING AREA FOR EACH FIRESTOP DEVICE MODULE, THE CABLES MAY REPRESENT A 0 TO 100 PERCENT VISUAL FILL. CABLE FILL TO BE DISTRIBUTED AT A UNIFORM HEIGHT ACROSS THE WIDTH OF EACH FIRE STOP DEVICE MODULE. CABLES TO BE RIGIDLY SUPPORTED ON BOTH SIDES OF THE FLOOR OR WALL ASSEMBLY. ANY COMBINATION OF THE FOLLOWING TYPES OF CABLES MAY BE USED:

   A. MAX 25 PAIR NO. 24 AWG (OR SMALLER) COPPER CONDUCTOR TELECOMMUNICATION CABLE WITH POLYVINYL CHLORIDE (PVC) INSULATION AND JACKETING.
   B. MAX 4 PAIR NO. 24 AWG (OR SMALLER) COPPER CONDUCTOR DATA CABLE WITH POLYVINYL CHLORIDE (PVC) INSULATION AND JACKETING.
   C. MAX RG/U COAXIAL CABLE WITH FLUORINATED ETHYLENE INSULATION AND JACKETING.

   *BEARING THE UL CLASSIFICATION MARKING.

B5 DETAIL

System No. W–J–7089

F Rating – 2 Hr
T Rating – 0 Hr

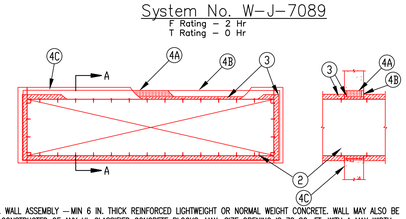

1. WALL ASSEMBLY —MIN 6 IN. THICK REINFORCED LIGHTWEIGHT OR NORMAL WEIGHT CONCRETE. WALL MAY ALSO BE CONSTRUCTED OF ANY UL CLASSIFIED CONCRETE BLOCKS. MAX. SIZE OPENING IS 78 SQ. FT. WITH A MAX WIDTH OF 106 INCHES. SEE CONCRETE BLOCKS (CATZ) CATEGORY IN FIRE RESISTANCE DIRECTORY FOR NAMES OF MANUFACTURERS.
2. STEEL DUCT– MAX. 100 X100 INCH STEEL DUCT TO BE INSTALLED WITHIN THE FRAMED OPENING. THE DUCT SHALL BE CONSTRUCTED AND REINFORCED IN ACCORDANCE WIHT SMACNA CONSTRUCTION STANDARDS. STEEL DUCT TO BE RIGIDLY SUPPORTED ON BOTH SIDES OF WALL ASSEMBLY.
3. BATTS AND BLANKETS– NOMINAL 1½" OR 2 INCH THICK GLASS FIBER BATT OR BLANKET JACKETED ON THE OUTSIDE WITH A FOIL–SCRIM–KRAFT FACING. LONGITUDUNAL AND TRANSVERSE JOINTS SEALED WITH ALUMINUM FOIL TAPE. DURING THE INSTALLATION OF THE FILL MATERIAL, THE BATT OR BLANKET SHALL BE COMPRESSED 50% SUCH THAT THE ANNUAL SPACE WITHIN THE FIRESTOP SYSTEM SHALL BE MIN ½" TO MAX. 2". SEE BATTS AND BLANKETS (BKNW) CATEGORY IN THE BUILDING MATERIALS DIRECTORY FOR NAMES OF MANUFACTURERS. ANY BATT OR BLANKET MEETING THE ABOVE SPECIFICATIONS AND BEARING THE UL CLASSIFICATION MARKING WITH A FLAME SPREAD INDEX OF 25 OR LESS AND A SMOKE DEVELOPMENT INDEX OF 50 OR LESS MAY BE USED.
4. FIRESTOP SYSTEM– THE FIRESTOP SYSTEM SHALL CONSIST OF THE FOLLOWING:
   A. PACKING MATERIAL– MIN. 4" THICKNESS OF MIN 4 PCF WOOL BATT INSULATION FIRMLY PACKED INTO OPENING AS A PERMANENT FORM. PACKING MATERIAL TO BE RECESSED FROM BOTH SURFACES OF WALL AS REQUIRED TO ACCOMODATE THE REQUIRED THICKNESS OF FILL MATERIAL.
   B. FILL, VOID OR CAVITY MATERIAL– SEALANT– MIN ¼" THICKNESS OF FILL MATERIAL APPLIED WITHIN ANNULUS, FLUSH WITH BOTH SURFACES OF WALL. SPECIFIED TECHNOLOGIES INC– SPECSEAL SERIES SSS SEALANT, SPECSEAL LCI SEALANT.
   C. STEEL RETAINING ANGLES– MIN NO 16 GUAGE GALV STEEL ANGLES SIZED TO LAP STEEL DUCT A MIN OF 1 INCH AND LAP WALL SURFACES A MIN OF 2 INCHES. ANGLES ATTACHED TO STEEL DUCT ON BOTH SIDES OF WALL WITH MIN. NO 10 STEEL SHEET METAL SCREWS A MAX OF 1 INCH FROM EACH END OF STEEL DUCT AND SPACED A MAX OF 6 INCHES OC.
   SPECIFIED TECHNOLOGIES INC.

   *BEARING THE UL CLASSIFICATION MARK

B5 DETAIL

System No. C–AJ–7104

F Rating — 2 Hr
T Rating — 1/4 Hr

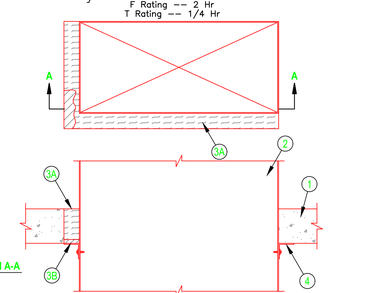

1. Floor or Wall Assembly — Min 4–1/2 in. thick reinforced lightweight or normal weight (100–150 pcf) concrete. Wall may also be constructed of any UL Classified Concrete Blocks*. Max area of opening is 364 in2. with a max dimension of 26 in. See Concrete Blocks (CAZT) category in the Fire Resistance Directory for names of manufacturers.
2. Steel Duct — Max 24 in. by 12 in. by No. 24 gauge (or heavier) galv steel duct. One steel duct to be positioned within the firestop system. The annular space shall be min 0 in. (point of contact max two adjacent sides) to max 2 in. Duct to be rigidly supported on both sides of floor or wall assembly.
3. Firestop System — The firestop system shall consist of the following:
   A. Packing Materials — Min 4 in. thickness of min 4 pcf mineral wool batt insulation firmly packed into opening as a permanent form between the bore steel duct and the periphery of the opening. Packing material to be recessed from top surface

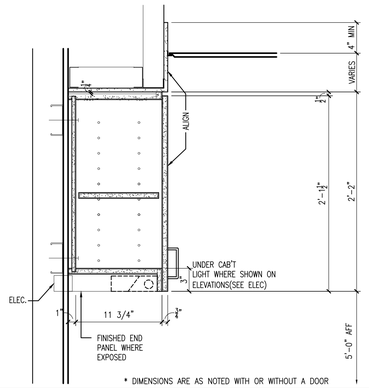

D1 WALL CABINET W/ DOORS 1 1/2" = 1'-0"

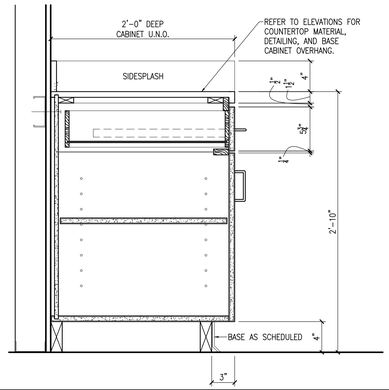

D2 34" BASE CAB W/ DWR 1 1/2" = 1'-0"

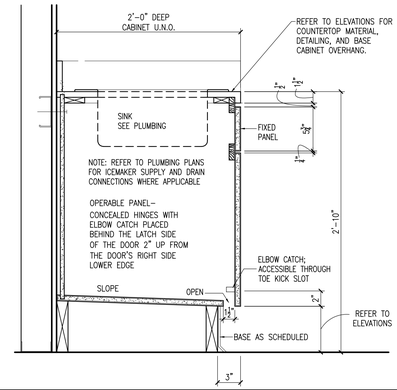

D3 34" SINK CABINET 1 1/2" = 1'-0"

1

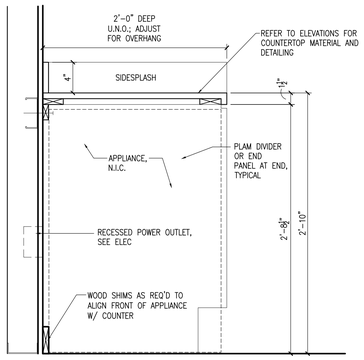

C1 34" U.C. EQUIP / KNEE SPACE 1 1/2" = 1'-0"

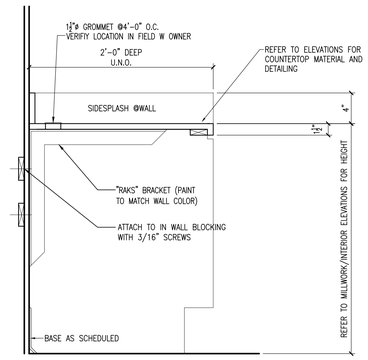

C2 30" KNEE SPACE 1 1/2" = 1'-0"

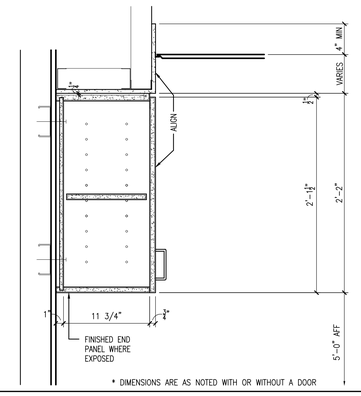

C3 WALL CABINET W/ DOORS 1 1/2" = 1'-0"

C

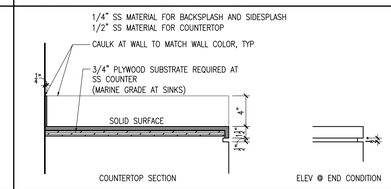

B2B SOLID SURFACE COUNTER 1 1/2" = 1'-0"

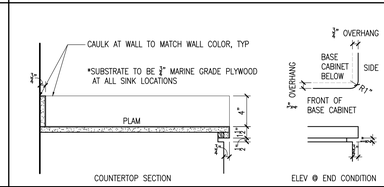

B2A PLAM COUNTER 1 1/2" = 1'-0"

B

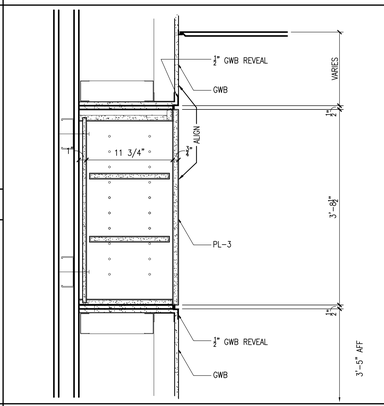

B3 P.P.E. CABINET W/ DOORS 1 1/2" = 1'-0"

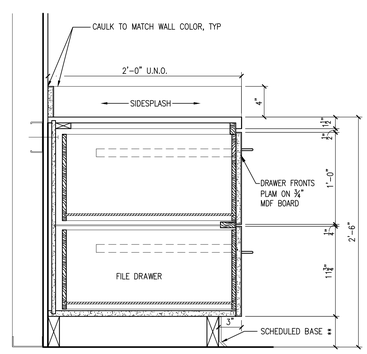

A3 30" DRAWER STACK 1 1/2" = 1'-0"

A

1 2 3 4 5

DesignStrategies

Planning
Architecture
Interior Architecture
Landscape Architecture
Engineering

130 South Main Street
Greenville, SC 29601
T (864) 527-6500
F (864) 233-8385

STATE OF SOUTH CAROLINA
DESIGN STRATEGIES, LLC
GREENVILLE, SC
02019
REGISTERED ARCHITECT

REVISIONS

NO	DATE	DESCRIPTION
0	12.24.2020	ISSUED FOR BID

McLeod Health
The Choice for Medical Excellence.

SEACOAST HOSPITAL
50-BED ADDITION

LITTLE RIVER, SC

KEYPLAN

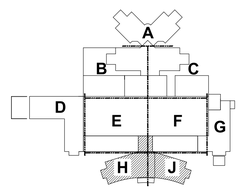

TRUE NORTH

0 4" 8" 1'-4"
SCALE: 1 1/2" = 1'-0"

PROJECT NO: **0370.45**
DATE: **12.24.2020**
COPYRIGHT © 2020 **DesignStrategies, LLC**

TYPICAL MILLWORK DETAILING

AE800

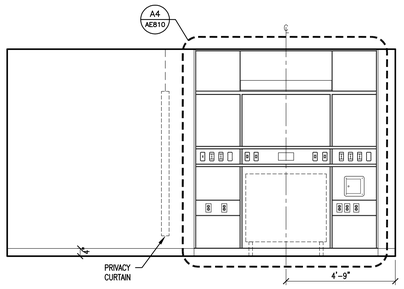

D1 DIALYSIS 4568 3/8" = 1'-0"

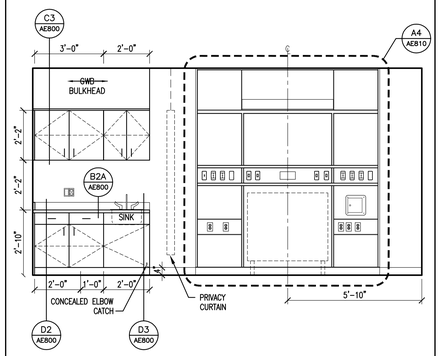

D2 DIALYSIS 4568 3/8" = 1'-0"

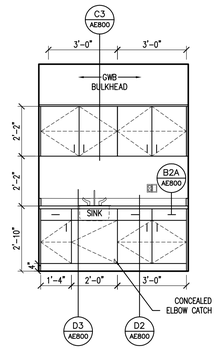

D3 FAMILY WAITING KITCHENETTE 3/8" = 1'-0"

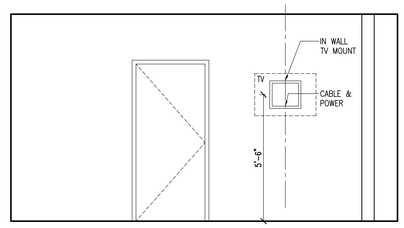

D4 BREAK ROOM 4571 3/8" = 1'-0"

C3 DIALYSIS 4568 3/8" = 1'-0"

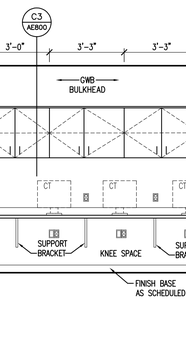

C3 WORKROOM 4570 3/8" = 1'-0"

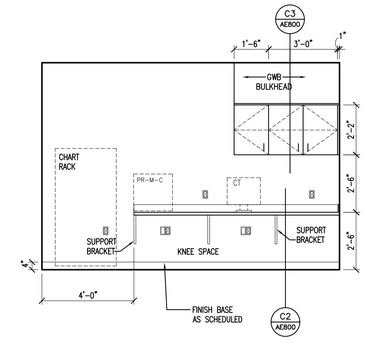

C4 WORKROOM 4513 3/8" = 1'-0"

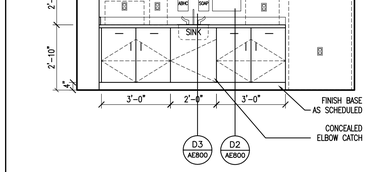

B2 BREAK ROOM 4571 3/8" = 1'-0"

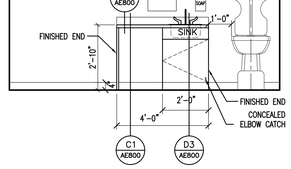

B3 SOIL UTILITY 4562 3/8" = 1'-0"

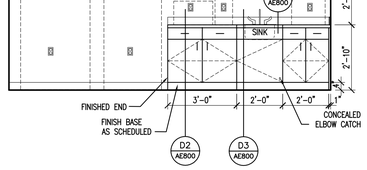

B4 NOURISHMENT 4566 WEST 3/8" = 1'-0"

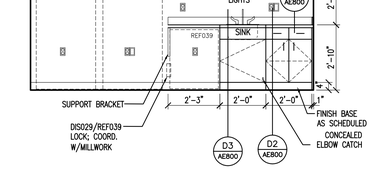

B5 MEDICATION 4566 EAST 3/8" = 1'-0"

A3 DOCTOR DICTATION 4564 3/8" = 1'-0"

A4 WORKROOM 4565 WEST 3/8" = 1'-0"

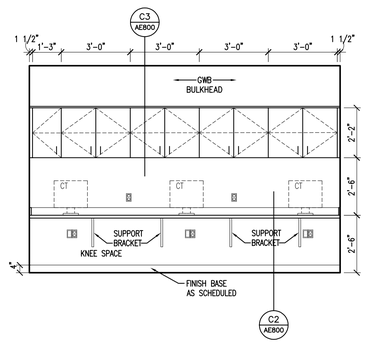

A5 WORKROOM 4565 EAST 3/8" = 1'-0"

DesignStrategies

Planning
Architecture
Interior Architecture
Landscape Architecture
Engineering

130 South Main Street
Greenville, SC 29601
T (864) 527-6500
F (864) 233-8385

STATE OF SOUTH CAROLINA
DESIGN STRATEGIES, LLC
GREENVILLE, SC
02019
REGISTERED ARCHITECT

REVISIONS

NO	DATE	DESCRIPTION
0	12.24.2020	ISSUED FOR BID

McLeod Health
The Choice for Medical Excellence.

SEACOAST HOSPITAL
50-BED ADDITION

LITTLE RIVER, SC

KEYPLAN

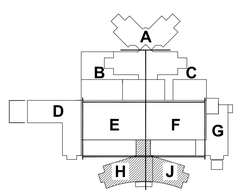

TRUE
NORTH

PROJECT NO: **0370.45**
DATE: **12.24.2020**
COPYRIGHT © 2020 **DesignStrategies, LLC**

CASEWORK ELEVATIONS

AE801

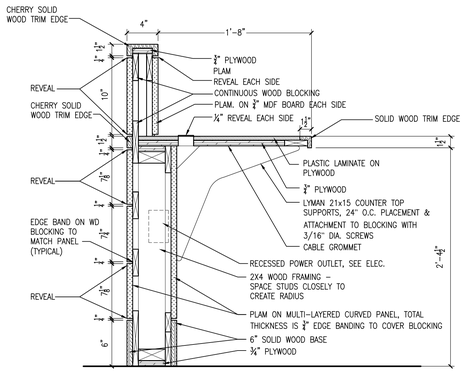

D1 SPECIAL MILLWORK SECTION 1 1/2" = 1'-0"

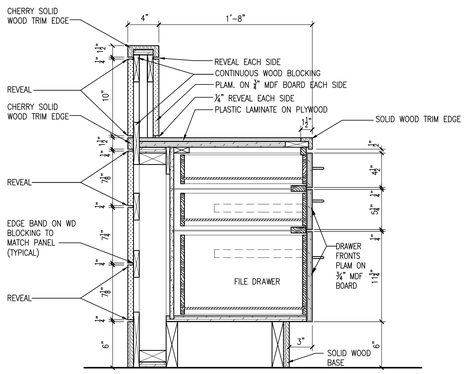

C1 SPECIAL MILLWORK SECTION 1 1/2" = 1'-0"

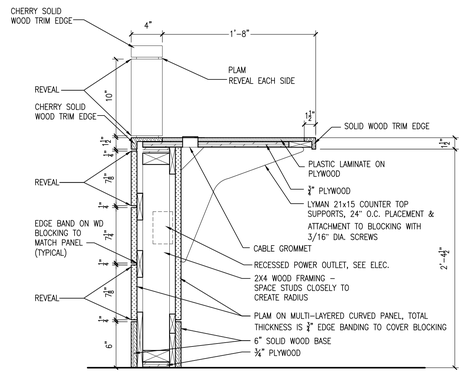

C2 SPECIAL MILLWORK SECTION 1 1/2" = 1'-0"

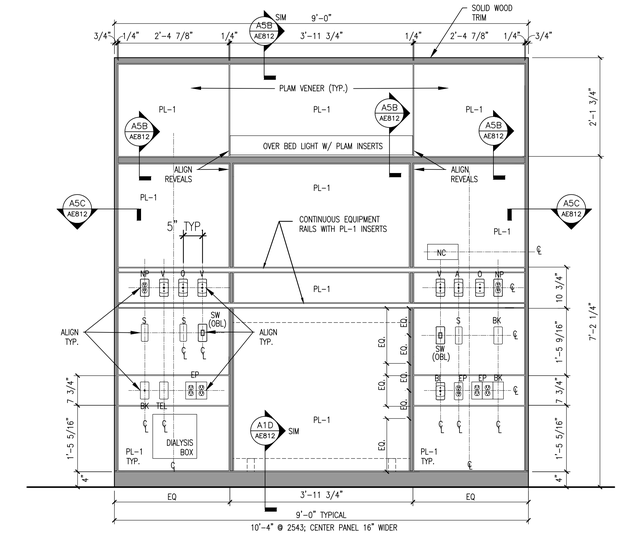

A = AIR
O = OXYGEN
S = SLIDE
V = VACUUM

CB = CODE BLUE
EP = EMERGENCY POWER
NC = NURSE CALL
NP = NORMAL POWER

NP/EP = QUAD – NORMAL & EMER. POWER
SW = SWITCH
T/D = TELE/DATA
BK = BLANK COVER W/CONDUIT TO CLNG. FOR FUTURE POWER OR DATA

C4 PATIENT ROOM HEADWALL W/ DIALYSIS (ROOMS 4516 AND 4517) 3/4" = 1'-0"

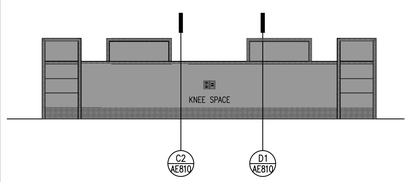

3/8" = 1'-0"

B1 SPECIAL MILLWORK ELEVATION

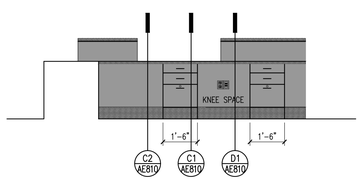

3/8" = 1'-0"

B2 SPECIAL MILLWORK ELEVATION

1 1/2" = 1'-0"

B3 SPECIAL MILLWORK SECTION

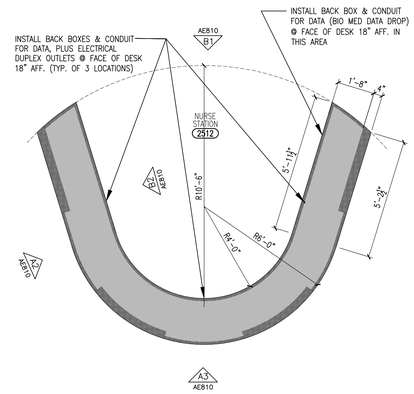

A1 SPECIAL MILLWORK PLAN 3/8" = 1'-0"

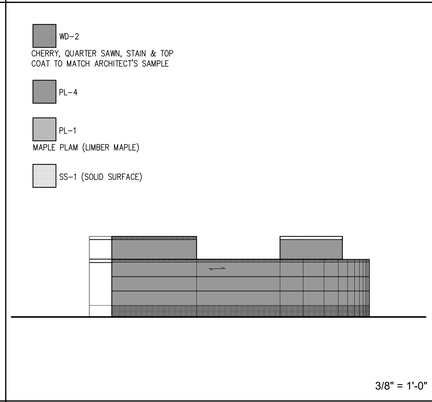

3/8" = 1'-0"

A2 SPECIAL MILLWORK ELEVATION

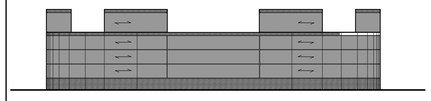

3/8" = 1'-0"

A3 SPECIAL MILLWORK ELEVATION

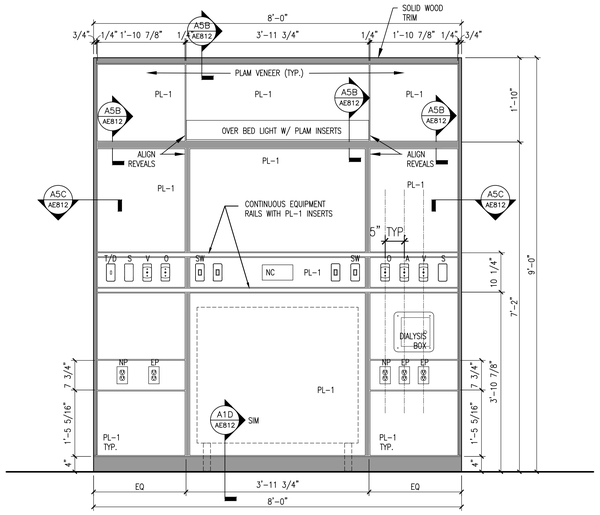

A = AIR
O = OXYGEN
S = SLIDE
V = VACUUM

CB = CODE BLUE
EP = EMERGENCY POWER
NC = NURSE CALL
NP = NORMAL POWER

NP/EP = QUAD – NORMAL & EMER. POWER
SW = SWITCH
T/D = TELE/DATA
BK = BLANK COVER W/CONDUIT TO CLNG. FOR FUTURE POWER OR DATA

A4 DIALYSIS HEADWALL (4568) 3/4" = 1'-0"

DesignStrategies
Planning
Architecture
Interior Architecture
Landscape Architecture
Engineering

130 South Main Street
Greenville, SC 29601
T (864) 527-6500
F (864) 233-8385

STATE OF SOUTH CAROLINA
DESIGN STRATEGIES, LLC
GREENVILLE, SC
02019
REGISTERED ARCHITECT

REVISIONS

NO	DATE	DESCRIPTION
0	12.24.2020	ISSUED FOR BID

McLeod Health
The Choice for Medical Excellence.

SEACOAST HOSPITAL
50-BED ADDITION

LITTLE RIVER, SC

KEYPLAN

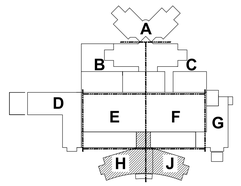

TRUE NORTH

0 4" 8" 1'-4"
SCALE: 1 1/2" = 1'-0"

PROJECT NO: 0370.45
DATE: 12.24.2020
COPYRIGHT © 2020 DesignStrategies, LLC

SPECIAL MILLWORK SECTIONS

AE810

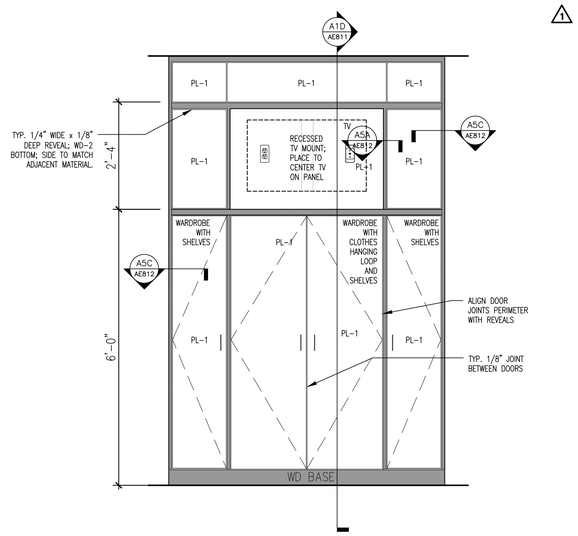

C1 PATIENT ROOM TV FOOTWALL ELEVATION 3/4" = 1'-0"

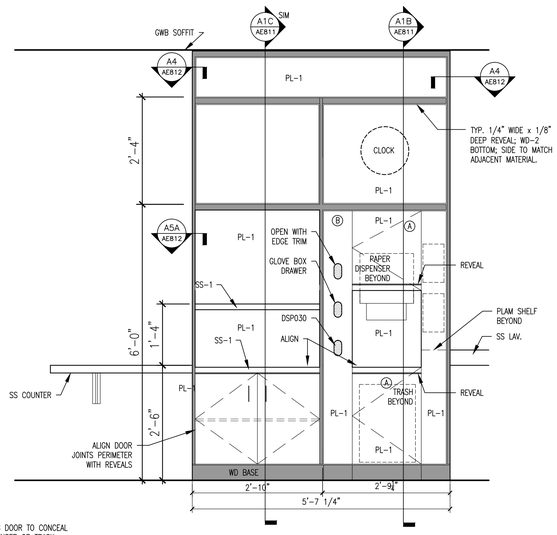

Ⓐ SWINGING DOOR TO CONCEAL PT DISPENSER OR TRASH; MAG CATCH & NO HANDLE

Ⓑ GLOVES DRAWER; SLIDES TOP & BOTTOM. SLOTS TO HOLD BOXES. DRAWER HOLES IN FRONT FOR ACCESS. MAG. LATCH.

C2 PATIENT ROOM SIDEWALL ELEVATION 3/4" = 1'-0"

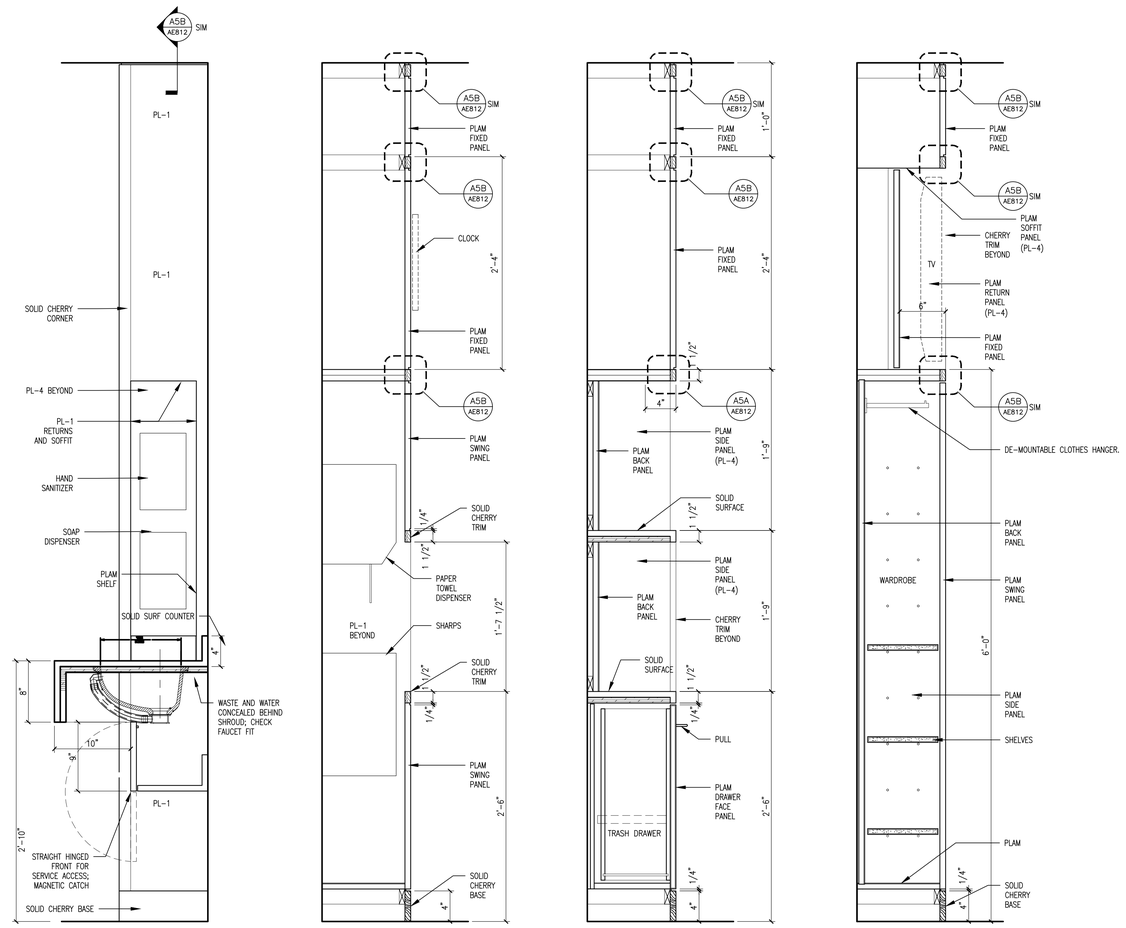

A1 SPECIAL MILLWORK SECTIONS 1 1/2" = 1'-0"

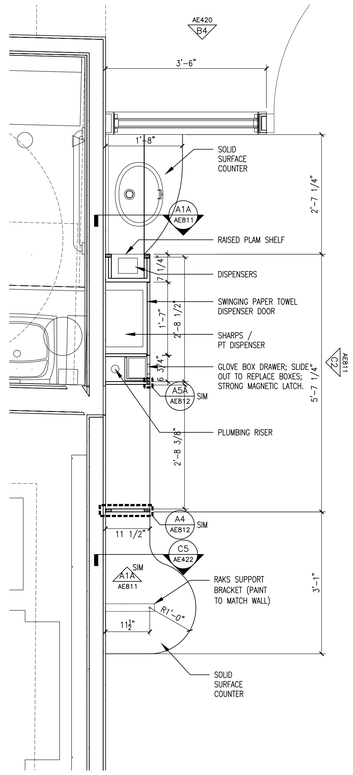

B4 ENLARGED PLAN DETAIL 3/4" = 1'-0"

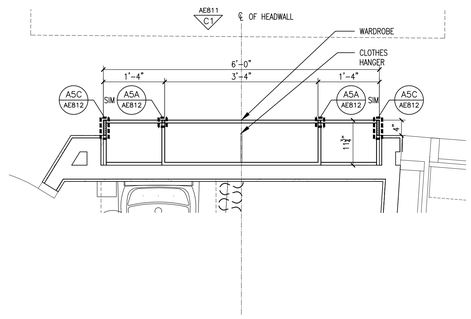

A4 ENLARGED PLAN DETAIL 3/4" = 1'-0"

DesignStrategies

Planning
Architecture
Interior Architecture
Landscape Architecture
Engineering

130 South Main Street
Greenville, SC 29601
T (864) 527-6500
F (864) 233-8385

STATE OF SOUTH CAROLINA
DESIGN STRATEGIES, LLC
GREENVILLE, SC
02019
REGISTERED ARCHITECT

REVISIONS

NO	DATE	DESCRIPTION
0	12.24.2020	ISSUED FOR BID

McLeod Health
The Choice for Medical Excellence.

SEACOAST HOSPITAL
50-BED ADDITION

LITTLE RIVER, SC

KEYPLAN

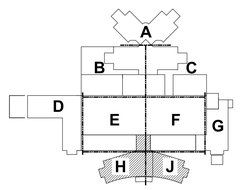

TRUE NORTH

0 4" 8" 1'-4"
SCALE: 1 1/2" = 1'-0"

PROJECT NO: 0370.45
DATE: 12.24.2020
COPYRIGHT © 2020 DesignStrategies, LLC

SPECIAL MILLWORK
ENLARGED PLANS
ELEVATIONS
DETAILS

AE811

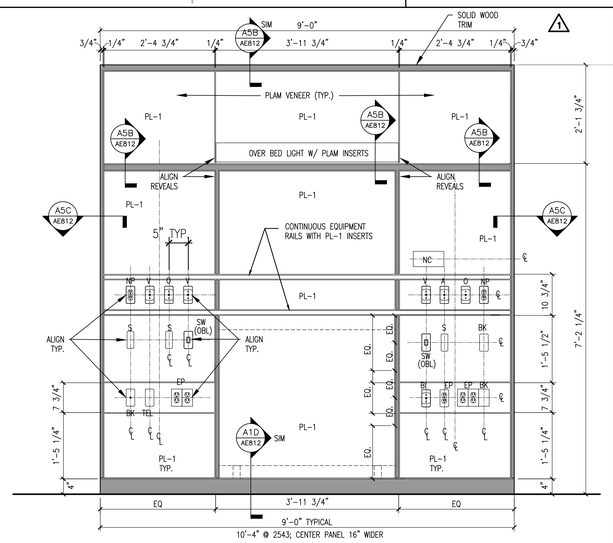

A = AIR
O = OXYGEN
S = SLIDE
V = VACUUM

CB = CODE BLUE
EP = EMERGENCY POWER
NC = NURSE CALL
NP = NORMAL POWER

NP/EP = QUAD – NORMAL & EMER. POWER
SW = SWITCH
T/D = TELE/DATA
BK = BLANK COVER W/CONDUIT TO CLNG. FOR FUTURE POWER OR DATA

C1 PATIENT ROOM HEADWALL ELEVATION

3/4" = 1'-0"

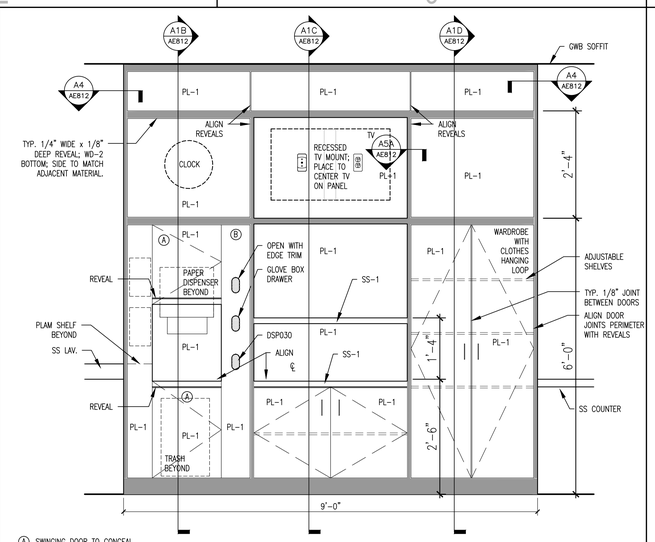

Ⓐ SWINGING DOOR TO CONCEAL PT DISPENSER OR TRASH; MAG CATCH & NO HANDLE

Ⓑ GLOVES DRAWER; SLIDES TOP & BOTTOM. SLOTS TO HOLD BOXES, DRAWER HOLES IN FRONT FOR ACCESS. MAG. LATCH.

C2 PATIENT ROOM FOOTWALL ELEVATION

3/4" = 1'-0"

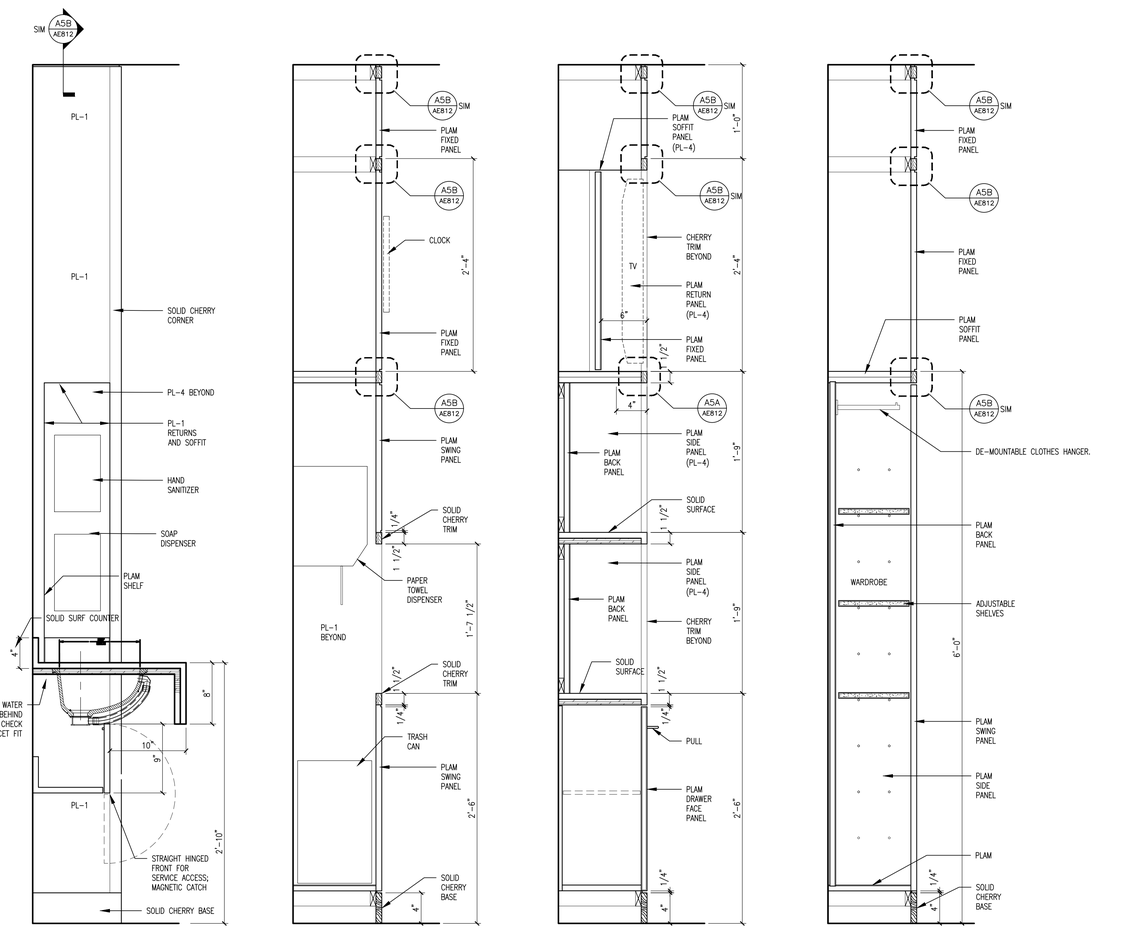

A1 SPECIAL MILLWORK SECTIONS

1 1/2" = 1'-0"

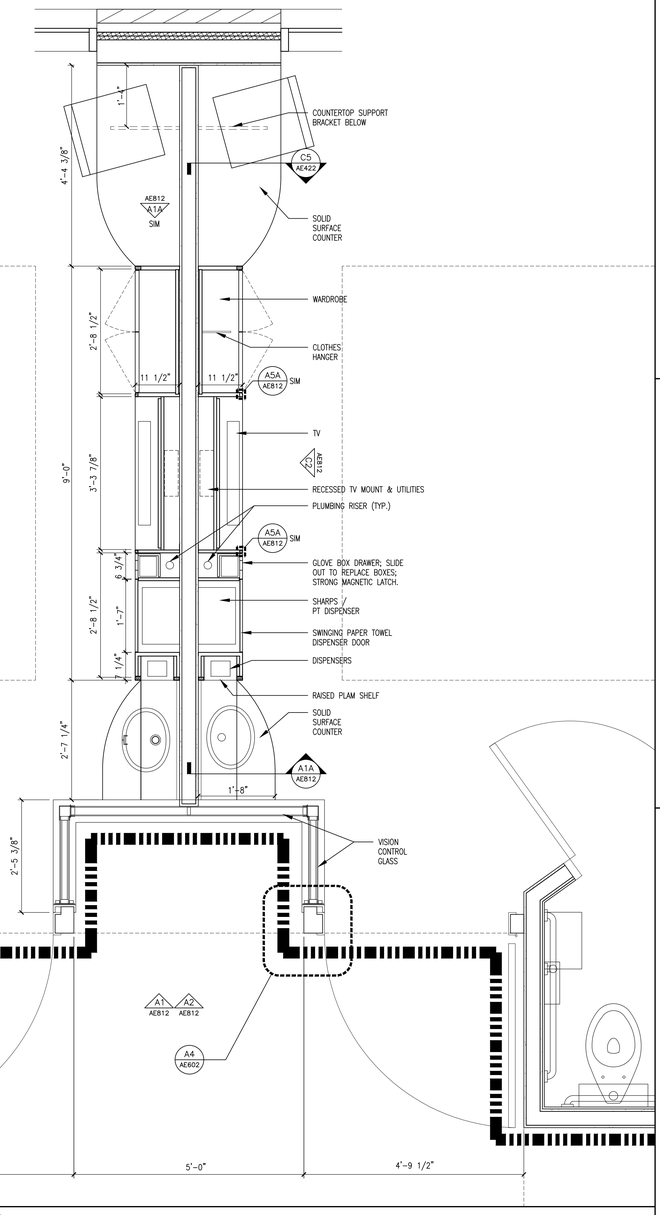

B4 ENLARGED PLAN DETAIL

3/4" = 1'-0"

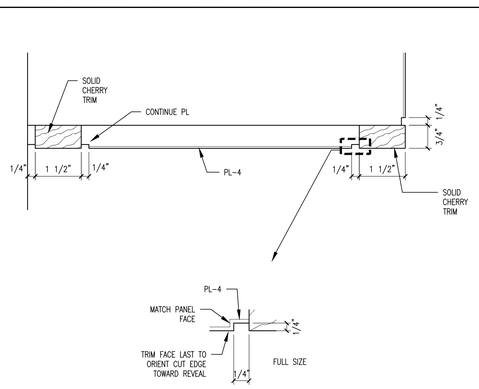

A4 TRIM DETAIL

6" = 1'-0"

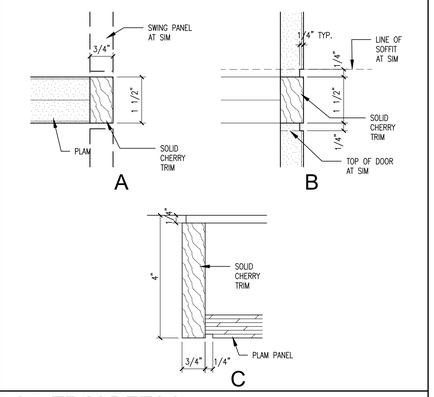

A5 TRIM DETAIL

6" = 1'-0"

DesignStrategies

Planning
Architecture
Interior Architecture
Landscape Architecture
Engineering

130 South Main Street
Greenville, SC 29601
T (864) 527-6500
F (864) 233-8385

STATE OF SOUTH CAROLINA
DESIGN STRATEGIES, LLC
GREENVILLE, SC
02019
REGISTERED ARCHITECT

REVISIONS

NO	DATE	DESCRIPTION
0	12.24.2020	ISSUED FOR BID

McLeod Health
The Choice for Medical Excellence.

SEACOAST HOSPITAL 50-BED ADDITION

LITTLE RIVER, SC

KEYPLAN

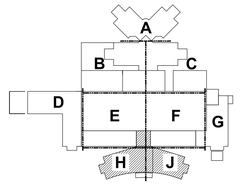

TRUE NORTH

0 4" 8" 1'-4"
SCALE: 1 1/2" = 1'-0"

PROJECT NO: 0370.45
DATE: 12.24.2020

COPYRIGHT © 2020 DesignStrategies, LLC

SPECIAL MILLWORK ENLARGED PLANS ELEVATIONS, AND DETAILS

AE812

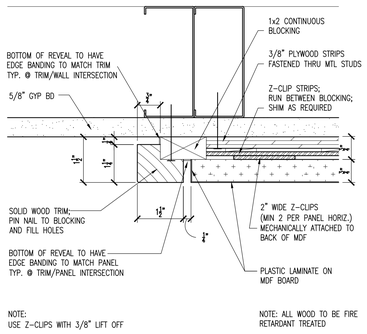

D1 PANELING PLAN DETAIL 6" = 1'-0"

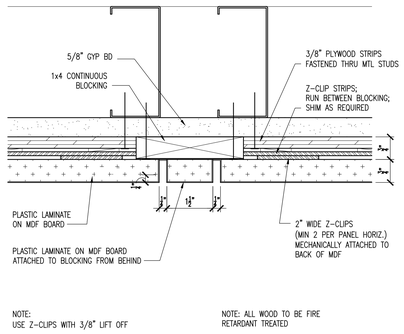

D2 PANELING PLAN DETAIL 6" = 1'-0"

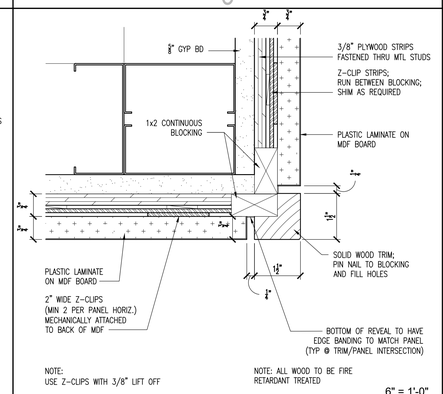

D3 OUTSIDE CORNER PLAN DETAIL 6" = 1'-0"

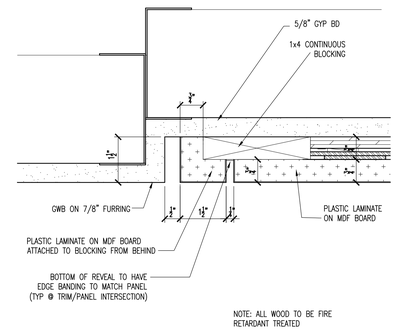

D4 PANELING PLAN DETAIL 6" = 1'-0"

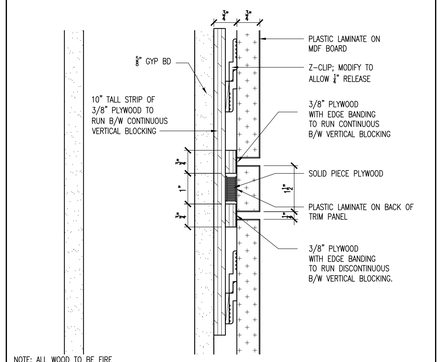

C1 HORIZ. TRIM SECTION DETAIL 6" = 1'-0"

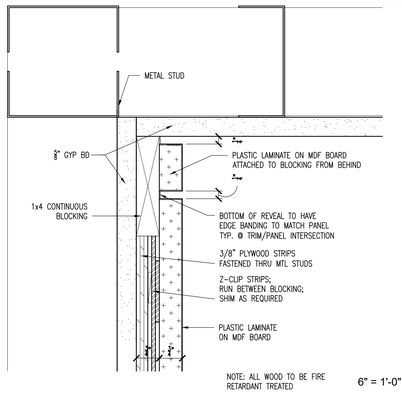

C2 INSIDE CORNER PLAN DETAIL 6" = 1'-0"

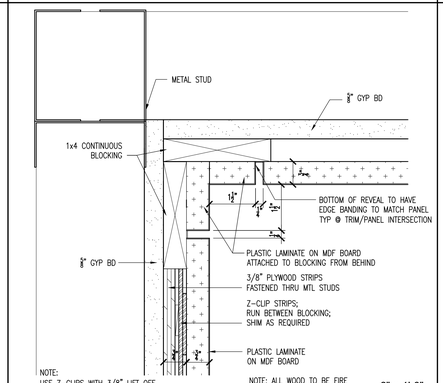

C3 INSIDE CORNER PLAN DETAIL 6" = 1'-0"

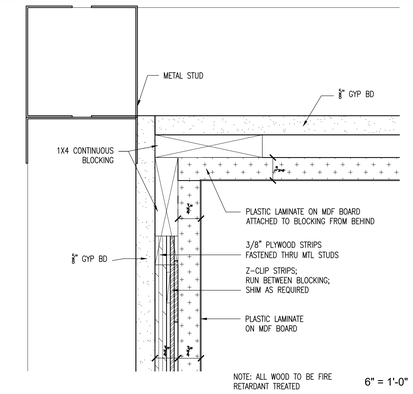

C4 INSIDE CORNER PLAN DETAIL 6" = 1'-0"

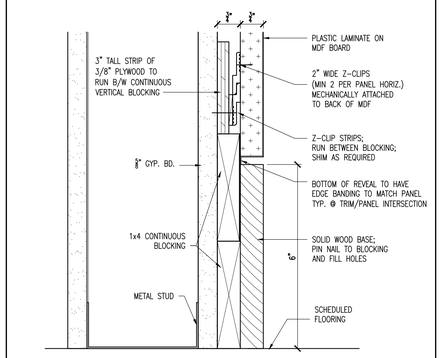

B1 SOLID WOOD BASE DETAIL 6" = 1'-0"

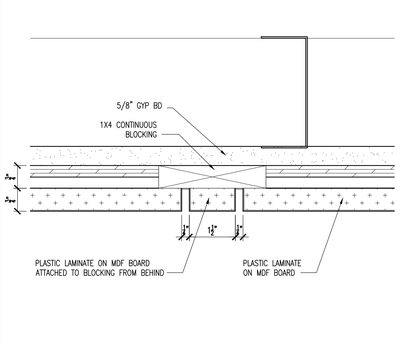

B2 P.LAM. SOFFIT SECTION DETAIL

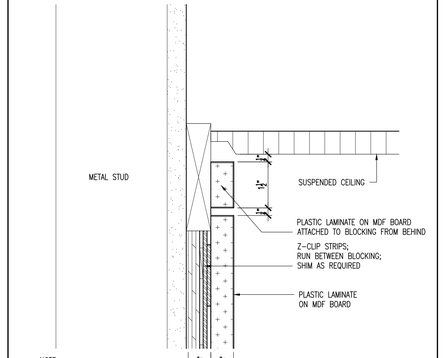

B3 PANELING TRIM DETAIL AT A.P.C. 6" = 1'-0"

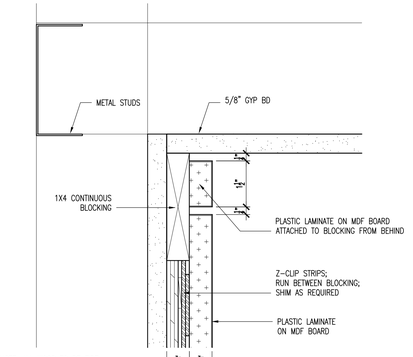

B4 TRIM DETAIL AT GYP. BD. CEILING 6" = 1'-0"

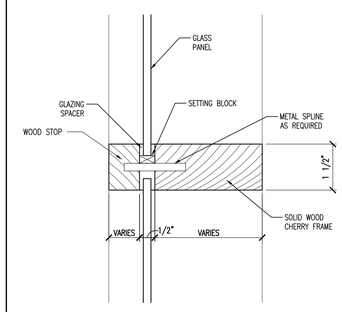

6" = 1'-0"

A1 HORIZONTAL WOOD MULLION DET.

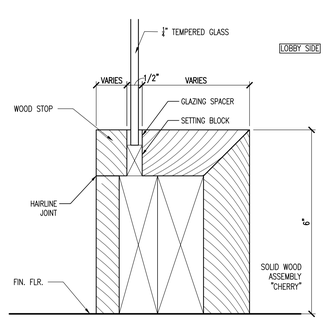

6" = 1'-0"

A2 WOOD FRAME BASE DETAIL

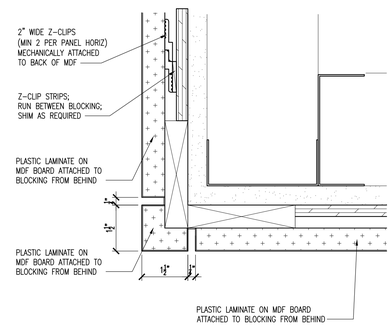

A3 OUTSIDE CORNER BULKHEAD DET.

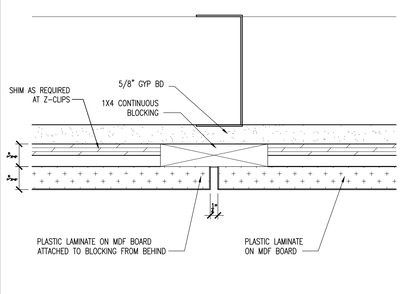

A4 PLAN DET. AT WALL PANELS 6" = 1'-0"

A5 NOT USED

1 2 3 4 5

DesignStrategies
Planning
Architecture
Interior Architecture
Landscape Architecture
Engineering

130 South Main Street
Greenville, SC 29601
T (864) 527-6500
F (864) 233-8385

STATE OF SOUTH CAROLINA
DESIGN STRATEGIES, LLC
GREENVILLE, SC
02019
REGISTERED ARCHITECT

REVISIONS

NO	DATE	DESCRIPTION
0	12.24.2020	ISSUED FOR BID

McLeod Health
The Choice for Medical Excellence.

SEACOAST HOSPITAL
50-BED ADDITION

LITTLE RIVER, SC

KEYPLAN

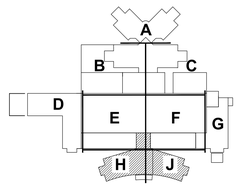

TRUE NORTH TRUE NORTH

PROJECT NO: **0370.45**
DATE: **12.24.2020**
COPYRIGHT © 2020 **DesignStrategies, LLC**

INTERIOR DETAILS

AE814



B1 LEVEL 4 FURNITURE FLOOR PLAN - ZONE H

1/8" = 1'-0"

DesignStrategies

Planning
Architecture
Interior Architecture
Landscape Architecture
Engineering

130 South Main Street
Greenville, SC 29601
T (864) 527-6500
F (864) 233-8385

STATE OF SOUTH CAROLINA
DESIGN STRATEGIES, LLC
GREENVILLE, SC
02019
REGISTERED ARCHITECT

REVISIONS

NO	DATE	DESCRIPTION
0	12.24.2020	ISSUED FOR BID

McLeod Health
The Choice for Medical Excellence.

SEACOAST HOSPITAL
50-BED ADDITION

LITTLE RIVER, SC

KEYPLAN

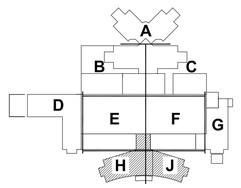

PLAN NORTH
TRUE NORTH

0 4' 8' 16'
SCALE: 1/8" = 1'-0"

PROJECT NO: **0370.45**
DATE: **12.24.2020**
COPYRIGHT © 2020 **DesignStrategies, LLC**

LEVEL 4 FURNITURE FLOOR PLAN - ZONE H

IF104H



B1 LEVEL 2 FURNITURE FLOOR PLAN - ZONE J

1/8" = 1'-0"

DesignStrategies

Planning
Architecture
Interior Architecture
Landscape Architecture
Engineering

130 South Main Street
Greenville, SC 29601
T (864) 527-6500
F (864) 233-8385

STATE OF SOUTH CAROLINA
DESIGN STRATEGIES, LLC
GREENVILLE, SC
02019
REGISTERED ARCHITECT

REVISIONS

NO	DATE	DESCRIPTION
0	12.24.2020	ISSUED FOR BID

McLeod Health
The Choice for Medical Excellence.

SEACOAST HOSPITAL
50-BED ADDITION

LITTLE RIVER, SC

KEYPLAN

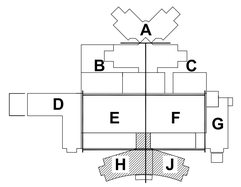

PLAN NORTH
TRUE NORTH

0 4' 8' 16'
SCALE: 1/8" = 1'-0"

PROJECT NO: **0370.45**
DATE: **12.24.2020**
COPYRIGHT © 2020 **DesignStrategies, LLC**

LEVEL 2 FURNITURE FLOOR PLAN - ZONE J

IF102J

COLOR FINISH SCHEDULE

HATCH	TAG	MANUFACTURER	PATTERN / STYLE	COLOR / PATTERN	SIZE	REMARKS
SECTION 057500 - DEORATIVE FORMED METAL						
SECTION 064023 - INTERIOR ARCHITECTURAL WOODWORK						
WD (WOOD VENEER & SOLIDS)						
	WD-1	Wood Species: Maple	Veneer Panels and Solids		Varies	As specified by architect See elevations and millwork drawings for wood accent wall locations
	WD-2	Wood Species: Cherry	Veneer Panels and Solids		Varies	As specified by architect See elevations and millwork drawings for wood accent wall locations
SECTION 064116 - PLASTIC LAMINATE FACED ARCHITECTURAL CABINETS						
PL (PLASTIC LAMINATE)						
	PL-1	Wilsonart		Limber Maple - 10734-60 Matte finish		Backsplash Detail: Refer To Drawings
	PL-2	Wilsonart		Natural Almond - D30-60 Textured finish		Backsplash Detail: Refer To Drawings
	PL-3	Formica		Fossil - 5349-58 Matte finish		
	PL-4	Wilsonart		Amber Cherry 7919K-78		
	PL-5	Pionite		Wheat Fiber AT991 Suede finish		
NOT USED	PL-6	Wilsonart		Wallaby D43960 Matte finish		
SECTION 064219 - PLASTIC LAMINATE FACED WOOD PANELING						
PL (PLASTIC LAMINATE)						
	PL-1	Wilsonart		Limber Maple - 10734-60 Matte finish		
	PL-4	Wilsonart		Amber Cherry 7919K-78		
SECTION 066400 - PLASTIC PANELING						
FRP (FIBER-REINFORCED PLASTIC PANELING)						
	FRP-1	Nudo	Fiber-reinforced plastic	Almond	Full Height	As specified by architect and shown on Wall Finish Plan.
SECTION 079200 - JOINT SEALANTS						
JS (JOINT SEALANTS)						
	JS-1					As specified by architect See elevations and millwork drawings for wood accent wall locations
SECTION 081113 - HOLLOW METAL DOORS AND FRAMES						
HMD (HOLLOW METAL DOORS/FRAMES)						
	HMD-1					
SECTION 081416 - FLUSH WOOD DOORS						
FWD (FLUSH WOOD DOORS)						
	FWD-1		Species: Grade A A rotary cut white Maple veneer			
SECTION 084113 - ALUMINUM FRAME ENTRANCES						
AFE (ALUMINUM FRAME ENTRANCES)						
	AFE-1					
SECTION 083213 - SIDING ALUMINUM FRAMED GLASS DOORS						
SAF (SIDING ALUMINUM FRAMED)						
	SAF-1					
SECTION 084243 - ICU/CCU ENTRANCES						
SD (SLIDING DOOR)						
	SD-1	BESAM	VersaMax			

TAG	DEVICE	MANUFACTURER	COLOR / PATTERN	REMARKS
SECTION 090512 - MISCELLANEOUS DEVICE COLOR SCHEDULE				
	Magnetic Hold Open		Brushed Stainless	
	Touchless Handwave sensor		WHITE	
	Proximity Door swing sensor		WHITE	
	F.A Pull Station		RED	
	F.A. Strobe		WHITE	
	Exit Light		RED Letters, Clear Housing, White Accessory box.	
	Receptacles and switches **		WHITE	Unless required to be red or orange by regulation.
	Switchplates **		WHITE	Unless required to be red or orange by regulation.
	Differential Pressure Sensors		WHITE	
	Thermostat / Temp Sensor		WHITE	
	Grilles / Diffusers		WHITE	
	Chilled Beams		WHITE	
			WHITE	
	Med Gas Outlets		COLOR CODED	Plate surrounding outlet shall be smallest available. Color shall be white or grey as selected by architect. Provide per NFPA 99C
	Zone Valve Boxes		WHITE	CABINET FRAME
	Med Gas Alarms		WHITE	CABINET FRAME
	Area Alarms		WHITE	CABINET FRAME
	Master Alarms		WHITE	CABINET FRAME
	Sprinkler Heads - Concealed		WHITE	COVER PLATES
	Sprinkler Heads -Concealed in Wood Ceiling		Factory painted to match Wilsonart Limber Maple 10734-60	
	N.C. Dome Light		WHITE	
	N.C. Stations		WHITE	
	Telemetry Antennae		WHITE	
	Proximity Door Sensor		WHITE	
	Data and Telephone Outlets		WHITE	
	Sound System Speakers		WHITE	
	Volume Switch		WHITE	
	Intercom		WHITE	
	Key Pad		WHITE	
	Any item not listed on schedule		WHITE	
	All Exposed Cords		WHITE	

HATCH	TAG	MANUFACTURER	PATTERN / STYLE	COLOR / PATTERN	SIZE	REMARKS
SECTION 096519 - RESILIENT TILE FLOORING						
MCT (MARMOLEUM COMPOSITION TILE)						
NOT USED	MCT-1	Forbo	Marmoleum Composition Tile	White Marble MCT-607	13" x 13"	FIELD
NOT USED	MCT-2	Forbo	Marmoleum Composition Tile	Shell MCT-3075	13" x 13"	BORDER
NOT USED	MCT-3	Forbo	Marmoleum Composition Tile	Rosato MCT-3120	13" x 13"	INSERT
NOT USED	MCT-4	Forbo	Marmoleum Composition Tile	Azzurro MCT-3134	13" x 13"	ACCENT TO BE SELECTED BY ARCHITECT
NOT USED	MCT-5	Forbo	Marmoleum Composition Tile	Rust MCT-767	13" x 13"	ACCENT

A1 COLOR FINISH SCHEDULE

COLOR FINISH SCHEDULE

HATCH	TAG	MANUFACTURER	PATTERN / STYLE	COLOR / PATTERN	SIZE	REMARKS
SECTION 09300 - TILING						
CTB (CERAMIC TILE BASE)						
NOT USED	CTB-1	DALTILE	DIAMANTE S-44C9	CREMA P022 POLISHED	4" X 12"	GROUT: LATRICRETE SPECTRA LOCK PRO COLOR: 23 ANTIQUE WHITE JOINT: 1/16"
	CTB-2	DALTILE	DIAMANTE S-36C9TB	CREMA	6" X 12"	GROUT: LATRICRETE SPECTRA LOCK PRO COLOR: 23 ANTIQUE WHITE JOINT: 1/16"
NOT USED	CTB-3	DALTILE	UNITY UNPOLISHED S-36C9T	BEIGE P401	6" X 12"	GROUT: LATRICRETE SPECTRA LOCK PRO COLOR: 23 ANTIQUE WHITE JOINT: 1/16"
CTF (CERAMIC TILE FLOOR)						
	CTF-1	DALTILE	DIAMANTE	CREMA P022 UNPOLISHED	12" X 12"	GROUT: LATRICRETE SPECTRA LOCK PRO COLOR: 23 ANTIQUE WHITE JOINT: 1/8"
	CTF-2	DALTILE	DIAMANTE	GHIACCIO P026 UNPOLISHED	12" X 12"	GROUT: LATRICRETE SPECTRA LOCK PRO COLOR: 23 ANTIQUE WHITE JOINT: 1/8"
NOT USED	CTF-3	DALTILE	DIAMANTE	CREMA P022	12" X 12"	GROUT: LATRICRETE SPECTRA LOCK PRO COLOR: 23 ANTIQUE WHITE JOINT: 1/8"
NOT USED	CTF-4	DALTILE	COLOR BODY PORCELAIN	PORCELATO AGEAN CD47	12" X 12"	GROUT: LATRICRETE SPECTRA LOCK PRO COLOR: 23 ANTIQUE WHITE JOINT: 1/8"
NOT USED	CTF-5	DALTILE	KEYSTONE	ALMOND D335	2" X 2" OR 3" X 3"	GROUT: LATRICRETE SPECTRA LOCK PRO COLOR: 23 ANTIQUE WHITE JOINT: 1/8"
	CTF-6	DALTILE	UNITY UNPOLISHED	BEIGE P401	12" X 12"	GROUT: LATRICRETE SPECTRA LOCK PRO COLOR: 39 MUSHROOM JOINT: 1/8"
NOT USED	CTF-7	DALTILE	QUARRY TILE	#0Q40 RED BLAZE	6"X6"	CONVENTIONAL (SET-ON) BULLNOSE TRIM TO MATCH CUSTOM POLYBLEND EPOXY GROUT GROUT COLOR: #50 NUTMEG
CTW (CERAMIC TILE WALLS)						
	CTW-1	DALTILE	SEMI-GLOSS WALL TILE	SPA 0148	4¼" X 4¼"	GROUT: LATRICRETE SPECTRA LOCK PRO COLOR: 50 SEA GLASS JOINT: 1/16"
	CTW-2	DALTILE	SEMI-GLOSS WALL TILE	FIRE BRICK Q093	4¼" X 4¼"	GROUT: LATRICRETE SPECTRA LOCK PRO COLOR: SEA GLASS WHEN USED AS ACCENT WITH SPA TILE JOINT: 1/16"
	CTW-3	DALTILE	SEMI-GLOSS WALL TILE	ALMOND K165	4¼" X 4¼"	GROUT: LATRICRETE SPECTRA LOCK PRO COLOR: 85 ALMOND JOINT: 1/16"
	CTW-4	DALTILE	DIAMANTE	CREMA P022 POLISHED	12" X 12"	GROUT: LATRICRETE SPECTRA LOCK PRO COLOR: 23 ANTIQUE WHITE JOINT: 1/16"
NOT USED	CTW-5	DALTILE	UNITY POLISHED	BEIGE P401	12" X 12"	GROUT: LATRICRETE SPECTRA LOCK PRO COLOR: 39 MUSHROOM JOINT: 1/16" ; BULLNOSE TILE AT GWB TRANSITION
SECTION 096500 – RESILIENT FLOORING						
RST (RUBBER STAIR TREAD AND RISERS)						
NOT USED	RST-1	Nora Systems, Inc.	Norament Hammered Stairtreads	Vanilla Cream 2685	19.88 x 19.88	One-piece nosing, tread and riser
RLT (RUBBER LANDING TILE)						
NOT USED	RLT-1	Nora Systems, Inc.	Norament Hammered Article: 1910	Vanilla Cream 2685	19.88 x 19.88	Landing Tile
NOT USED	RLT-2	Nora Systems, Inc.	Norament Hammered Article: 1910	Cape Ann 2079	19.88 x 19.88	
SECTION 096513 - RESILIENT BASE AND ACCESSORIES						
CP (COVE CAP)						
NOT USED	CP-1	Johnsonite	Style: SCC-22B	Color: 22 Pearl		
RB (RUBBER BASE)						
	RB-1	Johnsonite	Continuous Cove Rubber	Bone White 79	Height 4" Gauge1/8"	
	RB-2	Johnsonite	Straight Rubber Wall Base	123 Mineral Springs	Height 6" Gauge1/8"	**PAIR WITH MILLWORK PL-3.**
	RB-3	Johnsonite	Continuous Cove Rubber Wall Base	Bone White 79	Height 6" Gauge1/8"	All corridors and open spaces contiguous to corridors
	RB-4	Johnsonite	Continuous Cove Rubber Wall Base	130 Sisal	Height 4" Gauge1/8"	
	RB-5	Johnsonite	Straight Rubber Wall Base	130 Sisal	Height 4" Gauge1/8"	**PAIR WITH MILLWORK PL-1.**
	RB-6	Johnsonite	Continuous Cove Rubber Wall Base	130 Sisal	Height 6" Gauge1/8"	
	RB-7	Johnsonite	Continuous Cove Rubber Wall Base	259 Terra Firma	Height 6" or 4" Gauge1/8"	**PAIR WITH MILLWORK PL-4.**
	RB-8	Johnsonite	Continuous Cove Rubber Wall Base	123 Mineral Springs	Height 4" Gauge1/8"	**PAIR WITH MILLWORK PL-3**
TS (TRANSITION STRIP)						
	TS-1	Johnsonite	Style: CTA-22-A	Color: 22 Pearl	Size: 1/4" (Carpet) to 1/8" (Floor)	
	TS-2	Johnsonite	Style: CTA-22-A	Color:	Size: 1/4" (Carpet) to 1/8" (Floor)	
SECTION 096516 - RESILIENT SHEET FLOORING						
HWSV (HEAT WELDED SHEET VINYL)						
	HWSV-1	Armstrong	Medintone	Natural White H8311	Roll Width: 6' to 7' W	FIELD Weld Rod: WM311 SOLID
NOT USED	HWSV-2	Armstrong	Medintech	Sandalwood 88450	Roll Width: 6' to 7' W	BORDER Weld Rod: WM450 SOLID
NOT USED	HWSV-3	Armstrong	Medintech	Brushed Sand 88497	Roll Width: 6' to 7' W	INSERT Weld Rod: WM497 SOLID
NOT USED	HWSV-4	Armstrong	Medintone	Woodland Blue H8357	Roll Width: 6' to 7' W	ACCENT Weld Rod: WM357 SOLID
	HWSV-5	Toli	Mature Wood	771	Roll Width: 6'W x 66'L	ACCENT Weld Rod: to match color 771 SOLID
NOT USED	HWSV-6	Armstrong	Medintone	H8342 Terracotta	Roll Width: 6'W x 7'L	ACCENT Weld Rod: to match color WM342
SECTION 096516.13 - LINOLEUM FLOORING						
LIN (LINOLEUM)						
	LIN-1	Forbo	Real	White Marble 2607	Roll Width: 79"	FIELD Weld Rod Color: 2607 SOLID
	LIN-2	Forbo	Real	Tan Pink 3077	Roll Width: 79"	BORDER Weld Rod Color: 3077 SOLID
	LIN-3	Forbo	Real	Rosato 3120	Roll Width: 79"	INSERT Weld Rod Color: 3120 SOLID
	LIN-4	Armstrong	Marmorette (LINO ART)	Tidal Blue LS099	Roll Width: 79" W	ACCENT Weld Rod Color: W1799 Blue Cove
	LIN-5	Forbo	Real	Indian Summer 3164	Roll Width: 79"	ACCENT Weld Rod Color:
SECTION 094020 - EPOXY TERRAZZO FLOORING						
TZ (TERRAZZO)						
	TZ-1	TERRAZZCO		083115XT01A		ACCENT 1
NOT USED	TZ-2	TERRAZZCO		051115XT02A		FIELD
NOT USED	TZ-3	TERAAZZCO		051115XT01A		BAND
NOT USED	TZ-4	TERRAZZCO		042715XT03B		INSERT
NOT USED	TZ-5	TERRAZZCO		042715XT06		ACCENT 2

CRACK SUPPRESION MEMBRANE SHALL BE USED AT ALL CRACKS AND WHERE CONCRETE CONTROL JOINTS DO NOT ALIGN WITH TERRAZZO PATTERN.

COLOR FINISH SCHEDULE

HATCH	TAG	MANUFACTURER	PATTERN / STYLE	COLOR / PATTERN	SIZE	REMARKS
SECTION 096519 - RESILIENT TILE FLOORING (CONTINUED)						
VCT (VINYL COMPOSITE TILE)						
	VCT-1	Armstrong	Standard Excelon	Antique White 51811	12" x 12" Gauge: 1/8"	FIELD TILE
NOT USED	VCT-2	Mannington	Designer Essentials	Wheat 123	12" x 12" Gauge: 1/8"	ACCENT TILE
NOT USED	VCT-3	Mannington	Designer Essentials	Almond Buff 167	12" x 12" Gauge: 1/8"	ACCENT TILE
NOT USED	VCT-4	Armstrong	Standard Excelon	Colorado Stone 57506	12" x 12" Gauge: 1/8"	ACCENT TILE
SECTION 096813 - TILE CARPETING						
CPTT (CARPET TILE)						
	CPTT-1	Interface Flor	Kamala Ni	1663302500 Color: Otera 2700	50cm x 50cm	FIELD TILE - ****STANDARD OPTION 100 YARD MINIMUM ORDER** Installation: Quarter-turned with tac-tiles
NOT USED	CPTT-2	Interface Flor	Nikko Ni	1663202500 Color: 2600 Otera	50cm x 50cm	ACCENT TILE Installation: Quarter-turned with tac-tiles
NOT USED	CPTT-3	Interface Flor	Viva Colores			ACCENT TILE
	CPTT-4	Interface Flor	Viva Colores	146500250H Color: Azul Verdoso	50cm x 50cm	ACCENT TILE Installation: Quarter-turned with Tac Tiles
NOT USED	CPTT-5	Interface Flor	Viva Colores	146500250H Color: 101162 Mandarina	50cm x 50cm	ACCENT TILE Installation: Quarter-turned with Tac Tiles
NOT USED	WOM-1	Forbo				
NOT USED	WOM-2	Interface Flor	Super Flor 6090002504	Berber Beige 603092	50cm x 50cm	Installation: Parquet 1 (quarter-turned)
NOT USED	WOM-3	Interface Flor	Super Flor 6090002504	Mediterranean 609153	50cm x 50cm	Installation: Parquet 1 (quarter-turned)
SECTION 097060 – POLYURETHANE COATED RESINOUS FLOORING						
FAEB (FLUID APPLIED EPOXY BASE)						
	FAEB-1	Stonhard	StonShield SLT	Custom: XIII-CS-65C	3" ±	Texture: Medium
FAEF (FLUID APPLIED EPOXY FLOOR)						
	FAEF-1	Stonhard	StonShield SLT 2mm	Custom: XIII-CS-65C		Texture: Medium
SECTION 099123 - INTERIOR PAINTING						
P (PAINT)						
	P-1	Sherwin Williams to match Benjamin Moore	MRMC STANDARD	Barbados Sand SW1094		
	P-2	Sherwin Williams	MRMC STANDARD	Rainwashed SW6211		
NOT USED	P-3	Sherwin Williams	MRMC STANDARD	Sleepy Blue SW6225		
NOT USED	P-4	Sherwin Williams	MRMC STANDARD	Icy SW6534		
NOT USED	P-5	Sherwin Williams	MRMC STANDARD			
	P-6	Sherwin Williams	MRMC STANDARD	Meditative SW6227		
	P-7	Sherwin Williams	MRMC STANDARD	Solitude SW6535		
	P-8	Sherwin Williams	MRMC STANDARD	Underseas SW6214		
NOT USED	P-9	Sherwin Williams	MRMC STANDARD	Refuge SW6228		
NOT USED	P-10	Sherwin Williams	MRMC STANDARD	Searching Blue SW653		
	P-11	Sherwin Williams	MRMC STANDARD	Pearly White SW7009		Hollow metal door frames not in wood surrounds
	P-12	Sherwin Williams to match ICI	MRMC STANDARD	Egret 39YY 85/046 #A0052		GWB ceilings in Patient Toilets and heads on specific door frames.
	P-13	Sherwin Williams	MRMC STANDARD	Totally Tan SW6115		Hollow metal door frames occurring in PL-1 shall be painted P-13 and sprinkler heads occurring in PL-1 features shall be factory finished to match P-13.
NOT USED	P-14	Sherwin Williams	MRMC STANDARD	To match existing door frame paint		
	P-15	Sherwin Williams to match ICI	MRMC STANDARD	Summer Porch 1155 30GG 46/052		
NOT USED	P-16	Sherwin Williams to match ICI	MRMC STANDARD	#A0517 Spanish Chestnut		Use in reveals with PL-4; hollow metal door frames occurring in PL-4 shall be painted P-16.
NOT USED	P-17	Sherwin Williams to match ICI	MRMC STANDARD	Pillar 40YY 67/087		
NOT USED	P-18	Benjamin Moore	MRMC STANDARD	*Kittery Point Green HC-119		
NOT USED	P-19	Benjamin Moore	MRMC STANDARD	Sherwood Green HC-118		
NOT USED	P-20	Sherwin Williams to match ICI	MRMC STANDARD	*Cosmic Crescent #50BB 26/105		
	P-X	TBD	TBD	TBD		Paint color to match exterior brick color.
SECTION 099300 - STAINING AND TRANSPARENT FINISHING						
WS (WOOD STAIN)						
	WS-1	Custom Stain		Color: Stain to match Wilsonart Limber Maple 10734-60		To be used with WD-1 Submit sample for architect review and approval
	WS-2	Custom Stain		Color: Stain as submitted by contractor to match PL-4		To be used with WD-2 Submit sample for architect review and approval
SECTION 098433 SOUND-ABSORBING WALL UNITS						
AWC (ACOUSTICAL WALL COVERING)						
	AWC-1	GUILFORD OF MAINE	FR 701, 2100	747 STRAW	66" WIDE	
SECTION 101900 - SHOWER CURTAIN						
SC (SHOWER CURTAIN)						
	SC-1	Herculite	Sure-Chek Linen	White		Shower Curtains are Contractor provided and installed.
SECTION 102600 - WALL AND DOOR PROTECTION						
BR (BUMPER RAIL)						
	BR-1	CS Acrovyn	Style: SCR-48MN	#933 Mission White		As specified by architect and shown on Wall Finish Plan.
CG (CORNER GUARD)						
	CG-A thru CG-F	Tri Guard	Style: Clear Lexan	Color: Back-painted to match adjacent wall color	2 1/2" W Full height	No predrilled holes. As specified by architect and shown on Wall Finish Plan. Contractor to field verify angles.
CR (CRASH RAIL)						
	CR-1	CS Acrovyn	Style: SCR-48MN	#933 Mission White		As specified by architect and shown on Wall Finish Plan.
HR (HAND RAIL)						
	HR-1	CS Acrovyn	Style: P-RWAN	#933 Mission White Wood: Maple Finish: Custom #571-W		As specified by architect and shown on Wall Finish Plan. Shall be mounted 38" to top of gripping surface.
WP (WALL PROTECTION)						
	WP-1	Inpro	Rigid sheet wall protection	Serenity 0166	0.080" thick	Trimless installation
	WP-2	CS Acrovyn	4000	#660 Sage Green, suede texture	0.075" thick	Trimless installation
SECTION 102123 - CUBICLES						
CC (CUBICLE CURTAIN)						
	CC-1	Clickkeze	Tudor	Color: Seagrass		Curtains are Contractor provided and installed.

COLOR FINISH SCHEDULE

HATCH	TAG	MANUFACTURER	PATTERN / STYLE	COLOR / PATTERN	SIZE	REMARKS
SECTION 102800 - TOILET, BATH AND LAUNDRY ACCESSORIES						
TA (TOILET ACCESSORIES)						
	TA-1	ASI	Model 3801-18W	Powder Coat White	1.5" Dia. x18"L	GRAB BAR
	TA-2	ASI	Model 3801-24W	Powder Coat White	1.5" Dia. x24"L	GRAB BAR
	TA-3	ASI	Model 3801-36W	Powder Coat White	1.5" Dia. x36"L	GRAB BAR
	TA-4	ASI	Model 3801-42W	Powder Coat White	1.5" Dia. x42"L	GRAB BAR
	TA-5	ASI	Model 3801-48W	Powder Coat White	1.5" Dia. x48"L	GRAB BAR
	TA-6	ASI	Model 3801-18W	Powder Coat White	1.5" Dia. x18"L	GRAB BAR
	TA-7	Health Craft Products	Model PT-WR32L-PCW	Powder Coat White	1-1/2" O.D x32"L	HINGED GRAB BAR- LEFT (FOLDING PT RAIL)
	TA-8	Health Craft Products	Model PT-WR32R-PCW	Powder Coat White	1-1/2" O.D x32"L	HINGED GRAB BAR- RIGHT (FOLDING PT RAIL)
	TA-9	T.B.D.				24" HAND SHOWER SLIDE BAR AND ACCESSORIES
			Model S-2252 Anystream Classic	Polished Chrome	2-3/4" Face	SHOWERHEAD
			VS-153-ADA	White	24"L	COMBINATION SLIDE BAR AND GRAB BAR
			VS-1000-AF-PC	Polished Chrome		VERSATILE SHOWER SYSTEM- HAND HELD
			S-2500	Polished Chrome	7" L	SHOWERARM AND FLANGE-REFER TO PLUMBING DRAWINGS FOR SPECIFICATIONS
	TA-10	Truebro	Model 2018-AS-L Am. Std. Lucerne	China White	16"W x 20"H x 6"-8"D	LAV SHIELD SINK PLUMBING SHROUD/LAVATORY PROTECTIVE ENCLOSURE-REFER TO PLUMBING DRAWINGS FOR SPECIFICATIONS
	TA-11	ASI	Model 8287	N/A	16"W x 40"H U.N.O.	FRAMELESS MIRROR. SIZE AS NOTED ON DRAWING
	TA-12	Gyford Productions LLC	Model SO-APC-100	Machined Aluminum with Satin Clear Anodized Finish	3/8"Hx 1" DIA.	PANEL MOUNT CLIPS
	TA-13	ASI	Model 8203-M22	White with black edges	Seat 22"W x 13.5"D	PHENOLIC FOLD UP SHOWER SEAT
	TA-14	NOT USED				
	TA-15	ASI	Model 0473-A	Stainless Steel		SANITARY NAPKIN DISPOSAL
	TA-16	InPro Corporation (IPC)	OptiTrack by Click Eze	White baked acrylic enamel finish		CURTAIN TRACK AND END CAPS
	TA-17	Steris		White/Clear		SOAP DISPENSER- SURFACE MOUNTED
	TA-18	Georgia Pacific	Model 56796	White/ Clear	10.1"W x 6.75"D x 7.12"H	COMPACT SIDE BY SIDE DBL ROLL TOILET TISSUE DISPENSER
	TA-19	Georgia Pacific	Model 59498	White/ Clear	13.2"W x 9.5"D x 13.1"H	PAPER TOWEL DISPENSER SURFACE MTD.
	TA-20	ASI	Model 7340-W	White Powder Coat	2"D x 2"H x 7/16"D	COAT HOOK/ SINGLE ROBE HOOK
	TA-21	Rubbermaid	Model 2806	White	14.5"D x11"W x18"H	WASTE RECEPTICLE
	TA-22	Cooper Lighting	Series 604	Matte White	24" or 36"L	OVER MIRROR LIGHT - REFER TO ELECTRICAL DRAWINGS FOR SPECIFICATIONS
	TA-23	Bobrick	B-239	Stainless steel	34"W x 8"D x 13"H	UTILITY SHELF W/ MOP/ BROOM HOLDERS AND RAG HOOKS
	TA-24	Mocket	SH17SSS	Stainless steel/Powdercoat	1¾"L x 1 3/8"Dia	SHELF SUPPORT BRACKET
	TA-25	Newport Brass	Alveston Style:13-33/50	White		HOTEL SHELF W/ TOWEL BAR
	TA-26	ASI	1204	Stainless steel		COAT ROD
	TA-27	T.B.D.				PPE BAG HOOK
SECTION 104413 - FIRE EXTINGUISHER CABINETS						
FEC (FIRE EXTINGUISHER CABINETS)						
	FEC-F	Larsen	Architectural Series, Semi-Recessed/firerated FS-2409-R4	Powdercoat White		
	FEC-R	Larsen	Architectural Series, trimless-fully recessed 2712-RT	Powdercoat White		
	FEC-S	Larsen	Architectural Series, semi-recessed 2712-RM	Powdercoat White		
	FEC-SM	Larsen	Architectural Series 2712-SM	Powdercoat White		
SECTION 105113 - METAL LOCKERS						
ML (METAL LOCKERS)						
NOT USED	ML-1	Penco	#6367V	T.B.D.		
SECTION 122413 - ROLLER WINDOW SHADES						
RS (ROLLER SHADES)						
	RS-1	Refer to Specifications	Refer to Specifications	Refer to Specifications		Refer to Specifications

SECTION 123623 - PLASTIC LAMINATE CLAD COUNTERTOPS						
PL (PLASTIC LAMINATE)						
	SEE SECTION 064116 FOR PLASTIC LAMINATE SPECIFICATIONS					
SECTION 123661 - SIMULATED STONE COUNTERTOPS						
SS (SOLID SURFACE MATERIAL)						
	SS-1	Wilsonart	Gibraltar	Marzipan Mirage 9130MG (2)		Edge Detail: Refer to millwork drawings Backsplash Detail: Refer to millwork drawings
	SS-2	staron		SM465 Sanded Meadow		Edge Detail: Refer to millwork drawings Backsplash Detail: Refer to millwork drawings
NOT USED	SS-3	Wilsonart		Blanco Riverstone 9137RS (4)		Edge Detail: Refer to millwork drawings Backsplash Detail: Refer to millwork drawings
	SS-4	Corian		Bone D30SL(1)		Edge Detail: Refer to millwork drawings Backsplash Detail: Refer to millwork drawings
NOT USED	SS-5	Corian		Chamois		Only used on threshold for floors in patient toilets
NOT USED	SS-6	Corian		Linen		Intergral sinks
NOT USED	SS-7	Wilsonart		Frosty White 1573SL(1)		

DesignStrategies

Planning
Architecture
Interior Architecture
Landscape Architecture
Engineering

130 South Main Street
Greenville, SC 29601
T (864) 527-6500
F (864) 233-8385

STATE OF SOUTH CAROLINA
DESIGN STRATEGIES, LLC
GREENVILLE, SC
02019
REGISTERED ARCHITECT

REVISIONS

NO	DATE	DESCRIPTION
0	12.24.2020	ISSUED FOR BID

McLeod Health
The Choice for Medical Excellence.

SEACOAST HOSPITAL
50-BED ADDITION

LITTLE RIVER, SC

KEYPLAN

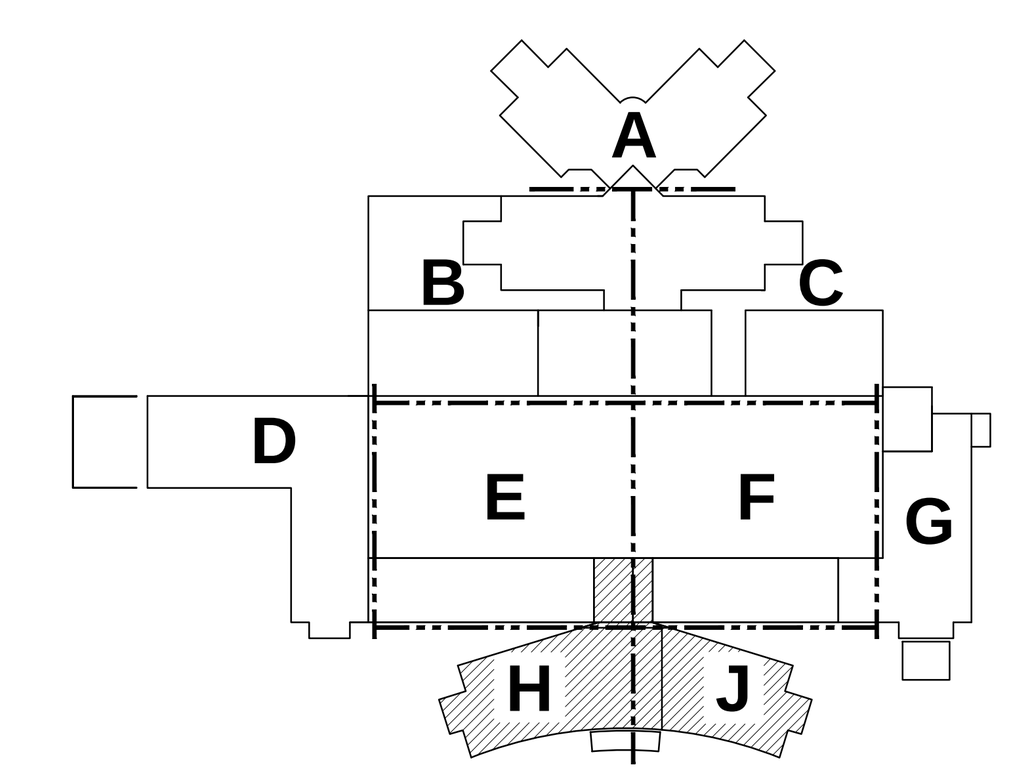

TRUE NORTH

0 4' 8' 16'
SCALE: 1/8" = 1'-0"

PROJECT NO: **0370.45**
DATE: **12.24.2020**
COPYRIGHT © 2020 **DesignStrategies, LLC**

COLOR FINISH SCHEDULE

IN001-U

ROOM FINISH SCHEDULE

ROOM #	ROOM NAME	FLOOR	BASE	WALLS						CEILINGS			MILLWORK		REMARKS
		MATERIAL	MATERIAL	MATERIAL	FINISH	NORTH	SOUTH	EAST	WEST	MATERIAL	FINISH	PAINT	CTOPS	CABINETS	
4501	ELEVATOR LOBBY	LIN-1,2,3,4,5	RB-3/WD-2	GWB	PE/-	P-8,15	P-8,15	P-8,15	P-8,15	GWB/ACT	PE/-	P-1	-	-	
4502	CORRIDOR	LIN-1,2,3,4,5	RB-3	GWB	PE	-	-	P-8,15	P-8,15	GWB/ACT	PE/-	P-15	-	-	
4503	CORRIDOR	LIN-1,2,3,4,5	RB-3	GWB	PE	P-8,15	P-8,15	P-8,15	P-8,15	GWB/ACT	PE/-	P-2,15	-	-	
4504	CORRIDOR	LIN-1,2,3,4,5	RB-3	GWB	PE	P-8,15	P-8,15	P-8,15	P-8,15	GWB/ACT	PE/-	P-2,15	-	-	
4505	CORRIDOR	LIN-1,2,3,4,5	RB-3	GWB	PE	P-8,15	P-8,15	P-8,15	P-8,15	GWB/ACT	PE/-	P-2,15	-	-	
4506	CORRIDOR	LIN-1,2,3,4,5	RB-3	GWB	PE	P-8,15	P-8,15	P-8,15	P-8,15	GWB/ACT	PE/-	P-2,15	-	-	
4507	CORRIDOR	LIN-1,2,3,4,5	RB-3	GWB	PE	P-8,15	P-8,15	P-8,15	P-8,15	GWB/ACT	PE/-	P-2,15	-	-	
4508	CORRIDOR	LIN-1,2,3,4,5	RB-3	GWB	PE	P-8,15	P-8,15	P-8,15	P-8,15	GWB/ACT	PE/-	P-2,15	-	-	
4509	CORRIDOR	LIN-1,2,3,4,5	RB-3	GWB	PE	P-8,15	P-8,15	P-8,15	P-8,15	GWB/ACT	PE/-	P-2,15	-	-	
4510	CORRIDOR	LIN-1,2,3,4,5	RB-3	GWB	PE	P-8,15	P-8,15	P-8,15	P-8,15	GWB/ACT	PE/-	P-15	-	-	
4511	ELEVATOR LOBBY	LIN-1,2,3,4,5	RB-3/WD-2	GWB/PL/WD	PE/-	P-8,15	P-8,15	P-8,15/PL-1,4	P-8,15/PL-1,4	GWB/WD	PE/-	P-1	-	-	
4512	NURSE STATION	LIN-1,2,3,4,5	WD-2	GWB	PE	P-8/15	P-8,15	P-8,15	P-8,15	GWB/WD	PE/-	P-1,15	PL-5/WD-2	PL-1,4/WD-2	
4513	WORKROOM	LIN-1,2,3,4	RB-1,8	GWB	PS	P-15	P-1	P-15	P-15	GWB/ACT	PE/-	P-15	SS-2	PL-3	PAR RB-8 WITH MILLWORK PL-3
4514	PATIENT ROOM	HWSV-5	RB-1/WD-2	GWB/WD	PE/-	P-2	P-2	P-2/PL-1/WDP-2/PL-1/WD		GWB/ACT	PE/-	P-1	SS-1	PL-1/WD-2	
4514T	TOILET	FAEF-1	3" FAEB-1	CTW-1,2	-	CTW-1,2	CTW-1,2	CTW-1,2	CTW-1,2	MRGWB	PS	P-12	-	-	
4515	PATIENT ROOM	HWSV-5	RB-1/WD-2	GWB/WD	PE/-	P-2	P-2	P-2/PL-1/WDP-2/PL-1/WD		GWB/ACT	PE/-	-	SS-1	PL-1/WD-2	
4515T	TOILET	FAEF-1	3" FAEB-1	CTW-1,2	-	CTW-1,2	CTW-1,2	CTW-1,2	CTW-1,2	MRGWB	PS	P-12	-	-	
4516	PATIENT ROOM	HWSV-5	RB-1/WD-2	GWB/WD	PE/-	P-2	P-2	P-2/PL-1/WDP-2/PL-1/WD		GWB/ACT	PE/-	-	SS-1	PL-1/WD-2	
4516T	TOILET	FAEF-1	3" FAEB-1	CTW-1,2	-	CTW-1,2	CTW-1,2	CTW-1,2	CTW-1,2	MRGWB	PS	P-12	-	-	
4517	PATIENT ROOM	HWSV-5	RB-1/WD-2	GWB/WD	PE/-	P-2	P-2	P-2/PL-1/WDP-2/PL-1/WD		GWB/ACT	PE/-	-	SS-1	PL-1/WD-2	
4517T	TOILET	FAEF-1	3" FAEB-1	CTW-1,2	-	CTW-1,2	CTW-1,2	CTW-1,2	CTW-1,2	MRGWB	PS	P-12	-	-	
4518	PATIENT ROOM	HWSV-5	RB-1/WD-2	GWB/WD	PE/-	P-2	P-2	P-2/PL-1/WDP-2/PL-1/WD		GWB/ACT	PE/-	-	SS-1	PL-1/WD-2	
4518T	TOILET	FAEF-1	3" FAEB-1	CTW-1,2	-	CTW-1,2	CTW-1,2	CTW-1,2	CTW-1,2	MRGWB	PS	P-12	-	-	
4519	PATIENT ROOM	HWSV-5	RB-1/WD-2	GWB/WD	PE/-	P-2	P-2	P-2/PL-1/WDP-2/PL-1/WD		GWB/ACT	PE/-	-	SS-1	PL-1/WD-2	
4519T	TOILET	FAEF-1	3" FAEB-1	CTW-1,2	-	CTW-1,2	CTW-1,2	CTW-1,2	CTW-1,2	MRGWB	PS	P-12	-	-	
4520	PATIENT ROOM	HWSV-5	RB-1/WD-2	GWB/WD	PE/-	P-2	P-2	P-2/PL-1/WDP-2/PL-1/WD		GWB/ACT	PE/-	-	SS-1	PL-1/WD-2	
4520T	TOILET	FAEF-1	3" FAEB-1	CTW-1,2	-	CTW-1,2	CTW-1,2	CTW-1,2	CTW-1,2	MRGWB	PS	P-12	-	-	
4521	PATIENT ROOM	HWSV-5	RB-1/WD-2	GWB/WD	PE/-	P-2	P-2	P-2/PL-1/WDP-2/PL-1/WD		GWB/ACT	PE/-	-	SS-1	PL-1/WD-2	
4521T	TOILET	FAEF-1	3" FAEB-1	CTW-1,2	-	CTW-1,2	CTW-1,2	CTW-1,2	CTW-1,2	MRGWB	PS	P-12	-	-	
4522	ISOLATION PATIENT ROOM	HWSV-5	RB-1/WD-2	GWB/WD	PE/-	P-2	P-2	P-2/PL-1/WDP-2/PL-1/WD		GWB/ACT	PE/-	-	SS-1	PL-1/WD-2	
4522T	TOILET	FAEF-1	3" FAEB-1	CTW-1,2	-	CTW-1,2	CTW-1,2	CTW-1,2	CTW-1,2	MRGWB	PS	P-12	-	-	
4523	ISOLATION PATIENT ROOM	HWSV-5	RB-1/WD-2	GWB/WD	PE/-	P-2	P-2	P-2/PL-1/WDP-2/PL-1/WD		GWB/ACT	PE/-	-	SS-1	PL-1/WD-2	
4523T	TOILET	FAEF-1	3" FAEB-1	CTW-1,2	-	CTW-1,2	CTW-1,2	CTW-1,2	CTW-1,2	MRGWB	PS	P-12	-	-	
4524	CONFERENCE	CPTT-1	RB-1/WD-2	GWB/WD	PE/-	P-15	P-15	P-15/PL-1,4	P-15	GWB/ACT	PE/-	P-1	-	-	
4525	PATIENT ROOM	HWSV-5	RB-1/WD-2	GWB/WD	PE/-	P-2	P-2	P-2/PL-1/WDP-2/PL-1/WD		GWB/PL/WD	PE/-	P-1	SS-1	PL-1,4/WD-2	
4525T	TOILET	FAEF-1	3" FAEB-1	CTW-1,2	-	CTW-1,2	CTW-1,2	CTW-1,2	CTW-1,2	MRGWB	PS	P-12	-	-	
4526	PATIENT ROOM	HWSV-5	RB-1/WD-2	GWB/WD	PE/-	P-2	P-2	P-2/PL-1/WDP-2/PL-1/WD		GWB/ACT	PE/-	-	SS-1	PL-1/WD-2	
4526T	TOILET	FAEF-1	3" FAEB-1	CTW-1,2	-	CTW-1,2	CTW-1,2	CTW-1,2	CTW-1,2	MRGWB	PS	P-12	-	-	
4527	PATIENT ROOM	HWSV-5	RB-1/WD-2	GWB/WD	PE/-	P-2	P-2	P-2/PL-1/WDP-2/PL-1/WD		GWB/ACT	PE/-	-	SS-1	PL-1/WD-2	
4527T	TOILET	FAEF-1	3" FAEB-1	CTW-1,2	-	CTW-1,2	CTW-1,2	CTW-1,2	CTW-1,2	MRGWB	PS	P-12	-	-	
4528	PATIENT ROOM	HWSV-5	RB-1/WD-2	GWB/WD	PE/-	P-2	P-2	P-2/PL-1/WDP-2/PL-1/WD		GWB/ACT	PE/-	-	SS-1	PL-1/WD-2	
4528T	TOILET	FAEF-1	3" FAEB-1	CTW-1,2	-	CTW-1,2	CTW-1,2	CTW-1,2	CTW-1,2	MRGWB	PS	P-12	-	-	
4529	PATIENT ROOM	HWSV-5	RB-1/WD-2	GWB/WD	PE/-	P-2	P-2	P-2/PL-1/WDP-2/PL-1/WD		GWB/ACT	PE/-	-	SS-1	PL-1/WD-2	
4529T	TOILET	FAEF-1	3" FAEB-1	CTW-1,2	-	CTW-1,2	CTW-1,2	CTW-1,2	CTW-1,2	MRGWB	PS	P-12	-	-	
4530	PATIENT ROOM	HWSV-5	RB-1/WD-2	GWB/WD	PE/-	P-2	P-2	P-2/PL-1/WDP-2/PL-1/WD		GWB/ACT	PE/-	-	SS-1	PL-1/WD-2	
4530T	TOILET	FAEF-1	3" FAEB-1	CTW-1,2	-	CTW-1,2	CTW-1,2	CTW-1,2	CTW-1,2	MRGWB	PS	P-12	-	-	
4531	PATIENT ROOM	HWSV-5	RB-1/WD-2	GWB/WD	PE/-	P-2	P-2	P-2/PL-1/WDP-2/PL-1/WD		GWB/ACT	PE/-	-	SS-1	PL-1/WD-2	
4531T	TOILET	FAEF-1	3" FAEB-1	CTW-1,2	-	CTW-1,2	CTW-1,2	CTW-1,2	CTW-1,2	MRGWB	PS	P-12	-	-	
4532	PATIENT ROOM	HWSV-5	RB-1/WD-2	GWB/WD	PE/-	P-2	P-2	P-2/PL-1/WDP-2/PL-1/WD		GWB/ACT	PE/-	-	SS-1	PL-1/WD-2	
4532T	TOILET	FAEF-1	3" FAEB-1	CTW-1,2	-	CTW-1,2	CTW-1,2	CTW-1,2	CTW-1,2	MRGWB	PS	P-12	-	-	
4533	PATIENT ROOM	HWSV-5	RB-1/WD-2	GWB/WD	PE/-	P-2	P-2	P-2/PL-1/WDP-2/PL-1/WD		GWB/ACT	PE/-	-	SS-1	PL-1/WD-2	
4533T	TOILET	FAEF-1	3" FAEB-1	CTW-1,2	-	CTW-1,2	CTW-1,2	CTW-1,2	CTW-1,2	MRGWB	PS	P-12	-	-	
4534	PATIENT ROOM	HWSV-5	RB-1/WD-2	GWB/WD	PE/-	P-2	P-2	P-2/PL-1/WDP-2/PL-1/WD		GWB/ACT	PE/-	-	SS-1	PL-1/WD-2	
4534T	TOILET	FAEF-1	3" FAEB-1	CTW-1,2	-	CTW-1,2	CTW-1,2	CTW-1,2	CTW-1,2	MRGWB	PS	P-12	-	-	
4535	PATIENT ROOM	HWSV-5	RB-1/WD-2	GWB/WD	PE/-	P-2	P-2	P-2/PL-1/WDP-2/PL-1/WD		GWB/ACT	PE/-	-	SS-1	PL-1/WD-2	
4535T	TOILET	FAEF-1	3" FAEB-1	CTW-1,2	-	CTW-1,2	CTW-1,2	CTW-1,2	CTW-1,2	MRGWB	PS	P-12	-	-	
4536	PATIENT ROOM	HWSV-5	RB-1/WD-2	GWB/WD	PE/-	P-2	P-2	P-2/PL-1/WDP-2/PL-1/WD		GWB/ACT	PE/-	-	SS-1	PL-1/WD-2	
4536T	TOILET	FAEF-1	3" FAEB-1	CTW-1,2	-	CTW-1,2	CTW-1,2	CTW-1,2	CTW-1,2	MRGWB	PS	P-12	-	-	
4537	PATIENT ROOM	HWSV-5	RB-1/WD-2	GWB/WD	PE/-	P-2	P-2	P-2/PL-1/WDP-2/PL-1/WD		GWB/ACT	PE/-	-	SS-1	PL-1/WD-2	
4537T	TOILET	FAEF-1	3" FAEB-1	CTW-1,2	-	CTW-1,2	CTW-1,2	CTW-1,2	CTW-1,2	MRGWB	PS	P-12	-	-	
4538	PATIENT ROOM	HWSV-5	RB-1/WD-2	GWB/WD	PE/-	P-2	P-2	P-2/PL-1/WDP-2/PL-1/WD		GWB/ACT	PE/-	-	SS-1	PL-1/WD-2	
4538T	TOILET	FAEF-1	3" FAEB-1	CTW-1,2	-	CTW-1,2	CTW-1,2	CTW-1,2	CTW-1,2	MRGWB	PS	P-12	-	-	
4539	PATIENT ROOM	HWSV-5	RB-1/WD-2	GWB/WD	PE/-	P-2	P-2	P-2/PL-1/WDP-2/PL-1/WD		GWB/ACT	PE/-	-	SS-1	PL-1/WD-2	
4539T	TOILET	FAEF-1	3" FAEB-1	CTW-1,2	-	CTW-1,2	CTW-1,2	CTW-1,2	CTW-1,2	MRGWB	PS	P-12	-	-	
4540	PATIENT ROOM	HWSV-5	RB-1/WD-2	GWB/WD	PE/-	P-2	P-2	P-2/PL-1/WDP-2/PL-1/WD		GWB/ACT	PE/-	-	SS-1	PL-1/WD-2	
4540T	TOILET	FAEF-1	3" FAEB-1	CTW-1,2	-	CTW-1,2	CTW-1,2	CTW-1,2	CTW-1,2	MRGWB	PS	P-12	-	-	
4541	PATIENT ROOM	HWSV-5	RB-1/WD-2	GWB/WD	PE/-	P-2	P-2	P-2/PL-1/WDP-2/PL-1/WD		GWB/ACT	PE/-	-	SS-1	PL-1/WD-2	
4541T	TOILET	FAEF-1	3" FAEB-1	CTW-1,2	-	CTW-1,2	CTW-1,2	CTW-1,2	CTW-1,2	MRGWB	PS	P-12	-	-	
4542	BARIATRIC PATIENT ROOM	HWSV-5	RB-1/WD-2	GWB/WD	PE/-	P-2	P-2	P-2/PL-1/WDP-2/PL-1/WD		GWB/ACT	PE/-	-	SS-1	PL-1/WD-2	
4542T	TOILET	FAEF-1	3" FAEB-1	CTW-1,2	-	CTW-1,2	CTW-1,2	CTW-1,2	CTW-1,2	MRGWB	PS	P-12	-	-	
4543	BARIATRIC PATIENT ROOM	HWSV-5	RB-1/WD-2	GWB/WD	PE/-	P-2	P-2	P-2/PL-1/WDP-2/PL-1/WD		GWB/ACT	PE/-	-	SS-1	PL-1/WD-2	
4543T	TOILET	FAEF-1	3" FAEB-1	CTW-1,2	-	CTW-1,2	CTW-1,2	CTW-1,2	CTW-1,2	MRGWB	PS	P-12	-	-	
4544	PATIENT ROOM	HWSV-5	RB-1/WD-2	GWB/WD	PE/-	P-2	P-2	P-2/PL-1/WDP-2/PL-1/WD		GWB/ACT	PE/-	-	SS-1	PL-1/WD-2	
4544T	TOILET	FAEF-1	3" FAEB-1	CTW-1,2	-	CTW-1,2	CTW-1,2	CTW-1,2	CTW-1,2	MRGWB	PS	P-12	-	-	
4545	PATIENT ROOM	HWSV-5	RB-1/WD-2	GWB/WD	PE/-	P-2	P-2	P-2/PL-1/WDP-2/PL-1/WD		GWB/ACT	PE/-	-	SS-1	PL-1/WD-2	
4545T	TOILET	FAEF-1	3" FAEB-1	CTW-1,2	-	CTW-1,2	CTW-1,2	CTW-1,2	CTW-1,2	MRGWB	PS	P-12	-	-	
4546	PATIENT ROOM	HWSV-5	RB-1/WD-2	GWB/WD	PE/-	P-2	P-2	P-2/PL-1/WDP-2/PL-1/WD		GWB/ACT	PE/-	-	SS-1	PL-1/WD-2	
4546T	TOILET	FAEF-1	3" FAEB-1	CTW-1,2	-	CTW-1,2	CTW-1,2	CTW-1,2	CTW-1,2	MRGWB	PS	P-12	-	-	
4547	PATIENT ROOM	HWSV-5	RB-1/WD-2	GWB/WD	PE/-	P-2	P-2	P-2/PL-1/WDP-2/PL-1/WD		GWB/ACT	PE/-	-	SS-1	PL-1/WD-2	
4547T	TOILET	FAEF-1	3" FAEB-1	CTW-1,2	-	CTW-1,2	CTW-1,2	CTW-1,2	CTW-1,2	MRGWB	PS	P-12	-	-	
4548	PATIENT ROOM	HWSV-5	RB-1/WD-2	GWB/WD	PE/-	P-2	P-2	P-2/PL-1/WDP-2/PL-1/WD		GWB/ACT	PE/-	-	SS-1	PL-1/WD-2	
4548T	TOILET	FAEF-1	3" FAEB-1	CTW-1,2	-	CTW-1,2	CTW-1,2	CTW-1,2	CTW-1,2	MRGWB	PS	P-12	-	-	
4549	PATIENT ROOM	HWSV-5	RB-1/WD-2	GWB/WD	PE/-	P-2	P-2	P-2/PL-1/WDP-2/PL-1/WD		GWB/ACT	PE/-	-	SS-1	PL-1/WD-2	
4549T	TOILET	FAEF-1	3" FAEB-1	CTW-1,2	-	CTW-1,2	CTW-1,2	CTW-1,2	CTW-1,2	MRGWB	PS	P-12	-	-	
4550	PATIENT ROOM	HWSV-5	RB-1/WD-2	GWB/WD	PE/-	P-2	P-2	P-2/PL-1/WDP-2/PL-1/WD		GWB/ACT	PE/-	-	SS-1	PL-1/WD-2	
4550T	TOILET	FAEF-1	3" FAEB-1	CTW-1,2	-	CTW-1,2	CTW-1,2	CTW-1,2	CTW-1,2	MRGWB	PS	P-12	-	-	
4551	PATIENT ROOM	HWSV-5	RB-1/WD-2	GWB/WD	PE/-	P-2	P-2	P-2/PL-1/WDP-2/PL-1/WD		GWB/ACT	PE/-	-	SS-1	PL-1/WD-2	
4551T	TOILET	FAEF-1	3" FAEB-1	CTW-1,2	-	CTW-1,2	CTW-1,2	CTW-1,2	CTW-1,2	MRGWB	PS	P-12	-	-	
4560	STAFF TOILET	CTF-1,2,6	CTB-2	MRGWB/CTW	PS/-	P-7	CTW-4	P-7	P-7	MRGWB	PS	P-12	-	-	
4561	JANITOR	HWSV-1	HWSV-1	GWB	PS	P-1	P-1	P-1	P-1	ACT	-	-	-	-	
4562	SOILED UTILITY	HWSV-1	HWSV-1	GWB	PS	P-1	P-1	P-6	P-1	ACT	-	-	SS-4	PL-2	
4563	OFFICE	CPTT-1	RB-1	GWB	PE	P-7	P-7	P-7	P-7	ACT	-	-	-	-	
4564	DOCTOR'S DICTATION	LIN-1	RB-1	GWB	PE	P-15	P-15	P-15	P-15	ACT	-	-	PL-3	PL-3	
4565	WORKROOM	LIN-1,2,3,4	RB-1	GWB	PS	P-15	P-15	P-15	P-15	ACT	-	-	PL-3	PL-3	
4566	MEDICATION/NOURISH	LIN-1,2,3,4	RB-1	GWB	PS	P-2	P-2	P-1	P-1	ACT	-	-	SS-4	PL-2	
4567	CLEAN SUPPLY	VCT-1	RB-1	GWB	PS	P-1	P-1	P-1	P-1	ACT	-	-	-	-	
4568	DIALYSIS	HWSV-1	HWSV-1 COVE	GWB	PE	P-2	P-2	P-2	P-2	ACT	-	-	SS-4	PL-1	
4569	MALE TOILET	CTF-1,2,6	CTB-2	MRGWB/CTW	PS/-	P-7	CTW-4	P-7	P-7	MRGWB	PS	P-12	-	-	
4570	DIALYSIS CLEANING	HWSV-1	HWSV-1 COVE	GWB	PE	P-2	P-2	P-2	P-2	ACT	-	-	-	-	
4571	BREAKROOM	LIN-1,2,3,4,5	RB-3,5	GWB	PE	P-2	P-2	P-2,15	P-2	ACT	-	-	SS-1	PL-1	
4571	TELE/DATA	VCT-1	RB-1	GWB	PS	P-1	P-1	P-1	P-1	ACT	-	-	-	-	
4573	ELECTRICAL	VCT-1	RB-1	GWB	PS	P-1	P-1	P-1	P-1	ACT	-	-	-	-	
4574	FAMILY WAITING	LIN-1,2,3,4,5	RB-3,5	GWB	PE	P-2	P-2	P-2	P-2,15	ACT	-	-	SS-1	PL-1	
4575	FEMALE TOILET	CTF-1,2,6	CTB-2	MRGWB/CTW	PS/-	P-7	CTW-4	P-7	P-7	MRGWB	PS	P-12	-	-	
4576	NURSE MANAGER	CPTT-1	RB-1	GWB	PE	P-2	P-2	P-2	P-2	ACT	-	-	-	-	
4577	EQUIPMENT	VCT-1	RB-1	GWB	PS	P-1	P-1	P-1	P-1	ACT	-	-	-	-	
4578	CLEAN UTILITY	VCT-1	RB-1	GWB	PS	P-1	P-1	P-7	P-1	ACT	-	-	SS-4	PL-2	
4579	MEDICATION/NOURISH	LIN-1,2,3,4	RB-1	GWB	PS	P-2	P-2	P-1	P-1	ACT	-	-	SS-4	PL-2	
4580	WORKROOM	LIN-1,2,3,4	RB-1	GWB	PS	P-15	P-15	P-15	P-15	ACT	-	-	PL-3	PL-3	
4581	DOCTOR'S DICTATION	LIN-1	RB-1	GWB	PE	P-15	P-15	P-15	P-15	ACT	-	-	PL-3	PL-3	
4582	OFFICE	CPTT-1	RB-1	GWB	PE	P-7	P-7	P-7	P-7	ACT	-	-	-	-	
4583	SOILED UTILITY	HWSV-1	HWSV-1	GWB	PS	P-1	P-1	P-1	P-2	ACT	-	-	SS-4	PL-2	
4584	JANITOR	HWSV-1	HWSV-1	GWB	PS	P-1	P-1	P-1	P-1	ACT	-	-	-	-	
4585	STAFF TOILET	CTF-1,2,6	CTB-2	MRGWB/CTW	PS/-	P-7	CTW-4	P-7	P-7	MRGWB	PS	P-12	-	-	
4586	STORAGE	LIN-1	RB-3	GWB	PS	P-1	P-1	P-1	P-1	ACT	-	-	-	-	

A1 NOT USED

A3 FOURTH FLOOR ROOM FINISH SCHEDULE

DesignStrategies

Planning
Architecture
Interior Architecture
Landscape Architecture
Engineering

130 South Main Street
Greenville, SC 29601
T (864) 527-6500
F (864) 233-8385

STATE OF SOUTH CAROLINA
DESIGN STRATEGIES, LLC
GREENVILLE, SC
02019
REGISTERED ARCHITECT

REVISIONS

NO	DATE	DESCRIPTION
0	12.24.2020	ISSUED FOR BID

McLeod Health
The Choice for Medical Excellence.

SEACOAST HOSPITAL
50-BED ADDITION

LITTLE RIVER, SC

KEYPLAN

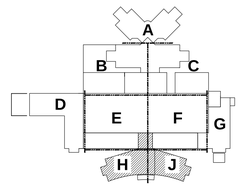

TRUE NORTH

0 4' 8' 16'

SCALE: 1/8" = 1'-0"

PROJECT NO: **0370.45**
DATE: **12.24.2020**
COPYRIGHT © 2020 **DesignStrategies, LLC**

ROOM FINISH SCHEDULE

IN002-U

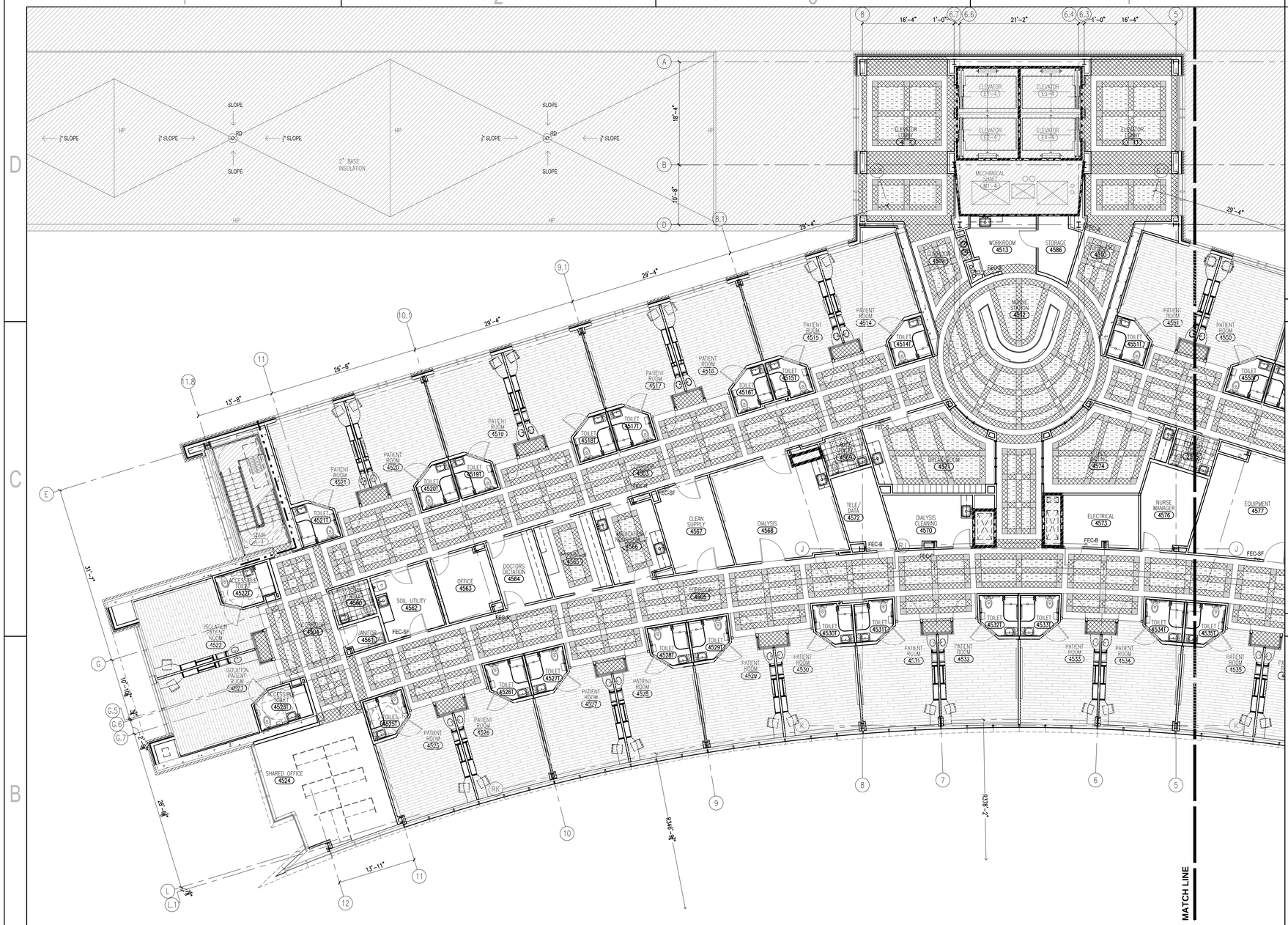

B1 LEVEL 4 FLOOR FINISH PLAN - ZONE H

1/8" = 1'-0"

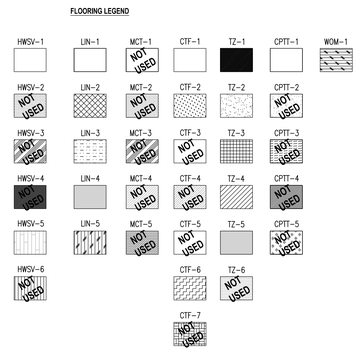

A4 FLOOR FINISH LEGEND

DesignStrategies

Planning
Architecture
Interior Architecture
Landscape Architecture
Engineering

130 South Main Street
Greenville, SC 29601
T (864) 527-6500
F (864) 233-8385

STATE OF SOUTH CAROLINA
DESIGN STRATEGIES, LLC
GREENVILLE, SC
02019
REGISTERED ARCHITECT

REVISIONS

NO	DATE	DESCRIPTION
0	12.24.2020	ISSUED FOR BID

McLeod Health
The Choice for Medical Excellence.

SEACOAST HOSPITAL
50-BED ADDITION

LITTLE RIVER, SC

KEYPLAN

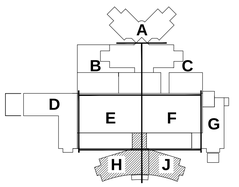

PLAN NORTH
TRUE NORTH

0 4' 8' 16'
SCALE: 1/8" = 1'-0"

PROJECT NO: 0370.45
DATE: 12.24.2020
COPYRIGHT © 2020 DesignStrategies, LLC

LEVEL 4 FLOOR FINISH PLAN - ZONE H

IN104H



B1 LEVEL 4 FLOOR FINISH PLAN - ZONE J

1/8" = 1'-0"

FLOORING LEGEND

HWSV-1	LIN-1	MCT-1 NOT USED	CTF-1	TZ-1	CPIT-1	WOM-1
HWSV-2 NOT USED	LIN-2	MCT-2 NOT USED	CTF-2	TZ-2	CPIT-2 NOT USED	
HWSV-3 NOT USED	LIN-3	MCT-3 NOT USED	CTF-3 NOT USED	TZ-3	CPIT-3 NOT USED	
HWSV-4 NOT USED	LIN-4	MCT-4 NOT USED	CTF-4 NOT USED	TZ-4	CPIT-4 NOT USED	
HWSV-5	LIN-5	MCT-5 NOT USED	CTF-5 NOT USED	TZ-5	CPIT-5 NOT USED	
HWSV-6 NOT USED			CTF-6 NOT USED	TZ-6 NOT USED		
			CTF-7 NOT USED			

A4 FLOOR FINISH LEGEND

A5 NOT USED

DesignStrategies
Planning
Architecture
Interior Architecture
Landscape Architecture
Engineering

130 South Main Street
Greenville, SC 29601
T (864) 527-6500
F (864) 233-8385

STATE OF SOUTH CAROLINA
DESIGN STRATEGIES, LLC
GREENVILLE, SC
02019
REGISTERED ARCHITECT

REVISIONS

NO	DATE	DESCRIPTION
0	12.24.2020	ISSUED FOR BID

McLeod Health
The Choice for Medical Excellence.

SEACOAST HOSPITAL
50-BED ADDITION

LITTLE RIVER, SC

KEYPLAN

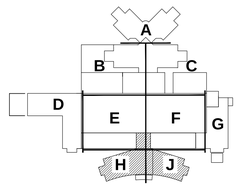

PLAN NORTH
TRUE NORTH

0 4' 8' 16'
SCALE: 1/8" = 1'-0"

PROJECT NO: 0370.45
DATE: 12.24.2020
COPYRIGHT © 2020 DesignStrategies, LLC

LEVEL 4 FLOOR FINISH PLAN - ZONE J

IN104J

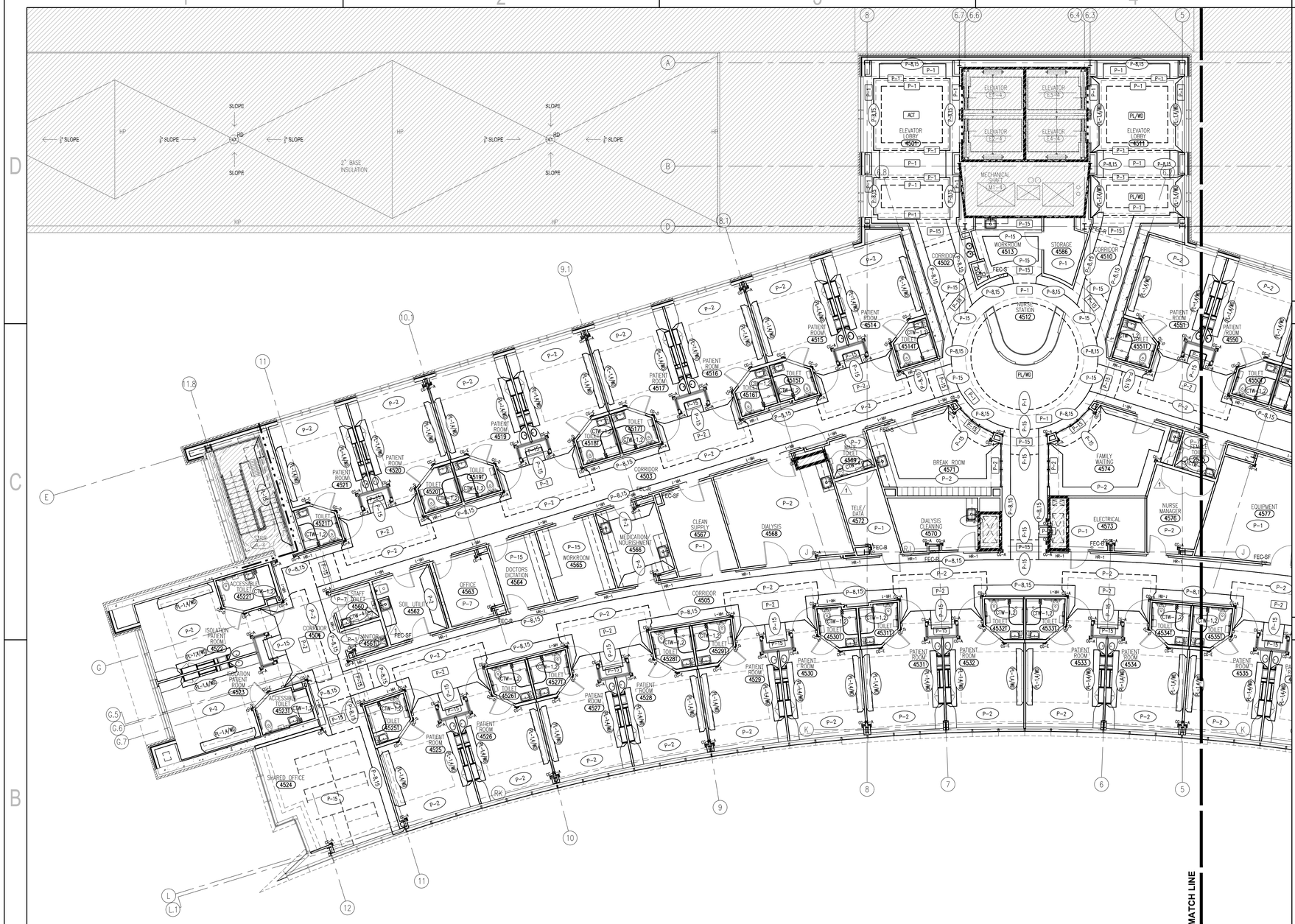

B1 LEVEL 4 WALL FINISH PLAN - ZONE H

1/8" = 1'-0"

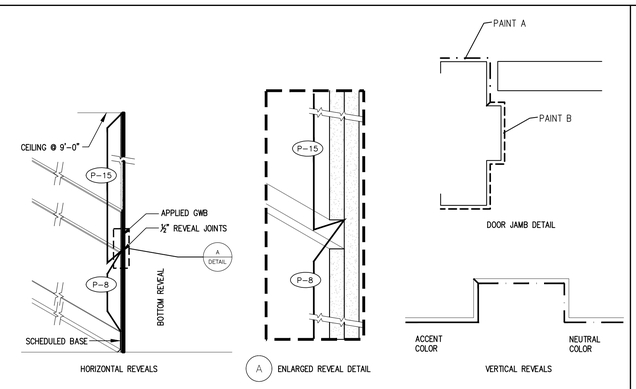

A1 PAINT TERMINATION DETAILS

A2 NOT USED

LEGEND

- P-XXX — INDICATES WALL COLOR
- INDICATES EXTENT OF WALL COLOR
- INDICATES TERMINATION OF WALL COLOR
- P-XXX — INDICATES SOFFIT COLOR
- INDICATES EXTENT OF SOFFIT COLOR
- INDICATES TERMINATION OF SOFFIT COLOR
- INDICATES EXTENT OF WOOD WALLS AND SOFFITS
- BRT-1 — BUMPER RAIL
- CR-1 — CRASH RAIL
- HR-1 — HAND RAIL
- CP-A — CORNER GUARD(S)
- FRP — FIBER-REINFORCED PANEL
- WP-2 — WALL PROTECTION

A5 LEGEND

DesignStrategies
Planning
Architecture
Interior Architecture
Landscape Architecture
Engineering

130 South Main Street
Greenville, SC 29601
T (864) 527-6500
F (864) 233-8385

STATE OF SOUTH CAROLINA
DESIGN STRATEGIES, LLC
GREENVILLE, SC
02019
REGISTERED ARCHITECT

REVISIONS

NO	DATE	DESCRIPTION
0	12.24.2020	ISSUED FOR BID

McLeod Health
The Choice for Medical Excellence.

SEACOAST HOSPITAL
50-BED ADDITION

LITTLE RIVER, SC

KEYPLAN

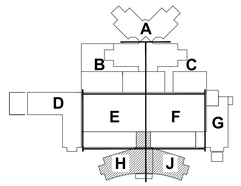

PLAN NORTH
TRUE NORTH

0 4' 8' 16'
SCALE: 1/8" = 1'-0"

PROJECT NO: **0370.45**
DATE: **12.24.2020**
COPYRIGHT © 2020 **DesignStrategies, LLC**

LEVEL 4 WALL FINISH PLAN - ZONE H

IW104H

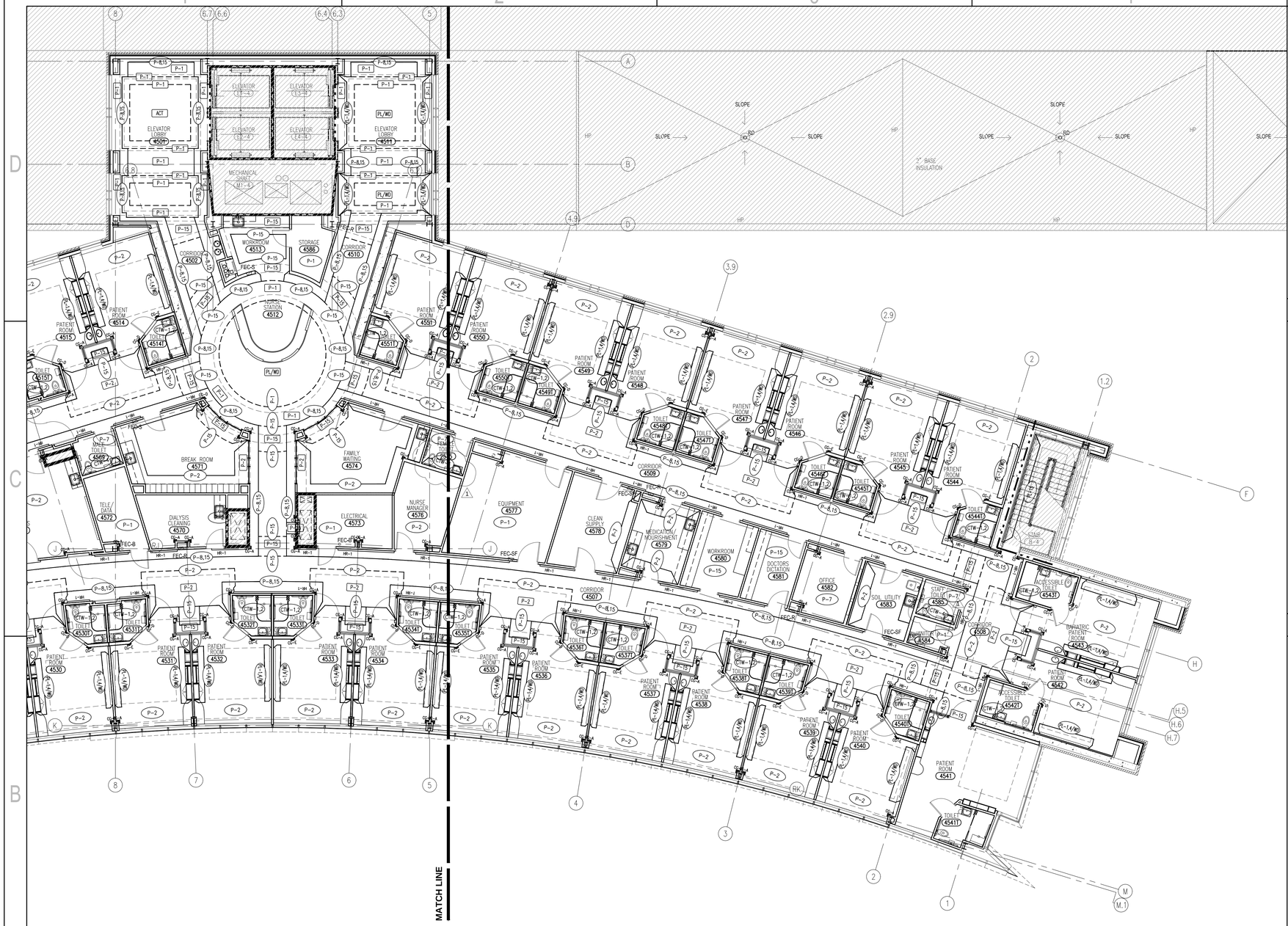

B1 LEVEL 4 WALL FINISH PLAN - ZONE J

1/8" = 1'-0"

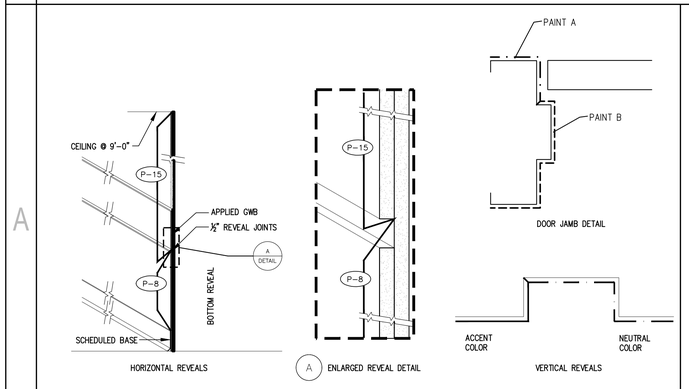

A1 PAINT TERMINATION DETAILS

A2 NOT USED

LEGEND

- P-XXX — INDICATES WALL COLOR
- INDICATES EXTENT OF WALL COLOR
- INDICATES TERMINATION OF WALL COLOR
- P-XXX — INDICATES SOFFIT COLOR
- INDICATES EXTENT OF SOFFIT COLOR
- INDICATES TERMINATION OF SOFFIT COLOR
- INDICATES EXTENT OF WOOD WALLS AND SOFFITS
- BR-1 — BUMPER RAIL
- CR-1 — CRASH RAIL
- HR-1 — HAND RAIL
- CP-A — CORNER GUARD(S)
- FRP — FIBER-REINFORCED PANEL
- WP-2 — WALL PROTECTION

A5 LEGEND

DesignStrategies

Planning
Architecture
Interior Architecture
Landscape Architecture
Engineering

130 South Main Street
Greenville, SC 29601
T (864) 527-6500
F (864) 233-8385

STATE OF SOUTH CAROLINA — DESIGN STRATEGIES, LLC — GREENVILLE, SC 02019 — REGISTERED ARCHITECT

REVISIONS

NO	DATE	DESCRIPTION
0	12.24.2020	ISSUED FOR BID

McLeod Health
The Choice for Medical Excellence.

SEACOAST HOSPITAL
50-BED ADDITION

LITTLE RIVER, SC

KEYPLAN

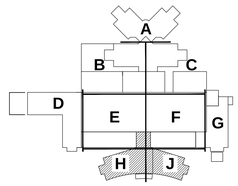

PLAN NORTH — TRUE NORTH

0 4' 8' 16'

SCALE: 1/8" = 1'-0"

PROJECT NO: **0370.45**
DATE: **12.24.2020**
COPYRIGHT © 2020 **DesignStrategies, LLC**

LEVEL 4 WALL FINISH PLAN - ZONE J

IW104J



B1 LEVEL 3 EQUIPMENT PLAN - ZONE H

1/8" = 1'-0"

DesignStrategies

Planning
Architecture
Interior Architecture
Landscape Architecture
Engineering

130 South Main Street
Greenville, SC 29601
T (864) 527-6500
F (864) 233-8385

STATE OF SOUTH CAROLINA
DESIGN STRATEGIES, LLC
GREENVILLE, SC
02019
REGISTERED ARCHITECT

REVISIONS

NO	DATE	DESCRIPTION
0	12.24.2020	ISSUED FOR BID

McLeod Health
The Choice for Medical Excellence.

SEACOAST HOSPITAL
50-BED ADDITION

LITTLE RIVER, SC

KEYPLAN

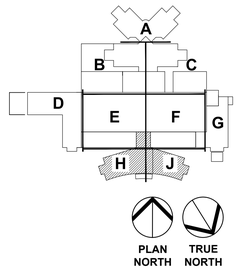

PLAN NORTH
TRUE NORTH

0 4' 8' 16'
SCALE: 1/8" = 1'-0"

PROJECT NO: **0370.45**
DATE: **12.24.2020**
COPYRIGHT © 2020 **DesignStrategies, LLC**

LEVEL 4 EQUIPMENT PLAN - ZONE H

EQ104H



B1 LEVEL 3 EQUIPMENT PLAN - ZONE J

1/8" = 1'-0"

DesignStrategies

Planning
Architecture
Interior Architecture
Landscape Architecture
Engineering

130 South Main Street
Greenville, SC 29601
T (864) 527-6500
F (864) 233-8385

STATE OF SOUTH CAROLINA
DESIGN STRATEGIES, LLC
GREENVILLE, SC
02019
REGISTERED ARCHITECT

REVISIONS

NO	DATE	DESCRIPTION
0	12.24.2020	ISSUED FOR BID

McLeod Health
The Choice for Medical Excellence.

SEACOAST HOSPITAL
50-BED ADDITION

LITTLE RIVER, SC

KEYPLAN

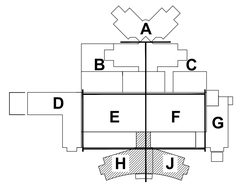

PLAN NORTH
TRUE NORTH

0 4' 8' 16'
SCALE: 1/8" = 1'-0"

PROJECT NO: **0370.45**
DATE: **12.24.2020**
COPYRIGHT © 2020 **DesignStrategies, LLC**

LEVEL 4 EQUIPMENT PLAN - ZONE J

EQ104J

MECHANICAL LEGEND

SYMBOL	ABBREV.	DESCRIPTION
	–	FUTURE (SHOWN HIDDEN & LIGHT ON NEW WORK DWGS.)
	–	GATE VALVE
	–	GATE VALVE IN RISER
	–	CONTROL VALVE IN RISER
	CV	CONTROL VALVE
	PRV	PRESSURE REGULATING VALVE
	–	PLUG VALVE
	–	STRAINER
	–	STRAINER WITH BLOWDOWN VALVE
	–	PRESSURE RELIEF VALVE
	–	CHECK VALVE
	–	AUTOMATIC FLOW CONTROL VALVE
	–	CIRCUIT SETTER
	–	SOLENOID VALVE, SAFETY SHUT-OFF VALVE
	–	BUTTERFLY VALVE
	–	BUTTERFLY CONTROL VALVE
	–	GLOBE VALVE
	–	BALL VALVE
	–	ANGLE VALVE
	–	PIPE UNION
	–	BLIND FLANGE
	–	FLANGED CONNECTION
	–	FLEXIBLE HOSE
	DN.	PIPE DROP
	UP	PIPE RISE
	–	PIPE CAP
	–	AIR FLOW
	℄	CENTER LINE
	–	COLUMN DESIGNATION
	–	CONCENTRIC PIPE REDUCER
	–	ECCENTRIC PIPE REDUCER (FLAT ON TOP)
	–	ECCENTRIC PIPE REDUCER (FLAT ON BOTTOM)
	–	FLOW ELEMENT
	–	TURBINE FLOW ELEMENT
	–	THERMOSTAT
	B.F.P.	BACKFLOW PREVENTOR
MX.XX	–	DRAWING CONTINUATION DESIGNATION
	–	ORIFICE
	–	FLOW ARROW
	–	PUMP
	–	OUTSIDE STEM AND YOKE GATE VALVE
FS	–	FLOW SWITCH
CS/CU	CS/CU	CORROSION COUPON
X XX XX XX	–	SECTION DESIGNATION DRAWING SECTION IS DRAWN FROM / DRAWING SECTION IS DRAWN ON
		THERMOSTAT
	–	GATE VALVE
	–	BALL VALVE
	–	BUTTERFLY VALVE
	–	3-WAY VALVE
12x12	–	RECTANGULAR DUCT & SIZE
12"Ø	–	ROUND DUCT & SIZE
	–	EXISTING DUCTWORK TO BE REMOVED
	–	MANUAL DAMPER
F	–	FIRE DAMPER
FS	–	FIRE/SMOKE DAMPER
S	–	SMOKE DAMPER
SD	–	SMOKE DETECTOR (REFER TO ELECTRICAL DRAWING)
MD	–	MOTORIZED DAMPER
XXXX	–	AIR TERMINAL UNIT DESIGNATION XXXX VAV BOX NO. FLOOR AIR HANDLER NUMBER NOTE: LEGEND SYMBOL INDICATES CONTROL PANEL LOCATION AS "RIGHT HAND". REFER TO THE PLANS FOR ACTUAL LOCATION FOR EACH AIR TERMINAL UNIT.
	–	DIRECTION OF AIR FLOW
	–	POINT OF CONNECTION TO EXISTING SYSTEMS, VERIFY SIZE AND LOCATION
	–	PIPE GUIDE
	–	PIPE ANCHOR
		SUPPLY DIFFUSER - 4-WAY AIR DISTRIBUTION
		SUPPLY DIFFUSER - 3-WAY AIR DISTRIBUTION
		RETURN OR EXHAUST GRILLE - SEE PLAN
		SLOT DIFFUSER
		EXISTING PIPING TO BE REMOVED

MECHANICAL ABBREVIATIONS

AAV	AUTOMATIC AIR VENT
AFF	ABOVE FINISHED FLOOR
AFR	ABOVE FINISHED ROOF
AHU	AIR HANDLING UNIT
AP	ACCESS PANEL
APPROX.	APPROXIMATELY
ARU	AIR ROTATION UNIT
BAS	BUILDING AUTOMATION SYSTEM
BHP	BRAKE HORSEPOWER
BLDG.	BUILDING
BOP	BOTTOM OF PIPE
BTU	BRITISH THERMAL UNIT
CA	COMPRESSED AIR
CD	CEILING DIFFUSER
CFM	CUBIC FEET PER MINUTE
CH	CHILLER
CHWP	CHILLED WATER PUMP
CHWR	CHILLED WATER RETURN
CHWS	CHILLED WATER SUPPLY
CIRC	CIRCULATION
CONC	CONCRETE
COND	CONDENSATE
CONN	CONNECTION
CONT	CONTINUOUS
CR	CONDENSER WATER RETURN
CS	CONDENSER WATER SUPPLY
CT	COOLING TOWER
CTO	COOLING TOWER OVERFLOW
CTP	CONDENSATE TRANSFER PUMP
CU	CONDENSING UNIT
CV	CONSTANT AIR VOLUME
CW	CITY WATER (NON-POTABLE)
CWP	CONDENSER WATER PUMP
DCW	DOMESTIC CITY WATER
DEMO	DEMOLITION
DG	DOOR GRILLE
DIA	DIAMETER, DIAGRAM
DN	DOWN
DR	DRAIN
DWG	DRAWING
DWP	DISTRIBUTION WATER PUMP
D-X	DAMPER NUMBER
EA	EXHAUST AIR
EAT	ENTERING AIR TEMPERATURE
EF	EXHAUST FAN
ELEV	ELEVATION
EWT	ENTERING WATER TEMPERATURE
EX	EXISTING
EXP	EXPANSION
FCU	FAN COIL UNIT
FF	FINAL FILTERS
FFE	FINISHED FLOOR ELEVATION
FIN	FINISHED
FLA	FULL LOAD AMPS
FLEX	FLEXIBLE
FPM	FEET PER MINUTE
FT	FOOT; FEET
FUT	FUTURE
GA	GAUGE
GPM	GALLONS PER MINUTE
HD	HEAD
HP	HORSEPOWER
HPR	HIGH PRESSURE RETURN (CONDENSATE)
HPS	HIGH PRESSURE STEAM (OVER 15 PSIG.)
HR	HOUR
H_2O	WATER
HWR	HOT WATER RETURN
HWS	HOT WATER SUPPLY
IA	INSTRUMENT AIR
KW	KILOWATT
LAT	LEAVING AIR TEMPERATURE
LB.	POUND
LB/HR	POUND PER HOUR
LD	LINEAR DIFFUSER
LPE	LOW PRESSURE STEAM EXHAUST
LVL.	LEVEL
LWT	LEAVING WATER TEMPERATURE
LV-X	LOUVER NUMBER
MAV	MANUAL AIR VENT
MAX	MAXIMUM
MBH	THOUSAND BTU's PER HOUR
MCA	MINIMUM CIRCUIT AMPS
MECH	MECHANICAL
MIN	MINIMUM
MOCP	MAXIMUM OVER CURRENT PROTECTION
MOD	MOTOR OPERATED DAMPER
MVD	MANUAL VOLUME DAMPER
NC	NORMALLY CLOSED
NO	NORMALLY OPEN / NUMBER
NTS	NOT TO SCALE
OA	OUTSIDE AIR
OAL	OUTSIDE AIR LOUVER
PA	PLANT AIR
PC	PUMPED CONDENSATE
PCHP	PRIMARY CHILLED WATER PUMP
PD	PRESSURE DROP
PRESS	PRESSURE
PROP	PROPOSED
PRS	PRESSURE REDUCING STATION
PRV	PRESSURE REDUCING/REGULATING VALVE
PSI	POUNDS PER SQUARE INCH
PSIG	POUNDS PER SQUARE INCH GAUGE
PVC	POLYVINYL CHLORIDE PIPE
PWR	POWER
RA	RETURN AIR
RAG	RETURN AIR GRILLE
REFRIG	REFRIGERATION
REL	RELOCATE, RELOCATED
REQ'D	REQUIRED
RH	RELATIVE HUMIDITY
RM	ROOM
RPM	REVOLUTIONS PER MINUTE
RS/L	REFRIGERANT SUCTION & LIQUID LINES
RX	REMOVE EXISTING
SA	SUPPLY AIR
SCHWP	SECONDARY CHILLED WATER PUMP
SD	SMOKE DETECTOR
SOL	SOCKOLET
SP	STATIC PRESSURE
SS	STAINLESS STEEL
ST	STORM SEWER
STP	STORAGE TANK PUMP
TCHP	TERTIARY CHILLED WATER PUMP
TEMP	TEMPORARY / TEMPERATURE
THK	THICK
TP	TRAP PRIMER
TSP	TOTAL STATIC PRESSURE
TYP	TYPICAL
UH	UNIT HEATER
UNO	UNLESS OTHERWISE NOTED
V	VENT
VFD	VARIABLE FREQUENCY DRIVE
V/PH	VOLTS/PHASE
VSD	VARIABLE SPEED DRIVE
WOL	WELDOLET
@	AT
℄	CENTER LINE
Ø	DIAMETER
°F	DEGREE FAHRENHEIT
%	PERCENT
#	POUND (PSIG) OR NUMBER
W/	WITH
ΔP	CHANGE IN PRESSURE
ΔT	CHANGE IN TEMPERATURE

SOME MECHANICAL SYMBOLS AND ABBREVIATIONS SHOWN ON THIS ON THIS DRAWING MAY NOT BE APPLICABLE TO THIS PROJECT

DUCT PRESSURE CLASSIFICATION
SUPPLY UPSTREAM OF VAV BOXES - 6 IN. SUPPLY DOWNSTREAM OF VAV BOXES - 2 IN. RETURN / EXHAUST DUCT - 3 IN.

MECHANICAL DESIGN CRITERIA

CONDITION	CRITERIA	COMMENTS
SUMMER (COOLING):		
OUTSIDE AIR DESIGN	98° F DB/78° F WB	
WINTER (HEATING):		
OUTSIDE AIR DESIGN	23° F DB	
INDOOR DESIGN		
OCCUPIED AREAS	73° F DB	RELATIVE HUMIDITY (CONTROLLED): 30% (WINTER) - 60% (SUMMER)
EQUIPMENT ROOMS	85° F DB	RELATIVE HUMIDITY (UNCONTROLLED)

MECHANICAL GENERAL NOTES:

1. **CONNECTION TO EQUIPMENT SHALL BE VERIFIED WITH MANUFACTURER'S CERTIFIED DRAWINGS. TRANSITIONS TO ALL EQUIPMENT SHALL BE VERIFIED AND PROVIDED FOR EQUIPMENT FURNISHED.**
2. **DIMENSIONS SHALL BE FIELD VERIFIED AND COORDINATED PRIOR TO PROCUREMENT OR FABRICATION. COORDINATE THE WORK WITH OTHER TRADES INVOLVED. FIELD MODIFICATIONS SUCH AS OFFSETS IN PIPING OR DUCTWORK (INCLUDING DIVIDED DUCTWORK) NEEDED DUE TO OBSTRUCTIONS OR INTERFERENCES SHALL BE PROVIDED AT NO ADDITIONAL COST. FOR PROJECTS INVOLVING RENOVATION, COORDINATE NEW WORK WITH EXISTING ELEMENTS SUCH AS THE BUILDING STRUCTURE AND ARCHITECTURAL FEATURES, SPRINKLER PIPING, LIGHTS, PLUMBING, AND ELECTRICAL CONDUIT.**
3. **ALL MECHANICAL WORK SHALL BE PERFORMED IN ACCORDANCE WITH THE 2018 INTERNATIONAL BUILDING, MECHANICAL, PLUMBING, FUEL GAS, FIRE PROTECTION AND 2009 ENERGY CONSERVATION CODES.**
4. **DUCT CONSTRUCTION GAUGES, THICKNESS, BRACING, REQUIREMENTS, ETC., SHALL BE IN ACCORDANCE WITH THE LATEST EDITION OF THE SMACNA HVAC DUCT CONSTRUCTION STANDARD.**
5. **PROVIDE AIR TURNING VANES IN ALL 90 DEGREE RECTANGULAR DUCT ELBOWS.**
6. **RADIUSED ELBOWS SHALL BE USED IN ALL RETURN AND EXHAUST DUCTWORK WHERE SPACE PERMITS. MITERED ELBOWS WITH TURNING VANES ARE PERMITTED WHERE SHOWN ON PLAN IF ACCESS DOORS FOR CLEANING ARE PROVIDED AT TURNING VANES.**
7. **DUCT SIZES AND ALL OPENINGS THROUGH BUILDING CONSTRUCTION SHALL SUIT EQUIPMENT FURNISHED.**
8. **COORDINATE DIFFUSER, GRILLE AND REGISTER LOCATIONS WITH ARCHITECTURAL REFLECTED CEILING PLANS AND EQUIPMENT OF ALL TRADES.**
9. **LOCATE THERMOSTATS, TEMPERATURE SENSORS, HUMIDISTATS AND HUMIDITY SENSORS AT 48" ABOVE FINISHED FLOOR UNLESS NOTED OTHERWISE. COORDINATE LOCATIONS WITH OTHER EQUIPMENT, FURNITURE AND DOOR SWINGS. WHEN THERMOSTAT IS ADJACENT TO LIGHT SWITCH, LOCATE AT THE SAME HEIGHT AND SO SWITCH IS CLOSER TO DOOR.**
10. **ALL EQUIPMENT, DUCTWORK, ETC., SHALL BE SUPPORTED AND BRACED AS DETAILED AND/OR SPECIFIED TO MEET SEISMIC REQUIREMENTS. PROVIDE ADDITIONAL SUPPORTS AS REQUIRED TO PROVIDE A VIBRATION-FREE, RIGID INSTALLATION.**
11. **ALL DUCT SIZES SHOWN AS INSIDE CLEAR DIMENSIONS.**
12. **DAMPERS AND INSIDES OF DUCTS VISIBLE THROUGH GRILLES, REGISTERS AND DIFFUSERS SHALL BE PAINTED FLAT BLACK.**
13. **REFER TO TYPICAL DETAILS FOR PIPING AND INSTALLATION OF EQUIPMENT.**
14. **TRAPPED CONDENSATE DRAINS FROM ALL MECHANICAL EQUIPMENT SHALL BE PROVIDED FOR PROPER DRAINAGE TO SUIT EQUIPMENT FURNISHED.**
15. **ACCESS PANELS IN DUCTWORK AND CEILINGS SHALL BE PROVIDED WHERE REQUIRED FOR OPERATION, BALANCING OR MAINTENANCE OF ALL MECHANICAL EQUIPMENT.**
16. **ALL DUCTWORK AND PIPING IS SHOWN SCHEMATICALLY. PROVIDE ALL TRANSITIONS, TURNING VANES, ELBOWS, FITTINGS, ETC., TO ALLOW SMOOTH FLOWS. ALL SPLIT DUCT FITTINGS SHALL TRANSITION TO FULL SIZE OF THE SUM OF BOTH BRANCHES, UPSTREAM OF SPLIT.**
17. **PROVIDE CONCRETE HOUSEKEEPING PAD UNDER ALL FLOOR-MOUNTED EQUIPMENT. REFER TO SPECIFICATIONS FOR DETAILED REQUIREMENTS.**
18. **VERIFY FINISH WITH ARCHITECT PRIOR TO PURCHASING GRILLES, REGISTERS, DIFFUSERS, LOUVERS AND OTHER AIR DISTRIBUTION DEVICES.**
19. **PROVIDE FLEXIBLE DUCT CONNECTIONS ON ALL DUCTWORK CONNECTING TO EACH PIECE OF EQUIPMENT INCLUDING FANS, AIR HANDLING UNITS AND FAN COIL UNITS, ETC.**
20. **RUNOUT DUCTS TO DIFFUSERS & GRILLES SHALL MATCH THE SCHEDULED DEVICE NECK SIZE UNLESS NOTED OTHERWISE. PROVIDE TRANSITIONS AT DIFFUSER NECKS AS REQUIRED TO MATCH SIZES OF FLEX DUCTS TO BE CONNECTED.**
21. **MAINTAIN CLEARANCE OF A MINIMUM OF 6" BETWEEN DUCTWORK, PIPING, EQUIPMENT, ETC. AND ALL FIRE RATED AND FIRE/SMOKE RATED PARTITIONS, TO ALLOW FOR INSPECTIONS OF RATED WALLS.**
22. **LOCATE ALL OUTSIDE AIR INTAKES A MINIMUM OF 25'-0" CLEAR FROM ALL PLUMBING VENTS AND EXHAUST AIR DISCHARGE LOCATIONS. LOWEST POINT OF EACH OUTSIDE AIR INTAKE ON A ROOF SHALL BE A MINIMUM OF 36" ABOVE THE ROOF. LOWEST POINT OF EACH OUTSIDE AIR INTAKE AT GRADE LEVEL SHALL BE A MINIMUM OF 6'-0" ABOVE GRADE.**
23. **WATER PRESSURE DROPS THROUGH COIL CONTROL VALVES SHALL NOT EXCEED 5 P.S.I.**
24. **UNLESS OTHERWISE NOTED, ALL DRAINS FOR EQUIPMENT AND VALVES SHALL BE INDEPENDENTLY PIPED FULL SIZE TO THE NEAREST PLUMBING DRAIN.**
25. **SLEEVE AND SEAL ALL PIPING PENETRATIONS THROUGH BUILDING PARTITIONS.**
26. **A MAXIMUM OF 5'-0" FLEXIBLE DUCTWORK ALLOWED ON ANY BRANCH.**
27. **ALL AIR TERMINAL UNIT RUNOUT SIZES SHALL BE ONE SIZE LARGER THAN TERMINAL UNIT INLET SIZE, UNLESS OTHERWISE NOTED. TERMINAL UNIT OUTLET LOW PRESSURE DUCT SHALL BE TERMINAL BOX COIL SIZE UNLESS OTHERWISE NOTED.**
28. **ALL SUPPLY AND RETURN GRILLES SHALL BE A MINIMUM OF 36" AWAY FROM SMOKE DETECTOR LOCATIONS AS REQUIRED BY NFPA 72.**
29. **PENETRATIONS OF RATED WALL ASSEMBLIES SHALL BE SEALED OR PROTECTED IN ACCORDANCE WITH THE INTERNATIONAL BUILDING CODE. REFER TO ARCHITECTURAL SERIES DRAWINGS FOR WALL RATINGS.**
30. **ALL FLEXIBLE DUCT CONNECTIONS DOWNSTREAM OF VAV BOXES TO HAVE MANUFACTURED SPIN-IN FITTINGS WITH VOLUME DAMPER AND MANUAL LOCKING QUADRANT WITH INSULATION STAND-OFF BRACKET. SECURE FLEXIBLE DUCT TO FITTING WITH STEEL BAND AND WORM GEAR OPERATED CLAMP.**
31. **REFER TO ARCHITECTURAL PLANS FOR FLOOR PLAN DIMENSIONS. DO NOT SCALE THESE DRAWINGS.**
32. **DUCTWORK AS SHOWN ON THE DRAWINGS IS DIAGRAMMATIC. COORDINATE EXACT LOCATION WITH THE BUILDING STRUCTURE.**
33. **PROVIDE ACCESS PANELS IN THE DUCTWORK FOR ALL FIRE DAMPERS OR OTHER DUCT MOUNTED EQUIPMENT. PROVIDE CEILING OR WALL ACCESS PANELS FOR ACCESS TO EQUIPMENT REQUIRING MAINTENANCE.**
34. **PROVIDE OPERATING AND MAINTENANCE INSTRUCTIONS ON ALL EQUIPMENT IN ACCORDANCE WITH SPECIFICATIONS.**
35. **INSTALL ESCUTCHEONS IN ALL PLACES WHERE PIPING PENETRATES A WALL IN AN EXPOSED LOCATION.**
36. **REPLACE FILTERS JUST PRIOR TO ACCEPTANCE BY THE OWNER.**
37. **TERMINATE DUCT 18" MINIMUM BEYOND CENTERLINE OF OUTLET TO LAST DIFFUSER.**
38. **PROVIDE AIR VENTS AT ALL HIGH POINTS AND DRAINS AT LOW POINTS IN PIPING SYSTEMS.**
39. **ON HYDRONIC PIPING SYSTEMS USE BALL VALVES ON PIPING 4" AND SMALLER, USE BUTTERFLY VALVES ON PIPING LARGER THAN 4".**
40. **PROVIDE ISOLATION VALVES ON HYDRONIC PIPING AT BRANCH LINES.**
41. **COORDINATE THE DELIVERY CLEARANCE REQUIREMENTS OF LARGE EQUIPMENT TO PROVIDE SUFFICIENT ACCESS FROM THE DELIVERY POINT TO THE EQUIPMENT'S FINAL LOCATION.**
42. **PIPING, DUCTWORK, LEAK PROTECTION APPARATUS, OR OTHER EQUIPMENT FOREIGN TO ELECTRICAL SWITCHBOARDS, PANELBOARDS, DISTRIBUTION BOARDS, OR MOTOR CONTROL CENTERS SHALL NOT BE INSTALLED WITHIN THE REQUIRED SPACE FOR WORKING CLEARANCES, OR DEDICATED SPACES OF THE ELECTRICAL EQUIPMENT, EXTENDING IN FRONT OF AND FROM FLOOR TO STRAUCTURAL CEILING WITH A WIDTH AND DEPTH OF THE ELECTRICAL EQUIPMENT IN ACCORDANCE WITH NEC-110.26.**
43. **MECHANICAL EQUIPMENT, OR FIXTURES (WATER OR DRAINAGE PIPING OF ANY KIND, DUCTWORK, PNEUMATIC TUBING) NOT DIRECTLY RELATED TO THE SUPPORT OF TELLECOMMUNICATIONS EQUIPMENT ROOMS SHALL NOT BE INSTALLED IN, PASS THROUGH, OR ENTER THE ROOM, PER NFPA 99-2018.**
44. **TEST AND BALANCE SHALL BE PROVIDED BY OWNER TO WITHIN +/- 10% OF ALL AFFECTED TERMINAL UNITS AND SUPPLY OUTLETS AND RETURN AND EXHAUST INLETS.**

DesignStrategies

Planning
Architecture
Interior Architecture
Landscape Architecture
Engineering

130 South Main Street
Greenville, SC 29601
T (864) 527-6500
F (864) 233-8385

SOUTH CAROLINA DESIGN STRATEGIES, LLC No. C02638 CERTIFICATE OF AUTHORIZATION

SOUTH CAROLINA REGISTERED PROFESSIONAL ENGINEER NO. 23210 JOHN C. BALL IV

REVISIONS

NO	DATE	DESCRIPTION
0	12.24.2020	ISSUED FOR BID

McLeod Health
The Choice for Medical Excellence.

SEACOAST HOSPITAL
50-BED ADDITION

LITTLE RIVER, SC

KEYPLAN

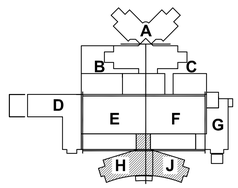

TRUE NORTH TRUE NORTH

PROJECT NO: **0370.45**
DATE: **12.24.2020**
COPYRIGHT © 2020 **DesignStrategies, LLC**

LEGEND, ABBREVIATIONS, SYMBOLS AND GENERAL NOTES

M-001-U

A1 LEGEND, ABBREVIATIONS, SYMBOLS AND GENERAL NOTES

SCALE: NTS

P:\DesignStrategies PROJECTS\0370.45 Seacoast Bed Tower 4th Floor Upfit\500 Drawings\Sheets\HVAC\0370454A-001-U.dwg, 12/22/2020 5:22:31 PM, Bluebeam PDF

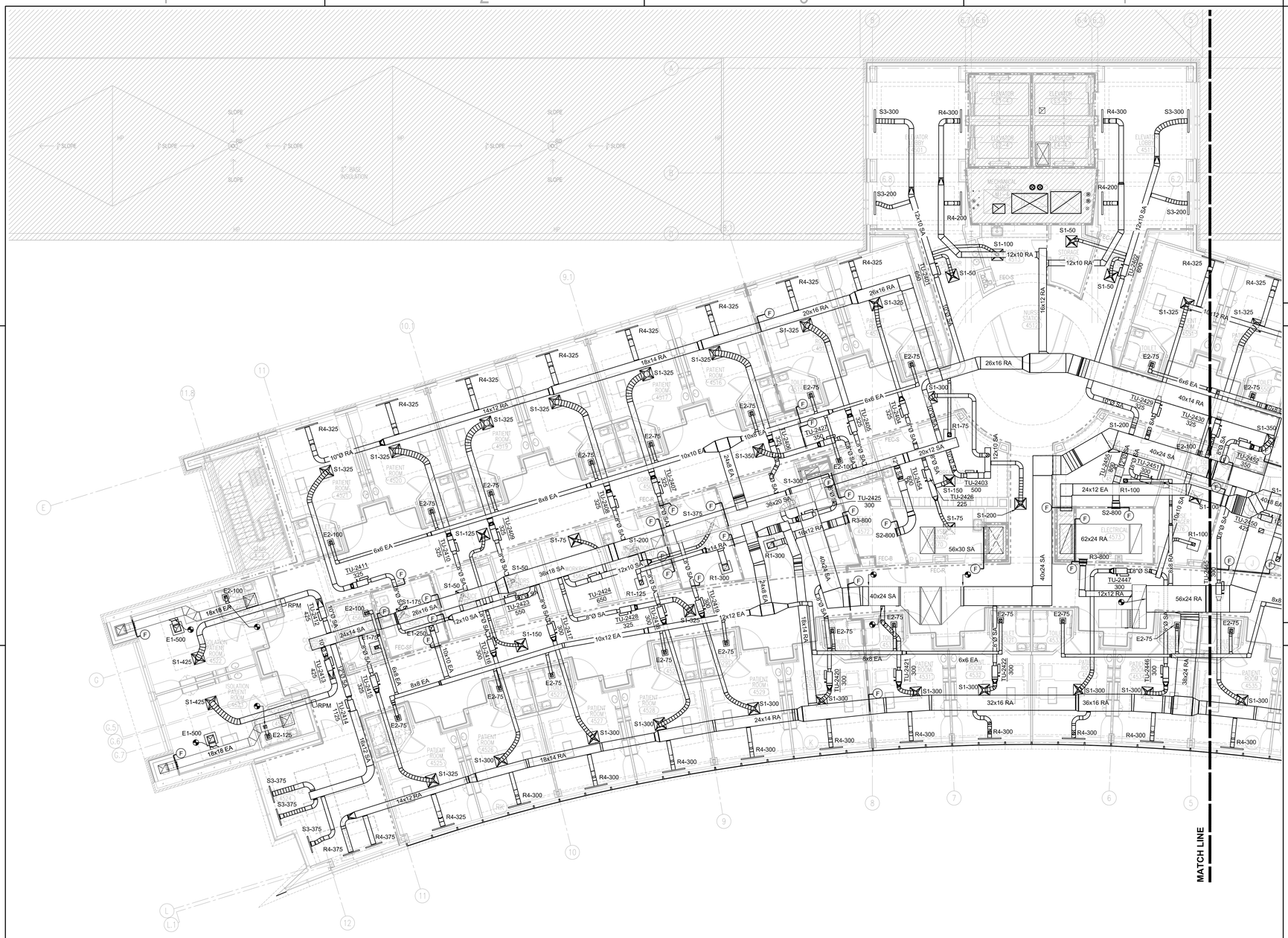

B1 LEVEL 4 MECHANICAL HVAC FLOOR PLAN - ZONE H

1/8" = 1'-0"

1. R1/E1 AND R2/E2 GRILLES SHALL BE ORIENTED SUCH THAT THE FIXED BLADES ARE DIRECTED TOWARDS THE NEAREST WALL.
2. PIPING, DUCTWORK, LEAK PROTECTION APPARATUS, OR OTHER EQUIPMENT FOREIGN TO ELECTRICAL SWITCHBOARDS, PANEL BOARDS, DIST. BOARDS OR MOTOR CONTROL CENTERS SHALL NOT BE INSTALLED WITHIN THE REQUIRED SPACE FOR WORKING CLEARANCE OF ELECTRICAL EQUIPMENT IN ACCORDANCE WITH NEC-110.28.
3. COORDINATE INSTALLATION OF DUCTWORK, PIPING, CONDUIT, EQUIPMENT AND HANGARS WITH ALL TRADES TO PROVIDE ACCESS FOR SERVICING AND MAINTENANCE OF HVAC, PLUMBING/MED GAS, FIRE PROTECTION AND ELECTRICAL EQUIPMENT, CONTROL PANELS, DAMPERS, SWITCHES, VALVES AND OTHER ACCESSORIES ABOVE ARCHITECTURAL CEILINGS IN ACCORDANCE WITH MANUFACTURER'S RECOMMENDED INSTALLATION AND OPERATING INSTRUCTIONS AND AS DETAILED ON X-###. ACCESS TO ABOVE-CEILING CONTROLS AND EQUIPMENT SHALL BE PROVIDED THROUGH A 24X24 CEILING TILE OR 24X24 ACCESS PANEL FROM AN 8-FOOT LADDER. WHERE ACCESS IS NOT PROVIDED, CONTRACTOR SHALL BE RESPONSIBLE THROUGH PROJECT WARRANTY PERIOD TO MODIFY INSTALLATION AS NECESSARY TO PROVIDE REQUIRED ACCESS.

D5 GENERAL NOTES

C5 NOT USED

B5 NOT USED

A1 NOT USED

DesignStrategies

Planning
Architecture
Interior Architecture
Landscape Architecture
Engineering

130 South Main Street
Greenville, SC 29601
T (864) 527-6500
F (864) 233-8385

SOUTH CAROLINA DESIGN STRATEGIES, LLC No. C02638 CERTIFICATE OF AUTHORIZATION

SOUTH CAROLINA LICENSED PROFESSIONAL ENGINEER NO. 23210 JOHN C BALL IV

REVISIONS

NO	DATE	DESCRIPTION
0	12.24.2020	ISSUED FOR BID

McLeod Health
The Choice for Medical Excellence.

SEACOAST HOSPITAL
50-BED ADDITION

LITTLE RIVER, SC

KEYPLAN

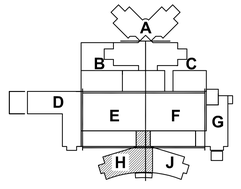

TRUE NORTH TRUE NORTH

PROJECT NO: **0370.45**
DATE: **12.24.2020**
COPYRIGHT © 2020 **DesignStrategies, LLC**

LEVEL 4
MECHANICAL HVAC
FLOOR PLAN
ZONE H

MH104H-U

P:\DesignStrategies PROJECTS\0370.45 Seacoast Bed Tower 4th Floor Upfit\500 Drawings\Sheets\HVAC\0370454MH104H-UJ.dwg, 12/23/2020 2:59:06 PM, Bluebeam PDF

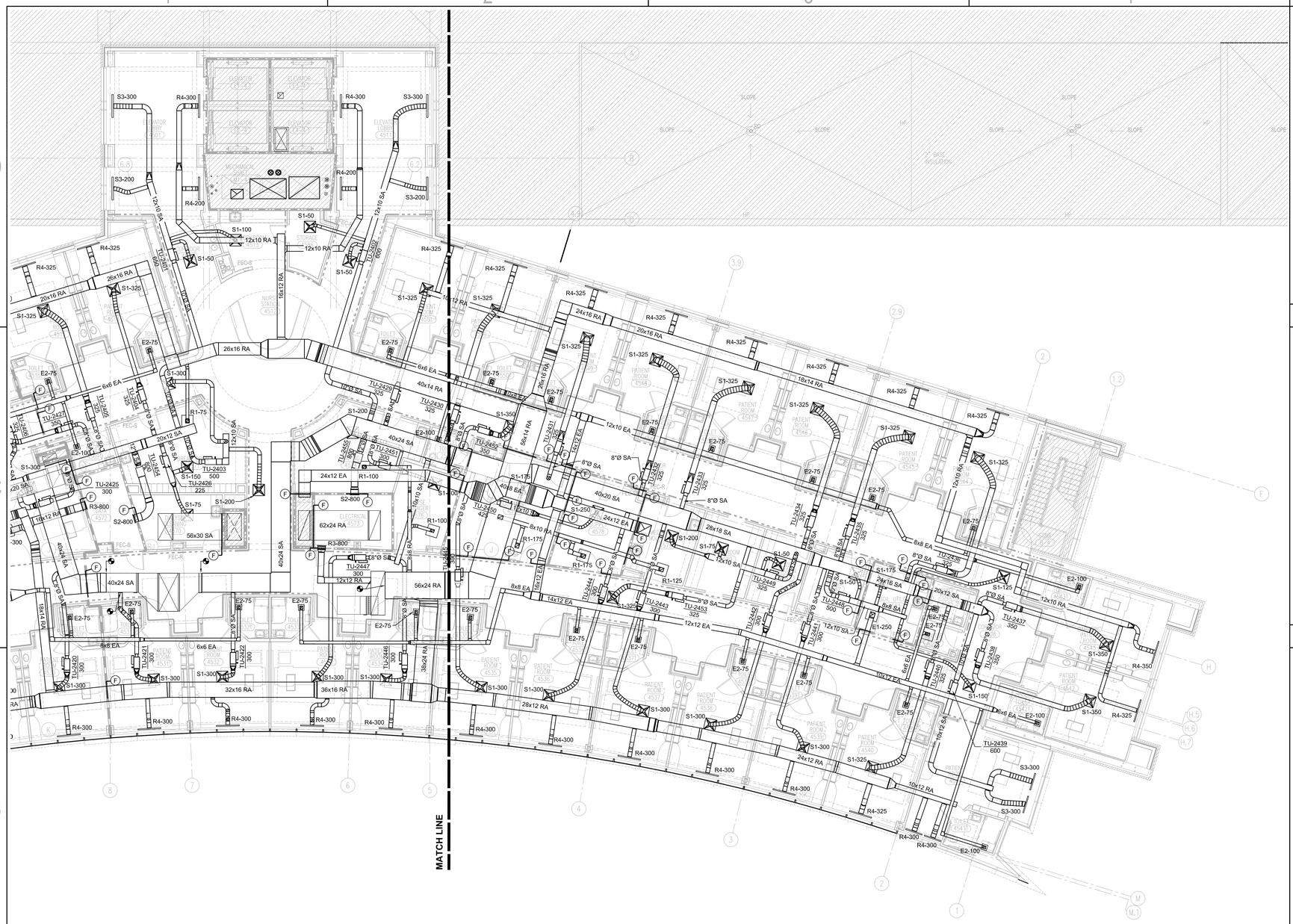

1. R1/E1 AND R2/E2 GRILLES SHALL BE ORIENTED SUCH THAT THE FIXED BLADES ARE DIRECTED TOWARDS THE NEAREST WALL.
2. PIPING, DUCTWORK, LEAK PROTECTION APPARATUS, OR OTHER EQUIPMENT FOREIGN TO ELECTRICAL SWITCHBOARDS, PANEL BOARDS, DIST. BOARDS OR MOTOR CONTROL CENTERS SHALL NOT BE INSTALLED WITHIN THE REQUIRED SPACE FOR WORKING CLEARANCE OF ELECTRICAL EQUIPMENT IN ACCORDANCE WITH NEC-110.28.
3. COORDINATE INSTALLATION OF DUCTWORK, PIPING, CONDUIT, EQUIPMENT AND HANGARS WITH ALL TRADES TO PROVIDE ACCESS FOR SERVICING AND MAINTENANCE OF HVAC, PLUMBING/MED GAS, FIRE PROTECTION AND ELECTRICAL EQUIPMENT, CONTROL PANELS, DAMPERS, SWITCHES, VALVES AND OTHER ACCESSORIES ABOVE ARCHITECTURAL CEILINGS IN ACCORDANCE WITH MANUFACTURER'S RECOMMENDED INSTALLATION AND OPERATING INSTRUCTIONS AND AS DETAILED ON X-###. ACCESS TO ABOVE-CEILING CONTROLS AND EQUIPMENT SHALL BE PROVIDED THROUGH A 24X24 CEILING TILE OR 24X24 ACCESS PANEL FROM AN 8-FOOT LADDER. WHERE ACCESS IS NOT PROVIDED, CONTRACTOR SHALL BE RESPONSIBLE THROUGH PROJECT WARRANTY PERIOD TO MODIFY INSTALLATION AS NECESSARY TO PROVIDE REQUIRED ACCESS.

D5 GENERAL NOTES

B1 LEVEL 4 MECHANICAL HVAC FLOOR PLAN - ZONE J

SCALE: 1/8" = 1'-0"

B5 NOT USED

A1 NOT USED

DesignStrategies

Planning
Architecture
Interior Architecture
Landscape Architecture
Engineering

130 South Main Street
Greenville, SC 29601
T (864) 527-6500
F (864) 233-8385

SOUTH CAROLINA DESIGN STRATEGIES, LLC No. C02638 CERTIFICATE OF AUTHORIZATION

SOUTH CAROLINA REGISTERED PROFESSIONAL ENGINEER NO. 23210 JOHN C BALLEW

REVISIONS

NO	DATE	DESCRIPTION
0	12.24.2020	ISSUED FOR BID

McLeod Health
The Choice for Medical Excellence.

SEACOAST HOSPITAL
50-BED ADDITION

LITTLE RIVER, SC

KEYPLAN

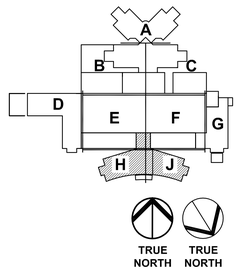

TRUE NORTH TRUE NORTH

PROJECT NO: **0370.45**
DATE: **12.24.2020**
COPYRIGHT © 2020 **DesignStrategies, LLC**

LEVEL 4
MECHANICAL HVAC
FLOOR PLAN
ZONE J

MH104J-U

P:\DesignStrategies PROJECTS\0370.45 Seacoast Bed Tower 4th Floor Upfit\500 Drawings\Sheets\HVAC\0370454MH104J-U.dwg, 12/22/2020 5:20:15 PM, Bluebeam PDF


TU-2401 0.9
2" HWS&R
TU-2402 0.8
SHUT-OFF VALVES
1-1/4" HWS&R
1 1/4" HWS&R
SHUT-OFF VALVES
TU-2404 0.4
TU-2405 0.4
TU-2406 0.4
TU-2427 0.4
1" HWS&R
TU-2407 0.4
TU-2408 0.4
3/4" HWS&R
TU-2409 0.4
TU-2410 0.4
TU-2411 0.4
TU-2412 0.6
TU-2413 0.6
TU-2414 1.6
TU-2415 0.4
TU-2416 0.4
TU-2417 0.4
TU-2418 0.4
TU-2419 0.4
TU-2420 0.4
TU-2421 0.4
TU-2422 0.4
TU-2423 0.6
TU-2424 0.7
TU-2425 0.3
TU-2426 0.2
TU-2428 0.3
TU-2429 0.4
TU-2430 0.4
TU-2431 0.4
TU-2432 0.4
TU-2433 0.4
TU-2434 0.4
TU-2435 0.4
TU-2436 0.4
TU-2437 0.4
TU-2438 0.4
TU-2439 0.4
TU-2440 0.4
TU-2441 0.4
TU-2442 0.4
TU-2443 0.4
TU-2444 0.4
TU-2445 0.4
TU-2446 0.4
TU-2447 0.4
TU-2448 0.4
TU-2449 0.4
TU-2450 0.5
TU-2451 0.3
TU-2452 0.4
TU-2453 0.4
TU-2454 0.4
TU-2455 0.4
TU-2456 0.4
TU-2457 0.4
TU-2458 0.4
TU-2459 0.4
TU-2460 0.4
TU-2461 0.4
TU-2462 0.4
TU-2463 0.4
TU-2464 0.4
TU-2465 0.4
TU-2466 0.4
TU-2467 0.4
TU-2468 0.4
TU-2469 0.4
TU-2470 0.4
TU-2471 0.4



B1 LEVEL 4 MECHANICAL HVAC FLOOR PLAN - ZONE J

SCALE: 1/8" = 1'-0"

1. PIPING, DUCTWORK, LEAK PROTECTION APPARATUS, OR OTHER EQUIPMENT FOREIGN TO ELECTRICAL SWITCHBOARDS, PANEL BOARDS, DIST. BOARDS, OR MOTOR CONTROL CENTERS SHALL NOT BE INSTALLED WITHIN THE REQUIRED SPACE FOR WORKING CLEARANCE OF ELECTRICAL EQUIPMENT IN ACCORDANCE WITH NEC-110.28.

D5 KEY NOTES

1. COORDINATE INSTALLATION OF DUCTWORK, PIPING, CONDUIT, EQUIPMENT AND HANGARS WITH ALL TRADES TO PROVIDE ACCESS FOR SERVICING AND MAINTENANCE OF HVAC, PLUMBING/MED GAS, FIRE PROTECTION AND ELECTRICAL EQUIPMENT, CONTROL PANELS, DAMPERS, SWITCHES, VALVES AND OTHER ACCESSORIES ABOVE ARCHITECTURAL CEILINGS IN ACCORDANCE WITH MANUFACTURER'S RECOMMENDED INSTALLATION AND OPERATING INSTRUCTIONS AND AS DETAILED ON X-###. ACCESS TO ABOVE-CEILING CONTROLS AND EQUIPMENT SHALL BE PROVIDED THROUGH A 24X24 CEILING TILE OR 24X24 ACCESS PANEL FROM AN 8-FOOT LADDER. WHERE ACCESS IS NOT PROVIDED, CONTRACTOR SHALL BE RESPONSIBLE THROUGH PROJECT WARRANTY PERIOD TO MODIFY INSTALLATION AS NECESSARY TO PROVIDE REQUIRED ACCESS.

C5 GENERAL NOTES

B5 NOT USED

A1 NOT USED

DesignStrategies

Planning
Architecture
Interior Architecture
Landscape Architecture
Engineering

130 South Main Street
Greenville, SC 29601
T (864) 527-6500
F (864) 233-8385

SOUTH CAROLINA DESIGN STRATEGIES, LLC No. C02638 CERTIFICATE OF AUTHORIZATION

SOUTH CAROLINA REGISTERED PROFESSIONAL ENGINEER NO. 23210 DON C BAILEY

REVISIONS

NO	DATE	DESCRIPTION
0	12.24.2020	ISSUED FOR BID

McLeod Health
The Choice for Medical Excellence.

SEACOAST HOSPITAL
50-BED ADDITION

LITTLE RIVER, SC

KEYPLAN

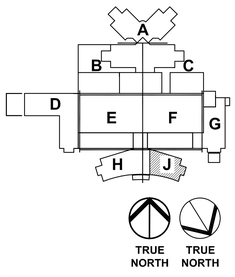

PROJECT NO: 0370.45
DATE: 12.24.2020
COPYRIGHT © 2020 DesignStrategies, LLC

LEVEL 4
MECHANICAL PIPING
FLOOR PLAN
ZONE J

MP104J-U

P:\DesignStrategies PROJECTS\0370.45 Seacoast Bed Tower 4th Floor Uplift\500 Drawings\Sheets\HVAC\037045-MP104J-U.dwg, 12/22/2020 5:22:59 PM, Bluebeam PDF

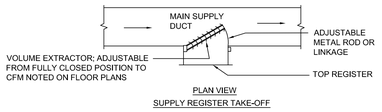

PLAN VIEW
SUPPLY REGISTER TAKE-OFF

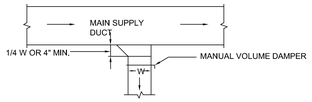

PLAN VIEW
BRANCH DUCT TAKE-OFF

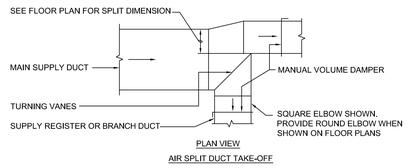

PLAN VIEW
AIR SPLIT DUCT TAKE-OFF

SUPPLY DUCTWORK TAKE-OFF
NO SCALE

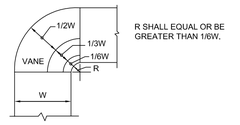

R SHALL EQUAL OR BE GREATER THAN 1/6W.

SHORT RADIUS ELBOW WITH TWO VANES

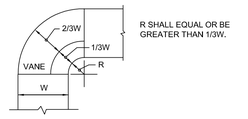

R SHALL EQUAL OR BE GREATER THAN 1/3W.

SHORT RADIUS ELBOW WITH ONE VANE

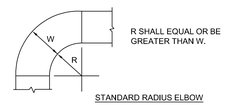

R SHALL EQUAL OR BE GREATER THAN W.

STANDARD RADIUS ELBOW

NOTES:

1. THE INTERIOR SURFACE OF ALL RADIUS ELBOWS SHALL BE MADE ROUND.
2. ALL STANDARD RADIUS ELBOWS SHOWN ON FLOOR PLANS MAY BE MADE SHORT RADIUS ELBOWS. ALL SHORT RADIUS ELBOWS SHALL HAVE VANES. VANES SHALL BE CONSTRUCTED, SUPPORTED AND FASTENED AS RECOMMENDED BY SMACNA.

DUCTWORK RADIUS ELBOW
NO SCALE

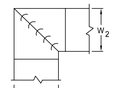

NOTES:

1. ALL VANED ELBOWS SHALL BE CONSTRUCTED AND INSTALLED AS DETAILED BY SMACNA.
2. WHEN W_1 DOES NOT EQUAL W_2 W VANE SHALL BE SINGLE VANE TYPE REGARDLESS OF W DIMENSION.
3. ALL SINGLE VANES SHALL HAVE A 2" RADIUS, 1 1/2" MAXIMUM SPACE BETWEEN VANES AND A 3/4" TRAILING EDGE.
4. WHEN W_1 EQUALS W_2 AND W IS GREATER THAN 20" VANES SHALL BE DOUBLE VANE TYPE.

DUCTWORK SQUARE VANED ELBOW
NO SCALE

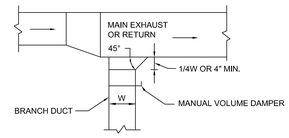

PLAN VIEW

EXHAUST OR RETURN BRANCH DUCTWORK DETAIL
NO SCALE

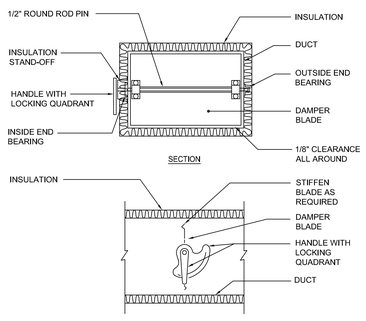

SECTION

SIDE ELEVATION

NOTES:

1. DELETE INSULATION STAND-OFF ON DUCTWORK WITHOUT EXTERIOR INSULATION.
2. DETAIL SHOWS SINGLE BLADE DAMPER. DAMPER INSTALLATION SHALL BE SIMILAR FOR MULTI-BLADE DAMPERS & ROUND DAMPERS.

VOLUME DAMPER DETAIL
NO SCALE

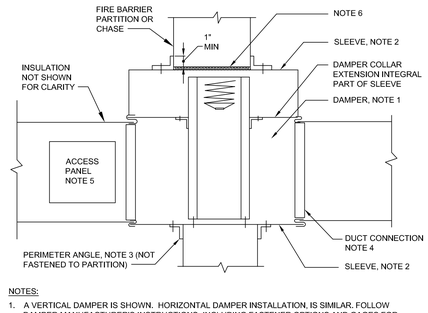

NOTES:

1. A VERTICAL DAMPER IS SHOWN. HORIZONTAL DAMPER INSTALLATION, IS SIMILAR. FOLLOW DAMPER MANUFACTURER'S INSTRUCTIONS, INCLUDING FASTENER OPTIONS AND GAGES FOR SLEEVE AND PERIMETER ANGLES. FIRE DAMPERS MUST BE INSTALLED IN THE PARTITION OR FLOOR AND NOT OUTSIDE THE PENETRATION.
2. GALVANIZED SLEEVE: GAGE NOT LESS THAN CONNECTING DUCT. FASTEN SLEEVE TO DAMPER FRAME AND TO PERIMETER ANGLES.
3. PERIMETER ANGELS: GALVANIZED STEEL, NOT LESS THAN 1 1/2" x 1 1/2", 14 GAGE, TO PROVIDE 1" MINIMUM OVERLAP OF OPENING ON ALL 4 SIDES.
4. BREAKAWAY DUCT CONNECTION: CONTRACTOR'S OPTION OF TYPES SHOWN IN SMACNA LPDS, FIG. 2-13, SEAL JOINTS.
5. ACCESS PANELS: SIZE AND LOCATION TO PERMIT SERVICING THE FUSIBLE LINK OR LINKS.
6. PROVIDE 1/4" TO 1/2" CLEARANCE ON HEIGHT AND WIDTH. FILL OPEN SPACE WITH ROCK WOOL FIRESTOP FIBER.
7. ALL DUCT WORK RISERS WHICH ARE RUN EXPOSED, SUCH AS THRU ATTIC FLOORS AND MECHANICAL ROOM FLOORS, SHALL BE PROVIDED WITH 3 INCH HIGH CONCRETE CURB AROUND OPENING FOR DUCT.

SECTION THROUGH TYPICAL FIRE DAMPER INSTALLATION
NO SCALE

NOTE:
1. TERMINAL BOX SHALL BE INSTALLED SO THAT 24" CLEARANCE IS MAINTAINED ON CONTROL SIDE OF BOX.
2. TERMINAL BOX SHALL BE INSTALLED SO THAT ACCESS TO ACCESS DOORS IS NOT IMPEDED.
3. PIPE SIZE TO BE AS SHOWN BELOW UNLESS OTHERWISE SHOWN ON PLANS. ALL PIPE SIZES ARE IRON PIPE SIZE MINIMUM. GPM REQUIRED BY COIL SHALL BE AS INDICATED AT EACH COIL.

0-3.5 GPM = 3/4" PIPE
3.51-6 GPM = 1" PIPE
6.01-12 GPM = 1-1/4" PIPE
12.01-18 GPM = 1-1/2" PIPE

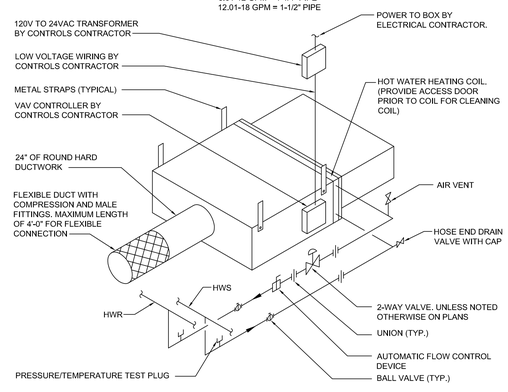

TERMINAL REHEAT OR VARIABLE VOLUME BOX
NO SCALE

NOTES:

1. LOCATE ACCESS DOOR ON THE ACTUATOR. LATCH RELEASE OR FUSIBLE LINK SIDE OF ALL FIRE, SMOKE AND FIRE/SMOKE DAMPERS.
2. PROVIDE PERMANENT LABEL WITH 1/2" HIGH (MINIMUM) LETTERING. REFER TO SPECIFICATION SECTION "MECHANICAL IDENTIFICATION" FOR ADDITIONAL INFORMATION.
3. REFER TO SPECIFICATION SECTION "DUCT ACCESSORIES" FOR ACCESS DOOR HINGE AND CAM LATCH QUANTITIES AND CONFIGURATIONS. NOTE: CAM LATCHES SHALL BE PROVIDED ON ALL SIDES AT LOCATIONS WHERE A HINGED ACCESS DOOR IS UNABLE TO OPEN A MINIMUM OF 90 DEGREES.
4. REFER TO THE TABLE FOR APPROPRIATE ACCESS DOOR SIZE BASED ON THE MOUNTING LOCATION DUCT HEIGHT (SIDE-MOUNTED) OR DUCT WIDTH (BOTTOM-MOUNTED).
5. ACCESS DOORS LESS THAN 18"x18" SERVING FIRE, SMOKE OR FIRE/SMOKE DAMPERS SHALL BE LOCATED IN A REMOVABLE SECTION OF DUCT. INCLUDE "REMOVABLE DUCT" SUPPLEMENTAL LABELING.
6. MOUNTING LOCATIONS HAVING A DUCT DIMENSION LESS THAN 8" SHALL BE PROVIDED WITH TRANSITIONS AS REQUIRED TO PROVIDE A 6"x6" ACCESS DOOR.

MOUNTING LOCATION DUCT DIMENSION	DOOR SIZE
UP TO 8"	6"x6"
10"	8"x8"
12"	10"x10"
14"	12"x12"
16"	14"x14"
18"	16"x16"
20" - 42"	18"x18"

NOTE: REFER TO "RECTANGULAR DUCT ACCESS DOOR ARRANGEMENT DETAIL" FOR MOUNTING LOCATION DUCT DIMENSIONS GREATER THAN 42"

RECTANGULAR DUCT ACCESS DOOR DETAIL
NO SCALE

TYPICAL FLEX DUCT CONNECTION
NO SCALE

NOTE:
PROVIDE OPPOSED BLADE DAMPERS ONLY IN DIFFUSERS LOCATED IN HARD CEILINGS

DIFFUSER WITH FLEXIBLE CONNECTION
NO SCALE

1-SLOT LINEAR DIFFUSER
NO SCALE

A1 MECHANICAL DETAILS

SCALE: NTS

DesignStrategies

Planning
Architecture
Interior Architecture
Landscape Architecture
Engineering

130 South Main Street
Greenville, SC 29601
T (864) 527-6500
F (864) 233-8385

SOUTH CAROLINA DESIGN STRATEGIES, LLC No. C02638 CERTIFICATE OF AUTHORIZATION

SOUTH CAROLINA LICENSED PROFESSIONAL NO. 23210 JOHN C. BALL IV

REVISIONS

NO	DATE	DESCRIPTION
0	12.24.2020	ISSUED FOR BID

McLeod Health
The Choice for Medical Excellence.

SEACOAST HOSPITAL
50-BED ADDITION

LITTLE RIVER, SC

KEYPLAN

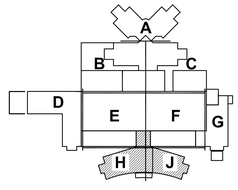

TRUE NORTH TRUE NORTH

PROJECT NO: **0370.45**
DATE: **12.24.2020**
COPYRIGHT © 2020 **DesignStrategies, LLC**

MECHANICAL DETAILS

M-500-U

P:\DesignStrategies PROJECTS\0370.45 Seacoast Bed Tower 4th Floor Upfit\500 Drawings\Sheets\HVAC\03704S-M-500-U.dwg, 12/22/2020 5:21:57 PM, Bluebeam PDF

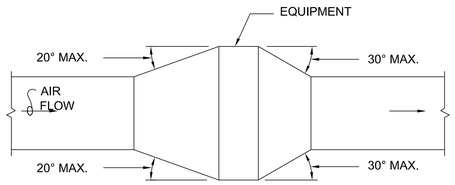

PLAN OR SIDE VIEW

NOTE:

UNLESS OTHERWISE INDICATED ON PLANS, MAXIMUM ANGLES SHOWN SHALL APPLY.

DUCTWORK TRANSITION AT EQUIPMENT DETAIL

NO SCALE

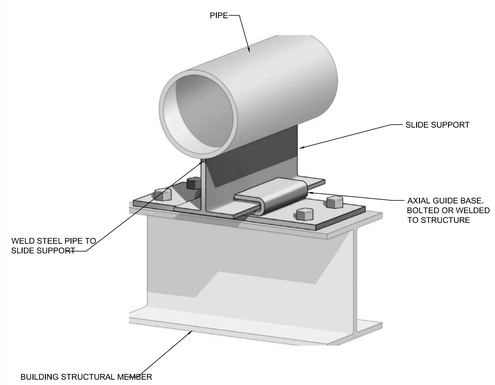

PIPE GUIDE

NO SCALE

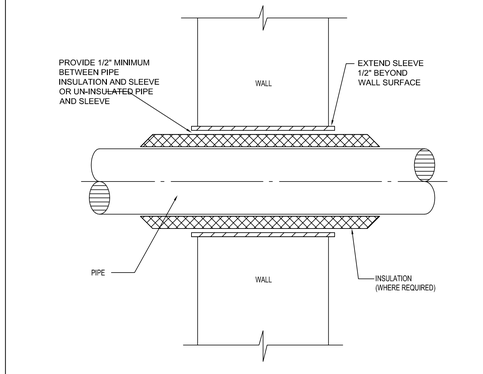

TYPICAL PIPE SLEEVE

NO SCALE

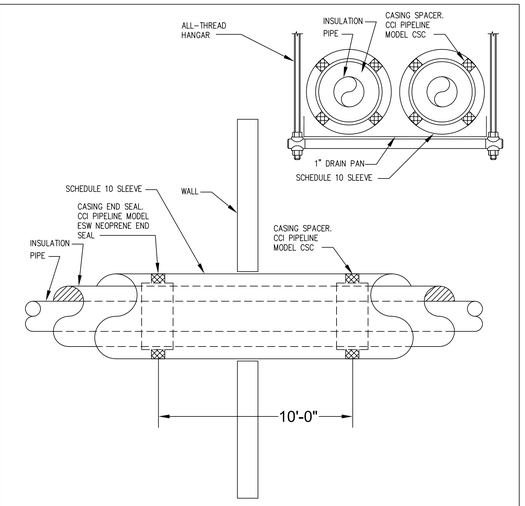

HYDRONIC PIPING SLEEVE

NO SCALE

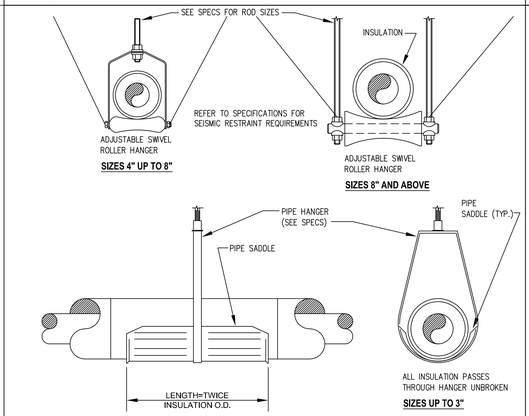

FURNISH AND INSTALL A SECTION OF FOAM-GLASS INSULATION WITH A THICKNESS TO MATCH ADJACENT PIPE INSULATION, THE LENGTH OF THE PROTECTIVE SADDLE PLUS 2 INCHES TO PREVENT THE WEIGHT OF THE PIPE FORM COMPRESSING THE INSULATION AT THE HANGER LOCATION. THE RIGID INSULATION INSERT SHALL BE THE FULL CIRCUMFERENCE OF THE PIPING. VAPOR BARRIER SHALL BE CONTINUOUS AND SEALED.

GENERAL NOTE:
FURNISH AND INSTALL SEISMIC RESTRAINTS AND SUPPORTS AS SPECIFIED IN SPECIFICATION SECTIONS 220548 AND 230548. DESIGN OF SEISMIC SUPPORTS AND RESTRAINTS SHALL BE BY MANUFACTURER IN ACCORDANCE WITH THE SPECIFICATIONS. THE INSTALLATION SHALL BE IN ACCORDANCE WITH DETAILS AND INSTRUCTION FURNISHED BY THAT SUPPLIER.

INSULATED PIPE HANGER FOR SEISMIC ATTACHMENT

NO SCALE

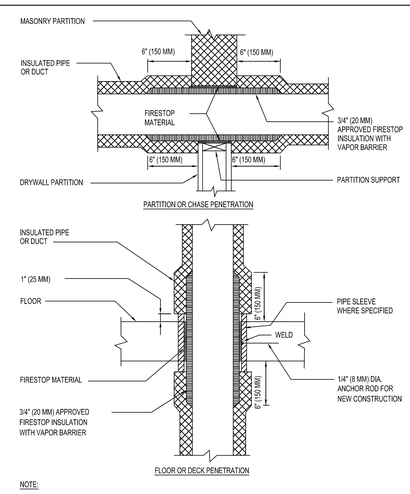

NOTE:

1. APPLICABLE TO PENETRATIONS OF ALL FIRE RATED MEMBRANES, IN ACCORDANCE WITH NFPA 101. REFER TO SPECIFICATIONS SECTION 07270, FIRE STOPPING SYSTEMS.

PIPE/DUCT PENETRATION OF FIRE/SMOKE BARRIERS

NO SCALE

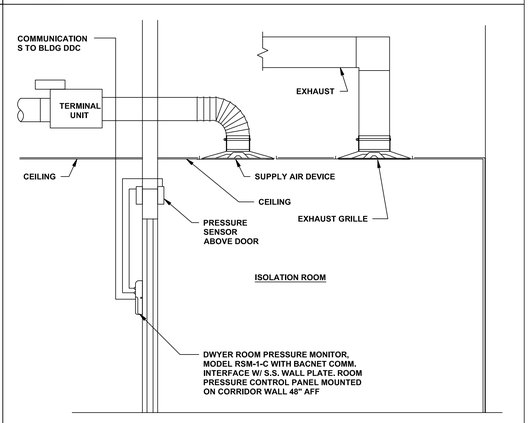

SEQUENCE OF OPERATION

THE ROOM PRESSURE CONTROL PANEL CONTINUOUSLY MEASURES THE PRESSURE BETWEEN THE ISOLATION ROOM AND THE CORRIDOR. THE CONTROL PANEL COMPARES THE ACTUAL PRESSURE DIFFERENTIAL TO THE PRESSURE DIFFERENTIAL SET POINT OF -0.02 IN W.G. A GREEN LIGHT IS ON WHEN SET POINT IS MAINTAINED. ALARM SET POINTS, PROGRAMMED INTO THE CONTROL PANEL, ACTIVATE A RED LIGHT AND CANCELABLE AUDIBLE ALARM IF PRESSURE CONTROL SET POINT CANNOT BE MAINTAINED.

A PROGRAMMABLE TIME DELAY OF 0-30 SECONDS SHALL BE PROVIDED TO MINIMIZE NUISANCE ALARMS.

ISOLATION ROOM PRESSURE CONTROL DIAGRAM

NO SCALE

DesignStrategies

Planning
Architecture
Interior Architecture
Landscape Architecture
Engineering

130 South Main Street
Greenville, SC 29601
T (864) 527-6500
F (864) 233-8385

SOUTH CAROLINA DESIGN STRATEGIES, LLC No. C02638 CERTIFICATE OF AUTHORIZATION

SOUTH CAROLINA LICENSED PROFESSIONAL ENGINEER NO. 23210 JOHN C. BAILEY

REVISIONS

NO	DATE	DESCRIPTION
0	12.24.2020	ISSUED FOR BID

McLeod Health
The Choice for Medical Excellence.

SEACOAST HOSPITAL 50-BED ADDITION

LITTLE RIVER, SC

KEYPLAN

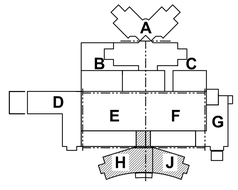

TRUE NORTH TRUE NORTH

PROJECT NO: **0370.45**
DATE: **12.24.2020**
COPYRIGHT © 2020 **DesignStrategies, LLC**

MECHANICAL DETAILS

M-501-U

A1 MECHANICAL DETAILS

SCALE: NTS

P:\DesignStrategies PROJECTS\0370.45 Seacoast Bed Tower 4th Floor Upfit\500 Drawings\Sheets\HVAC\0370454-M-501-U.dwg, 12/22/2020 5:21:36 PM, Bluebeam PDF

AIR TERMINAL UNIT SCHEDULE

MARK	AREA SERVED	MANUF.	MODEL	"INLET SIZE"	"MAX. CFM"	"MIN. CFM"	"MAX. UNIT P.D. (IN. W.G.)"	"MIN. INLET S.P. (IN. W.G.)"	"HEATING CAPACITY (BTUH)"	HW FLOW (GPM)	PIPE RUNOUT SIZE (IN)	"CONTROL TYPE"	REMARKS
TU-2401	ELEVATOR LOBBY	METALAIRE	TH508	8	650	310	0.5		13,392	0.9	1/2"	DDC	
TU-2402	ELEVATOR LOBBY	METALAIRE	TH508	8	600	300	0.5		12,960	0.9	1/2"	DDC	
TU-2403	NURSE STATION	METALAIRE	TH508	8	500	250	0.5		8,100	0.5	1/2"	DDC	
TU-2404	PATIENT ROOM	METALAIRE	TH506	6	325	160	0.5		6,048	0.4	1/2"	DDC	
TU-2405	PATIENT ROOM	METALAIRE	TH506	6	325	160	0.5		6,048	0.4	1/2"	DDC	
TU-2406	PATIENT ROOM	METALAIRE	TH506	6	325	160	0.5		6,048	0.4	1/2"	DDC	
TU-2407	PATIENT ROOM	METALAIRE	TH506	6	325	160	0.5		6,048	0.4	1/2"	DDC	
TU-2408	PATIENT ROOM	METALAIRE	TH506	6	325	160	0.5		6,048	0.4	1/2"	DDC	
TU-2409	PATIENT ROOM	METALAIRE	TH506	6	325	160	0.5		6,048	0.4	1/2"	DDC	
TU-2410	PATIENT ROOM	METALAIRE	TH506	6	325	160	0.5		6,048	0.4	1/2"	DDC	
TU-2411	PATIENT ROOM	METALAIRE	TH506	6	325	160	0.5		6,048	0.4	1/2"	DDC	
TU-2412	ISO PATIENT ROOM	METALAIRE	TH508	8	425	210	0.5		9,072	0.6	1/2"	DDC	
TU-2413	ISO PATIENT ROOM	METALAIRE	TH508	8	425	210	0.5		9,072	0.6	1/2"	DDC	
TU-2414	CONFERENCE	METALAIRE	TH512	12	1125	560	0.5		24,192	1.6	3/4"	DDC	
TU-2415	PATIENT ROOM	METALAIRE	TH506	6	325	160	0.5		6,048	0.4	1/2"	DDC	
TU-2416	PATIENT ROOM	METALAIRE	TH506	6	300	150	0.5		5,670	0.4	1/2"	DDC	
TU-2417	PATIENT ROOM	METALAIRE	TH506	6	300	150	0.5		5,670	0.4	1/2"	DDC	
TU-2418	PATIENT ROOM	METALAIRE	TH506	6	300	150	0.5		5,670	0.4	1/2"	DDC	
TU-2419	PATIENT ROOM	METALAIRE	TH506	6	300	150	0.5		5,670	0.4	1/2"	DDC	
TU-2420	PATIENT ROOM	METALAIRE	TH506	6	300	150	0.5		5,670	0.4	1/2"	DDC	
TU-2421	PATIENT ROOM	METALAIRE	TH506	6	300	150	0.5		5,670	0.4	1/2"	DDC	
TU-2422	PATIENT ROOM	METALAIRE	TH506	6	300	150	0.5		5,670	0.4	1/2"	DDC	
TU-2423	DICTATION	METALAIRE	TH508	8	550	280	0.5		9,072	0.6	1/2"	DDC	
TU-2424	MED/NOUR	METALAIRE	TH508	8	650	330	0.5		10,692	0.7	1/2"	DDC	
TU-2425	WORKROOM	METALAIRE	TH506	6	300	150	0.5		4,860	0.3	1/2"	DDC	
TU-2426	SHARED OFFICE	METALAIRE	TH506	6	225	110	0.5		3,564	0.2	1/2"	DDC	
TU-2427	CORR	METALAIRE	TH506	6	350	180	0.5		5,832	0.4	1/2"	DDC	
TU-2428	CORR	METALAIRE	TH506	6	325	160	0.5		5,184	0.3	1/2"	DDC	
TU-2429	PATIENT ROOM	METALAIRE	TH506	6	325	160	0.5		6,048	0.4	1/2"	DDC	
TU-2430	PATIENT ROOM	METALAIRE	TH506	6	325	160	0.5		6,048	0.4	1/2"	DDC	
TU-2431	PATIENT ROOM	METALAIRE	TH506	6	325	160	0.5		6,048	0.4	1/2"	DDC	
TU-2432	PATIENT ROOM	METALAIRE	TH506	6	325	160	0.5		6,048	0.4	1/2"	DDC	
TU-2433	PATIENT ROOM	METALAIRE	TH506	6	325	160	0.5		6,048	0.4	1/2"	DDC	
TU-2434	PATIENT ROOM	METALAIRE	TH506	6	325	160	0.5		6,048	0.4	1/2"	DDC	
TU-2435	PATIENT ROOM	METALAIRE	TH506	6	325	160	0.5		6,048	0.4	1/2"	DDC	
TU-2436	PATIENT ROOM	METALAIRE	TH506	6	325	160	0.5		6,048	0.4	1/2"	DDC	
TU-2437	BARIATRIC PATIENT ROOM	METALAIRE	TH506	6	350	180	0.5		7,776	0.5	1/2"	DDC	
TU-2438	PATIENT ROOM	METALAIRE	TH506	6	350	180	0.5		7,776	0.5	1/2"	DDC	
TU-2439	PATIENT ROOM	METALAIRE	TH508	8	600	300	0.5		12,960	0.9	1/2"	DDC	
TU-2440	PATIENT ROOM	METALAIRE	TH506	6	325	160	0.5		6,048	0.4	1/2"	DDC	
TU-2441	PATIENT ROOM	METALAIRE	TH506	6	300	150	0.5		5,670	0.4	1/2"	DDC	
TU-2442	PATIENT ROOM	METALAIRE	TH506	6	300	150	0.5		5,670	0.4	1/2"	DDC	
TU-2443	PATIENT ROOM	METALAIRE	TH506	6	300	150	0.5		5,670	0.4	1/2"	DDC	
TU-2444	PATIENT ROOM	METALAIRE	TH506	6	300	150	0.5		5,670	0.4	1/2"	DDC	
TU-2445	PATIENT ROOM	METALAIRE	TH506	6	300	150	0.5		5,670	0.4	1/2"	DDC	
TU-2446	PATIENT ROOM	METALAIRE	TH506	6	300	150	0.5		5,670	0.4	1/2"	DDC	
TU-2447	PATIENT ROOM	METALAIRE	TH506	6	300	150	0.5		5,670	0.4	1/2"	DDC	
TU-2448	OFFICE	METALAIRE	TH508	8	500	250	0.5		8,100	0.5	1/2"	DDC	
TU-2449	WORKROOM	METALAIRE	TH506	6	325	160	0.5		5,184	0.3	1/2"	DDC	
TU-2450	CLEAN UTIL	METALAIRE	TH508	8	425	210	0.5		6,804	0.5	1/2"	DDC	
TU-2451	FAMILY WAITING	METALAIRE	TH506	6	300	150	0.5		4,860	0.3	1/2"	DDC	
TU-2452	CORR	METALAIRE	TH506	6	350	180	0.5		5,832	0.4	1/2"	DDC	
TU-2453	CORR	METALAIRE	TH506	6	325	160	0.5		5,184	0.3	1/2"	DDC	
TU-2454	TELE/DATA	METALAIRE	TH510	10	800	800	0.5		-	-	-	DDC	COOLING ONLY
TU-2455	ELEC	METALAIRE	TH510	10	800	800	0.5		-	-	-	DDC	COOLING ONLY

GENERAL NOTES APPLY TO ALL TERMINAL UNITS:

A. SINGLE DUCT, VARIABLE VOLUME, PRESSURE INDEPENDENT
B. DDC CONTROL COMPATIBLE WITH AUTOMATIC LOGIC COMTROL
C. 1" DOUBLE WALL INSULATION WITH SOLID LINER
D. MAX INLET SP = 1.00 IN WG
E. MAX UNIT AIR PD AT COOLING CFM = 0.50 IN WG
F. MAXIMUM NC LEVEL (DISCHARGE / RADIATED) = 35 / 40
G. PROVIDE TRANSITION FROM SUPPLY RUNOUT DUCT TO UNIT INLET AS REQUIRED SUPPLY
H. PROVIDE $277_{/1}$ CONTROL POWER TRANSFORMER
I. PROVIDE SCR CONTROL FOR ELECTRIC HEAT

AIR DISTRIBUTION DEVICE SCHEDULE

MARK		MANUF	MODEL	TYPE	USE S	USE R	USE E	LOCATION	CFM RANGE MIN	CFM RANGE MAX	NECK SIZE	MOUNTING STYLE	PANEL SIZE	NOTES
S1	A	PRICE	ASPD	PLAQUE	X			CEILING	0	170	6"Ø/9"X9"	SEE NOTE C	24"x24"	1
	B	PRICE	ASPD	PLAQUE	X			CEILING	175	280	8"Ø/9"X9"	SEE NOTE C	24"x24"	1
	C	PRICE	ASPD	PLAQUE	X			CEILING	285	380	10"Ø/12"X12"	SEE NOTE C	24"x24"	1
	D	PRICE	ASPD	PLAQUE	X			CEILING	385	500	12"Ø/15"X15"	SEE NOTE C	24"x24"	1
	E	PRICE	ASPD	PLAQUE	X			CEILING	505	650	14"Ø/18"X18"	SEE NOTE C	24"x24"	1
	F	PRICE	ASPD	PLAQUE	X			CEILING	655	790	16"Ø/21"X21"	SEE NOTE C	24"x24"	1
S2	A	PRICE	620	LOUVERED SUPPLY	X			WALL/DUCT	0	145	8"x 4"	SEE GEN. NOTE F	N/A	2
	B	PRICE	620	LOUVERED SUPPLY	X			WALL/DUCT	150	240	10"x 6"	SEE GEN. NOTE F	N/A	2
	C	PRICE	620	LOUVERED SUPPLY	X			WALL/DUCT	245	360	12"x 8"	SEE GEN. NOTE F	N/A	2
	D	PRICE	620	LOUVERED SUPPLY	X			WALL/DUCT	365	540	12"x 12"	SEE GEN. NOTE F	N/A	2
	E	PRICE	620	LOUVERED SUPPLY	X			WALL/DUCT	545	800	16"x 16"	SEE GEN. NOTE F	N/A	2
S3	A	PRICE	48"JSP210/1/22	SLOT / 1-SLOT	X			CEILING	0	200	8"Ø	CONCEALED	48"	1" SLOT
	B	PRICE	48"/JSP220/1/22	SLOT / 1-SLOT	X			CEILING	200	380	8"Ø	CONCEALED	48"	2" SLOT
	C	PRICE	48"/JSP220/1/22	SLOT / 1-SLOT	X			CEILING	385	500	10"Ø	CONCEALED	48"	2" SLOT
	D	PRICE	60"/JSP220/1/22	SLOT / 1-SLOT	X			CEILING	200	380	8"Ø	CONCEALED	60"	2" SLOT VESTIBULE
R1/E1	A	PRICE	630TB	FIXED BLADE (45 DEG)		X	X	CEILING	0	100	6"X6"	SEE NOTE C	24"x24"	8
	B	PRICE	630TB	FIXED BLADE (45 DEG)		X	X	CEILING	105	190	8"X8"	SEE NOTE C	24"x24"	8
	C	PRICE	630TB	FIXED BLADE (45 DEG)		X	X	CEILING	195	280	10"X10"	SEE NOTE C	24"x24"	8
	D	PRICE	630TB	FIXED BLADE (45 DEG)		X	X	CEILING	285	400	12"X12"	SEE NOTE C	24"x24"	8
	E	PRICE	630TB	FIXED BLADE (45 DEG)		X	X	CEILING	405	640	14"X14"	SEE NOTE C	24"x24"	8
	F	PRICE	630TB	FIXED BLADE (45 DEG)		X	X	CEILING	645	850	16"X16"	SEE NOTE C	24"x24"	8
	G	PRICE	630TB	FIXED BLADE (45 DEG)		X	X	CEILING	-	1400	24"X24"	SEE NOTE C	24"x24"	8
R2/E2	A	PRICE	630	FIXED BLADE (45 DEG)		X	X	CEILING	0	100	6"x6"	SURFACE	12"x12"	8
	B	PRICE	630	FIXED BLADE (45 DEG)		X	X	CEILING	105	190	8"x8"	SURFACE	12"x12"	8
R3/E3	A	PRICE	630	FIXED BLADE (45 DEG)		X	X	WALL/DUCT	0	100	8"x 4"	SEE GEN. NOTE F	N/A	2,7
	B	PRICE	630	FIXED BLADE (45 DEG)		X	X	WALL/DUCT	105	160	10"x 6"	SEE GEN. NOTE F	N/A	2,7
	C	PRICE	630	FIXED BLADE (45 DEG)		X	X	WALL/DUCT	165	270	12"x 8"	SEE GEN. NOTE F	N/A	2,7
	D	PRICE	630	FIXED BLADE (45 DEG)		X	X	WALL/DUCT	275	500	16"x 10"	SEE GEN. NOTE F	N/A	2,7
	E	PRICE	630	FIXED BLADE (45 DEG)		X	X	WALL/DUCT	505	800	18"x 14"	SEE GEN. NOTE F	N/A	2,7
R4/E4	A	PRICE	48"/JSP210/1/22	SLOT / 1-SLOT		X		CEILING	0	195	8"Ø	CONCEALED	48"	1" SLOT
	B	PRICE	48"/JSP220/1/22	SLOT / 1-SLOT		X		CEILING	200	380	10"Ø	CONCEALED	48"	2" SLOT
	C	PRICE	60"/JSP220/1/22	SLOT / 1-SLOT		X		CEILING	200	380	10"Ø		60"	2" SLOT VESTIBULE
R5/E5	A	PRICE	48"/JSP220/1/21	SLOT / 1-SLOT		X		CEILING	200	380	10"Ø	EXPOSED	48"	2" SLOT

NOTES:

1. PROVIDE SQUARE TO ROUND TRANSITION AS REQUIRED
2. BLADES PARALLEL TO LONG DIMENSION
3. PERFORATED TRANSFER GRILLE
4. 3-WAY OR 4-WAY, SEE PLAN
5. S.S. FACE, ALUMINUM PLENUM, DAMPER, SPRING CORDED FASTENERS, SAFETY CABLES, STRUCTURAL HANGER TABS
6. S.S., 3/4" BLADES SPACE, QUICK RELEASE FASTENERS, SURFACE MOUNTED.
7. OPPOSED BLADE DAMPER.
8. FIXED BLADES SHALL BE DIRECTED TOWARD THE NEAREST WALL, UNLESS OTHERWISE NOTED.

GENERAL NOTES:

A. PROVIDE MOUNTING STYLE BASED ON CEILING TYPE INDICATED ON THE REFLECTED CEILING PLANS
B. ALL AIR DISTRIBUTION DEVICES SHALL BE ALUMINUM OR S.S. CONSTRUCTION AND HAVE A MAXIMUM NC RATING OF 25
C. IN AREAS WITH 24"X24" LAY-IN CEILINGS, PROVIDE 24"X24" PANEL. IN AREAS WITH HARD CEILINGS, PROVIDE SURFACE MOUNTED TYPE DEVICE WITHOUT 24"X24" PANEL
D. ALL AIR DISTRIBUTION LOCATED IN HARD CEILINGS SHALL BE PROVIDED WITH VOLUME DAMPERS (OPPOSED BLADE WHEN AVAILABLE). DAMPERS SHALL BE ACCESSIBLE FROM INSIDE DIFFUSER WITH NO ADDITIONAL ACCESS PANELS
E. CONTRACTOR SHALL PAINT THE INTERIOR OF RETURN/EXHAUST SQUARE TO ROUND TRANSITIONS AND SLOT DIFFUSER/ RETURN PLENUMS FLAT BLACK.
F. DIFFUSER/GRILLE MAY BE DUCT-MOUNTED OR WALL MOUNTED. SEE PLAN.

HVAC CONTROLS LEGEND	
(AI)	ANALOG INPUT
(AO)	ANALOG OUTPUT
(BI)	BINARY INPUT
(BO)	BINARY OUTPUT

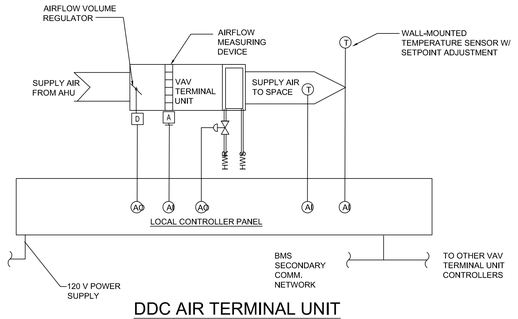

DDC AIR TERMINAL UNIT CONTROL DIAGRAM

NOTES:
1. CONTROLLER PANEL SHALL BE PROVIDED BY CONTROL CONTRACTOR. TRANSFORMER, IF REQUIRED, SHALL BE PROVIDED WITHIN CONTROLLER.
2. ACTUATOR ON TERMINAL UNIT SHALL BE PROVIDED WITH TERMINAL UNIT BY MANUFACTURER.
3. AIR FLOW MEASURING DEVICE SHALL BE PROVIDED WITH TERMINAL UNIT BY MANUFACTURER.
4. CONTROL CONTRACTOR SHALL PROVIDE TEMPERATURE SENSORS AND FLOW CONTROL VALVES. CONTROL VALVES SHALL BE INSTALLED BY MECHANICAL CONTRACTOR.
5. ALL CONTROL WIRING TO FIELD INSTALLED ITEMS SHALL BE PROVIDED BY CONTROL CONTRACTOR.

SEQUENCE OF OPERATION - AIR TERMINAL UNITS (VARIABLE VOLUME)

1. UPON A RISE IN SPACE TEMPERATURE ABOVE COOLING SETPOINT (VARIES WITH SPACE AND IS ADJ.), THE TERMINAL UNIT AIR VALVE IS TO MODULATE OPEN TO MAINTAIN SETPOINT.
2. UPON A FALL IN SPACE TEMPERATURE BELOW COOLING SETPOINT, THE TERMINAL UNIT AIR VALVE IS TO MODULATE CLOSED TO MAINTAIN SETPOINT.
3. UPON A FURTHER DROP IN SPACE TEMPERATURE BELOW THE HEATING SETPOINT THE HEATING COIL HOT WATER VALVE IS TO MODULATE OPEN TO MAINTAIN SETPOINT.
4. UPON A RISE IN SPACE TEMPERATURE ABOVE THE HEATING SETPOINT, THE REVERSE IS TO OCCUR.

SEQUENCE OF OPERATION - AIR TERMINAL UNITS (CONSTANT VOLUME)

1. TERMINAL UNIT VOLUME REGULATORS ARE TO MODULATE TO MAINTAIN THE UNIT'S SCHEDULED AIRFLOW.
2. THE HOT WATER COIL CONTROL VALVE IS TO MODULATE TO MAINTAIN THE SPACE TEMPERATURE SETPOINT (VARIES WITH SPACE AND IS ADJ)
3. IN THE EVENT THE SCHEDULED TERMINAL UNIT AIRFLOW CANNOT BE MAINTAINED, AN ALARM IS TO BE ACTIVATED AT THE CONTROL PANEL.

A1 MECHANICAL SCHEDULES

SCALE: NTS

DesignStrategies
Planning
Architecture
Interior Architecture
Landscape Architecture
Engineering

130 South Main Street
Greenville, SC 29601
T (864) 527-6500
F (864) 233-8385

SOUTH CAROLINA DESIGN STRATEGIES, LLC No. C02638 CERTIFICATE OF AUTHORIZATION

SOUTH CAROLINA LICENSED PROFESSIONAL ENGINEER NO. 23210 JOHN C. BALL IV

REVISIONS

NO	DATE	DESCRIPTION
0	12.24.2020	ISSUED FOR BID

McLeod Health
The Choice for Medical Excellence.

SEACOAST HOSPITAL
50-BED ADDITION

LITTLE RIVER, SC

KEYPLAN

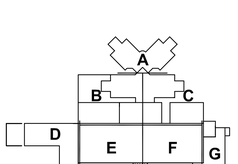

TRUE NORTH TRUE NORTH

PROJECT NO: 0370.45
DATE: 12.24.2020
COPYRIGHT © 2020 DesignStrategies, LLC

MECHANICAL SCHEDULES

M-600-U

P:\DesignStrategies PROJECTS\0370.45 Seacoast Bed Tower 4th Floor Upfit\600 Drawings\Sheets\HVAC\037045-M-600-U.dwg, 12/22/2020 5:21:10 PM, Bluebeam PDF

WC-1 WATER CLOSET, FLOOR MOUNTED (ADA)

BARRIER FREE, WHITE VITREOUS CHINA, FLOOR MOUNTED, SIPHON JET, ELONGATED BOWL WITH 1-1/2 INCH TOP SPUD.

EXPOSED CLOSET FLUSH VALVE, CHROME PLATED, 1 INCH SCREW DRIVER ANGLE STOP WITH PROTECTIVE CAP. ADJUSTABLE TAIL PIECE, VACUUM BREAKER FLUSH CONNECTION AND SPUD COUPLING FOR A 1-1/2 INCH TOP SPUD, WALL AND SPUD FLANGES, SOLID RING PIPE SUPPORT.

CONTOURED SEAT SHALL BE EXTRA HEAVY SOLID PLASTIC WITH OPEN FRONT LESS COVER. SEAT SHALL INCLUDE STAINLESS STEEL HINGE.

BASIS OF DESIGN
CHINA - AMERICAN STANDARD 3466.001
FLUSH VALVE - ZURN 6011PL-BWN
SEAT - BEMIS - 2155SSCT

WC-2 WATER CLOSET, FLOOR MOUNTED (ADA)

STANDARD HEIGHT, WHITE VITREOUS CHINA, FLOOR MOUNTED, SIPHON JET, ELONGATED BOWL WITH 1-1/2 INCH TOP SPUD.

EXPOSED CLOSET FLUSH VALVE, CHROME PLATED, 1 INCH SCREW DRIVER ANGLE STOP WITH PROTECTIVE CAP. ADJUSTABLE TAIL PIECE, VACUUM BREAKER FLUSH CONNECTION AND SPUD COUPLING FOR A 1-1/2 INCH TOP SPUD, WALL AND SPUD FLANGES, SOLID RING PIPE SUPPORT.

CONTOURED SEAT SHALL BE EXTRA HEAVY SOLID PLASTIC WITH OPEN FRONT LESS COVER. SEAT SHALL INCLUDE STAINLESS STEEL SELF SUSTAINING CHECK HINGE FEATURE.

BASIS OF DESIGN
CHINA - AMERICAN STANDARD 3461.001
FLUSH VALVE - ZURN Z6000PL-HET-BWN
SEAT - BEMIS 2155SSCT

U-1 URINAL, WALL MOUNTED

WHITE VITREOUS CHINA, WALL MOUNTED, SIPHON JET WITH SIDE SPLASH PANELS AND 3/4 INCH TOP SPUD.

EXPOSED URINAL FLUSH VALVE, CHROME PLATED, METAL WITH SELF-GENERATING, HYDROPOWER SYSTEM, INFRARED SENSOR AND VANDAL RESISTANT PROTECTIVE CAP. ADJUSTABLE TAIL PIECE, VACUUM BREAKER FLUSH CONNECTION AND SPUD COUPLING FOR A 3/4 INCH TOP SPUD, WALL AND SPUD FLANGES.

URINAL SUPPORT SYSTEM: COATED STEEL UPRIGHTS, WITH WELDED FEET BOLTED TO FLOOR, CAST IRON ADJUSTABLE HEADERS STEEL SLEEVES, AND ALIGNMENT TRUSS WITH FASTENERS.

BASIS OF DESIGN
CHINA - AMERICAN STANDARD 6590.001
FLUSH VALVE - ZURN ZTR6203-EWS-LL
CARRIER - ZURN Z1222

L-1 WALL HUNG LAVATORY (ADA)

BARRIER FREE, VITREOUS CHINA, WALL HUNG LAVATORY, 20"X18", WITH FRONT OVERFLOW, SELF DRAINING DECK AREA, AND BACK SPLASH PANEL. PROVIDE FIXTURE PUNCH FOR 4 INCH CENTERS AND CONCEALED ARM CARRIER SUPPORT, MOUNTING HEIGHT SHALL BE 34 INCHES FROM FINISHED FLOOR TO TOP OF DECK.

4 INCH CENTERSET COMBINATION CHROME PLATED BRASS FAUCET WITH RIGID GOOSENECK NOZZLE AND 1.5 GPM LAMINAR FLOW CONTROL TOWER, VANDAL RESISTANT 4" WRIST BLADE HANDLES WITH COLOR CODED INDEXES.

CHROME PLATED CAST BRASS GRID STRAINER WITH 1-1/4" O.D. TAILPIECE, CHROME PLATED 17-GAUGE 1-1/4"X1-1/2" BRASS P-TRAP WITH CLEANOUT PLUG AND SLIP NUTS.

3/8 INCH CHROME PLATED ANGLE STOP SUPPLIES, LOOSE KEY STOP, REDUCER, WROUGHT BRASS DEEP BELL FLANGED ESCUTCHEON AND 1/2 INCH CHROME PLATED COPPER EXTENSION TUBE.

PROVIDE P-TRAP, TAILPIECE AND WATER SUPPLIES WITH MOLDED PLASTIC ENCLOSURE THAT COMPLETELY COVERS TAILPIECE, TRAP AND WATER SUPPLIES. USE PRECUT SHIELD TO MATCH LAVATORY.

LAVATORY SUPPORT SYSTEM WITH CONCEALED ARMS: COATED STEEL UPRIGHTS WITH WELDED FEET, CAST IRON ADJUSTABLE HEADERS, STEEL SLEEVES, ALIGNMENT TRUSS AND FASTENERS.

BASIS OF DESIGN
CHINA - AMERICAN STANDARD 0355.012
FAUCET - T&S BRASS B-0892-FC
P-TRAP - MCGUIRE NO. 8902
SUPPLIES - MCGUIRE NO. H170LK
PROTECTIVE ENCLOSURE - TRUEBRO LAV SHIELD
CARRIER - J.R. SMITH 0700 SERIES

L-2 UNDER COUNTER MOUNTED LAVATORY (ADA)

BARRIER FREE, UNDER COUNTER MOUNTED CORIAN LAVATORY, 18" X 14" NOMINAL SIZE.

8 INCH DECK MOUNTED COMBINATION CHROME PLATED BRASS FAUCET WITH GOOSENECK NOZZLE WITH PLAIN END AND 1.6 GPM TOWER, VANDAL RESISTANT 4" WRIST BLADE HANDLES WITH COLOR CODED INDEXES.

CHROME PLATED CAST BRASS GRID STRAINER WITH 1-1/4" O.D. TAILPIECE, CHROME PLATED 17-GAUGE 1-1/4"X1-1/2" BRASS P-TRAP WITH CLEANOUT PLUG AND SLIP NUTS.
3/8 INCH CHROME PLATED ANGLE STOP SUPPLIES, LOOSE KEY STOP, REDUCER, WROUGHT BRASS DEEP BELL FLANGED ESCUTCHEON AND 1/2 INCH CHROME PLATED COPPER EXTENSION TUBE.

BASIS OF DESIGN
LAVATORY - DUPONT CORIAN NO. 810
FAUCET - T&S BRASS B-2867-04FC
P-TRAP - McGUIRE NO. 8902
SUPPLIES - McGUIRE NO. H170LK

L-3 UNDER COUNTER MOUNTED LAVATORY (ADA)

BARRIER FREE, UNDER COUNTER MOUNTED CORIAN LAVATORY, 16" X 12" NOMINAL SIZE. MOUNTING HEIGHT SHALL BE 34 INCHES FROM FINISHED FLOOR TO TOP OF DECK.

4 INCH DECK MOUNTED COMBINATION CHROME PLATED BRASS FAUCET WITH GOOSENECK NOZZLE AND 2.2 GPM LAMINAR FLOW TOWER, VANDAL RESISTANT 4" WRIST BLADE HANDLES WITH COLOR CODED INDEXES.

CHROME PLATED CAST BRASS GRID STRAINER WITH 1-1/4" O.D. TAILPIECE, CHROME PLATED 17-GAUGE 1-1/4"X1-1/2" BRASS P-TRAP WITH CLEANOUT PLUG AND SLIP NUTS.
3/8 INCH CHROME PLATED ANGLE STOP SUPPLIES, LOOSE KEY STOP, REDUCER, WROUGHT BRASS DEEP BELL FLANGED ESCUTCHEON AND ½ INCH CHROME PLATED COPPER EXTENSION TUBE.

BASIS OF DESIGN
LAVATORY - DUPONT CORIAN NO. 820
FAUCET - T&S BRASS B-0892-01CR-L22
P-TRAP - McGUIRE NO. 8902
SUPPLIES - McGUIRE NO. H170LK

S-1 SINK - SINGLE COMPARTMENT

SINGLE COMPARTMENT SELF RIMMING SINK CONSTRUCTED OF TYPE 302 18-8 STAINLESS STEEL, 17"X20"X7-5/8" DEEP. INTERIOR AND TOP SURFACES SHALL BE POLISHED TO A HIGH LUSTER FINISH. PROVIDE FIXTURE PUNCH FOR COMBINATION FITTING ON 4 INCH CENTERS.

4 INCH CENTERSET COMBINATION CHROME PLATED BRASS FAUCET, WITH RIGID GOOSENECK NOZZLE AND 0.7 GPM PAIN END OUTLET, VANDAL RESISTANT 4 INCH WRIST BLADE HANDLES. OUTLET SPOUT SHALL BE A MINIMUM OF 5 INCHES ABOVE RIM OF FIXTURE.

CHROME PLATED CAST BRASS CUP STRAINER WITH 1-1/2" O.D. TAILPIECE, CHROME PLATED 17-GAUGE 1-1/2"X1-1/2" BRASS P-TRAP WITH CLEANOUT PLUG AND SLIP NUTS.

3/8 INCH CHROME PLATED ANGLE STOP SUPPLIES, LOOSE KEY STOP, REDUCER, WROUGHT BRASS DEEP BELL FLANGED ESCUTCHEON AND ½ INCH CHROME PLATED COPPER EXTENSION TUBE.

BASIS OF DESIGN
SINK - ELKAY LR1720
FAUCET - T&S BRASS B-0892-FC
TRAP - MCGUIRE NO. 8912
SUPPLIES - MCGUIRE NO. H170LK

S-2 SINK - SINGLE COMPARTMENT

SINGLE COMPARTMENT SELF RIMMING SINK CONSTRUCTED OF TYPE 302 18-8 STAINLESS STEEL, 22"X22"X7-5/8" DEEP. INTERIOR AND TOP SURFACES SHALL BE POLISHED TO A HIGH LUSTER FINISH. PROVIDE FIXTURE PUNCH FOR COMBINATION FITTING ON 4 INCH CENTERS AND PROVIDE PUNCH FOR EYEWASH (EEW-1) WHERE NOTED ON PLAN DRAWINGS.

4 INCH CENTERSET COMBINATION CHROME PLATED BRASS FAUCET, WITH GOOSENECK NOZZLE AND 2.2 GPM LAMINAR FLOW TOWER, VANDAL RESISTANT 4 INCH WRIST BLADE HANDLES. OUTLET SPOUT SHALL BE A MINIMUM OF 5 INCHES ABOVE RIM OF FIXTURE.

CHROME PLATED CAST BRASS CUP STRAINER WITH 1-1/2" O.D. TAILPIECE, CHROME PLATED 17-GAUGE 1-1/2"X1-1/2" BRASS P-TRAP WITH CLEANOUT PLUG AND SLIP NUTS.

3/8 INCH CHROME PLATED ANGLE STOP SUPPLIES, LOOSE KEY STOP, REDUCER, WROUGHT BRASS DEEP BELL FLANGED ESCUTCHEON AND ½ INCH CHROME PLATED COPPER EXTENSION TUBE.

BASIS OF DESIGN
SINK - ELKAY LR2222
FAUCET - T&S BRASS B-0892-122X-LAM
TRAP - MCGUIRE NO. 8912
SUPPLIES - MCGUIRE NO. H170LK

CSS-1 - CLINICAL SERVICE SINK

FLOOR MOUNTED, VITREOUS CHINA, SIPHON JET, FLUSHING RIM SINK, WITH BOLT CAPS, STRAINER, AND STAINLESS STEEL RIM GUARDS AND 10 INCH HIGH PEDESTAL BASE.

WALL MOUNTED, ROUGH CHROME PLATED, BRASS FAUCET, WITH VACUUM BREAKER, AND INTEGRAL STOPS, AND WALL BRACE. EXPOSED FLUSH VALVE.

BEDPAN WASHER WITH WALL MOUNTED FOOT PEDALS, VACUUM BREAKER, AND WALL HOOK FOR HOSE AND NOZZLE ASSEMBLY.

BASIS OF DESIGN

SINK - AMERICAN STANDARD 9504.999.020 WITH 037640-0200 STRAINER PEDESTAL BASE - AMERICAN STANDARD 710098-201.081 RIM GUARD - AMERICAN STANDARD 7832504.075 FAUCET - T&S BRASS B-0655-BSTR BED PAN WASHER, FOOT VALVE - T&S BRASS B-0676 FLUSH VALVE - SLOAN 117

MSB-1 MOP SINK

ONE PIECE TERRAZZO WITH STAINLESS STEEL CAP, 24" x 24" x 12", WITH 6" DROP FRONT. MINIMUM COMPRESSIVE PRESSURE TO BE 3000 PSI. DRAIN BODY SHALL BE STAINLESS STEEL CAST INTEGRAL, FOR A 3" CAULK CONNECTION TO A 3" PIPE.

TYPE 304, 20 GAUGE STAINLESS STEEL SPLASH PANELS, 12" HEIGHT SECURED TO WALL ON 2 OR 3 SIDES AS NECESSARY.

SERVICE FAUCET SHALL BE CHROME PLATED WITH RENEWABLE SEATS, VACUUM BREAKER, INTEGRAL STOPS, ADJUSTABLE WALL BRACE, PAIL HOOK, AND 3/4" HOSE THREAD ON SPOUT.

BASIS OF DESIGN
MOP BASIN - FIAT - MO. TSB3000
FAUCET - T&S BRASS B-0665-BSTR

DIALYSIS STATION SUPPLY AND DRAIN WALL BOX

LOCKING RECESSED BOX FOR INSTALL IN 4" HEADWALL, WALL-FLANGE DOOR WITH CYLINDER LOCK AND KEY.

316 STAINLESS STEEL, WELDED WITH WALL ANCHOR TABS. POLISHED FINISH, 18 GAGE.

2" NOMINAL DRAIN TUBE, WASTE RECEPTOR, AND HOSE BRACKET TO CONNECT DIALYSIS MACHINE HOSE.

1/2" CW SUPPLY STOP VALVE, BRASS OR BRONZE.
1-1/4" BRASS P-TRAP AND TAILPIECE.

BASIS OF DESIGN
BOX - BRADLEY 7920 OR WHITEHALL 8196
P-TRAP - McGUIRE NO. 8902
SUPPLY - McGUIRE NO. H170LK

EWC-1 ELECTRIC WATER COOLER (H.C.) (REMOTE MOUNT CHILLER)

BARRIER FREE, BI-LEVEL, TYPE 304 STAINLESS STEEL DRINKING FOUNTAIN WITH SELF CLOSING FRONT MOUNTED PUSH BUTTON BUBBLER, REMOTE CHILLER. CHILLER UNIT CAPABLE OF 8 GPH OF 50°F AT AMBIENT TEMPERATURE OF 80°F. ELECTRICAL REQUIREMENTS - 120 VOLT.

REMOTE CHILLER, 115V, 370W TO BE MOUNTED ABOVE CEILING.

CHROME PLATED 17 GUAGE 1-1/4" x 1-1/2" BRASS P-TRAP WITH CLEAN OUT. 3/8" I.P.S. CHROME PLATED ANGLE SUPPLY, LOOSE KEY STOP, REDUCER, WROUGHT BRASS DEEP BELL FLANGE ESCUTCHEON AND 1/2" CHROME PLATED COOPER EXTENSION TUBE WITH SWEAT CONNECTIONS.

BASIS OF DESIGN
FOUNTAIN - ELKAY EDFPBM117C
REMOTE CHILLER - ELKAY ECH 8
P-TRAP - MCQUIRE 8902
CARRIER - J.R. SMITH 0830 AND WALL PLATE INCLUDED WITH FOUNTAIN
SUPPLY - MCQUIRE H170LK

EEW-1 EMERGENCY EYE WASH

SINK TOP MOUNTED EYEWASH WITH INTEGRAL FLOW CONTROL, AND LAMINAR FLOW HEADS.

BASIS OF DESIGN
HAWS 7610
TEMPERING VALVE - HAWS 9201 EW

SA-1 WATER HAMMER ARRESTER (SHOCK ABSORBER)

SPUN CLOSED SEAMLESS COPPER TUBE CHAMBER SEALING A 60 PSIG AIR CHARGE ABOVE A DOUBLE O-RING ACETAL PISTON, O-RINGS LUBRICATED WITH LONG LIFE APPROVED SILICONE COMPOUND, TO BE PROVIDED WITH MALE SWEAT END CONNECTIONS. MOUNT AT ALL LOCATIONS WITH QUICK CLOSING VALVES.

BASIS OF DESIGN
J.R. SMITH HYDROTROL 5000 SERIES

TMX-1 THERMOSTATIC MIXING VALVE

CHROME PLATED BRONZE CONSTRUCTION WITH STAINLESS STEEL COMPONENTS. LIQUID FILLED THERMAL MOTOR, SELF CLEANING SWIVEL ACTION CHECK STOPS, AND INTERNAL STRAINER. BIOMETAL THERMOMETER WITH 3" DIAMETER FACE. PERFORMANCE 40 GPM AT 5 PSI PRESSURE DROP

BASIS OF DESIGN
VALVE - LAWLER 66-125

TP-1 TRAP PRIMER VALVE

AUTOMATIC TRAP PRIMER, ALL BRASS CONSTRUCTION WITH BACKFLOW PREVENTER SEAL, NO ADJUSTMENTS REQUIRED. INSTALL PER MANUFACTURERS RECOMMENDATION AND AS INDICATED ON THE CONSTRUCTION DOCUMENTS. PERFORMANCE - OPERATE ON 6 PSI OR LESS PRESSURE DIFFERENTIAL.

BASIS OF DESIGN
PPP "PRIME-RITE" - PR-500

CO CLEANOUTS

DURA-COATED CAST IRON BODY W/CAS AND WATERTIGHT TAPERED THREAD PLUG AND ROUND TOP ADJUSTABLE TO FINISHED FLOOR; FLOOR; INFILL RECESS WITH FINISHED FLOORING TO MATCH .

BASIS OF DESIGN
FINISHED WALLS - CLEANOUT TEE WITH J.R. SMITH - NO. 4777
ACCESS DOORS - J.R. SMITH - NO. 4760
ACCESS COVERS - J.R. SMITH - NO. 4710

VINYL OR CERAMIC TILE FLOORS - J.R. SMITH - NO. 4141S-PB
TERRAZZO FLOORS - J.R. SMITH - NO. 4191-PB
CARPETED FLOORS - J.R. SMITH - NO. 4031-X

SH-1 SHOWER

SHOWER, ANTI-SCALD, CONCEALED, PRESSURE BALANCE SHOWER VALVE WITH SINGLE LEVER VOLUME CONTROL, AND INTEGRAL SERVICE STOPS. ADJUSTABLE SHOWER HEAD WITH ARM AND WALL FLANGE.

SHOWER DRAIN WITH 6 INCH NICKEL BRONZE STRAINER AND 2 INCH OUTLET.

BASIS OF DESIGN
SHOWER - SYMMONS S-9605-PLR
ORIGINS SHOWER/HAND SHOWER SYSTEM
TEMPTROL PRESSURE BALANCING VALVE
INTEGRAL SERVICE STOPS
INTEGRATED VOLUME CONTROL
IN-LINE VACUUM BREAKER
SHOWER HEAD - SYMMONS 432SH
SHOWER ARM - SYMMONS A18
SLIDE BAR - 30" ADJUSTING BAR
DRAIN - J.R. SMITH 2005

MEDICAL GAS

WALL OUTLETS - BEACON MEDAES SERIES B MEDICAL GAS OUTLET

REFER TO ARCHITECTURAL HEADWALL DETAILS FOR CONTRACTOR TO INSTALL OUTLETS IN HEADWALL UNITS AND MAKE FINAL CONNECTIONS AFTER WALL IS IN PLACE.

SMALL CONSOLE TRIM PLATE FOR INSTALL IN MILLWORK. STANDARD WALL TRIM PLATE FOR INSTALL IN GYPSUM WALL BOARD.

ZONE VALVE AND ZONE VALVE BOX ASSEMBLY
MULTIPLE ZONE VALVE BOX WITH PRESSURE GAUGE, SHUT-OFF VALVE, AND GAS-SPECIFIC SENSOR.
DUAL-PORT SHUT-OFF VALVE WITH LOCKING HANDLE.
ZONE VALVE BOX WITH PRESSURE GAUGE.
BEACON MEDAES ZVB

ALARMS
UL LISTED MICROPROCESSOR COMBINATION ALARM WITH DIGITAL DISPLAY BEACON MEDAES MEGA3 MEDICAL GAS NOTIFICATION ALARM

FLOOR DRAIN FD-2

CAST IRON DRAIN WITH FLANGE, INTEGRAL CLAMPING COLLAR, SEEPAGE OPENINGS AND 8" ROUND NICKEL BRONZE STRAINER WITH VANDAL PROOF SCREWS.

ZURN ZZN5084 NLVP

NFHB NON-FREEZE HOSE BIB

ENCASED ECOLOTROL "ANTI-SIPHON" AUTOMATIC DRAINING WALL HYDRANT FOR FLUSH INSTALLATION. COMPLETE WITH INTEGRAL BACKFLOW PREVENTER. STAINLESS STEEL BOX AND HINGED COVER WITH OPERATING KEY LOCK.

BASIS OF DESIGN
ZURN Z1320

PLUMBING LEGEND

SYMBOL	DESCRIPTION	SYMBOL	DESCRIPTION
	NEW		EXISTING
———	COLD WATER LINE (CW)	———	COLD WATER LINE (CW)
———	HOT WATER LINE (HW)	———	HOT WATER LINE (HW)
———	HOT WATER RECIRCULATING LINE (HWR)	———	HOT WATER RECIRCULATING LINE (HWR)
——SAN——	SANITARY WASTE (W)	——SAN——	SANITARY WASTE (W)
———	SANITARY VENT LINE (V)	———	SANITARY VENT LINE (V)
——SD——	STORM DRAIN (SD)	——SD——	STORM DRAIN (SD)
——▷◁——	GATE VALVE/SHUTOFF VALVE	——▷◁——	GATE VALVE/SHUTOFF VALVE
——◇——	BALANCING VALVE	——◇——	BALANCING VALVE
AAP-X-X FLOOR ZONE	AREA ALARM PANEL	——N——	NITROGEN
ZVC-X-X FLOOR ZONE	ZONE VALVE CABINET	——MA——	MEDICAL AIR
		——OX——	OXYGEN
		——VAC——	MEDICAL VACUUM
		——NO——	NITROUS OXIDE

ABBREVIATIONS *

ABV	ABOVE	L-#	LAVATORY
AFF	ABOVE FINISHED FLOOR	N/A	NOT APPLICABLE
AV	ACID VENT	NTS	NOT TO SCALE
AW	ACID WASTE	OD	OUTSIDE DIAMETER
BFP	BACKFLOW PREVENTER	OSD	OVERFLOW STORM DRAIN
CA	COMPRESSED AIR	P-#	PUMP - No.
CONN	CONNECTION	PRV	PRESSURE REDUCING VALVE
CONT	CONTINUATION	PSI	POUNDS PER SQUARE INCH
CW	DOMESTIC COLD WATER	RD	ROOF DRAIN
DN	DOWN	SAN	SANITARY
DWG	DRAWING	SD	STORM DRAIN
ELEV	ELEVATION	SF	SQUARE FEET
EWC-#	ELECTRIC WATER COOLER	SH-#	SHOWER
EXIST	EXISTING	S-#	SINK
FCO	FLOOR CLEANOUT	TYP	TYPICAL
FD	FLOOR DRAIN	UR-#	URINAL
FL	FLOOR	V	SANITARY VENT
FS	FLOOR SINK	VAC	MEDICAL VACUUM
FT	FEET	VB	VACUUM BREAKER
GPH	GALLONS PER HOUR	VC	VACUUM CLEANING
GPM	GALLONS PER MINUTE	VEL	VELOCITY
HB	HOSE BIBB	VTR	VENT THROUGH ROOF
HD	HUB DRAIN	W	SANITARY WASTE
HW	HOT WATER	WB-#	WALL BOX
HWR	HOT WATER RETURN	WC-#	WATER CLOSET
IE	INVERT ELEVATION	WCO	WALL CLEANOUT
IW	INDIRECT WASTE		

* Not All Abbreviations Used

APPLICABLE CODES

ALL WORK SHOWN ON THE ABOVE PLUMBING DRAWINGS SHALL COMPLY WITH ALL FEDERAL, STATE AND LOCAL CODES INCLUDING BUT NOT LIMITED TO THE FOLLOWING:

- SOUTH CAROLINA BUILDING CODE (SCBC), 2018 EDITION
- SOUTH CAROLINA PLUMBING CODE (SCPC), 2018 EDITION
- NFPA 101, LIFE SAFETY CODE, 2018 EDITION
- NFPA 99, HEALTH CARE FACILITIES CODE, 2018 EDITION
- FACILITY GUIDELINES INSTITUTE, GUIDELINES FOR HOSPITALS, 2018 EDITION

ALL ADOPTED CODE AMMENDMENTS SHALL APPLY.

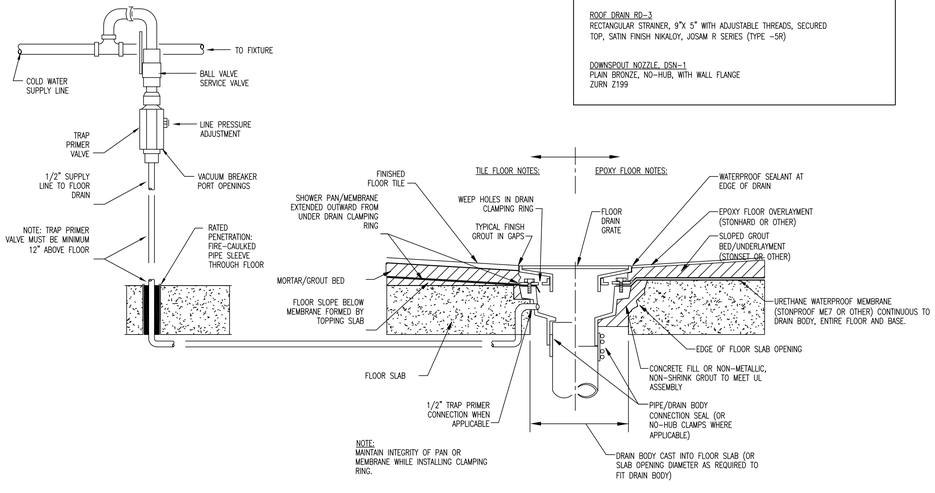

TYPICAL FLOOR DRAIN DETAIL
NO SCALE

PLUMBING GENERAL NOTES

1. PIPE ROUTING SHOWN IS SCHEMATIC AND NOT INTENDED TO INDICATE EXACT ROUTING AND ALL ADDITIONAL OFFSETS AND FITTINGS REQUIRED FOR PROPER INSTALLATION AND TO MAINTAIN CLEARANCES. CONTRACTOR TO VERIFY STRUCTURAL, MECHANICAL, ELECTRICAL INSTALLATIONS AND OBSTRUCTIONS AND ROUTE PIPING TO AVOID ANY AND ALL INTERFERENCES BETWEEN ALL OTHER TRADES AND PLUMBING PIPE ROUTING.

   ACCESS TO ABOVE-CEILING EQUIPMENT/CONTROLS SHALL BE PRACTICABLE WITH USE OF 8-FOOT LADDER AND THROUGH A 24X24 CEILING TILE OR ACCESS PANEL. THROUGH THE ENTIRETY OF THE PROJECT WARRANTY PERIOD, FIRE SPRINKLER CONTRACTOR SHALL BE RESPONSIBLE TO MODIFY PLUMBING PIPING INSTALLATION AS NECESSARY TO PROVIDE REQUIRED ACCESS TO DEVICES.
2. ALL PLUMBING INSTALLATIONS AND MATERIALS SHALL BE IN STRICT ACCORDANCE WITH SOUTH CAROLINA PLUMBING CODE 2018, NFPA 99 2018, DHSR REGULATIONS AND ALL MUNICIPAL, STATE AND FEDERAL CODES AND REGULATIONS AND AUTHORITIES HAVING JURISDICTION OVER THE PROJECT.
3. DRAINAGE SYSTEMS SHALL BE SLOPED PER SCPC AND/OR IPC. SLOPE NOT NOTED ON THE DRAWING(S) UNLESS THE PIPE SIZE AND SLOPE IS ADJUSTED TO SUIT BUILDING CONDITIONS SUCH AS CEILING HEIGHTS OR BUILDING STEEL LOCATIONS AS WELL AS ALL OTHER ENGINEERED SYSTEMS.
4. FIRE STOPPING ALL PENETRATIONS OF RATED WALLS, CEILINGS, AND FLOORS IS COVERED IN SPECIFICATION SECTION 078413.
5. PROVIDE AND INSTALL WHEN REQUIRED BY CODE AN AIR GAP SERVING INDIVIDUAL FIXTURES, DEVICES, APPLIANCES OR APPARATUS.
6. PROVIDE SANITARY WASTE, VENT, DOMESTIC WATER, ETC., ROUGH-IN AND MAKE FINAL CONNECTIONS (INCLUDING SUPPLYING AND/OR INSTALLING ALL NECESSARY RELATED STOPS, VALVES, TRAPS, ETC., AND MAKING READY FOR USE) TO ALL EQUIPMENT WHETHER FURNISHED BY THIS CONTRACTOR OR FURNISHED BY OTHERS.
7. SIZE AND LOCATION OF CLEANOUTS SHALL BE IN ACCORDANCE WITH INTERNATIONAL PLUMBING CODE 2018 AND ALL GOVERNING MUNICIPAL CODES AND ORDINANCES.
8. INSTALL ALL PIPING CONCEALED ABOVE CEILING WITHIN WALLS, CHASES OR IN MECHANICAL ROOMS, EXCEPT AS SPECIFICALLY NOTED. WORK TO BE DONE ONLY BY WORKMEN SKILLED IN THE TRADE INVOLVED AND TO THE SATISFACTION OF THE OWNERS REPRESENTATIVE.
9. PROVIDE ALL CONCEALED VALVES, WATER HAMMER ARRESTORS, CLEANOUTS, ETC., CONCEALED IN WALLS WITH AN ACCESS PANEL SUCH AS J.R. SMITH 4760 OR APPROVED EQUAL.
10. LOCATION OF EXISTING PIPING, DUCTWORK, REGISTERS, ETC... IS BASED ON EXISTING DRAWINGS AND MUST BE FIELD VERIFIED.
11. PLUMBING SHALL NOT BE INSTALLED WITHIN THE REQUIRED SPACE FOR WORKING CLEARANCE OF ELECTRICAL EQUIPMENT IN ACCORDANCE WITH NEC-110.28.

PHASING NOTES

1. INSTALLATION OF NEW FIXTURES ON LEVEL 4 OF THIS PROJECT WILL REQUIRE EXTENSION OF SANITARY DRAINS AND VENT STACKS FROM ABOVE CEILINGS OF LEVEL 3 WHICH IS AN OCCUPIED FLOOR. PLUMBING WORK IN CEILINGS OF LEVEL 3 PATIENT ROOMS AND TOILETS SHALL BE COORDINATED TO MINIMIZE DISRUPTIONS TO TWO PATIENT ROOMS AT ANY TIME. ALL WORK IN LEVEL 3 ABOVE OR BELOW CEILINGS SHALL BE COMPLETED IN ACCORDANCE WITH THE McLEOD HEALTH INFECTION CONTROL PLAN FOR THIS PROJECT. ALL WALLS OR CEILINGS DEMOLISHED OR REMOVED TO ACCOMPLISH NEW PLUMBING WORK ON LEVEL 3 SHALL BE RESTORED TO THE (ORIGINAL) CONDITIONS PRIOR THE START OF CONSTRUCTION.

DRAIN SCHEDULE

FLOOR DRAIN FD-1
NOT USED

FLOOR DRAIN FD-2
CAST IRON DRAIN WITH FLANGE, INTEGRAL CLAMPING COLLAR, SEEPAGE OPENINGS AND 8" ROUND NICKEL BRONZE STRAINER WITH VANDAL PROOF SCREWS. J.R. SMITH 2110-NB OR EQUAL.

ROOF DRAIN RD-1
15" DIAMETER CAST IRON COMBINATION PRIMARY AND SECONDARY ROOF DRAIN WITH LOW PROFILE CAST IRON STRAINER AND DECK CLAMP, 4" OR 6" TO MATCH DRAIN PIPING SIZE.
ZURN Z103

ROOF DRAIN RD-2
CAST IRON MEDIUM DECK DRAIN WITH 2" EXTENSION, DECK CLAMP, AND SUMP DRAIN PAN. 4" OUTLET AND NICKEL BRONZE GRATE. EQUAL J.R. SMITH 1450-NB

ROOF DRAIN RD-3
RECTANGULAR STRAINER, 9"X 5" WITH ADJUSTABLE THREADS, SECURED TOP, SATIN FINISH NIKALOY, JOSAM R SERIES (TYPE -5R)

DOWNSPOUT NOZZLE, DSN-1
PLAIN BRONZE, NO-HUB, WITH WALL FLANGE
ZURN Z199

DesignStrategies
Planning
Architecture
Interior Architecture
Landscape Architecture
Engineering

130 South Main Street
Greenville, SC 29601
T (864) 527-6500
F (864) 233-8385

SOUTH CAROLINA DESIGN STRATEGIES, LLC No. C02638 CERTIFICATE OF AUTHORIZATION

SOUTH CAROLINA LICENSED PROFESSIONAL ENGINEER NO. 23210 JOHN C. BAILEY

REVISIONS

NO	DATE	DESCRIPTION
0	12.24.2020	ISSUED FOR BID

McLeod Health
The Choice for Medical Excellence.

SEACOAST HOSPITAL
50-BED ADDITION

LITTLE RIVER, SC

KEYPLAN

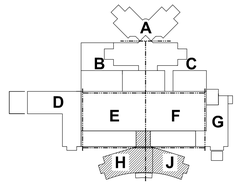

TRUE NORTH

0' 4' 8' 16'
SCALE: 1/8"=1'-0"

PROJECT NO: 0370.45
DATE: 12.24.2020
COPYRIGHT © 2020 DesignStrategies, LLC

PLUMBING LEGEND
SCHEDULES
ABBREVIATIONS
SPECIFICATIONS
AND NOTES

PL001-U

A1 PLUMBING LEGEND SCHEDULES ABBREVIATIONS AND NOTES

SCALE: NONE

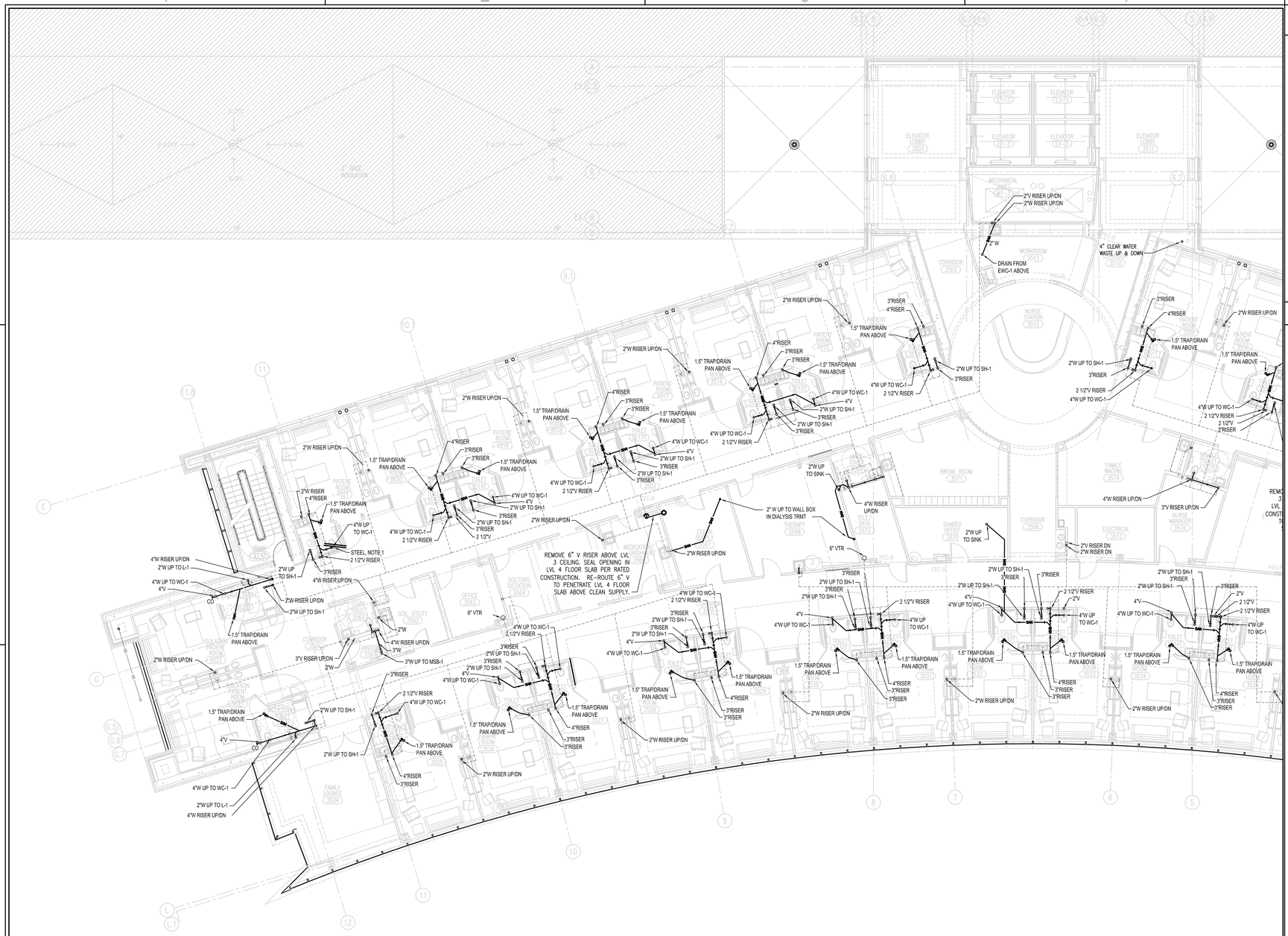
2"W RISER UP/DN
2"V RISER UP/DN
2"W RISER UP/DN
4" CLEAR WATER WASTE UP & DOWN
DRAIN FROM EWC-1 ABOVE
1.5" TRAP/DRAIN PAN ABOVE
4"RISER
3"RISER
2"W UP TO SH-1
4"W UP TO WC-1
4"V
2 1/2"V RISER
2"W UP TO WC-1
2"W UP TO L-1
4"W RISER UP/DN
3"V RISER UP/DN
3"W RISER
2"W UP TO MSB-1
2"W UP TO SINK
2"W UP TO WALL BOX IN DIALYSIS TRMT
6" VTR
4"W UP TO SINK
2"V RISER DN
2"W RISER DN
3"V RISER UP/DN
REMOVE 6" V RISER ABOVE LVL 3 CEILING. SEAL OPENING IN LVL 4 FLOOR SLAB PER RATED CONSTRUCTION. RE-ROUTE 6" V TO PENETRATE LVL 4 FLOOR SLAB ABOVE CLEAN SUPPLY.
STEEL NOTE 1
CO
2"V
2 1/2"V
4"W UP TO TO WC-1
ELEVATOR (E1-3)
ELEVATOR (E2-3)
ELEVATOR (E3-3)
ELEVATOR (E4-3)
ELEVATOR LOBBY 3501
MECHANICAL SHAFT MS-3
WORKROOM 3513
CORRIDOR 3502
NURSE STATION 3512
PATIENT ROOM 3510
PATIENT ROOM 3511
PATIENT ROOM 3515
PATIENT ROOM 3516
PATIENT ROOM 3517
PATIENT ROOM 3518
PATIENT ROOM 3519
PATIENT ROOM 3520
PATIENT ROOM 3521
ISOLATION PATIENT ROOM 3522
ISOLATION PATIENT ROOM 3523
PATIENT ROOM 3524
PATIENT ROOM 3525
PATIENT ROOM 3526
PATIENT ROOM 3527
PATIENT ROOM 3528
PATIENT ROOM 3529
PATIENT ROOM 3530
PATIENT ROOM 3531
PATIENT ROOM 3532
PATIENT ROOM 3533
PATIENT ROOM 3534
PATIENT ROOM 3535
PATIENT ROOM

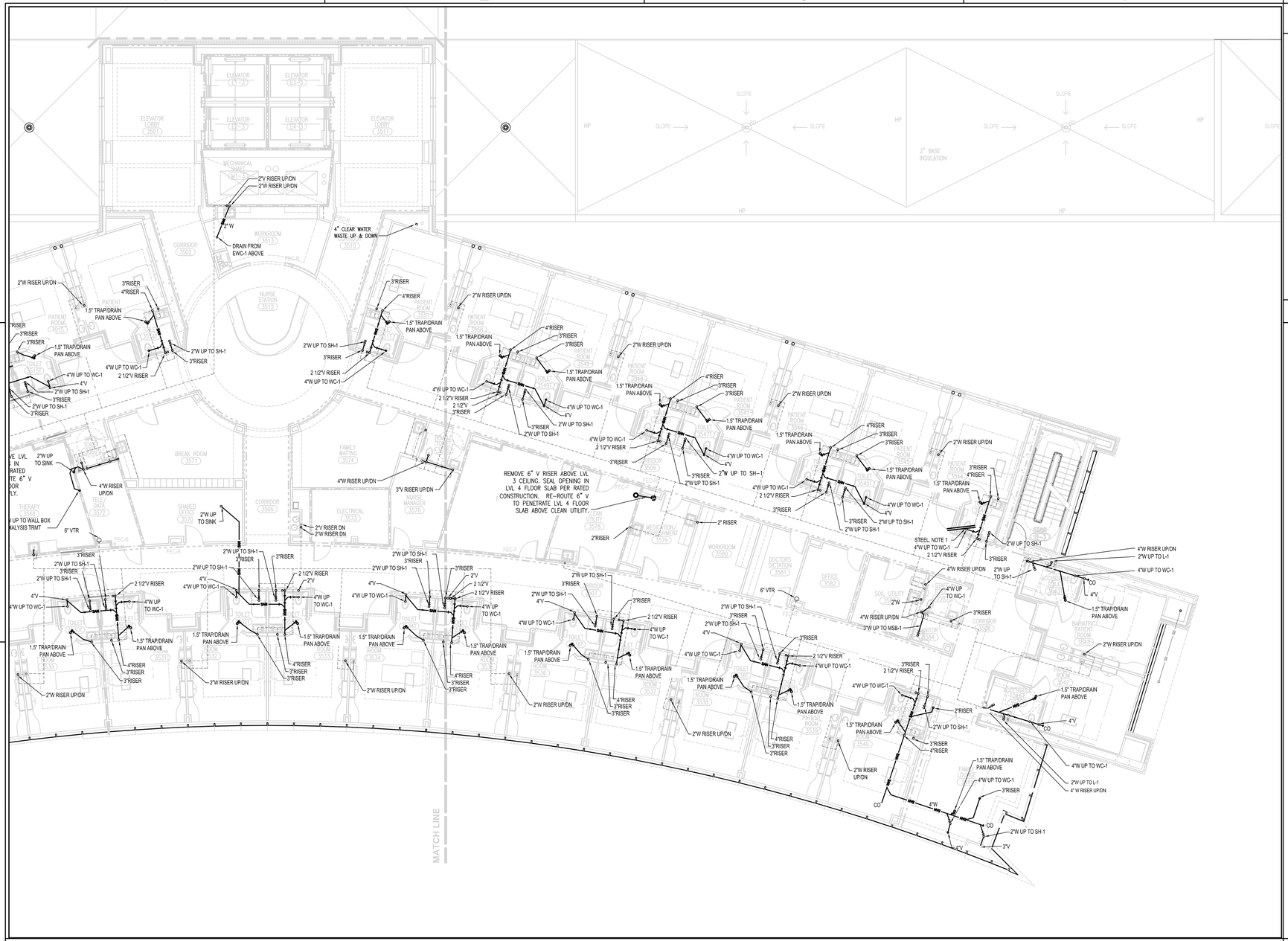

B1 LEVEL 3 PLUMBING FLOOR PLAN - ZONE J

SCALE: 1/8" = 1'-0"

B5 NOT USED

A1 NOT USED

A5 NOT USED

D5 SHEET NOTES

NOTES

1. THIS WATER CLOSET OUTLET IS LOCATED CLOSE TO BUILDING STEEL. THE LOCATION OF THE STEEL REQUIRES THE OUTLET PIPE THAT IS ADJACENT TO THE WATER CLOSET TO BE OFFSET INSIDE THE CONCRETE FLOOR. INSTALL SHORT CLOSET FLANGE, OATEY 4"X 2" TALL, CAST IRON CLOSET FLANGE, (WWW.OATEY.COM) AND, INSTALL BACK-TO-BACK 4" 1/8TH BENDS NO-HUB CAST IRON FITTINGS.

C5 GENERAL NOTES

1. INSTALLATION OF NEW FIXTURES ON LEVEL 4 OF THIS PROJECT WILL REQUIRE EXTENDINGSANITARY DRAINS AND VENT STACKS FROM ABOVE CEILINGS OF LEVEL 3 WHICH IS AN OCCUPIED FLOOR. PLUMBING WORK IN CEILINGS OF LEVEL 3 PATIENT ROOMS AND TOILETS SHALL BE COORDINATED TO MINIMIZE DISRUPTIONS TO TWO PATIENT ROOMS AT ANY TIME. ALL WORK IN LEVEL 3 ABOVE OR BELOW CEILINGS SHALL BE COMPLETED IN ACCORDANCE WITH THE McLEOD HEALTH INFECTION CONTROL PLAN FOR THIS PROJECT. ALL WALLS OR CEILINGS DEMOLISHED OR REMOVED TO ACCOMPLISH NEW PLUMBING WORK ON LEVEL 3 SHALL BE RESTORED TO THE (ORIGINAL) CONDITIONS PRIOR THE START OF CONSTRUCTION.
2. MODIFY EXISTING THIRD FLOOR SANITARY VENT PIPING TO ACCOMMODATE NEW FOURTH FLOOR SANITARY PIPING LAYOUT.

DesignStrategies

Planning
Architecture
Interior Architecture
Landscape Architecture
Engineering

130 South Main Street
Greenville, SC 29601
T (864) 527-6500
F (864) 233-8385

SOUTH CAROLINA DESIGN STRATEGIES, LLC No. C02638 CERTIFICATE OF AUTHORIZATION

SOUTH CAROLINA LABOR, LICENSING AND REGULATION PROFESSIONAL ENGINEER NO. 23210 DON C. BAILEY

REVISIONS

NO	DATE	DESCRIPTION
0	12.24.2020	ISSUED FOR BID

McLeod Health
The Choice for Medical Excellence.

SEACOAST HOSPITAL 50-BED ADDITION

LITTLE RIVER, SC

KEYPLAN

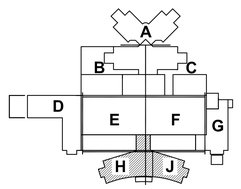

TRUE NORTH TRUE NORTH

PROJECT NO: **0370.45**
DATE: **12.24.2020**
COPYRIGHT © 2020 **DesignStrategies, LLC**

LEVEL 3
PLUMBING DWV
FLOOR PLAN
ZONE J

PL103J-U

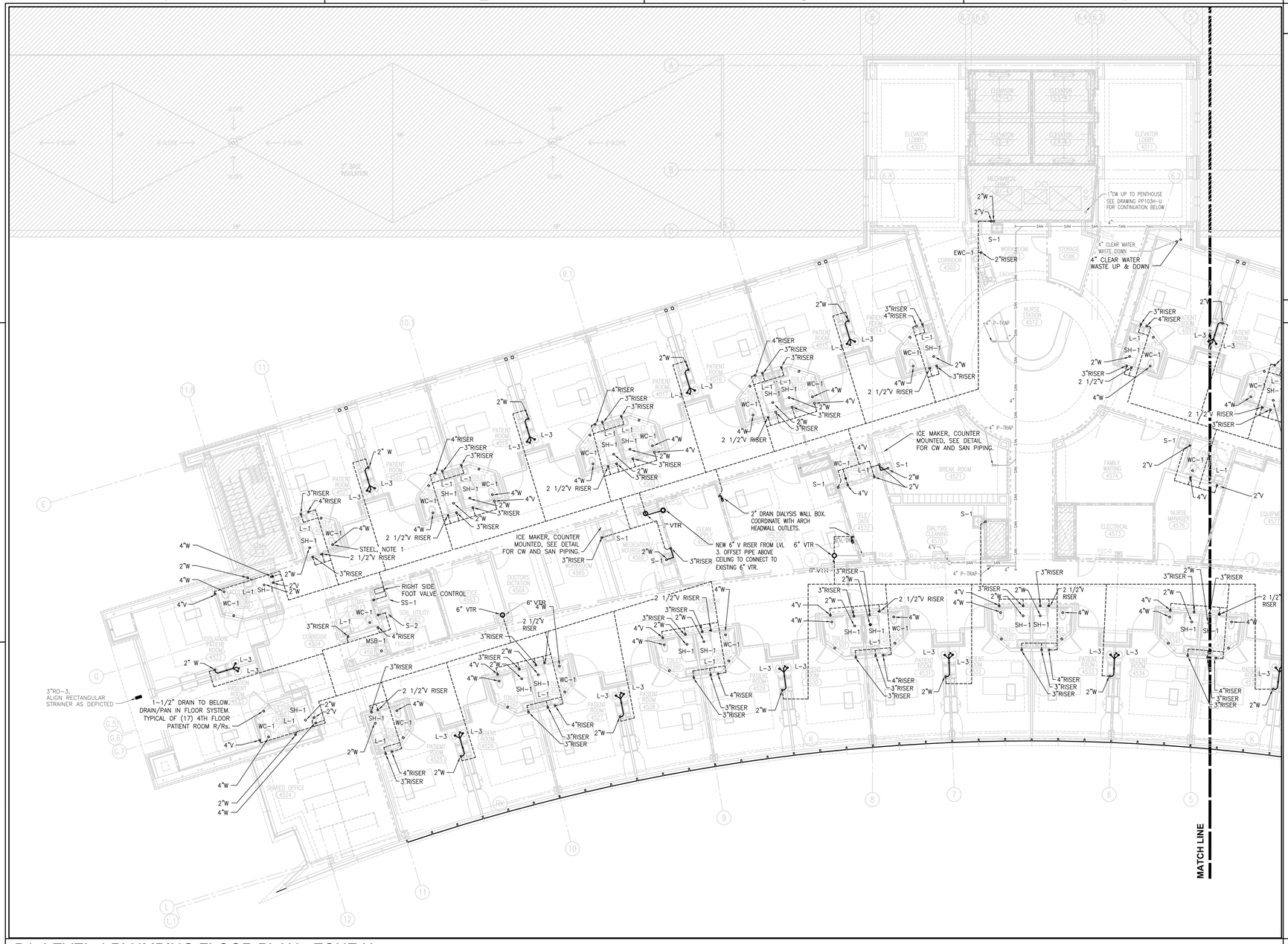

B1 LEVEL 4 PLUMBING FLOOR PLAN - ZONE H

SCALE: 1/8" = 1'-0"

A1 NOT USED

D5 SHEET NOTES

C5 GENERAL NOTES

1. INSTALLATION OF NEW FIXTURES ON LEVEL 4 OF THIS PROJECT WILL REQUIRE EXTENDINGSANITARY DRAINS AND VENT STACKS FROM ABOVE CEILINGS OF LEVEL 3 WHICH IS AN OCCUPIED FLOOR. PLUMBING WORK IN CEILINGS OF LEVEL 3 PATIENT ROOMS AND TOILETS SHALL BE COORDINATED TO MINIMIZE DISRUPTIONS TO TWO PATIENT ROOMS AT ANY TIME. ALL WORK IN LEVEL 3 ABOVE OR BELOW CEILINGS SHALL BE COMPLETED IN ACCORDANCE WITH THE McLEOD HEALTH INFECTION CONTROL PLAN FOR THIS PROJECT. ALL WALLS OR CEILINGS DEMOLISHED OR REMOVED TO ACCOMPLISH NEW PLUMBING WORK ON LEVEL 3 SHALL BE RESTORED TO THE (ORIGINAL) CONDITIONS PRIOR THE START OF CONSTRUCTION.
2. MODIFY EXISTING THIRD FLOOR SANITARY VENT PIPING TO ACCOMMODATE NEW FOURTH FLOOR SANITARY PIPING LAYOUT.

DesignStrategies

Planning
Architecture
Interior Architecture
Landscape Architecture
Engineering

130 South Main Street
Greenville, SC 29601
T (864) 527-6500
F (864) 233-8385

SOUTH CAROLINA DESIGN STRATEGIES, LLC No. C02638 CERTIFICATE OF AUTHORIZATION

SOUTH CAROLINA LICENSED PROFESSIONAL ENGINEER NO. 23210 JOHN C. BALL IV

REVISIONS

NO	DATE	DESCRIPTION
0	12.24.2020	ISSUED FOR BID

McLeod Health
The Choice for Medical Excellence.

SEACOAST HOSPITAL
50-BED ADDITION

LITTLE RIVER, SC

KEYPLAN

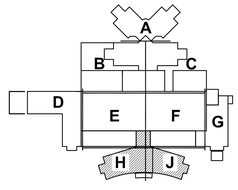

TRUE NORTH TRUE NORTH

PROJECT NO: **0370.45**
DATE: **12.24.2020**
COPYRIGHT © 2020 **DesignStrategies, LLC**

LEVEL 4
PLUMBING DWV
FLOOR PLAN
ZONE H

PL104H-U

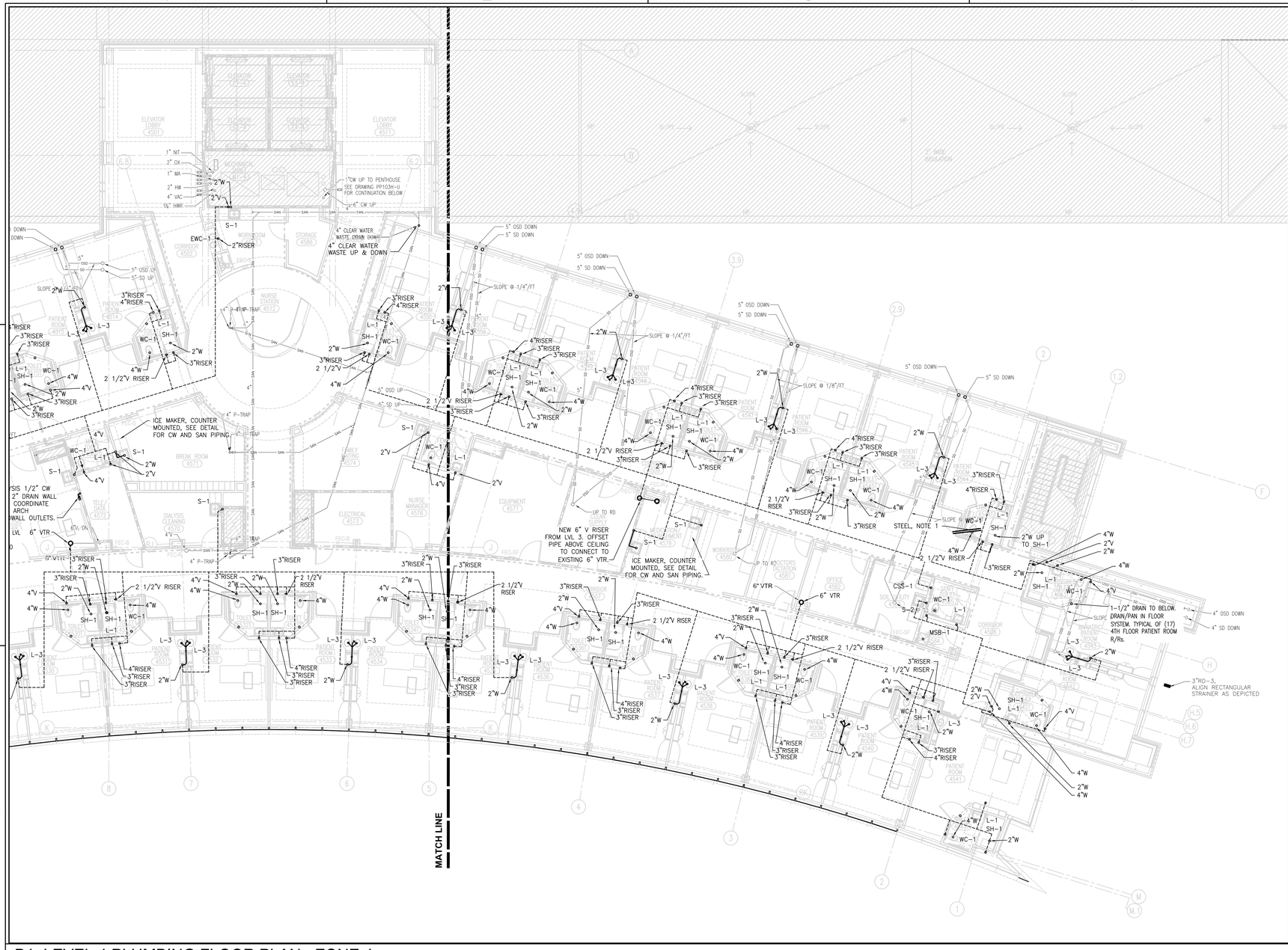

B1 LEVEL 4 PLUMBING FLOOR PLAN - ZONE J

SCALE: 1/8" = 1'-0"

A1 NOT USED

D5 SHEET NOTES

C5 GENERAL NOTES

1. INSTALLATION OF NEW FIXTURES ON LEVEL 4 OF THIS PROJECT WILL REQUIRE EXTENDINGSANITARY DRAINS AND VENT STACKS FROM ABOVE CEILINGS OF LEVEL 3 WHICH IS AN OCCUPIED FLOOR. PLUMBING WORK IN CEILINGS OF LEVEL 3 PATIENT ROOMS AND TOILETS SHALL BE COORDINATED TO MINIMIZE DISRUPTIONS TO TWO PATIENT ROOMS AT ANY TIME. ALL WORK IN LEVEL 3 ABOVE OR BELOW CEILINGS SHALL BE COMPLETED IN ACCORDANCE WITH THE McLEOD HEALTH INFECTION CONTROL PLAN FOR THIS PROJECT. ALL WALLS OR CEILINGS DEMOLISHED OR REMOVED TO ACCOMPLISH NEW PLUMBING WORK ON LEVEL 3 SHALL BE RESTORED TO THE (ORIGINAL) CONDITIONS PRIOR THE START OF CONSTRUCTION.
2. MODIFY EXISTING THIRD FLOOR SANITARY VENT PIPING TO ACCOMMODATE NEW FOURTH FLOOR SANITARY PIPING LAYOUT.

DesignStrategies

Planning
Architecture
Interior Architecture
Landscape Architecture
Engineering

130 South Main Street
Greenville, SC 29601
T (864) 527-6500
F (864) 233-8385

SOUTH CAROLINA DESIGN STRATEGIES, LLC No. C02638 CERTIFICATE OF AUTHORIZATION

SOUTH CAROLINA REGISTERED PROFESSIONAL ENGINEER NO. 23210 JOHN C. BAILEY

REVISIONS

NO	DATE	DESCRIPTION
0	12.24.2020	ISSUED FOR BID

McLeod Health
The Choice for Medical Excellence.

SEACOAST HOSPITAL
50-BED ADDITION

LITTLE RIVER, SC

KEYPLAN

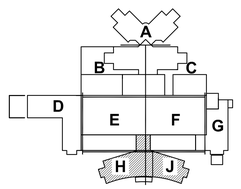

TRUE NORTH TRUE NORTH

PROJECT NO: **0370.45**
DATE: **12.24.2020**
COPYRIGHT © 2020 **DesignStrategies, LLC**

LEVEL 4
PLUMBING DWV
FLOOR PLAN
ZONE J

PL104J-U



B1 LEVEL 4 MEDICAL GAS FLOOR PLAN - ZONE H

1/8" = 1'-0"

A1 NOT USED

D5 PLAN NOTES

1. CONNECT 1/2" OX, 3/4" VAC AND 1/2" MA TO HEADWALL. SEE ELEVATION "C1" ON SHEET AE812 FOR LOCATIONS, QUANTITIES, AND TYPES OF OUTLETS.
2. CONNECT 1/2" OX, 3/4" VAC AND 1/2" MA TO HEADWALL. SEE ELEVATION "A4" ON SHEET AE810 FOR LOCATIONS, QUANTITIES, AND TYPES OF OUTLETS.

C5 GENERAL NOTES

B5 NOT USED

A5 NOT USED

DesignStrategies

Planning
Architecture
Interior Architecture
Landscape Architecture
Engineering

130 South Main Street
Greenville, SC 29601
T (864) 527-6500
F (864) 233-8385

SOUTH CAROLINA DESIGN STRATEGIES, LLC No. C02638 CERTIFICATE OF AUTHORIZATION

SOUTH CAROLINA REGISTERED PROFESSIONAL ENGINEER NO. 23210 DON C BAILEY

REVISIONS

NO	DATE	DESCRIPTION
0	12.24.2020	ISSUED FOR BID

McLeod Health
The Choice for Medical Excellence.

SEACOAST HOSPITAL
50-BED ADDITION

LITTLE RIVER, SC

KEYPLAN

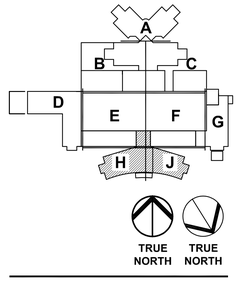

PROJECT NO: 0370.45
DATE: 12.24.2020
COPYRIGHT © 2020 DesignStrategies, LLC

LEVEL 4
MEDICAL GAS
FLOOR PLAN
ZONE H

PM104H-U


NOTE:
SEE MEDGAS RISER ON SHEET PL001 FOR MORE INFORMATION
3/4" OX FROM 3RD FLOOR
3/4" MA FROM 3RD FLOOR
1 1/4" VAC FROM 3RD FLOOR
AAP-4-1
AAP-4-2
ZVC-4-1
ZVC-4-2
1/2" OX
1/2" MA
3/4" VAC
3/4" OX
3/4" MA
1 1/4" VAC
ELEVATOR LOBBY 4507
NURSE STATION 4512
CORRIDOR 4502
CORRIDOR 4507
BREAK ROOM 4571
FAMILY WAITING 4574
NURSE MANAGER 4576
EQUIPMENT 4577
CLEAN SUPPLY 4578
MEDICATION / NOURISHMENT 4579
WORKROOM 4580
DOCTORS DICTATION 4581
OFFICE 4582
SOIL UTILITY 4583
DIALYSIS CLEANING 4570
ELECTRICAL 4573
PATIENT ROOM 4549
PATIENT ROOM 4545
PATIENT ROOM 4541
PATIENT ROOM 4537
PATIENT ROOM 4533
PATIENT ROOM 4534
PATIENT ROOM 4536
PATIENT ROOM 4538
PATIENT ROOM 4539
PATIENT ROOM 4543
PATIENT ROOM 4547
PATIENT ROOM 4551
PATIENT ROOM 4553
PATIENT ROOM 4555
PATIENT ROOM 4557
PATIENT ROOM 4559
PATIENT ROOM 4561
PATIENT ROOM 4563
PATIENT ROOM 4565
PATIENT ROOM 4567
PATIENT ROOM 4569
PATIENT ROOM 4571
PATIENT ROOM 4573
PATIENT ROOM 4575
PATIENT ROOM

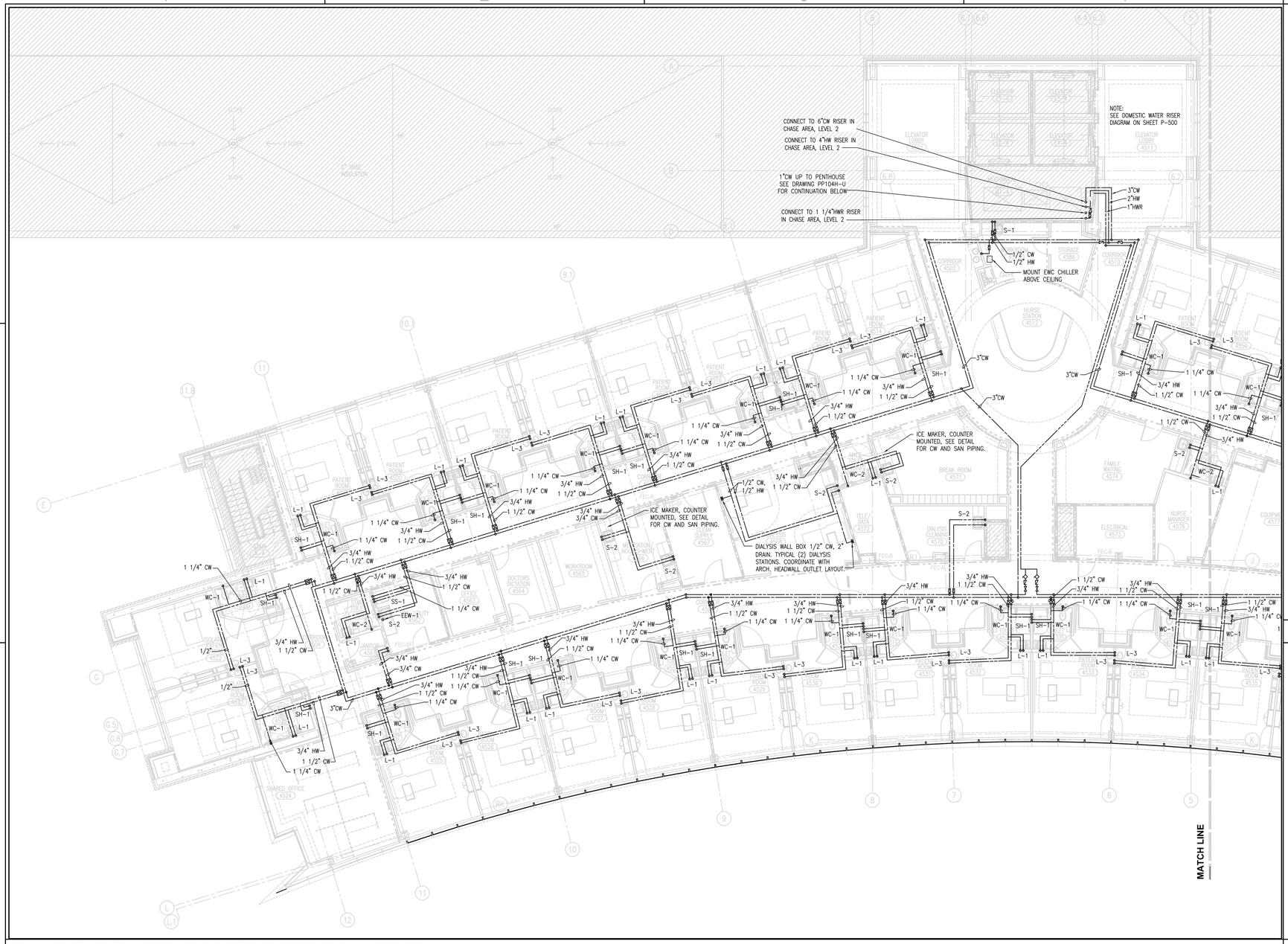

B1 LEVEL 3 PLUMBING WATER FLOOR PLAN - ZONE H

1/8" = 1'-0"

C5 GENERAL NOTES

B5 NOT USED

A1 NOT USED

A5 NOT USED

DesignStrategies

Planning
Architecture
Interior Architecture
Landscape Architecture
Engineering

130 South Main Street
Greenville, SC 29601
T (864) 527-6500
F (864) 233-8385

SOUTH CAROLINA DESIGN STRATEGIES, LLC No. C02638 CERTIFICATE OF AUTHORIZATION

SOUTH CAROLINA REGISTERED PROFESSIONAL ENGINEER NO. 23210 JOHN C. BAILEY

REVISIONS

NO	DATE	DESCRIPTION
0	12.24.2020	ISSUED FOR BID

McLeod Health
The Choice for Medical Excellence.

SEACOAST HOSPITAL
50-BED ADDITION

LITTLE RIVER, SC

KEYPLAN

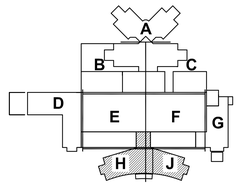

TRUE NORTH TRUE NORTH

PROJECT NO: **0370.45**
DATE: **12.24.2020**
COPYRIGHT © 2020 **DesignStrategies, LLC**

LEVEL 4
PLUMBING WATER
FLOOR PLAN
ZONE H

PP104H-U

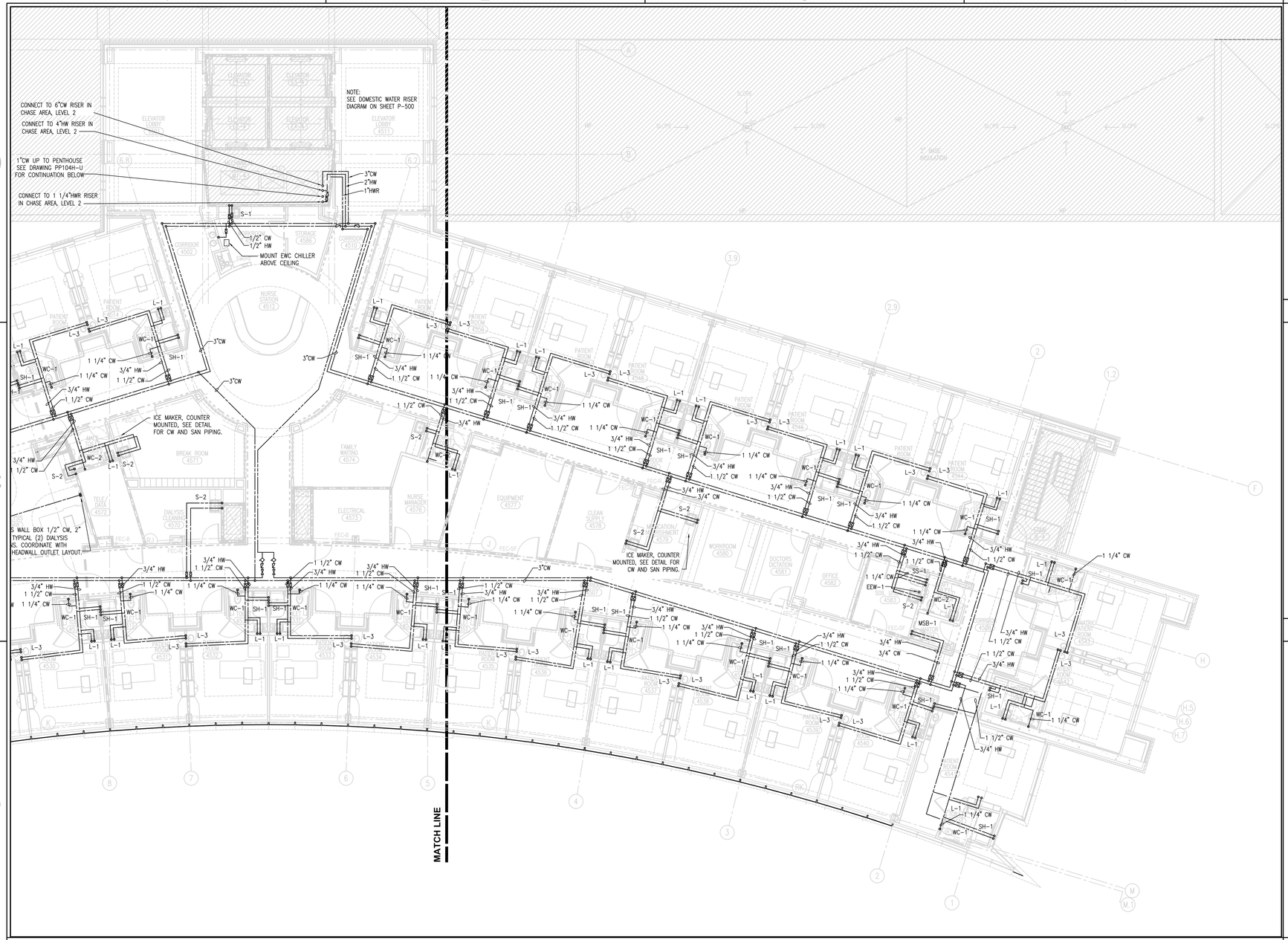

B1 LEVEL 4 PLUMBING WATER FLOOR PLAN - ZONE J

SCALE: 1/8" = 1'-0"

A1 NOT USED

DesignStrategies

Planning
Architecture
Interior Architecture
Landscape Architecture
Engineering

130 South Main Street
Greenville, SC 29601
T (864) 527-6500
F (864) 233-8385

SOUTH CAROLINA DESIGN STRATEGIES, LLC No. C02638 CERTIFICATE OF AUTHORIZATION

SOUTH CAROLINA LICENSED PROFESSIONAL NO. 23210 JOHN C. BAILEY

REVISIONS

NO	DATE	DESCRIPTION
0	12.24.2020	ISSUED FOR BID

McLeod Health
The Choice for Medical Excellence.

SEACOAST HOSPITAL
50-BED ADDITION

LITTLE RIVER, SC

KEYPLAN

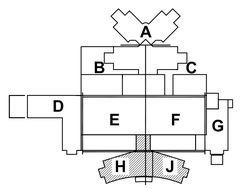

TRUE NORTH TRUE NORTH

PROJECT NO: **0370.45**
DATE: **12.24.2020**
COPYRIGHT © 2020 **DesignStrategies, LLC**

LEVEL 4
PLUMBING WAER
FLOOR PLAN
ZONE J

PP104J-U

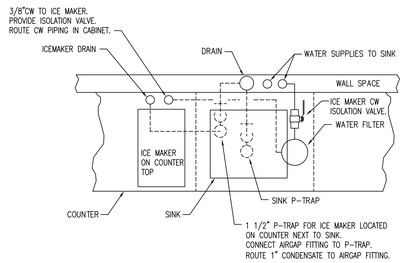

ICE MAKER AIRGAP CONNECTION (PLAN VIEW)
NO SCALE

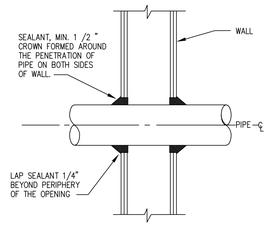

PIPE SLEEVE DETAIL
NO SCALE

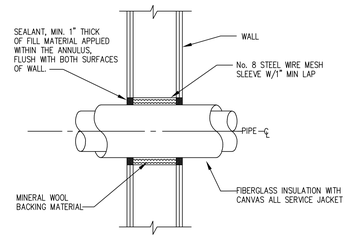

PIPE SLEEVE DETAIL
NO SCALE

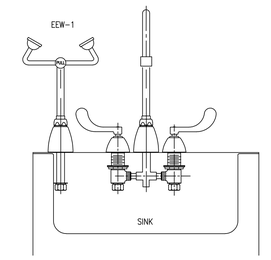

CONTRACTOR SHALL PROVIDE PUNCH IN SINK FOR EMERGENCY EYE WASH

FAUCET MOUNTED EYEWASH
NO SCALE

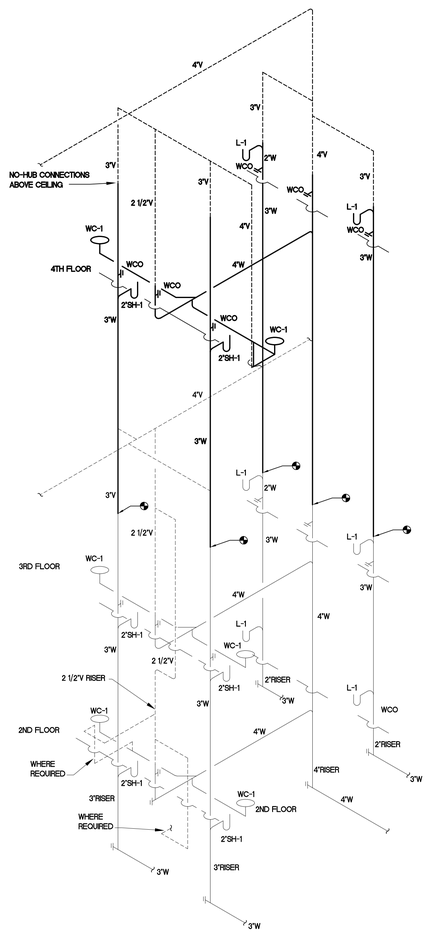

TYPICAL PATIENT ROOM SANITARY WASTE RISER

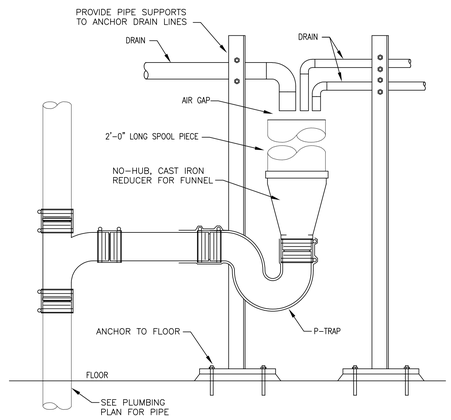

TYPICAL AIRGAP CONNECTION DETAIL
NO SCALE

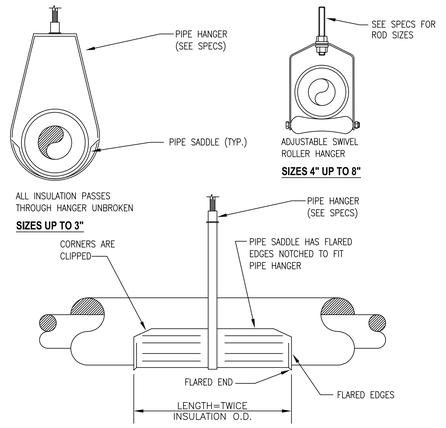

INSULATED PIPE HANGER
NO SCALE

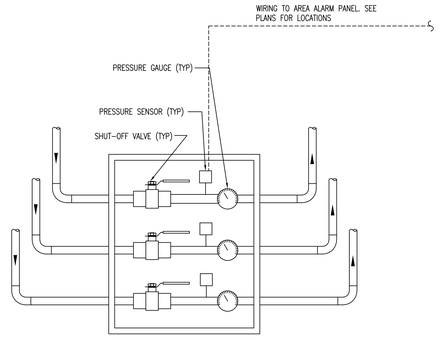

ZONE VALVE CABINET ELEVATION
NO SCALE

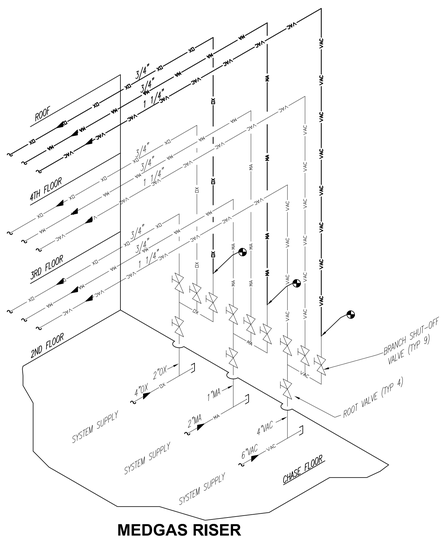

MEDGAS RISER

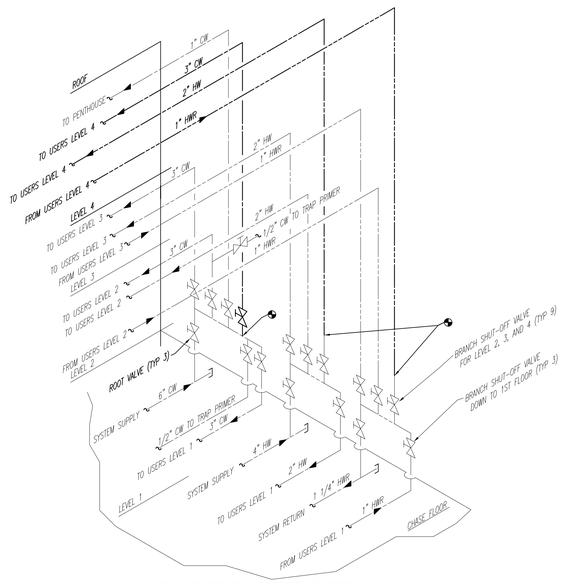

DOMESTIC WATER RISER

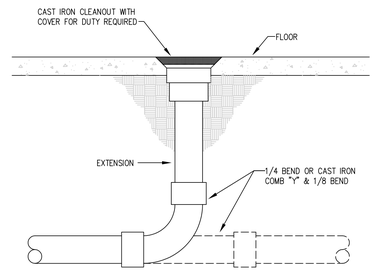

FLOOR CLEANOUT DETAIL
NO SCALE

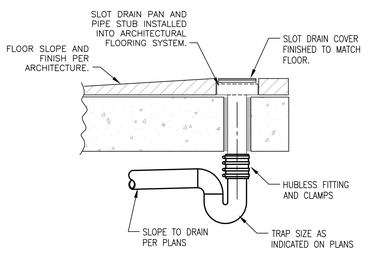

SLOT DRAIN/PAN CONNECTION
NO SCALE

A1 PLUMBING DETAILS AND RISERS

SCALE: NONE

DesignStrategies

Planning
Architecture
Interior Architecture
Landscape Architecture
Engineering

130 South Main Street
Greenville, SC 29601
T (864) 527-6500
F (864) 233-8385

SOUTH CAROLINA DESIGN STRATEGIES, LLC No. C02638 CERTIFICATE OF AUTHORIZATION

SOUTH CAROLINA LICENSED PROFESSIONAL No. 23210 JOHN C. BAILEY

REVISIONS

NO	DATE	DESCRIPTION
0	12.24.2020	ISSUED FOR BID

McLeod Health
The Choice for Medical Excellence.

SEACOAST HOSPITAL
50-BED ADDITION

LITTLE RIVER, SC

KEYPLAN

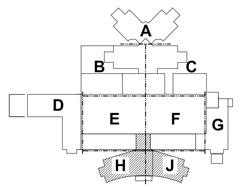

TRUE NORTH

PROJECT NO: **0370.45**
DATE: **12.24.2020**
COPYRIGHT © 2020 **DesignStrategies, LLC**

PLUMBING DETAILS AND RISERS

P-500-U

SCHEDULE

- LIGHT HAZARD CONCEALED HEADS*
- ORDINARY HAZARD GROUP 1 UPRIGHT HEADS
- ORDINARY HAZARD GROUP 1 CONCEALED HEADS

* QUICK RESPONSE SPRINKLERS

LAY IN CEILING TILES AND GYPSUM CEILINGS: CONCEALED SPRINKLER HEAD COVERS SHALL BE COLOR WHITE.

WOOD CEILINGS: CONCEALED SPRINKLER HEAD COVERS SHALL MATCH COLOR "LIMBER MAPLE".

DESIGN CRITERIA:

WET SYSTEM
LIGHT HAZARD
0.10 GPM/SQ.FT.
1500 SQ. FT. REMOTE AREA
MAXIMUM COVERAGE – 225 SQ. FT.

WET SYSTEM
ORDINARY HAZARD GROUP 1
0.15 GPM/SQ.FT.
1500 SQ. FT. REMOTE AREA
MAXIMUM COVERAGE – 130 SQ. FT.

LEGEND

SYMBOL	DESCRIPTION
	GATE VALVE
	CHECK VALVE
	ZONE CONTROL VALVE ASSEMBLY
	ELBOW TURNED DOWN (DN)
	ELBOW TURNED UP
	SPRINKLER PIPING

HYDRANT FLOW TEST DATA

HYDRANT LOCATION: 4000 HWY 9, LITTLE RIVER, SC;
SEACOAST HOSPITAL

STATIC PRESSURE: 59 PSIG

RESIDUAL PRESSURE: 51 PSIG AT A FLOW RATE OF 1,000 GALLONS PER MINUTE.

DATE OF TEST: JULY 5, 2019

FIRE PROTECTION NOTES

1. SYSTEMS SHALL COMPLY WITH N.F.P.A. 13, 2018 EDITION, AND ALL APPLICABLE STATE/LOCAL GOVERNMENTAL CODES AND ORDINANCES.
2. CONTRACTOR SHALL OBTAIN APPLICABLE PERMITS AND LICENSES
3. INSPECTIONS AND FINAL APPROVAL BY FIRE DEPARTMENT AND ARCHITECT / ENGINEER.
4. CUTTING OF STRUCTURAL AND / OR ARCHITECTURAL MEMBERS TO BE DONE ONLY WITH THE WRITTEN APPROVAL OF THE ARCHITECT.
5. COORDINATION WITH OTHER TRADES, AND / OR TO MAINTAIN PROPER CLEARANCES SHALL BE PROVIDED BY THE FIRE PROTECTION CONTRACTOR. FIRE PROTECTION CONTRACTOR TO VERIFY STRUCTURAL, MECHANICAL, ELECTRICAL INSTALLATIONS AND AVOID ANY / ALL OBSTRUCTIONS OR INTERFERENCES BETWEEN ALL OTHER TRADES AND THE FIRE PROTECTION PIPE ROUTING.

   ACCESS TO ABOVE-CEILING EQUIPMENT/CONTROLS SHALL BE PRACTICABLE WITH USE OF 8-FOOT LADDER AND THROUGH A 24X24 CEILING TILE OR ACCESS PANEL. THROUGH THE ENTIRETY OF THE PROJECT WARRANTY PERIOD, FIRE SPRINKLER CONTRACTOR SHALL BE RESPONSIBLE TO MODIFY FIRE SPRINKLER SYSTEM INSTALLATION AS NECESSARY TO PROVIDE REQUIRED ACCESS TO DEVICES.
6. ABOVE CEILING HORIZONTAL FIRE PROTECTION PIPING SHALL BE RUN AS CLOSE TO CEILING CONSTRUCTION AND LIGHTING AS POSSIBLE (U.O.N.).
7. REFER TO ARCHITECTURAL REFLECTED CEILING AND ELECTRICAL LIGHTING DRAWINGS FOR CEILING DESCRIPTIONS AND HEIGHTS.
8. PROVIDE FIRE RATED SLEEVES AND FIRE STOP ALL PENETRATIONS OF SMOKE / FIRE WALLS, CEILINGS, ETC., INCLUDING ROOFS. FLASH AND COUNTERFLASH ROOF PENETRATIONS.
9. PROVIDE ACCESS PANELS TO ALL VALVES ABOVE NON-ACCESSIBLE CEILINGS AND WALLS. COORDINATE WITH ARCHITECTURAL DRAWINGS.
10. SPRINKLER HEADS ARE TO BE COORDINATED WITH ALL DIFFUSERS, GRILLES, LIGHTING FIXTURES AND CEILING SYSTEMS.
11. FIRE PROTECTION SUBCONTRACTOR SHALL BE RESPONSIBLE FOR COORDINATING, SUPPLYING AND INSTALLING SPRINKLER HEADS AT PENETRATION LOCATIONS PROVIDED BY CEILING SUBCONTRACTOR.
12. SPRINKLER HEADS SHALL BE INSTALLED IN THE CENTER OF THE ACOUSTICAL PANEL OR WOOD PANEL AS APPLICABLE.
13. ON SHOP DRAWINGS INDICATE CENTER TO CENTER DIMENSIONS AND / OR PIPE CUT LENGTHS AND NOMINAL PIPE DIAMETERS ON ALL PIPING.
14. INDICATE PIPE TYPE, SCHEDULE OF WALL THICKNESS AND METHOD OF JOINING ON SHOP DRAWINGS.
15. PROVIDE SUFFICIENT INFORMATION ON SHOP DRAWINGS REGARDING THE EXISTING FIRE PROTECTION SYSTEM TO MAKE ALL CONDITIONS CLEAR.
16. PROVIDE THE ROOM NAMES FOR EACH AREA ON SHOP DRAWINGS.
17. PROVIDE STOCK OF EXTRA SPRINKLER HEADS IN ACCORDANCE WITH N.F.P.A. 13 3-18.7.3.
18. SHOP DRAWINGS SHOULD PROVIDE DETAIL AND INDICATE TYPE OF HANGER TO BE INSTALLED FOR SPRINKLER PIPING.
19. MATERIAL SUBMITTALS SHALL BE SUBMITTED TO ARCHITECT / ENGINEER AND SHALL BE APPROVED BEFORE ANY INSTALLATION.
20. PIPE 2" OR SMALLER SHALL BE STEEL, SCHEDULE 40, BLACK AND IN ACCORDANCE WITH SPECIFICATION ASTM A120.
21. SCHEDULE 40 BLACK STEEL PIPE SHALL BE JOINED BY SCREWED JOINTS IN ACCORDANCE WITH SPECIFICATION ANSI B2.1.
22. PIPE 2-1/2" OR LARGER GROOVED PIPE SHALL BE STEEL, SCHEDULE 10, BLACK.
23. ALL UNDERGROUND FIRE PROTECTION PIPING SHALL BE DUCTILE IRON CLASS #52. ALL UNDERGROUND BENDS SHALL BE RODDED AND THRUST BLOCKED.
24. AUTOMATIC SPRINKLER TEMPERATURE RATINGS TO BE IN ACCORDANCE WITH N.F.P.A.13.
25. METHODS OF HANGING PIPES, HEADERS AND BRANCHES SHALL BE APPROVED BY N.F.P.A. 13. ALL HANGERS ON 4" PIPE AND LARGER SHALL BE CLEVIS TYPE HANGERS. HANGERS SHALL NOT INTERFERE WITH ANY OTHER TRADE. POWDER DRIVEN STUDS SHALL NOT BE USED.
26. ALL VALVES FOR FIRE SERVICE SHALL BE APPROVED BY THE UNDERWRITER'S LABORATORIES INC., AND THE FACTORY MUTUAL LABORATORIES. VALVES SHALL BE MARKED "UL" AND "FM", 175 P.S.I. WORKING PRESSURE.
27. ALL VALVES ON THE FIRE PROTECTION SYSTEM TO BE ELECTRICALLY SUPERVISED. FIRE PROTECTION CONTRACTOR SHALL BE RESPONSIBLE FOR COORDINATING WITH ELECTRICAL CONTRACTOR, TYPE AND EXACT LOCATION OF FLOW, PRESSURE AND SUPERVISORY SWITCHES. ADDITIONAL WIRING OR ADDITIONAL SWITCHES REQUIRED BY FIRE PROTECTION CONTRACTOR'S DESIGN WILL BE THE RESPONSIBILITY OF THE FIRE PROTECTION CONTRACTOR.
28. ALL POWER WIRING SHALL BE ACCOMPLISHED UNDER ELECTRICAL DIVISION. ALL CONTROL AND INTERLOCK WIRING SHALL BE ACCOMPLISHED UNDER THIS SECTION OF THE SPECIFICATIONS IN ACCORDANCE WITH THE REQUIREMENTS IN THE ELECTRICAL DIVISION. FIRE PROTECTION CONTRACTOR SHALL COORDINATE ALL ELECTRICAL ITEMS WITH ELECTRICAL CONTRACTOR AND INSURE PROPER COORDINATION.
29. NO SPRINKLER HEAD SHALL BE INSTALLED FURTHER THAN 7'-6" FROM A MAGNETICALLY HELD OPEN SMOKE DOOR.
30. PROVIDE A PERMANENTLY ATTACHED NAME TAG STATING THE REQUIRED DESIGN CRITERIA FOR EACH HYDRAULICALLY DESIGNED SYSTEM.
31. SPRINKLERS SHALL COVER THE ENTIRE AREA OF THE ROOM INCLUDING ALCOVES. SPRAY SHALL NOT BE BLOCKED BY WALLS OR PARTITIONS.
32. THE FIRE PROTECTION CONTRACTOR SHALL IMMEDIATELY NOTIFY THE ARCHITECT / ENGINEER OF ANY DISCREPANCIES FOUND BETWEEN THESE PLANS, THE ARCHITECTURAL PLANS AND / OR FIELD CONDITIONS PRIOR TO CONSTRUCTION.
33. MAKE NO CHANGES WITHOUT ARCHITECT / ENGINEER'S WRITTEN PERMISSION. IN CASE OF DISPUTE OR DOUBT AS TO INTENT OF DRAWINGS OR SPECIFICATIONS, OBTAIN ARCHITECT / ENGINEER'S DECISION BEFORE PROCEEDING WITH WORK INVOLVED. FAILURE TO FOLLOW THIS INSTRUCTION SHALL MAKE THE CONTRACTOR LIABLE FOR DAMAGE TO OTHER WORK AND FOR REMOVING AND REPAIRING DEFECTIVE OR MISLOCATED WORK IN PROPER MANNER.
34. BEFORE SUBMITTING PROPOSAL OF BID, THIS TRADE SHALL EXAMINE ALL DRAWINGS AND SPECIFICATIONS RELATING TO THIS PROJECT, THE AMOUNT OF SPACE AVAILABLE FOR PIPING EQUIPMENT AND CONNECTING SERVICES, THE SITE OF THE WORK, THE REQUIREMENTS TO CORRELATE THE FIRE PROTECTIONS WORK WITH THAT OF OTHER TRADES, AND THE TIME SCHEDULE NECESSARY TO PERFORM THE WORK.
35. THIS TRADE, AFTER EXAMINATION OF ALL PLANS AND SPECIFICATIONS, SHALL INCLUDE ALL THE COSTS NECESSARY FOR A COMPLETE AND FINISHED INSTALLATION IN ALL ASPECTS. IT IS THE INTENT THAT ALL COSTS FOR THE WORK REQUIRED BE INCLUDED IN THE BID OF THIS TRADE.
36. SUBMIT HYDRAULIC CALCULATIONS PROVING THE VIABILITY OF THE MOST HYDRAULICALLY REMOTE AREAS OF THE PROJECT. INDICATE HYDRAULIC REFERENCE POINTS AND SUBMIT COMPUTER ANALYZED NODAL CALCULATIONS IN BOTH TABULAR AND GRAPHICAL FORMATS. HYDRAULIC IMBALANCE SHALL NOT EXCEED 0.01 GPM AT A NODE, AND WATER VELOCITY SHALL NOT EXCEED 25 FEET PER SECOND. DEMONSTRATE COMPLIANCE WITH THE REQUIREMENTS OF NFPA-13 REGARDING DENSITY, AREA OF COVERAGE, SELECTION OF HYDRAULICALLY REMOTE AREAS, AND MAXIMUM COVERAGE PER SPRINKLER.
37. ALL SPRINKLERS TO BE QUICK RESPONSE TYPE, OF ORDINARY TEMPERATURE RATING; IN ACCORDANCE WITH NFPA 13.
38. SPRINKLERS SHALL BR INSTALLED UNDER FIXED OBSTRUCTIONS OVER 4 FEET WIDE. NFPA-13 8.7.5.3.2.

A1 FIRE PROTECTION LEGEND, SCHEDULES AND NOTES

SCALE: NONE

DesignStrategies

Planning
Architecture
Interior Architecture
Landscape Architecture
Engineering

130 South Main Street
Greenville, SC 29601
T (864) 527-6500
F (864) 233-8385

SOUTH CAROLINA DESIGN STRATEGIES, LLC No. C02638 CERTIFICATE OF AUTHORIZATION

SOUTH CAROLINA REGISTERED PROFESSIONAL NO. 23210 JOHN C. BAILEY

REVISIONS

NO	DATE	DESCRIPTION
0	12.24.2020	ISSUED FOR BID

McLeod Health
The Choice for Medical Excellence.

SEACOAST HOSPITAL
50-BED ADDITION

LITTLE RIVER, SC

KEYPLAN

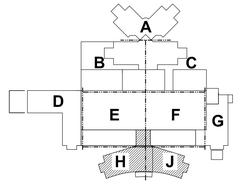

TRUE NORTH

PROJECT NO: **0370.45**
DATE: **12.24.2020**
COPYRIGHT © 2020 **DesignStrategies, LLC**

FIRE PROTECTION LEGEND, SCHEDULES AND NOTES

FX001-U



B1 LEVEL 4 FIRE PROTECTION FLOOR PLAN ZONE H

1/8" = 1'-0"

C5 GENERAL NOTES

B5 NOT USED

A1 NOT USED

A5 NOT USED

DesignStrategies

Planning
Architecture
Interior Architecture
Landscape Architecture
Engineering

130 South Main Street
Greenville, SC 29601
T (864) 527-6500
F (864) 233-8385

SOUTH CAROLINA DESIGN STRATEGIES, LLC No. C02638 CERTIFICATE OF AUTHORIZATION

SOUTH CAROLINA REGISTERED PROFESSIONAL ENGINEER NO. 23210 DON C BAILEY

REVISIONS

NO	DATE	DESCRIPTION
0	12.24.2020	ISSUED FOR BID

McLeod Health
The Choice for Medical Excellence.

SEACOAST HOSPITAL
50-BED ADDITION

LITTLE RIVER, SC

KEYPLAN

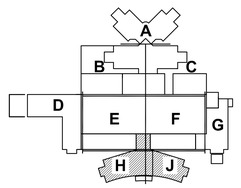

TRUE NORTH

PROJECT NO: 0370.45
DATE: 12.24.2020
COPYRIGHT © 2020 DesignStrategies, LLC

LEVEL 4
FIRE PROTECTION
FLOOR PLAN
ZONE H

FX104H-U



B1 LEVEL 4 FIRE PROTECTION FLOOR PLAN - ZONE J

SCALE: 1/8" = 1'-0"

A1 NOT USED

DesignStrategies

Planning
Architecture
Interior Architecture
Landscape Architecture
Engineering

130 South Main Street
Greenville, SC 29601
T (864) 527-6500
F (864) 233-8385

SOUTH CAROLINA DESIGN STRATEGIES, LLC No. C02638 CERTIFICATE OF AUTHORIZATION

SOUTH CAROLINA LICENSED PROFESSIONAL No. 23210 DON C. BAILEY

REVISIONS

NO	DATE	DESCRIPTION
0	12.24.2020	ISSUED FOR BID

McLeod Health
The Choice for Medical Excellence.

SEACOAST HOSPITAL
50-BED ADDITION

LITTLE RIVER, SC

KEYPLAN

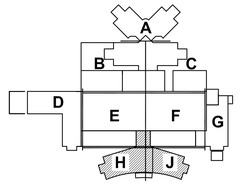

TRUE NORTH

PROJECT NO: **0370.45**
DATE: **12.24.2020**
COPYRIGHT © 2020 **DesignStrategies, LLC**

LEVEL 4
FIRE PROTECTION
FLOOR PLAN
ZONE J

FX104J-U

POWER DEVICES

- NEMA 5-20R DUPLEX HOSPITAL GRADE RECEPTACLE 20 AMPERE/120 VOLTS. SEE ELECTRICAL MOUNTING HEIGHT ELEVATION DETAIL THIS SHEET FOR MOUNTING HEIGHT. WHERE SHOWN WITH + SIGN AND NUMBER ADJACENT, MOUNT AT HEIGHT INDICATED BY THE NUMBER SHOWN. WHERE INSTALLED IN BLOCK WALL, MOUNT AT BLOCK COURSING AT APPROXIMATELY 18 INCHES. MOUNTING HEIGHT INFORMATION IS TYPICAL FOR ALL RECEPTACLES UNLESS NOTED OTHERWISE.
- EM NEMA 5-20R DUPLEX HOSPITAL GRADE RECEPTACLE. 20 AMPERE/120 VOLTS. TO BE SUPPLIED AS AN EMERGENCY TYPE RECEPTACLE, RED IN COLOR, THAT IS SUPPLIED BY A GENERATOR CIRCUIT.
- TP NEMA 5-20R DUPLEX HOSPITAL GRADE "TAMPER RESISTANT RECEPTACLE. 20 AMPERE/120 VOLTS.
- DED NEMA 5-20R DUPLEX HOSPITAL GRADE RECEPTACLE ON A DEDICATED CIRCUIT. 20 AMPERE/120 VOLTS.
- TV NEMA 5-20R DUPLEX HOSPITAL GRADE RECEPTACLE FOR TELEVISION. 20 AMPERE/ 120 VOLTS. MOUNTING HEIGHT TO BE DETERMINED BY MOUNTING BRACKET HEIGHT.
- GFCI NEMA 5-20R DUPLEX HOSPITAL GRADE RECEPTACLE 20 AMPERE/120 VOLTS. "GFCI" INDICATES THE RECEPTACLE SHALL BE SUPPLIED AS A GROUND FAULT CIRCUIT INTERRUPTING TYPE. ALL RECEPTACLES INSTALLED WITHIN 6 FEET OF THE OUTER EDGE OF A WATER SOURCE SHALL BE GFCI WHETHER INDICATED TO BE OR NOT INDICATED TO BE ON THE DRAWINGS.
- C NEMA 5-20R DUPLEX HOSPITAL GRADE RECEPTACLE 20 AMPERE/120 VOLTS. "C" INDICATES THE RECEPTACLE SHALL BE MOUNTED AT COUNTER HEIGHT, 3" ABOVE THE COUNTER OR 1" ABOVE THE BACK SPLASH.
- WP NEMA 5-20R DUPLEX HOSPITAL GRADE RECEPTACLE 20 AMPERE/120 VOLTS. "WP" INDICATES THE RECEPTACLE IS TO BE SUPPLIED WITH A WEATHER PROOF COVER
- WR NEMA 5-20R DUPLEX HOSPITAL GRADE RECEPTACLE 20 AMPERE/120 VOLTS. "WR" INDICATES THE RECEPTACLE IS TO BE SUPPLIED WITH A WEATHER RESISTANT COVER
- EWC NEMA 5-20R DUPLEX HOSPITAL GRADE RECEPTACLE 20 AMPERE/120 VOLTS. "EWC" INDICATES THE RECEPTACLE IS FOR AN ELECTRIC WATER COOLER AND SHALL BE MOUNTED AT A HEIGHT AND LOCATION AS TO BE BEHIND THE WATER COOLER.
- # TWO NEMA 5-20R DUPLEX HOSPITAL GRADE RECEPTACLE 20 AMPERE/120 VOLTS MOUNTED UNDER ONE COVERPLATE. SEE ELECTRICAL MOUNTING HEIGHT ELEVATION THIS SHEET FOR MOUNTING HEIGHT. WHERE SHOWN WITH + SIGN AND NUMBER ADJACENT, MOUNT AT HEIGHT INDICATED BY THE NUMBER SHOWN. MOUNTING HEIGHT INFORMATION IS TYPICAL FOR ALL RECEPTACLES UNLESS NOTED OTHERWISE.
- RECESSED FLOOR BOX. PROVIDE TWO 20 AMPERE NEMA 5-20R DUPLEX HOSPITAL GRADE RECEPTACLES AND PROVISIONS FOR TWO RJ45 JACKS. WALKER WIREMOLD RFB SERIES, COLOR OF TRIM TO BE SELECTED BY ARCHITECT.
- FB POKE-THRU DEVICE. SEE NOTE 14, SHEET EP104H-U FOR MORE INFORMATION.
- 20 NEMA 6-20R RECEPTACLE, 208 VOLT, SINGLE PHASE.
- PLUGMOLD WITH NEMA 5-20R HOSPITAL GRADE RECEPTACLES, SEE DETAIL B5/EP104J-U FOR SPACING, WIREMOLD SERIES AL 3000.
- S_{HP} HORSEPOWER RATED SWITCH LOCATED AT MOTOR OR LOAD FOR DISCONNECT MEANS. SEE GENERAL NOTES
- 30/20 AS SHOWN THE TOP NUMBER INDICATES THE SWITCH RATING AND THE BOTTOM NUMBER INDICATES THE FUSE RATING. NF INDICATES NON FUSED. SWITCHES INSTALLED IN DOORS SHALL BE NEMA TYPE 1. AND SWITCHES INSTALLED OUT OF DOORS OR EXPOSED TO WET CONDITIONS SHALL BE NEMA TYPE 4 STAINLESS STEEL. ALL DISCONNECT SAFETY SWITCHES SHALL BE INSTALLED IN ACCORDANCE WITH THE REQUIREMENTS OF NEC AS TO THE REQUIRED CLEARANCES AND ACCESS TO THEM.
- S_M MANUAL MOTOR STARTER, HORSEPOWER RATED WITH AMBIENT COMPENSATED OVERLOADS. SIZE BASED ON ACTUAL MOTOR RUNNING CURRENT AND N.E.C..
- J JUNCTION BOX. SIZE TO BE IN COMPLIANCE WITH THE LATEST EDITION OF THE NATIONAL ELECTRICAL CODE.
- PANELBOARD, SURFACE MOUNTED. SEE PANEL SCHEDULE FOR SIZE AND TYPE.
- 1NL1-32/34/36 HOMERUN. AS SHOWN IS TO A SINGLE 3 POLE CIRCUIT BREAKER IN SLOTS 32,34 AND 36.
- 1NL1-32,34,36 HOMERUN. AS SHOWN IS TO THREE 1 POLE CIRCUIT BREAKER IN SLOTS 32,34 AND 36.
- MOTOR CONTACTOR IN MCC SIZE 1 FVNR UNO.
- SERVICE OR EQUIPMENT GROUND (SIZED PER NEC).
- XX/XX CIRCUIT BREAKER. SINGLE NUMBER INDICATES FRAME AND TRIP SIZE. DUAL NUMBERS – TOP NUMBER INDICATES FRAME SIZE, BOTTOM NUMBER INDICATES TRIP SIZE.
- XX/XX COMBINATION STARTER. AS SHOWN IS FVNR OTHERWISE AS NOTED. NEMA SIZE 1 UNLESS OTHERWISE NOTED ON DRAWING
- SINGLE PHASE MOTOR. NUMBER INDICATES HORSEPOWER.
- THREE PHASE MOTOR. NUMBER INDICATES HORSEPOWER.
- -- AS -- AF CLASS "-" FUSED SWITCH. TOP NUMBER INDICATES SWITCH RATING. BOTTOM NUMBER INDICATES FUSE RATING.
- DMD ELECTRIC METERING DEVICE
- STEP DOWN TRANSFORMER, DRY TYPE KA UNLESS A DIFFERENT K FACTOR IS NOTED ADJACENT TO TRANSFORMER SYMBOL WITH K RATING INDICATED.
- LSIG LONG TIME, SHORT TIME, INSTANTANEOUS, GROUND FAULT UNIT INCLUDED WITH CIRCUIT BREAKER. MONITORING DEVICE SHALL BE FULLY COMPATIBLE WITH SQUARE D POWER LOGIC SYSTEM.
- PM POWER MONITORING DEVICE SUPPLIED WITH EQUIPMENT.
- GFP GROUND FAULT PROTECTION

SWITCHES

- S SWITCH RATED FOR 20 AMPERES AT BOTH 120 VOLTS AND 277 VOLTS. AS SHOWN THE SWITCH IS TO BE MOUNTED AT 48 INCHES AFF TO TOP UNO. WHERE SHOWN WITH + SIGN AND NUMBER ADJACENT, MOUNT AT THE HEIGHT INDICATED BY THE NUMBER SHOWN. WHERE INSTALLED IN BLOCK WALL, MOUNT AT BLOCK COURSING AT APPROXIMATE HEIGHT INDICATED. MOUNTING HEIGHT INFORMATION IS TYPICAL FOR ALL SWITCHES UNLESS NOTED OTHERWISE.
- S_2 PASS & SEYMORE 1251 SERIES MOMENTARY CONTACT, THREE POSITION, CENTER POSITION, MAINTAINED RATED FOR 20 AMPERES AT BOTH 120 VOLTS AND 277 VOLTS
- S_3 THREE WAY SWITCH RATED FOR 20 AMPERES AT BOTH 120 VOLTS AND 277 VOLTS.
- S_4 FOUR WAY SWITCH RATED FOR 20 AMPERES AT BOTH 120 VOLTS AND 277 VOLTS.
- S_D DIMMER SWITCH. 2000 WATT INCANDESCANT NON PRESET SLIDE DIMMER, 120 VOLT, SOLID STATE WITH RADIO FREQUENCY INTERFERENCE FILTER. OR LUTRON SINGLE POLE 277V, 8A DIMMER. DIMMERS TO BE COMPATIBLE WITH THE FIXTURES THEY ARE INTENDED TO CONTROL.

FIRE ALARM DEVICES

- F FIRE ALARM SYSTEM PULL STATION MOUNTED 46 INCHES A.F.F. TO CENTER OF DEVICE.
- S FIRE ALARM SYSTEM VISUAL DEVICE MOUNTED AT 80 INCHES A.F.F. TO BOTTOM OF DEVICE. VISUAL DEVICE INTENSITY TO BE 110cd (CANDELA) UNLESS NOTED OTHERWISE.
- S FIRE ALARM SYSTEM AUDIO/VISUAL DEVICE MOUNTED AT 80 INCHES A.F.F. TO BOTTOM OF DEVICE. INTENSITY TO BE 110cd (CANDELA) UNLESS NOTED OTHERWISE. AUDIO DEVICE SHALL BE SPEAKER CHIME.
- S SMOKE DETECTOR PHOTOELECTRIC TYPE, CEILING MOUNTED
- H HEAT DETECTOR, CEILING MOUNTED
- SD DUCT MOUNTED SMOKE DETECTOR FURNISHED, INSTALLED AND WIRED BY CONTRACTOR. PROVIDE REMOTE INDICATOR LIGHT FOR EACH DUCT-MOUNTED DETECTOR.
- FAAP FIRE ALARM ANNUNCIATOR PANEL
- FACP FIRE ALARM CONTROL PANEL
- FAPS FIRE ALARM POWER SUPPLY
- FATC FIRE ALARM TERMINAL CABINET
- CM FIRE ALARM SYSTEM CONTROL MODULE
- MM FIRE ALARM SYSTEM MONITOR MODULE
- M FA FIRE ALARM SYSTEM MAGNETIC HOLD OPEN DEVICE

NURSE CALL DEVICES

- NM NURSE CALL MASTER STATION
- NCEC NURSE CALL EQUIPMENT CABINET WITH POWER SUPPLY
- D DOME LIGHT
- DC DOMELESS CONTROLLER FOR DUTY STATION MOUNTED ABOVE CEILING
- DY DUTY STATION
- EP BATHROOM PULL CORD
- RC ENHANCED PATIENT STATION
- TV AC TELEVISION SET CONNECTION TO PATIENT STATION
- LV LOW VOLTAGE LIGHTING CONTROLLER
- RK FEATURED BED RECEPTACLE KIT (ALTERNATE)
- 2 NURSE CALL ZONE LIGHT

COMMUNICATIONS DEVICES

- TELEPHONE/DATA OUTLET BACKBOX (3 DROP) NOMINAL 4" x 4" WITH SINGLE GANG MUD RING AND 1 1/2" CONDUIT ROUTED FROM BACKBOX TO ABOVE AN ACCESSIBLE CEILING. . SEE ELECTRICAL MOUNTING HEIGHT ELEVATION THIS SHEET FOR MOUNTING HEIGHT. WHERE SHOWN WITH + SIGN AND NUMBER ADJACENT, MOUNT AT HEIGHT INDICATED. WHERE INSTALLED IN BLOCK WALL, MOUNT AT BLOCK COURSING AT APPROXIMATE HEIGHT INDICATED. CABLING TO BE INSTALLED BY OWNER.
- $\blacktriangledown_2$ TELEPHONE/DATA OUTLET BACK BOX (2 DROP). OTHERWISE THE SAME AS FOR THE TELEPHONE BACK BOX.
- $\blacktriangledown_A$ WHERE SHOWN WITH "A" ADJACENT STANDS FOR ANALOG PHONE. OTHERWISE THE SAME AS FOR THE TELEPHONE BACK BOX.
- $\blacktriangledown_W$ WHERE SHOWN WITH "W" ADJACENT MOUNT WALL OUTLET AT 46 INCHES A.F.F. TO CENTER. OTHERWISE THE SAME AS FOR THE TELEPHONE BACK BOX.
- ▼ TELEPHONE/DATA OUTLET BACK BOX (1 DROP). OTHERWISE THE SAME AS FOR THE TELEPHONE BACK BOX.
- ∇_W WHERE SHOWN WITH "W" ADJACENT MOUNT WALL OUTLET AT 46 INCHES A.F.F. TO CENTER UNLESS NOTED OTHERWISE. OTHERWISE THE SAME AS FOR THE TELEPHONE BACK BOX.
- ∇_{FA} FIREMAN'S PHONE JACK
- TV TELEVISION OUTLET BACK BOX. OTHERWISE THE SAME AS FOR THE TELEPHONE BACK BOX. "W" WHERE ADJACENT INDICATES MOUNTING HEIGHT OF 84" AFF. "C" WHERE ADJACENT INDICATES MOUNTING IN SPECIAL 2X2 CEILING TILE FOR TELEVISION.
- SP PAGING SYSTEM SPEAKER BACKBOX, CEILING MOUNTED
- V PAGING SYSTEM VOLUME CONTROL. MOUNT 46" CENTERLINE A.F.F. UNO
- SECURITY CAMERA BACKBOX
- CR CARD READER – BACKBOX & CONDUIT TO ACCESSIBLE CEILING SHALL BE PROVIDED BY THE CONTRACTOR
- KP KEYPAD BACKBOX FOR DOOR ACCESS. BACKBOX AND CONDUIT TO ACCESIBLE CEILING SHALL BE PROVIDED BY CONTRACTOR.
- AP WIRELESS ACCESS POINT

SWITCHES (CONTINUE)

- OS CEILING MOUNTED OCCUPANCY SENSOR WITH OVERRIDE. WATTSTOPPER CAT# DT-355
- OS WALL MOUNTED OCCUPANCY SENSOR WITH OVERRIDE. WATTSTOPPER CAT# DSW-301-W
- OS 2 WALL MOUNTED OCCUPANCY SENSOR WITH OVERRIDE. WATTSTOPPER CAT# DSW-302-W

SOME OF THE SYMBOLS LISTED MAY NOT APPLY TO THIS PROJECT

B1 ELECTRICAL LEGEND

AF	– AMPERE FUSE	CT	– CURRENT TRANSFORMER	IG	– ISOLATED GROUND	PM	– POWER MONITORING DEVICE
AFC	– ABOVE FINISHED COUNTER	D	– DATA	JB	– JUNCTION BOX	PNL	– PANELBOARD
AFF	– ABOVE FINISHED FLOOR	EC	– EMPTY CONDUIT	KVA	– KILOVOLT AMPERES	PT	– PNEUMATIC TUBE
AFG	– ABOVE FINISH GRADE	EMD	– ELECTRONIC METERING DEVICE	KW	– KILOWATTS	RVNR	– REDUCED VOLTAGE NON-REVERSING
AFR	– AMPERE FRAME	EO	– ELECTRICALLY OPERATED BOTH CLOSING AND OPENING	LCP	– LIGHTING CONTROL PANEL	SPD	– SURGE PROTECTIVE DEVICE
AIC	– AMPERES INSTANTANEOUS CURRENT	EWC	– ELECTRIC WATER COOLER	MCA	– MINIMUM CIRCUIT AMPACITY	SPKR	– SPEAKER
AM	– AMPERE METER	FA	– FIRE ALARM SYSTEM	MCB	– MAIN CIRCUIT BREAKER	SWBD	– SWITCHBOARD
AMB	– AMPERE MAIN BREAKER	FAAP	– FIRE ALARM ANNUNCIATOR PANEL	MCC	– MOTOR CONTROL CENTER	TB	– TERMINAL BOARD
AMLO	– AMPERES MAIN LUG ONLY	FACP	– FIRE ALARM CONTROL PANEL	MD	– MOTION DETECTOR	TC	– TIME CLOCK
AMP	– AMPERES	FAJ	– FIREMAN'S TELEPHONE JACK	MIC	– MICROPHONE	TEL	– TELEPHONE
ARA	– AREA OF RESCUE ASSISTANCE	FLUOR	– FLUORESCENT	MOCP	– MAXIMUM OVERCURRENT PROTECTION	TEL OUT	– TELEPHONE OUTLET
ARAM	– AREA OF RESCUE ASSISTANCE MASTER STATION	FU	– FUSED	N, NEUT	– NEUTRAL	TVSS	– TRANSIENT VOLTAGE SURGE SUPPRESSOR
AS	– AMPERE SWITCH	FVNR FULL	– VOLTAGE NON-REVERSING	NC	– NURSE CALL	TYP	– TYPICAL
AT	– AMPERE TRIP	FWE	– FURNISH WITH EQUIPMENT	NCAP	– NURSE CALL ANNUNCIATOR PANEL	UNO	– UNLESS NOTED OTHERWISE
ATS	– AUTOMATIC TRANSFER SWITCH	G, GND	– GROUND	NEC	– NATIONAL ELECTRICAL CODE	VAC	– VOLTAGE ALTERNATING CURRENT
AWG	– AMERICAN WIRE GAUGE	GF,GFI,GFCI	– GROUND FAULT CIRCUIT INTERRUPTER	NF	– NON FUSED	VFD	– VARIABLE FREQUENCY DRIVE
CKT BRKR	– CIRCUIT BREAKER	GFP	– GROUND FAULT PROTECTOR	NS	– NON SWITCHED	VM	– VOLTAGE METER
CKT	– CIRCUIT	HC	– HANDICAP	NTS	– NOT TO SCALE	VS	– VOLTAGE SWITCH
C	– CONDUIT	HID	– HIGH INTENSITY DISCHARGE	OC	– ON CENTER	VSD	– VARIABLE SPEED DRIVE
CPT	– CONTROL POWER TRANSFORMER	HOA	– HAND OFF AUTO	OL	– OVERLOAD RELAY	W	– WALL
CR	– CARD READER	IC	– INTERCOM	PA	– PUBLIC ADDRESS	WP	– WEATHERPROOF
CRWS	– CODE REQUIRED WORK SPACE			PB	– PUSHBUTTON SWITCH	XFMR	– TRANSFORMER
						Z	– IMPEDANCE

A1 ABBREVIATIONS

LIGHT FIXTURE SCHEDULE

FIXTURE SYMBOL	TYPE	MOUNTING	MANUFACTURER AND CATALOG #	LAMPS QTY.	LAMPS TYPE	VA	VOLTS	REMARKS
A1	2x4 LED TROFFER	RECESSED	LITHONIA CAT. # 2TL4-40L-FW-A12-EZ1-LP835	1	LED 3500° ARRAY	32	277	PROVIDE 0 TO 10 VOLT DIMMER CONTROLLER
A2	2x4 LED TROFFER	RECESSED	LITHONIA CAT. # 2TL4-60L-FW-A12-EZ1-LP835	1	LED 3500° ARRAY	47	277	PROVIDE 0 TO 10 VOLT DIMMER CONTROLLER
B1	2x2 LED WITH A12 LENS	RECESSED	LITHONIA CAT. # 2TL2-33L-FW-A12-LP835-N80	1	LED 3500° ARRAY	29	277	
BL	PATIENT ROOM BEDLIGHT	RECESSED	LITHONIA CAT. # 2AVL4 50L MDR MVOLT EZ1 LP835 ALG	1	LED 3500° ARRAY	61	277	
HL	HEADWALL LIGHT	WALL	HEALTHCARE LIGHTING CAT. # HPW348-277-LED35-2U1D-LV-FW		LED 3500° ARRAY	140	277	LOW VOLTAGE LIGHTING CONTROLLER AS SHOWN ON DRAWING EP500 SHALL BE PROVIDED INTEGRAL TO LIGHT FIXTURE.
K5	8" LED DOWNLIGHT	RECESSED	GOTHAM CAT. # EVO 35/30 8AR WD LSS 277	1	LED 3500° ARRAY	47.1	.	
K6	COMPACT 6" LED DOWN LIGHT	RECESSED	GOTHAM CAT. # ICO-35/40 6AR FL 40D 277 EZ1 NPP 16D	1	LED 3500K	57	277	
K8	2" DIA LED DOWNLIGHT	RECESSED	GOTHAM CAT. # INCITO ICO 35/15 2AR LSS 150 MVOLT TRW CR190 NCH		LED 3500K		277	
K10	6" LED DOWN LIGHT	RECESSED	GOTHAM CAT. # EVO6 35/30 AR WD LSS MVOLT- EZ10	1	LED 3500K	47	277	PROVIDE 0 TO 10 VOLT DIMMER CONTROLLER
ML	MIRROR LIGHT	WALL	AXIS LIGHTING PRIME LED CAT # PRWLED 800 90 35 S 2 W UNV LT 1	1	LED 3500K	14.34	277	
NL	NIGHT LIGHT	WALL RECESSED	LEGRAND CAT. # NTLFULLWCC6 WITH LOUVERS	1	LED ARRAY		120	
S4	48 INCH LED STRIP FIXTURE	SUSPENDED	LITHONIA CAT. # ZL1N L48 5000LM FST MVOLT 35K 80CRI WH HC36 WGZ48	1	LED 3500K ARRAY	41	277	
SL	STAIR LIGHT	WALL	PEERLESS CAT #RD4WS LLP 8' MSL8 80CRI 35K 800LMF DARK ZT 277 SCT 1EC C032	1	LED 3500K		277	STAIR LIGHT. MOUNT ON HORIZONTAL STEEL AT EACH LANDING. PROVIDE FOUR FIXTURES IN EACH STAIR. SEE ARCH STAIR SECTION. SEE LIGHTING PLANS.
UC2	28" UNDERCABINET LIGHT	SURFACE	PHILIPS DAY-BRITE CAT. #LINCS100-L28-120-WHG-RSW	1	LED 3500K ARRAY	17.5	120	WHERE SPACE REQUIRES MORE THAN ONE FIXTURE, FIXTURES CAN BE INSTALLED IN TANDEM.
WW1	PERIMETER LED WALL WASH	RECESSED	NEO-RAY CAT# 79-PF-2-L35-*-277-STD-2-**-DC-W COORDINATE SPECIFIC DETAILS FOR ORDER WITH A NEO-RAY REPRESENTATIVE TO ENSURE PROPER LENGTH.		LINEAR LED 3500°K	143	277	* LENGTH OF WALL 15'-1 1/2", TOTAL QUANTITY OF 6 ❶ THIS LENGTH. **
WW2	PERIMETER LED WALL WASH	RECESSED	NEO-RAY CAT# 79-PF-2-L35-*-277-STD-2-**-DC-W COORDINATE SPECIFIC DETAILS FOR ORDER WITH A NEO-RAY REPRESENTATIVE TO ENSURE PROPER LENGTH.		LINEAR LED 3500°K	142	277	* LENGTH OF WALL 14'-9 1/4", TOTAL QUANTITY OF 5 ❶ THIS LENGTH. **
WW3	PERIMETER LED WALL WASH	RECESSED	NEO-RAY CAT# 79-PF-2-L35-*-277-STD-2-**-DC-W COORDINATE SPECIFIC DETAILS FOR ORDER WITH A NEO-RAY REPRESENTATIVE TO ENSURE PROPER LENGTH.		LINEAR LED 3500°K	43	277	* LENGTH OF WALL 4'-4 5/8", TOTAL QUANTITY OF 2 ❶ THIS LENGTH. **
WW4	PERIMETER LED WALL WASH	RECESSED	NEO-RAY CAT# 79-PF-2-L35-*-277-STD-2-**-DC-W COORDINATE SPECIFIC DETAILS FOR ORDER WITH A NEO-RAY REPRESENTATIVE TO ENSURE PROPER LENGTH.		LINEAR LED 3500°K	69	277	* LENGTH OF WALL 7'-2", TOTAL QUANTITY OF 2 ❶ THIS LENGTH. **
WW5	PERIMETER LED WALL WASH	RECESSED	NEO-RAY CAT# 79-PF-2-L35-*-277-STD-2-**-DC-W COORDINATE SPECIFIC DETAILS FOR ORDER WITH A NEO-RAY REPRESENTATIVE TO ENSURE PROPER LENGTH.		LINEAR LED 3500°K	67	277	* LENGTH OF WALL 6'-11 11/16", TOTAL QUANTITY OF 2 ❶ THIS LENGTH. **
WW6	PERIMETER LED WALL WASH	RECESSED	NEO-RAY CAT# 79-PF-2-L35-*-277-STD-2-**-DC-W COORDINATE SPECIFIC DETAILS FOR ORDER WITH A NEO-RAY REPRESENTATIVE TO ENSURE PROPER LENGTH.		LINEAR LED 3500°K	46	277	* LENGTH OF WALL 5'-1 1/2", TOTAL QUANTITY OF 2 ❶ THIS LENGTH. **
WW7	PERIMETER LED WALL WASH	RECESSED	NEO-RAY CAT# 79-PF-2-L35-*-277-STD-2-**-DC-W COORDINATE SPECIFIC DETAILS FOR ORDER WITH A NEO-RAY REPRESENTATIVE TO ENSURE PROPER LENGTH.		LINEAR LED 3500°K	60	277	* LENGTH OF WALL 6'-3", TOTAL QUANTITY OF 2 ❶ THIS LENGTH. **
WW8	PERIMETER LED WALL WASH	RECESSED	NEO-RAY CAT# 79-PF-2-L35-*-277-STD-2-**-DC-W COORDINATE SPECIFIC DETAILS FOR ORDER WITH A NEO-RAY REPRESENTATIVE TO ENSURE PROPER LENGTH.		LINEAR LED 3500°K	48	277	* LENGTH OF WALL 5'-0", TOTAL QUANTITY OF 2 ❶ THIS LENGTH. **
WW9	PERIMETER LED WALL WASH	RECESSED	NEO-RAY CAT# 79-PF-2-L35-*-277-STD-2-**-DC-W COORDINATE SPECIFIC DETAILS FOR ORDER WITH A NEO-RAY REPRESENTATIVE TO ENSURE PROPER LENGTH.		LINEAR LED 3500°K	86	277	* LENGTH OF WALL 9'-0", TOTAL QUANTITY OF 2 ❶ THIS LENGTH. **
	SINGLE FACE EXIT LIGHT	CEILING	LITHONIA CAT. # LRP-W-1-RMR-120/277	1	LED PLATE	1.8	277	
	DOUBLE FACE EXIT LIGHT	CEILING	LITHONIA CAT. # LRP-W-2-RMR-120/277	1	LED PLATE	3.4	277	
	DOUBLE FACE EXIT LIGHT	CEILING	LITHONIA CAT. # LRP-W-2-RMR-DA-120/277	1	LED PLATE	3.4	277	
	SINGLE FACE EXIT LIGHT	CEILING	LITHONIA CAT. # LRP-W-1-RMR-RA-120/277	1	LED PLATE	1.8	277	

L1. FIXTURE SHOWN ON PLANS WITH A DIAGONAL LINE ( ) AND A LOWER CASE "e" ARE TO BE SUPPLIED BY A CRITICAL BRANCH GENERATOR CIRCUIT.

L2. FIXTURE SHOWN ON PLANS THAT ARE HALF SHADED ( ) AND HAVE A LOWER CASE "e" ADJACENT TO FIXTURE LABEL ARE TO BE SUPPLIED BY A LIFE SAFETY BRANCH GENERATOR CIRCUIT AND SHALL NOT BE SWITCHED.

SOME OF THE SYMBOLS LISTED MAY NOT APPLY TO THIS PROJECT

B3 LIGHT FIXTURE SCHEDULE

NTS

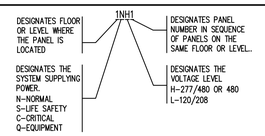

PANEL BOARD NAMING CONVENTION

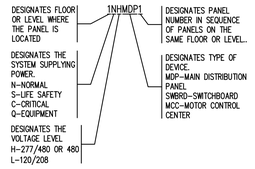

SWITCHBOARD, MOTOR CONTROL CENTER AND MAIN DISTRIBUTION PANEL NAMING CONVENTION

A3 NAMING CONVENTIONS

E-001	ELECTRICAL NOTES, LEGEND AND SCHEDULES
ED104H&J	LEVEL 4 ELECTRICAL DEMOLITION PLAN ZONE H & J
EL104H	LEVEL 4 LIGHTING PLAN – ZONE H
EL104J	LEVEL 4 LIGHTING PLAN – ZONE J
EP104H	LEVEL 4 POWER PLAN – ZONE H
EP104J	LEVEL 4 POWER PLAN – ZONE J
EP105J	LEVEL 5 / ROOF PLAN ZONE H & J
EP400	ENLARGED PLANS
EP500	DETAILS
EP602	PANEL SCHEDULES
EP604	PANEL SCHEDULES
EP605	PANEL SCHEDULES
EP700	ELECTRICAL FEEDER LEGEND AND DETAILS
EP701	ELECTRICAL SINGLE LINE DIAGRAM
EP702	ELECTRICAL SINGLE LINE DIAGRAM
EY104H	LEVEL 4 SYSTEMS PLAN – ZONE H
EY104J	LEVEL 4 SYSTEMS PLAN – ZONE J
EY700	TELEPHONE ROOM RISER DIAGRAM AND DETAILS

A4 ELECTRICAL DRAWING LIST

1. ALL ELECTRICAL CONSTRUCTION SHALL BE IN COMPLIANCE WITH THE 2018 EDITION OF THE INTERNATIONAL BUILDING CODE AND THE 2017 EDITION OF THE NATIONAL ELECTRICAL CODE AND THE 2018 EDITION OF HEALTH CARE FACILITIES CODE AND SHALL COMPLY WITH LOCAL, STATE AND FEDERAL CODES HAVING JURISDICTION. ALL ELECTRICAL WORK SHALL BE PERFORMED UNDER THE SUPERVISION OF A LICENSED ELECTRICIAN.
2. CONTRACTOR SHALL INSPECT SITE PRIOR TO SUBMITTING BID. THE DRAWINGS ARE INTENDED TO COVER THE REQUIRED ELECTRICAL SYSTEMS. THE DRAWINGS MAY NOT SHOW THE COMPLETE OR ACCURATE DETAILS OF THE BUILDING OR SYSTEM IN EVERY RESPECT. IT IS THE RESPONSIBILITY OF THE CONTRACTOR TO OBTAIN ANY ADDITIONAL INFORMATION AS REQUIRED.
3. THE CONTRACTOR SHALL VERIFY ALL DIMENSIONS AND CLEARANCES PRIOR TO INSTALLATION OF EQUIPMENT AND RACEWAYS. CONTRACTOR IS RESPONSIBLE FOR COORDINATION OF WORK WITH THAT OF ALL OTHER TRADES AS REQUIRED.
4. THE CONTRACTOR SHALL FURNISH AND INSTALL ALL MATERIALS IN A NEAT AND WORKMAN-LIKE FASHION. ALL MATERIALS SHALL BE NEW, FIRST QUALITY AND U.L LABEL.
5. ALL WORK SHALL HAVE PROPER LABELING AND NAMEPLATES. ALL CIRCUITS SHALL BE LABELED AT PANELS AND BOXES AS INDICATED. ALL PANELS AND DISCONNECTS ARE TO BE PERMANENTLY MARKED WITH NAME OF EQUIPMENT SERVED. ALL PANELS ARE TO BE PROVIDED WITH TYPEWRITTEN PANEL SCHEDULES. A SET OF PANEL SCHEDULES ,IN EXCEL FORMAT, SHALL BE GIVEN TO MCLEOD ENGINEERING. SEE SPECIFICATIONS.
6. THE CONTRACTOR SHALL THOROUGHLY CLEAN ALL EQUIPMENT AND SYSTEMS BEFORE PLACING IN OPERATION. RESTORE FINISHED SURFACES IF DAMAGED AND DELIVER THE ENTIRE INSTALLATION IN AN APPROVED CONDITION. CONTRACTOR SHALL INSTRUCT THE OWNERS PERSONNEL IN THE PROPER OPERATION AND MAINTENANCE OF THE SYSTEMS.
7. CONTRACTOR SHALL GUARANTEE THE WORK INSTALLED UNDER HIS CONTRACT FOR A PERIOD OF ONE YEAR AFTER DATE OF FINAL ACCEPTANCE. DEFECTS WHICH APPEAR AS A RESULT OF NORMAL USAGE SHALL BE REMEDIED BY THE CONTRACTOR TO THE COMPLETE SATISFACTION OF THE OWNER WITHOUT COST TO OWNER.
8. CONTRACTOR SHALL KEEP A CURRENT SET OF PLANS FOR THE DURATION OF CONSTRUCTION WITH ALL CHANGES TO WORK NEATLY AND ACCURATELY MARKED IN RED AND SHALL TURN OVER TO OWNER AT COMPLETION OF PROJECT.
9. ALL ELECTRICAL WORK, LABOR, MATERIALS, INSTALLATION AND TESTING SHALL BE IN FULL COMPLIANCE WITH THE NATIONAL ELECTRICAL CODE NFPA 70. ALL WORK SHALL ALSO BE IN STRICT COMPLIANCE WITH ARTICLE 517 OF NFPA 70 IN APPLICABLE AREAS OF BUILDING.
10. ALL BACK BOXES SHALL BE METALLIC. PVC BOXES ARE NOT PERMITTED IN THE BUILDING.
11. CONDUIT SHALL BE ELECTRICAL METALLIC TUBING OR RIGID GALVANIZED STEEL FOR BRANCH CIRCUIT WIRING. MINIMUM CONDUIT SIZE SHALL BE 3/4". ALL CONDUCTORS SHALL BE TYPE THHN/THWN, 600V COPPER BUILDING WIRE UNO. MINIMUM SIZE SHALL BE #12 AWG COPPER UNLESS NOTED. TYPE HCFMC, CABLE MAY BE USED IN THIS BUILDING FOR NORMAL POWER CIRCUITS ONLY. HCFMC CABLE SHALL NOT BE INSTALLED IN CEILINGS BUT CAN BE INSTALLED IN WALL CAVITIES.
12. THE CONTRACTOR MAY ARRANGE CIRCUIT CONDUCTORS IN ANY CONFIGURATION TO SUIT CONDITIONS. TYPICALLY FEEDERS FROM 20 AMPERE SINGLE POLE CIRCUIT BREAKER SHALL BE A SINGLE 12 AWG PHASE CONDUCTOR, A SINGLE 12 AWG NEUTRAL CONDUCTOR AND A SINGLE 12 AWG GROUNDING CONDUCTOR IN 3/4 INCH CONDUIT. WHERE THE CONTRACTOR SELECTS TO COMBINE CIRCUITS THEN THE MAXIMUM PHASE CONDUCTORS SHALL BE ONE PER PHASE WITH A NEUTRAL CONDUCTOR WITH EACH PHASE CONDUCTOR.
13. RECEPTACLE CIRCUITS FOR A HOME RUN WHICH CONTAINS THREE PHASE CONDUCTORS, EACH FROM A DIFFERENT PHASE, SHALL BE HOME RUN AS 3#12, 1#12N, 1#12G IN 3/4 INCH CONDUIT. IF THE HOME RUN CONTAINS TWO EACH PHASE CONDUCTORS, EACH FROM A DIFFERENT PHASE, THE HOME RUN WILL BE 2#12, 2#12N, 1#12G IN 3/4 INCH CONDUIT.
14. CONDUCTORS USED ON WIRING TERMINATION LESS THAN 100 AMPERES OR ARE SIZE 1 CONDUCTOR O

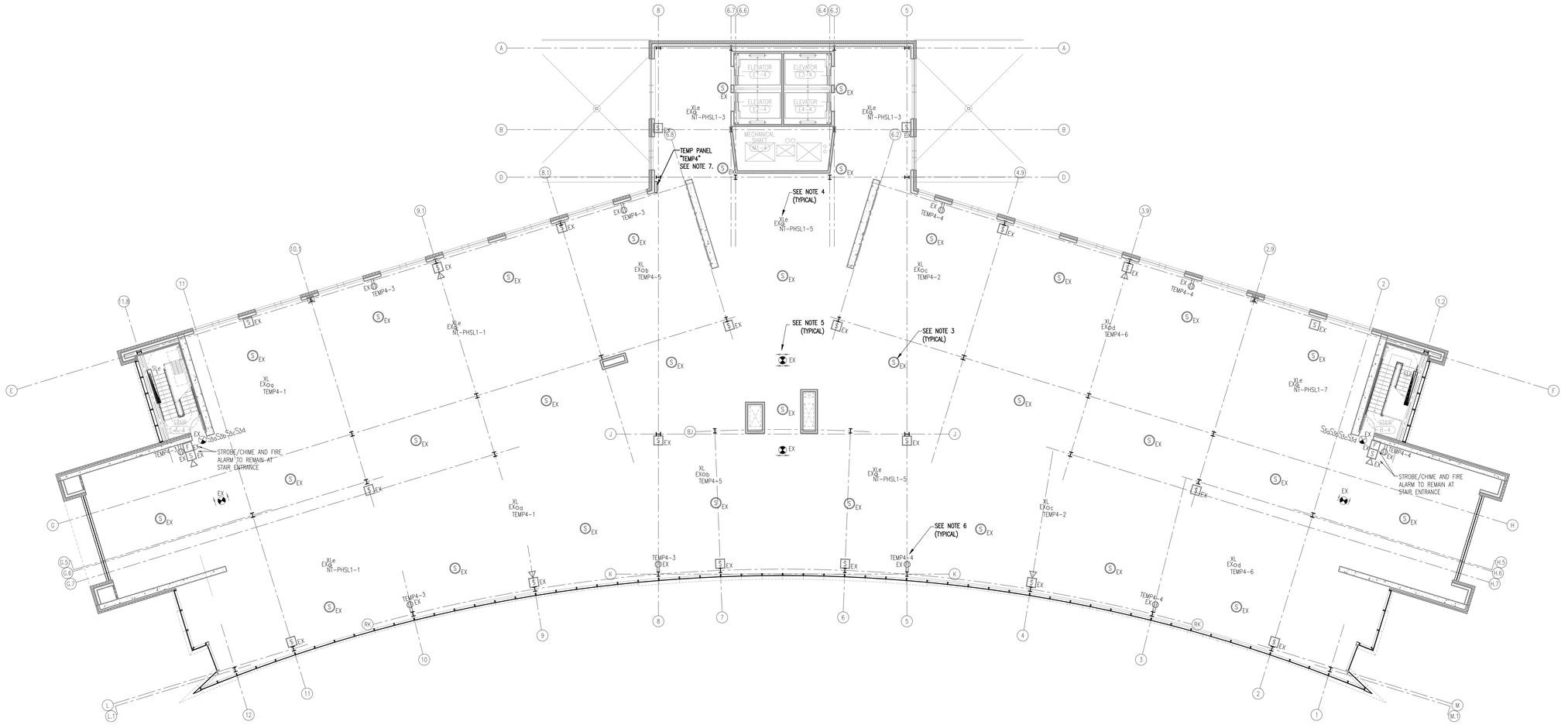

B1 LEVEL 4 ELECTRICAL DEMOLITION PLAN - ZONE H & J

3/32" = 1'-0"

A1 NOT USED

A3 NOT USED

A5 NOTES

1. SEE DRAWING E-001 FOR GENERAL ELECTRICAL NOTES, LEGEND AND SCHEDULES.
2. SEE MECHANICAL DRAWINGS FOR EXACT LOCATIONS OF ALL MECHANICAL EQUIPMENT.
3. REMOVE AND REUSE FIRE ALARM SYSTEM DEVICES THAT ARE NOT INDICATED TO REMAIN ON DRAWING EY104. DEVICES REMOVED AND NOT INSTALLED IN A NEW LOCATION SHALL BE TURNED OVER TO THE OWNER FOR HIS USE. REMOVE ALL FIRE ALARM SYSTEM, CONDUIT AND CONDUCTORS NO LONGER IN USE DURING DEMOLITION.
4. REMOVE SYMBOL "XL" LIGHT FIXTURES SHOWN ON THIS DRAWING, INCLUDING CONDUIT AND CONDUCTORS BACK TO PANEL. TURN SYMBOL "XL" FIXTURES OVER TO THE OWNER FOR FUTURE USE.
5. REMOVE EXISTING EXIT LIGHT FIXTURES AND TURN OVER TO THE OWNER FOR FUTURE USE. REMOVE ALL CONDUIT AND CONDUCTORS.
6. EXISTING RECEPTACLES IN THE SHELL SPACE SHALL BE REMOVED. REMOVE ALL CONDUIT AND CONDUCTORS.
7. EXISTING TEMPORARY 120/208 VOLT 3ø, 4W 30 AMP 12 CKT, PANEL "TEMP4" FED FROM A 30 AMPERE 3 POLE BREAKER PANEL "NT-PHSL1" CKT # 37/39/41. REMOVE PANEL BOARD AND THEN TURN OVER TO OWNER. REMOVE ALL CONDUIT AND CONDUCTORS.
8. EXISTING LIGHTING CONTROL DEVICES IN THE SHELL SPACE SHALL BE REMOVED. REMOVE ALL CONDUIT AND CONDUCTORS.
9. REMOVE ALL EXISTING HANGERS AND SUPPORTS FOR THE ABOVE BEING REMOVED.

DesignStrategies

Planning
Architecture
Interior Architecture
Landscape Architecture
Engineering

130 South Main Street
Greenville, SC 29601
T (864) 527-6500
F (864) 233-8385

REVISIONS

NO	DATE	DESCRIPTION
0	12.24.2020	ISSUED FOR BID

McLeod Health
The Choice for Medical Excellence.

SEACOAST HOSPITAL 50-BED ADDITION

LITTLE RIVER, SC

KEYPLAN

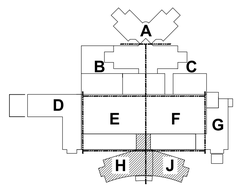

TRUE NORTH

PROJECT NO: **0370.45**
DATE: **12.24.2020**
COPYRIGHT © 2020 **DesignStrategies, LLC**

LEVEL 4 ELECTRICAL DEMOLITION PLAN ZONE H & J

ED104H&J



B1 LEVEL 4 LIGHTING PLAN - ZONE H

1/8" = 1'-0"

D5 NOT USED

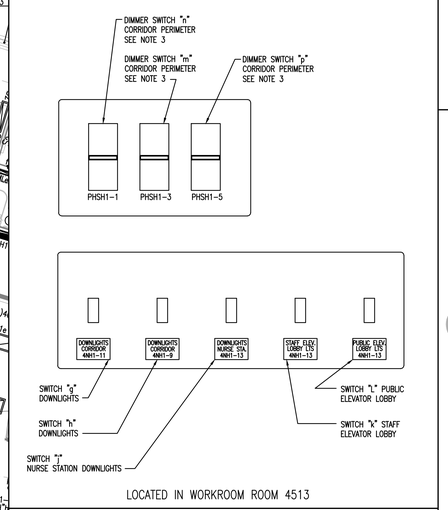

C5 SWITCH BANK DETAIL

B5 NOT USED

1. SEE DRAWING E-001 FOR GENERAL ELECTRICAL NOTES, LEGEND AND SCHEDULES.
2. SEE ARCHITECTURAL REFLECTED CEILING PLANS FOR EXACT LOCATION OF ALL CEILING MOUNTED DEVICES AND FIXTURES.
3. PROVIDE DIMMER FOR PERIMETER WALL LIGHTING IN THE CORRIDOR. PROVIDE CONTROLS FOR EACH CIRCUIT SUPPLYING THE CORRIDOR PERIMETER LIGHTING. THE SWITCH SHALL CONTROL BOTH DRIVERS IN FIXTURE AND HAVE THE CAPABILITY OF REDUCING THE OUTPUT BY 50 PERCENT BY MANUAL CONTROL IN THE EVENING HOURS. LIGHTING TO RETURN TO FULL OUTPUT IN THE EVENT OF POWER LOSS. SEE LIGHT FIXTURE SCHEDULE FOR LIGHTING TYPE.
4. CIRCUIT PATIENT ROOM FIXTURES WITH A LOWER CASE e IN THE FIXTURE NAME TO THE CRITICAL CIRCUIT ASSIGNED TO THE ROOM. ALL OTHER FIXTURES IN ROOM SHALL BE CIRCUITED TO THE NORMAL CIRCUIT ASSIGNED TO ROOM. SEE DRAWING EP400 FOR CIRCUITING INFORMATION FOR FIXTURE "NL" NIGHT LIGHT.
5. ORIENT THE SWITCHES IN EACH PATIENT ROOM WITH THE NIGHT LIGHT SWITCH CLOSEST TO DOOR.
6. ALL EXIT LIGHTS ON THE FOURTH FLOOR PATIENT BED TOWER SHALL BE CONNECTED TO PANEL NT-PHSH1-12.
7. SEE SHEET EP500, DETAIL A4 AND A5 NURSE CARE ALCOVE ELEVATION FOR MOUNTING HEIGHT AND LOCATION OF SWITCHES.

A1 NOT USED

A5 NOTES

DesignStrategies

Planning
Architecture
Interior Architecture
Landscape Architecture
Engineering

130 South Main Street
Greenville, SC 29601
T (864) 527-6500
F (864) 233-8385

REVISIONS

NO	DATE	DESCRIPTION
0	12.24.2020	ISSUED FOR BID

McLeod Health
The Choice for Medical Excellence.

SEACOAST HOSPITAL
50-BED ADDITION

LITTLE RIVER, SC

KEYPLAN

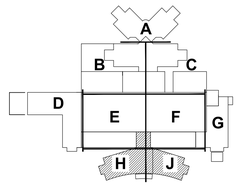

PLAN NORTH

TRUE NORTH

0 4' 8' 16'

SCALE: 1/8" = 1'-0"

PROJECT NO: 0370.45
DATE: 12.24.2020

COPYRIGHT © 2020 DesignStrategies, LLC

LEVEL 4 LIGHTING PLAN - ZONE H

EL104H-U

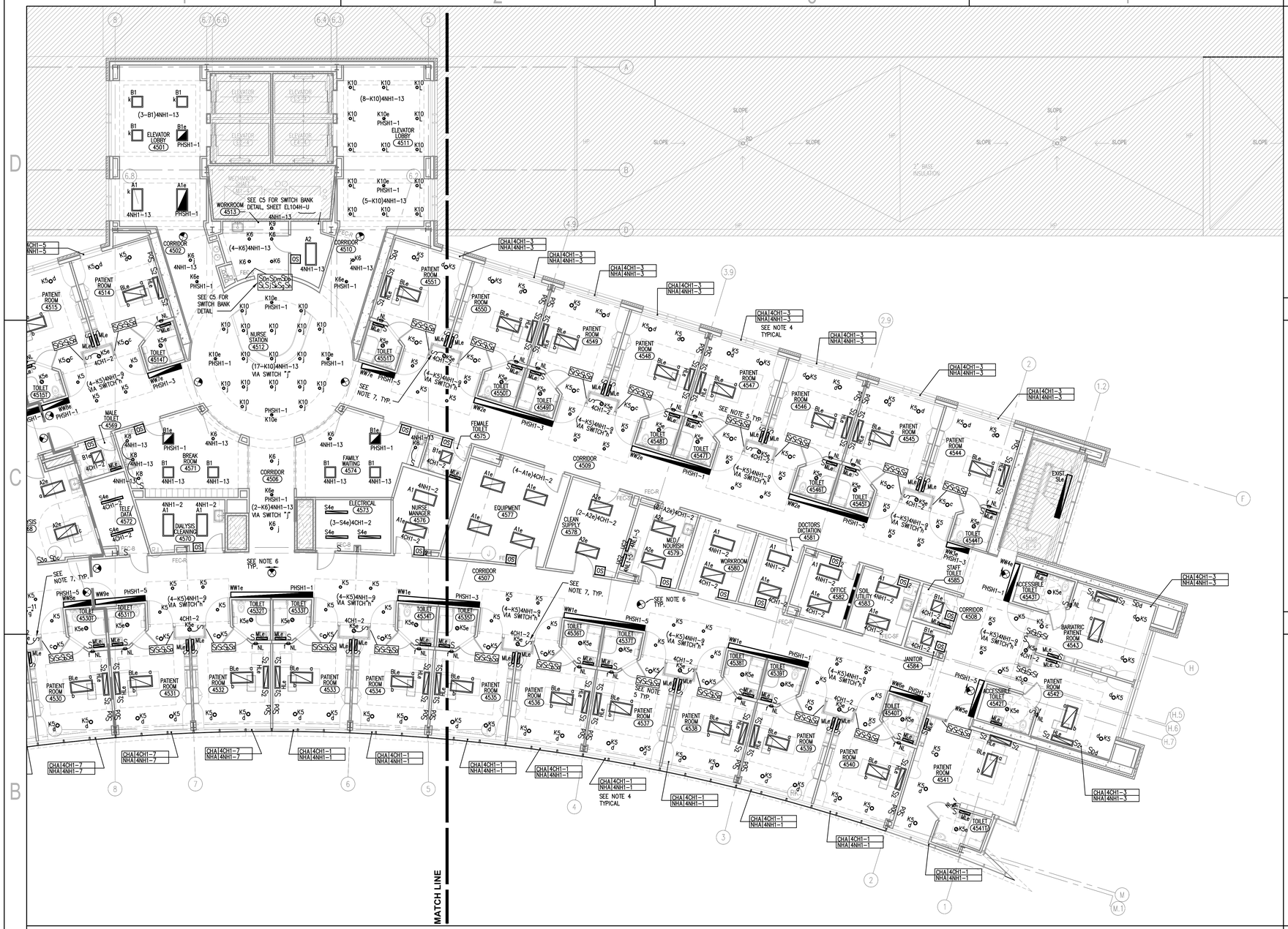

B1 LEVEL 4 LIGHTING PLAN - ZONE H

1/8" = 1'-0"

C5 NOT USED

3/8" = 1'-0"

A1 NOT USED

A5 NOTES

1. SEE DRAWING E-001 FOR GENERAL ELECTRICAL NOTES, LEGEND AND SCHEDULES.
2. SEE ARCHITECTURAL REFLECTED CEILING PLANS FOR EXACT LOCATION OF ALL CEILING MOUNTED DEVICES AND FIXTURES.
3. PROVIDE DIMMER FOR PERIMETER WALL LIGHTING IN THE CORRIDOR. PROVIDE CONTROLS FOR EACH CIRCUIT SUPPLYING THE CORRIDOR PERIMETER LIGHTING. THE SWITCH SHALL CONTROL BOTH DRIVERS IN FIXTURE AND HAVE THE CAPABILITY OF REDUCING THE OUTPUT BY 50 PERCENT BY MANUAL CONTROL IN THE EVENING HOURS. LIGHTING TO RETURN TO FULL OUTPUT IN THE EVENT OF POWER LOSS. SEE LIGHT FIXTURE SCHEDULE FOR LIGHTING TYPE.
4. CIRCUIT PATIENT ROOM FIXTURES WITH A LOWER CASE e IN THE FIXTURE NAME TO THE CRITICAL CIRCUIT ASSIGNED TO THE ROOM. ALL OTHER FIXTURES IN ROOM SHALL BE CIRCUITED TO THE NORMAL CIRCUIT ASSIGNED TO ROOM. SEE DRAWING EP400 FOR CIRCUITING INFORMATION FOR FIXTURE "NL" NIGHT LIGHT.
5. ORIENT THE SWITCHES IN EACH PATIENT ROOM WITH THE NIGHT LIGHT SWITCH CLOSEST TO DOOR.
6. ALL EXIT LIGHTS ON THE FOURTH FLOOR PATIENT BED TOWER SHALL BE CONNECTED TO PANEL NT-PHSH1-12.
7. SEE SHEET EP500, DETAIL A4 AND A5 NURSE CARE ALCOVE ELEVATION FOR MOUNTING HEIGHT AND LOCATION OF SWITCHES.

DesignStrategies

Planning
Architecture
Interior Architecture
Landscape Architecture
Engineering

130 South Main Street
Greenville, SC 29601
T (864) 527-6500
F (864) 233-8385

REVISIONS

NO	DATE	DESCRIPTION
0	12.24.2020	ISSUED FOR BID

McLeod Health
The Choice for Medical Excellence.

SEACOAST HOSPITAL
50-BED ADDITION

LITTLE RIVER, SC

KEYPLAN

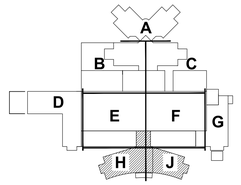

PLAN NORTH
TRUE NORTH

0 4' 8' 16'
SCALE: 1/8" = 1'-0"

PROJECT NO: **0370.45**
DATE: **12.24.2020**
COPYRIGHT © 2020 **DesignStrategies, LLC**

LEVEL 4 LIGHTING PLAN - ZONE J

EL104J-U



B1 LEVEL 4 POWER PLAN - ZONE H

1/8" = 1'-0"

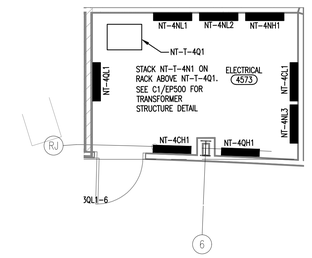

NOTE:

1. PANELS NT-4NL4, NT-4CL2 AND NT-4CL3 ARE LOCATED IN OFFICE 4563.
2. PANELS NT-4NL5, NT-4CL4 AND NT-4CL5 ARE LOCATED IN OFFICE 4582.

1/4" = 1'-0"

D5 ENLARGED ELECTRICAL PLAN

C5 NOT USED

B5 NOT USED

A1 NOT USED

A2 NOT USED

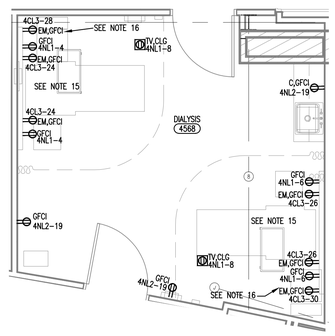

A3 DIALYSIS 4568

1. SEE DRAWING E-001 FOR GENERAL ELECTRICAL NOTES, LEGEND AND SCHEDULES.
2. SEE MECHANICAL DRAWINGS FOR EXACT LOCATIONS OF ALL MECHANICAL EQUIPMENT.
3. SEE DRAWING EP400 FOR ENLARGED PATIENT ROOMS AND ADDITIONAL INFORMATION.
4. SEE ARCHITECTURAL DETAILS AND ELEVATIONS FOR ADDITIONAL INFORMATION ON DEVICE MOUNTING HEIGHTS.
5. MOUNT RECEPTACLE AT THE SAME HEIGHT AS THE ROOM LIGHTING CONTROLS.
6. SEE ARCHITECTURAL ELEVATIONS FOR MOUNTING HEIGHTS OF MICROWAVE. RECEPTACLE TO BE LOCATED SO IT IS CONCEALED FROM VIEW ONCE MICROWAVE IS IN PLACE.
7. PROVIDE A RECESSED BACKBOX AT THIS LOCATION WITH 3/4" EMPTY CONDUIT FROM BOX TO ABOVE CEILING FOR FUTURE TV. BACKBOX TO BE MOUNTED ADJACENT TO BACKBOX FOR CABLE TV AND DATA CONNECTION. MOUNT BACKBOX 72" AFF TO CENTER.
8. PROVIDE POWER AND DATA AT THIS LOCATION FOR WALL MOUNTED COMPUTER. COORDINATE THE EXACT LOCATION AND MOUNTING HEIGHT WITH ARCHITECTURAL ELEVATIONS.
9. PROVIDE PLUGMOLD FOR EQUIPMENT ROOM IN LENGTHS SHOWN IN DETAIL B5/EP104J-U. CONTRACTOR TO SUBMIT DIMENSIONS SHOP DRAWINGS FOR APPROVAL. PLUGMOLD TO BE WIRE MOLD AL300 WITH RED HOSPITAL GRADE DUPLEX RECEPTACLES.
10. SEE SHEET EP500, DETAIL A4 AND A5 NURSE CARE ALCOVE ELEVATIONS FOR MOUNTING HEIGHT AND LOCATION OF RECEPTACLES AND DATA OUTLETS.
11. PROVIDE 208V,1ø,3W CIRCUIT SHOWN TO SERVER RACK POWER.
12. ROUTE LIFE SAFETY CIRCUIT SHOWN TO A JUNCTION BOX WITHIN ROOM TO ALLOW FOR CONNECTIONS TO LIFE SAFETY POWER.
13. SEE DETAIL B2 ON DRAWING EP500 CONCERNING SUPPLEMENTAL GROUNDING REQUIRED FOR PATIENT CARE SPACES INCLUDING PATIENT ROOMS.
14. PROVIDE A LEGRAND WIREMOLD SERIES 8ATC POKE-THRU ASSEMBLY IN CORE DRILLED HOLE IN CONCRETE FLOOR. THE ASSEMBLY SHALL BE CENTERED BENEATH EACH SET OF TWO CUBICLES. PROVIDE DEVICE PLATES AS NEEDED FOR THE INSTALLATION WHICH WILL ALSO CONTAIN UP TO 4 EACH RJ 45 TELECOMMUNICATIONS JACKS IN THE POKE-THRU. PROVIDE 2 EACH NEMA 5-20R HOSPITAL GRADE POWER RECEPTACLES IN THE POKE-THRU. THE COLOR AND TYPE OF TRIM RING AND THE COLOR AND TYPE OF COVER PLATE SHALL BE SELECTED BY THE ARCHITECT. CONDUITS SHALL BE ROUTED IN THE THIRD FLOOR CEILING FROM THE POKE-THRU JUNCTION BOX TO THE FOURTH FLOOR ELECTRICAL PANEL BOARD. POWER CIRCUITS IN THE POKE-THRU SHALL BE AS INDICATED.
15. SEE ARCHITECTURAL ELEVATIONS FOR MOUNTING HEIGHTS OF ALL DIALYSIS ELECTRICAL DEVICES.
16. COORDINATE EXACT LOCATION OF THE DIALYSIS MACHINE RECEPTACLE WITH ARCHITECT/OWNER PRIOR TO INSTALLMENT.

A4 NOTES

DesignStrategies

Planning
Architecture
Interior Architecture
Landscape Architecture
Engineering

130 South Main Street
Greenville, SC 29601
T (864) 527-6500
F (864) 233-8385

REVISIONS

NO	DATE	DESCRIPTION
0	12.24.2020	ISSUED FOR BID

McLeod Health
The Choice for Medical Excellence.

SEACOAST HOSPITAL
50-BED ADDITION

LITTLE RIVER, SC

KEYPLAN

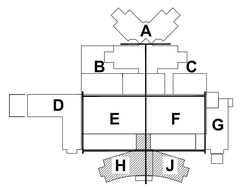

PLAN NORTH
TRUE NORTH

0 4' 8' 16'
SCALE: 1/8" = 1'-0"

PROJECT NO: **0370.45**
DATE: **12.24.2020**
COPYRIGHT © 2020 **DesignStrategies, LLC**

LEVEL 4 POWER PLAN - ZONE H

EP104H-U



B1 LEVEL 4 POWER PLAN - ZONE H 1/8" = 1'-0"

D5 NOT USED

C5 NOT USED

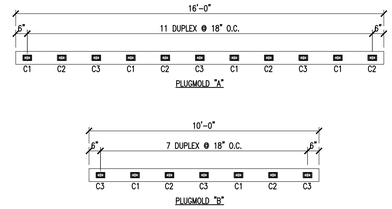

C1 = CIRCUIT 1
C2 = CIRCUIT 2
C3 = CIRCUIT 3
SEE PLAN FOR CIRCUITS

B5 DETAIL 3/8" = 1'-0"

A1 NOT USED

A5 NOTES

1. SEE DRAWING E-001 FOR GENERAL ELECTRICAL NOTES, LEGEND AND SCHEDULES.
2. SEE MECHANICAL DRAWINGS FOR EXACT LOCATIONS OF ALL MECHANICAL EQUIPMENT.
3. SEE DRAWING EP400 FOR ENLARGED PATIENT ROOMS AND ADDITIONAL INFORMATION.
4. SEE ARCHITECTURAL DETAILS AND ELEVATIONS FOR ADDITIONAL INFORMATION ON DEVICE MOUNTING HEIGHTS.
5. MOUNT RECEPTACLE AT THE SAME HEIGHT AS THE ROOM LIGHTING CONTROLS.
6. SEE ARCHITECTURAL ELEVATIONS FOR MOUNTING HEIGHTS OF MICROWAVE. RECEPTACLE TO BE LOCATED SO IT IS CONCEALED FROM VIEW ONCE MICROWAVE IS IN PLACE.
7. NOT USED.
8. PROVIDE POWER AND DATA AT THIS LOCATION FOR WALL MOUNTED COMPUTER. COORDINATE THE EXACT LOCATION AND MOUNTING HEIGHT WITH ARCHITECTURAL ELEVATIONS.
9. PROVIDE PLUGMOLD FOR EQUIPMENT ROOM IN LENGTHS SHOWN IN DETAIL B5/EP104J-U CONTRACTOR TO SUBMIT DIMENSIONS SHOP DRAWINGS FOR APPROVAL. PLUGMOLD TO BE WIRE MOLD AL300 WITH RED HOSPITAL GRADE DUPLEX RECEPTACLES.
10. SEE SHEET EP500, DETAIL A4 AND A5 NURSE CARE ALCOVE ELEVATIONS FOR MOUNTING HEIGHT AND LOCATION OF RECEPTACLES AND DATA OUTLETS.
11. PROVIDE 208V,1ø,3W CIRCUIT SHOWN TO SERVE RACK POWER.
12. ROUTE LIFE SAFETY CIRCUIT SHOWN TO A JUNCTION BOX WITHIN ROOM TO ALLOW FOR CONNECTIONS TO LIFE SAFETY POWER.
13. SEE DETAIL B2 ON DRAWING EP500 CONCERNING SUPPLEMENTAL GROUNDING REQUIRED FOR PATIENT CARE SPACES INCLUDING PATIENT ROOMS.

DesignStrategies

Planning
Architecture
Interior Architecture
Landscape Architecture
Engineering

130 South Main Street
Greenville, SC 29601
T (864) 527-6500
F (864) 233-8385

REVISIONS

NO	DATE	DESCRIPTION
0	12.24.2020	ISSUED FOR BID

McLeod Health
The Choice for Medical Excellence.

SEACOAST HOSPITAL 50-BED ADDITION

LITTLE RIVER, SC

KEYPLAN

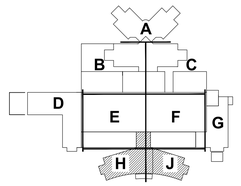

PLAN NORTH TRUE NORTH

0 4' 8' 16'
SCALE: 1/8" = 1'-0"

PROJECT NO: 0370.45
DATE: 12.24.2020
COPYRIGHT © 2020 DesignStrategies, LLC

LEVEL 4 POWER PLAN - ZONE J

EP104J-U

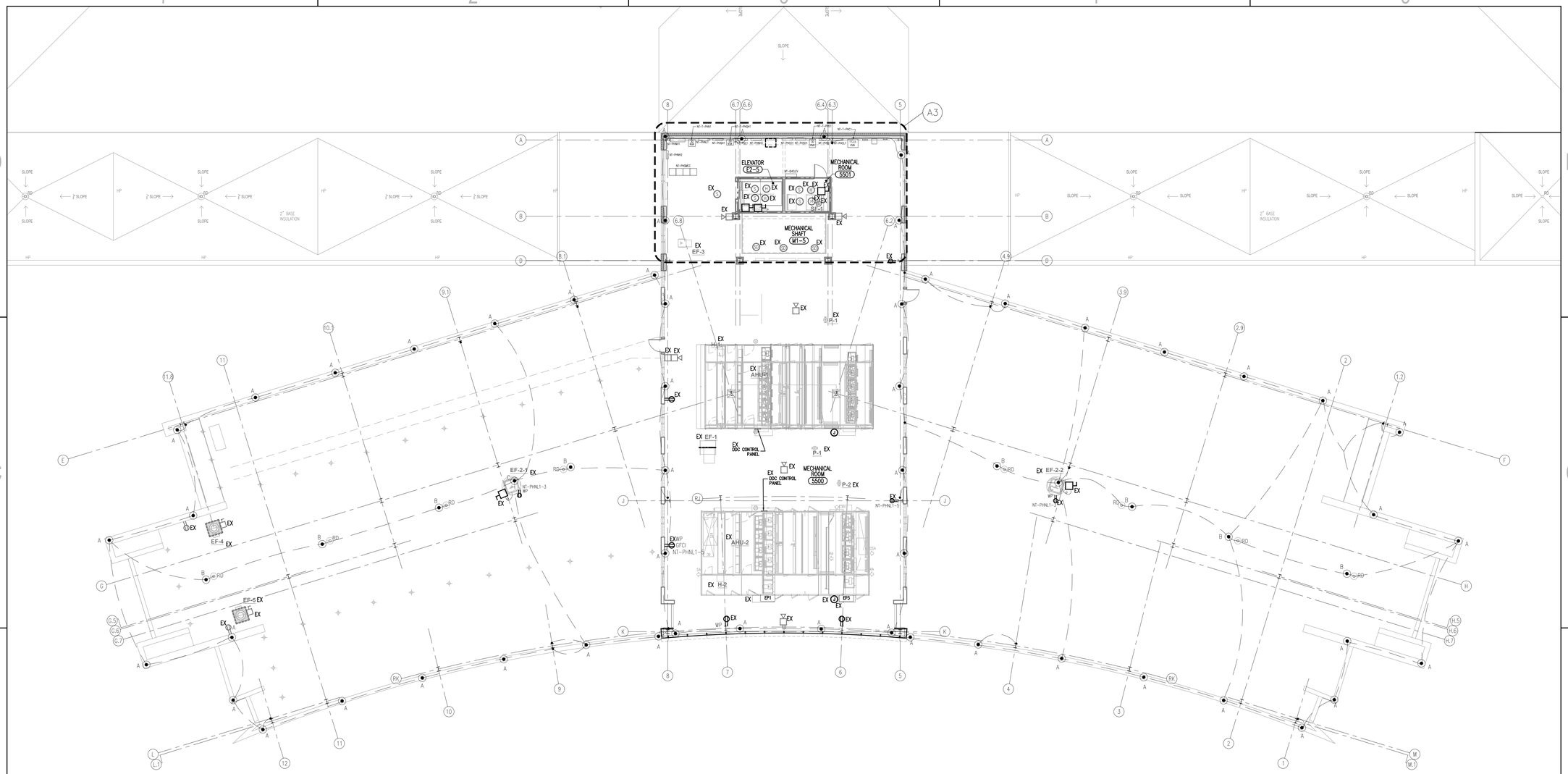

B1 ROOF PLAN - ZONE H & J

3/32" = 1'-0"

A1 NOT USED

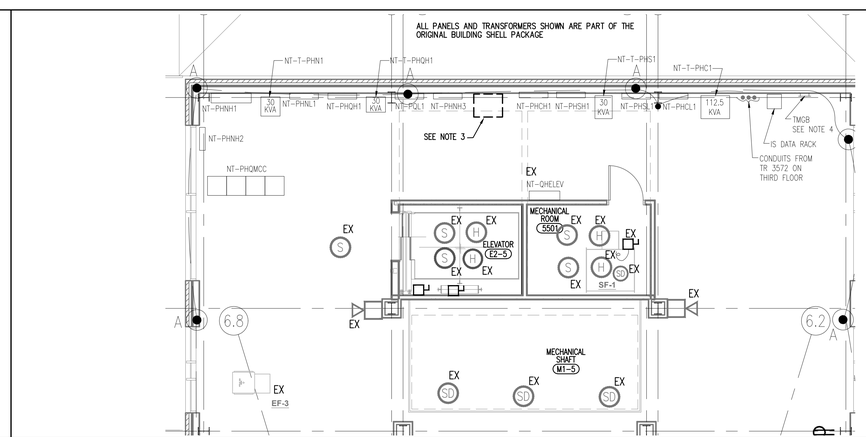

A3 ENLARGED ELECTRICAL ROOM PLAN

3/16"=1'-0"

A5 NOTES

1. SEE DRAWING E-001 FOR GENERAL ELECTRICAL NOTES, LEGEND AND SCHEDULES.
2. SEE MECHANICAL DRAWINGS FOR EXACT LOCATIONS OF ALL MECHANICAL EQUIPMENT.
3. EXISTING TRANSFORMER NT-4N1 SHALL BE RELOCATED TO ELECTRICAL ROOM 4573 ON THE FOURTH FLOOR. SEE DRAWING EP104H-U, DRAWING EP602 AND DRAWING EP701.

DesignStrategies

Planning
Architecture
Interior Architecture
Landscape Architecture
Engineering

130 South Main Street
Greenville, SC 29601
T (864) 527-6500
F (864) 233-8385

REVISIONS

NO	DATE	DESCRIPTION
0	12.24.2020	ISSUED FOR BID

McLeod Health
The Choice for Medical Excellence.

SEACOAST HOSPITAL
50-BED ADDITION

LITTLE RIVER, SC

KEYPLAN

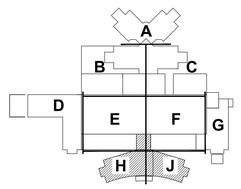

PLAN NORTH TRUE NORTH

0 4' 8' 16'
SCALE: 1/8" = 1'-0"

PROJECT NO: **0370.45**
DATE: **12.24.2020**
COPYRIGHT © 2020 **DesignStrategies, LLC**

LEVEL 5 / ROOF PLAN ZONE H & J

EP105H&J

C1 ENLARGED POWER PLAN

SCALE: 1/4"=1'-0"

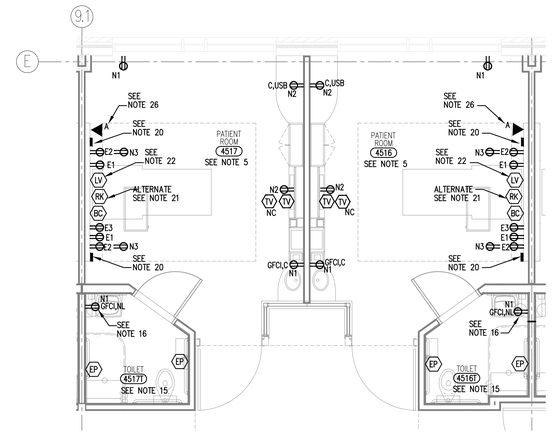

N1	NORMAL PANEL CKT 1
N2	NORMAL PANEL CKT 2
N3	NORMAL PANEL CKT 3
E1	EMERG. PANEL CKT 1
E2	EMERG. PANEL CKT 2
E3	EMERG. PANEL CKT 3

-SEE DRAWING EP104H-U & EP104J-U FOR THE PANEL AND CIRCUIT DESIGNATIONS THAT CORRESPOND TO THIS LEGEND

-CONNECT THE 120V LED NIGHT LIGHTS SHOWN ON LIGHTING PLANS IN EACH PATIENT ROOM TO THE RECEPTACLE CIRCUIT "E2". REFER TO ARCHITECTURAL DRAWINGS FOR TYPICAL PATIENT ROOM ELEVATION.

TYPICAL FOR ALL PATIENT ROOMS:
4514, 4515, 4516, 4517, 4518, 4519, 4527, 4528, 4529, 4530, 4531, 4532, 4533, 4534, 4535, 4536, 4537, 4538, 4546, 4547, 4548, 4549, 4550, 4551

C3 ENLARGED POWER PLAN

SCALE: 1/4"=1'-0"

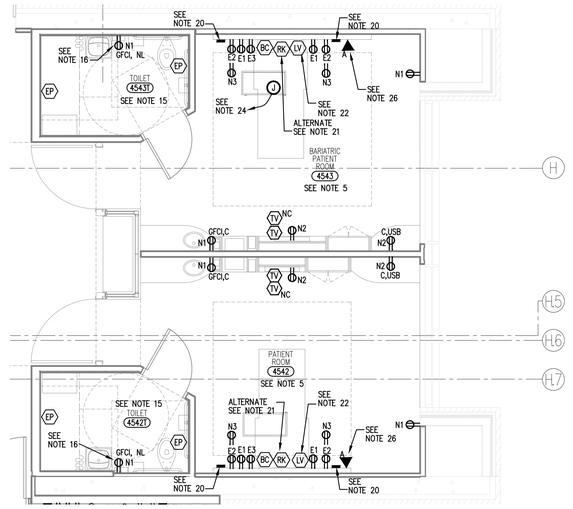

N1	NORMAL PANEL CKT 1
N2	NORMAL PANEL CKT 2
N3	NORMAL PANEL CKT 3
E1	EMERG. PANEL CKT 1
E2	EMERG. PANEL CKT 2
E3	EMERG. PANEL CKT 3

-SEE DRAWING EP104H-U & EP104J-U FOR THE PANEL AND CIRCUIT DESIGNATIONS THAT CORRESPOND TO THIS LEGEND

-CONNECT THE 120V LED NIGHT LIGHTS SHOWN ON LIGHTING PLANS IN EACH PATIENT ROOM TO THE RECEPTACLE CIRCUIT "E2". REFER TO ARCHITECTURAL DRAWINGS FOR TYPICAL PATIENT ROOM ELEVATION.

D5 WALL ELEV.

NTS

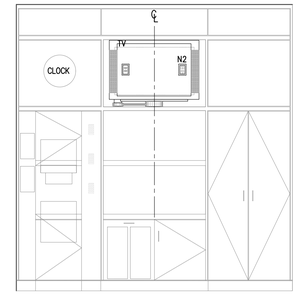

THIS ELEVATION IS TO BE USED FOR REFERENCE FOR CIRCUIT INFO AND DEVICE ALIGNMENT. SEE ARCHITECTURAL ELEVATIONS FOR EXACT MOUNTING HEIGHTS.

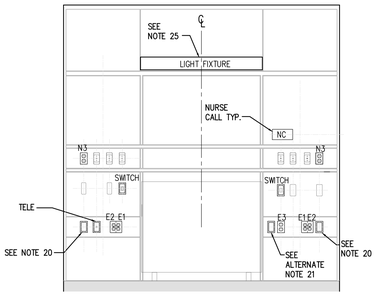

SEE ARCHITECTURAL ELEVATIONS FOR ADDITIONAL INFORMATION.

THIS ELEVATION IS TO BE USED AS A REFERENCE FOR CIRCUIT INFORMATION FOR ALL PATIENT ROOMS. SEE ARCHITECTURAL ELEVATIONS FOR ACTUAL HEADWALL LAYOUT AND CONSTRUCTION. SEE ARCHITECTURAL ELEVATIONS FOR MEDGAS INFORMATION. SEE DETAIL A2/EP500 FOR LIGHT SWITCH INFORMATION.

C5 HEADWALL ELEV.

NTS

1. SEE DRAWING E-001 FOR ELECTRICAL NOTES, LEGEND AND SCHEDULES.
2. SEE ARCHITECTURAL REFLECTED CEILING PLAN FOR EXACT LOCATION OF ALL CEILING MOUNTED DEVICES.
3. SEE ARCHITECTURAL ELEVATIONS FOR ADDITIONAL INFORMATION CONCERNING ELECTRICAL DEVICE MOUNTING HEIGHTS AND LOCATIONS.
4. NOT USED
5. SEE ROOM AND PANELBOARD GROUNDING DETAIL B2 ON DRAWING EP500 FOR INFORMATION ON ALL PATIENT ROOM GROUNDING REQUIREMENTS.
6. THE ENLARGED PLANS ON THIS SHEET SHOW TYPICAL PATIENT ROOM DEVICE LAYOUTS. SEE DRAWING EP104H-U & EP104J-U FOR THE PANEL AND CIRCUIT DESIGNATIONS FOR EACH ROOM.
7. COORDINATE ALL HEADWALL DEVICE LOCATIONS (POWER, DATA, NURSE CALL ETC.) AND CONNECTION REQUIREMENTS WITH THE HEADWALL VENDOR.
8. EACH BACKBOX IN ROOM 15 TO BE INDIVIDUALLY FED FROM ABOVE THE CEILING. ALL CONDUIT IS TO BE ROUTED VERTICALLY IN WALL. NO CONDUIT SHALL BE INSTALLED HORIZONTALLY, FROM BACK BOX TO BACK BOX, IN WALL.
9. ALL CONDUCTORS ROUTED IN WALL BELOW OBSERVATION WINDOWS SHALL BE INSTALLED IN CONDUIT.
10. THE CONTRACTOR SHALL COORDINATE WITH THE NURSE CALL SUPPLIER SO THAT ALL HOME RUNS FROM THE CONSOLIDATED ROOM BOX TO THE NURSE CALL EQUIPMENT CABINET (NCEC) CAN BE COMBINED AND ROUTED IN ONE CODE SIZED CONDUIT INSTEAD OF INDIVIDUAL 3/4 INCH CONDUIT FOR EACH ROOM DEVICE. SEE DETAIL B3, THIS SHEET.
11. COLOR OF ALL ELECTRICAL DEVICES AND COVER PLATES TO BE SELECTED BY ARCHITECT.
12. ROUTE 3/4" CONDUIT FROM TELEPHONE/DATA BACKBOX IN WALL TO ABOVE CEILING AND THEN TO COMMUNICATION CLOSET. IDENTIFY END OF CONDUIT IN COMMUNICATIONS CLOSET TO INDICATE THE ROOMS SERVED BY THE CONDUIT.
13. ROUTE 3/4" CONDUIT FROM TELEVISION BACKBOX IN WALL TO ABOVE CEILING AND THEN TO COMMUNICATION CLOSET. IDENTIFY END OF CONDUIT IN COMMUNICATIONS CLOSET TO INDICATE THE ROOMS SERVED BY THE CONDUIT.
14. VERIFY THE EXACT LOCATION OF AUDIO STATION W/ CODE BLUE IN EACH PATIENT ROOM HEADWALL.
15. COORDINATE THE EXACT LOCATION OF NURSE CALL PULL STATIONS IN FIELD WITH ARCHITECT BEFORE INSTALLATION. NURSE CALL PULL STATION AT SHOWER TO BE ACCESSIBLE WHEN CURTAIN TRACK IS EXTENDED.
16. MOUNT DUPLEX RECEPTACLE LOCATED IN PATIENT TOILETS AT THE SAME HEIGHT AS THE ROOM LIGHT SWITCH.
17. PROVIDE A FIRE ALARM CHIME/STROBE IN EACH ADA PATIENT ROOM.
18. COORDINATE ALL NURSE CALL DEVICES AND CONDUIT REQUIREMENTS WITH THE NURSE CALL SUPPLIER. SEE NURSE CALL RISER DIAGRAM DETAIL B3 THIS SHEET FOR ADDITIONAL INFORMATION CONCERNING PATIENT ROOM NURSE CALL.
19. SEE NURSE CALL SUPPLIER DRAWINGS AND RISER FOR INFORMATION CONCERNING NURSE CALL INSTALLATION.
20. PROVIDE A 2"x4" NOMINAL BACK BOX WITH 1/2" CONDUIT AND PULL WIRE TO ABOVE CEILING FOR FUTURE USE. PROVIDE BLANK COVER PLATE AT EACH LOCATION.
21. FEATURE BED RECEPTACLE KIT TO BE INCLUDED IN PRICING AS A BID ALTERNATE.
22. LOW VOLTAGE CONTROLLER FOR LIGHT FIXTURE TO BE SUPPLIED BY NURSE CALL PROVIDER IF HEADWALL FIXTURE IS NOT SUPPLIED WITH INTEGRAL LOW VOLTAGE CONTROLLER.
23. SEE SYSTEMS PLAN FOR LOCATION OF PATIENT ROOM DOME LIGHTS.
24. PROVIDE CONNECTION IN BARIATRIC PATIENT ROOM (4543) FOR PATIENT LIFT. CONNECT TO CIRCUIT 4CL4-31. SEE REFLECTED CEILING PLAN FOR LOCATION. COORDINATE ALL CONNECTIONS AND LOCATIONS WITH SUPPLIER PRIOR TO INSTALLATION.
25. SEE DETAIL A2 ON DRAWING EP500 CONCERNING HEADWALL LIGHT SWITCHING DETAIL FOR PATIENT ROOMS.
26. SPLIT ANALOG CABLE TO ALLOW FOR 2 SEPARATE CONNECTIONS.

B1 ENLARGED POWER PLAN

SCALE: 1/4"=1'-0"

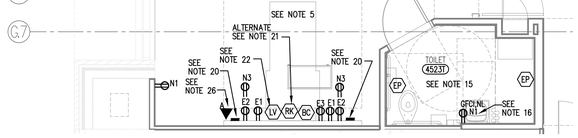

N1	NORMAL PANEL CKT 1
N2	NORMAL PANEL CKT 2
N3	NORMAL PANEL CKT 3
E1	EMERG. PANEL CKT 1
E2	EMERG. PANEL CKT 2
E3	EMERG. PANEL CKT 3

-SEE DRAWING EP104H-U & EP104J-U FOR THE PANEL AND CIRCUIT DESIGNATIONS THAT CORRESPOND TO THIS LEGEND

-CONNECT THE 120V LED NIGHT LIGHT SHOWN ON LIGHTING PLANS IN EACH PATIENT ROOM TO THE RECEPTACLE CIRCUIT "E2". REFER TO ARCHITECTURAL DRAWINGS FOR TYPICAL PATIENT ROOM ELEVATION.

B3 TYPICAL NURSE CALL RISER

NTS

NOTE: SEE DRAWING E-001 FOR LEGEND SHOWING NURSE CALL DEVICES.



A1 ENLARGED POWER PLAN

SCALE: 1/4"=1'-0"

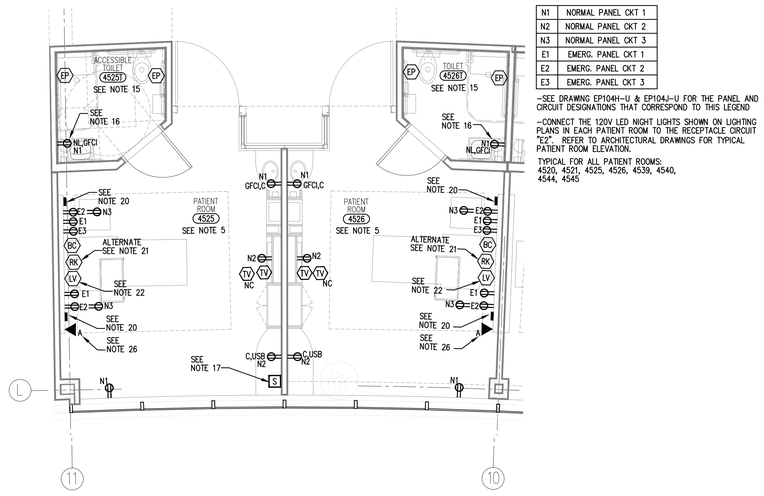

N1	NORMAL PANEL CKT 1
N2	NORMAL PANEL CKT 2
N3	NORMAL PANEL CKT 3
E1	EMERG. PANEL CKT 1
E2	EMERG. PANEL CKT 2
E3	EMERG. PANEL CKT 3

-SEE DRAWING EP104H-U & EP104J-U FOR THE PANEL AND CIRCUIT DESIGNATIONS THAT CORRESPOND TO THIS LEGEND

-CONNECT THE 120V LED NIGHT LIGHTS SHOWN ON LIGHTING PLANS IN EACH PATIENT ROOM TO THE RECEPTACLE CIRCUIT "E2". REFER TO ARCHITECTURAL DRAWINGS FOR TYPICAL PATIENT ROOM ELEVATION.

TYPICAL FOR ALL PATIENT ROOMS:
4520, 4521, 4525, 4526, 4539, 4540, 4544, 4545

A3 ENLARGED POWER PLAN

1/4" = 1'-0"

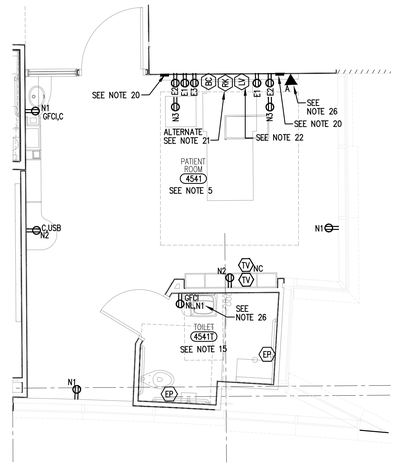

N1	NORMAL PANEL CKT 1
N2	NORMAL PANEL CKT 2
N3	NORMAL PANEL CKT 3
E1	EMERG. PANEL CKT 1
E2	EMERG. PANEL CKT 2
E3	EMERG. PANEL CKT 3

-SEE DRAWING EP104J-U SHEET FOR THE PANEL AND CIRCUIT DESIGNATIONS THAT CORRESPOND TO THIS LEGEND

-CONNECT THE 120V LED NIGHT LIGHTS SHOWN ON LIGHTING PLANS IN EACH PATIENT ROOM TO THE RECEPTACLE CIRCUIT "E2". REFER TO ARCHITECTURAL DRAWINGS FOR TYPICAL PATIENT ROOM ELEVATION.

-FOR PATIENT ROOM: 4541

A5 NOTES

DesignStrategies
Planning
Architecture
Interior Architecture
Landscape Architecture
Engineering

130 South Main Street
Greenville, SC 29601
T (864) 527-6500
F (864) 233-8385

REVISIONS

NO	DATE	DESCRIPTION
0	12.24.2020	ISSUED FOR BID

McLeod Health
The Choice for Medical Excellence.

SEACOAST HOSPITAL
50-BED ADDITION

LITTLE RIVER, SC

KEYPLAN

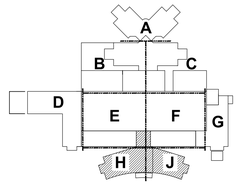

PROJECT NO: **0370.45**
DATE: **12.24.2020**
COPYRIGHT © 2020 **DesignStrategies, LLC**

ENLARGED PLANS

EP400

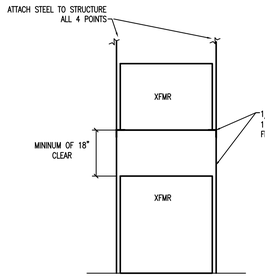

NOTE:

1. TRANSFORMER STRUCTURE SHALL BE SECURELY FASTENED TO FLOOR AND SHALL BE BRACED FOR SEISMIC. SECURE EACH TRANSFORMER TO STRUCTURE. STRUCTURE TO BE DESIGNED BY P.E. SEE SPECIFICATIONS.
2. SIZE STRUCTURE TO ACCOMMODATE TRANSFORMER SIZES.

SCALE: NTS

C1 TRANSFORMER STRUCTURE DETAIL

Revised: June 25, 2019

McLeod Health
Low Voltage Cabling Specifications

McLeod Health specifications for ALL low-voltage cable are as follows:
- Support, terminate, test, and label all cable inside the closets properly.
- Label all faceplates per McLeod Information Systems direction.
- Mount above-ceiling drops in biscuit jacks on the wall nearest the location marked on drawing.
- Use a drywall bracket if an in-wall box is unavailable.
- Mount j-hooks above-ceiling every 4 to 6 feet. If this distance is not attainable, mount the j-hook to the wall cable, and support it with its own hanger suspended from the deck above.
- Support all cables whether they are bundled or individual.
- Use 568B terminations for all CAT-6 cable unless otherwise specified.
- There shall be:
  - No cabling lying on the ceiling, ceiling grid, conduit, water pipes or duct work.
  - No cables tied to or supported from ceiling grid supports, electrical conduit, water pipes, or ductwork.

McLeod Health specifications for Voice Cross Connect cabling:
- Install feeder cabling on the left side and station cabling on the right side.
- The top of the 188B Backboard shall be installed at 6' above floor with the 110 blocks with legs beneath the 188B flush with each other on 2"x2" wood strips so that they stand off the wall.
- Ensure that the bottom of the 110 blocks with legs is not below 3' above the floor.
- Terminate all 4 pairs of the CAT-6 cable, and bind with C4 clips.

McLeod Health specifications for Fiber:
- Use Armored Single Mode loose tube indoor/outdoor fiber unless specified otherwise.
- Use LC Fusion Spliced Factory Pigtails for all terminations.
- Corning and AFL are approved manufacturers.

McLeod Health specifications for Voice cabling:
- Patient Rooms: Install single jack with blue/white blue.
- Non-Patient Rooms: Install dual jacks with blue/white blue on side one and brown/white brown on side two.
- Install Ortronics Light Red phone icon on each voice jack.

McLeod Health specifications for Speaker cabling:
- Terminate all speakers on to a 66 block.
- Terminate Valcom power supply for speakers via the installed 66 block.
- White Blue pair used for audio
- White Brown pair used for power.

McLeod Health specifications for CATV cabling:
- Limit all RG-6 drops to a maximum of 200'.
- Limit all RG-11 drops to a maximum of 350'.
- Use specified Flex 500 for all feeder and riser installations.
- Terminate all CATV drops into specified 2-way splitter then patch into the cable company's tap.
- Terminate in the closet with specified F-Type terminator.
- Terminate in the wall with specified wall plate.

McLeod Health specifications for Data/Telecom Closets:
- Install 12" ladder rack on all 4 walls in each closet and connect to racks.
- Install proper grounding to racks and ladder racks.
- Install ground bus bar 8' above finished floor tied to the building ground.
- Install sufficient Ortronics patch panels as needed.
- Bolt specified 42U floor-mount two post rack to the floor and attach to the ladder rack at the top.

Standard Cable Types to Use per Application
- Data, Bio-med
  - Category 6 U/UTP - Superior Essex 77 Series or Comtran Com-Link
  - Single Mode Fiber - Corning or AFL
- Voice, Speakers
  - Category 5 U/UTP - Superior Essex 77 Series or Comtran Com-Link
- CATV
  - RG-6 - CommScope 2279V
  - RG-11 - CommScope F11T5V
  - Flex 500 - CommScope 2312V Plen Trunk 2400
- Access Control
  - Composite - Superior Essex CMP/CL3P/FPLP - AC-A2x-68

Standard Cable Colors per Application
- Data: Green
- Bio-med Data: Yellow
- Voice: White
- Speakers: Orange
- CATV: White
- Access Control: Yellow

Acceptable Equipment and Supplies for Data/Voice
- Ortronics Series II
  - OR-S21600 - SINGLE
  - OR-S22600 - DUAL
  - OR-40300158 - FACEPLATE
  - OR-40300164 - BLANKS
  - OR-40300061 - SURFACE MOUNT BOX
  - OR-MM10716 - Mighty Mo 10 Rack 42U
  - OR-MM6WD706 - Vertical Wire Manager
  - OR-PHA66U48 - 48 port 110, Angled Cat6 Panel
  - OR-40322100 - Colored Snap-in Icon Light Red (Voice)

Acceptable Equipment and Supplies for Firewall Penetrations:
- Data Closets: a minimum of 4" 3M EZ-Path
- Main Halls: a minimum of 4" 3M Ready Sleeve
- All other locations: a minimum of 1" 3M Ready Sleeve
- All penetrations are to be fire stopped to code and labeled per McLeod Engineering requirements.

Acceptable Equipment and Supplies for CATV:
- CommScope SV2G 2-way splitter
- CommScope SVF59TG F-type connecter
- CommScope SVF59TG wall plate

Acceptable Equipment and Supplies for Speakers:
- Valcom 8004R amp/controller
- Valcom VP-2124D power supply
- Valcom V-9022A-2 2x2 lay-in ceiling speaker

Acceptable Equipment and Supplies for Cameras:
- Axis M3045-V indoor camera
- Axis M3025-VE outdoor camera
- Axis M3105-LVE outdoor camera

Acceptable Equipment and Supplies for Access Control:
- Software House iStar Pro controller
- RK40DKNN HID iClass SE PROX only w/elite key reader

C2 CABLING SPECIFICATIONS

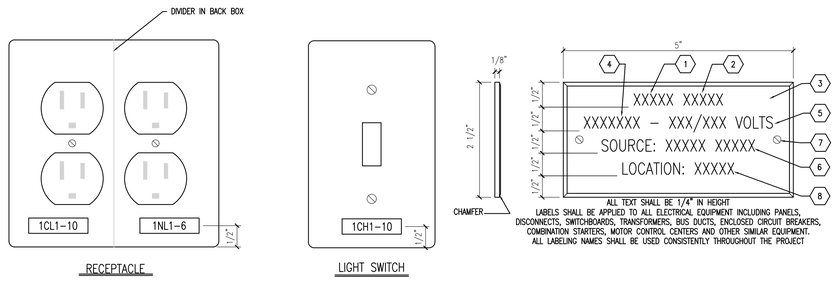

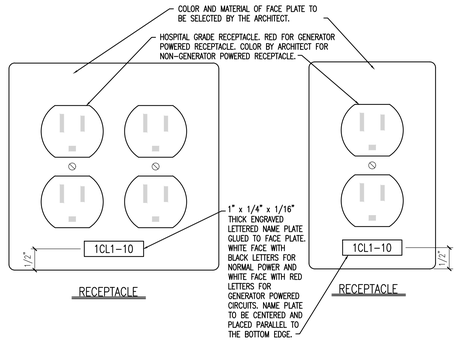

LABEL NOTES:

1. TYPE OF EQUIPMENT WHERE X'S ARE INDICATED. USE NAMES AS INDICATED ON DRAWINGS. WHERE NO NAMES ARE INDICATED, POSSIBLE CHOICES ARE:
   "PANEL" "SWBD" "BUS DUCT" "MCC" "ATS" "COMBINATION
   "XFMR" "DISC" "BKR" "SWGR" "VFD" STARTER"
2. EQUIPMENT NAME (EX. "1NH1", SEE NAMING CONVENTION AND SINGLE LINE DIAGRAM)
3. COLOR: (FACE/LETTERS)
   (WH/BLK) - NORMAL POWER
   (WH/RED) - CRITICAL, LIFE SAFETY AND EQUIPMENT POWER
4. SUPPLY SOURCE WHERE X'S ARE INDICATED. POSSIBLE CHOICES ARE:
   "NORMAL" "CRITICAL"
   "LIFE SAFETY" "EQUIPMENT"
5. INSERT VOLTAGE WHERE X'S ARE INDICATED. POSSIBLE CHOICES ARE:
   "277/480" "480"
   "120/208" "208"
6. INSERT SUPPLYING PANEL DESIGNATION WHERE X'S ARE INDICATED (EX. "PANEL 1NH1", "XFMR 1TN1"). WHEN THIS EQUIPMENT IS SERVED DIRECTLY FROM A TRANSFORMER, THE PANEL SERVING THE TRANSFORMER SHALL ALSO BE LISTED.
7. SECURE LABEL TO EQUIPMENT COVER WITH STAINLESS STEEL, COUNTERSINK SCREWS WITH MATCHING NUTS AND LOCKWASHERS, OR RIVET LABEL TO EQUIPMENT COVERS.
8. ROOM WHERE THE EQUIPMENT PROVIDING POWER TO THIS PIECE OF EQUIPMENT IS LOCATED.

C4 ELECTRICAL EQUIPMENT NAMEPLATE DETAIL

NTS

GROUNDING DETAIL NOTES:

1. INTERCONNECT ALL NON-CURRENT CARRYING METAL SURFACES IN EACH PATIENT CARE AREA USING 10 AWG COPPER CONDUCTOR. THIS INCLUDES METAL WALL STUDS, CEILING GRID, PLUMBING LINES, MEDICAL GAS LINES AND ELECTRICAL DEVICE BACK BOXES, COVERS, FILM ILLUMINATORS AND IN SURGICAL ROOMS THE SURGICAL LIGHTS.
2. ALL PANEL BOARDS SERVING A PATIENT CARE AREA SHALL BE BONDED TOGETHER USING A MINIMUM OF 4 AWG COPPER BONDING CONDUCTOR.
3. THE PERFORMANCE OF THE GROUNDING SYSTEM IN ALL PATIENT CARE AREAS SHALL BE IN ACCORDANCE WITH THE REQUIREMENTS OF NFPA 99. THE CONTRACTOR SHALL SUBMIT A COPY OF ALL TESTING TO THE ARCHITECT FOR REVIEW AND ACCEPTANCE BEFORE THE GROUNDING SYSTEM IS ACCEPTABLE.
4. THERE SHALL BE A ROOM REFERENCE GROUNDING POINT DEVICE INSTALLED IN EVERY PATIENT CARE AREA. THE ROOM REFERENCE GROUNDING POINT SHALL BE ACCESSIBLE AND SHALL BE RECESSED IN THE WALL AT THE HEAD OF THE BED. IN SURGICAL ROOMS IT SHALL BE AT THE ISOLATION PANEL.

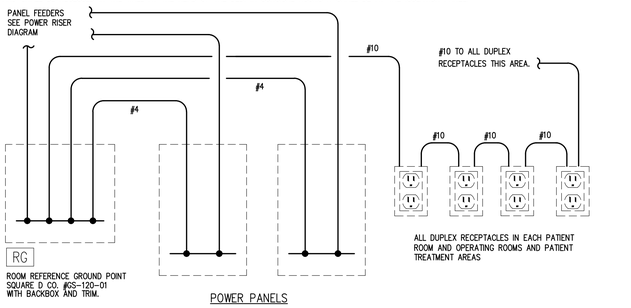

POWER PANELS

B2 ROOM AND PANEL BOARD GROUNDING DETAIL

NTS

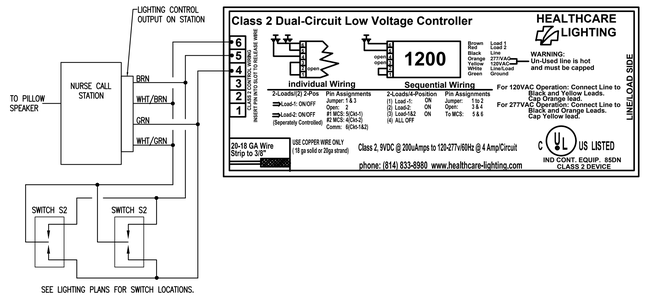

SEE LIGHTING PLANS FOR SWITCH LOCATIONS.

C4 ELECTRICAL MOUNTING HEIGHT ELEVATION AND NOTES

NTS

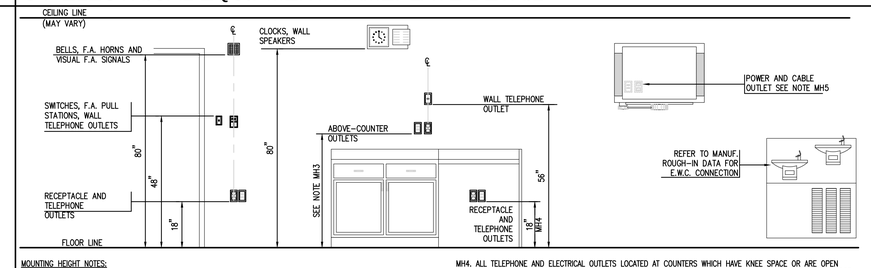

MOUNTING HEIGHT NOTES:

MH1. THIS DETAIL INDICATES TYPICAL MOUNTING HEIGHTS TO THE BOTTOM OF DEVICES. HEIGHTS SHALL BE AS SHOWN UNLESS OTHERWISE SPECIFIED OR NOTED ON PLANS. SOME DEVICES SHOWN MAY NOT BE PRESENT. WHERE DEVICES ARE TO BE MOUNTED IN BLOCK WALL, MOUNT AT BLOCK COURSING AT THE APPROXIMATE HEIGHT OF DEVICES SHOWN ABOVE.

MH2. THE CONTRACTOR SHALL COORDINATE DEVICE LOCATIONS WITH THE POWER AND SYSTEMS DRAWINGS. IN AREAS WHERE A RECEPTACLE AND DATA OUTLET ARE SHOWN IN APPROXIMATELY THE SAME LOCATION, BOTH DEVICES SHALL BE MOUNTED ADJACENT AND AT THE SAME HEIGHT WITH A MAXIMUM OF 1/2 INCH BETWEEN THE EDGE OF COVER PLATES. DEVICES SHOWN IN THE SAME APPROXIMATE LOCATION BUT AT DIFFERENT ELEVATIONS, SUCH AS A FIRE ALARM STROBE AND FIRE ALARM PULL BOX OR FIRE ALARM STROBE AND RECEPTACLE, SHALL BE MOUNTED IN VERTICAL ALIGNMENT TO EACH OTHER AT THE REQUIRED MOUNTING HEIGHT.

MH3. MOUNT AT 3" ABOVE THE COUNTERTOP OR 1" ABOVE THE BACKSPLASH. THE CONTRACTOR SHALL VERIFY COUNTER HEIGHTS BEFORE ROUGHING IN. IN REST ROOMS WHERE NO COUNTER IS PRESENT AT THE SINK THE RECEPTACLES SHALL BE MOUNTED THE SAME HEIGHT AS THE LIGHT SWITCH.

MH4. ALL TELEPHONE AND ELECTRICAL OUTLETS LOCATED AT COUNTERS WHICH HAVE KNEE SPACE OR ARE OPEN BENEATH THE COUNTER, THE ELECTRICAL DEVICES SHALL BE INSTALLED AT 18 INCHES ABOVE FINISHED FLOOR. WHERE THESE ELECTRICAL DEVICES ARE SHOWN AND THERE ARE DRAWERS OR OTHER OBSTRUCTIONS BENEATH THE COUNTER, ELECTRICAL DEVICES SHALL BE INSTALLED ABOVE THE COUNTER TOP. WHERE A TELEPHONE AND ELECTRICAL OUTLET IS SHOWN MOUNTED BENEATH A COUNTER HAVING KNEE SPACE THE DEVICES SHALL BE MOUNTED ADJACENT TO EACH OTHER WITH A MAXIMUM OF 1/2 INCH BETWEEN THE EDGE OF COVER PLATES. WHERE A COUNTER SUPPORT BRACE IS LOCATED IN THE KNEE SPACE BOTH DEVICES SHALL BE MOUNTED ON THE SAME SIDE OF THE BRACE. COORDINATE THE DEVICE LOCATIONS WITH THE ARCHITECTURAL MILLWORK ELEVATIONS.

MH5. COORDINATE THE RECEPTACLE AND CABLE CONNECTION MOUNTING HEIGHT WITH THE HEIGHT OF THE TELEVISION BRACKET. POWER AND CABLE CONNECTIONS SHALL BE IN A LOCATION THAT IS CONCEALED BEHIND THE TELEVISION. POWER AND CABLE CONNECTION SHALL BE AT THE SAME HEIGHT WITH A MAXIMUM DISTANCE OF 1/2 INCH BETWEEN THE EDGE OF COVER PLATES.

MH6. WALL PLATES SHALL BE PLUMB TO WITHIN 1/16", AND INSTALLED WITH NO GAPS BETWEEN PLATE AND WALL

MH7. DO NOT USE OVERSIZED OR EXTRA DEEP PLATES. REPAIR WALL FINISHES AND REMOUNT OUTLET BOXES WHEN STANDARD DEVICE PLATES DO NOT FIT FLUSH OR DO NOT COVER ROUGH WALL OPENING

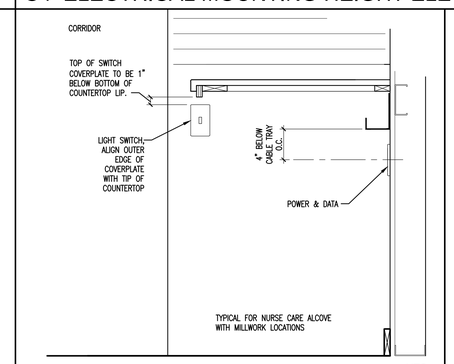

NTS

A4 NURSE CARE ELEV. w/ MILLWORK

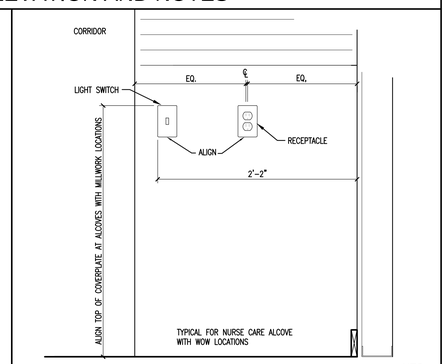

NTS

A5 NURSE CARE ELEV. w/ WOW'S

A1 NOT USED

A2 HEADWALL LIGHT SYMBOL "HL" SWITCHING DETAIL

DesignStrategies

Planning
Architecture
Interior Architecture
Landscape Architecture
Engineering

130 South Main Street
Greenville, SC 29601
T (864) 527-6500
F (864) 233-8385

REVISIONS

NO	DATE	DESCRIPTION
0	12.24.2020	ISSUED FOR BID

McLeod Health
The Choice for Medical Excellence.

SEACOAST HOSPITAL
50-BED ADDITION

LITTLE RIVER, SC

KEYPLAN

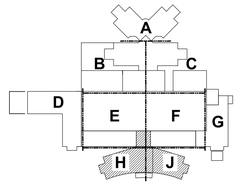

TRUE NORTH

PROJECT NO: 0370.45
DATE: 12.24.2020

COPYRIGHT © 2020 **DesignStrategies, LLC**

ELECTRICAL
DETAILS

EP500

PANEL: NT-3NH1 | VOLTAGE: 277/480 3ø, 4W | TYPE: SEE SPECS | MAINS: ---

DEVICE AMPS/TRIP	DEVICE POLES	NOTES	BRANCH CIRCUIT DESIGNATION	VOLT AMPS	NO.	PHASE LOAD (VOLT-AMPS) ØA	ØB	ØC	NO.	BRANCH CIRCUIT VOLT AMPS	DESIGNATION	NOTES	DEVICE POLES	DEVICE AMPS/TRIP
20	1	–	LTG – PAT. RM. 3533–3541	---	1	---			2	470	LTS – CORE	–	1	20
20	1	–	LTG – PAT. RM. 3542–3551	---	3		---		4	---	SPARE	–	1	20
20	1	–	LTG – PAT. RM. 3514–3523	---	5			---	6	---	SPARE	–	1	20
20	1	–	LTG – PAT. RM. 3525–3532	---	7	---			8	---	SPARE	–	1	20
20	1	–	LTG – CORR. DOWN LTS J	---	9		---		10	---	SPARE	–	1	20
20	1	–	LTG – CORR. DOWN LTS H	---	11			---	12	---	SPARE	–	1	20
20	1	–	LTG – ELEV. LOBBY	2793	13	---			14	---	SPARE	–	1	20
20	1	–	SPARE	---	15		---		16	---	SPARE	–	1	20
20	1	–	SPARE	---	17			---	18	---	SPARE	–	1	20
20	1	–	SPARE	---	19	---			20	---	SPARE	–	1	20
20	1	–	SPARE	---	21		---		22	---	SPARE	–	1	20
20	1	–	SPARE	---	23			---	24	---	SPARE	–	1	20
20	1	–	SPARE	---	25	---			26	---	SPARE	–	1	20
20	1	–	SPARE	---	27		---		28	---	SPARE	–	1	20
20	1	–	SPARE	---	29			---	30	---	SPARE	–	1	20
20	1	–	SPARE	---	31	---			32	---	SPARE	–	1	20
20	1	–	SPARE	---	33		---		34	---	SPARE	–	1	20
20	1	–	SPARE	---	35			---	36	---	SPARE	–	1	20
175	3	–	TRANSFORMER NT-T-1N3	---	37	---			38	---	TVSS	–	3	30
				---	39		---		40	---		–		
				---	41			---	42	---		–		

INTEGRATED EQUIP. RATING: ---- A/C | KVA TOTAL | --- | --- | --- | PANELBOARD LOAD TOTAL: --- KVA

PANEL: NT-3NL1 | VOLTAGE: 120/208 3ø, 4W | TYPE: SEE SPECS | MAINS: 400 AMB

DEVICE AMPS/TRIP	DEVICE POLES	NOTES	BRANCH CIRCUIT DESIGNATION	VOLT AMPS	NO.	PHASE LOAD (VOLT-AMPS) ØA	ØB	ØC	NO.	BRANCH CIRCUIT VOLT AMPS	DESIGNATION	NOTES	DEVICE POLES	DEVICE AMPS/TRIP
20	1	–	REC – 3512, 3513	540	1	---			2	---	SPARE	–	1	20
20	1	–	REC – 3512, 3513	360	3		---		4	---	SPARE	–	1	20
20	1	–	SPARE	---	5			---	6	---	SPARE	–	1	20
20	1	–	SPARE	---	7	---			8	---	SPARE	–	1	20
20	1	–	SPARE	---	9		---		10	---	SPARE	–	1	20
20	1	–	SPARE	---	11			---	12	---	SPARE	–	1	20
20	1	–	SPARE	---	13	---			14	---	SPARE	–	1	20
20	1	–	SPARE	---	15		---		16	---	SPARE	–	1	20
20	1	–	SPARE	---	17			---	18	---	SPARE	–	1	20
20	1	–	SPARE	---	19	---			20	---	SPARE	–	1	20
20	1	–	SPARE	---	21		---		22	---	SPARE	–	1	20
20	1	–	SPARE	---	23			---	24	---	SPARE	–	1	20
20	1	–	SPARE	---	25	---			26	---	SPARE	–	1	20
20	1	–	SPARE	---	27		---		28	---	SPARE	–	1	20
20	1	–	SPARE	---	29			---	30	---	SPARE	–	1	20
100	3	–	PANEL NT-3NL4	---	31	---			32	---	SPARE	–	1	20
				---	33		---		34	---	SPARE	–	1	20
				---	35			---	36	---	SPARE	–	1	20
100	3	–	PANEL NT-3NL3	---	37	---			38	---	SPARE	–	3	100
				---	39		---		40	---		–		
				---	41			---	42	---		–		

INTEGRATED EQUIP. RATING: 10,000 A/C | KVA TOTAL | --- | --- | --- | PANELBOARD LOAD TOTAL: --- KVA

PANEL: NT-3NL2 | VOLTAGE: 120/208 3ø, 4W | TYPE: SEE SPECS | MAINS: 100 AMLO

DEVICE AMPS/TRIP	DEVICE POLES	NOTES	BRANCH CIRCUIT DESIGNATION	VOLT AMPS	NO.	PHASE LOAD (VOLT-AMPS) ØA	ØB	ØC	NO.	BRANCH CIRCUIT VOLT AMPS	DESIGNATION	NOTES	DEVICE POLES	DEVICE AMPS/TRIP
20	1	–	RECS 3563–3565	540	1	1440			2	900	RECS CORR & TLTS	–	1	20
20	1	–	RECS 3563–3565	540	3		1260		4	720	RECS CORR & TLTS	–	1	20
20	1	–	RECS 3563–3565	360	5			900	6	540	RECS CORR & TLTS	–	1	20
20	1	–	RECS FAMILY COFFEE	180	7	900			8	720	RECS CORR & TLTS	–	1	20
20	1	–	RECS 3524	900	9		1620		10	720	RECS CORR & TLTS	–	1	20
20	1	–	RECS 3566 COFFEE	180	11			720	12	540	RECS CORR & TLTS	–	1	20
20	1	–	RECS 3566 MICRO	180	13	720			14	540	RECS 3580–3582	–	1	20
20	1	–	RECS 3566–3568	720	15		1260		16	540	RECS 3580–3582	–	1	20
20	1	–	RECS 3566–3568	720	17			1080	18	360	RECS 3580–3582	–	1	20
20	1	–	RECS 3566–3568	720	19	1440			20	720	RECS 3576	–	1	20
20	1	–	WATER COOLER	500	21		1300		22	800	RECS – IT 3572	–	1	20
20	1	–	SPARE	---	23			---	24	---	SPARE	–	1	20
20	1	–	SPARE	---	25	---			26	---	SPARE	–	1	20
20	1	–	SPARE	---	27		---		28	---	SPARE	–	1	20
20	1	–	SPARE	---	29			---	30	---	SPARE	–	1	20
20	1	–	SPARE	---	31	---			32	---	SPARE	–	1	20
20	1	–	SPARE	---	33		---		34	---	SPARE	–	1	20
20	1	–	SPARE	---	35			---	36	---	SPARE	–	1	20
20	1	–	SPARE	---	37	---			38	---	TVSS	–	3	30
				---	39		---		40	---		–		
				---	41			---	42	---		–		

INTEGRATED EQUIP. RATING: 10,000 A/C | KVA TOTAL | 4.50 | 5.44 | 2.70 | PANELBOARD LOAD TOTAL: 12.64 KVA

PANEL: NT-3NL3 | VOLTAGE: 120/208 3ø, 4W | TYPE: SEE SPECS | MAINS: 100 AMLO

DEVICE AMPS/TRIP	DEVICE POLES	NOTES	BRANCH CIRCUIT DESIGNATION	VOLT AMPS	NO.	PHASE LOAD (VOLT-AMPS) ØA	ØB	ØC	NO.	BRANCH CIRCUIT VOLT AMPS	DESIGNATION	NOTES	DEVICE POLES	DEVICE AMPS/TRIP
20	1	–	RECS –2571 MICRO	180	1	720			2	540	REC – 3577, 3579	–	1	20
20	1	–	RECS – 3571 COFFEE	180	3		540		4	360	REC – 3577, 3579	–	1	20
20	1	–	RECS – 3571, 3570	720	5			1080	6	360	REC – 3577, 3579	–	1	20
20	1	–	REC – 3571, 3570	180	7	540			8	360	REC – 3579	–	1	20
20	1	–	REC – 3571, 3570	360	9		760		10	400	ELEC. FIREPLACE	–	1	20
20	1	–	REC – 3574 COFFEE	180	11			720	12	540	TV 3541	–	1	20
20	1	–	REC – 3574	900	13	1080			14	180	REC – 3541	–	1	20
20	1	–	SPARE	---	15		---		16	---	SPARE	–	1	20
20	1	–	SPARE	---	17			---	18	---	SPARE	–	1	20
20	1	–	SPARE	---	19	---			20	---	SPARE	–	1	20
20	1	–	SPARE	---	21		---		22	---	SPARE	–	1	20
20	1	–	SPARE	---	23			---	24	---	SPARE	–	1	20
20	1	–	SPARE	---	25	---			26	---	SPARE	–	1	20
20	1	–	SPARE	---	27		---		28	---	SPARE	–	1	20
20	1	–	SPARE	---	29			---	30	---	SPARE	–	1	20
20	1	–	SPARE	---	31	---			32	---	SPARE	–	1	20
20	1	–	SPARE	---	33		---		34	---	SPARE	–	1	20
20	1	–	SPARE	---	35			---	36	---	SPARE	–	1	20
20	1	–	SPARE	---	37	---			38	---	TVSS	–	3	30
				---	39		---		40	---		–		
				---	41			---	42	---		–		

INTEGRATED EQUIP. RATING: 10,000 A/C | KVA TOTAL | 2.34 | 1.30 | 1.80 | PANELBOARD LOAD TOTAL: 5.44 KVA

PANEL: NT-3NL4 | VOLTAGE: 120/208 3ø, 4W | TYPE: SEE SPECS | MAINS: 100 AMLO

DEVICE AMPS/TRIP	DEVICE POLES	NOTES	BRANCH CIRCUIT DESIGNATION	VOLT AMPS	NO.	PHASE LOAD (VOLT-AMPS) ØA	ØB	ØC	NO.	BRANCH CIRCUIT VOLT AMPS	DESIGNATION	NOTES	DEVICE POLES	DEVICE AMPS/TRIP
20	1	–	REC PAT. RM 3514, 3515	1080	1	2160			2	1080	REC PAT. RM 3525, 3526	–	1	20
20	1	–	REC PAT. RM 3514, 3515	1080	3		2160		4	1080	REC PAT. RM 3525, 3526	–	1	20
20	1	–	REC PAT. RM 3514, 3515	720	5			1440	6	720	REC PAT. RM 3525, 3526	–	1	20
20	1	–	REC PAT. RM 3516, 3517	1080	7	2160			8	1080	REC PAT. RM 3527, 3528	–	1	20
20	1	–	REC PAT. RM 3516, 3517	1080	9		2160		10	1080	REC PAT. RM 3527, 3528	–	1	20
20	1	–	REC PAT. RM 3516, 3517	720	11			1440	12	720	REC PAT. RM 3527, 3528	–	1	20
20	1	–	REC PAT. RM 3518, 3519	1080	13	2160			14	1080	REC PAT. RM 3529, 3530	–	1	20
20	1	–	REC PAT. RM 3518, 3519	1080	15		2160		16	1080	REC PAT. RM 3529, 3530	–	1	20
20	1	–	REC PAT. RM 3518, 3519	720	17			1440	18	720	REC PAT. RM 3529, 3530	–	1	20
20	1	–	REC PAT. RM 3520, 3521	1080	19	2160			20	1080	REC PAT. RM 3531, 3532	–	1	20
20	1	–	REC PAT. RM 3520, 3521	1080	21		2160		22	1080	REC PAT. RM 3531, 3532	–	1	20
20	1	–	REC PAT. RM 3520, 3521	720	23			1440	24	720	REC PAT. RM 3531, 3532	–	1	20
20	1	–	REC PAT. RM 3522, 3523	1080	25	1080			26	---	SPARE	–	1	20
20	1	–	REC PAT. RM 3522, 3523	1080	27		1080		28	---	SPARE	–	1	20
20	1	–	REC PAT. RM 3522, 3523	720	29			720	30	---	SPARE	–	1	20
20	1	–	SPARE	---	31	---			32	---	SPARE	–	1	20
20	1	–	SPARE	---	33		---		34	---	SPARE	–	1	20
20	1	–	SPARE	---	35			---	36	---	SPARE	–	1	20
20	1	–	SPARE	---	37	---			38	---	TVSS	–	3	30
20	1	–	SPARE	---	39		---		40	---		–		
20	1	–	SPARE	---	41			---	42	---		–		

INTEGRATED EQUIP. RATING: 10,000 A/C | KVA TOTAL | --- | --- | --- | PANELBOARD LOAD TOTAL: --- KVA

PANEL: NT-3NL5 | VOLTAGE: 120/208 3ø, 4W | TYPE: SEE SPECS | MAINS: 100 AMLO

DEVICE AMPS/TRIP	DEVICE POLES	NOTES	BRANCH CIRCUIT DESIGNATION	VOLT AMPS	NO.	PHASE LOAD (VOLT-AMPS) ØA	ØB	ØC	NO.	BRANCH CIRCUIT VOLT AMPS	DESIGNATION	NOTES	DEVICE POLES	DEVICE AMPS/TRIP
20	1	–	REC PAT. RM 3533, 3534	1080	1	2160			2	1080	REC PAT. RM 3544, 3545	–	1	20
20	1	–	REC PAT. RM 3533, 3534	1080	3		2160		4	1080	REC PAT. RM 3544, 3545	–	1	20
20	1	–	REC PAT. RM 3533, 3534	720	5			1440	6	720	REC PAT. RM 3544, 3545	–	1	20
20	1	–	REC PAT. RM 3535, 3536	1080	7	2160			8	1080	REC PAT. RM 3546, 3547	–	1	20
20	1	–	REC PAT. RM 3535, 3536	1080	9		2160		10	1080	REC PAT. RM 3546, 3547	–	1	20
20	1	–	REC PAT. RM 3535, 3536	720	11			1440	12	720	REC PAT. RM 3546, 3547	–	1	20
20	1	–	REC PAT. RM 3537, 3538	1080	13	2160			14	1080	REC PAT. RM 3548, 3549	–	1	20
20	1	–	REC PAT. RM 3537, 3538	1080	15		2160		16	1080	REC PAT. RM 3548, 3549	–	1	20
20	1	–	REC PAT. RM 3537, 3538	720	17			1440	18	720	REC PAT. RM 3548, 3549	–	1	20
20	1	–	REC PAT. RM 3539, 3540	1080	19	2160			20	1080	REC PAT. RM 3550, 3551	–	1	20
20	1	–	REC PAT. RM 3539, 3540	1080	21		2160		22	1080	REC PAT. RM 3550, 3551	–	1	20
20	1	–	REC PAT. RM 3539, 3540	720	23			1440	24	720	REC PAT. RM 3550, 3551	–	1	20
20	1	–	REC PAT. RM 3542, 3543	1080	25	1080			26	---	SPARE	–	1	20
20	1	–	REC PAT. RM 3542, 3543	1080	27		1080		28	---	SPARE	–	1	20
20	1	–	REC PAT. RM 3542, 3543	720	29			720	30	---	SPARE	–	1	20
20	1	–	SPARE	---	31	---			32	---	SPARE	–	1	20
20	1	–	SPARE	---	33		---		34	---	SPARE	–	1	20
20	1	–	SPARE	---	35			---	36	---	SPARE	–	1	20
20	1	–	SPARE	---	37	---			38	---	TVSS	–	3	30
20	1	–	SPARE	---	39		---		40	---		–		
20	1	–	SPARE	---	41			---	42	---		–		

INTEGRATED EQUIP. RATING: 10,000 A/C | KVA TOTAL | --- | --- | --- | PANELBOARD LOAD TOTAL: --- KVA

PANEL: NT-4NH1 | VOLTAGE: 277/480 3ø, 4W | NEW | TYPE: SEE SPECS | MAINS: 400 AMLO

DEVICE AMPS/TRIP	DEVICE POLES	NOTES	BRANCH CIRCUIT DESIGNATION	VOLT AMPS	NO.	PHASE LOAD (VOLT-AMPS) ØA	ØB	ØC	NO.	BRANCH CIRCUIT VOLT AMPS	DESIGNATION	NOTES	DEVICE POLES	DEVICE AMPS/TRIP
20	1	–	LTG – PAT. RM. 4533–4540	---	1	---			2	---	LTS – CORE	–	1	20
20	1	–	LTG – PAT. RM. 4542–4557	---	3		---		4	---	SPARE	–	1	20
20	1	–	LTG – PAT. RM. 4514–4522	---	5			---	6	---	SPARE	–	1	20
20	1	–	LTG – PAT. RM. 4525–4532	---	7	---			8	---	SPARE	–	1	20
20	1	–	LTG – CORR. DOWN LTS J	---	9		---		10	---	SPARE	–	1	20
20	1	–	LTG – CORR. DOWN LTS H	---	11			---	12	---	SPARE	–	1	20
20	1	–	LTG – LOBBY,4513,4571,4574	---	13	---			14	---	SPARE	–	1	20
20	1	–	SPARE	---	15		---		16	---	SPARE	–	1	20
20	1	–	SPARE	---	17			---	18	---	SPARE	–	1	20
20	1	–	SPARE	---	19	---			20	---	SPARE	–	1	20
20	1	–	SPARE	---	21		---		22	---	SPARE	–	1	20
20	1	–	SPARE	---	23			---	24	---	SPARE	–	1	20
20	1	–	SPARE	---	25	---			26	---	SPARE	–	1	20
20	1	–	SPARE	---	27		---		28	---	SPARE	–	1	20
20	1	–	SPARE	---	29			---	30	---	SPARE	–	1	20
20	1	–	SPARE	---	31	---			32	---	SPARE	–	1	20
20	1	–	SPARE	---	33		---		34	---	SPARE	–	1	20
20	1	–	SPARE	---	35			---	36	---	SPARE	–	1	20
20	1	–	SPARE	---	37	---			38	---	TVSS	–	3	30
20	1	–	SPARE	---	39		---		40	---		–		
20	1	–	SPARE	---	41			---	42	---		–		

INTEGRATED EQUIP. RATING: 42,000 A/C | KVA TOTAL | --- | --- | --- | PANELBOARD LOAD TOTAL: --- KVA

PANEL: NT-4NL1 | VOLTAGE: 120/208 3ø, 4W | NEW | TYPE: SEE SPECS | MAINS: 400 AMB

DEVICE AMPS/TRIP	DEVICE POLES	NOTES	BRANCH CIRCUIT DESIGNATION	VOLT AMPS	NO.	PHASE LOAD (VOLT-AMPS) ØA	ØB	ØC	NO.	BRANCH CIRCUIT VOLT AMPS	DESIGNATION	NOTES	DEVICE POLES	DEVICE AMPS/TRIP
20	1	–	REC – 4512, 4513	540	1	900			2	360	REC – CORR 4502, 4510	–	1	20
20	1	–	REC – 4512, 4513	360	3		720		4	360	REC – DIALYSIS 4568	–	1	20
20	1	–	U.C. LTS – 4566, 4579	070	5			430	6	360	REC – DIALYSIS 4568	–	1	20
20	1	–	SPARE	---	7	540			8	540	REC – DIALYSIS 4568 TV	–	1	20
20	1	–	SPARE	---	9		---		10	---	SPARE	–	1	20
20	1	–	SPARE	---	11			---	12	---	SPARE	–	1	20
20	1	–	SPARE	---	13	---			14	---	SPARE	–	1	20
20	1	–	SPARE	---	15		---		16	---	SPARE	–	1	20
20	1	–	SPARE	---	17			---	18	---	SPARE	–	1	20
20	1	–	SPARE	---	19	---			20	---	SPARE	–	1	20
20	1	–	SPARE	---	21		---		22	---	SPARE	–	1	20
20	1	–	SPARE	---	23			---	24	---	SPARE	–	1	20
20	1	–	SPARE	---	25	---			26	9720	SPARE		2	
				9720	27		9720		28	---	SPARE	–	1	20
				6480	29			6480	30	---	SPARE	–	1	20
100	3	–	PANEL NT-4NL3	2900	31	13160			32	10260	PANEL NT-4NL5	–	3	100
				1860	33		11940		34	10080		–		
				2040	35			8880	36	6840		–		
100	3	–	PANEL NT-4NL2	6140	37	6140			38	---	TVSS	–	3	30
				4720	39		4720		40	---		–		
				4920	41			4920	42	---		–		

INTEGRATED EQUIP. RATING: 10,000 A/C | KVA TOTAL | 30.46 | 27.10 | 20.71 | PANELBOARD LOAD TOTAL: 78.27 KVA

PANEL: NT-4NL2 | VOLTAGE: 120/208 3ø, 4W | NEW | TYPE: SEE SPECS | MAINS: 100 AMLO

DEVICE AMPS/TRIP	DEVICE POLES	NOTES	BRANCH CIRCUIT DESIGNATION	VOLT AMPS	NO.	PHASE LOAD (VOLT-AMPS) ØA	ØB	ØC	NO.	BRANCH CIRCUIT VOLT AMPS	DESIGNATION	NOTES	DEVICE POLES	DEVICE AMPS/TRIP
20	1	–	RECS 4563–4565	540	1	1620			2	1080	RECS CORR	–	1	20
20	1	–	RECS 4563–4565	540	3		1260		4	720	RECS CORR & TLTS	–	1	20
20	1	–	RECS 4563, 4565	360	5			900	6	540	RECS CORR & TLTS	–	1	20
20	1	–	RECS 4565	360	7	1080			8	720	RECS CORR & TLTS	–	1	20
20	1	–	RECS 4562	360	9		1080		10	720	RECS CORR & TLTS	–	1	20
20	1	–	RECS 4566 COFFEE	1140	11			1680	12	540	RECS CORR & TLTS	–	1	20
20	1	–	RECS 4566 MICRO	1100	13	1640			14	540	RECS 4580–4582	–	1	20
20	1	–	RECS 4567	180	15		540		16	360	RECS 4580, 4582	–	1	20
20	1	–	RECS 4566, 4567	360	17			900	18	540	RECS 4580, 4582	–	1	20
20	1	–	RECS 4567, 4568	900	19	1620			20	720	RECS 4576	–	1	20
20	1	–	WATER COOLER	500	21		1300		22	800	QUAD – IT 4572	–	1	20
20	1	–	RECS 4524	540	23			900	24	360	RECS 4580, 4581	–	1	20
20	1	–	RECS 4524	540	25	540			26	---	SPARE	–	1	20
20	1	–	RECS WORKROOM 4568	540	27		540		28	---	SPARE	–	1	20
20	1	–	RECS WORKROOM 4568	540	29			540	30	---	SPARE	–	1	20
20	1	–	SPARE	---	31	---			32	---	SPARE	–	1	20
20	1	–	SPARE	---	33		---		34	---	SPARE	–	1	20
20	1	–	SPARE	---	35			---	36	---	SPARE	–	1	20
20	1	–	SPARE	---	37	---			38	---	TVSS	–	3	30
20	1	–	SPARE	---	39		---		40	---		–		
20	1	–	SPARE	---	41			---	42	---		–		

INTEGRATED EQUIP. RATING: 10,000 A/C | KVA TOTAL | 6.50 | 4.72 | 4.92 | PANELBOARD LOAD TOTAL: 16.14 KVA

PANEL: NT-4NL3 | VOLTAGE: 120/208 3ø, 4W | NEW | TYPE: SEE SPECS | MAINS: 100 AMLO

DEVICE AMPS/TRIP	DEVICE POLES	NOTES	BRANCH CIRCUIT DESIGNATION	VOLT AMPS	NO.	PHASE LOAD (VOLT-AMPS) ØA	ØB	ØC	NO.	BRANCH CIRCUIT VOLT AMPS	DESIGNATION	NOTES	DEVICE POLES	DEVICE AMPS/TRIP
20	1	–	RECS –4571 MICRO	1100	1	1640			2	540	REC – 4577, 4578	–	1	20
20	1	–	RECS – 4571 COFFEE	1140	3		1500		4	360	REC – 4577, 4578	–	1	20
20	1	–	RECS – 4571, 4570	540	5			900	6	360	REC – 4577, 4578	–	1	20
20	1	–	REC – 4570	180	7	540			8	360	REC – 4579	–	1	20
20	1	–	REC – 4571, 4570	360	9		1080		10	720	FLOOR BOX – 4524	–	1	20
20	1	–	DED REC – 4574 COFFEE	1140	11			1860	12	720	FLOOR BOX – 4524	–	1	20
20	1	–	REC – 4574	720	13	1440			14	720	FLOOR BOX – 4524	–	1	20
20	1	–	SPARE	---	15		360		16	360	REC – SHARED OFFICE 4524	–	1	20
20	1	–	SPARE	---	17			---	18	---	SPARE	–	1	20
20	1	–	SPARE	---	19	---			20	---	SPARE	–	1	20
20	1	–	SPARE	---	21		---		22	---	SPARE	–	1	20
20	1	–	SPARE	---	23			---	24	---	SPARE	–	1	20
20	1	–	SPARE	---	25	---			26	---	SPARE	–	1	20
20	1	–	SPARE	---	27		---		28	---	SPARE	–	1	20
20	1	–	SPARE	---	29			---	30	---	SPARE	–	1	20
20	1	–	SPARE	---	31	---			32	---	SPARE	–	1	20
20	1	–	SPARE	---	33		---		34	---	SPARE	–	1	20
20	1	–	SPARE	---	35			---	36	---	SPARE	–	1	20
20	1	–	SPARE	---	37	---			38	---	TVSS	–	3	30
20	1	–	SPARE	---	39		---		40	---		–		
20	1	–	SPARE	---	41			---	42	---		–		

INTEGRATED EQUIP. RATING: 10,000 A/C | KVA TOTAL | 3.62 | 2.94 | 2.76 | PANELBOARD LOAD TOTAL: 9.32 KVA

PANEL: NT-4NL4 | VOLTAGE: 120/208 3ø, 4W | NEW | TYPE: SEE SPECS | MAINS: 100 AMLO

DEVICE AMPS/TRIP	DEVICE POLES	NOTES	BRANCH CIRCUIT DESIGNATION	VOLT AMPS	NO.	PHASE LOAD (VOLT-AMPS) ØA	ØB	ØC	NO.	BRANCH CIRCUIT VOLT AMPS	DESIGNATION	NOTES	DEVICE POLES	DEVICE AMPS/TRIP
20	1	–	REC PAT. RM 4514, 4515	1080	1	2160			2	1080	REC PAT. RM 4525, 4526	–	1	20
20	1	–	REC PAT. RM 4514, 4515	1080	3		2160		4	1080	REC PAT. RM 4525, 4526	–	1	20
20	1	–	REC PAT. RM 4514, 4515	720	5			1440	6	720	REC PAT. RM 4525, 4526	–	1	20
20	1	–	REC PAT. RM 4516, 4517	1080	7	2160			8	1080	REC PAT. RM 4527, 4528	–	1	20
20	1	–	REC PAT. RM 4516, 4517	1080	9		2160		10	1080	REC PAT. RM 4

PANEL NT-3CH1 | VOLTAGE 277/480 3ø, 4W | EXISTING | TYPE SEE SPECS | MAINS ---

DEVICE AMPS/TRIP	DEVICE POLES	NOTES	BRANCH CIRCUIT DESIGNATION	VOLT AMPS	NO.	PHASE LOAD (VOLT-AMPS) øA	øB	øC	NO.	BRANCH CIRCUIT VOLT AMPS	BRANCH CIRCUIT DESIGNATION	NOTES	DEVICE POLES	DEVICE AMPS/TRIP
20	1	–	LTS – PAT. RMS	---	1	---			2	---	SPARE	–	1	20
20	1	–	LTS – PAT. RMS	---	3		---		4	---	SPARE	–	1	20
20	1	–	LTS – PAT. RMS	---	5			---	6	---	SPARE	–	1	20
20	1	–	LTS – PAT. RMS	---	7	---			8	---	SPARE	–	1	20
20	1	–	SPARE	---	9		---		10	---	SPARE	–	1	20
20	1	–	SPARE	---	11			---	12	---	SPARE	–	1	20
20	1	–	SPARE	---	13	---			14	---	SPARE	–	1	20
20	1	–	SPARE	---	15		---		16	---	SPARE	–	1	20
20	1	–	SPARE	---	17			---	18	---	SPARE	–	1	20
20	1	–	SPARE	---	19	---			20	---	SPARE	–	1	20
20	1	–	SPARE	---	21		---		22	---	SPARE	–	1	20
20	1	–	SPARE	---	23			---	24	---	SPARE	–	1	20
20	1	–	SPARE	---	25	---			26	---	SPARE	–	1	20
20	1	–	SPARE	---	27		---		28	---	SPARE	–	1	20
20	1	–	SPARE	---	29			---	30	---	SPARE	–	1	20
20	1	–	SPARE	---	31	---			32	---	SPARE	–	1	20
20	1	–	SPARE	---	33		---		34	---	SPARE	–	1	20
20	1	–	SPARE	---	35			---	36	---	SPARE	–	1	20
175	3	–	TRANSFORMER NT-T-3C1	---	37	---			38	---	TVSS	–	3	30
				---	39		---		40	---		–		
				---	41			---	42	---		–		

INTEGRATED EQUIP. RATING: 42,000 AIC | KVA TOTAL --- --- --- | PANELBOARD LOAD TOTAL: --- KVA

PANEL NT-3CL1 | VOLTAGE 120/208 3ø, 4W | EXISTING | TYPE SEE SPECS | MAINS 400 AMLO

DEVICE AMPS/TRIP	DEVICE POLES	NOTES	BRANCH CIRCUIT DESIGNATION	VOLT AMPS	NO.	PHASE LOAD (VOLT-AMPS) øA	øB	øC	NO.	BRANCH CIRCUIT VOLT AMPS	BRANCH CIRCUIT DESIGNATION	NOTES	DEVICE POLES	DEVICE AMPS/TRIP
20	1	–	QUAD – NURSE 3576	360	1	360			2	---	SPARE	–	1	20
20	1	–	PLUGMOLD 3577	1080	3		1080		4	---	SPARE	–	1	20
20	1	–	PLUGMOLD 3577	1080	5			1080	6	---	SPARE	–	1	20
20	1	–	PLUGMOLD 3577	1080	7	1080			8	---	SPARE	–	1	20
20	1	–	REC – IT 3572	800	9		800		10	---	SPARE	–	1	20
20	1	–	REC – IT 3572	800	11			800	12	---	SPARE	–	1	20
30	2	–	RACK 3572	750	13	750			14	---	SPARE	–	1	20
30	2	–	RACK 3572	750	15		750		16	---	SPARE	–	1	20
20	1	–	SPARE	---	17			---	18	---	SPARE	–	1	20
20	1	–	SPARE	---	19	---			20	---	SPARE	–	1	20
20	1	–	SPARE	---	21		---		22	---	SPARE	–	1	20
20	1	–	SPARE	---	23			---	24	---	SPARE	–	1	20
100	3	–	PANEL NT-3CL4	3960	25	3960			26	---	SPARE	–	1	20
				3880	27		3880		28	---	SPARE	–	1	20
				5680	29			5680	30	---	SPARE	–	1	20
100	3	–	PANEL NT-3CL3	2160	31	5220			32	3060	PANEL NT-3CL5	–	3	100
				2160	33		5400		34	3240		–		
				2880	35			7660	36	4780		–		
100	3	–	PANEL NT-3CL2	2880	37	2880			38	---	TVSS	–	3	30
				2880	39		2880		40	---		–		
				3240	41			3240	42	---		–		

INTEGRATED EQUIP. RATING: 10,000 AIC | KVA TOTAL 14.25 14.79 18.46 | PANELBOARD LOAD TOTAL: 47.50 KVA

PANEL NT-3CL2 | VOLTAGE 120/208 3ø, 4W | EXISTING | TYPE SEE SPECS | MAINS 100 AMLO

DEVICE AMPS/TRIP	DEVICE POLES	NOTES	BRANCH CIRCUIT DESIGNATION	VOLT AMPS	NO.	PHASE LOAD (VOLT-AMPS) øA	øB	øC	NO.	BRANCH CIRCUIT VOLT AMPS	BRANCH CIRCUIT DESIGNATION	NOTES	DEVICE POLES	DEVICE AMPS/TRIP
20	1	–	REC PAT. BED 3522	180	1	360			2	180	REC PAT. BED 3527	–	1	20
20	1	–	REC PAT. RM 3522, 3523	720	3		1440		4	720	REC PAT. RM 3527, 3528	–	1	20
20	1	–	REC PAT. RM 3522, 3523	720	5			1440	6	720	REC PAT. RM 3527, 3528	–	1	20
20	1	–	REC PAT. BED 3523	180	7	360			8	180	REC PAT. BED 3528	–	1	20
20	1	–	REC PAT. BED 3525	180	9		360		10	180	REC PAT. BED 3529	–	1	20
20	1	–	REC PAT. RM 3525, 3526	720	11			1440	12	720	REC PAT. RM 3529, 3530	–	1	20
20	1	–	REC PAT. RM 3525, 3526	720	13	1440			14	720	REC PAT. RM 3529, 3530	–	1	20
20	1	–	REC PAT. BED 3526	180	15		360		16	180	REC PAT. BED 3530	–	1	20
20	1	–	SPARE	---	17			180	18	180	REC PAT. BED 3531	–	1	20
20	1	–	SPARE	---	19	720			20	720	REC PAT. RM 3531, 3532	–	1	20
20	1	–	SPARE	---	21		720		22	720	REC PAT. RM 3531, 3532	–	1	20
20	1	–	SPARE	---	23			180	24	180	REC PAT. BED 3532	–	1	20
20	1	–	SPARE	---	25	---			26	---	SPARE	–	1	20
20	1	–	SPARE	---	27		---		28	---	SPARE	–	1	20
20	1	–	SPARE	---	29			---	30	---	SPARE	–	1	20
20	1	–	SPARE	---	31	---			32	---	SPARE	–	1	20
20	1	–	SPARE	---	33		---		34	---	SPARE	–	1	20
20	1	–	SPARE	---	35			---	36	---	SPARE	–	1	20
20	1	–	SPARE	---	37	---			38	---	TVSS	–	3	30
				---	39		---		40	---		–		
				---	41			---	42	---		–		

INTEGRATED EQUIP. RATING: 10,000 AIC | KVA TOTAL 2.88 2.88 3.24 | PANELBOARD LOAD TOTAL: 9.00 KVA

PANEL NT-3CL3 | VOLTAGE 120/208 3ø, 4W | EXISTING | TYPE SEE SPECS | MAINS 100 AMLO

DEVICE AMPS/TRIP	DEVICE POLES	NOTES	BRANCH CIRCUIT DESIGNATION	VOLT AMPS	NO.	PHASE LOAD (VOLT-AMPS) øA	øB	øC	NO.	BRANCH CIRCUIT VOLT AMPS	BRANCH CIRCUIT DESIGNATION	NOTES	DEVICE POLES	DEVICE AMPS/TRIP
20	1	–	REC PAT. BED 3514	180	1	360			2	180	REC PAT. BED 3518	–	1	20
20	1	–	REC PAT. RM 3514, 3515	720	3		1440		4	720	REC PAT. RM 3518, 3519	–	1	20
20	1	–	REC PAT. RM 3514, 3515	720	5			1440	6	720	REC PAT. RM 3518, 3519	–	1	20
20	1	–	REC PAT. BED 3515	180	7	360			8	180	REC PAT. BED 3519	–	1	20
20	1	–	REC PAT. BED 3516	180	9		360		10	180	REC PAT. BED 3520	–	1	20
20	1	–	REC PAT. RM 3516, 3517	720	11			1440	12	720	REC PAT. RM 3520, 3521	–	1	20
20	1	–	REC PAT. RM 3516, 3517	720	13	1440			14	720	REC PAT. RM 3520, 3521	–	1	20
20	1	–	REC PAT. BED 3517	180	15		360		16	180	REC PAT. BED 3521	–	1	20
20	1	–	SPARE	---	17			---	18	---	SPARE	–	1	20
20	1	–	SPARE	---	19	---			20	---	SPARE	–	1	20
20	1	–	SPARE	---	21		---		22	---	SPARE	–	1	20
20	1	–	SPARE	---	23			---	24	---	SPARE	–	1	20
20	1	–	SPARE	---	25	---			26	---	SPARE	–	1	20
20	1	–	SPARE	---	27		---		28	---	SPARE	–	1	20
20	1	–	SPARE	---	29			---	30	---	SPARE	–	1	20
20	1	–	SPARE	---	31	---			32	---	SPARE	–	1	20
20	1	–	SPARE	---	33		---		34	---	SPARE	–	1	20
20	1	–	SPARE	---	35			---	36	---	SPARE	–	1	20
20	1	–	SPARE	---	37	---			38	---	TVSS	–	3	30
				---	39		---		40	---		–		
				---	41			---	42	---		–		

INTEGRATED EQUIP. RATING: 10,000 AIC | KVA TOTAL 2.16 2.16 2.88 | PANELBOARD LOAD TOTAL: 7.20 KVA

PANEL NT-3CL4 | VOLTAGE 120/208 3ø, 4W | EXISTING | TYPE SEE SPECS | MAINS 100 AMLO

DEVICE AMPS/TRIP	DEVICE POLES	NOTES	BRANCH CIRCUIT DESIGNATION	VOLT AMPS	NO.	PHASE LOAD (VOLT-AMPS) øA	øB	øC	NO.	BRANCH CIRCUIT VOLT AMPS	BRANCH CIRCUIT DESIGNATION	NOTES	DEVICE POLES	DEVICE AMPS/TRIP
20	1	–	REC PAT. BED 3539	180	1	360			2	180	REC PAT. BED 3533			
20	1	–	REC PAT. RM 3539, 3540	720	3		1440		4	720	REC PAT. RM 3533, 3334	–	1	20
20	1	–	REC PAT. RM 3539, 3540	720	5			1440	6	720	REC PAT. RM 3533, 3334	–	1	20
20	1	–	REC PAT. BED 3540	180	7	360			8	180	REC PAT. BED 3534	–	1	20
20	1	–	REC PAT. BED 3542	180	9		360		10	180	REC PAT. BED 3535	–	1	20
20	1	–	REC PAT. RM 3542, 3543	720	11			1440	12	720	REC PAT. RM 3535, 3336	–	1	20
20	1	–	REC PAT. RM 3542, 3543	720	13	1440			14	720	REC PAT. RM 3535, 3336	–	1	20
20	1	–	REC PAT. BED 3543	180	15		360		16	180	REC PAT. BED 3536	–	1	20
20	1	–	BLANKET WARMER	1440	17			1620	18	180	REC PAT. BED 3537	–	1	20
20	1	–	REC WALL COMP 3578	500	19	1220			20	720	REC PAT. RM 3537, 3338	–	1	20
20	1	–	MEDS DISP. 3579	500	21		1220		22	720	REC PAT. RM 3537, 3338	–	1	20
20	1	–	MEDS DISP. 3579	500	23			680	24	180	REC PAT. BED 3538	–	1	20
20	1	–	U.C. REF. 3579	400	25	580			26	180	REC – COMP 3579	–	1	20
20	1	–	ICE 3579	500	27		500		28	---	SPARE	–	1	20
20	1	–	REF 3579	500	29			500	30	---	SPARE	–	1	20
20	1	–	BARIATRIC PATIENT LIFT– RM 3543	---	31	---			32	---	SPARE	–	1	20
20	1	–	SPARE	---	33		---		34	---	SPARE	–	1	20
20	1	–	SPARE	---	35			---	36	---	SPARE	–	1	20
20	1	–	SPARE	---	37	---			38	---	TVSS	–	3	30
20	1	–	SPARE	---	39		---		40	---		–		
20	1	–	SPARE	---	41			---	42	---		–		

INTEGRATED EQUIP. RATING: 10,000 AIC | KVA TOTAL 3.96 3.88 5.68 | PANELBOARD LOAD TOTAL: 13.52 KVA

PANEL NT-3CL5 | VOLTAGE 120/208 3ø, 4W | EXISTING | TYPE SEE SPECS | MAINS 100 AMLO

DEVICE AMPS/TRIP	DEVICE POLES	NOTES	BRANCH CIRCUIT DESIGNATION	VOLT AMPS	NO.	PHASE LOAD (VOLT-AMPS) øA	øB	øC	NO.	BRANCH CIRCUIT VOLT AMPS	BRANCH CIRCUIT DESIGNATION	NOTES	DEVICE POLES	DEVICE AMPS/TRIP
20	1	–	REC PAT. BED 3544	180	1	360			2	180	REC PAT. BED 3548			
20	1	–	REC PAT. RM 3544, 3545	720	3		1440		4	720	REC PAT. RM 3548, 3549	–	1	20
20	1	–	REC PAT. RM 3544, 3545	720	5			1440	6	720	REC PAT. RM 3548, 3549	–	1	20
20	1	–	REC PAT. BED 3545	180	7	360			8	180	REC PAT. BED 3549	–	1	20
20	1	–	REC PAT. BED 3546	180	9		360		10	180	REC PAT. BED 3550	–	1	20
20	1	–	REC PAT. RM 3546, 3547	720	11			1440	12	720	REC PAT. RM 3550, 3551	–	1	20
20	1	–	REC PAT. RM 3546, 3547	720	13	1440			14	720	REC PAT. RM 3550, 3551	–	1	20
20	1	–	REC PAT. BED 3547	180	15		360		16	180	REC PAT. BED 3551	–	1	20
20	1	–	REC – 3580–3582	360	17			900	18	540	REC – ALCOVE	–	1	20
20	1	–	REC – 3580–3582	360	19	900			20	540	REC – ALCOVE	–	1	20
20	1	–	REC – 3580–3582	540	21		1080		22	540	REC – ALCOVE	–	1	20
20	1	–	SUPER 3580	1000	23			1000	24	---	SPARE	–	1	20
20	1	–	SPARE	---	25	---			26	---	SPARE	–	1	20
20	1	–	SPARE	---	27		---		28	---	SPARE	–	1	20
20	1	–	SPARE	---	29			---	30	---	SPARE	–	1	20
20	1	–	SPARE	---	31	---			32	---	SPARE	–	1	20
20	1	–	SPARE	---	33		---		34	---	SPARE	–	1	20
20	1	–	SPARE	---	35			---	36	---	SPARE	–	1	20
20	1	–	SPARE	---	37	---			38	---	TVSS	–	3	30
20	1	–	SPARE	---	39		---		40	---		–		
20	1	–	SPARE	---	41			---	42	---		–		

INTEGRATED EQUIP. RATING: 10,000 AIC | KVA TOTAL 3.06 3.24 4.78 | PANELBOARD LOAD TOTAL: 11.08 KVA

PANEL NT-4CH1 | VOLTAGE 277/480 3ø, 4W | NEW | TYPE SEE SPECS | MAINS 100 AMLO

DEVICE AMPS/TRIP	DEVICE POLES	NOTES	BRANCH CIRCUIT DESIGNATION	VOLT AMPS	NO.	PHASE LOAD (VOLT-AMPS) øA	øB	øC	NO.	BRANCH CIRCUIT VOLT AMPS	BRANCH CIRCUIT DESIGNATION	NOTES	DEVICE POLES	DEVICE AMPS/TRIP
20	1	–	LTS – PAT. RMS – 4TH FLOOR	2491	1	4839			2	2348	LTS – CORE RMS AND ALCOVE	–	1	20
20	1	–	LTS – PAT. RMS – 4TH FLOOR	2768	3		2768		4	---	SPARE	–	1	20
20	1	–	LTS – PAT. RMS – 4TH FLOOR	2768	5			2768	6	---	SPARE	–	1	20
20	1	–	LTS – PAT. RMS – 4TH FLOOR	2215	7	2215			8	---	SPARE	–	1	20
20	1	–	SPARE	---	9		---		10	---	SPARE	–	1	20
20	1	–	SPARE	---	11			---	12	---	SPARE	–	1	20
20	1	–	SPARE	---	13	---			14	---	SPARE	–	1	20
20	1	–	SPARE	---	15		---		16	---	SPARE	–	1	20
20	1	–	SPARE	---	17			---	18	---	SPARE	–	1	20
20	1	–	SPARE	---	19	---			20	---	SPARE	–	1	20
20	1	–	SPARE	---	21		---		22	---	SPARE	–	1	20
20	1	–	SPARE	---	23			---	24	---	SPARE	–	1	20
20	1	–	SPARE	---	25	---			26	---	SPARE	–	1	20
20	1	–	SPARE	---	27		---		28	---	SPARE	–	1	20
20	1	–	SPARE	---	29			---	30	---	SPARE	–	1	20
20	1	–	SPARE	---	31	---			32	---	SPARE	–	1	20
20	1	–	SPARE	---	33		---		34	---	SPARE	–	1	20
20	1	–	SPARE	---	35			---	36	---	SPARE	–	1	20
20	1	–	SPARE	---	37	---			38	---	TVSS	–	3	30
20	1	–	SPARE	---	39		---		40	---		–		
20	1	–	SPARE	---	41			---	42	---		–		

INTEGRATED EQUIP. RATING: 42,000 AIC | KVA TOTAL 7.05 2.76 2.76 | PANELBOARD LOAD TOTAL: 12.57 KVA

PANEL NT-4CL1 * | VOLTAGE 120/208 3ø, 4W | NEW | TYPE SEE SPECS | MAINS 400 AMLO

DEVICE AMPS/TRIP	DEVICE POLES	NOTES	BRANCH CIRCUIT DESIGNATION	VOLT AMPS	NO.	PHASE LOAD (VOLT-AMPS) øA	øB	øC	NO.	BRANCH CIRCUIT VOLT AMPS	BRANCH CIRCUIT DESIGNATION	NOTES	DEVICE POLES	DEVICE AMPS/TRIP
20	1	–	QUAD – NURSE 4576	360	1	860			2	500	REC CRASH CART 4512	–	1	20
20	1	–	PLUGMOLD 4577	1080	3		1440		4	360	REC 4512	–	1	20
20	1	–	PLUGMOLD 4577	1080	5			1440	6	360	REC 4512	–	1	20
20	1	–	PLUGMOLD 4577	1080	7	1780			8	700	REC 4513 PRINTER	–	1	20
20	1	–	QUAD – IT 4572	800	9		1300		10	500	REC REF BKRM 4571	–	1	20
20	1	–	QUAD – IT 4572	800	11			2065	12	1265	REC ICE BKRM 4571	–	1	20
20	1	–	RACK 4572	750	13	1110			14	360	REC OFFICE 4570	–	1	20
20	1	–	RACK 4572	750	15		1450		16	700	REC 4570 PRINTER	–	1	20
20	1	–	REC 4576 PRINTER	700	17			1060	18	360	QUAD 4524	–	1	20
20	1	–	SPARE	---	19	---			20	---	JUNCTION BOX RM 4572	–	2	30
20	1	–	SPARE	---	21		---		22	---		–		
20	1	–	SPARE	---	23			180	24	180	REC 4513 PYXIS COMMAND	–	1	20
100	3	–	PANEL NT-4CL4	4140	25	4840			26	700	REC 4513 PRINTER	–	1	20
				5185	27		6185		28	1000	REC 4513 FLOOR PRINTER	–	1	20
				6040	29			6040	30	---	SPARE	–	1	20
100	3	–	PANEL NT-4CL3	4240	31	7840			32	3600	PANEL NT-4CL5	–	3	100
				5000	33		9120		34	4120	3600 4120 5540			
				6490	35			12030	36	5540		–		
100	3	–	PANEL NT-4CL2	4680	37	4680			38	---	TVSS	–	3	30
				5180	39		5180		40	---		–		
				5180	41			5180	42	---		–		

INTEGRATED EQUIP. RATING: 10,000 AIC | KVA TOTAL 21.11 24.68 27.99 | PANELBOARD LOAD TOTAL: 73.78 KVA

* FEED PANEL BOARD NT-4CL1 FROM EXISTING PANEL BOARD NT-PHCL1

PANEL NT-4CL2 | VOLTAGE 120/208 3ø, 4W | NEW | TYPE SEE SPECS | MAINS 100 AMLO

DEVICE AMPS/TRIP	DEVICE POLES	NOTES	BRANCH CIRCUIT DESIGNATION	VOLT AMPS	NO.	PHASE LOAD (VOLT-AMPS) øA	øB	øC	NO.	BRANCH CIRCUIT VOLT AMPS	BRANCH CIRCUIT DESIGNATION	NOTES	DEVICE POLES	DEVICE AMPS/TRIP
20	1	–	REC PAT. BED 4522	180	1	360			2	180	REC PAT. BED 4527	–	1	20
20	1	–	REC PAT. RM 4522, 4523	720	3		1440		4	720	REC PAT. RM 4527, 4528	–	1	20
20	1	–	REC PAT. RM 4522, 4523	720	5			1440	6	720	REC PAT. RM 4527, 4528	–	1	20
20	1	–	REC PAT. BED 4523	180	7	360			8	180	REC PAT. BED 4528	–	1	20
20	1	–	REC PAT. BED 4525	180	9		360		10	180	REC PAT. BED 4529	–	1	20
20	1	–	REC PAT. RM 4525, 4526	720	11			1440	12	720	REC PAT. RM 4529, 4530	–	1	20
20	1	–	REC PAT. RM 4525, 4526	720	13	1440			14	720	REC PAT. RM 4529, 4530	–	1	20
20	1	–	REC PAT. BED 4526	180	15		360		16	180	REC PAT. BED 4530	–	1	20
20	1	–	QUAD OFFICE 4563	360	17			540	18	180	REC PAT. BED 4531	–	1	20
20	1	–	REC 4564, 4565	540	19	1260			20	720	REC PAT. RM 4531, 4532	–	1	20
20	1	–	REC 4564, 4565	360	21		1080		22	720	REC PAT. RM 4531, 4532	–	1	20
20	1	–	REC 4565 PRINTER	700	23			880	24	180	REC PAT. BED 4532	–	1	20
20	1	–	REC 4564, 4565	360	25	900			26	540	REC WORKROOM 4568	–	1	20
20	1	–	REC 4563 PRINTER	700	27		1240		28	540	REC WORKROOM 4568	–	1	20
20	1	–	REC 4568 PRINTER	700	29			700	30	---	SPARE	–	1	20
20	1	–	REC 4565, 4566	360	31	360			32	---	SPARE	–	1	20
20	1	–	REC 4564 PRINTER	700	33		700		34	---	SPARE	–	1	20
20	1	–	SPARE	---	35			---	36	---	SPARE	–	1	20
20	1	–	SPARE	---	37	---			38	---	TVSS	–	3	30
20	1	–	SPARE	---	39		---		40	---		–		
20	1	–	REC NOURISHMENT 2566	180	41			180	42	---		–		

INTEGRATED EQUIP. RATING: 10,000 AIC | KVA TOTAL 4.68 5.18 5.18 | PANELBOARD LOAD TOTAL: 15.04 KVA

PANEL NT-4CL3 | VOLTAGE 120/208 3ø, 4W | NEW | TYPE SEE SPECS | MAINS 100 AMLO

DEVICE AMPS/TRIP	DEVICE POLES	NOTES	BRANCH CIRCUIT DESIGNATION	VOLT AMPS	NO.	PHASE LOAD (VOLT-AMPS) øA	øB	øC	NO.	BRANCH CIRCUIT VOLT AMPS	BRANCH CIRCUIT DESIGNATION	NOTES	DEVICE POLES	DEVICE AMPS/TRIP
20	1	–	REC PAT. BED 4514	180	1	360			2	180	REC PAT. BED 4518	–	1	20
20	1	–	REC PAT. RM 4514, 4515	720	3		1440		4	720	REC PAT. RM 4518, 4519	–	1	20
20	1	–	REC PAT. RM 4514, 4515	720	5			1440	6	720	REC PAT. RM 4518, 4519	–	1	20
20	1	–	REC PAT. BED 4515	180	7	360			8	180	REC PAT. BED 4519	–	1	20
20	1	–	REC PAT. BED 4516	180	9		360		10	180	REC PAT. BED 4520	–	1	20
20	1	–	REC PAT. RM 4516, 4517	720	11			1440	12	720	REC PAT. RM 4520, 4521	–	1	20
20	1	–	REC PAT. RM 4516, 4517	720	13	1440			14	720	REC PAT. RM 4520, 4521	–	1	20
20	1	–	REC PAT. BED 4517	180	15		360		16	180	REC PAT. BED 4521	–	1	20
20	1	–	REC MEDS DISP. 4566	500	17			1400	18	900	REC ALCOVE	–	1	20
20	1	–	REC MEDS DISP. 4566	500	19	1220			20	720	REC ALCOVE	–	1	20
20	1	–	REC REF NOUR. 4566	500	21		1220		22	720	REC ALCOVE	–	1	20
20	1	–	REC ICE MAKER NOUR. 4566	1265	23			1625	24	360	REC DIALYSIS 4568	–	1	20
20	1	–	REC WALL COMP 4567	500	25	860			26	360	REC DIALYSIS 4568	–	1	20
20	1	–	DED REC BLKT WARMER 4567	1440	27		1620		28	180	REC DIALYSIS 4568	–	1	20
20	1	–	REC U.C. REF MEDS 2566	400	29			580	30	180	REC DIALYSIS 4568	–	1	20
20	1	–	SPARE	---	31	---			32	---	SPARE	–	1	20
20	1	–	SPARE	---	33		---		34	---	SPARE	–	1	20
20	1	–	SPARE	---	35			---	36	---	SPARE	–	1	20
20	1	–	SPARE	---	37	---			38	---	TVSS	–	3	30
20	1	–	SPARE	---	39		---		40	---		–		
20	1	–	SPARE	---	41			---	42	---		–		

INTEGRATED EQUIP. RATING: 10,000 AIC | KVA TOTAL 4.24 5.00 6.49 | PANELBOARD LOAD TOTAL: 15.73 KVA

PANEL NT-4CL4 | VOLTAGE 120/208 3ø, 4W | NEW | TYPE SEE SPECS | MAINS 100 AMLO

| DEVICE AMPS/TRIP | DEVICE POLES | NOTES | BRANCH CIRCUIT DESIGNATION | VOLT AMPS | NO. | PHASE LOAD (VOLT-AMPS) øA | ø

PANEL: NT-3QH1 | VOLTAGE: 277/480 3ø, 4W | EXISTING | TYPE: SEE SPECS | MAINS: ---

DEVICE AMPS/TRIP	DEVICE POLES	NOTES	BRANCH CIRCUIT DESIGNATION	VOLT AMPS	NO.	PHASE LOAD (VOLT-AMPS) øA	øB	øC	NO.	BRANCH CIRCUIT VOLT AMPS	DESIGNATION	NOTES	DEVICE POLES	DEVICE AMPS/TRIP
20	1	–	SPARE	---	1	---			2	---	SPARE	–	1	20
20	1	–	SPARE	---	3		---		4	---	SPARE	–	1	20
20	1	–	SPARE	---	5			---	6	---	SPARE	–	1	20
20	1	–	SPARE	---	7	---			8	---	SPARE	–	1	20
20	1	–	SPARE	---	9		---		10	---	SPARE	–	1	20
20	1	–	SPARE	---	11			---	12	---	SPARE	–	1	20
20	1	–	SPARE	---	13	---			14	---	SPARE	–	1	20
20	1	–	SPARE	---	15		---		16	---	SPARE	–	1	20
20	1	–	SPARE	---	17			---	18	---	SPARE	–	1	20
20	1	–	SPARE	---	19	---			20	---	SPARE	–	1	20
20	1	–	SPARE	---	21		---		22	---	SPARE	–	1	20
20	1	–	SPARE	---	23			---	24	---	SPARE	–	1	20
20	1	–	SPARE	---	25	---			26	---	TVSS	–	3	30
20	1	–	SPARE	---	27		---		28	---		–		
20	1	–	SPARE	---	29			---	30	---		–		

INTEGRATED EQUIP. RATING: ---,--- AIC | KVA TOTAL | --- | --- | --- | PANELBOARD LOAD TOTAL: --- KVA

PANEL: NT-3QL1 | VOLTAGE: 120/208 3ø, 4W | EXISTING | TYPE: SEE SPECS | MAINS: 100 AMB

DEVICE AMPS/TRIP	DEVICE POLES	NOTES	BRANCH CIRCUIT DESIGNATION	VOLT AMPS	NO.	PHASE LOAD (VOLT-AMPS) øA	øB	øC	NO.	BRANCH CIRCUIT VOLT AMPS	DESIGNATION	NOTES	DEVICE POLES	DEVICE AMPS/TRIP
20	1	–	VAV CONTROLS	200	1	400			2	200	VAV CONTROLS	–	1	20
20	1	–	VAV CONTROLS	200	3		400		4	200	VAV CONTROLS	–	1	20
20	1	–	VAV CONTROLS	200	5			400	6	200	VAV CONTROLS	–	1	20
20	1	–	VAV CONTROLS	200	7	400			8	200	VAV CONTROLS	–	1	20
20	1	–	VAV CONTROLS	200	9		400		10	200	VAV CONTROLS	–	1	20
20	1	–	VAV CONTROLS	200	11			700	12	500	TUBE STATION	–	1	20
20	1	–	SPARE	---	13	---			14	---	SPARE	–	1	20
20	1	–	SPARE	---	15		---		16	---	SPARE	–	1	20
20	1	–	SPARE	---	17			---	18	---	SPARE	–	1	20
20	1	–	SPARE	---	19	---			20	---	SPARE	–	1	20
20	1	–	SPARE	---	21		---		22	---	SPARE	–	1	20
20	1	–	SPARE	---	23			---	24	---	SPARE	–	1	20
20	1	–	SPARE	---	25	---			26	---	TVSS	–	3	30
20	1	–	SPARE	---	27		---		28	---		–		
20	1	–	SPARE	---	29			---	30	---		–		

INTEGRATED EQUIP. RATING: ---,--- AIC | KVA TOTAL | 0.8 | 0.8 | 1.1 | PANELBOARD LOAD TOTAL: 2.7 KVA

PANEL: NT-4QH1 | VOLTAGE: 277/480 3ø, 4W | NEW | TYPE: SEE SPECS | MAINS: 100 AMLO

DEVICE AMPS/TRIP	DEVICE POLES	NOTES	BRANCH CIRCUIT DESIGNATION	VOLT AMPS	NO.	PHASE LOAD (VOLT-AMPS) øA	øB	øC	NO.	BRANCH CIRCUIT VOLT AMPS	DESIGNATION	NOTES	DEVICE POLES	DEVICE AMPS/TRIP
20	1	–	SPARE	---	1	---			2	---	SPARE	–	1	20
20	1	–	SPARE	---	3		---		4	---	SPARE	–	1	20
20	1	–	SPARE	---	5			---	6	---	SPARE	–	1	20
20	1	–	SPARE	---	7	---			8	---	SPARE	–	1	20
20	1	–	SPARE	---	9		---		10	---	SPARE	–	1	20
20	1	–	SPARE	---	11			---	12	---	SPARE	–	1	20
20	1	–	SPARE	---	13	---			14	---	SPARE	–	1	20
20	1	–	SPARE	---	15		---		16	---	SPARE	–	1	20
20	1	–	SPARE	---	17			---	18	---	SPARE	–	1	20
20	1	–	SPARE	---	19	---			20	---	SPARE	–	1	20
20	1	–	SPARE	---	21		---		22	---	SPARE	–	1	20
20	1	–	SPARE	---	23			---	24	---	SPARE	–	1	20
45	3	–	TRANSFORMER NT-T-4Q1	800	25	800			26	---	TVSS	–	3	30
		–		800	27		800		28	---		–		
		–		1100	29			1100	30	---		–		

INTEGRATED EQUIP. RATING: 42,000 AIC | KVA TOTAL | .80 | .80 | 1.10 | PANELBOARD LOAD TOTAL: 2.70 KVA

PANEL: NT-4QL1 | VOLTAGE: 120/208 3ø, 4W | NEW | TYPE: SEE SPECS | MAINS: 100 AMB

DEVICE AMPS/TRIP	DEVICE POLES	NOTES	BRANCH CIRCUIT DESIGNATION	VOLT AMPS	NO.	PHASE LOAD (VOLT-AMPS) øA	øB	øC	NO.	BRANCH CIRCUIT VOLT AMPS	DESIGNATION	NOTES	DEVICE POLES	DEVICE AMPS/TRIP
20	1	–	VAV CONTROLS	200	1	400			2	200	VAV CONTROLS	–	1	20
20	1	–	VAV CONTROLS	200	3		400		4	200	VAV CONTROLS	–	1	20
20	1	–	VAV CONTROLS	200	5			400	6	200	VAV CONTROLS	–	1	20
20	1	–	VAV CONTROLS	200	7	400			8	200	VAV CONTROLS	–	1	20
20	1	–	VAV CONTROLS	200	9		400		10	200	VAV CONTROLS	–	1	20
20	1	–	VAV CONTROLS	200	11			700	12	500	TUBE STATION	–	1	20
20	1	–	SPARE	---	13	---			14	---	SPARE	–	1	20
20	1	–	SPARE	---	15		---		16	---	SPARE	–	1	20
20	1	–	SPARE	---	17			---	18	---	SPARE	–	1	20
20	1	–	SPARE	---	19	---			20	---	SPARE	–	1	20
20	1	–	SPARE	---	21		---		22	---	SPARE	–	1	20
20	1	–	SPARE	---	23			---	24	---	SPARE	–	1	20
20	1	–	SPARE	---	25	---			26	---	TVSS	–	3	30
20	1	–	SPARE	---	27		---		28	---		–		
20	1	–	SPARE	---	29			---	30	---		–		

INTEGRATED EQUIP. RATING: 10,000 AIC | KVA TOTAL | .80 | .80 | 1.10 | PANELBOARD LOAD TOTAL: 2.70 KVA

PANEL: NT-PHQH1 | VOLTAGE: 277/480 3ø, 4W | EXISTING | TYPE: SEE SPECS | MAINS: 400 AMLO

DEVICE AMPS/TRIP	DEVICE POLES	NOTES	BRANCH CIRCUIT DESIGNATION	VOLT AMPS	NO.	PHASE LOAD (VOLT-AMPS) øA	øB	øC	NO.	BRANCH CIRCUIT VOLT AMPS	DESIGNATION	NOTES	DEVICE POLES	DEVICE AMPS/TRIP
100	3	–	"H1" ELEC HUMIDIFER AHU-1	22000	1	23030			2	1030	P-1 (PUMP)	1	3	20
		–		22000	3		23030		4	1030				
		–		22000	5			23030	6	1030				
100	3	–	"H2" ELEC HUMIDIFER AHU-2	22000	7	23030			8	1030	P-2 (PUMP)	1	3	20
		–		22000	9		23030		10	1030				
		–		22000	11			23030	12	1030				
20	1	–	SPARE	---	13	---			14	---	SPARE	–	1	20
20	1	–	SPARE	---	15		---		16	---	SPARE	–	1	20
20	1	–	SPARE	---	17			---	18	---	SPARE	–	1	20
20	1	–	SPARE	---	19	---			20	---	SPARE	–	1	20
20	1	–	SPARE	---	21		---		22	---	SPARE	–	1	20
20	1	–	SPARE	---	23			---	24	---	SPARE	–	1	20
20	1	–	SPARE	---	25	---			26	---	SPARE	–	1	20
20	1	–	SPARE	---	27		---		28	---	SPARE	–	1	20
20	1	–	SPARE	---	29			---	30	---	SPARE	–	1	20
20	1	–	SPARE	---	31	---			32	---	**PANEL NT-4QH1**	–	3	**100**
20	1	–	SPARE	---	33		---		34	---		–		
20	1	–	SPARE	---	35			---	36	---		–		
45	3	–	TRANSFORMER NT-T-PHQ1	4680	37	4680			38	---	TVSS	–	3	30
		–		4110	39		4110		40	---		–		
		–		2590	41			2590	42	---		–		

INTEGRATED EQUIP. RATING: 42,000 AIC | KVA TOTAL | 50.74 | 50.17 | 48.65 | PANELBOARD LOAD TOTAL: 149.56 KVA

1. COORDINATE EXACT LOCATION OF PUMPS WITH MECHANICAL DRAWINGS. COORDINATE CONNECTIONS FOR PUMPS WITH THE REQUIREMENTS OF THE PUMPS.

PANEL: NT-PHQL1 | VOLTAGE: 120/208 3ø, 4W | EXISTING | TYPE: SEE SPECS | MAINS: 100 AMB

DEVICE AMPS/TRIP	DEVICE POLES	NOTES	BRANCH CIRCUIT DESIGNATION	VOLT AMPS	NO.	PHASE LOAD (VOLT-AMPS) øA	øB	øC	NO.	BRANCH CIRCUIT VOLT AMPS	DESIGNATION	NOTES	DEVICE POLES	DEVICE AMPS/TRIP
20	1	2	LT & RECEPT AHU-1	1500	1	3000			2	1500	DDC PANEL PENTHOUSE	1	1	20
20	1	2	LT & RECEPT AHU2	1500	3		3000		4	1500	DDC PANEL PENTHOUSE	1	1	20
20	1	3	EF-3	1660	5			1660	6	---	SPARE	–	1	20
20	1	–	ELEV PIT SUMP PUMP	750	7	750			8	---	SPARE	–	1	20
20	1	–	ELEV PIT SUMP PUMP	750	9		750		10	---	SPARE	–	1	20
20	1	–	ELEV PIT SUMP PUMP	750	11			750	12	---	SPARE	–	1	20
20	1	–	ELEV PIT SUMP PUMP	750	13	750			14	---	SPARE	–	1	20
20	1	–	ELEV PIT RECEPT	180	15		180		16	---	SPARE	–	1	20
20	1	–	ELEV PIT RECEPT	180	17			180	18	---	SPARE	–	1	20
20	1	–	ELEV PIT RECEPT	180	19	180			20	---	**PANEL NT-4QL1**	–	3	**60**
20	1	–	ELEV PIT RECEPT	180	21		180		22	---		–		
20	1	–	SPARE	---	23			---	24	---		–		
20	1	–	SPARE	---	25	---			26	---	TVSS	–	3	30
20	1	–	SPARE	---	27		---		28	---		–		
20	1	–	SPARE	---	29			---	30	---		–		

INTEGRATED EQUIP. RATING: 10,000 AIC | KVA TOTAL | 4.68 | 4.11 | 2.59 | PANELBOARD LOAD TOTAL: 11.38 KVA

1. COORDINATE THE EXACT LOCATION OF PENTHOUSE DDC PANELS WITH MECHANICAL DRAWINGS.
2. COORDINATE THE EXACT LOCATION OF JUNCTION BOX FOR RECEPTACLE POWER AND LIGHTING FOR EACH AHU WITH REQUIREMENTS OF AHU.
3. SEE MECHANICAL DRAWINGS FOR EXACT LOCATION OF EF-3.

PANEL: NT-1SL1 | VOLTAGE: 120/208 3ø, 4W | EXISTING | TYPE: | MAINS: 100 AMLO

DEVICE AMPS/TRIP	DEVICE POLES	NOTES	BRANCH CIRCUIT DESIGNATION	VOLT AMPS	NO.	PHASE LOAD (VOLT-AMPS) øA	øB	øC	NO.	BRANCH CIRCUIT VOLT AMPS	DESIGNATION	NOTES	DEVICE POLES	DEVICE AMPS/TRIP
20	1	–	IT/DATA ROOM 1ST	720	1	920			2	200	TELE/DATA RM 1ST	–	1	20
20	1	–	SPARE	---	3		---		4	---	SPARE	–	1	20
20	1	–	SPARE	---	5			---	6	---	SPARE	–	1	20
				---	7	300			8	300	AUTO DOORS	–	1	20
				---	9		300		10	300	AUTO DOORS	–	1	20
				---	11			---	12	---				
				---	13	---			14	---				
				---	15		---		16	---				
				---	17			---	18	---				
				---	19	---			20	---				
				---	21		---		22	---				
				---	23			---	24	---				
				---	25	---			26	---				
				---	27		---		28	---				
				---	29			---	30	---				
				---	31	---			32	---				
				---	33		---		34	---				
				---	35			---	36	---				
				---	37	---			38	---				
				---	39		---		40	---				
				---	41			---	42	---				

INTEGRATED EQUIP. RATING: ---,--- AIC | KVA TOTAL | --- | --- | --- | PANELBOARD LOAD TOTAL: --- KVA

PANEL: NT-2SH1 | VOLTAGE: 277/480 3ø, 4W | EXISTING | TYPE: SEE SPECS | MAINS: ---

DEVICE AMPS/TRIP	DEVICE POLES	NOTES	BRANCH CIRCUIT DESIGNATION	VOLT AMPS	NO.	PHASE LOAD (VOLT-AMPS) øA	øB	øC	NO.	BRANCH CIRCUIT VOLT AMPS	DESIGNATION	NOTES	DEVICE POLES	DEVICE AMPS/TRIP
20	1	–	LTS – 3RD FLOOR LOBBY	---	1	---			2	---	LTS – 3RD FLOOR CORR	–	1	20
20	1	–	LTS – 2ND FLOOR	---	3		---		4	---	LTS – 2RD FLOOR CORR	–	1	20
20	1	–	LTS – 1ST FLOOR	1600	5			---	6	---	LTS – 2RD FLOOR CORR	–	1	20
20	1	–	LTS – 1ST FLOOR	1200	7	---			8	---	LTS – 2RD FLOOR CORR	–	1	20
20	1	–	STAIR LIGHTING	800	9		800		10	---	SPARE	–	1	20
20	1	–	SPARE	---	11			---	12	---	SPARE	–	1	20
20	1	–	SPARE	---	13	---			14	---	SPARE	–	1	20
20	1	–	SPARE	---	15		---		16	---	SPARE	–	1	20
20	1	–	SPARE	---	17			---	18	---	SPARE	–	1	20
20	1	–	SPARE	---	19	---			20	---	SPARE	–	1	20
20	1	–	SPARE	---	21		---		22	---	SPARE	–	1	20
20	1	–	SPARE	---	23			---	24	---	SPARE	–	1	20
20	1	–	SPARE	---	25	---			26	---	SPARE	–	1	20
20	1	–	SPARE	---	27		---		28	---	SPARE	–	1	20
20	1	–	SPARE	---	29			---	30	---	SPARE	–	1	20
20	1	–	SPARE	---	31	---			32	---	SPARE	–	1	20
20	1	–	SPARE	---	33		---		34	---	SPARE	–	1	20
20	1	–	SPARE	---	35			---	36	---	SPARE	–	1	20
20	1	–	SPARE	---	37	---			38	---	TVSS	–	3	30
20	1	–	SPARE	---	39		---		40	---		–		
20	1	–	SPARE	---	41			---	42	---		–		

INTEGRATED EQUIP. RATING: ---,--- AIC | KVA TOTAL | --- | --- | --- | PANELBOARD LOAD TOTAL: --- KVA

PANEL: NT-2SL1 | VOLTAGE: 277/480 3ø, 4W | EXISTING | TYPE: SEE SPECS | MAINS: ---

DEVICE AMPS/TRIP	DEVICE POLES	NOTES	BRANCH CIRCUIT DESIGNATION	VOLT AMPS	NO.	PHASE LOAD (VOLT-AMPS) øA	øB	øC	NO.	BRANCH CIRCUIT VOLT AMPS	DESIGNATION	NOTES	DEVICE POLES	DEVICE AMPS/TRIP
20	1	–	TELE/DATA 2572	200	1	---			2	200	TELE/DATA 3572	–	1	20
20	1	–	SPARE	---	3		---		4	---	SPARE	–	1	20
20	1	–	SPARE	---	5			---	6	---	SPARE	–	1	20
20	1	–	SPARE	---	7	---			8	---	SPARE	–	1	20
20	1	–	SPARE	---	9		---		10	---	SPARE	–	1	20
20	1	–	SPARE	---	11			---	12	---	SPARE	–	1	20
20	1	–	SPARE	---	13	---			14	---	SPARE	–	1	20
20	1	–	SPARE	---	15		---		16	---	SPARE	–	1	20
20	1	–	SPARE	---	17			---	18	---	SPARE	–	1	20
20	1	–	SPARE	---	19	---			20	---	SPARE	–	1	20
20	1	–	SPARE	---	21		---		22	---	SPARE	–	1	20
20	1	–	SPARE	---	23			---	24	---	SPARE	–	1	20
20	1	–	SPARE	---	25	---			26	---	SPARE	–	1	20
20	1	–	SPARE	---	27		---		28	---	SPARE	–	1	20
20	1	–	SPARE	---	29			---	30	---	SPARE	–	1	20
20	1	–	SPARE	---	31	---			32	---	SPARE	–	1	20
20	1	–	SPARE	---	33		---		34	---	SPARE	–	1	20
20	1	–	SPARE	---	35			---	36	---	SPARE	–	1	20
20	1	–	SPARE	---	37	---			38	---	TVSS	–	3	30
20	1	–	SPARE	---	39		---		40	---		–		
20	1	–	SPARE	---	41			---	42	---		–		

INTEGRATED EQUIP. RATING: ---,--- AIC | KVA TOTAL | --- | --- | --- | PANELBOARD LOAD TOTAL: --- KVA

PANEL: NT-PHSH1 | VOLTAGE: 277/480 3ø, 4W | EXISTING | TYPE: SEE SPECS | MAINS: 400 AMLO

DEVICE AMPS/TRIP	DEVICE POLES	NOTES	BRANCH CIRCUIT DESIGNATION	VOLT AMPS	NO.	PHASE LOAD (VOLT-AMPS) øA	øB	øC	NO.	BRANCH CIRCUIT VOLT AMPS	DESIGNATION	NOTES	DEVICE POLES	DEVICE AMPS/TRIP
20	1	–	**4TH FLOOR LTS AREA H & J**	**800**	1	---			2	300	PENTHOUSE LIGHTING	–	1	20
20	1	–	**4TH FLOOR LTS AREA H & J**	**800**	3		---		4	---	SPARE	–	1	20
20	1	–	**4TH FLOOR LTS AREA H & J**	**800**	5			---	6	---	SPARE	–	1	20
20	1	–	SPARE	---	7	---			8	---	SPARE	–	1	20
20	1	–	SPARE	---	9		---		10	---	SPARE	–	1	20
20	1	–	SPARE	---	11			---	12	---	**4TH FLOOR EXIT LIGHTS**	–	1	20
20	1	–	SPARE	---	13	---			14	---	SPARE	–	1	20
20	1	–	SPARE	---	15		---		16	---	SPARE	–	1	20
20	1	–	SPARE	---	17			---	18	---	SPARE	–	1	20
20	1	–	SPARE	---	19	---			20	---	TRANSFORMER NT-T-PHS1	–	3	45
20	1	–	SPARE	---	21		---		22	---		–		
20	1	–	SPARE	---	23			---	24	---		–		
20	1	–	SPARE	---	25	---			26	---	SPARE	–	1	20
20	1	–	SPARE	---	27		---		28	---	SPARE	–	1	20
20	1	–	SPARE	---	29			---	30	---	SPARE	–	1	20
20	1	–	SPARE	---	31	---			32	---	SPARE	–	1	20
20	1	–	SPARE	---	33		---		34	---	SPARE	–	1	20
20	1	–	SPARE	---	35			---	36	---	SPARE	–	1	20
20	1	–	SPARE	---	37	---			38	---	TVSS	–	3	30
20	1	–	SPARE	---	39		---		40	---		–		
20	1	–	SPARE	---	41			---	42	---		–		

INTEGRATED EQUIP. RATING: ---,--- AIC | KVA TOTAL | --- | --- | --- | PANELBOARD LOAD TOTAL: --- KVA

PANEL: NT-PHSL1 | VOLTAGE: 120/208 3ø, 4W | EXISTING | TYPE: SEE SPECS | MAINS: 100 AMB

DEVICE AMPS/TRIP	DEVICE POLES	NOTES	BRANCH CIRCUIT DESIGNATION	VOLT AMPS	NO.	PHASE LOAD (VOLT-AMPS) øA	øB	øC	NO.	BRANCH CIRCUIT VOLT AMPS	DESIGNATION	NOTES	DEVICE POLES	DEVICE AMPS/TRIP
20	1	–	SPARE	---	1	---			2	500	ELEV PWR (LTS & CONTROLS)	–	1	20
20	1	–	SPARE	---	3		---		4	500	ELEV PWR (LTS & CONTROLS)	–	1	20
20	1	–	SPARE	---	5			---	6	500	ELEV PWR (LTS & CONTROLS)	–	1	20
20	1	–	SPARE	---	7	---			8	500	ELEV PWR (LTS & CONTROLS)	–	1	20
20	1	–	ROOF LIGHTS	1115	9		---		10	**200**	**TELE/DATA 4TH FLR**	–	1	20
20	1	–	SPARE	---	11			---	12	---	SPARE	–	1	20
20	1	–	SPARE	---	13	---			14	---	SPARE	–	1	20
20	1	–	SPARE	---	15		---		16	---	SPARE	–	1	20
20	1	–	SPARE	---	17			---	18	---	SPARE	–	1	20
20	1	–	SPARE	---	19	---			20	---	SPARE	–	1	20
20	1	–	SPARE	---	21		---		22	---	SPARE	–	1	20
20	1	–	SPARE	---	23			---	24	---	SPARE	–	1	20
20	1	–	SPARE	---	25	---			26	---	SPARE	–	1	20
20	1	–	SPARE	---	27		---		28	---	SPARE	–	1	20
20	1	–	SPARE	---	29			---	30	---	SPARE	–	1	20
20	1	–	SPARE	---	31	---			32	---	SPARE	–	1	20
20	1	–	SPARE	---	33		---		34	---	SPARE	–	1	20
20	1	–	SPARE	---	35			---	36	---	SPARE	–	1	20
20	1	–	SPARE	---	37	---			38	---	TVSS	–	3	30
20	1	–	SPARE	---	39		---		40	---		–		
20	1	–	SPARE	---	41			---	42	---		–		

INTEGRATED EQUIP. RATING: ---,--- AIC | KVA TOTAL | --- | --- | --- | PANELBOARD LOAD TOTAL: --- KVA

PANEL: ED-1CL3 | VOLTAGE: 120/208 3ø, 4W | EXISTING | TYPE: SEE SPECS | MAINS: 100 AMLO

DEVICE AMPS/TRIP	DEVICE POLES	NOTES	BRANCH CIRCUIT DESIGNATION	VOLT AMPS	NO.	PHASE LOAD (VOLT-AMPS) øA	øB	øC	NO.	BRANCH CIRCUIT VOLT AMPS	DESIGNATION	NOTES	DEVICE POLES	DEVICE AMPS/TRIP
20	1	–	NURSE CALL CABINET	900	1	1140			2	240	NURSE CALL PWR SUPPLY	1	1	20
20	1	–	NURSE CALL CABINET	900	3		1140		4	240	NURSE CALL PWR SUPPLY	1	1	20
20	1	–	NURSE CALL CABINET	900	5			1140	6	240	NURSE CALL PWR SUPPLY	1	1	20
20	1	–	NURSE CALL CABINET	900	7	1140			8	240	NURSE CALL PWR SUPPLY	1	1	20
20	1	–	CARD READERS (NON EGRESS PATH)	200	9		240		10	240	NURSE CALL PWR SUPPLY	1	1	20
20	1	–	SPARE	---	11			180	12	180	WIREMOLD 1055	–	1	20
20	1	–	SPARE	---	13	180			14	180	WIREMOLD 1055	–	1	20
20	1	–	SPARE	---	15		180		16	180	WIREMOLD 1055	–	1	20
20	1	–	SPARE	---	17			180	18	180	WIREMOLD 1054	–	1	20
20	1	–	SPARE	---	19	180			20	180	WIREMOLD 1054	–	1	20
20	1	–	SPARE	---	21		---		22	---	SPARE	–	1	20
20	1	–	SPARE	---	23			---	24	---	SPARE	–	1	20
20	1	–	SPARE	---	25	---			26	---	TVSS	–	3	30
20	1	–	SPARE	---	27		---		28	---		–		
20	1	–	HELIPAD LTNG	600	29			600	30	---		–		

INTEGRATED EQUIP. RATING: ---,--- AIC | KVA TOTAL | 2.64 | 1.56 | 2.10 | PANELBOARD LOAD TOTAL: 6.3 KVA

1. COORDINATE EXACT LOCATION OF EACH POWER RECEPTACLE WITH NURSE CALL POWER SUPPLY BEING INSTALLED. PROVIDE POWER RECEPTACLE AT EACH NURSE CALL POWER SUPPLY.

PANEL: NT-PHCH1 | VOLTAGE: 277/480 3ø, 4W | EXISTING | TYPE: SEE SPECS | MAINS: 400 AMLO

DEVICE AMPS/TRIP	DEVICE POLES	NOTES	BRANCH CIRCUIT DESIGNATION	VOLT AMPS	NO.	PHASE LOAD (VOLT-AMPS) øA	øB	øC	NO.	BRANCH CIRCUIT VOLT AMPS	DESIGNATION	NOTES	DEVICE POLES	DEVICE AMPS/TRIP
20	1	–	ELEVATOR PIT LIGHTS	800	1	---			2	---	SPARE	–	1	20
20	1	–	SPARE	---	3		---		4	---	SPARE	–	1	20
20	1	–	SPARE	---	5			---	6	---	SPARE	–	1	20
20	1	–	SPARE	---	7	---			8	---	SPARE	–	1	20
20	1	–	SPARE	---	9		---		10	---	SPARE	–	1	20
20	1	–	SPARE	---	11

FEEDER LEGEND

	AMPERE SERVICE	COND. TYPE	3ø, 4W SERVICE ENTRANCE <1>	3ø, 4W NON-SERVICE ENTRANCE <2>	3ø, 3W SERVICE ENTRANCE <3>	3ø, 3W NON-SERVICE ENTRANCE <4>	1ø, 3W SERVICE ENTRANCE <5>	1ø, 3W NON-SERVICE ENTRANCE <6>	1ø, 2W (208 OR 480 VOLTS) <7>	1ø, 2W (120 OR 277 VOLTS) <8>	AMPERE SERVICE	
SE	3000	COPPER	8 RUNS [3#600 MCM, 1#600 MCM N, 1#1/0G – 4"C]	8 RUNS [3#600 MCM, 1#600 MCM N, 1#400MCM G–4"C]	8 RUNS [3#600 MCM, 1#1/0G – 4"C]	8 RUNS [3#600 MCM, 1#400 MCM G – 4"C]					3000	SE
		ALUMIN.	10 RUNS [3#500 MCM, 1#500 MCM N, 1#1/0G – 4"C]	10 RUNS [3#500 MCM, 1#500 MCM N, 1#600MCM G–4"C]	10 RUNS [3#500 MCM, 1#1/0G – 4"C]	10 RUNS [3#500 MCM, 1#600 MCM G – 4"C]						
A	2500	COPPER	6 RUNS [3#600 MCM, 1#600 MCM N, 1#1/0G – 4"C]	6 RUNS [3#600 MCM, 1#600 MCM N, 1#350MCM G–4"C]	6 RUNS [3#600 MCM, 1#1/0G – 4"C]	6 RUNS [3#600 MCM, 1#350 MCM G – 4"C]	6 RUNS [2#600 MCM, 1#600 MCM N, 1#1/0G – 4"C]	6 RUNS [2#600 MCM, 1#600 MCM N, 1#350 MCM G–4"C]	6 RUNS [2#600 MCM, 1#350 MCM G – 4"C]	–	2500	A
		ALUMIN.	8 RUNS [3#500 MCM, 1#500 MCM N, 1#1/0G – 4"C]	8 RUNS [3#600 MCM, 1#600 MCM N, 1#500MCM G–4"C]	8 RUNS [3#500 MCM, 1#1/0G – 4"C]	8 RUNS [3#500 MCM, 1#600 MCM G – 4"C]						
B	2000	COPPER	5 RUNS [3#600 MCM, 1#600 MCM N, 1#1/0G – 4"C]	5 RUNS [3#600 MCM, 1#600 MCM N, 1#250MCM G–4"C]	5 RUNS [3#600 MCM, 1#1/0G – 4"C]	5 RUNS [3#600 MCM, 1#250 MCM G – 4"C]	5 RUNS [2#600 MCM, 1#600 MCM N, 1#1/0G – 4"C]	5 RUNS [2#600 MCM, 1#600 MCM N, 1#250 MCM G–4"C]	5 RUNS [2#600 MCM, 1#250 MCM G – 4"C]	–	2000	B
		ALUMIN.	7 RUNS [3#500 MCM, 1#500 MCM N, 1#3/0G – 3"C]	7 RUNS [3#500 MCM, 1#500 MCM N, 1#400MCM G–4"C]	7 RUNS [3#500 MCM, 1#3/0G – 3"C]	7 RUNS [3#500 MCM, 1#400 MCM G – 4"C]						
C	1600	COPPER	4 RUNS [3#600 MCM, 1#600 MCM N, 1#1/0G – 4"C]	4 RUNS [3#600 MCM, 1#600 MCM N, 1#4/0 G–4"C]	4 RUNS [3#600 MCM, 1#1/0G – 4"C]	4 RUNS [3#600 MCM, 1#4/0 G – 4"C]	4 RUNS [2#600 MCM, 1#600 MCM N, 1#1/0G – 4"C]	4 RUNS [2#600 MCM, 1#600 MCM N, 1#4/0 G – 4"C]	4 RUNS [2#600 MCM, 1#4/0 G – 4"C]	–	1600	C
		ALUMIN.	5 RUNS [3#600 MCM, 1#600 MCM N, 1#3/0G – 3 1/2"C]	5 RUNS [3#600 MCM, 1#600 MCM N, 1#350MCM G–3 1/2"C]	5 RUNS [3#600 MCM, 1#350MCM G – 4"C]	5 RUNS [3#600 MCM, 1#350 MCM G – 3 1/2"C]						
D	1200	COPPER	3 RUNS [3#600 MCM, 1#600 MCM N, 1#3/0 G – 4"C]	3 RUNS [3#600 MCM, 1#600 MCM N, 1#3/0 G – 4"C]	3 RUNS [3#600 MCM, 1#1/0G – 4"C]	3 RUNS [3#600 MCM, 1#3/0 G – 4"C]	3 RUNS [2#600 MCM, 1#600 MCM N, 1#1/0G – 4"C]	3 RUNS [2#600 MCM, 1#600 MCM N, 1#3/0 G – 4"C]	3 RUNS [2#600 MCM, 1#3/0 G – 4"C]		1200	D
		ALUMIN.	4 RUNS [3#500 MCM, 1#500 MCM N, 1#3/0G – 3"C]	4 RUNS [3#500 MCM, 1#500 MCM N, 1#250MCM G–4"C]	4 RUNS [3#500 MCM, 1#3/0G – 3"C]	4 RUNS [3#500 MCM, 1#250 MCM G – 4"C]						
E	1000	COPPER	3 RUNS [3#400 MCM, 1#400 MCM N, 1#2/0 G – 4"C]	3 RUNS [3#400 MCM, 1#400 MCM N, 1#2/0 G – 4"C]	3 RUNS [3#400 MCM, 1#1/0G – 4"C]	3 RUNS [3#400 MCM, 1#2/0 G – 4"C]	3 RUNS [2#400 MCM, 1#600 MCM N, 1#1/0G – 4"C]	3 RUNS [2#400 MCM, 1#400 MCM N, 1#2/0 G – 4"C]	3 RUNS [2#400 MCM, 1#2/0 G – 4"C]	–	1000	E
		ALUMIN.	3 RUNS [3#600 MCM, 1#600 MCM N, 1#1/0G – 4"C]	3 RUNS [3#600 MCM, 1#600 MCM N, 1#4/0 G – 4"C]	3 RUNS [3#600 MCM, 1#1/0G – 4"C]	3 RUNS [3#600 MCM, 1#4/0 G – 4"C]						
F	800	COPPER	2 RUNS [3#600 MCM, 1#600 MCM N, 1#1/0G – 4"C]	2 RUNS [3#600 MCM, 1#600 MCM N, 1#1/0 G – 4"C]	2 RUNS [3#600 MCM, 1#1/0G – 4"C]	2 RUNS [3#600 MCM, 1#1/0 G – 4"C]	2 RUNS [2#600 MCM, 1#600 MCM N, 1#1/0G – 4"C]	2 RUNS [2#600 MCM, 1#600 MCM N, 1#1/0 G – 4"C]	2 RUNS [2#600 MCM, 1#1/0 G – 4"C]	–	800	F
		ALUMIN.	4 RUNS [3#250 MCM, 1#250 MCM N, 1#3/0G – 2 1/2"C]	4 RUNS [3#250 MCM, 1#250 MCM N, 1#3/0 G – 2 1/2"C]	4 RUNS [3#250 MCM, 1#2G – 2 1/2"C]	4 RUNS [3#250 MCM, 1#3/0 G – 2 1/2"C]						
G	700	COPPER	2 RUNS [3#500 MCM, 1#500 MCM N, 1#1/0G – 3"C]	2 RUNS [3#500 MCM, 1#500 MCM N, 1#1/0 G–3 1/2"C]	2 RUNS [3#500 MCM, 1#1/0G – 3"C]	2 RUNS [3#500 MCM, 1#1/0 G – 3 1/2"C]	2 RUNS [2#500 MCM, 1#500 MCM N, 1#1/0G – 3"C]	2 RUNS [2#500 MCM, 1#500 MCM N, 1#1/0 G – 3"C]	2 RUNS [2#500 MCM, 1#1/0 G – 3"C]		700	G
		ALUMIN.	3 RUNS [3#350 MCM, 1#350 MCM N, 1#1/0G – 3"C]	3 RUNS [3#350 MCM, 1#350 MCM N, 1#3/0 G–3"C]	3 RUNS [3#350 MCM, 1#2G – 3"C]	3 RUNS [3#350 MCM, 1#3/0 G – 3"C]						
H	600	COPPER	2 RUNS [3#350 MCM, 1#350 MCM N, 1#2G – 3"C]	2 RUNS [3#350 MCM, 1#350 MCM N, 1#1 G–3 1/2"C]	2 RUNS [3#350 MCM, 1#2G – 3"C]	2 RUNS [3#350 MCM, 1#1 G – 3 1/2"C]	2 RUNS [2#350 MCM, 1#350 MCM N, 1#2G – 3"C]	2 RUNS [2#350 MCM, 1#350 MCM N, 1#1 G – 3"C]	2 RUNS [2#350 MCM, 1#1 G – 3"C]	–	600	H
		ALUMIN.	2 RUNS [3#500 MCM, 1#500 MCM N, 1#3/0G–3"C]	2 RUNS [3#500 MCM, 1#500 MCM N, 1#2/0 G–3"C]	2 RUNS [3#500 MCM, 1#2G – 3"C]	2 RUNS [3#500 MCM, 1#2/0 G – 3"C]						
I	500	COPPER	2 RUNS [3#250 MCM, 1#250 MCM N, 1#2G – 2 1/2"C]	2 RUNS [3#250 MCM, 1#250 MCM N, 1#2 G – 3"C]	2 RUNS [3#250 MCM, 1#2G – 2 1/2"C]	2 RUNS [3#250 MCM, 1#2 G – 3"C]	2 RUNS [2#250 MCM, 1#250 MCM N, 1#2G – 2 1/2"C]	2 RUNS [2#250 MCM, 1#250 MCM N, 1#2 G – 2 1/2"C]	2 RUNS [2#250 MCM, 1#2 G – 2 1/2"C]	–	500	I
		ALUMIN.	2 RUNS [3#350 MCM, 1#350 MCM N, 1#1/0G – 3"C]	2 RUNS [3#350 MCM, 1#350 MCM N, 1#1/0 G–3"C]	2 RUNS [3#350 MCM, 1#1/0G – 3"C]	2 RUNS [3#350 MCM, 1#1/0 G – 3"C]						
J	450	COPPER	2 RUNS [3#4/0, 1#4/0N, 1#2G – 2 1/2"C]	2 RUNS [3#4/0, 1#4/0N, 1#2 G – 2 1/2"C]	2 RUNS [3#4/0, 1#2G – 2 1/2"C]	2 RUNS [3#4/0, 1#2 G – 2 1/2"C]	2 RUNS [2#4/0, 1#4/0N, 1#2G – 2 1/2"C]	2 RUNS [2#4/0, 1#4/0N, 1#2 G – 2 1/2"C]	2 RUNS [2#4/0, 1#2 G – 2 1/2"C]	–	450	J
		ALUMIN.	2 RUNS [3#500 MCM, 1#350 MCM N, 1#1/0G – 2 1/2"C]	2 RUNS [3#500 MCM, 1#350 MCM N, 1#1/0 G–2 1/2"C]	2 RUNS [3#500 MCM, 1#1/0G – 2 1/2"C]	2 RUNS [3#500 MCM, 1#1/0 G – 2 1/2"C]						
K	400	COPPER	3#600 MCM, 1#600 MCM N, 1#1/0G – 4"C	3#600 MCM, 1#600 MCM N, 1#3G – 4"C	3#600 MCM, 1#1/0G – 4"C	3#600 MCM, 1#3G – 4"C	2#600 MCM, 1#600 MCM N, 1#1/0G – 4"C	2#600 MCM, 1#600 MCM N, 1#3G – 4"C	2#600 MCM, 1#3G – 4"C	–	400	K
		ALUMIN.	2 RUNS [3#250 MCM, 1#250 MCM N, 1#1/0G – 2 1/2"C]	2 RUNS [3#250 MCM, 1#250 MCM N, 1#1G – 2 1/2"C]	2 RUNS [3#250 MCM, 1#1/0G – 2 1/2"C]	2 RUNS [3#250 MCM, 1#1 G – 2 1/2"C]						
L	350	COPPER	3#500 MCM, 1#500 MCM N, 1#1/0G – 3"C	3#500 MCM, 1#500 MCM N, 1#3G – 3"C	3#500 MCM, 1#1/0G – 3"C	3#500 MCM, 1#3G – 3"C	2#500 MCM, 1#500 MCM N, 1#1/0G – 3"C	2#500 MCM, 1#500 MCM N, 1#3G – 3"C	2#500 MCM, 1#3G – 3"C	–	350	L
		ALUMIN.	2 RUNS [3#4/0, 1#4/0 N, 1#2G – 2"C]	2 RUNS [3#4/0, 1#4/0 N, 1#1G – 2"C]	2 RUNS [3#4/0, 1#2G – 2"C]	2 RUNS [3#4/0, 1#1 G – 2"C]						
M	300	COPPER	3#350 MCM, 1#350 MCM N, 1#2G – 3"C	3#350 MCM, 1#350 MCM N, 1#4G – 3"C	3#350 MCM, 1#2G – 3"C	3#350 MCM, 1#4G – 3"C	2#350 MCM, 1#350 MCM N, 1#2G – 3"C	2#350 MCM, 1#350 MCM N, 1#4G – 3"C	2#350 MCM, 1#4G – 3"C	–	300	M
		ALUMIN.	3#500 MCM, 1#500 MCM N, 1#3/0G – 3"C	3#500 MCM, 1#500 MCM N, 1#1G – 3"C	3#500 MCM, 1#3/0G – 3"C	3#500 MCM, 1#1G – 3"C						
N	250	COPPER	3#250 MCM, 1#250 MCM N, 1#2G – 2 1/2"C	3#250 MCM, 1#250 MCM N, 1#4G – 2 1/2"C	3#250 MCM, 1#2G – 2 1/2"C	3#250 MCM, 1#4G – 2 1/2"C	2#250 MCM, 1#250 MCM N, 1#2G – 2 1/2"C	2#250 MCM, 1#250 MCM N, 1#4G – 2 1/2"C	2#250 MCM, 1#4G – 2 1/2"C		250	N
		ALUMIN.	3#350 MCM, 1#350 MCM N, 1#1/0G – 2"C	3#350 MCM, 1#350 MCM N, 1#2G – 2"C	3#350 MCM, 1#1/0G – 2"C	3#350 MCM, 1#2G – 2"C						
O	225	COPPER	3#4/0, 1#4/0N, 1#2G – 2 1/2"C	3#4/0, 1#4/0N, 1#4G – 2 1/2"C	3#4/0, 1#2G – 2 1/2"C	3#4/0, 1#4G – 2 1/2"C	2#4/0, 1#4/0N, 1#2G – 2 1/2"C	2#4/0, 1#4/0N, 1#4G – 2 1/2"C	2#4/0, 1#4G – 2 1/2"C	–	225	O
		ALUMIN.	3#300 MCM, 1#300 MCM N, 1#1/0G – 2 1/2"C	3#300 MCM, 1#300 MCM N, 1#2G – 2 1/2"C	3#300, 1#1/0G – 2 1/2"C	3#300, 1#2G – 2 1/2"C			2#400 MCM, 1#2G – 2 1/2"C			
P	200	COPPER	3#3/0, 1#3/0N, 1#4G – 2"C	3#3/0, 1#3/0N, 1#6G – 2" C	3#3/0, 1#4G – 2"C	3#3/0, 1#6G – 2" C	2#3/0, 1#3/0N, 1#4G – 2"C	2#3/0, 1#3/0N, 1#6G – 2"C	3#3/0, 1#6G – 2"C	–	200	P
		ALUMIN.	3#250 MCM, 1#250 MCM N, 1#2G – 2 1/2"C	3#250 MCM, 1#250 MCM N, 1#4G – 2 1/2"C	3#250 MCM, 1#2G – 2 1/2"C	3#250 MCM, 1#4G – 2 1/2"C	2#250 MCM, 1#250 MCM N, 1#2G – 2 1/2"C	2#250 MCM, 1#250 MCM N, 1#4G – 2 1/2"C	2#250 MCM, 1#4G – 2"C			
Q	175	COPPER	3#2/0, 1#2/0N, 1#4G – 2"C	3#2/0, 1#2/0N, 1#6G – 2"C	3#2/0, 1#4G – 2"C	3#2/0, 1#6G – 2"C	2#2/0, 1#2/0N, 1#4G – 2"C	2#2/0, 1#2/0N, 1#6G – 2"C	2#2/0, 1#6G – 2"C	1#2/0, 1#2/0N, 1#6G – 2"C	175	Q
		ALUMIN.										
R	150	COPPER	3#1/0, 1#1/0N, 1#6G – 2"C	3#1/0, 1#1/0N, 1#6G – 2"C	3#1/0, 1#6G – 1 1/2"C	3#1/0, 1#6G – 1 1/2"C	2#1/0, 1#1/0N, 1#6G – 1 1/2"C	2#1/0, 1#1/0N, 1#6G – 1 1/2"C	2#1/0, 1#6G – 1 1/2"C	1#1/0, 1#1/0N, 1#6G – 1 1/2"C	150	R
		ALUMIN.								–		
S	110–125	COPPER	3#1, 1#1N, 1#6G – 2"C	3#1, 1#1N, 1#6G – 2"C	3#1, 1#6G – 1 1/2"C	3#1, 1#6G – 1 1/2"C	2#1, 1#1N, 1#6G – 1 1/2"C	2#1, 1#1N, 1#6G – 1 1/2"C	2#1, 1#6G – 1 1/2"C	1#1, 1#1N, 1#6G – 1 1/2"C	110–125	S
		ALUMIN.										
T	100	COPPER	3#1, 1#1N, 1#6G – 2"C	3#1, 1#1N, 1#8G – 2"C	3#1, 1#6G – 1 1/2"C	3#1, 1#8G – 1 1/2"C	2#1, 1#1N, 1#6G – 1 1/2"C	2#1, 1#1N, 1#8G – 1 1/2"C	2#1, 1#8G – 1 1/2"C	1#1, 1#1N, 1#8G – 1 1/2"C	100	T
		ALUMIN.										
U	90	COPPER	3#2, 1#2N, 1#8G – 1 1/2"C	3#2, 1#2N, 1#8G – 1 1/2"C	3#2, 1#8G – 1 1/4"C	3#2, 1#8G – 1 1/4"C	2#2, 1#2N, 1#8G – 1 1/4"C	2#2, 1#2N, 1#8G – 1 1/4"C	2#2, 1#8G – 1 1/4"C	1#2, 1#2N, 1#8G – 1 1/4"C	90	U
		ALUMIN.										
V	80	COPPER	3#3, 1#3N, 1#8G – 1 1/4"C	3#3, 1#3N, 1#8G – 1 1/4"C	3#3, 1#8G – 1 1/4"C	3#3, 1#8G – 1 1/4"C	2#3, 1#3N, 1#8G – 1 1/4"C	2#3, 1#3N, 1#8G – 1 1/4"C	2#3, 1#8G – 1"C	1#3, 1#3N, 1#8G – 1"C	80	V
		ALUMIN.										
W	70	COPPER	3#4, 1#4N, 1#8G – 1 1/4"C	3#4, 1#4N, 1#8G – 1 1/4"C	3#4, 1#8G – 1 1/4"C	3#4, 1#8G – 1 1/4"C	2#4, 1#4N, 1#8G – 1 1/4"C	2#4, 1#4N, 1#8G – 1 1/4"C	2#4, 1#8G – 1"C	1#4, 1#4N, 1#8G – 1"C	70	W
		ALUMIN.										
X	60	COPPER	3#4, 1#4N, 1#8G – 1 1/4"C	3#4, 1#4N, 1#10G – 1 1/4"C	3#4, 1#8G – 1 1/4"C	3#4, 1#10G – 1 1/4"C	2#4, 1#4N, 1#8G – 1 1/4"C	2#4, 1#4N, 1#10G – 1 1/4"C	2#4, 1#10G – 1"C	1#4, 1#4N, 1#10G – 1"C	60	X
		ALUMIN.										
Y	50	COPPER	3#6, 1#6N, 1#8G – 1"C	3#6, 1#6N, 1#10G – 1"C	3#6, 1#8G – 3/4"C	3#6, 1#10G – 3/4"C	2#6, 1#6N, 1#8G – 3/4"C	2#6, 1#6N, 1#10G – 3/4"C	2#6, 1#10G – 3/4"C	1#6, 1#6N, 1#10G – 3/4"C	50	Y
		ALUMIN.										
Z	45	COPPER	3#6, 1#6N, 1#8G – 1"C	3#6, 1#6N, 1#10G – 1"C	3#6, 1#8G – 3/4"C	3#6, 1#10G – 3/4"C	2#6, 1#6N, 1#8G – 3/4"C	2#6, 1#6N, 1#10G – 3/4"C	2#6, 1#10G – 3/4"C	1#6, 1#6N, 1#10G – 3/4"C	45	Z
		ALUMIN.										
AA	40	COPPER	3#8, 1#8N, 1#8G – 3/4"C	3#8, 1#8N, 1#10G – 3/4"C	3#8, 1#8G – 3/4"C	3#8, 1#10G – 3/4"C	2#8, 1#8N, 1#8G – 3/4"C	2#8, 1#8N, 1#10G – 3/4"C	2#8, 1#10G – 3/4"C	1#8, 1#8N, 1#10G – 3/4"C	40	AA
		ALUMIN.										
BB	30	COPPER	3#10, 1#10N, 1#8G – 3/4"C	3#10, 1#10N, 1#10G – 3/4"C	3#10, 1#8G – 3/4"C	3#10, 1#10G – 3/4"C	2#10, 1#10N, 1#8G – 3/4"C	2#10, 1#10N, 1#10G – 3/4"C	2#10, 1#10G – 3/4"C	1#10, 1#10N, 1#10G – 3/4"C	30	BB
		ALUMIN.										
CC	25	COPPER	3#10, 1#10N, 1#8G – 3/4"C	3#10, 1#10N, 1#10G – 3/4"C	3#10, 1#8G – 3/4"C	3#10, 1#10G – 3/4"C	2#10, 1#10N, 1#8G – 3/4"C	2#10, 1#10N, 1#10G – 3/4"C	2#10, 1#10G – 3/4"C	1#10, 1#10N, 1#10G – 3/4"C	25	CC
		ALUMIN.										
DD	20	COPPER	3#12, 1#12N, 1#8G – 3/4"C	3#12, 1#12N, 1#12G – 3/4"C	3#12, 1#8G – 3/4"C	3#12, 1#12G – 3/4"C	2#12, 1#12N, 1#8G – 3/4"C	2#12, 1#12N, 1#12G – 3/4"C	2#12, 1#12G – 3/4"C	1#12, 1#12N, 1#12G – 3/4"C	20	DD
		ALUMIN.										

100 AMPERE AND SMALLER CIRCUITS ARE BASED ON 60 DEGREE C AMPACITY IN NEC TABLE 310.16. SEE NEC 110.14(B)(1)(a)(1).
CIRCUITS GREATER THAN 100 AMPERE ARE BASED ON 75 DEGREE C AMPACITY IN NEC TABLE 310.16. SEE NEC 110.14(B)(1)(b)(1).

NOTE:
ALUMINUM CONDUCTORS ARE NOT ALLOWED FOR USE ON THIS PROJECT. ALL CONDUCTORS INSTALLED ON THIS PROJECT SHALL BE COPPER.

TRANSFORMER SCHEDULE

KVA	PRIMARY FEEDER	SECONDARY FEEDER	PRIM FLA	POCP	SEC FLA	SOCP
6	DD4	CC1	7.2A	15A	16.5A	20A
9	DD4	AA1	10.8A	15A	25A	30A
15	CC4	W1	18A	25A	41A	50A
22.5	AA4	V1	27A	35A	62A	80A
30	Z4	T1	36A	45A	83A	100A
45	W4	Q1	54A	70A	124A	150A
75	T4	M1	90A	125A	208A	250A
112.5	Q4	K1	135A	175A	312A	400A
150	O4	H1	180A	225A	416A	500A
225	I4	F1	270A	350A	624A	800A
300	J4	D1	360A	450A	832A	1000A
500	F4	B1	601A	750A	1387A	1800A

100 AMPERE AND SMALLER CIRCUITS ARE BASED ON 60 DEGREE C AMPACITY IN NEC TABLE 310.15. SEE NEC 110.14(C).

CIRCUITS GREATER THAN 100 AMPERE ARE BASED ON 75 DEGREE C AMPACITY IN NEC TABLE 310.15. SEE NEC 110.14(C).

A1 FEEDER LEGEND

NTS

DesignStrategies
Planning
Architecture
Interior Architecture
Landscape Architecture
Engineering

130 South Main Street
Greenville, SC 29601
T (864) 527-6500
F (864) 233-8385

REVISIONS

NO	DATE	DESCRIPTION
0	12.24.2020	ISSUED FOR BID

McLeod Health
The Choice for Medical Excellence.

SEACOAST HOSPITAL
50-BED ADDITION

LITTLE RIVER, SC

KEYPLAN

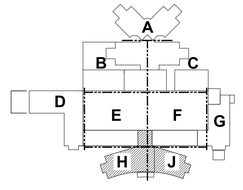

TRUE NORTH

PROJECT NO: 0370.45
DATE: 12.24.2020
COPYRIGHT © 2020 DesignStrategies, LLC

ELECTRICAL
FEEDER
LEGEND
AND DETAILS

EP700

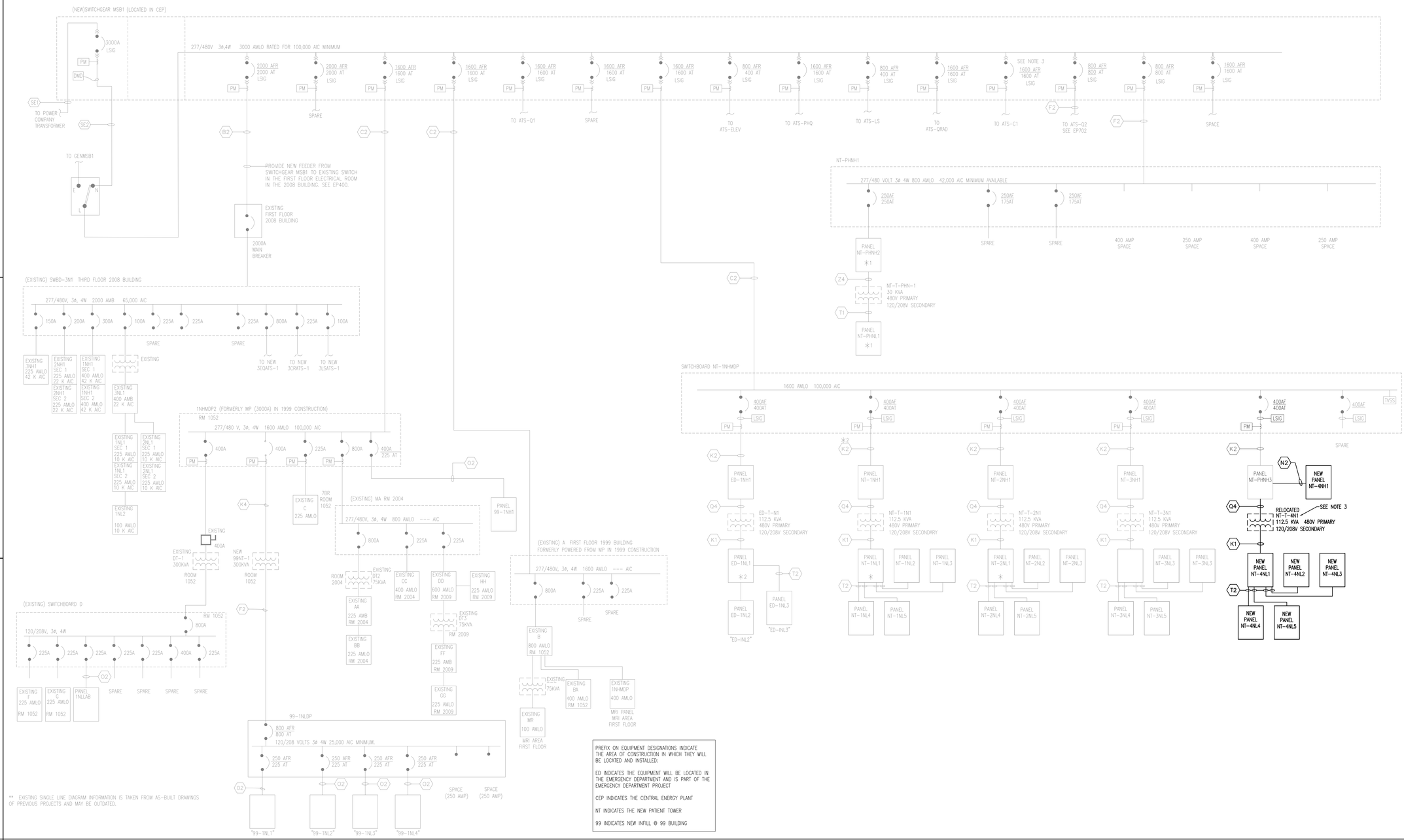

B1 SINGLE LINE DIAGRAM

A1 NOT USED

A5 NOTES

1. ALL PANEL BOARD, SWITCHBOARDS AND MOTOR CONTROL CENTERS SHALL BE PROVIDED WITH INTEGRAL SPD (TVSS) DEVICE.
2. COORDINATE THE EXACT LOCATION OF DUCT HUMIDIFICATION WITH MECHANICAL DRAWINGS. DISCONNECT FOR EACH HUMIDIFIER SHALL BE INSTALLED WITHIN SITE OF THE HUMIDIFIER AND SHALL HAVE ALL CODE REQUIRED CLEARANCES AND WORK SPACES AROUND DISCONNECT.
3. EXISTING TRANSFORMER NT-T-4N1 SHALL BE RELOCATED FROM FIFTH FLOOR PENTHOUSE TO ELECTRICAL ROOM 4573 ON FOURTH FLOOR. ROUTE NEW CIRCUIT FROM PANEL BOARD NT-PHNH3 TO TRANSFORMER PRIMARY.

DesignStrategies

Planning
Architecture
Interior Architecture
Landscape Architecture
Engineering

130 South Main Street
Greenville, SC 29601
T (864) 527-6500
F (864) 233-8385

REVISIONS

NO	DATE	DESCRIPTION
0	12.24.2020	ISSUED FOR BID

McLeod Health
The Choice for Medical Excellence.

SEACOAST HOSPITAL 50-BED ADDITION

LITTLE RIVER, SC

KEYPLAN

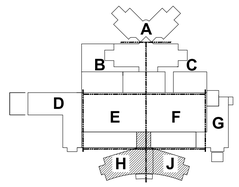

PLAN NORTH TRUE NORTH

PROJECT NO: 0370.45
DATE: 12.24.2020
COPYRIGHT © 2020 DesignStrategies, LLC

ELECTRICAL SINGLE LINE DIAGRAM

EP701

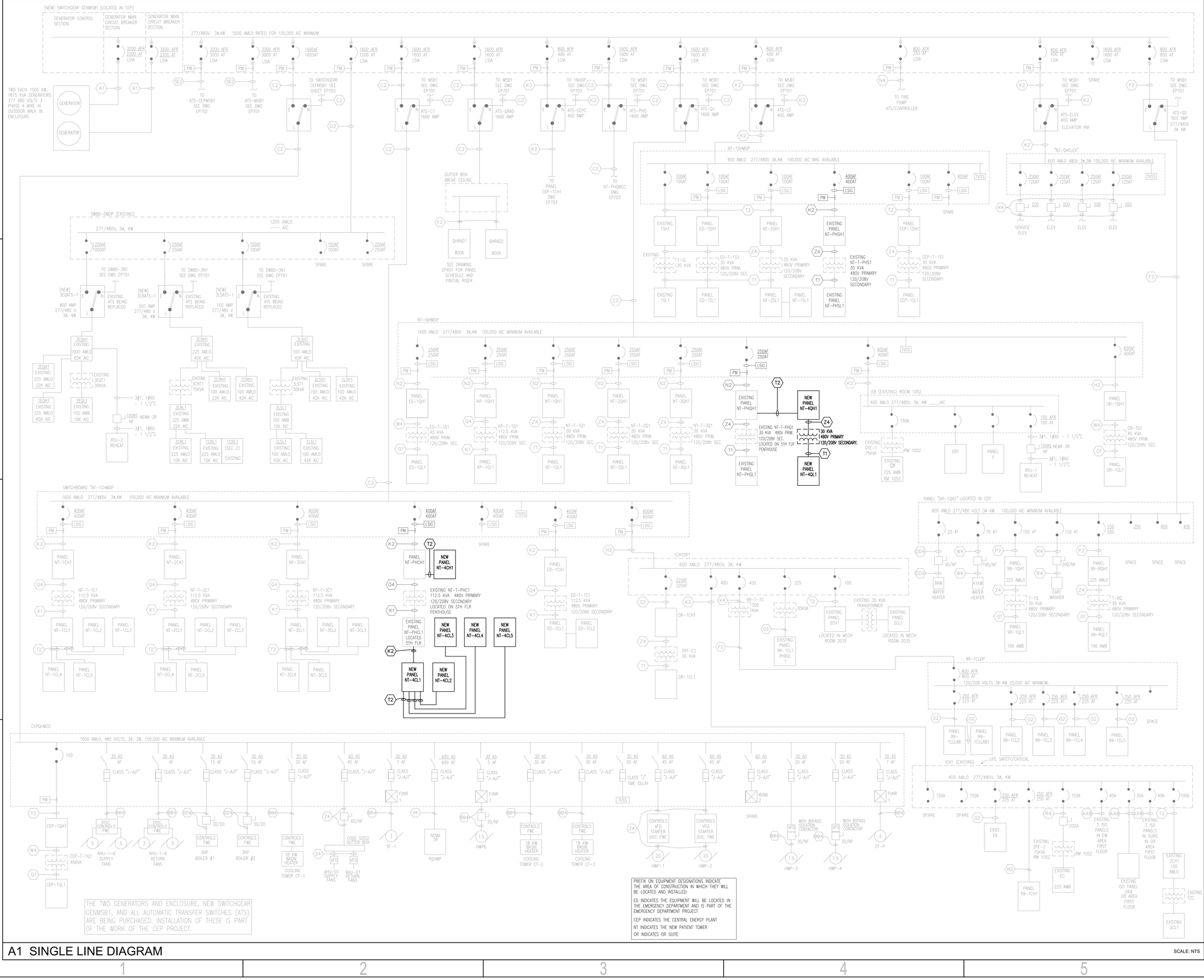

A1 SINGLE LINE DIAGRAM

SCALE: NTS

DesignStrategies

Planning
Architecture
Interior Architecture
Landscape Architecture
Engineering

130 South Main Street
Greenville, SC 29601
T (864) 527-6500
F (864) 233-8385

REVISIONS

NO	DATE	DESCRIPTION
0	12.24.2020	ISSUED FOR BID

McLeod Health
The Choice for Medical Excellence.

SEACOAST HOSPITAL 50-BED ADDITION

LITTLE RIVER, SC

KEYPLAN

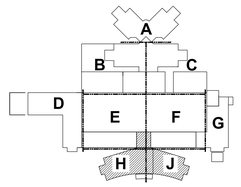

TRUE NORTH TRUE NORTH

PROJECT NO: 0370.45
DATE: 12.24.2020
COPYRIGHT © 2020 DesignStrategies, LLC

ELECTRICAL SINGLE LINE DIAGRAM

EP702



B1 LEVEL 4 SYSTEMS PLAN - ZONE H 1/8" = 1'-0"

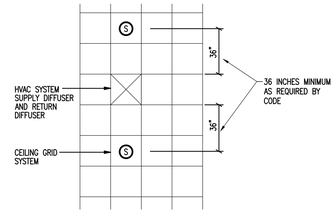

D5 SMOKE DETECTOR LOCATION NTS

B5 NOT USED

C5 NOT USED

A1 NOT USED

A2 NOT USED

A3 NOT USED

A4 NOTES

1. SEE DRAWING E-001 FOR GENERAL ELECTRICAL NOTES, LEGEND AND SCHEDULES.
2. SEE MECHANICAL DRAWINGS FOR EXACT LOCATIONS OF ALL MECHANICAL EQUIPMENT.
3. SEE DRAWING EP400 FOR PATIENT ROOM NURSE CALL AND SYSTEMS DEVICES.
4. SEE NURSE CALL SUPPLIER'S DRAWINGS AND RISER FOR ADDITIONAL INFORMATION.
5. PROVIDE DATA CONNECTION FOR TUBE SYSTEM STATION.
6. INSTALL FIRE ALARM PULL STATION AT NURSE STATION. COORDINATE THE EXACT LOCATION WITH THE ARCHITECT BEFORE INSTALLATION. PULL STATION SHALL BE ON THE NURSE SIDE OF THE DESK AND NOT ON THE CORRIDOR SIDE.
7. VERIFY LOCATION OF NURSE CALL EQUIPMENT CABINET PRIOR TO INSTALLATION. SEE NURSE CALL SUPPLIER FOR ADDITIONAL INFORMATION.
8. SEE ARCHITECTURAL ELEVATIONS FOR EXACT LOCATION OF NURSE CALL DOME LIGHT.
9. IN ALCOVES WHERE A COMPUTER TERMINAL IS LOCATED, MOUNTING HEIGHT OF DATA TO BE THE SAME AS RECEPTACLE IN SAME LOCATION. SEE SHEET EP500 FOR NURSE CARE ELEVATIONS.
10. ALL MAGNETIC DOOR HOLD SHALL BE POWERED BY THE FIRE ALARM SYSTEM.
11. SEE MECHANICAL DRAWINGS FOR LOCATION AND QUANTITY OF SMOKE DAMPERS. PROVIDE A CONTROL MODULE AT EACH DAMPER FOR FIRE ALARM CONNECTION. SEE POWER DRAWINGS FOR 120 VOLT CIRCUIT TO POWER EACH DAMPER. PROVIDE DUCT DETECTORS FOR EACH DAMPER. SEE MECHANICAL DRAWINGS FOR ADDITIONAL INFORMATION.
12. SPLIT ANALOG CABLE TO ALLOW FOR 2 SEPARATE CONNECTIONS.
13. INSTALL FIRE ALARM SIGNALING DEVICE ALIGNED VERTICALLY ABOVE ROOM LIGHTING CONTROLS.
14. PROVIDE TELEPHONE EQUIPMENT GROUNDING BAR TMGB AT THIS LOCATION. CONNECT THE TMGB GROUNDING BAR TO TELEPHONE GROUNDING BAR IN THE FIRST FLOOR IT ROOM.
15. COORDINATE LOCATION OF NURSE CALL STATION WITH SWITCH BANK AT SAME LOCATION. COORDINATE LOCATION WITH ARCHITECT PRIOR TO INSTALLATION.
16. CABLE TRAY INSTALLED ABOVE CEILING. CABLE TRAY SHALL BE CABLOFIL CAT# OF 105/500 EZ TRAY. CABLE TRAY SHALL BE CONTINUOUS AS SHOWN. TRAY SHALL BE OFFSET AROUND ITEMS IN PATHWAY SHOWN.
17. PROVIDE BIOMED DATA 3 DROP AT NURSE CALL MASTER LOCATION. THIS WILL REQUIRE YELLOW CABLING.
18. MOUNT SMOKE DETECTOR ON CEILING DIRECTLY ABOVE WALL MOUNTED STROBE.
19. SEE NOTE 14, SHEET EP104H-U CONCERNING TELECOMMUNICATIONS JACKS IN THE POKE-THRU DEVICE.
20. COORDINATE THE EXACT LOCATION OF THE DATA JACK WITH MCLEOD IT BEFORE INSTALLATION OF THE ISTAR DATA JACK.
21. PROVIDE RECESSED BACKBOX WITH 1" CONDUIT STUBBED TO (CABLE & DATA) ABOVE CEILING FOR FUTURE TV CONNECTIONS. PROVIDE APPROPRIATE BLANK COVER PLATES FOR EACH BOX.
22. CEILING MOUNTED TV. PROVIDE RECESSED TV CONNECTION AT CEILING. COORDINATE LOCATION WITH REFLECTED CEILING PLAN.

DesignStrategies

Planning
Architecture
Interior Architecture
Landscape Architecture
Engineering

130 South Main Street
Greenville, SC 29601
T (864) 527-6500
F (864) 233-8385

REVISIONS

NO	DATE	DESCRIPTION
0	12.24.2020	ISSUED FOR BID

McLeod Health
The Choice for Medical Excellence.

SEACOAST HOSPITAL
50-BED ADDITION

LITTLE RIVER, SC

KEYPLAN

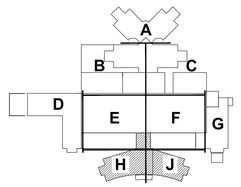

0 4' 8' 16'
SCALE: 1/8" = 1'-0"

PROJECT NO: **0370.45**
DATE: **12.24.2020**
COPYRIGHT © 2020 **DesignStrategies, LLC**

LEVEL 4 SYSTEMS PLAN - ZONE H

EY104H-U



B1 LEVEL 4 SYSTEMS PLAN - ZONE J 1/8" = 1'-0"

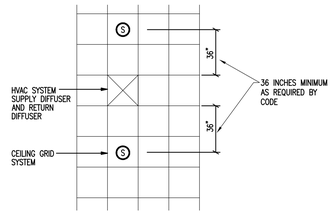

D5 SMOKE DETECTOR LOCATION NTS

C5 NOT USED

B5 DETAIL 3/8" = 1'-0"

A1 NOT USED

A5 NOTES

1. SEE DRAWING E-001 FOR GENERAL ELECTRICAL NOTES, LEGEND AND SCHEDULES.
2. SEE MECHANICAL DRAWINGS FOR EXACT LOCATIONS OF ALL MECHANICAL EQUIPMENT.
3. SEE DRAWING EP400 FOR PATIENT ROOM NURSE CALL AND SYSTEMS DEVICES.
4. SEE NURSE CALL SUPPLIER'S DRAWINGS AND RISER FOR ADDITIONAL INFORMATION.
5. PROVIDE DATA CONNECTION FOR TUBE SYSTEM STATION.
6. INSTALL FIRE ALARM PULL STATION AT NURSE STATION. COORDINATE THE EXACT LOCATION WITH THE ARCHITECT BEFORE INSTALLATION.
7. VERIFY LOCATION OF NURSE CALL EQUIPMENT CABINET PRIOR TO INSTALLATION. SEE NURSE CALL SUPPLIER FOR ADDITIONAL INFORMATION.
8. SEE ARCHITECTURAL ELEVATIONS FOR EXACT LOCATION OF NURSE CALL DOME LIGHT.
9. IN ALCOVES WHERE A CT IS LOCATED, MOUNTING HEIGHT OF DATA TO BE THE SAME AS RECEPTACLE IN SAME LOCATION. SEE SHEET EP500 FOR NURSE CARE ELEVATIONS.
10. ALL MAGNETIC DOOR HOLD SHALL BE POWERED BY THE FIRE ALARM SYSTEM.
11. SEE MECHANICAL DRAWINGS FOR LOCATION AND QUANTITY OF SMOKE DAMPERS. PROVIDE A CONTROL MODULE AT EACH DAMPER FOR FIRE ALARM CONNECTION. SEE POWER DRAWINGS FOR 120 VOLT CIRCUIT TO POWER EACH DAMPER. PROVIDE DUCT DETECTORS FOR EACH DAMPER. SEE MECHANICAL DRAWINGS FOR ADDITIONAL INFORMATION.
12. SPLIT ANALOG CABLE TO ALLOW FOR 2 SEPARATE CONNECTIONS.
13. INSTALL FIRE ALARM SIGNALING DEVICE ALIGNED VERTICALLY ABOVE ROOM LIGHTING CONTROLS.
14. PROVIDE TELEPHONE EQUIPMENT GROUNDING BAR AT THIS LOCATION. GROUNDING BAR TO BE 1/4"X4"X18", 98% CONDUCTIVE COPPER INSTALLED ON 600 VOLT PORCELAIN INSULATORS AT 18" A.F.F.. CONNECT THE GROUNDING BAR TO TELEPHONE GROUNDING BAR IN THE FIRST FLOOR IT ROOM.
15. COORDINATE LOCATION OF NURSE CALL STATION WITH SWITCH BANK AT SAME LOCATION.
16. CABLE TRAY INSTALLED ABOVE CEILING. CABLE TRAY SHALL BE CABLOFIL CAT6 CF 105/500 EZ TRAY. CABLE TRAY SHALL BE CONTINUOUS AS SHOWN. TRAY SHALL BE OFFSET AROUND ITEMS IN PATHWAY SHOWN.
17. PROVIDE BIOMED DATA 3 DROP AT NURSE CALL MASTER LOCATION. THIS WILL REQUIRE YELLOW CABLING.
18. MOUNT SMOKE DETECTOR ON CEILING DIRECTLY ABOVE WALL MOUNTED STROBE.
19. SEE NOTE 14, SHEET EP104H-U CONCERNING TELECOMMUNICATIONS JACKS IN THE POKE-THRU DEVICE.
20. COORDINATE THE EXACT LOCATION OF THE DATA JACK WITH MCLEOD IT BEFORE INSTALLATION OF THE ISTAR DATA JACK.

DesignStrategies

Planning
Architecture
Interior Architecture
Landscape Architecture
Engineering

130 South Main Street
Greenville, SC 29601
T (864) 527-6500
F (864) 233-8385

REVISIONS

NO	DATE	DESCRIPTION
0	12.24.2020	ISSUED FOR BID

McLeod Health
The Choice for Medical Excellence.

SEACOAST HOSPITAL
50-BED ADDITION

LITTLE RIVER, SC

KEYPLAN

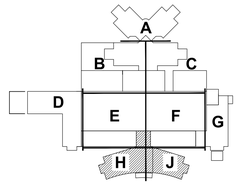

PLAN NORTH
TRUE NORTH

0 4' 8' 16'
SCALE: 1/8" = 1'-0"

PROJECT NO: **0370.45**
DATE: **12.24.2020**
COPYRIGHT © 2020 **DesignStrategies, LLC**

LEVEL 4 SYSTEMS PLAN - ZONE J

EY104J-U

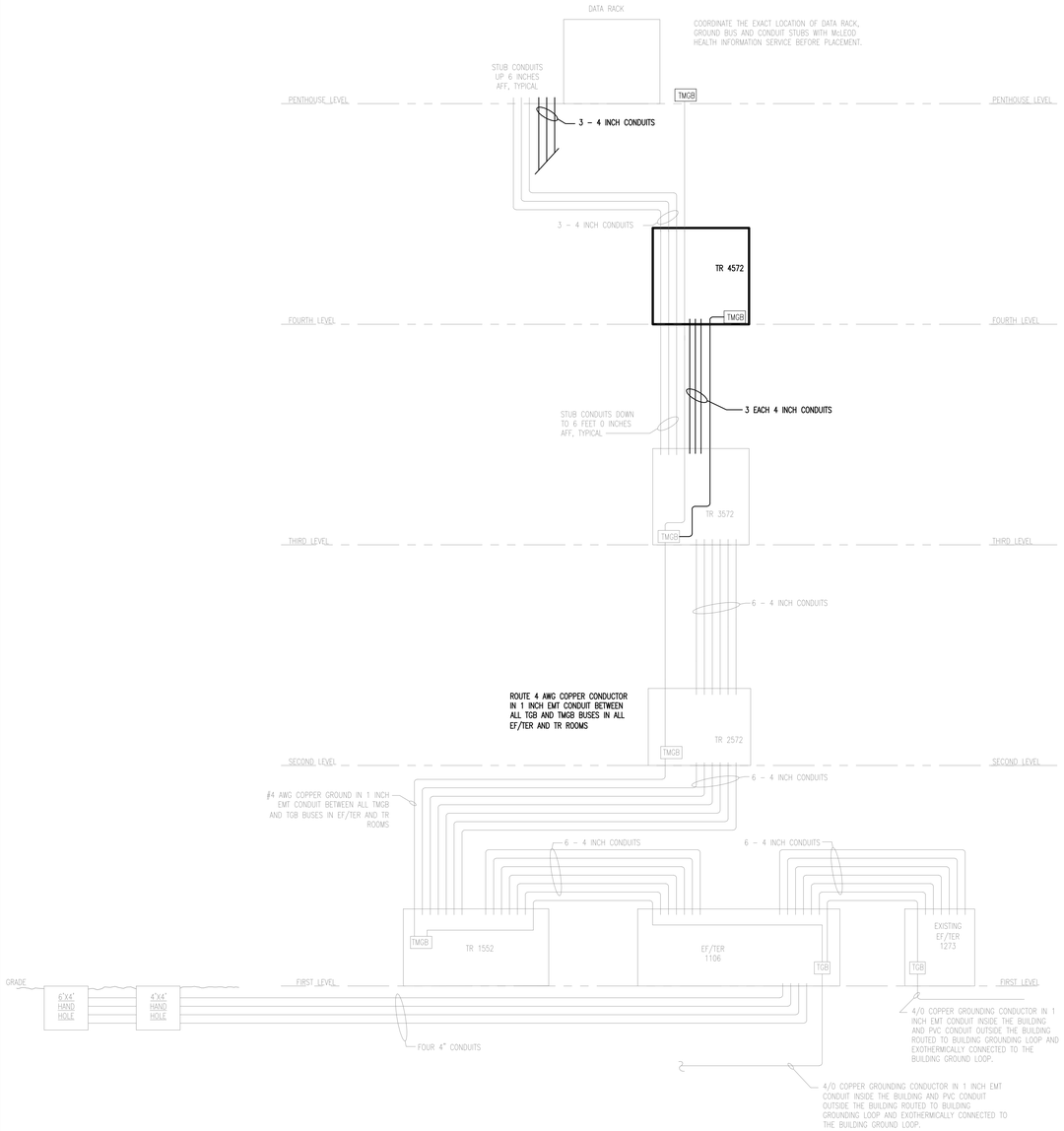

A1 TELEPHONE ROOM RISER DIAGRAM

SCALE: NTS

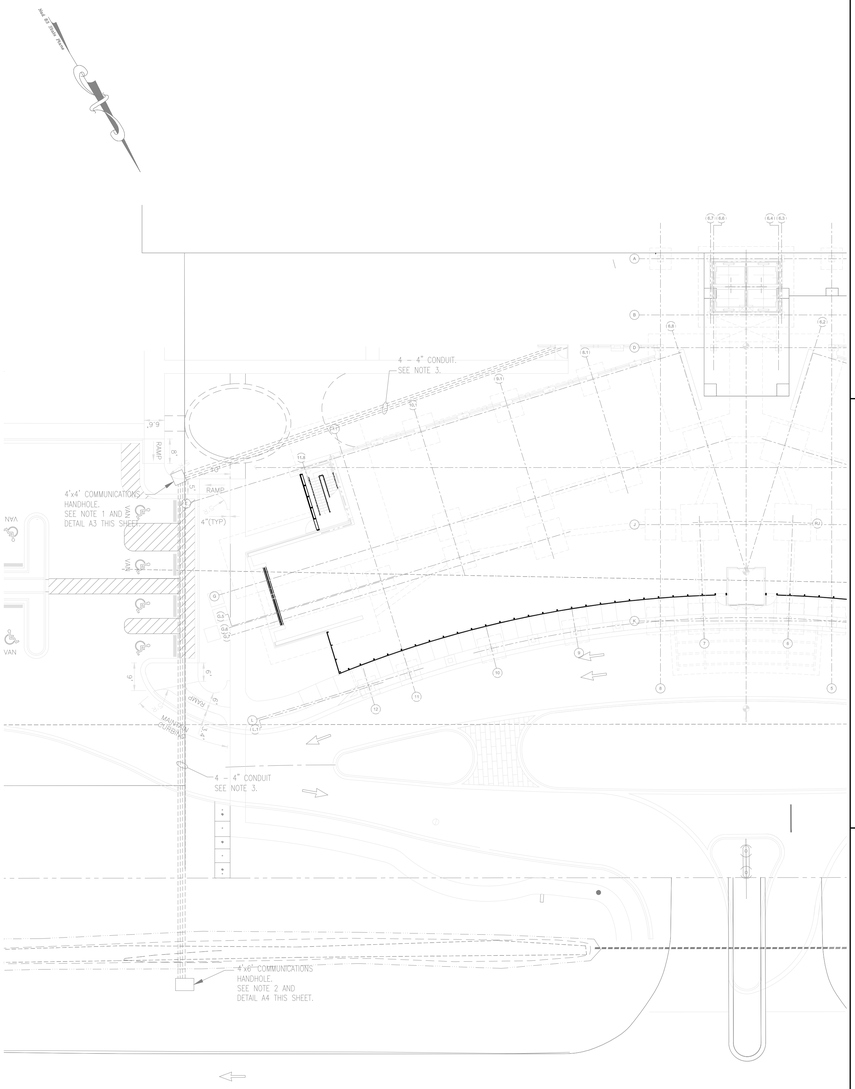

B3 ELECTRICAL SITE PLAN

SCALE: 1"=20'

TMGB 1/4" X 4" X 18", 90 PERCENT CONDUCTIVE COPPER BUS BAR INSTALLED ON 600 VOLT PORCELAIN INSULATORS AT 18" AFF ON WALL.

TGB 1/4" X 4" X 18", 90 PERCENT CONDUCTIVE COPPER BUS BAR INSTALLED ON 600 VOLT PORCELAIN INSULATORS AT 18" AFF ON WALL.

EF/TER ENTRANCE FACILITY/TELECOMMUNICATIONS EQUIPMENT ROOM AS DEFINED BY NFPA 99.

TR TR TELECOMMUNICATIONS ROOM AS DEFINEDR BY NFPA 99.

ALL CONDUITS, CABLE TRAYS ETC., IN EACH EF/TER AND TR ROOM SHALL BE BONDED TO THE ROOM GROUNDING BUS IN EACH ROOM

A1 LEGEND

A2 NOT USED

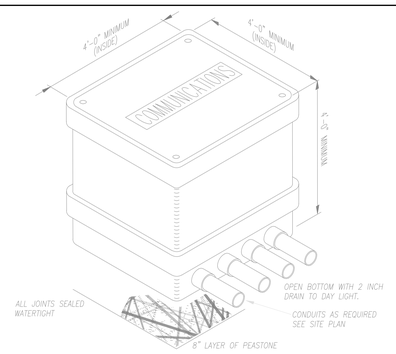

A3 HANDHOLE DETAIL

SCALE: NTS

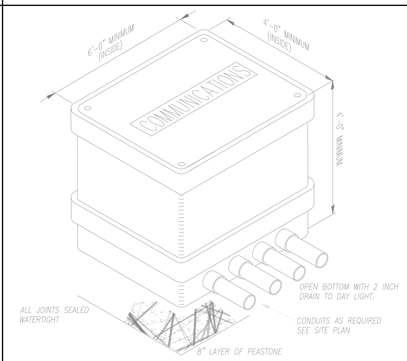

A4 HANDHOLE DETAIL

SCALE: NTS

1. PROVIDE QUAZITE PG STYLE UTILITY ENCLOSURE FOR COMMUNICATIONS PULL BOX. PULL BOX TO BE CAT. # PC4848BA48 WITH PC4848HH00-12 COVER. COORDINATE LOCATION WITH OTHER UTILITIES.
2. PROVIDE QUAZITE PG STYLE UTILITY ENCLOSURE FOR COMMUNICATIONS PULL BOX. PULL BOX TO BE CAT.# PC4872BA48 WITH PC4872HH00-12 COVER. COORDINATE LOCATION WITH OTHER UTILITIES.
3. COORDINATE ROUTING OF 4" CONDUITS WITH OTHER UTILITIES IN THE AREA TO AVOID CONFLICTS.

A5 NOTES

DesignStrategies
Planning
Architecture
Interior Architecture
Landscape Architecture
Engineering

130 South Main Street
Greenville, SC 29601
T (864) 527-6500
F (864) 233-8385

REVISIONS

NO	DATE	DESCRIPTION
0	12.24.2020	ISSUED FOR BID

McLeod Health
The Choice for Medical Excellence.

SEACOAST HOSPITAL
50-BED ADDITION

LITTLE RIVER, SC

KEYPLAN

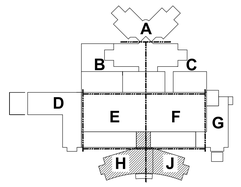

TRUE NORTH

20 0 20
(IN FEET)
SCALE: 1 inch = 20 ft.

PROJECT NO: **0370.45**
DATE: **12.24.2020**
COPYRIGHT © 2020 **DesignStrategies, LLC**

TELEPHONE ROOM RISER DIAGRAM AND DETAILS

EY700