1.0 CODES AND STANDARDS:

1.1 "2018 North Carolina State Building Code" and "International Building Code", 2015.

1.2 "Minimum Design Loads for Buildings and other Structures" SEI/ASCE 7-16.

1.3 "Building Code Requirements for Structural Concrete (ACI 318-14)" American Concrete Institute 2014.

1.4 "Manual of Standard Practice", Concrete Reinforcing Steel Institute, latest edition.

1.5 "Specification for Structural Steel Buildings (AISC 360-10)" American Institute of Steel Construction, 2011 – 14th Edition

1.6 "Structural Welding Code – Steel (AWS D1.1)" and "Structural Welding Code – Reinforcing Steel (AWS D1.4)", American Welding Society.

1.7 "Building Code Requirements for Masonry Structures", ACI 530-13, ASCE 5-13, TMS 402-13.

1.8 "Standard Specifications for Joist Girders (JG-10)", "Standard Specifications for Open Web Steel Joists, K-Series (k-10)", "Standard Specifications for Long Span Steel Joist, LH Series and Deep Longspan Steel Joists, DLH Series (LH/DLH-1.1)", Steel Joist Institute

1.9 "Design Manual For Floor Decks and Roof Decks", Steel Deck Institute, latest edition.

2.0 DESIGN LOADS:
Project Located in: City of Wilmington, County of New Hanover, State of North Carolina.

2.1 Risk Category = II

2.2 Gravity Loads: (Reduced where allowed)

GRAVITY LOADS		
Location	Uniform (psf)	Concentrated (lbs) (Over 2.5'x2.5')
Roof Loads:		
Dead Load	20	
Live Load	20	300
Mechanical Area (inside screen wall)	65	
Floor Loads:		
Dead Load	72	
Floor Live Loads:		
Office	81	2000
Assembly	100	

2.3 Drifting Snow Loads per N.C. Building Code.

Pg = 10 psf
I = 1.0
Ce = 0.9
Ct = 1.0

2.4 Wind Loads per N.C. State Building Codes, 2018 edition (IBC 2015) & ASCE 7-16 (3-second gust)

Main Wind Force Resisting System:
V 146 mph
Exposure Category "B"

Building is enclosed & Internal Pressure coefficient (GCpi) = +0.18 & -0.18
Topographic Factor Kzt = 1.0
Wind Directionality Factor, Kd = 0.85

Calculated Wind Base Shear (For MWFRS)
Vx = 188k Vy = 308k

Components and Cladding:
V 146 mph
Exposure Category "B"

Components and Cladding Wind Pressure (psf)										
Walls	Area = 10ft^2		Area = 20ft^2		Area = 50ft^2		Area = 100ft^2		Area = 500ft^2	
Zone 4	44.5	-48.2	42.5	-46.3	39.9	-43.6	37.8	-41.6	37.8	-41.6
Zone 5	44.5	-59.5	42.5	-55.5	39.9	-50.2	37.8	-46.3	37.8	-46.3
Roof	Area = 10ft^2		Area = 20ft^2		Area = 50ft^2		Area = 100ft^2		Area = 500ft^2	
Zone 1	18.0	-70.9	16.9	-66.2	16.0	-60.1	16.0	-55.4	16.0	-55.4
Zone 1'	18.0	-40.7	16.9	-40.7	16.0	-40.7	16.0	-40.7	16.0	-40.7
Zone 2	18.0	-93.9	16.9	-87.4	16.0	-79.5	16.0	-73.5	16.0	-73.5
Zone 3	18.0	-127.4	16.9	-115.4	16.0	-99.5	16.0	-87.4	16.0	-87.4

Notes:
1. Areas noted are effective wind areas as per ASCE 7-16, 26.2 definitions.
2. See figures below for Zone locations.
3. Plus and minus signs signify pressures acting toward and away from surfaces, respectively.
4. Design pressures shown in table are strength design wind pressures. Allowable stress design wind pressures may be calculated by factoring the pressures by 0.6.
5. Design pressures for effective wind areas between those noted in schedule may be interpolated.
6. Tributary area = greater of LxW or LxL/3.
7. Deflections may be calculated based on 42% of these loads.

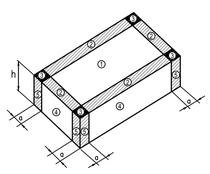

COMPONENT & CLADDING WALL PRESSURES

Flat Roof

a = 10ft "corner zone"

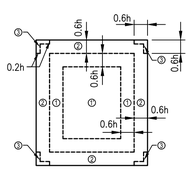

COMPONENT & CLADDING ROOF PRESSURES

Flat Roof

h = 43ft "corner zone"

2.5 Seismic Loads per 2018 North Carolina State Building Code (IBC 2015) & ASCE 7-16

Risk Category = II
Site class = "D" (per geotechnical report)
Spectral Response Coefficients:
SDS = 0.159g
SD1 = 0.106g
Cs = 0.053g

Seismic Design Category = B
Seismic Importance Factor = 1.0
Basic Seismic – Force – Resisting System
Building Frame System – Special Steel Concentrically Braced Frames

RX=RY=3.0, OX=OY=3.0, CDX=CDY=3.0
Design Base Shear Vx = 174k Vy = 174k
Building Height Limit = NL
Analysis Procedure – 12.8.1 ASCE 7-16
Equivalent Lateral Force Procedure

2.6 Guardrail designed per North Carolina State Building Code, Section 1607.8

Guardrail:
Uniform load = 50 plf, any direction – per 1607.8.1
Concentrated load = 200 lbs, any direction – per 1607.8.1.1
Intermediate Rail: (all those expect handrail) per 1607.8.1.2

2.7 Flood Loads:
Project is not located in a flood zone.

3.0 FOUNDATIONS:

3.1 Foundation design is based on geotechnical report # 22:2973 by ECS Southeast, LLP, Wilmington, NC dated December 4, 2020. This report is available for inspection at the office of the architect or owner. The recommendations contained in this report are herein made part of the requirements of these contract documents.

3.2 Footings shall bear on strata capable of sustaining a minimum bearing pressure of 1500 psf.

3.3 Top of footing (T/FTG) elevations are shown on the drawings or are to be determined by the Contractor in the field in accordance with the guidelines set forth in the drawings.

3.4 Bottom of exterior footings, grade beams and walls shall bear at a minimum depth of 1'-0" below final grade for frost protection.

3.5 Testing and Inspection:
a. All areas to have slabs on grade shall be proof rolled in accordance with and under observation of the Geotechnical Engineer and approved prior to preparation for concrete placement.

b. All foundation bearing strata shall be inspected and approved by the Geotechnical Engineer prior to any concrete placement.

c. Geotechnical Engineer shall be the sole judge as to suitability of all foundation and/or slab bearing strata.

d. Footing bearing elevations shall be adjusted in the field as required to meet the design bearing pressures by additional excavation or compaction and/or backfilling or by other means acceptable to the Geotechnical Engineer.

3.6 Undercutting to remove existing fill beneath footings and slab shall be performed at the direction of the Geotechnical Engineer.

3.7 Engineered Fill: All fill material shall be selected in accordance with the Geotechnical Report Material shall be a clean, low plastic soil with a plasticity index less than 30 (less than 15 is preferred), liquid limit less than 50, and unit weight of 120 pcf (+ 5 pcf)

3.8 Compaction: All fill shall be placed in loose lifts not exceeding 8 inches in thickness and compacted to a minimum of 96 percent Standard Proctor (ASTM D-698) except that the top 12 inches shall be compacted to a minimum of 98 percent Standard Proctor. Moisture shall be controlled to within 3 percent above or below optimum content.

3.9 Remove all topsoil and organic materials. The stripping should extend at least 10' beyond the proposed construction limits.

3.10 Contractor shall review all construction considerations as outlined in the Geotechnical report and bid accordingly.

4.0 CONCRETE:

4.1 Concrete Strength:
All concrete shall be in accordance with the American Concrete Institute (ACI) 301 and 318.

4.2 Concrete shall have a 28 day compressive strength and density as follows:
a. Footings, Grade Beams, and Interior Slab-on-grade.....3,000psi, Density = ±145pcf
b. Elevated Slab on Deck.....3,000psi, Density = ±145pcf
c. Exterior Slab on Grade.....4,000psi, Density = ±145pcf
d. CMU Grout Fill.....3,000psi pea gravel mix, Density = ±145pcf, Slump 8"-11" or grout per Structural Masonry Notes, this sheet.

4.3 Concrete Mix Designs:
a. Submittals: Submit written reports of each proposed concrete mix not less than 15 days prior to the start of work.
b. Mix designs, including water, cement ratios and slumps, shall be prepared in accordance with ACI 301-05, Section 4, Cement shall conform to ASTM C 150 Type 1 or at contractor's option, ASTM C 595 Type IP where fly ash is permitted. Normal weight aggregate shall conform to ASTM C 33 and light weight aggregate shall conform to ASTM C 330. No admixtures containing calcium chloride shall be permitted in any concrete.
c. Aggregate size shall be #67 stone for supported slabs or other formed concrete elements; #57 stone for slabs on grade and footings or other concrete elements formed from and poured against earth; #89 stone for masonry grout.
d. Water reducing admixture shall be used in all concrete.
e. Air entraining admixture in accordance with ACI 301 shall be used in all concrete exposed freezing and thawing during construction or service conditions.
f. Concrete subjected to freezing/thawing shall have a maximum water/cement ratio of 0.45 and shall contain the amount of air entraining agent specified in ACI 301-05 Section 4.

4.4 Curing:
See specifications for curing method options and apply within two (2) hours after completion of finishing to all concrete flatwork and walls, U.N.O., other than footings and grade beams.

4.5 Use a non-corrosive, non-chloride accelerating admixture in concrete exposed to temperatures below 40 degrees. Uniformly heat the water and aggregates to a temperature of not less than 50 degrees. Place and cure concrete in accordance with ACI 306.

4.6 When hot weather conditions exist, place and cure concrete in accordance with ACI 301. Cool ingredients before mixing to maintain concrete temp. at time of placement below 90 degrees.

4.7 Reinforcing in all abutting concrete, including footings shall be continuous through or around all corners or intersections. Dowels or splices shall be equal in size and spacing to the reinforcing in the abutting members.

4.8 Refer to architectural drawings for door and window openings, drips, reglets, washes, masonry anchors, brick ledge elevations, slab depressions and miscellaneous embedded plates, bolts, anchors, angles, etc.

4.9 Refer to plumbing, mechanical and electrical drawings for underfloor, perimeter and other drains and for sleeves, outlet boxes, conduit, anchors, etc. The various trades are responsible for their items.

4.10 Base plates, anchor rods, support angles and other steel exposed to earth or granular fill shall be covered with a minimum of 3" of concrete.

4.11 Fill slabs, not shown on the structural drawings, shall be reinforced with a minimum of 3.0 lbs/yd^3 of synthetic macro-fibers – see plan notes, unless noted otherwise on other drawings.

4.12 Finish surfaces to the following tolerances, according to ASTM E 1155, for a randomly trafficked floor surface:
a. Specified overall values of flatness, F(F) 25; and of levelness, F(L) 20; with minimum local values equal to ⅔ of the overall flatness and levelness values.
b. The composite F(F) and F(L) numbers shall be measured and reported within 72 hours after completion of slab concrete finishing operations and before removal of any supporting shores.

4.13 Non-shrink grout shall be pre-mixed, non-corrosive, non-metallic, non-staining containing silica sands, Portland cement, shrinkage compensating and water reducing agents. Product shall only require the addition of water. Minimum compressive strength shall be 2500 psi after one day and 7000 psi after 28 days. Grout shall be free of gas producing or air releasing and oxidizing agents and contain no corrosive iron, aluminum or gypsum.

4.14 Provide concrete grout – not mortar – for reinforced masonry lintel and bond beams where indicated on drawing or as scheduled.

4.15 Tolerance for anchor rods and other embedded items shall be per the AISC Code of Standard Practice Section 7.5.

4.16 Unless otherwise shown in the architectural drawings, provide 3/4-inch chamfers at all column, wall, slab or beam edges that are exposed to view in the finished structure.

4.17 Concrete cover for cast-in-place concrete reinforcement:
Concrete cast against & permanently exposed to earth:.....3 Inches
Concrete exposed to earth or weather:
No. 6 through No. 18 Bars:.....2 Inches
No. 5 Bar and smaller:.....½" Inches
Concrete not exposed to weather or in contact with ground:
Slabs, Walls, Joists:
No. 11 Bar and smaller:.....¾" Inches
Beams, Columns:
Primary Reinforcement, Ties, Stirrups:.....½" Inches

5.0 REINFORCING STEEL:

5.1 Reinforcing shall be domestic new billet steel conforming to ASTM A615, Grade 60 or 60S including stirrups and ties, except that reinforcing which is required to be welded shall conform to ASTM A706.

5.2 Field bending of concrete reinforcing steel is not permitted.

5.3 Welded wire mat and fabric shall conform to ASTM A184 and A185 respectively and shall be provided in flat sheets. Welded wire mat/fabric shall be lapped 0'-6" at all splices.

5.4 Bar Splices:

	f'c = 3,000psi		f'c = 4,000psi		f'c = 5,000psi	
Bar Size	Ld (in)	Class "B" Lap Splice (in)	Ld (in)	Class "B" Lap Splice (in)	Ld (in)	Class "B" Lap Splice (in)
#3	17	22	15	19	13	17
#4	22	29	19	25	17	23
#5	28	36	24	31	22	28
#6	33	43	29	37	26	34
#7	48	63	42	54	38	49
#8	55	72	48	62	43	56

1. Values are based on normal weight concrete.
2. Ld = minimum embed of rebar
3. Class "B" lap splice refers to minimum distance bars must be lapped for a full tension splice.

6.0 STRUCTURAL MASONRY:

6.1 All structural masonry shall conform to ACI 530 standards as appropriate to the material.

6.2 Concrete Masonry Units (CMU):
a. Units shall be lightweight cellular units conforming to ASTM C 90, Grade N-2. Concrete masonry net area unit strength shall be no less than 2,000psi in accordance with ASTM C 140, with a unit weight not exceeding 95 pcf.
b. Design compressive strength of CMU (fm) = 2,000psi.

6.3 Mortar shall conform to ASTM C 270. Mortar shall be type "S" and shall conform to the ASTM C270 proportion requirements.

6.4 Neither type "N" mortar nor masonry cement shall be used as part of the lateral force resisting system.

6.5 Grouting:
a. Grout shall conform to ASTM C476 as specified by proportion. Masonry grout shall conform to the ASTM proportion requirements for coarse grout with a slump of 8 to 11 inches. Contractor may substitute grout with pea gravel concrete masonry fill, see note 4.2 this sheet.
b. All bond beams shall be filled with grout and reinforced as indicated on the drawings (details or schedules). Mortar fill is not permitted.
c. All masonry wall cells or cavities indicated as reinforced shall be grouted for the full height of the wall, unless specifically noted otherwise on the drawings. Unreinforced walls indicated as grouted shall be grouted full height, unless specifically noted otherwise. Mortar fill is not permitted.
d. All masonry cells or cavities below grade shall be grouted solid unless specifically noted otherwise on the drawings. Mortar fill is not permitted.
e. Vertical grouting shall be low lift or high lift as follows:
(1) Low lift grouting shall be used for all cavity walls and may be used for all walls at the option of the Contractor. Lifts shall not exceed 4'-0" in height.
(2) High lift grouting is permissible only for filling of cellular masonry units and shall not exceed 12'-8" in height. Clean out holes shall be provided at the base of each grouted cell.
f. Grouting shall be stopped 1-1/2" below the top of a course to form a key at the joint.
g. Grouting of masonry beams or lintels shall be done in one continuous operation.
h. Consolidate pours with mechanical vibrator and reconsolidate by mechanical vibration after initial water loss and settlement has occured.
i. Mechanical vibrator shall be a low velocity vibrator with a ¾" head.

6.6 Masonry Reinforcing:
a. Foundation dowels may slope a maximum of 1:6 to align with wall cavities or vertical CMU cores. Greater slopes will require replacement of the foundation dowels.
b. Spliced reinforcing shall be lapped a length calculated per IBC 2107.5 OR 15" OR as shown on drawings, whichever is greatest. All splices shall be wired together.
c. Vertical reinforcing bars shall have a minimum clearance of ¼" from masonry and shall be held in position top and bottom and at intervals not exceeding 4'-0". Accessories for such support shall be used. Provide "AA Wire Products Company" (or approved equal) Rebar Positioner AA225 or AA239 for vertical bars and AA238 for horizontal bars or approved equal products from other suppliers.
d. Horizontal joint reinforcing shall be lapped no less than 6" all splices, including corners and tees where no control joint is used.
e. All horizontal joint reinforcing shall stop at control joints.
f. Horizontal reinforcing in bond beams shall be continuous through control joints.
g. All CMU walls shall have joint reinforcing @ 16"o.c. All joint reinforcing shall have (2) 9 gauge (0.148"ø or W1.7) side rods & cross rods @ 16"o.c.

6.7 Masonry contractor shall provide for and coordinate with other trades for placement of all items to be embedded or built into the masonry.

MINIMUM SPLICING LENGTH (Ld) FOR MASONRY	
BAR SIZE	SPLICE LENGTH
#3	16"
#4	22"
#5	26"
#6	43"
#7	60"

LISLE Architecture & Design, Inc.

Lisle Architecture & Design, Inc.
614 Market Street
Wilmington, NC 28401
(910) 763.6053 (o)
(910) 763.4517 (f)

5 W. Hargett St. Suite 312
Raleigh, NC 27601
(919) 980.0283 (o)

www.LisleArchitecture.com

WOODS ENGINEERING
Consulting Structural Engineers
254 North Front Street
Suite 201
Wilmington, NC 28401
Phone: 910.348.8007
www.woodseng.com

WOODS ENGINEERING, P.A. CORPORATE SEAL No. C-1806 NORTH CAROLINA

NORTH CAROLINA PROFESSIONAL SEAL 19475 ENGINEER DON R. WOODS

Digitally signed by Don R. Woods, PE
DN: C=US, E=donwoods@woodseng.com, O=WOODS ENGINEERING, P.A., CN=DON R. WOODS, S=North Carolina
Date: 2020.12.15 11:42:23-05'00'

Smith Office - Sir Tyler IV
Wilmington, NC

NO.	REV/SUB.	DATE

DATE: 12.15.2020 - CONSTRUCTION DOCUMENTS

PROJECT NO: 20131

GENERAL NOTES

S1.01

Plotted:12.15.2020 THIS DRAWING IS THE LEGAL PROPERTY OF LISLE ARCHITECTURE AND DESIGN, INC. AND IS NOT TO BE COPIED OR REPRODUCED IN WHOLE OR IN PART WITHOUT THE PERMISSION OF THE ARCHITECT - COPYRIGHT 2020

7.3 All members shown are standard designations of "Dietrich Industries, Inc."

7.4 Design of members indicated in structural drawings is based on minimum properties of products produced by "Dietrich Industries." No substitution of materials is acceptable for use without prior approval of the structural engineer. Substitutions shall meet or exceed all properties produced by "Dietrich Industries, Inc."

7.5 All shop drawing submittals shall show layout, spacing, sizes, thicknesses and types of cold–formed metal framing, fabrication, and fastening and anchorage details, including mechanical fasteners. Show reinforcing channels, opening framing, supplemental framing, strapping, bracing, bridging, splices, accessories, connection details and attachment to adjoining work.

7.6 Shop drawings, design calculations and other structural data shall be prepared and sealed by a qualified engineer. The Structural Engineer shall be legally qualified to practice in the jurisdiction where the project is located and shall be experienced in providing engineering services of the kind indicated.

7.7 All framing components shall be cut squarely for attachment to perpendicular members or as required for an angular fit tight against abutting members. All load bearing stud/walls shall be factory assembled into panels with studs bearing squarely and fully in top and bottom tracks.

7.8 Fastening components shall be by self–drilling screws or by welding as defined below UNO on the drawings.

7.9 Screwed connections:
- a. Screws shall be type S–12 or type S–4 for all framing members per manufacturer's recommendations.
- b. A minimum of three (3) exposed threads shall penetrate through at joined materials.
- c. Corrosion–resistant cadmium–plated screws shall be used for screws attaching metal lath, masonry ties, and other exterior materials.

7.10 Welded connections:
- a. Gas metal arc welding (GMAW) shall be used for 20 ga. Or lighter members. AWSE–705–3, E–705–E, E–705–6 wire electrodes .030"–.035" diameter shall be used with carbon dioxide, argon–oxygen or argon–carbon dioxide shielding. Welding equipment 60–100 amperes at 25 volts using 220–volt 3–phase electric service.
- b. Shielded metal arc welding (SMAW) shall be used for 18 ga' and heavier members. AWS E–6012, E–6013, or E–7014 electrodes of 3/32" or 1/8" diameter shall be used. Welding equipment heat setting shall be varied dependent on material thickness.
- c. All welds shall be touched up with zinc rich paint, or paint similar to that used by the framing member manufacturer.

7.11 Alignment of studs (plumbness) and walls (straightness) shall be within 1/960 of their respective heights and lengths.

7.12 Studs shall be plumbed, aligned, and securely attached to top and bottom runners. Splices in studs are not permitted.

7.13 Where manufacturer's recommendations for erection, attachment, assembly, bracing, alignment, or other installation, or assembly requirements are more stringent than indicated in these drawings, the manufacturer's recommendations shall apply.

STEEL THICKNESS

Gauge:	Mils	Design Thickness		Minimum Thickness		Yield Strength
		Inches	mm	Inches	mm	ksi
20	33	0.0346	0.879	0.0329	0.836	33
18	43	0.0451	1.146	0.0428	1.087	33
16	54	0.0566	1.438	0.0538	1.367	50
14	68	0.0713	1.811	0.0677	1.720	50
12	97	0.1017	2.583	0.0966	2.454	50

8.0 STEEL JOISTS:

8.1 All steel joists shall be designed, fabricated, and erected in accordance with the SJI Specifications.

8.2 Joist ends shall be fixed and bridging shall be placed prior to application of any loads.

8.3 End Support:
- a. Minimum bearing requirements shall be in accordance with the SJI Specification. Extended joist ends for bearing on masonry shall be provided by the joist manufacturer where required to accommodate bearing conditions shown on the drawings.
- b. K Series joists shall be welded to supports with 1/8" fillet welds, one each side, 2" long.
- c. Bolt joists as indicated below to structural steel supports at column centerlines or where joists do not space on centerlines, bolt connections for each joist adjacent to centerline. K Series: 2 @ 1/2–inch diameter bolts (minimum)

8.4 Joist bridging:
- a. Shall be placed in accordance with the SJI Specification U.N.O. and shall be horizontal rods or angles at top & bottom chords for all K Series joists.
- b. Bridging that terminates at or is interrupted by structural steel members, shall be welded or bolted thereto. Provide diagonal ("X") bridging for ends of bridging lines terminating at walls/beams.

8.5 Holes in joist chords are not permitted, except at bearing and bolted connections.

8.6 All joists (40) forty feet and longer shall require a row of bolted bridging to be in place before slackening of hoisting lines.

9.0 STRUCTURAL STEEL:

9.1 All structural steel shall be of the grades indicated below, unless noted otherwise on plans or details.
Rolled shapes ASTM A992 Gr. 50
Steel pipe ASTM A53, Type E or S, Grade B, Fy–35ksi
Structural tubing ASTM A500, Grade B, Fy–46ksi
Plates and bars ASTM A36 U.N.O.
Anchor rods ASTM F1554, Grade 36 U.N.O.
Miscellaneous ASTM A36 U.N.O.

9.2 All structural steel shall be detailed, fabricated and erected in accordance with the AISC Code of Standard Practice. The fabricator is responsible for the design of connections not shown on the structural drawings. For the purpose of the connection design, the fabricator shall retain a professional engineer registered in the state where the project is located. The engineer shall seal and sign each shop drawing containing connection design. A note shall accompany the drawings stating that the seal is for "Connection Design Only".

9.3 Connection Design:
- a. Generally, connections shown on the drawings are schematic and are intended to show the relationship of the members.
- b. Connections shall be designed for one–half (1/2) the allowable uniform load on the member, as defined in Part 3, "Allowable Loads on Beams" tables in the AISC "Manual of Steel Construction", 14th Edition, See plan notes for design methodology and minimum reactions.

9.4 Bolted connections:
- a. Bearing type connections shall be snug tight with A325N or A490N bolts, U.N.O. Oversized and long–slotted holes are NOT permitted U.N.O. At single shear plate connections, provide bearing type fasteners with horizontal short slotted holes. All bolts shall be snug tight. DO NOT over torque bolts.
- b. Protruding bolt heads, shafts or nuts shall not extend nor prohibit the application of architectural finishes or placement of steel deck at its correct location and elevation.
- c. Connection designer is responsible for verifying the axial capacity after a section is reduced for bolt holes. Member size may be increased or plates added to maintain required capacity.
- d. Bolted connections shall be assembled and inspected in accordance with RCSC–2009 (Specification for Structural Joints Using High–Strength Bolts).

9.5 Welded connections:
- a. All welding shall be in accordance with the "Structural Welding Code – Steel" (AWS D1.1) of the American Welding Society, Latest Edition.
- b. Electrodes for welding shall comply with the requirements of Table 4.1.1 of the AWS code.
- c. At Moment Connections and Braced Frames Provide filler Metal that has a minimum CVN Toughness of 20 ft–lbs at minus 20 degrees F, As determined by AWS classification or Manufacturer Certification.
- d. Proof of welder certification shall be available at the job site during times of inspection.

9.6 Minimum plate thickness shall be 3/8" U.N.O.; minimum bolt diameter shall be 3/4–inch U.N.O.; minimum shop weld shall be 3/16" and minimum field weld shall be 1/4–inch U.N.O.

9.7 All re–entrant corners (such as copes and blocks) shall be cut and shaped notch free with a radius of at least 1/2–inch.

10.0 STEEL DECK:

10.1 Steel roof deck shall be galvanized, Type B, 1 1/2" deep, 20 gauge, U.N.O.

10.2 For steel roof deck spans, mechanically fasten side laps at mid–span using "Buildex", self–tapping TEKS No. 10 or larger machine screws or as noted on plan.
Provide additional sidelap fasteners where noted on plan.
Fasten roof deck to supporting members as noted on plan.

10.3 Do not hang pipes or ducts from steel roof deck. Fasten roof deck to supporting members as noted on plan.

10.4 COMPOSITE FLOOR DECK:
- a. Deck shall be 2" – 18 gauge, galvanized, composite floor deck. Vulcraft 2VLI18 or approved equal.
- b. Deck shall be galvanized per ASTM A924–94 (G60)
- c. Fasten composite floor deck to supporting members by not less than 3/4–inch puddle welds or elongated welds of equal perimeter, spaced not more than 12" o.c. with a minimum 2 welds per unit at each support.

11.0 COMPOSITE BEAMS:

11.1 Composite beams and girders DO NOT require temporary shoring for construction loads (wet concrete + 20 psf) U N O on the drawings. Contractor is responsible for verifying the construction load imposed on the structure. Where questions as to capacity arise, Contractor shall inform the Structural Engineer prior to proceeding with any work.

11.2 See details on S1.03 for typical stud layouts.

11.3 The number of shear connectors (studs) shown is based upon obtaining the full horizontal shear capacity indicated on the AISC "Load and Resistance Factor Design Specification for Steel Buildings" (LRFD) Chapter "I" for each stud for the strength and density of concrete where used. See composite steel deck notes also.

11.4 Studs shall be 3/4–inch diameter and shall extend not less than 1–1/2 inches above the top of the steel deck and shall not have less than 1/2–inch concrete cover above top of stud after welding and shall conform to ASTM A108.

11.5 The number of studs on a beam or between any two connections along a beam is shown on the drawings. Spacing of studs within the length shown shall be as uniform as possible.

11.6 No shop paint shall be applied to any studs nor to top flanges or surfaces of members receiving field welds.

11.7 Stud capacity varies with the type and length of the stud and with the properties of the composite deck. The deck supplier shall provide deck with a configuration that does not reduce the stud capacity per AISC requirements.

11.8 Stud type, length, shear value and detailed layout shall be submitted with the composite metal deck shop drawings.

11.9 Break ceramic ferrules (arc shields) loose and remove from deck.

11.10 A stud shear connector welded through the metal deck may take the place of a 3/4–inch puddle weld in order to secure the deck to the steel framing. Do not weld shear connectors through two layers (lapped ends) of deck units.

12.0 CONSTRUCTION AND SAFETY:

12.1 Woods Engineering P.A.'s responsibility is limited to the details and information shown on these drawings. It is the responsibility of the Contractor to provide adequate safety measures required by local codes as well as OSHA Standards for the Construction Industry.
This should include, but not be limited to the following:
Shoring to protect new as well as existing structures.
Necessary Scaffolding.
Material Handling Equipment.
Trench Boxing.

13.0 SPECIAL INSPECTIONS:

13.1 Refer to Sheet S1.04 for all Structural Material Inspections requirements.

14.0 SHOP DRAWING SUBMITTAL:

14.1 See Project Manual

14.2 Contractor shall submit Electronic copies (PDF format) of each shop drawing for review. Shop drawings shall be reviewed by the Contractor prior to submission to the Engineer. The Contractor shall allow 10 working days for shop drawing approval.

ABBREVIATIONS

@	AT
&	AND
AB	ANCHOR BOLTS
ACI	AMERICAN CONCRETE INSTITUTE
ADDL	ADDITIONAL
AFF	ABOVE FINISHED FLOOR
AISC	AMERICAN INSTITUTE OF STEEL CONSTRUCTION
AISI	AMERICAN IRON AND STEEL INSTITUTE
ALT	ALTERNATE
ARCH	ARCHITECTS – ARCHITECTURAL
ASTM	AMERICAN SOCIETY FOR TESTING AND MATERIALS
AWS	AMERICAN WELDING SOCIETY
B, BOTT	BOTTOM
BCX	BOTTOM CHORD EXTENSION
BFF	BELOW FINISHED FLOOR
BLDG	BUILDING
BM	BEAM
BOS	BOTTOM OF STEEL
BRG	BEARING
BTWN	BETWEEN
CFS	COLD FORMED STEEL
CJ	CONTRACTION JOINT
CL	CENTERLINE
CLR	CLEAR
CMU	CONCRETE MASONRY UNITS
COL	COLUMN
CONC	CONCRETE
CONN	CONNECTION
CONST JT	CONSTRUCTION JOINT
CONT	CONTINUOUS
CONTR	CONTRACTOR
CSJ	COMPOSITE STEEL JOIST
CTRD	CENTERED
DBA	DEFORMED BAR ANCHOR
DD	DELEGATED DESIGN
DEFL	DEFLECTION
DEPR	DEPRESSION – DEPRESSED
DET	DETAIL
DIAG	DIAGONAL
ø	DIAMETER
DIM	DIMENSION
DIST	DISTANCE
DWG(S)	DRAWING(S)
DWL(S)	DOWEL(S)
EA	EACH
ELEV	ELEVATION
EMBED	EMBEDDED – EMBEDMENT
ENG	ENGINEER
EOR	ENGINEER OF RECORD
EQ	EQUAL
EQUIP	EQUIPMENT
EF	EACH FACE
EJ	EXPANSION JOINT
EOD	EDGE OF DECK
EOM	EDGE OF MASONRY
EOS	EDGE OF SLAB
EOW	EDGE OF WALL
EW	EACH WAY
EXIST	EXISTING
EXP	EXPANSION
EXT	EXTERIOR
FDN	FOUNDATION
FFE	FINISHED FLOOR ELEVATION
FS	FAR SIDE
FTG	FOOTING
GA	GAUGE
GALV	GALVANIZED
GT	GIRDER TRUSS
HD	HEADED
HI	HIGH
HORIZ	HORIZONTAL
HSS	HOLLOW STRUCTURAL SECTION
HT	HIP TRUSS
IFM	INSIDE FACE OF MASONRY
INT	INTERIOR
JBE	JOIST BEARING ELEVATION
JT	JOINT
K	KIP–S
KB	KICKER BRACE
KSI	KIPS PER SQUARE INCH
(L)	LONG SIDE REINFORCEMENT
LB	LONG BAR
LBS	POUNDS
LLH	LONG LEG HORIZONTAL
LLV	LONG LEG VERTICAL
LO	LOW
LOC	LOCATION
LWC	LIGHT WEIGHT CONCRETE
MAX	MAXIMUM
MC	MOMENT CONNECTION
MECH	MECHANICAL
MFR	MANUFACTURER
MID	MIDDLE
MIN	MINIMUM
MISC	MISCELLANEOUS
MOW	MIDDLE OF WALL
MP	MASONRY PILASTER
d	NAILS – PENNY
No	NUMBER
NS	NEAR SIDE
NTS	NOT TO SCALE
NWC	NORMAL WEIGHT CONCRETE
OC	ON CENTER
OFB	OUTSIDE FACE OF BRICK
OFM	OUTSIDE FACE OF MASONRY
OFS	OUTSIDE FACE OF STUD
OPNG	OPENING
OPP	OPPOSITE HAND
PEBS	PRE–ENGINEERED BUILDING SUPPLIER
PED	PEDESTAL
PL	PLATE
PSF	POUNDS PER SQUARE FOOT
PSI	POUNDS PER SQUARE INCH
PSL	PARALLEL STRAND LUMBER
PLF	POUNDS PER LINEAR FOOT
PT	PRESSURE TREATED
REF	REFERENCE
REINF	REINFORCING
REQD	REQUIRED
(S)	SHORT SIDE REINFORCEMENT
SB	SHORT BAR
SCHD	SCHEDULE
SF	STEP FOOTING
SIM	SIMILAR
SOG	SLAB ON GRADE
SPEC(S)	SPECIFICATION(S)
SPF	SPRUCE PINE FUR
SQ	SQUARE
STD	STANDARD
STIFF	STIFFENER
STIRR	STIRRUP
STL	STEEL
STR	STRUCTURAL
SW	SHEAR WALL
SYP	SOUTHERN YELLOW PINE
T	TOP
TCX	TOP CHORD EXTENSION
TOC	TOP OF CONCRETE
TOS	TOP OF STEEL
TOW	TOP OF WALL
TYP	TYPICAL
UNO	UNLESS NOTED OTHERWISE
VB	VEHICLE BARRIER
VERT	VERTICAL
VIF	VERIFY IN FIELD
W	WITH
WWF	WELDED WIRE FABRIC

DO NOT SCALE DIGITAL OR HARD COPIES OF THESE DRAWINGS:

Unless Specifically Noted – Drawings, Plans, Sections, Details, Etc. are a graphic representation of the framing conditions and/or requirements.
Rebar lengths, bends & etc. SHALL NOT be determined by scaling any drawings included in this set of documents. Lengths & sizes shall be determined by the schedules only, or specifically requested if not numerically shown. Submit a written request to Woods Engineering, PA if further clarification is needed.

LISLE Architecture & Design, Inc.

Lisle Architecture & Design, Inc.
614 Market Street
Wilmington, NC 28401
(910) 763.6053 (o)
(910) 763.4517 (f)

5 W. Hargett St. Suite 312
Raleigh, NC 27601
(919) 980.0283 (o)

www.LisleArchitecture.com

WOODS ENGINEERING
Consulting Structural Engineers
254 North Front Street
Suite 201
Wilmington, NC 28401
Phone: 910.348.8007
www.woodseng.com

WOODS ENGINEERING, P.A. CORPORATE SEAL No. C-1806 NORTH CAROLINA

NORTH CAROLINA PROFESSIONAL ENGINEER SEAL 19475 DON R. WOODS

Digitally signed by Don R. Woods, PE
DN: cn=Don R. Woods, PE, o=Woods Engineering, P.A.(C-1806), c=Wilmington, St=North Carolina, C=US
Date: 2020.12.15 11:42:02 -05'00'

DATE: 12.15.2020 - CONSTRUCTION DOCUMENTS

PROJECT NO: 20131

Smith Office - Sir Tyler IV
Wilmington, NC

NO.	REV/SUB.	DATE

GENERAL NOTES

S1.02

Plotted12.15.2020 THIS DRAWING IS THE LEGAL PROPERTY OF LISLE ARCHITECTURE AND DESIGN, INC. AND IS NOT TO BE COPIED OR REPRODUCED IN WHOLE OR IN PART WITHOUT THE PERMISSION OF THE ARCHITECT - COPYRIGHT 2020

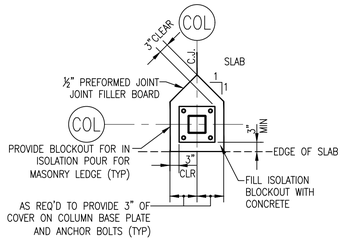

TYPICAL ISOLATION JOINT AT SLAB EDGE

NOT TO SCALE

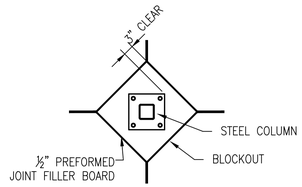

ISOLATION JOINT DETAIL

NOT TO SCALE

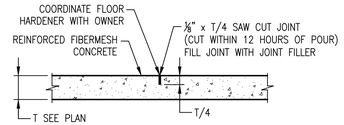

CONTRACTION JOINT

SCALE: 1" = 1'-0"

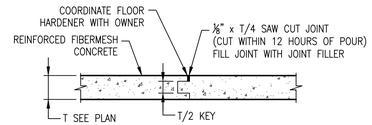

CONSTRUCTION JOINT

SCALE: 1" = 1'-0"

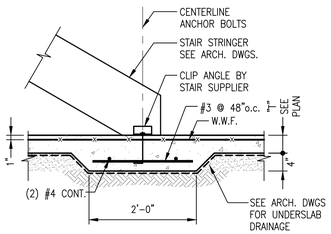

NOTE: EXTEND THICKENED SLAB BETWEEN STAIR STRINGERS AND 1'-0" BEYOND EACH

TYPICAL THICKENED SLAB

SCALE: 3/4" = 1'-0"

STEEL LINTEL SCHEDULE

CLEAR OPENING	ONE ANGLE FOR EA 4"WYTHE	MIN BRG	MAX. HEIGHT OF BRICK
0'-8" TO 6'-0"	∠7" x 4" x ⅜" LLH	8"	9'-0"
6'-0" TO 8'-0"	7"x5"x 7/16" BENT PLATE LLH	8"	9'-0"
8'-0" TO 10'-0"	7"x7"x 7/16" BENT PLATE	8"	9'-0"
10'-0" TO 12'-0"	9"x7"x 7/16" BENT PLATE LLV	8"	9'-0"

NOTES:
1. WHERE LINTELS BEAR ON HOLLOW MASONRY UNITS FILL ALL CORES UNDER BEARING WITH GROUT FROM BOTTOM OF LINTEL TO 16" MINIMUM BELOW.
2. THESE LINTELS ARE NOT DESIGNED FOR MASONRY WALLS THAT CARRY FLOOR OR ROOF LOAD.
3. LINTELS ARE DESIGNED TO CARRY THE MAXIMUM HEIGHT OF BRICK LISTED IN SCHEDULE. IF STACKED BRICK HEIGHT EXCEEDS LISTED VALUE, THEN CONTACT STRUCTURAL ENGINEER FOR ALTERNATE DESIGN.
4. ALL STEEL LINTELS SHALL BE HOT DIP GALVANIZED AND PAINTED.
5. SEE DETAIL BELOW FOR REQUIREMENTS

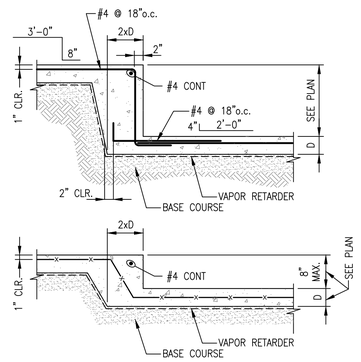

TYPICAL SLAB STEP

SCALE: 3/4" = 1'-0"

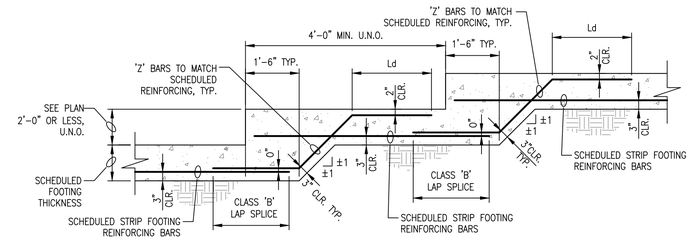

STEP FOOTING DETAIL

SCALE: 1/2" = 1'-0"

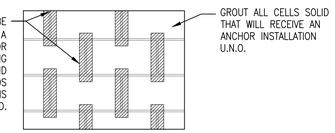

ANCHOR INSTALLATION DIAGRAM

SCALE: 3/4" = 1'-0"

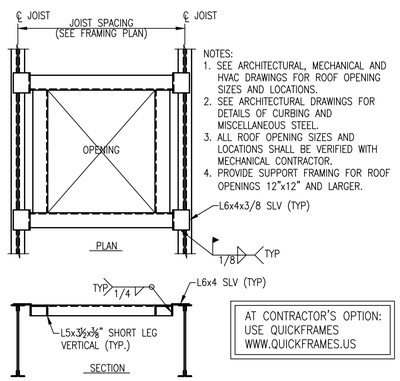

NOTES:
1. SEE ARCHITECTURAL, MECHANICAL AND HVAC DRAWINGS FOR ROOF OPENING SIZES AND LOCATIONS.
2. SEE ARCHITECTURAL DRAWINGS FOR DETAILS OF CURBING AND MISCELLANEOUS STEEL.
3. ALL ROOF OPENING SIZES AND LOCATIONS SHALL BE VERIFIED WITH MECHANICAL CONTRACTOR.
4. PROVIDE SUPPORT FRAMING FOR ROOF OPENINGS 12"x12" AND LARGER.

AT CONTRACTOR'S OPTION: USE QUICKFRAMES WWW.QUICKFRAMES.US

DETAIL OF TYPICAL ROOF OPENING

NOT TO SCALE

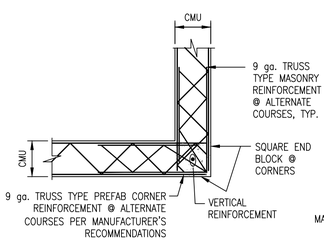

TYPICAL CMU CORNER

DETAIL "B"

SCALE: 3/4" = 1'-0"

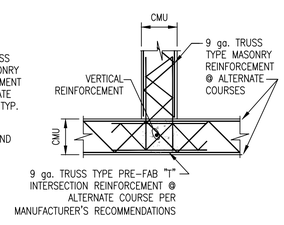

TYPICAL CMU INTERSECTION

DETAIL "C"

SCALE: 3/4" = 1'-0"

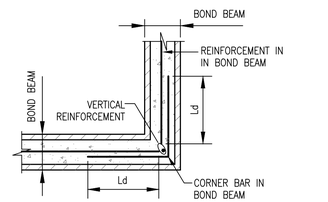

TYPICAL BOND BEAM REINFORCING

NOTE: TRUSS TYPE REINFORCEMENT SHOWN, HOWEVER LADDER OR TRUSS TYPES ARE ACCEPTABLE.

DETAIL "D"

SCALE: 3/4" = 1'-0"

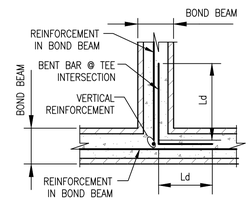

TYPICAL BOND BEAM INTERSECTION REINFORCING

DETAIL "E"

SCALE: 3/4" = 1'-0"

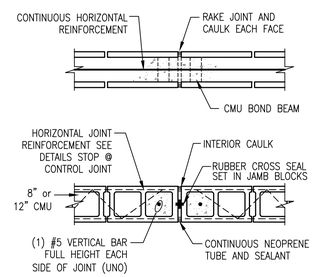

TYPICAL CONTROL JOINT

DETAIL "F"

SCALE: 3/4" = 1'-0"

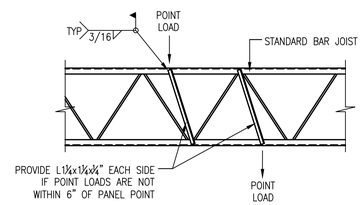

DETAIL OF TYPICAL JOIST REINFORCEMENT

NOT TO SCALE

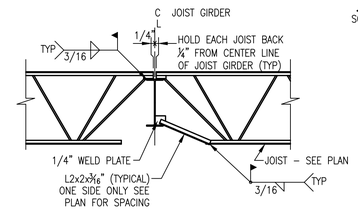

SECTION "A"

SCALE: 1/2" = 1'-0"
GIRDER BOTTOM FLANGE (BRACE TYP.)

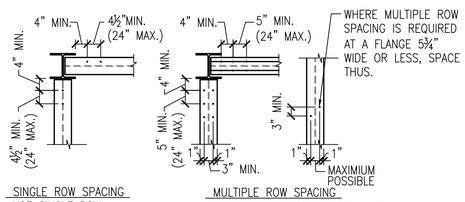

SINGLE ROW SPACING

USE SINGLE ROW SPACING EXCEPT WHEN REQUIRED BY FIELD CONDITIONS.

MULTIPLE ROW SPACING

NOTE: WHERE DECK IS CONTINUOUS OVER THE BEAMS THE DECK VALLEYS MAY CONTROL & POSSIBLY DICTATE SPACING. DECK SUPPLIER SHALL COMPLY W/ STUD CAPACITY REDUCTIONS REQUIRED TO EQUAL ORIGINAL CAPACITY.

TYPICAL SHEAR STUD DETAIL

SCALE: 1/2" = 1'-0"

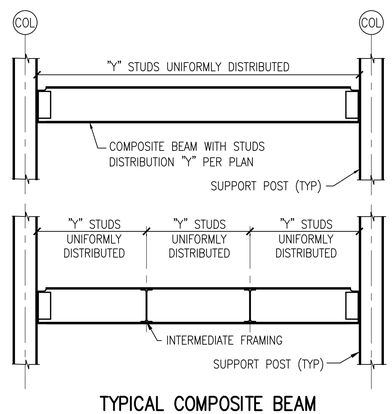

TYPICAL COMPOSITE BEAM STUD DISTRIBUTION

SCALE: 1/2" = 1'-0"

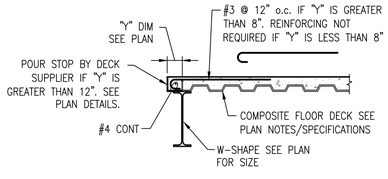

TYPICAL INTERIOR EDGE OF FRAMED FLOOR SLAB

SCALE: 1/2" = 1'-0"

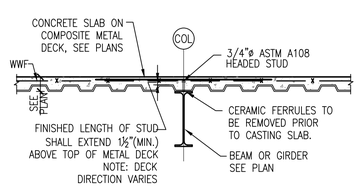

TYPICAL SHEAR STUD DETAIL

SCALE: 1/2" = 1'-0"

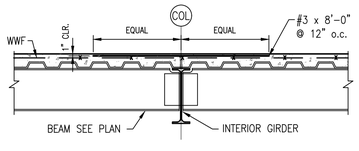

TYPICAL COMPOSITE SLAB REINFORCEMENT

SCALE: 1/2" = 1'-0"

LISLE Architecture & Design, Inc.

Lisle Architecture & Design, Inc.
614 Market Street
Wilmington, NC 28401
(910) 763.6053 (o)
(910) 763.4517 (f)

5 W. Hargett St. Suite 312
Raleigh, NC 27601
(919) 980.0283 (o)

www.LisleArchitecture.com

WOODS ENGINEERING
Consulting Structural Engineers
254 North Front Street Suite 201
Wilmington, NC 28401
Phone: 910.348.8007
www.woodseng.com

WOODS ENGINEERING, P.A. CORPORATE SEAL No. C-1806 NORTH CAROLINA

NORTH CAROLINA PROFESSIONAL SEAL 19475 ENGINEER DON R. WOODS

Digitally signed by Don R. Woods, PE
DN: c=US, o=woodsengineering.com, cn=Don R. Woods, PE, O=WOODS ENGINEERING, P.A., l=Wilmington, S=North Carolina, C=US
Date: 2020.12.15 11:40:20 -05'00'

Smith Office - Sir Tyler IV
Wilmington, NC

NO.	REV/SUB.	DATE

DATE: 12.15.2020 - CONSTRUCTION DOCUMENTS

PROJECT NO. 20131

TYPICAL DETAILS

S1.03

Plotted:12.15.2020 THIS DRAWING IS THE LEGAL PROPERTY OF LISLE ARCHITECTURE AND DESIGN, INC. AND IS NOT TO BE COPIED OR REPRODUCED IN WHOLE OR IN PART WITHOUT THE PERMISSION OF THE ARCHITECT - COPYRIGHT 2020

SCHEDULE FOR STRUCTURAL MATERIAL INSPECTIONS

BUILDING COMPONENTS OR MATERIAL	MATERIAL SUBMITTAL	INSPECTION / MONITORING	INSPECTION FREQUENCY	INSPECTOR QUALIFICATIONS	TEST REQUIREMENTS	TEST FREQUENCY	INSPECTION AGENCY
SOILS	1. REVIEW XX, XX. GEOTECHNICAL REPORT #34.1868 – ALLOWABLE SOIL BEARING = 2000psf 2. FILL MATERIAL SPECIFICATIONS. 3. VAPOR BARRIER	1.–2. INSPECT SOILS PER ATTACHED 2015 IBC, TABLE 1705.6 FOR REQUIRED VERIFICATION AND INSPECTION. 3. INSPECT VAPOR BARRIER INSTALLATION. SEE PROJECT & MANUFACTURER SPECS.	ALL INSPECTIONS ARE PERIODIC EXCEPT FILL PLACEMENT AND COMPACTION WHICH IS CONTINUOUS.	1. QUALIFIED INSPECTION AGENCY A) INSPECTION AGENCY TO BE APPROVED BY SPECIAL INSPECTION COORDINATOR & BUILDING OFFICIAL.	1. PROVIDE VISUAL AND DCP TESTS PER ASTM STP–399 2. SUBGRADE DENSITY VERIFICATION	1. EACH ISOLATED FOOTING AND AT 20' INTERVALS FOR CONTINUOUS FOOTINGS. 2. AS REQUIRED TO VERIFY ENTIRE BUILDING PAD.	1. QUALIFIED INSPECTION AGENCY A) INSPECTION AGENCY TO BE APPROVED BY SPECIAL INSPECTION COORDINATOR & BUILDING OFFICIAL.
CONCRETE	1. SUBMIT CONCRETE MIX DESIGN. 2. SUBMIT MATERIAL CERTIFICATION 3. SUBMIT REBAR SHOP DRAWINGS.	INSPECT CONCRETE CONSTRUCTION PER ATTACHED 2015 IBC, TABLE 1705.3	AS OUTLINED PER TASK IN TABLE 1705.3	1. QUALIFIED INSPECTION AGENCY A) INSPECTION AGENCY TO BE APPROVED BY SPECIAL INSPECTION COORDINATOR & BUILDING OFFICIAL.	1. TEST CONCRETE FOR COMPRESSIVE STRENGTH, SLUMP, AIR CONTENT, TEMPERATURE AND BATCH TO PLACEMENT TIME.	1. SAMPLES FOR STRENGTH TESTS FOR EACH CLASS OF CONCRETE PLACED EACH DAY SHALL BE TAKEN NOT LESS THAN ONCE A DAY, NOR LESS THAN ONCE FOR EACH 150 YD^3 OF CONCRETE, NOR LESS THAN ONCE FOR EACH 5,000FT^2 OF SURFACE AREA FOR SLABS OR WALLS.	1. QUALIFIED INSPECTION AGENCY A) INSPECTION AGENCY TO BE APPROVED BY SPECIAL INSPECTION COORDINATOR & BUILDING OFFICIAL.
STEEL	1. SUBMIT ANCHOR BOLT SETTING PLAN. 2. SUBMIT STEEL SHOP DRAWINGS. 3. SUBMIT MATERIAL CERTIFICATES. 4. FABRICATOR CERTIFICATE OF COMPLIANCE WITH 2015 IBC, 1705.2.	INSPECT STEEL PER ATTACHED TABLE BELOW	AS OUTLINED PER TASK IN TABLE BELOW	1. QUALIFIED INSPECTION AGENCY A) INSPECTION AGENCY TO BE APPROVED BY SPECIAL INSPECTION COORDINATOR & BUILDING OFFICIAL.	1. VISUAL INSPECTION BY A QUALIFIED STEEL INSPECTOR. 2. MOMENT CONNECTIONS FIELD WELDED. 3. ALL FIELD BOLTING SHALL BE SNUG TIGHT.	INSPECT ALL FIELD CONNECTIONS. CONTINUOUS INSPECTION OF ALL MOMENT CONNECTIONS REQUIRED.	1. QUALIFIED INSPECTION AGENCY A) INSPECTION AGENCY TO BE APPROVED BY SPECIAL INSPECTION COORDINATOR & BUILDING OFFICIAL.
STEEL JOISTS	1. SUBMIT STEEL SHOP DRAWINGS. 2. SUBMIT MATERIAL CERTIFICATES. 3. FABRICATOR CERTIFICATE OF COMPLIANCE WITH 2015 IBC, 1705.2.	INSPECT STEEL JOIST PER ATTACHED TABLE 1705.2.3	AS OUTLINED PER TASK IN TABLE 1705.2.3	1. QUALIFIED INSPECTION AGENCY A) INSPECTION AGENCY TO BE APPROVED BY SPECIAL INSPECTION COORDINATOR & BUILDING OFFICIAL.	1. VISUAL INSPECTION BY A QUALIFIED STEEL INSPECTOR. 2. MOMENT CONNECTIONS FIELD WELDED. 3. ALL FIELD BOLTING SHALL BE SNUG TIGHT.	1. PERIODIC	1. QUALIFIED INSPECTION AGENCY A) INSPECTION AGENCY TO BE APPROVED BY SPECIAL INSPECTION COORDINATOR & BUILDING OFFICIAL.
METAL ROOF DECK	1. SUBMIT PRODUCT DATA SHEET 2. SUBMIT METAL ROOF DECK SHOP DRAWINGS.	1. VERIFY DECK TYPE, DEPTH, AND GAUGE. 2. VERIFY QUANTITY AND QUALITY OF CONNECTIONS TO SUPPORT MEMBERS. 3. VERIFY SIDE LAP CONNECTIONS.	1. PERIODIC	1. QUALIFIED INSPECTION AGENCY A) INSPECTION AGENCY TO BE APPROVED BY SPECIAL INSPECTION COORDINATOR & BUILDING OFFICIAL.	NONE	NONE	1. QUALIFIED INSPECTION AGENCY A) INSPECTION AGENCY TO BE APPROVED BY SPECIAL INSPECTION COORDINATOR & BUILDING OFFICIAL.
MASONRY	1. SUBMIT MATERIAL CERTIFICATIONS.	INSPECT MASONRY PER ATTACHED ACI 530–13, TABLE 1.19.2. LEVEL B REQUIRED VERIFICATION AND INSPECTION OF MASONRY CONSTRUCTION.	AS OUTLINED PER TASK IN TABLE BELOW.	1. QUALIFIED INSPECTION AGENCY A) INSPECTION AGENCY TO BE APPROVED BY SPECIAL INSPECTION COORDINATOR & BUILDING OFFICIAL.	1. TEST GROUT (PEA GRAVEL CONCRETE) FOR SLUMP & COMPRESSIVE STRENGTH.	1. SAMPLES FOR STRENGTH TESTS FOR EACH CLASS OF CONCRETE PLACED EACH DAY SHALL BE TAKEN NOT LESS THAN ONCE A DAY, NOR LESS THAN ONCE FOR EACH 150 YD^3 OF CONCRETE, NOR LESS THAN ONCE FOR EACH 5,000FT^2 OF SURFACE AREA FOR SLABS OR WALLS.	1. QUALIFIED INSPECTION AGENCY A) INSPECTION AGENCY TO BE APPROVED BY SPECIAL INSPECTION COORDINATOR & BUILDING OFFICIAL.
ROOF CLADDING	NONE.	1. VISUAL AND AS REQUIRED TO CERTIFY ROOF ATTACHMENT PER MANUFACTURER GUIDELINES.	1. PERIODIC.	1. QUALIFIED INSPECTION AGENCY A) INSPECTION AGENCY TO BE APPROVED BY SPECIAL INSPECTION COORDINATOR & BUILDING OFFICIAL.	1. PER MANUFACTURER AND 2015 IBC CODE FOR A WIND SPEED OF 146 MPH.	1. PERIODIC	1. QUALIFIED INSPECTION AGENCY A) INSPECTION AGENCY TO BE APPROVED BY SPECIAL INSPECTION COORDINATOR & BUILDING OFFICIAL.

REQUIRED VERIFICATION & INSPECTION OF SOILS

VERIFICATION & INSPECTION TASK	CONTINUOUS	PERIODIC
1. VERIFY MATERIALS BELOW FOOTINGS ARE ADEQUATE TO ACHIEVE THE DESIGN BEARING CAPACITY.	–	X
2. VERIFY EXCAVATIONS ARE EXTENDED TO PROPER DEPTH AND HAVE REACHED PROPER MATERIAL.	–	X
3. PERFORM CLASSIFICATION AND TESTING OF CONTROLLED FILL MATERIALS.	–	X
4. VERIFY USE OF PROPER MATERIALS, DENSITIES AND LIFT THICKNESS DURING PLACEMENT AND COMPACTION OF CONTROLLED FILL.	X	–
5. PRIOR TO PLACEMENT OF COMPACTED FILL, OBSERVE SUBGRADE AND VERIFY THAT SITE HAS BEEN PREPARED PROPERLY,	–	X

NOTE: SEE IBC–2015, TABLE 1705.6, CHAPTER 17

REQUIRED VERIFICATION & INSPECTION OF CONCRETE CONSTRUCTION FREQUENCY CHART

VERIFICATION & INSPECTION TASK	CONTINUOUS	PERIODIC
1. INSPECTION OF REINFORCING STEEL INCLUDING PRESTRESSING TENDONS, AND VERIFY PLACEMENT	–	X
2. REINFORCING BAR WELDING: a. VERIFY WEDABILITY OF REINFORCING BARS OTHER THAN ASTM A 706 b. INSPECT SINGLE–PASS FILLET WELDS, MAXIMUM $3/16$"; and c. INSPECT ALL OTHER WELDS.	– X	 X X
3. INSPECTION OF ANCHORS CAST IN CONCRETE	–	X
4. INSPECT ANCHORS POST–INSTALLED IN HARDENED CONCRETE MEMBERS a. ADHESIVE ANCHORS INSTALLED HORIZONTALLY OR UPWARDLY INCLUDED ORIENTATIONS TO RESIST SUSTAINED TENSION LOADS. b. MECHANICAL ANCHORS AND ADHESIVE ANCHORS NOT DEFINED IN 4.a.	X	 X
5. VERIFY USE OF REQUIRED DESIGN MIX.	–	X
6. PRIOR TO CONCRETE PLACEMENT, FABRICATE SPECIMENS FOR STRENGTH TESTS, PERFORM SLUMP AND AIR CONTENT TESTS, AND DETERMINE THE TEMPERATURE OF THE CONCRETE.	X	–
7. INSPECTION OF CONCRETE AND SHOTCRETE PLACEMENT FOR PROPER APPLICATION TECHNIQUES.	X	–
8. VERIFY MAINTENANCE OF SPECIFIED CURING TEMPERATURE AND TECHNIQUES.	–	X
9. INSPECTION OF PRESTRESSED CONCRETE: a. APPLICATION OF PRESTRESSING FORCES. b. GROUTING OF BONDED PRESTRESSING TENDONS	 X X	 – –
10. INSPECT ERECTION OF PRECAST CONCRETE MEMBERS.	–	X
11. VERIFY IN–SITU CONCRETE STRENGTH, PRIOR TO STRESSING OF TENDONS IN POST–TENSIONED CONCRETE AND PRIOR TO REMOVAL OF SHORES AND FORMS FROM BEAMS AND STRUCTURAL SLABS.	–	X
12. INSPECT FORMWORK FOR SHAPE, LOCATION AND DIMENSIONS OF THE CONCRETE MEMBER BEING FORMED.	–	X

NOTE: SEE IBC 2015, TABLE 1705.3 FOR REFERENCE STANDARDS.

REQUIRED LEVEL B VERIFICATION & INSPECTION OF MASONRY CONSTRUCTION FREQUENCY CHART

VERIFICATION & INSPECTION TASK	CONTINUOUS	PERIODIC
1. COMPLIANCE WITH REQUIRED INSPECTION PROVISIONS OF THE CONSTRUCTION DOCUMENTS AND THE APPROVED SUBMITTALS SHALL BE VERIFIED.	–	x
2. VERIFICATION OF f'_m AND f'_{MC} PRIOR TO CONSTRUCTION EXCEPT WHERE SPECIFICALLY EXEMPTED BY THIS CODE.	–	X
3. VERIFICATION OF SLUMP FLOW AND VSI AS DELIVERED TO THE SITE FOR SELF–CONSOLIDATING GROUT.	X	–
4. AS MASONRY CONSTRUCTION BEGINS, THE FOLLOWING SHALL BE VERIFIED TO ENSURE COMPLIANCE:		
a. PROPORTIONS OF SITE–PREPARED MORTAR.	–	X
b. CONSTRUCTION OF MORTAR JOINTS.	–	X
c. LOCATION OF REINFORCEMENT, CONNECTORS, PRESTRESSING TENDONS AND ANCHORAGES.	–	X
d. PRESTRESSING TECHNIQUE.	–	X
e. GRADE AND SIZE OF PRESTRESSING TENDONS AND ANCHORAGES.	–	X
5. DURING CONSTRUCTION THE INSPECTION PROGRAM SHALL VERIFY:		
a. SIZE AND LOCATION OF STRUCTURAL ELEMENTS.	–	X
b. TYPE, SIZE AND LOCATION OF ANCHORS, INCLUDING OTHER DETAILS OF ANCHORAGE OF MASONRY TO STRUCTURAL MEMBERS, FRAMES OR OTHER CONSTRUCTION.	–	X
c. SPECIFIED SIZE, GRADE AND TYPE OF REINFORCEMENT, ANCHOR BOLTS, PRESTRESSING TENDONS AND ANCHORAGES.	–	X
d. WELDING OF REINFORCING BARS.	X	–
e. PREPARATION, CONSTRUCTION AND PROTECTION OF MASONRY DURING COLD WEATHER (TEMPERATURE BELOW 40°F) OR HOT WEATHER (TEMPERATURE ABOVE 90°F).	–	X
f. APPLICATION AND MEASUREMENT OF PRESTRESSING FORCE.	X	–
6. PRIOR TO GROUTING, THE FOLLOWING SHALL BE VERIFIED TO ENSURE COMPLIANCE:		
a. GROUT SPACE IS CLEAN.	–	X
b. PLACEMENT OF REINFORCEMENT AND CONNECTORS, AND PRESTRESSING TENDONS AND ANCHORAGES.	–	X
c. PROPORTIONS OF SITE–PREPARED GROUT AND PRESTRESSING GROUT FOR BONDED TENDONS.	–	X
d. CONSTRUCTION OF MORTAR JOINTS.	–	X
7. GROUT PLACEMENT SHALL BE VERIFIED TO ENSURE COMPLIANCE:	X	–
a. GROUTING OF PRESTRESSING BONDED TENDONS.	X	–
8. PREPARATION OF ANY REQUIRED GROUT SPECIMENS, MORTAR SPECIMENS AND/OR PRISMS SHALL BE OBSERVED.	–	X

NOTE: SEE IBC 2015, SECTION 1705.4 FOR REFERENCE STANDARDS.

(a) FREQUENCY REFERS TO THE FREQUENCY OF INSPECTION, WHICH MAY BE CONTINUOUS DURING THE TASK LISTED OF PERIODICALLY DURING THE LISTED TASK, AS DEFINED IN THE TABLE
(b) REQUIRED FOR THE FIRST 5000 ft^2 OF AAC MASONRY
(c) REQUIRED AFTER THE FIRST 5000 ft^2 OF AAC MASONRY
(d) SEE TABLE 1.19.2 OF TMS 402/ACI 530/ASCE 5–13 FOR REFERENCE STANDARDS

REQUIRED VERIFICATION & INSPECTION OF STEEL CONSTRUCTION

VERIFICATION & INSPECTION TASK	CONTINUOUS	PERIODIC
1. MATERIAL VERIFICATION OF HIGH–STRENGTH BOLTS, NUTS AND WASHERS:		
a. IDENTIFICATION MARKINGS TO CONFORM TO ASTM STANDARDS SPECIFIED IN THE APPROVED CONSTRUCTION DOCUMENTS.	–	X
b. MANUFACTURER'S CERTIFICATE OF COMPLIANCE REQUIRED.	–	X
2. INSPECTION OF HIGH–STRENGTH BOLTING:		
a. SNUG–TIGHT JOINTS.	–	X
b. PRETENSIONED AND SLIP–CRITICAL JOINTS USING TURN–OF–NUT WITH MATCHMARKING, TWST–OFF BOLT OR DIRECT TENSION INDICATOR METHODS OF INSTALLATION.	–	X
c. PRETENSIONED AND SLIP–CRITICAL JOINTS USING TURN–OF–NUT WITHOUT MATCHMARKING OR CALIBRATED WRENCH METHODS OF INSTALLATION.	X	–
3. MATERIAL VERIFICATION OF STRUCTURAL STEEL AND COLD–FORMED STEEL DECK:		
a. FOR STRUCTURAL STEEL, IDENTIFICATION MARKINGS TO CONFORM TO AISC 360	–	X
b. FOR OTHER STEEL, INDENTIFICATION MARKINGS TO CONFORM TO ASTM STANDARDS SPECIFIED IN THE APPROVED CONSTRUCTION DOCUMENTS.	–	X
c. MANUFACTURER'S CERTIFIED TEST REPORTS.	–	X
4. MATERIAL VERIFICATION OF WELD FILLER MATERIALS:		
a. IDENTIFICATION MARKINGS TO CONFORM TO AWS SPECIFICATION IN THE APPROVED CONSTRUCTION DOCUMENTS.	–	X
b. MANUFACTURER'S CERTIFICATE OF COMPLIANCE REQUIRED.	–	X
5. INSPECTION OF WELDING:		
a. STRUCTURAL STEEL AND COLD–FORMED STEEL DECK:		
1) COMPLETE AND PARTIAL PENETRATION GROOVE WELDS.	X	–
2) MULTIPASS FILLET WELDS.	X	–
3) SINGLE–PASS FILLET WELDS > $5/16$"	X	–
4) PLUG AND SLOT WELDS.	X	–
5) SINGLE–PASS FILLET WELDS $\leq 5/16$"	–	X
6) FLOOR AND ROOF DECK WELDS.	–	X
b. REINFORCING STEEL:		
1) VERIFICATION OF WELDABILITY OF REINFORCING STEEL OTHER THAN ASTM A 706.	–	X
2) REINFORCING STEEL–RESISTING FLEXURAL AND AXIAL FORCES IN INTERMEDIATE AND SPECIAL MOMENT FRAMES, AND BOUNDARY ELEMENTS OF SPECIAL STRUCTURAL WALLS OF CONCRETE AND SHEAR REINFORCEMENT.	X	–
3) SHEAR REINFORCEMENT.	X	–
4) OTHER REINFORCING STEEL	–	X
6. INSPECTION OF STEEL FRAME JOINT DETAILS FOR COMPLIANCE:		
a. DETAILS SUCH AS BRACING AND STIFFENING.	–	X
b. MEMBER LOCATIONS.	–	X
c. APPLICATION OF JOINT DETAILS AT EACH CONNECTION.	–	X

(a) OBSERVE ON A RANDOM BASIS, OPERATIONS NEED NOT BE DELAYED PENDING THESE INSPECTIONS. PERFORM THESE TASKS FOR EACH WELDED JOINT, BOLTED CONNECTION, OR STEEL ELEMENT
(b) SEE AISC 360 QUALITY ASSURANCE INSPECTION REQUIREMENTS

LISLE Architecture & Design, Inc.

Lisle Architecture & Design, Inc.
614 Market Street
Wilmington, NC 28401
(910) 763.6053 (o)
(910) 763.4517 (f)

5 W. Hargett St. Suite 312
Raleigh, NC 27601
(919) 980.0283 (o)

www.LisleArchitecture.com

WOODS ENGINEERING
Consulting Structural Engineers
254 North Front Street
Suite 201
Wilmington, NC 28401
Phone: 910.348.8007
www.woodseng.com

WOODS ENGINEERING, P.A. CORPORATE SEAL No. C-1806 NORTH CAROLINA

NORTH CAROLINA PROFESSIONAL SEAL 19475 ENGINEER DON R. WOODS

NORTH CAROLINA PROFESSIONAL SEAL 19475 ENGINEER DON R. WOODS

Digitally signed by Don R. Woods, PE
DN: cn=dwoods@woodseng.com, c=US, o=Don R. Woods, PE", O=WOODS ENGINEERING, P.A., l=Wilmington, S=North Carolina, C=US
Date: 2020.12.15 15:45:20-05'00'

DATE: 12.15.2020 - CONSTRUCTION DOCUMENTS

Smith Office - Sir Tyler IV
Wilmington, NC

PROJECT NO: 20131

NO.	REV/SUB.	DATE

STRUCTURAL MATERIAL INSPECTIONS

S1.04

Plotted12.15.2020 THIS DRAWING IS THE LEGAL PROPERTY OF LISLE ARCHITECTURE AND DESIGN, INC. AND IS NOT TO BE COPIED OR REPRODUCED IN WHOLE OR IN PART WITHOUT THE PERMISSION OF THE ARCHITECT - COPYRIGHT 2020

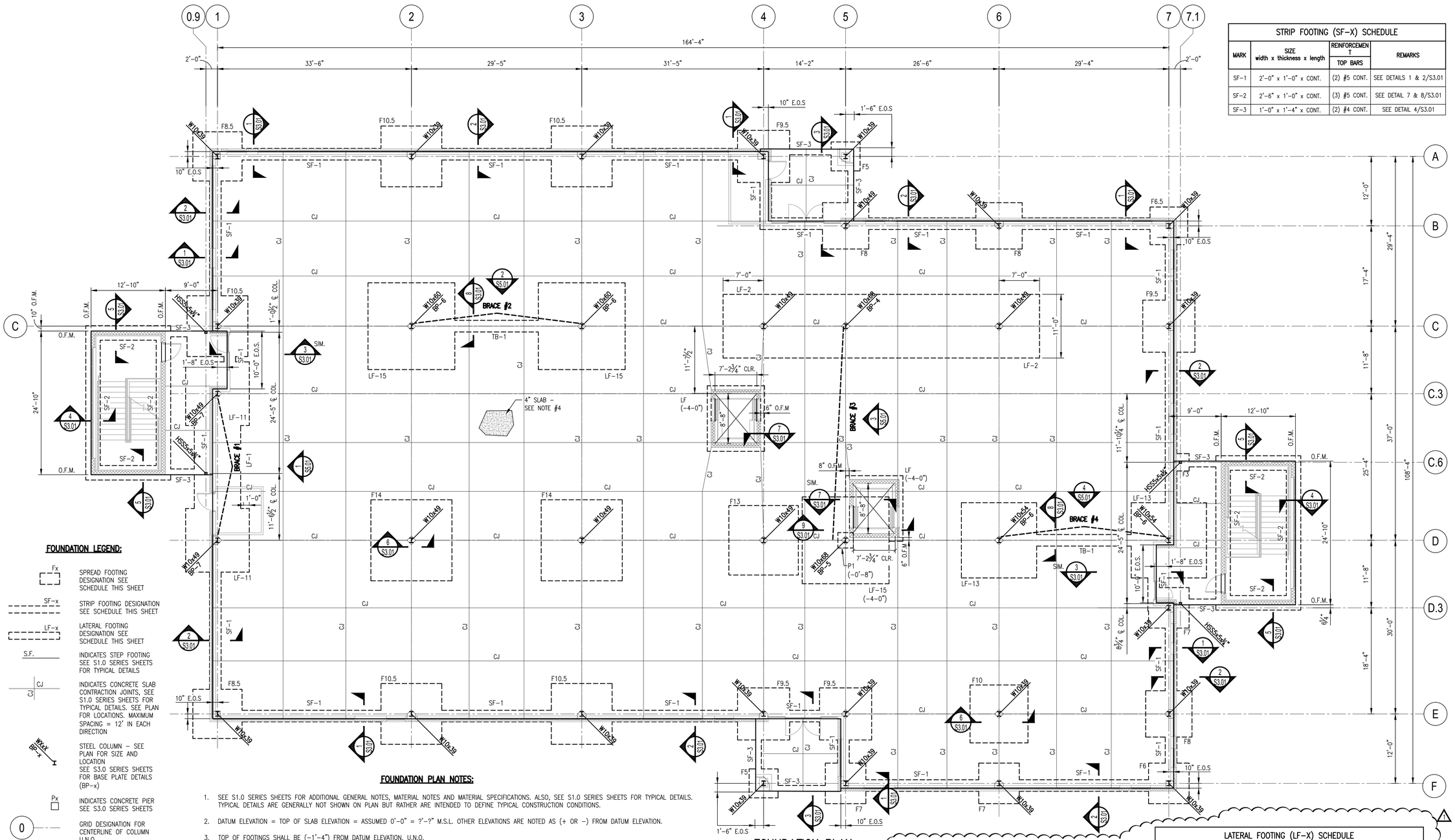

FOUNDATION PLAN

SCALE: 1/8" = 1'-0"

STRIP FOOTING (SF-x) SCHEDULE			
MARK	SIZE width x thickness x length	REINFORCEMENT TOP BARS	REMARKS
SF-1	2'-0" x 1'-0" x CONT.	(2) #5 CONT.	SEE DETAILS 1 & 2/S3.01
SF-2	2'-6" x 1'-0" x CONT.	(3) #5 CONT.	SEE DETAIL 7 & 8/S3.01
SF-3	1'-0" x 1'-4" x CONT.	(2) #4 CONT.	SEE DETAIL 4/S3.01

FOUNDATION LEGEND:

- Fx — SPREAD FOOTING DESIGNATION SEE SCHEDULE THIS SHEET
- SF-x — STRIP FOOTING DESIGNATION SEE SCHEDULE THIS SHEET
- LF-x — LATERAL FOOTING DESIGNATION SEE SCHEDULE THIS SHEET
- S.F. — INDICATES STEP FOOTING SEE S1.0 SERIES SHEETS FOR TYPICAL DETAILS
- CJ / CJ — INDICATES CONCRETE SLAB CONTRACTION JOINTS, SEE S1.0 SERIES SHEETS FOR TYPICAL DETAILS. SEE PLAN FOR LOCATIONS. MAXIMUM SPACING = 12' IN EACH DIRECTION
- W10x49 BP-7 — STEEL COLUMN – SEE PLAN FOR SIZE AND LOCATION SEE S3.0 SERIES SHEETS FOR BASE PLATE DETAILS (BP-x)
- Px — INDICATES CONCRETE PIER SEE S3.0 SERIES SHEETS
- 0 — GRID DESIGNATION FOR CENTERLINE OF COLUMN U.N.O.
- INDICATES ?" SLAB DEPRESSION COORDINATE EXACT LIMITS W/ ARCH. & PLUMBING DWGs & SEE S1.0 SERIES SHEETS FOR TYPICAL SLAB DEPRESSION DETAILS
- F.D. — FLOOR DRAIN – COORDINATE W/ PLUMBING DRAWINGS
- BRACE #x — INDICATES STEEL BRACE LOCATIONS SEE PLAN & SHEET S5.0 SERIES SHEETS
- E.J. — BUILDING EXPANSION JOINT LOCATION – SEE SECTIONS FOR DETAILS
- INV=X.XX — UNDERGROUND PLUMBING LINES – COORDINATE WITH PLUMBING DWGs

FOUNDATION PLAN NOTES:

1. SEE S1.0 SERIES SHEETS FOR ADDITIONAL GENERAL NOTES, MATERIAL NOTES AND MATERIAL SPECIFICATIONS. ALSO, SEE S1.0 SERIES SHEETS FOR TYPICAL DETAILS. TYPICAL DETAILS ARE GENERALLY NOT SHOWN ON PLAN BUT RATHER ARE INTENDED TO DEFINE TYPICAL CONSTRUCTION CONDITIONS.
2. DATUM ELEVATION = TOP OF SLAB ELEVATION = ASSUMED 0'-0" = ?'-?" M.S.L. OTHER ELEVATIONS ARE NOTED AS (+ OR –) FROM DATUM ELEVATION.
3. TOP OF FOOTINGS SHALL BE (–1'-4") FROM DATUM ELEVATION, U.N.O.
4. SLAB-ON-GRADE SHALL BE 4" THICK 3000 psi CONCRETE WITH 6x6xW2.0xW2.0 or 3.0lbs/yd.^{3} OF SYNTHETIC MACRO-FIBERS (TUF-STRAND SF BY EUCLID, FIBER MAC SERIES BY BASF, OR FORTA-FERRO BY FORTA CORP, OR APPROVED EQUAL) ON 15 mil VAPOR RETARDER, ON 6" WELL COMPACTED CLEAN SAND WITH LESS THAN 3% FINES ON WELL COMPACTED SUB GRADE. VERIFY COMPACTION WITH QUALIFIED GEOTECHNICAL ENGINEER
5. REFER TO ARCHITECTURAL, MECHANICAL, ELECTRICAL, PLUMBING, AND OTHER DISCIPLINE DRAWINGS FOR OPENINGS AND DEPRESSIONS NOT SHOWN ON THESE DRAWINGS.
6. RELOCATE ANY UTILITY LINES THAT CONFLICT WITH THE FOUNDATIONS OR DROP THE FOUNDATIONS TO AN ELEVATION BELOW THE PROPOSED UTILITIES. RELOCATE ANY GRAVITY FLOW LINES THAT CONFLICT WITH SPREAD FOOTINGS AS SHOWN ON STRUCTURAL FOUNDATION PLANS. IF A GRAVITY FLOW LINE TRAVELS UNDER A CONTINUOUS STRIP FOOTING EITHER:
   a. DROP THE FOOTING ELEVATION BELOW THE PROPOSED LINE.
   b. ENCASE THE LINE IN A STEEL PIPE 2" LARGER IN DIAMETER THAN THE LINE AND EXTEND THE PIPE 1'-0" PAST EACH SIDE OF THE CONCRETE FOOTING. BACKFILL THE TRENCH WITH #57 STONE. THE BEARING CAPACITY OF THIS AREA MUST MEET OR EXCEED THE ALLOWABLE SOIL BEARING CAPACITY.
7. DIMENSIONS ARE FROM EDGE OF SLAB (E.O.S.) AND OUTSIDE FACE OF STUD (O.F.S.) / CURTAINWALL (O.F.CW.) TO COLUMN CENTERLINE UNLESS NOTED OTHERWISE.
8. S.F. = STEP FOOTING, SEE TYPICAL DETAIL ON S1.0 SERIES SHEETS – G.C. TO COORDINATE STEPS IN FOUNDATION FOR PLUMBING, ELECTRICAL AND MECHANICAL.
9. SEE S5.0 SERIES SHEETS FOR (SHEARWALL, BRACE FRAMING, MOMENT FRAME, X-STRAPPING) INFORMATION AND REQUIREMENTS.
10. WHEN A SECTION IS CUT OR A DETAIL IS LABELED FOR A PARTICULAR CONDITION, THAT SECTION OR DETAIL SHALL APPLY FOR ALL SIMILAR CONDITIONS REGARDLESS OF WHETHER CUT OR LABELED, U.N.O.

TOP OF SLAB ELEVATION TABLE	
FLOOR	ELEVATION
Roof	VARIES
3rd	+28'-0"
2nd	14'-0"
1st	0'-0"

ELEVATIONS NOTED ARE FROM DATUM ELEVATION (0'-0")

SPREAD FOOTING (FX) SCHEDULE		
MARK	SIZE width x length x thickness	BOTTOM BARS EACH WAY (U.N.O.)
F3	3'-0" x 3'-0" x 1'-0"	(3) #5
F5	5'-0" x 5'-0" x 1'-0"	(5) #5
F6	6'-0" x 6'-0" x 1'-0"	(6) #5
F6.5	6'-6" x 6'-6" x 1'-1"	(7) #5
F7	7'-0" x 7'-0" x 1'-2"	(7) #5
F8	8'-0" x 8'-0" x 1'-4"	(7) #6
F8.5	8'-6" x 8'-6" x 1'-5"	(8) #6
F9.5	9'-6" x 9'-6" x 1'-6"	(7) #7
F10	10'-0" x 10'-0" x 1'-7"	(8) #7
F10.5	10'-6" x 10'-6" x 1'-8"	(9) #7
F13	13'-0" x 13'-0" x 2'-1"	(13) #7
F14	14'-0" x 14'-0" x 2'-3"	(15) #7

LATERAL FOOTING (LF-X) SCHEDULE				
MARK	SIZE width x thickness x length	REINFORCEMENT TOP BARS	REINFORCEMENT BOTTOM BARS	REMARKS
LF-1	8'-0" x 2'-6" x SEE PLAN	(9) #5 LONG & #5 @12"o.c. SHORT	(17) #7 LONG #7 @12"o.c. SHORT	EXTEND LONG BAR TO FAR END OF ADJACENT FOOTING
LF-2	11'-0" x 2'-6" x SEE PLAN	(15) #6 LONG & #6 @10"o.c. SHORT	(15) #7 LONG #7 @10"o.c. SHORT	
LF-11	11'-0" x 2'-6" x 11'-0"	(12) #5 E.W.	(12) #7 E.W.	
LF-13	13'-0" x 2'-6" x 13'-0"	(17) #5 E.W.	(17) #7 E.W.	
LF-15	15'-0" x 2'-6" x 15'-0"	(19) #5 E.W.	(19) #7 E.W.	

TIE BEAM (TB-X) SCHEDULE				
MARK	SIZE width x thickness x length	LONGITUDINAL REINFORCEMENT	STIURRUPS	REMARKS
TB-1	1'-6" x 1'-6" x SEE PLAN	(4) #8	#3 @9"o.c.	SEE DETAIL TB-1 ON S3.02

LISLE Architecture & Design, Inc.

Lisle Architecture & Design, Inc.

614 Market Street
Wilmington, NC 28401
(910) 763.6053 (o)
(910) 763.4517 (f)

5 W. Hargett St. Suite 312
Raleigh, NC 27601
(919) 980.0283 (o)

www.LisleArchitecture.com

WOODS ENGINEERING
Consulting Structural Engineers
254 North Front Street
Suite 201
Wilmington, NC 28401
Phone: 910.348.8007
www.woodseng.com

WOODS ENGINEERING, P.A. CORPORATE SEAL No. C-1806 NORTH CAROLINA

NORTH CAROLINA PROFESSIONAL SEAL 19475 ENGINEER DON R. WOODS

Digitally signed by Don R. Woods, PE
DN: cn=donwoods@woodseng.com, C=Don R. Woods, PE, O=WOODS ENGINEERING, P.A.?, L=Wilmington, S=North Carolina, C=US
Date: 2020.12.15 11:43:43 -05'00'

Smith Office - Sir Tyler IV
Wilmington, NC

PROJECT NO. 20131

DATE: 12.15.2020 - CONSTRUCTION DOCUMENTS

NO.	REV./SUB.	DATE
1	ADDED FOOTINGS	12.14.2020

FOUNDATION PLAN

S2.01

Plotted:12.15.2020 THIS DRAWING IS THE LEGAL PROPERTY OF LISLE ARCHITECTURE AND DESIGN, INC. AND IS NOT TO BE COPIED OR REPRODUCED IN WHOLE OR IN PART WITHOUT THE PERMISSION OF THE ARCHITECT - COPYRIGHT 2020

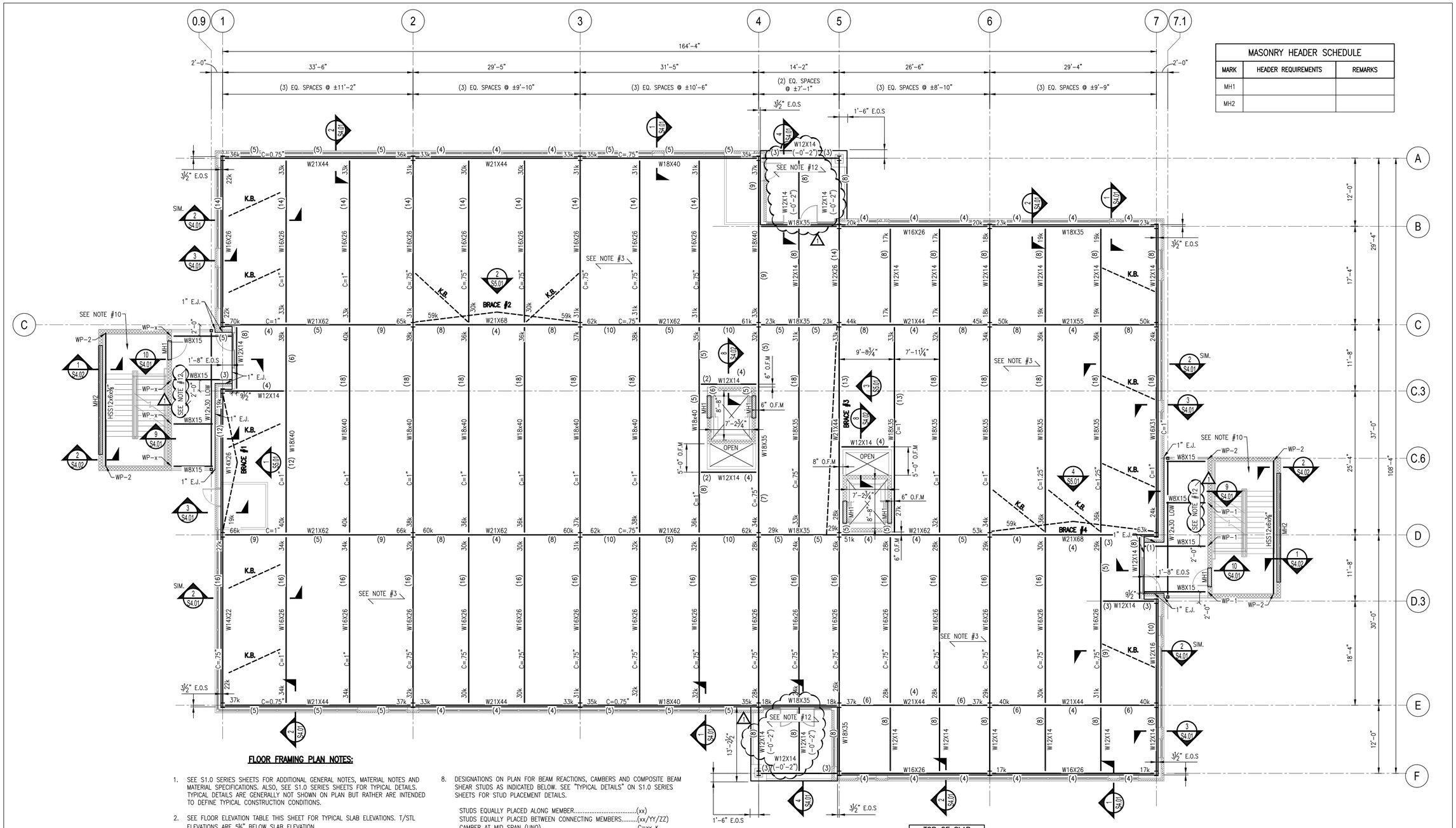

MASONRY HEADER SCHEDULE		
MARK	HEADER REQUIREMENTS	REMARKS
MH1		
MH2		

FLOOR FRAMING PLAN NOTES:

1. SEE S1.0 SERIES SHEETS FOR ADDITIONAL GENERAL NOTES, MATERIAL NOTES AND MATERIAL SPECIFICATIONS. ALSO, SEE S1.0 SERIES SHEETS FOR TYPICAL DETAILS. TYPICAL DETAILS ARE GENERALLY NOT SHOWN ON PLAN BUT RATHER ARE INTENDED TO DEFINE TYPICAL CONSTRUCTION CONDITIONS.
2. SEE FLOOR ELEVATION TABLE THIS SHEET FOR TYPICAL SLAB ELEVATIONS. T/STL ELEVATIONS ARE 5½" BELOW SLAB ELEVATION.
3. TYPICAL FLOOR SLAB IS 3½" – 3,000 psi NORMAL WEIGHT CONCRETE TOPPING WITH 4lbs/yd³ OF SYNTHETIC MACRO–FIBERS (TUF–STRAND SF BY EUCLID, FORTA–FERRO BY FORTA CORP, OR APPROVED EQUAL) ON 2", 18 GAUGE GALVANIZED COMPOSITE METAL DECK VULCRAFT 2VLI18 OR APPROVED EQUAL. TOTAL FLOOR SLAB SYSTEM IS 5½" THICK, TYP. UNO.
4. PROVIDE JOIST BRIDGING PER SJI RECOMMENDATIONS.
5. J.B.E. = JOIST BEARING ELEVATION.
6. HANGER AND KICKER FOR WIND BEAM SUPPORTS – SEE SECTIONS
7. T/STL = TOP OF STEEL
8. DESIGNATIONS ON PLAN FOR BEAM REACTIONS, CAMBERS AND COMPOSITE BEAM SHEAR STUDS AS INDICATED BELOW. SEE "TYPICAL DETAILS" ON S1.0 SERIES SHEETS FOR STUD PLACEMENT DETAILS.

   STUDS EQUALLY PLACED ALONG MEMBER.....(xx)
   STUDS EQUALLY PLACED BETWEEN CONNECTING MEMBERS.....(xx/YY/ZZ)
   CAMBER AT MID SPAN (UNO).....C=xx ĸ
   ASD REACTIONS AT EACH END (KIPS).....xx ĸ (LRFD)
   (MINIMUM REACTION = 16k IF NOT SHOWN ON PLAN)(LRFD)

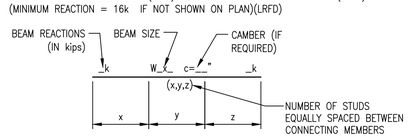

9. WHEN A SECTION IS CUT OR A DETAIL IS LABELED FOR A PARTICULAR CONDITION, THAT SECTION OR DETAIL SHALL APPLY FOR ALL SIMILAR CONDITIONS REGARDLESS OF WHETHER CUT OR LABELED, U.N.O.
10. EXIT STAIRS SHALL BE STEEL, METAL PAN AND CONCRETE, D.D.
11. SEE S2.01 SHEET FOR WF COLUMN SIZES.
12. TYPICAL DECK SLAB SHALL BE 3½" (MIN.) – 3,000 psi NORMAL WEIGHT CONCRETE TOPPING WITH #4 @ 12"o.c. EACH WAY ON 2", 18 GAUGE GALVANIZED COMPOSITE METAL DECK VULCRAFT 2VLI18 OR APPROVED EQUAL. TOTAL FLOOR SLAB SYSTEM IS 5½" THICK MINIMUM.

SECOND FLOOR FRAMING PLAN

SCALE: 1/8" = 1'-0"

TOP OF SLAB ELEVATION TABLE	
FLOOR	ELEVATION
Roof	VARIES
3rd	+28'-0"
2nd	14'-0"
1st	0'-0"

ELEVATIONS NOTED ARE FROM DATUM ELEVATION (0'-0")

FLOOR FRAMING LEGEND

- W14X4 — STEEL COLUMN – SEE PLAN FOR SIZE AND LOCATION
- W_x_ — STEEL BEAM – SEE PLAN FOR SIZE AND LOCATION
- 0 — GRID DESIGNATION FOR CENTERLINE OF COLUMN U.N.O.
- BRACE #x — INDICATES STEEL BRACE LOCATIONS – SEE PLAN & SHEET S5.0 SERIES SHEETS
- E.J. — BUILDING EXPANSION JOINT LOCATION – SEE SECTIONS FOR DETAILS
- INDICATES 8" CMU WALL SEE PLAN FOR REQUIREMENTS
- MHx — MASONRY HEADER SEE SCHEDULE THIS SHEET
- KB — KICKER BRACE – L4x4 SEE 3/S4.01
- WP–x — INDICATES MASONRY WALL PLATE SEE S3.0 SERIES SHEETS
- MBP–x — INDICATES MASONRY BEARING PLATE SEE S3.0 SERIES SHEETS

LISLE Architecture & Design, Inc.

Lisle Architecture & Design, Inc.
614 Market Street
Wilmington, NC 28401
(910) 763.6053 (o)
(910) 763.4517 (f)

5 W. Hargett St. Suite 312
Raleigh, NC 27601
(919) 980.0283 (o)

www.LisleArchitecture.com

WOODS ENGINEERING
Consulting Structural Engineers
254 North Front Street
Suite 201
Wilmington, NC 28401
Phone: 910.348.8007
www.woodseng.com

WOODS ENGINEERING, P.A. CORPORATE SEAL No. C-1806 NORTH CAROLINA

NORTH CAROLINA PROFESSIONAL SEAL 19475 ENGINEER DON R. WOODS

Digitally signed by Don R. Woods, PE
DN: cn=Don R. Woods, PE, o=WOODS ENGINEERING, P.A., ou=Wilmington, S.Hanover, C=US
Date: 2020.12.15 11:44:04-05'00'

DATE: 12.15.2020 - CONSTRUCTION DOCUMENTS

PROJECT NO: 20131

Smith Office - Sir Tyler IV
Wilmington, NC

NO.	REV./SUB.	DATE
1	PORCH MODS	12.14.2020

SECOND FLOOR FRAMING PLAN

S2.02

Plotted:12.15.2020 THIS DRAWING IS THE LEGAL PROPERTY OF LISLE ARCHITECTURE AND DESIGN, INC. AND IS NOT TO BE COPIED OR REPRODUCED IN WHOLE OR IN PART WITHOUT THE PERMISSION OF THE ARCHITECT - COPYRIGHT 2020

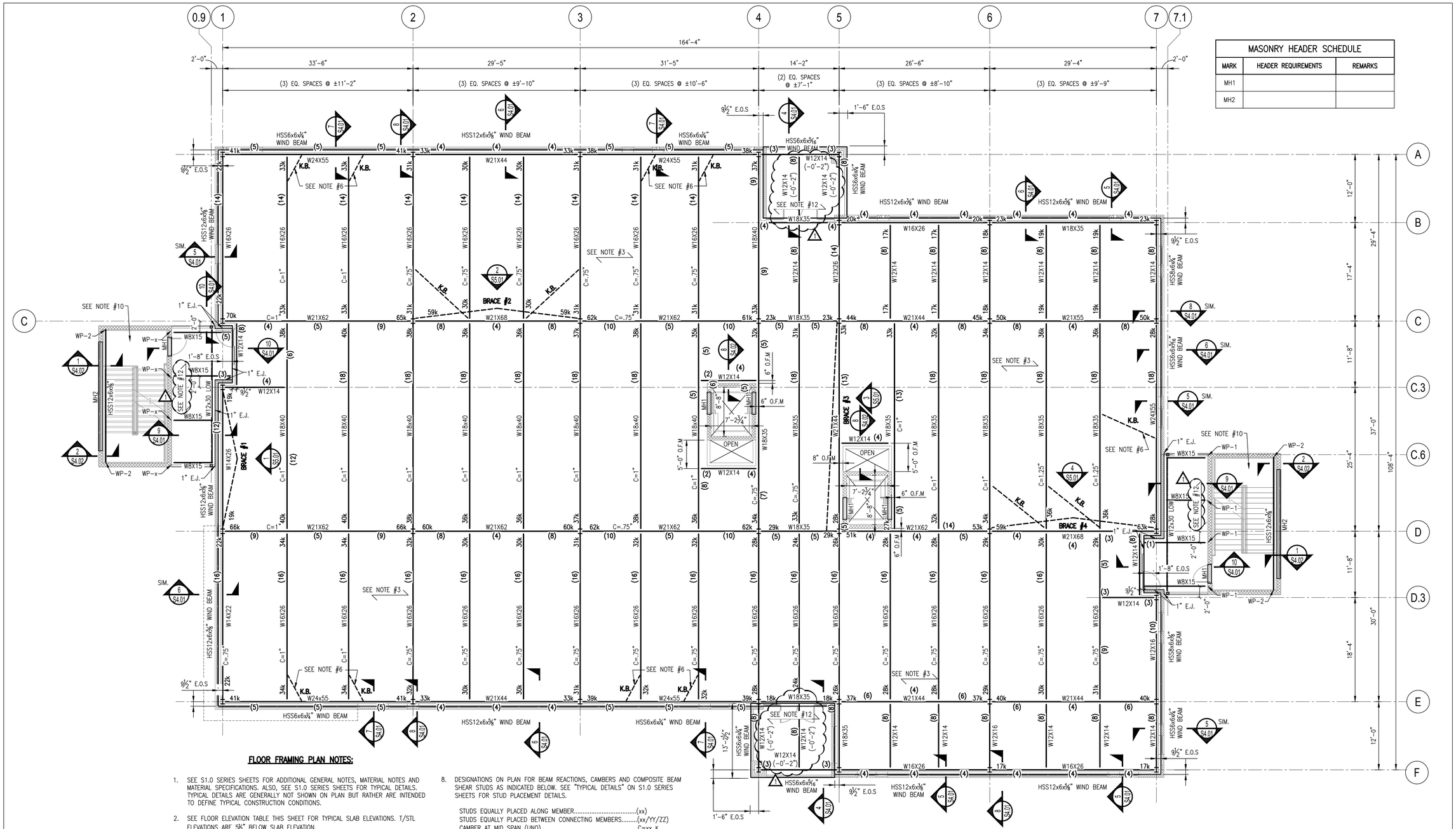

MASONRY HEADER SCHEDULE		
MARK	HEADER REQUIREMENTS	REMARKS
MH1		
MH2		

FLOOR FRAMING PLAN NOTES:

1. SEE S1.0 SERIES SHEETS FOR ADDITIONAL GENERAL NOTES, MATERIAL NOTES AND MATERIAL SPECIFICATIONS. ALSO, SEE S1.0 SERIES SHEETS FOR TYPICAL DETAILS. TYPICAL DETAILS ARE GENERALLY NOT SHOWN ON PLAN BUT RATHER ARE INTENDED TO DEFINE TYPICAL CONSTRUCTION CONDITIONS.
2. SEE FLOOR ELEVATION TABLE THIS SHEET FOR TYPICAL SLAB ELEVATIONS. T/STL ELEVATIONS ARE 5½" BELOW SLAB ELEVATION.
3. TYPICAL FLOOR SLAB IS 3½" – 3,000 psi NORMAL WEIGHT CONCRETE TOPPING WITH 4lbs/yd³ OF SYNTHETIC MACRO-FIBERS (TUF-STRAND SF BY EUCLID, FORTA-FERRO BY FORTA CORP, OR APPROVED EQUAL) ON 2", 18 GAUGE GALVANIZED COMPOSITE METAL DECK VULCRAFT 2VLI18 OR APPROVED EQUAL. TOTAL FLOOR SLAB SYSTEM IS 5½" THICK, TYP. UNO.
4. PROVIDE JOIST BRIDGING PER SJI RECOMMENDATIONS.
5. J.B.E. = JOIST BEARING ELEVATION.
6. HANGER AND KICKER FOR WIND BEAM SUPPORTS – SEE SECTIONS
7. T/STL = TOP OF STEEL
8. DESIGNATIONS ON PLAN FOR BEAM REACTIONS, CAMBERS AND COMPOSITE BEAM SHEAR STUDS AS INDICATED BELOW. SEE "TYPICAL DETAILS" ON S1.0 SERIES SHEETS FOR STUD PLACEMENT DETAILS.

   STUDS EQUALLY PLACED ALONG MEMBER.....(xx)
   STUDS EQUALLY PLACED BETWEEN CONNECTING MEMBERS.....(xx/YY/ZZ)
   CAMBER AT MID SPAN (UNO).....C=xx K
   ASD REACTIONS AT EACH END (KIPS).....xx K (LRFD)
   (MINIMUM REACTION = 16k IF NOT SHOWN ON PLAN)(LRFD)

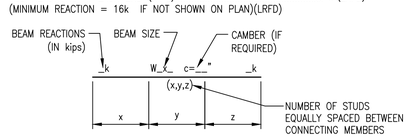

9. WHEN A SECTION IS CUT OR A DETAIL IS LABELED FOR A PARTICULAR CONDITION, THAT SECTION OR DETAIL SHALL APPLY FOR ALL SIMILAR CONDITIONS REGARDLESS OF WHETHER CUT OR LABELED, U.N.O.
10. EXIT STAIRS SHALL BE STEEL, METAL PAN AND CONCRETE, D.D.
11. SEE S2.01 SHEET FOR WF COLUMN SIZES.
12. TYPICAL DECK SLAB SHALL BE 3½" (MIN.) – 3,000 psi NORMAL WEIGHT CONCRETE TOPPING WITH #4 @ 12"o.c. EACH WAY ON 2", 18 GAUGE GALVANIZED COMPOSITE METAL DECK VULCRAFT 2VLI18 OR APPROVED EQUAL. TOTAL FLOOR SLAB SYSTEM IS 5½" THICK MINIMUM.

THIRD FLOOR FRAMING PLAN

SCALE: 1/8" = 1'-0"

WIND BEAM B/STL =+1½" ABOVE CURTAIN WALL

TOP OF SLAB ELEVATION TABLE	
FLOOR	ELEVATION
Roof	VARIES
3rd	+28'-0"
2nd	14'-0"
1st	0'-0"

ELEVATIONS NOTED ARE FROM DATUM ELEVATION (0'-0")

FLOOR FRAMING LEGEND

- WXXX — STEEL COLUMN – SEE PLAN FOR SIZE AND LOCATION
- W_x_ — STEEL BEAM – SEE PLAN FOR SIZE AND LOCATION
- 0 — GRID DESIGNATION FOR CENTERLINE OF COLUMN U.N.O.
- BRACE #x — INDICATES STEEL BRACE LOCATIONS – SEE PLAN & SHEET S5.0 SERIES SHEETS
- E.J. — BUILDING EXPANSION JOINT LOCATION – SEE SECTIONS FOR DETAILS
- INDICATES 8" CMU WALL SEE PLAN FOR REQUIREMENTS
- MHx — MASONRY HEADER SEE SCHEDULE THIS SHEET
- KB — KICKER BRACE – L4x4 SEE 3/S4.01
- WP-x — INDICATES MASONRY WALL PLATE SEE S3.0 SERIES SHEETS
- MBP-x — INDICATES MASONRY BEARING PLATE SEE S3.0 SERIES SHEETS

LISLE Architecture & Design, Inc.

Lisle Architecture & Design, Inc.
614 Market Street
Wilmington, NC 28401
(910) 763.6053 (o)
(910) 763.4517 (f)

5 W. Hargett St. Suite 312
Raleigh, NC 27601
(919) 980.0283 (o)

www.LisleArchitecture.com

WOODS ENGINEERING
Consulting Structural Engineers
254 North Front Street
Suite 201
Wilmington, NC 28401
Phone: 910.348.8007
www.woodseng.com

WOODS ENGINEERING, P.A. CORPORATE SEAL No. C-1806 NORTH CAROLINA

NORTH CAROLINA PROFESSIONAL SEAL 19475 ENGINEER DON R. WOODS

Digitally signed by Don R. Woods, PE
DN: C=US, E=donwoods@woodseng.com, CN=Don R. Woods, PE, O=WOODS ENGINEERING, P.A.T.L.=wwwlogin, S=North Carolina, C=US
Date: 2020.12.15 11:44:23-05'00'

Smith Office - Sir Tyler IV
Wilmington, NC

NO.	REV/SUB.	DATE
1	PORCH MODS	12.14.2020

DATE: 12.15.2020 - CONSTRUCTION DOCUMENTS

PROJECT NO. 20131

THIRD FLOOR FRAMING PLAN

S2.03

Rotted12.15.2020 THIS DRAWING IS THE LEGAL PROPERTY OF LISLE ARCHITECTURE AND DESIGN, INC. AND IS NOT TO BE COPIED OR REPRODUCED IN WHOLE OR IN PART WITHOUT THE PERMISSION OF THE ARCHITECT - COPYRIGHT 2020

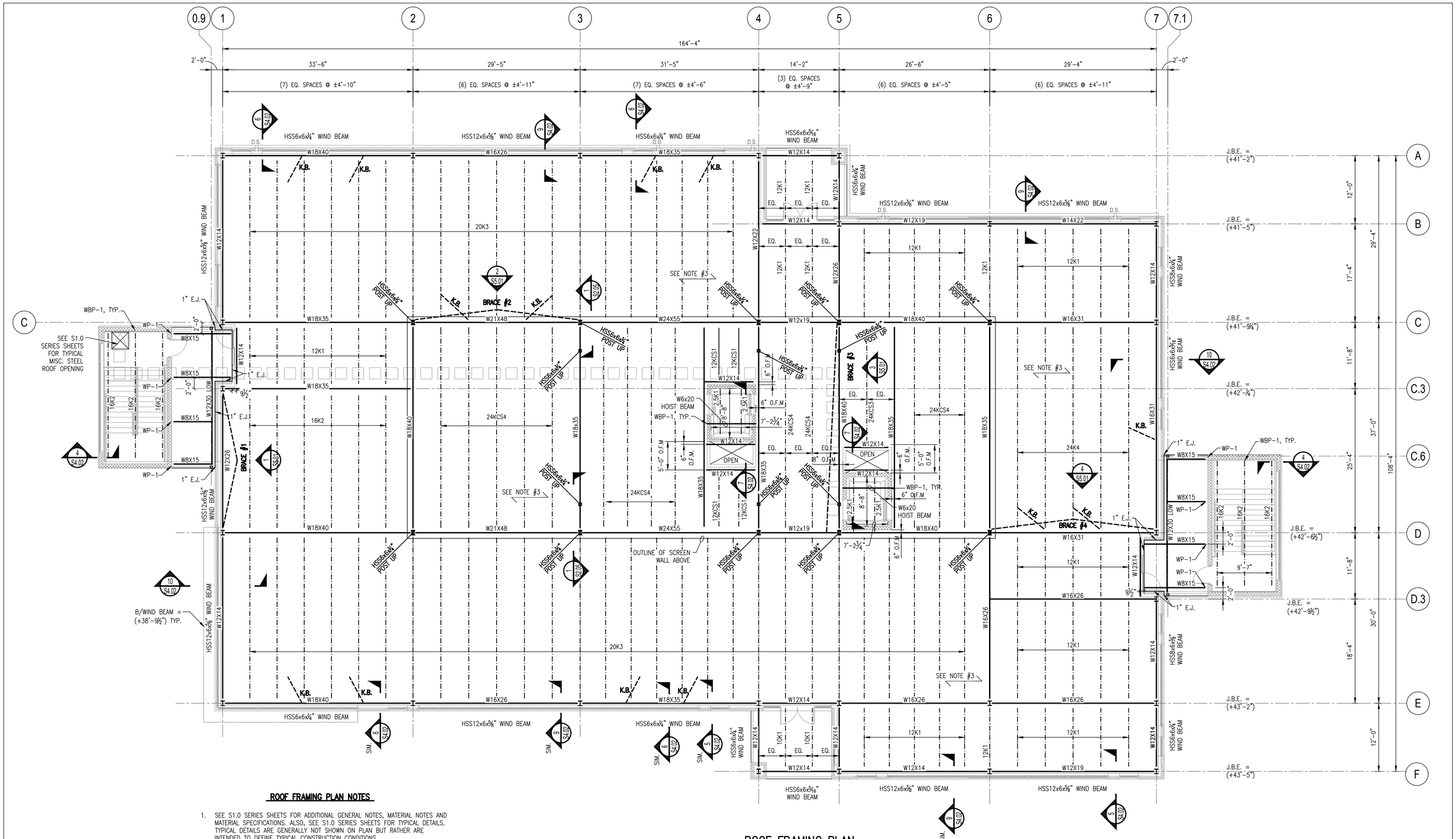

ROOF FRAMING PLAN

SCALE: 1/8" = 1'-0"

B/WIND BEAM = (+38'-9½") TYP.

ROOF FRAMING PLAN NOTES

1. SEE S1.0 SERIES SHEETS FOR ADDITIONAL GENERAL NOTES, MATERIAL NOTES AND MATERIAL SPECIFICATIONS. ALSO, SEE S1.0 SERIES SHEETS FOR TYPICAL DETAILS. TYPICAL DETAILS ARE GENERALLY NOT SHOWN ON PLAN BUT RATHER ARE INTENDED TO DEFINE TYPICAL CONSTRUCTION CONDITIONS.
2. ELEVATIONS SHOWN ON PLAN ARE REFERENCED TO DATUM ELEVATION (0'-0") – SEE S2.01.
3. TYPICAL ROOF DECK IS 1½" DEEP, 20 ga., GALVANIZED, TYPE 'B' METAL ROOF DECK.
4. METAL ROOF DECK SHALL BE ATTACHED TO SUPPORTING MEMBERS WITH HILTI X-HSN 24 FOR STEEL THICKNESS EQUAL TO OR LESS THAN 3/8" AND HILTI X-ENP 19 OTHERWISE IN A 36/4 PATTERN U.N.O. ON PLAN – EXCEPT WITHIN ?'-?" OF ROOF EDGE PROVIDE FASTENERS IN A 36/7 PATTERN. PROVIDE (1) HILTI SCC TEK SIDELAP SCREW PER SPAN, U.N.O. ON PLAN.
5. ALL JOISTS SHALL BE DESIGNED FOR A NET UPLIFT PRESSURE OF 42 psf (LRFD)
6. PROVIDE JOIST BRIDGING PER SJI RECOMMENDATIONS.
7. SEE S5.0 SERIES SHEETS FOR BRACE FRAME INFORMATION.
8. WHEN A SECTION IS CUT OR A DETAIL IS LABELED FOR A PARTICULAR CONDITION, THAT SECTION OR DETAIL SHALL APPLY FOR ALL SIMILAR CONDITIONS REGARDLESS OF WHETHER CUT OR LABELED, U.N.O.
9. SEE S2.01 SHEET FOR WF COLUMN SIZES.

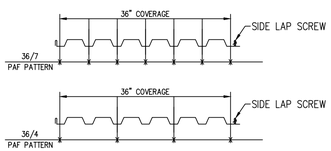

TOP OF SLAB ELEVATION TABLE	
FLOOR	ELEVATION
Roof	VARIES
3rd	+28'-0"
2nd	14'-0"
1st	0'-0"

ELEVATIONS NOTED ARE FROM DATUM ELEVATION (0'-0")

ROOF FRAMING LEGEND

W#x#	STEEL COLUMN – SEE PLAN FOR SIZE AND LOCATION
W_x_	STEEL BEAM – SEE PLAN FOR SIZE AND LOCATION
	INDICATES STEEL ROOF JOISTS SEE PLAN FOR SIZE AND SPACING
KB	KICKER BRACE – L4x4 SEE 3/S4.01
0	GRID DESIGNATION FOR CENTERLINE OF COLUMN U.N.O.
E.J.	BUILDING EXPANSION JOINT LOCATION – SEE SECTIONS FOR DETAILS
BRACE #x	INDICATES STEEL BRACE LOCATIONS SEE PLAN & SHEET S5.0 SERIES SHEETS
	INDICATES 8" CMU WALLS (BELOW) SEE PLAN FOR REQUIREMENTS
MHx	MASONRY HEADER SEE SCHEDULE THIS SHEET
WP-x	INDICATES MASONRY WALL PLATE SEE S3.0 SERIES SHEETS
MBP-x	INDICATES MASONRY BEARING PLATE SEE S3.0 SERIES SHEETS

LISLE Architecture & Design, Inc.

Lisle Architecture & Design, Inc.
614 Market Street
Wilmington, NC 28401
(910) 763.6053 (o)
(910) 763.4517 (f)

5 W. Hargett St. Suite 312
Raleigh, NC 27601
(919) 980.0283 (o)

www.LisleArchitecture.com

WOODS ENGINEERING
Consulting Structural Engineers
254 North Front Street
Suite 201
Wilmington, NC 28401
Phone: 910.348.8007
www.woodseng.com

WOODS ENGINEERING, P.A. CORPORATE SEAL No. C-1806 NORTH CAROLINA

NORTH CAROLINA PROFESSIONAL SEAL 19475 ENGINEER DON R. WOODS

Digitally signed by Don R. Woods, PE
DN: cn=Don R. Woods, PE, o=WOODS ENGINEERING, P.A., l=Wilmington, S=North Carolina, C=US
Date: 2020.12.15 11:44:43-05'00'

DATE: 12.15.2020 - CONSTRUCTION DOCUMENTS

PROJECT NO: 20131

NO.	REV/SUB.	DATE

Smith Office - Sir Tyler IV
Wilmington, NC

ROOF FRAMING PLAN

S2.04

Plotted:12.15.2020 THIS DRAWING IS THE LEGAL PROPERTY OF LISLE ARCHITECTURE AND DESIGN, INC. AND IS NOT TO BE COPIED OR REPRODUCED IN WHOLE OR IN PART WITHOUT THE PERMISSION OF THE ARCHITECT - COPYRIGHT 2020

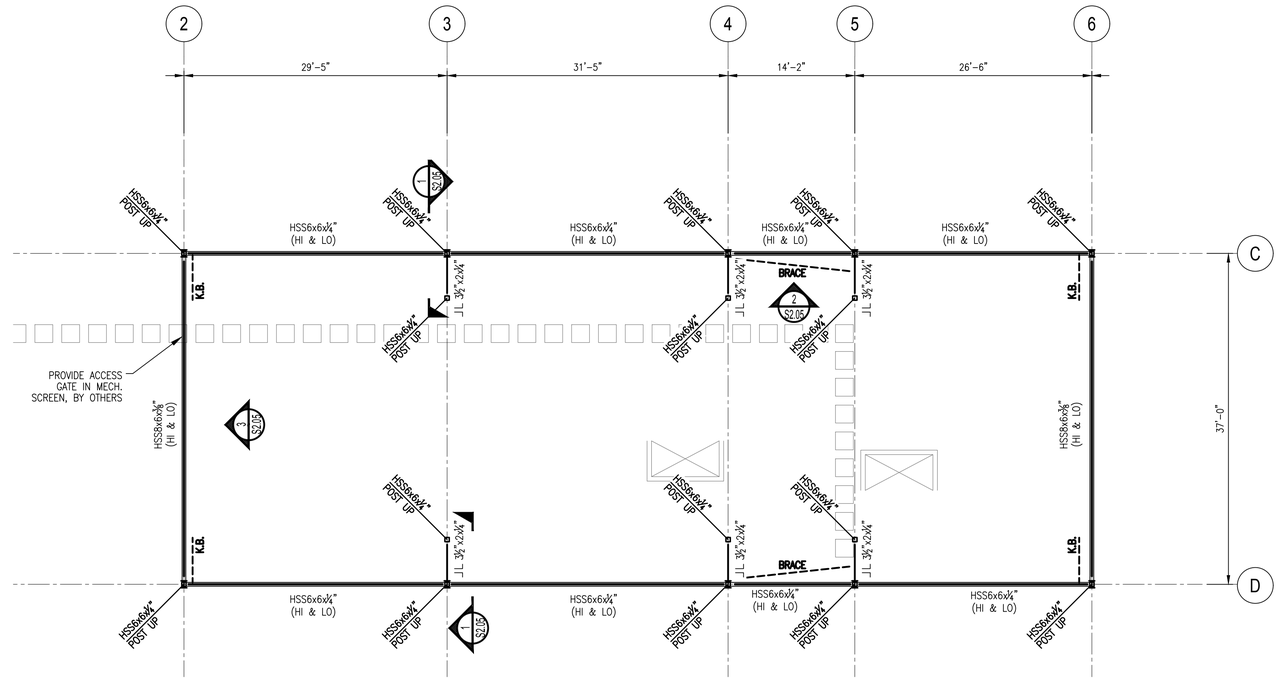

SCREEN WALL FRAMING PLAN

SCALE: 1/8" = 1'-0"

TOP OF SLAB ELEVATION TABLE	
FLOOR	ELEVATION
Roof	VARIES
3rd	+28'-0"
2nd	14'-0"
1st	0'-0"

ELEVATIONS NOTED ARE FROM DATUM ELEVATION (0'-0")

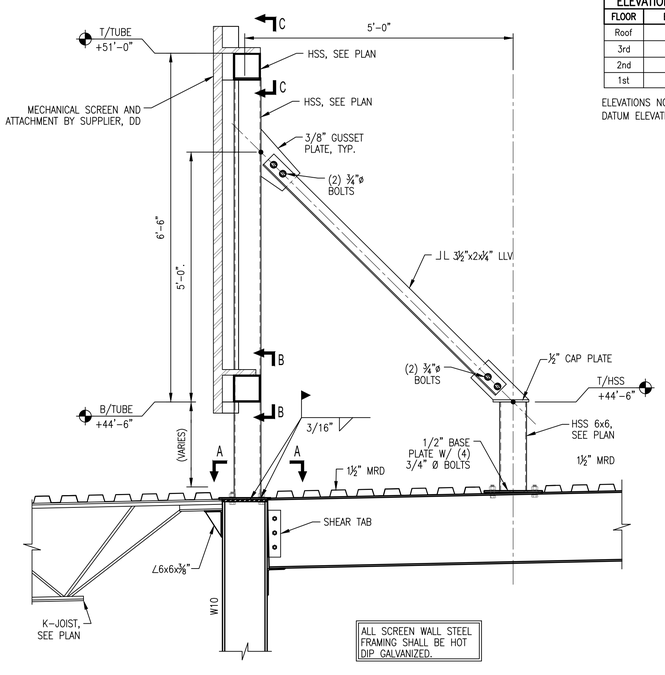

SECTION 1-1

SCALE: 3/4" = 1'-0"

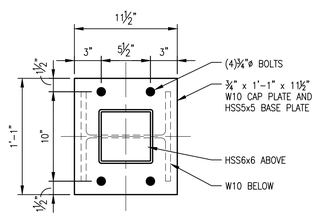

DETAIL A-A

SCALE: 1 1/2" = 1'-0"

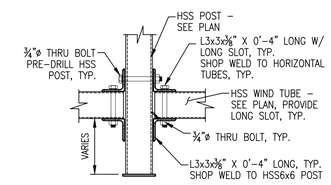

DETAIL B-B

SCALE: 3/4" = 1'-0"

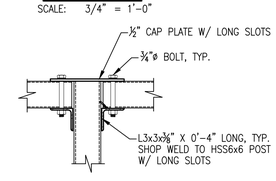

DETAIL C-C

SCALE: 3/4" = 1'-0"

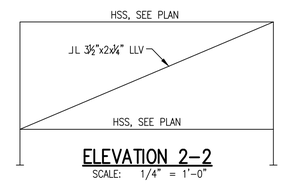

ELEVATION 2-2

SCALE: 1/4" = 1'-0"

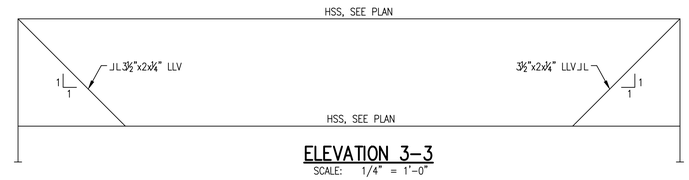

ELEVATION 3-3

SCALE: 1/4" = 1'-0"

LISLE Architecture & Design, Inc.

Lisle Architecture & Design, Inc.

614 Market Street
Wilmington, NC 28401
(910) 763.6053 (o)
(910) 763.4517 (f)

5 W. Hargett St. Suite 312
Raleigh, NC 27601
(919) 980.0283 (o)

www.LisleArchitecture.com

WOODS ENGINEERING
Consulting Structural Engineers
254 North Front Street Suite 201 Wilmington, NC 28401
Phone: 910.348.8007
www.woodseng.com

WOODS ENGINEERING, P.A. CORPORATE SEAL No. C-1806 NORTH CAROLINA

NORTH CAROLINA PROFESSIONAL SEAL 19475 ENGINEER DON R. WOODS

Digitally signed by Don R. Woods, PE
DN: cn=Don R. Woods, PE, o=WOODS ENGINEERING, P.A., l=Wilmington, S=North Carolina, c=US
Date: 2020.12.15 11:45:01-05'00'

DATE: 12.15.2020 - CONSTRUCTION DOCUMENTS

Smith Office - Sir Tyler IV
Wilmington, NC

PROJECT NO: 20131

NO.	REV/SUB.	DATE

SCREEN WALL FRAMING PLAN

S2.05

Plotted:12.15.2020 THIS DRAWING IS THE LEGAL PROPERTY OF LISLE ARCHITECTURE AND DESIGN, INC. AND IS NOT TO BE COPIED OR REPRODUCED IN WHOLE OR IN PART WITHOUT THE PERMISSION OF THE ARCHITECT - COPYRIGHT 2020

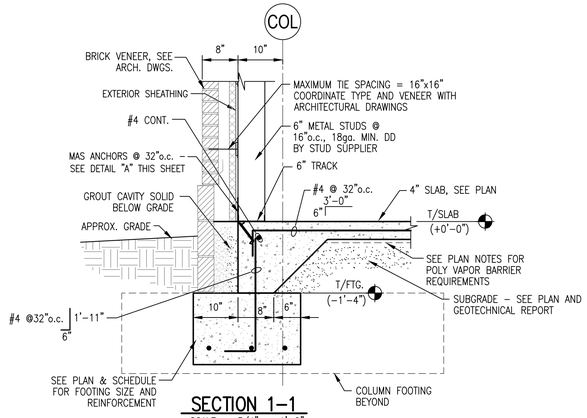

SECTION 1–1
SCALE: 3/4" = 1'-0"

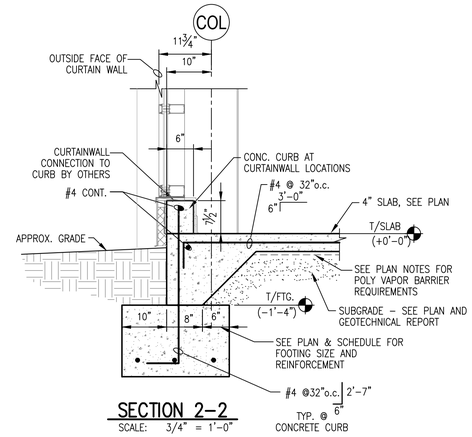

SECTION 2–2
SCALE: 3/4" = 1'-0"

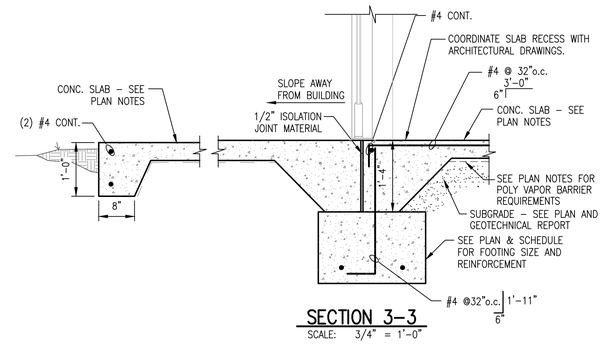

SECTION 3–3
SCALE: 3/4" = 1'-0"

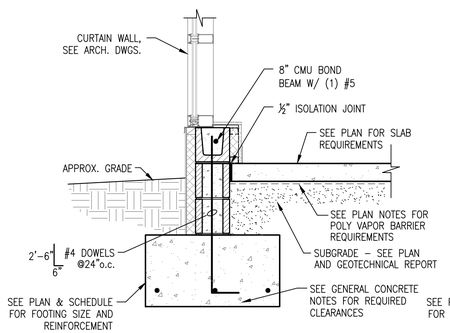

SECTION 4–4
SCALE: 3/4" = 1'-0"

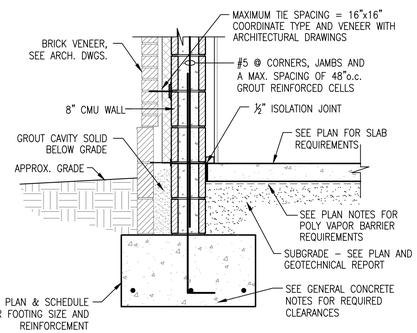

SECTION 5–5
SCALE: 3/4" = 1'-0"

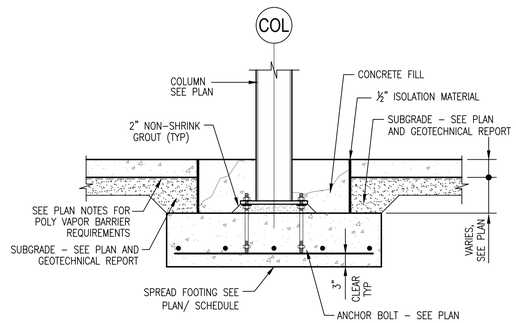

SECTION 6–6
SCALE: 3/4" = 1'-0"

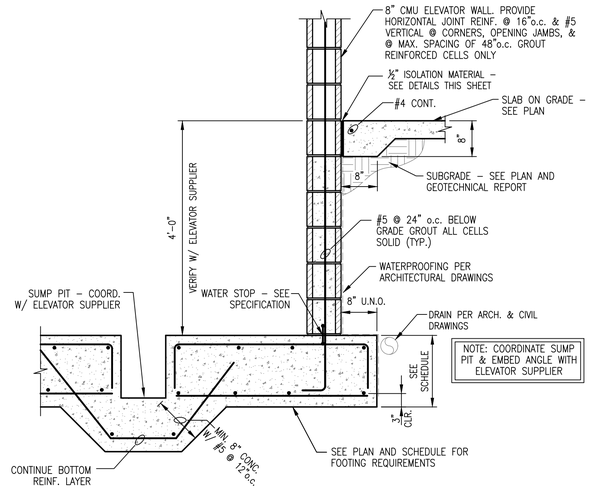

SECTION 7–7
SCALE: 3/4" = 1'-0"

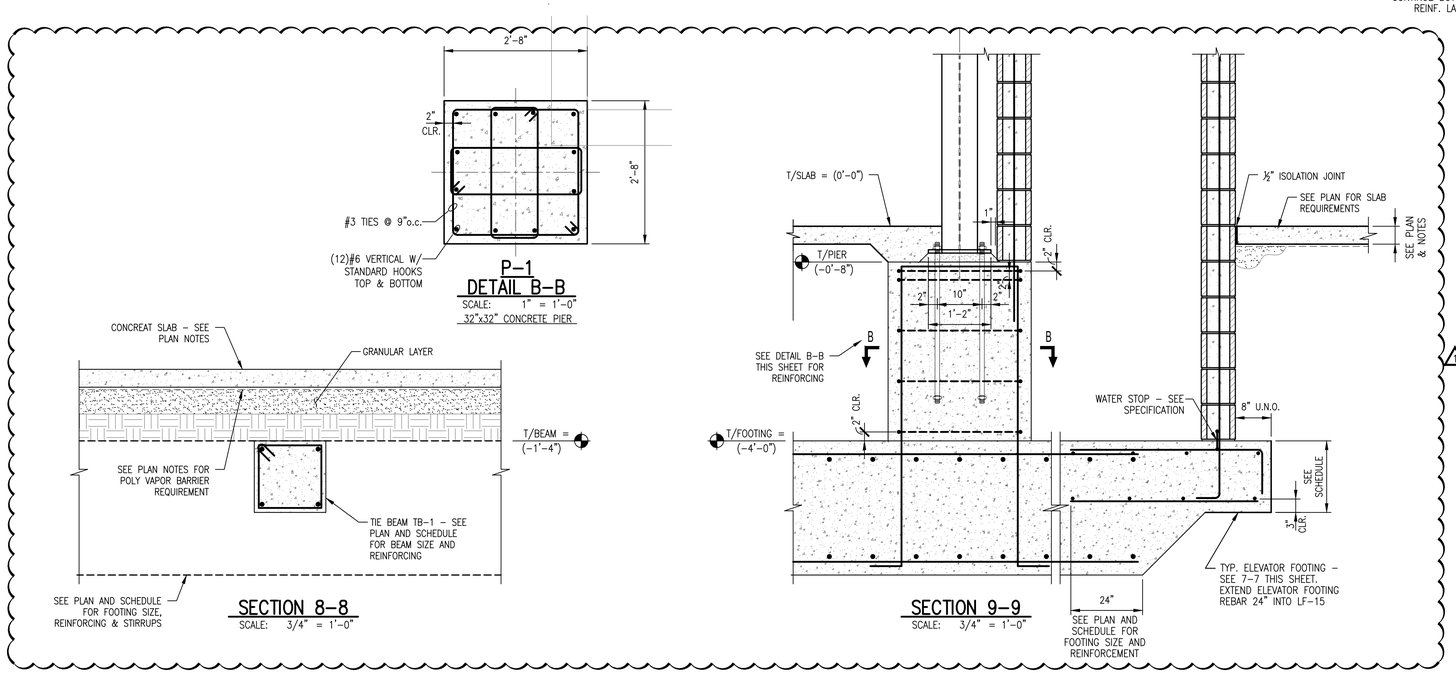

LISLE Architecture & Design, Inc.

Lisle Architecture & Design, Inc.
614 Market Street
Wilmington, NC 28401
(910) 763.6053 (o)
(910) 763.4517 (f)

5 W. Hargett St. Suite 312
Raleigh, NC 27601
(919) 980.0283 (o)

www.LisleArchitecture.com

WOODS ENGINEERING
Consulting Structural Engineers
254 North Front Street
Suite 201
Wilmington, NC 28401
Phone: 910.348.8007
www.woodseng.com

WOODS ENGINEERING, P.A. CORPORATE SEAL No. C-1806 NORTH CAROLINA

NORTH CAROLINA PROFESSIONAL SEAL 19475 ENGINEER DON R. WOODS

Digitally signed by Don R. Woods, PE
DN: cn=Don R. Woods, PE, o=WOODS ENGINEERING, P.A., l=Wilmington, S=North Carolina, c=US
Date: 2020.12.15 14:49:24-05'00'

DATE: 12.15.2020 - CONSTRUCTION DOCUMENTS

Smith Office - Sir Tyler IV
Wilmington, NC

PROJECT NO: 20131

NO.	REV./SUB.	DATE
1	ADDED FOOTINGS	12.14.2020

FOUNDATION SECTIONS & DETAILS

S3.01

Plotted:12.15.2020 THIS DRAWING IS THE LEGAL PROPERTY OF LISLE ARCHITECTURE AND DESIGN, INC. AND IS NOT TO BE COPIED OR REPRODUCED IN WHOLE OR IN PART WITHOUT THE PERMISSION OF THE ARCHITECT - COPYRIGHT 2020

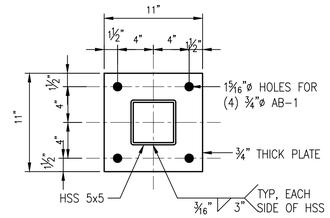

DETAIL 'BP-1'
SCALE: 1 1/2" = 1'-0"
(HSS 5x5 BASEPLATE)
TYPICAL, UNO

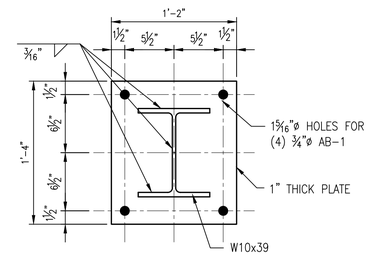

DETAIL 'BP-2'
SCALE: 1 1/2" = 1'-0"
(W10x39 BASEPLATE)
TYPICAL, UNO

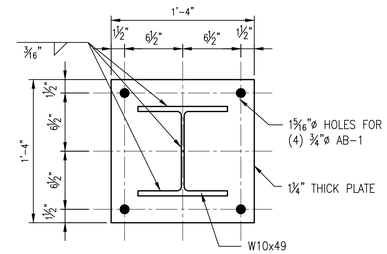

DETAIL 'BP-3'
SCALE: 1 1/2" = 1'-0"
(W10x49 BASEPLATE)
TYPICAL, UNO

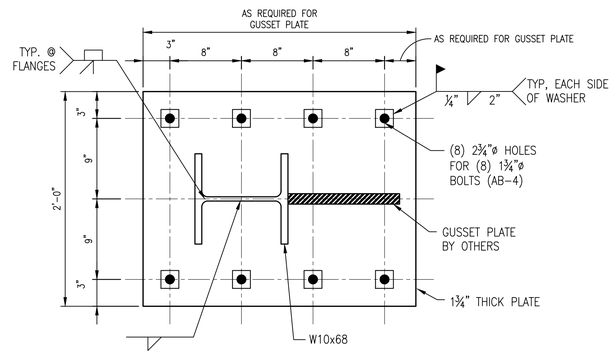

DETAIL 'BP-4'
SCALE: 1 1/2" = 1'-0"
(BRACE FRAME #3 BASEPLATE)
TYPICAL, UNO

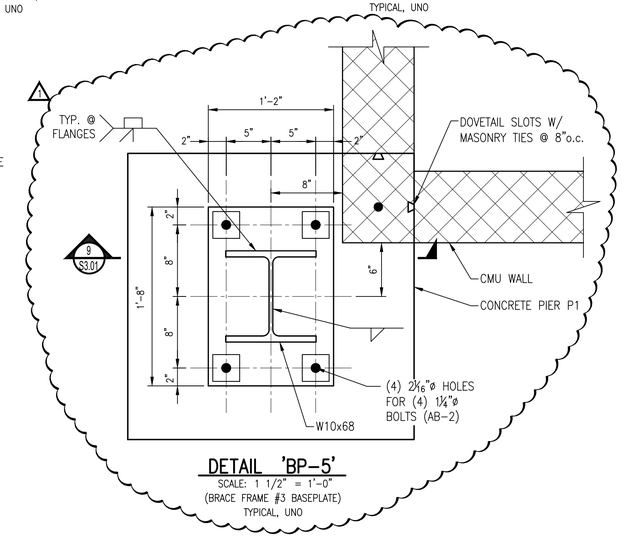

DETAIL 'BP-5'
SCALE: 1 1/2" = 1'-0"
(BRACE FRAME #3 BASEPLATE)
TYPICAL, UNO

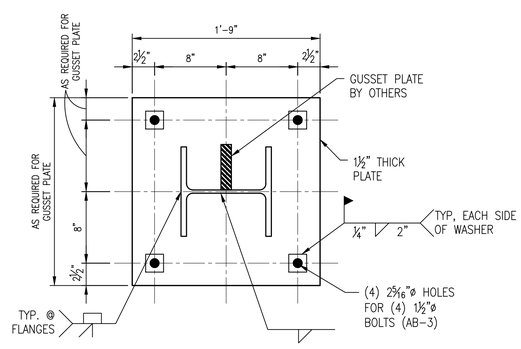

DETAIL 'BP-6'
SCALE: 1 1/2" = 1'-0"
(BRACE FRAME #2 & #4 BASEPLATE)
TYPICAL, UNO

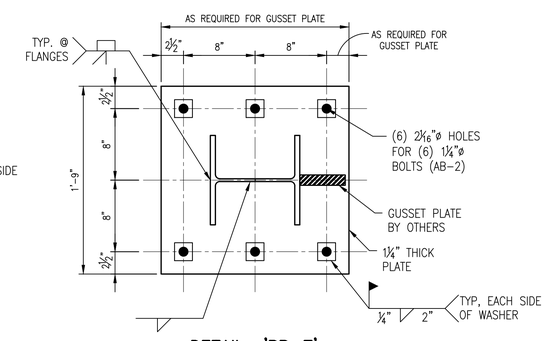

DETAIL 'BP-7'
SCALE: 1 1/2" = 1'-0"
(BRACE FRAME #1 BASEPLATE)
TYPICAL, UNO

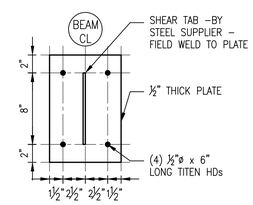

DETAIL 'WP-1'
SCALE: 1 1/2" = 1'-0"

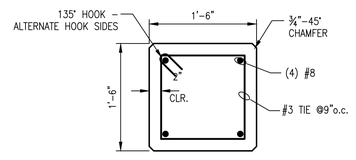

TIE BEAM (TB-1) DETAIL
SCALE: 1" = 1'-0"

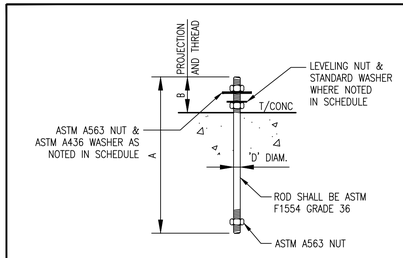

ANCHOR BOLT SCHEDULE

MARK	BOLT DIAM. D	HOLE DIAMETER	A	B	WASHER O.D. x t	WASHER HOLE DIAM.	LEVELING NUT	PULLOUT WASHER	REMARKS
AB-1	¾"	1⁵⁄₁₆"	1'-2"	5"	2" x ¼"	1³⁄₁₆"	YES	–	
AB-2	1¼"	2⁹⁄₁₆"	2'-4"	7"	3" x ½"	1⁹⁄₁₆"	YES	–	
AB-3	1½"	2⁵⁄₁₆"	2'-5"	8"	3½" x ½"	1⁹⁄₁₆"	YES	4"x4"x¾"	
AB-4	1¾"	2¾"	2'-8"	9"	4" x ⅝"	1¹³⁄₁₆"	YES	4"x4"x¾"	

LISLE Architecture & Design, Inc.

Lisle Architecture & Design, Inc.
614 Market Street
Wilmington, NC 28401
(910) 763.6053 (o)
(910) 763.4517 (f)

5 W. Hargett St. Suite 312
Raleigh, NC 27601
(919) 980.0283 (o)

www.LisleArchitecture.com

WOODS ENGINEERING
Consulting Structural Engineers
254 North Front Street
Suite 201
Wilmington, NC 28401
Phone: 910.348.8007
www.woodseng.com

WOODS ENGINEERING, P.A. CORPORATE SEAL No. C-1806 NORTH CAROLINA

NORTH CAROLINA PROFESSIONAL SEAL 19475 ENGINEER DON R. WOODS

Digitally signed by Don R. Woods, PE
DN: c=US, o=woodsengineering.com, cn=Don R. Woods, PE, o=WOODS ENGINEERING, P.A.?1, l=Wilmington, S=North Carolina, C=US
Date: 2020.12.15 11:45:44-05'00'

DATE: 12.15.2020 - CONSTRUCTION DOCUMENTS

PROJECT NO: 20131

Smith Office - Sir Tyler IV
Wilmington, NC

NO.	REV/SUB.	DATE
1	ADDED FOOTINGS	12.14.2020

BASE PLATES

S3.02

Plotted12.15.2020 THIS DRAWING IS THE LEGAL PROPERTY OF LISLE ARCHITECTURE AND DESIGN, INC. AND IS NOT TO BE COPIED OR REPRODUCED IN WHOLE OR IN PART WITHOUT THE PERMISSION OF THE ARCHITECT - COPYRIGHT 2020

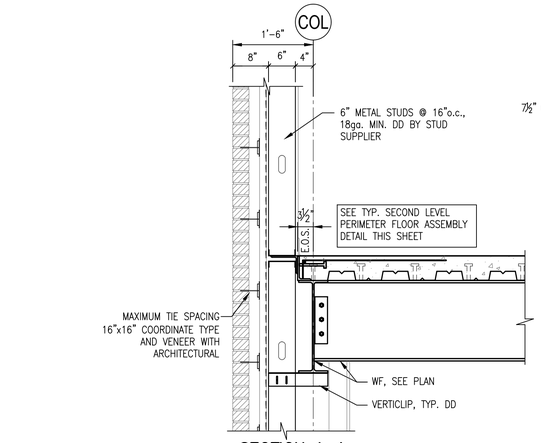

SECTION 1–1
SCALE: 3/4" = 1'-0"
2nd @ PERIMETER NO WINDOW

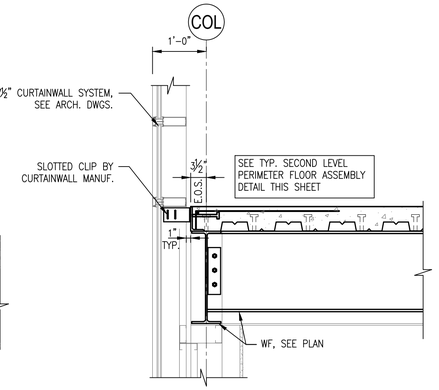

SECTION 2–2
SCALE: 3/4" = 1'-0"
@ 2nd PERIMETER CURTAIN WALL

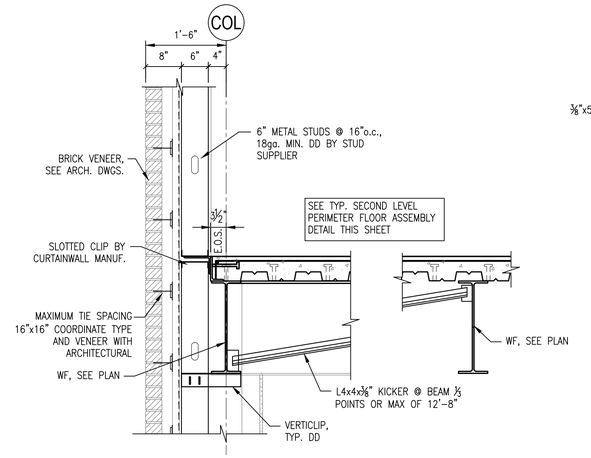

SECTION 3–3
SCALE: 3/4" = 1'-0"

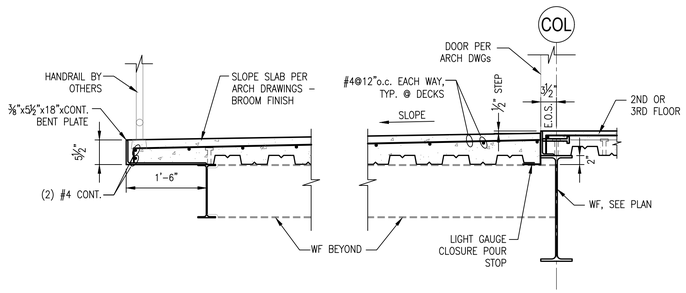

SECTION 4–4
SCALE: 3/4" = 1'-0"

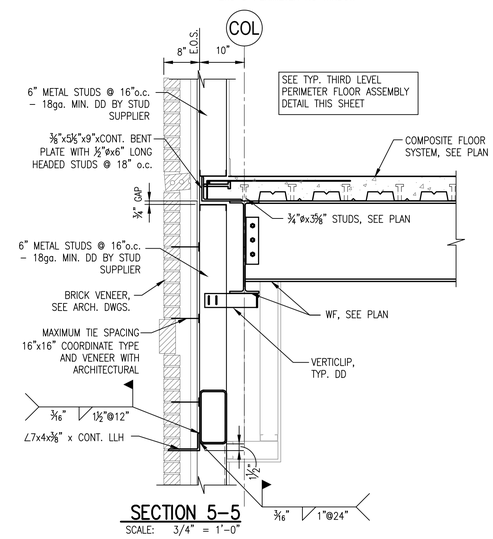

SECTION 5–5
SCALE: 3/4" = 1'-0"

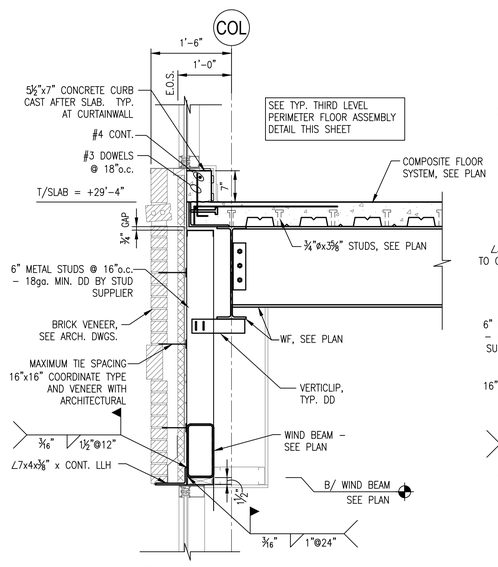

SECTION 6–6
SCALE: 3/4" = 1'-0"

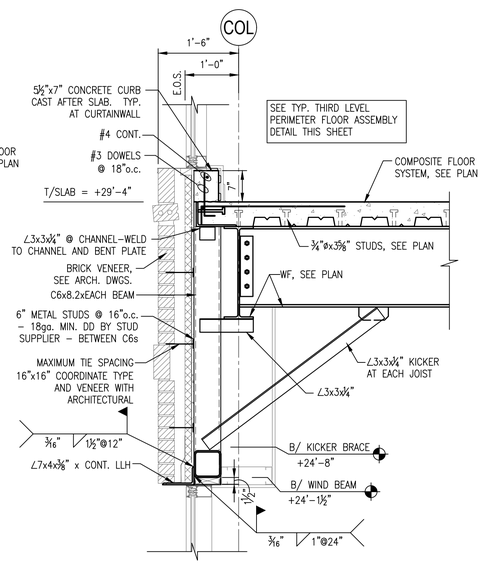

SECTION 7–7
SCALE: 3/4" = 1'-0"

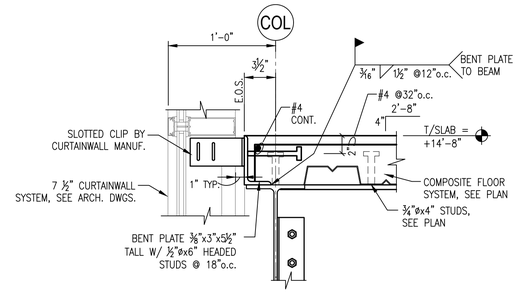

TYP. SECOND LEVEL PERIMETER FLOOR ASSEMBLY AT CURTAIN WALL
SCALE: 1 1/2" = 1'-0"

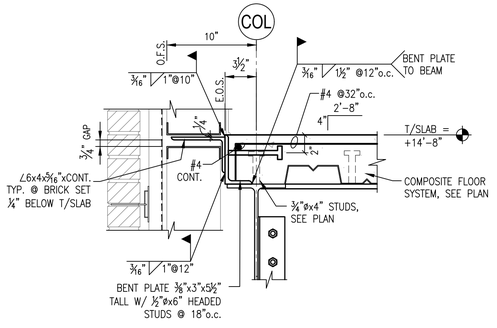

TYP. SECOND LEVEL PERIMETER FLOOR ASSEMBLY AT MASONRY
SCALE: 1 1/2" = 1'-0"

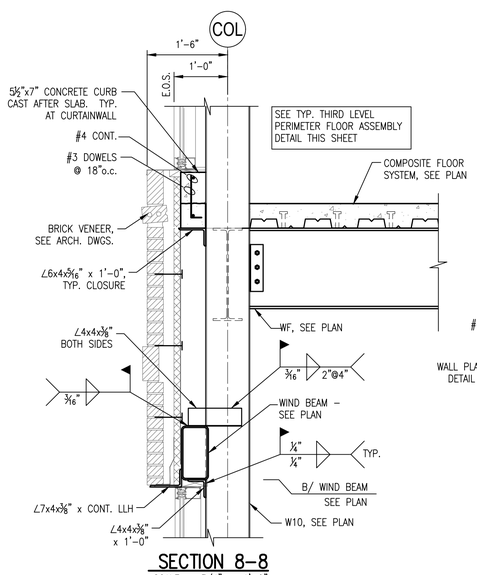

SECTION 8–8
SCALE: 3/4" = 1'-0"

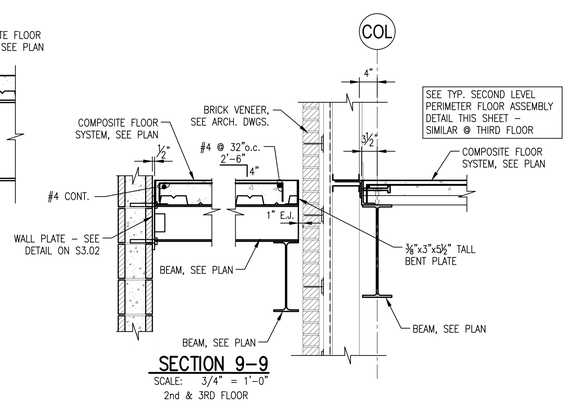

SECTION 9–9
SCALE: 3/4" = 1'-0"
2nd & 3RD FLOOR
FRAMING BESIDE STAIRS

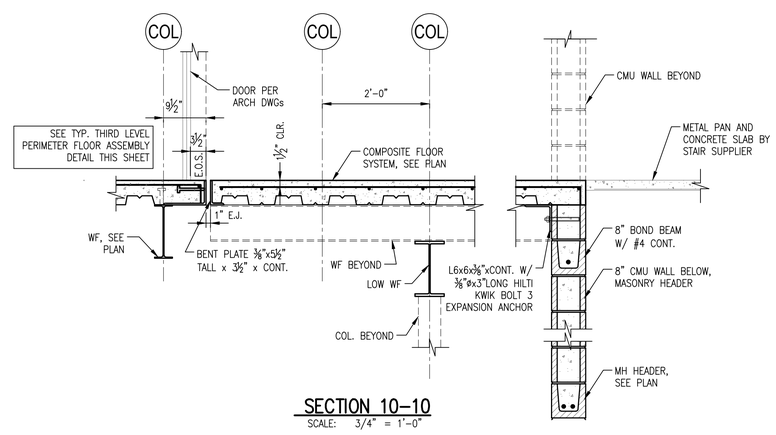

SECTION 10–10
SCALE: 3/4" = 1'-0"

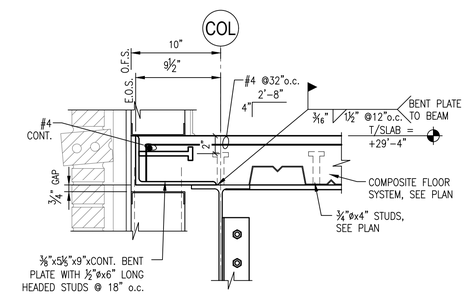

TYP. THIRD LEVEL PERIMETER FLOOR ASSEMBLY
SCALE: 1 1/2" = 1'-0"

LISLE Architecture & Design, Inc.

Lisle Architecture & Design, Inc.
614 Market Street
Wilmington, NC 28401
(910) 763.6053 (o)
(910) 763.4517 (f)

5 W. Hargett St. Suite 312
Raleigh, NC 27601
(919) 980.0283 (o)

www.LisleArchitecture.com

WOODS ENGINEERING
Consulting Structural Engineers
254 North Front Street
Suite 201
Wilmington, NC 28401
Phone: 910.348.8007
www.woodseng.com

WOODS ENGINEERING, P.A. CORPORATE SEAL No. C-1806 NORTH CAROLINA

NORTH CAROLINA PROFESSIONAL SEAL 19475 ENGINEER DON R. WOODS

Digitally signed by Don R. Woods, P.E.
DN: cn=Don R. Woods, P.E., o=WOODS ENGINEERING, P.A., ou=Engineering, c=US, email=don@woodseng.com, c=US
Date: 2020.12.15 11:46:02-05'00'

DATE: 12.15.2020 - CONSTRUCTION DOCUMENTS

PROJECT NO: 20131

Smith Office - Sir Tyler IV
Wilmington, NC

NO.	REV/SUB.	DATE
1	PORCH MODS	12.14.2020

FRAMING SECTIONS & DETAILS

S4.01

Plotted12.15.2020 THIS DRAWING IS THE LEGAL PROPERTY OF LISLE ARCHITECTURE AND DESIGN, INC. AND IS NOT TO BE COPIED OR REPRODUCED IN WHOLE OR IN PART WITHOUT THE PERMISSION OF THE ARCHITECT - COPYRIGHT 2020

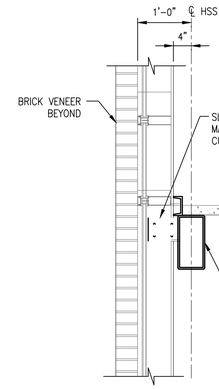

SECTION 1–1
SCALE: 3/4" = 1'-0"
2nd & 3RD STAIR LANDING FRAMING @ WINDOW

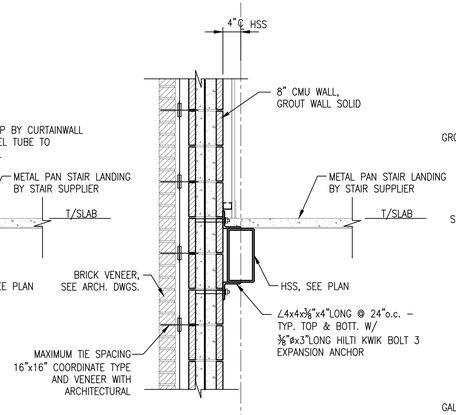

SECTION 2–2
SCALE: 3/4" = 1'-0"
2ND & 3RD @ STAIR NO WINDOW

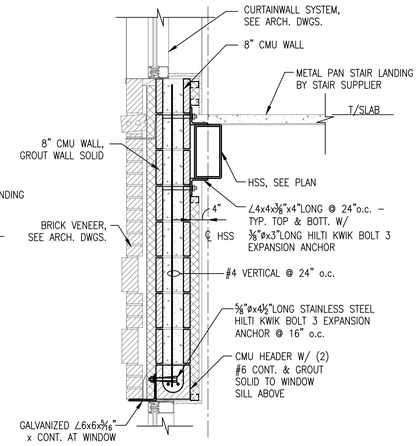

SECTION 3–3
SCALE: 3/4" = 1'-0"

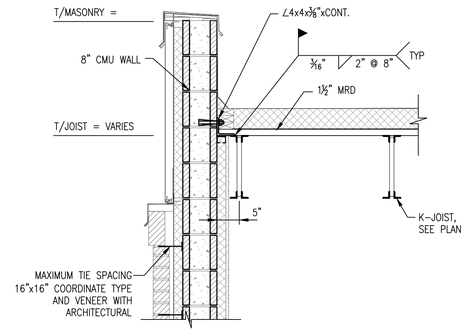

SECTION 4–4
SCALE: 3/4" = 1'-0"

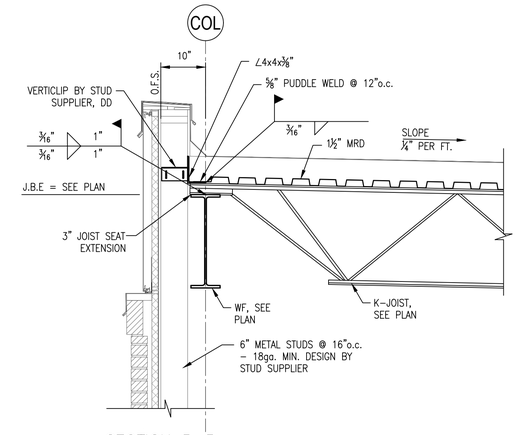

SECTION 5–5
SCALE: 3/4" = 1'-0"

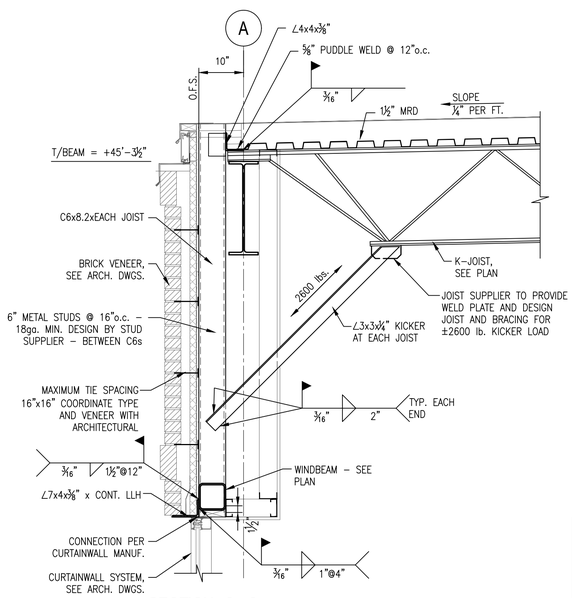

SECTION 6–6
SCALE: 3/4" = 1'-0"

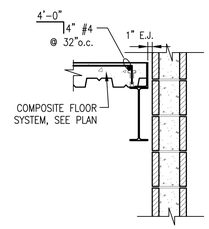

SECTION 8–8
SCALE: 3/4" = 1'-0"
@ ELEVATOR FRAMING 2nd & 3RD

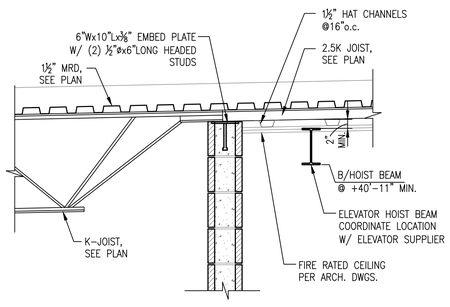

SECTION 7–7
SCALE: 3/4" = 1'-0"

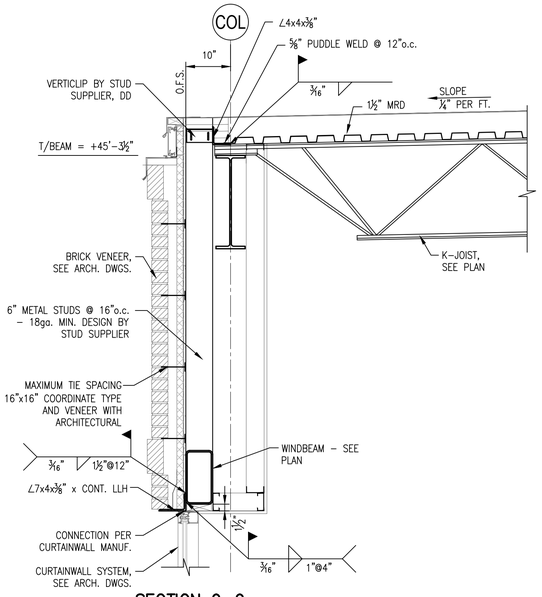

SECTION 9–9
SCALE: 3/4" = 1'-0"

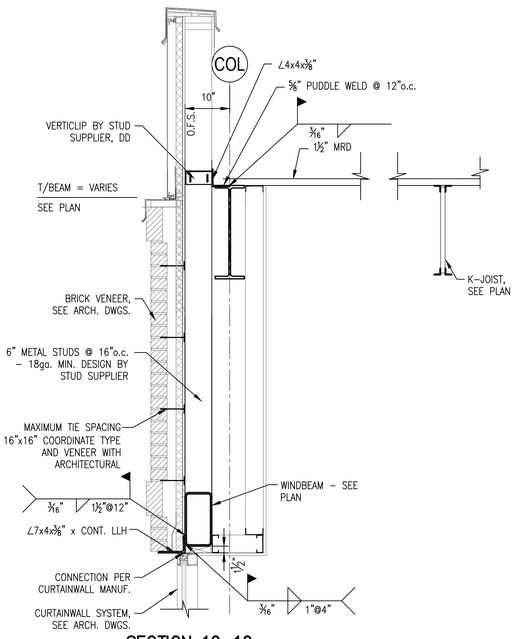

SECTION 10–10
SCALE: 3/4" = 1'-0"

LISLE Architecture & Design, Inc.

Lisle Architecture & Design, Inc.
614 Market Street
Wilmington, NC 28401
(910) 763.6053 (o)
(910) 763.4517 (f)

5 W. Hargett St. Suite 312
Raleigh, NC 27601
(919) 980.0283 (o)

www.LisleArchitecture.com

WOODS ENGINEERING
Consulting Structural Engineers
254 North Front Street
Suite 201
Wilmington, NC 28401
Phone: 910.348.8007
www.woodseng.com

WOODS ENGINEERING, P.A. CORPORATE SEAL No. C-1806 NORTH CAROLINA

NORTH CAROLINA PROFESSIONAL SEAL 19475 ENGINEER DON R. WOODS

Digitally signed by Don R. Woods, PE
DN: c=US, e=donwoods@woodseng.com, o=Don R. Woods, PE/ DR WOODS ENGINEERING, P.A./C=Wilmington, S=North Carolina, C=US
Date: 2020.12.15 11:46:22-05'00'

DATE: 12.15.2020 - CONSTRUCTION DOCUMENTS

Smith Office - Sir Tyler IV
Wilmington, NC

PROJECT NO: 20131

NO.	REV./SUB.	DATE

FLOOR FRAMING SECTIONS & DETAILS

S4.02

Plotted12.15.2020 THIS DRAWING IS THE LEGAL PROPERTY OF LISLE ARCHITECTURE AND DESIGN, INC. AND IS NOT TO BE COPIED OR REPRODUCED IN WHOLE OR IN PART WITHOUT THE PERMISSION OF THE ARCHITECT - COPYRIGHT 2020

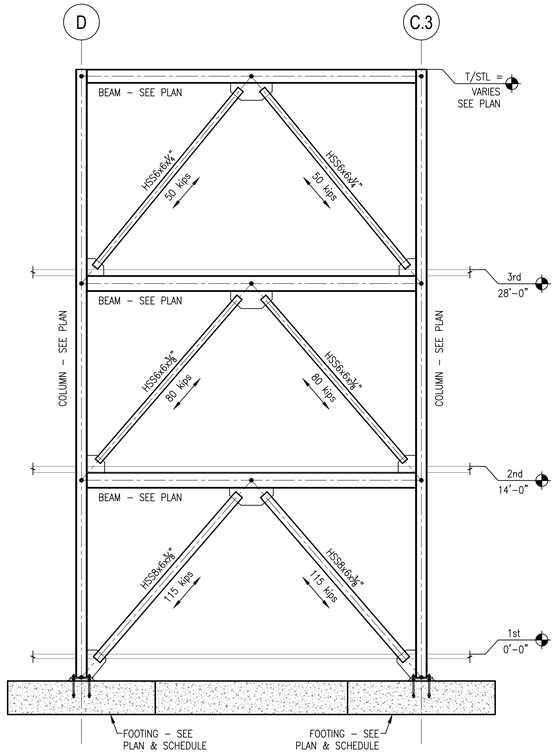

BRACE #1 ELEVATION
SCALE: 3/16" = 1'–0"

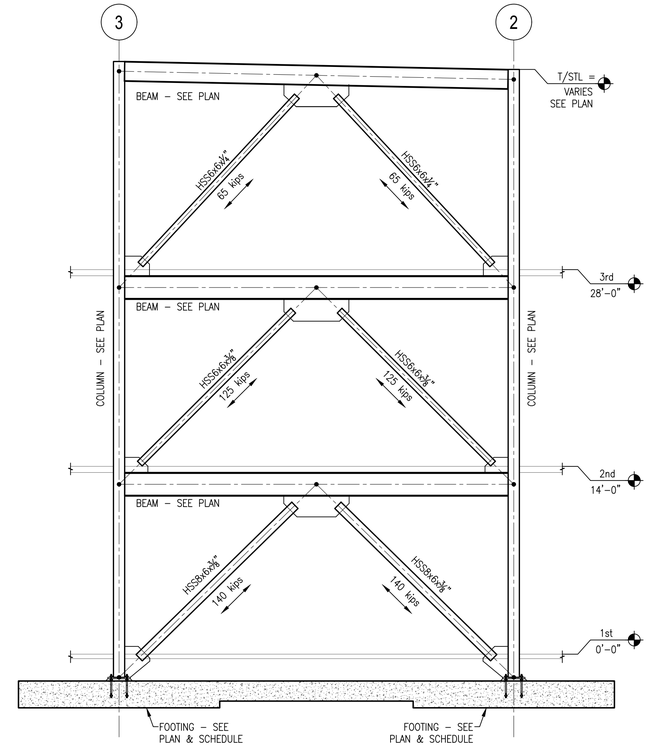

BRACE #2 ELEVATION
SCALE: 3/16" = 1'–0"

TOP OF SLAB ELEVATION TABLE	
FLOOR	ELEVATION
Roof	VARIES
3rd	+28'–0"
2nd	14'–0"
1st	0'–0"

ELEVATIONS NOTED ARE FROM DATUM ELEVATION (0'–0")

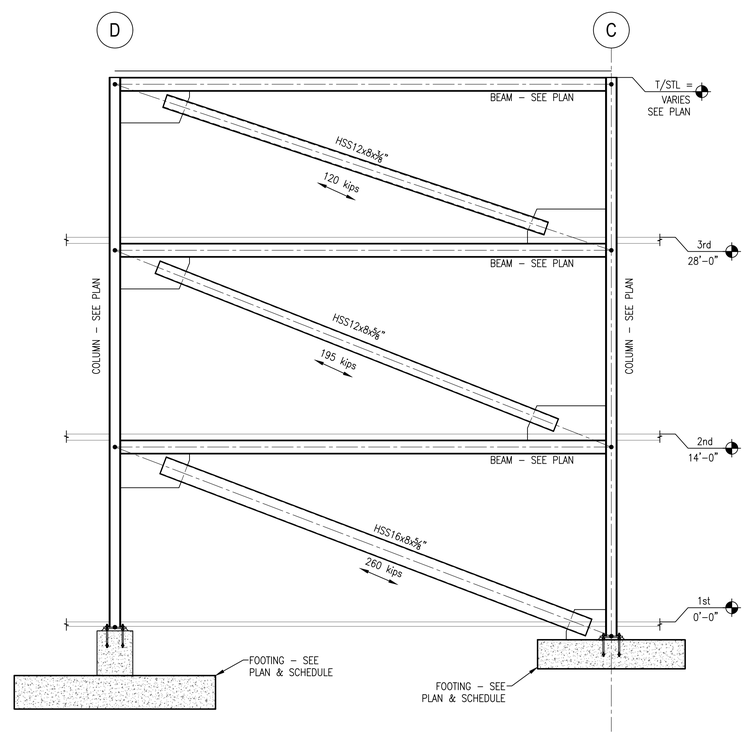

BRACE #3 ELEVATION
SCALE: 3/16" = 1'–0"

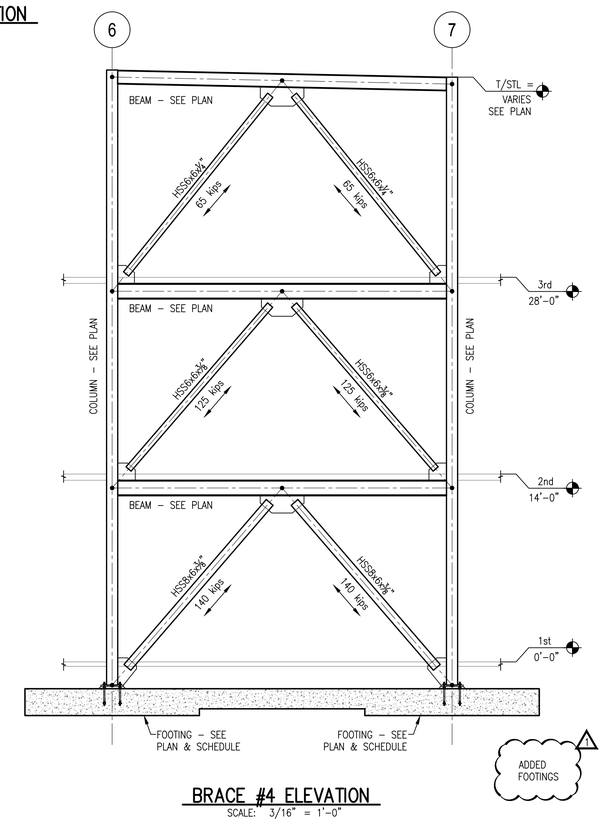

BRACE #4 ELEVATION
SCALE: 3/16" = 1'–0"

LISLE Architecture & Design, Inc.

Lisle Architecture & Design, Inc.

614 Market Street
Wilmington, NC 28401
(910) 763.6053 (o)
(910) 763.4517 (f)

5 W. Hargett St. Suite 312
Raleigh, NC 27601
(919) 980.0283 (o)

www.LisleArchitecture.com

WOODS ENGINEERING
Consulting Structural Engineers
254 North Front Street
Suite 201
Wilmington, NC 28401
Phone: 910.348.8007
www.woodseng.com

WOODS ENGINEERING, P.A. CORPORATE SEAL No. C-1808 NORTH CAROLINA

NORTH CAROLINA PROFESSIONAL SEAL 19475 ENGINEER DON R. WOODS

Digitally signed by Don R. Woods, PE
DN: C=US, E=donwoods@woodseng.com, CN=Don R. Woods, PE, O=WOODS ENGINEERING, P.A.C.L.=Wilmington, S=North Carolina, C=US
Date: 2020.12.15 11:48:43-05'00'

DATE: 12.15.2020 - CONSTRUCTION DOCUMENTS

Smith Office - Sir Tyler IV
Wilmington, NC

PROJECT NO: 20131

NO.	REV./SUB.	DATE
1	ADDED FOOTING	12.14.2020

BRACE FRAME ELEVATIONS

S5.01

Plotted12.15.2020 THIS DRAWING IS THE LEGAL PROPERTY OF LISLE ARCHITECTURE AND DESIGN, INC. AND IS NOT TO BE COPIED OR REPRODUCED IN WHOLE OR IN PART WITHOUT THE PERMISSION OF THE ARCHITECT - COPYRIGHT 2020