NEW HANOVER COUNTY GOVERNMENT COMPLEX CONSTRUCTION DRAWINGS

PRELIMINARY
NOT FOR RECORDATION, CONSTRUCTION, SALE OR CONVEYENCE

OWNER
NEW HANOVER COUNTY
230 GOVERNMENT CENTER DR.
WILMINGTON, NC 28403
PHONE: (910) 798-7311
CONTACT: CHRIS COUDRIET, COUNTY MANAGER

CLIENT/DEVELOPER
GHKCAPE FEAR COMMERCIAL
1051 MILITARY CUTOFF RD., SUITE 200
WILMINGTON, NC 28405
PHONE: (910) 344-1000
CONTACT: MIKE BROWN, SENIOR V.P.

CIVIL ENGINEER
SEPI, INC.
5030 NEW CENTRE DRIVE, SUITE B
WILMINGTON, NC 28403
PHONE: (910) 523-5715
CONTACT: MARK ARCURI, PE

SURVEYOR
SEPI, INC.
5030 NEW CENTRE DRIVE, SUITE B
WILMINGTON, NC 28403
PHONE: (910) 523-5715
CONTACT: MIKE TACKETT, PLS

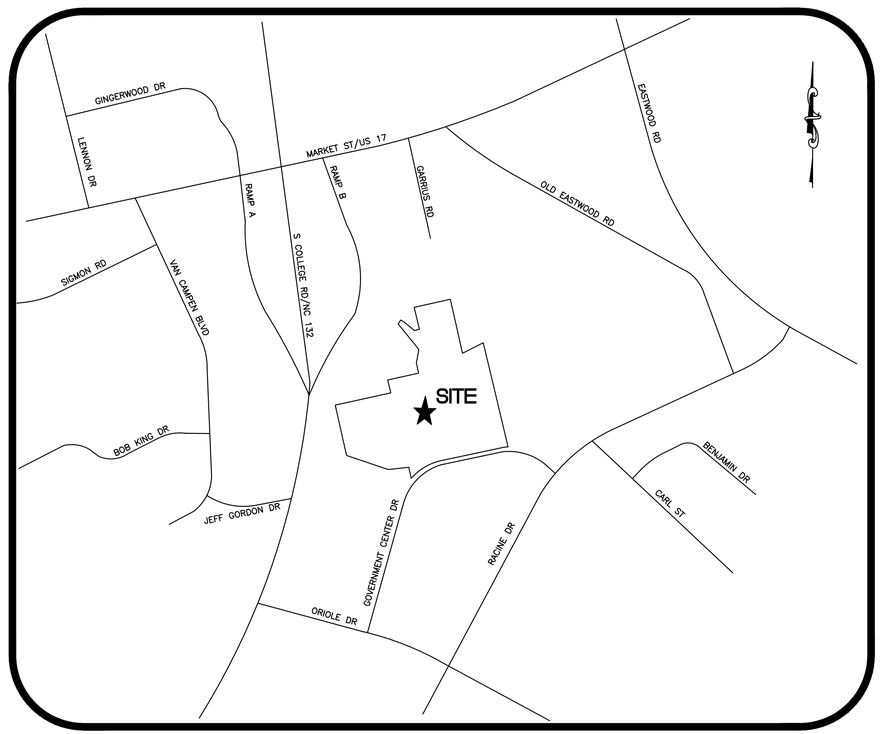

VICINITY MAP - NOT TO SCALE

SHEET INDEX

Approved Construction Plan

	Name	Date
Planning		
Traffic		
Fire		

CITY OF WILMINGTON NORTH CAROLINA
Public Services • Engineering Division
APPROVED STORMWATER MANAGEMENT PLAN
Date:_____ Permit #_____
Signed: _____

For each open utility cut of City streets, a $325 permit shall be required from the City prior to occupancy and/or project acceptance

SEPI
SEPI ENGINEERING & CONSTRUCTION, INC.
RALEIGH | WILMINGTON | CHARLOTTE
BEAUFORT | CHARLESTON

5030 NEW CENTRE DR. | SUITE B
WILMINGTON, NC 28403
PHONE | 910.523.5715

sepiinc.com

811 Know what's below. before you dig.
3 WORKING DAYS BEFORE YOU DIG FOR THE LOCATION OF UNDERGROUND FACILITIES

THE LOCATIONS OF EXISTING UNDERGROUND UTILITIES ARE SHOWN IN AN APPROXIMATE WAY ONLY AND HAVE NOT BEEN INDEPENDENTLY VERIFIED BY THE OWNER OR ITS REPRESENTATIVE. THE CONTRACTOR SHALL DETERMINE THE EXACT LOCATION OF ALL EXISTING UTILITIES BEFORE COMMENCING WORK, AND AGREES TO BE FULLY RESPONSIBLE FOR ANY AND ALL DAMAGES WHICH MIGHT BE OCCASIONED BY THE CONTRACTOR'S FAILURE TO EXACTLY LOCATE AND PRESERVE ANY AND ALL UNDERGROUND UTILITIES.

NOTICE:
CONSTRUCTION SITE SAFETY IS THE SOLE RESPONSIBILITY OF THE CONTRACTOR NEITHER THE OWNER NOR THE ENGINEER SHALL BE EXPECTED TO ASSUME ANY RESPONSIBILITY FOR SAFETY OF THE WORK, OF PERSONS ENGAGED IN THE WORK, OF ANY NEARBY STRUCTURES, OR OF ANY OTHER PERSONS.

NORTH CAROLINA PROFESSIONAL SEAL 24419 ENGINEER MARK T. ARCURI
SEPI ENGINEERING & CONSTRUCTION, INC CORPORATE SEAL C-2197 N.C.
PRELIMINARY

NEW HANOVER COUNTY GOVERNMENT CENTER
230 GOVERNMENT CENTER DRIVE, WILMINGTON NC 28403

PREPARED FOR:
GHKCAPE FEAR DEVELOPMENT LLC
1051 MILITARY CUTOFF RD #200, WILMINGTON, NC 28405

PRELIMINARY
NOT FOR CONSTRUCTION

		DATE
PROJECT:	SE20.022.00	
ISSUE:	90% SUBMITTAL	10/01/2020
REVISIONS:		
PROJ. MGR:	MTA	
DRAWN BY:	KTD	
CHECKED BY:	MTA	

COVER SHEET

C-0.0

10/17/2020 6:59 PM X:\2020\SE20\022.00 CFC-NHC Govt Complex\LD\Design\Drawings\Construction Plan\SE20022 - COVER SHEET & LEGEND.dwg

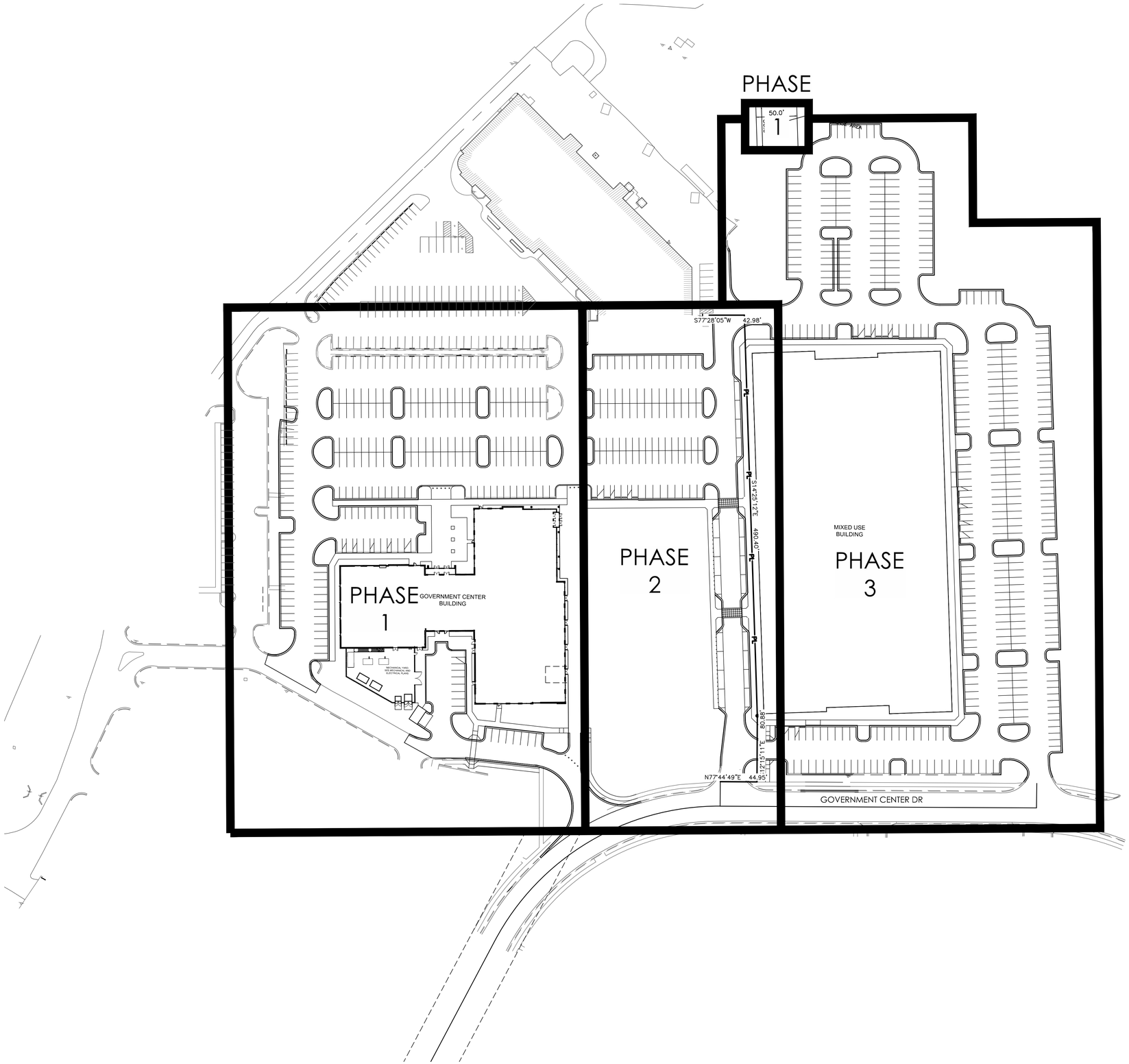

N
W E
S
NAD 83 NC GRID

GRAPHIC SCALE

60 0 30 60 120

(IN FEET)

1 inch = 60 ft. Horz.

Approved Construction Plan

Name Date

Planning _____

Traffic _____

Fire _____

CITY OF WILMINGTON NORTH CAROLINA

Public Services • Engineering Division

APPROVED STORMWATER MANAGEMENT PLAN

Date:_____ Permit #_____

Signed: _____

For each open utility cut of City streets, a $325 permit shall be required from the City prior to occupancy and/or project acceptance

SEPI

SEPI ENGINEERING & CONSTRUCTION, INC.
RALEIGH | WILMINGTON | CHARLOTTE
BEAUFORT | CHARLESTON

5030 NEW CENTRE DR. | SUITE B
WILMINGTON, NC 28403
PHONE | 910.523.5715

sepiinc.com

811 3 WORKING DAYS BEFORE YOU DIG FOR THE LOCATION OF UNDERGROUND FACILITIES

Know what's below. before you dig.

THE LOCATIONS OF EXISTING UNDERGROUND UTILITIES ARE SHOWN IN AN APPROXIMATE WAY ONLY AND HAVE NOT BEEN INDEPENDENTLY VERIFIED BY THE OWNER OR ITS REPRESENTATIVE. THE CONTRACTOR SHALL DETERMINE THE EXACT LOCATION OF ALL EXISTING UTILITIES BEFORE COMMENCING WORK, AND AGREES TO BE FULLY RESPONSIBLE FOR ANY AND ALL DAMAGES WHICH MIGHT BE OCCASIONED BY THE CONTRACTOR'S FAILURE TO EXACTLY LOCATE AND PRESERVE ANY AND ALL UNDERGROUND UTILITIES.

NOTICE:
CONSTRUCTION SITE SAFETY IS THE SOLE RESPONSIBILITY OF THE CONTRACTOR NEITHER THE OWNER NOR THE ENGINEER SHALL BE EXPECTED TO ASSUME ANY RESPONSIBILITY FOR SAFETY OF THE WORK, OF PERSONS ENGAGED IN THE WORK, OF ANY NEARBY STRUCTURES, OR OF ANY OTHER PERSONS.

NORTH CAROLINA PROFESSIONAL SEAL 24419 ENGINEER MARK T. ARCURI

SEPI ENGINEERING & CONSTRUCTION, INC CORPORATE SEAL C-2197 N.C.

PRELIMINARY

NEW HANOVER COUNTY GOVERNMENT CENTER

230 GOVERNMENT CENTER DRIVE, WILMINGTON NC 28403

PREPARED FOR:
GHKCAPE FEAR DEVELOPMENT LLC
1051 MILITARY CUTOFF RD #200,
WILMINGTON, NC 28405

PRELIMINARY
NOT FOR CONSTRUCTION

		DATE
PROJECT:	SE20.022.00	
ISSUE:	90% SUBMITTAL	10/01/2020
	-	-
	-	-
	-	-
	-	-
REVISIONS:		
	-	-
	-	-
	-	-
	-	-
	-	-
	-	-
PROJ. MGR:	MTA	
DRAWN BY:	KTD	
CHECKED BY:	MTA	

OVERALL PHASING PLAN

C-0.1

10/1/2020 1:45 PM X:\2020\SE20.022.00 CFC-NHC Govt Complex\LDI\Design\Drawings\Construction Plans\SE20022 - EXISTING CONDITIONS PLANS.dwg

PROPERTIES:

MARKERS:

- EXISTING RIGHT OF WAY MONUMENT — RWM
- EXISTING CONCRETE MONUMENT — ECM
- EXISTING IRON PIPE — EIP
- IRON PIPE SET — IPS
- EXISTING IRON ROD — EIR
- REBAR SET — IRS
- PK NAIL FOUND — PKF
- PK NAIL SET — PKS
- EXISTING GEODETIC MONUMENT — EGM
- TRAVERSE NAIL — TN
- CALCULATED PROPERTY CORNER
- EXISTING BENCHMARK — BM
- PROPOSED BENCHMARK — BM
- CONTROL CORNER — CC
- NOW OR FORMERLY — N/F
- WETLAND FLAG — wetl

LINES:

- RIGHT OF WAY — R/W
- PROPERTY LINE, SURVEYED
- PROPERTY LINE, NOT SURVEYED
- PROPOSED PROPERTY LINE — PL
- EXISTING EASEMENT
- PROPOSED EASEMENT
- EXISTING EDGE OF WATER
- PROPOSED EDGE OF WATER
- 100 YEAR FLOOD PLAIN
- AEC LINE
- CAMA LINE
- BUFFER LINE
- EXISTING WETLAND LINE
- EXISTING HIGH WATER LINE

GRADING:

- EXISTING MINOR CONTOUR — 39
- PROPOSED MINOR CONTOUR — 39
- EXISTING MAJOR CONTOUR — 40
- PROPOSED MAJOR CONTOUR — 40
- EXISTING SPOT ELEVATION — × 1.00
- PROPOSED SPOT ELEVATION — 1.00
- EXISTING GRADE ARROW
- PROPOSED GRADE ARROW

MISCELLANEOUS:

- PROPOSED SILT FENCE — SF
- PROPOSED TREE PROTECTION FENCE — TP
- PROPOSED DEMOLITION DESIGNATION — X·X·X·X·X·X
- PROPOSED LIMITS OF DISTURBANCE — LD
- PROPOSED TURBIDITY CURTAIN — T

SITE:

- EXISTING MAILBOX — mb
- PROPOSED MAILBOX — MB
- EXISTING BOLLARD — bol
- PROPOSED BOLLARD — BOL
- EXISTING FLAG POLE — f
- PROPOSED FLAG POLE — F
- EXISTING SIGN
- EXISTING SIGN, RELOCATED
- PROPOSED SIGN
- EXISTING HARDWOOD TREE
- PROPOSED HARDWOOD TREE
- EXISTING CONIFER TREE
- PROPOSED CONIFER TREE
- EXISTING PALM TREE
- PROPOSED PALM TREE
- EXISTING FLOWERING TREE
- PROPOSED FLOWERING TREE
- EXISTING SHRUB
- PROPOSED SHRUB
- EXISTING TREELINE
- PROPOSED TREELINE
- EXISTING FENCE — x
- PROPOSED FENCE — x

UTILITIES:

ELECTRIC:

- EXISTING UNDERGROUND ELECTRIC — uge
- PROPOSED UNDERGROUND ELECTRIC — UGE
- EXISTING OVERHEAD ELECTRIC — ohe
- PROPOSED OVERHEAD ELECTRIC — OHE
- EXISTING POWER POLE
- PROPOSED POWER POLE
- EXISTING GUY POLE
- PROPOSED GUY POLE
- EXISTING GUY WIRE
- PROPOSED GUY WIRE
- EXISTING LIGHT POLE
- EXISTING LIGHT POLE, REOCATED
- PROPOSED LIGHT POLE
- EXISTING TRANSFORMER — et
- PROPOSED TRANSFORMER — ET
- EXISTING ELECTRIC METER — em
- PROPOSED ELECTRIC METER — EM
- EXISTING TRAFFIC SIGNAL BASE — ts
- PROPOSED TRAFFIC SIGNAL BASE — TS

SANITARY SEWER:

- EXISTING FORCEMAIN — ssfm
- PROPOSED FORCEMAIN — SSFM
- EXISTING GRAVITY SEWER — ss
- PROPOSED GRAVITY SEWER — SS
- EXISTING SEWER MANHOLE — SS
- PROPOSED SEWER MANHOLE — SS
- EXISTING SEWER WET WELL — ww
- PROPOSED SEWER WET WELL — WW
- EXISTING CLEANOUT — co
- PROPOSED CLEANOUT — CO
- EXISTING SEWER VALVE — sv
- PROPOSED SEWER VALVE — SV
- EXISTING SEWER AIR RELEASE VALVE — arv
- PROPOSED SEWER AIR RELEASE VALVE — ARV
- EXISTING FLOW METER — fm
- PROPOSED FLOW METER — FM
- EXISTING SCADA TOWER
- PROPOSED SCADA TOWER
- EXISTING GENERATOR — gen
- PROPOSED GENERATOR — GEN
- EXISTING GREASE TRAP
- PROPOSED GREASE TRAP

COMMUNICATIONS:

- EXISTING FIBER OPTIC — fo
- PROPOSED FIBER OPTIC — FO
- EXISTING OVERHEAD TELEPHONE — oht
- PROPOSED OVERHEAD TELEPHONE — OHT
- EXISTING UNDERGROUND TELEPHONE — ugt
- PROPOSED UNDERGROUND TELEPHONE — UGT
- EXISTING OVERHEAD CABLE — ohc
- PROPOSED OVERHEAD CABLE — OHC
- EXISTING UNDERGROUND CABLE — c
- PROPOSED UNDERGROUND CABLE — C
- EXISTING TELEPHONE PEDESTAL — tp
- PROPOSED TELEPHONE PEDESTAL — TP
- EXISTING CABLE BOX — catv
- PROPOSED CABLE BOX — CATV
- EXISTING FIBER OPTIC MARKER — fm
- PROPOSED FIBER OPTIC MARKER — FM
- EXISTING TELEPHONE MANHOLE — t
- EXISTING FIBER OPTIC PEDESTAL — fo
- PROPOSED FIBER OPTIC PEDESTAL — FO

UTILITIES (CON'T):

STORM/ DRAINAGE:

- EXISTING STORM PIPE
- PROPOSED STORM PIPE
- EXISTING DITCH AND FLOW DIRECTION
- PROPOSED DITCH AND FLOW DIRECTION
- EXISTING STORM FORCE MAIN — stfm
- PROPOSED STORM FORCE MAIN — STFM
- EXISTING STORM MANHOLE — st
- PROPOSED STORM MANHOLE — ST
- EXISTING CURB INLET
- PROPOSED CURB INLET
- EXISTING DROP INLET
- PROPOSED DROP INLET
- EXISTING YARD INLET — yi
- PROPOSED YARD INLET — YI
- EXISTING FLARED END SECTION
- PROPOSED FLARED END SECTION
- EXISTING STORM WET WELL — st ww
- PROPOSED STORM WET WELL — ST WW
- EXISTING GENERATOR — gen
- PROPOSED GENERATOR — GEN

GAS:

- EXISTING GAS LINE — g
- PROPOSED GAS LINE — G
- EXISTING GAS MARKER — gm
- PROPOSED GAS MARKER — GM
- EXISTING GAS METER — gm
- PROPOSED GAS METER — GM
- EXISTING GAS VALVE — gv
- PROPOSED GAS VALVE — GV

WATER:

- EXISTING WATER LINE — w
- PROPOSED WATER LINE — W
- EXISTING WATER REUSE LINE — w/r
- PROPOSED WATER REUSE LINE — W/R
- EXISTING WATER VALVE — wv
- PROPOSED WATER VALVE — WV
- EXISTING WATER METER — wm
- PROPOSED WATER METER — WM
- EXISTING FIRE HYDRANT
- PROPOSED FIRE HYDRANT
- EXISTING IRRIGATION CONTROL VALVE — icv
- PROPOSED IRRIGATION CONTROL VALVE — ICV
- EXISTING SPRINKLER HEAD
- PROPOSED SPRINKLER HEAD
- EXISTING BACKFLOW PREVENTER — bfp
- PROPOSED BACKFLOW PREVENTER — BFP
- EXISTING HOSE BIBB — hb
- PROPOSED HOSE BIBB — HB
- EXISTING YARD HYDRANT — yh
- PROPOSED YARD HYDRANT — YH
- EXISTING POTABLE WELL — pw
- PROPOSED POTABLE WELL — PW
- EXISTING NON–POTABLE WELL — npw
- PROPOSED NON–POTABLE WELL — NPW
- EXISTING BLOW–OFF — bo
- PROPOSED BLOW–OFF — BO
- EXISTING FIRE DEPARTMENT CONNECTION — fdc
- PROPOSED FIRE DEPARTMENT CONNECTION — FDC
- EXISTING FIRE DEPARTMENT CONNECTION VALVE — fdcv
- PROPOSED FIRE DEPARTMENT CONNECTION VALVE — FDCV

HATCHES:

- EXISTING GRAVEL
- PROPOSED GRAVEL
- EXISTING CONCRETE
- PROPOSED CONCRETE
- EXISTING DIRT ROAD
- PROPOSED DIRT ROAD
- EXISTING RIPRAP
- PROPOSED RIPRAP
- EXISTING TRUNCATED DOME
- PROPOSED TRUNCATED DOME
- EXISTING WETLANDS
- EXISTING ASPHALT
- PROPOSED ASPHALT
- PROPOSED HEAVY DUTY ASPHALT

Approved Construction Plan

Name Date

Planning

Traffic

Fire

CITY OF WILMINGTON NORTH CAROLINA

Public Services • Engineering Division

APPROVED STORMWATER MANAGEMENT PLAN

Date:_____ Permit #_____

Signed: _____

For each open utility cut of City streets, a $325 permit shall be required from the City prior to occupancy and/or project acceptance

SEPI

SEPI ENGINEERING & CONSTRUCTION, INC.

RALEIGH | WILMINGTON | CHARLOTTE
BELHAVEN | CHARLESTON

5030 NEW CENTRE DR. | SUITE B
WILMINGTON, NC 28403
PHONE | 910.523.5715

sepiinc.com

811 Know what's below. before you dig.

3 WORKING DAYS BEFORE YOU DIG FOR THE LOCATION OF UNDERGROUND FACILITIES

THE LOCATIONS OF EXISTING UNDERGROUND UTILITIES ARE SHOWN IN AN APPROXIMATE WAY ONLY AND HAVE NOT BEEN INDEPENDENTLY VERIFIED BY THE OWNER OR ITS REPRESENTATIVE. THE CONTRACTOR SHALL DETERMINE THE EXACT LOCATION OF ALL EXISTING UTILITIES BEFORE COMMENCING WORK, AND AGREES TO BE FULLY RESPONSIBLE FOR ANY AND ALL DAMAGES WHICH MIGHT BE OCCASIONED BY THE CONTRACTOR'S FAILURE TO EXACTLY LOCATE AND PRESERVE ANY AND ALL UNDERGROUND UTILITIES.

NOTICE:
CONSTRUCTION SITE SAFETY IS THE SOLE RESPONSIBILITY OF THE CONTRACTOR NEITHER THE OWNER NOR THE ENGINEER SHALL BE EXPECTED TO ASSUME ANY RESPONSIBILITY FOR SAFETY OF THE WORK, OF PERSONS ENGAGED IN THE WORK, OF ANY NEARBY STRUCTURES, OR OF ANY OTHER PERSONS.

NORTH CAROLINA PROFESSIONAL SEAL 24419 ENGINEER MARK T. ARCURI

SEPI ENGINEERING & CONSTRUCTION, INC CORPORATE SEAL C-2197 N.C.

PRELIMINARY

NEW HANOVER COUNTY GOVERNMENT CENTER

230 GOVERNMENT CENTER DRIVE, WILMINGTON NC 28403

PREPARED FOR:
GHKCAPE FEAR DEVELOPMENT LLC
1051 MILITARY CUTOFF RD #200,
WILMINGTON, NC 28405

PRELIMINARY
NOT FOR CONSTRUCTION

		DATE
PROJECT:	SE20.022.00	
ISSUE:	90% SUBMITTAL	10/01/2020

REVISIONS:

PROJ. MGR:	MTA
DRAWN BY:	KTD
CHECKED BY:	MTA

LEGEND

C-0.2

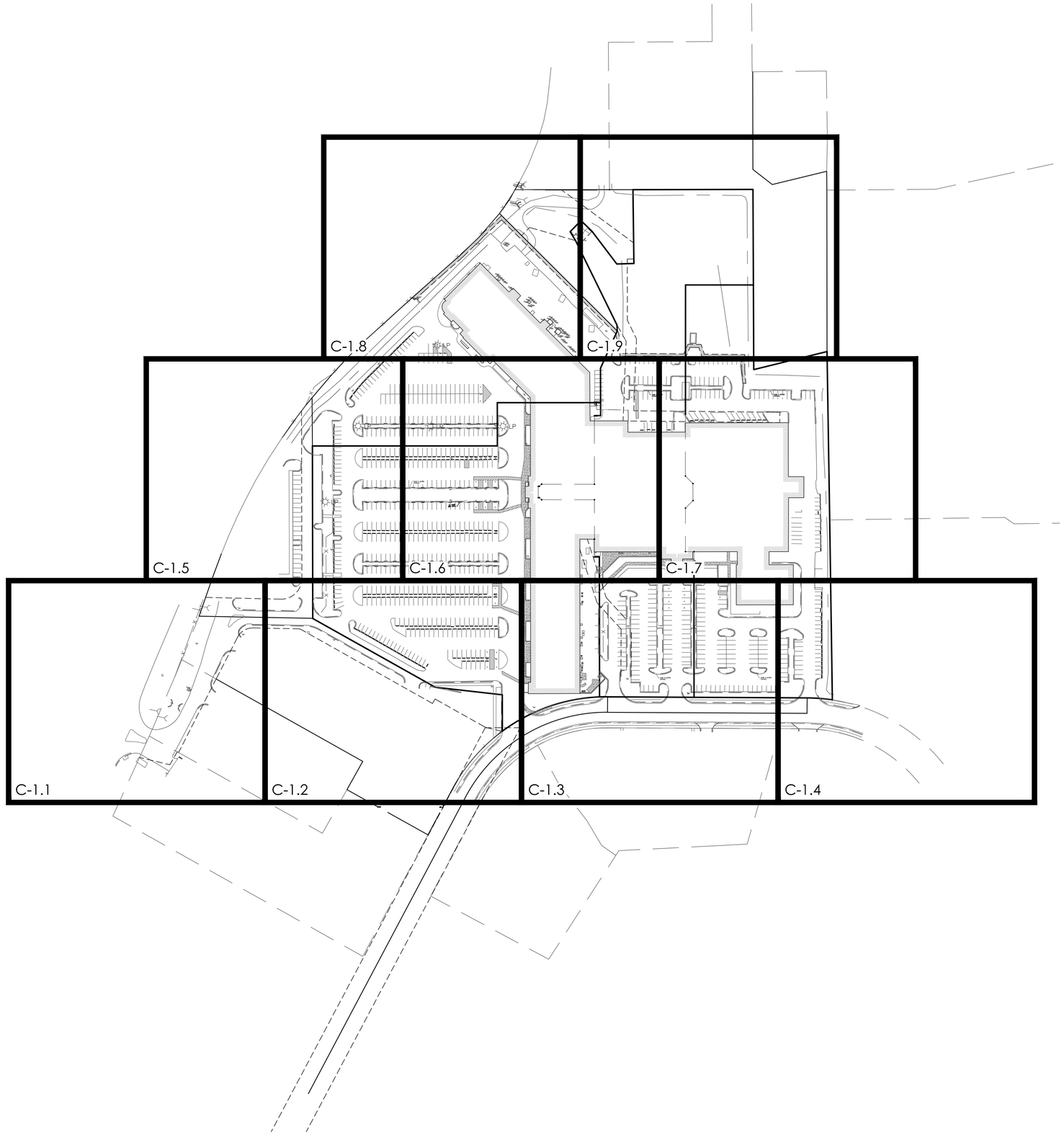

N
W E
S
NAD 83 NC GRID

GRAPHIC SCALE
100 0 50 100 200
(IN FEET)
1 inch = 100 ft. Horz.

Approved Construction Plan
Name Date
Planning
Traffic
Fire

CITY OF WILMINGTON NORTH CAROLINA
Public Services • Engineering Division
APPROVED STORMWATER MANAGEMENT PLAN
Date:_____ Permit #_____
Signed: _____

For each open utility cut of City streets, a $325 permit shall be required from the City prior to occupancy and/or project acceptance

SEPI
SEPI ENGINEERING & CONSTRUCTION, INC.
RALEIGH | WILMINGTON | CHARLOTTE
BELHAVEN | CHARLESTON

5030 NEW CENTRE DR. | SUITE B
WILMINGTON, NC 28403
PHONE | 910.523.5715

sepiinc.com

811 3 WORKING DAYS BEFORE YOU DIG FOR THE LOCATION OF UNDERGROUND FACILITIES
Know what's below. before you dig.

THE LOCATIONS OF EXISTING UNDERGROUND UTILITIES ARE SHOWN IN AN APPROXIMATE WAY ONLY AND HAVE NOT BEEN INDEPENDENTLY VERIFIED BY THE OWNER OR ITS REPRESENTATIVE. THE CONTRACTOR SHALL DETERMINE THE EXACT LOCATION OF ALL EXISTING UTILITIES BEFORE COMMENCING WORK, AND AGREES TO BE FULLY RESPONSIBLE FOR ANY AND ALL DAMAGES WHICH MIGHT BE OCCASIONED BY THE CONTRACTOR'S FAILURE TO EXACTLY LOCATE AND PRESERVE ANY AND ALL UNDERGROUND UTILITIES.

NOTICE:
CONSTRUCTION SITE SAFETY IS THE SOLE RESPONSIBILITY OF THE CONTRACTOR NEITHER THE OWNER NOR THE ENGINEER SHALL BE EXPECTED TO ASSUME ANY RESPONSIBILITY FOR SAFETY OF THE WORK, OF PERSONS ENGAGED IN THE WORK, OF ANY NEARBY STRUCTURES, OR OF ANY OTHER PERSONS.

NORTH CAROLINA PROFESSIONAL SEAL 24419 ENGINEER MARK T. ARCURI
SEPI ENGINEERING & CONSTRUCTION, INC. CORPORATE SEAL C-2197 N.C.
PRELIMINARY

NEW HANOVER COUNTY GOVERNMENT CENTER

230 GOVERNMENT CENTER DRIVE, WILMINGTON NC 28403

PREPARED FOR:
GHKCAPE FEAR DEVELOPMENT LLC
1051 MILITARY CUTOFF RD #200, WILMINGTON, NC 28405

PRELIMINARY
NOT FOR CONSTRUCTION

		DATE
PROJECT:	SE20.022.00	
ISSUE:	90% SUBMITTAL	10/01/2020
	-	-
	-	-
	-	-
	-	-
REVISIONS:		
	-	-
	-	-
	-	-
	-	-
	-	-
	-	-
PROJ. MGR:	MTA	
DRAWN BY:	KTD	
CHECKED BY:	MTA	

OVERALL EXISTING CONDITIONS PLAN

C-1.0

9/30/2020 8:53 PM X:\2020\SE20.022.00 CFC-NHC Govt Complex\LD\Design\Drawings\Construction Plan\SE20022 - EXISTING CONDITIONS PLANS.dwg

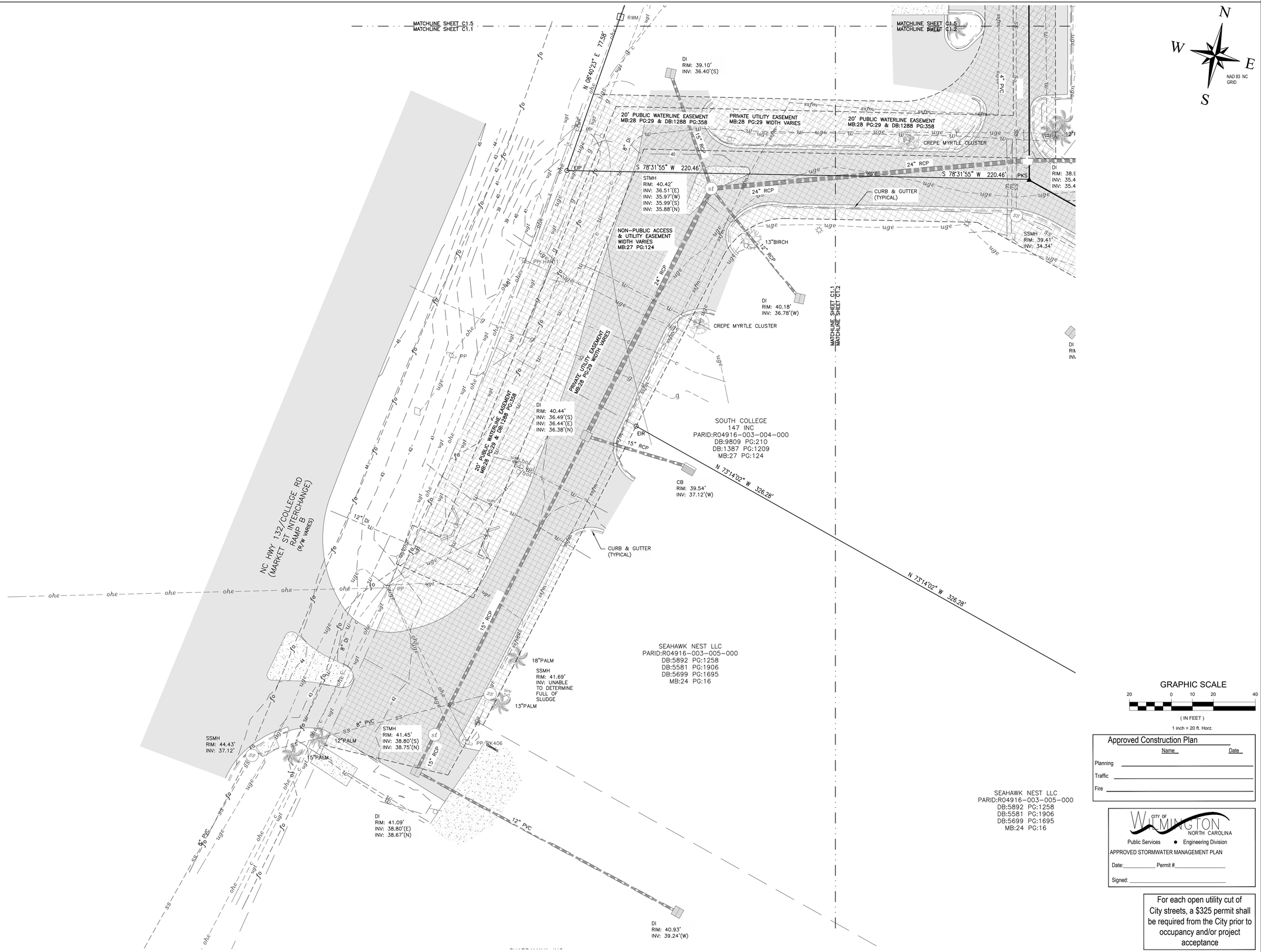

GRAPHIC SCALE

20 0 10 20 40

(IN FEET)

1 inch = 20 ft. Horz.

Approved Construction Plan

	Name	Date
Planning		
Traffic		
Fire		

CITY OF WILMINGTON NORTH CAROLINA

Public Services • Engineering Division

APPROVED STORMWATER MANAGEMENT PLAN

Date:_____ Permit #_____

Signed: _____

For each open utility cut of City streets, a $325 permit shall be required from the City prior to occupancy and/or project acceptance

SEPI

SEPI ENGINEERING & CONSTRUCTION, INC.
RALEIGH | WILMINGTON | CHARLOTTE
BEAUFORT | CHARLESTON

5030 NEW CENTRE DR. | SUITE B
WILMINGTON, NC 28403
PHONE | 910.523.5715

sepiinc.com

811 Know what's below. before you dig.

3 WORKING DAYS BEFORE YOU DIG FOR THE LOCATION OF UNDERGROUND FACILITIES

THE LOCATIONS OF EXISTING UNDERGROUND UTILITIES ARE SHOWN IN AN APPROXIMATE WAY ONLY AND HAVE NOT BEEN INDEPENDENTLY VERIFIED BY THE OWNER OR ITS REPRESENTATIVE. THE CONTRACTOR SHALL DETERMINE THE EXACT LOCATION OF ALL EXISTING UTILITIES BEFORE COMMENCING WORK, AND AGREES TO BE FULLY RESPONSIBLE FOR ANY AND ALL DAMAGES WHICH MIGHT BE OCCASIONED BY THE CONTRACTOR'S FAILURE TO EXACTLY LOCATE AND PRESERVE ANY AND ALL UNDERGROUND UTILITIES.

NOTICE:
CONSTRUCTION SITE SAFETY IS THE SOLE RESPONSIBILITY OF THE CONTRACTOR NEITHER THE OWNER NOR THE ENGINEER SHALL BE EXPECTED TO ASSUME ANY RESPONSIBILITY FOR SAFETY OF THE WORK, OF PERSONS ENGAGED IN THE WORK, OF ANY NEARBY STRUCTURES, OR OF ANY OTHER PERSONS.

NORTH CAROLINA PROFESSIONAL SEAL 24419 ENGINEER MARK T. ARCURI

SEPI ENGINEERING & CONSTRUCTION, INC CORPORATE SEAL C-2197 N.C.

PRELIMINARY

NEW HANOVER COUNTY GOVERNMENT CENTER

230 GOVERNMENT CENTER DRIVE, WILMINGTON NC 28403

PREPARED FOR:
GHKCAPE FEAR DEVELOPMENT LLC
1051 MILITARY CUTOFF RD #200,
WILMINGTON, NC 28405

PRELIMINARY
NOT FOR CONSTRUCTION

		DATE
PROJECT:	SE20.022.00	
ISSUE:	90% SUBMITTAL	10/01/2020
REVISIONS:		
PROJ. MGR:	MTA	
DRAWN BY:	KTD	
CHECKED BY:	MTA	

EXISTING CONDITIONS PLAN

C-1.1

10/1/2020 12:41 PM, K:\2020\SE20.022.00 CFC NHC Govt Complex\LD\Design\Drawings\Construction Plans\SE20022 - EXISTING CONDITIONS PLANS.dwg

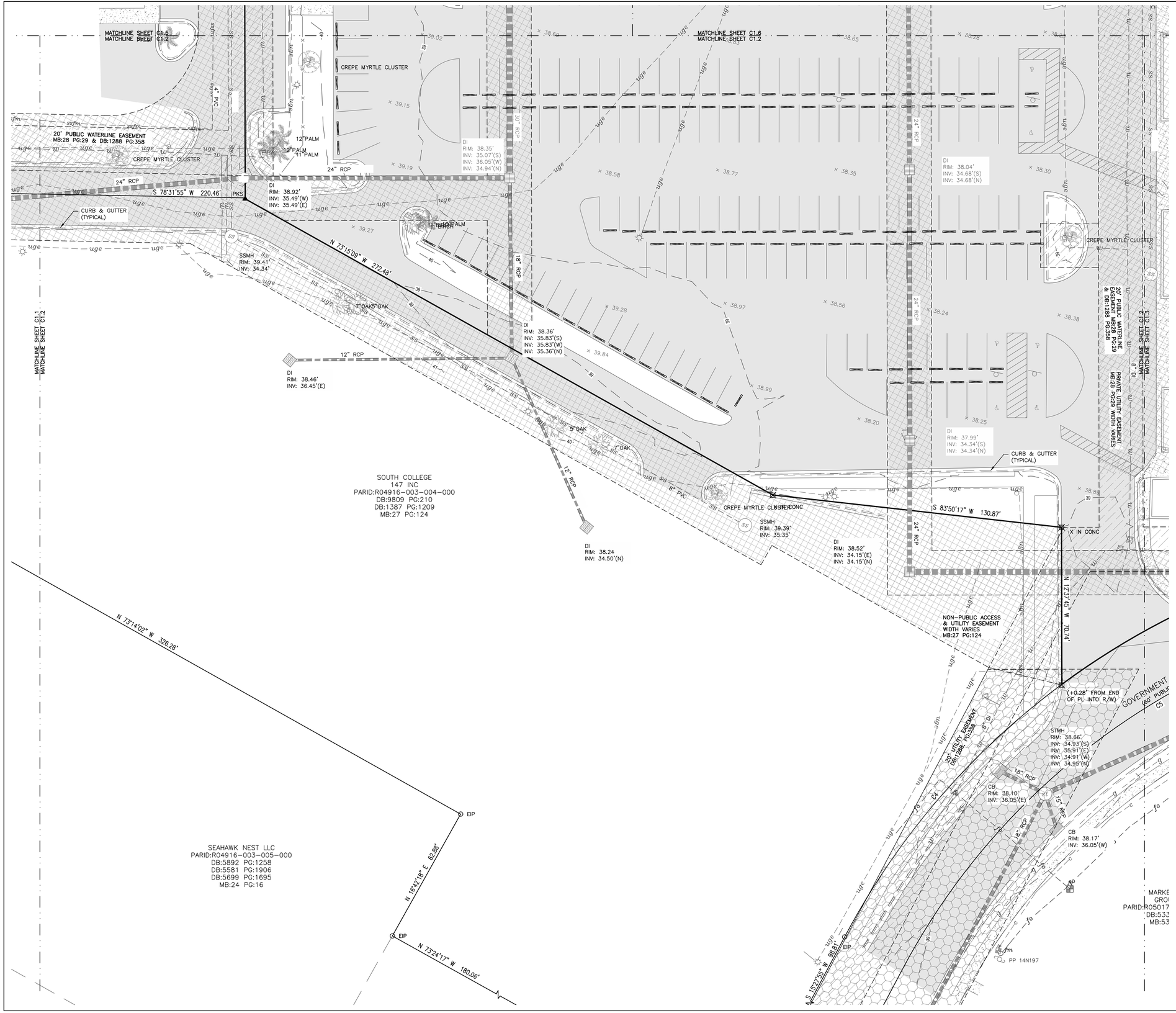

GRAPHIC SCALE

20 0 10 20 40

(IN FEET)

1 inch = 20 ft. Horz.

Approved Construction Plan

Name Date

Planning

Traffic

Fire

CITY OF WILMINGTON NORTH CAROLINA

Public Services • Engineering Division

APPROVED STORMWATER MANAGEMENT PLAN

Date: Permit #

Signed:

For each open utility cut of City streets, a $325 permit shall be required from the City prior to occupancy and/or project acceptance

SEPI

SEPI ENGINEERING & CONSTRUCTION, INC.

RALEIGH | WILMINGTON | CHARLOTTE
BEAUFORT | CHARLESTON

5030 NEW CENTRE DR. | SUITE B
WILMINGTON, NC 28403
PHONE | 910.523.5715

sepiinc.com

811 Know what's below, before you dig.

3 WORKING DAYS BEFORE YOU DIG FOR THE LOCATION OF UNDERGROUND FACILITIES

THE LOCATIONS OF EXISTING UNDERGROUND UTILITIES ARE SHOWN IN AN APPROXIMATE WAY ONLY AND HAVE NOT BEEN INDEPENDENTLY VERIFIED BY THE OWNER OR ITS REPRESENTATIVE. THE CONTRACTOR SHALL DETERMINE THE EXACT LOCATION OF ALL EXISTING UTILITIES BEFORE COMMENCING WORK, AND AGREES TO BE FULLY RESPONSIBLE FOR ANY AND ALL DAMAGES WHICH MIGHT BE OCCASIONED BY THE CONTRACTOR'S FAILURE TO EXACTLY LOCATE AND PRESERVE ANY AND ALL UNDERGROUND UTILITIES.

NOTICE:
CONSTRUCTION SITE SAFETY IS THE SOLE RESPONSIBILITY OF THE CONTRACTOR NEITHER THE OWNER NOR THE ENGINEER SHALL BE EXPECTED TO ASSUME ANY RESPONSIBILITY FOR SAFETY OF THE WORK, OF PERSONS ENGAGED IN THE WORK, OF ANY NEARBY STRUCTURES, OR OF ANY OTHER PERSONS.

NORTH CAROLINA PROFESSIONAL SEAL 24419 ENGINEER MARK T. ARCURI

SEPI ENGINEERING & CONSTRUCTION, INC. CORPORATE SEAL C-2197 N.C.

PRELIMINARY

NEW HANOVER COUNTY GOVERNMENT CENTER

230 GOVERNMENT CENTER DRIVE, WILMINGTON NC 28403

PREPARED FOR:
GHKCAPE FEAR DEVELOPMENT LLC
1051 MILITARY CUTOFF RD #200,
WILMINGTON, NC 28405

PRELIMINARY
NOT FOR CONSTRUCTION

		DATE
PROJECT:	SE20.022.00	
ISSUE:	90% SUBMITTAL	10/01/2020
	.	.
	.	.
	.	.
	.	.
REVISIONS:		
	.	.
	.	.
	.	.
	.	.
	.	.
	.	.
PROJ. MGR:	MTA	
DRAWN BY:	KTD	
CHECKED BY:	MTA	

EXISTING CONDITIONS PLAN

C-1.2

10/1/2020 12:41 PM X:\2020\SE20.022.00 CFC-NHC Govt Complex\LD\Design\Drawings\Construction Plans\SE20022 - EXISTING CONDITIONS PLANS.dwg

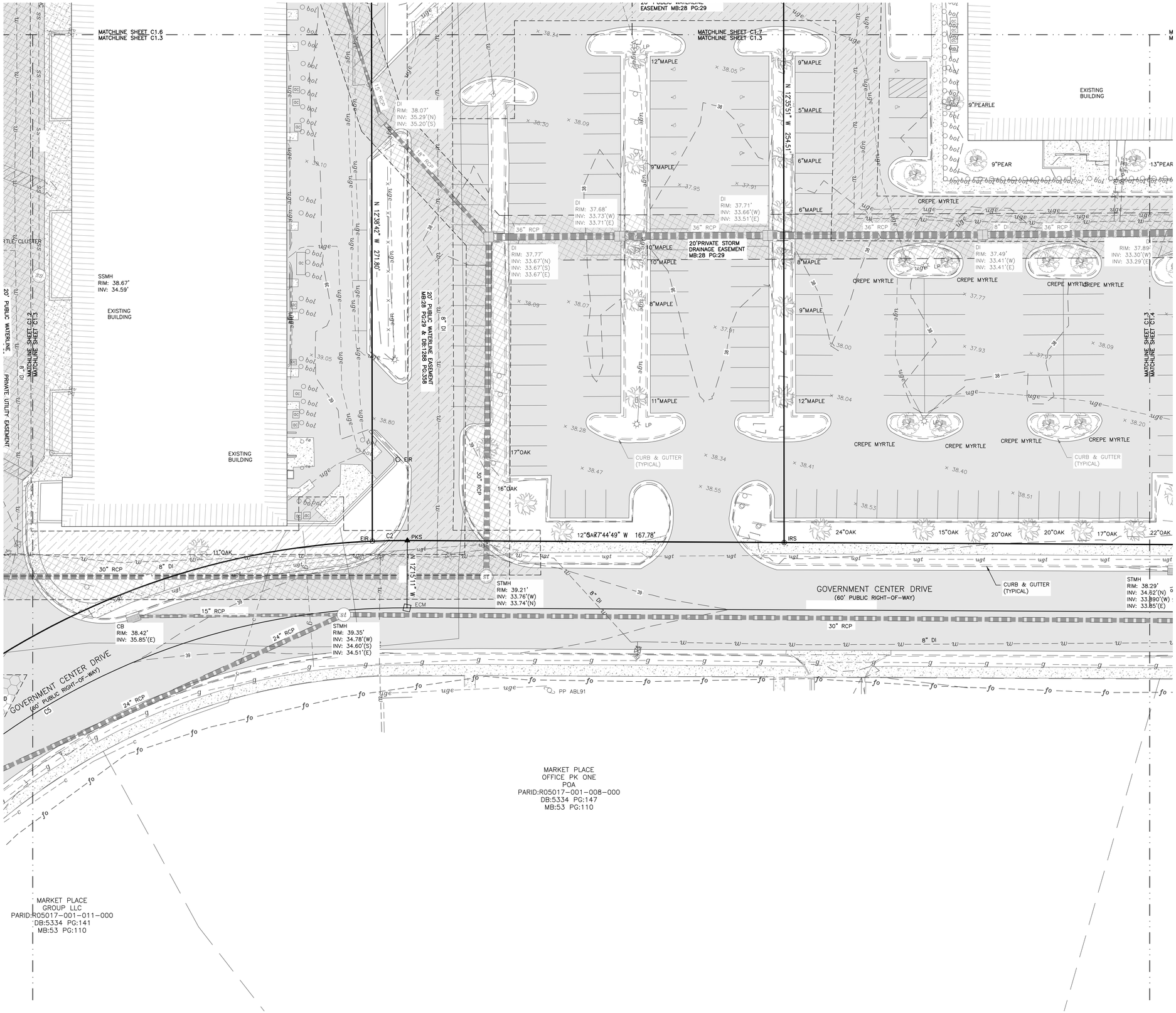

N
W E
S
NAD 83 NC GRID

GRAPHIC SCALE

20 0 10 20 40

(IN FEET)

1 inch = 20 ft. Horz.

Approved Construction Plan

	Name	Date
Planning		
Traffic		
Fire		

CITY OF WILMINGTON NORTH CAROLINA

Public Services • Engineering Division (GIS)

APPROVED STORMWATER MANAGEMENT PLAN

Date:_____ Permit #_____

Signed: _____

For each open utility cut of City streets, a $325 permit shall be required from the City prior to occupancy and/or project acceptance

SEPI

SEPI ENGINEERING & CONSTRUCTION, INC.

RALEIGH | WILMINGTON | CHARLOTTE
BEAUFORT | CHARLESTON

5030 NEW CENTRE DR. | SUITE B
WILMINGTON, NC 28403
PHONE | 910.523.5715

sepiinc.com

811 Know what's below. before you dig.

3 WORKING DAYS BEFORE YOU DIG FOR THE LOCATION OF UNDERGROUND FACILITIES

THE LOCATIONS OF EXISTING UNDERGROUND UTILITIES ARE SHOWN IN AN APPROXIMATE WAY ONLY AND HAVE NOT BEEN INDEPENDENTLY VERIFIED BY THE OWNER OR ITS REPRESENTATIVE. THE CONTRACTOR SHALL DETERMINE THE EXACT LOCATION OF ALL EXISTING UTILITIES BEFORE COMMENCING WORK, AND AGREES TO BE FULLY RESPONSIBLE FOR ANY AND ALL DAMAGES WHICH MIGHT BE OCCASIONED BY THE CONTRACTOR'S FAILURE TO EXACTLY LOCATE AND PRESERVE ANY AND ALL UNDERGROUND UTILITIES.

NOTICE:
CONSTRUCTION SITE SAFETY IS THE SOLE RESPONSIBILITY OF THE CONTRACTOR NEITHER THE OWNER NOR THE ENGINEER SHALL BE EXPECTED TO ASSUME ANY RESPONSIBILITY FOR SAFETY OF THE WORK, OF PERSONS ENGAGED IN THE WORK, OF ANY NEARBY STRUCTURES, OR OF ANY OTHER PERSONS.

NORTH CAROLINA PROFESSIONAL SEAL 24419 ENGINEER MARK T. ARCURI

SEPI ENGINEERING & CONSTRUCTION, INC CORPORATE SEAL C-2197 N.C.

PRELIMINARY

NEW HANOVER COUNTY GOVERNMENT CENTER

230 GOVERNMENT CENTER DRIVE, WILMINGTON NC 28403

PREPARED FOR:
GHKCAPE FEAR DEVELOPMENT LLC
1051 MILITARY CUTOFF RD #200,
WILMINGTON, NC 28405

PRELIMINARY
NOT FOR CONSTRUCTION

		DATE
PROJECT:	SE20.022.00	
ISSUE:	90% SUBMITTAL	10/01/2020
	-	-
	-	-
	-	-
	-	-
REVISIONS:		
	-	-
	-	-
	-	-
	-	-
	-	-
	-	-
	-	-
PROJ. MGR:	MTA	
DRAWN BY:	KTD	
CHECKED BY:	MTA	

EXISTING CONDITIONS PLAN

C-1.3

10/1/2020 12:42 PM X:\2020\SE20.022.00 CFC HHC Govt Complex\LD\Design\Drawings\Construction Plans\SE20022 - EXISTING CONDITIONS PLANS.dwg

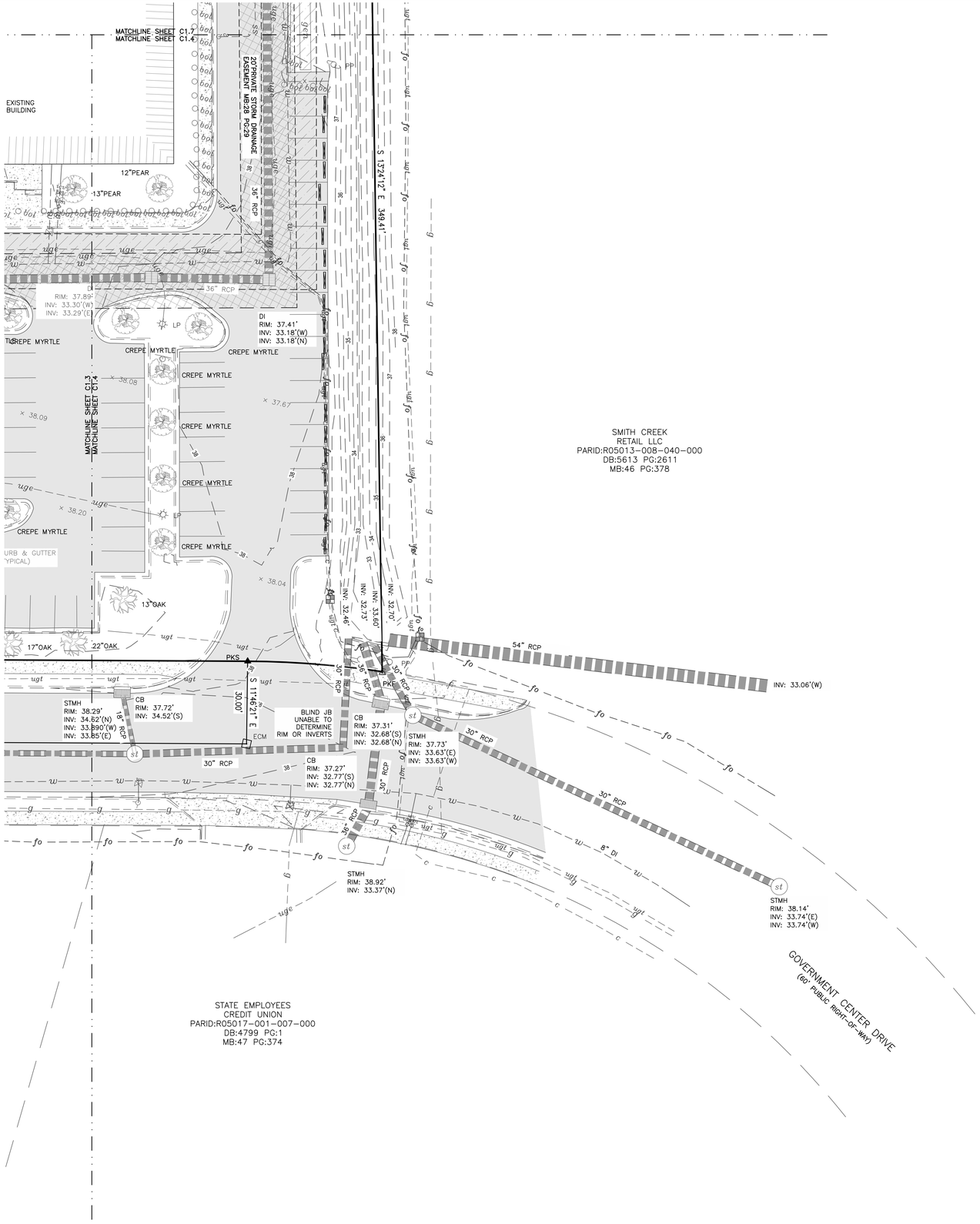

N
W E
S
NAD 83 NC GRID

SEPI

SEPI ENGINEERING & CONSTRUCTION, INC.
RALEIGH | WILMINGTON | CHARLOTTE
BEAUFORT | CHARLESTON

5030 NEW CENTRE DR. | SUITE B
WILMINGTON, NC 28403
PHONE | 910.523.5715

sepiinc.com

811 3 WORKING DAYS BEFORE YOU DIG FOR THE LOCATION OF UNDERGROUND FACILITIES
Know what's below. before you dig.

THE LOCATIONS OF EXISTING UNDERGROUND UTILITIES ARE SHOWN IN AN APPROXIMATE WAY ONLY AND HAVE NOT BEEN INDEPENDENTLY VERIFIED BY THE OWNER OR ITS REPRESENTATIVE. THE CONTRACTOR SHALL DETERMINE THE EXACT LOCATION OF ALL EXISTING UTILITIES BEFORE COMMENCING WORK, AND AGREES TO BE FULLY RESPONSIBLE FOR ANY AND ALL DAMAGES WHICH MIGHT BE OCCASIONED BY THE CONTRACTOR'S FAILURE TO EXACTLY LOCATE AND PRESERVE ANY AND ALL UNDERGROUND UTILITIES.

NOTICE:
CONSTRUCTION SITE SAFETY IS THE SOLE RESPONSIBILITY OF THE CONTRACTOR NEITHER THE OWNER NOR THE ENGINEER SHALL BE EXPECTED TO ASSUME ANY RESPONSIBILITY FOR SAFETY OF THE WORK, OF PERSONS ENGAGED IN THE WORK, OF ANY NEARBY STRUCTURES, OR OF ANY OTHER PERSONS.

NORTH CAROLINA PROFESSIONAL SEAL 24419 ENGINEER MARK T. ARCURI

SEPI ENGINEERING & CONSTRUCTION, INC. CORPORATE SEAL C-2197 N.C.

PRELIMINARY

NEW HANOVER COUNTY GOVERNMENT CENTER

230 GOVERNMENT CENTER DRIVE, WILMINGTON NC 28403

PREPARED FOR:
GHKCAPE FEAR DEVELOPMENT LLC
1051 MILITARY CUTOFF RD #200,
WILMINGTON, NC 28405

PRELIMINARY
NOT FOR CONSTRUCTION

GRAPHIC SCALE
20 0 10 20 40
(IN FEET)
1 inch = 20 ft. Horz.

Approved Construction Plan

	Name	Date
Planning		
Traffic		
Fire		

CITY OF WILMINGTON NORTH CAROLINA
Public Services • Engineering Division
APPROVED STORMWATER MANAGEMENT PLAN
Date:_____ Permit #_____
Signed: _____

For each open utility cut of City streets, a $325 permit shall be required from the City prior to occupancy and/or project acceptance

		DATE
PROJECT:	SE20.022.00	
ISSUE:	90% SUBMITTAL	10/01/2020
	.	.
	.	.
	.	.
	.	.
REVISIONS:		
	.	.
	.	.
	.	.
	.	.
	.	.
	.	.
PROJ. MGR:	MTA	
DRAWN BY:	KTD	
CHECKED BY:	MTA	

EXISTING CONDITIONS PLAN

C-1.4

10/1/2020 12:43 PM X:\2020\SE20.022.00 CFC-NHC Gov't Complex\LD\Design\Drawings\Construction Plans\SE20022 - EXISTING CONDITIONS PLANS.dwg

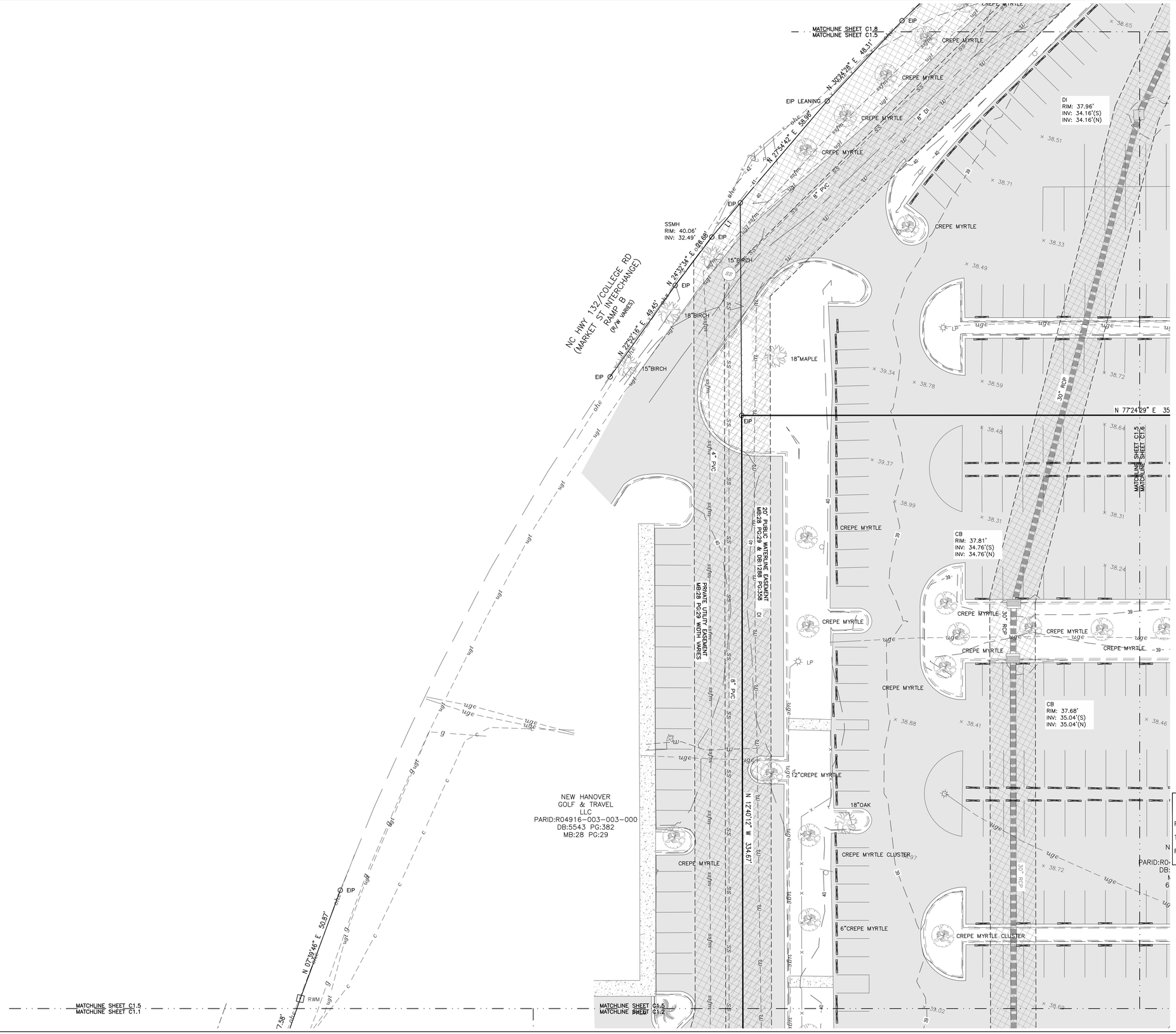

N
W E
S
NAD 83 NC GRID

GRAPHIC SCALE

20 0 10 20 40

(IN FEET)

1 inch = 20 ft. Horz.

Approved Construction Plan

Name Date

Planning

Traffic

Fire

CITY OF WILMINGTON NORTH CAROLINA

Public Services • Engineering Division

APPROVED STORMWATER MANAGEMENT PLAN

Date:_____ Permit #_____

Signed: _____

For each open utility cut of City streets, a $325 permit shall be required from the City prior to occupancy and/or project acceptance

SEPI

SEPI ENGINEERING & CONSTRUCTION, INC.

RALEIGH | WILMINGTON | CHARLOTTE
BEAUFORT | CHARLESTON

5030 NEW CENTRE DR. | SUITE B
WILMINGTON, NC 28403
PHONE | 910.523.5715

sepiinc.com

811 3 WORKING DAYS BEFORE YOU DIG FOR THE LOCATION OF UNDERGROUND FACILITIES

Know what's below. before you dig.

THE LOCATIONS OF EXISTING UNDERGROUND UTILITIES ARE SHOWN IN AN APPROXIMATE WAY ONLY AND HAVE NOT BEEN INDEPENDENTLY VERIFIED BY THE OWNER OR ITS REPRESENTATIVE. THE CONTRACTOR SHALL DETERMINE THE EXACT LOCATION OF ALL EXISTING UTILITIES BEFORE COMMENCING WORK, AND AGREES TO BE FULLY RESPONSIBLE FOR ANY AND ALL DAMAGES WHICH MIGHT BE OCCASIONED BY THE CONTRACTOR'S FAILURE TO EXACTLY LOCATE AND PRESERVE ANY AND ALL UNDERGROUND UTILITIES.

NOTICE:
CONSTRUCTION SITE SAFETY IS THE SOLE RESPONSIBILITY OF THE CONTRACTOR NEITHER THE OWNER NOR THE ENGINEER SHALL BE EXPECTED TO ASSUME ANY RESPONSIBILITY FOR SAFETY OF THE WORK, OF PERSONS ENGAGED IN THE WORK, OF ANY NEARBY STRUCTURES, OR OF ANY OTHER PERSONS.

NORTH CAROLINA PROFESSIONAL SEAL 24419 ENGINEER MARK T. ARCURI

SEPI ENGINEERING & CONSTRUCTION, INC. CORPORATE SEAL C-2197 N.C.

PRELIMINARY

NEW HANOVER COUNTY GOVERNMENT CENTER

230 GOVERNMENT CENTER DRIVE, WILMINGTON NC 28403

PREPARED FOR:
GHKCAPE FEAR DEVELOPMENT LLC
1051 MILITARY CUTOFF RD #200,
WILMINGTON, NC 28405

PRELIMINARY
NOT FOR CONSTRUCTION

		DATE
PROJECT:	SE20.022.00	
ISSUE:	90% SUBMITTAL	10/01/2020
	-	-
	-	-
	-	-
	-	-
REVISIONS:		
	-	-
	-	-
	-	-
	-	-
	-	-
	-	-
PROJ. MGR:	MTA	
DRAWN BY:	KTD	
CHECKED BY:	MTA	

EXISTING CONDITIONS PLAN

C-1.5

10/1/2020 12:43 PM X:\2020\SE20.022.00 CFC-NHC Govt Complex\LD\Design\Drawings\Construction Plans\SE20022 - EXISTING CONDITIONS PLANS.dwg

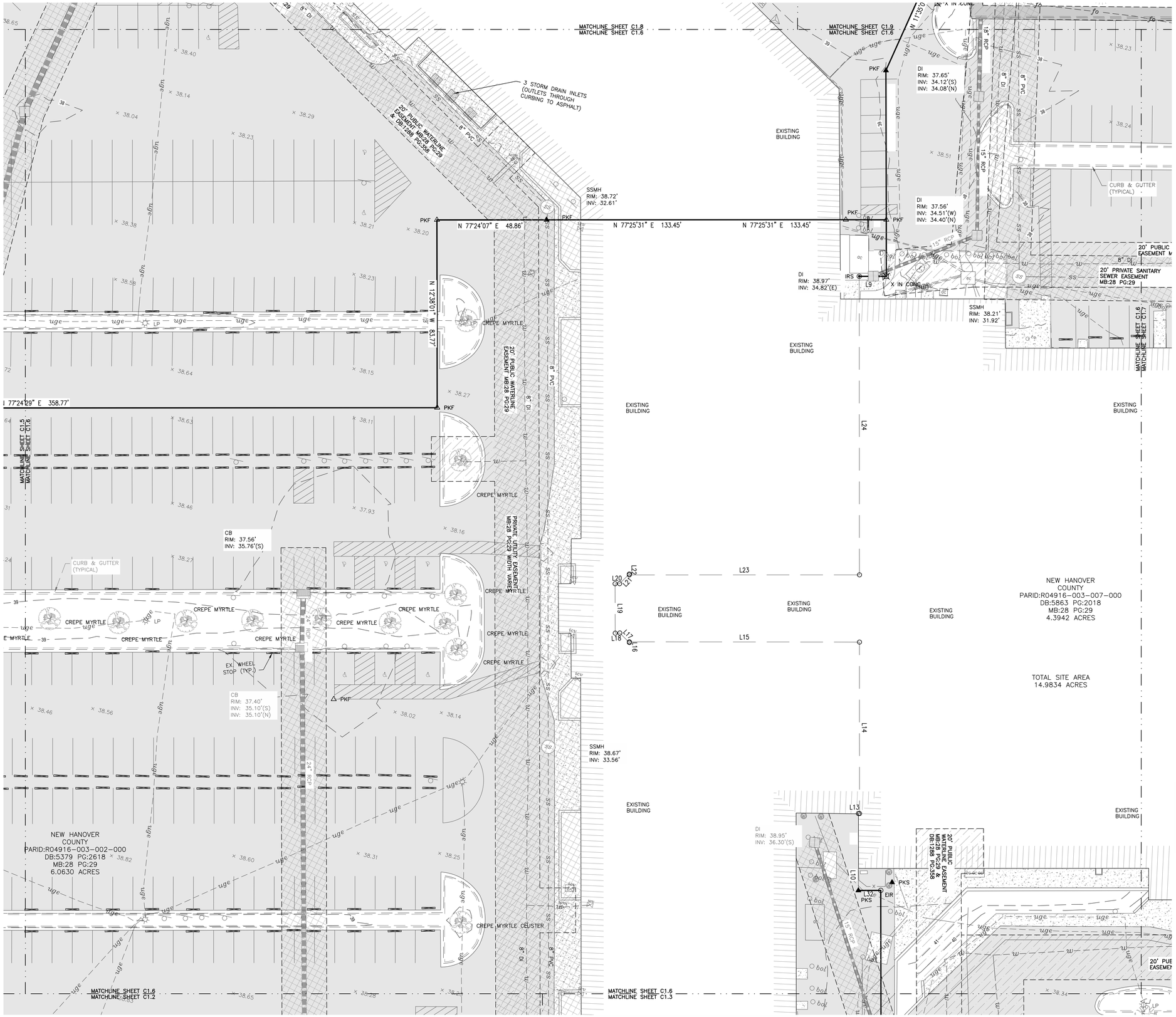

GRAPHIC SCALE

20 0 10 20 40

(IN FEET)

1 inch = 20 ft. Horz.

Approved Construction Plan

	Name	Date
Planning		
Traffic		
Fire		

CITY OF WILMINGTON NORTH CAROLINA

Public Services • Engineering Division

APPROVED STORMWATER MANAGEMENT PLAN

Date:_____ Permit #_____

Signed: _____

For each open utility cut of City streets, a $325 permit shall be required from the City prior to occupancy and/or project acceptance

SEPI

SEPI ENGINEERING & CONSTRUCTION, INC.
RALEIGH | WILMINGTON | CHARLOTTE
BEAUFORT | CHARLESTON

5030 NEW CENTRE DR. | SUITE B
WILMINGTON, NC 28403
PHONE | 910.523.5715

sepiinc.com

811 3 WORKING DAYS BEFORE YOU DIG FOR THE LOCATION OF UNDERGROUND FACILITIES

Know what's below. before you dig.

THE LOCATIONS OF EXISTING UNDERGROUND UTILITIES ARE SHOWN IN AN APPROXIMATE WAY ONLY AND HAVE NOT BEEN INDEPENDENTLY VERIFIED BY THE OWNER OR ITS REPRESENTATIVE. THE CONTRACTOR SHALL DETERMINE THE EXACT LOCATION OF ALL EXISTING UTILITIES BEFORE COMMENCING WORK, AND AGREES TO BE FULLY RESPONSIBLE FOR ANY AND ALL DAMAGES WHICH MIGHT BE OCCASIONED BY THE CONTRACTOR'S FAILURE TO EXACTLY LOCATE AND PRESERVE ANY AND ALL UNDERGROUND UTILITIES.

NOTICE:
CONSTRUCTION SITE SAFETY IS THE SOLE RESPONSIBILITY OF THE CONTRACTOR NEITHER THE OWNER NOR THE ENGINEER SHALL BE EXPECTED TO ASSUME ANY RESPONSIBILITY FOR SAFETY OF THE WORK, OF PERSONS ENGAGED IN THE WORK, OF ANY NEARBY STRUCTURES, OR OF ANY OTHER PERSONS.

NORTH CAROLINA PROFESSIONAL SEAL 24419 ENGINEER MARK T. ARCURI

SEPI ENGINEERING & CONSTRUCTION, INC. CORPORATE SEAL C-2197 N.C.

PRELIMINARY

NEW HANOVER COUNTY GOVERNMENT CENTER

230 GOVERNMENT CENTER DRIVE, WILMINGTON NC 28403

PREPARED FOR:
GHKCAPE FEAR DEVELOPMENT LLC
1051 MILITARY CUTOFF RD #200,
WILMINGTON, NC 28405

PRELIMINARY
NOT FOR CONSTRUCTION

		DATE
PROJECT:	SE20.022.00	
ISSUE:	90% SUBMITTAL	10/01/2020
	.	.
	.	.
	.	.
	.	.
REVISIONS:		
	.	.
	.	.
	.	.
	.	.
	.	.
	.	.
PROJ. MGR:	MTA	
DRAWN BY:	KTD	
CHECKED BY:	MTA	

EXISTING CONDITIONS PLAN

C-1.6

10/1/2020 12:44 PM K:\2020\SE20.022.00 CFC-NHC Govt Complex\LD\Design\Drawings\Construction Plans\SE20022 - EXISTING CONDITIONS PLANS.dwg

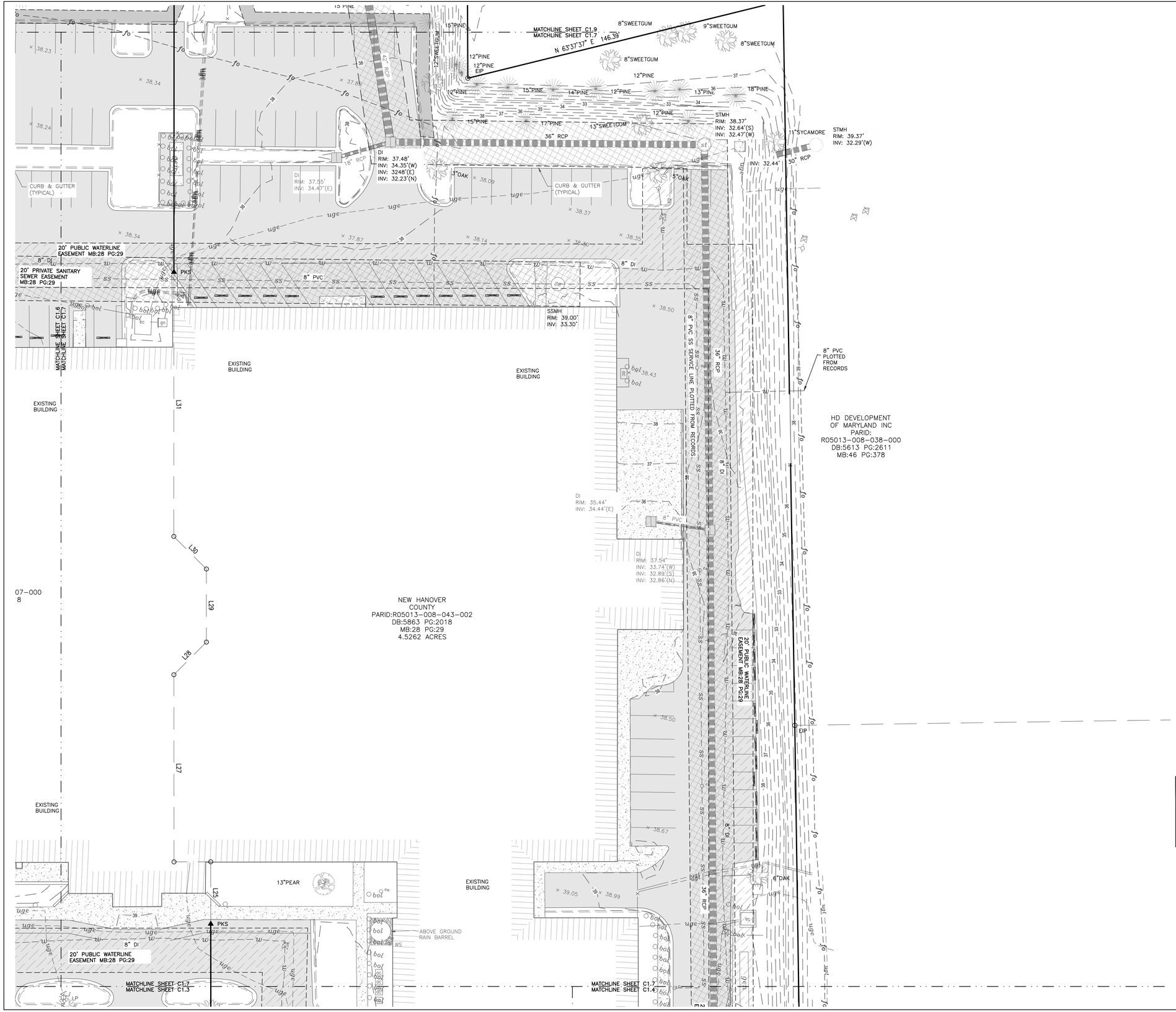

N
W E
S
NAD 83 NC GRID

GRAPHIC SCALE

20 0 10 20 40

(IN FEET)

1 inch = 20 ft. Horz.

Approved Construction Plan

	Name	Date
Planning		
Traffic		
Fire		

CITY OF WILMINGTON NORTH CAROLINA

Public Services • Engineering Division

APPROVED STORMWATER MANAGEMENT PLAN

Date:_____ Permit #_____

Signed: _____

For each open utility cut of City streets, a $325 permit shall be required from the City prior to occupancy and/or project acceptance

SEPI

SEPI ENGINEERING & CONSTRUCTION, INC.
RALEIGH | WILMINGTON | CHARLOTTE
BEAUFORT | CHARLESTON

5030 NEW CENTRE DR. | SUITE B
WILMINGTON, NC 28403
PHONE | 910.523.5715

sepiinc.com

811 3 WORKING DAYS BEFORE YOU DIG FOR THE LOCATION OF UNDERGROUND FACILITIES

Know what's below. before you dig.

THE LOCATIONS OF EXISTING UNDERGROUND UTILITIES ARE SHOWN IN AN APPROXIMATE WAY ONLY AND HAVE NOT BEEN INDEPENDENTLY VERIFIED BY THE OWNER OR ITS REPRESENTATIVE. THE CONTRACTOR SHALL DETERMINE THE EXACT LOCATION OF ALL EXISTING UTILITIES BEFORE COMMENCING WORK, AND AGREES TO BE FULLY RESPONSIBLE FOR ANY AND ALL DAMAGES WHICH MIGHT BE OCCASIONED BY THE CONTRACTOR'S FAILURE TO EXACTLY LOCATE AND PRESERVE ANY AND ALL UNDERGROUND UTILITIES.

NOTICE:
CONSTRUCTION SITE SAFETY IS THE SOLE RESPONSIBILITY OF THE CONTRACTOR NEITHER THE OWNER NOR THE ENGINEER SHALL BE EXPECTED TO ASSUME ANY RESPONSIBILITY FOR SAFETY OF THE WORK, OF PERSONS ENGAGED IN THE WORK, OF ANY NEARBY STRUCTURES, OR OF ANY OTHER PERSONS.

NORTH CAROLINA PROFESSIONAL SEAL 24419 ENGINEER MARK T. ARCURI

SEPI ENGINEERING & CONSTRUCTION, INC. CORPORATE SEAL C-2197 N.C.

PRELIMINARY

NEW HANOVER COUNTY GOVERNMENT CENTER

230 GOVERNMENT CENTER DRIVE, WILMINGTON NC 28403

PREPARED FOR:
GHKCAPE FEAR DEVELOPMENT LLC
1051 MILITARY CUTOFF RD #200,
WILMINGTON, NC 28405

PRELIMINARY
NOT FOR CONSTRUCTION

		DATE
PROJECT:	SE20.022.00	
ISSUE:	90% SUBMITTAL	10/01/2020
	.	.
	.	.
	.	.
	.	.
REVISIONS:		
	.	.
	.	.
	.	.
	.	.
	.	.
	.	.
PROJ. MGR:	MTA	
DRAWN BY:	KTD	
CHECKED BY:	MTA	

EXISTING CONDITIONS PLAN

C-1.7

10/1/2020 12:46 PM X:\2020\SE20.022.00 CFC-NHC Govt Complex\LD\Design\Drawings\Construction Plans\SE20022 - EXISTING CONDITIONS PLANS.dwg

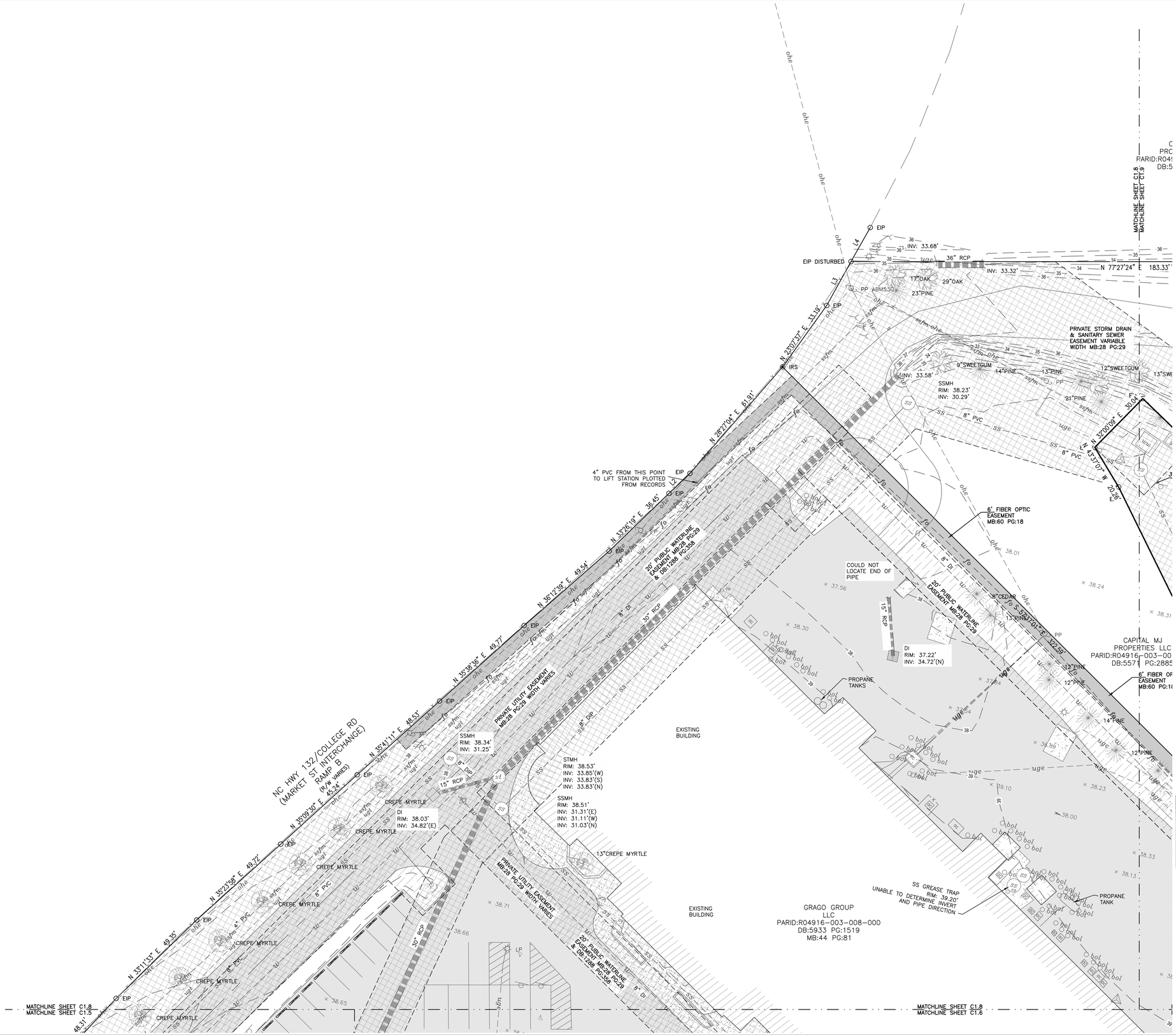

GRAPHIC SCALE

20 0 10 20 40

(IN FEET)

1 inch = 20 ft. Horz.

Approved Construction Plan

	Name	Date
Planning		
Traffic		
Fire		

CITY OF WILMINGTON NORTH CAROLINA

Public Services • Engineering Division

APPROVED STORMWATER MANAGEMENT PLAN

Date:_____ Permit #_____

Signed: _____

For each open utility cut of City streets, a $325 permit shall be required from the City prior to occupancy and/or project acceptance

SEPI

SEPI ENGINEERING & CONSTRUCTION, INC.
RALEIGH | WILMINGTON | CHARLOTTE
BEAUFORT | CHARLESTON

5030 NEW CENTRE DR. | SUITE B
WILMINGTON, NC 28403
PHONE | 910.523.5715

sepiinc.com

811 3 WORKING DAYS BEFORE YOU DIG FOR THE LOCATION OF UNDERGROUND FACILITIES

Know what's below. before you dig.

THE LOCATIONS OF EXISTING UNDERGROUND UTILITIES ARE SHOWN IN AN APPROXIMATE WAY ONLY AND HAVE NOT BEEN INDEPENDENTLY VERIFIED BY THE OWNER OR ITS REPRESENTATIVE. THE CONTRACTOR SHALL DETERMINE THE EXACT LOCATION OF ALL EXISTING UTILITIES BEFORE COMMENCING WORK, AND AGREES TO BE FULLY RESPONSIBLE FOR ANY AND ALL DAMAGES WHICH MIGHT BE OCCASIONED BY THE CONTRACTOR'S FAILURE TO EXACTLY LOCATE AND PRESERVE ANY AND ALL UNDERGROUND UTILITIES.

NOTICE:
CONSTRUCTION SITE SAFETY IS THE SOLE RESPONSIBILITY OF THE CONTRACTOR NEITHER THE OWNER NOR THE ENGINEER SHALL BE EXPECTED TO ASSUME ANY RESPONSIBILITY FOR SAFETY OF THE WORK, OF PERSONS ENGAGED IN THE WORK, OF ANY NEARBY STRUCTURES, OR OF ANY OTHER PERSONS.

NORTH CAROLINA PROFESSIONAL SEAL 24419 ENGINEER MARK T. ARCURI

SEPI ENGINEERING & CONSTRUCTION, INC CORPORATE SEAL C-2197 N.C.

PRELIMINARY

NEW HANOVER COUNTY GOVERNMENT CENTER

230 GOVERNMENT CENTER DRIVE, WILMINGTON NC 28403

PREPARED FOR:
GHKCAPE FEAR DEVELOPMENT LLC
1051 MILITARY CUTOFF RD #200,
WILMINGTON, NC 28405

PRELIMINARY
NOT FOR CONSTRUCTION

		DATE
PROJECT:	SE20.022.00	
ISSUE:	90% SUBMITTAL	10/01/2020
	.	.
	.	.
	.	.
	.	.
REVISIONS:		
	.	.
	.	.
	.	.
	.	.
	.	.
	.	.
PROJ. MGR:	MTA	
DRAWN BY:	KTD	
CHECKED BY:	MTA	

EXISTING CONDITIONS PLAN

C-1.8

10/1/2020 12:47 PM X:\2020\SE20.022.00 CFC-NHC Govt Complex\LD\Design\Drawings\Construction Plan\SE20022 - EXISTING CONDITIONS PLANS.dwg

GRAPHIC SCALE

20 0 10 20 40

(IN FEET)

1 inch = 20 ft. Horz.

Approved Construction Plan		
	Name	Date
Planning		
Traffic		
Fire		

CITY OF WILMINGTON NORTH CAROLINA

Public Services • Engineering Division

APPROVED STORMWATER MANAGEMENT PLAN

Date:_____ Permit #_____

Signed: _____

For each open utility cut of City streets, a $325 permit shall be required from the City prior to occupancy and/or project acceptance

SEPI

SEPI ENGINEERING & CONSTRUCTION, INC.
RALEIGH | WILMINGTON | CHARLOTTE
BEAUFORT | CHARLESTON

5030 NEW CENTRE DR. | SUITE B
WILMINGTON, NC 28403
PHONE | 910.523.5715

sepiinc.com

811 3 WORKING DAYS BEFORE YOU DIG FOR THE LOCATION OF UNDERGROUND FACILITIES

Know what's below, before you dig.

THE LOCATIONS OF EXISTING UNDERGROUND UTILITIES ARE SHOWN IN AN APPROXIMATE WAY ONLY AND HAVE NOT BEEN INDEPENDENTLY VERIFIED BY THE OWNER OR ITS REPRESENTATIVE. THE CONTRACTOR SHALL DETERMINE THE EXACT LOCATION OF ALL EXISTING UTILITIES BEFORE COMMENCING WORK, AND AGREES TO BE FULLY RESPONSIBLE FOR ANY AND ALL DAMAGES WHICH MIGHT BE OCCASIONED BY THE CONTRACTOR'S FAILURE TO EXACTLY LOCATE AND PRESERVE ANY AND ALL UNDERGROUND UTILITIES.

NOTICE:
CONSTRUCTION SITE SAFETY IS THE SOLE RESPONSIBILITY OF THE CONTRACTOR NEITHER THE OWNER NOR THE ENGINEER SHALL BE EXPECTED TO ASSUME ANY RESPONSIBILITY FOR SAFETY OF THE WORK, OF PERSONS ENGAGED IN THE WORK, OF ANY NEARBY STRUCTURES, OR OF ANY OTHER PERSONS.

NORTH CAROLINA PROFESSIONAL SEAL 24419 ENGINEER MARK T. ARCURI

SEPI ENGINEERING & CONSTRUCTION, INC. CORPORATE SEAL C-2197 N.C.

PRELIMINARY

NEW HANOVER COUNTY GOVERNMENT CENTER

230 GOVERNMENT CENTER DRIVE, WILMINGTON NC 28403

PREPARED FOR:
GHKCAPE FEAR DEVELOPMENT LLC
1051 MILITARY CUTOFF RD #200,
WILMINGTON, NC 28405

PRELIMINARY
NOT FOR CONSTRUCTION

		DATE
PROJECT:	SE20.022.00	
ISSUE:	90% SUBMITTAL	10/01/2020
	.	.
	.	.
	.	.
	.	.
REVISIONS:		
	.	.
	.	.
	.	.
	.	.
	.	.
	.	.
PROJ. MGR:	MTA	
DRAWN BY:	KTD	
CHECKED BY:	MTA	

EXISTING CONDITIONS PLAN

C-1.9

10/1/2020 5:09 PM X:\2020\SE20.022.00 CFC-NHC Govt Complex\LD\Design\Drawings\Construction Plan\SE20022 - EXISTING CONDITIONS PLANS.dwg

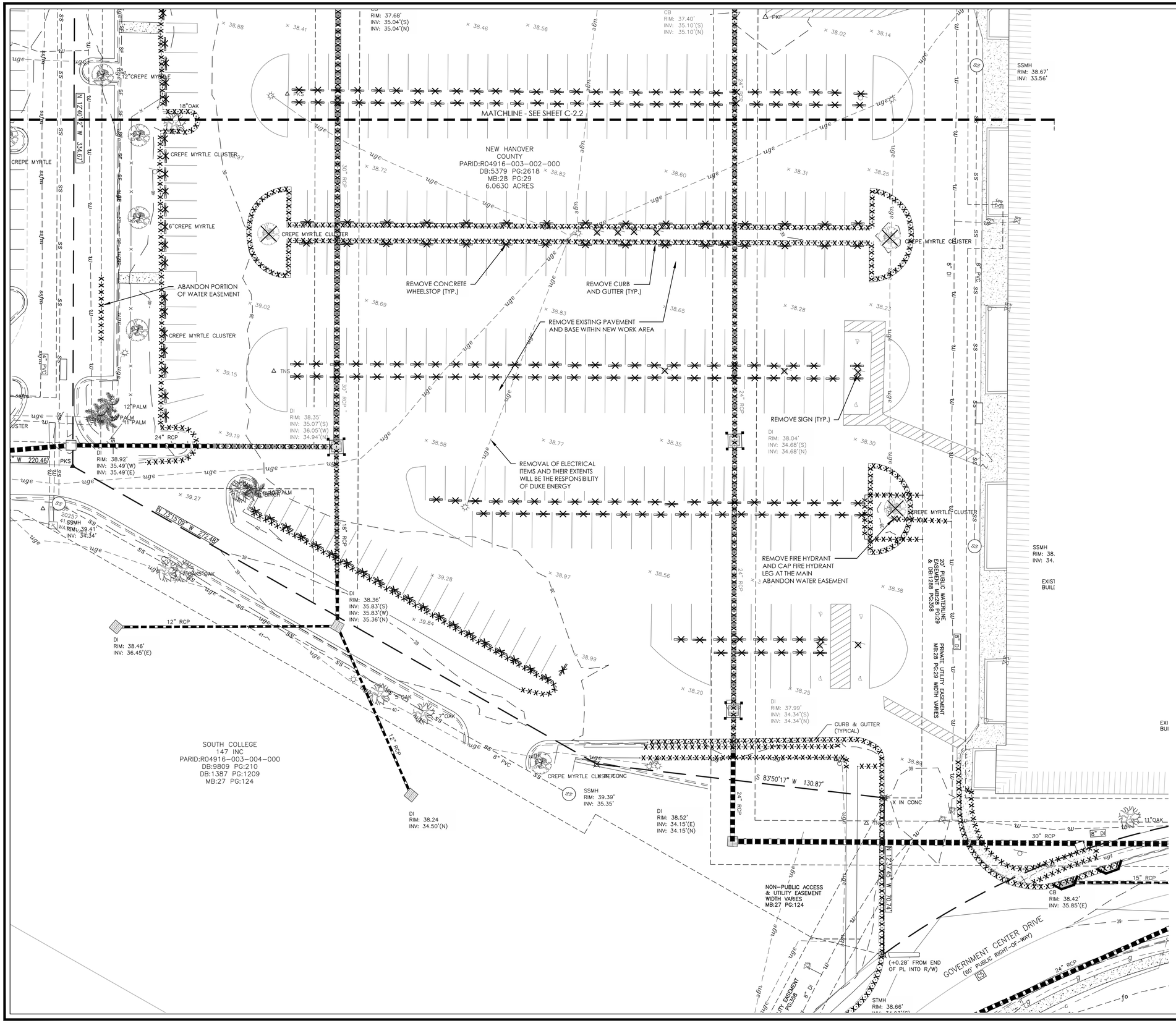

GRAPHIC SCALE

20 0 10 20 40

(IN FEET)

1 inch = 20 ft. Horz.

Approved Construction Plan

Name Date

Planning _____

Traffic _____

Fire _____

CITY OF WILMINGTON NORTH CAROLINA

Public Services • Engineering Division

APPROVED STORMWATER MANAGEMENT PLAN

Date:_____ Permit #_____

Signed: _____

For each open utility cut of City streets, a $325 permit shall be required from the City prior to occupancy and/or project acceptance

SEPI

SEPI ENGINEERING & CONSTRUCTION, INC.

RALEIGH | WILMINGTON | CHARLOTTE
BEAUFORT | CHARLESTON

5030 NEW CENTRE DR. | SUITE B
WILMINGTON, NC 28403
PHONE | 910.523.5715

sepiinc.com

811 — 3 WORKING DAYS BEFORE YOU DIG FOR THE LOCATION OF UNDERGROUND FACILITIES

Know what's below, before you dig.

THE LOCATIONS OF EXISTING UNDERGROUND UTILITIES ARE SHOWN IN AN APPROXIMATE WAY ONLY AND HAVE NOT BEEN INDEPENDENTLY VERIFIED BY THE OWNER OR ITS REPRESENTATIVE. THE CONTRACTOR SHALL DETERMINE THE EXACT LOCATION OF ALL EXISTING UTILITIES BEFORE COMMENCING WORK, AND AGREES TO BE FULLY RESPONSIBLE FOR ANY AND ALL DAMAGES WHICH MIGHT BE OCCASIONED BY THE CONTRACTOR'S FAILURE TO EXACTLY LOCATE AND PRESERVE ANY AND ALL UNDERGROUND UTILITIES.

NOTICE:
CONSTRUCTION SITE SAFETY IS THE SOLE RESPONSIBILITY OF THE CONTRACTOR NEITHER THE OWNER NOR THE ENGINEER SHALL BE EXPECTED TO ASSUME ANY RESPONSIBILITY FOR SAFETY OF THE WORK, OF PERSONS ENGAGED IN THE WORK, OF ANY NEARBY STRUCTURES, OR OF ANY OTHER PERSONS.

NORTH CAROLINA PROFESSIONAL SEAL 24419 ENGINEER MARK T. ARCURI

SEPI ENGINEERING & CONSTRUCTION, INC CORPORATE SEAL C-2197 N.C.

PRELIMINARY

NEW HANOVER COUNTY GOVERNMENT CENTER

230 GOVERNMENT CENTER DRIVE, WILMINGTON NC 28403

PREPARED FOR:
GHKCAPE FEAR DEVELOPMENT LLC
1051 MILITARY CUTOFF RD #200,
WILMINGTON, NC 28405

PRELIMINARY
NOT FOR CONSTRUCTION

		DATE
PROJECT:	SE20.022.00	
ISSUE:	90% SUBMITTAL	10/01/2020
	-	-
	-	-
	-	-
	-	-
REVISIONS:		
	-	-
	-	-
	-	-
	-	-
	-	-
	-	-
	-	-
PROJ. MGR:	MTA	
DRAWN BY:	KTD	
CHECKED BY:	MTA	

PHASE 1
DEMOLITION PLAN

C-2.1

10/1/2020 6:56 PM X:\2020\SE20.022.00 CFC-NHC Govt Complex\LD\Design\Drawings\Construction Plans\SE20022 - DEMOLITION PLANS.dwg

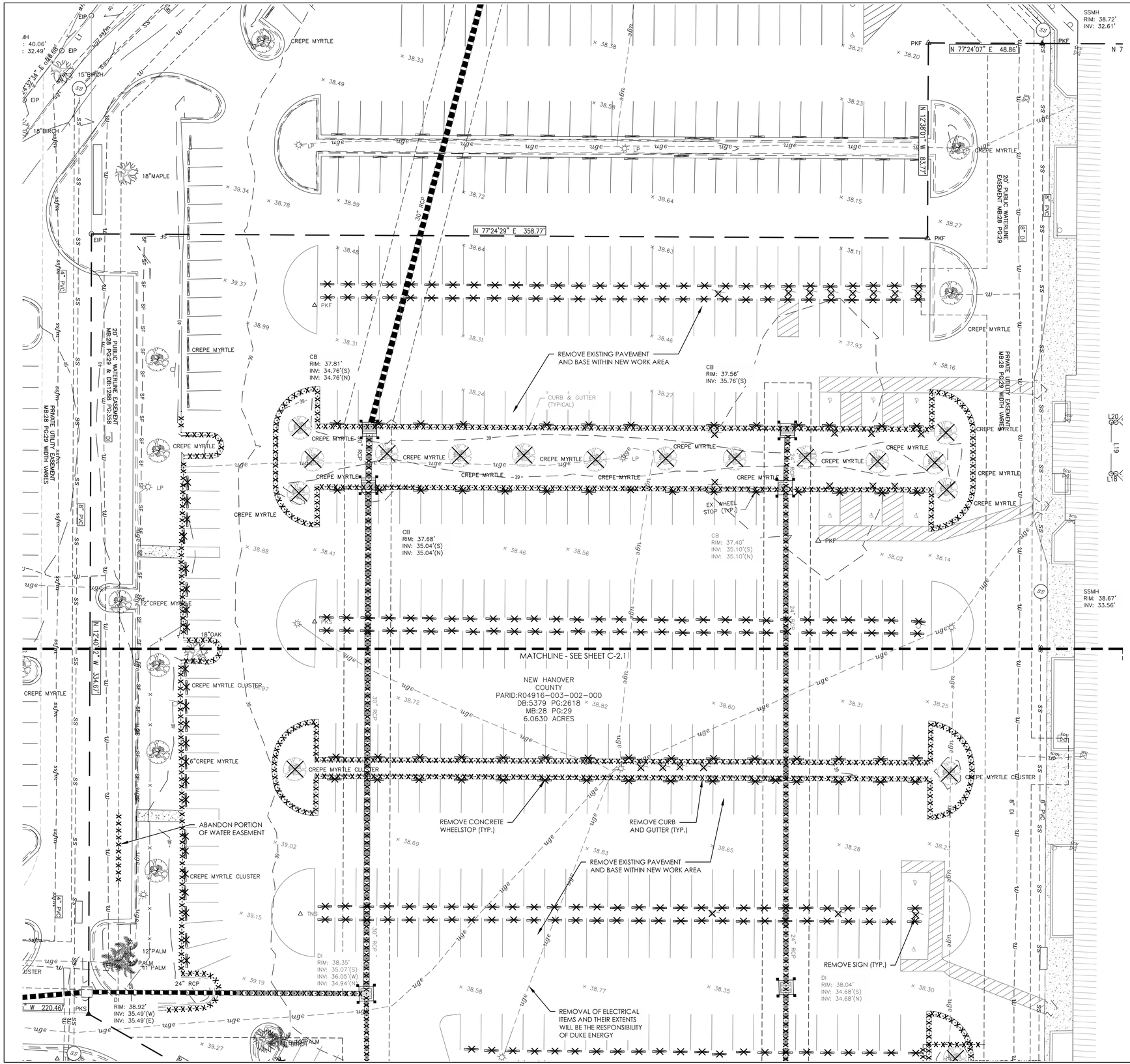

N
W E
S
NAD 83 NC GRID

GRAPHIC SCALE

20 0 10 20 40

(IN FEET)

1 inch = 20 ft. Horz.

Approved Construction Plan

	Name	Date
Planning		
Traffic		
Fire		

CITY OF WILMINGTON NORTH CAROLINA

Public Services • Engineering Division

APPROVED STORMWATER MANAGEMENT PLAN

Date:_____ Permit #_____

Signed: _____

For each open utility cut of City streets, a $325 permit shall be required from the City prior to occupancy and/or project acceptance

SEPI

SEPI ENGINEERING & CONSTRUCTION, INC.
RALEIGH | WILMINGTON | CHARLOTTE
BEAUFORT | CHARLESTON

5030 NEW CENTRE DR. | SUITE B
WILMINGTON, NC 28403
PHONE | 910.523.5715

sepiinc.com

811 3 WORKING DAYS BEFORE YOU DIG FOR THE LOCATION OF UNDERGROUND FACILITIES

Know what's below. before you dig.

THE LOCATIONS OF EXISTING UNDERGROUND UTILITIES ARE SHOWN IN AN APPROXIMATE WAY ONLY AND HAVE NOT BEEN INDEPENDENTLY VERIFIED BY THE OWNER OR ITS REPRESENTATIVE. THE CONTRACTOR SHALL DETERMINE THE EXACT LOCATION OF ALL EXISTING UTILITIES BEFORE COMMENCING WORK, AND AGREES TO BE FULLY RESPONSIBLE FOR ANY AND ALL DAMAGES WHICH MIGHT BE OCCASIONED BY THE CONTRACTOR'S FAILURE TO EXACTLY LOCATE AND PRESERVE ANY AND ALL UNDERGROUND UTILITIES.

NOTICE:
CONSTRUCTION SITE SAFETY IS THE SOLE RESPONSIBILITY OF THE CONTRACTOR NEITHER THE OWNER NOR THE ENGINEER SHALL BE EXPECTED TO ASSUME ANY RESPONSIBILITY FOR SAFETY OF THE WORK, OF PERSONS ENGAGED IN THE WORK, OF ANY NEARBY STRUCTURES, OR OF ANY OTHER PERSONS.

NORTH CAROLINA PROFESSIONAL SEAL 24419 ENGINEER MARK T. ARCURI

SEPI ENGINEERING & CONSTRUCTION, INC. CORPORATE SEAL C-2197 N.C.

PRELIMINARY

NEW HANOVER COUNTY GOVERNMENT CENTER

230 GOVERNMENT CENTER DRIVE, WILMINGTON NC 28403

PREPARED FOR:
GHKCAPE FEAR DEVELOPMENT LLC
1051 MILITARY CUTOFF RD #200,
WILMINGTON, NC 28405

PRELIMINARY
NOT FOR CONSTRUCTION

		DATE
PROJECT:	SE20.022.00	
ISSUE:	90% SUBMITTAL	10/01/2020
	.	.
	.	.
	.	.
	.	.
REVISIONS:		
	.	.
	.	.
	.	.
	.	.
	.	.
	.	.
PROJ. MGR:	MTA	
DRAWN BY:	KTD	
CHECKED BY:	MTA	

PHASE 1
DEMOLITION PLAN

C-2.2

10/1/2020 4:53 PM X:\2020\SE20.022.00 CFC-NHC Govt Complex\LDI\Design\Drawings\Construction Plans\SE20022 - DEMOLITION PLANS.dwg

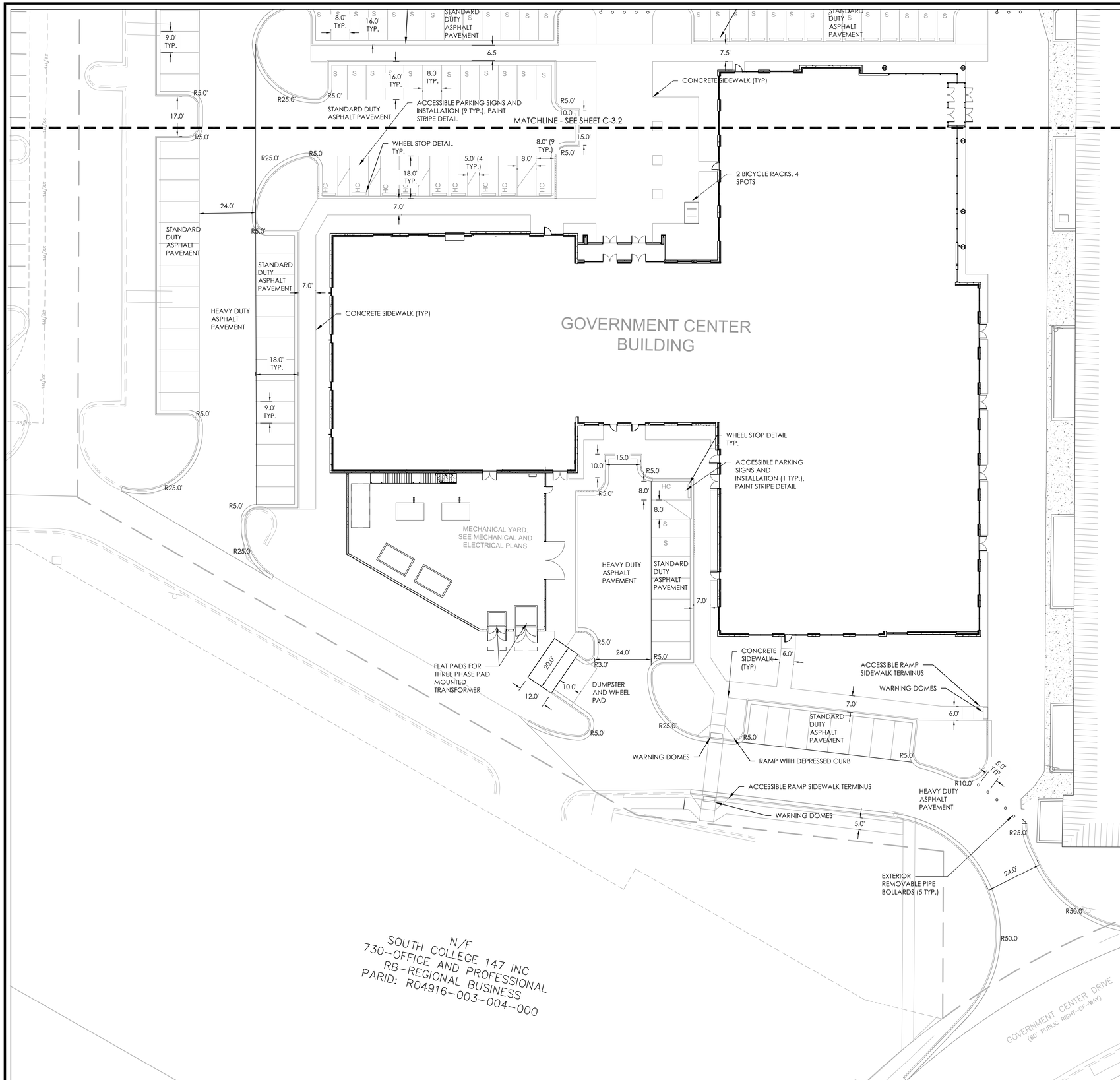

N
W E
S
NAD 83 NC GRID

SITE DATA TABLE PHASE 1

PARCEL ID	R04916-003-002-000 R04916-003-007-000 R05013-008-043-002
PARCEL OWNERSHIP	NEW HAN CNTY
ZONING DISTRICT	RB - REGIONAL BUSINESS
BUILDING SETBACKS (FT)	
GOV CETNER	38
FRONT	28
REAR	13
INTERIOR SIDE	38
CORNER	
TOTAL ACREAGE	652,831 SF, 14.99 AC
GOV CENTER PROPERTY	301,029 SF, 6.91 AC
BUILDING SIZE	
GOV CENTER	136,595 SF
BUILDING LOT COVERAGE	44,560 SF / 301,029 SF =14.80%
BUILDING CONSTRUCTION TYPE	
GOV CENTER	II-B
NUMBER OF BUILDINGS	1 BUILDING
BUILDING HEIGHT	
GOV CENTER	60 FT
NUMBER OF STORIES	
GOV CENTER	4
SF PER FLOOR	
GOV CENTER (1)	41,852
GOV CETNER (2)	41,481
GOV CETNER (3)	26,631
GOV CENTER (4)	26,631
TOTAL GOV CENTER	136,595
OFF STREET PARKING CALCULATIONS	
REQUIRED PARKING	
GOV CENTER	MAX 1 PER 200 SF GFA X 136,595 = 683
	MIN 1 PER 300 SF GFA X 136,595 = 456
TEN PIN ALLEY	1/ALLEY = 24
RESTAURANT	MAX 1 PER 2.5 SEATS X 90 = 36
	MIN 1 PER 4 SEATS X 90 = 23
TOTAL	MAX = 743
	MIN = 503
PROVIDED PARKING	
STANDARD SPACES	159
COMPACT SPACES	39
STANDARD HANDICAPPED SPACES	6
VAN HANDICAPPED SPACES	3
TOTAL NEW PARKING	207
PARKING TO REMAIN GOV CENTER	294
PARKING TO REMAIN TEN PIN ALLEY	180
TOTAL PARKING TO REMAIN	474
TOTAL PROVIDED PARKING	681
CAMA LAND USE CLASSIFICATION	URBAN
CAMA AEC AND SETBACKS:	NONE
HISTORICAL OR ARCHAEOLOGICAL SITES:	NONE
CEMETERY:	NONE
WETLANDS:	NONE
ENDANGERED SPECIES OR HABITAT:	NONE
CONSERVATION AREAS:	NONE
MEAN HIGH WATER LINE:	SMITH CREEK
WATER SHED:	CAPE FEAR RIVER BASIN
RIVER BASIN:	NONE
EXISTING OR PROPOSED THOROUGHFARES:	NONE
BIKE ROUTES:	AS SHOWN
PEDESTRIAN SIDEWALKS:	NONE
TRANSIT FACILITIES:	NONE
SOIL TYPE:	LEON SAND, MURVILLE FINE SAND, SEAGATE FINE SAND

SUBJECT AREA IS LOCATED WITHIN SPECIAL FLOOD HAZARD ZONE X AS TAKEN FROM THE NC FLOOD RISK INFORMATION SYSTEM AND AS SHOWN ON FIRM MAP #37203148000K PANEL 3148, EFFECTIVE AUG. 28, 2018.

ABBREVIATIONS LIST:
HC = HANDICAPPED SPACE
S = COMPACT SPACE

Approved Construction Plan

	Name	Date
Planning		
Traffic		
Fire		

CITY OF WILMINGTON NORTH CAROLINA
Public Services • Engineering Division
APPROVED STORMWATER MANAGEMENT PLAN
Date:_____ Permit #_____
Signed: _____

GRAPHIC SCALE
20 0 10 20 40
(IN FEET)
1 inch = 20 ft. Horz.

For each open utility cut of City streets, a $325 permit shall be required from the City prior to occupancy and/or project acceptance

SEPI
SEPI ENGINEERING & CONSTRUCTION, INC.
RALEIGH | WILMINGTON | CHARLOTTE
BEAUFORT | CHARLESTON
5030 NEW CENTRE DR. | SUITE B
WILMINGTON, NC 28403
PHONE | 910.523.5715
sepiinc.com

811 3 WORKING DAYS BEFORE YOU DIG FOR THE LOCATION OF UNDERGROUND FACILITIES
Know what's below, before you dig.

THE LOCATIONS OF EXISTING UNDERGROUND UTILITIES ARE SHOWN IN AN APPROXIMATE WAY ONLY AND HAVE NOT BEEN INDEPENDENTLY VERIFIED BY THE OWNER OR ITS REPRESENTATIVE. THE CONTRACTOR SHALL DETERMINE THE EXACT LOCATION OF ALL EXISTING UTILITIES BEFORE COMMENCING WORK, AND AGREES TO BE FULLY RESPONSIBLE FOR ANY AND ALL DAMAGES WHICH MIGHT BE OCCASIONED BY THE CONTRACTOR'S FAILURE TO EXACTLY LOCATE AND PRESERVE ANY AND ALL UNDERGROUND UTILITIES.

NOTICE:
CONSTRUCTION SITE SAFETY IS THE SOLE RESPONSIBILITY OF THE CONTRACTOR NEITHER THE OWNER NOR THE ENGINEER SHALL BE EXPECTED TO ASSUME ANY RESPONSIBILITY FOR SAFETY OF THE WORK, OF PERSONS ENGAGED IN THE WORK, OF ANY NEARBY STRUCTURES, OR OF ANY OTHER PERSONS.

NORTH CAROLINA PROFESSIONAL SEAL 24419 ENGINEER MARK T. ARCURI
SEPI ENGINEERING & CONSTRUCTION, INC CORPORATE SEAL C-2197 N.C.
PRELIMINARY

NEW HANOVER COUNTY GOVERNMENT CENTER

230 GOVERNMENT CENTER DRIVE, WILMINGTON NC 28403

PREPARED FOR:
GHKCAPE FEAR DEVELOPMENT LLC
1051 MILITARY CUTOFF RD #200,
WILMINGTON, NC 28405

PRELIMINARY
NOT FOR CONSTRUCTION

		DATE
PROJECT:	SE20.022.00	
ISSUE:	90% SUBMITTAL	10/01/2020
REVISIONS:		
PROJ. MGR:	MTA	
DRAWN BY:	KTD	
CHECKED BY:	MTA	

PHASE 1
SITE LAYOUT PLAN

C-3.1

10/1/2020 5:37 PM X:\2020\SE20.022.00 CFC-NHC Govt Complex\LD\Design\Drawings\Construction Plans\SE20022 - SITE PLANS.dwg

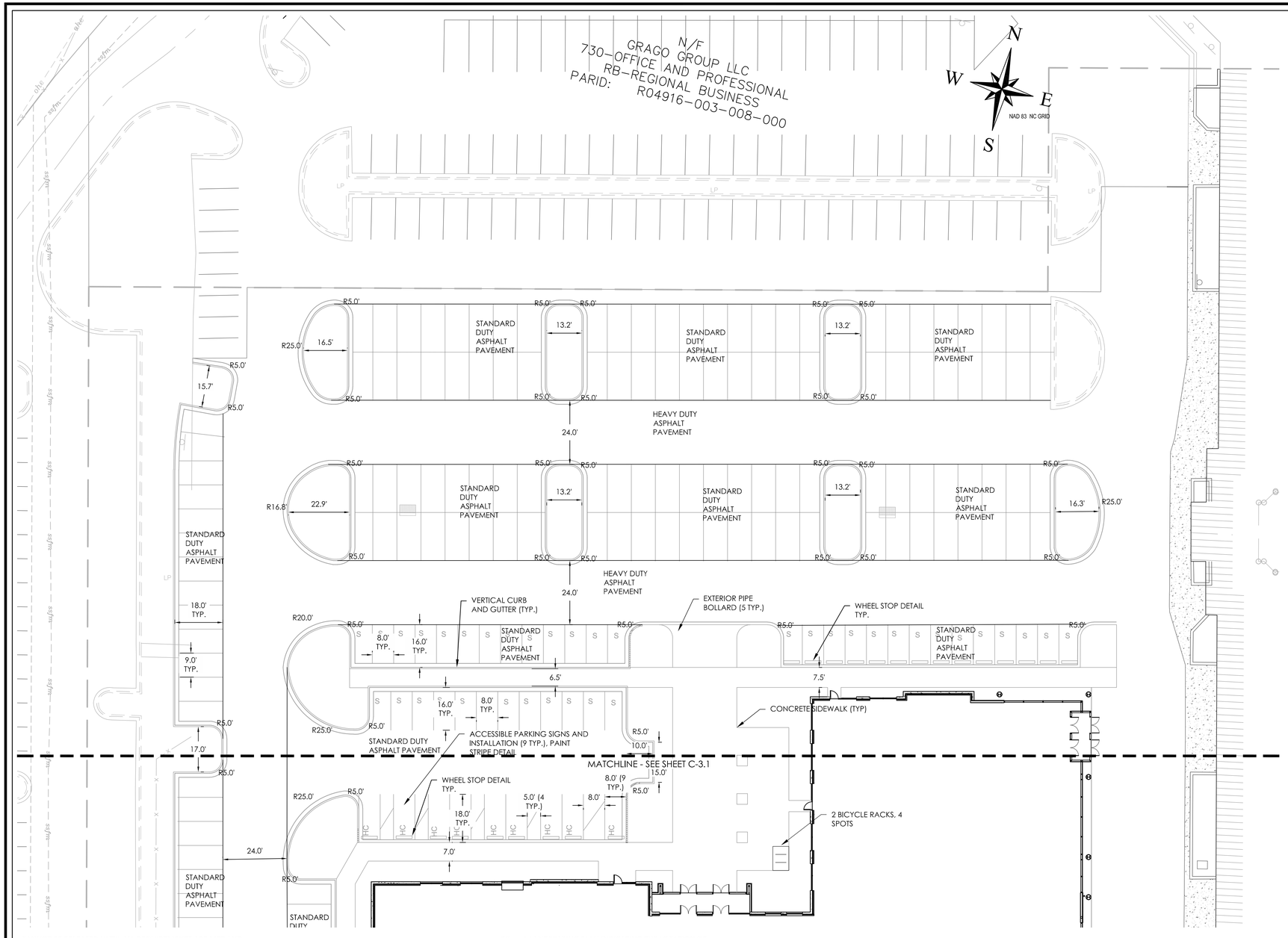

ENGINEER NOTES

1. PRIOR TO ANY CLEARING, GRADING OR CONSTRUCTION ACTIVITY, TREE PROTECTION FENCING SHALL BE INSTALLED AROUND PROTECTED TREES OR GROVES OF TREES. NO CONSTRUCTION WORKERS, TOOLS, MATERIALS, OR VEHICLES ARE PERMITTED WITHIN THE TREE PROTECTION FENCING.
2. ANY TREES AND/OR AREAS DESIGNATED TO BE PROTECTED MUST BE PROPERLY BARRICADED WITH FENCING AND PROTECTED THROUGHOUT CONSTRUCTION TO ENSURE THAT NO CLEARING, GRADING OR STAGING OF MATERIALS WILL OCCUR IN THOSE AREAS.
3. NO EQUIPMENT IS ALLOWED ON SITE UNTIL ALL TREE PROTECTION FENCING AND SILT FENCING IS INSTALLED AND APPROVED. PROTECTIVE FENCING IS TO BE MAINTAINED THROUGHOUT THE DURATION OF THE PROJECT, AND CONTRACTORS SHALL RECEIVE ADEQUATE INSTRUCTION ON TREE PROTECTION METHODS.
4. ALL PAVEMENT MARKINGS IN PUBLIC RIGHTS-OF-WAY AND FOR DRIVEWAYS ARE TO BE THERMOPLASTIC AND MEET CITY AND/OR NCDOT STANDARDS.
5. ONCE STREETS ARE OPEN TO TRAFFIC, CONTACT TRAFFIC ENGINEERING REGARDING THE INSTALLATION OF TRAFFIC AND STREET NAME SIGNS. PROPOSED STREET NAMES MUST BE APPROVED PRIOR TO INSTALLATION OF STREET NAME SIGNS.
6. TRAFFIC CONTROL DEVICES (INCLUDING SIGNS AND PAVEMENT MARKINGS) IN AREAS OPEN TO PUBLIC TRAFFIC ARE TO MEET MUTCD (MANUAL ON UNIFORM TRAFFIC CONTROL DEVICES) STANDARDS.
7. CONTACT TRAFFIC ENGINEERING AT 910-341-7888 TO ENSURE THAT ALL TRAFFIC SIGNAL FACILITIES AND EQUIPMENT ARE SHOWN ON THE PLAN.
8. CONTACT 811 PRIOR TO CONTACTING CITY OF WILMINGTON, TRAFFIC ENGINEERING REGARDING THE UTILITIES IN THE ROW.
9. CALL TRAFFIC ENGINEERING AT 910-341-7888 FORTY-EIGHT (48) HOURS PRIOR TO ANY EXCAVATION IN THE RIGHT-OF-WAY.
10. TRAFFIC ENGINEERING MUST APPROVE OF PAVEMENT MARKING PRIOR TO ACTUAL STRIPING.
11. ALL PARKING STALL MARKINGS AND LANE ARROWS WITHIN THE PARKING AREAS SHALL BE WHITE.
12. ALL TRAFFIC CONTROL SIGNS AND MARKINGS OFF THE RIGHT-OF-WAY ARE TO BE MAINTAINED BY THE PROPERTY OWNER IN ACCORDANCE WITH MUTCD STANDARDS.
13. STOP SIGNS AND STREET SIGNS TO REMAIN IN PLACE DURING CONSTRUCTION.
14. TACTILE WARNING MATS WILL BE INSTALLED ON ALL WHEELCHAIR RAMPS.
15. A UTILITY CUT PERMIT IS REQUIRED FOR EACH OPEN CUT OF A CITY STREET.
16. ANY BROKEN OR MISSING SIDEWALK PANELS, DRIVEWAY PANELS AND CURBING WILL BE REPLACED.
17. CONTACT TRAFFIC ENGINEERING AT (910) 341-7888 TO DISCUSS STREET LIGHTING OPTIONS.
18. WATER AND SEWER SERVICE SHALL MEET CAPE FEAR PUBLIC UTILITY AUTHORITY (CFPUA) DETAILS AND SPECIFICATIONS.
19. PROJECT SHALL COMPLY WITH CFPUA CROSS CONNECTION CONTROL REQUIREMENTS. WATER METER(S) CANNOT BE RELEASED UNTIL ALL REQUIREMENTS ARE MET AND THE STATE HAS GIVEN THEIR FINAL APPROVAL. CALL 910-343-3910 FOR INFORMATION.
20. IF THE CONTRACTOR DESIRES CFPUA WATER FOR CONSTRUCTION, HE SHALL APPLY IN ADVANCE FOR THIS SERVICE AND MUST PROVIDE A REDUCED PRESSURE ZONE (RPZ) BACKFLOW PREVENTION DEVICE ON THE DEVELOPER'S SIDE OF THE WATER METER BOX.
21. ANY IRRIGATION SYSTEM SUPPLIED BY CFPUA WATER SHALL COMPLY WITH THE CFPUA CROSS CONNECTION CONTROL REGULATIONS. CALL 919-343-3910 FOR INFORMATION.
22. ANY IRRIGATION SYSTEM SHALL BE EQUIPPED WITH A RAIN AND FREEZER SENSOR.
23. ANY BACKFLOW PREVENTION DEVICES REQUIRED BY THE CFPUA WILL NEED TO BE ON THE LIST OF APPROVED DEVICES BY USCFCCCHR OR ASSE.
24. CONTRACTOR TO FIELD VERIFY EXISTING WATER AND SEWER SERVICE LOCATIONS, SIZES AND MATERIALS PRIOR TO CONSTRUCTION. ENGINEER TO BE NOTIFIED OF ANY CONFLICTS.
25. CONTRACTOR SHALL MAINTAIN ALL-WEATHER ACCESS FOR EMERGENCY VEHICLES AT ALL TIMES DURING CONSTRUCTION.
26. UNDERGROUND FIRE LINE(S) MUST BE PERMITTED AND INSPECTED BY THE WILMINGTON FIRE DEPARTMENT FROM THE PUBLIC RIGHT-OF-WAY TO THE BUILDING. CONTACT THE WILMINGTON FIRE DEPARTMENT DIVISION OF FIRE AND LIFE SAFETY AT 910-341-0696.
27. NO OBSTRUCTIONS ARE PERMITTED IN THE SPACE BETWEEN THIRTY (30) INCHES AND TEN (10) FEET ABOVE THE GROUND WITHIN THE TRIANGULAR SIGHT DISTANCE.
28. CONTACT THE NORTH CAROLINA ONE CALL CENTER AT 1.800.632.4949 PRIOR TO DOING ANY DIGGING, CLEARING, OR GRADING
29. DRIVEWAY DESIGN MATCHES EXISTING CONDITIONS AND DOES NOT CONFORM TO CITY STANDARDS
30. THE MAXIMUM HEIGHT AND AREA OF THE MAIN SIGN IS 20 FEET AND 65 SQUARE FEET RESPECTIVELY.
31. ALL RADII ARE FACE OF CURB.
32. NEW HYDRANTS MUST BE BROUGHT INTO SERVICE [PRIOR TO COMBUSTIBLE MATERIALS DELIVERED TO THE JOB SITE.
33. LANDSCAPING OR PARKING CANNOT BLOCK OR IMPEDE FIRE HYDRANTS. A 3-FOOT CLEAR SPACE SHALL BE MAINTAINED AROUND THE CIRCUMFERENCE OF THE HYDRANT.
34. ADDITIONAL FIRE PROTECTION AND/OR ACCESSIBILITY MAY BE REQUIRED DUE TO ANY SPECIAL CIRCUMSTANCES CONCERNING THE PROJECT.
35. CONTRACTORS SHALL SUBMIT A RADIO SIGNAL STRENGTH STUDY FOR ALL COMMERCIAL BUILDINGS THAT DEMONSTRATE THAT EXISTING FIRE EMERGENCY RESPONDER RADIO SIGNAL LEVELS MEET THE REQUIREMENTS OF SECTION 510 OF THE 2018 FIRE CODE.
36. A LANDSCAPING PLAN INDICATING THE LOCATION OF REQUIRED STREET TREES SHALL BE SUBMITTED TO THE CITY OF WILMINGTON TRAFFIC ENGINEERING DIVISION AND PARKS AND RECREATION DEPARTMENT FOR REVIEW AND PRIOR APPROVAL TO THE RECORDING OF THE FINAL PLAT.
37. STREET TREES MUST BE LOCATED A MINIMUM OF 15 FEET FROM STREET LIGHTS.

ABBREVIATIONS LIST:
HC = HANDICAPPED SPACE
S = COMPACT SPACE

GRAPHIC SCALE
20 0 10 20 40
(IN FEET)
1 inch = 20 ft. Horz.

Approved Construction Plan

	Name	Date
Planning		
Traffic		
Fire		

CITY OF WILMINGTON NORTH CAROLINA
Public Services • Engineering Division
APPROVED STORMWATER MANAGEMENT PLAN
Date:_____ Permit #_____
Signed: _____

For each open utility cut of City streets, a $325 permit shall be required from the City prior to occupancy and/or project acceptance

SEPI
SEPI ENGINEERING & CONSTRUCTION, INC.
RALEIGH | WILMINGTON | CHARLOTTE
BEAUFORT | CHARLESTON
5030 NEW CENTRE DR. | SUITE B
WILMINGTON, NC 28403
PHONE | 910.523.5715
sepiinc.com

811 Know what's below, before you dig.
3 WORKING DAYS BEFORE YOU DIG FOR THE LOCATION OF UNDERGROUND FACILITIES

THE LOCATIONS OF EXISTING UNDERGROUND UTILITIES ARE SHOWN IN AN APPROXIMATE WAY ONLY AND HAVE NOT BEEN INDEPENDENTLY VERIFIED BY THE OWNER OR ITS REPRESENTATIVE. THE CONTRACTOR SHALL DETERMINE THE EXACT LOCATION OF ALL EXISTING UTILITIES BEFORE COMMENCING WORK, AND AGREES TO BE FULLY RESPONSIBLE FOR ANY AND ALL DAMAGES WHICH MIGHT BE OCCASIONED BY THE CONTRACTOR'S FAILURE TO EXACTLY LOCATE AND PRESERVE ANY AND ALL UNDERGROUND UTILITIES.

NOTICE:
CONSTRUCTION SITE SAFETY IS THE SOLE RESPONSIBILITY OF THE CONTRACTOR NEITHER THE OWNER NOR THE ENGINEER SHALL BE EXPECTED TO ASSUME ANY RESPONSIBILITY FOR SAFETY OF THE WORK, OF PERSONS ENGAGED IN THE WORK, OF ANY NEARBY STRUCTURES, OR OF ANY OTHER PERSONS.

NORTH CAROLINA PROFESSIONAL SEAL 24419 ENGINEER MARK T. ARCURI
SEPI ENGINEERING & CONSTRUCTION, INC CORPORATE SEAL C-2197 N.C.
PRELIMINARY

NEW HANOVER COUNTY GOVERNMENT CENTER

230 GOVERNMENT CENTER DRIVE, WILMINGTON NC 28403

PREPARED FOR:
GHKCAPE FEAR DEVELOPMENT LLC
1051 MILITARY CUTOFF RD #200,
WILMINGTON, NC 28405

PRELIMINARY
NOT FOR CONSTRUCTION

		DATE
PROJECT:	SE20.022.00	
ISSUE:	90% SUBMITTAL	10/01/2020
	.	.
	.	.
	.	.
	.	.
REVISIONS:		
	.	.
	.	.
	.	.
	.	.
	.	.
	.	.
PROJ. MGR:	MTA	
DRAWN BY:	KTD	
CHECKED BY:	MTA	

PHASE 1
SITE LAYOUT PLAN

C-3.2

10/1/2020 6:01 PM X:\2020\SE20.022.00 CFC-NHC Govt Complex\LD\Design\Drawings\Construction Plan\SE20022 - SITE PLANS.dwg

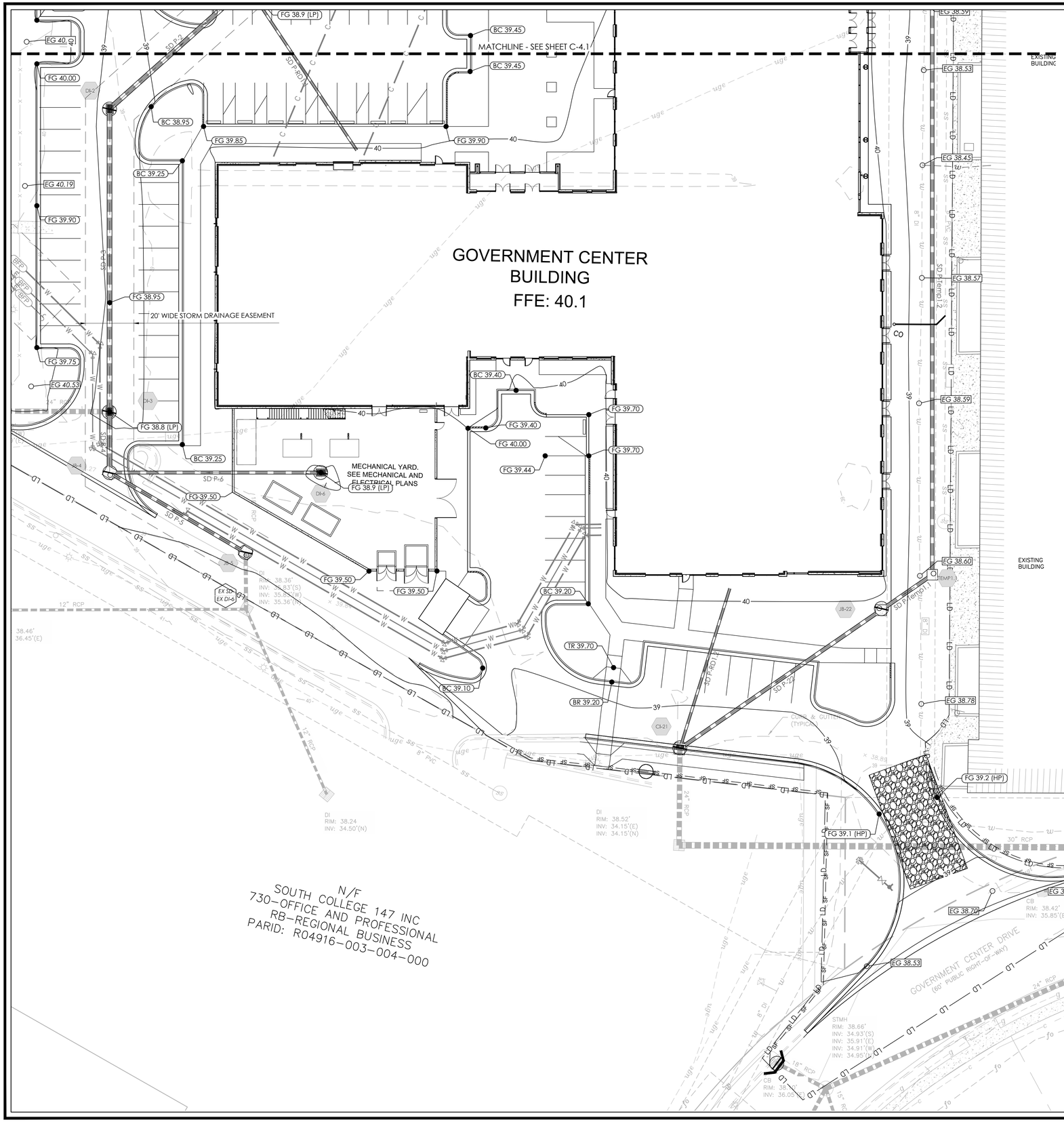

STORM DRAINAGE (SD) STRUCTURE TABLE

ID NO.	DETAILS
CI-1	RIM = 38.85 INV IN = 34.85 (SD P-2) INV IN = 36.50 (SD P-RD1.1) INV OUT = 34.85 (SD P-1)
CI-21	RIM = 38.30 INV IN = 34.50 (SD P-22) INV IN = 35.25 (SD P-RD1.2) INV OUT = 34.28 (SD P-EX 21)
CI-40	RIM = 38.84 INV OUT = 36.00 (SD P-40)
DI-2	RIM = 38.80 INV IN = 35.00 (SD P-3) INV OUT = 35.00 (SD P-2)
DI-3	RIM = 38.80 INV IN = 35.20 (SD P-4) INV IN = 35.25 (SD P-EX 8) INV OUT = 35.20 (SD P-3)
DI-6	RIM = 38.90 INV OUT = 36.00 (SD P-6)
EX D-I3	RIM = 38.05 INV IN = 34.76 (SD P-1) INV OUT = 34.76 (SD P-EX 3)
EX DI-24	RIM = 37.80 INV OUT = 35.42 (SD P-24)
JB-4	RIM = 39.25 INV IN = 35.25 (SD P-5) INV IN = 35.50 (SD P-6) INV OUT = 35.25 (SD P-4)
JB-5	RIM = 39.94 INV IN = 35.28 (SD P-EX 6) INV OUT = 35.28 (SD P-5)
JB-22	RIM = 38.56 INV IN = 35.10 (SD P-Temp1.1) INV OUT = 35.10 (SD P-22)
JB-23	RIM = 39.16 INV IN = 35.24 (SD P-24) INV OUT = 35.24 (SD P-23)
Temp1.2	RIM = 38.63 INV IN = 35.10 (SD P-Temp1.3) INV OUT = 35.10 (SD P-Temp1.2)

STORM DRAINAGE (SD) PIPE TABLE

PIPE NAME	SIZE	MATERIAL	LENGTH	SLOPE
SD-1	30"	RCP CLASS III	64.1 LF	0.1%
SD-2	24"	RCP CLASS III	76.1 LF	0.2%
SD-3	24"	RCP CLASS III	124.9 LF	0.2%
SD-4	24"	RCP CLASS III	25.1 LF	0.2%
SD-5	18"	RCP CLASS III	65.2 LF	0.0%
SD-6	15"	RCP CLASS III	85.6 LF	0.6%
SD-24	18"	RCP CLASS III	79.7 LF	0.2%
SD-40	15"	RCP CLASS III	74.4 LF	-2.4%
SD-RD1.1	12"	PVC	81.4 LF	0.7%
SD-RD1.2	12"	PVC	67.5 LF	0.2%
SD-Temp1.1	18"	SLOTTED DRAIN	23.8 LF	0.0%
SD-Temp1.2	18"	SLOTTED DRAIN	238.3 LF	0.0%
SD-Temp1.3	18"	RCP CLASS III	71.3 LF	0.1%

ABBREVIATIONS

BC: BOTTOM OF CURB
CI: CURB INLET
DI: DRAIN INLET
EG: EXISTING GRADE
FG: FINISHED GRADE
HP: HIGH POINT
JB: JUNCTION BOX
LP: LOW POINT
MH: MANHOLE
SD: STORMWATER DRAINAGE

GRAPHIC SCALE

20 0 10 20 40

(IN FEET)

1 inch = 20 ft. Horz.

Approved Construction Plan

Name Date

Planning _____

Traffic _____

Fire _____

CITY OF WILMINGTON NORTH CAROLINA

Public Services • Engineering Division

APPROVED STORMWATER MANAGEMENT PLAN

Date:_____ Permit #_____

Signed: _____

For each open utility cut of City streets, a $325 permit shall be required from the City prior to occupancy and/or project acceptance

SEPI

SEPI ENGINEERING & CONSTRUCTION, INC.
RALEIGH | WILMINGTON | CHARLOTTE
BEAUFORT | CHARLESTON

5030 NEW CENTRE DR. | SUITE B
WILMINGTON, NC 28403
PHONE | 910.523.5715

sepiinc.com

811 3 WORKING DAYS BEFORE YOU DIG FOR THE LOCATION OF UNDERGROUND FACILITIES

Know what's below, before you dig.

THE LOCATIONS OF EXISTING UNDERGROUND UTILITIES ARE SHOWN IN AN APPROXIMATE WAY ONLY AND HAVE NOT BEEN INDEPENDENTLY VERIFIED BY THE OWNER OR ITS REPRESENTATIVE. THE CONTRACTOR SHALL DETERMINE THE EXACT LOCATION OF ALL EXISTING UTILITIES BEFORE COMMENCING WORK, AND AGREES TO BE FULLY RESPONSIBLE FOR ANY AND ALL DAMAGES WHICH MIGHT BE OCCASIONED BY THE CONTRACTOR'S FAILURE TO EXACTLY LOCATE AND PRESERVE ANY AND ALL UNDERGROUND UTILITIES.

NOTICE:
CONSTRUCTION SITE SAFETY IS THE SOLE RESPONSIBILITY OF THE CONTRACTOR NEITHER THE OWNER NOR THE ENGINEER SHALL BE EXPECTED TO ASSUME ANY RESPONSIBILITY FOR SAFETY OF THE WORK, OF PERSONS ENGAGED IN THE WORK, OF ANY NEARBY STRUCTURES, OR OF ANY OTHER PERSONS.

NORTH CAROLINA PROFESSIONAL SEAL 24419 ENGINEER MARK T. ARCURI

SEPI ENGINEERING & CONSTRUCTION, INC CORPORATE SEAL C-2197 N.C.

PRELIMINARY

NEW HANOVER COUNTY GOVERNMENT CENTER

230 GOVERNMENT CENTER DRIVE, WILMINGTON NC 28403

PREPARED FOR:
GHKCAPE FEAR DEVELOPMENT LLC
1051 MILITARY CUTOFF RD #200,
WILMINGTON, NC 28405

PRELIMINARY
NOT FOR CONSTRUCTION

		DATE
PROJECT:	SE20.022.00	
ISSUE:	90% SUBMITTAL	10/01/2020
	.	.
	.	.
	.	.
	.	.
REVISIONS:		
	.	.
	.	.
	.	.
	.	.
	.	.
	.	.
PROJ. MGR:	MTA	
DRAWN BY:	KTD	
CHECKED BY:	MTA	

PHASE 1
EROSION CONTROL, GRADING & STORMWATER PLAN

C-4.1

10/1/2020 5:37 PM X:\2020\SE20.022.00 CFC-NHC Govt Complex\LDI\Design\Drawings\Construction Plans\SE20022 - GRADING PLANS.dwg

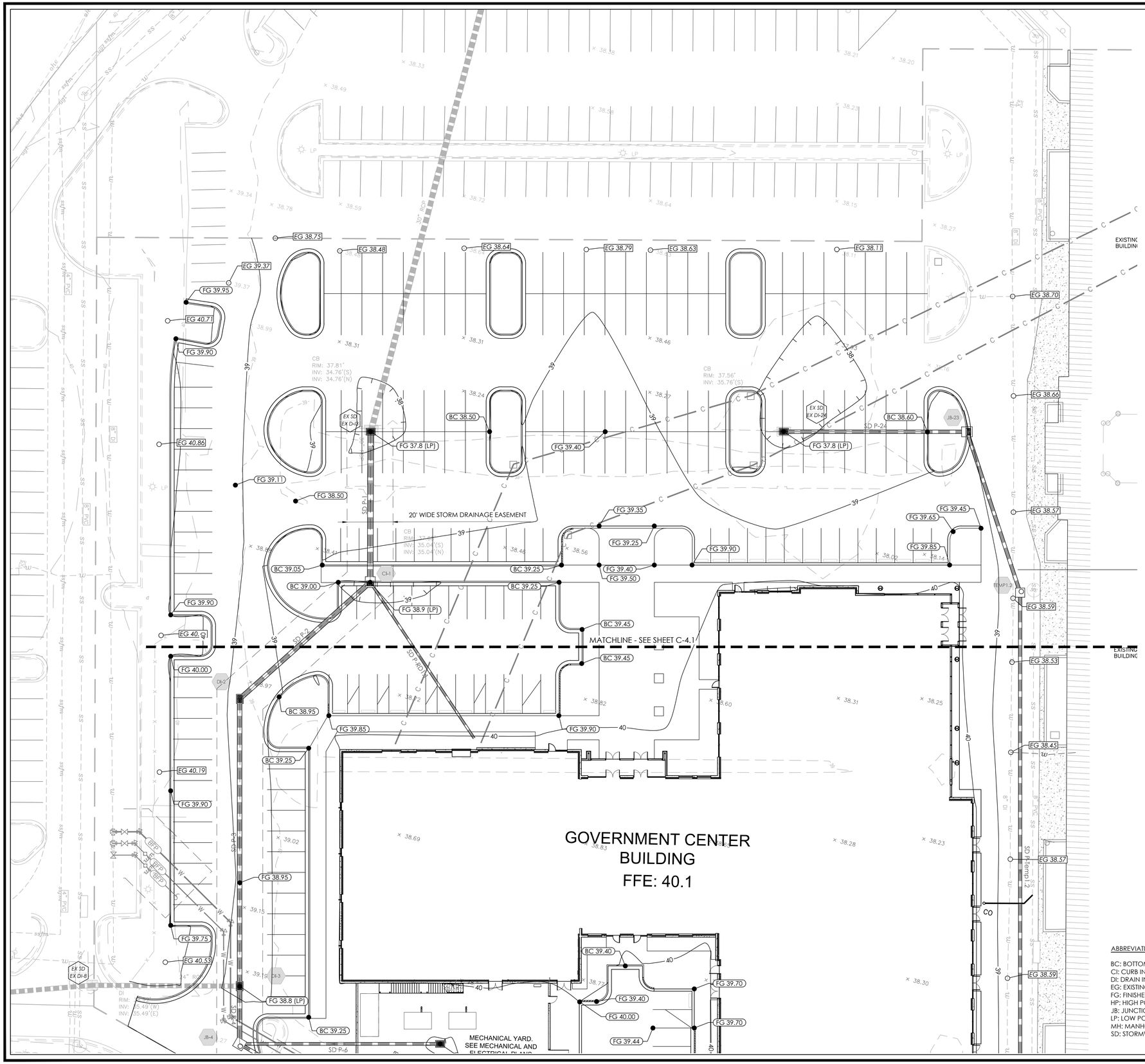

STORM DRAINAGE (SD) STRUCTURE TABLE

ID NO.	DETAILS
CI-1	RIM = 38.85 INV IN = 34.85 (SD P-2) INV IN = 36.50 (SD P-RD1.1) INV OUT = 34.85 (SD P-1)
CI-21	RIM = 38.30 INV IN = 34.50 (SD P-22) INV IN = 35.25 (SD P-RD1.2) INV OUT = 34.28 (SD P-EX 21)
CI-40	RIM = 38.84 INV OUT = 36.00 (SD P-40)
DI-2	RIM = 38.80 INV IN = 35.00 (SD P-3) INV OUT = 35.00 (SD P-2)
DI-3	RIM = 38.80 INV IN = 35.20 (SD P-4) INV IN = 35.25 (SD P-EX 8) INV OUT = 35.20 (SD P-3)
DI-6	RIM = 38.90 INV OUT = 36.00 (SD P-6)
EX DI-13	RIM = 38.05 INV IN = 34.76 (SD P-1) INV OUT = 34.76 (SD P-EX 3)
EX DI-24	RIM = 37.80 INV OUT = 35.42 (SD P-24)
JB-4	RIM = 39.25 INV IN = 35.25 (SD P-5) INV IN = 35.50 (SD P-6) INV OUT = 35.25 (SD P-4)
JB-5	RIM = 39.94 INV IN = 35.28 (SD P-EX 6) INV OUT = 35.28 (SD P-5)
JB-22	RIM = 38.56 INV IN = 35.10 (SD P-Temp1.1) INV OUT = 35.10 (SD P-22)
JB-23	RIM = 39.16 INV IN = 35.24 (SD P-24) INV OUT = 35.24 (SD P-23)
Temp1.2	RIM = 38.63 INV IN = 35.10 (SD P-Temp1.3) INV OUT = 35.10 (SD P-Temp1.2)

STORM DRAINAGE (SD) PIPE TABLE

PIPE NAME	SIZE	MATERIAL	LENGTH	SLOPE
SD-1	30"	RCP CLASS III	64.1 LF	0.1%
SD-2	24"	RCP CLASS III	76.1 LF	0.2%
SD-3	24"	RCP CLASS III	124.9 LF	0.2%
SD-4	24"	RCP CLASS III	25.1 LF	0.2%
SD-5	18"	RCP CLASS III	65.2 LF	0.0%
SD-6	15"	RCP CLASS III	85.6 LF	0.6%
SD-24	18"	RCP CLASS III	79.7 LF	0.2%
SD-40	15"	RCP CLASS III	74.4 LF	-2.4%
SD-RD1.1	12"	PVC	81.4 LF	0.7%
SD-RD1.2	12"	PVC	67.5 LF	0.2%
SD-Temp1.1	18"	SLOTTED DRAIN	23.8 LF	0.0%
SD-Temp1.2	18"	SLOTTED DRAIN	238.3 LF	0.0%
SD-Temp1.3	18"	RCP CLASS III	71.3 LF	0.1%

N
W E
S
NAD 83 NC GRID

GRAPHIC SCALE
20 0 10 20 40
(IN FEET)
1 inch = 20 ft. Horz.

Approved Construction Plan

	Name	Date
Planning		
Traffic		
Fire		

CITY OF WILMINGTON NORTH CAROLINA
Public Services • Engineering Division
APPROVED STORMWATER MANAGEMENT PLAN
Date:_____ Permit #_____
Signed: _____

For each open utility cut of City streets, a $325 permit shall be required from the City prior to occupancy and/or project acceptance

ABBREVIATIONS

BC: BOTTOM OF CURB
CI: CURB INLET
DI: DRAIN INLET
EG: EXISTING GRADE
FG: FINISHED GRADE
HP: HIGH POINT
JB: JUNCTION BOX
LP: LOW POINT
MH: MANHOLE
SD: STORMWATER DRAINAGE

SEPI
SEPI ENGINEERING & CONSTRUCTION, INC.
RALEIGH | WILMINGTON | CHARLOTTE
BEAUFORT | CHARLESTON
5030 NEW CENTRE DR. | SUITE B
WILMINGTON, NC 28403
PHONE | 910.523.5715
sepiinc.com

811 Know what's below. before you dig.
3 WORKING DAYS BEFORE YOU DIG FOR THE LOCATION OF UNDERGROUND FACILITIES

THE LOCATIONS OF EXISTING UNDERGROUND UTILITIES ARE SHOWN IN AN APPROXIMATE WAY ONLY AND HAVE NOT BEEN INDEPENDENTLY VERIFIED BY THE OWNER OR ITS REPRESENTATIVE. THE CONTRACTOR SHALL DETERMINE THE EXACT LOCATION OF ALL EXISTING UTILITIES BEFORE COMMENCING WORK, AND AGREES TO BE FULLY RESPONSIBLE FOR ANY AND ALL DAMAGES WHICH MIGHT BE OCCASIONED BY THE CONTRACTOR'S FAILURE TO EXACTLY LOCATE AND PRESERVE ANY AND ALL UNDERGROUND UTILITIES.

NOTICE:
CONSTRUCTION SITE SAFETY IS THE SOLE RESPONSIBILITY OF THE CONTRACTOR NEITHER THE OWNER NOR THE ENGINEER SHALL BE EXPECTED TO ASSUME ANY RESPONSIBILITY FOR SAFETY OF THE WORK, OF PERSONS ENGAGED IN THE WORK, OF ANY NEARBY STRUCTURES, OR OF ANY OTHER PERSONS.

NORTH CAROLINA PROFESSIONAL SEAL 24419 ENGINEER MARK T. ARCURI
SEPI ENGINEERING & CONSTRUCTION, INC CORPORATE SEAL C-2197 N.C.
PRELIMINARY

NEW HANOVER COUNTY GOVERNMENT CENTER

230 GOVERNMENT CENTER DRIVE, WILMINGTON NC 28403

PREPARED FOR:
GHKCAPE FEAR DEVELOPMENT LLC
1051 MILITARY CUTOFF RD #200, WILMINGTON, NC 28405

PRELIMINARY
NOT FOR CONSTRUCTION

		DATE
PROJECT:	SE20.022.00	
ISSUE:	90% SUBMITTAL	10/01/2020
	.	.
	.	.
	.	.
	.	.
REVISIONS:		
	.	.
	.	.
	.	.
	.	.
	.	.
	.	.
	.	.
PROJ. MGR:	MTA	
DRAWN BY:	KTD	
CHECKED BY:	MTA	

PHASE 1
EROSION CONTROL, GRADING & STORMWATER PLAN

C-4.2

10/1/2020 1:45 PM X:\2020\SE20.022.00 CFC-NHC Govt Complex\LD\Design\Drawings\Construction Plans\SE20022 - GRADING PLANS.dwg

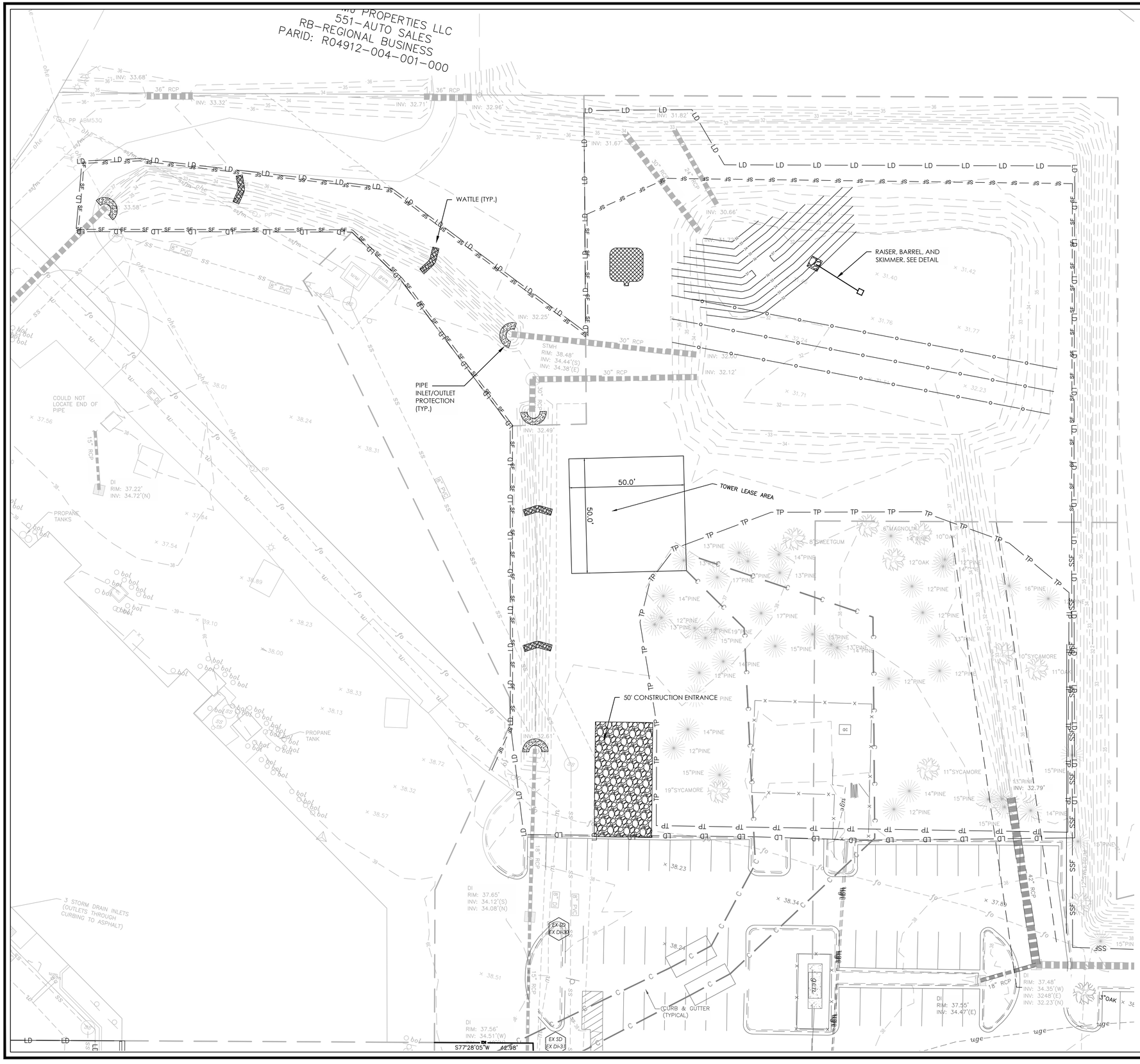

NOTE ABT WHICH WAY TO DRIVE

N
W E
S
NAD 83 NC GRID

GRAPHIC SCALE

20 0 10 20 40

(IN FEET)

1 inch = 20 ft. Horz.

Approved Construction Plan

	Name	Date
Planning		
Traffic		
Fire		

CITY OF WILMINGTON NORTH CAROLINA

Public Services • Engineering Division

APPROVED STORMWATER MANAGEMENT PLAN

Date:_____ Permit #_____

Signed: _____

For each open utility cut of City streets, a $325 permit shall be required from the City prior to occupancy and/or project acceptance

SEPI

SEPI ENGINEERING & CONSTRUCTION, INC.
RALEIGH | WILMINGTON | CHARLOTTE
BEAUFORT | CHARLESTON

5030 NEW CENTRE DR. | SUITE B
WILMINGTON, NC 28403
PHONE | 910.523.5715

sepiinc.com

811 3 WORKING DAYS BEFORE YOU DIG FOR THE LOCATION OF UNDERGROUND FACILITIES

Know what's below. before you dig.

THE LOCATIONS OF EXISTING UNDERGROUND UTILITIES ARE SHOWN IN AN APPROXIMATE WAY ONLY AND HAVE NOT BEEN INDEPENDENTLY VERIFIED BY THE OWNER OR ITS REPRESENTATIVE. THE CONTRACTOR SHALL DETERMINE THE EXACT LOCATION OF ALL EXISTING UTILITIES BEFORE COMMENCING WORK, AND AGREES TO BE FULLY RESPONSIBLE FOR ANY AND ALL DAMAGES WHICH MIGHT BE OCCASIONED BY THE CONTRACTOR'S FAILURE TO EXACTLY LOCATE AND PRESERVE ANY AND ALL UNDERGROUND UTILITIES.

NOTICE:
CONSTRUCTION SITE SAFETY IS THE SOLE RESPONSIBILITY OF THE CONTRACTOR NEITHER THE OWNER NOR THE ENGINEER SHALL BE EXPECTED TO ASSUME ANY RESPONSIBILITY FOR SAFETY OF THE WORK, OF PERSONS ENGAGED IN THE WORK, OF ANY NEARBY STRUCTURES, OR OF ANY OTHER PERSONS.

NORTH CAROLINA PROFESSIONAL SEAL 24419 ENGINEER MARK T. ARCURI

SEPI ENGINEERING & CONSTRUCTION, INC CORPORATE SEAL C-2197 N.C.

PRELIMINARY

NEW HANOVER COUNTY GOVERNMENT CENTER

230 GOVERNMENT CENTER DRIVE, WILMINGTON NC 28403

PREPARED FOR:
GHKCAPE FEAR DEVELOPMENT LLC
1051 MILITARY CUTOFF RD #200,
WILMINGTON, NC 28405

PRELIMINARY
NOT FOR CONSTRUCTION

		DATE
PROJECT:	SE20.022.00	
ISSUE:	90% SUBMITTAL	10/01/2020
	.	.
	.	.
	.	.
	.	.
REVISIONS:		
	.	.
	.	.
	.	.
	.	.
	.	.
	.	.
PROJ. MGR:	MTA	
DRAWN BY:	KTD	
CHECKED BY:	MTA	

PHASE 1
EROSION CONTROL, GRADING & STORMWATER PLAN

C-4.3

10/1/2020 1:48 PM X:\2020\SE20\022.00 CFC-NHC Govt Complex\LD\Design\Drawings\Construction Plans\SE20022 - GRADING PLANS.dwg

MATCHLINE - SEE SHEET C-5.2

COMMUNICATION LINE ROUTES BETWEEN COMMUNICATION TOWER AND 911/EOC CENTER. SEE MILESTONE PLANS FOR DETAIL DESIGN.

CUT IN 8x6 TEE
6" GATE VALVE
6" RP BFP - WILKINS 375
OR PRIOR APPROVED
EQUIVALENT

CUT IN 8x4 TEE
4" GATE VALVE
4" DC BFP - WILKINS 350
OR PRIOR APPROVED
EQUIVALENT

1" IRRIGATION SERVICE
1" RP BFP - WILKINS 975
OR PRIOR APPROVED
EQUIVALENT

GOVERNMENT CENTER BUILDING

PROPOSED 6" PVC
SANITARY SEWER SERVICE

PROPOSED 4" PVC
POTABLE WATER SERVICE

PROPOSED 6" DIP
FIRE WATER SERVICE

MECHANICAL YARD.
SEE MECHANICAL AND
ELECTRICAL PLANS

PROPOSED
REMOTE FDC
WITH 5" STORZ
CONNECTION

6" DIP BENDS (TYP)
4" DIP BENDS (TYP)

RELOCATE
FIRE HYDRANT
ASSEMBLY

EXISTING BUILDING

EXISTING BUILDING

EXISTING BUILDING

SSMH
RIM: 38.67'
INV: 33.56'

SSMH
RIM: 38.67'
INV: 34.59'

SSMH
RIM: 39.41'
INV: 34.34'

DI
RIM: 38.36'
INV: 35.83'(S)
INV: 35.83'(W)
INV: 35.83'(N)

DI
RIM: 38.46'
INV: 36.45'(E)

DI
RIM: 38.24
INV: 34.50'(N)

SSMH
RIM: 39.39'
INV: 35.35'

DI
RIM: 38.52'
INV: 34.15'(E)
INV: 34.15'(N)

CB
RIM: 38.42'
INV: 35.85'(E)

STMH
RIM: 39.35'
INV: 34.78'(W)
INV: 34.60'(S)
INV: 34.51'(E)

N 12°40'12" W 343.49'

N 12°38'42" W 271.80'

S 83°50'17" W 130.87'

N 12°29'45" W 272.11'

N 75°52'03" W 272.48'

W 220.46'

24" RCP

12" RCP

8" PVC

30" RCP

15" RCP

8" DI

N
W E
S
NAD 83 NC GRID

GRAPHIC SCALE
20 0 10 20 40
(IN FEET)
1 inch = 20 ft. Horz.

SEPI

SEPI ENGINEERING & CONSTRUCTION, INC.
RALEIGH | WILMINGTON | CHARLOTTE
BEAUFORT | CHARLESTON

5030 NEW CENTRE DR. | SUITE B
WILMINGTON, NC 28403
PHONE | 910.523.5715

sepiinc.com

811 3 WORKING DAYS BEFORE YOU DIG
FOR THE LOCATION OF UNDERGROUND FACILITIES
Know what's below. before you dig.

THE LOCATIONS OF EXISTING UNDERGROUND UTILITIES ARE SHOWN IN AN APPROXIMATE WAY ONLY AND HAVE NOT BEEN INDEPENDENTLY VERIFIED BY THE OWNER OR ITS REPRESENTATIVE. THE CONTRACTOR SHALL DETERMINE THE EXACT LOCATION OF ALL EXISTING UTILITIES BEFORE COMMENCING WORK, AND AGREES TO BE FULLY RESPONSIBLE FOR ANY AND ALL DAMAGES WHICH MIGHT BE OCCASIONED BY THE CONTRACTOR'S FAILURE TO EXACTLY LOCATE AND PRESERVE ANY AND ALL UNDERGROUND UTILITIES.

NOTICE:
CONSTRUCTION SITE SAFETY IS THE SOLE RESPONSIBILITY OF THE CONTRACTOR NEITHER THE OWNER NOR THE ENGINEER SHALL BE EXPECTED TO ASSUME ANY RESPONSIBILITY FOR SAFETY OF THE WORK, OF PERSONS ENGAGED IN THE WORK, OF ANY NEARBY STRUCTURES, OR OF ANY OTHER PERSONS.

NORTH CAROLINA PROFESSIONAL SEAL 24419 ENGINEER MARK T. ARCURI

SEPI ENGINEERING & CONSTRUCTION, INC. CORPORATE SEAL C-2197 N.C.

PRELIMINARY

NEW HANOVER COUNTY GOVERNMENT CENTER

230 GOVERNMENT CENTER DRIVE, WILMINGTON NC 28403

PREPARED FOR:
GHKCAPE FEAR DEVELOPMENT LLC
1051 MILITARY CUTOFF RD #200,
WILMINGTON, NC 28405

PRELIMINARY
NOT FOR CONSTRUCTION

UTILITY PLAN

		DATE
PROJECT:	SE20.022.00	
ISSUE:	90% SUBMITTAL	10/01/2020
	.	.
	.	.
	.	.
	.	.
REVISIONS:		
	.	.
	.	.
	.	.
	.	.
	.	.
	.	.
	.	.
PROJ. MGR:	MTA	
DRAWN BY:	KTD	
CHECKED BY:	MTA	

PHASE 1
UTILITY PLAN

C-5.1

10/1/2020 5:26 PM X:\2020\SE20.022.00 CFC-NHC Govt Complex\LD\Design\Drawings\Construction Plans\SE20022 - UTILITY PLANS.dwg

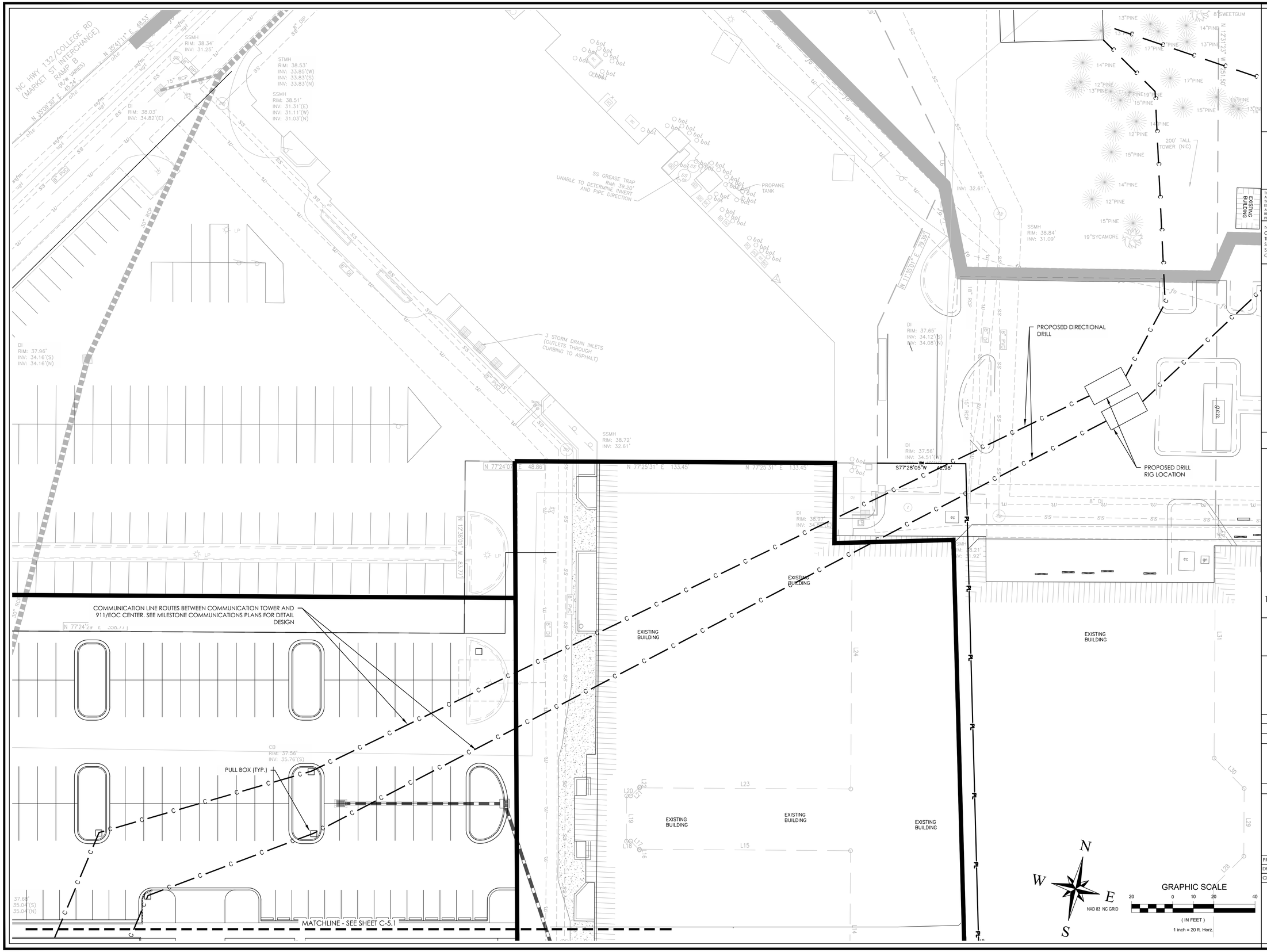

SEPI

SEPI ENGINEERING & CONSTRUCTION, INC.
RALEIGH | WILMINGTON | CHARLOTTE
BEAUFORT | CHARLESTON

5030 NEW CENTRE DR. | SUITE B
WILMINGTON, NC 28403
PHONE | 910.523.5715

sepiinc.com

811 3 WORKING DAYS BEFORE YOU DIG FOR THE LOCATION OF UNDERGROUND FACILITIES

Know what's below. before you dig.

THE LOCATIONS OF EXISTING UNDERGROUND UTILITIES ARE SHOWN IN AN APPROXIMATE WAY ONLY AND HAVE NOT BEEN INDEPENDENTLY VERIFIED BY THE OWNER OR ITS REPRESENTATIVE. THE CONTRACTOR SHALL DETERMINE THE EXACT LOCATION OF ALL EXISTING UTILITIES BEFORE COMMENCING WORK, AND AGREES TO BE FULLY RESPONSIBLE FOR ANY AND ALL DAMAGES WHICH MIGHT BE OCCASIONED BY THE CONTRACTOR'S FAILURE TO EXACTLY LOCATE AND PRESERVE ANY AND ALL UNDERGROUND UTILITIES.

NOTICE:
CONSTRUCTION SITE SAFETY IS THE SOLE RESPONSIBILITY OF THE CONTRACTOR NEITHER THE OWNER NOR THE ENGINEER SHALL BE EXPECTED TO ASSUME ANY RESPONSIBILITY FOR SAFETY OF THE WORK, OF PERSONS ENGAGED IN THE WORK, OF ANY NEARBY STRUCTURES, OR OF ANY OTHER PERSONS.

NORTH CAROLINA PROFESSIONAL SEAL 24419 ENGINEER MARK T. ARCURI

SEPI ENGINEERING & CONSTRUCTION, INC. CORPORATE SEAL C-2197 N.C.

PRELIMINARY

NEW HANOVER COUNTY GOVERNMENT CENTER

230 GOVERNMENT CENTER DRIVE, WILMINGTON NC 28403

PREPARED FOR:
GHKCAPE FEAR DEVELOPMENT LLC
1051 MILITARY CUTOFF RD #200,
WILMINGTON, NC 28405

PRELIMINARY
NOT FOR CONSTRUCTION

UTILITY PLAN

		DATE
PROJECT:	SE20.022.00	
ISSUE:	90% SUBMITTAL	10/01/2020
	-	-
	-	-
	-	-
	-	-
REVISIONS:		
	-	-
	-	-
	-	-
	-	-
	-	-
	-	-
PROJ. MGR:	MTA	
DRAWN BY:	KTD	
CHECKED BY:	MTA	

PHASE 1
UTILITY PLAN

C-5.2

10/1/2020 5:30 PM X:\2020\SE20.022.00 CFC-NHC Govt Complex\LD\Design\Drawings\Construction Plans\SE20022 - UTILITY PLANS.dwg

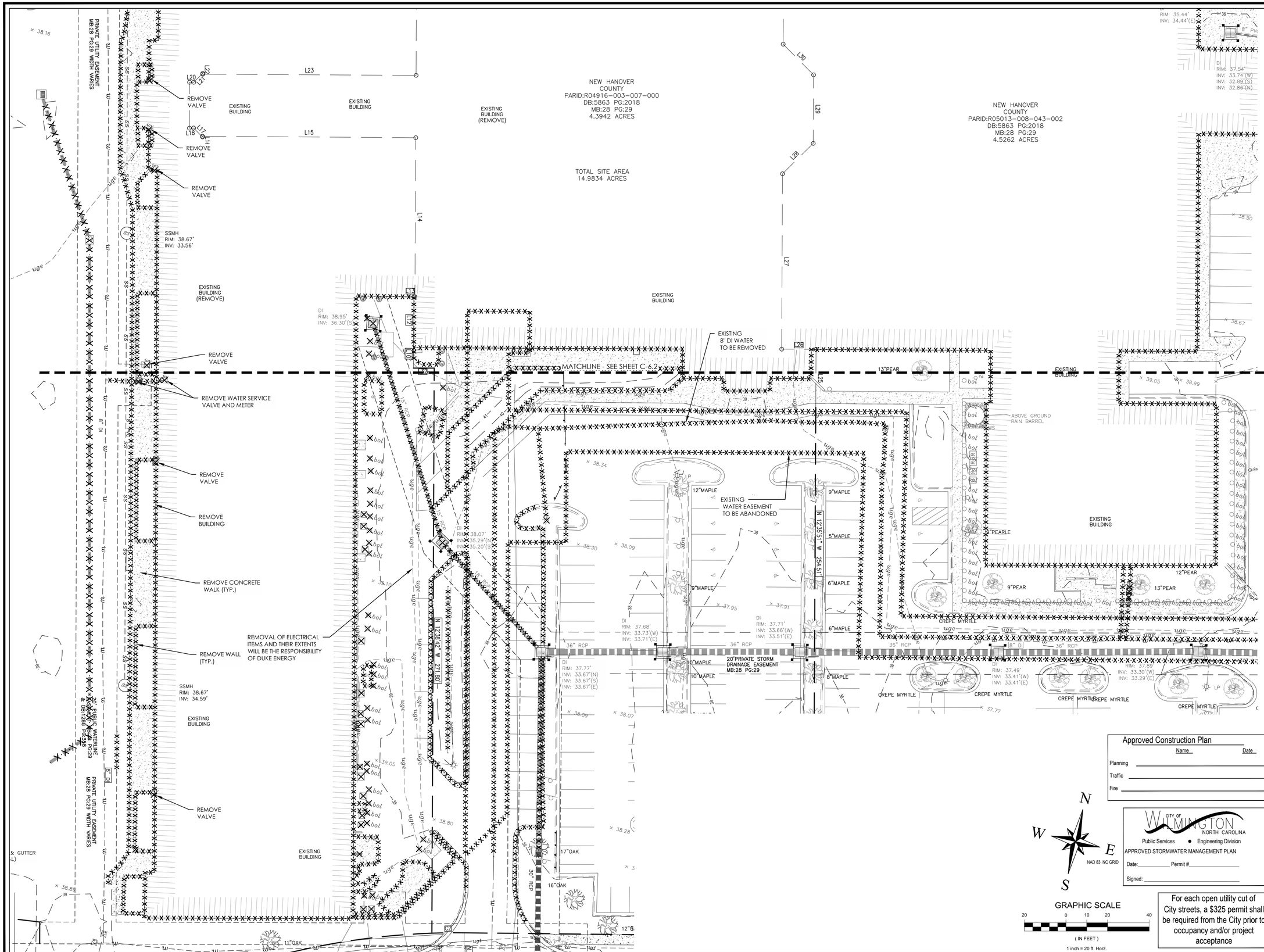

Approved Construction Plan

	Name	Date
Planning		
Traffic		
Fire		

CITY OF WILMINGTON NORTH CAROLINA
Public Services • Engineering Division
APPROVED STORMWATER MANAGEMENT PLAN
Date:_____ Permit #_____
Signed: _____

N W E S
NAD 83 NC GRID

GRAPHIC SCALE
20 0 10 20 40
(IN FEET)
1 inch = 20 ft. Horz.

For each open utility cut of City streets, a $325 permit shall be required from the City prior to occupancy and/or project acceptance

SEPI
SEPI ENGINEERING & CONSTRUCTION, INC.
RALEIGH | WILMINGTON | CHARLOTTE
BEAUFORT | CHARLESTON
5030 NEW CENTRE DR. | SUITE B
WILMINGTON, NC 28403
PHONE | 910.523.5715
sepiinc.com

811 Know what's below, before you dig.
3 WORKING DAYS BEFORE YOU DIG FOR THE LOCATION OF UNDERGROUND FACILITIES

THE LOCATIONS OF EXISTING UNDERGROUND UTILITIES ARE SHOWN IN AN APPROXIMATE WAY ONLY AND HAVE NOT BEEN INDEPENDENTLY VERIFIED BY THE OWNER OR ITS REPRESENTATIVE. THE CONTRACTOR SHALL DETERMINE THE EXACT LOCATION OF ALL EXISTING UTILITIES BEFORE COMMENCING WORK, AND AGREES TO BE FULLY RESPONSIBLE FOR ANY AND ALL DAMAGES WHICH MIGHT BE OCCASIONED BY THE CONTRACTOR'S FAILURE TO EXACTLY LOCATE AND PRESERVE ANY AND ALL UNDERGROUND UTILITIES.

NOTICE:
CONSTRUCTION SITE SAFETY IS THE SOLE RESPONSIBILITY OF THE CONTRACTOR NEITHER THE OWNER NOR THE ENGINEER SHALL BE EXPECTED TO ASSUME ANY RESPONSIBILITY FOR SAFETY OF THE WORK, OF PERSONS ENGAGED IN THE WORK, OF ANY NEARBY STRUCTURES, OR OF ANY OTHER PERSONS.

NORTH CAROLINA PROFESSIONAL SEAL 24419 ENGINEER MARK T. ARCURI

SEPI ENGINEERING & CONSTRUCTION, INC CORPORATE SEAL C-2197 N.C.

PRELIMINARY

NEW HANOVER COUNTY GOVERNMENT CENTER

230 GOVERNMENT CENTER DRIVE, WILMINGTON NC 28403

PREPARED FOR:
GHKCAPE FEAR DEVELOPMENT LLC
1051 MILITARY CUTOFF RD #200,
WILMINGTON, NC 28405

PRELIMINARY
NOT FOR CONSTRUCTION

		DATE
PROJECT:	SE20.022.00	
ISSUE:	90% SUBMITTAL	10/01/2020
	.	.
	.	.
	.	.
	.	.
REVISIONS:		
	.	.
	.	.
	.	.
	.	.
	.	.
	.	.
	.	.
PROJ. MGR:	MTA	
DRAWN BY:	KTD	
CHECKED BY:	MTA	

PHASE 2
DEMOLITION PLAN

C-6.1

10/1/2020 6:54 PM X:\2020\SE20.022.00 CFC-NHC Govt Complex\LD\Design\Drawings\Construction Plans\SE20022 - DEMOLITION PLANS.dwg

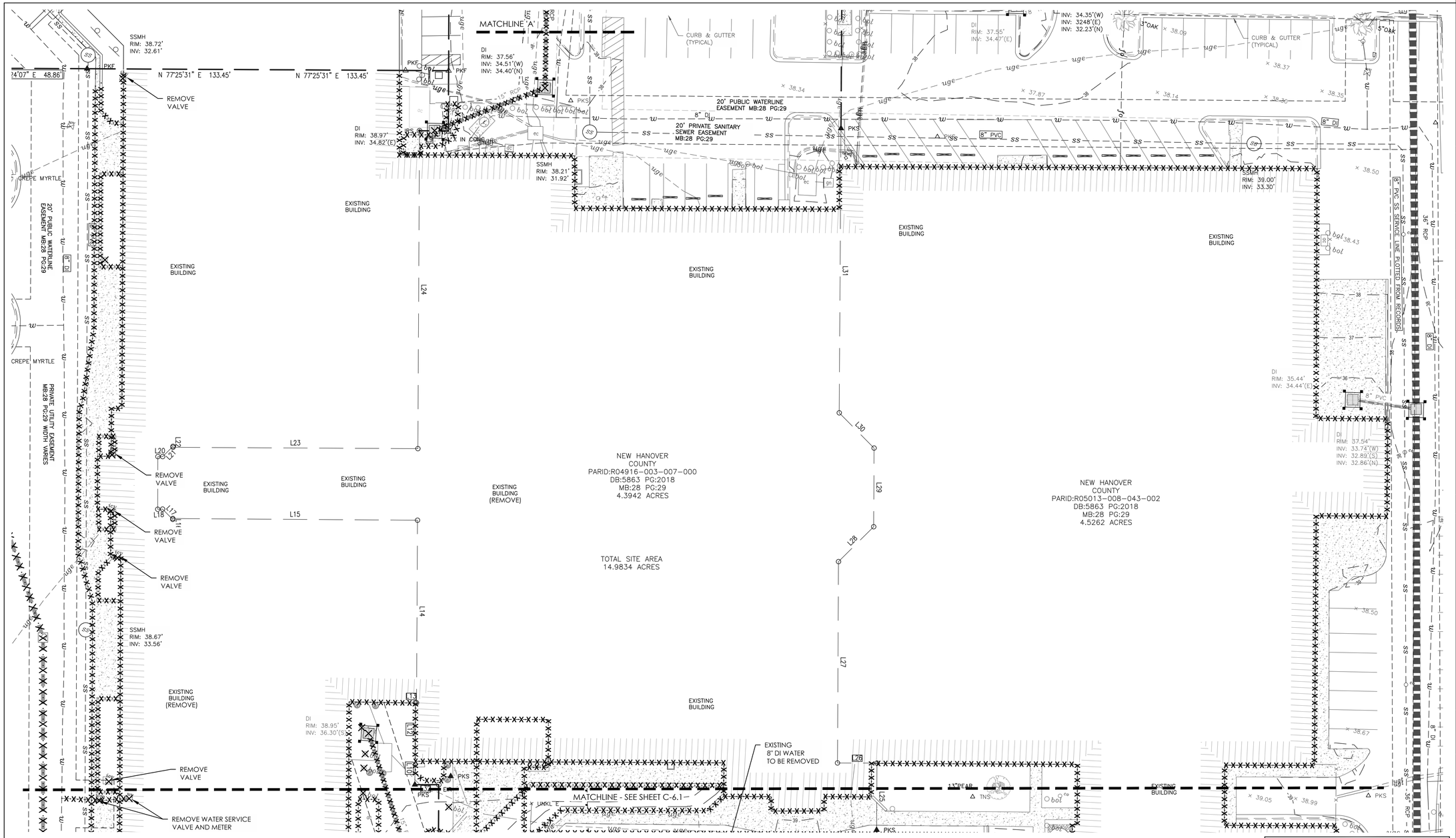

GRAPHIC SCALE

20 0 10 20 40

(IN FEET)

1 inch = 20 ft. Horz.

Approved Construction Plan

	Name	Date
Planning		
Traffic		
Fire		

CITY OF WILMINGTON NORTH CAROLINA

Public Services • Engineering Division

APPROVED STORMWATER MANAGEMENT PLAN

Date:_____ Permit #_____

Signed:_____

For each open utility cut of City streets, a $325 permit shall be required from the City prior to occupancy and/or project acceptance

SEPI

SEPI ENGINEERING & CONSTRUCTION, INC.

RALEIGH | WILMINGTON | CHARLOTTE
BEAUFORT | CHARLESTON

5030 NEW CENTRE DR. | SUITE B
WILMINGTON, NC 28403
PHONE | 910.523.5715

sepiinc.com

811 3 WORKING DAYS BEFORE YOU DIG FOR THE LOCATION OF UNDERGROUND FACILITIES

Know what's below. before you dig.

THE LOCATIONS OF EXISTING UNDERGROUND UTILITIES ARE SHOWN IN AN APPROXIMATE WAY ONLY AND HAVE NOT BEEN INDEPENDENTLY VERIFIED BY THE OWNER OR ITS REPRESENTATIVE. THE CONTRACTOR SHALL DETERMINE THE EXACT LOCATION OF ALL EXISTING UTILITIES BEFORE COMMENCING WORK, AND AGREES TO BE FULLY RESPONSIBLE FOR ANY AND ALL DAMAGES WHICH MIGHT BE OCCASIONED BY THE CONTRACTOR'S FAILURE TO EXACTLY LOCATE AND PRESERVE ANY AND ALL UNDERGROUND UTILITIES.

NOTICE:
CONSTRUCTION SITE SAFETY IS THE SOLE RESPONSIBILITY OF THE CONTRACTOR NEITHER THE OWNER NOR THE ENGINEER SHALL BE EXPECTED TO ASSUME ANY RESPONSIBILITY FOR SAFETY OF THE WORK, OF PERSONS ENGAGED IN THE WORK, OF ANY NEARBY STRUCTURES, OR OF ANY OTHER PERSONS.

NORTH CAROLINA PROFESSIONAL SEAL 24419 ENGINEER MARK T. ARCURI

SEPI ENGINEERING & CONSTRUCTION, INC. CORPORATE SEAL C-2197 N.C.

PRELIMINARY

NEW HANOVER COUNTY GOVERNMENT CENTER

230 GOVERNMENT CENTER DRIVE, WILMINGTON NC 28403

PREPARED FOR:
GHKCAPE FEAR DEVELOPMENT LLC
1051 MILITARY CUTOFF RD #200,
WILMINGTON, NC 28405

PRELIMINARY
NOT FOR CONSTRUCTION

		DATE
PROJECT:	SE20.022.00	
ISSUE:	90% SUBMITTAL	10/01/2020
	-	-
	-	-
	-	-
	-	-
REVISIONS:		
	-	-
	-	-
	-	-
	-	-
	-	-
	-	-
PROJ. MGR:	MTA	
DRAWN BY:	KTD	
CHECKED BY:	MTA	

PHASE 2
DEMOLITION PLAN

C-6.2

10/1/2020 6:53 PM X:\2020\SE20.022.00 CFC-NHC Govt Complex\LD\Design\Drawings\Construction Plans\SE20022 - DEMOLITION PLANS.dwg

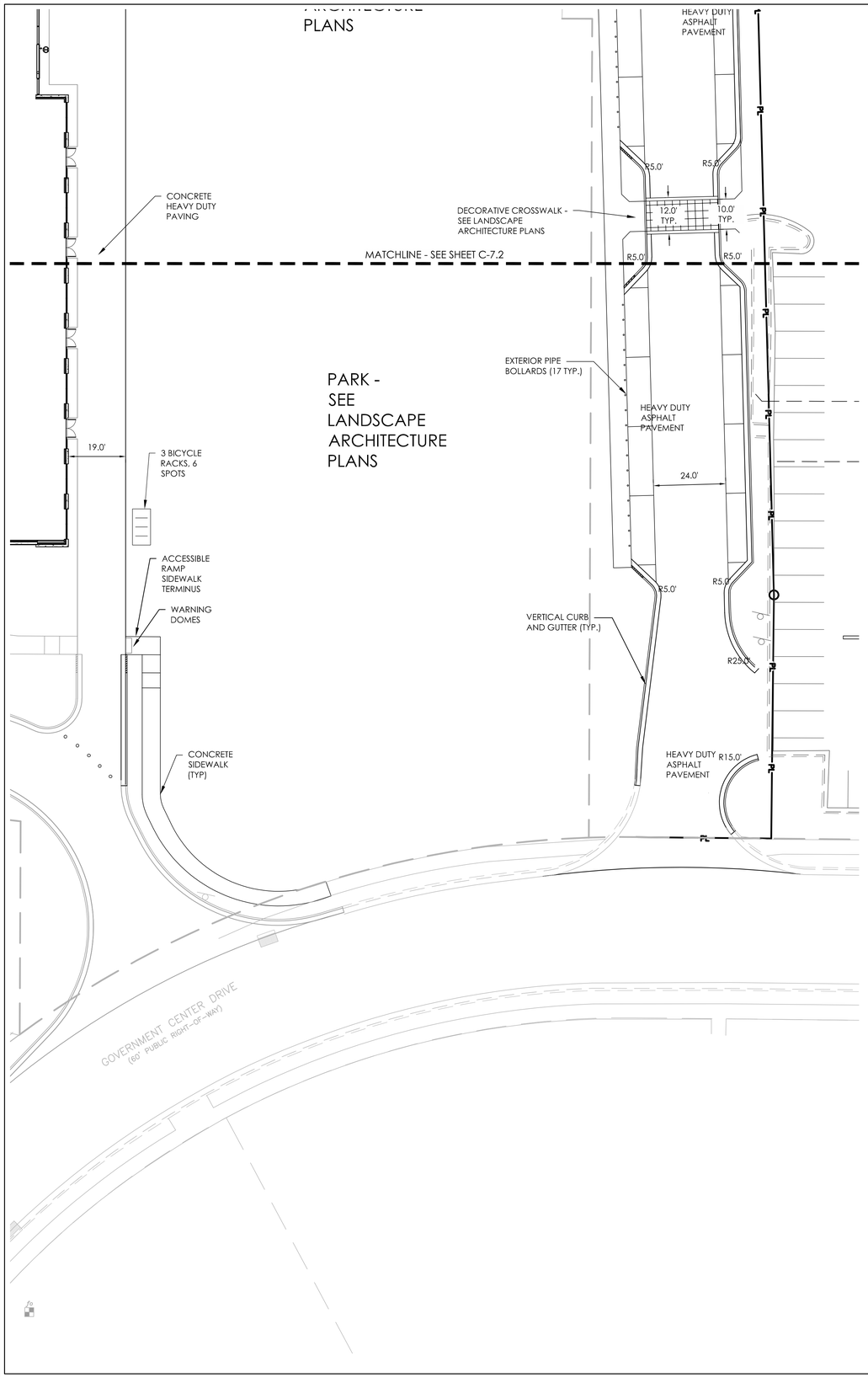

SITE DATA TABLE PHASE 2

PARCEL ID	R04916-003-002-000 R04916-003-007-000 R05013-008-043-002
PARCEL OWNERSHIP	NEW HAN CNTY
ZONING DISTRICT	RB - REGIONAL BUSINESS
BUILDING SETBACKS (FT)	
GOV CETNER	
FRONT	38
REAR	28
INTERIOR SIDE	13
CORNER	38
TOTAL ACREAGE	652,831 SF, 14.99 AC
GOV CENTER PROPERTY	301,029 SF, 6.91 AC
APARTMENT/RETAIL PROPERTY	351,802 SF, 8.08 AC
BUILDING SIZE	
GOV CENTER	136,595 SF
BUILDING LOT COVERAGE	44,560 SF / 301,029 SF = 14.80%
BUILDING CONSTRUCTION TYPE	
GOV CENTER	II-B
NUMBER OF BUILDINGS	1 BUILDING
BUILDING HEIGHT	
GOV CENTER	60 FT
NUMBER OF STORIES	
GOV CENTER	4
SF PER FLOOR	
GOV CENTER (1)	41,852
GOV CETNER (2)	41,481
GOV CETNER (3)	26,631
GOV CENTER (4)	26,631
TOTAL GOV CENTER	136,595
OFF STREET PARKING CALCULATIONS	
REQUIRED PARKING	
GOV CENTER	MAX 1 PER 200 SF GFA X 136,595 = 683 MIN 1 PER 300 SF GFA X 136,595 = 456
TEN PIN ALLEY	1/ALLEY = 24
RESTAURANT	MAX 1 PER 2.5 SEATS X 90 = 36 MIN 1 PER 4 SEATS X 90 = 23
TOTAL	MAX = 743 MIN = 503
PROVIDED PARKING	
STANDARD SPACES	213
COMPACT SPACES	73
STANDARD HANDICAPPED SPACES	9
VAN HANDICAPPED SPACES	5
TOTAL NEW PARKING	300
PARKING TO REMAIN GOV CENTER	294
PARKING TO REMAIN TEN PIN ALLEY	180
TOTAL PARKING TO REMAIN	474
TOTAL PROVIDED PARKING	774
CAMA LAND USE CLASSIFICATION	URBAN
CAMA AEC AND SETBACKS:	NONE
HISTORICAL OR ARCHAEOLOGICAL SITES:	
CEMETERY:	NONE
WETLANDS:	NONE
ENDANGERED SPECIES OR HABITAT:	NONE
CONSERVATION AREAS:	NONE
MEAN HIGH WATER LINE:	NONE
WATER SHED:	SMITH CREEK
RIVER BASIN:	CAPE FEAR RIVER BASIN
EXISTING OR PROPOSED THOROUGHFARES:	NONE
BIKE ROUTES:	NONE
PEDESTRIAN SIDEWALKS:	AS SHOWN
TRANSIT FACILITIES:	NONE
SOIL TYPE:	LEON SAND, MURVILLE FINE SAND, SEAGATE FINE SAND

SUBJECT AREA IS LOCATED WITHIN SPECIAL FLOOD HAZARD ZONE X AS TAKEN FROM THE NC FLOOD RISK INFORMATION SYSTEM AND AS SHOWN ON FIRM MAP #37203148000K PANEL 3148, EFFECTIVE AUG. 28, 2018.

ABBREVIATIONS LIST:
HC = HANDICAPPED SPACE
S = COMPACT SPACE

N
W E
S
NAD 83 NC GRID

GRAPHIC SCALE
20 0 10 20 40
(IN FEET)
1 inch = 20 ft. Horz.

Approved Construction Plan
Name Date
Planning
Traffic
Fire

CITY OF WILMINGTON NORTH CAROLINA
Public Services • Engineering Division
APPROVED STORMWATER MANAGEMENT PLAN
Date:_____ Permit #_____
Signed: _____

For each open utility cut of City streets, a $325 permit shall be required from the City prior to occupancy and/or project acceptance

SEPI
SEPI ENGINEERING & CONSTRUCTION, INC.
RALEIGH | WILMINGTON | CHARLOTTE
BEAUFORT | CHARLESTON
5030 NEW CENTRE DR. | SUITE B
WILMINGTON, NC 28403
PHONE | 910.523.5715
sepiinc.com

811 Know what's below, before you dig.
3 WORKING DAYS BEFORE YOU DIG FOR THE LOCATION OF UNDERGROUND FACILITIES

THE LOCATIONS OF EXISTING UNDERGROUND UTILITIES ARE SHOWN IN AN APPROXIMATE WAY ONLY AND HAVE NOT BEEN INDEPENDENTLY VERIFIED BY THE OWNER OR ITS REPRESENTATIVE. THE CONTRACTOR SHALL DETERMINE THE EXACT LOCATION OF ALL EXISTING UTILITIES BEFORE COMMENCING WORK, AND AGREES TO BE FULLY RESPONSIBLE FOR ANY AND ALL DAMAGES WHICH MIGHT BE OCCASIONED BY THE CONTRACTOR'S FAILURE TO EXACTLY LOCATE AND PRESERVE ANY AND ALL UNDERGROUND UTILITIES.

NOTICE:
CONSTRUCTION SITE SAFETY IS THE SOLE RESPONSIBILITY OF THE CONTRACTOR NEITHER THE OWNER NOR THE ENGINEER SHALL BE EXPECTED TO ASSUME ANY RESPONSIBILITY FOR SAFETY OF THE WORK, OF PERSONS ENGAGED IN THE WORK, OF ANY NEARBY STRUCTURES, OR OF ANY OTHER PERSONS.

NORTH CAROLINA PROFESSIONAL SEAL 24419 ENGINEER MARK T. ARCURI
SEPI ENGINEERING & CONSTRUCTION, INC CORPORATE SEAL C-2197 N.C.
PRELIMINARY

NEW HANOVER COUNTY GOVERNMENT CENTER

230 GOVERNMENT CENTER DRIVE, WILMINGTON NC 28403

PREPARED FOR:
GHKCAPE FEAR DEVELOPMENT LLC
1051 MILITARY CUTOFF RD #200,
WILMINGTON, NC 28405

PRELIMINARY
NOT FOR CONSTRUCTION

		DATE
PROJECT:	SE20.022.00	
ISSUE:	90% SUBMITTAL	10/01/2020
	.	.
	.	.
	.	.
	.	.
REVISIONS:		
	.	.
	.	.
	.	.
	.	.
	.	.
	.	.
PROJ. MGR:	MTA	
DRAWN BY:	KTD	
CHECKED BY:	MTA	

PHASE 2
SITE LAYOUT PLAN

C-7.1

10/1/2020 6:02 PM X:\2020\SE20.022.00 CFC-NHC Gov't Complex\LD\Design\Drawings\Construction Plans\SE20022 - SITE PLANS.dwg

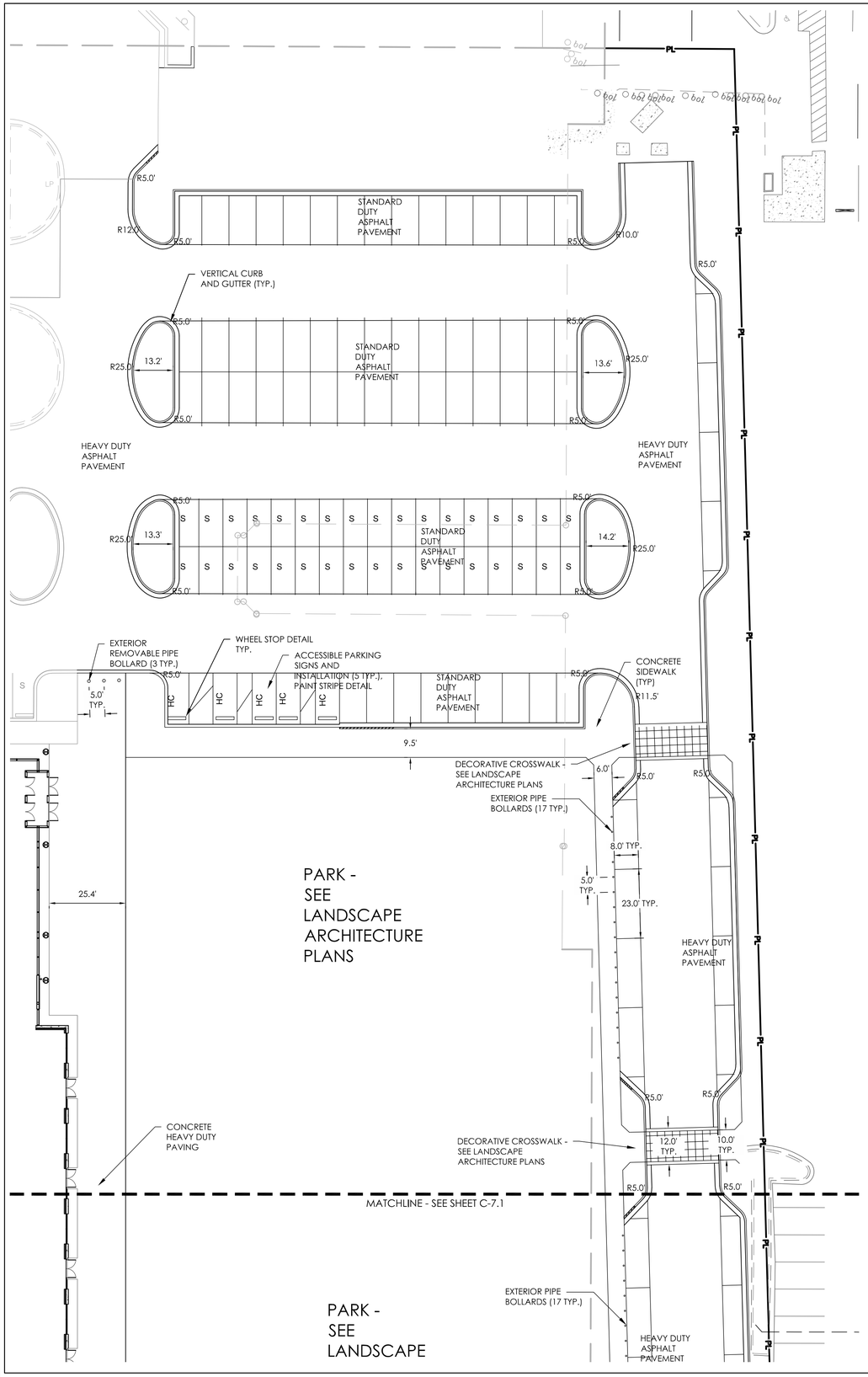

ENGINEER NOTES

1. PRIOR TO ANY CLEARING, GRADING OR CONSTRUCTION ACTIVITY, TREE PROTECTION FENCING SHALL BE INSTALLED AROUND PROTECTED TREES OR GROVES OF TREES. NO CONSTRUCTION WORKERS, TOOLS, MATERIALS, OR VEHICLES ARE PERMITTED WITHIN THE TREE PROTECTION FENCING.

2. ANY TREES AND/OR AREAS DESIGNATED TO BE PROTECTED MUST BE PROPERLY BARRICADED WITH FENCING AND PROTECTED THROUGHOUT CONSTRUCTION TO ENSURE THAT NO CLEARING, GRADING OR STAGING OF MATERIALS WILL OCCUR IN THOSE AREAS.

3. NO EQUIPMENT IS ALLOWED ON SITE UNTIL ALL TREE PROTECTION FENCING AND SILT FENCING IS INSTALLED AND APPROVED. PROTECTIVE FENCING IS TO BE MAINTAINED THROUGHOUT THE DURATION OF THE PROJECT, AND CONTRACTORS SHALL RECEIVE ADEQUATE INSTRUCTION ON TREE PROTECTION METHODS.

4. ALL PAVEMENT MARKINGS IN PUBLIC RIGHTS-OF-WAY AND FOR DRIVEWAYS ARE TO BE THERMOPLASTIC AND MEET CITY AND/OR NCDOT STANDARDS.

5. ONCE STREETS ARE OPEN TO TRAFFIC, CONTACT TRAFFIC ENGINEERING REGARDING THE INSTALLATION OF TRAFFIC AND STREET NAME SIGNS. PROPOSED STREET NAMES MUST BE APPROVED PRIOR TO INSTALLATION OF STREET NAME SIGNS.

6. TRAFFIC CONTROL DEVICES (INCLUDING SIGNS AND PAVEMENT MARKINGS) IN AREAS OPEN TO PUBLIC TRAFFIC ARE TO MEET MUTCD (MANUAL ON UNIFORM TRAFFIC CONTROL DEVICES) STANDARDS.

7. CONTACT TRAFFIC ENGINEERING AT 910-341-7888 TO ENSURE THAT ALL TRAFFIC SIGNAL FACILITIES AND EQUIPMENT ARE SHOWN ON THE PLAN.

8. CONTACT 811 PRIOR TO CONTACTING CITY OF WILMINGTON, TRAFFIC ENGINEERING REGARDING THE UTILITIES IN THE ROW.

9. CALL TRAFFIC ENGINEERING AT 910-341-7888 FORTY-EIGHT (48) HOURS PRIOR TO ANY EXCAVATION IN THE RIGHT-OF-WAY.

10. TRAFFIC ENGINEERING MUST APPROVE OF PAVEMENT MARKING PRIOR TO ACTUAL STRIPING.

11. ALL PARKING STALL MARKINGS AND LANE ARROWS WITHIN THE PARKING AREAS SHALL BE WHITE.

12. ALL TRAFFIC CONTROL SIGNS AND MARKINGS OFF THE RIGHT-OF-WAY ARE TO BE MAINTAINED BY THE PROPERTY OWNER IN ACCORDANCE WITH MUTCD STANDARDS.

13. STOP SIGNS AND STREET SIGNS TO REMAIN IN PLACE DURING CONSTRUCTION.

14. TACTILE WARNING MATS WILL BE INSTALLED ON ALL WHEELCHAIR RAMPS.

15. A UTILITY CUT PERMIT IS REQUIRED FOR EACH OPEN CUT OF A CITY STREET.

16. ANY BROKEN OR MISSING SIDEWALK PANELS, DRIVEWAY PANELS AND CURBING WILL BE REPLACED.

17. CONTACT TRAFFIC ENGINEERING AT (910) 341-7888 TO DISCUSS STREET LIGHTING OPTIONS.

18. WATER AND SEWER SERVICE SHALL MEET CAPE FEAR PUBLIC UTILITY AUTHORITY (CFPUA) DETAILS AND SPECIFICATIONS.

19. PROJECT SHALL COMPLY WITH CFPUA CROSS CONNECTION CONTROL REQUIREMENTS. WATER METER(S) CANNOT BE RELEASED UNTIL ALL REQUIREMENTS ARE MET AND THE STATE HAS GIVEN THEIR FINAL APPROVAL. CALL 910-343-3910 FOR INFORMATION.

20. IF THE CONTRACTOR DESIRES CFPUA WATER FOR CONSTRUCTION, HE SHALL APPLY IN ADVANCE FOR THIS SERVICE AND MUST PROVIDE A REDUCED PRESSURE ZONE (RPZ) BACKFLOW PREVENTION DEVICE ON THE DEVELOPER'S SIDE OF THE WATER METER BOX.

21. ANY IRRIGATION SYSTEM SUPPLIED BY CFPUA WATER SHALL COMPLY WITH THE CFPUA CROSS CONNECTION CONTROL REGULATIONS. CALL 919-343-3910 FOR INFORMATION.

22. ANY IRRIGATION SYSTEM SHALL BE EQUIPPED WITH A RAIN AND FREEZER SENSOR.

23. ANY BACKFLOW PREVENTION DEVICES REQUIRED BY THE CFPUA WILL NEED TO BE ON THE LIST OF APPROVED DEVICES BY USCFCCCHR OR ASSE.

24. CONTRACTOR TO FIELD VERIFY EXISTING WATER AND SEWER SERVICE LOCATIONS, SIZES AND MATERIALS PRIOR TO CONSTRUCTION. ENGINEER TO BE NOTIFIED OF ANY CONFLICTS.

25. CONTRACTOR SHALL MAINTAIN ALL-WEATHER ACCESS FOR EMERGENCY VEHICLES AT ALL TIMES DURING CONSTRUCTION.

26. UNDERGROUND FIRE LINE(S) MUST BE PERMITTED AND INSPECTED BY THE WILMINGTON FIRE DEPARTMENT FROM THE PUBLIC RIGHT-OF-WAY TO THE BUILDING. CONTACT THE WILMINGTON FIRE DEPARTMENT DIVISION OF FIRE AND LIFE SAFETY AT 910-341-0696.

27. NO OBSTRUCTIONS ARE PERMITTED IN THE SPACE BETWEEN THIRTY (30) INCHES AND TEN (10) FEET ABOVE THE GROUND WITHIN THE TRIANGULAR SIGHT DISTANCE.

28. CONTACT THE NORTH CAROLINA ONE CALL CENTER AT 1.800.632.4949 PRIOR TO DOING ANY DIGGING, CLEARING, OR GRADING

29. DRIVEWAY DESIGN MATCHES EXISTING CONDITIONS AND DOES NOT CONFORM TO CITY STANDARDS

30. THE MAXIMUM HEIGHT AND AREA OF THE MAIN SIGN IS 20 FEET AND 65 SQUARE FEET RESPECTIVELY.

31. ALL RADII ARE FACE OF CURB.

32. NEW HYDRANTS MUST BE BROUGHT INTO SERVICE [PRIOR TO COMBUSTIBLE MATERIALS DELIVERED TO THE JOB SITE.

33. LANDSCAPING OR PARKING CANNOT BLOCK OR IMPEDE FIRE HYDRANTS. A 3-FOOT CLEAR SPACE SHALL BE MAINTAINED AROUND THE CIRCUMFERENCE OF THE HYDRANT.

34. ADDITIONAL FIRE PROTECTION AND/OR ACCESSIBILITY MAY BE REQUIRED DUE TO ANY SPECIAL CIRCUMSTANCES CONCERNING THE PROJECT.

35. CONTRACTORS SHALL SUBMIT A RADIO SIGNAL STRENGTH STUDY FOR ALL COMMERCIAL BUILDINGS THAT DEMONSTRATE THAT EXISTING FIRE EMERGENCY RESPONDER RADIO SIGNAL LEVELS MEET THE REQUIREMENTS OF SECTION 510 OF THE 2018 FIRE CODE.

36. A LANDSCAPING PLAN INDICATING THE LOCATION OF REQUIRED STREET TREES SHALL BE SUBMITTED TO THE CITY OF WILMINGTON TRAFFIC ENGINEERING DIVISION AND PARKS AND RECREATION DEPARTMENT FOR REVIEW AND PRIOR APPROVAL TO THE RECORDING OF THE FINAL PLAT.

37. STREET TREES MUST BE LOCATED A MINIMUM OF 15 FEET FROM STREET LIGHTS.

ABBREVIATIONS LIST:
HC = HANDICAPPED SPACE
S = COMPACT SPACE

GRAPHIC SCALE
20 0 10 20 40
(IN FEET)
1 inch = 20 ft. Horz.

Approved Construction Plan

	Name	Date
Planning		
Traffic		
Fire		

CITY OF WILMINGTON NORTH CAROLINA
Public Services • Engineering Division
APPROVED STORMWATER MANAGEMENT PLAN
Date:_____ Permit #_____
Signed: _____

For each open utility cut of City streets, a $325 permit shall be required from the City prior to occupancy and/or project acceptance

SEPI
SEPI ENGINEERING & CONSTRUCTION, INC.
RALEIGH | WILMINGTON | CHARLOTTE
BEAUFORT | CHARLESTON
5030 NEW CENTRE DR. | SUITE B
WILMINGTON, NC 28403
PHONE | 910.523.5715
sepiinc.com

811 Know what's below, before you dig.
3 WORKING DAYS BEFORE YOU DIG FOR THE LOCATION OF UNDERGROUND FACILITIES

THE LOCATIONS OF EXISTING UNDERGROUND UTILITIES ARE SHOWN IN AN APPROXIMATE WAY ONLY AND HAVE NOT BEEN INDEPENDENTLY VERIFIED BY THE OWNER OR ITS REPRESENTATIVE. THE CONTRACTOR SHALL DETERMINE THE EXACT LOCATION OF ALL EXISTING UTILITIES BEFORE COMMENCING WORK, AND AGREES TO BE FULLY RESPONSIBLE FOR ANY AND ALL DAMAGES WHICH MIGHT BE OCCASIONED BY THE CONTRACTOR'S FAILURE TO EXACTLY LOCATE AND PRESERVE ANY AND ALL UNDERGROUND UTILITIES.

NOTICE:
CONSTRUCTION SITE SAFETY IS THE SOLE RESPONSIBILITY OF THE CONTRACTOR NEITHER THE OWNER NOR THE ENGINEER SHALL BE EXPECTED TO ASSUME ANY RESPONSIBILITY FOR SAFETY OF THE WORK, OF PERSONS ENGAGED IN THE WORK, OF ANY NEARBY STRUCTURES, OR OF ANY OTHER PERSONS.

NORTH CAROLINA PROFESSIONAL SEAL 24419 ENGINEER MARK T. ARCURI
SEPI ENGINEERING & CONSTRUCTION, INC CORPORATE SEAL C-2197 N.C.
PRELIMINARY

NEW HANOVER COUNTY GOVERNMENT CENTER

230 GOVERNMENT CENTER DRIVE, WILMINGTON NC 28403

PREPARED FOR:
GHKCAPE FEAR DEVELOPMENT LLC
1051 MILITARY CUTOFF RD #200, WILMINGTON, NC 28405

PRELIMINARY
NOT FOR CONSTRUCTION

		DATE
PROJECT:	SE20.022.00	
ISSUE:	90% SUBMITTAL	10/01/2020
REVISIONS:		
PROJ. MGR:	MTA	
DRAWN BY:	KTD	
CHECKED BY:	MTA	

PHASE 2
SITE LAYOUT PLAN

C-7.2

10/1/2020 6:05 PM X:\2020\SE20.022.00 CFC-NHC Govt Complex\LD Design\Drawings\Construction Plans\SE20022 - SITE PLANS.dwg

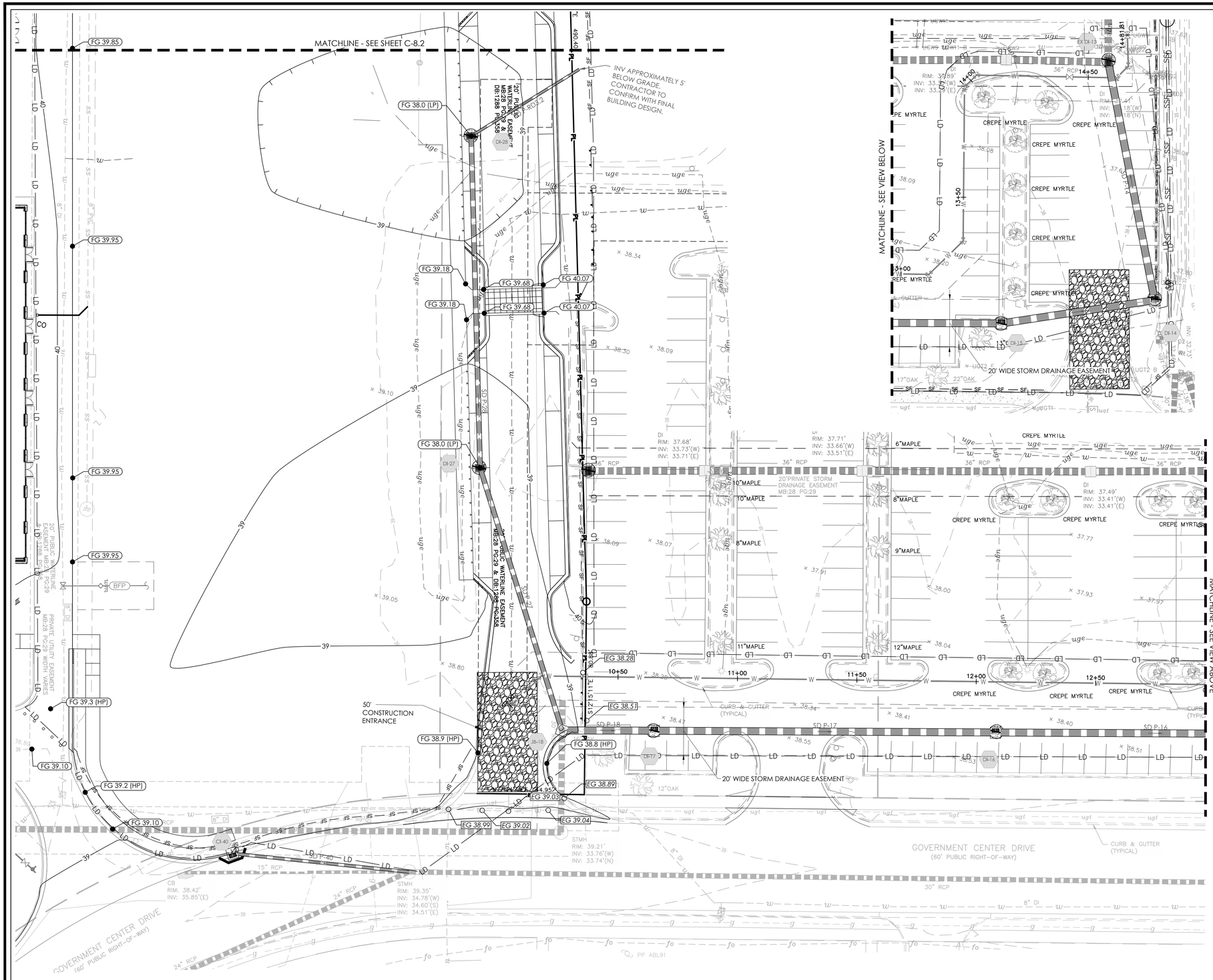

STORM DRAINAGE (SD) STRUCTURE TABLE

ID NO.	DETAILS
CI-33	RIM = 38.51 INV IN = 34.71 (SD P-34) INV OUT = 34.71 (SD P-33)
CI-34	RIM = 38.50 INV IN = 35.07 (SD P-23) INV OUT = 35.07 (SD P-34)
DI-14	RIM = 37.30 INV IN = 33.29 (SD P-15) INV OUT = 33.30 (SD P-14)
DI-15	RIM = 38.35 INV IN = 33.41 (SD P-16) INV OUT = 33.41 (SD P-15)
DI-16	RIM = 38.40 INV IN = 33.53 (SD P-17) INV IN = 35.25 (SD P-RD3.3) INV OUT = 33.53 (SD P-16)
DI-17	RIM = 38.40 INV IN = 33.65 (SD P-18) INV OUT = 33.65 (SD P-17)
DI-27	RIM = 38.05 INV IN = 35.00 (SD P-28) INV OUT = 35.00 (SD P-27)
DI-28	RIM = 38.05 INV IN = 35.75 (SD P-RD3.2) INV OUT = 35.20 (SD P-28)
EX DI-30	RIM = 37.65 INV IN = 33.33 (SD P-31) INV OUT = 33.33 (SD P-30)
EX DI-31	RIM = 37.58 INV IN = 34.00 (SD P-32) INV OUT = 33.63 (SD P-31)
EX DI-32	RIM = 38.97 INV IN = 34.48 (SD P-33) INV OUT = 34.48 (SD P-32)
JB-18	RIM = 38.77 INV IN = 33.71 (SD P-EX 19) INV IN = 34.50 (SD P-27) INV OUT = 33.71 (SD P-18)

STORM DRAINAGE (SD) PIPE TABLE

PIPE NAME	SIZE	MATERIAL	LENGTH	SLOPE
SD-14	36"	RCP CLASS III	101.6 LF	0.1%
SD-15	36"	RCP CLASS III	64.8 LF	0.2%
SD-16	36"	RCP CLASS III	134.0 LF	0.1%
SD-17	36"	RCP CLASS III	142.9 LF	0.1%
SD-18	36"	RCP CLASS III	38.6 LF	0.2%
SD-23	24"	RCP CLASS III	114.1 LF	0.1%
SD-27	24"	RCP CLASS III	115.1 LF	0.4%
SD-28	24"	RCP CLASS III	139.0 LF	0.1%
SD-30	30"	RCP CLASS III	71.8 LF	1.0%
SD-31	30"	RCP CLASS III	59.3 LF	0.5%
SD-32	24"	RCP CLASS III	48.4 LF	1.0%
SD-33	24"	RCP CLASS III	22.7 LF	1.0%
SD-34	24"	RCP CLASS III	108.0 LF	0.3%
SD-RD3.2	12"	PVC	53.2 LF	0.5%

ABBREVIATIONS

BC: BOTTOM OF CURB
CI: CURB INLET
DI: DRAIN INLET
EG: EXISTING GRADE
FG: FINISHED GRADE
HP: HIGH POINT
JB: JUNCTION BOX
LP: LOW POINT
MH: MANHOLE
SD: STORMWATER DRAINAGE

GRAPHIC SCALE

20 0 10 20 40

(IN FEET)

1 inch = 20 ft. Horz.

Approved Construction Plan

Name Date

Planning

Traffic

Fire

CITY OF WILMINGTON NORTH CAROLINA

Public Services • Engineering Division

APPROVED STORMWATER MANAGEMENT PLAN

Date:_____ Permit #_____

Signed: _____

For each open utility cut of City streets, a $325 permit shall be required from the City prior to occupancy and/or project acceptance

SEPI

SEPI ENGINEERING & CONSTRUCTION, INC.
RALEIGH | WILMINGTON | CHARLOTTE
BEAUFORT | CHARLESTON

5030 NEW CENTRE DR. | SUITE B
WILMINGTON, NC 28403
PHONE | 910.523.5715

sepiinc.com

811 3 WORKING DAYS BEFORE YOU DIG FOR THE LOCATION OF UNDERGROUND FACILITIES

Know what's below. before you dig.

THE LOCATIONS OF EXISTING UNDERGROUND UTILITIES ARE SHOWN IN AN APPROXIMATE WAY ONLY AND HAVE NOT BEEN INDEPENDENTLY VERIFIED BY THE OWNER OR ITS REPRESENTATIVE. THE CONTRACTOR SHALL DETERMINE THE EXACT LOCATION OF ALL EXISTING UTILITIES BEFORE COMMENCING WORK, AND AGREES TO BE FULLY RESPONSIBLE FOR ANY AND ALL DAMAGES WHICH MIGHT BE OCCASIONED BY THE CONTRACTOR'S FAILURE TO EXACTLY LOCATE AND PRESERVE ANY AND ALL UNDERGROUND UTILITIES.

NOTICE:
CONSTRUCTION SITE SAFETY IS THE SOLE RESPONSIBILITY OF THE CONTRACTOR NEITHER THE OWNER NOR THE ENGINEER SHALL BE EXPECTED TO ASSUME ANY RESPONSIBILITY FOR SAFETY OF THE WORK, OF PERSONS ENGAGED IN THE WORK, OF ANY NEARBY STRUCTURES, OR OF ANY OTHER PERSONS.

NORTH CAROLINA PROFESSIONAL SEAL 24419 ENGINEER MARK T. ARCURI

SEPI ENGINEERING & CONSTRUCTION, INC. CORPORATE SEAL C-2197 N.C.

PRELIMINARY

NEW HANOVER COUNTY GOVERNMENT CENTER

230 GOVERNMENT CENTER DRIVE, WILMINGTON NC 28403

PREPARED FOR:
GHKCAPE FEAR DEVELOPMENT LLC
1051 MILITARY CUTOFF RD #200,
WILMINGTON, NC 28405

PRELIMINARY
NOT FOR CONSTRUCTION

		DATE
PROJECT:	SE20.022.00	
ISSUE:	90% SUBMITTAL	10/01/2020
	.	.
	.	.
	.	.
	.	.

REVISIONS:

	.	.
	.	.
	.	.
	.	.
	.	.
	.	.

PROJ. MGR:	MTA
DRAWN BY:	KTD
CHECKED BY:	MTA

PHASE 2
EROSION CONTROL, GRADING & STORMWATER PLAN

C-8.1

10/1/2020 4:33 PM X:\2020\SE20.022.00 CFC-NHC Govt Complex\LDI\Design\Drawings\Construction Plans\SE20022 - GRADING PLANS.dwg

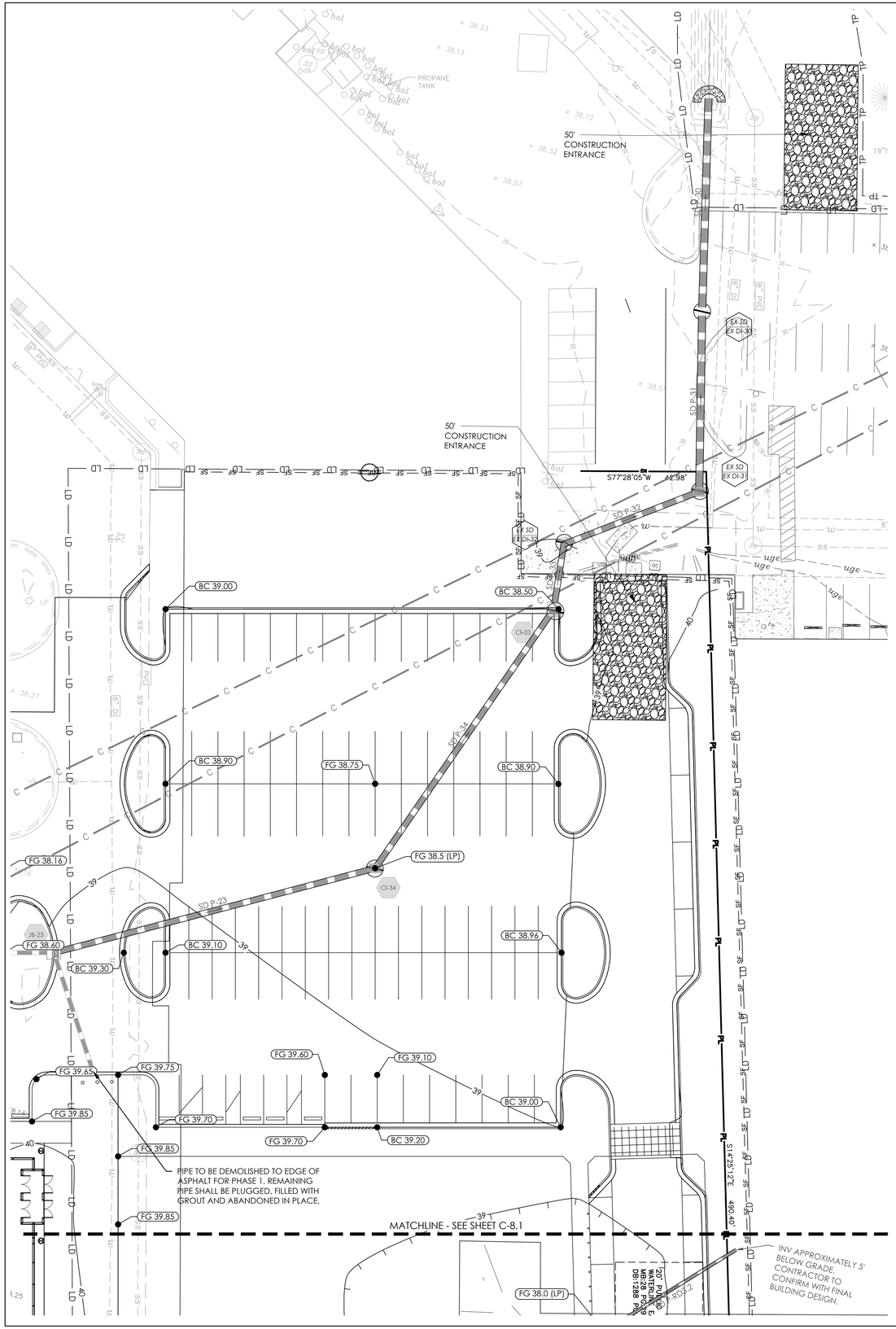

STORM DRAINAGE (SD) STRUCTURE TABLE	
ID NO.	DETAILS
CI-33	RIM = 38.51 INV IN = 34.71 (SD P-34) INV OUT = 34.71 (SD P-33)
CI-34	RIM = 38.50 INV IN = 35.07 (SD P-23) INV OUT = 35.07 (SD P-34)
DI-14	RIM = 37.30 INV IN = 33.29 (SD P-15) INV OUT = 33.30 (SD P-14)
DI-15	RIM = 38.35 INV IN = 33.41 (SD P-16) INV OUT = 33.41 (SD P-15)
DI-16	RIM = 38.40 INV IN = 33.53 (SD P-17) INV IN = 35.25 (SD P-RD3.3) INV OUT = 33.53 (SD P-16)
DI-17	RIM = 38.40 INV IN = 33.65 (SD P-18) INV OUT = 33.65 (SD P-17)
DI-27	RIM = 38.05 INV IN = 35.00 (SD P-28) INV OUT = 35.00 (SD P-27)
DI-28	RIM = 38.05 INV IN = 35.75 (SD P-RD3.2) INV OUT = 35.20 (SD P-28)
EX DI-30	RIM = 37.65 INV IN = 33.33 (SD P-31) INV OUT = 33.33 (SD P-30)
EX DI-31	RIM = 37.58 INV IN = 34.00 (SD P-32) INV OUT = 33.63 (SD P-31)
EX DI-32	RIM = 38.97 INV IN = 34.48 (SD P-33) INV OUT = 34.48 (SD P-32)
JB-18	RIM = 38.77 INV IN = 33.71 (SD P-EX 19) INV IN = 34.50 (SD P-27) INV OUT = 33.71 (SD P-18)

STORM DRAINAGE (SD) PIPE TABLE				
PIPE NAME	SIZE	MATERIAL	LENGTH	SLOPE
SD-14	36"	RCP CLASS III	101.6 LF	0.1%
SD-15	36"	RCP CLASS III	64.8 LF	0.2%
SD-16	36"	RCP CLASS III	134.0 LF	0.1%
SD-17	36"	RCP CLASS III	142.9 LF	0.1%
SD-18	36"	RCP CLASS III	38.6 LF	0.2%
SD-23	24"	RCP CLASS III	114.1 LF	0.1%
SD-27	24"	RCP CLASS III	115.1 LF	0.4%
SD-28	24"	RCP CLASS III	139.0 LF	0.1%
SD-30	30"	RCP CLASS III	71.8 LF	1.0%
SD-31	30"	RCP CLASS III	59.3 LF	0.5%
SD-32	24"	RCP CLASS III	48.4 LF	1.0%
SD-33	24"	RCP CLASS III	22.7 LF	1.0%
SD-34	24"	RCP CLASS III	108.0 LF	0.3%
SD-RD3.2	12"	PVC	53.2 LF	0.5%

N
W E
S
NAD 83 NC GRID

GRAPHIC SCALE
20 0 10 20 40
(IN FEET)
1 inch = 20 ft. Horz.

Approved Construction Plan

	Name	Date
Planning		
Traffic		
Fire		

CITY OF WILMINGTON NORTH CAROLINA
Public Services • Engineering Division
APPROVED STORMWATER MANAGEMENT PLAN
Date:_____ Permit #_____
Signed: _____

ABBREVIATIONS

BC: BOTTOM OF CURB
CI: CURB INLET
DI: DRAIN INLET
EG: EXISTING GRADE
FG: FINISHED GRADE
HP: HIGH POINT
JB: JUNCTION BOX
LP: LOW POINT
MH: MANHOLE
SD: STORMWATER DRAINAGE

For each open utility cut of City streets, a $325 permit shall be required from the City prior to occupancy and/or project acceptance

SEPI
SEPI ENGINEERING & CONSTRUCTION, INC.
RALEIGH | WILMINGTON | CHARLOTTE
BEAUFORT | CHARLESTON
5030 NEW CENTRE DR. | SUITE B
WILMINGTON, NC 28403
PHONE | 910.523.5715
sepiinc.com

811 Know what's below. before you dig.
3 WORKING DAYS BEFORE YOU DIG FOR THE LOCATION OF UNDERGROUND FACILITIES

THE LOCATIONS OF EXISTING UNDERGROUND UTILITIES ARE SHOWN IN AN APPROXIMATE WAY ONLY AND HAVE NOT BEEN INDEPENDENTLY VERIFIED BY THE OWNER OR ITS REPRESENTATIVE. THE CONTRACTOR SHALL DETERMINE THE EXACT LOCATION OF ALL EXISTING UTILITIES BEFORE COMMENCING WORK, AND AGREES TO BE FULLY RESPONSIBLE FOR ANY AND ALL DAMAGES WHICH MIGHT BE OCCASIONED BY THE CONTRACTOR'S FAILURE TO EXACTLY LOCATE AND PRESERVE ANY AND ALL UNDERGROUND UTILITIES.

NOTICE:
CONSTRUCTION SITE SAFETY IS THE SOLE RESPONSIBILITY OF THE CONTRACTOR NEITHER THE OWNER NOR THE ENGINEER SHALL BE EXPECTED TO ASSUME ANY RESPONSIBILITY FOR SAFETY OF THE WORK, OF PERSONS ENGAGED IN THE WORK, OF ANY NEARBY STRUCTURES, OR OF ANY OTHER PERSONS.

NORTH CAROLINA PROFESSIONAL SEAL 24419 ENGINEER MARK T. ARCURI
SEPI ENGINEERING & CONSTRUCTION, INC CORPORATE SEAL C-2197 N.C.
PRELIMINARY

NEW HANOVER COUNTY GOVERNMENT CENTER

230 GOVERNMENT CENTER DRIVE, WILMINGTON NC 28403

PREPARED FOR:
GHKCAPE FEAR DEVELOPMENT LLC
1051 MILITARY CUTOFF RD #200,
WILMINGTON, NC 28405

PRELIMINARY
NOT FOR CONSTRUCTION

		DATE
PROJECT:	SE20.022.00	
ISSUE:	90% SUBMITTAL	10/01/2020
	-	-
	-	-
	-	-
	-	-
REVISIONS:		
	-	-
	-	-
	-	-
	-	-
	-	-
	-	-
PROJ. MGR:	MTA	
DRAWN BY:	KTD	
CHECKED BY:	MTA	

PHASE 2
EROSION CONTROL, GRADING & STORMWATER PLAN

C-8.2

10/1/2020 6:31 PM X:\2020\SE20.022.00 CFC-NHC Govt Complex\LD\Design\Drawings\Construction Plans\SE20022 - GRADING PLANS.dwg

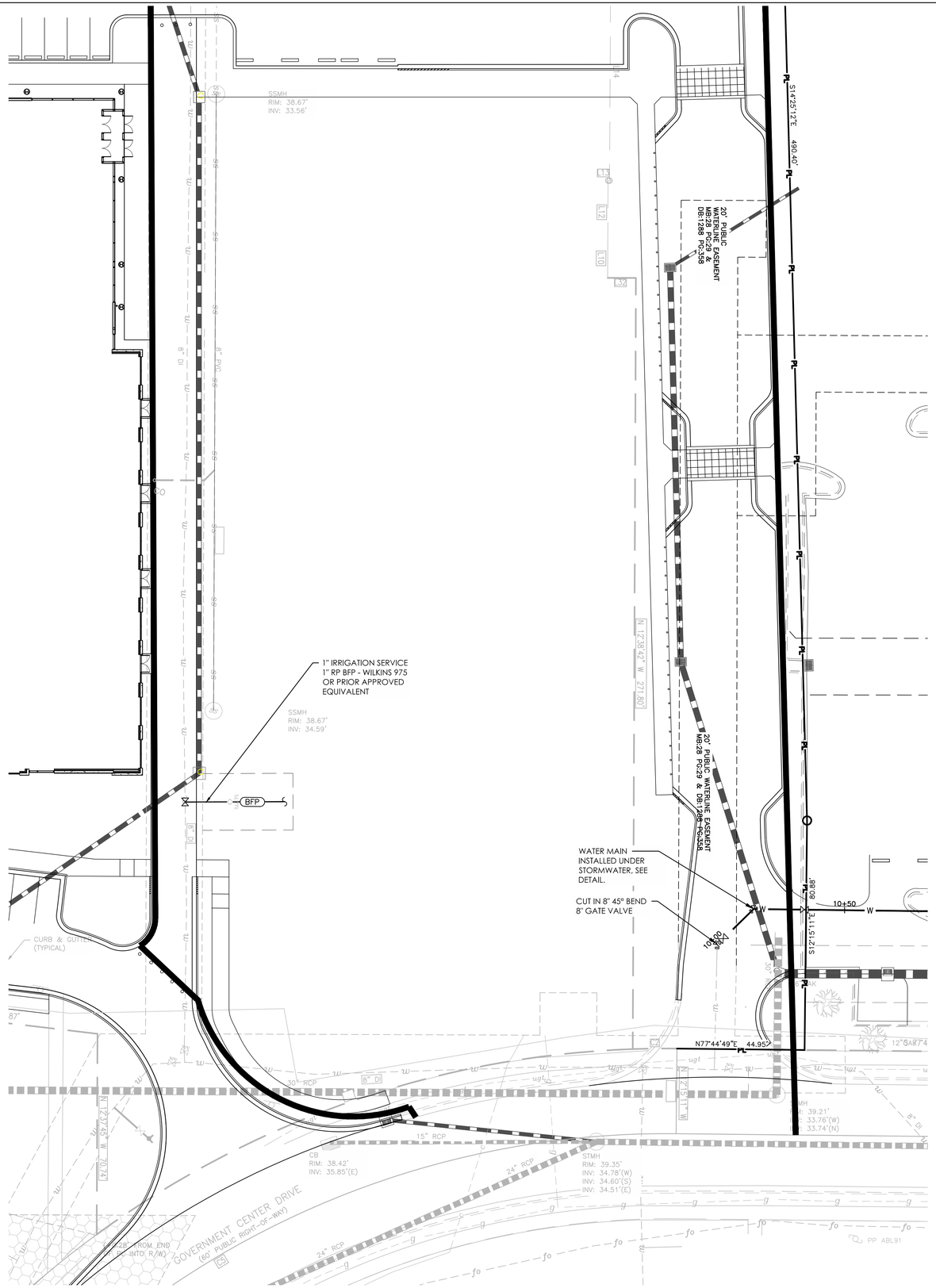

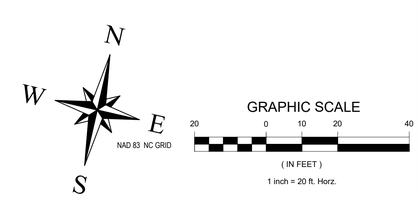

SEPI

SEPI ENGINEERING & CONSTRUCTION, INC.
RALEIGH | WILMINGTON | CHARLOTTE
BEAUFORT | CHARLESTON

5030 NEW CENTRE DR. | SUITE B
WILMINGTON, NC 28403
PHONE | 910.523.5715

sepiinc.com

811 Know what's below. before you dig.
3 WORKING DAYS
BEFORE YOU DIG
FOR THE LOCATION OF
UNDERGROUND FACILITIES

THE LOCATIONS OF EXISTING UNDERGROUND UTILITIES ARE SHOWN IN AN APPROXIMATE WAY ONLY AND HAVE NOT BEEN INDEPENDENTLY VERIFIED BY THE OWNER OR ITS REPRESENTATIVE. THE CONTRACTOR SHALL DETERMINE THE EXACT LOCATION OF ALL EXISTING UTILITIES BEFORE COMMENCING WORK, AND AGREES TO BE FULLY RESPONSIBLE FOR ANY AND ALL DAMAGES WHICH MIGHT BE OCCASIONED BY THE CONTRACTOR'S FAILURE TO EXACTLY LOCATE AND PRESERVE ANY AND ALL UNDERGROUND UTILITIES.

NOTICE:
CONSTRUCTION SITE SAFETY IS THE SOLE RESPONSIBILITY OF THE CONTRACTOR NEITHER THE OWNER NOR THE ENGINEER SHALL BE EXPECTED TO ASSUME ANY RESPONSIBILITY FOR SAFETY OF THE WORK, OF PERSONS ENGAGED IN THE WORK, OF ANY NEARBY STRUCTURES, OR OF ANY OTHER PERSONS.

NORTH CAROLINA PROFESSIONAL SEAL 24419 ENGINEER MARK T. ARCURI

SEPI ENGINEERING & CONSTRUCTION, INC. CORPORATE SEAL C-2197 N.C.

PRELIMINARY

NEW HANOVER COUNTY GOVERNMENT CENTER

230 GOVERNMENT CENTER DRIVE, WILMINGTON NC 28403

PREPARED FOR:
GHKCAPE FEAR DEVELOPMENT LLC
1051 MILITARY CUTOFF RD #200,
WILMINGTON, NC 28405

PRELIMINARY
NOT FOR CONSTRUCTION

UTILITY PLAN

		DATE
PROJECT:	SE20.022.00	
ISSUE:	90% SUBMITTAL	10/01/2020
	-	-
	-	-
	-	-
	-	-
REVISIONS:		
	-	-
	-	-
	-	-
	-	-
	-	-
	-	-
	-	-
PROJ. MGR:	MTA	
DRAWN BY:	KTD	
CHECKED BY:	MTA	

PHASE 2
UTILITY PLAN

C-9.1

10/17/2020 6:38 PM X:\2020\SE20.022.00 CFC-NHC Govt Complex\LD\Design\Drawings\Construction Plan\SE20022 - UTILITY PLANS.dwg

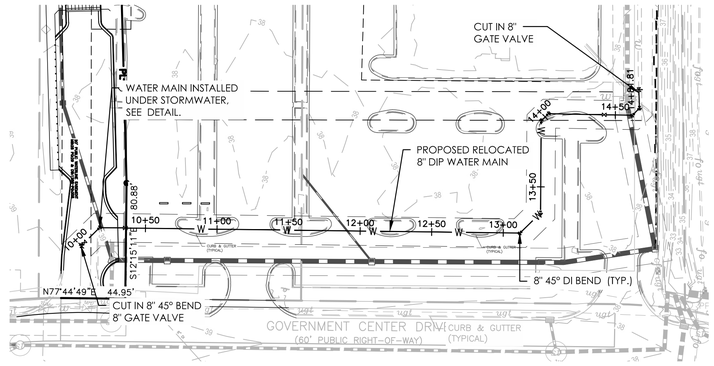

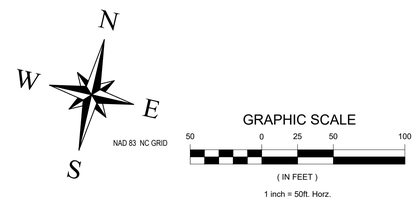

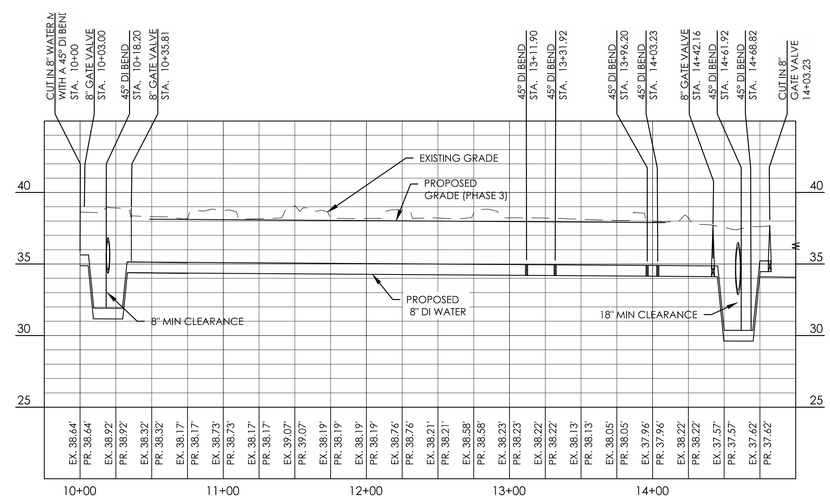

WATER MAIN PROFILE
SCALE:
1"=50' HORIZ.
1"=5' VERT.

SEPI

SEPI ENGINEERING & CONSTRUCTION, INC.
RALEIGH | WILMINGTON | CHARLOTTE
BEAUFORT | CHARLESTON

5030 NEW CENTRE DR. | SUITE B
WILMINGTON, NC 28403
PHONE | 910.523.5715

sepiinc.com

811 3 WORKING DAYS BEFORE YOU DIG FOR THE LOCATION OF UNDERGROUND FACILITIES
Know what's below. before you dig.

THE LOCATIONS OF EXISTING UNDERGROUND UTILITIES ARE SHOWN IN AN APPROXIMATE WAY ONLY AND HAVE NOT BEEN INDEPENDENTLY VERIFIED BY THE OWNER OR ITS REPRESENTATIVE. THE CONTRACTOR SHALL DETERMINE THE EXACT LOCATION OF ALL EXISTING UTILITIES BEFORE COMMENCING WORK, AND AGREES TO BE FULLY RESPONSIBLE FOR ANY AND ALL DAMAGES WHICH MIGHT BE OCCASIONED BY THE CONTRACTOR'S FAILURE TO EXACTLY LOCATE AND PRESERVE ANY AND ALL UNDERGROUND UTILITIES.

NOTICE:
CONSTRUCTION SITE SAFETY IS THE SOLE RESPONSIBILITY OF THE CONTRACTOR NEITHER THE OWNER NOR THE ENGINEER SHALL BE EXPECTED TO ASSUME ANY RESPONSIBILITY FOR SAFETY OF THE WORK, OF PERSONS ENGAGED IN THE WORK, OF ANY NEARBY STRUCTURES, OR OF ANY OTHER PERSONS.

NORTH CAROLINA PROFESSIONAL SEAL 24419 ENGINEER MARK T. ARCURI

SEPI ENGINEERING & CONSTRUCTION, INC. CORPORATE SEAL C-2197 N.C.

PRELIMINARY

NEW HANOVER COUNTY GOVERNMENT CENTER

230 GOVERNMENT CENTER DRIVE, WILMINGTON NC 28403

PREPARED FOR:
GHKCAPE FEAR DEVELOPMENT LLC
1051 MILITARY CUTOFF RD #200,
WILMINGTON, NC 28405

PRELIMINARY
NOT FOR CONSTRUCTION

UTILITY PLAN

		DATE
PROJECT:	SE20.022.00	
ISSUE:	90% SUBMITTAL	10/01/2020
	-	-
	-	-
	-	-
	-	-
REVISIONS:		
	-	-
	-	-
	-	-
	-	-
	-	-
	-	-
PROJ. MGR:	MTA	
DRAWN BY:	KTD	
CHECKED BY:	MTA	

PHASE 2
UTILITY PLAN

C-9.2

10/1/2020 3:19 PM \\sepi.local\cdf\Projects\2020\SE20.022.00 CFC-NHC Govt Complex\LD\Design\Drawings\Construction Plans\SE20022 - UTILITY PLANS.dwg

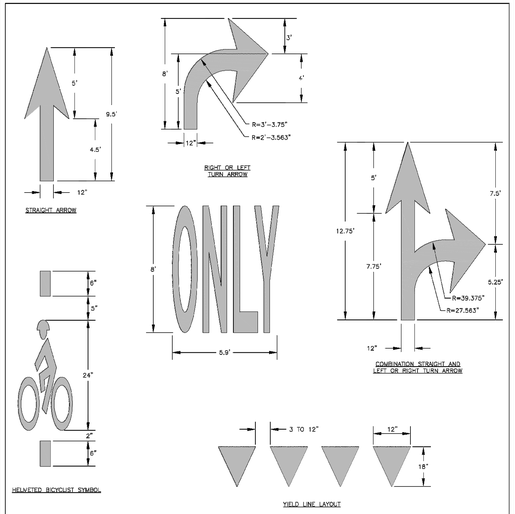

GENERAL NOTES

1-PAVEMENT MARKINGS, SYMBOLS AND DIMENSIONS SHALL BE DESIGNED PER MUTCD WITH APPROVAL FROM CITY TRAFFIC ENGINEERING, AND INSTALLED IN ACCORDANCE WITH NCDOT DIVISION 12 SPECIFICATIONS. SEE SD 11-01.

DATE: OCTOBER, 2012	STANDARD DETAIL	CITY OF WILMINGTON NORTH CAROLINA
DRAWN BY JSR	GUIDELINES FOR PAVEMENT MARKINGS AND SYMBOLS	CITY OF WILMINGTON ENGINEERING PO BOX 1810 WILMINGTON, NC 28402 (910) 341-7807
CHECKED BY BDR, P.E.		
SCALE NOT TO SCALE		SD 11-03

Mini Parking Bumper 71"

Item no. 5000m
Wt. 104 lb

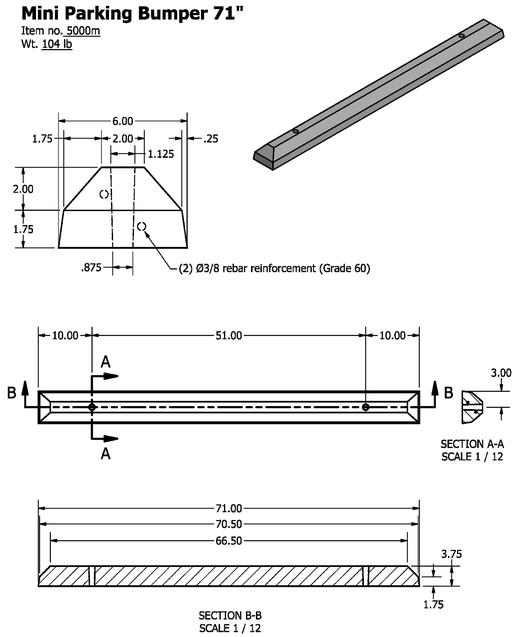

WHEEL STOP DETAIL

NOT TO SCALE

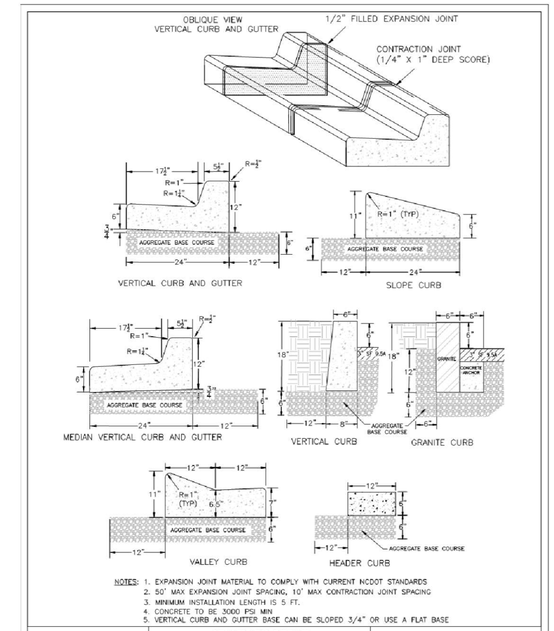

NOTES:
1. EXPANSION JOINT MATERIAL TO COMPLY WITH CURRENT NCDOT STANDARDS
2. 50' MAX EXPANSION JOINT SPACING, 10' MAX CONTRACTION JOINT SPACING
3. MINIMUM INSTALLATION LENGTH IS 5 FT.
4. CONCRETE TO BE 3000 PSI MIN
5. VERTICAL CURB AND GUTTER BASE CAN BE SLOPED 3/4" OR USE A FLAT BASE

DATE: AUGUST, 2011	STANDARD DETAIL	CITY OF WILMINGTON NORTH CAROLINA
DRAWN: PB/JSR	CURBING	CITY OF WILMINGTON ENGINEERING PO BOX 1810 WILMINGTON N.C. 28402 (910) 341-7807
CHECKED: DEC		
SCALE NOT TO SCALE		SD 3-11

SEPI

SEPI ENGINEERING & CONSTRUCTION, INC.
RALEIGH | WILMINGTON | CHARLOTTE
BEAUFORT | CHARLESTON

5030 NEW CENTRE DR. | SUITE B
WILMINGTON, NC 28403
PHONE | 910.523.5715

sepiinc.com

811 3 WORKING DAYS BEFORE YOU DIG FOR THE LOCATION OF UNDERGROUND FACILITIES
Know what's below, before you dig.

THE LOCATIONS OF EXISTING UNDERGROUND UTILITIES ARE SHOWN IN AN APPROXIMATE WAY ONLY AND HAVE NOT BEEN INDEPENDENTLY VERIFIED BY THE OWNER OR ITS REPRESENTATIVE. THE CONTRACTOR SHALL DETERMINE THE EXACT LOCATION OF ALL EXISTING UTILITIES BEFORE COMMENCING WORK, AND AGREES TO BE FULLY RESPONSIBLE FOR ANY AND ALL DAMAGES WHICH MIGHT BE OCCASIONED BY THE CONTRACTOR'S FAILURE TO EXACTLY LOCATE AND PRESERVE ANY AND ALL UNDERGROUND UTILITIES.

NOTICE:
CONSTRUCTION SITE SAFETY IS THE SOLE RESPONSIBILITY OF THE CONTRACTOR NEITHER THE OWNER NOR THE ENGINEER SHALL BE EXPECTED TO ASSUME ANY RESPONSIBILITY FOR SAFETY OF THE WORK, OF PERSONS ENGAGED IN THE WORK, OF ANY NEARBY STRUCTURES, OR OF ANY OTHER PERSONS.

NORTH CAROLINA PROFESSIONAL SEAL 24419 ENGINEER MARK T. ARCURI

SEPI ENGINEERING & CONSTRUCTION, INC. CORPORATE SEAL C-2197 N.C.

PRELIMINARY

NEW HANOVER COUNTY GOVERNMENT CENTER

230 GOVERNMENT CENTER DRIVE, WILMINGTON NC 28403

PREPARED FOR:
GHKCAPE FEAR DEVELOPMENT LLC
1051 MILITARY CUTOFF RD #200,
WILMINGTON, NC 28405

PRELIMINARY
NOT FOR CONSTRUCTION

PENDING

EXTERIOR REMOVABLE PIPE BOLLARD

NOT TO SCALE

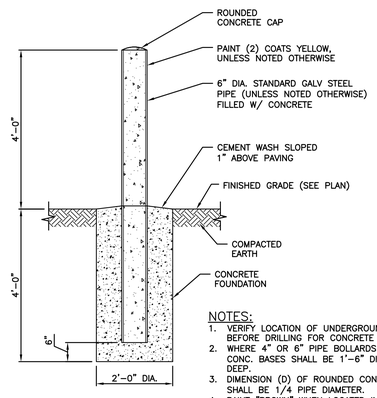

NOTES:
1. VERIFY LOCATION OF UNDERGROUND UTILITIES BEFORE DRILLING FOR CONCRETE FOUNDATION.
2. WHERE 4" OR 6" PIPE BOLLARDS ARE SPECIFIED, CONC. BASES SHALL BE 1'-6" DIA. BY 3'-0" DEEP.
3. DIMENSION (D) OF ROUNDED CONCRETE CAP SHALL BE 1/4 PIPE DIAMETER.
4. PAINT "BROWN" WHEN LOCATED IN PLANTER.
5. PROVIDE REMOVABLE PIPE BOLLARDS AT EQUIPMENT ACCESS PANELS, AS REQUIRED.

EXTERIOR PIPE BOLLARD

NOT TO SCALE

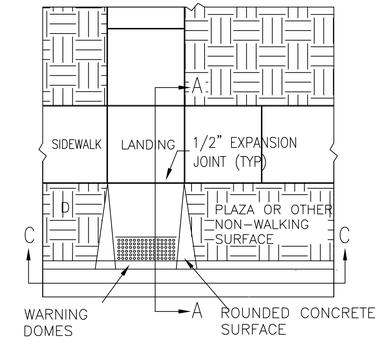

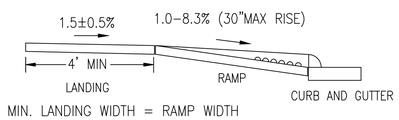

MIN. LANDING WIDTH = RAMP WIDTH
MAX SLOPE 2% IN ANY DIRECTION

SECTION A-A

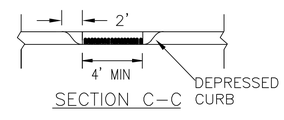

SECTION C-C

RAMP WITH DEPRESSED CURB (APPLICABLE PART FROM CoW 3-08)

NOT TO SCALE

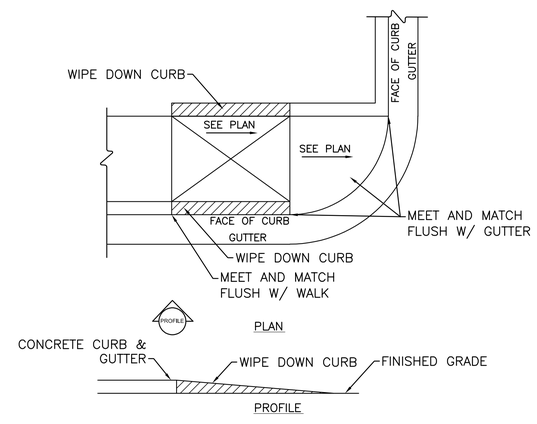

ACCESSIBLE RAMP SIDEWALK TERMINUS

NOT TO SCALE

Approved Construction Plan

	Name	Date
Planning		
Traffic		
Fire		

CITY OF WILMINGTON NORTH CAROLINA
Public Services • Engineering Division
APPROVED STORMWATER MANAGEMENT PLAN
Date:_____ Permit #_____
Signed: _____

For each open utility cut of City streets, a $325 permit shall be required from the City prior to occupancy and/or project acceptance

		DATE
PROJECT:	SE20.022.00	
ISSUE:	90% SUBMITTAL	10/01/2020
	.	.
	.	.
	.	.
	.	.
REVISIONS:		
	.	.
	.	.
	.	.
	.	.
	.	.
	.	.
PROJ. MGR:	MTA	
DRAWN BY:	KTD	
CHECKED BY:	MTA	

SITE DETAILS

C-15.1

10/1/2020 6:42 PM X:\2020\SE20.022.00 CFC-NHC Govt Complex\LD\Design\Drawings\Construction Plans\SE20022 - DETAILS.dwg

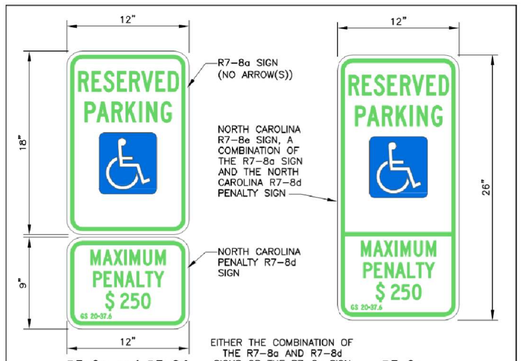

R7-8a and R7-8d Signage
Figure A1.1

R7-8e Signage
Figure A1.2

WHERE VAN ACCESSIBLE PARKING IS PROVIDED, THE VAN ACCESSIBLE (R7-8P) SIGN SHALL BE MOUNTED BELOW THE OTHER ACCESSIBLE PARKING SIGNS.
(2009 EDITION MUTCD SECTION 2B.47)

FOR DESIGN OF ACCESSIBLE SIGNS, SEE THE FOLLOWING:

- 2009 MUTCD OR LATEST EDITION.
- 2004 EDITION OF THE STANDARD HIGHWAY SIGNS AND THE 2012 SUPPLEMENT OR LATEST EDITION.
- NORTH CAROLINA 2009 SUPPLEMENT TO THE MANUAL OF UNIFORM TRAFFIC CONTROL DEVICES OR LATEST EDITION
- NCDOT DRAWING H-1_S FOR SIGNS SP00075, SP00076, AND SP00077.

R7-8P Signage
Figure A1.3

DATE:	NOVEMBER 8, 2016	ACCESSIBLE PARKING SIGNS AND INSTALLATION DETAILS SHEET A1 OF 5	CITY OF WILMINGTON TRAFFIC ENGINEERING P.O. Box 1810 • Wilmington, NC 28402 • (910) 341-7800
DRAWN BY:	DALE THOMPSON		
CHECKED BY:	RANDALL GLAZIER		
SCALE:	NOT TO SCALE		

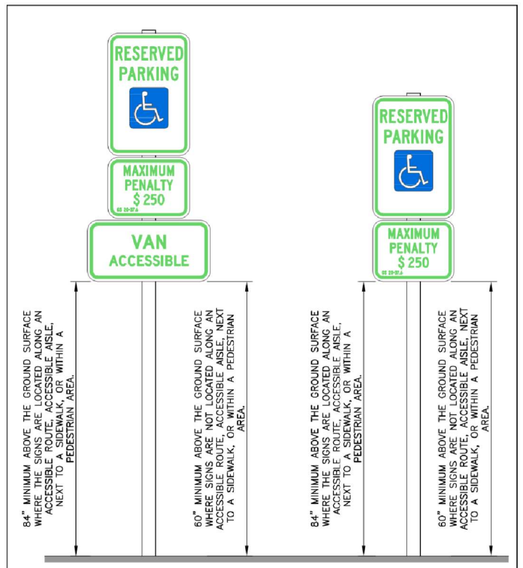

Signage Height
Figure A2.1

DATE:	NOVEMBER 8, 2016	ACCESSIBLE PARKING SIGNS AND INSTALLATION DETAILS SHEET A2 OF 5	CITY OF WILMINGTON TRAFFIC ENGINEERING P.O. Box 1810 • Wilmington, NC 28402 • (910) 341-7800
DRAWN BY:	DALE THOMPSON		
CHECKED BY:	RANDALL GLAZIER		
SCALE:	NOT TO SCALE		

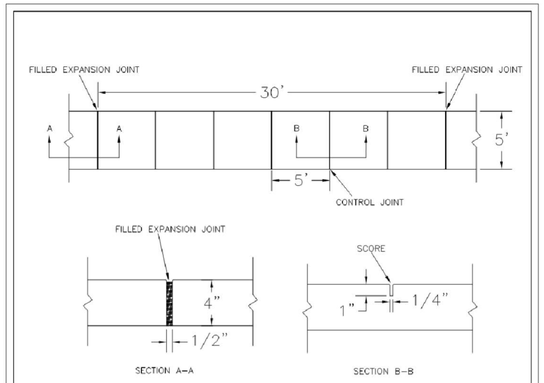

NOTES:

1. JOINT MATERIAL TO COMPLY WITH CURRENT NCDOT STANDARDS.
2. SANITARY SEWER CLEAN-OUTS, WATER METERS, MANHOLES, AND VALVE LIDS TO BE LOCATED OUTSIDE SIDEWALK WHERE FEASIBLE.
3. MINIMUM SIDEWALK WIDTH TO BE 6' MINIMUM IF PLACED AT BACK OF CURB.
4. CONCRETE FOR ALL SIDEWALKS (EXCEPT ANY PORTION CONTAIN WITHIN A DRIVEWAY APRON) SHALL BE CLASS "A" - 3,000 PSI.
5. MINIMUM REPLACEMENT FOR REPAIRS IS A 5' X 5' PANEL
6. 4" STONE BASE MAY BE REQUIRED FOR POOR SOIL CONDITIONS
7. MINIMUM DEPTH FOR TUNNELING BELOW SIDEWALK IS 12"
8. MAX ADJACENT GROUND SLOPE WITHOUT RAILING IS 2:1
9. MIN GRADE FOR PROPER DRAINAGE IS 1% IN AT LEAST 1 DIRECTION. MAX CROSS SLOPE IS 2%. MAX LONGITUDINAL SLOPE IS 8.3%, 10% IF LIMITED BY EXISTING CONDITIONS, OR NO GREATER THAN THE SLOPE OF THE EXISTING ADJACENT ROAD.

DATE: OCTOBER, 2010	STANDARD DETAIL	CITY OF WILMINGTON NORTH CAROLINA
DRAWN: PB/JSR	SIDEWALK	CITY OF WILMINGTON ENGINEERING PO BOX 1810 WILMINGTON N.C. 28402 (910) 341-7807
CHECKED: DEC		
SCALE NOT TO SCALE		SD 3-10

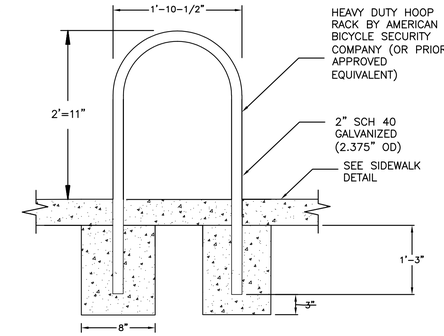

BIKE RACK DETAILS
NOT TO SCALE

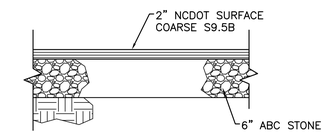

NOTE:
PAVEMENT SECTION MAY VARY DEPENDING UPON FIELD CONDITIONS. CONTRACTOR SHALL COORDINATE W/ OWNER & ENGINEER IF FIELD CHANGES ARE NEEDED.

STANDARD ASPHALT PAVEMENT SECTION
NOT TO SCALE

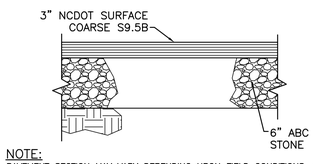

NOTE:
PAVEMENT SECTION MAY VARY DEPENDING UPON FIELD CONDITIONS. CONTRACTOR SHALL COORDINATE W/ OWNER & ENGINEER IF FIELD CHANGES ARE NEEDED.

HEAVY DUTY ASPHALT PAVEMENT SECTION
NOT TO SCALE

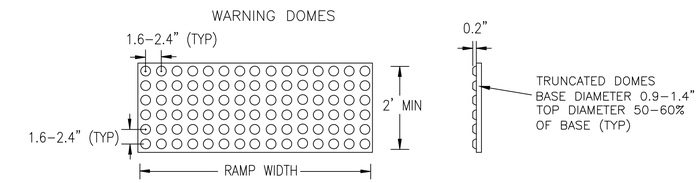

WARNING DOME NOTES:

1. USE CONTRASTING COLORS, RED OR BLACK ON WHITE PAVEMENT.
2. USE CAST IN PLACE PAVERS FOR NEW CONSTRUCTION.
3. RUBBER MATS ARE PERMITTED FOR RETROFITS.
4. LANDING AND RAMP WIDTH MAY BE REDUCED TO 3' WHERE SPACE IS LIMITED AND DESIGN IS APPROVED BY THE CITY FNGINFFR

WARNING DOMES (APPLICABLE PART FROM CoW 3-07)
NOT TO SCALE

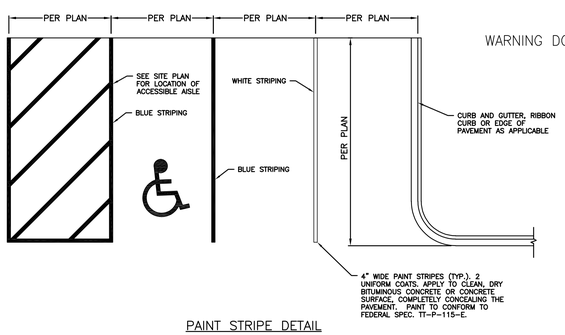

PAINT STRIPE DETAIL
NOT TO SCALE

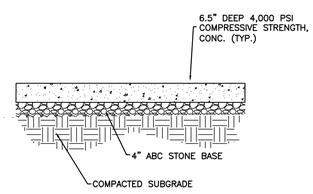

CONCRETE HEAVY DUTY PAVING DETAIL
NOT TO SCALE

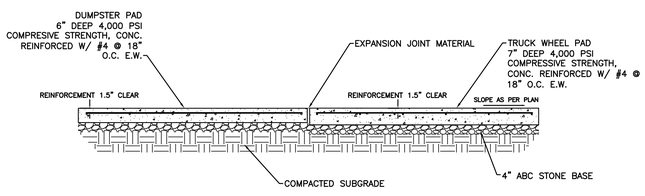

DUMPSTER AND WHEEL PAD DETAIL
NOT TO SCALE

Approved Construction Plan

	Name	Date
Planning		
Traffic		
Fire		

CITY OF WILMINGTON NORTH CAROLINA
Public Services • Engineering Division
APPROVED STORMWATER MANAGEMENT PLAN
Date:_____ Permit #_____
Signed:_____

For each open utility cut of City streets, a $325 permit shall be required from the City prior to occupancy and/or project acceptance

SEPI
SEPI ENGINEERING & CONSTRUCTION, INC.
RALEIGH | WILMINGTON | CHARLOTTE
BEAUFORT | CHARLESTON
5030 NEW CENTRE DR. | SUITE B
WILMINGTON, NC 28403
PHONE | 910.523.5715
sepiinc.com

811 Know what's below. before you dig.
3 WORKING DAYS BEFORE YOU DIG FOR THE LOCATION OF UNDERGROUND FACILITIES

THE LOCATIONS OF EXISTING UNDERGROUND UTILITIES ARE SHOWN IN AN APPROXIMATE WAY ONLY AND HAVE NOT BEEN INDEPENDENTLY VERIFIED BY THE OWNER OR ITS REPRESENTATIVE. THE CONTRACTOR SHALL DETERMINE THE EXACT LOCATION OF ALL EXISTING UTILITIES BEFORE COMMENCING WORK, AND AGREES TO BE FULLY RESPONSIBLE FOR ANY AND ALL DAMAGES WHICH MIGHT BE OCCASIONED BY THE CONTRACTOR'S FAILURE TO EXACTLY LOCATE AND PRESERVE ANY AND ALL UNDERGROUND UTILITIES.

NOTICE:
CONSTRUCTION SITE SAFETY IS THE SOLE RESPONSIBILITY OF THE CONTRACTOR NEITHER THE OWNER NOR THE ENGINEER SHALL BE EXPECTED TO ASSUME ANY RESPONSIBILITY FOR SAFETY OF THE WORK, OF PERSONS ENGAGED IN THE WORK, OF ANY NEARBY STRUCTURES, OR OF ANY OTHER PERSONS.

NORTH CAROLINA PROFESSIONAL SEAL 24419 ENGINEER MARK T. ARCURI
SEPI ENGINEERING & CONSTRUCTION, INC CORPORATE SEAL C-2197 N.C.
PRELIMINARY

NEW HANOVER COUNTY GOVERNMENT CENTER

230 GOVERNMENT CENTER DRIVE, WILMINGTON NC 28403

PREPARED FOR:
GHKCAPE FEAR DEVELOPMENT LLC
1051 MILITARY CUTOFF RD #200,
WILMINGTON, NC 28405

PRELIMINARY
NOT FOR CONSTRUCTION

		DATE
PROJECT:	SE20.022.00	
ISSUE:	90% SUBMITTAL	10/01/2020
REVISIONS:		
PROJ. MGR:	MTA	
DRAWN BY:	KTD	
CHECKED BY:	MTA	

SITE DETAILS

C-15.2

10/1/2020 6:44 PM X:\2020\SE20.022.00 CFC-NHC Govt Complex\LD\Design\Drawings\Construction Plans\SE20022 - DETAILS.dwg

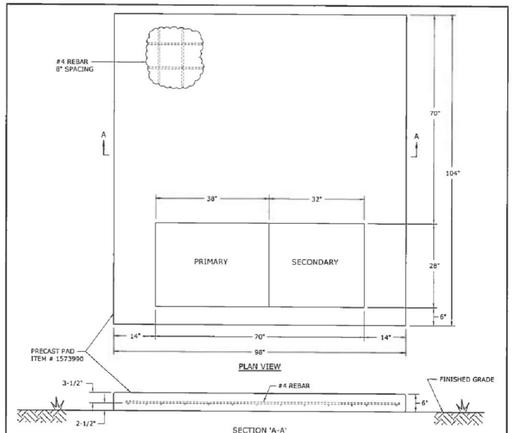

NOTES:

1. THIS STANDARD APPLIES TO THE DEF REGION, AND THE COASTAL AREAS IN THE DEP REGION.
2. THE COMPANY RESERVES THE RIGHT TO REFUSE SERVICE TO NEW INSTALLATIONS THAT DO NOT MEET DUKE ENERGY REQUIREMENTS.
3. REFERENCE DWG. 24.01-102 TO DETERMINE IF CURBING AND ABSORPTION BED IS REQUIRED.
4. PROTECTIVE POLES ARE REQUIRED WHEN TRANSFORMERS ARE EXPOSED TO VEHICLE TRAFFIC. SEE DWG. 36.01-105 FOR PROTECTIVE POLE DETAILS.
5. THERE SHALL BE MINIMUM CLEARANCES OF 10' IN FRONT OF THE TRANSFORMER AND 3' ON ALL OTHER SIDES OF THE TRANSFORMER. SEE DWGS. 36.01-101 AND 36.01-103 FOR MORE DETAILS ON CLEARANCES.
6. TRANSFORMER MUST BE LOCATED IN AN AREA THAT ALLOWS SAFE ACCESS BY DUKE ENERGY CONSTRUCTION AND MAINTENANCE EQUIPMENT IN WET OR DRY WEATHER.
7. CONSIDER FROST ACTION, DRAINAGE, AND LOCAL SOIL CONDITIONS WHEN PREPARING SITE FOR PAD. SOIL UNDERNEATH PADS SHALL BE LEVELED AND COMPACTED. SOIL SHALL ALSO BE FREE OF ROOTS AND OTHER ORGANIC MATERIALS TO PREVENT SETTLING AND EROSION. SOD MAY BE REQUIRED AROUND PAD TO PREVENT SOIL EROSION.
8. USE FIRE ANT CONTROL IN PAD OPENINGS.
9. ALL CONDUITS SHALL BE CUT SO THAT THE TOP OF THE CONDUIT IS FLUSH WITH THE TOP OF THE PAD.
10. CUSTOMER SHALL INSTALL THE CONDUIT FOR THE PRIMARY CONDUCTORS AS CLOSE TO THE CENTER OF THE PRIMARY AREA AS PRACTICAL. THE SECONDARY CONDUITS SHALL BE INSTALLED TO THE RIGHT INSIDE THE SECONDARY AREA. SEE SERVICE GUIDE FOR PAD INSTALLATION DETAILS AND SPECIFICATIONS.
11. OTHER UTILITIES SHALL NOT BE INSTALLED UNDER TRANSFORMER PAD. SEE SECTION 36 FOR MINIMUM CABLE CLEARANCES.
12. SEE SECTION 27 OF THIS MANUAL FOR GROUND ROD AND GROUND BUS DETAILS.

DUKE ENERGY.

3				
2				
1				
0	5/28/14	PLATTNER	SAMS	ARCOSH
REVISED		BY	CHK'D	APPR.

FLAT PADS FOR THREE-PHASE
PAD-MOUNTED TRANSFORMERS
500 KVA- 5000 KVA

DEC	DEM	DEP	DEF
		X	X

24.01-118

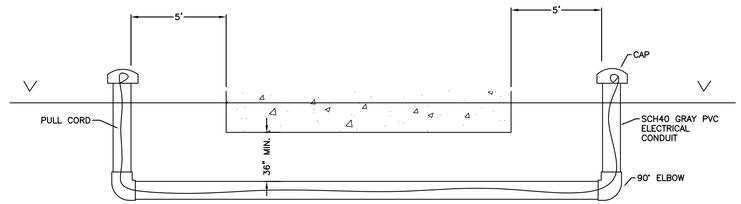

ELECTRICAL CONDUIT FOR DUKE ENERGY
NOT TO SCALE

Approved Construction Plan

Name Date

Planning

Traffic

Fire

CITY OF WILMINGTON NORTH CAROLINA

Public Services • Engineering Division

APPROVED STORMWATER MANAGEMENT PLAN

Date:_____ Permit #_____

Signed:_____

For each open utility cut of City streets, a $325 permit shall be required from the City prior to occupancy and/or project acceptance

SEPI

SEPI ENGINEERING & CONSTRUCTION, INC.
RALEIGH | WILMINGTON | CHARLOTTE
BEAUFORT | CHARLESTON

5030 NEW CENTRE DR. | SUITE B
WILMINGTON, NC 28403
PHONE | 910.523.5715

sepiinc.com

811 3 WORKING DAYS BEFORE YOU DIG FOR THE LOCATION OF UNDERGROUND FACILITIES

Know what's below. before you dig.

THE LOCATIONS OF EXISTING UNDERGROUND UTILITIES ARE SHOWN IN AN APPROXIMATE WAY ONLY AND HAVE NOT BEEN INDEPENDENTLY VERIFIED BY THE OWNER OR ITS REPRESENTATIVE. THE CONTRACTOR SHALL DETERMINE THE EXACT LOCATION OF ALL EXISTING UTILITIES BEFORE COMMENCING WORK, AND AGREES TO BE FULLY RESPONSIBLE FOR ANY AND ALL DAMAGES WHICH MIGHT BE OCCASIONED BY THE CONTRACTOR'S FAILURE TO EXACTLY LOCATE AND PRESERVE ANY AND ALL UNDERGROUND UTILITIES.

NOTICE:
CONSTRUCTION SITE SAFETY IS THE SOLE RESPONSIBILITY OF THE CONTRACTOR NEITHER THE OWNER NOR THE ENGINEER SHALL BE EXPECTED TO ASSUME ANY RESPONSIBILITY FOR SAFETY OF THE WORK, OF PERSONS ENGAGED IN THE WORK, OF ANY NEARBY STRUCTURES, OR OF ANY OTHER PERSONS.

NORTH CAROLINA PROFESSIONAL SEAL 24419 ENGINEER MARK T. ARCURI

SEPI ENGINEERING & CONSTRUCTION, INC. CORPORATE SEAL C-2197 N.C.

PRELIMINARY

NEW HANOVER COUNTY GOVERNMENT CENTER

230 GOVERNMENT CENTER DRIVE, WILMINGTON NC 28403

PREPARED FOR:
GHKCAPE FEAR DEVELOPMENT LLC
1051 MILITARY CUTOFF RD #200,
WILMINGTON, NC 28405

PRELIMINARY
NOT FOR CONSTRUCTION

		DATE
PROJECT:	SE20.022.00	
ISSUE:	90% SUBMITTAL	10/01/2020
	.	.
	.	.
	.	.
	.	.

REVISIONS:

	.	.
	.	.
	.	.
	.	.
	.	.
	.	.

PROJ. MGR:	MTA
DRAWN BY:	KTD
CHECKED BY:	MTA

SITE DETAILS

C-15.3

10/1/2020 6:46 PM X:\2020\SE20.022.00 CFC-NHC Govt Complex\LD\Design\Drawings\Construction Plans\SE20022 - DETAILS.dwg

PHASE 1 CONSTRUCTION SEQUENCE

1. INSTALL TREE PROTECTION FENCING.
2. REQUEST TREE PROTECTION APPROVAL FROM NEW HANOVER COUNTY PLANNING OFFICE.
3. REQUEST PRE-CONSTRUCTION MEETING WITH _____ EROSION INSPECTOR.
4. INSTALL EROSION CONTROL MEASURES ON THE **PHASE 1 DEMO PLAN. (FIND OUT NAME OF THIS SHEET)**
5. PERFORM PHASE 1 DEMOLITION WORK.
6. INSTALL REMAINING EROSION CONTROL ITEMS SHOWN ON PHASE 1 EROSION CONTROL, GRADING, AND STORMWATER PLAN.
7. PERFORM PHASE 1 CLEARING OPERATIONS.
8. INSTALL STORM DRAIN STRUCTURES AND PIPES AND INLET PROTECTION. INSTALL INLET PROTECTION IMMEDIATELY AFTER EACH STORM STRUCTURE TO MINIMIZE SEDIMENT FROM ENTERING THE STORM DRAIN SYSTEM.
9. PERFORM PHASE 1 GRADING OPERATIONS
10. STABILIZE ALL DISTURBED AREAS AS SOON AS FINAL GRADES ARE ESTABLISHED.
11. INSTALL ALL REMAINING SITE WORK AND BUILDING CONSTRUCTION ITEMS.

PHASE 2 CONSTRUCTION SEQUENCE

1. INSTALL EROSION CONTROL MEASURES ON THE **PHASE 2 DEMO PLAN. (FIND OUT NAME OF THIS SHEET)**
2. PERFORM PHASE 2 DEMOLITION WORK.
3. INSTALL REMAINING EROSION CONTROL ITEMS SHOWN ON PHASE 2 EROSION CONTROL, GRADING, AND STORMWATER PLAN.
4. PERFORM PHASE 2 CLEARING OPERATIONS.
5. INSTALL STORM DRAIN STRUCTURES AND PIPES AND INLET PROTECTION. INSTALL INLET PROTECTION IMMEDIATELY AFTER EACH STORM STRUCTURE TO MINIMIZE SEDIMENT FROM ENTERING THE STORM DRAIN SYSTEM.
6. PERFORM PHASE 2 GRADING OPERATIONS
7. STABILIZE ALL DISTURBED AREAS AS SOON AS FINAL GRADES ARE ESTABLISHED.
8. INSTALL ALL REMAINING SITE WORK AND BUILDING CONSTRUCTION ITEMS.
9. ONCE PERMANENT VEGETATIVE COVER IS ESTABLISHED, REMOVE TEMPORARY CONTROL DEVICES (SILT FENCE, GRAVEL ENTRANCE, SEDIMENT BASIN, ETC.)
10. STABILIZE ANY REMAINING DENUDED AREAS.
11. ONCE FINAL CERTIFICATE OF OCCUPANCY AND CITY LANDSCAPE ZONING APPROVAL ARE ISSUED, REMOVE TREE PROTECTION FENCING.

PHASE 3 CONSTRUCTION SEQUENCE

1. INSTALL TREE PROTECTION FENCING.
2. REQUEST TREE PROTECTION APPROVAL FROM NEW HANOVER COUNTY PLANNING OFFICE.
3. REQUEST PRE-CONSTRUCTION MEETING WITH _____ EROSION INSPECTOR.
4. INSTALL EROSION CONTROL MEASURES ON THE **PHASE 3 DEMO PLAN. (FIND OUT NAME OF THIS SHEET)**
5. PERFORM PHASE 3 DEMOLITION WORK.
6. INSTALL REMAINING EROSION CONTROL ITEMS SHOWN ON PHASE 3 EROSION CONTROL, GRADING, AND STORMWATER PLAN.
7. PERFORM PHASE 3 CLEARING OPERATIONS.
8. INSTALL STORM DRAIN STRUCTURES AND PIPES AND INLET PROTECTION. INSTALL INLET PROTECTION IMMEDIATELY AFTER EACH STORM STRUCTURE TO MINIMIZE SEDIMENT FROM ENTERING THE STORM DRAIN SYSTEM.
9. PERFORM PHASE 3 GRADING OPERATIONS
10. STABILIZE ALL DISTURBED AREAS AS SOON AS FINAL GRADES ARE ESTABLISHED.
11. INSTALL ALL REMAINING SITE WORK AND BUILDING CONSTRUCTION ITEMS.
12. ONCE PERMANENT VEGETATIVE COVER IS ESTABLISHED, REMOVE TEMPORARY CONTROL DEVICES (SILT FENCE, GRAVEL ENTRANCE, SEDIMENT BASIN, ETC.) .
13. STABILIZE ANY REMAINING DENUDED AREAS.
14. ONCE FINAL CERTIFICATE OF OCCUPANCY AND CITY LANDSCAPE ZONING APPROVAL ARE ISSUED, REMOVE TREE PROTECTION FENCING.

GRADING NOTES

1. INITIATE CONSTRUCTION SEQUENCE BEFORE BEGINNING CLEARING AND GRADING OPERATIONS.
2. CLEAR AREAS TO BE GRADED OF ALL VEGETATION. PROTECT VEGETATION BEYOND GRADING LIMITS.
3. STRIP TOPSOIL TO FULL AREAS TO BE GRADED AND STOCKPILE OR REMOVE FROM SITE.
4. COMPACT ALL FILL AREAS TO 95% OF MAXIMUM DENSITY.
5. ALL BANKS AND SWALE SIDE SLOPES SHALL BE GRADED NO STEEPER THAN 3:1 SLOPES.
6. PROPOSED SPOT ELEVATIONS ARE SHOWN AT FINISHED GRADE.
7. OPERATOR SHALL VERIFY EXISTING TOPOGRAPHY IN RELATION TO THE PROPOSED GRADES TO ENSURE DRAINAGE IN THE DIRECTIONS INDICATED ON THE PLAN.

EROSION CONTROL

1. ANY GRADING BEYOND THE DENUDED LIMITS SHOWN ON THE PLAN IS A VIOLATION AND IS SUBJECT TO A FINE.
2. ADDITIONAL DEVICES MAY BE REQUIRED AS AGREED UPON BY THE FIELD INSPECTOR, ENGINEER, AND OWNER.

BASIN BAFFLES MAINTENANCE PLAN

1. INSPECT BAFFLES AT LEAST ONCE A WEEK AND AFTER EACH RAINFALL. MAKE ANY REQUIRED REPAIRS IMMEDIATELY.
2. BE SURE TO MAINTAIN ACCESS TO BAFFLES. SHOULD FABRIC OF A BAFFLE COLLAPSE, TEAR, DECOMPOSE, OR BECOME INEFFECTIVE, REPLACE IT PROMPTLY.
3. REMOVE SEDIMENT DEPOSITS WHEN IT REACHES HALF FULL TO PROVIDE ADEQUATE STORAGE VOLUME FOR THE NEXT RAIN AND TO REDUCE PRESSURE ON THE BAFFLES. TAKE CARE TO AVOID DAMAGING THE BAFFLES DURING CLEANOUT, AND REPLACE IF DAMAGED DURING CLEANOUT OPERATIONS. SEDIMENT DEPTH SHOULD NEVER EXCEED HALF THE DESIGNED STORAGE DEPTH.
4. AFTER THE CONTRIBUTING DRAINAGE AREA HAS BEEN PROPERLY STABILIZED, REMOVE ALL BAFFLE MATERIALS AND UNSTABLE SEDIMENT DEPOSITS, BRING THE AREA TO GRADE, AND STABILIZE IT.

BASIN SKIMMER MAINTENANCE PLAN

1. INSPECT SKIMMER SEDIMENT BASINS AT LEAST WEEKLY AND AFTER EVERY SIGNIFICANT (ONE HALF INCH OR GREATER) RAINFALL EVENT AND REPAIR IMMEDIATELY. REMOVE SEDIMENT AND RESTORE THE BASIN TO ITS ORIGINAL DIMENSIONS WHEN SEDIMENT ACCUMULATES TO ONE-HALF HEIGHT THE HEIGHT OF THE FIRST BAFFLE. PULL DOWN THE SKIMMER TO ONE SIDE SO THAT THE SEDIMENT UNDERNEATH CAN BE EXCAVATED. EXCAVATE THE SEDIMENT FROM THE ENTIRE BASIN, NOT JUST AROUND THE SKIMMER OR THE FIRST CELL. MAKE SURE VEGETATION GROWING IN THE BOTTOM OF THE BASIN DOSE NOT HOLD DOWN THE SKIMMER.
2. IF THE SKIMMER IS CLOGGED WITH TRASH AND THERE IS WATER IN THE BASIN, USUALLY JERKING THE ROPE WILL MAKE THE SKIMMER BOB UP AND DOWN AND DISLODGE THE DEBRIS AND RESTORE THE FLOW. IF THIS DOSE NOT WORK, PULL THE SKIMMER OVER TO THE SIDE OF THE BASIN AND REMOVE THE DEBRIS. ALSO CHECK THE ORIFICE INSIDE THE SKIMMER AND SEE IF IT IS CLOGGED; IF SO REMOVE THE DEBRIS.
3. IF THE SKIMMER ARM OR BARREL PIPE IS CLOGGED, THE ORIFICE CAN BE REMOVED AND THE OBSTRUCTION CLEARED WITH A PLUMBER'S SNAKE OR BY FLUSHING WITH WATER. BE SURE AND REPLACE THE ORIFICE BEFORE REPOSITIONING THE SKIMMER.
4. CHECK THE FABRIC LINED SPILLWAY FOR DAMAGE AND MAKE ANY REQUIRED REPAIRS WITH FABRIC THAT SPANS THE FULL WIDTH OF THE SPILLWAY. CHECK THE EMBANKMENT, SPILLWAYS AND OUTLET FOR EROSION DAMAGE AND INSPECT THE EMBANKMENT FOR PIPING AND SETTLEMENT. MAKE ALL NECESSARY REPAIRS IMMEDIATELY. REMOVE ALL TRASH AND OTHER DEBRIS FROM THE SKIMMER AND POOL AREAS.
5. FREEZING WEATHER CAN RESULT IN ICE FORMING IN THE BASIN. SOME SPECIAL PRECAUTIONS SHOULD BE TAKEN IN THE WINTER TO PREVENT THE SKIMMER FROM PLUGGING WITH ICE.

GENERAL ERROSION CONTROL MAINTENANCE PLAN

1. ALL EROSION AND SEDIMENT CONTROL PRACTICES WILL BE CHECKED FOR STABILITY AND OPERATION FOLLOWING EVERY RUNOFF-PRODUCING RAINFALL BUT IN NO CASE LESS THAN ONCE EVERY WEEK. ANY NEEDED REPAIRS WILL BE MADE IMMEDIATELY TO MAINTAIN ALL PRACTICES AS DESIGNED.
2. SEDIMENT WILL BE REMOVED FROM BEHIND THE SEDIMENT FENCE AND INLET PROTECTION FENCE WHEN IT BECOMES ABOUT 0.5 FEET DEEP AT THE FENCE. THE SEDIMENT FENCE WILL BE REPAIRED AS NECESSARY TO MAINTAIN A BARRIER.
3. ALL SEEDED AREAS WILL BE FERTILIZED, RESEEDED AS NECESSARY, AND MULCHED ACCORDING TO SPECIFICATIONS IN THE VEGETATIVE PLAN TO MAINTAIN A VIGOROUS, DENSE, VEGETATIVE COVER.
4. CONSTRUCTION ENTRANCE TO BE CLEANED WHEN SEDIMENT ACCUMULATIONS ARE VISIBLE OR SEDIMENT IS DEPOSITED ON THE ASPHALT AND STONE WILL BE PERIODICALLY TOP DRESSED WITH 2 INCHES OF #4 STONE TO MAINTAIN 8" MIN. DEPTH.

SITE NOTES

1. THE CONTRACTOR SHALL VISIT THE SITE TO FAMILIARIZE THEMSELVES WITH FIELD CONSTRUCTION CONDITIONS.
2. BORROW MATERIAL: ALL BORROWED MATERIAL MUST COME FROM A LEGALLY OPERATED MINE OR OTHER SOURCE APPROVED BY THE STATE.
3. CLEARED, GRUBBED, STRIPPED, OR EXCAVATED SPOIL SHALL BE REMOVED FROM THE SITE OR USED IN LANDSCAPED ISLANDS.

SEDIMENT BASIN NOTES:

1. INSPECT TEMPORARY SEDIMENT BASINS AT LEAST WEEKLY AND AFTER EACH SIGNIFICANT (1/2" OR GREATER) RAINFALL EVENT AND REPAIR IMMEDIATELY. REMOVE SEDIMENT AND RESTORE THE BASIN TO ITS ORIGINAL DIMENSIONS WHEN IT ACCUMULATES TO ONE-HALF THE DESIGN DEPTH. PLACE REMOVED SEDIMENT IN AN AREA WITH SEDIMENT CONTROLS.
2. CHECK THE SEDIMENT BASIN EMBANKMENT, SPILLWAYS, AND OUTLET FOR EROSION DAMAGE, AND INSPECT THE EMBANKMENT FOR PIPING AND SETTLEMENT. MAKE ALL NECESSARY REPAIRS IMMEDIATELY. REMOVE ALL TRASH AND OTHER DEBRIS FROM THE RISER AND POOL AREA.
3. INSPECT INLETS AT LEAST WEEKLY AND AFTER EACH SIGNIFICANT (1/2" OR GREATER) RAINFALL EVENT. CLEAR THE MESH WIRE OF ANY DEBRIS OR OTHER OBJECTS TO PROVIDE ADEQUATE FLOW FOR SUBSEQUENT RAINS. TAKE CARE NOT TO DAMAGE OR UNDERCUT THE WIRE MESH DURING SEDIMENT REMOVAL. REPLACE STONE AS NEEDED. INLET PROTECTION SHOULD BE CLEANED WHEN IT IS HALF FULL.

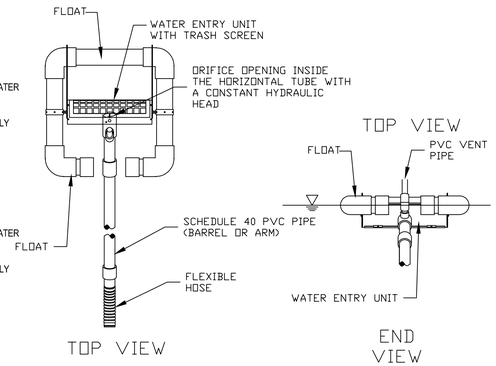

GENERAL NOTES:

1. EMBANKMENT MUST BE COMPACTED TO DESIGN SPECIFICATIONS.
2. EROSION PROTECTION MUST BE INSTALLED ALONG THE EMBANKMENT AND AT THE DISCHARGE END OF THE PIPE.
3. INSPECT SYSTEM REGULARLY TO ENSURE IT IS FUNCTIONING IN A CORRECT MANNER.
4. SKIMMER SHALL BE CONNECTED TO THE PERMANENT LOW FLOW CONTROL PIPE.
5. BASIN OUTLET STRUCTURES MUST BE ON SITE BEFORE GRADING OPERATIONS BEGIN.
6. EXCEPT DURING EXTREME STORM EVENTS WHEN WATER WILL FLOW OVER THE EMERGENCY WEIR, THE ONLY OUTLET FROM THE SEDIMENT BASIN (PRIOR TO FULL SITE STABILIZATION) SHALL BE THE SKIMMER. NO WATER SHALL LEAVE THE SEDIMENT BASIN IN ANY OTHER MANNER DURING A NORMAL RAIN EVENT.

	BASIN 1
SKIMMER SIZE (IN.)	3'
SKIMMER ORIFICE DIAMETER (IN.)	2.75"
NO. OF DAYS TO DRAIN	3.0
VENDOR	FAIRCLOTH

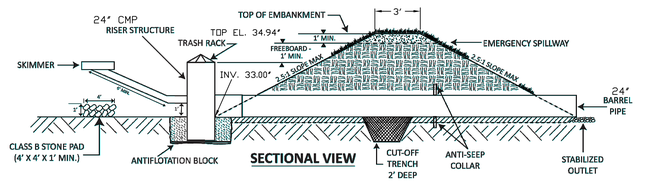

NOTES

1. SEED AND PLACE MATTING FOR EROSION CONTROL ON INTERIOR AND EXTERIOR SIDESLOPES.
2. INSTALL A MINIMUM OF 3 COIR FIBER BAFFLES IN ACCORDANCE WITH PRACTICE STANDARD 6.65.
3. INSTALL SKIMMER AND COUPLING TO RISER STRUCTURE OR DIRECTLY INTO EMBANKMENT 1 FT. FROM BOTTOM OF BASIN.
4. THE ARM PIPE SHALL HAVE A MINIMUM LENGTH OF 6 FT. BETWEEN THE SKIMMER AND COUPLING.

NOT TO SCALE

FAIRCLOTH SKIMMER DISCHARGE SYSTEM WITH OUTLET STRUCTURE

NOT TO SCALE

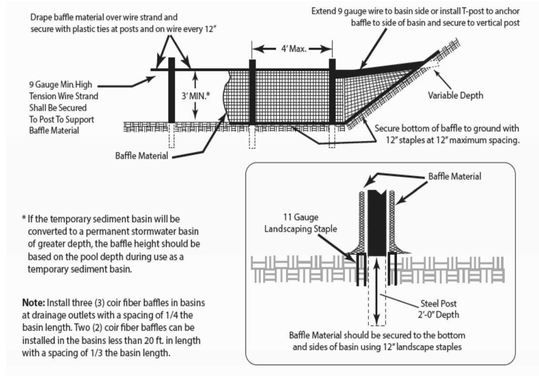

Note: Install three (3) coir fiber baffles in basins at drainage outlets with a spacing of 1/4 the basin length. Two (2) coir fiber baffles can be installed in the basins less than 20 ft. in length with a spacing of 1/3 the basin length.

Figure 6.65b Coir Fiber Baffle Detail
Cross section of a porous baffle in a sediment basin.

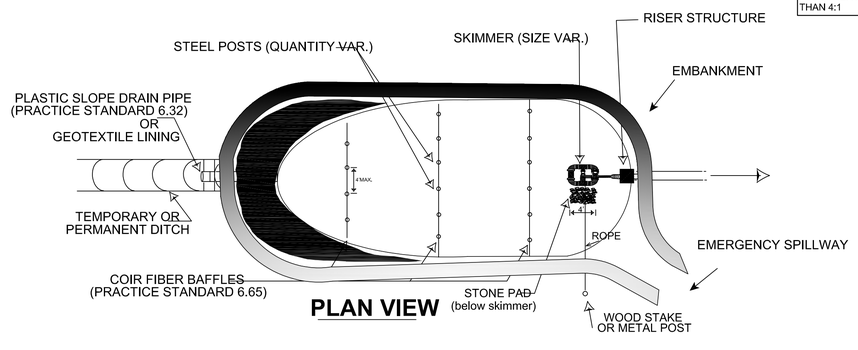

TEMPORARY SEEDING SPECIFICATIONS

LATE WINTER AND EARLY SPRING
(FROM NC EROSION & SEDIMENT CONTROL DESIGN MANUAL - TABLE 6.10A)

SEEDING MIXTURE

SPECIES	RATE (LB/ACRE)	(LB/1000 FT²)
RYE (GRAIN)	120	2.75
ANNUAL LESPEDEZA (KOBE IN PIEDMONT AND COASTAL PLAIN, KOREAN IN MOUNTAINS)	50	1.15

OMIT ANNUAL LESPEDEZA WHEN DURATION OF TEMPORARY COVER IS NOT TO EXTEND BEYOND JUNE.

SEEDING DATES
MOUNTAINS ——— ABOVE 2500 FEET: FEB. 15 - MAY 15 BELOW 2500 FEET: FEB. 1- MAY 1
PIEDMONT ——— JAN. 1 - MAY 1
COASTAL PLAIN — DEC. 1 - APR. 15

SOIL AMENDMENOT TO SCALE
APPLY LIME AND FERTILIZER ACCORDING TO SOIL TESTS, OR APPLY 2,000 LB/ACRE (45.9 LB/1000 SQ FT) GROUND AGRICULTURAL LIMESTONE (USE THE LOWER RATE ON SANDY SOILS) AND 750 LB/ACRE (17.2 LB/1000 SQ FT) 10-10-10 FERTILIZER.

MULCH
APPLY 4,000 LB/ACRE (91.83 LB/1000 SQ FT) STRAW. ANCHOR STRAW BY TACKING WITH ASPHALT, NETTING, OR A MULCH ANCHORING TOOL. A DISK WITH BLADES SET NEARLY STRAIGHT CAN BE USED AS A MULCH ANCHORING TOOL.

MAINTENANCE
REFERTILIZE IF GROWTH IS NOT FULLY ADEQUATE. RESEED, REFERTILIZE AND MULCH IMMEDIATELY FOLLOWING EROSION OR OTHER DAMAGE.

SUMMER
(FROM NC EROSION & SEDIMENT CONTROL DESIGN MANUAL - TABLE 6.10B)

SEEDING MIXTURE

SPECIES	RATE (LB/ACRE)	(LB/1000 FT²)
GERMAN MILLET	40	0.92

IN THE PIEDMONT AND MOUNTAINS, A SMALL-STEMMED SUDANGRASS MAY BE SUBSTITUTED AT A RATE OF 50 LB/ACRE.

SEEDING DATES
MOUNTAINS ——— MAY 15 - AUG. 15
PIEDMONT ——— MAY 1 - AUG. 15
COASTAL PLAIN — APR. 15 - AUG. 15

SOIL AMENDMENOT TO SCALE
FOLLOW RECOMMENDATIONS OF SOIL TESTS OR APPLY 2,000 LB/ACRE (45.9 LB/1000 SQ FT) GROUND AGRICULTURAL LIMESTONE AND 750 LB/ACRE (17.2 LB/1000 SQ FT) 10-10-10 FERTILIZER.

MULCH
APPLY 4,000 LB/ACRE (91.83 LB/1000 SQ FT) STRAW. ANCHOR STRAW BY TACKING WITH ASPHALT, NETTING, OR A MULCH ANCHORING TOOL. A DISK WITH BLADES SET NEARLY STRAIGHT CAN BE USED AS A MULCH ANCHORING TOOL.

MAINTENANCE
REFERTILIZE IF GROWTH IS NOT FULLY ADEQUATE. RESEED, REFERTILIZE AND MULCH IMMEDIATELY FOLLOWING EROSION OR OTHER DAMAGE.

FALL
(FROM NC EROSION & SEDIMENT CONTROL DESIGN MANUAL - TABLE 6.10C)

SEEDING MIXTURE

SPECIES	RATE (LB/ACRE)	(LB/1000 FT²)
RYE (GRAIN)	120	2.75

SEEDING DATES
MOUNTAINS ——— AUG. 15 - DEC. 15
PIEDMONT ——— AUG. 15 - DEC. 30

SOIL AMENDMENOT TO SCALE
FOLLOW RECOMMENDATIONS OF SOIL TESTS OR APPLY 2,000 LB/ACRE (45.9 LB/1000 SQ FT) GROUND AGRICULTURAL LIMESTONE AND 750 LB/ACRE (17.2 LB/1000 SQ FT) 10-10-10 FERTILIZER.

MULCH
APPLY 4,000 LB/ACRE (91.83 LB/1000 SQ FT) STRAW. ANCHOR STRAW BY TACKING WITH ASPHALT, NETTING, OR A MULCH ANCHORING TOOL. A DISK WITH BLADES SET NEARLY STRAIGHT CAN BE USED AS A MULCH ANCHORING TOOL.

MAINTENANCE
REPAIR AND REFERTILIZE DAMAGED AREAS IMMEDIATELY. TOPDRESS WITH 50 LB/ACRE OF NITROGEN IN MARCH. IF IT IS NECESSARY TO EXTENT TEMPORARY COVER BEYOND JUNE 15, OVERSEED WITH 50 LB/ACRE KOBE (PIEDMONT AND COASTAL PLAIN) OR KOREAN (MOUNTAINS) LESPEDEZA IN LATE FEBRUARY OR EARLY MARCH.

PERMANENT SEEDING SPECIFICATIONS

FALL AND EARLY SPRING
(FROM NC EROSION & SEDIMENT CONTROL DESIGN MANUAL - TABLE 6.11P)

SEEDING NO. 1CP FOR: WELL TO POORLY DRAINED SOILS WITH GOOD MOISTURE RETENTION; LOW MAINTENANCE

SEEDING MIXTURE

SPECIES	RATE (LB/ACRE)	(LB/1000 FT²)
TALL FESCUE	80	1.84
PENSACOLA BAHIAGRASS	50	1.15
SERICEA LESPEDEZA	80	0.69
KOBE LESPEDEZA	10	0.23

SEEDING NOTES
1. FROM SEPT. 1 - MAR. 1, USE UNSCARIFIED SERICEA SEED.
2. ON POORLY DRAINED SITES, OMIT SERICEA AND INCREASE KOBE TO 30 LB/ACRE.
3. WHERE A NEAT APPEARANCE IS DESIRED, OMIT SERICEA AND INCREASE KOBE TO 40 LB/ACRE.

NURSE PLANOT TO SCALE
BETWEEN APR. 15 AND AUG. 15, ADD 10 LB/ACRE GERMAN MILLET OR 15 LB/ACRE SUDANGRASS.
PRIOR TO MAY 1 OR AFTER AUG. 15, ADD 25 LB/ACRE RYE (GRAIN).

SEEDING DATES

	BEST	POSSIBLE
EARLY SPRING:	FEB. 15 - MAR. 20	FEB. 15 - APR. 30
FALL:	SEPT. 1 - SEPT. 30	SEPT. 1 - OCT. 31

SOIL AMENDMENOT TO SCALE
APPLY LIME AND FERTILIZER ACCORDING TO SOIL TESTS, OR APPLY 3,000-5,000 LB/ACRE (68.9-114.8 LB/1000 SQ FT) GROUND AGRICULTURAL LIMESTONE (USE THE LOWER RATE ON SANDY SOILS) AND 1,000 LB/ACRE (22.9 LB/1000 SQ FT) 10-10-10 FERTILIZER.

MULCH
APPLY 4,000 LB/ACRE (91.83 LB/1000 SQ FT) GRAIN STRAW OR EQUIVALENT COVER OF ANOTHER SUITABLE MULCH. ANCHOR STRAW BY TACKING WITH ASPHALT, NETTING, OR BY CRIMPING WITH A MULCH ANCHORING TOOL. A DISK WITH BLADES SET NEARLY STRAIGHT CAN BE USED A MULCH ANCHORING TOOL.

MAINTENANCE
IF GROWTH IS LESS THAN FULLY ADEQUATE, REFERTILIZE IN THE SECOND YEAR, ACCORDING TO SOIL TESTS OR TOPDRESS WITH 500 LB/ACRE (11.5 LB/1000 SQ FT) 10-10-10 FERTILIZER, MOW AS NEEDED WHEN SERICEA IS OMITTED FROM THE MIXTURE. RESEED, FERTILIZE, AND MULCH DAMAGED AREAS IMMEDIATELY.

[1] REFER TO APPENDIX 8.02 FOR BOTANICAL NAMES

LATE SPRING AND EARLY SUMMER
(FROM NC EROSION & SEDIMENT CONTROL DESIGN MANUAL - TABLE 6.11T)

SEEDING NO. 5CP FOR: WELL DRAINED SANDY LOAMS TO DRY SANDS; LOW MAINTENANCE

SEEDING MIXTURE

SPECIES	RATE (LB/ACRE)	(LB/1000 FT²)
PENSACOLA BAHIAGRASS	50	1.15
SERICEA LESPEDEZA	30	1.69
COMMON BERMUDAGRASS	10	0.23
GERMAN MILLET	10	0.23

SEEDING NOTES
1. WHERE A NEAT APPEARANCE IS DESIRED, OMIT SERICEA.
2. USE A COMMON BERMUDAGRASS ONLY ON ISOLATED SITES WHERE IT CANNOT BECOME A PEST. BERMUDAGRASS MAY BE REPLACED WITH 5 LB/ACRE CENTIPEDEGRASS.

SEEDING DATES
APRIL 1 - JULY 15

SOIL AMENDMENOT TO SCALE
APPLY LIME AND FERTILIZER ACCORDING TO SOIL TESTS, OR APPLY 3,000 LB/ACRE (68.9 LB/1000 SQ FT) GROUND AGRICULTURAL LIMESTONE AND 500 LB/ACRE (11.5 LB/1000 SQ FT) 10-10-10 FERTILIZER.

MULCH
APPLY 4,000 LB/ACRE (91.83 LB/1000 SQ FT) GRAIN STRAW OR EQUIVALENT COVER OF ANOTHER SUITABLE MULCH. ANCHOR STRAW BY TACKING WITH ASPHALT, NETTING, OR BY CRIMPING WITH A MULCH ANCHORING TOOL. A DISK WITH BLADES SET NEARLY STRAIGHT CAN BE USED A MULCH ANCHORING TOOL.

MAINTENANCE
REFERTILIZE THE FOLLOWING APR. WITH 50 LB/ACRE (1.15 LB/1000 SQ FT) NITROGEN. REPEAT AS GROWTH REQUIRES. MAY BE MOWED ONLY ONCE A YEAR. WHERE A NEAT APPEARANCE IS DESIRED, OMIT SERICEA AND MOW AS OFTEN AS NEEDED.

REFER TO APPENDIX 8.02 FOR BOTANICAL NAMES

GROUND STABILAZATION REQUIREMENT

SITE AREA DESCRIPTION	STABILIZATION	TIMEFRAME EXCEPTIONS
PERIMETER DIKES, SWALES, DITCHES AND SLOPES	7 DAYS	NONE
HIGH QUALITY WATER (HQW) ZONES	7 DAYS	NONE
SLOPES STEEPER THAN 3:1	7 DAYS	IF SLOPES ARE 10' OR LESS IN LENGTH & ARE NOT STEEPER THAN 2:1, 14 DAYS ARE ALLOWED
SLOPES 3:1 OR FLATTER	14 DAYS	7 DAYS FOR SLOPES GREATER THAN 50' IN LENGTH
ALL OTHER AREAS WITH SLOPES FLATTER THAN 4:1	14 DAYS	NONE EXCEPT FOR PERIMETER AND HQW ZONES

Approved Construction Plan
Name Date
Planning _____
Traffic _____
Fire _____

CITY OF WILMINGTON NORTH CAROLINA
Public Services • Engineering Division
APPROVED STORMWATER MANAGEMENT PLAN
Date:_____ Permit #_____
Signed: _____

For each open utility cut of City streets, a $325 permit shall be required from the City prior to occupancy and/or project acceptance

SEPI
SEPI ENGINEERING & CONSTRUCTION, INC.
RALEIGH | WILMINGTON | CHARLOTTE
BEAUFORT | CHARLESTON
5030 NEW CENTRE DR. | SUITE B
WILMINGTON, NC 28403
PHONE | 910.523.5715
sepiinc.com

811 Know what's below, before you dig. 3 WORKING DAYS BEFORE YOU DIG FOR THE LOCATION OF UNDERGROUND FACILITIES

THE LOCATIONS OF EXISTING UNDERGROUND UTILITIES ARE SHOWN IN AN APPROXIMATE WAY ONLY AND HAVE NOT BEEN INDEPENDENTLY VERIFIED BY THE OWNER OR ITS REPRESENTATIVE. THE CONTRACTOR SHALL DETERMINE THE EXACT LOCATION OF ALL EXISTING UTILITIES BEFORE COMMENCING WORK, AND AGREES TO BE FULLY RESPONSIBLE FOR ANY AND ALL DAMAGES WHICH MIGHT BE OCCASIONED BY THE CONTRACTOR'S FAILURE TO EXACTLY LOCATE AND PRESERVE ANY AND ALL UNDERGROUND UTILITIES.

NOTICE:
CONSTRUCTION SITE SAFETY IS THE SOLE RESPONSIBILITY OF THE CONTRACTOR NEITHER THE OWNER NOR THE ENGINEER SHALL BE EXPECTED TO ASSUME ANY RESPONSIBILITY FOR SAFETY OF THE WORK, OF PERSONS ENGAGED IN THE WORK, OF ANY NEARBY STRUCTURES, OR OF ANY OTHER PERSONS.

NORTH CAROLINA PROFESSIONAL SEAL 24419 ENGINEER MARK T. ARCURI

SEPI ENGINEERING & CONSTRUCTION, INC CORPORATE SEAL C-2197 N.C.

PRELIMINARY

NEW HANOVER COUNTY GOVERNMENT CENTER
230 GOVERNMENT CENTER DRIVE, WILMINGTON NC 28403

PREPARED FOR:
GHKCAPE FEAR DEVELOPMENT LLC
1051 MILITARY CUTOFF RD #200,
WILMINGTON, NC 28405

PRELIMINARY
NOT FOR CONSTRUCTION

		DATE
PROJECT:	SE20.022.00	
ISSUE:	90% SUBMITTAL	10/01/2020
REVISIONS:		
PROJ. MGR:	MTA	
DRAWN BY:	KTD	
CHECKED BY:	MTA	

EROSION CONTROL, GRADING & STORMWATER DETAILS

C-15.4

10/1/2020 @ 4:49 PM X:\2020\SE20.022.00 CFC-NHC Govt Complex\LD\Design\Drawings\Construction Plans\SE20022 - DETAILS.dwg

NOTE:
THE CRITICAL ROOT ZONE (CRZ) OF A TREE IS WHERE THE MAJORITY OF A TREE'S ROOTS LAY. 85% OF MOST TREE ROOTS ARE FOUND IN THE TOP 24" OF THE SOIL AND SUPPLY THE MAJORITY OF NUTRIENTS AND WATER. GENERALLY, ROOTS SPREAD OUT 2-3X THE HEIGHT OF THE TREE.

NOTE:
CROWN OF THE TREE IS NEEDED FOR LEAF GROWTH TO PRODUCE OXYGEN, FILTER THE AIR, REDUCE WIND AND SOFTEN NOISE. DO NOT DISFIGURE CROWN WITH INTENSIVE PRUNING.

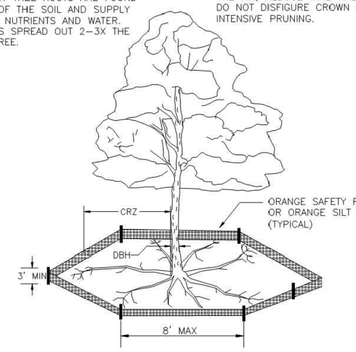

NOTES:
1. PROTECT CRITICAL ROOT ZONE (CRZ) OF TREES PRIOR TO CONSTRUCTION. CLEARLY MARK THE TREES AND ERECT A PROTECTIVE BARRIER AT THE CRZ. BARRIER SHALL BE MAINTAINED UNTIL CONSTRUCTION IS COMPLETE.
2. CRZ RADIUS IS 1 FT PER INCH OF TREE DIAMETER AT BREAST HEIGHT (DBH).
3. IF CONSTRUCTION OCCURS WITHIN THE CRZ, AT LEAST 12" OF MULCH AND/OR LOGGING MATTS SHALL BE PLACED WHERE MACHINERY MANEUVERS TO REDUCE SOIL COMPACTION IN THIS ZONE.
4. WHERE SIDEWALKS AND PATHWAYS PASS WITHIN CRZ, EXTRA CARE SHALL BE TAKEN TO AVOID DAMAGE TO THE ROOTS. ALTERNATE CONSTRUCTION METHODS, SUCH AS A REINFORCED SIDEWALK, SHALL BE IMPLEMENTED AS NECESSARY.
5. FOR ALL TREES, CUTTING OF LARGE STRUCTURAL ROOTS LOCATED NEAR THE BASE OF THE TRUNK IS PROHIBITED. DO NOT COMPACT SOIL BENEATH TREES. NO VEHICLE SHALL BE ALLOWED TO PARK UNDER TREES. NO MATERIALS OR EQUIPMENT SHALL BE STORED BENEATH TREES. DAMAGING THE BARK WITH LAWNMOWERS, CONSTRUCTION EQUIPMENT, OR ANYTHING ELSE IS PROHIBITED. CONTRACTOR SHALL REPAIR DAMAGE TO TREES.
6. FAILING TO INSTALL OR MAINTAIN PROTECTION MEASURES SHALL RESULT IN A STOP WORK ORDER AND FINE OF $500/DAY. DISTURBANCE OTHER THAN THAT ALLOWED ON THE APPROVED PLAN WILL REQUIRE OWNER TO POST A LETTER OF CREDIT FOR 3 YRS FOR TREE MITIGATION.

DATE: JAN, 2015	STANDARD DETAIL	CITY OF WILMINGTON NORTH CAROLINA
DRAWN BY JSR	TREE PROTECTION DURING CONSTRUCTION	CITY OF WILMINGTON ENGINEERING PO BOX 1810 WILMINGTON, NC 28402 (910) 341-7807
CHECKED BY RDG, P.E.	SHEET 1 of 2	
SCALE NOT TO SCALE		SD 15-09

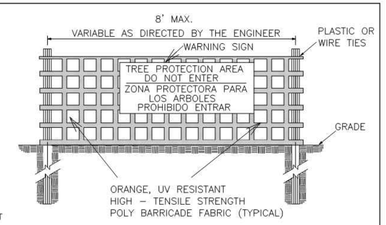

FRONT VIEW

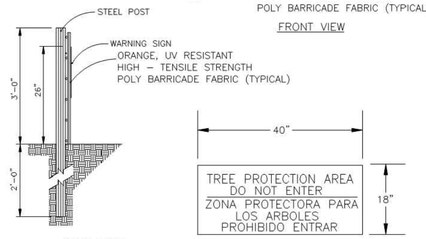

SIDE VIEW

WARNING SIGN DETAIL

NOTES:
1. THE TREE PROTECTION FENCING SHALL NOT BE VIOLATED FOR THE ENTIRE DURATION OF THE PROJECT WITHOUT APPROVAL FROM URBAN FORESTRY STAFF.
2. WARNING SIGNS TO BE MADE OF DURABLE, WEATHERPROOF MATERIAL. LETTERS TO BE 3" HIGH, MINIMUM, CLEARLY LEGIBLE AND SPACED AS DETAILED.
3. SIGNS SHALL BE PLACED AT 50' MAXIMUM INTERVALS. PLACE A SIGN AT EACH END OF LINEAR TREE PROTECTION AND 50' ON CENTER THEREAFTER. FOR TREE PROTECTION AREAS LESS THAN 100' IN PERIMETER, PROVIDE NO LESS THAN TWO SIGNS PER PROTECTION AREA.
4. ATTACH SIGNS SECURELY TO FENCE POSTS AND FABRIC. MAINTAIN TREE PROTECTION FENCE AND SIGNS THROUGHOUT DURATION OF PROJECT.
5. TREE PROTECTION FENCING AND SIGNAGE SHALL BE REMOVED AFTER CONSTRUCTION.
6. ADDITIONAL SIGNS MAY BE REQUIRED BY CITY OF WILMINGTON, BASED ON ACTUAL FIELD CONDITIONS.

DATE: JAN, 2015	STANDARD DETAIL	CITY OF WILMINGTON NORTH CAROLINA
DRAWN BY JSR	TREE PROTECTION DURING CONSTRUCTION	CITY OF WILMINGTON ENGINEERING PO BOX 1810 WILMINGTON, NC 28402 (910) 341-7807
CHECKED BY RDG, P.E.	SHEET 2 of 2	
SCALE NOT TO SCALE		SD 15-09

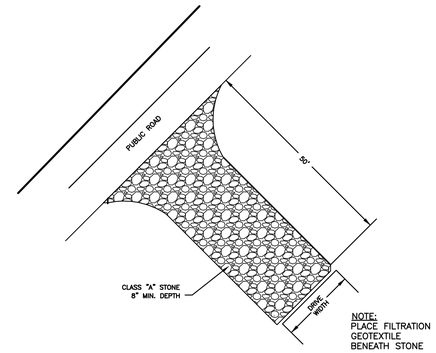

NOTES:
1. PROVIDE TURNING RADIUS SUFFICIENT TO ACCOMMODATE LARGE TRUCKS
2. LOCATE ENTRANCES TO PROVIDE FOR UTILIZATION BY ALL CONSTRUCTION VEHICLES
3. MUST BE MAINTAINED IN A CONDITION WHICH WILL PREVENT TRACKING OR DIRECT FLOW OF MUD ONTO THE STREETS. PERIODIC TOP DRESSING WITH STONE WILL BE NECESSARY.
4. ANY MATERIAL TRACKED ONTO THE ROADWAY MUST BE CLEANED UP IMMEDIATELY.
5. LOCATE ALL GRAVEL CONSTRUCTION ENTRANCES AT ALL POINOT TO SCALE OF INGRESS AND EGRESS UNTIL SITE IS STABILIZED. PROVIDE FREQUENT CHECKS OF THE DEVICE AND TIMELY MAINTENANCE.
6. NUMBER AND LOCATION OF CONSTRUCTION ENTRANCES TO BE DETERMINED BY THE ENGINEER.
7. USE CLASS "A" STONE OR OTHER AGGREGATE APPROVED BY THE ENGINEER.
8. INSTALL CONSTRUCTION ENTRANCES IN A WAY TO PREVENT VEHICLES FROM BYPASSING CONSTRUCTION ENTRANCE LEAVING PROJECT SITE.

GRAVEL CONSTRUCTION ENTRANCE
NOT TO SCALE

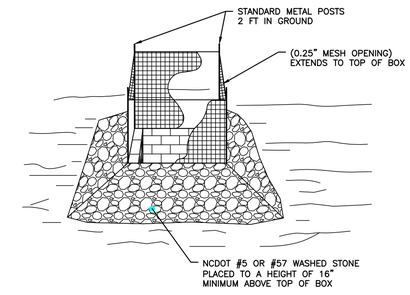

NOTES:
1. DRIVE 5-FOOT STEEL POSTS 2 FEET INTO THE GROUND SURROUNDING THE INLET. SPACE POSTS EVENLY AROUND THE PERIMETER OF THE INLET, A MAXIMUM OF 4 FEET APART.
2. SURROUND THE POSTS WITH WIRE MESH HARDWARE CLOTH. SECURE THE WIRE MESH TO THE STEEL POSTS AT THE TOP, MIDDLE, AND BOTTOM. PLACING A 1-FOOT FLAP OF THE WIRE MESH UNDER THE GRAVEL FOR ANCHORING IS RECOMMENDED.
3. PLACE CLEAN GRAVEL (NC DOT #5 OR #57 STONE) ON A 2:1 SLOPE WITH A MIN HEIGHT OF 16 INCHES AROUND THE WIRE, AND SMOOTH TO AN EVEN GRADE.

STANDARD INLET PROTECTION
NOT TO SCALE

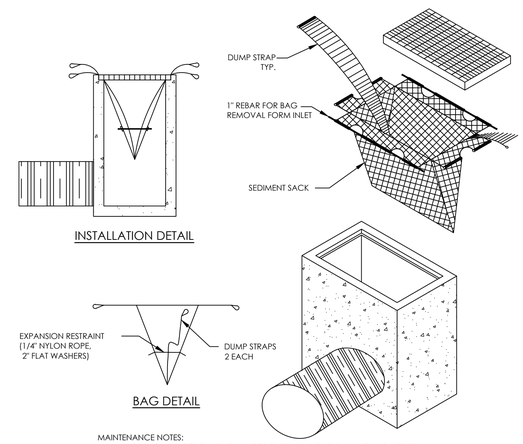

MAINTENANCE NOTES:
1. BAGS SHOULD BE CLEANED OUT AFTER EVERY RAIN EVENT AND/OR AS NEEDED.

STANDARD SILT BAG – INLET SEDIMENT CONTROL DEVICE
NOT TO SCALE

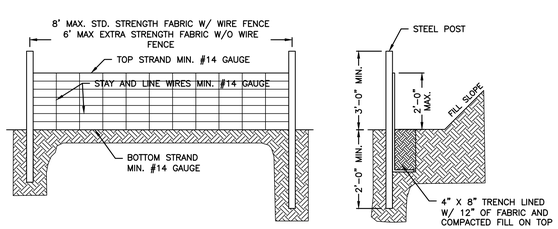

NOTES:
1. WIRE FENCE (IF USED) SHALL BE MINIMUM 14 GAUGE WITH A MAXIMUM MESH OPENING OF 6-INCHES.
2. SYNTHETIC FILTER FABRIC OF AT LEAST 95% BY WEIGHT OF POLYOLEFIN'S OR POLYESTER, WHICH IS CERTIFIED BY THE MANUFACTURER OR SUPPLIER AS CONFORMING TO THE REQUIREMENTS IN ASTM D 6461 AND ALSO SHOULD CONTAIN ULTRAVIOLET RAY INHIBITORS AND STABILIZERS ACCORDING TO ASTM D 4355.
3. SEE THE NC EROSION CONTROL MANUAL FOR SPECIFICATIONS INSTALLING SEDIMENT FENCE USING THE SLICING METHOD MACHINERY.

TEMPORARY SILT FENCE
NOT TO SCALE

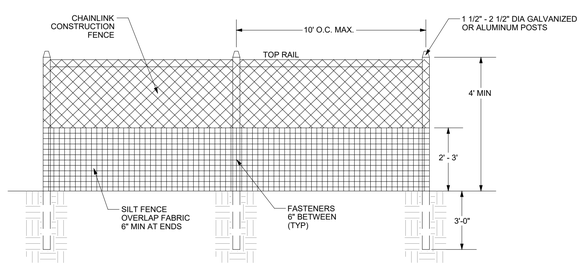

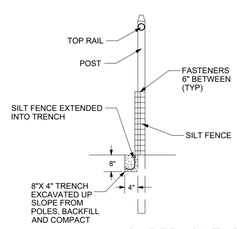

NOTES:
1. MAINTENANCE SHALL OCCUR WHEN NECESSARY. SILT FENCE SHALL BE REPLACED EVERY 6 MONTHS AND POSTS SHALL BE INSPECTED TO ENSURE STRUCTURAL INTEGRITY. SILT FENCE SHALL BE INSPECTED WEEKLY AND ALL MAINTENANCE ISSUES SHALL BE CORRECTED AT THAT TIME.
2. SILT FENCE SHOULD BE A MINIMUM OF 5 FEET FROM THE TOE OF SLOPE.

SUPER SILT FENCE DETAIL
NOT TO SCALE

Approved Construction Plan

	Name	Date
Planning		
Traffic		
Fire		

CITY OF WILMINGTON NORTH CAROLINA
Public Services • Engineering Division
APPROVED STORMWATER MANAGEMENT PLAN
Date:_____ Permit #_____
Signed: _____

For each open utility cut of City streets, a $325 permit shall be required from the City prior to occupancy and/or project acceptance

SEPI
SEPI ENGINEERING & CONSTRUCTION, INC.
RALEIGH | WILMINGTON | CHARLOTTE
BEAUFORT | CHARLESTON
5030 NEW CENTRE DR. | SUITE B
WILMINGTON, NC 28403
PHONE | 910.523.5715
sepiinc.com

811 Know what's below. before you dig.
3 WORKING DAYS BEFORE YOU DIG
FOR THE LOCATION OF UNDERGROUND FACILITIES

THE LOCATIONS OF EXISTING UNDERGROUND UTILITIES ARE SHOWN IN AN APPROXIMATE WAY ONLY AND HAVE NOT BEEN INDEPENDENTLY VERIFIED BY THE OWNER OR ITS REPRESENTATIVE. THE CONTRACTOR SHALL DETERMINE THE EXACT LOCATION OF ALL EXISTING UTILITIES BEFORE COMMENCING WORK, AND AGREES TO BE FULLY RESPONSIBLE FOR ANY AND ALL DAMAGES WHICH MIGHT BE OCCASIONED BY THE CONTRACTOR'S FAILURE TO EXACTLY LOCATE AND PRESERVE ANY AND ALL UNDERGROUND UTILITIES.

NOTICE:
CONSTRUCTION SITE SAFETY IS THE SOLE RESPONSIBILITY OF THE CONTRACTOR NEITHER THE OWNER NOR THE ENGINEER SHALL BE EXPECTED TO ASSUME ANY RESPONSIBILITY FOR SAFETY OF THE WORK, OF PERSONS ENGAGED IN THE WORK, OF ANY NEARBY STRUCTURES, OR OF ANY OTHER PERSONS.

NORTH CAROLINA PROFESSIONAL SEAL 24419 ENGINEER MARK T. ARCURI

SEPI ENGINEERING & CONSTRUCTION, INC CORPORATE SEAL C-2197 N.C.

PRELIMINARY

NEW HANOVER COUNTY GOVERNMENT CENTER
230 GOVERNMENT CENTER DRIVE, WILMINGTON NC 28403

PREPARED FOR:
GHKCAPE FEAR DEVELOPMENT LLC
1051 MILITARY CUTOFF RD #200, WILMINGTON, NC 28405

PRELIMINARY
NOT FOR CONSTRUCTION

		DATE
PROJECT:	SE20.022.00	
ISSUE:	90% SUBMITTAL	10/01/2020
	.	.
	.	.
	.	.
	.	.
REVISIONS:		
	.	.
	.	.
	.	.
	.	.
	.	.
	.	.
PROJ. MGR:	MTA	
DRAWN BY:	KTD	
CHECKED BY:	MTA	

SITE DETAILS AND EROSION CONTROL, GRADING & STORMWATER DETAILS

C-15.5

10/1/2020 2:03 PM X:\2020\SE20.022.00 CFC-NHC Govt Complex\LD\Design\Drawings\Construction Plans\SE20022 - DETAILS.dwg

GROUND STABILIZATION AND MATERIALS HANDLING PRACTICES FOR COMPLIANCE WITH THE NCG01 CONSTRUCTION GENERAL PERMIT

Implementing the details and specifications on this plan sheet will result in the construction activity being considered compliant with the Ground Stabilization and Materials Handling sections of the NCG01 Construction General Permit (Sections E and F, respectively). The permittee shall comply with the Erosion and Sediment Control plan approved by the delegated authority having jurisdiction. All details and specifications shown on this sheet may not apply depending on site conditions and the delegated authority having jurisdiction.

Temporary and Permanent Groundcover*

STABILIZATION TIMEFRAMES
(Effective Aug. 3, 2011)

Site Area Description	Stabilization	Timeframe Exceptions
Perimeter dikes, swales, ditches, slopes	7 days	None
High Quality Water (HQW) Zones	7 days	None
Slopes steeper than 3:1	7 days	If slopes are 10' or less in length and are not steeper than 2:1, 14 days are allowed.
Slopes 3:1 or flatter	14 days	7 days for slopes greater than 50' in length.
All other areas with slopes flatter than 4:1	14 days	None, except for perimeters and HQW Zones.

*-For Falls Lake watershed, in disturbed areas where grading activities are incomplete, provide temporary groundcover no later than seven (7) days for slopes steeper than 3:1; ten (10) days for slopes equal to or flatter than 3:1; fourteen (14) days for areas with no slope.

GROUND STABILIZATION SPECIFICATION

Stabilize the ground sufficiently so that rain will not dislodge the soil. Use one of the techniques in the table below:

Temporary Stabilization	Permanent Stabilization
• Temporary grass seed covered with straw or other mulches and tackifiers • Hydroseeding • Rolled erosion control products with or without temporary grass seed • Appropriately applied straw or other mulch • Plastic sheeting	• Permanent grass seed covered with straw or other mulches and tackifiers • Geotextile fabrics such as permanent soil reinforcement matting • Hydroseeding • Shrubs or other permanent plantings covered with mulch • Uniform and evenly distributed ground cover sufficient to restrain erosion • Structural methods such as concrete, asphalt or retaining walls

POLYACRYLAMIDES (PAMS) AND FLOCCULANTS

1. Select flocculants that are appropriate for the soils being exposed during construction, selecting from the *NC DWR List of Approved PAMS/Flocculants*.
2. Apply flocculants at or before the inlets to Erosion and Sediment Control Measures.
3. Apply flocculants at the concentrations specified in the *NC DWR List of Approved PAMS/Flocculants* and in accordance with the manufacturer's instructions.
4. Provide ponding area for containment of treated Stormwater before discharging offsite.
5. Store flocculants in leak-proof containers that are kept under storm-resistant cover or surrounded by secondary containment structures.

NORTH CAROLINA
Environmental Quality

EQUIPMENT AND VEHICLE MAINTENANCE

1. Maintain vehicles and equipment to prevent discharge of fluids.
2. Provide drip pans under any stored equipment.
3. Identify leaks and repair as soon as feasible, or remove leaking equipment from the project.
4. Collect all spent fluids, store in separate containers and properly dispose as hazardous waste (recycle when possible).
5. Remove leaking vehicles and construction equipment from service until the problem has been corrected.
6. Bring used fuels, lubricants, coolants, hydraulic fluids and other petroleum products to a recycling or disposal center that handles these materials.

LITTER, BUILDING MATERIAL AND LAND CLEARING WASTE

1. Never bury or burn waste. Place litter and debris in approved waste containers.
2. Provide a sufficient number of waste containers on site to manage the quantity of waste produced.
3. Locate waste containers at least 50 feet away from storm drain inlets and surface waters unless no other alternatives are reasonably available.
4. Locate waste containers on areas that do not receive substantial amounts of runoff from upland areas and does not drain directly to a storm drain, stream or wetland.
5. Cover waste containers at the end of each workday and before storm events. Repair or replace damaged waste containers.
6. Anchor all lightweight items in waste containers during times of high winds.
7. Empty waste containers as needed to prevent overflow.
8. Dispose waste off-site at an approved disposal facility.

PAINT AND OTHER LIQUID WASTE

1. Do not dump paint and other liquid waste into storm drains, streams or wetlands.
2. Locate paint washouts at least 50 feet away from storm drain inlets and surface waters unless no other alternatives are reasonably available.
3. Contain liquid wastes in a controlled area.
4. Containment must be labeled, sized and placed appropriately for the needs of site.
5. Prevent the discharge of soaps, solvents, detergents and other liquid wastes from construction sites.

PORTABLE TOILETS

1. Install portable toilets on level ground, at least 50 feet away from storm drains, streams or wetlands unless there is no alternative reasonably available. If 50 foot offset is not attainable, provide relocation of portable toilet behind silt fence or place on a gravel pad and surround with sand bags.
2. Provide staking or anchoring of portable toilets during periods of high winds or in high foot traffic areas.
3. Monitor portable toilets for leaking and properly dispose of any leaked material. Utilize a licensed sanitary waste hauler to remove leaking portable toilets and replace with properly operating unit.

EARTHEN STOCKPILE MANAGEMENT

1. Show stockpile locations on plans. Locate earthen-material stockpile areas at least 50 feet away from storm drain inlets, sediment basins, perimeter sediment controls and surface waters unless it can be shown no other alternatives are reasonably available.
2. Protect stockpile with silt fence installed along toe of slope with a minimum offset of five feet from the toe of stockpile.
3. Provide stable stone access point when feasible.
4. Stabilize stockpile within the timeframes provided on this sheet and in accordance with the approved plan and any additional requirements. Soil stabilization is defined as vegetative, physical or chemical coverage techniques that will restrain accelerated erosion on disturbed soils for temporary or permanent control needs.

ONSITE CONCRETE WASHOUT STRUCTURE WITH LINER

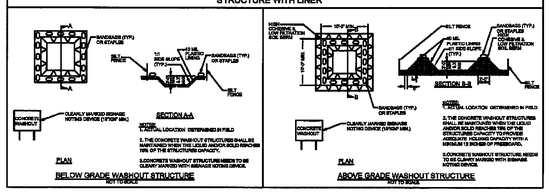

CONCRETE WASHOUTS

1. Do not discharge concrete or cement slurry from the site.
2. Dispose of, or recycle settled, hardened concrete residue in accordance with local and state solid waste regulations and at an approved facility.
3. Manage washout from mortar mixers in accordance with the above item and in addition place the mixer and associated materials on impervious barrier and within lot perimeter silt fence.
4. Install temporary concrete washouts per local requirements, where applicable. If an alternate method or product is to be used, contact your approval authority for review and approval. If local standard details are not available, use one of the two types of temporary concrete washouts provided on this detail.
5. Do not use concrete washouts for dewatering or storing defective curb or sidewalk sections. Stormwater accumulated within the washout may not be pumped into or discharged to the storm drain system or receiving surface waters. Liquid waste must be pumped out and removed from project.
6. Locate washouts at least 50 feet from storm drain inlets and surface waters unless it can be shown that no other alternatives are reasonably available. At a minimum, install protection of storm drain inlet(s) closest to the washout which could receive spills or overflow.
7. Locate washouts in an easily accessible area, on level ground and install a stone entrance pad in front of the washout. Additional controls may be required by the approving authority.
8. Install at least one sign directing concrete trucks to the washout within the project limits. Post signage on the washout itself to identify this location.
9. Remove leavings from the washout when at approximately 75% capacity to limit overflow events. Replace the tarp, sand bags or other temporary structural components when no longer functional. When utilizing alternative or proprietary products, follow manufacturer's instructions.
10. At the completion of the concrete work, remove remaining leavings and dispose of in an approved disposal facility. Fill pit, if applicable, and stabilize any disturbance caused by removal of washout.

HERBICIDES, PESTICIDES AND RODENTICIDES

1. Store and apply herbicides, pesticides and rodenticides in accordance with label restrictions.
2. Store herbicides, pesticides and rodenticides in their original containers with the label, which lists directions for use, ingredients and first aid steps in case of accidental poisoning.
3. Do not store herbicides, pesticides and rodenticides in areas where flooding is possible or where they may spill or leak into wells, stormwater drains, ground water or surface water. If a spill occurs, clean area immediately.
4. Do not stockpile these materials onsite.

HAZARDOUS AND TOXIC WASTE

1. Create designated hazardous waste collection areas on-site.
2. Place hazardous waste containers under cover or in secondary containment.
3. Do not store hazardous chemicals, drums or bagged materials directly on the ground.

NCG01 GROUND STABILIZATION AND MATERIALS HANDLING

EFFECTIVE: 03/01/19

Approved Construction Plan
Name Date
Planning
Traffic
Fire

CITY OF WILMINGTON NORTH CAROLINA
Public Services • Engineering Division
APPROVED STORMWATER MANAGEMENT PLAN
Date:_____ Permit #_____
Signed:

For each open utility cut of City streets, a $325 permit shall be required from the City prior to occupancy and/or project acceptance

SEPI
SEPI ENGINEERING & CONSTRUCTION, INC.
RALEIGH | WILMINGTON | CHARLOTTE
BEAUFORT | CHARLESTON
5030 NEW CENTRE DR. | SUITE B
WILMINGTON, NC 28403
PHONE | 910.523.5715
sepiinc.com

811 Know what's below. before you dig.
3 WORKING DAYS BEFORE YOU DIG
FOR THE LOCATION OF UNDERGROUND FACILITIES

THE LOCATIONS OF EXISTING UNDERGROUND UTILITIES ARE SHOWN IN AN APPROXIMATE WAY ONLY AND HAVE NOT BEEN INDEPENDENTLY VERIFIED BY THE OWNER OR ITS REPRESENTATIVE. THE CONTRACTOR SHALL DETERMINE THE EXACT LOCATION OF ALL EXISTING UTILITIES BEFORE COMMENCING WORK, AND AGREES TO BE FULLY RESPONSIBLE FOR ANY AND ALL DAMAGES WHICH MIGHT BE OCCASIONED BY THE CONTRACTOR'S FAILURE TO EXACTLY LOCATE AND PRESERVE ANY AND ALL UNDERGROUND UTILITIES.

NOTICE:
CONSTRUCTION SITE SAFETY IS THE SOLE RESPONSIBILITY OF THE CONTRACTOR NEITHER THE OWNER NOR THE ENGINEER SHALL BE EXPECTED TO ASSUME ANY RESPONSIBILITY FOR SAFETY OF THE WORK, OF PERSONS ENGAGED IN THE WORK, OF ANY NEARBY STRUCTURES, OR OF ANY OTHER PERSONS.

NORTH CAROLINA PROFESSIONAL SEAL 24419 ENGINEER MARK T. ARCURI
SEPI ENGINEERING & CONSTRUCTION, INC CORPORATE SEAL C-2197 N.C.
PRELIMINARY

NEW HANOVER COUNTY GOVERNMENT CENTER
230 GOVERNMENT CENTER DRIVE, WILMINGTON NC 28403

PREPARED FOR:
GHKCAPE FEAR DEVELOPMENT LLC
1051 MILITARY CUTOFF RD #200,
WILMINGTON, NC 28405

PRELIMINARY
NOT FOR CONSTRUCTION

		DATE
PROJECT:	SE20.022.00	
ISSUE:	90% SUBMITTAL	10/01/2020
REVISIONS:		
PROJ. MGR:	MTA	
DRAWN BY:	KTD	
CHECKED BY:	MTA	

NCG01 GROUND STABILIZATION AND MATERIALS HANDLING REQUIREMENTS

C-15.6

10/1/2020 6:51 PM X:\2020\SE20.022.00 CFC-NHC Govt Complex\LD\Design\Drawings\Construction Plans\SE20022 - DETAILS.dwg

PART III
SELF-INSPECTION, RECORDKEEPING AND REPORTING

SECTION A: SELF-INSPECTION

Self-inspections are required during normal business hours in accordance with the table below. When adverse weather or site conditions would cause the safety of the inspection personnel to be in jeopardy, the inspection may be delayed until the next business day on which it is safe to perform the inspection. In addition, when a storm event of greater than 1.0 inch occurs outside of normal business hours, the self-inspection shall be performed upon the commencement of the next business day. Any time when inspections were delayed shall be noted in the Inspection Record.

Inspect	Frequency (during normal business hours)	Inspection records must include [40 CFR 122.41]:
(1) Rain gauge maintained in good working order	Daily	Daily rainfall amounts. If no daily rain gauge observations are made during weekend or holiday periods, and no individual-day rainfall information is available, record the cumulative rain measurement for those un-attended days (and this will determine if a site inspection is needed). Days on which no rainfall occurred shall be recorded as "zero." The permittee may use another rain-monitoring device approved by the Division.
(2) E&SC Measures	At least once per 7 calendar days and within 24 hours of a rain event > 1.0 inch in 24 hours	1. Identification of the measures inspected, 2. Date and time of the inspection, 3. Name of the person performing the inspection, 4. Indication of whether the measures were operating properly, 5. Description of maintenance needs for the measure, 6. Corrective actions taken, and 7. Date of actions taken.
(3) Stormwater discharge outfalls (SDOs)	At least once per 7 calendar days and within 24 hours of a rain event > 1.0 inch in 24 hours	1. Identification of the discharge outfalls inspected, 2. Date and time of the inspection, 3. Name of the person performing the inspection, 4. Evidence of indicators of stormwater pollution such as oil sheen, floating or suspended solids or discoloration, 5. Indication of visible sediment leaving the site, 6. Actions taken to correct/prevent sedimentation, and 7. Date of actions taken.
(4) Perimeter of site	At least once per 7 calendar days and within 24 hours of a rain event > 1.0 inch in 24 hours	If visible sedimentation is found outside site limits, then a record of the following shall be made: 1. Actions taken to clean up or stabilize the sediment that has left the site limits, 2. Date of actions taken, and 3. An explanation as to the actions taken to control future releases.
(5) Streams or wetlands onsite or offsite (where accessible)	At least once per 7 calendar days and within 24 hours of a rain event > 1.0 inch in 24 hours	If the stream or wetland has increased visible sedimentation or a stream has visible increased turbidity from the construction activity, then a record of the following shall be made: 1. Evidence and actions taken to reduce sediment contributions, and 2. Records of the required reports to the appropriate Division Regional Office per Part III, Section C, Item (2)(a) of this permit of this permit.

NOTE: The rain inspection resets the required 7 calendar day inspection requirement.

PART III
SELF-INSPECTION, RECORDKEEPING AND REPORTING

SECTION B: RECORDKEEPING

1. E&SC Plan Documentation

The approved E&SC plan as well as any approved deviation shall be kept on the site. The approved E&SC plan must be kept up-to-date throughout the coverage under this permit. The following items pertaining to the E&SC plan shall be documented in the manner described:

Item to Document	Documentation Requirements
(a) Each E&SC Measure has been installed and does not significantly deviate from the locations, dimensions and relative elevations shown on the approved E&SC Plan.	Initial and date each E&SC Measure on a copy of the approved E&SC Plan or complete, date and sign an inspection report that lists each E&SC Measure shown on the approved E&SC Plan. This documentation is required upon the initial installation of the E&SC Measures or if the E&SC Measures are modified after initial installation.
(b) A phase of grading has been completed.	Initial and date a copy of the approved E&SC Plan or complete, date and sign an inspection report to indicate completion of the construction phase.
(c) Ground cover is located and installed in accordance with the approved E&SC Plan.	Initial and date a copy of the approved E&SC Plan or complete, date and sign an inspection report to indicate compliance with approved ground cover specifications.
(d) The maintenance and repair requirements for all E&SC Measures have been performed.	Complete, date and sign an inspection report.
(e) Corrective actions have been taken to E&SC Measures.	Initial and date a copy of the approved E&SC Plan or complete, date and sign an inspection report to indicate the completion of the corrective action.

2. Additional Documentation

In addition to the E&SC Plan documents above, the following items shall be kept on the site and available for agency inspectors at all times during normal business hours, unless the Division provides a site-specific exemption based on unique site conditions that make this requirement not practical:

(a) This general permit as well as the certificate of coverage, after it is received.

(b) Records of inspections made during the previous 30 days. The permittee shall record the required observations on the Inspection Record Form provided by the Division or a similar inspection form that includes all the required elements. Use of electronically-available records in lieu of the required paper copies will be allowed if shown to provide equal access and utility as the hard-copy records.

(c) All data used to complete the Notice of Intent and older inspection records shall be maintained for a period of three years after project completion and made available upon request. [40 CFR 122.41]

PART III
SELF-INSPECTION, RECORDKEEPING AND REPORTING

SECTION C: REPORTING

1. Occurrences that must be reported

Permittees shall report the following occurrences:

(a) Visible sediment deposition in a stream or wetland.

(b) Oil spills if:
- They are 25 gallons or more,
- They are less than 25 gallons but cannot be cleaned up within 24 hours,
- They cause sheen on surface waters (regardless of volume), or
- They are within 100 feet of surface waters (regardless of volume).

(a) Releases of hazardous substances in excess of reportable quantities under Section 311 of the Clean Water Act (Ref: 40 CFR 110.3 and 40 CFR 117.3) or Section 102 of CERCLA (Ref: 40 CFR 302.4) or G.S. 143-215.85.

(b) Anticipated bypasses and unanticipated bypasses.

(c) Noncompliance with the conditions of this permit that may endanger health or the environment.

2. Reporting Timeframes and Other Requirements

After a permittee becomes aware of an occurrence that must be reported, he shall contact the appropriate Division regional office within the timeframes and in accordance with the other requirements listed below. Occurrences outside normal business hours may also be reported to the Division's Emergency Response personnel at (800) 662-7956, (800) 858-0368 or (919) 733-3300.

Occurrence	Reporting Timeframes (After Discovery) and Other Requirements
(a) Visible sediment deposition in a stream or wetland	• ***Within 24 hours***, an oral or electronic notification. • ***Within 7 calendar days***, a report that contains a description of the sediment and actions taken to address the cause of the deposition. Division staff may waive the requirement for a written report on a case-by-case basis. • If the stream is named on the NC 303(d) list as impaired for sediment-related causes, the permittee may be required to perform additional monitoring, inspections or apply more stringent practices if staff determine that additional requirements are needed to assure compliance with the federal or state impaired-waters conditions.
(b) Oil spills and release of hazardous substances per Item 1(b)-(c) above	• ***Within 24 hours***, an oral or electronic notification. The notification shall include information about the date, time, nature, volume and location of the spill or release.
(c) Anticipated bypasses [40 CFR 122.41(m)(3)]	• ***A report at least ten days before the date of the bypass, if possible***. The report shall include an evaluation of the anticipated quality and effect of the bypass.
(d) Unanticipated bypasses [40 CFR 122.41(m)(3)]	• ***Within 24 hours***, an oral or electronic notification. • ***Within 7 calendar days***, a report that includes an evaluation of the quality and effect of the bypass.
(e) Noncompliance with the conditions of this permit that may endanger health or the environment[40 CFR 122.41(l)(7)]	• ***Within 24 hours***, an oral or electronic notification. • ***Within 7 calendar days***, a report that contains a description of the noncompliance, and its causes; the period of noncompliance, including exact dates and times, and if the noncompliance has not been corrected, the anticipated time noncompliance is expected to continue; and steps taken or planned to reduce, eliminate, and prevent reoccurrence of the noncompliance. [40 CFR 122.41(l)(6). • Division staff may waive the requirement for a written report on a case-by-case basis.

NORTH CAROLINA *Environmental Quality*

NCG01 SELF-INSPECTION, RECORDKEEPING AND REPORTING

EFFECTIVE: 03/01/19

Approved Construction Plan

Name Date

Planning

Traffic

Fire

CITY OF WILMINGTON NORTH CAROLINA

Public Services • Engineering Division

APPROVED STORMWATER MANAGEMENT PLAN

Date:_____ Permit #_____

Signed: _____

For each open utility cut of City streets, a $325 permit shall be required from the City prior to occupancy and/or project acceptance

SEPI

SEPI ENGINEERING & CONSTRUCTION, INC.
RALEIGH | WILMINGTON | CHARLOTTE
BEAUFORT | CHARLESTON

5030 NEW CENTRE DR. | SUITE B
WILMINGTON, NC 28403
PHONE | 910.523.5715

sepiinc.com

811 3 WORKING DAYS BEFORE YOU DIG FOR THE LOCATION OF UNDERGROUND FACILITIES

Know what's below. before you dig.

THE LOCATIONS OF EXISTING UNDERGROUND UTILITIES ARE SHOWN IN AN APPROXIMATE WAY ONLY AND HAVE NOT BEEN INDEPENDENTLY VERIFIED BY THE OWNER OR ITS REPRESENTATIVE. THE CONTRACTOR SHALL DETERMINE THE EXACT LOCATION OF ALL EXISTING UTILITIES BEFORE COMMENCING WORK, AND AGREES TO BE FULLY RESPONSIBLE FOR ANY AND ALL DAMAGES WHICH MIGHT BE OCCASIONED BY THE CONTRACTOR'S FAILURE TO EXACTLY LOCATE AND PRESERVE ANY AND ALL UNDERGROUND UTILITIES.

NOTICE:
CONSTRUCTION SITE SAFETY IS THE SOLE RESPONSIBILITY OF THE CONTRACTOR NEITHER THE OWNER NOR THE ENGINEER SHALL BE EXPECTED TO ASSUME ANY RESPONSIBILITY FOR SAFETY OF THE WORK, OF PERSONS ENGAGED IN THE WORK, OF ANY NEARBY STRUCTURES, OR OF ANY OTHER PERSONS.

NORTH CAROLINA PROFESSIONAL SEAL 24419 ENGINEER MARK T. ARCURI

SEPI ENGINEERING & CONSTRUCTION, INC. CORPORATE SEAL C-2197 N.C.

PRELIMINARY

NEW HANOVER COUNTY GOVERNMENT CENTER

230 GOVERNMENT CENTER DRIVE, WILMINGTON NC 28403

PREPARED FOR:
GHKCAPE FEAR DEVELOPMENT LLC
1051 MILITARY CUTOFF RD #200,
WILMINGTON, NC 28405

PRELIMINARY
NOT FOR CONSTRUCTION

		DATE
PROJECT:	SE20.022.00	
ISSUE:	90% SUBMITTAL	10/01/2020

REVISIONS:

PROJ. MGR:	MTA
DRAWN BY:	KTD
CHECKED BY:	MTA

NCG01 SELF-INSPECTION, RECORDKEEPING AND REPORTING REQUIREMENTS

C-15.7

10/1/2020 4:55 PM X:\2020\SE20.022.00 CFC-NHC Govt Complex\LD\Design\Drawings\Construction Plans\SE20022 - DETAILS.dwg

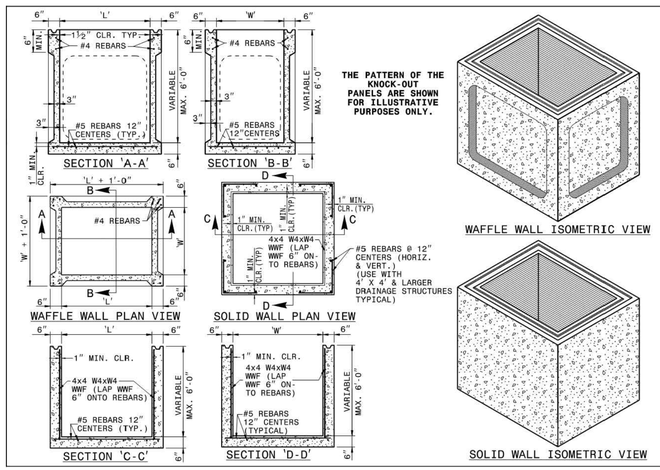

STATE OF NORTH CAROLINA DEPT. OF TRANSPORTATION DIVISION OF HIGHWAYS RALEIGH, N.C.

I-18

ROADWAY STANDARD DRAWING FOR **PRECAST DRAINAGE STRUCTURE** (SOLID AND WAFFLE WALL)

SHEET 1 OF 2 **840.45**

PRECAST DRAINAGE STRUCTURE (SOLID AND WAFFLE WALL)

NC DOT STANDARD DETAIL 840.45

GENERAL NOTES:

- THIS PRECAST BOX MAY BE USED FOR THE FOLLOWING STANDARDS: 840.01, 840.02, 840.04, 840.05, 840.13, 840.14, 840.15, 840.17, 840.18, 840.19, 840.26, 840.27, 840.28, 840.31, 840.32 AND 840.41.
- INSTALL PRECAST DRAINAGE STRUCTURES AND PAY FOR IN ACCORDANCE WITH SPECIFICATION SECTION 840.
- DO NOT PLACE PRECAST DRAINAGE STRUCTURES UNDER TRAFFIC OR WHERE TRAFFIC WILL BE DETOURED.
- USE 4000 PSI CONCRETE.
- PROVIDE ALL REINFORCING STEEL WHICH MEETS ASTM A615 FOR GRADE 60 AND WELDED WIRE FABRIC CONFORMING TO ASTM A1064.
- LIMIT MAXIMUM DEPTH TO TOP OF BOTTOM SLAB FOR WAFFLE WALL STRUCTURE TO 10'-0"; LIMIT SOLID WALL STRUCTURE TO 15'-0".
- PLACE LIFT HOLES OR PINS IN ACCORDANCE WITH OSHA STANDARD 1926.704.
- CUT OR FORM OPENINGS FOR PIPE TO PROVIDE REQUIRED SIZE AND LOCATION. ORIENT WAFFLE WALL STRUCTURES SO THAT PIPES ENTER THROUGH THE KNOCKOUT/WAFFLE PANELS ONLY. PIPES MAY ENTER THROUGH THE CORNERS OF SOLID WALL BOXES IF A MINIMUM OF 6" OF WALL IS PROVIDED ABOVE THE HOLE.
- ALL ELEMENTS PRECAST TO MEET ASTM C913.
- FRAME AND GRATE HEIGHT MAY BE ADJUSTED WITH CONCRETE OR BRICK IN ACCORDANCE WITH STANDARD 840.25.
- PROVIDE PRECAST STRUCTURES OVER 4'-0" IN DEPTH WITH STEPS AS DIRECTED BY THE ENGINEER.
- WELDED WIRE FABRIC MAY BE SUBSTITUTED FOR REBAR AS LONG AS THE SAME AREA OF STEEL IS PROVIDED.
- SEAL JOINTS WITH A FLEXIBLE BUTYL RUBBER BASE CONFORMING TO FEDERAL SPECIFICATION SS-S-21A, AASHTO M-198, TYPE B - BUTYL RUBBER.
- LIMIT MAXIMUM STRUCTURE SIZE TO INSIDE CLEAR DIMENSIONS OF 5'-0" X 5'-0".
- THE OUTSIDE PIPE DIAMETER PLUS 2" OR THE OPENING REQUIRED FOR FRAME AND GRATE IS THE MINIMUM STRUCTURE SIZE WHICHEVER IS GREATER.
- USE MANHOLE FRAME AND COVER AS INDICATED ON THE PLANS. REINFORCE OPENING AS SHOWN ON THIS SHEET.

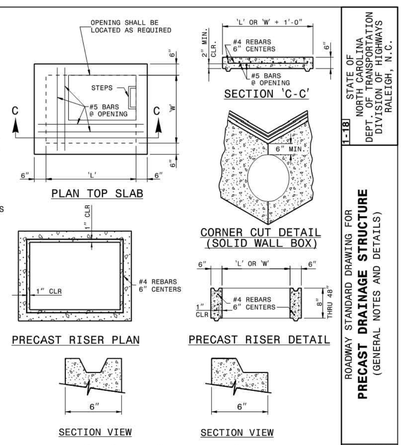

OPTIONAL JOINT DETAILS

STATE OF NORTH CAROLINA DEPT. OF TRANSPORTATION DIVISION OF HIGHWAYS RALEIGH, N.C.

I-18

ROADWAY STANDARD DRAWING FOR **PRECAST DRAINAGE STRUCTURE** (GENERAL NOTES AND DETAILS)

SHEET 2 OF 2 **840.45**

OPTIONAL JOINT DETAILS

NC DOT STANDARD DETAIL (12" THRU 30" PIPE)

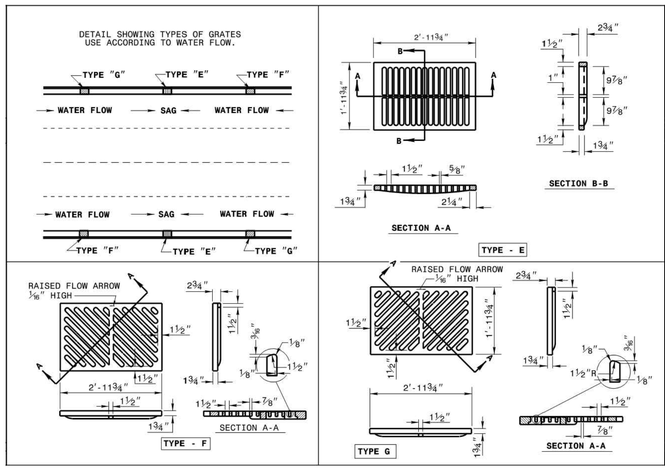

STATE OF NORTH CAROLINA DEPT. OF TRANSPORTATION DIVISION OF HIGHWAYS RALEIGH, N.C.

I-18

ROADWAY STANDARD DRAWING FOR **FRAME, GRATES, AND HOOD** FOR USE ON STANDARD CATCH BASIN

SHEET 2 OF 2 **840.03**

CATCH BASIN FRAMES, GRATES AND HOODS

NC DOT STANDARD DETAIL 840.03 (1 OF 2)

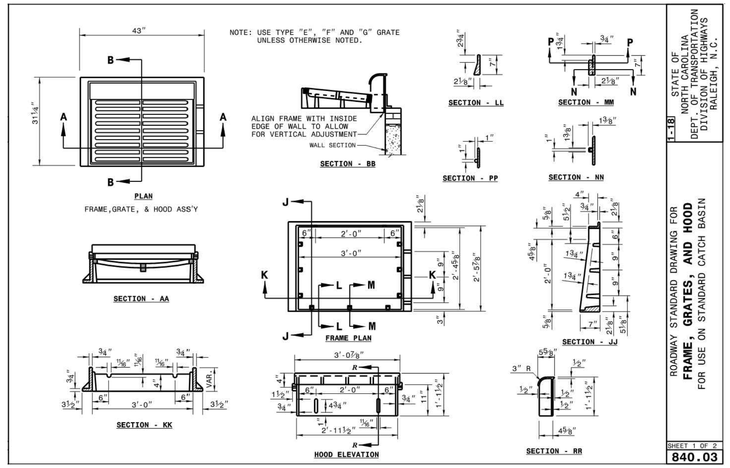

STATE OF NORTH CAROLINA DEPT. OF TRANSPORTATION DIVISION OF HIGHWAYS RALEIGH, N.C.

I-18

ROADWAY STANDARD DRAWING FOR **FRAME, GRATES, AND HOOD** FOR USE ON STANDARD CATCH BASIN

SHEET 1 OF 2 **840.03**

CATCH BASIN FRAMES, GRATES AND HOODS

NC DOT STANDARD DETAIL 840.03 (2 OF 2)

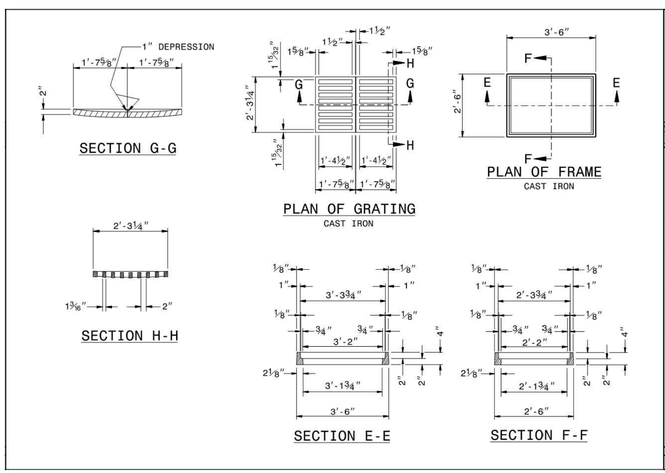

STATE OF NORTH CAROLINA DEPT. OF TRANSPORTATION DIVISION OF HIGHWAYS RALEIGH, N.C.

I-18

ROADWAY STANDARD DRAWING FOR **DROP INLET FRAME AND GRATES** FOR USE WITH STD. DWG.S 840.14 AND 840.15

SHEET 1 OF 1 **840.16**

DROP INLET, FRAMES AND GRATES

NC DOT STANDARD DETAIL 840.16

STRUCTURES

1. PRECAST STRUCTURES SHALL MEET NC DOT 840.45 OR PRIOR APPROVED EQUIVALENT.
2. BRICK BUILT CATCH BASINS CAN ALTERNATIVELY BE USED, AND SHALL MEET NC DOT 840.01, OR PRIOR APPROVED EQUIVALENT.
3. CONCRETE CATCH BASINS CAN ALTERNATIVELY BE USED, AND SHALL MEET NC DOT 840.02, OR PRIOR APPROVED EQUIVALENT.
4. CONCRETE DROP INLETS CAN ALTERNATIVELY BE USED, AND SHALL MEET NC DOT 840.14, OR PRIOR APPROVED EQUIVALENT.
5. BRICK BUILT DROP INLETS CAN ALTERNATIVELY BE USED, AND SHALL MEET NC DOT 840.15, OR PRIOR APPROVED EQUIVALENT.

CASTINGS

1. CATCH BASIN CASTINGS SHALL BE NC DOT 840.03, OR PRIOR APPROVED EQUIVALENT
2. DROP INLET CASTINGS SHALL BE NC DOT 840.16, OR PRIOR APPROVED EQUIVALENT
3. STORM DRAIN MANHOLE CASTINGS SHALL BE NC DOT 840.54, OR PRIOR APPROVED EQUIVALENT .

OTHER

1. ORIENTATION OF STORM DRAIN INLETS ON PLAN ARE FOR THE GRATE AND/OR CASTINGS. MINIMUM STRUCTURE SIZE IS 2' X 2' PLAN DIMENSION. CONTRACTOR SHALL PROVIDE BOXES LARGER THAN MINIMUM SIZE, ORIENT THE BOX/STRUCTURE, AND/OR PROVIDE TRANSITION TOPS AS NECESSARY TO ACCEPT THE PIPE SIZES AND TO ACHIEVE THE PIPE ALIGNMENT TO SCALE AS SHOWN ON THE PLAN. PIPES SHALL NOT CONNECT AT BOX CORNERS WITHOUT PRIOR APPROVAL FROM THE ENGINEER. SUMPS SHALL BE ZERO INCHES UNLESS OTHERWISE SHOWN. THERE SHALL BE NO MAN STEPS UNLESS OTHERWISE SHOWN.
2. GROUT BOTTOM OF STRUCTURES TO FORM BOWL-SHAPED INVERT WITH CONTINUOUS POSITIVE SLOPE FROM ALL INLET PIPES TO OUTLET PIPE.

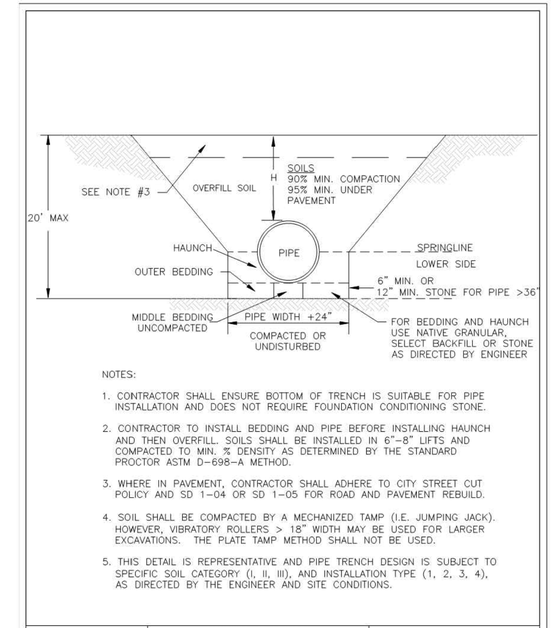

NOTES:

1. CONTRACTOR SHALL ENSURE BOTTOM OF TRENCH IS SUITABLE FOR PIPE INSTALLATION AND DOES NOT REQUIRE FOUNDATION CONDITIONING STONE.
2. CONTRACTOR TO INSTALL BEDDING AND PIPE BEFORE INSTALLING HAUNCH AND THEN OVERFILL. SOILS SHALL BE INSTALLED IN 6"–8" LIFTS AND COMPACTED TO MIN. % DENSITY AS DETERMINED BY THE STANDARD PROCTOR ASTM D–698–A METHOD.
3. WHERE IN PAVEMENT, CONTRACTOR SHALL ADHERE TO CITY STREET CUT POLICY AND SD 1–04 OR SD 1–05 FOR ROAD AND PAVEMENT REBUILD.
4. SOIL SHALL BE COMPACTED BY A MECHANIZED TAMP (I.E. JUMPING JACK). HOWEVER, VIBRATORY ROLLERS > 18" WIDTH MAY BE USED FOR LARGER EXCAVATIONS. THE PLATE TAMP METHOD SHALL NOT BE USED.
5. THIS DETAIL IS REPRESENTATIVE AND PIPE TRENCH DESIGN IS SUBJECT TO SPECIFIC SOIL CATEGORY (I, II, III), AND INSTALLATION TYPE (1, 2, 3, 4), AS DIRECTED BY THE ENGINEER AND SITE CONDITIONS.

DATE: MAY, 2013	STANDARD DETAIL	CITY OF WILMINGTON NORTH CAROLINA
DRAWN: JSR	PIPE TRENCH TYPICAL	CITY OF WILMINGTON ENGINEERING OFFICE 212 OPERATIONS CENTER DRIVE WILMINGTON N.C. 28412 (910) 341–7807
CHECKED: BDR, P.E.		SD 1-07
SCALE: NOT TO SCALE		

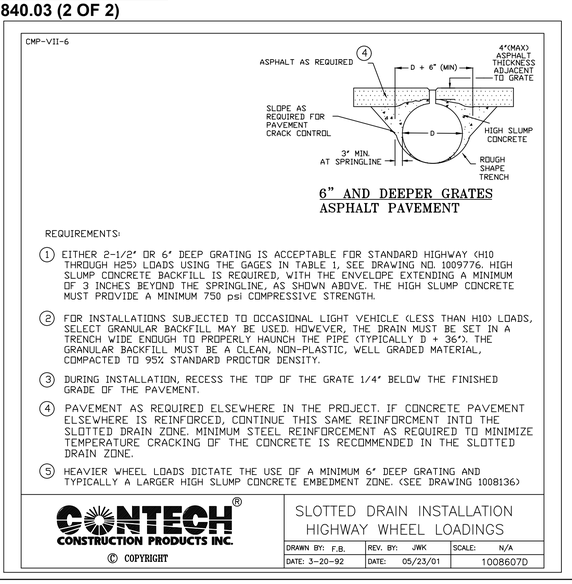

Approved Construction Plan

	Name	Date
Planning		
Traffic		
Fire		

CITY OF WILMINGTON NORTH CAROLINA
Public Services • Engineering Division
APPROVED STORMWATER MANAGEMENT PLAN
Date:_____ Permit #_____
Signed: _____

For each open utility cut of City streets, a $325 permit shall be required from the City prior to occupancy and/or project acceptance

SEPI
SEPI ENGINEERING & CONSTRUCTION, INC.
RALEIGH | WILMINGTON | CHARLOTTE
BEAUFORT | CHARLESTON
5030 NEW CENTRE DR. | SUITE B
WILMINGTON, NC 28403
PHONE | 910.523.5715
sepiinc.com

811 Know what's below. before you dig.
3 WORKING DAYS BEFORE YOU DIG
FOR THE LOCATION OF UNDERGROUND FACILITIES

THE LOCATIONS OF EXISTING UNDERGROUND UTILITIES ARE SHOWN IN AN APPROXIMATE WAY ONLY AND HAVE NOT BEEN INDEPENDENTLY VERIFIED BY THE OWNER OR ITS REPRESENTATIVE. THE CONTRACTOR SHALL DETERMINE THE EXACT LOCATION OF ALL EXISTING UTILITIES BEFORE COMMENCING WORK, AND AGREES TO BE FULLY RESPONSIBLE FOR ANY AND ALL DAMAGES WHICH MIGHT BE OCCASIONED BY THE CONTRACTOR'S FAILURE TO EXACTLY LOCATE AND PRESERVE ANY AND ALL UNDERGROUND UTILITIES.

NOTICE:
CONSTRUCTION SITE SAFETY IS THE SOLE RESPONSIBILITY OF THE CONTRACTOR NEITHER THE OWNER NOR THE ENGINEER SHALL BE EXPECTED TO ASSUME ANY RESPONSIBILITY FOR SAFETY OF THE WORK, OF PERSONS ENGAGED IN THE WORK, OF ANY NEARBY STRUCTURES, OR OF ANY OTHER PERSONS.

NORTH CAROLINA PROFESSIONAL SEAL 24419 ENGINEER MARK T. ARCURI
SEPI ENGINEERING & CONSTRUCTION, INC. CORPORATE SEAL C-2197 N.C.
PRELIMINARY

NEW HANOVER COUNTY GOVERNMENT CENTER
230 GOVERNMENT CENTER DRIVE, WILMINGTON NC 28403

PREPARED FOR:
GHKCAPE FEAR DEVELOPMENT LLC
1051 MILITARY CUTOFF RD #200, WILMINGTON, NC 28405

PRELIMINARY
NOT FOR CONSTRUCTION

		DATE
PROJECT:	SE20.022.00	
ISSUE:	90% SUBMITTAL	10/01/2020
REVISIONS:		
PROJ. MGR:	MTA	
DRAWN BY:	KTD	
CHECKED BY:	MTA	

STORM STRUCTURE DETAILS

C-15.8

10/1/2020 2:05 PM X:\2020\SE20.022.00 CFC-NHC Govt Complex\LD\Design\Drawings\Construction Plans\SE20022 - DETAILS.dwg

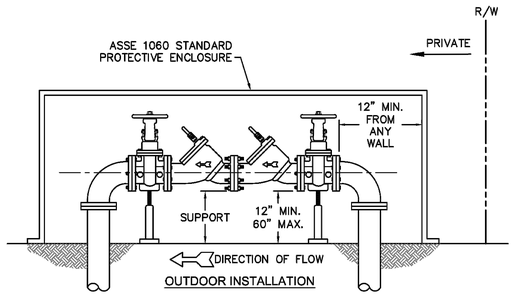

OUTDOOR INSTALLATION

NOTES:
1. MUST BE MIN. 36" AWAY FROM ANY ELECTRICAL PANEL.
2. VALVE REQUIRED DOWNSTREAM OF BACKFLOW ASSEMBLY.
3. VERTICAL INSTALLATION SHALL BE DESIGNED AND SUBMITTED TO CFPUA EMD FOR APPROVAL.
4. LOCATE AS CLOSE TO THE RIGHT-OF-WAY AS POSSIBLE.
5. INDOOR INSTALLATIONS MUST BE APPROVED BY CFPUA.
6. MUST COMPLETE CFPUA'S BACKFLOW INSTALLATION FORM. CONTACT COMMUNITY COMPLIANCE AT 910-332-6558 OR COMMUNITY.COMPLIANCE@CFPUA.ORG.
7. ONLY IN-LINE TESTABLE ASSEMBLIES APPROVED BY THE USC FOUNDATION FOR CROSS CONNECTION CONTROL OR ASSE SHALL BE ACCEPTED.

DETAIL: DOUBLE CHECK VALVE ASSEMBLY		CAPE FEAR PUBLIC UTILITY AUTHORITY 235 GOVERNMENT CENTER DRIVE WILMINGTON, NC 28403 OFFICE: (910)332-6560	DETAIL NO: EM-2
SCALE: NOT TO SCALE	CFPUA DETAIL DATE: 01/01/20		SHEET NO: -
CFPUA REV. No: 2		Stewardship. Sustainability. Service.	

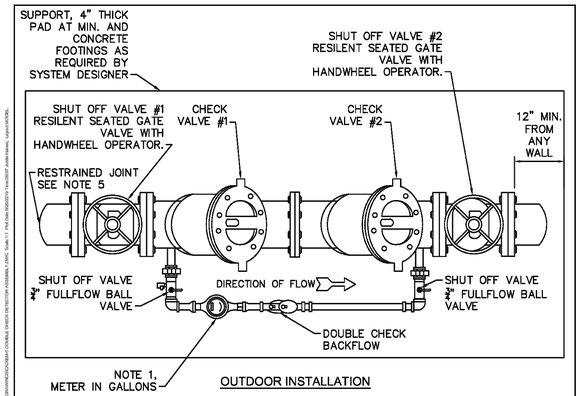

OUTDOOR INSTALLATION

NOTES:
1. FIRE SERVICE BACKFLOW ASSEMBLIES MUST BE CFPUA APPROVED.
2. ABOVE GROUND DOUBLE CHECK DETECTOR ASSEMBLIES (DCDA) PER CFPUA STANDARDS.
3. 4"-10" DCDA SHALL BE SUPPORTED WITH ADEQUATE SUPPORT PEDESTAL(S).
4. OUTDOOR INSTALLATION SHALL HAVE A PROTECTIVE ENCLOSURE PER CFPUA STANDARDS.
5. MAIN LINE 3" BRASS, K-COPPER OR GALVANIZED PIPE, 4" TO 10" DIP. RESTRAINED JOINTS SHALL BE FLANGED OR APPROVED EQUAL.
6. CFPUA APPROVED 3" – 10" DCDA INCLUDES SHUT OFF VALVES #1 AND #2. AS PART OF THE ASSEMBLY. NO SUBSTITUTIONS SHALL BE PERMITTED.
7. TEST COCK #1 SHALL BE UPSTREAM OF SHUT OFF VALVE #1 AND IS PART OF THE APPROVED ASSEMBLY.
8. MUST COMPLETE CFPUA'S BACKFLOW INSTALLATION FORM. CONTACT COMMUNITY COMPLIANCE AT 910-332-6558 OR EMAIL COMMUNITY.COMPLIANCE@CFPUA.ORG.
9. ONLY IN-LINE TESTABLE ASSEMBLIES APPROVED BY THE USC FOUNDATION FOR CROSS CONNECTION CONTROL OR ASSE SHALL BE ACCEPTED.

DETAIL: FIRE SERVICE DOUBLE CHECK DETECTOR ASSEMBLY		CAPE FEAR PUBLIC UTILITY AUTHORITY 235 GOVERNMENT CENTER DRIVE WILMINGTON, NC 28403 OFFICE: (910)332-6560	DETAIL NO: EM-5
SCALE: NOT TO SCALE	CFPUA DETAIL DATE: 01/01/20		SHEET NO: -
CFPUA REV. No: 2		Stewardship. Sustainability. Service.	

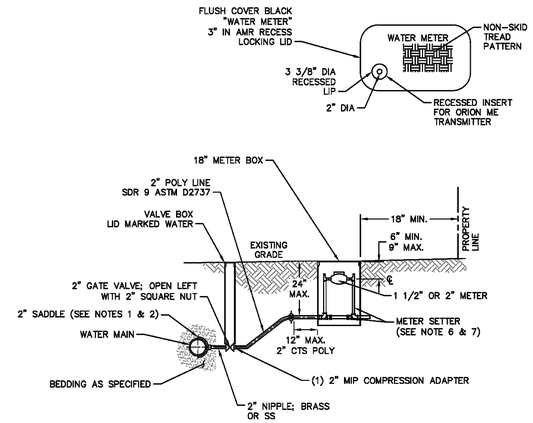

NOTES:
1. WATER SERVICES SHALL BE INSTALLED PERPENDICULAR TO MAIN AND TERMINATE 18" INSIDE THE RIGHT-OF-WAY LINE.
2. SERVICE SADDLES ON PVC MAINS SHALL BE WIDE BAND BRASS BODY.
3. METER BOXES SUSCEPTIBLE TO TRAFFIC SHALL CONFORM TO ASTM A48, CLASS 30B AND AASHTO H20 LOAD RATING STANDARDS.
4. NON-TRAFFIC METER BOXES SHALL BE PER CFPUA STANDARD MATERIAL.
5. 3" CLEAN FILL REQUIRED ALL AROUND 2" POLY SERVICE LINE.
6. 1 1/2" METER – NL METER SETTER SHALL BE PER CFPUA STANDARD MATERIAL.
7. 2" METER – NL METER SETTER SHALL BE PER CFPUA STANDARD MATERIAL.
8. WATER METER BOXES ARE TO BE A MINIMUM OF 5 FEET FROM THE PROPERTY CORNERS.
9. SERVICE PIPING AND METER SETTER TO BE CENTERED IN THE METER BOX.

DETAIL: COMMERCIAL WATER SERVICE - 1 1/2 OR 2-INCH METERS		CAPE FEAR PUBLIC UTILITY AUTHORITY 235 GOVERNMENT CENTER DRIVE WILMINGTON, NC 28403 OFFICE: (910)332-6560	DETAIL NO: W-3
SCALE: NOT TO SCALE	CFPUA DETAIL DATE: 01/01/20		SHEET NO: -
CFPUA REV. No: 2		Stewardship. Sustainability. Service.	

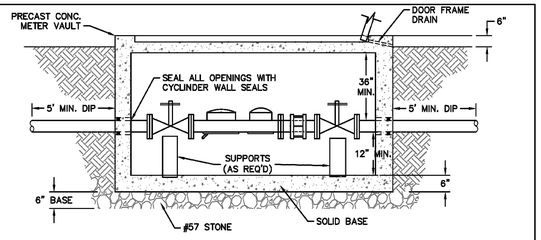

METER VAULT SECTION A-A

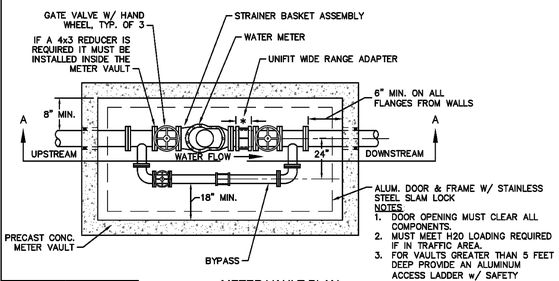

METER VAULT PLAN

NOTES:
1. DOOR OPENING MUST CLEAR ALL COMPONENTS.
2. MUST MEET H20 LOADING REQUIRED IF IN TRAFFIC AREA.
3. FOR VAULTS GREATER THAN 5 FEET DEEP PROVIDE AN ALUMINUM ACCESS LADDER w/ SAFETY EXTENSION AND NON-SKID RUNGS @ 12" o/c ANCHORED TO THE WALL.

Meter Size	By-Pass Size
3"	4"
4"	4"
6"	4"
8"	4"
10"	6"
12"	8"

* UNIFIT WIDE RANGE ADAPTER IS BOLTED DIRECTLY TO METER, ONLY ONE PExFLG PIECE THAT IS 3 TIMES THE PIPE DIAMETER.

DETAIL: COMMERCIAL WATER SERVICE - 3-INCH AND LARGER METERS		CAPE FEAR PUBLIC UTILITY AUTHORITY 235 GOVERNMENT CENTER DRIVE WILMINGTON, NC 28403 OFFICE: (910)332-6560	DETAIL NO: W-4
SCALE: NOT TO SCALE	CFPUA DETAIL DATE: 01/01/20		SHEET NO: -
CFPUA REV. No: 2		Stewardship. Sustainability. Service.	

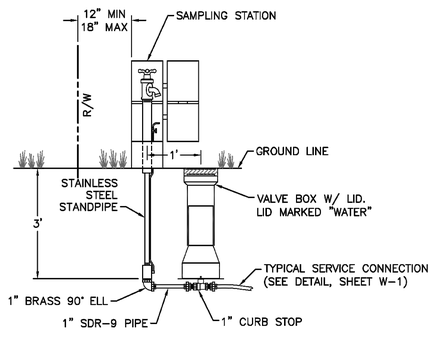

DETAIL: SAMPLING STATION		CAPE FEAR PUBLIC UTILITY AUTHORITY 235 GOVERNMENT CENTER DRIVE WILMINGTON, NC 28403 OFFICE: (910)332-6560	DETAIL NO: W-8
SCALE: NOT TO SCALE	CFPUA DETAIL DATE: 01/01/20		SHEET NO: -
CFPUA REV. No: 2		Stewardship. Sustainability. Service.	

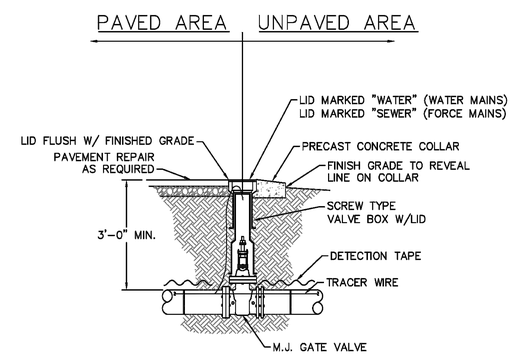

NOTES:
1. TRACER WIRE SHALL PENETRATE VALVE BOX THROUGH DRILLED HOLE APPROX. 6" BELOW GRADE WITH MINIMUM 2-FEET EXTRA LENGTH COILED IN THE VALVE BOX. SEE WS-6.

DETAIL: VALVE DETAIL		CAPE FEAR PUBLIC UTILITY AUTHORITY 235 GOVERNMENT CENTER DRIVE WILMINGTON, NC 28403 OFFICE: (910)332-6560	DETAIL NO: WS-5
SCALE: NOT TO SCALE	CFPUA DETAIL DATE: 01/01/20		SHEET NO: -
CFPUA REV. No: 2		Stewardship. Sustainability. Service.	

SEPI ENGINEERING & CONSTRUCTION, INC.
RALEIGH | WILMINGTON | CHARLOTTE
BEAUFORT | CHARLESTON
5030 NEW CENTRE DR. | SUITE B
WILMINGTON, NC 28403
PHONE | 910.523.5715
sepiinc.com

811 3 WORKING DAYS BEFORE YOU DIG FOR THE LOCATION OF UNDERGROUND FACILITIES
Know what's below, before you dig.

THE LOCATIONS OF EXISTING UNDERGROUND UTILITIES ARE SHOWN IN AN APPROXIMATE WAY ONLY AND HAVE NOT BEEN INDEPENDENTLY VERIFIED BY THE OWNER OR ITS REPRESENTATIVE. THE CONTRACTOR SHALL DETERMINE THE EXACT LOCATION OF ALL EXISTING UTILITIES BEFORE COMMENCING WORK, AND AGREES TO BE FULLY RESPONSIBLE FOR ANY AND ALL DAMAGES WHICH MIGHT BE OCCASIONED BY THE CONTRACTOR'S FAILURE TO EXACTLY LOCATE AND PRESERVE ANY AND ALL UNDERGROUND UTILITIES.

NOTICE:
CONSTRUCTION SITE SAFETY IS THE SOLE RESPONSIBILITY OF THE CONTRACTOR NEITHER THE OWNER NOR THE ENGINEER SHALL BE EXPECTED TO ASSUME ANY RESPONSIBILITY FOR SAFETY OF THE WORK, OF PERSONS ENGAGED IN THE WORK, OF ANY NEARBY STRUCTURES, OR OF ANY OTHER PERSONS.

NORTH CAROLINA PROFESSIONAL SEAL 24419 ENGINEER MARK T. ARCURI

SEPI ENGINEERING & CONSTRUCTION, INC. CORPORATE SEAL C-2197 N.C.

PRELIMINARY

NEW HANOVER COUNTY GOVERNMENT CENTER
230 GOVERNMENT CENTER DRIVE, WILMINGTON NC 28403

PREPARED FOR:
GHKCAPE FEAR DEVELOPMENT LLC
1051 MILITARY CUTOFF RD #200,
WILMINGTON, NC 28405

PRELIMINARY
NOT FOR CONSTRUCTION

		DATE
PROJECT:	SE20.022.00	
ISSUE:	90% SUBMITTAL	10/01/2020
REVISIONS:		

PROJ. MGR:	MTA
DRAWN BY:	KTD
CHECKED BY:	MTA

CFPUA UTILITY DETAILS I

C-15.9

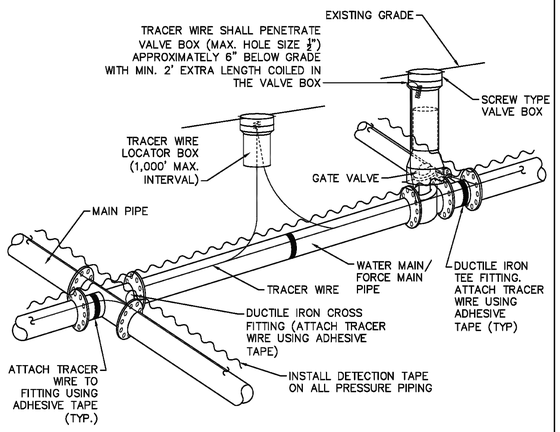

NOTES:
1. TRACER WIRE SHALL BE INSTALLED PER THE CFPUA MSM.
2. WIRE SHALL BE STRAPPED TO ALL PVC PIPING WITH ADHESIVE TAPE AT 12 FOOT INTERVALS.
3. SECURE WIRE TO ALL TEE AND CROSS FITTINGS WITH ADHESIVE TAPE.
4. ALL SPLICES IN THE WIRE SHALL BE MADE WITH 3M DBR DIRECT BURY SPLICE KITS.

DETAIL: TRACER WIRE DETAIL	CAPE FEAR PUBLIC UTILITY AUTHORITY 235 GOVERNMENT CENTER DRIVE WILMINGTON, NC 28403 OFFICE: (910)332-6560	DETAIL NO: WS-6
SCALE: NOT TO SCALE / CFPUA DETAIL DATE: 01/01/20	Stewardship. Sustainability. Service.	SHEET NO: -
CFPUA REV. No: 2		

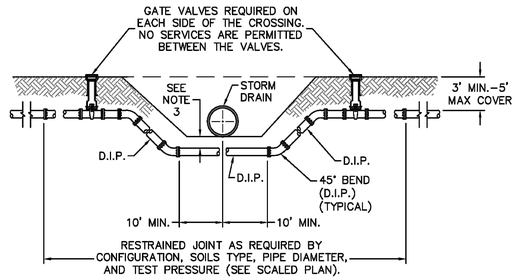

NOTES:
1. USE PRESSURE CLASS 350 DIP, UNLESS SPECIFIED OTHERWISE.
2. ALL BURIED PIPES, VALVES AND FITTINGS SHALL BE RESTRAINED.
3. MINIMUM DEPTH REQUIRED, UNLESS SPECIFIED OTHERWISE BY CFPUA:
   a. IN DOT R/W, 36" MIN. TYPICAL, OR 24" MIN. WHEN CROSSING A DITCH LINE.
   b. ALL OTHER LOCATIONS, 30" MIN.
   c. WHEN STORM DRAIN INVERT IS BURIED AT OR BELOW ABOVE DEPTHS, WATER MAIN AND STORM DRAIN SHALL BE CONSTRUCTED OF FERROUS MATERIALS WITH JOINTS EQUIVALENT TO WATER MAIN STANDARDS FOR A DISTANCE OF 10–FEET EACH SIDE OF THE POINT OF CROSSING.

DETAIL: PRESSURE MAIN DITCH AND STORM DRAIN DITCH CROSSING-DIP	CAPE FEAR PUBLIC UTILITY AUTHORITY 235 GOVERNMENT CENTER DRIVE WILMINGTON, NC 28403 OFFICE: (910)332-6560	DETAIL NO: WS-10
SCALE: NOT TO SCALE / CFPUA DETAIL DATE: 01/01/20	Stewardship. Sustainability. Service.	SHEET NO: -
CFPUA REV. No: 2		

GENERAL NOTES
1. Provide Building I.D. On Remote Fire Dept. Connection.
2. No Trees, Bushes Or Walls Within 5' Radius Of Fire Dept. Connection
3. 4' Min. To Back Of Curb, or 2' Min To Back Of Sidewalk, or When No Curb, 4' Max. Outside The Clear Zone.

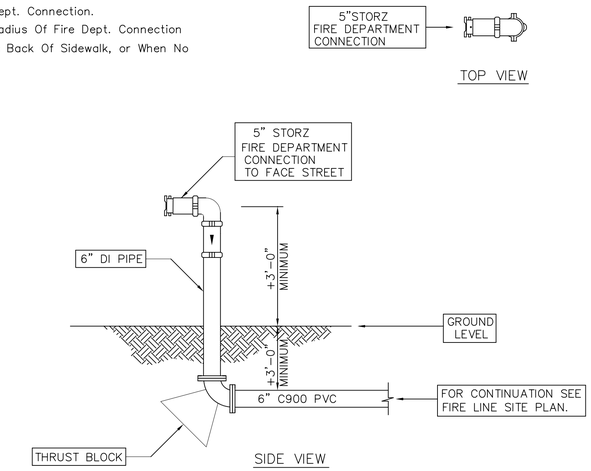

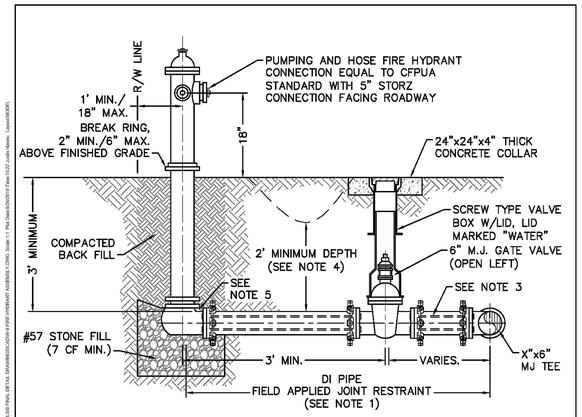

NOTES
1. JOINT RESTRAINT SYSTEMS SHALL BE WEDGE ACTION STYLE FOR DI.
2. WHEN HYDRANT LEGS REQUIRE FULL LENGTH PIPE SECTIONS, OVER BELL RESTRAINT SYSTEM SHALL HAVE 316 STAINLESS STEEL HARNESS AND FASTENERS.
3. CONTINUOUS 316 STAINLESS STEEL RODS (TEE TO VALVE AND VALVE TO HYDRANT) MAY BE USED WITH COR–BLUE MJ T–BOLT AND GASKET KITS, AS AN ALTERNATIVE.
4. HYDRANT AND VALVE SHALL BE PLACED OUTSIDE DITCH LIMITS.
5. WEEP HOLES OPEN AND UNBLOCKED TO DRAIN.
6. MJ TEE SHALL BE RESTRAINED ON EACH SIDE OF MAIN PLUS MAIN VALVES, FITTING, OR JOINTS WITHIN 10–FEET OF MJ TEE.
7. TRACING WIRE SHALL EXTEND ALONG HYDRANT LATERAL AND UP TO FINISHED GRADE WITH 2–FEET EXTENDED ABOVE THE BREAK RING OF HYDRANT.

DETAIL: FIRE HYDRANT ASSEMBLY	CAPE FEAR PUBLIC UTILITY AUTHORITY 235 GOVERNMENT CENTER DRIVE WILMINGTON, NC 28403 OFFICE: (910)332-6560	DETAIL NO: W-9
SCALE: NOT TO SCALE / CFPUA DETAIL DATE: 01/01/20	Stewardship. Sustainability. Service.	SHEET NO: -
CFPUA REV. No: 2		

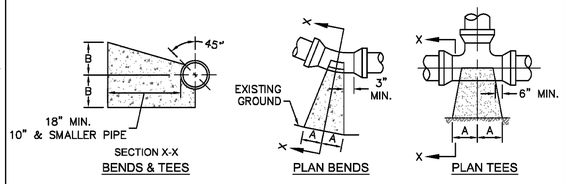

SIZE	90 BENDS A	90 BENDS B	45 BENDS A	45 BENDS B	22–1/2 BENDS A	22–1/2 BENDS B	TEES/PLUGS A	TEES/PLUGS B	45 VERT. BENDS
3"	8"	6"	5"	6"	3"	7"	6"	8"	27"
4"	8"	9"	5"	8"	3"	11"	6"	9"	28"
6"	14"	11"	9"	9"	8"	8"	12"	9"	36"
8"	16"	16"	12"	12"	10"	13"	14"	13"	42"
10"	18"	22"	15"	14"	14"	16"	18"	15"	50"
12"	20"	28"	18"	17"	16"	16"	22"	18"	62"
14"	26"	29"	21"	19"	18"	18"	26"	20"	72"
16"	33"	29"	25"	21"	20"	21"	32"	21"	83"
18"	40"	30"	28"	24"	22"	23"	36"	24"	88"

NOTES:
1. THRUST BLOCKING IS NOT PERMITTED EXCEPT IN SPECIAL INSTALLATIONS WHERE DESIGNED BY ENGINEER AND APPROVED BY CFPUA.
2. ALLOW 7–DAY MINIMUM CONCRETE CURE TIME BEFORE PLACING LOAD ON THRUST BLOCK
3. BASED ON 160 PSI TEST PRESSURE AND 2,000 PSF SOIL BEARING CAPACITY.
4. ALL BEARING SURFACES TO BE CARRIED TO UNDISTURBED GROUND.
5. PIPE & FITTINGS TO BE WRAPPED IN 10 MIL PLASTIC PRIOR TO THRUST BLOCK BEING POURED.

DETAIL: THRUST BLOCK	CAPE FEAR PUBLIC UTILITY AUTHORITY 235 GOVERNMENT CENTER DRIVE WILMINGTON, NC 28403 OFFICE: (910)332-6560	DETAIL NO: WS-13
SCALE: NOT TO SCALE / CFPUA DETAIL DATE: 01/01/20	Stewardship. Sustainability. Service.	SHEET NO: -
CFPUA REV. No: 2		

CAPE FEAR PUBLIC UTILITY AUTHORITY STANDARD NOTES:

1. ALL PROPOSED ADDITIONS TO THE CAPE FEAR PUBLIC UTILITY AUTHORITY (CFPUA) WATER DISTRIBUTION AND SANITARY SEWER COLLECTION SYSTEMS, AS SHOWN AND SPECIFIED HEREIN, SHALL BE DESIGNED AND CONSTRUCTED TO CONFORM TO STATE RULES AND THE CFPUA'S MINIMUM TECHNICAL STANDARDS. THE CFPUA MINIMUM TECHNICAL STANDARDS ARE CONTAINED IN THE CURRENT DESIGN GUIDANCE MANUAL, MATERIAL SPECIFICATION MANUAL, TECHNICAL SPECIFICATIONS FOR CONSTRUCTION, AND STANDARD DRAWING DETAILS.
2. SEWER GUARDS REQUIRED AT ALL MANHOLES. STAINLESS STEEL SEWER GUARDS REQUIRED AT MANHOLES LOCATED IN TRAFFIC AREAS.
3. WATER AND SEWER SERVICES SHALL BE PERPENDICULAR TO MAIN AND TERMINATE 18" INSIDE RIGHT–OF–WAY LINE. SEWER SERVICES IN CUL–DE–SACS ARE REQUIRED TO BE PERPENDICULAR, OR MUST ORIGINATE IN END OF LINE MANHOLE AND TERMINATE 18" INSIDE RIGHT–OF–WAY LINE.
4. ALL SEWER SERVICES CONNECTING INTO DUCTILE IRON MAINS SHALL ALSO BE CONSTRUCTED OF DIP.
5. MINIMUM 10' UTILITIES EASEMENT PROVIDED ALONG THE FRONTAGE OF ALL LOTS AND AS SHOWN FOR NEW DEVELOPMENTS.
6. NO FLEXIBLE COUPLINGS SHALL BE USED.
7. ALL STAINLESS STEEL FASTENERS SHALL BE TYPE 316.
8. CLEANOUTS SHALL BE LOCATED A MINIMUM OF 6 FEET FROM ALL PROPERTY CORNERS.
9. WATER METER BOXES ARE TO BE A MINIMUM OF 5 FEET FROM THE PROPERTY CORNER.
10. UNUSED SERVICES SHALL BE ABANDONED. ABANDONED WATER SERVICES SHALL BE DISCONNECTED FROM MAIN.
11. A MINIMUM OF 10' OF MAIN LINE, 5' UPSTREAM AND 5' DOWNSTREAM SHALL BE REPLACED FOR NEW SEWER SERVICE CONNECTIONS TO EXISTING CLAY GRAVITY SEWER MAINS.
12. A MINIMUM OF 20' OF MAIN LINE, 10' UPSTREAM AND 10' DOWNSTREAM SHALL BE REPLACED FOR NEW CUT IN MANHOLES ON EXISTING CLAY GRAVITY SEWER MAINS
13. PROVIDE A MINIMUM DISTANCE OF SIX (6) INCHES BETWEEN EDGE OF MANHOLE CORE HOLES AND MANHOLE BARREL JOINTS. PROVIDE A MINIMUM DISTANCE OF SIX (6) INCHES BETWEEN EDGES OF CORE HOLES. CORING THE MANHOLE CONE IS NOT PERMITTED
14. WATER MAIN AND FORCE MAIN PIPE INSTALLED BY OPEN CUT SHALL BE BURIED AT A MINIMUM OF THREE (3) FEET AND A MAXIMUM OF FIVE (5) FEET BELOW FINISHED GRADE. DEPTHS GREATER THAN FIVE (5) FEET MUST BE APPROVED BY CFPUA.
15. ALL MANHOLE MAIN LINE AND SERVICE PIPING TO BE INSTALLED AT A MINIMUM OF CROWN TO CROWN OF THE LARGEST DIAMETER PIPE.

DETAIL: STANDARD NOTES (REQUIRED ON ALL PLAN AND PROFILE SHEETS)	CAPE FEAR PUBLIC UTILITY AUTHORITY 235 GOVERNMENT CENTER DRIVE WILMINGTON, NC 28403 OFFICE: (910)332-6560	DETAIL NO: WS-14
SCALE: NOT TO SCALE / CFPUA DETAIL DATE: 01/01/20	Stewardship. Sustainability. Service.	SHEET NO: -
CFPUA REV. No: 2		

SEPI
SEPI ENGINEERING & CONSTRUCTION, INC.
RALEIGH | WILMINGTON | CHARLOTTE
BEAUFORT | CHARLESTON
5030 NEW CENTRE DR. | SUITE B
WILMINGTON, NC 28403
PHONE | 910.523.5715
sepiinc.com

811 Know what's below. before you dig.
3 WORKING DAYS BEFORE YOU DIG FOR THE LOCATION OF UNDERGROUND FACILITIES

THE LOCATIONS OF EXISTING UNDERGROUND UTILITIES ARE SHOWN IN AN APPROXIMATE WAY ONLY AND HAVE NOT BEEN INDEPENDENTLY VERIFIED BY THE OWNER OR ITS REPRESENTATIVE. THE CONTRACTOR SHALL DETERMINE THE EXACT LOCATION OF ALL EXISTING UTILITIES BEFORE COMMENCING WORK, AND AGREES TO BE FULLY RESPONSIBLE FOR ANY AND ALL DAMAGES WHICH MIGHT BE OCCASIONED BY THE CONTRACTOR'S FAILURE TO EXACTLY LOCATE AND PRESERVE ANY AND ALL UNDERGROUND UTILITIES.

NOTICE:
CONSTRUCTION SITE SAFETY IS THE SOLE RESPONSIBILITY OF THE CONTRACTOR NEITHER THE OWNER NOR THE ENGINEER SHALL BE EXPECTED TO ASSUME ANY RESPONSIBILITY FOR SAFETY OF THE WORK, OF PERSONS ENGAGED IN THE WORK, OF ANY NEARBY STRUCTURES, OR OF ANY OTHER PERSONS.

NORTH CAROLINA PROFESSIONAL SEAL 24419 ENGINEER MARK T. ARCURI
SEPI ENGINEERING & CONSTRUCTION, INC. CORPORATE SEAL C-2197 N.C.
PRELIMINARY

NEW HANOVER COUNTY GOVERNMENT CENTER
230 GOVERNMENT CENTER DRIVE, WILMINGTON NC 28403

PREPARED FOR:
GHKCAPE FEAR DEVELOPMENT LLC
1051 MILITARY CUTOFF RD #200,
WILMINGTON, NC 28405

PRELIMINARY
NOT FOR CONSTRUCTION

		DATE
PROJECT:	SE20.022.00	
ISSUE:	90% SUBMITTAL	10/01/2020
REVISIONS:		
PROJ. MGR:	MTA	
DRAWN BY:	KTD	
CHECKED BY:	MTA	

CFPUA UTILITY DETAILS II

C-15.10

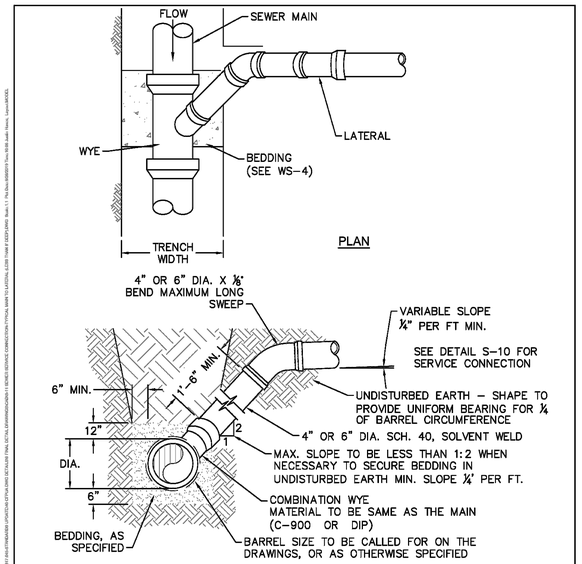

NOTES:

1. FOR PRIVATE 8" SERVICES, MANHOLES ARE REQUIRED FOR CONNECTION TO SYSTEM AND AT THE PROPERTY LINE, WITH REQUIRED EASEMENT.
2. ALL SERVICES CONNECTING INTO DUCTILE IRON MAINS SHALL BE CONSTRUCTED OF DIP, WITH PROTECTIVE LINING.

DETAIL: SEWER SERVICE CONNECTION - MAIN to LATERAL (LESS THAN 8' DEEP)	CAPE FEAR PUBLIC UTILITY AUTHORITY 235 GOVERNMENT CENTER DRIVE WILMINGTON, NC 28403 OFFICE: (910)332-6560	DETAIL NO: S-11
SCALE: NOT TO SCALE / CFPUA DETAIL DATE: 01/01/20	Stewardship. Sustainability. Service.	SHEET NO: -
CFPUA REV. No: 2		

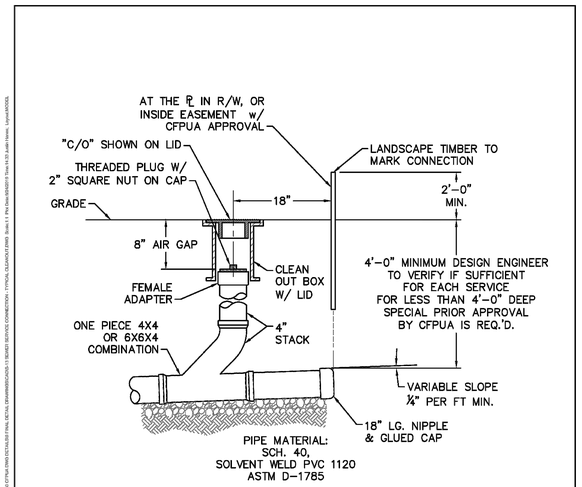

NOTES:

1. FOR PRIVATE 8" SERVICES, MANHOLES ARE REQUIRED FOR CONNECTION TO SYSTEM AND AT THE PROPERTY LINE, WITH REQUIRED EASEMENT.
2. CLEANOUTS SHALL BE LOCATED A MINIMUM OF 12 FEET FROM ALL PROPERTY CORNERS.

DETAIL: SEWER SERVICE CONNECTION - TYPICAL CLEAN-OUT	CAPE FEAR PUBLIC UTILITY AUTHORITY 235 GOVERNMENT CENTER DRIVE WILMINGTON, NC 28403 OFFICE: (910)332-6560	DETAIL NO: S-13
SCALE: NOT TO SCALE / CFPUA DETAIL DATE: 01/01/20	Stewardship. Sustainability. Service.	SHEET NO: -
CFPUA REV. No: 2		

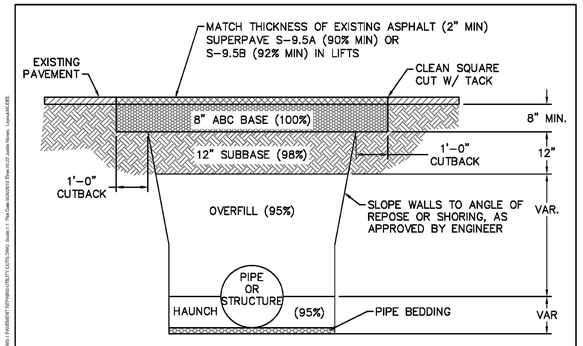

NOTES:

1. CONTRACTOR SHALL ENSURE BOTTOM OF TRENCH IS SUITABLE FOR INSTALLATION AND DOES NOT REQUIRE FOUNDATION CONDITIONING STONE.
2. FILL SHALL BE SUITABLE MATERIAL THAT IS FREE FROM HEAVY CLAY, GUMBOS, DEBRIS, ORGANICS AND LITTLE TO NO EXCESSIVE MOISTURE.
3. SELECT BACKFILL MAY BE SUBSTITUTED OR REQUIRED BY CITY TO ACHIEVE COMPACTION, (I.E. #57 STONE, ABC, CRUSHED LIMESTONE, CLEAN SAND, FLOWABLE FILL, ETC).
4. SOIL SHALL BE INSTALLED IN 6"–8" LIFTS AND COMPACTED BY A MECHANIZED TAMPER (I.E. JUMPING JACK). HOWEVER, VIBRATORY ROLLERS > 18" WIDTH MAY BE USED FOR LARGER EXCAVATIONS. THE PLATE TAMP METHOD SHALL NOT BE USED.
5. ALL APPROVED CASTINGS SHALL BE SET FLUSH TO GRADE AND SUPPORTED IF APPLICABLE.
6. COMPACT MATERIALS TO MINIMUM % DENSITY SHOWN IN DIAGRAM AS DETERMINED BY THE STANDARD PROCTOR METHOD ASTM D-698-A FOR SOILS, AND ASTM D-698-C FOR ABC STONE, AND BY NUCLEAR GAGE OR CORE SAMPLE FOR ASPHALT.
7. CUTBACKS OF ASPHALT SHALL BE PREPARED ON EDGE OF EXCAVATION OVER TOP OF UNDISTURBED SOIL.

(FOR PRIVATE ROADS AND PAVED AREAS; CONTRACTOR TO MEET MINIMUM REQUIREMENTS AS DEFINED BY RIGHT-OF-WAY OWNER FOR PUBLIC ROAD REPAIRS)

DETAIL: CITY OF WILMINGTON PAVEMENT REPAIRS-UTILITY CUTS	CAPE FEAR PUBLIC UTILITY AUTHORITY 235 GOVERNMENT CENTER DRIVE WILMINGTON, NC 28403 OFFICE: (910)332-6560	DETAIL NO: WS-1
SCALE: NOT TO SCALE / CFPUA DETAIL DATE: 01/01/20	Stewardship. Sustainability. Service.	SHEET NO: -
CFPUA REV. No: 2		

SEPI

SEPI ENGINEERING & CONSTRUCTION, INC.
RALEIGH | WILMINGTON | CHARLOTTE
BEAUFORT | CHARLESTON

5030 NEW CENTRE DR. | SUITE B
WILMINGTON, NC 28403
PHONE | 910.523.5715

sepiinc.com

811 3 WORKING DAYS BEFORE YOU DIG FOR THE LOCATION OF UNDERGROUND FACILITIES
Know what's below, before you dig.

THE LOCATIONS OF EXISTING UNDERGROUND UTILITIES ARE SHOWN IN AN APPROXIMATE WAY ONLY AND HAVE NOT BEEN INDEPENDENTLY VERIFIED BY THE OWNER OR ITS REPRESENTATIVE. THE CONTRACTOR SHALL DETERMINE THE EXACT LOCATION OF ALL EXISTING UTILITIES BEFORE COMMENCING WORK, AND AGREES TO BE FULLY RESPONSIBLE FOR ANY AND ALL DAMAGES WHICH MIGHT BE OCCASIONED BY THE CONTRACTOR'S FAILURE TO EXACTLY LOCATE AND PRESERVE ANY AND ALL UNDERGROUND UTILITIES.

NOTICE:
CONSTRUCTION SITE SAFETY IS THE SOLE RESPONSIBILITY OF THE CONTRACTOR NEITHER THE OWNER NOR THE ENGINEER SHALL BE EXPECTED TO ASSUME ANY RESPONSIBILITY FOR SAFETY OF THE WORK, OF PERSONS ENGAGED IN THE WORK, OF ANY NEARBY STRUCTURES, OR OF ANY OTHER PERSONS.

NORTH CAROLINA PROFESSIONAL SEAL 24419 ENGINEER MARK T. ARCURI

SEPI ENGINEERING & CONSTRUCTION, INC CORPORATE SEAL C-2197 N.C.

PRELIMINARY

NEW HANOVER COUNTY GOVERNMENT CENTER
230 GOVERNMENT CENTER DRIVE, WILMINGTON NC 28403

PREPARED FOR:
GHKCAPE FEAR DEVELOPMENT LLC
1051 MILITARY CUTOFF RD #200,
WILMINGTON, NC 28405

PRELIMINARY
NOT FOR CONSTRUCTION

		DATE
PROJECT:	SE20.022.00	
ISSUE:	90% SUBMITTAL	10/01/2020
	.	.
	.	.
	.	.
	.	.
REVISIONS:		
	.	.
	.	.
	.	.
	.	.
	.	.
	.	.
PROJ. MGR:	MTA	
DRAWN BY:	KTD	
CHECKED BY:	MTA	

CFPUA UTILITY DETAILS III

C-15.11