The Healing Place of New Hanover County

Addendum #3 – December 04, 2020

This addendum is to be considered part of the bid documents and must be acknowledged on the appropriate bid forms.

Modifications to the drawings:

1. **Delete Title Drawing Sheets T-106, T-107, T-108, T-109, T-110, and T-111 and substitute the accompanying Drawing Sheets T- 106, T-107, T-108, T-109, T-110, and T-111 with a latest revision date of 12/02/20.**

2. **Delete the following Architectural Drawing Sheets and substitute the accompanying Drawing Sheets with the same numbers and a latest revision:**
   a. A-001
   b. A-100
   c. A-101
   d. A-102
   e. A-103
   f. A-104
   g. A-105
   h. A-106
   i. A-107
   j. A-108
   k. A-109
   l. A-114
   m. A-204
   n. A-301
   o. A-302
   p. A-303
   q. A-304
   r. A-305
   s. A-306
   t. A-319
   u. A-506
   v. A-601
   w. A-602
   x. A-603
   y. A-604

3. **Delete the following Structural Drawing Sheets:**
   a. S-001

b. S-002
c. S-003
d. S-004
e. S-101
f. S-102
g. S-103
h. S-104
i. S-105
j. S-106
k. S-110
l. S-201
m. S-202
n. S-203
o. S-204
p. S-205
q. S-210
r. S-301
s. S-302
t. S-303
u. S-304
v. S-310
w. S-401
x. S-402
y. S-403
z. S-404
aa. S-410
bb. S-501
cc. S-502
dd. S-503
ee. S-504
ff. S-601
gg. S-701
hh. S-801

- Substitute the accompanying Drawing Sheets with the same numbers. Please note that the entire Structural Engineering set is being replaced. However, please refer to the title block of each sheet for indications of which sheets were modified for this MCD. Many of the other sheets without MCD changes utilized the wrong floor plan background in the previously released bid set. Those sheets are merely being updated in this set now with no structural changes.

4. **Delete the following Plumbing Drawing Sheets:**
    a. P001
    b. P101.1
    c. P101.3
    d. P102.1A
    e. P102.1B
    f. P102.3A
    g. P102.3B
    h. P103.0A
    i. P103.0B
    j. P103.2A
    k. P103.2B
    l. P104.0A
    m. P104.0B
    n. P104.3

- Substitute the accompanying Drawing Sheets with the same numbers and a latest revision date of 12/02/20.

5. **Delete the following Mechanical Drawing Sheets:**
    a. M104.0
    b. M104.1
    c. HD001
    d. HD002
    e. HD003

- Substitute the accompanying Drawing Sheets with the same numbers and a latest revision date of 12/02/20.

6. **Delete the following Electrical & Fire Alarm Drawing Sheets:**
    a. E102.0L
    b. E103.0
    c. E103.1
    d. E104.0L
    e. E104.0P
    f. FA101.0

g. FA102.0
h. FA104.0

- Substitute the accompanying Drawing Sheets with the same numbers and a latest revision date of 12/02/20.

7. **Add the accompanying Food Service Drawing Sheet FS-100 dated 08/25/20.**

8. **Delete the following Sprinkler Drawing Sheets: FP 1 OF 12 through FP 12 of 12 and substitute the accompanying Drawing Sheets with the same numbers and a latest revision date of 12/02/20.**

Modifications to the Project Manual:

1. **Delete the Project Manual Vol. 1 & Vol. 2 and substitute the accompanying Project Manual Vol. 1 & Vol. 2 revised November 30, 2020. See Table of Contents for changes. (The change is addition of concrete block wall specification)**

Modifications to the bid package:

a. BP 2.0: Remove Termite Control from scope.
b. BP 3.0: Allowances: Included in the base bid is allowance for undercut of unsuitable soil and replacement with 100 CY of compacted ABC stone.
c. BP 6.4: Included in this bid package is AWP-1 noted on A-202.
d. BP 11.0: Subcontractor shall furnish and install stainless steel panels SSP-1 noted on A-202.
e. BP 12.2: Include an allowance for provision and installation of 12 additional largest size window blinds.
f. BP 15.0: Also included is furnishing and installing of two hose bibs (one at each construction entrance) for wash stations and one general hose bib. All sewer lines shall be documented via video prior to substantial completion and repeated prior to building turnover.
g. BP 15.4: Omit ‘no later than Dec.1, 2016’ from line item 1.2.75. Omit ‘Need Points Listing for the Project ???’ from line item 1.2.58
h. BP 16.0: Omit line item 10. Include allowance of $450,000 for Generators.

End of Addendum #3.

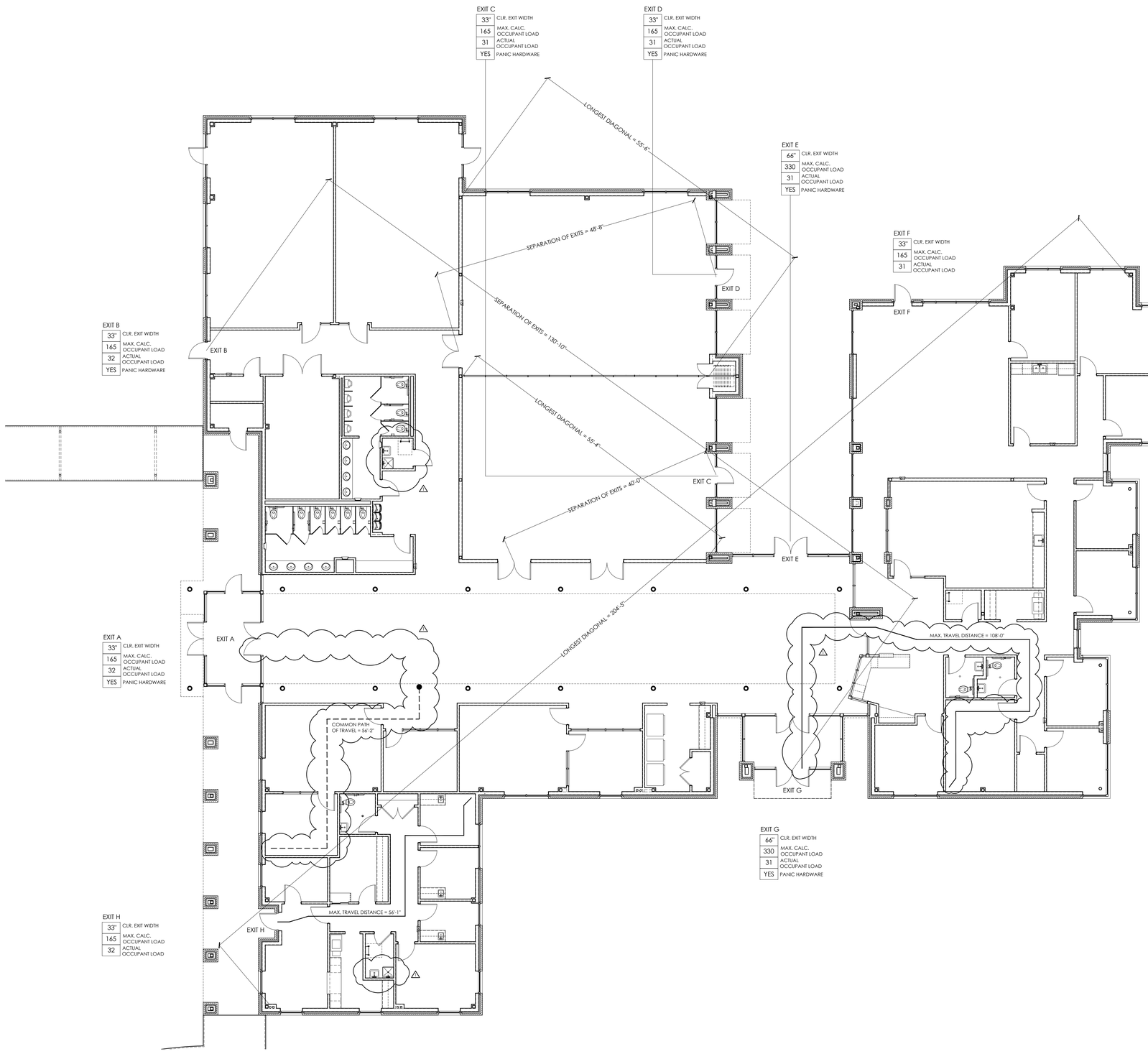

LIFE SAFETY PLAN - ADMINISTRATIVE/EDUCATION BUILDING | 01

SCALE: 1/8" = 1'-0"

isdesign
ARCHITECTURE + INTERIORS
1111 Haynes Street, Suite 103
Raleigh, North Carolina 27604
t. 919.833.5400
www.isdesignpa.com

Project

THE HEALING PLACE OF NEW HANOVER COUNTY

1000 MEDICAL CENTER DRIVE
WILMINGTON, NORTH CAROLINA

Client

NEW HANOVER COUNTY, NORTH CAROLINA

All reproduction & intellectual property rights reserved © 2020

Key Plan

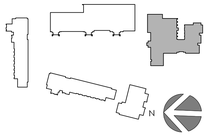

Professional Seals





No.	Description	Date
1	CONSTRUCTION DOCUMENT SET	08/25/20
1	MCD #1	12/02/20

Project Code: 16HTWILMING

Sheet Title

LIFE SAFETY PLAN

ADMIN/EDU BUILDING

Original drawing is 42 x 30 Do not scale contents of this drawing

Sheet Number

T-106

12/2/2020 3:59 PM P:\16HTWILMING\Construction Documents\MCD#1\Construction Documents\CD-16HTWILMING - T-106R T-107R T-108R - CD Life Safety Occupancy Plan - Administrative and Detox Buildings.dwg

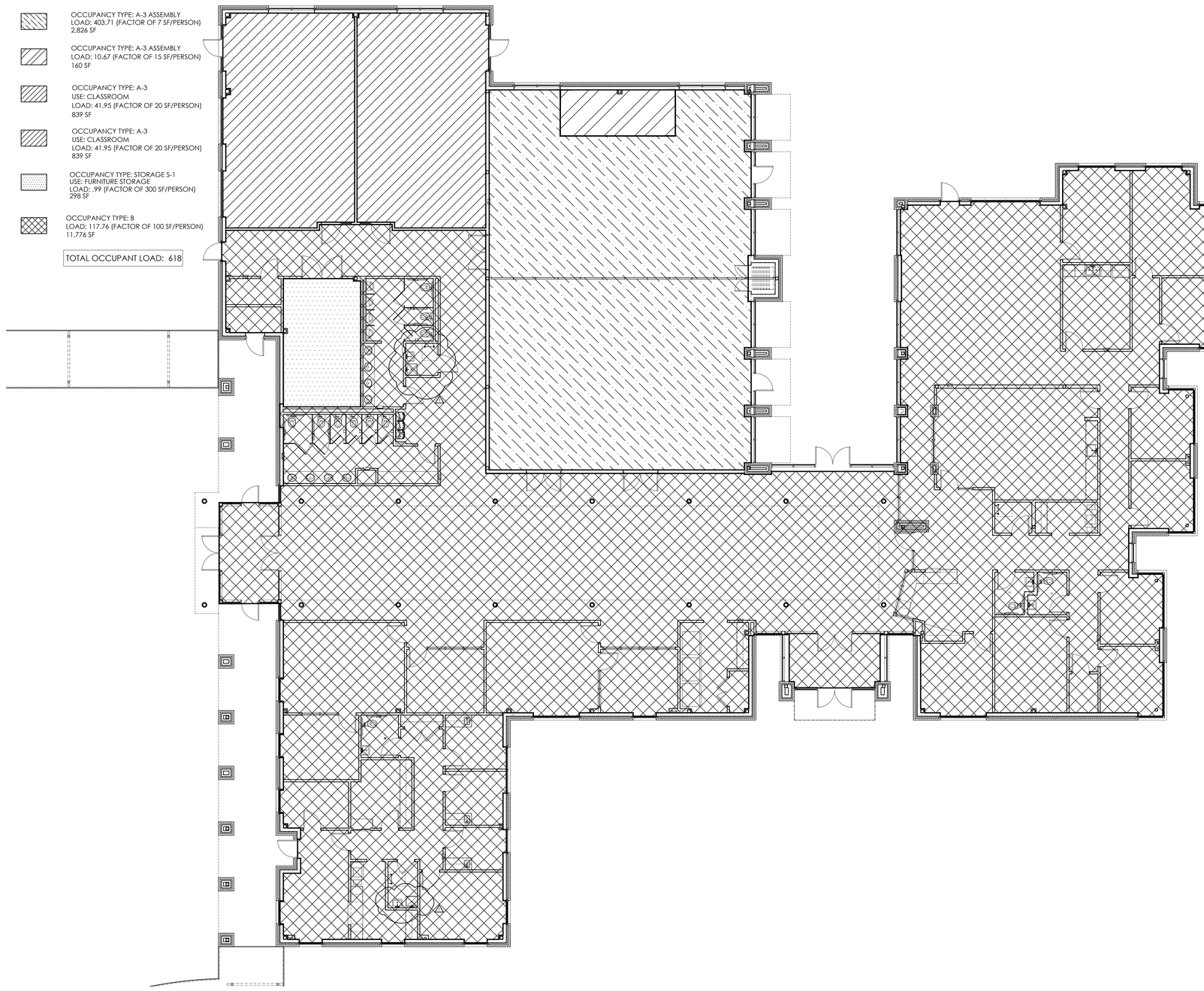

OCCUPANCY PLAN - ADMINISTRATIVE/EDUCATION BUILDING | 01

SCALE: 1/8" = 1'-0"

isdesign
ARCHITECTURE + INTERIORS
1111 Haynes Street, Suite 103
Raleigh, North Carolina 27604
t. 919.833.5400
www.isdesignpa.com

Project

THE HEALING PLACE OF NEW HANOVER COUNTY

1000 MEDICAL CENTER DRIVE
WILMINGTON, NORTH CAROLINA

Client

NEW HANOVER COUNTY, NORTH CAROLINA

All reproduction & intellectual property rights reserved © 2020

Key Plan

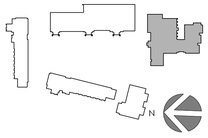

Professional Seals





No.	Description	Date
1	CONSTRUCTION DOCUMENT SET	08/25/20
1	MCD #1	12/02/20

Project Code: 16HTWILMING

Sheet Title

OCCUPANCY PLAN

ADMIN/EDU BUILDING

Original drawing is 42 x 30 Do not scale contents of this drawing

Sheet Number

T-107

12/2/2020 3:59 PM P:\16HTWILMING\Construction Documents\MCD#1\Construction Documents\CD-16HTWILMING - T-106R T-107R T-108R - CD Life Safety Occupancy Plan - Administrative and Detox Buildings.dwg

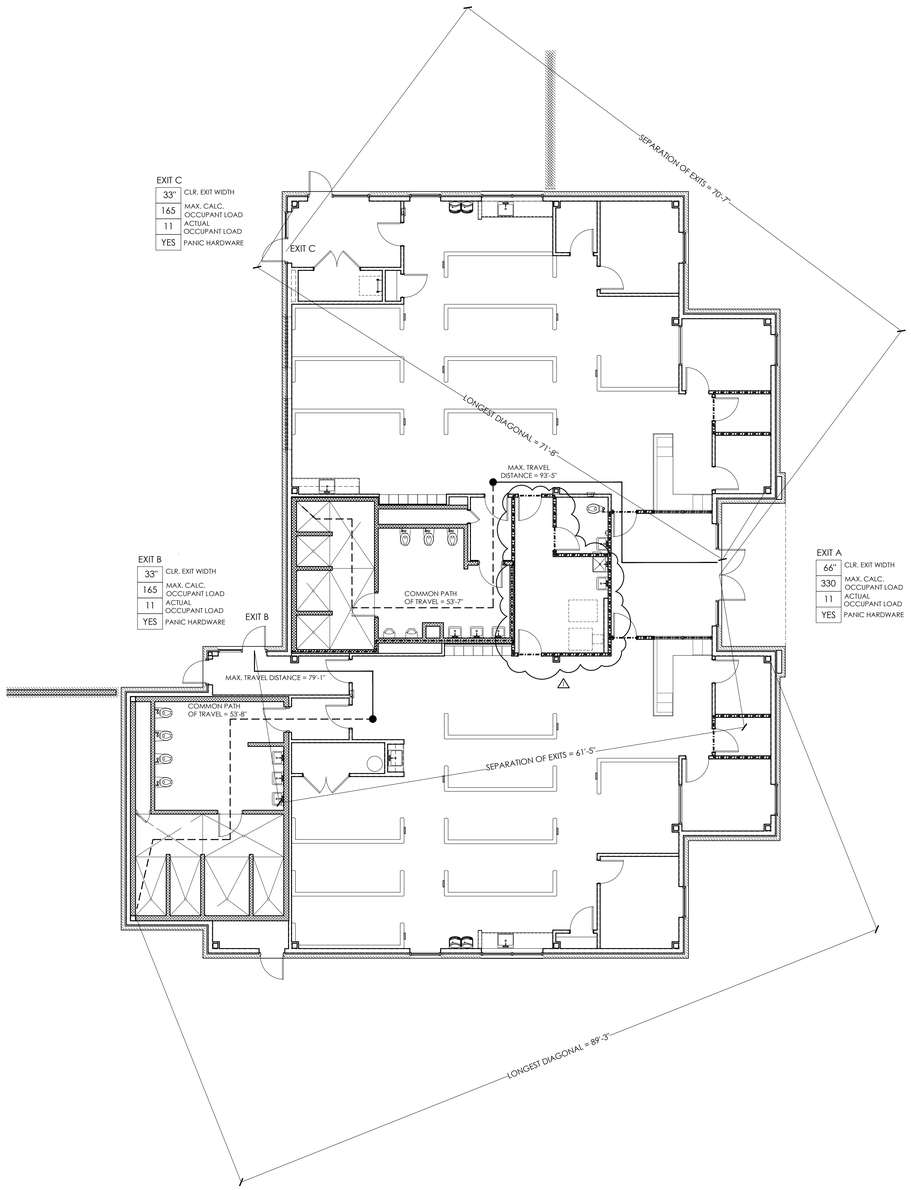

LIFE SAFETY PLAN - DETOX BUILDING | 01
SCALE: 1/8" = 1'-0"



OCCUPANCY PLAN - DETOX BUILDING | 02
SCALE: 1/8" = 1'-0"



REFUGE AREA PLAN - DETOX BUILDING | 03
SCALE: 1/8" = 1'-0"

isdesign
ARCHITECTURE + INTERIORS
1111 Haynes Street, Suite 103
Raleigh, North Carolina 27604
t. 919.833.5400
www.isdesignpa.com

Project
THE HEALING PLACE OF NEW HANOVER COUNTY

1000 MEDICAL CENTER DRIVE
WILMINGTON, NORTH CAROLINA

Client
NEW HANOVER COUNTY, NORTH CAROLINA

All reproduction & intellectual property rights reserved © 2020

Key Plan

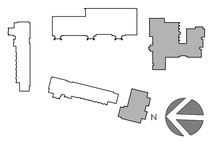

Professional Seals





No.	Description	Date
1	CONSTRUCTION DOCUMENT SET	08/25/20
1	MCD #1	12/02/20

Project Code: 16HTWILMING

Sheet Title
LIFE SAFETY & OCCUPANCY PLANS

DETOX BUILDING
Original drawing is 42 x 30 Do not scale contents of this drawing

Sheet Number
T-108

12/2/2020 3:40 PM P:\16HTWILMING\Construction Documents\CD-16HTWILMING - T-106R T-107R T-108R CD Life Safety Occupancy Plan - Administrative and Detox Buildings.dwg

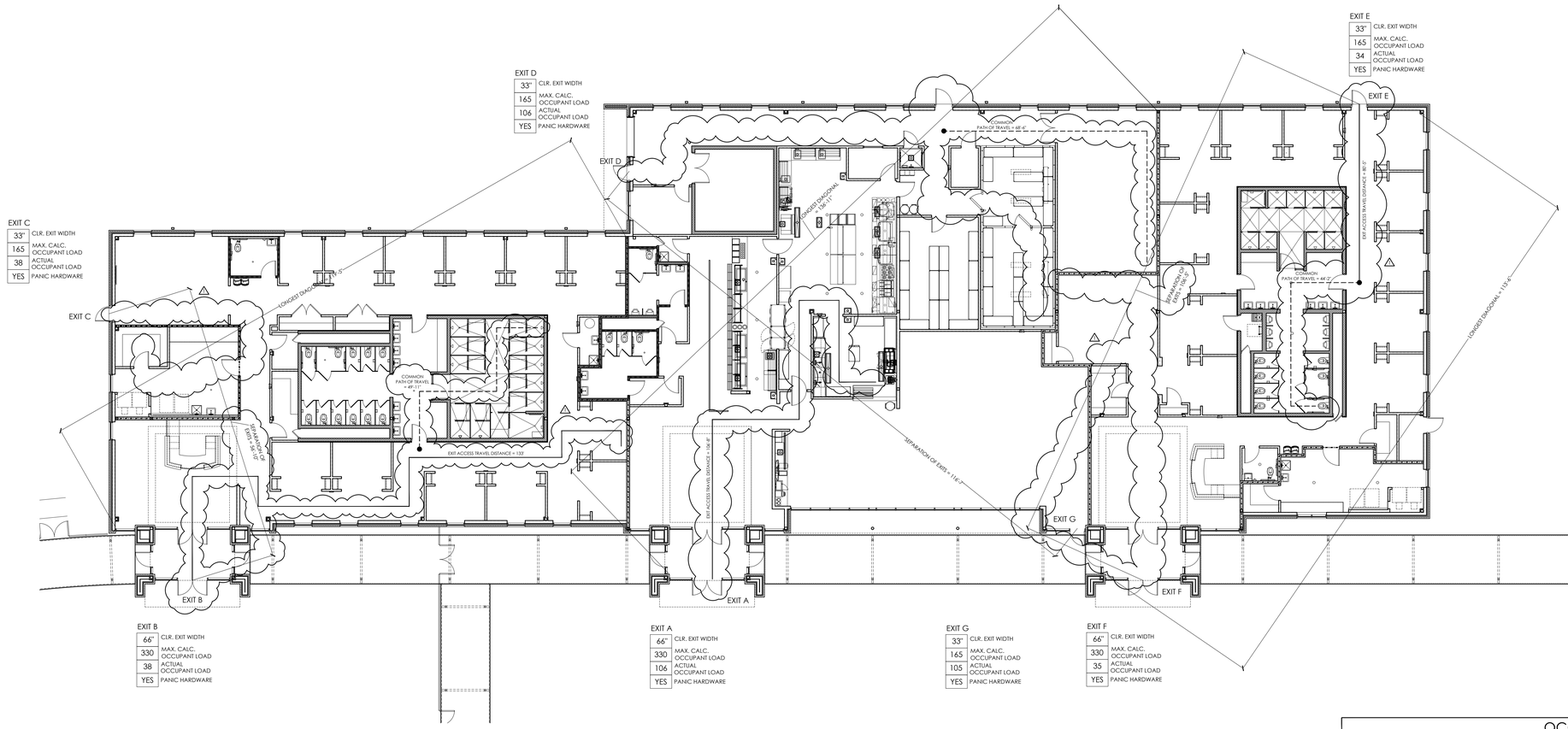

OCCUPANCY PLAN | 01

SCALE: 3/32" = 1'-0"

SUITE #1

OCCUPANCY TYPE: BUSINESS B
USE: LAUNDRY
LOAD: 4.51 (FACTOR OF 100 SF/PERSON)
451 SF

OCCUPANCY TYPE: INSTITUTIONAL I-1
USE: SHELTER AND ALCOHOL & DRUG CENTER PROGRAMS
SLEEPING AREA LOAD: 43.25 (FACTOR OF 120 SF/PERSON)
5,190 SF
TV ROOM LOAD: 27.86 (FACTOR OF 15 SF/PERSON)
418 SF

TOTAL OCCUPANT LOAD: 76

SUITE #2

OCCUPANCY TYPE: ASSEMBLY A-2
USE: DINING & KITCHEN
KITCHEN LOAD: 7.74 (FACTOR OF 200 SF/PERSON)
1,548 SF
DINING LOAD: 145.4 (FACTOR OF 15 SF/PERSON)
2,181 SF
QUEUE & SERVING LINE LOAD: 56.2 (FACTOR OF 5 SF/PERSON)
281 SF
LOBBY LOAD: 98 (FACTOR OF 7 SF/PERSON)
686 SF

OCCUPANCY TYPE: BUSINESS B
USE: OFFICE
LOAD: 1.19 (FACTOR OF 100 SF/PERSON)
119 SF

OCCUPANCY TYPE: STORAGE S-1
USE: TOOL, GIFT IN KIND STORAGE & DRY FOOD STORAGE
LOAD: 7.64 (FACTOR OF 300 SF/PERSON)
2,292 SF

TOTAL OCCUPANT LOAD: 317

SUITE #3

OCCUPANCY TYPE: INSTITUTIONAL I-1
USE: SHELTER AND ALCOHOL & DRUG CENTER PROGRAMS
SLEEPING AREA LOAD: 38.84 (FACTOR OF 120 SF/PERSON)
4,661 SF
TV ROOM LOAD: 25.6 (FACTOR OF 15 SF/PERSON)
384 SF

OCCUPANCY TYPE: BUSINESS B
USE: LAUNDRY
LOAD: 3.78 (FACTOR OF 100 SF/PERSON)
378 SF

TOTAL OCCUPANT LOAD: 69

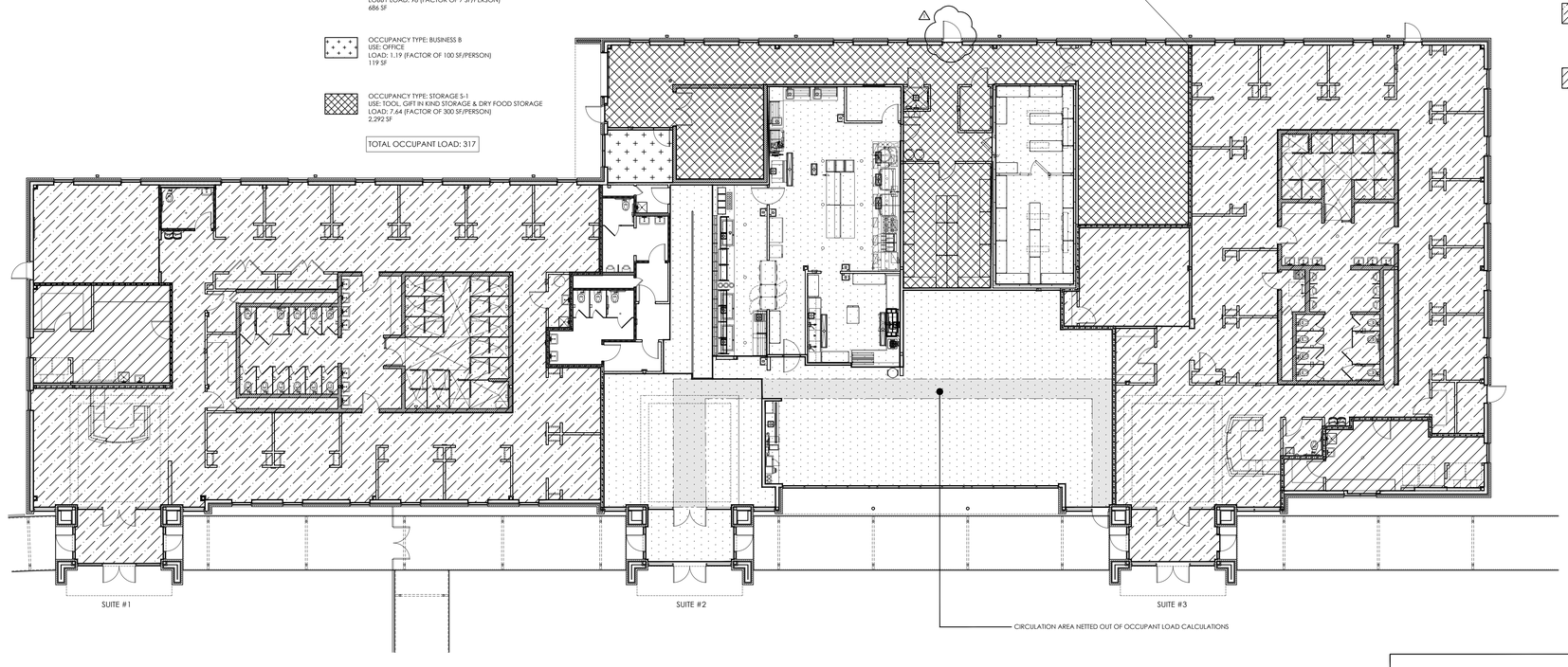

LIFE SAFETY PLAN | 02

SCALE: 3/32" = 1'-0"

isdesign
ARCHITECTURE + INTERIORS
1111 Haynes Street, Suite 103
Raleigh, North Carolina 27604
t. 919.833.5400
www.isdesignpa.com

Project

THE HEALING PLACE OF NEW HANOVER COUNTY

1000 MEDICAL CENTER DRIVE
WILMINGTON, NORTH CAROLINA

Client

NEW HANOVER COUNTY, NORTH CAROLINA

All reproduction & intellectual property rights reserved © 2020

Key Plan

Professional Seals

No.	Description	Date
1	CONSTRUCTION DOCUMENT SET	08/25/20
1	MCD #1	12/02/20

Project Code: 16HTWILMING

Sheet Title

LIFE SAFETY & OCCUPANCY PLANS DINING/SHELTER/STORAGE BUILDING

Original drawing is 42 x 30 Do not scale contents of this drawing.

Sheet Number

T-109

12/2/2020 2:57 AM P:\16HTWILMING\Construction Documents\MCD#1\Construction Documents\CD-16HTWILMING - T-109 R - CD Life Safety Occupancy Plan - Dining - Shelter - Storage Building.dwg

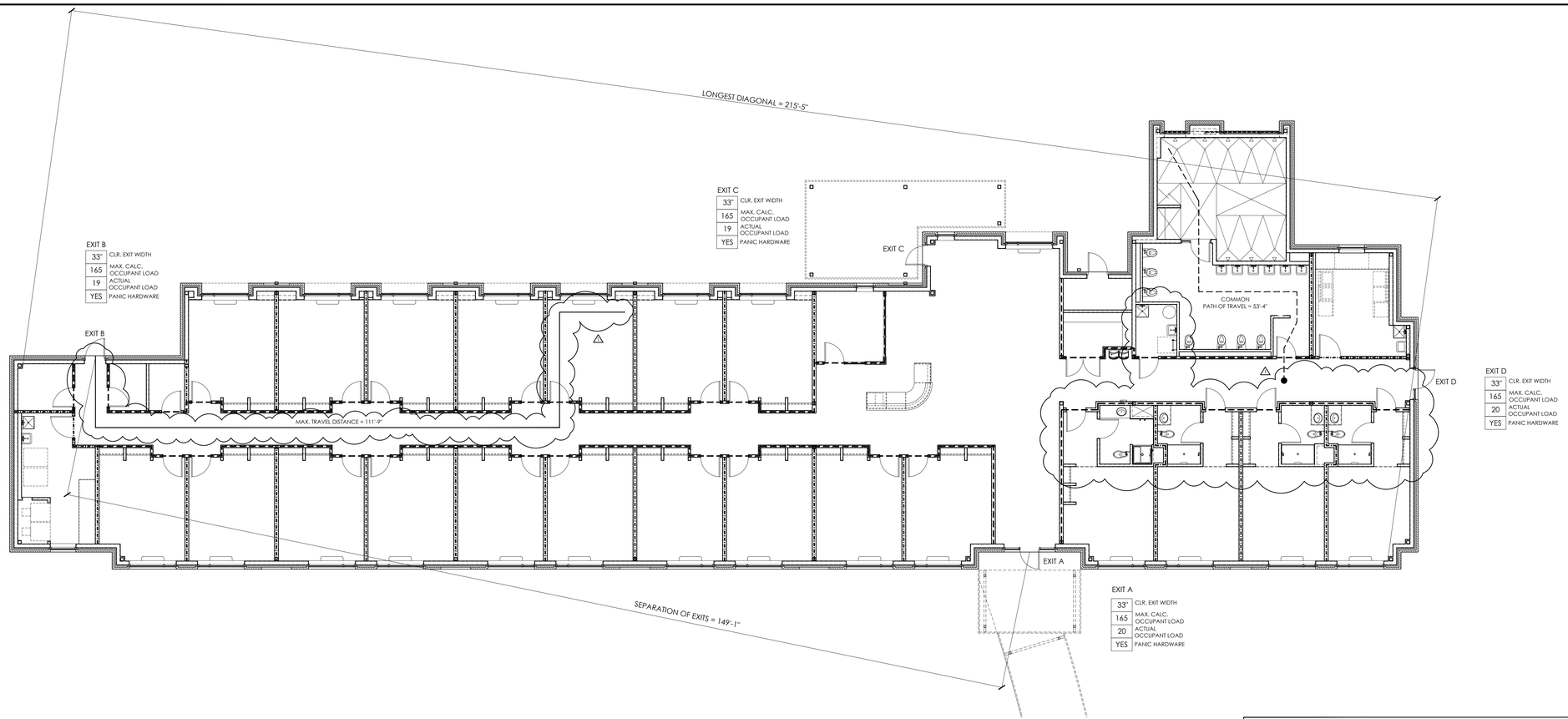

LIFE SAFETY PLAN - WOMEN'S RESIDENTIAL BUILDING | 01

SCALE: 1/8" = 1'-0"

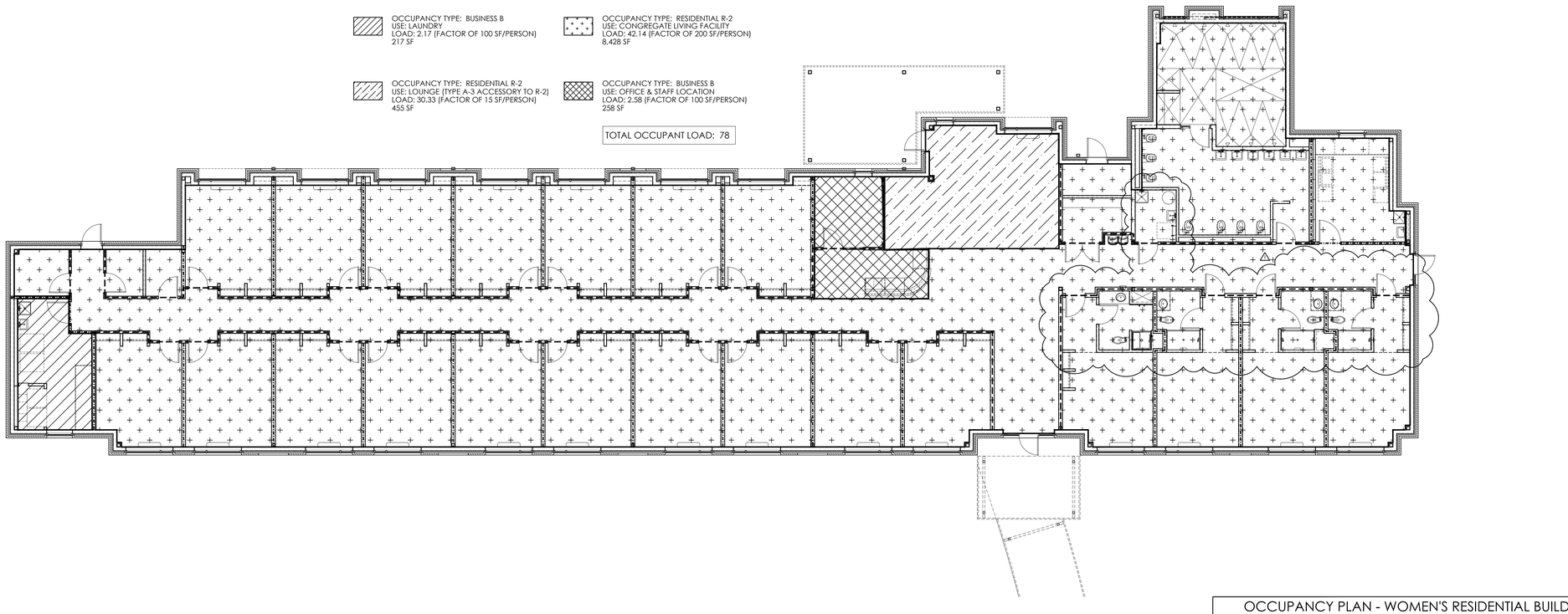

OCCUPANCY PLAN - WOMEN'S RESIDENTIAL BUILDING | 02

SCALE: 1/8" = 1'-0"

isdesign
ARCHITECTURE + INTERIORS
1111 Haynes Street, Suite 103
Raleigh, North Carolina 27604
t. 919.833.5400
www.isdesignpa.com

Project

THE HEALING PLACE OF NEW HANOVER COUNTY

1000 MEDICAL CENTER DRIVE
WILMINGTON, NORTH CAROLINA

Client

NEW HANOVER COUNTY, NORTH CAROLINA

All reproduction & intellectual property rights reserved © 2020

Key Plan

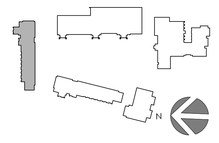

Professional Seals



No.	Description	Date
1	CONSTRUCTION DOCUMENT SET	08/25/20
△	MCD #1	12/02/20

Project Code: 16HTWILMING

Sheet Title

LIFE SAFETY & OCCUPANCY PLANS RESIDENTIAL WOMEN'S FACILITY BLDG

Original drawing is 42 x 30 Do not scale contents of this drawing

Sheet Number

T-110

12/2/2020 3:53 PM P:\16HTWILMING\Construction Documents\MCD#1\Construction Documents\CD-16HTWILMING - T-110R T-111R - CD Life Safety Occupancy Plan - Residential Men's and Women's Facility Buildings.dwg

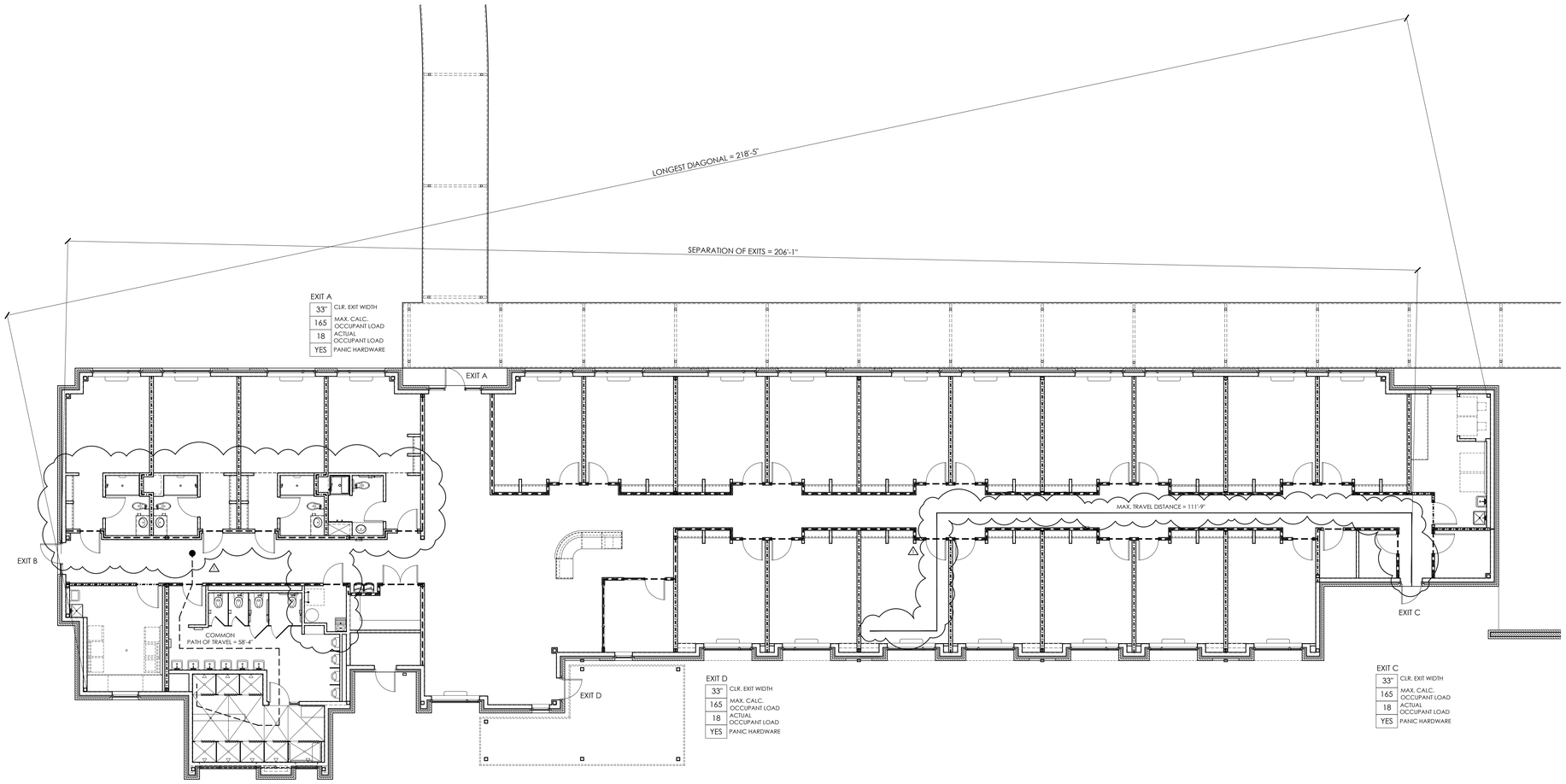

LIFE SAFETY PLAN - MEN'S RESIDENTIAL BUILDING | 01

SCALE: 1/8" = 1'-0"

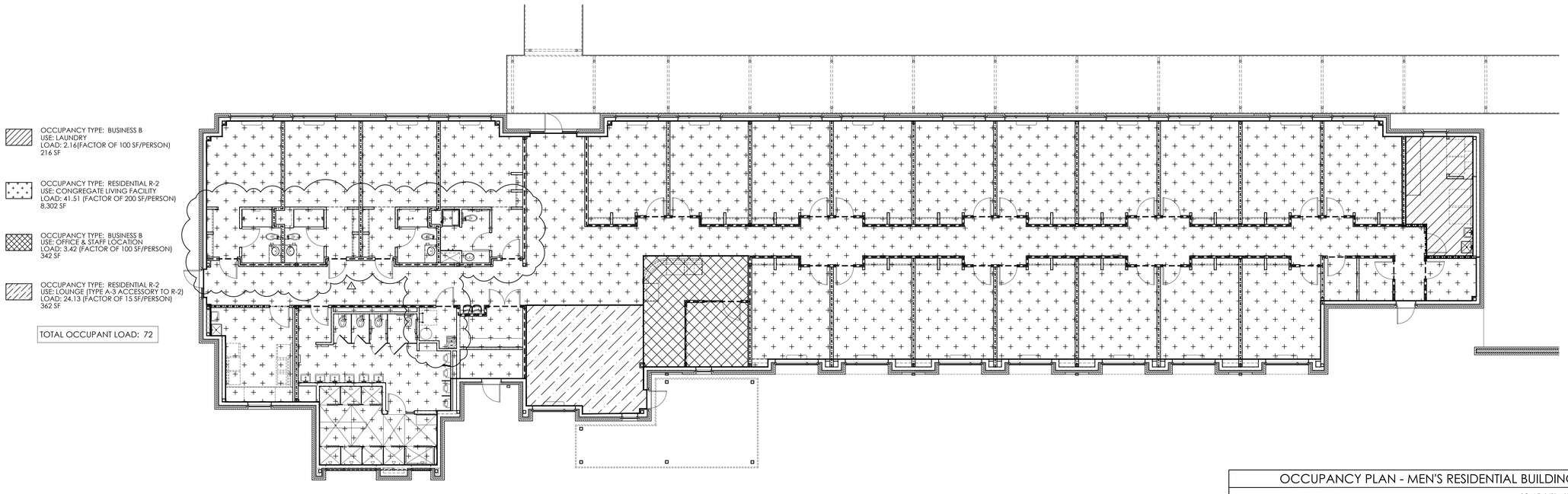

OCCUPANCY PLAN - MEN'S RESIDENTIAL BUILDING | 02

SCALE: 1/8" = 1'-0"

isdesign
ARCHITECTURE + INTERIORS
1111 Haynes Street, Suite 103
Raleigh, North Carolina 27604
t. 919.833.5400
www.isdesignpa.com

Project

THE HEALING PLACE OF NEW HANOVER COUNTY

1000 MEDICAL CENTER DRIVE
WILMINGTON, NORTH CAROLINA

Client

NEW HANOVER COUNTY, NORTH CAROLINA

All reproduction & intellectual property rights reserved © 2020

Key Plan

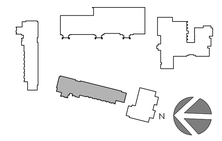

Professional Seals





No.	Description	Date
1	CONSTRUCTION DOCUMENT SET	08/25/20
1	MCD #1	12/02/20

Project Code: 16HTWILMING

Sheet Title

LIFE SAFETY & OCCUPANCY PLANS RESIDENTIAL MEN'S FACILITY BLDGS

Original drawing is 42 x 30 . Do not scale contents of this drawing.

Sheet Number

T-111

12/2/2020 3:54 PM P:\16HTWILMING\Construction Documents\MCD#1\Construction Documents\CD-16HTWILMING - T-110R T-111R - CD Life Safety Occupancy Plan - Residential Men's and Women's Facility Buildings.dwg

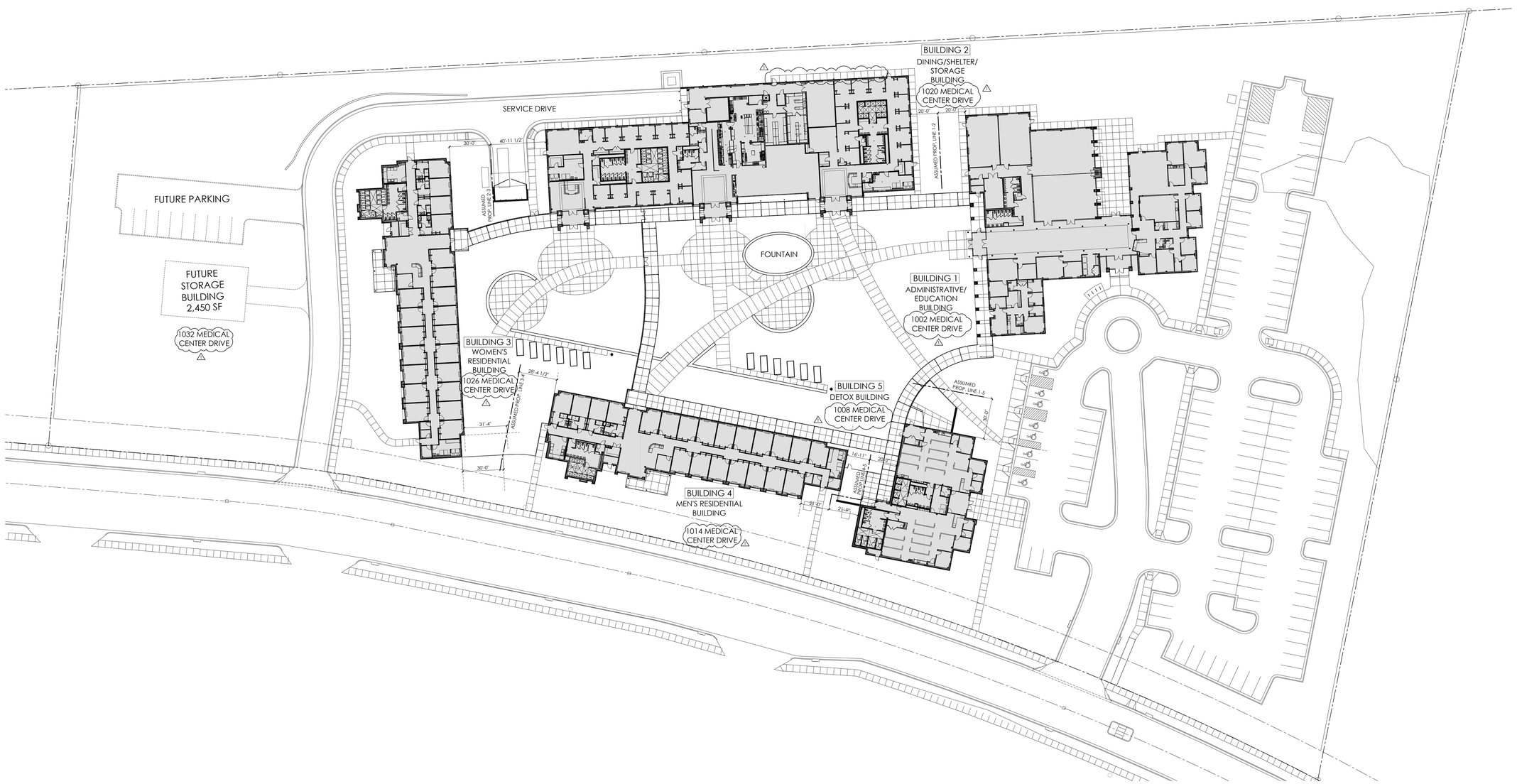

ARCHITECTURAL SITE PLAN | 01

SCALE: 1/32" = 1'-0"

12/2/2020 1:47 AM P:\16HTWILMING\Construction Documents\MCD#1\Construction Documents\CD-16HTWILMING - A-001R - CD Architectural Site Plan.dwg

isdesign
ARCHITECTURE + INTERIORS
1111 Haynes Street, Suite 103
Raleigh, North Carolina 27604
t. 919.833.5400
www.isdesignpa.com

Project

THE HEALING PLACE OF NEW HANOVER COUNTY

1000 MEDICAL CENTER DRIVE
WILMINGTON, NORTH CAROLINA

Client

NEW HANOVER COUNTY, NORTH CAROLINA

All reproduction & intellectual property rights reserved © 2020

Key Plan

Professional Seals





No.	Description	Date
1	SCHEMATIC DESIGN	11/26/19
2	DESIGN DEVELOPMENT SET	04/09/20
3	CONSTRUCTION DOCUMENT SET	08/25/20
1	MCD #1	12/02/20

Project Code: 16HTWILMING

Sheet Title

SITE PLAN

Original drawing is 42 x 30 Do not scale contents of this drawing.

Sheet Number

A-001

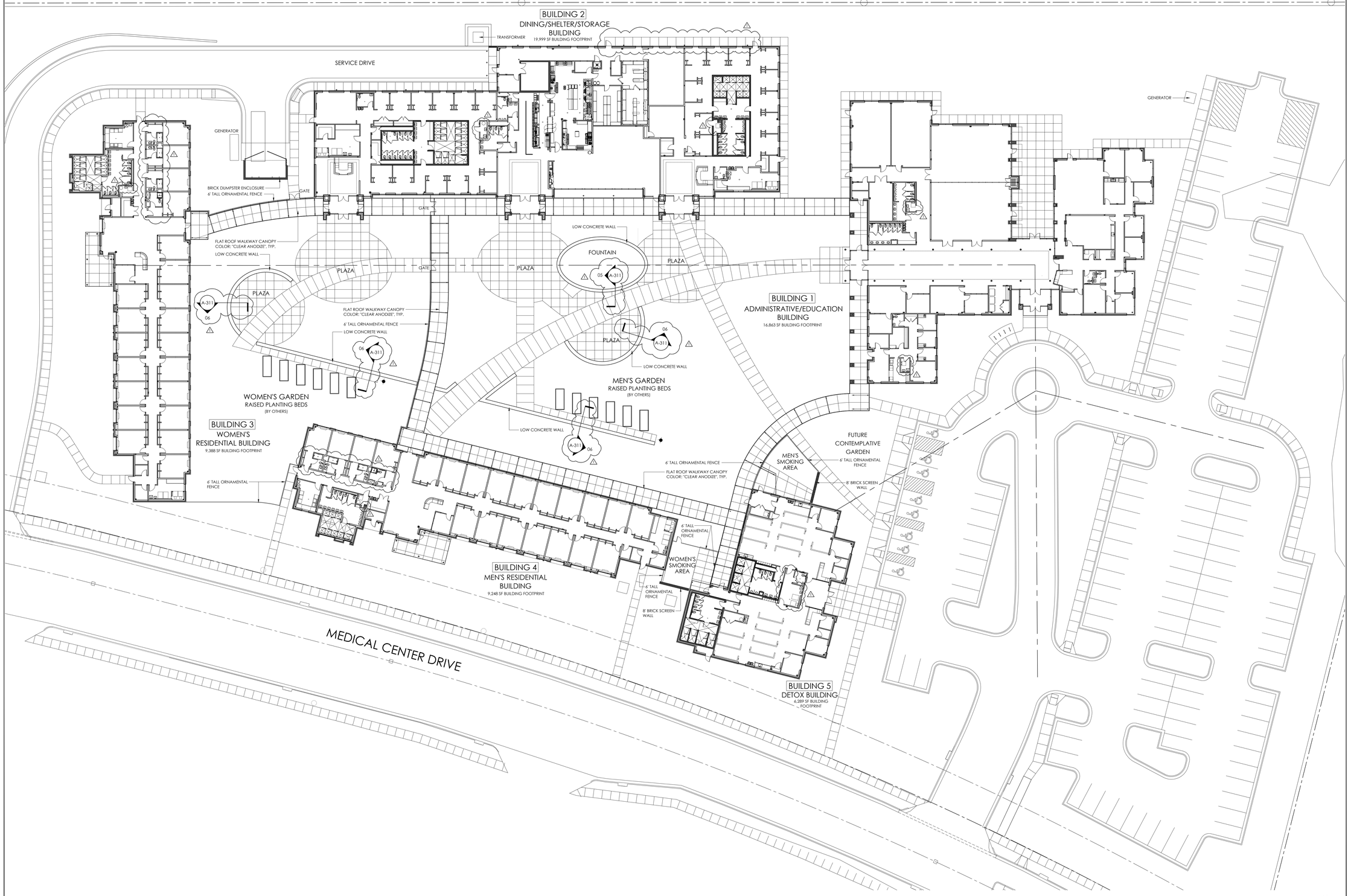

COMPOSITE FLOOR PLAN | 1

SCALE: 3/64" = 1'-0"

isdesign
ARCHITECTURE + INTERIORS
1111 Haynes Street, Suite 103
Raleigh, North Carolina 27604
t. 919.833.5400
www.isdesignpa.com

Project

THE HEALING PLACE OF NEW HANOVER COUNTY

1000 MEDICAL CENTER DRIVE
WILMINGTON, NORTH CAROLINA

Client

NEW HANOVER COUNTY, NORTH CAROLINA

All reproduction & intellectual property rights reserved © 2020

Key Plan

Professional Seals

No.	Description	Date
1	SCHEMATIC DESIGN	11/26/19
2	DESIGN DEVELOPMENT SET	04/09/20
3	CONSTRUCTION DOCUMENT SET	08/25/20
1	MCD #1	12/02/20

Project Code: 16HTWILMING

Sheet Title

COMPOSITE FLOOR PLANS

Original drawing is 42 x 30. Do not scale contents of this drawing

Sheet Number

A-100

12/2/2020 10:19 AM P:\16HTWILMING\Construction Documents\MCD#1\Construction Documents\CD-16HTWILMING - A-100 - CD Floor Plan - Composite Floor Plan.dwg

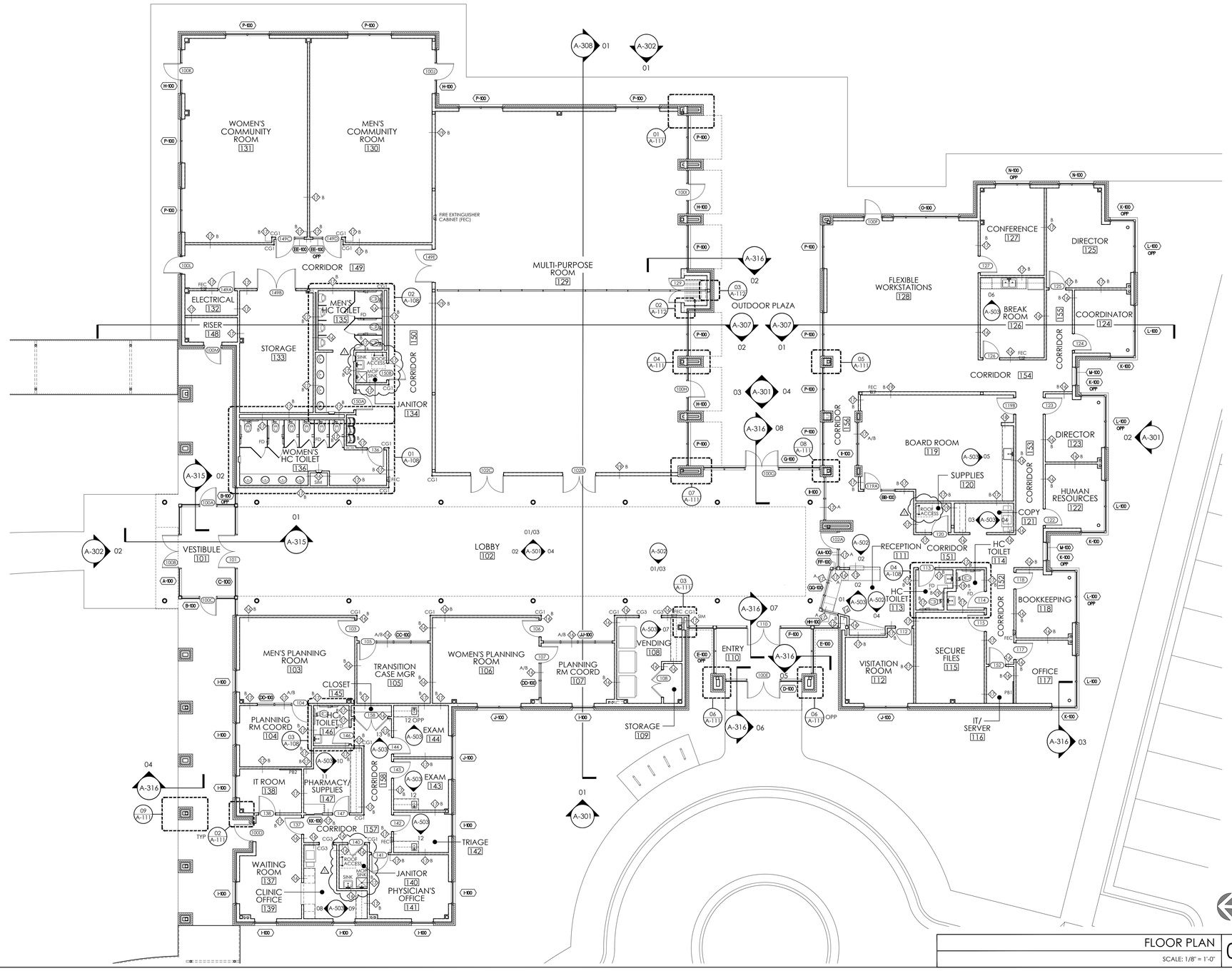

FLOOR PLAN 01

SCALE: 1/8" = 1'-0"

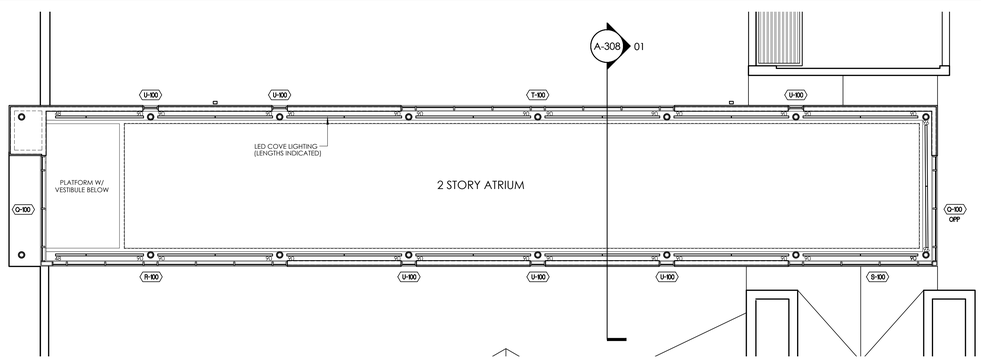

ATRIUM FLOOR PLAN 02

SCALE: 1/8" = 1'-0"

PARTITION TYPES

1. 1/2 HOUR RATED FIRE PARTITION (NON-BEARING). PROVIDE (1) ONE LAYER 5/8" GYPSUM WB ON EACH SIDE OF 3 5/8" (20 GAUGE) METAL STUDS @ 16" O.C. RUN THE WALL SYSTEM FROM THE FINISH FLOOR TO THE UNDERSIDE OF THE ROOF DECK ABOVE AND SEAL. (UL DESIGN U425)
2. 1/2 HOUR RATED FIRE PARTITION (NON-BEARING). PROVIDE (1) ONE LAYER 5/8" GYPSUM WB ON EACH SIDE OF 6" (20 GAUGE) METAL STUDS @ 16" O.C. RUN THE WALL SYSTEM FROM THE FINISH FLOOR TO THE UNDERSIDE OF THE STRUCTURE ABOVE AND SEAL. (UL DESIGN U425)
3. 1 HOUR RATED FIRE PARTITION / SMOKE BARRIER (NON-BEARING). PROVIDE (1) ONE LAYER 5/8" GYPSUM WB ON EACH SIDE OF 3 5/8" METAL STUDS @ 16" O.C. RUN THE WALL ASSEMBLY FROM THE FINISH FLOOR TO THE UNDERSIDE OF THE STRUCTURE ABOVE AND SEAL. (UL DESIGN U419)
4. 1 HOUR RATED FIRE PARTITION / BARRIER (NON-BEARING). PROVIDE (1) ONE LAYER 5/8" GYPSUM WB ON EACH SIDE OF 6" METAL STUDS @ 16" O.C. RUN THE WALL ASSEMBLY FROM THE FINISH FLOOR TO THE UNDERSIDE OF THE STRUCTURE ABOVE AND SEAL. (UL DESIGN U419)
5. 1 HOUR RATED SMOKE/FIRE BARRIER (NON-BEARING). PROVIDE 6" CMU WALL. RUN THE WALL SYSTEM FROM THE FINISH FLOOR TO THE UNDERSIDE OF THE ROOF DECK ABOVE. FILL VOIDS AT THE TOP OF THE WALL WITH FIRE-SAFING AND APPROVED FIRE SEALANT AS REQUIRED. (UL DESIGN U906)
6. 1 HOUR RATED SMOKE/FIRE BARRIER (NON-BEARING). PROVIDE 8" CMU WALL. RUN THE WALL SYSTEM FROM THE FINISH FLOOR TO THE UNDERSIDE OF THE ROOF DECK ABOVE. FILL VOIDS AT THE TOP OF THE WALL WITH FIRE-SAFING AND APPROVED FIRE SEALANT AS REQUIRED. (UL DESIGN U906)
7. NON-RATED 6" CMU LOW PARTITION. RUN MASONRY WALL FROM THE FINISH FLOOR TO 2'-4" A.F.F. PROVIDE 1" RADIUS BULLNOSE TOP UNIT AND 2" VINYL ENCASED FOAM PADDING ON TOP OF PARTITION - SECURE PAD WITH VELCRO STRIP.
8. NON-RATED 6" CMU LOW PARTITION. RUN MASONRY WALL FROM THE FINISH FLOOR TO 3'-8" A.F.F. PROVIDE 1" RADIUS DOUBLE BULLNOSE TOP UNIT.
9. NON-RATED 6" CMU LOW PARTITION. RUN MASONRY WALL FROM THE FINISH FLOOR TO 5'-0" A.F.F. INSTALL GALVANIZED HORIZONTAL LADDER REINFORCING AT 24" O.C. VERTICALLY. PROVIDE 1" RADIUS DOUBLE BULLNOSE TOP UNIT.
10. NON-RATED 6" CMU PARTITION. RUN MASONRY WALL FROM THE FINISH FLOOR TO 9'-4" A.F.F. INSTALL GALVANIZED HORIZONTAL LADDER REINFORCING AT 24" O.C. VERTICALLY.
11. NON-RATED 6" CMU PARTITION. RUN MASONRY WALL FROM THE FINISH FLOOR TO THE UNDERSIDE OF ROOF DECK ABOVE. INSTALL GALVANIZED HORIZONTAL LADDER REINFORCING AT 24" O.C. VERTICALLY.
12. NON-RATED 8" CMU PARTITION. RUN MASONRY WALL FROM THE FINISH FLOOR TO THE UNDERSIDE OF ROOF DECK ABOVE. INSTALL GALVANIZED HORIZONTAL LADDER REINFORCING AT 24" O.C. VERTICALLY.
13. NON-RATED PARTITION. PROVIDE 5/8" GYPSUM WB ON EACH SIDE OF 3 5/8" METAL STUDS @ 16" O.C. RUN GYPSUM WB AND METAL STUDS FROM THE FINISH FLOOR TO THE UNDERSIDE OF THE COUNTER W/ TOP AT 2'-6" A.F.F.
14. NON-RATED PARTITION. PROVIDE 5/8" GYPSUM WB ON EACH SIDE OF 3 5/8" METAL STUDS @ 16" O.C. RUN GYPSUM WB AND METAL STUDS FROM THE FINISH FLOOR TO THE UNDERSIDE OF THE COUNTER W/ TOP AT 3'-0" A.F.F.
15. NON-RATED PARTITION. PROVIDE 5/8" GYPSUM WB ON EACH SIDE OF 3 5/8" METAL STUDS @ 16" O.C. RUN GYPSUM WB AND METAL STUDS FROM THE FINISH FLOOR TO 8'-0" A.F.F.
16. NON-RATED PARTITION. PROVIDE 5/8" GYPSUM WB ON EACH SIDE OF 3 5/8" METAL STUDS @ 16" O.C. RUN GYPSUM WB AND METAL STUDS FROM THE FINISH FLOOR TO 10'-0" A.F.F.
17. NON-RATED PARTITION. PROVIDE 5/8" GYPSUM WB ON EACH SIDE OF 3 5/8" METAL STUDS @ 16" O.C. RUN GYPSUM WB AND METAL STUDS FROM THE FINISH FLOOR TO THE UNDERSIDE OF THE ROOF DECK ABOVE.
18. NON-RATED PARTITION. PROVIDE 5/8" GYPSUM WB ON EACH SIDE OF 6" METAL STUDS @ 16" O.C. RUN GYPSUM WB AND METAL STUDS FROM THE FINISH FLOOR TO 10'-0" A.F.F.
19. NON-RATED PARTITION. PROVIDE 5/8" GYPSUM WB ON EACH SIDE OF 6" METAL STUDS @ 16" O.C. RUN GYPSUM WB AND METAL STUDS FROM THE FINISH FLOOR TO THE UNDERSIDE OF THE ROOF DECK ABOVE.
20. NON-RATED PARTITION. PROVIDE 5/8" GYPSUM WB ON FINISH SIDE OF 7/8" HAT CHANNELS. RUN GYPSUM WB AND FURRING FROM THE FINISH FLOOR TO 10'-0" A.F.F.
21. SMOKE PARTITION. PROVIDE 5/8" GYPSUM WB ON EACH SIDE OF 3 5/8" METAL STUDS @ 16" O.C. RUN GYPSUM WB AND METAL STUDS FROM THE FINISH FLOOR TO THE UNDERSIDE OF THE ROOF DECK ABOVE. PROTECT TO COMPLY WITH 2018 NCSBC SECTION 710.
22. NON-RATED PARTITION. PROVIDE 5/8" GYPSUM WB ON THE FINISHED ROOM SIDE OF 3 5/8" METAL STUDS @ 16" O.C. RUN GYPSUM WB AND METAL STUDS FROM THE FINISH FLOOR TO THE UNDERSIDE OF THE ROOF DECK ABOVE. PROVIDE R-15 BATT INSULATION.

NOTES:

1. PROVIDE MOISTURE RESISTANT GYSUM WB FOR WALLS WITHIN HC TOILET ROOMS.
2. ALL THE GYPSUM WB PARTITIONS IN THE ADMINISTRATIVE BUILDING (EXCLUSIVE OF ROOMS 115-131 & 144-149)ARE TO BE ABUSE RESISTANT GYPSUM WB FROM THE FINISHED FLOOR TO 8'-0" A.F.F. ON 20 GAUGE METAL STUDS MIN.)
3. ALL WALLS TO BE BRACED TO STRUCTURE ABOVE TO RESIST LATERAL LOAD OF SLB MIN. SEE DETAILS ON SHEET A-003.
4. ALL EXPOSED MASONRY WALLS ARE TO HAVE BULLNOSE CAPS AND CORNERS.

WALL SYMBOL LEGEND

INDICATES NEW NON-RATED PARTITION	
1/2 HR RATED FIRE PARTITION	
1 HR RATED FIRE PARTITIONS/ BARRIERS & SMOKE BARRIERS	
SMOKE PARTITION	
INDICATES LOCATIONS WHERE FRP IS INSTALLED ON WALLS IN KITCHEN	
BRICK VENEER	
CMU WALLS	
INDICATES PARTITION TYPES ABOVE OR BELOW WINDOW	A (DESIGNATION NEXT TO PARTITION TYPE LABEL)
INDICATES SOUND BATTS IN INTERIOR PARTITION	B (DESIGNATION NEXT TO PARTITION TYPE LABEL)
INDICATES SMOKE BARRIER	SB (DESIGNATION NEXT TO PARTITION TYPE LABEL)
INDICATES SMOKE PARTITION	SP (DESIGNATION NEXT TO PARTITION TYPE LABEL)
FLUSH MOUNT CORNER GUARD TO 4'-0" A.F.F.	CG1 (SEE 08/A114)
FLUSH MOUNT CORNER GUARD TO 4'-0" A.F.F. (FIRE RATED)	CG2 (SEE 08/A114)
FLUSH MOUNT END WALL GUARD TO 4'-0" A.F.F.	CG3 (SEE 08/A114)
STAINLESS STEEL CORNER GUARD TO 4'-0" A.F.F.	CG4 (SEE 08/A114)
STAINLESS STEEL END WALL GUARD TO 4'-0" A.F.F.	CG5 (SEE 08/A114)
PATHWAY LIGHTING IN LOW MASONRY WALLS	WL
PROVIDE ½" 4X4 FRT PLY WOOD. PAINT TO MATCH GYPSUM WB	PB1
PROVIDE ½" 4X8 (H.) FRT PLY WOOD. PAINT TO MATCH GYPSUM WB	PB2

isdesign
ARCHITECTURE + INTERIORS
1111 Haynes Street, Suite 103
Raleigh, North Carolina 27604
t. 919.833.5400
www.isdesignpa.com

Project

THE HEALING PLACE OF NEW HANOVER COUNTY

1000 MEDICAL CENTER DRIVE
WILMINGTON, NORTH CAROLINA

Client

NEW HANOVER COUNTY, NORTH CAROLINA

All reproduction & intellectual property rights reserved © 2020

Key Plan



Professional Seals

No.	Description	Date
1	SCHEMATIC DESIGN	11/26/19
2	DESIGN DEVELOPMENT SET	04/09/20
3	CONSTRUCTION DOCUMENT SET	08/25/20
1	MCD #1	12/02/20

Project Code: 16HTWILMING

Sheet Title

FLOOR PLAN

ADMINISTRATIVE/ EDUCATION BUILDING

Original drawing is 42 x 30 Do not scale contents of this drawing

Sheet Number

A-101

12/2/2020 1:52 AM P:\16HTWILMING\Construction Documents\MCD#1\Construction Documents\CD-16HTWILMING - A-101R - CD Floor Plan - Administrative Building.dwg

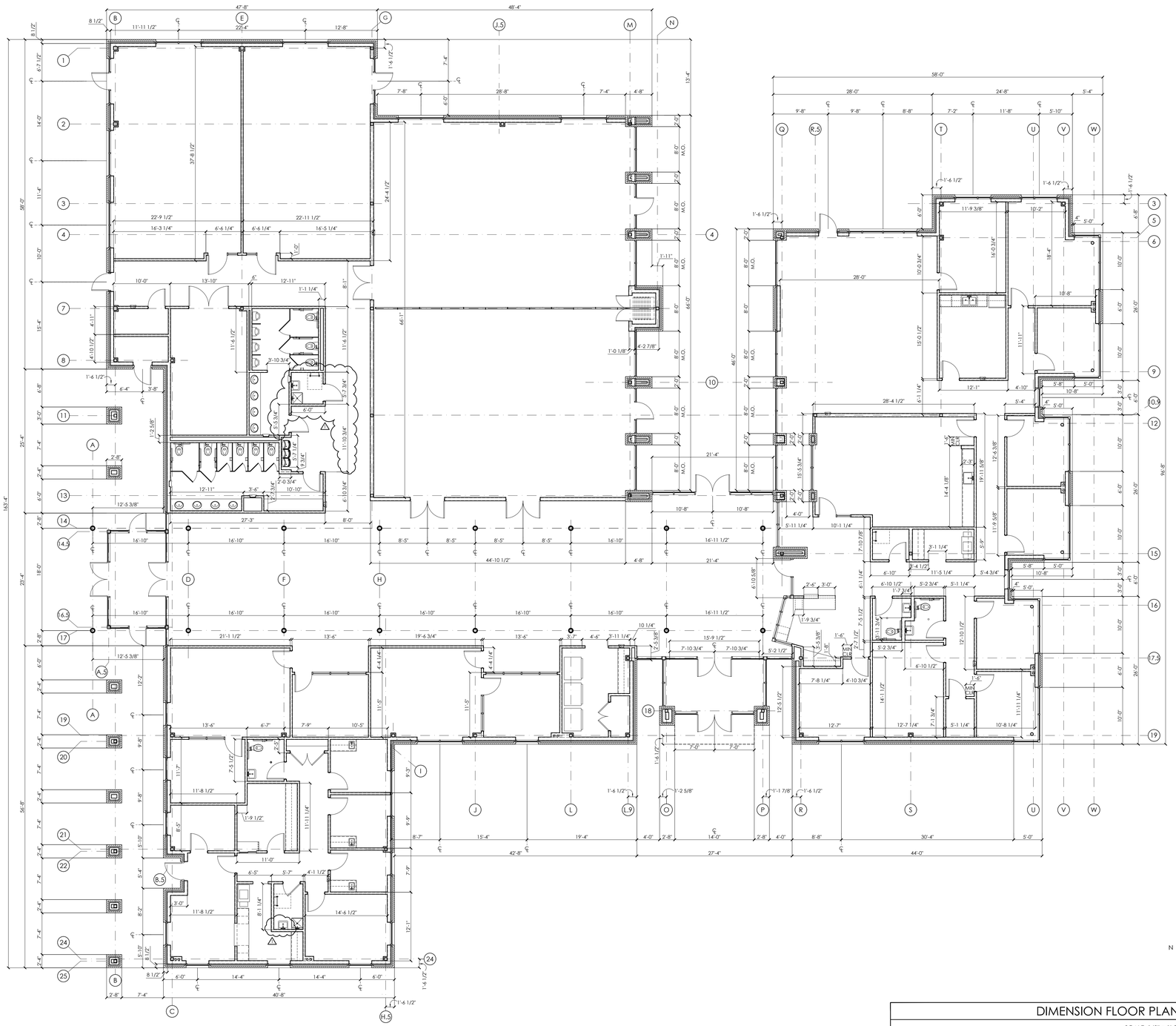

DIMENSION FLOOR PLAN
SCALE: 1/8" = 1'-0"
01

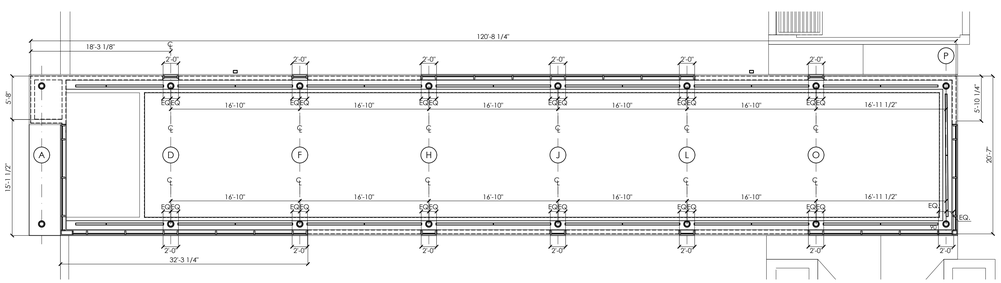

ATRIUM DIMENSION FLOOR PLAN
SCALE: 1/8" = 1'-0"
02

NOTES:

1. ALL DIMENSIONS SHOWN ARE FROM FACE OF STUD OR FACE OF MASONRY UNLESS NOTED OTHERWISE. ALL CMU WALLS ARE NOMINAL DIMENSIONS.
2. SEE ENLARGED PLANS ON SHEETS A-108 FOR ADDITIONAL DIMENSIONS.

isdesign
ARCHITECTURE + INTERIORS
1111 Haynes Street, Suite 103
Raleigh, North Carolina 27604
t. 919.833.5400
www.isdesignpa.com

Project

THE HEALING PLACE OF NEW HANOVER COUNTY

1000 MEDICAL CENTER DRIVE
WILMINGTON, NORTH CAROLINA

Client

NEW HANOVER COUNTY, NORTH CAROLINA

All reproduction & intellectual property rights reserved © 2020

Key Plan

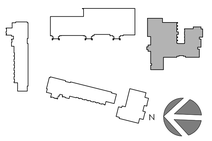

Professional Seals





No.	Description	Date
1	DESIGN DEVELOPMENT SET	04/09/20
2	CONSTRUCTION DOCUMENT SET	08/25/20
△	MCD #1	12/02/20

Project Code: 16HTWILMING

Sheet Title

DIMENSION FLOOR PLAN

ADMINISTRATIVE / EDUCATION BUILDING

Original drawing is 42 x 30 Do not scale contents of this drawing

Sheet Number

A-102

12/2/2020 1:54 AM P:\16HTWILMING\Construction Documents\MCD#1\Construction Documents\CD-16HTWILMING - A-102R - CD Dimension Floor Plan - Administrative Building.dwg

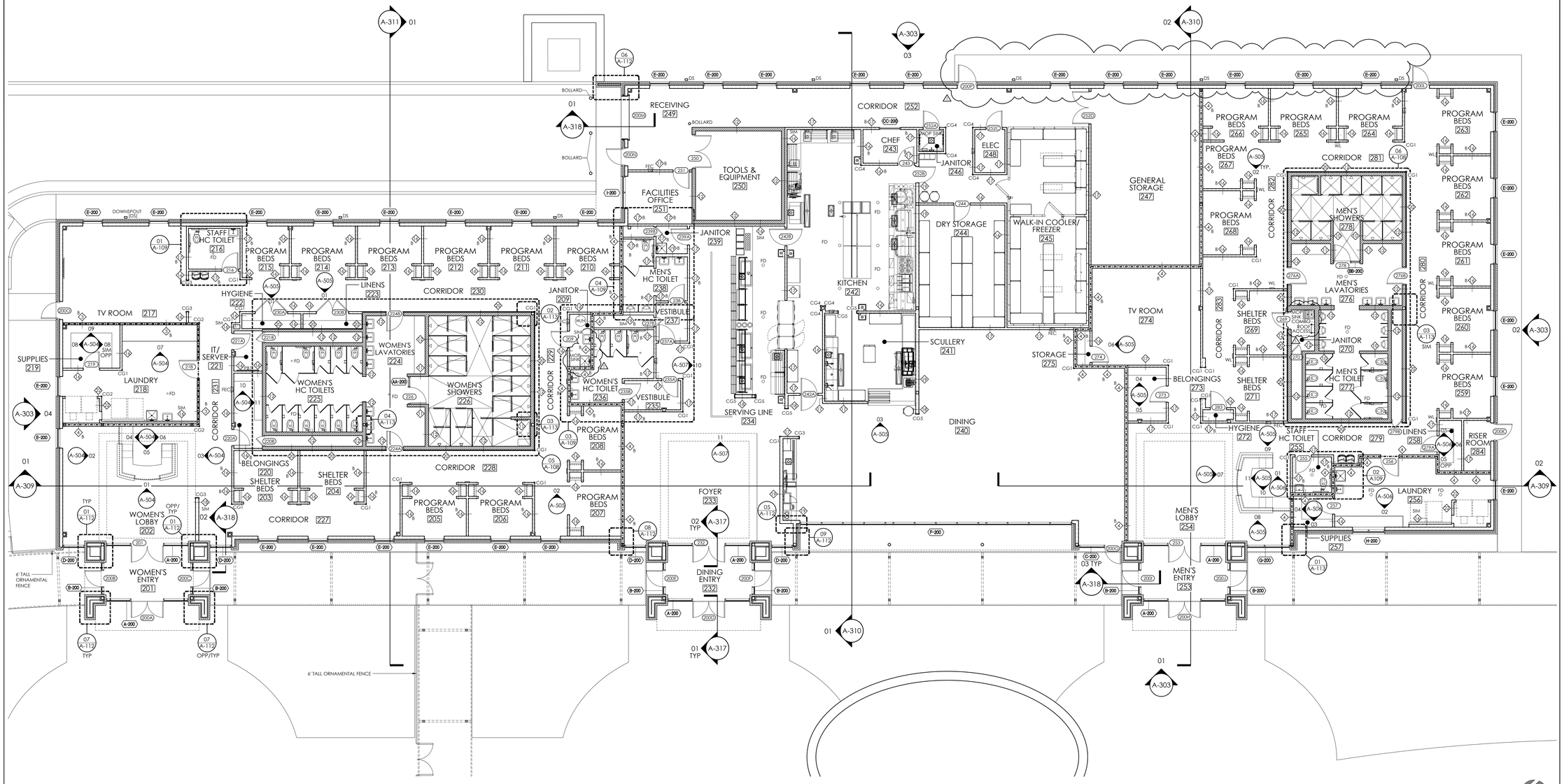

FLOOR PLAN

SCALE: 1/8" = 1'-0"

01

WALL SYMBOL LEGEND

INDICATES NEW NON-RATED PARTITION	
1/2 HR RATED FIRE PARTITION	
1 HR RATED FIRE PARTITIONS/ BARRIERS & SMOKE BARRIERS	
SMOKE PARTITION	
INDICATES LOCATIONS WHERE FRP IS INSTALLED ON WALLS IN KITCHEN	
BRICK VENEER	
CMU WALLS	
INDICATES PARTITION TYPES ABOVE OR BELOW WINDOW	A (DESIGNATION NEXT TO PARTITION TYPE LABEL)
INDICATES SOUND BATTS IN INTERIOR PARTITION	B (DESIGNATION NEXT TO PARTITION TYPE LABEL)
INDICATES SMOKE BARRIER	SB (DESIGNATION NEXT TO PARTITION TYPE LABEL)
INDICATES SMOKE PARTITION	SP (DESIGNATION NEXT TO PARTITION TYPE LABEL)
FLUSH MOUNT CORNER GUARD TO 4'-0" A.F.F.	CG1 (SEE 08/A114)
FLUSH MOUNT CORNER GUARD TO 4'-0" A.F.F. (FIRE RATED)	CG2 (SEE 08/A114)
FLUSH MOUNT END WALL GUARD TO 4'-0" A.F.F.	CG3 (SEE 08/A114)
STAINLESS STEEL CORNER GUARD TO 4'-0" A.F.F.	CG4 (SEE 08/A114)
STAINLESS STEEL END WALL GUARD TO 4'-0" A.F.F.	CG5 (SEE 08/A114)
PATHWAY LIGHTING IN LOW MASONRY WALLS	WL
PROVIDE ¾" 4'X4' FIRE-RETARDANT TREATED PLYWOOD, PAINT TO MATCH GYPSUM WB.	PB1

PARTITION TYPES

1. 1/2 HOUR RATED FIRE PARTITION (NON-BEARING). PROVIDE (1) ONE LAYER 5/8" GYPSUM WB ON EACH SIDE OF 3 5/8" (20 GAUGE) METAL STUDS @ 16" O.C. RUN THE WALL SYSTEM FROM THE FINISH FLOOR TO THE UNDERSIDE OF THE ROOF DECK ABOVE AND SEAL. (UL DESIGN U425)
2. 1/2 HOUR RATED FIRE PARTITION (NON-BEARING). PROVIDE (1) ONE LAYER 5/8" GYPSUM WB ON EACH SIDE OF 6" (20 GAUGE) METAL STUDS @ 16" O.C. RUN THE WALL SYSTEM FROM THE FINISH FLOOR TO THE UNDERSIDE OF THE STRUCTURE ABOVE AND SEAL. (UL DESIGN U425)
3. 1 HOUR RATED FIRE PARTITION / SMOKE BARRIER (NON-BEARING). PROVIDE (1) ONE LAYER 5/8" GYPSUM WB ON EACH SIDE OF 3 5/8" METAL STUDS @ 16" O.C. RUN THE WALL ASSEMBLY FROM THE FINISH FLOOR TO THE UNDERSIDE OF THE STRUCTURE ABOVE AND SEAL. (UL DESIGN U419)
4. 1 HOUR RATED FIRE PARTITION / BARRIER (NON-BEARING). PROVIDE (1) ONE LAYER 5/8" GYPSUM WB ON EACH SIDE OF 6" METAL STUDS @ 16" O.C. RUN THE WALL ASSEMBLY FROM THE FINISH FLOOR TO THE UNDERSIDE OF THE STRUCTURE ABOVE AND SEAL. (UL DESIGN U419)
5. 1 HOUR RATED SMOKE/FIRE BARRIER (NON-BEARING). PROVIDE 6" CMU WALL. RUN THE WALL SYSTEM FROM THE FINISH FLOOR TO THE UNDERSIDE OF THE ROOF DECK ABOVE. FILL VOIDS AT THE TOP OF THE WALL WITH FIRE-SAFING AND APPROVED FIRE SEALANT AS REQUIRED. (UL DESIGN U906)
6. 1 HOUR RATED SMOKE/FIRE BARRIER (NON-BEARING). PROVIDE 8" CMU WALL. RUN THE WALL SYSTEM FROM THE FINISH FLOOR TO THE UNDERSIDE OF THE ROOF DECK ABOVE. FILL VOIDS AT THE TOP OF THE WALL WITH FIRE-SAFING AND APPROVED FIRE SEALANT AS REQUIRED. (UL DESIGN U906)
7. NON-RATED 6" CMU LOW PARTITION. RUN MASONRY WALL FROM THE FINISH FLOOR TO 2'-4" A.F.F. PROVIDE 1" RADIUS BULLNOSE TOP UNIT AND 2" VINYL ENCASED FOAM PADDING ON TOP OF PARTITION - SECURE PAD WITH VELCRO STRIP.
8. NON-RATED 6" CMU LOW PARTITION. RUN MASONRY WALL FROM THE FINISH FLOOR TO 3'-8" A.F.F. PROVIDE 1" RADIUS DOUBLE BULLNOSE TOP UNIT.
9. NON-RATED 6" CMU LOW PARTITION. RUN MASONRY WALL FROM THE FINISH FLOOR TO 5'-0" A.F.F. INSTALL GALVANIZED HORIZONTAL LADDER REINFORCING AT 24" O.C. VERTICALLY. PROVIDE 1" RADIUS DOUBLE BULLNOSE TOP UNIT.
10. NON-RATED 6" CMU PARTITION. RUN MASONRY WALL FROM THE FINISH FLOOR TO 9'-4" A.F.F. INSTALL GALVANIZED HORIZONTAL LADDER REINFORCING AT 24" O.C. VERTICALLY.
11. NON-RATED 6" CMU PARTITION. RUN MASONRY WALL FROM THE FINISH FLOOR TO THE UNDERSIDE OF ROOF DECK ABOVE. INSTALL GALVANIZED HORIZONTAL LADDER REINFORCING AT 24" O.C. VERTICALLY.
12. NON-RATED 8" CMU PARTITION. RUN MASONRY WALL FROM THE FINISH FLOOR TO THE UNDERSIDE OF ROOF DECK ABOVE. INSTALL GALVANIZED HORIZONTAL LADDER REINFORCING AT 24" O.C. VERTICALLY.
13. NON-RATED PARTITION. PROVIDE 5/8" GYPSUM WB ON EACH SIDE OF 3 5/8" METAL STUDS @ 16" O.C. RUN GYPSUM WB AND METAL STUDS FROM THE FINISH FLOOR TO THE UNDERSIDE OF THE COUNTER W/ TOP AT 2'-6" A.F.F.
14. NON-RATED PARTITION. PROVIDE 5/8" GYPSUM WB ON EACH SIDE OF 3 5/8" METAL STUDS @ 16" O.C. RUN GYPSUM WB AND METAL STUDS FROM THE FINISH FLOOR TO THE UNDERSIDE OF THE COUNTER W/ TOP AT 3'-0" A.F.F.
15. NON-RATED PARTITION. PROVIDE 5/8" GYPSUM WB ON EACH SIDE OF 3 5/8" METAL STUDS @ 16" O.C. RUN GYPSUM WB AND METAL STUDS FROM THE FINISH FLOOR TO 8'-0" A.F.F.
16. NON-RATED PARTITION. PROVIDE 5/8" GYPSUM WB ON EACH SIDE OF 3 5/8" METAL STUDS @ 16" O.C. RUN GYPSUM WB AND METAL STUDS FROM THE FINISH FLOOR TO 10'-0" A.F.F.
17. NON-RATED PARTITION. PROVIDE 5/8" GYPSUM WB ON EACH SIDE OF 3 5/8" METAL STUDS @ 16" O.C. RUN GYPSUM WB AND METAL STUDS FROM THE FINISH FLOOR TO THE UNDERSIDE OF THE ROOF DECK ABOVE.
18. NON-RATED PARTITION. PROVIDE 5/8" GYPSUM WB ON EACH SIDE OF 6" METAL STUDS @ 16" O.C. RUN GYPSUM WB AND METAL STUDS FROM THE FINISH FLOOR TO 10'-0" A.F.F.
19. NON-RATED PARTITION. PROVIDE 5/8" GYPSUM WB ON EACH SIDE OF 6" METAL STUDS @ 16" O.C. RUN GYPSUM WB AND METAL STUDS FROM THE FINISH FLOOR TO THE UNDERSIDE OF THE ROOF DECK ABOVE.
20. NON-RATED PARTITION. PROVIDE 5/8" GYPSUM WB ON FINISH SIDE OF 7/8" HAT CHANNELS. RUN GYPSUM WB AND FURRING FROM THE FINISH FLOOR TO 10'-0" A.F.F.
21. SMOKE PARTITION. PROVIDE 5/8" GYPSUM WB ON EACH SIDE OF 3 5/8" METAL STUDS @ 16" O.C. RUN GYPSUM WB AND METAL STUDS FROM THE FINISH FLOOR TO THE UNDERSIDE OF THE ROOF DECK ABOVE. PROTECT TO COMPLY WITH 2018 NCSBC SECTION 710.
22. NON-RATED PARTITION. PROVIDE 5/8" GYPSUM WB ON THE FINISHED ROOM SIDE OF 3 5/8" METAL STUDS @ 16" O.C. RUN GYPSUM WB AND METAL STUDS FROM THE FINISH FLOOR TO THE UNDERSIDE OF THE ROOF DECK ABOVE. PROVIDE R-15 BATT INSULATION.

NOTES:

1. PROVIDE MOISTURE RESISTANT GYSUM WB FOR WALLS WITHIN HC TOILET ROOMS.
2. ALL THE GYPSUM WB PARTITIONS IN THE DINING / SHELTER BUILDING ARE TO BE ABUSE RESISTANT GYPSUM WB FROM THE FINISHED FLOOR TO 8'-0" A.F.F. ON 20 GAUGE METAL STUDS MIN.)
3. ALL WALLS TO BE BRACED TO STRUCTURE ABOVE TO RESIST LATERAL LOAD OF 5LB MIN. SEE DETAILS ON SHEET A-003.
4. ALL EXPOSED MASONRY WALLS ARE TO HAVE BULLNOSE CAPS AND CORNERS.
5. REFER TO WALL FINISH PLANS FOR FINISH MATERIALS AND LOCATIONS.

isdesign
ARCHITECTURE + INTERIORS
1111 Haynes Street, Suite 103
Raleigh, North Carolina 27604
t. 919.833.5400
www.isdesignpa.com

Project

THE HEALING PLACE OF NEW HANOVER COUNTY

1000 MEDICAL CENTER DRIVE
WILMINGTON, NORTH CAROLINA

Client

NEW HANOVER COUNTY, NORTH CAROLINA

All reproduction & intellectual property rights reserved © 2020

Key Plan

Professional Seals

No.	Description	Date
1	SCHEMATIC DESIGN	11/26/19
2	DESIGN DEVELOPMENT SET	04/09/20
3	CONSTRUCTION DOCUMENT SET	08/25/20
1	MCD #1	12/02/20

Project Code: 16HTWILMING

Sheet Title

FLOOR PLAN

DINING/SHELTER/STORAGE BUILDING

Original drawing is 42 x 30 Do not scale contents of this drawing

Sheet Number

A-103

12/2/2020 1:56 AM P:\16HTWILMING\Construction Documents\CD-16HTWILMING - A-103R - CD Floor Plan - Dining - Shelter - Storage Building.dwg

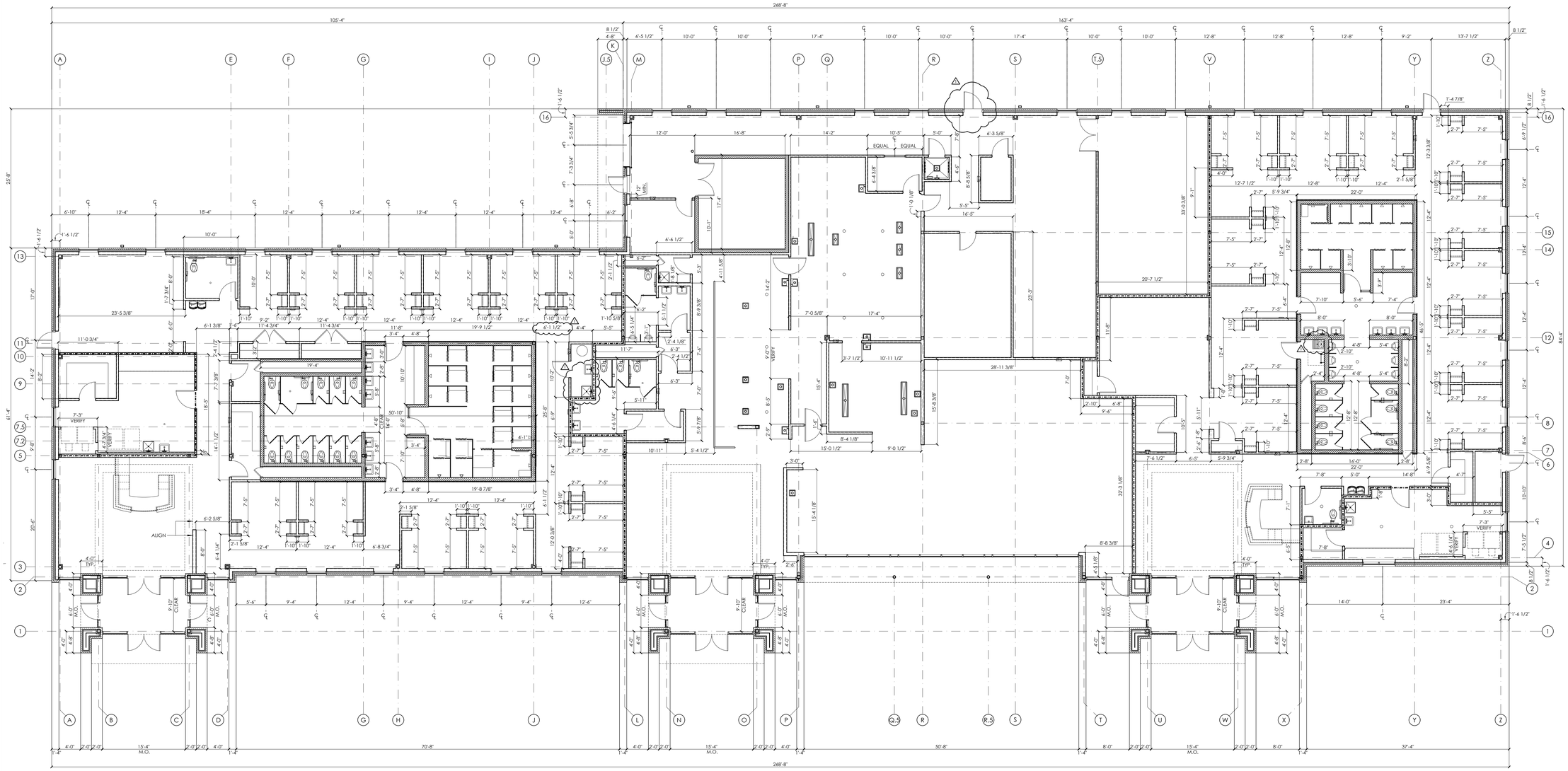

N

DIMENSION FLOOR PLAN

SCALE: 1/8" = 1'-0"

01

NOTES:

1. ALL DIMENSIONS SHOWN ARE FROM FACE OF STUD OR FACE OF MASONRY UNLESS NOTED OTHERWISE. ALL CMU WALLS ARE NOMINAL DIMENSIONS.
2. SEE ENLARGED PLANS ON SHEETS A-108 AND A-109 FOR ADDITIONAL DIMENSIONS.

isdesign
ARCHITECTURE + INTERIORS
1111 Haynes Street, Suite 103
Raleigh, North Carolina 27604
t. 919.833.5400
www.isdesignpa.com

Project

THE HEALING PLACE OF NEW HANOVER COUNTY

1000 MEDICAL CENTER DRIVE
WILMINGTON, NORTH CAROLINA

Client

NEW HANOVER COUNTY, NORTH CAROLINA

All reproduction & intellectual property rights reserved © 2020

Key Plan

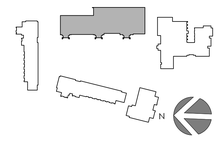

Professional Seals



No.	Description	Date
1	SCHEMATIC DESIGN	11/26/19
2	DESIGN DEVELOPMENT PACKAGE	04/09/20
3	CONSTRUCTION DOCUMENT SET	08/25/20
1	MCD #1	12/02/20

Project Code: 16HTWILMING

Sheet Title

DIMENSION FLOOR PLAN

DINING/SHELTER/STORAGE BUILDING

Original drawing is 42 x 30 Do not scale contents of this drawing

Sheet Number

A-104

12/2/2020 1:58 AM P:\16HTWILMING\Construction Documents\MCD#1\Construction Documents\CD-16HTWILMING - A-104R - CD Dimension Floor Plan - Dining - Shelter - Storage Building.dwg

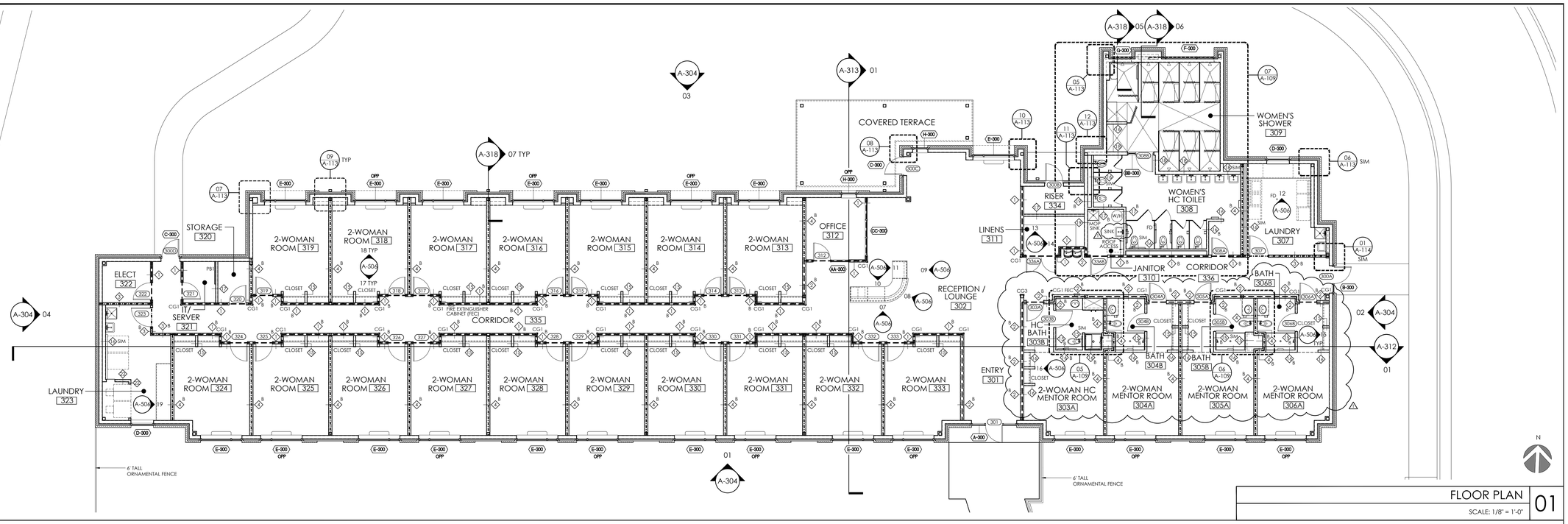

FLOOR PLAN 01

SCALE: 1/8" = 1'-0"

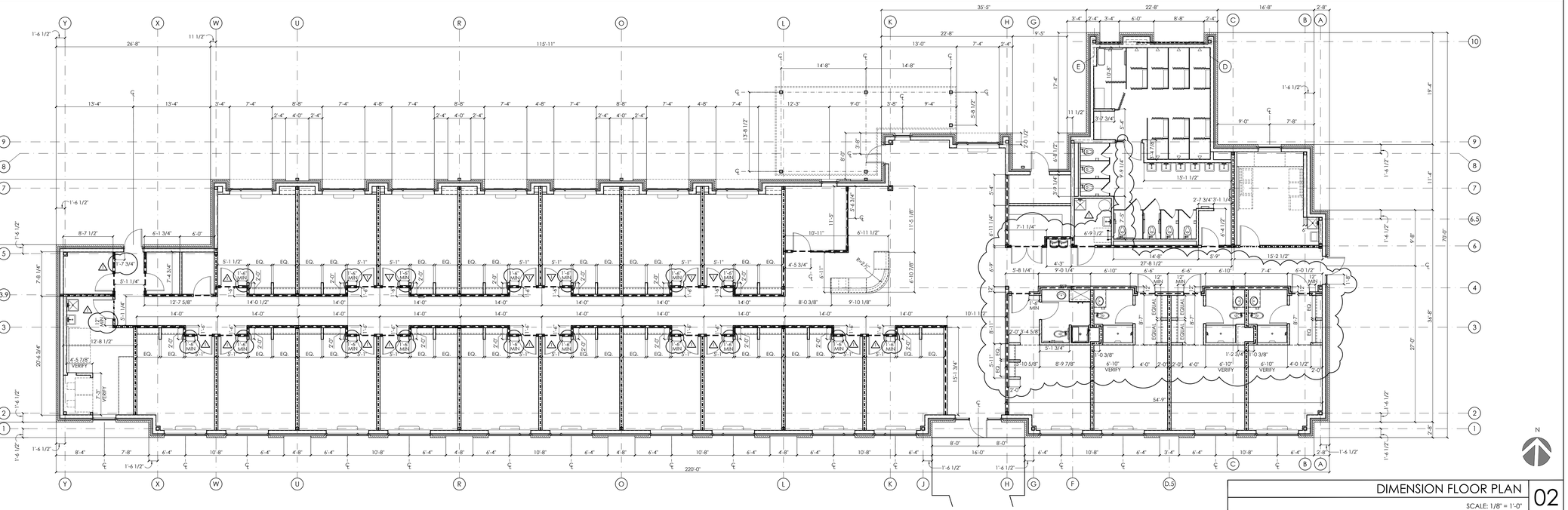

DIMENSION FLOOR PLAN 02

SCALE: 1/8" = 1'-0"

PARTITION TYPES

1. 1/2 HOUR RATED FIRE PARTITION (NON-BEARING). PROVIDE (1) ONE LAYER 5/8" GYPSUM WB ON EACH SIDE OF 3 5/8" (20 GAUGE) METAL STUDS @ 16" O.C. RUN THE WALL SYSTEM FROM THE FINISH FLOOR TO THE UNDERSIDE OF THE ROOF DECK ABOVE AND SEAL. (UL DESIGN U425)
2. 1/2 HOUR RATED FIRE PARTITION (NON-BEARING). PROVIDE (1) ONE LAYER 5/8" GYPSUM WB ON EACH SIDE OF 6" (20 GAUGE) METAL STUDS @ 16" O.C. RUN THE WALL SYSTEM FROM THE FINISH FLOOR TO THE UNDERSIDE OF THE STRUCTURE ABOVE AND SEAL. (UL DESIGN U425)
3. 1 HOUR RATED FIRE PARTITION / SMOKE BARRIER (NON-BEARING). PROVIDE (1) ONE LAYER 5/8" GYPSUM WB ON EACH SIDE OF 3 5/8" METAL STUDS @ 16" O.C. RUN THE WALL ASSEMBLY FROM THE FINISH FLOOR TO THE UNDERSIDE OF THE STRUCTURE ABOVE AND SEAL. (UL DESIGN U419)
4. 1 HOUR RATED FIRE PARTITION / BARRIER (NON-BEARING). PROVIDE (1) ONE LAYER 5/8" GYPSUM WB ON EACH SIDE OF 6" METAL STUDS @ 16" O.C. RUN THE WALL ASSEMBLY FROM THE FINISH FLOOR TO THE UNDERSIDE OF THE STRUCTURE ABOVE AND SEAL. (UL DESIGN U419)
5. 1 HOUR RATED SMOKE/FIRE BARRIER (NON-BEARING). PROVIDE 6" CMU WALL. RUN THE WALL SYSTEM FROM THE FINISH FLOOR TO THE UNDERSIDE OF THE ROOF DECK ABOVE. FILL VOIDS AT THE TOP OF THE WALL WITH FIRE-SAFING AND APPROVED FIRE SEALANT AS REQUIRED. (UL DESIGN U906)
6. 1 HOUR RATED SMOKE/FIRE BARRIER (NON-BEARING). PROVIDE 8" CMU WALL. RUN THE WALL SYSTEM FROM THE FINISH FLOOR TO THE UNDERSIDE OF THE ROOF DECK ABOVE. FILL VOIDS AT THE TOP OF THE WALL WITH FIRE-SAFING AND APPROVED FIRE SEALANT AS REQUIRED. (UL DESIGN U906)
7. NON-RATED 6" CMU LOW PARTITION. RUN MASONRY WALL FROM THE FINISH FLOOR TO 2'-4" A.F.F. PROVIDE 1" RADIUS BULLNOSE TOP UNIT AND 2" VINYL ENCASED FOAM PADDING ON TOP OF PARTITION - SECURE PAD WITH VELCRO STRIP.
8. NON-RATED 6" CMU LOW PARTITION. RUN MASONRY WALL FROM THE FINISH FLOOR TO 3'-8" A.F.F. PROVIDE 1" RADIUS DOUBLE BULLNOSE TOP UNIT.
9. NON-RATED 6" CMU LOW PARTITION. RUN MASONRY WALL FROM THE FINISH FLOOR TO 5'-0" A.F.F. INSTALL GALVANIZED HORIZONTAL LADDER REINFORCING AT 24" O.C. VERTICALLY. PROVIDE 1" RADIUS DOUBLE BULLNOSE TOP UNIT.
10. NON-RATED 6" CMU PARTITION. RUN MASONRY WALL FROM THE FINISH FLOOR TO 9'-4" A.F.F. INSTALL GALVANIZED HORIZONTAL LADDER REINFORCING AT 24" O.C. VERTICALLY.
11. NON-RATED 6" CMU PARTITION. RUN MASONRY WALL FROM THE FINISH FLOOR TO THE UNDERSIDE OF ROOF DECK ABOVE. INSTALL GALVANIZED HORIZONTAL LADDER REINFORCING AT 24" O.C. VERTICALLY.
12. NON-RATED 4" CMU PARTITION. RUN MASONRY WALL FROM THE FINISH FLOOR TO THE UNDERSIDE OF ROOF DECK ABOVE. INSTALL GALVANIZED HORIZONTAL LADDER REINFORCING AT 24" O.C. VERTICALLY.
13. NON-RATED PARTITION. PROVIDE 5/8" GYPSUM WB ON EACH SIDE OF 3 5/8" METAL STUDS @ 16" O.C. RUN GYPSUM WB AND METAL STUDS FROM THE FINISH FLOOR TO THE UNDERSIDE OF THE COUNTER W/ TOP AT 2'-6" A.F.F.
14. NON-RATED PARTITION. PROVIDE 5/8" GYPSUM WB ON EACH SIDE OF 3 5/8" METAL STUDS @ 16" O.C. RUN GYPSUM WB AND METAL STUDS FROM THE FINISH FLOOR TO THE UNDERSIDE OF THE COUNTER W/ TOP AT 3'-0" A.F.F.
15. NON-RATED PARTITION. PROVIDE 5/8" GYPSUM WB ON EACH SIDE OF 3 5/8" METAL STUDS @ 16" O.C. RUN GYPSUM WB AND METAL STUDS FROM THE FINISH FLOOR TO 8'-0" A.F.F.
16. NON-RATED PARTITION. PROVIDE 5/8" GYPSUM WB ON EACH SIDE OF 3 5/8" METAL STUDS @ 16" O.C. RUN GYPSUM WB AND METAL STUDS FROM THE FINISH FLOOR TO 10'-0" A.F.F.
17. NON-RATED PARTITION. PROVIDE 5/8" GYPSUM WB ON EACH SIDE OF 3 5/8" METAL STUDS @ 16" O.C. RUN GYPSUM WB AND METAL STUDS FROM THE FINISH FLOOR TO THE UNDERSIDE OF THE ROOF DECK ABOVE.
18. NON-RATED PARTITION. PROVIDE 5/8" GYPSUM WB ON EACH SIDE OF 6" METAL STUDS @ 16" O.C. RUN GYPSUM WB AND METAL STUDS FROM THE FINISH FLOOR TO 10'-0" A.F.F.
19. NON-RATED PARTITION. PROVIDE 5/8" GYPSUM WB ON EACH SIDE OF 6" METAL STUDS @ 16" O.C. RUN GYPSUM WB AND METAL STUDS FROM THE FINISH FLOOR TO THE UNDERSIDE OF THE ROOF DECK ABOVE.
20. NON-RATED PARTITION. PROVIDE 5/8" GYPSUM WB ON FINISH SIDE OF 7/8" HAT CHANNELS. RUN GYPSUM WB AND FURRING FROM THE FINISH FLOOR TO 10'-0" A.F.F.
21. SMOKE PARTITION. PROVIDE 5/8" GYPSUM WB ON EACH SIDE OF 3 5/8" METAL STUDS @ 16" O.C. RUN GYPSUM WB AND METAL STUDS FROM THE FINISH FLOOR TO THE UNDERSIDE OF THE ROOF DECK ABOVE. PROTECT TO COMPLY WITH 2018 NCSBC SECTION 710.
22. NON-RATED PARTITION. PROVIDE 5/8" GYPSUM WB ON THE FINISHED ROOM SIDE OF 3 5/8" METAL STUDS @ 16" O.C. RUN GYPSUM WB AND METAL STUDS FROM THE FINISH FLOOR TO THE UNDERSIDE OF THE ROOF DECK ABOVE. PROVIDE R-15 BATT INSULATION.

NOTES:

1. PROVIDE MOISTURE RESISTANT GYSUM WB FOR WALLS WITHIN HC TOILET ROOMS.
2. ALL THE GYPSUM WB PARTITIONS IN THE WOMEN'S RESIDENTIAL BUILDING ARE TO BE ABUSE RESISTANT GYPSUM WB FROM THE FINISHED FLOOR TO 8'-0" A.F.F. ON 20 GAUGE METAL STUDS MIN.)
3. ALL WALLS TO BE BRACED TO STRUCTURE ABOVE TO RESIST LATERAL LOAD OF 5LB MIN. SEE DETAILS ON SHEET A-003.
4. ALL EXPOSED MASONRY WALLS ARE TO HAVE BULLNOSE CAPS AND CORNERS.
5. REFER TO WALL FINISH PLANS FOR FINISH MATERIAL LOCATIONS.
6. ALL DIMENSIONS SHOWN ARE FROM FACE OF STUD OR FACE OF MASONRY UNLESS NOTED OTHERWISE.
7. SEE ENLARGED PLANS ON SHEET A-109 FOR ADDITIONAL DIMENSIONS.

WALL SYMBOL LEGEND

INDICATES NEW NON-RATED PARTITION		PROVIDE ¾" 4'X4' FIRE-RETARDANT TREATED PLYWOOD. PAINT TO MATCH GYPSUM WB. ⎓ PB1
1/2 HR RATED FIRE PARTITION		
1 HR RATED FIRE PARTITIONS/ BARRIERS & SMOKE BARRIERS		
SMOKE PARTITION		
INDICATES LOCATIONS WHERE FRP IS INSTALLED ON WALLS IN KITCHEN		
BRICK VENEER		
CMU WALLS		
INDICATES PARTITION TYPES ABOVE OR BELOW WINDOW		A (DESIGNATION NEXT TO PARTITION TYPE LABEL)
INDICATES SOUND BATTS IN INTERIOR PARTITION		B (DESIGNATION NEXT TO PARTITION TYPE LABEL)
INDICATES SMOKE BARRIER		SB (DESIGNATION NEXT TO PARTITION TYPE LABEL)
INDICATES SMOKE PARTITION		SP (DESIGNATION NEXT TO PARTITION TYPE LABEL)
FLUSH MOUNT CORNER GUARD TO 4'-0" A.F.F.	⌞ CG1 (SEE 08/A114)	
FLUSH MOUNT CORNER GUARD TO 4'-0" A.F.F. (FIRE RATED)	⌞ CG2 (SEE 08/A114)	
FLUSH MOUNT END WALL GUARD TO 4'-0" A.F.F.	⌞ CG3 (SEE 08/A114)	
STAINLESS STEEL CORNER GUARD TO 4'-0" A.F.F.	⌞ CG4 (SEE 08/A114)	
STAINLESS STEEL END WALL GUARD TO 4'-0" A.F.F.	⌞ CG5 (SEE 08/A114)	
PATHWAY LIGHTING IN LOW MASONRY WALLS	⎓ WL	

isdesign
ARCHITECTURE + INTERIORS
1111 Haynes Street, Suite 103
Raleigh, North Carolina 27604
t. 919.833.5400
www.isdesignpa.com

Project

THE HEALING PLACE OF NEW HANOVER COUNTY

1000 MEDICAL CENTER DRIVE
WILMINGTON, NORTH CAROLINA

Client

NEW HANOVER COUNTY, NORTH CAROLINA

All reproduction & intellectual property rights reserved © 2020

Key Plan

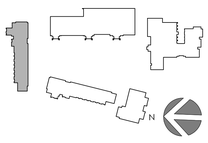

Professional Seals



No.	Description	Date
1	SCHEMATIC DESIGN	11/26/19
2	DESIGN DEVELOPMENT SET	04/09/20
3	CONSTRUCTION DOCUMENT SET	08/25/20
1	MCD #1	12/02/20

Project Code: 16HTWILMING

Sheet Title

FLOOR PLAN

RESIDENTIAL WOMEN'S FACILITY BUILDING

Original drawing is 42 x 30 Do not scale contents of this drawing.

Sheet Number

A-105

12/2/2020 2:01 AM P:\16HTWILMING\Construction Documents\MCD#1\Construction Documents\MCD#1\16HTWILMING - A-105R - CD Floor Plan & Dimensions - Residential Women's Facility Building.dwg

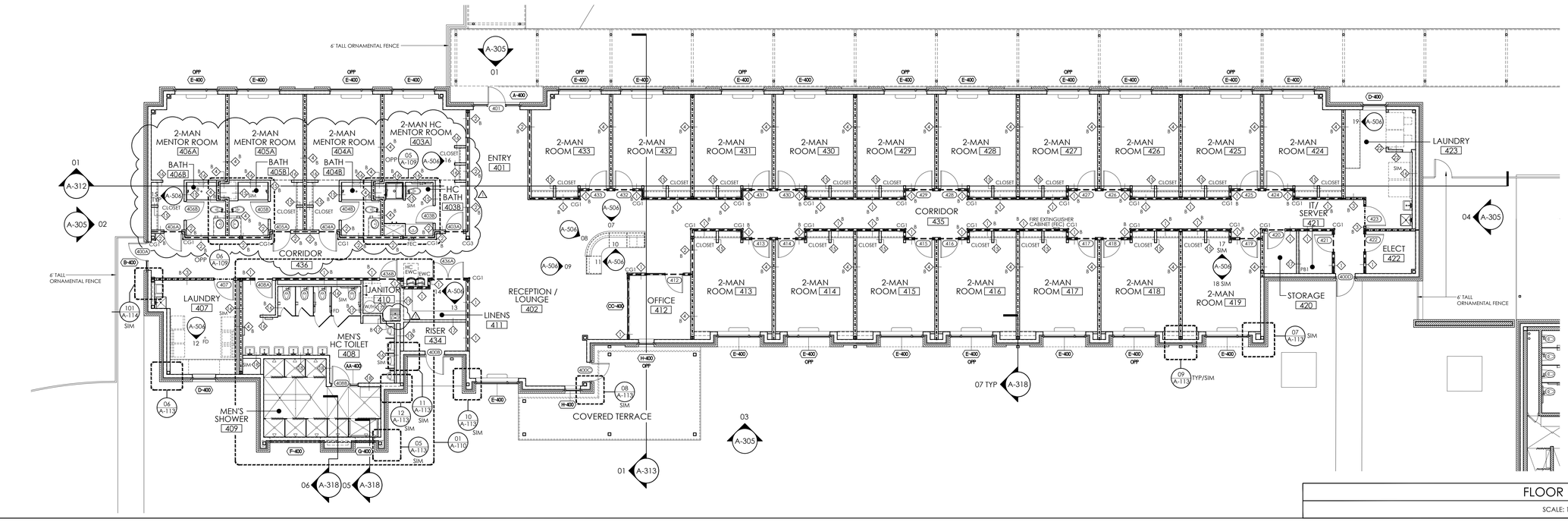

FLOOR PLAN | 01

SCALE: 1/8" = 1'-0"

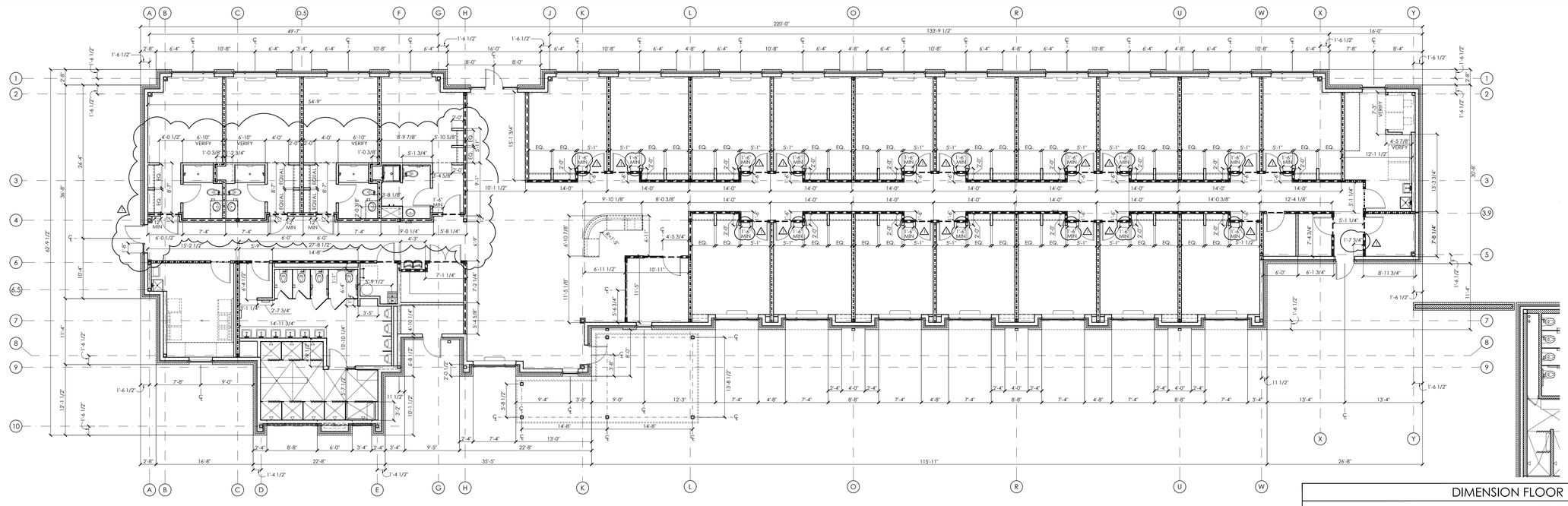

DIMENSION FLOOR PLAN | 02

SCALE: 1/8" = 1'-0"

PARTITION TYPES

1. 1/2 HOUR RATED FIRE PARTITION (NON-BEARING). PROVIDE (1) ONE LAYER 5/8" GYPSUM WB ON EACH SIDE OF 3 5/8" (20 GAUGE) METAL STUDS @ 16" O.C. RUN THE WALL SYSTEM FROM THE FINISH FLOOR TO THE UNDERSIDE OF THE ROOF DECK ABOVE AND SEAL. (UL DESIGN U425)
2. 1/2 HOUR RATED FIRE PARTITION (NON-BEARING). PROVIDE (1) ONE LAYER 5/8" GYPSUM WB ON EACH SIDE OF 6" (20 GAUGE) METAL STUDS @ 16" O.C. RUN THE WALL SYSTEM FROM THE FINISH FLOOR TO THE UNDERSIDE OF THE STRUCTURE ABOVE AND SEAL. (UL DESIGN U425)
3. 1 HOUR RATED FIRE PARTITION / SMOKE BARRIER (NON-BEARING). PROVIDE (1) ONE LAYER 5/8" GYPSUM WB ON EACH SIDE OF 3 5/8" METAL STUDS @ 16" O.C. RUN THE WALL ASSEMBLY FROM THE FINISH FLOOR TO THE UNDERSIDE OF THE STRUCTURE ABOVE AND SEAL. (UL DESIGN U419)
4. 1 HOUR RATED FIRE PARTITION / BARRIER (NON-BEARING). PROVIDE (1) ONE LAYER 5/8" GYPSUM WB ON EACH SIDE OF 6" METAL STUDS @ 16" O.C. RUN THE WALL ASSEMBLY FROM THE FINISH FLOOR TO THE UNDERSIDE OF THE STRUCTURE ABOVE AND SEAL. (UL DESIGN U419)
5. 1 HOUR RATED SMOKE/FIRE BARRIER (NON-BEARING). PROVIDE 6" CMU WALL. RUN THE WALL SYSTEM FROM THE FINISH FLOOR TO THE UNDERSIDE OF THE ROOF DECK ABOVE. FILL VOIDS AT THE TOP OF THE WALL WITH FIRE-SAFING AND APPROVED FIRE SEALANT AS REQUIRED. (UL DESIGN U906)
6. 1 HOUR RATED SMOKE/FIRE BARRIER (NON-BEARING). PROVIDE 8" CMU WALL. RUN THE WALL SYSTEM FROM THE FINISH FLOOR TO THE UNDERSIDE OF THE ROOF DECK ABOVE. FILL VOIDS AT THE TOP OF THE WALL WITH FIRE-SAFING AND APPROVED FIRE SEALANT AS REQUIRED. (UL DESIGN U906)
7. NON-RATED 6" CMU LOW PARTITION. RUN MASONRY WALL FROM THE FINISH FLOOR TO 2'-4" A.F.F. PROVIDE 1" RADIUS BULLNOSE TOP UNIT AND 2" VINYL ENCASED FOAM PADDING ON TOP OF PARTITION - SECURE PAD WITH VELCRO STRIP.
8. NON-RATED 6" CMU LOW PARTITION. RUN MASONRY WALL FROM THE FINISH FLOOR TO 3'-8" A.F.F. PROVIDE 1" RADIUS DOUBLE BULLNOSE TOP UNIT.
9. NON-RATED 6" CMU LOW PARTITION. RUN MASONRY WALL FROM THE FINISH FLOOR TO 5'-0" A.F.F. INSTALL GALVANIZED HORIZONTAL LADDER REINFORCING AT 24" O.C. VERTICALLY. PROVIDE 1" RADIUS DOUBLE BULLNOSE TOP UNIT.
10. NON-RATED 6" CMU PARTITION. RUN MASONRY WALL FROM THE FINISH FLOOR TO 9'-4" A.F.F. INSTALL GALVANIZED HORIZONTAL LADDER REINFORCING AT 24" O.C. VERTICALLY.
11. NON-RATED 6" CMU PARTITION. RUN MASONRY WALL FROM THE FINISH FLOOR TO THE UNDERSIDE OF ROOF DECK ABOVE. INSTALL GALVANIZED HORIZONTAL LADDER REINFORCING AT 24" O.C. VERTICALLY.
12. NON-RATED 8" CMU PARTITION. RUN MASONRY WALL FROM THE FINISH FLOOR TO THE UNDERSIDE OF ROOF DECK ABOVE. INSTALL GALVANIZED HORIZONTAL LADDER REINFORCING AT 24" O.C. VERTICALLY.
13. NON-RATED PARTITION. PROVIDE 5/8" GYPSUM WB ON EACH SIDE OF 3 5/8" METAL STUDS @ 16" O.C. RUN GYPSUM WB AND METAL STUDS FROM THE FINISH FLOOR TO THE UNDERSIDE OF THE COUNTER W/ TOP AT 2'-6" A.F.F.
14. NON-RATED PARTITION. PROVIDE 5/8" GYPSUM WB ON EACH SIDE OF 3 5/8" METAL STUDS @ 16" O.C. RUN GYPSUM WB AND METAL STUDS FROM THE FINISH FLOOR TO THE UNDERSIDE OF THE COUNTER W/ TOP AT 3'-0" A.F.F.
15. NON-RATED PARTITION. PROVIDE 5/8" GYPSUM WB ON EACH SIDE OF 3 5/8" METAL STUDS @ 16" O.C. RUN GYPSUM WB AND METAL STUDS FROM THE FINISH FLOOR TO 8'-0" A.F.F.
16. NON-RATED PARTITION. PROVIDE 5/8" GYPSUM WB ON EACH SIDE OF 3 5/8" METAL STUDS @ 16" O.C. RUN GYPSUM WB AND METAL STUDS FROM THE FINISH FLOOR TO 10'-0" A.F.F.
17. NON-RATED PARTITION. PROVIDE 5/8" GYPSUM WB ON EACH SIDE OF 3 5/8" METAL STUDS @ 16" O.C. RUN GYPSUM WB AND METAL STUDS FROM THE FINISH FLOOR TO THE UNDERSIDE OF THE ROOF DECK ABOVE.
18. NON-RATED PARTITION. PROVIDE 5/8" GYPSUM WB ON EACH SIDE OF 6" METAL STUDS @ 16" O.C. RUN GYPSUM WB AND METAL STUDS FROM THE FINISH FLOOR TO 10'-0" A.F.F.
19. NON-RATED PARTITION. PROVIDE 5/8" GYPSUM WB ON EACH SIDE OF 6" METAL STUDS @ 16" O.C. RUN GYPSUM WB AND METAL STUDS FROM THE FINISH FLOOR TO THE UNDERSIDE OF THE ROOF DECK ABOVE. PROVIDE R-15 BATT INSULATION.
20. NON-RATED PARTITION. PROVIDE 5/8" GYPSUM WB ON FINISH SIDE OF 7/8" HAT CHANNELS. RUN GYPSUM WB AND FURRING FROM THE FINISH FLOOR TO 10'-0" A.F.F.
21. SMOKE PARTITION. PROVIDE 5/8" GYPSUM WB ON EACH SIDE OF 3 5/8" METAL STUDS @ 16" O.C. RUN GYPSUM WB AND METAL STUDS FROM THE FINISH FLOOR TO THE UNDERSIDE OF THE ROOF DECK ABOVE. PROTECT TO COMPLY WITH 2018 NCSBC SECTION 710.
22. NON-RATED PARTITION. PROVIDE 5/8" GYPSUM WB ON THE FINISHED ROOM SIDE OF 3 5/8" METAL STUDS @ 16" O.C. RUN GYPSUM WB AND METAL STUDS FROM THE FINISH FLOOR TO THE UNDERSIDE OF THE ROOF DECK ABOVE. PROVIDE R-15 BATT INSULATION.

NOTES:

1. PROVIDE MOISTURE RESISTANT GYSUM WB FOR WALLS WITHIN HC TOILET ROOMS.
2. ALL THE GYPSUM WB PARTITIONS IN THE MEN'S RESIDENTIAL BUILDING ARE TO BE ABUSE RESISTANT GYPSUM WB FROM THE FINISHED FLOOR TO 8'-0" A.F.F. ON 20 GAUGE METAL STUDS MIN.)
3. ALL WALLS TO BE BRACED TO STRUCTURE ABOVE TO RESIST LATERAL LOAD OF 5LB MIN. SEE DETAILS ON SHEET A-003.
4. ALL EXPOSED MASONRY WALLS ARE TO HAVE BULLNOSE CAPS AND CORNERS.
5. REFER TO WALL FINISH PLANS FOR FINISH MATERIAL LOCATIONS.
6. ALL DIMENSIONS SHOWN ARE FROM FACE OF STUD OR FACE OF MASONRY UNLESS NOTED OTHERWISE.
7. SEE ENLARGED PLANS ON SHEET A-110 FOR ADDITIONAL DIMENSIONS.

WALL SYMBOL LEGEND

INDICATES NEW NON-RATED PARTITION		PROVIDE 3/4" 4'X4' FIRE-RETARDANT TREATED PLYWOOD, PAINT TO MATCH GYPSUM WB. ⟹ PB1
1/2 HR RATED FIRE PARTITION		
1 HR RATED FIRE PARTITIONS/ BARRIERS & SMOKE BARRIERS		
SMOKE PARTITION		
INDICATES LOCATIONS WHERE FRP IS INSTALLED ON WALLS IN KITCHEN		
BRICK VENEER		
CMU WALLS		
INDICATES PARTITION TYPES ABOVE OR BELOW WINDOW	A	(DESIGNATION NEXT TO PARTITION TYPE LABEL)
INDICATES SOUND BATTS IN INTERIOR PARTITION	B	(DESIGNATION NEXT TO PARTITION TYPE LABEL)
INDICATES SMOKE BARRIER	SB	(DESIGNATION NEXT TO PARTITION TYPE LABEL)
INDICATES SMOKE PARTITION	SP	(DESIGNATION NEXT TO PARTITION TYPE LABEL)
FLUSH MOUNT CORNER GUARD TO 4'-0" A.F.F.	⌞ CG1	(SEE 08/A114)
FLUSH MOUNT CORNER GUARD TO 4'-0" A.F.F. (FIRE RATED)	⌞ CG2	(SEE 08/A114)
FLUSH MOUNT END WALL GUARD TO 4'-0" A.F.F.	⌞ CG3	(SEE 08/A114)
STAINLESS STEEL CORNER GUARD TO 4'-0" A.F.F.	⌞ CG4	(SEE 08/A114)
STAINLESS STEEL END WALL GUARD TO 4'-0" A.F.F.	⌞ CG5	(SEE 08/A114)
PATHWAY LIGHTING IN LOW MASONRY WALLS	⟹ WL	

isdesign
ARCHITECTURE + INTERIORS
1111 Haynes Street, Suite 103
Raleigh, North Carolina 27604
t. 919.833.5400
www.isdesignpa.com

Project

THE HEALING PLACE OF NEW HANOVER COUNTY

1000 MEDICAL CENTER DRIVE
WILMINGTON, NORTH CAROLINA

Client

NEW HANOVER COUNTY, NORTH CAROLINA

All reproduction & intellectual property rights reserved © 2020

Key Plan

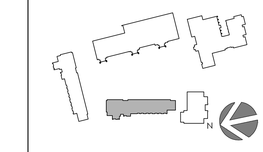

Professional Seals





No.	Description	Date
1	SCHEMATIC DESIGN	11/26/19
2	DESIGN DEVELOPMENT SET	04/09/20
3	CONSTRUCTION DOCUMENT SET	08/25/20
△	MCD #1	12/02/20

Project Code: 16HTWILMING

Sheet Title

FLOOR PLAN

RESIDENTIAL MEN'S FACILITY BUILDING

Original drawing is 42 x 30. Do not scale contents of this drawing.

Sheet Number

A-106

12/2/2020 3:44 PM P:\16HTWILMING\Construction Documents\MCD#1\Construction Documents\CD-16HTWILMING - A-106R - CD Floor Plan & Dimensions - Residential Men's Facility Building.dwg

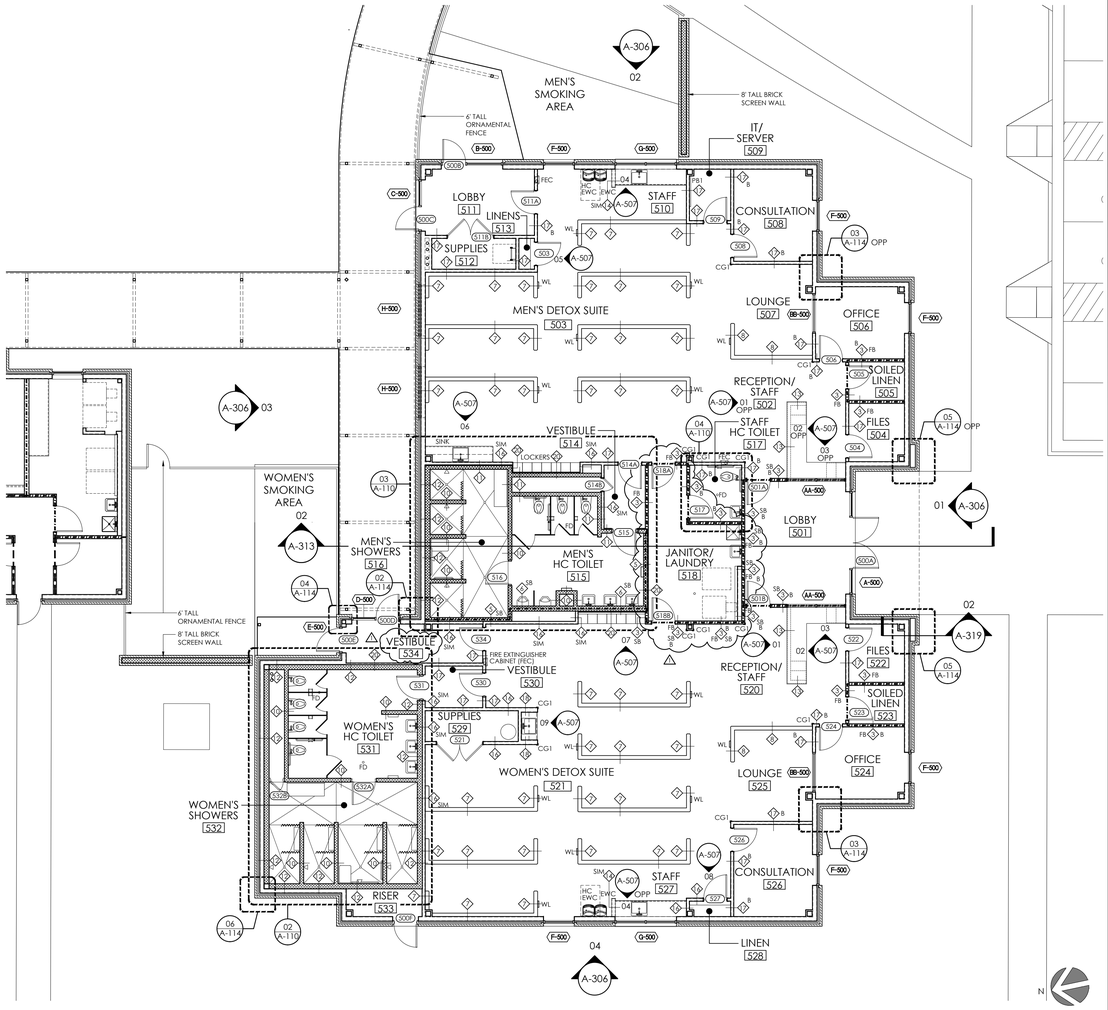

FLOOR PLAN 01

SCALE: 1/8" = 1'-0"

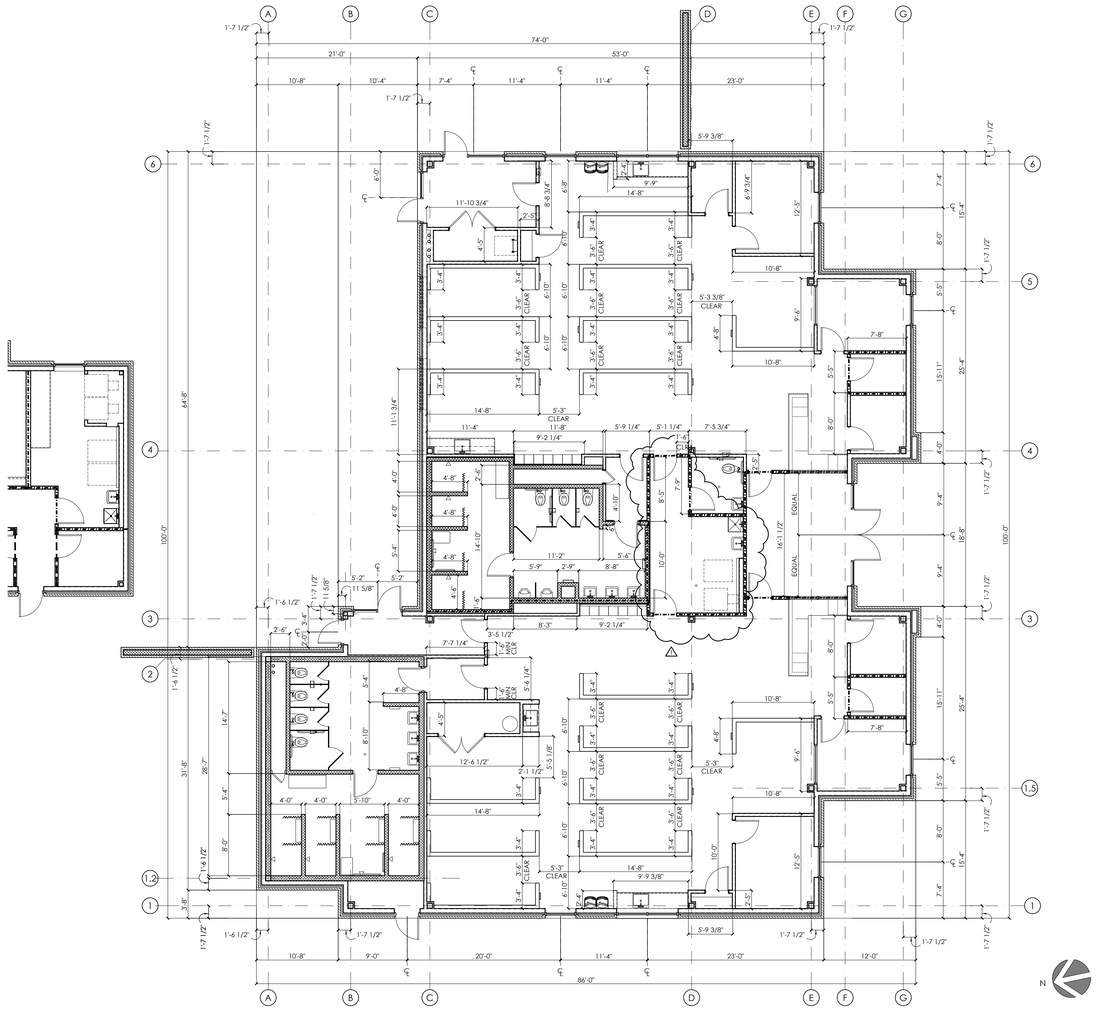

DIMENSION FLOOR PLAN 02

SCALE: 1/8" = 1'-0"

PARTITION TYPES

1. 1/2 HOUR RATED FIRE PARTITION (NON-BEARING). PROVIDE (1) ONE LAYER 5/8" GYPSUM WB ON EACH SIDE OF 3 5/8" (20 GAUGE) METAL STUDS @ 16" O.C. RUN THE WALL SYSTEM FROM THE FINISH FLOOR TO THE UNDERSIDE OF THE ROOF DECK ABOVE AND SEAL. (UL DESIGN U425)
2. 1/2 HOUR RATED FIRE PARTITION (NON-BEARING). PROVIDE (1) ONE LAYER 5/8" GYPSUM WB ON EACH SIDE OF 6" (20 GAUGE) METAL STUDS @ 16" O.C. RUN THE WALL SYSTEM FROM THE FINISH FLOOR TO THE UNDERSIDE OF THE STRUCTURE ABOVE AND SEAL. (UL DESIGN U425)
3. 1 HOUR RATED FIRE PARTITION / FIRE BARRIER / SMOKE BARRIER (NON-BEARING). PROVIDE (1) ONE LAYER 5/8" GYPSUM WB ON EACH SIDE OF 3 5/8" METAL STUDS @ 16" O.C. RUN THE WALL ASSEMBLY FROM THE FINISH FLOOR TO THE UNDERSIDE OF THE STRUCTURE ABOVE AND SEAL. (UL DESIGN U419)
4. 1 HOUR RATED FIRE PARTITION / BARRIER (NON-BEARING). PROVIDE (1) ONE LAYER 5/8" GYPSUM WB ON EACH SIDE OF 6" METAL STUDS @ 16" O.C. RUN THE WALL ASSEMBLY FROM THE FINISH FLOOR TO THE UNDERSIDE OF THE STRUCTURE ABOVE AND SEAL. (UL DESIGN U419)
5. 1 HOUR RATED SMOKE/FIRE BARRIER (NON-BEARING). PROVIDE 6" CMU WALL. RUN THE WALL SYSTEM FROM THE FINISH FLOOR TO THE UNDERSIDE OF THE ROOF DECK ABOVE. FILL VOIDS AT THE TOP OF THE WALL WITH FIRE-SAFING AND APPROVED FIRE SEALANT AS REQUIRED. (UL DESIGN U906)
6. 1 HOUR RATED SMOKE/FIRE BARRIER (NON-BEARING). PROVIDE 8" CMU WALL. RUN THE WALL SYSTEM FROM THE FINISH FLOOR TO THE UNDERSIDE OF THE ROOF DECK ABOVE. FILL VOIDS AT THE TOP OF THE WALL WITH FIRE-SAFING AND APPROVED FIRE SEALANT AS REQUIRED. (UL DESIGN U906)
7. NON-RATED 6" CMU LOW PARTITION. RUN MASONRY WALL FROM THE FINISH FLOOR TO 2'-4" A.F.F. PROVIDE 1" RADIUS BULLNOSE TOP UNIT AND 2" VINYL ENCASED FOAM PADDING ON TOP OF PARTITION - SECURE PAD WITH VELCRO STRIP.
8. NON-RATED 6" CMU LOW PARTITION. RUN MASONRY WALL FROM THE FINISH FLOOR TO 3'-8" A.F.F. PROVIDE 1" RADIUS DOUBLE BULLNOSE TOP UNIT.
9. NON-RATED 6" CMU LOW PARTITION. RUN MASONRY WALL FROM THE FINISH FLOOR TO 5'-0" A.F.F. INSTALL GALVANIZED HORIZONTAL LADDER REINFORCING AT 24" O.C. VERTICALLY. PROVIDE 1" RADIUS DOUBLE BULLNOSE TOP UNIT.
10. NON-RATED 6" CMU PARTITION. RUN MASONRY WALL FROM THE FINISH FLOOR TO 9'-4" A.F.F. INSTALL GALVANIZED HORIZONTAL LADDER REINFORCING AT 24" O.C. VERTICALLY.
11. NON-RATED 6" CMU PARTITION. RUN MASONRY WALL FROM THE FINISH FLOOR TO THE UNDERSIDE OF ROOF DECK ABOVE. INSTALL GALVANIZED HORIZONTAL LADDER REINFORCING AT 24" O.C. VERTICALLY.
12. NON-RATED 8" CMU PARTITION. RUN MASONRY WALL FROM THE FINISH FLOOR TO THE UNDERSIDE OF ROOF DECK ABOVE. INSTALL GALVANIZED HORIZONTAL LADDER REINFORCING AT 24" O.C. VERTICALLY.
13. NON-RATED PARTITION. PROVIDE 5/8" GYPSUM WB ON EACH SIDE OF 3 5/8" METAL STUDS @ 16" O.C. RUN GYPSUM WB AND METAL STUDS FROM THE FINISH FLOOR TO THE UNDERSIDE OF THE COUNTER W/ TOP AT 2'-6" A.F.F.
14. NON-RATED PARTITION. PROVIDE 5/8" GYPSUM WB ON EACH SIDE OF 3 5/8" METAL STUDS @ 16" O.C. RUN GYPSUM WB AND METAL STUDS FROM THE FINISH FLOOR TO THE UNDERSIDE OF THE COUNTER W/ TOP AT 3'-0" A.F.F.
15. NON-RATED PARTITION. PROVIDE 5/8" GYPSUM WB ON EACH SIDE OF 3 5/8" METAL STUDS @ 16" O.C. RUN GYPSUM WB AND METAL STUDS FROM THE FINISH FLOOR TO 8'-0" A.F.F.
16. NON-RATED PARTITION. PROVIDE 5/8" GYPSUM WB ON EACH SIDE OF 3 5/8" METAL STUDS @ 16" O.C. RUN GYPSUM WB AND METAL STUDS FROM THE FINISH FLOOR TO 10'-0" A.F.F.
17. NON-RATED PARTITION. PROVIDE 5/8" GYPSUM WB ON EACH SIDE OF 3 5/8" METAL STUDS @ 16" O.C. RUN GYPSUM WB AND METAL STUDS FROM THE FINISH FLOOR TO THE UNDERSIDE OF THE ROOF DECK ABOVE.
18. NON-RATED PARTITION. PROVIDE 5/8" GYPSUM WB ON EACH SIDE OF 6" METAL STUDS @ 16" O.C. RUN GYPSUM WB AND METAL STUDS FROM THE FINISH FLOOR TO 10'-0" A.F.F.
19. NON-RATED PARTITION. PROVIDE 5/8" GYPSUM WB ON EACH SIDE OF 6" METAL STUDS @ 16" O.C. RUN GYPSUM WB AND METAL STUDS FROM THE FINISH FLOOR TO THE UNDERSIDE OF THE ROOF DECK ABOVE.
20. NON-RATED PARTITION. PROVIDE 5/8" GYPSUM WB ON FINISH SIDE OF 7/8" HAT CHANNELS. RUN GYPSUM WB AND FURRING FROM THE FINISH FLOOR TO 10'-0" A.F.F.
21. SMOKE PARTITION. PROVIDE 5/8" GYPSUM WB ON EACH SIDE OF 3 5/8" METAL STUDS @ 16" O.C. RUN GYPSUM WB AND METAL STUDS FROM THE FINISH FLOOR TO THE UNDERSIDE OF THE ROOF DECK ABOVE. PROTECT TO COMPLY WITH 2018 NCSBC SECTION 710.
22. NON-RATED PARTITION. PROVIDE 5/8" GYPSUM WB ON THE FINISHED ROOM SIDE OF 3 5/8" METAL STUDS @ 16" O.C. RUN GYPSUM WB AND METAL STUDS FROM THE FINISH FLOOR TO THE UNDERSIDE OF THE ROOF DECK ABOVE. PROVIDE R-15 BATT INSULATION.

NOTES:

1. PROVIDE MOISTURE RESISTANT GYSUM WB FOR WALLS WITHIN HC TOILET ROOMS.
2. ALL THE GYPSUM WB PARTITIONS IN THE DETOX BUILDING ARE TO BE ABUSE RESISTANT GYPSUM WB FROM THE FINISHED FLOOR TO 8'-0" A.F.F. ON 20 GAUGE METAL STUDS MIN.)
3. ALL WALLS TO BE BRACED TO STRUCTURE ABOVE TO RESIST LATERAL LOAD OF 5LB MIN. SEE DETAILS ON SHEET A-003.
4. ALL EXPOSED MASONRY WALLS ARE TO HAVE BULLNOSE CAPS AND CORNERS.
5. REFER TO WALL FINISH PLANS FOR FINISH MATERIAL LOCATIONS.
6. ALL DIMENSIONS SHOWN ARE FROM FACE OF STUD OR FACE OF MASONRY UNLESS NOTED OTHERWISE. ALL CMU WALLS ARE NOMINAL DIMENSIONS.
7. SEE ENLARGED PLANS ON SHEET A-110 FOR ADDITIONAL DIMENSIONS.

WALL SYMBOL LEGEND

INDICATES NEW NON-RATED PARTITION		
1/2 HR RATED FIRE PARTITION		
1 HR RATED FIRE PARTITIONS/ BARRIERS & SMOKE BARRIERS		
SMOKE PARTITION		
INDICATES LOCATIONS WHERE FRP IS INSTALLED ON WALLS IN KITCHEN		
BRICK VENEER		
CMU WALLS		
INDICATES PARTITION TYPES ABOVE OR BELOW WINDOW	A	(DESIGNATION NEXT TO PARTITION TYPE LABEL)
INDICATES SOUND BATTS IN INTERIOR PARTITION	B	(DESIGNATION NEXT TO PARTITION TYPE LABEL)
INDICATES SMOKE BARRIER	SB	(DESIGNATION NEXT TO PARTITION TYPE LABEL)
INDICATES SMOKE PARTITION	SP	(DESIGNATION NEXT TO PARTITION TYPE LABEL)
INDICATES FIRE BARRIER	FB	(DESIGNATION NEXT TO PARTITION TYPE LABEL)
FLUSH MOUNT CORNER GUARD TO 4'-0" A.F.F.	CG1	(SEE 08/A114)
FLUSH MOUNT CORNER GUARD TO 4'-0" A.F.F. (FIRE RATED)	CG2	(SEE 08/A114)
FLUSH MOUNT END WALL GUARD TO 4'-0" A.F.F.	CG3	(SEE 08/A114)
STAINLESS STEEL CORNER GUARD TO 4'-0" A.F.F.	CG4	(SEE 08/A114)
STAINLESS STEEL END WALL GUARD TO 4'-0" A.F.F.	CG5	(SEE 08/A114)
PATHWAY LIGHTING IN LOW MASONRY WALLS	WL	
PROVIDE ¾" 4'X4' FIRE-RETARDANT TREATED PLYWOOD, PAINT TO MATCH GYPSUM WB.	PB1	

isdesign
ARCHITECTURE + INTERIORS
1111 Haynes Street, Suite 103
Raleigh, North Carolina 27604
t. 919.833.5400
www.isdesignpa.com

Project

THE HEALING PLACE OF NEW HANOVER COUNTY

1000 MEDICAL CENTER DRIVE
WILMINGTON, NORTH CAROLINA

Client

NEW HANOVER COUNTY, NORTH CAROLINA

All reproduction & intellectual property rights reserved © 2020

Key Plan

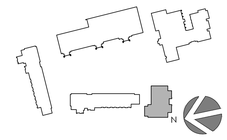

Professional Seals



No.	Description	Date
1	SCHEMATIC DESIGN	11/26/19
2	DESIGN DEVELOPMENT SET	04/09/20
3	CONSTRUCTION DOCUMENT SET	08/25/20
1	MCD #1	12/02/20

Project Code: 16HTWILMING

Sheet Title

FLOOR PLAN

DETOX BUILDING

Original drawing is 42 x 30 Do not scale contents of this drawing

Sheet Number

A-107

12/2/2020 2:05 AM P:\16HTWILMING\Construction Documents\MCD#1\Construction Document\VCD-16HTWILMING - A-107R - CD Floor Plan & Dimension Plan - Detox Building.dwg

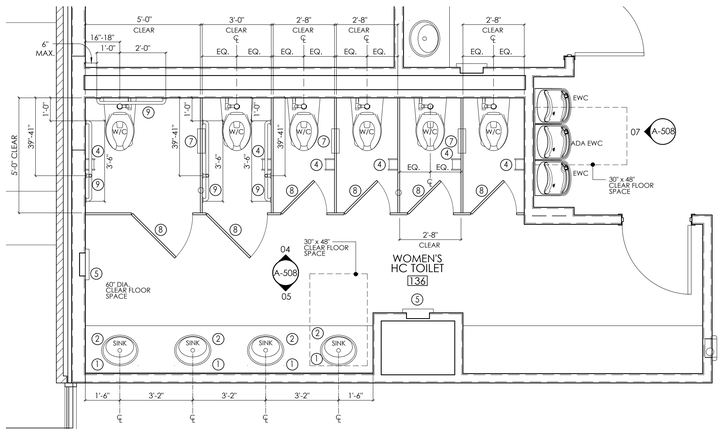

ENLARGED FLOOR PLAN 01
SCALE: 3/8" = 1'-0"

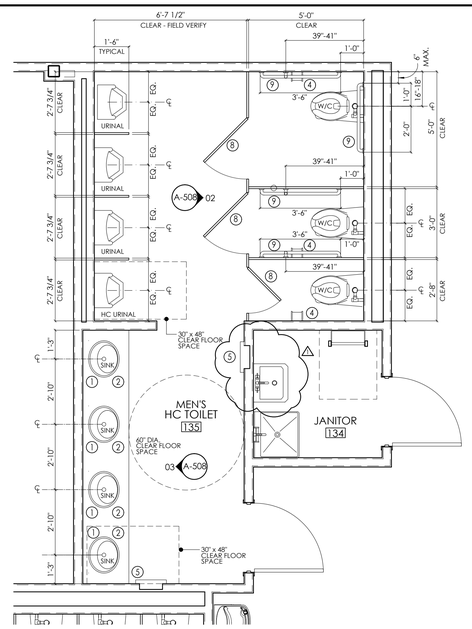

ENLARGED FLOOR PLAN 02
SCALE: 3/8" = 1'-0"

BATHROOM/SHOWER ROOM FIXTURE ACCESSORY SCHEDULE - ADMIN/EDUCATION BUILDING

ITEM	SYMB.	SPECIFICATION/BASIS OF DESIGN	LOCATION/QUANTITY				
			HC TOILET 113	HC TOILET 114	MEN'S 135	WOMEN'S 136	HC TOILET 146
AUTOMATIC HAND WASHING FAUCET	①	SLOAN ETF-80 OPTIMA, CHROME PLATED, BRASS SPOUT, SINGLE HOLE HARD WIRE OPERATED SENSOR FAUCET W/ PLUG-IN TRANSFORMER	1	1	4	4	1
AUTOMATIC SOAP DISPENSER	②	SLOAN EDS-200, CHROME PLATED, BRASS SPOUT, MODULAR ONE PIECE CONSTRUCTION, INFRARED SENSOR W/ PLUG-IN ADAPTER, FOAM SOAP	0	0	4	4	0
SURFACE-MOUNTED SOAP DISPENSER	③	OWNER PROVIDED/OWNER INSTALLED	1	1	0	0	1
TOILET PAPER DISPENSER	④	OWNER PROVIDED/OWNER INSTALLED	1	1	3	6	1
RECESSED PAPER TOWEL DISPENSER/WASTE RECEPTACLE	⑤	BOBRICK RECESSED PAPER TOWEL DISPENSER/WASTE RECEPTACLE, B-369	0	0	2	2	0
PAPER TOWEL DISPENSER	⑥	OWNER PROVIDED/OWNER INSTALLED	1	1	0	0	1
SANITARY NAPKIN DISPOSAL	⑦	BRADLEY RECESSED SANITARY NAPKIN DISPOSAL #4721-15, STAINLESS STEEL FOR SHARED PARTITIONS. #4722-15 FOR SINGLE SIDE SERVED DISPOSAL	0	0	0	3 DBL	0
COAT HOOK	⑧	BRADLEY #915 SINGLE HOOK, SURFACE MOUNTED CLOTHES HOOK & DOOR BUMPER , CHROME-PLATED BRASS	1	1	3	6	1
ADA GRAB BARS	⑨	BRUSHED STAINLESS STEEL	1 SET	1 SET	2 SETS	2 SETS	1 SET
MIRROR	⑩	24"x36" WELDED-FRAME MIRROR, B-290 2436	1	1	0	0	1
CLOTHES HOOK STRIP	⑪	BOBRICK B-985	0	0	0	0	0
SOAP DISH	⑫	BOBRICK RECESSED SOAP DISH B-4380	0	0	0	0	0
CLOTHES HOOK	⑬	BOBRICK B-983	0	0	0	0	0
BENCH	⑭	TUFFTEC BENCH BY SCRANTON PRODUCTS- 36"X9 1/2"	0	0	0	0	0
HC SHOWER SEAT	⑮	BRADLEY 9593 SHOWER SEAT	0	0	0	0	0
TOWEL PIN	⑯	BOBRICK B-6777	0	0	0	0	0
BENCH	⑰	TUFFTEC BENCH BY SCRANTON PRODUCTS- 96"X9 1/2"	0	0	0	0	0
BENCH	⑱	TUFFTEC BENCH BY SCRANTON PRODUCTS- 42"X24" -18" SEAT HGT., REAR OF SEAT TO BE IN CONTACT W/ WALL	0	0	0	0	0
BENCH	⑲	TUFFTEC BENCH BY SCRANTON PRODUCTS- 60"X24" -18" SEAT HGT., REAR OF SEAT TO BE IN CONTACT W/ WALL	0	0	0	0	0
MOP & BROOM HOLDER	⑳	BOBRICK B-223 X 24 - PROVIDE TWO (2) IN EACH OF EIGHT (8) JANITOR ROOMS THROUGHOUT PROJECT - LOCATION TO BE DETERMINED BY ARCHITECT	0	0	0	0	0

BATHROOM NOTES:
-NEW PLUMBING FIXTURES - SEE PLUMBING SPECS ON PLUMBING ENGINEERING PLANS
-NEW FLOORING - SEE FINISH PLAN FOR SPEC.

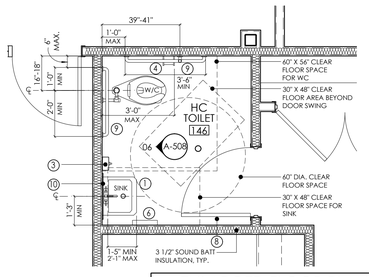

ENLARGED FLOOR PLAN 03
SCALE: 3/8" = 1'-0"

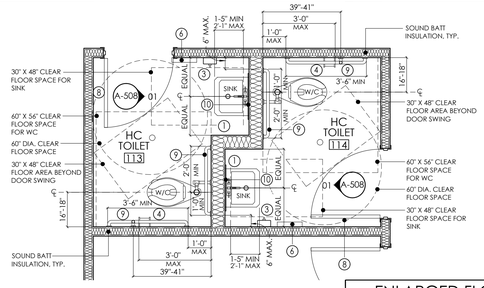

ENLARGED FLOOR PLAN 04
SCALE: 3/8" = 1'-0"

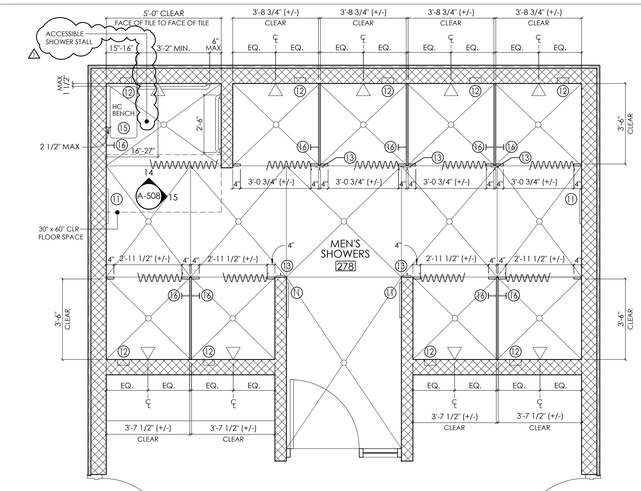

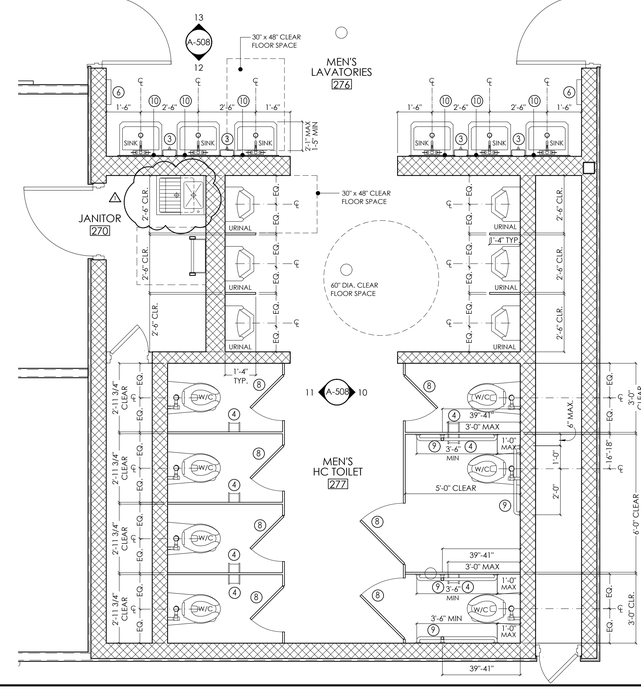

ENLARGED FLOOR PLAN 06
SCALE: 3/8" = 1'-0"

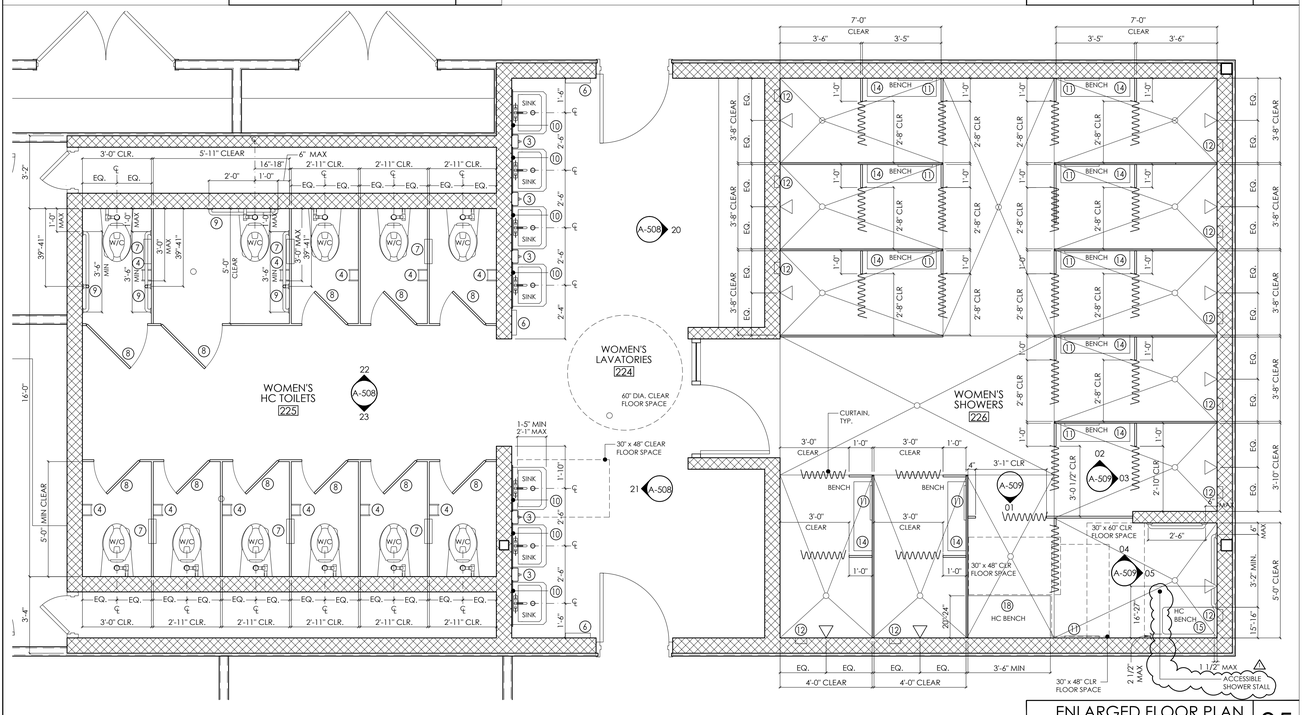

ENLARGED FLOOR PLAN 05
SCALE: 3/8" = 1'-0"

isdesign
ARCHITECTURE + INTERIORS
1111 Haynes Street, Suite 103
Raleigh, North Carolina 27604
t. 919.833.5400
www.isdesignpa.com

Project

THE HEALING PLACE OF NEW HANOVER COUNTY

1000 MEDICAL CENTER DRIVE
WILMINGTON, NORTH CAROLINA

Client

NEW HANOVER COUNTY, NORTH CAROLINA

All reproduction & intellectual property rights reserved © 2020

Key Plan

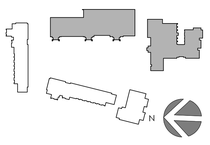

Professional Seals



No.	Description	Date
1	CONSTRUCTION DOCUMENT SET	08/25/20
△ MCD #1		12/02/20

Project Code: 16HTWILMING

Sheet Title

ENLARGED FLOOR PLANS ADMINISTRATIVE/ EDUCATION BUILDING DINING/SHELTER BUILDING

Original drawing is 42 x 30 Do not scale contents of this drawing.

Sheet Number

A-108

12/2/2020 2:17 AM P:\16HTWILMING\Construction Documents\MCD#1\Construction Documents\CD-16HTWILMING - A-108R - CD Enlarged Plans.dwg

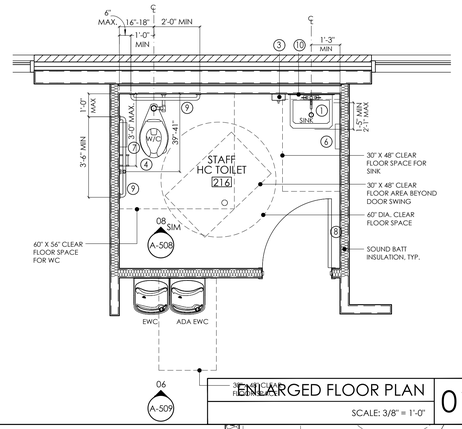

ENLARGED FLOOR PLAN 01

SCALE: 3/8" = 1'-0"

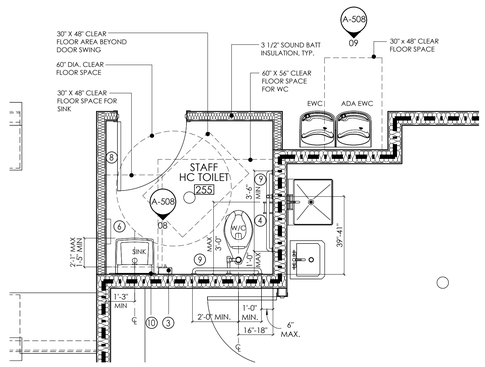

ENLARGED FLOOR PLAN 02

SCALE: 3/8" = 1'-0"

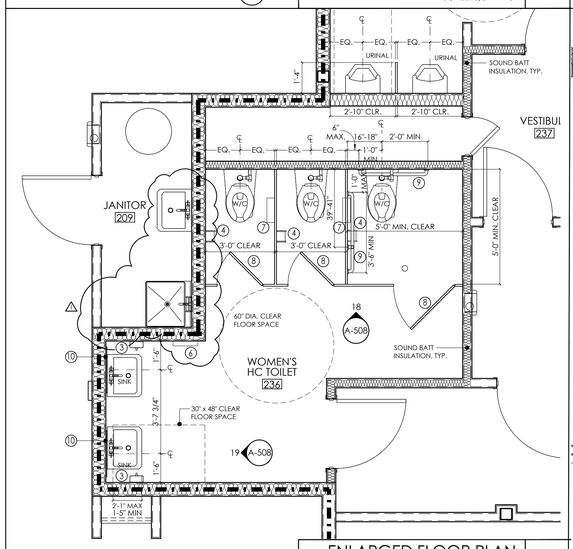

ENLARGED FLOOR PLAN 03

SCALE: 3/8" = 1'-0"

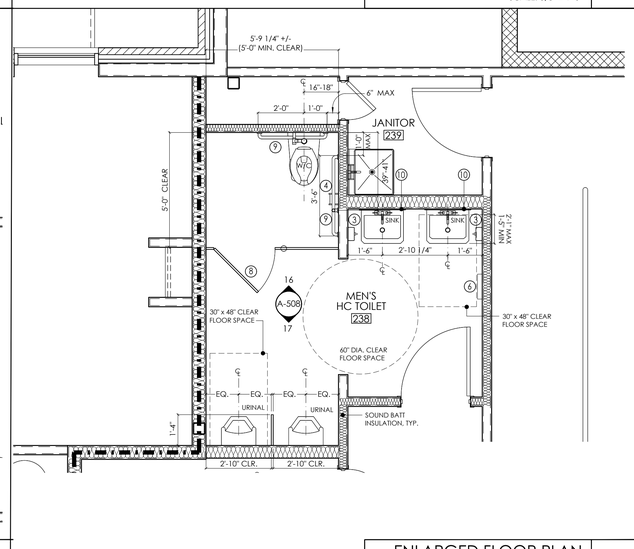

ENLARGED FLOOR PLAN 04

SCALE: 3/8" = 1'-0"

BATHROOM/SHOWER ROOM FIXTURE ACCESSORY SCHEDULE - DINING/SHELTER/STORAGE BUILDING

ITEM	SYMB.	SPECIFICATION/BASIS OF DESIGN	LOCATION/QUANTITY								
			STAFF TOILET 216	WOMEN'S LAV 224	WOMEN'S 225	WOMEN'S 226	WOMEN'S 236	MEN'S 238	STAFF TOILET 255	MEN'S LAV 276	MEN'S 277	MEN'S 278
AUTOMATIC HAND WASHING FAUCET	1	SLOAN ETF-80 OPTIMA, CHROME PLATED, BRASS SPOUT, SINGLE HOLE HARD WIRE OPERATED SENSOR FAUCET W/ PLUG-IN TRANSFORMER	1	7	0	0	2	2	1	6	0	0
AUTOMATIC SOAP DISPENSER	2	SLOAN EDS-200, CHROME PLATED, BRASS SPOUT, MODULAR ONE PIECE CONSTRUCTION, INFRARED SENSOR W/ PLUG-IN ADAPTER, FOAM SOAP	0	0	0	0	0	0	0	0	0	0
SURFACE-MOUNTED SOAP DISPENSER	3	OWNER PROVIDED/OWNER INSTALLED	1	5	0	0	2	2	1	4	0	0
TOILET PAPER DISPENSER	4	OWNER PROVIDED/OWNER INSTALLED	1	0	11	0	3	1	1	0	7	0
RECESSED PAPER TOWEL DISPENSER/WASTE RECEPTACLE	5	BOBRICK RECESSED PAPER TOWEL DISPENSER/WASTE RECEPTACLE, B-369	0	0	0	0	0	0	0	0	0	0
PAPER TOWEL DISPENSER	6	OWNER PROVIDED/OWNER INSTALLED	1	2	0	0	1	1	1	2	0	0
SANITARY NAPKIN DISPOSAL	7	BRADLEY RECESSED SANITARY NAPKIN DISPOSAL #4721-15, STAINLESS STEEL FOR SHARED PARTITIONS, #4722-15 FOR SINGLE SIDE SERVED DISPOSAL	1	0	5 DBL/ 1 SINGLE	0	1 DBL/ 1 SINGLE	0	0	0	0	0
COAT HOOK	8	BRADLEY #915 SINGLE HOOK, SURFACE MOUNTED CLOTHES HOOK & DOOR BUMPER , CHROME-PLATED BRASS	1	0	11	0	3	1	1	0	7	0
ADA GRAB BARS	9	BRUSHED STAINLESS STEEL - SEE NOTES BELOW	1 SET	0	2 SETS	0	1 SET	1 SET	1 SET	0	2 SETS	0
MIRROR	10	24"x36" WELDED-FRAME MIRROR, B-290 2436	1	7	0	0	2	2	1	6	0	0
CLOTHES HOOK STRIP	11	BOBRICK B-985	0	0	0	11	0	0	0	0	0	4
SOAP DISH	12	BOBRICK RECESSED SOAP DISH B-4380	0	0	0	11	0	0	0	0	0	9
CLOTHES HOOK	13	BOBRICK B-983	0	0	0	0	0	0	0	0	0	5
BENCH	14	TUFFTEC BENCH BY SCRANTON PRODUCTS- 36"X9 1/2"	0	0	0	10	0	0	0	0	0	0
HC SHOWER SEAT	15	BRADLEY 9593 SHOWER SEAT	0	0	0	1	0	0	0	0	0	1
TOWEL PIN	16	BOBRICK B-6777	0	0	0	0	0	0	0	0	0	9
BENCH	17	TUFFTEC BENCH BY SCRANTON PRODUCTS- 96"X9 1/2"	0	0	0	0	0	0	0	0	0	0
BENCH	18	TUFFTEC BENCH BY SCRANTON PRODUCTS- 42"X24" - 18" SEAT HGT., REAR OF SEAT TO BE IN CONTACT W/ WALL	0	0	0	1	0	0	0	0	0	0
BENCH	19	TUFFTEC BENCH BY SCRANTON PRODUCTS- 60"X24" - 18" SEAT HGT., REAR OF SEAT TO BE IN CONTACT W/ WALL	0	0	0	0	0	0	0	0	0	0
MOP & BROOM HOLDER	20	BOBRICK B-223 X 24 - PROVIDE TWO (2) IN EACH OF EIGHT (8) JANITOR ROOMS THROUGHOUT PROJECT - LOCATION TO BE DETERMINED BY ARCHITECT	0	0	0	0	0	0	0	0	0	0

BATHROOM NOTES:

-NEW PLUMBING FIXTURES - SEE PLUMBING SPECS ON PLUMBING ENGINEERING PLANS

-NEW FLOORING - SEE FINISH PLAN FOR SPEC.

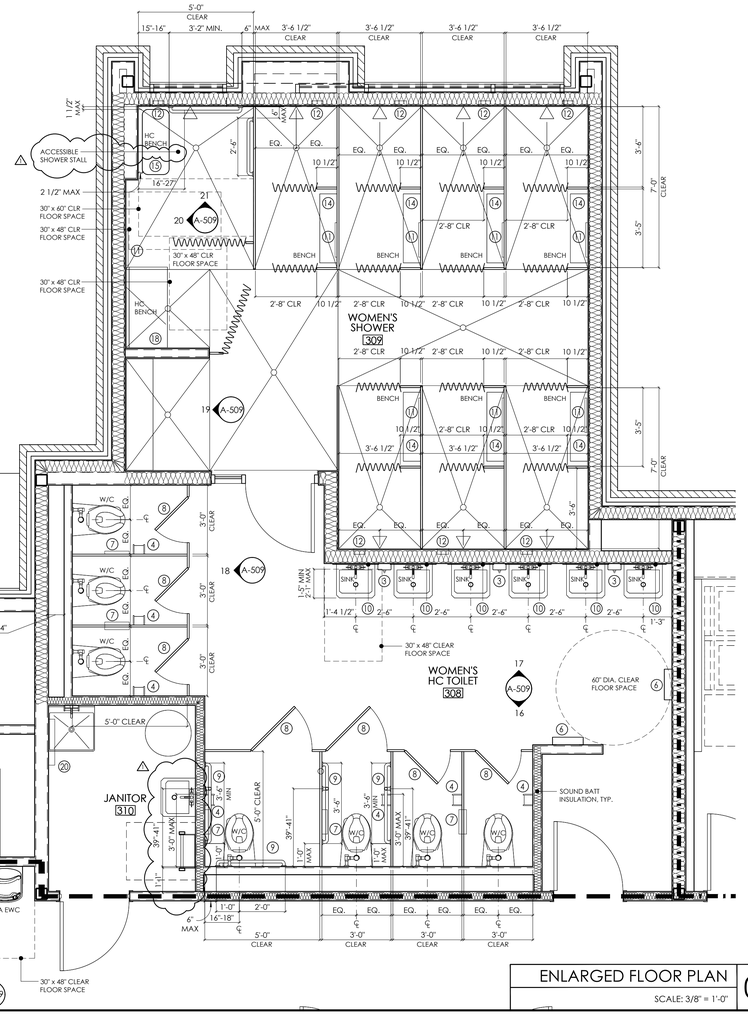

ENLARGED FLOOR PLAN 07

SCALE: 3/8" = 1'-0"

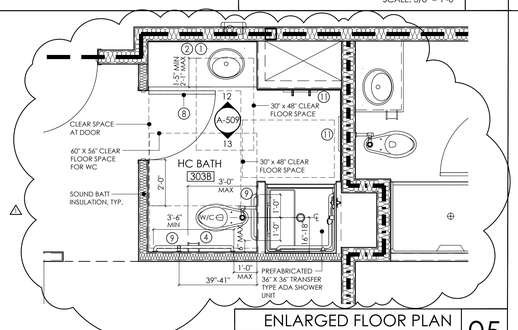

ENLARGED FLOOR PLAN 05

SCALE: 3/8" = 1'-0"

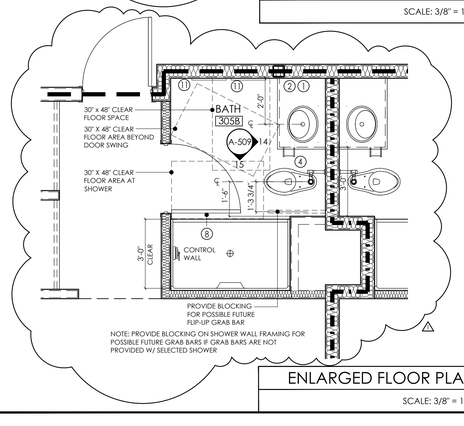

ENLARGED FLOOR PLAN 06

SCALE: 3/8" = 1'-0"

BATHROOM/SHOWER ROOM FIXTURE ACCESSORY SCHEDULE - WOMEN'S RESIDENTIAL BUILDING

ITEM	SYMB.	SPECIFICATION/BASIS OF DESIGN	LOCATION/QUANTITY				
			WOMEN'S 308	WOMEN'S 309	HC BATH 303B	BATH 305B	JANITOR 310
AUTOMATIC HAND WASHING FAUCET	1	SLOAN ETF-80 OPTIMA, CHROME PLATED, BRASS SPOUT, SINGLE HOLE HARD WIRE OPERATED SENSOR FAUCET W/ PLUG-IN TRANSFORMER	6	0	1	1	0
AUTOMATIC SOAP DISPENSER	2	SLOAN EDS-200, CHROME PLATED, BRASS SPOUT, MODULAR ONE PIECE CONSTRUCTION, INFRARED SENSOR W/ PLUG-IN ADAPTER, FOAM SOAP	0	0	1	1	0
SURFACE-MOUNTED SOAP DISPENSER	3	OWNER PROVIDED/OWNER INSTALLED	3	0	0	0	0
TOILET PAPER DISPENSER	4	OWNER PROVIDED/OWNER INSTALLED	7	0	1	1	0
RECESSED PAPER TOWEL DISPENSER/WASTE RECEPTACLE	5	BOBRICK RECESSED PAPER TOWEL DISPENSER/WASTE RECEPTACLE, B-369	0	0	0	0	0
PAPER TOWEL DISPENSER	6	OWNER PROVIDED/OWNER INSTALLED	2	0	0	0	0
SANITARY NAPKIN DISPOSAL	7	BRADLEY RECESSED SANITARY NAPKIN DISPOSAL #4721-15, STAINLESS STEEL FOR SHARED PARTITIONS, #4722-15 FOR SINGLE SIDE SERVED DISPOSAL	2 DBL 3 SINGLE	0	1 SINGLE	1 SINGLE	0
COAT HOOK	8	BRADLEY #915 SINGLE HOOK, SURFACE MOUNTED CLOTHES HOOK & DOOR BUMPER , CHROME-PLATED BRASS	7	0	1	1	0
ADA GRAB BARS	9	BRUSHED STAINLESS STEEL - SEE NOTES BELOW	2 SETS	0	1 SET	0	0
MIRROR	10	24"x36" WELDED-FRAME MIRROR, B-290 2436	6	0	0	0	0
CLOTHES HOOK STRIP	11	BOBRICK B-985	0	8	2	2	0
SOAP DISH	12	BOBRICK RECESSED SOAP DISH B-4380	0	8	0	0	0
CLOTHES HOOK	13	BOBRICK B-983	0	0	0	0	0
BENCH	14	TUFFTEC BENCH BY SCRANTON PRODUCTS- 36"X9 1/2"	0	7	0	0	0
HC SHOWER SEAT	15	BRADLEY 9593 SHOWER SEAT	0	1	0	0	0
TOWEL PIN	16	BOBRICK B-6777	0	0	0	0	0
BENCH	17	TUFFTEC BENCH BY SCRANTON PRODUCTS- 96"X9 1/2"	0	0	0	0	0
BENCH	18	TUFFTEC BENCH BY SCRANTON PRODUCTS- 42"X24" - 18" SEAT HGT., REAR OF SEAT TO BE IN CONTACT W/ WALL	0	0	0	0	0
BENCH	19	TUFFTEC BENCH BY SCRANTON PRODUCTS- 60"X24" - 18" SEAT HGT., REAR OF SEAT TO BE IN CONTACT W/ WALL	0	0	0	0	0
MOP & BROOM HOLDER	20	BOBRICK B-223 X 24 - PROVIDE TWO (2) IN EACH OF EIGHT (8) JANITOR ROOMS THROUGHOUT PROJECT - LOCATION TO BE DETERMINED BY ARCHITECT	0	0	0	0	1

BATHROOM NOTES:

-NEW PLUMBING FIXTURES - SEE PLUMBING SPECS ON PLUMBING ENGINEERING PLANS

-NEW FLOORING - SEE FINISH PLAN FOR SPEC.

isdesign
ARCHITECTURE + INTERIORS
1111 Haynes Street, Suite 103
Raleigh, North Carolina 27604
t. 919.833.5400
www.isdesignpa.com

Project

THE HEALING PLACE OF NEW HANOVER COUNTY

1000 MEDICAL CENTER DRIVE
WILMINGTON, NORTH CAROLINA

Client

NEW HANOVER COUNTY, NORTH CAROLINA

All reproduction & intellectual property rights reserved © 2020

Key Plan

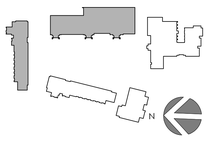

Professional Seals

No.	Description	Date
1	CONSTRUCTION DOCUMENT SET	08/25/20
1	MCD #1	12/02/20

Project Code: 16HTWILMING

Sheet Title

ENLARGED FLOOR PLANS

DINING/SHELTER BUILDING
WOMEN'S RESIDENCE

Original drawing is 42 x 30 Do not scale contents of this drawing

Sheet Number

A-109

12/2/2020 2:22 AM P:\16HTWILMING\Construction Documents\MCD#1\Construction Documents\CD-16HTWILMING - A-109R - CD Enlarged Plans.dwg

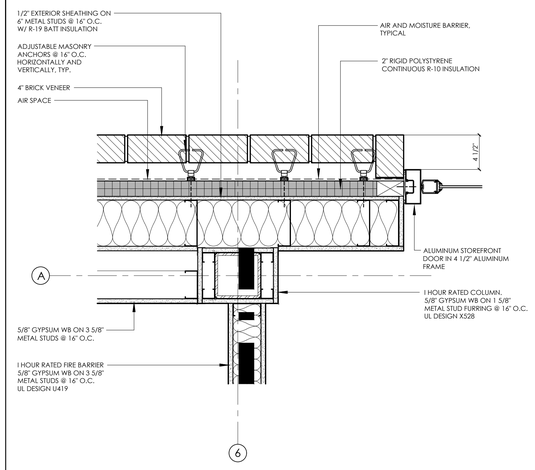

PLAN DETAIL 01
SCALE: 1 1/2" = 1'-0"

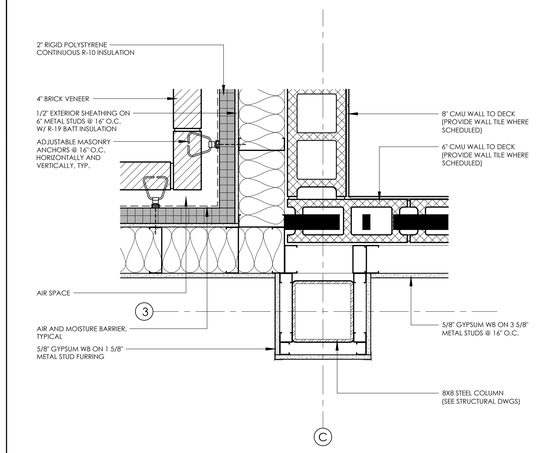

PLAN DETAIL 02
SCALE: 1 1/2" = 1'-0"

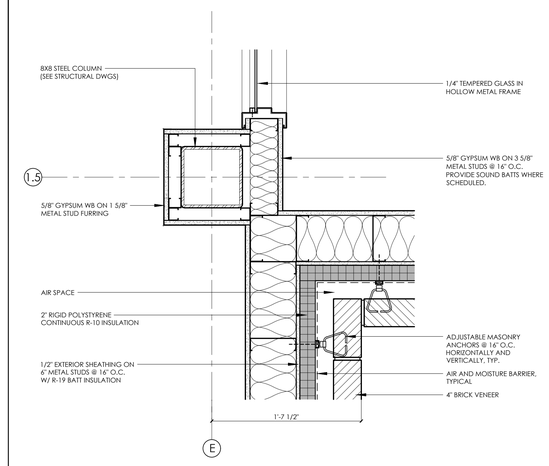

PLAN DETAIL 03
SCALE: 1 1/2" = 1'-0"

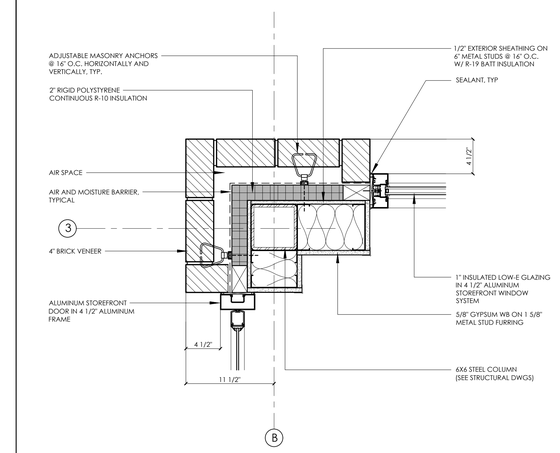

PLAN DETAIL 04
SCALE: 1 1/2" = 1'-0"

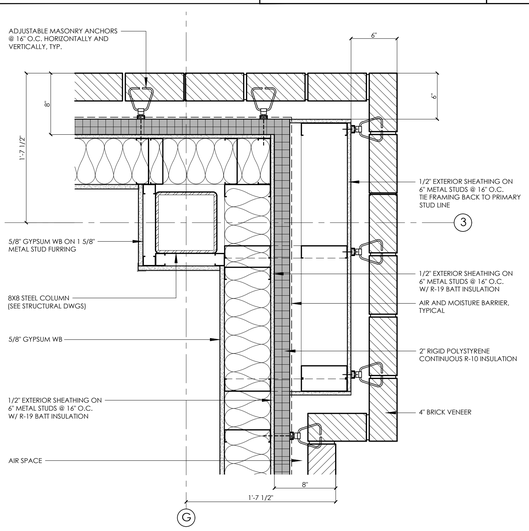

PLAN DETAIL 05
SCALE: 1 1/2" = 1'-0"

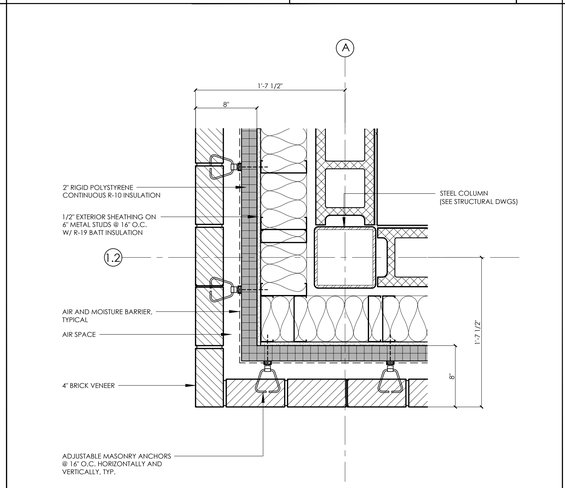

PLAN DETAIL 06
SCALE: 1 1/2" = 1'-0"

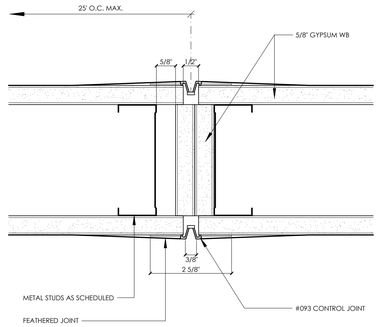

PLAN DETAIL 07
SCALE: 6" = 1'-0"

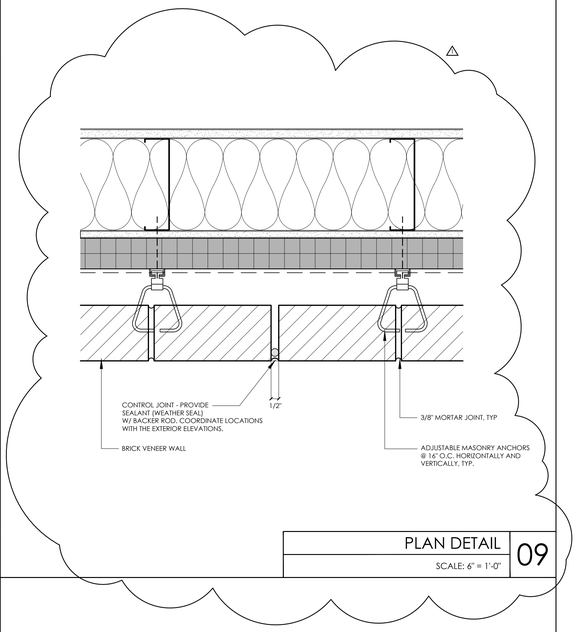

PLAN DETAIL 09
SCALE: 6" = 1'-0"

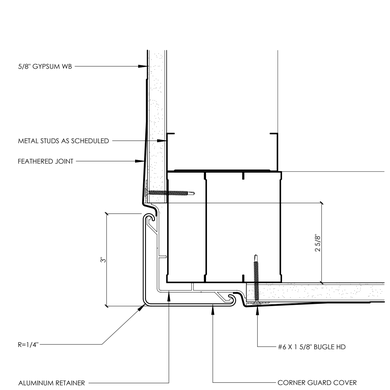

CG1 / CG2

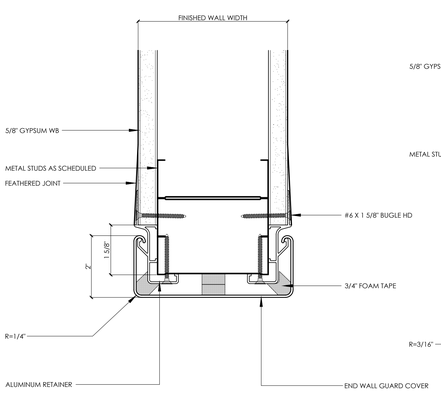

CG3

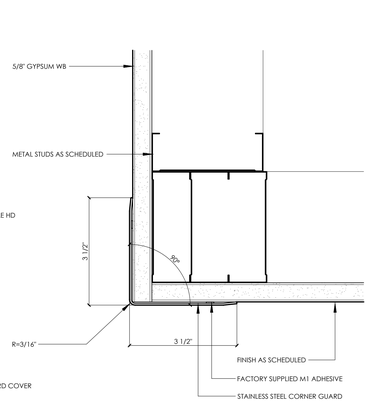

CG4

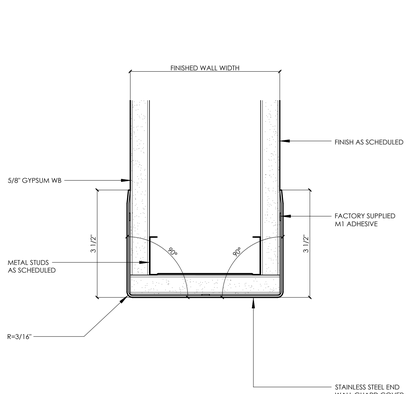

CG5

PLAN DETAIL 08
SCALE: 6" = 1'-0"

isdesign
ARCHITECTURE + INTERIORS
1111 Haynes Street, Suite 103
Raleigh, North Carolina 27604
t. 919.833.5400
www.isdesignpa.com

Project

THE HEALING PLACE OF NEW HANOVER COUNTY

1000 MEDICAL CENTER DRIVE
WILMINGTON, NORTH CAROLINA

Client

NEW HANOVER COUNTY, NORTH CAROLINA

All reproduction & intellectual property rights reserved © 2020

Key Plan

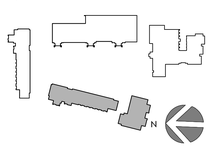

Professional Seals





No.	Description	Date
1	CONSTRUCTION DOCUMENT SET	08/25/20
1	MCD #1	12/02/20

Project Code: 16HTWILMING

Sheet Title

PLAN DETAILS

RESIDENTIAL BUILDINGS/ DETOX BUILDING

Original drawing is 42 x 30 Do not scale contents of this drawing.

Sheet Number

A-114

12/2/2020 2:24 AM P:\16HTWILMING\Construction Documents\MCD#1\Construction Documents\CD-16HTWILMING - A-114R - CD Plan Details.dwg

DOOR SCHEDULE — ADMINISTRATIVE BUILDING

NO.	SIZE	MATERIAL	FRAME	FRAME ELEVATION	DOOR ELEVATION	DOOR FINISH	HARDWARE	FIRE RATING	HARDWARE KEY	DETAIL SHEET A-205	REMARKS
100A	3'-0" X 8'-0" X 1 3/4"	ALUMINUM / GLASS	ALUMINUM STOREFRONT		04		PHR, LS, C, T, WST, CY, CG	-	1		
100B	3'-4" X 8'-0" X 1 3/4"	ALUMINUM / GLASS	ALUMINUM STOREFRONT		04		PHC, C, T, WST, CY, CG	-	1		
100C	3'-0" X 8'-0" X 1 3/4"	ALUMINUM / GLASS	ALUMINUM STOREFRONT		04		PHR, LS, C, T, WST, CY, CG	-	1		
100D	3'-0" X 7'-2" X 1 3/4"	ALUMINUM / GLASS	ALUMINUM STOREFRONT		04		DL, LP, LS, C, T, CY, CG, WST	-	1	28 / 29	
100E	PR. 3'-0" X 8'-0" X 1 3/4"	ALUMINUM / GLASS	ALUMINUM STOREFRONT		01		PHC, C, T, CY, CG, WST	-	1		
100F	3'-0" X 7'-10" X 1 3/4"	ALUMINUM / GLASS	ALUMINUM STOREFRONT		03		DL, LP, LS, C, T, CY, CG, WST	-	1	28 / 29	
100G	PR. 3'-0" X 7'-0" X 1 3/4"	ALUMINUM / GLASS	ALUMINUM STOREFRONT		01		PHC, C, T, CY, CG, WST	-	1		
100H	3'-0" X 7'-0" X 1 3/4"	ALUMINUM / GLASS	ALUMINUM STOREFRONT		04		PHR, LS, C, T, CY, CG, WST	-	1		
100I	3'-0" X 7'-0" X 1 3/4"	ALUMINUM / GLASS	ALUMINUM STOREFRONT		04		PHR, LS, C, T, CY, CG, WST	-	1		
100J	3'-0" X 7'-0" X 1 3/4"	ALUMINUM / GLASS	ALUMINUM STOREFRONT		04		PHR, LS, C, T, CY, CG, WST	-	1		
100K	3'-0" X 7'-0" X 1 3/4"	ALUMINUM / GLASS	ALUMINUM STOREFRONT		04		PHR, LS, C, T, CY, CG, WST	-	1		
100L	3'-0" X 7'-2" X 1 3/4"	ALUMINUM / GLASS	HOLLOW METAL	01	04		PHR, LS, C, T, CY, CG, WST	-	2	28 / 29	
100M	3'-0" X 7'-0" X 1 3/4"	STEEL DOOR	HOLLOW METAL	02	09	PAINT	SR, C, T, H, S, WST	-	2	26 / 27	
101	PR. 3'-0" X 8'-0" X 1 3/4"	ALUMINUM / GLASS	ALUMINUM STOREFRONT		02		PHC, C, CY, CG	-	1		
102A	3'-0" X 8'-0" X 1 3/4"	ALUMINUM / GLASS	ALUMINUM		04		EO, H, S, C, WS	-	2		BASIS OF DESIGN INTERIOR ALUMINUM FRAME WINDOW WALL SYSTEM
102B	PR. 3'-0" X 7'-0" X 1 3/4"	SOLID CORE WOOD	ALUMINUM	01	08	PLAM	PHC, C, S, H	-	2	22 / 23	
102C	PR. 3'-0" X 7'-0" X 1 3/4"	SOLID CORE WOOD	ALUMINUM	01	08	PLAM	PHC, C, S, H	-	2	22 / 23	
103	3'-0" X 7'-0" X 1 3/4"	SOLID CORE WOOD	ALUMINUM	01	06	PLAM	EO, H, S, WS	-	2	22 / 23	
104	3'-0" X 7'-0" X 1 3/4"	SOLID CORE WOOD	ALUMINUM		06	PLAM	EO, H, S, WS	-	2	22 / 23	BASIS OF DESIGN INTERIOR ALUMINUM FRAME WINDOW WALL SYSTEM
105	3'-0" X 7'-0" X 1 3/4"	SOLID CORE WOOD	ALUMINUM		06	PLAM	EO, H, S, WS	-	2	22 / 23	BASIS OF DESIGN INTERIOR ALUMINUM FRAME WINDOW WALL SYSTEM
106	3'-0" X 7'-0" X 1 3/4"	SOLID CORE WOOD	ALUMINUM	01	06	PLAM	EO, H, S, WS	-	2	22 / 23	
107	3'-0" X 7'-0" X 1 3/4"	SOLID CORE WOOD	ALUMINUM		06	PLAM	EO, H, S, FS	-	2	22 / 23	BASIS OF DESIGN INTERIOR ALUMINUM FRAME WINDOW WALL SYSTEM
108	PR. 2'-6" X 7'-0" X 1 3/4"	SOLID CORE WOOD	ALUMINUM	01	05	PLAM	SR, C, CO, AFB, H	-	2	22 / 23	
110	PR. 3'-0" X 7'-0" X 1 3/4"	ALUMINUM / GLASS	ALUMINUM STOREFRONT		02		PP, C	-	1		
112	3'-0" X 7'-0" X 1 3/4"	SOLID CORE WOOD	ALUMINUM	01	07	STAIN	PR, H, WS, S	-	2	22 / 23	
113	3'-0" X 7'-0" X 1 3/4"	SOLID CORE WOOD	ALUMINUM	01	07	STAIN	PR, H, WS, S, C	-	2	22 / 23	
114	3'-0" X 7'-0" X 1 3/4"	SOLID CORE WOOD	ALUMINUM	01	07	STAIN	PR, H, WS, S, C	-	2	22 / 23	
115	3'-0" X 7'-0" X 1 3/4"	SOLID CORE WOOD	ALUMINUM	01	07	STAIN	EO, H, WS, S	-	2	22 / 23	BASIS OF DESIGN RACO ALUMINUM FRAME WINDOW WALL SYSTEM
117	3'-0" X 7'-0" X 1 3/4"	SOLID CORE WOOD	ALUMINUM	01	07	STAIN	EO, H, WS, S	-	2	22 / 23	
118	3'-0" X 7'-0" X 1 3/4"	SOLID CORE WOOD	ALUMINUM	01	07	STAIN	EO, H, WS, S	-	2	22 / 23	
119A	3'-0" X 7'-0" X 1 3/4"	SOLID CORE WOOD	ALUMINUM		07	STAIN	P, H, WS, S	-	2	22 / 23	
119B	3'-0" X 7'-0" X 1 3/4"	SOLID CORE WOOD	ALUMINUM	01	07	STAIN	P, H, WS, S	-	2	22 / 23	
120	3'-0" X 7'-0" X 1 3/4"	SOLID CORE WOOD	ALUMINUM	01	07	STAIN	P, H, WS, S	-	2	22 / 23	
122	3'-0" X 7'-0" X 1 3/4"	SOLID CORE WOOD	ALUMINUM	01	07	STAIN	EO, H, WS, S	-	2	22 / 23	
123	3'-0" X 7'-0" X 1 3/4"	SOLID CORE WOOD	ALUMINUM	01	07	STAIN	EO, H, WS, S	-	2	22 / 23	
124	3'-0" X 7'-0" X 1 3/4"	SOLID CORE WOOD	ALUMINUM	01	07	STAIN	EO, H, WS, S	-	2	22 / 23	
125	3'-0" X 7'-0" X 1 3/4"	SOLID CORE WOOD	ALUMINUM	01	07	STAIN	EO, H, WS, S	-	2	22 / 23	
126	3'-0" X 7'-0" X 1 3/4"	SOLID CORE WOOD	ALUMINUM	01	07	STAIN	P, H, WS, S	-	2	22 / 23	
127	3'-0" X 7'-0" X 1 3/4"	SOLID CORE WOOD	ALUMINUM	01	07	STAIN	P, H, WS, S	-	2	22 / 23	
129		FOLDING PARTITION						-			SEE FOLDING PANELS PARTITION SPEC
136	3'-0" X 7'-0" X 1 3/4"	SOLID CORE WOOD	ALUMINUM	01	14	PLAM	PP, H, KP, C, WS, S	-	2	22 / 23	
137	3'-0" X 7'-0" X 1 3/4"	SOLID CORE WOOD	ALUMINUM	01	08	PLAM	P, C, H, WS, S	-	2	22 / 23	
138	3'-0" X 7'-0" X 1 3/4"	SOLID CORE WOOD	ALUMINUM	01	06	PLAM	SR, H, C, S	-	2	22 / 23	
140	3'-0" X 7'-0" X 1 3/4"	SOLID CORE WOOD	ALUMINUM	01	06	PLAM	P, H, WS, S	-	2	22 / 23	
141	3'-0" X 7'-0" X 1 3/4"	SOLID CORE WOOD	ALUMINUM	01	06	PLAM	EO, H, WS, S	-	2	22 / 23	
142	3'-0" X 7'-0" X 1 3/4"	SOLID CORE WOOD	ALUMINUM	01	06	PLAM	P, H, WS, S	-	2	22 / 23	
143	3'-0" X 7'-0" X 1 3/4"	SOLID CORE WOOD	ALUMINUM	01	06	PLAM	P, H, WS, S	-	2	22 / 23	
144	3'-0" X 7'-0" X 1 3/4"	SOLID CORE WOOD	ALUMINUM	01	06	PLAM	P, H, WS, S	-	2	22 / 23	
146	3'-0" X 7'-0" X 1 3/4"	SOLID CORE WOOD	ALUMINUM	01	06	PLAM	PR, H, WS, S	-	2	22 / 23	
147	3'-0" X 7'-0" X 1 3/4"	SOLID CORE WOOD	ALUMINUM	01	06	PLAM	SR, H, OS, S	-	2	22 / 23	
149A	3'-0" X 7'-0" X 1 3/4"	SOLID CORE WOOD	ALUMINUM	01	06	PLAM	SR, H, OS, S	-	2	22 / 23	
149B	PR. 3'-6" X 7'-0" X 1 3/4"	SOLID CORE WOOD	ALUMINUM	01	05	PLAM	P, H, C, 2PL, S, DS	-	2	22 / 23	
149C	3'-4" X 7'-0" X 1 3/4"	SOLID CORE WOOD	ALUMINUM		13	PLAM	CR, H, K, C, FS, S	-	2	22 / 23	FS AT OUTSIDE CORNER
149D	3'-4" X 7'-0" X 1 3/4"	SOLID CORE WOOD	ALUMINUM		13	PLAM	CR, H, K, C, FS, S	-	2	22 / 23	FS AT OUTSIDE CORNER
149E	PR. 3'-0" X 7'-0" X 1 3/4"	SOLID CORE WOOD	ALUMINUM	01	08	PLAM	PHC, C, S, H	-	2	22 / 23	
150A	3'-0" X 7'-0" X 1 3/4"	SOLID CORE WOOD	ALUMINUM	01	14	PLAM	PP, H, KP, C, S	-	2	22 / 23	
150B	3'-0" X 7'-0" X 1 3/4"	SOLID CORE WOOD	ALUMINUM	01	06	PLAM	P, H, WS, S	-	2	22 / 23	
152	3'-0" X 7'-0" X 1 3/4"	SOLID CORE WOOD	ALUMINUM	01	07	STAIN	SR, H, WS	-	2	22 / 23	
158	PR. 3'-0" X 7'-0" X 1 3/4"	SOLID CORE WOOD	ALUMINUM	01	05	PLAM	SD, H, OS, S, HD	-	2	22 / 23	

DOOR SCHEDULE — DINING/SHELTER/STORAGE BUILDING

NO.	SIZE	MATERIAL	FRAME	FRAME ELEVATION	DOOR ELEVATION	DOOR FINISH	HARDWARE	FIRE RATING	HARDWARE KEY	DETAIL SHEET A-205	REMARKS
200A	PR. 3'-0" X 7'-0" X 1 3/4"	ALUMINUM / GLASS	ALUMINUM STOREFRONT		02		PHC, C, T, WST, CY		1		
200B	3'-0" X 7'-0" X 1 3/4"	ALUMINUM / GLASS	ALUMINUM STOREFRONT		04		PHR, C, T, WST, CY, LS		1		
200C	3'-0" X 7'-0" X 1 3/4"	ALUMINUM / GLASS	ALUMINUM STOREFRONT		04		PHR, C, T, WST, CY, LS		1		
200D	PR. 3'-0" X 7'-0" X 1 3/4"	ALUMINUM / GLASS	ALUMINUM STOREFRONT		02		PHC, C, T, WST, CY		1		
200E	3'-0" X 7'-0" X 1 3/4"	ALUMINUM / GLASS	ALUMINUM STOREFRONT		04		PHR, C, T, WST, CY, LS		1		
200F	3'-0" X 7'-0" X 1 3/4"	ALUMINUM / GLASS	ALUMINUM STOREFRONT		04		PHR, C, T, WST, CY, LS		1		
200G	3'-0" X 7'-0" X 1 3/4"	ALUMINUM / GLASS	ALUMINUM STOREFRONT		04		PHR, C, T, WST, FS, LS		1		
200H	PR. 3'-0" X 7'-0" X 1 3/4"	ALUMINUM / GLASS	ALUMINUM STOREFRONT		02		PHC, C, T, WST		1		
200I	3'-0" X 7'-0" X 1 3/4"	ALUMINUM / GLASS	ALUMINUM STOREFRONT		04		PHR, C, T, WST, CY, LS		1		
200J	3'-0" X 7'-0" X 1 3/4"	ALUMINUM / GLASS	ALUMINUM STOREFRONT		04		PHR, C, T, WST, CY, LS		1		
200K	3'-0" X 7'-0" X 1 3/4"	STEEL DOOR	HOLLOW METAL	02	09	PAINT	SR, C, T, H, WST, CY, CG		2	26 / 27	
200L	3'-0" X 7'-0" X 1 3/4"	STEEL DOOR	HOLLOW METAL	02	09	PAINT	E, C, T, H, WST		2	26 / 27	
200M	8'-0"X8'-0"	STEEL DOOR	HOLLOW METAL		12	PAINT	UPWARD ACTING COILING STEEL SERVICE DOOR, INSULATED				
200N	3'-0" X 7'-0" X 1 3/4"	STEEL DOOR	HOLLOW METAL	02	09	PAINT	E, T, H, WST		2	26 / 27	
200Q	3'-0" X 7'-0" X 1 3/4"	STEEL DOOR	HOLLOW METAL		09	PAINT	E, C, T, H, WST		2	26 / 27	
200P	3'-4" X 7'-0" X 1 3/4"	STEEL DOOR	HOLLOW METAL	02	09	PAINT	E, C, T, H, WST		2	26 / 27	
201	PR. 3'-0" X 7'-0" X 1 3/4"	ALUMINUM / GLASS	ALUMINUM STOREFRONT		02		PHC, C, CY, CG		1		
209	3'-0" X 7'-0" X 1 3/4"	SOLID CORE WOOD	HOLLOW METAL	01	06	PLAM	SR, H, S, OS		2	20 / 21	
216	3'-0" X 7'-0" X 1 3/4"	SOLID CORE WOOD	HOLLOW METAL	01	06	PLAM	PR, H, S, C		2	20 / 21	
218	3'-4" X 7'-0" X 1 3/4"	SOLID CORE WOOD	HOLLOW METAL	01	06	PLAM	P, H, S, C, K	45 MIN.	2	20 / 21	
219	3'-0" X 7'-0" X 1 3/4"	SOLID CORE WOOD	HOLLOW METAL	01	06	PLAM	SR, H, S, OS		2	20 / 21	
220A	3'-0" X 7'-0" X 1 3/4"	SOLID CORE WOOD	HOLLOW METAL	01	06	PLAM	SR, H, S, WS		2	20 / 21	
220B	1'-8" X 7'-0" X 1 3/4"	STEEL DOOR	HOLLOW METAL	02	09	PAINT	CY, H, S, DB		2	17/19	
221A	3'-0" X 7'-0" X 1 3/4"	SOLID CORE WOOD	HOLLOW METAL	01	06	PLAM	SR, H, S, WS		2	20 / 21	
221B	1'-8" X 7'-0" X 1 3/4"	STEEL DOOR	HOLLOW METAL	02	09	PAINT	CY, H, S, DB		2	17/19	
224A	3'-0" X 7'-0" X 1 3/4"	SOLID CORE WOOD	HOLLOW METAL	02	06	PLAM	PP, C, H, K		2	16/18	
224B	3'-0" X 7'-0" X 1 3/4"	SOLID CORE WOOD	HOLLOW METAL	02	06	PLAM	PP, C, H, K		2	16/18	
226	3'-0" X 7'-0" X 1 3/4"	ALUMINUM / GLASS	ALUMINUM STOREFRONT		04		PP, C, WS		1	22	
230A	PR. 3'-0" X 7'-0" X 1 3/4"	SOLID CORE WOOD	HOLLOW METAL	01	05	PLAM	P, H, 2PL, C, DS, S		2	20 / 21	
230B	PR. 3'-0" X 7'-0" X 1 3/4"	SOLID CORE WOOD	HOLLOW METAL	01	05	PLAM	P, H, 2PL, C, DS, S		2	20 / 21	
232	PR. 3'-0" X 7'-0" X 1 3/4"	ALUMINUM / GLASS	ALUMINUM STOREFRONT		02		PHC, C, CY, CG		1		
235A	3'-0" X 7'-0" X 1 3/4"	SOLID CORE WOOD	HOLLOW METAL	01	06	PLAM	PP, C, WS, K, S, H		2	20 / 21	
235B	3'-0" X 7'-0" X 1 3/4"	SOLID CORE WOOD	HOLLOW METAL	01	06	PLAM	PP, C, WS, K, S, H		2	20 / 21	
237A	3'-0" X 7'-0" X 1 3/4"	SOLID CORE WOOD	HOLLOW METAL	01	06	PLAM	PP, C, WS, K, S, H		2	20 / 21	
237B	1'-8" X 7'-0" X 1 3/4"	SOLID CORE WOOD	HOLLOW METAL	01	06	PLAM	CY, H, S, DB		2	20 / 21	
238	3'-0" X 7'-0" X 1 3/4"	SOLID CORE WOOD	HOLLOW METAL	01	06	PLAM	PP, C, WS, K, S, H		2	20 / 21	
239A	3'-0" X 7'-0" X 1 3/4"	SOLID CORE WOOD	HOLLOW METAL	01	06	PLAM	SR, H, WS, S		2	20 / 21	
239B	1'-8" X 7'-0" X 1 3/4"	STEEL DOOR	HOLLOW METAL	01	06	PAINT	CY, H, S, DB		2	20 / 21	
242A	3'-0" X 7'-0" X 1 3/4"	STAINLESS STEEL/GLASS			11		TRAFFIC DOOR - SEE SPECS				
242B	3'-0" X 7'-0" X 1 3/4"	STAINLESS STEEL/GLASS			11		TRAFFIC DOOR - SEE SPECS				
243	3'-0" X 7'-0" X 1 3/4"	STEEL DOOR	HOLLOW METAL	01	06	PAINT	EO, H, WS, S		2	20 / 21	
244	3'-0" X 7'-0" X 1 3/4"	STEEL DOOR	HOLLOW METAL	01	06	PAINT	SR, H, WS, S		2	20 / 21	
250	PR. 3'-0" X 7'-0" X 1 3/4"	STEEL DOOR	HOLLOW METAL	02	10	PAINT	P, H, C, 2PL, S, DS, WS		2	17 / 19	
251	3'-0" X 7'-0" X 1 3/4"	STEEL DOOR	HOLLOW METAL	01	09	PAINT	EO, H, S, WS		2		
252A	3'-0" X 7'-0" X 1 3/4"	STEEL DOOR	HOLLOW METAL	01	09	PAINT	P, H, S, OS, DS		2	20 / 21	
252B	3'-0" X 7'-0" X 1 3/4"	STEEL DOOR	HOLLOW METAL	01	08	PAINT	P, H, S, C, K, FS, DS		2	20 / 21	
252C	3'-0" X 7'-0" X 1 3/4"	STEEL DOOR	HOLLOW METAL	01	09	PAINT	SR, H, S, OS		2	20 / 21	
252D	PR. 3'-0" X 7'-0" X 1 3/4"	STEEL DOOR	HOLLOW METAL	01	10	PAINT	SR, C, CO, AFB, H, S		2	20 / 21	
253	PR. 3'-0" X 7'-0" X 1 3/4"	ALUMINUM / GLASS	ALUMINUM STOREFRONT		02		PHC, C, CY, CG		1		
255	3'-0" X 7'-0" X 1 3/4"	SOLID CORE WOOD	HOLLOW METAL	01	06	PLAM	PR, H, S, C		2	20 / 21	
256	3'-4" X 7'-0" X 1 3/4"	SOLID CORE WOOD	HOLLOW METAL	01	06	PLAM	P, H, S, C, K	45 MIN.	2	20 / 21	
257	3'-0" X 7'-0" X 1 3/4"	SOLID CORE WOOD	HOLLOW METAL	01	06	PLAM	SR, H, S, WS		2	20 / 21	
269	3'-0" X 7'-0" X 1 3/4"	SOLID CORE WOOD	HOLLOW METAL	01	06	PLAM	SR, H, S, OS		2	16 / 18	
270	1'-8" X 7'-0" X 1 3/4"	SOLID CORE WOOD	HOLLOW METAL	01	06	PLAM	DB, CY, H, S		2	17 / 19 SIM	
273	3'-0" X 7'-0" X 1 3/4"	SOLID CORE WOOD	HOLLOW METAL	01	06	PLAM	SR, H, S, OS		2	20 / 21	
274	3'-0" X 7'-0" X 1 3/4"	SOLID CORE WOOD	HOLLOW METAL	01	06	PLAM	SR, H, WS, S		2	20 / 21	
276A	3'-0" X 7'-0" X 1 3/4"	SOLID CORE WOOD	HOLLOW METAL	02	06	PLAM	PP, C, H, K		2	16 / 18	
276B	3'-0" X 7'-0" X 1 3/4"	SOLID CORE WOOD	HOLLOW METAL	02	06	PLAM	PP, C, H, K		2	16 / 18	
278	3'-0" X 7'-0" X 1 3/4"	ALUMINUM / GLASS	ALUMINUM STOREFRONT		04		PP, C, WS		1	22	
279A	3'-0" X 7'-0" X 1 3/4"	SOLID CORE WOOD	HOLLOW METAL	01	06	PLAM	PP, C, WS		2	20 / 21	
279B	1'-8" X 7'-0" X 1 3/4"	SOLID CORE WOOD	HOLLOW METAL	01	06	PLAM	DB, CY, H, S		2	17 / 19 SIM	
283	3'-0" X 7'-0" X 1 3/4"	SOLID CORE WOOD	HOLLOW METAL	01	06	PLAM	P, H, S		2	20 / 21	

DOOR SCHEDULE — RESIDENTIAL WOMEN'S FACILITY BUILDING

NO.	SIZE	MATERIAL	FRAME	FRAME ELEVATION	DOOR ELEVATION	DOOR FINISH	HARDWARE	FIRE RATING	HARDWARE KEY	DETAIL SHEET A-205	REMARKS
300A	3'-0" X 7'-0" X 1 3/4"	ALUMINUM / GLASS	ALUMINUM STOREFRONT		04		PHR, LS, C, T, CY, CG, WST		1	28 / 29 SIM	
300B	3'-0" X 7'-0" X 1 3/4"	STEEL DOOR	HOLLOW METAL	02	09	PAINT	SR, C, T, H, WST, CY, CG		2	26 / 27	
300C	3'-0" X 7'-0" X 1 3/4"	ALUMINUM / GLASS	ALUMINUM STOREFRONT		04		PHR, LS, C, T, CY, CG, WST		1	28 / 29 SIM	
300D	3'-0" X 7'-0" X 1 3/4"	ALUMINUM / GLASS	ALUMINUM STOREFRONT		04		PHR, LS, C, T, CY, CG, WST		1	28 / 29 SIM	
301	3'-0" X 7'-0" X 1 3/4"	ALUMINUM / GLASS	ALUMINUM STOREFRONT		04		PHR, LS, C, T, CY, CG, WST		1		
303A	3'-0" X 7'-0" X 1 3/4"	SOLID CORE WOOD	HOLLOW METAL	01	06	PLAM	CR, H, WS, C, S	20 MIN.	2	20 / 21	
303B	3'-0" X 7'-0" X 1 3/4"	SOLID CORE WOOD	HOLLOW METAL	01	06	PLAM	PR, H, OS, S		2	20 / 21	
304A	3'-0" X 7'-0" X 1 3/4"	SOLID CORE WOOD	HOLLOW METAL	01	06	PLAM	CR, H, C, S	20 MIN.	2	20 / 21	
304B	3'-0" X 7'-0" X 1 3/4"	SOLID CORE WOOD	HOLLOW METAL	01	06	PLAM	PR, H, OS, S		2	20 / 21	
305A	3'-0" X 7'-0" X 1 3/4"	SOLID CORE WOOD	HOLLOW METAL	01	06	PLAM	CR, H, C, S	20 MIN.	2	20 / 21	
305B	3'-0" X 7'-0" X 1 3/4"	SOLID CORE WOOD	HOLLOW METAL	01	06	PLAM	PR, H, OS, S		2	20 / 21	
306A	3'-0" X 7'-0" X 1 3/4"	SOLID CORE WOOD	HOLLOW METAL	01	06	PLAM	CR, H, C, S	20 MIN.	2	20 / 21	
306B	3'-0" X 7'-0" X 1 3/4"	SOLID CORE WOOD	HOLLOW METAL	01	06	PLAM	PR, H, OS, S		2	20 / 21	
307	3'-4" X 7'-0" X 1 3/4"	SOLID CORE WOOD	HOLLOW METAL	01	06	PLAM	P, H, S, C, K	45 MIN.	2	20 / 21	
308A	3'-0" X 7'-0" X 1 3/4"	SOLID CORE WOOD	HOLLOW METAL	01	06	PLAM	P, H, C, K, S, WS	20 MIN.	2	20 / 21	
308B	3'-0" X 7'-0" X 1 3/4"	ALUMINUM/GLASS	ALUMINUM STOREFRONT		04		PP, C, WS		1	22 / 23	
312	3'-0" X 7'-0" X 1 3/4"	SOLID CORE WOOD	HOLLOW METAL	01	06	PLAM	EO, H, C, S, WS	20 MIN.	2	20 / 21	
313	3'-0" X 7'-0" X 1 3/4"	SOLID CORE WOOD	HOLLOW METAL	01	06	PLAM	CR, H, C, S, WS	20 MIN.	2	20 / 21	
314	3'-0" X 7'-0" X 1 3/4"	SOLID CORE WOOD	HOLLOW METAL	01	06	PLAM	CR, H, C, S, WS	20 MIN.	2	20 / 21	
315	3'-0" X 7'-0" X 1 3/4"	SOLID CORE WOOD	HOLLOW METAL	01	06	PLAM	CR, H, C, S, WS	20 MIN.	2	20 / 21	
316	3'-0" X 7'-0" X 1 3/4"	SOLID CORE WOOD	HOLLOW METAL	01	06	PLAM	CR, H, C, S, WS	20 MIN.	2	20 / 21	
317	3'-0" X 7'-0" X 1 3/4"	SOLID CORE WOOD	HOLLOW METAL	01	06	PLAM	CR, H, C, S, WS	20 MIN.	2	20 / 21	
318	3'-0" X 7'-0" X 1 3/4"	SOLID CORE WOOD	HOLLOW METAL	01	06	PLAM	CR, H, C, S, WS	20 MIN.	2	20 / 21	
319	3'-0" X 7'-0" X 1 3/4"	SOLID CORE WOOD	HOLLOW METAL	01	06	PLAM	CR, H, C, S, WS	20 MIN.	2	20 / 21	
320	3'-0" X 7'-0" X 1 3/4"	SOLID CORE WOOD	HOLLOW METAL	01	06	PLAM	SR, H, C, S, WS	20 MIN.	2	20 / 21	
321	3'-0" X 7'-0" X 1 3/4"	SOLID CORE WOOD	HOLLOW METAL	01	06	PLAM	SR, H, C, S, WS	20 MIN.	2	20 / 21	
322	3'-0" X 7'-0" X 1 3/4"	SOLID CORE WOOD	HOLLOW METAL	01	06	PLAM	SR, H, C, S, WS	20 MIN.	2	20 / 21	
323	3'-4" X 7'-0" X 1 3/4"	SOLID CORE WOOD	HOLLOW METAL	01	06	PLAM	PH, S, C K	45 MIN.	2	20 / 21	
324	3'-0" X 7'-0" X 1 3/4"	SOLID CORE WOOD	HOLLOW METAL	01	06	PLAM	CR, H, C, S, WS	20 MIN.	2	20 / 21	
325	3'-0" X 7'-0" X 1 3/4"	SOLID CORE WOOD	HOLLOW METAL	01	06	PLAM	CR, H, C, S, WS	20 MIN.	2	20 / 21	
326	3'-0" X 7'-0" X 1 3/4"	SOLID CORE WOOD	HOLLOW METAL	01	06	PLAM	CR, H, C, S, WS	20 MIN.	2	20 / 21	
327	3'-0" X 7'-0" X 1 3/4"	SOLID CORE WOOD	HOLLOW METAL	01	06	PLAM	CR, H, C, S, WS	20 MIN.	2	20 / 21	
328	3'-0" X 7'-0" X 1 3/4"	SOLID CORE WOOD	HOLLOW METAL	01	06	PLAM	CR, H, C, S, WS	20 MIN.	2	20 / 21	
329	3'-0" X 7'-0" X 1 3/4"	SOLID CORE WOOD	HOLLOW METAL	01	06	PLAM	CR, H, C, S, WS	20 MIN.	2	20 / 21	
330	3'-0" X 7'-0" X 1 3/4"	SOLID CORE WOOD	HOLLOW METAL	01	06	PLAM	CR, H, C, S, WS	20 MIN.	2	20 / 21	
331	3'-0" X 7'-0" X 1 3/4"	SOLID CORE WOOD	HOLLOW METAL	01	06	PLAM	CR, H, C, S, WS	20 MIN.	2	20 / 21	
332	3'-0" X 7'-0" X 1 3/4"	SOLID CORE WOOD	HOLLOW METAL	01	06	PLAM	CR, H, C, S, WS	20 MIN.	2	20 / 21	
333	3'-0" X 7'-0" X 1 3/4"	SOLID CORE WOOD	HOLLOW METAL	01	06	PLAM	CR, H, C, S, WS	20 MIN.	2	20 / 21	
336A	PR. 3'-0" X 7'-0" X 1 3/4"	SOLID CORE WOOD	HOLLOW METAL	01	05	PLAM	P, H, 2PL, C, S	20 MIN.	2	20 / 21	
336B	PR. 2'-8" X 7'-0" X 1 3/4"	SOLID CORE WOOD	HOLLOW METAL	01	05	PLAM	SR, H, S, C	20 MIN.	2	20 / 21	

DOOR SCHEDULE — RESIDENTIAL MEN'S FACILITY BUILDING

NO.	SIZE	MATERIAL	FRAME	FRAME ELEVATION	DOOR ELEVATION	DOOR FINISH	HARDWARE	FIRE RATING	HARDWARE KEY	DETAIL SHEET A-205	REMARKS
400A	3'-0" X 7'-0" X 1 3/4"	ALUMINUM / GLASS	ALUMINUM STOREFRONT		04		PHR, LS, C, T, CY,CG, WST		1	28 / 29 SIM	
400B	3'-0" X 7'-0" X 1 3/4"	STEEL DOOR	HOLLOW METAL		09	PAINT	SR, C, T, H, WST, CY, CG		2	26 / 27	
400C	3'-0" X 7'-0" X 1 3/4"	ALUMINUM / GLASS	ALUMINUM STOREFRONT		04		PHR, LS, C, T, CY,CG, WST		1	28 / 29 SIM	
400D	3'-0" X 7'-0" X 1 3/4"	ALUMINUM / GLASS	ALUMINUM STOREFRONT		04		PHR, LS, C, T, CY,CG, WST		1	28 / 29 SIM	
401	3'-0" X 7'-0" X 1 3/4"	ALUMINUM / GLASS	ALUMINUM STOREFRONT		04		PHR, LS, C, T, CY,CG, WST		1		
403A	3'-0" X 7'-0" X 1 3/4"	SOLID CORE WOOD	HOLLOW METAL	01	06	PLAM	CR, H, WS, C, S	20 MIN.	2	20 / 21	
403B	3'-0" X 7'-0" X 1 3/4"	SOLID CORE WOOD	HOLLOW METAL	01	06	PLAM	PR, H, OS, S		2	20 / 21	
404A	3'-0" X 7'-0" X 1 3/4"	SOLID CORE WOOD	HOLLOW METAL	01	06	PLAM	CR, H, C, S	20 MIN.	2	20 / 21	
404B	3'-0" X 7'-0" X 1 3/4"	SOLID CORE WOOD	HOLLOW METAL	01	06	PLAM	PR, H, OS, S		2	20 / 21	
405A	3'-0" X 7'-0" X 1 3/4"	SOLID CORE WOOD	HOLLOW METAL

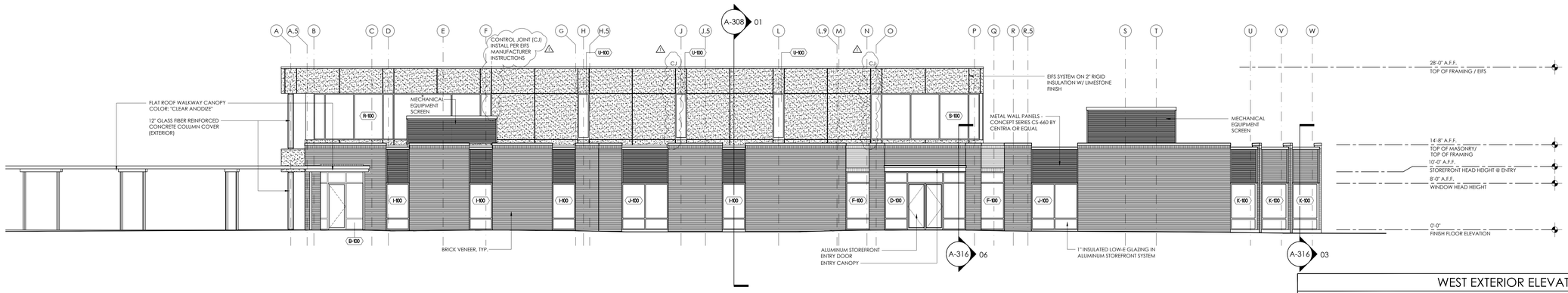

WEST EXTERIOR ELEVATION — SCALE: 1/8" = 1'-0" — 01

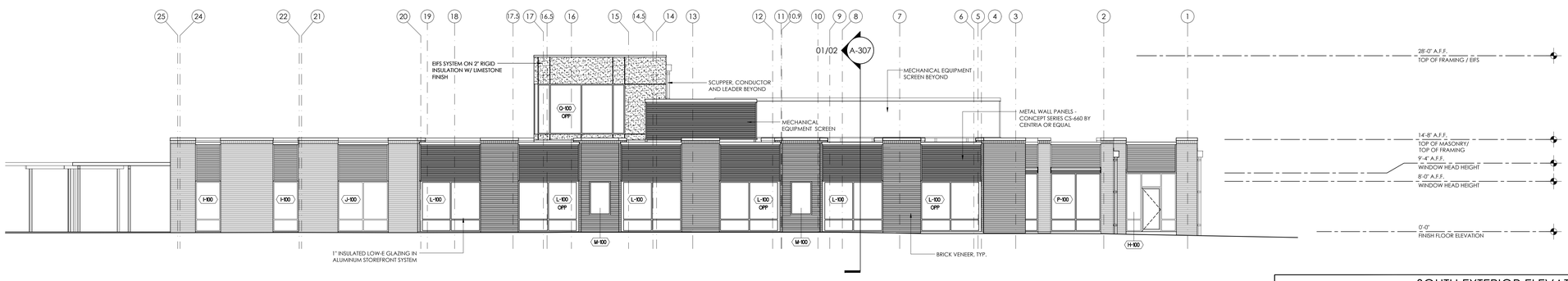

SOUTH EXTERIOR ELEVATION — SCALE: 1/8" = 1'-0" — 02

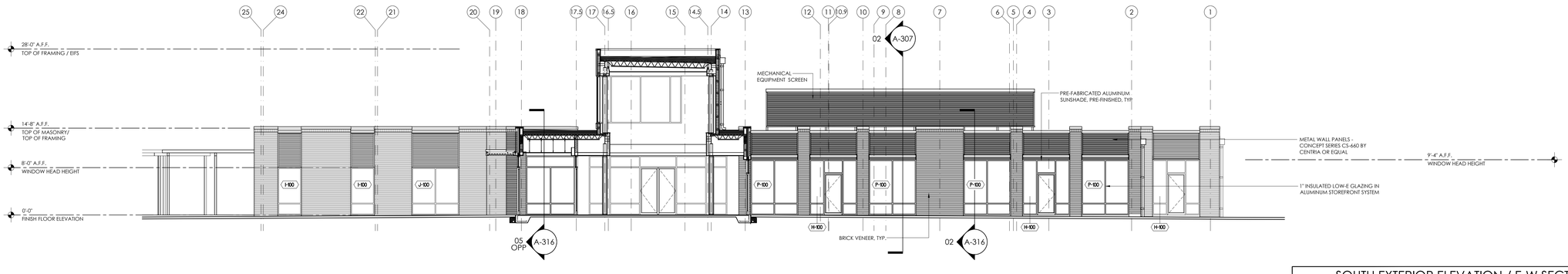

SOUTH EXTERIOR ELEVATION / E-W SECTION — SCALE: 1/8" = 1'-0" — 03

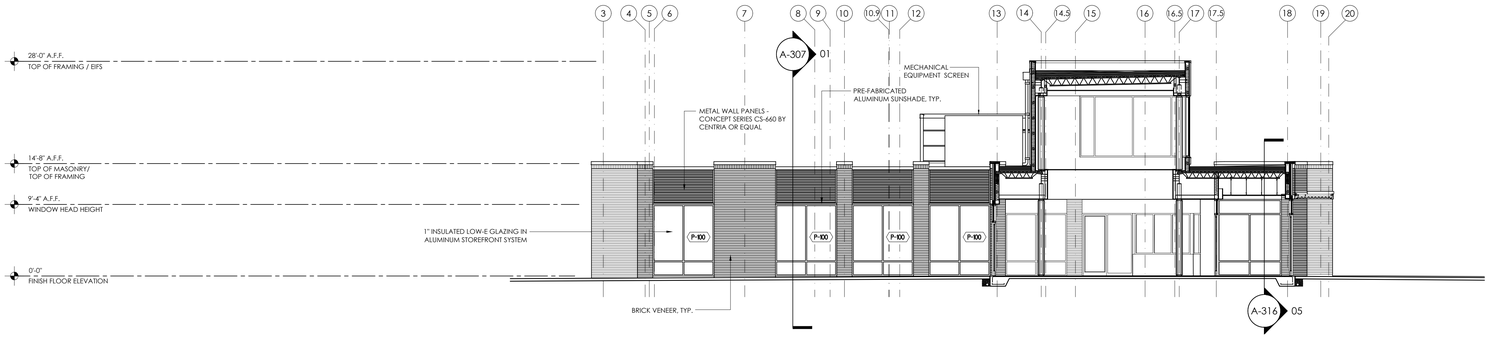

NORTH EXTERIOR ELEVATION / E-W SECTION — SCALE: 1/8" = 1'-0" — 04

isdesign
ARCHITECTURE + INTERIORS
1111 Haynes Street, Suite 103
Raleigh, North Carolina 27604
t. 919.833.5400
www.isdesignpa.com

Project

THE HEALING PLACE OF NEW HANOVER COUNTY

1000 MEDICAL CENTER DRIVE
WILMINGTON, NORTH CAROLINA

Client

NEW HANOVER COUNTY, NORTH CAROLINA

All reproduction & intellectual property rights reserved © 2020

Key Plan

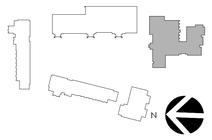

Professional Seals



No.	Description	Date
1	SCHEMATIC DESIGN	11/26/19
2	DESIGN DEVELOPMENT SET	04/09/20
3	CONSTRUCTION DOCUMENT SET	08/25/20
1	MCD #1	12/02/20

Project Code: 16HTWILMING

Sheet Title

EXTERIOR ELEVATIONS

ADMINISTRATIVE/ EDUCATION BUILDING

Original drawing is 42 x 30 Do not scale contents of this drawing

Sheet Number

A-301

12/2/2020 2:31 AM P:\16HTWILMING\Construction Documents\MCD#1\Construction Documents\CD-16HTWILMING - A-301R - CD Exterior Elevations - Administrative Building.dwg

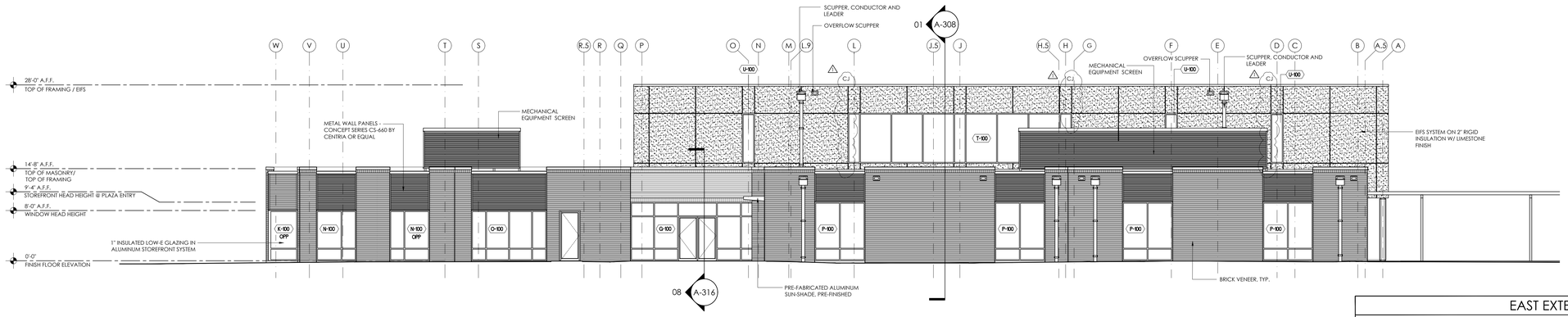

EAST EXTERIOR ELEVATION — 01

SCALE: 1/8" = 1'-0"

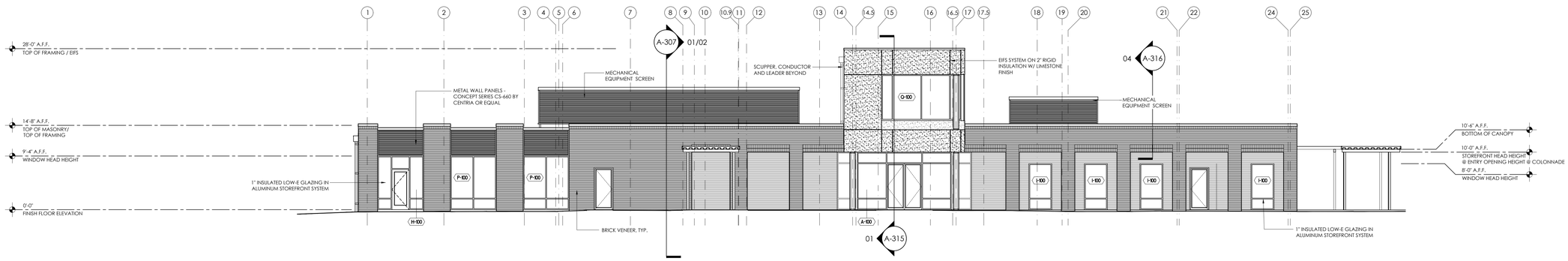

NORTH EXTERIOR ELEVATION — 02

SCALE: 1/8" = 1'-0"

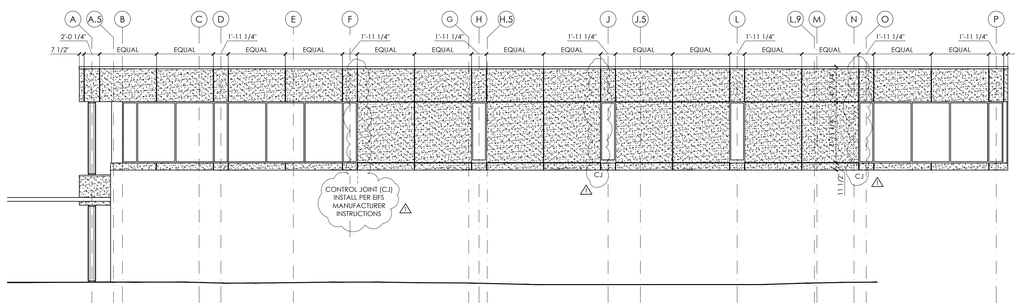

WEST EIFS SCORING ELEVATION — 04

SCALE: 1/8" = 1'-0"

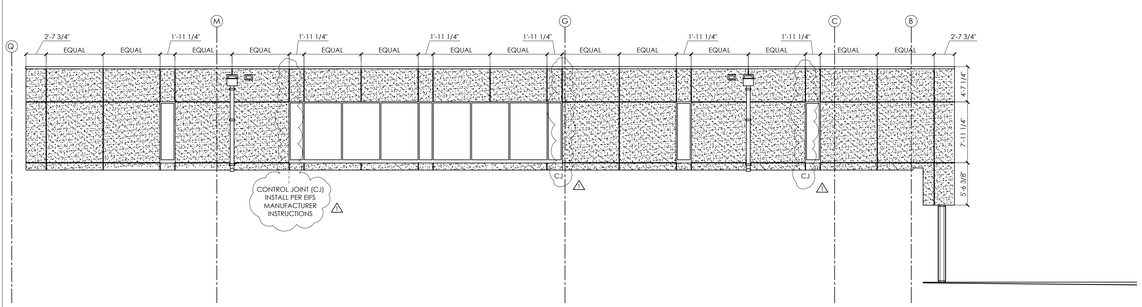

EAST EIFS SCORING ELEVATION — 03

SCALE: 1/8" = 1'-0"

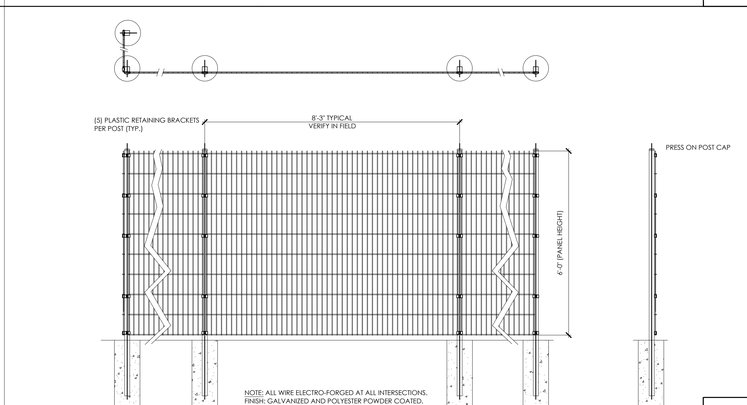

ORNAMENTAL FENCE TYPICAL ELEVATION — 05

SCALE: 1/2" = 1'-0"

isdesign
ARCHITECTURE + INTERIORS
1111 Haynes Street, Suite 103
Raleigh, North Carolina 27604
t. 919.833.5400
www.isdesignpa.com

Project

THE HEALING PLACE OF NEW HANOVER COUNTY

1000 MEDICAL CENTER DRIVE
WILMINGTON, NORTH CAROLINA

Client

NEW HANOVER COUNTY, NORTH CAROLINA

All reproduction & intellectual property rights reserved © 2020

Key Plan

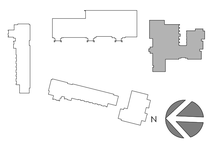

Professional Seals



No.	Description	Date
1	SCHEMATIC DESIGN	11/26/19
2	DESIGN DEVELOPMENT SET	04/09/20
3	CONSTRUCTION DOCUMENT SET	08/25/20
1	MCD #1	12/02/20

Project Code: 16HTWILMING

Sheet Title

EXTERIOR ELEVATIONS

ADMINISTRATIVE/ EDUCATION BUILDING

Original drawing is 42 x 30 Do not scale contents of this drawing.

Sheet Number

A-302

12/2/2020 2:33 AM P:\16HTWILMING\Construction Documents\MCD#1\Construction Documents\CD-16HTWILMING - A-302R - CD Exterior Elevations - Administrative Building.dwg

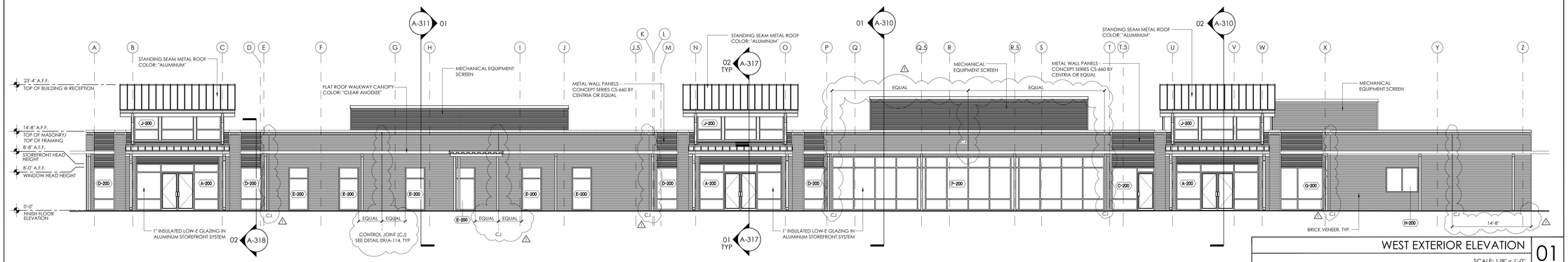

WEST EXTERIOR ELEVATION — 01

SCALE: 1/8" = 1'-0"

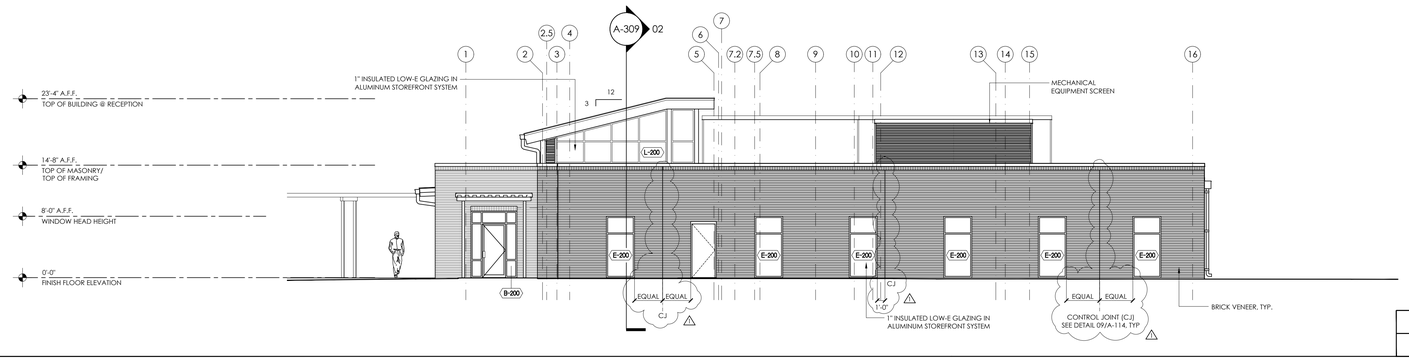

SOUTH EXTERIOR ELEVATION — 02

SCALE: 1/8" = 1'-0"

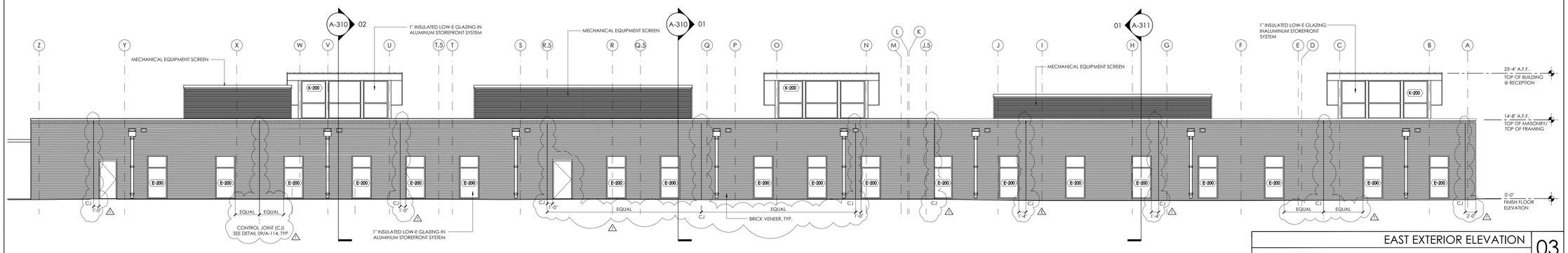

EAST EXTERIOR ELEVATION — 03

SCALE: 1/8" = 1'-0"

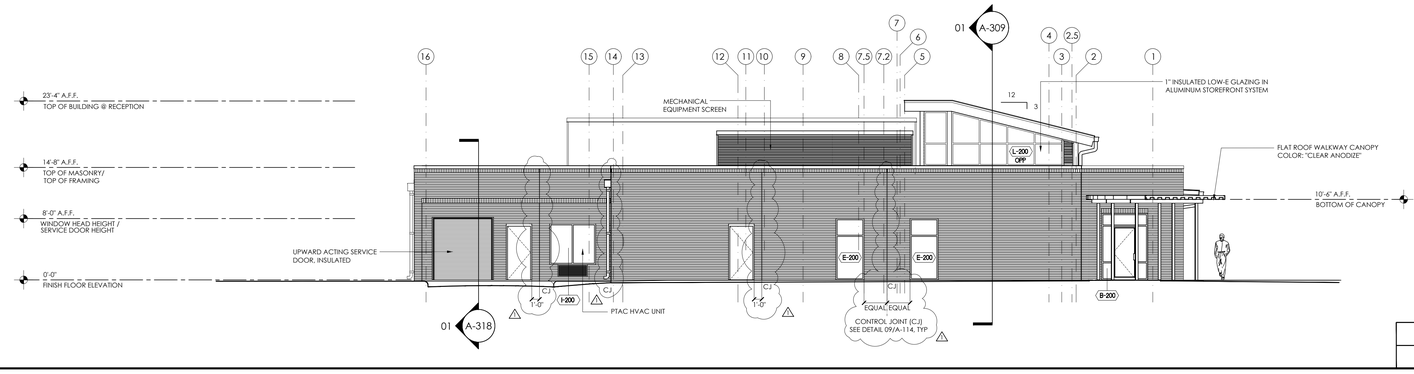

NORTH EXTERIOR ELEVATION — 04

SCALE: 1/8" = 1'-0"

isdesign
ARCHITECTURE + INTERIORS
1111 Haynes Street, Suite 103
Raleigh, North Carolina 27604
t. 919.833.5400
www.isdesignpa.com

Project

THE HEALING PLACE OF NEW HANOVER COUNTY

1000 MEDICAL CENTER DRIVE
WILMINGTON, NORTH CAROLINA

Client

NEW HANOVER COUNTY, NORTH CAROLINA

All reproduction & intellectual property rights reserved © 2020

Key Plan

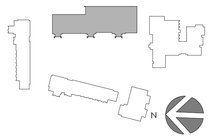

Professional Seals





No.	Description	Date
1	SCHEMATIC DESIGN	11/26/19
2	DESIGN DEVELOPMENT SET	04/09/20
3	CONSTRUCTION DOCUMENT SET	08/25/20
1	MCD #1	12/02/20

Project Code: 16HTWILMING

Sheet Title

EXTERIOR ELEVATIONS

DINING/SHELTER/STORAGE BUILDING

Original drawing is 42 x 30 Do not scale contents of this drawing

Sheet Number

A-303

12/2/2020 2:55 AM P:\16HTWILMING\Construction Documents\MCD#1\Construction Documents\CD-16HTWILMING - A-303R - CD Exterior Elevations - Dining - Shelter - Storage Building.dwg



SOUTH EXTERIOR ELEVATION — SCALE: 1/8" = 1'-0" — 01

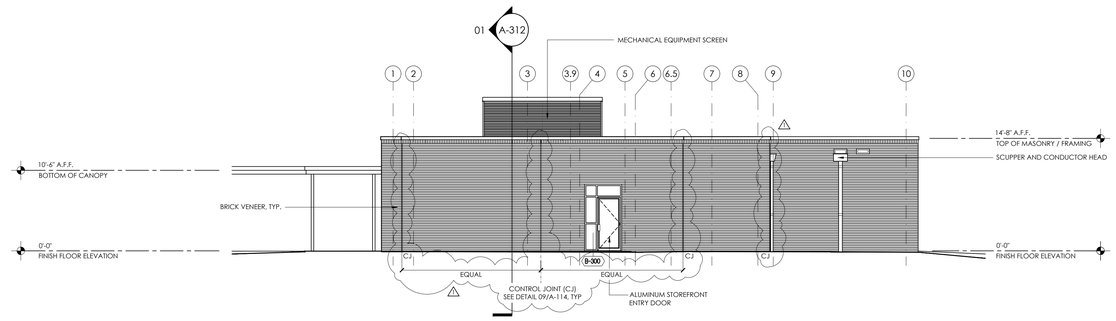

EAST EXTERIOR ELEVATION — SCALE: 1/8" = 1'-0" — 02

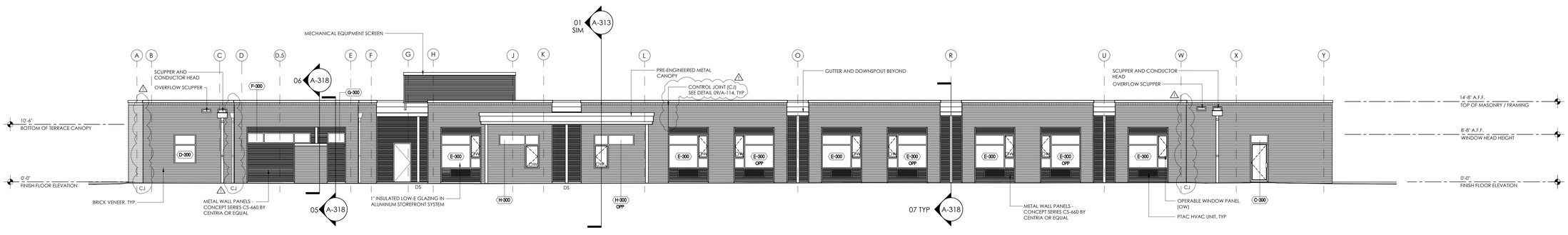

NORTH EXTERIOR ELEVATION — SCALE: 1/8" = 1'-0" — 03

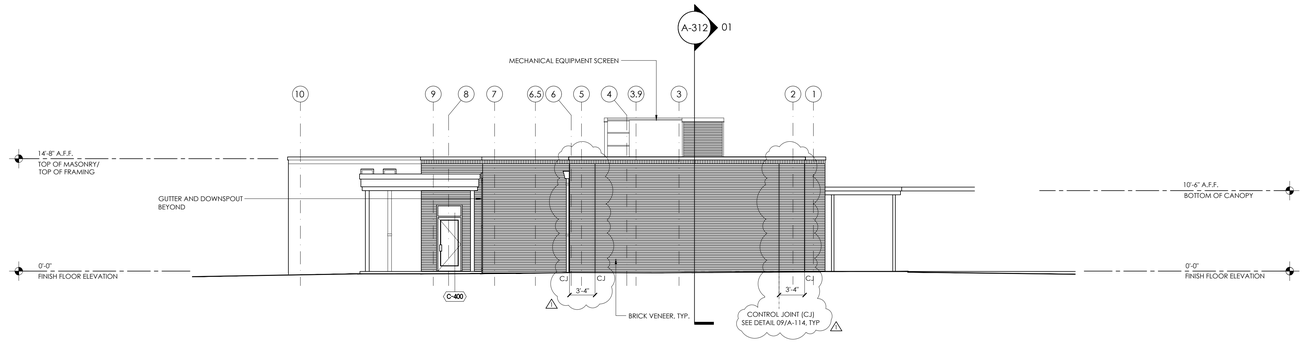

WEST EXTERIOR ELEVATION — SCALE: 1/8" = 1'-0" — 04

isdesign
ARCHITECTURE + INTERIORS
1111 Haynes Street, Suite 103
Raleigh, North Carolina 27604
t. 919.833.5400
www.isdesignpa.com

Project

THE HEALING PLACE OF NEW HANOVER COUNTY

1000 MEDICAL CENTER DRIVE
WILMINGTON, NORTH CAROLINA

Client

NEW HANOVER COUNTY, NORTH CAROLINA

All reproduction & intellectual property rights reserved © 2020

Key Plan

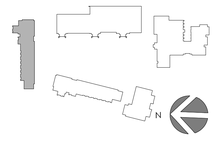

Professional Seals



No.	Description	Date
1	SCHEMATIC DESIGN	11/26/19
2	DESIGN DEVELOPMENT SET	04/09/20
3	CONSTRUCTION DOCUMENT SET	08/25/20
1	MCD #1	12/02/20

Project Code: 16HTWILMING

Sheet Title

EXTERIOR ELEVATIONS

WOMEN'S RESIDENTIAL BUILDING

Original drawing is 42 x 30 Do not scale contents of this drawing

Sheet Number

A-304

12/2/2020 2:37 AM P:\16HTWILMING\Construction Documents\MCD#1\Construction Documents\CD-16HTWILMING - A-304R - CD Exterior Elevations - Women's Residential Building.dwg

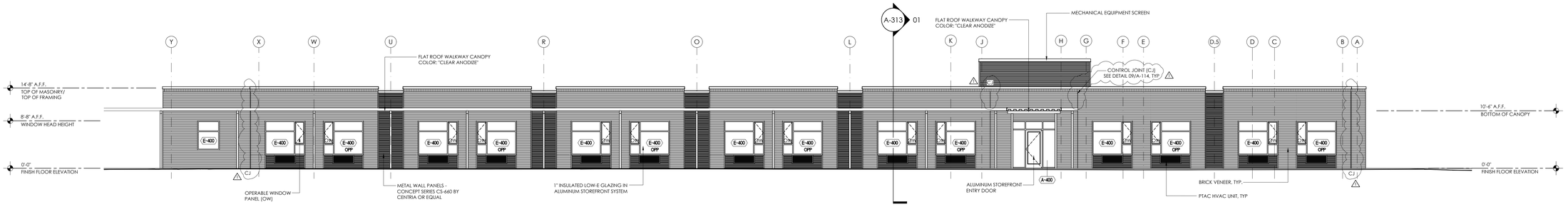

EAST EXTERIOR ELEVATION — SCALE: 1/8" = 1'-0" — 01

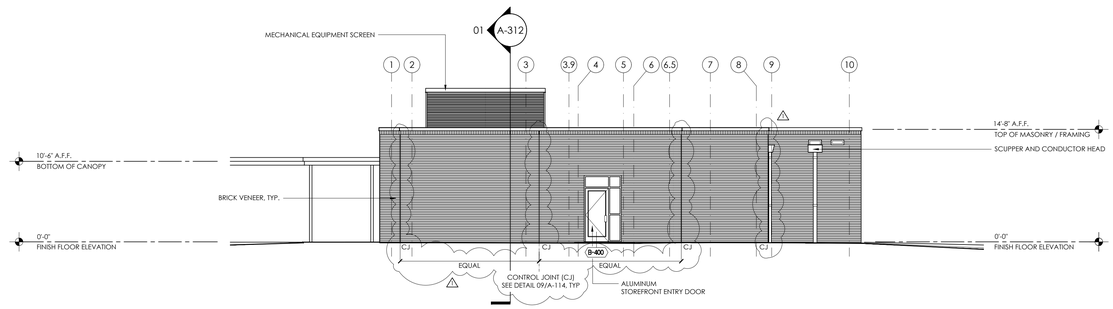

NORTH EXTERIOR ELEVATION — SCALE: 1/8" = 1'-0" — 02

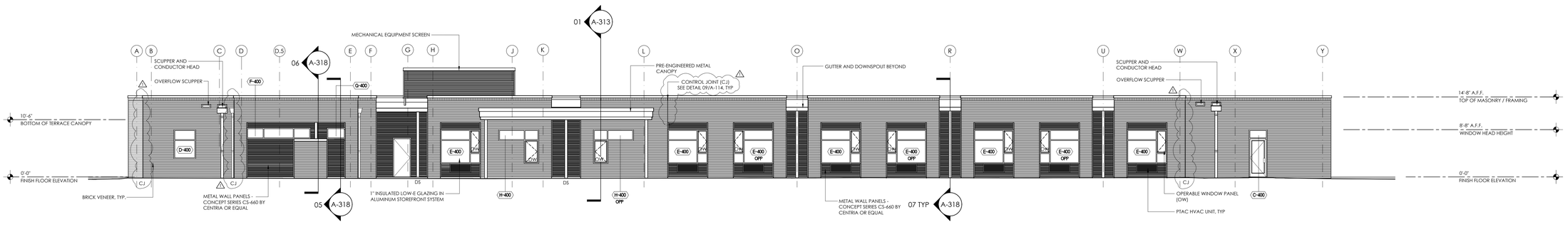

WEST EXTERIOR ELEVATION — SCALE: 1/8" = 1'-0" — 03

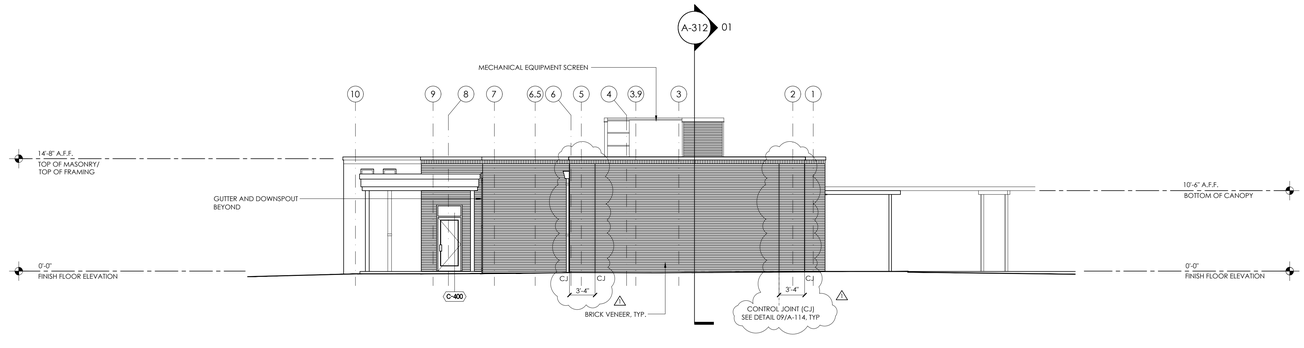

SOUTH EXTERIOR ELEVATION — SCALE: 1/8" = 1'-0" — 04

isdesign
ARCHITECTURE + INTERIORS
1111 Haynes Street, Suite 103
Raleigh, North Carolina 27604
t. 919.833.5400
www.isdesignpa.com

Project

THE HEALING PLACE OF NEW HANOVER COUNTY

1000 MEDICAL CENTER DRIVE
WILMINGTON, NORTH CAROLINA

Client

NEW HANOVER COUNTY, NORTH CAROLINA

All reproduction & intellectual property rights reserved © 2020

Key Plan

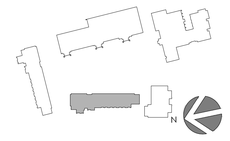

Professional Seals



No.	Description	Date
1	SCHEMATIC DESIGN	11/26/19
2	DESIGN DEVELOPMENT SET	04/09/20
3	CONSTRUCTION DOCUMENT SET	08/25/20
1	MCD #1	12/02/20

Project Code: 16HTWILMING

Sheet Title

EXTERIOR ELEVATIONS

MEN'S RESIDENTIAL BUILDING

Original drawing is 42 x 30 Do not scale contents of this drawing

Sheet Number

A-305

12/2/2020 2:39 AM P:\16HTWILMING\Construction Documents\MCD#1\Construction Documents\CD-16HTWILMING - A-305R - CD Exterior Elevations - Men's Residential Building.dwg

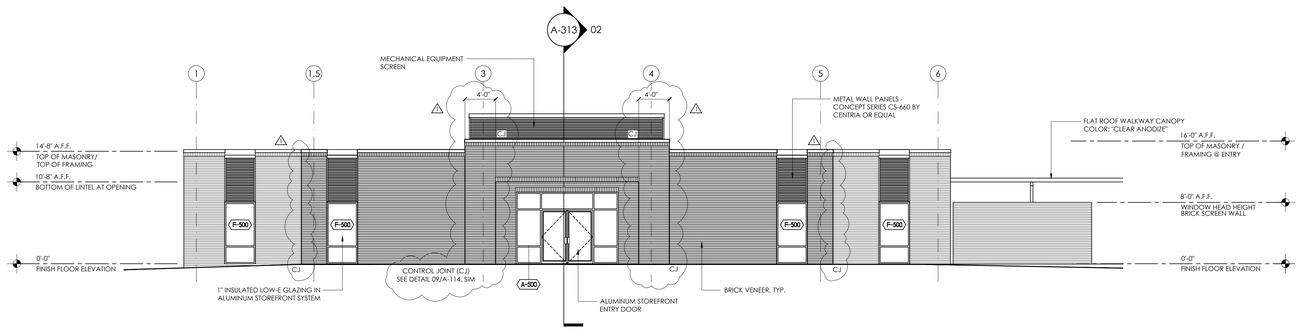

SOUTH EXTERIOR ELEVATION — SCALE: 1/8" = 1'-0" — 01

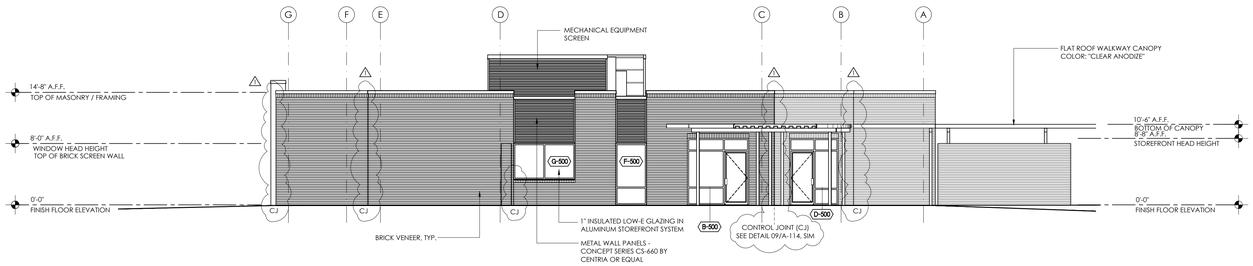

EAST EXTERIOR ELEVATION — SCALE: 1/8" = 1'-0" — 02

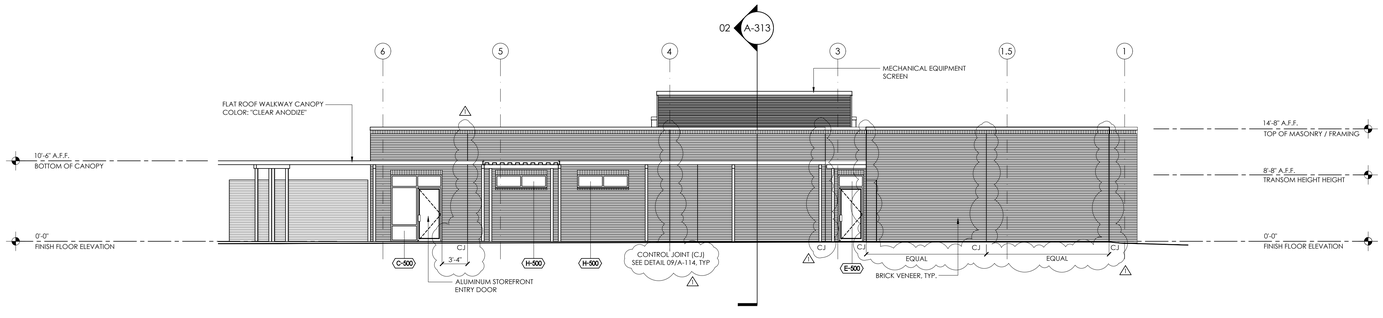

NORTH EXTERIOR ELEVATION — SCALE: 1/8" = 1'-0" — 03

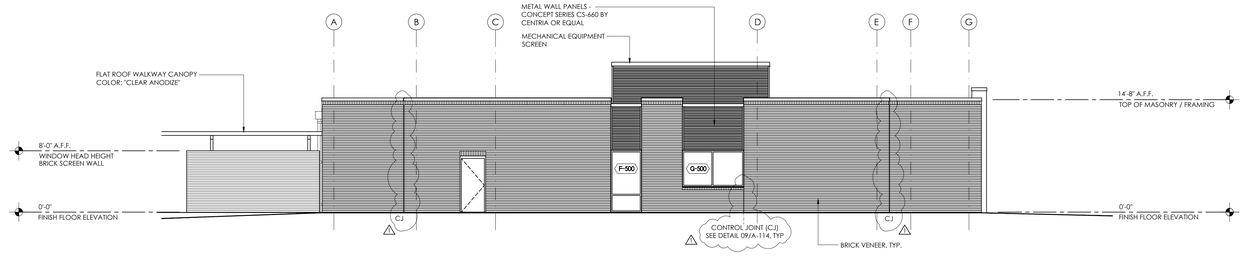

WEST EXTERIOR ELEVATION — SCALE: 1/8" = 1'-0" — 04

isdesign
ARCHITECTURE + INTERIORS
1111 Haynes Street, Suite 103
Raleigh, North Carolina 27604
t. 919.833.5400
www.isdesignpa.com

Project

THE HEALING PLACE OF NEW HANOVER COUNTY

1000 MEDICAL CENTER DRIVE
WILMINGTON, NORTH CAROLINA

Client

NEW HANOVER COUNTY, NORTH CAROLINA

All reproduction & intellectual property rights reserved © 2020

Key Plan

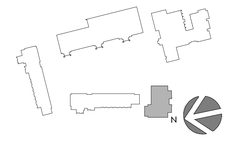

Professional Seals



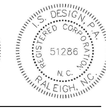

No.	Description	Date
1	SCHEMATIC DESIGN	11/26/19
2	DESIGN DEVELOPMENT SET	04/09/20
3	CONSTRUCTION DOCUMENT SET	08/25/20
1	MCD #1	12/02/20

Project Code: 16HTWILMING

Sheet Title

EXTERIOR ELEVATIONS

DETOX BUILDING

Original drawing is 42 x 30 Do not scale contents of this drawing

Sheet Number

A-306

12/2/2020 2:40 AM P:\16HTWILMING\Construction Documents\MCD#1\Construction Documents\CD-16HTWILMING - A-306R - CD Exterior Elevations - Detox Building.dwg

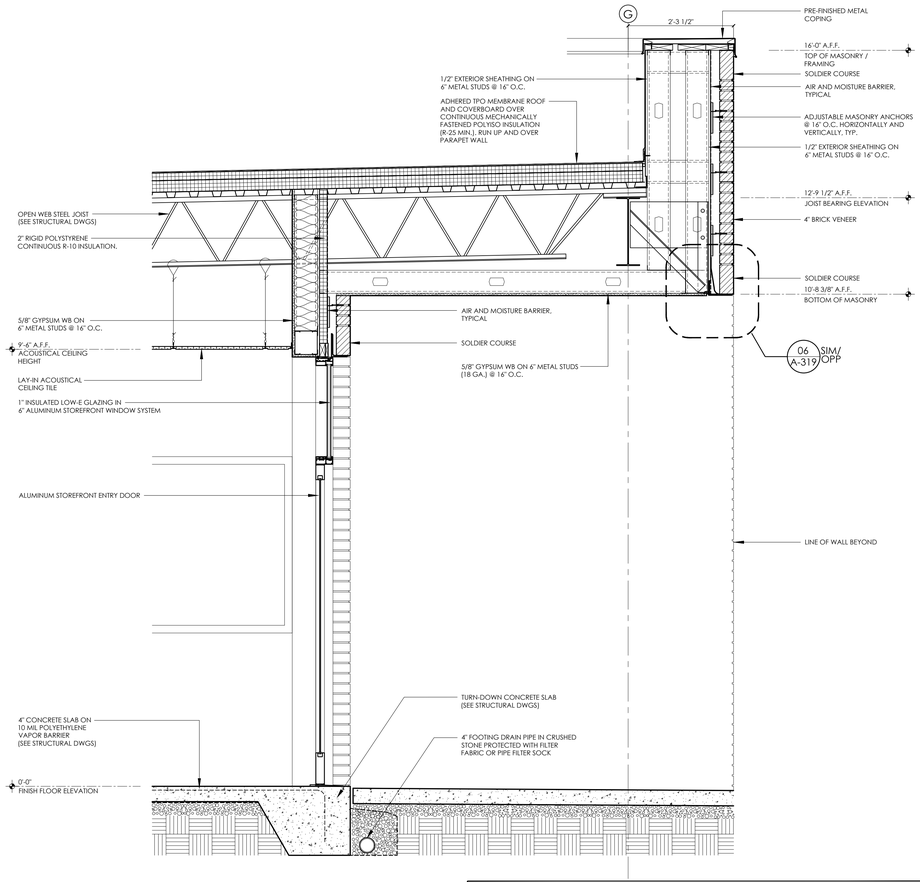

WALL SECTION 01
SCALE: 3/4" = 1'-0"

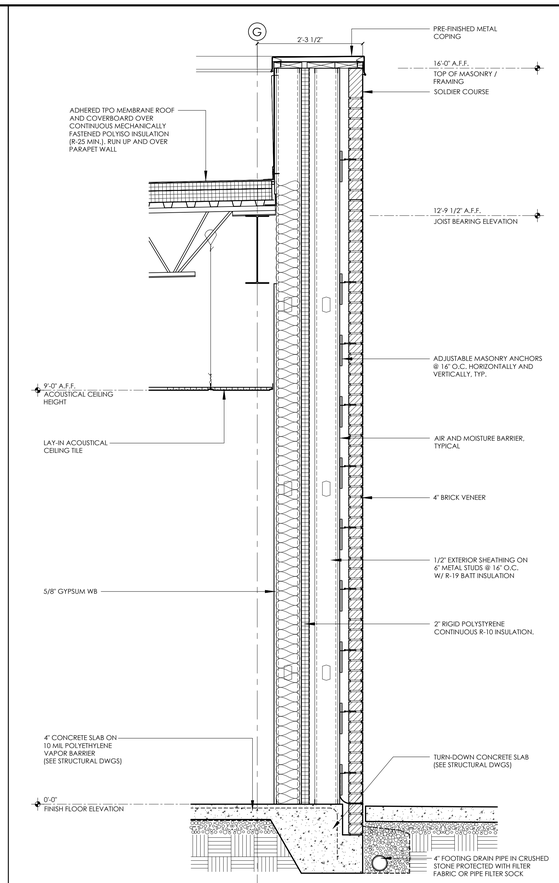

WALL SECTION 02
SCALE: 3/4" = 1'-0"

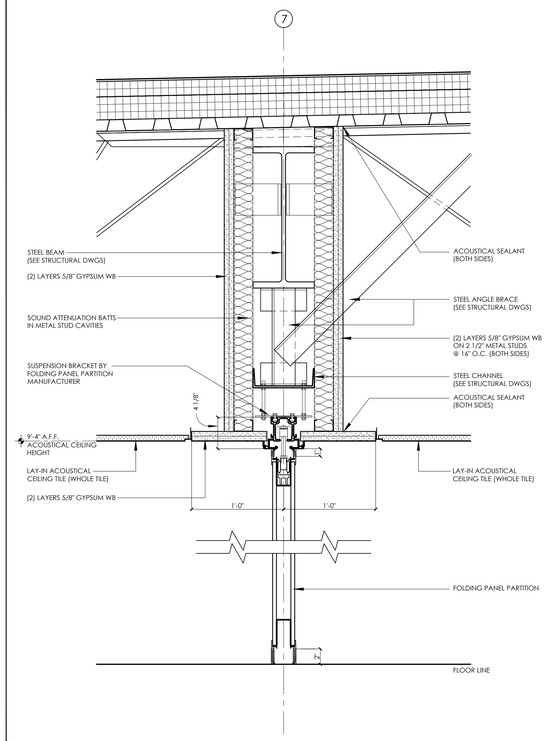

SECTION 03
SCALE: 1 1/2" = 1'-0"

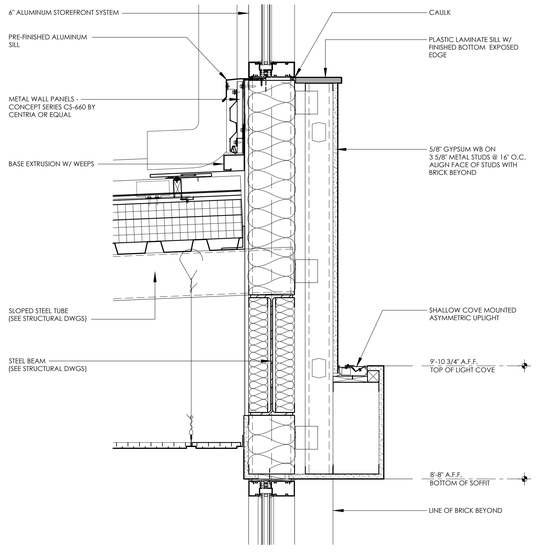

SECTION 04
SCALE: 1 1/2" = 1'-0"

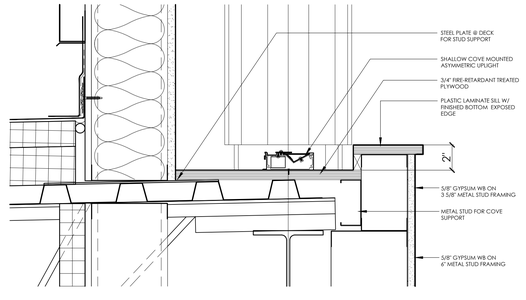

SECTION 05
SCALE: 1 1/2" = 1'-0"

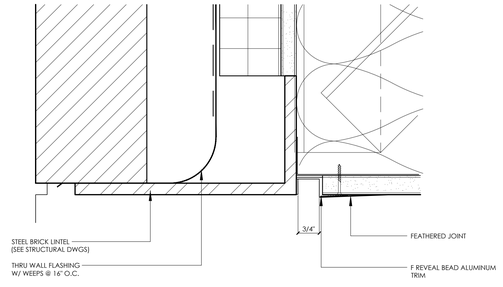

SECTION 06
SCALE: 6" = 1'-0"

SECTION 07
SCALE: 1 1/2" = 1'-0"

isdesign
ARCHITECTURE + INTERIORS
1111 Haynes Street, Suite 103
Raleigh, North Carolina 27604
t. 919.833.5400
www.isdesignpa.com

Project

THE HEALING PLACE OF NEW HANOVER COUNTY

1000 MEDICAL CENTER DRIVE
WILMINGTON, NORTH CAROLINA

Client

NEW HANOVER COUNTY, NORTH CAROLINA

All reproduction & intellectual property rights reserved © 2020

Key Plan

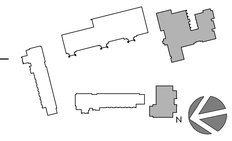

Professional Seals



No.	Description	Date
1	CONSTRUCTION DOCUMENT SET	08/25/20
1	MCD #1	12/02/20

Project Code: 16HTWILMING

Sheet Title

WALL SECTIONS

Original drawing is 42 x 30 Do not scale contents of this drawing

Sheet Number

A-319

12/2/2020 2:42 AM P:\16HTWILMING\Construction Documents\MCD#1\Construction Documents\CD-16HTWILMING - A-319R - CD Wall Sections.dwg

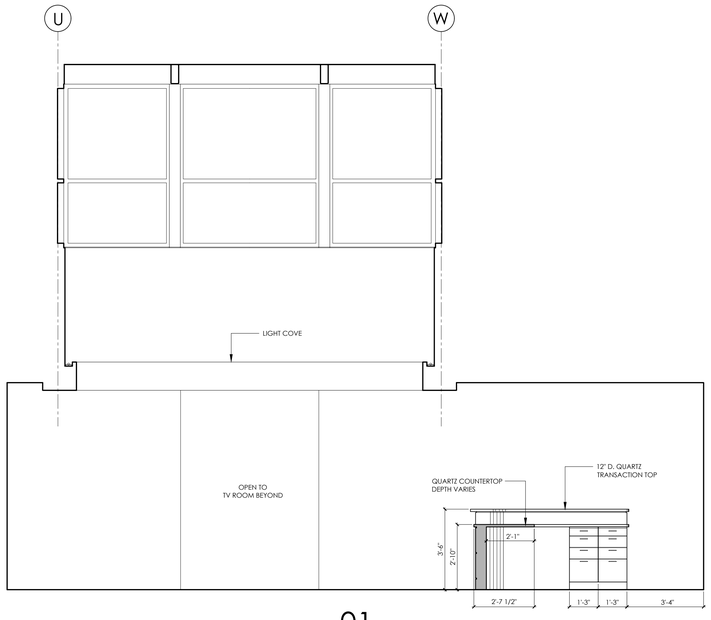

01

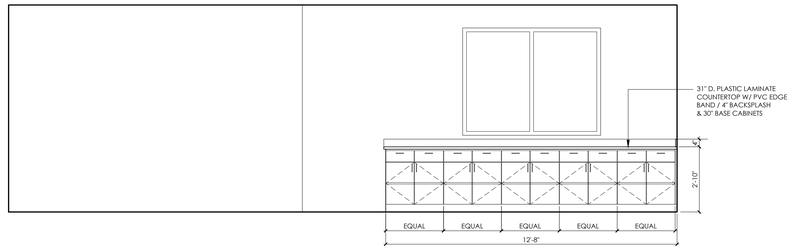

02

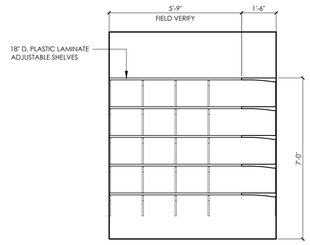

03

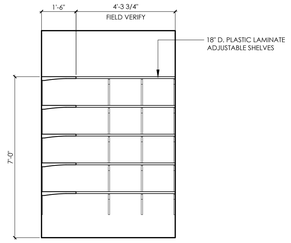

04

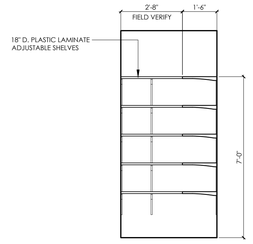

05

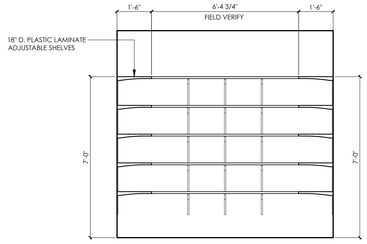

06

DINING / SHELTER BUILDING INTERIOR ELEVATIONS

SCALE: 3/8" = 1'-0"

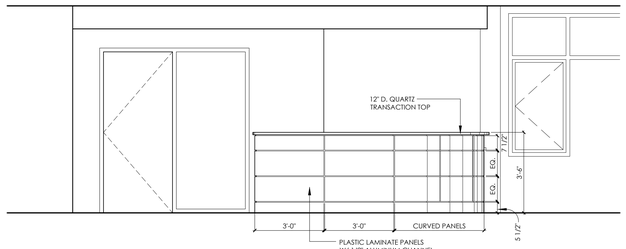

07

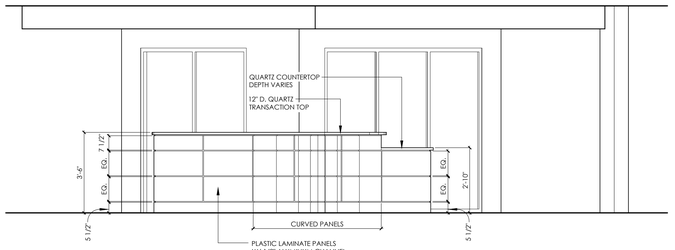

08

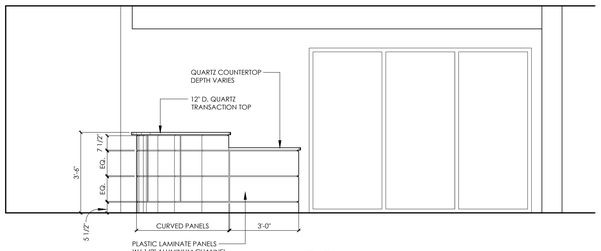

09

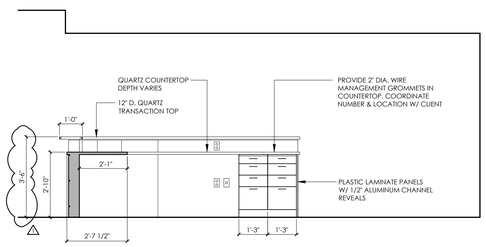

10

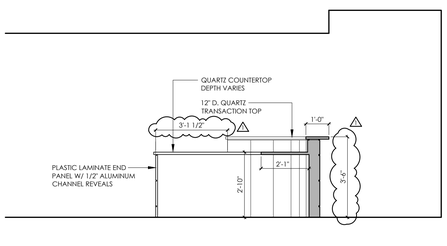

11

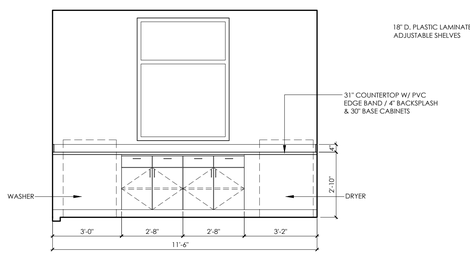

12

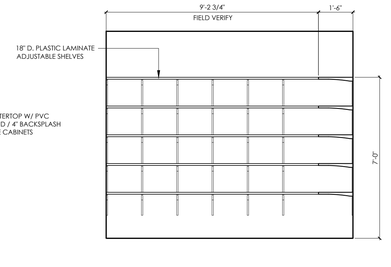

13

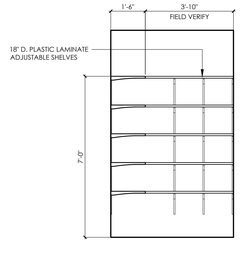

14

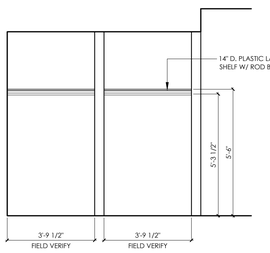

15

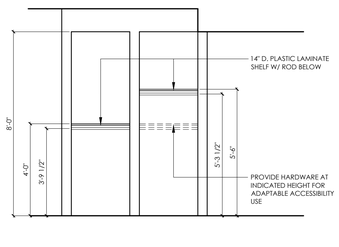

16

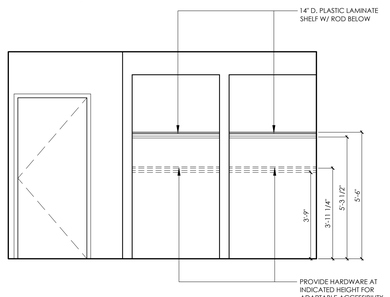

17

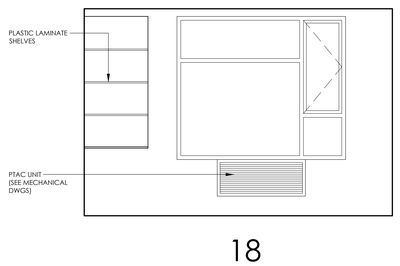

18

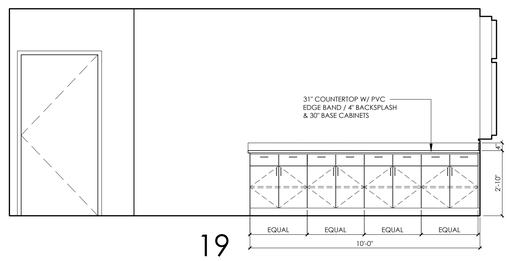

19

RESIDENCE BUILDINGS INTERIOR ELEVATIONS

SCALE: 3/8" = 1'-0"

isdesign
ARCHITECTURE + INTERIORS
1111 Haynes Street, Suite 103
Raleigh, North Carolina 27604
t. 919.833.5400
www.isdesignpa.com

Project

THE HEALING PLACE OF NEW HANOVER COUNTY

1000 MEDICAL CENTER DRIVE
WILMINGTON, NORTH CAROLINA

Client

NEW HANOVER COUNTY, NORTH CAROLINA

All reproduction & intellectual property rights reserved © 2020

Key Plan

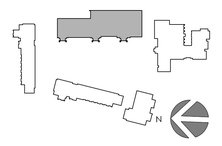

Professional Seals





No.	Description	Date
1	CONSTRUCTION DOCUMENT SET	08/25/20
1	MCD #1	12/02/20

Project Code: 16HTWILMING

Sheet Title

INTERIOR ELEVATIONS

DINING/SHELTER & RESIDENCE BUILDINGS

Original drawing is 42 x 30. Do not scale contents of this drawing

Sheet Number

A-506

12/2/2020 2:44 AM P:\16HTWILMING\Construction Documents\MCD#1\Construction Documents\CD-16HTWILMING - A-506R - CD Interior Elevations.dwg

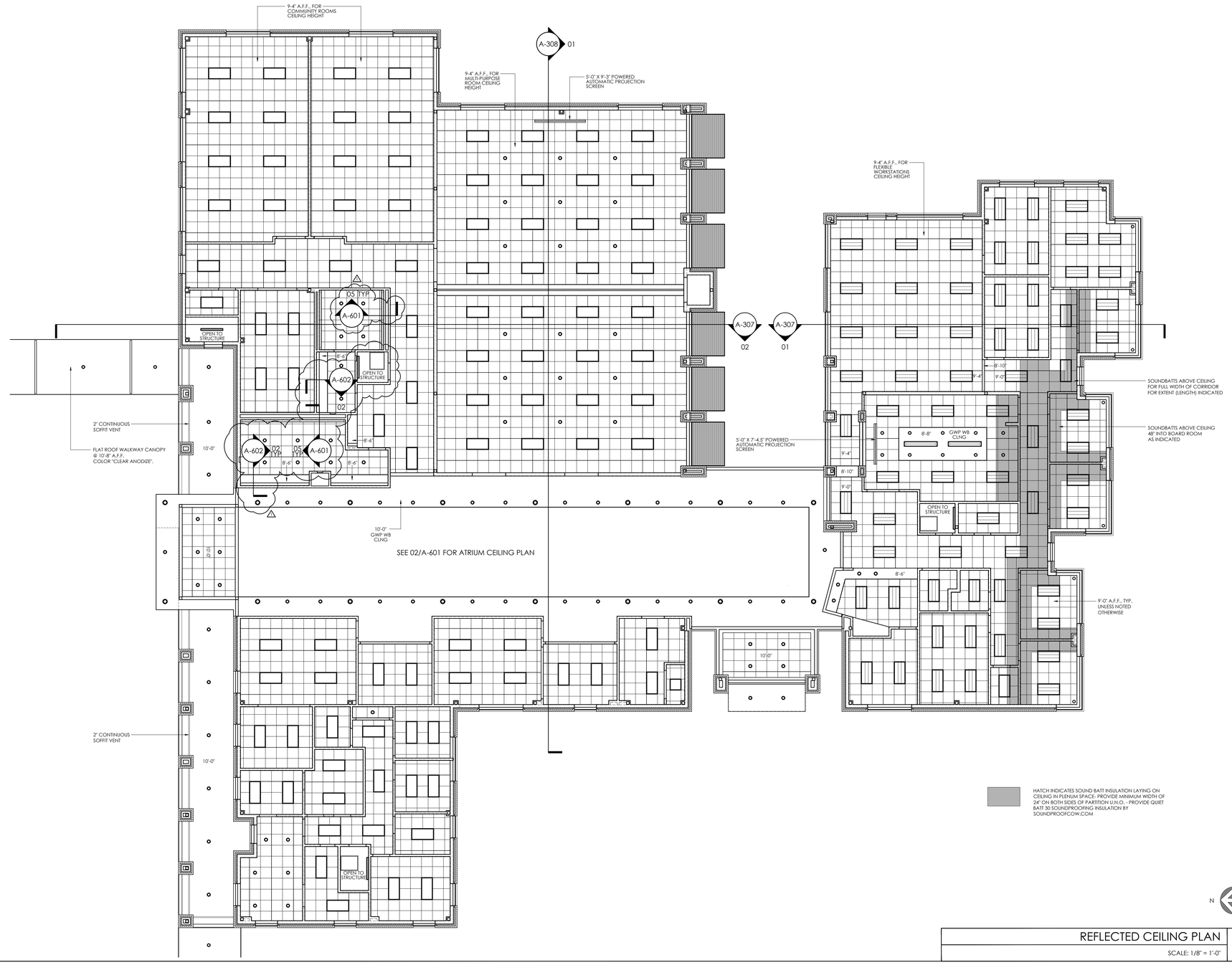

REFLECTED CEILING PLAN 01
SCALE: 1/8" = 1'-0"

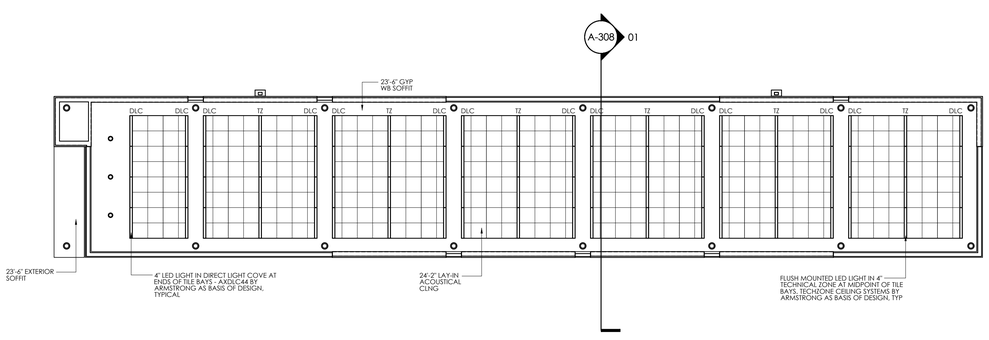

ATRIUM REFLECTED CEILING PLAN 02
SCALE: 1/8" = 1'-0"

LIGHTING/CEILING LEGEND

- 2X4 LAY-IN LED INDIRECT FIXTURE
- 2X4 ACRYLIC LAY-IN LED FIXTURE
- 1X4 SURFACE LED FIXTURE
- RECESSED LED FIXTURE
- 12" PENDANT FIXTURE
- RECESSED SHOWER FIXTURE
- WALL SCONCE
- SUSPENDED UTILITY LED FIXTURE
- SURFACE MOUNTED UTILITY LED FIXTURE
- WALL-MTD. BATHROOM LED FIXTURE
- 4" W. RECESSED LED FIXTURE
- LED LINEAR PERIMETER LIGHTING
- SUSPENDED INDIRECT LIGHT FIXTURE TO BE SELECTED
- HATCH INDICATES GYP. BD. CEILING
- ACOUSTICAL CEILING TILE - PROVIDE 24" X 24" ARMSTRONG ULTIMA LAY-IN TEGULAR TILE IN STANDARD SPECIFIED GRID. PROVIDE ARMSTRONG TECHZONE SYSTEM IN ATRIUM CEILING (BASIS OF DESIGN)

RATED WALL SYMBOL LEGEND

- INDICATES NEW NON-RATED PARTITION
- 1/2 HR RATED FIRE PARTITION
- 1 HR RATED FIRE PARTITIONS/ BARRIERS
- 2 HR RATED FIRE BARRIERS

NOTE:
1. THE CEILING HEIGHT FOR LAY-IN ACOUSTICAL CEILING TILE IS TO BE 9'-0" A.F.F. UNLESS NOTED OTHERWISE.

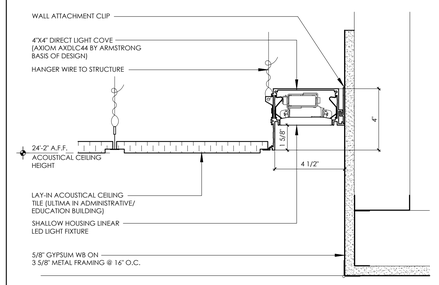

SECTION DETAIL 03
SCALE: 3" = 1'-0"

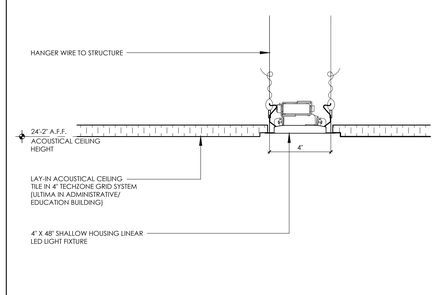

SECTION DETAIL 04
SCALE: 3" = 1'-0"

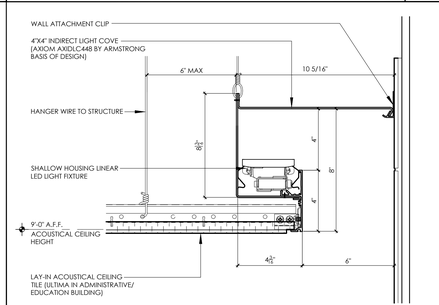

SECTION DETAIL 05
SCALE: 3" = 1'-0"

isdesign
ARCHITECTURE + INTERIORS
1111 Haynes Street, Suite 103
Raleigh, North Carolina 27604
t. 919.833.5400
www.isdesignpa.com

Project
THE HEALING PLACE OF NEW HANOVER COUNTY

1000 MEDICAL CENTER DRIVE
WILMINGTON, NORTH CAROLINA

Client
NEW HANOVER COUNTY, NORTH CAROLINA

All reproduction & intellectual property rights reserved © 2020

Key Plan

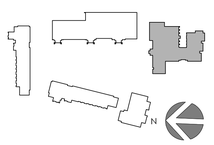

Professional Seals





No.	Description	Date
1	DESIGN DEVELOPMENT SET	04/09/20
2	CONSTRUCTION DOCUMENT SET	08/25/20
1	MCD #1	12/02/20

Project Code: 16HTWILMING

Sheet Title
REFLECTED CEILING PLAN

ADMINISTRATIVE/ EDUCATION BUILDING

Original drawing is 42 x 30 Do not scale contents of this drawing

Sheet Number
A-601

12/2/2020 2:46 AM P:\16HTWILMING\Construction Documents\MCD#1\Construction Documents\CD-16HTWILMING - A-601R - CD Reflected Ceiling Plan - Administrative Building.dwg

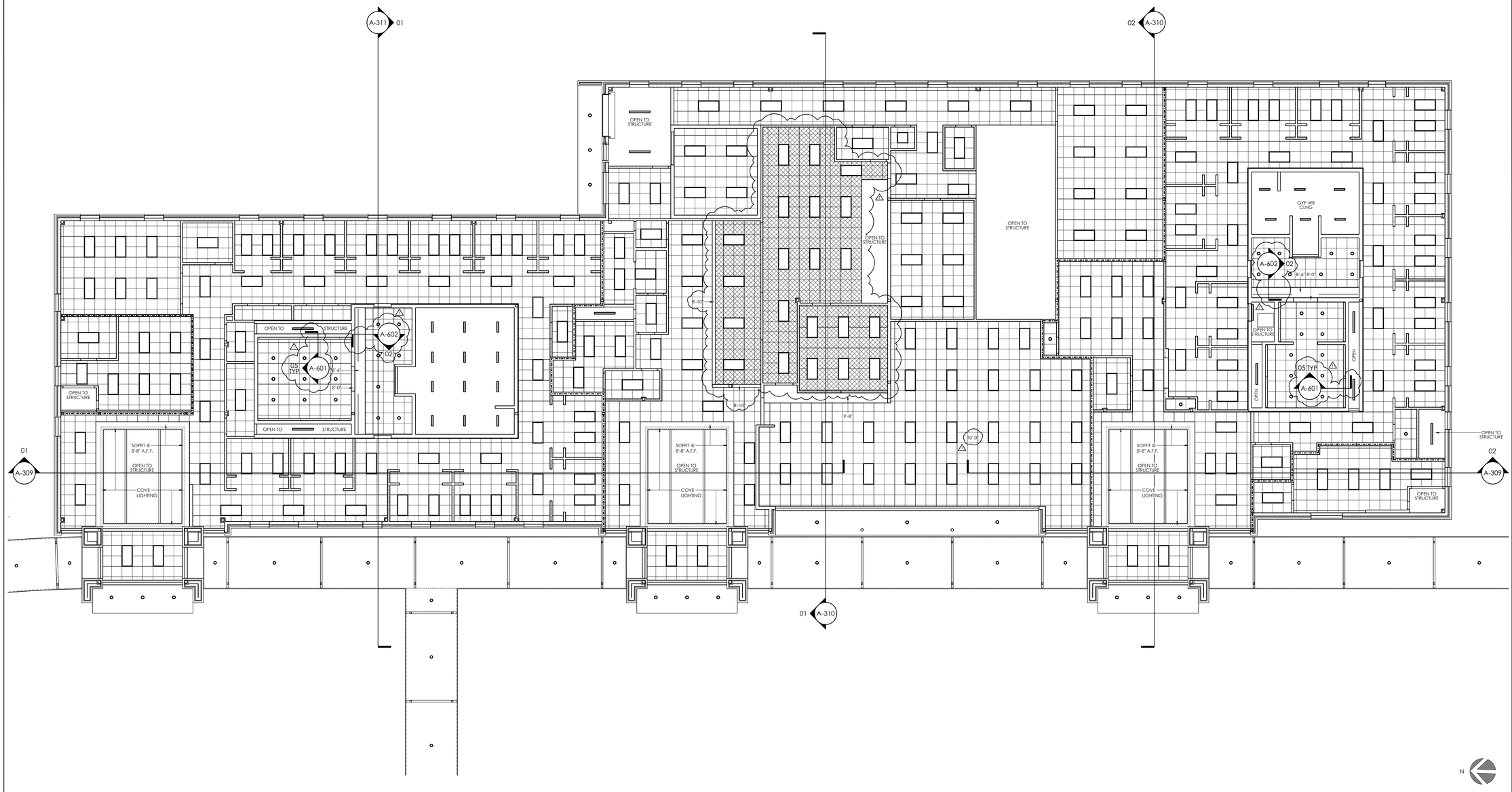

REFLECTED CEILING PLAN — SCALE: 1/8" = 1'-0" — 01

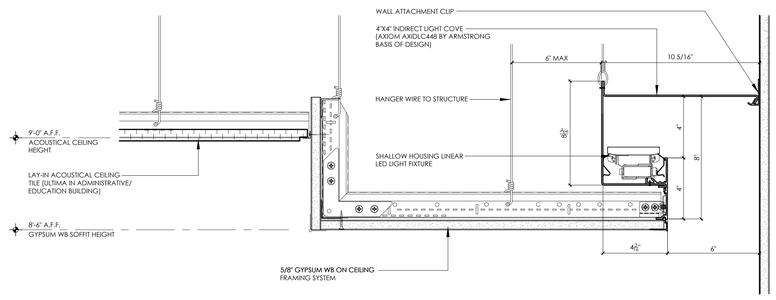

SECTION DETAIL — SCALE: 3" = 1'-0" — 02

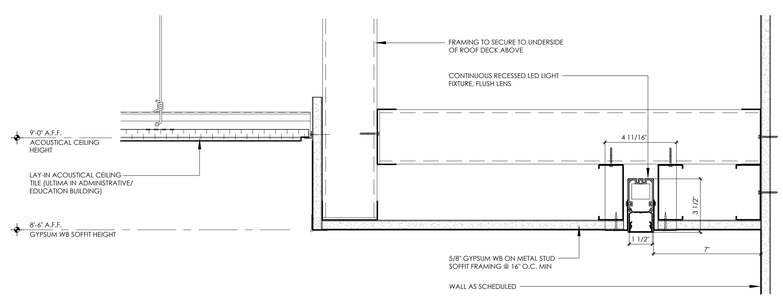

SECTION DETAIL — SCALE: 3" = 1'-0" — 03

LIGHTING/CEILING LEGEND

- 2X4 LAY-IN LED INDIRECT FIXTURE
- 2X4 ACRYLIC LAY-IN LED FIXTURE
- 1X4 SURFACE LED FIXTURE
- RECESSED LED FIXTURE
- 12" PENDANT FIXTURE
- RECESSED SHOWER FIXTURE
- WALL SCONCE
- SUSPENDED UTILITY LED FIXTURE
- SURFACE MOUNTED UTILITY LED FIXTURE
- WALL-MTD. BATHROOM LED FIXTURE
- 4" W. RECESSED LED FIXTURE
- LED LINEAR PERIMETER LIGHTING
- SUSPENDED INDIRECT LIGHT FIXTURE TO BE SELECTED
- HATCH INDICATES GYP. BD. CEILING
- ACOUSTICAL CEILING TILE - PROVIDE 24" X 24" ARMSTRONG CIRRUS LAY-IN TEGULAR TILE IN STANDARD SPECIFIED GRID, TYPICAL (BASIS OF DESIGN - SEE SPECIFICATIONS)
- ACOUSTICAL CEILING TILE - PROVIDE 24" X 24" VINYL WRAPPED GYPSUM WB TILE IN STANDARD SPECIFIED GRID, TYPICAL

NOTE:
1. THE CEILING HEIGHT FOR LAY-IN ACOUSTICAL CEILING TILE IS TO BE 9'-0" A.F.F. UNLESS NOTED OTHERWISE.

isdesign
ARCHITECTURE + INTERIORS
1111 Haynes Street, Suite 103
Raleigh, North Carolina 27604
t. 919.833.5400
www.isdesignpa.com

Project
THE HEALING PLACE OF NEW HANOVER COUNTY

1000 MEDICAL CENTER DRIVE
WILMINGTON, NORTH CAROLINA

Client
NEW HANOVER COUNTY, NORTH CAROLINA

All reproduction & intellectual property rights reserved © 2020

Key Plan

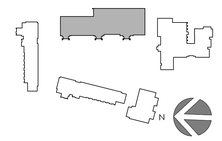

Professional Seals



No.	Description	Date
1	DESIGN DEVELOPMENT SET	04/09/20
2	CONSTRUCTION DOCUMENT SET	08/25/20
△	MCD #1	12/02/20

Project Code: 16HTWILMING

Sheet Title
REFLECTED CEILING PLAN

DINING/SHELTER/STORAGE BUILDING
Original drawing is 42 x 30 Do not scale contents of this drawing.

Sheet Number
A-602

P:\16HTWILMING\Construction Documents\MCD#1\Construction Documents\CD-16HTWILMING - A-602R - CD Reflected Ceiling Plan - Dining - Shelter - Storage Building.dwg
12/2/2020 2:49 AM

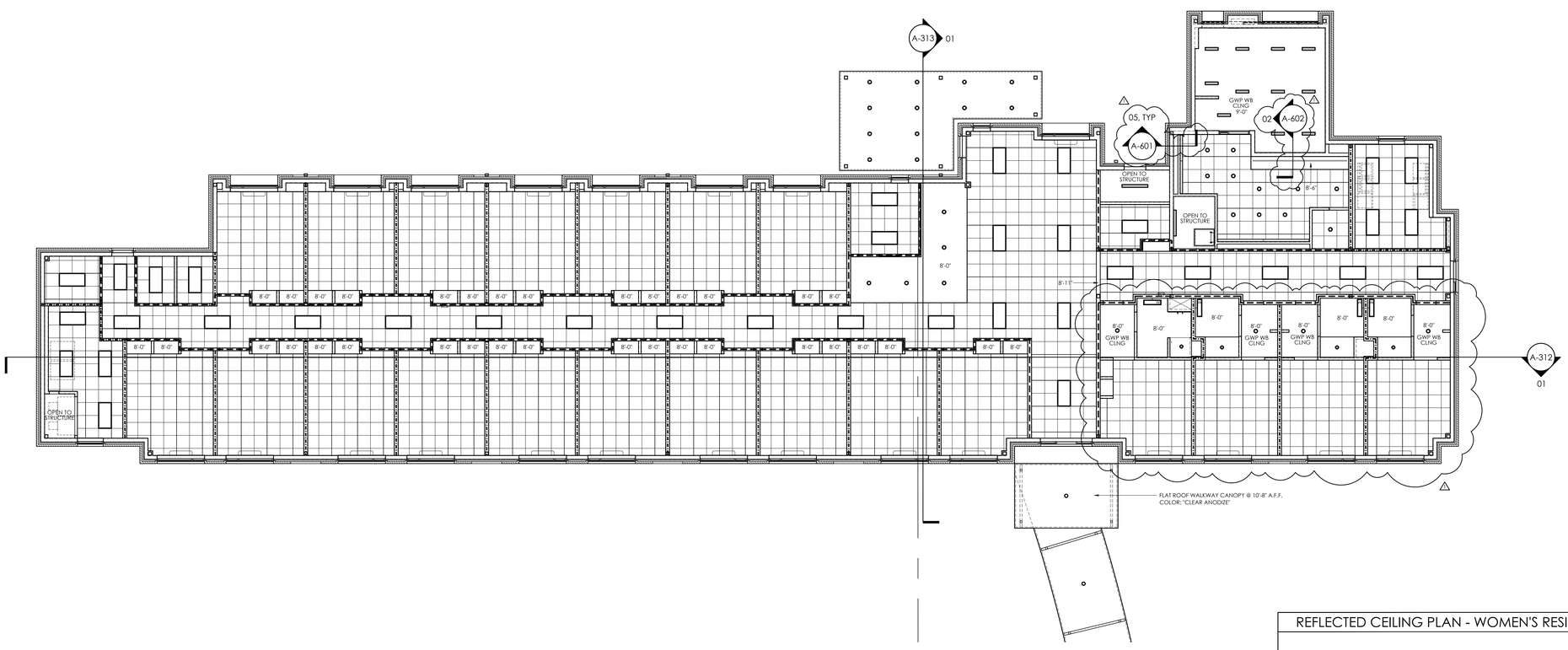

REFLECTED CEILING PLAN - WOMEN'S RESIDENTIAL BUILDING | 01

SCALE: 1/8" = 1'-0"

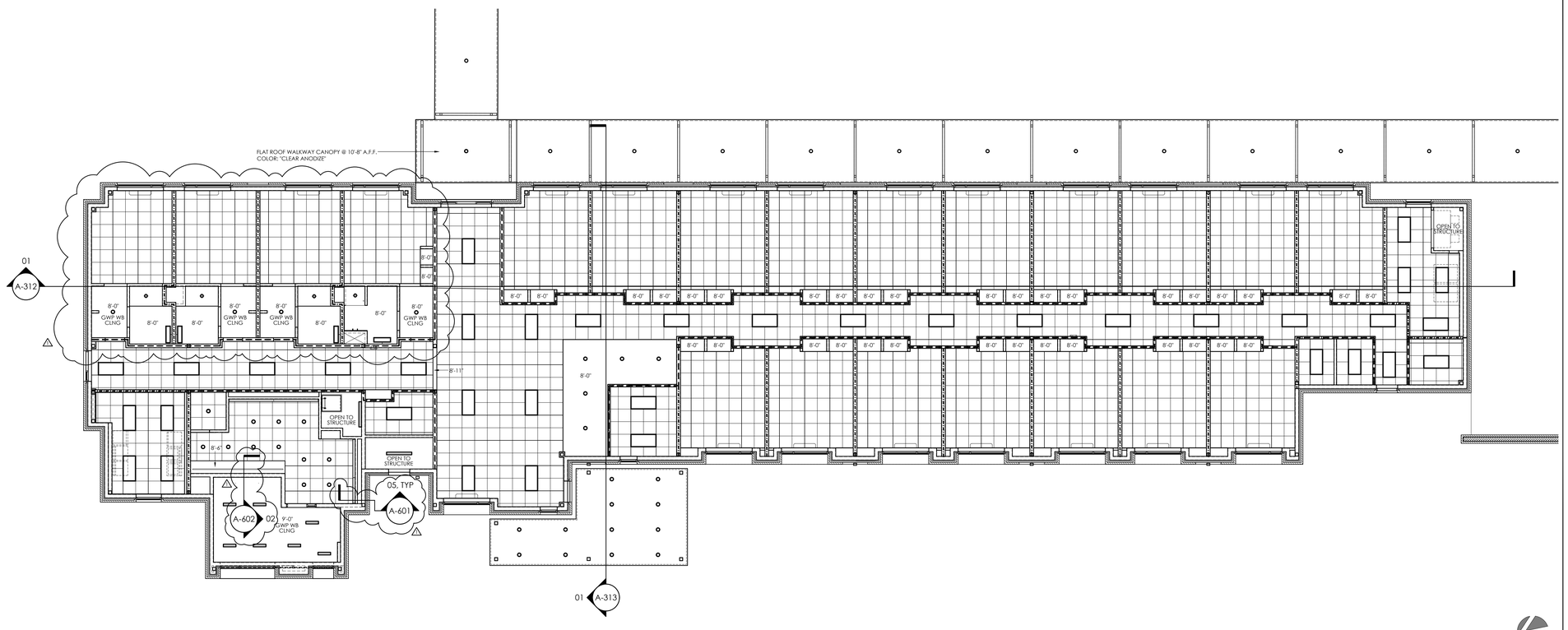

REFLECTED CEILING PLAN - MEN'S RESIDENTIAL BUILDING | 02

SCALE: 1/8" = 1'-0"

LIGHTING/CEILING LEGEND

- 2X4 LAY-IN LED INDIRECT FIXTURE
- 2X4 ACRYLIC LAY-IN LED FIXTURE
- 1X4 SURFACE LED FIXTURE
- RECESSED LED FIXTURE
- 12" PENDANT FIXTURE
- RECESSED SHOWER FIXTURE
- WALL SCONCE
- SUSPENDED UTILITY LED FIXTURE
- S SURFACE MOUNTED UTILITY LED FIXTURE
- WALL-MTD. BATHROOM LED FIXTURE
- 4" W. RECESSED LED FIXTURE
- LED LINEAR PERIMETER LIGHTING
- SUSPENDED INDIRECT LIGHT FIXTURE TO BE SELECTED
- HATCH INDICATES GYP. BD. CEILING
- ACOUSTICAL CEILING TILE - PROVIDE 24" X 24" ARMSTRONG CIRRUS LAY-IN TEGULAR TILE IN STANDARD SPECIFIED GIRD. TYPICAL (BASIS OF DESIGN - SEE SPECIFICATIONS)

NOTE:
1. THE CEILING HEIGHT FOR LAY-IN ACOUSTICAL CEILING TILE IS TO BE 9'-0" A.F.F. UNLESS NOTED OTHERWISE.

isdesign
ARCHITECTURE + INTERIORS
1111 Haynes Street, Suite 103
Raleigh, North Carolina 27604
t. 919.833.5400
www.isdesignpa.com

Project

THE HEALING PLACE OF NEW HANOVER COUNTY

1000 MEDICAL CENTER DRIVE
WILMINGTON, NORTH CAROLINA

Client

NEW HANOVER COUNTY, NORTH CAROLINA

All reproduction & intellectual property rights reserved © 2020

Key Plan

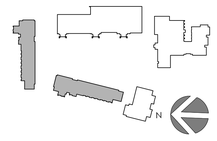

Professional Seals

MARK D. WHITE REGISTERED LANDSCAPE ARCHITECT N.C. 2497 12/02/20

PROFESSIONAL DESIGNATION 51286 REGISTERED LANDSCAPE ARCHITECT N.C. RALEIGH

No.	Description	Date
1	DESIGN DEVELOPMENT SET	04/09/20
2	CONSTRUCTION DOCUMENT SET	08/25/20
△	MCD #1	12/02/20

Project Code: 16HTWILMING

Sheet Title

REFLECTED CEILING PLANS

WOMEN'S & MEN'S RESIDENTIAL BUILDINGS

Original drawing is 42 x 30 Do not scale contents of this drawing

Sheet Number

A-603

12/2/2020 2:51 AM P:\16HTWILMING\Construction Documents\MCD#1\Construction Documents\CD-16HTWILMING - A-603R - CD Reflected Ceiling Plan - Women's & Men's Residential Buildings.dwg



REFLECTED CEILING PLAN - DETOX BUILDING

SCALE: 1/8" = 1'-0"

01

LIGHTING/CEILING LEGEND

- 2X4 LAY-IN LED INDIRECT FIXTURE
- 2X4 ACRYLIC LAY-IN LED FIXTURE
- 1X4 SURFACE LED FIXTURE
- RECESSED LED FIXTURE
- 12" PENDANT FIXTURE
- RECESSED SHOWER FIXTURE
- WALL SCONCE
- SUSPENDED UTILITY LED FIXTURE
- S — SURFACE MOUNTED UTILITY LED FIXTURE
- WALL-MTD. BATHROOM LED FIXTURE
- 4" W. RECESSED LED FIXTURE
- LED LINEAR PERIMETER LIGHTING
- SUSPENDED INDIRECT LIGHT FIXTURE TO BE SELECTED
- HATCH INDICATES GYP. BD. CEILING
- ACOUSTICAL CEILING TILE - PROVIDE 24" X 24" ARMSTRONG CIRRUS LAY-IN TEGULAR TILE IN STANDARD SPECIFIED GRID. TYPICAL (BASIS OF DESIGN - SEE SPECIFICATIONS)

NOTE:
1. THE CEILING HEIGHT FOR LAY-IN ACOUSTICAL CEILING TILE IS TO BE 9'-0" A.F.F. UNLESS NOTED OTHERWISE.

isdesign
ARCHITECTURE + INTERIORS
1111 Haynes Street, Suite 103
Raleigh, North Carolina 27604
t. 919.833.5400
www.isdesignpa.com

Project

THE HEALING PLACE OF NEW HANOVER COUNTY

1000 MEDICAL CENTER DRIVE
WILMINGTON, NORTH CAROLINA

Client

NEW HANOVER COUNTY, NORTH CAROLINA

All reproduction & intellectual property rights reserved © 2020

Key Plan

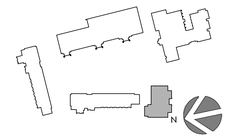

Professional Seals



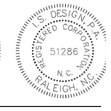

No.	Description	Date
1	DESIGN DEVELOPMENT SET	04/09/20
2	CONSTRUCTION DOCUMENT SET	08/25/20
1	MCD #1	12/02/20

Project Code: 16HTWILMING

Sheet Title

REFLECTED CEILING PLAN

DETOX BUILDING

Original drawing is 42 x 30 Do not scale contents of this drawing

Sheet Number

A-604

12/2/2020 2:53 AM P:\16HTWILMING\Construction Documents\MCD#1\Construction Documents\CD-16HTWILMING - A-604R- CD Reflected Ceiling Plan - Detox Building.dwg

X
SXXX | NOT USED | SCALE:

X
SXXX | NOT USED | SCALE:

X
SXXX | NOT USED | SCALE:

X
SXXX | NOT USED | SCALE:

X
SXXX | NOT USED | SCALE:

X
SXXX | NOT USED | SCALE:

X
SXXX | NOT USED | SCALE:

X
SXXX | NOT USED | SCALE:

5
S001 | SUBMITTALS

SUBMITTALS

1. SHOP DRAWINGS AND SUBMITTALS SHALL BE SUBMITTED TO RED ENGINEERING & DESIGN, INC. FOR REVIEW BEFORE ANY CONSTRUCTION BEGINS. THESE SUBMITTALS WILL BE REVIEWED FOR OVERALL COMPLIANCE AS IT RELATES TO THE STRUCTURAL DESIGN OF THIS PROJECT. VERIFICATION OF THE SHOP DRAWINGS FOR DIMENSIONS, OR FOR ACTUAL FIELD CONDITIONS IS NOT THE RESPONSIBILTY OF RED ENGINEERING & DESIGN, INC.

2. ALLOW ENOUGH TIME FOR SUBMITTAL REVIEW, INCLUDING TIME FOR RESUBMITTALS. TIME FOR REVIEW SHALL COMMENCE UPON RED ENGINEERING & DESIGN'S RECEIPT OF SUBMITTAL. ALLOW 15 DAYS FOR INITIAL REVIEW OF EACH SUBMITTAL AND 15 DAYS FOR REVIEW OF EACH RESUBMITTAL.

3. HIGHLIGHT, ENCIRCLE, OR OTHERWISE SPECIFICALLY IDENTIFY DEVIATIONS FROM THE CONTRACT DOCUMENTS ON SUBMITTALS.

4. REVIEW EACH SUBMITTAL AND CHECK FOR COORDINATION WITH OTHER TRADES AND FOR COMPLIANCE WITH THE CONTRACT DOCUMENTS. NOTE CORRECTIONS AND FIELD DIMENSIONS. MARK WITH APPROVAL STAMP BEFORE SUBMITTING TO RED ENGINEERING & DESIGN, INC. STAMP SHALL INCLUDE NAME OF REVIEWER, DATE OF CONTRACTOR'S APPROVAL, AND STATEMENT CERTIFYING THAT SUBMITTAL HAS BEEN REVIEWED, CHECKED, AND APPROVED FOR COMPLIANCE WITH THE CONTRACT DOCUMENTS.

5. WHERE PROFESSIONAL DESIGN SERVICE OR CERTIFICATIONS BY A DESIGN PROFESSIONAL ARE SPECIFICALLY REQUIRED OF THE CONTRACTOR BY THE CONTRACT DOCUMENTS, PROVIDE PRODUCTS AND SYSTEMS COMPLYING WITH SPECIFIC PERFORMANCE AND DESIGN CRITERIA INDICATED. IN ADDITION, SUBMIT COPIES OF A STATEMENT, SIGNED AND SEALED BY THE RESPONSIBLE DESIGN PROFESSIONAL, FOR EACH PRODUCT AND SYSTEM SPECIFICALLY ASSIGNED TO THE CONTRACTOR TO BE DESIGNED OR CERTIFIED BY A DESIGN PROFESSIONAL.

6. PROVIDE THE FOLLOWING SUBMITTALS FOR THIS PROJECT:

a. CAST-IN-PLACE CONCRETE
   i. DESIGN MIXTURES FOR EACH CONCRETE MIXTURE.
   ii. PRODUCT DATA FOR EACH TYPE OF PRODUCT INDICATED.
   iii. REBAR SHOP DRAWINGS.
   v. SHOP DRAWINGS FOR THE ERECTION, AND REMOVAL OF FORMWORK, SHORES AND RESHORES.
      a. PROVIDE STRUCTURAL ANALYSIS DATA, CERTIFIED BY A LICENSED PROFESSIONAL ENGINEER.

b. STRUCTURAL STEEL
   i. SHOP DRAWINGS: SHOW FABRICATION OF STRUCTURAL STEEL COMPONENTS.
   ii. WELDING PROCEDURES AND WELDING CERTIFICATES WITH CONTINUITY LOGS AS REQ'D.
   iii. ALL CONNECTIONS NOT FULLY DEVELOPED IN THESE DOCUMENTS SHALL BE DESIGNATED AS A DELEGATED DESIGN IN ACCORDANCE WITH AISC 303-10, SECT 3.1.2(3).
      a. NO RESTRICTIONS ON TYPE OF CONNECTION.
      b. LOADS ARE PROVIDED ON FRAMING PLANS. (USE 15k MINIMUM WHERE NO LOAD IS SHOWN.)
      c. ALL LOADS ARE DESIGN-LOAD LEVEL (FACTORED).
      d. LRFD OR ASD MAY BE USED IN THE SELECTION AND DESIGN OF CONNECTIONS.
      e. PROVIDE CALCULATIONS FOR ALL CONNECTIONS NOT FULLY DEVELOPED IN THESE DOCUMENTS, CERTIFIED BY A LICENSED PROFESSIONAL ENGINEER WORKING FOR THE FABRICATOR.

c. STEEL JOISTS, JOIST GIRDERS, AND STEEL DECK
   i. PLACEMENT PLANS: SHOW PLACEMENT OF ALL STEEL COMPONENTS.
   ii. WELDING PROCEDURES AND WELDING CERTIFICATES WITH CONTINUITY LOGS AS REQ'D.

d. COLD-FORMED STEEL EXTERIOR CURTAIN WALLS
   i. SHOP DRAWINGS: SHOW INSTALLATION OF ALL COLD FORMED STEEL MEMBERS, CONNECTIONS, AND COMPONENTS.
   ii. WELDING PROCEDURES AND WELDING CERTIFICATES WITH CONTINUITY LOGS AS REQ'D.
   iii. PROVIDE CALCULATIONS FOR ALL MEMBERS, COMPONENTS, AND CONNECTIONS, CERTIFIED BY A LICENSED PROFESSIONAL ENGINEER.
      a. INCORPORATE COMPONENTS & CLADDING NET DESIGN WIND PRESSURES IN ACCORDANCE WITH ASCE 7-10.

6
S001 | SCHEDULE

ISOLATED SPREAD FOOTING SCHEDULE

MARK	PLAN SIZE L	PLAN SIZE W	THICKNESS	REINFORCEMENT BOTTOM	REINFORCEMENT TOP	NOTES
F3	3'-0"	3'-0"	12"	3 ~ #5 EA.WAY	3 ~ #5 EA.WAY	1, 2, 3, 4
F4	4'-0"	4'-0"	12"	4 ~ #5 EA.WAY	4 ~ #5 EA.WAY	1, 2, 3, 4
F5	5'-0"	5'-0"	12"	5 ~ #5 EA.WAY	5 ~ #5 EA.WAY	1, 2, 3, 4
F6	6'-0"	6'-0"	16"	7 ~ #5 EA.WAY	7 ~ #5 EA.WAY	1, 2, 3, 4
F7	7'-0"	7'-0"	16"	8 ~ #5 EA.WAY	8 ~ #5 EA.WAY	1, 2, 3, 4
F8	8'-0"	8'-0"	18"	11 ~ #5 EA.WAY	11 ~ #5 EA.WAY	1, 2, 3, 4
F10	10'-0"	10'-0"	24"	17 ~ #5 EA.WAY	17 ~ #5 EA.WAY	1, 2, 3, 4
F12	12'-0"	12'-0"	36"	31 ~ #5 EA.WAY	31 ~ #5 EA.WAY	1, 2, 3, 4
F12.5	12'-0"	12'-0"	24"	21 ~ #5 EA.WAY	21 ~ #5 EA.WAY	1, 2, 3, 4
F12-8	12'-0"	8'-0"	12"	16 ~ #5 SHORT WAY 10 ~ #5 LONG WAY	16 ~ #5 SHORT WAY 10 ~ #5 LONG WAY	1, 2, 3, 4
F15-8	15'-0"	8'-0"	18"	12 ~ #5 LONG WAY 21 ~ #5 SHORT WAY	12 ~ #5 LONG WAY 21 ~ #5 SHORT WAY	1, 2, 3, 4
F16	16'-0"	16'-0"	24"	28 ~ #5 EA.WAY	28 ~ #5 EA.WAY	1, 2, 3, 4
F24-8	24'-0"	8'-0"	24"	41 ~ #5 SHORT WAY 14 ~ #5 LONG WAY	41 ~ #5 SHORT WAY 14 ~ #5 LONG WAY	1, 2, 3, 4
F28-8	28'-0"	8'-0"	16"	34 ~ #5 SHORT WAY 10 ~ #5 LONG WAY	34 ~ #5 SHORT WAY 10 ~ #5 LONG WAY	1, 2, 3, 4
F30/10	30'-0"	10'-0"	16"	36 ~ #5 SHORT WAY 12 ~ #5 LONG WAY	36 ~ #5 SHORT WAY 12 ~ #5 LONG WAY	1, 2, 3, 4
F44-8	44'-0"	8'-0"	16"	53 ~ #5 SHORT WAY 10 ~ #5 LONG WAY	53 ~ #5 SHORT WAY 10 ~ #5 LONG WAY	1, 2, 3, 4

NOTES:
1.) SEE FOUNDATION PLAN FOR TOP OF FOOTING ELEVATIONS.
2.)SPACE REINFORCING BARS EQUALLY THROUGHOUT FOOTING.
3.)BOTTOM STEEL SHALL BE PLACED 3" CLEAR FROM THE BOTTOM OF THE FOOTING.
4.)TOP STEEL (IF APPLICABLE) SHALL BE PLACED 2" CLEAR FROM THE TOP OF THE FOOTING.

3
S001 | MATERIAL SPECIFICATIONS

MATERIAL SPECIFICATION

1. ALL STRUCTURAL STEEL TO BE PREFERRED MATERIAL SPECIFICATION IN ACCORDANCE WITH:
   a. AISC 360-10, SPECIFICATION FOR STRUCTURAL STEEL BUILDINGS
   b. AISC 348-09, RCSC SPECIFICATION FOR STRUCTURAL JOINTS USING HIGH-STRENGTH BOLTS
   c. AISC 303-10, CODE OF STANDARD PRACTICE FOR STEEL BUILDINGS AND BRIDGES.

2. ALL OPEN WEB STEEL JOISTS AND JOIST GIRDERS SHALL BE IN ACCORDANCE WITH:
   a. SJI-COSP-2010, "CODE OF STANDARD PRACTICE FOR STEEL JOISTS AND JOIST GIRDERS."
   b. SJI-K-2010, "STANDARD SPECIFICATION FOR OPEN WEB STEEL JOISTS, K-SERIES."
   c. ALL JOISTS SHALL BE DESIGNED FOR AN ADDITIONAL 400 POUND TRAVELING PROVISIONAL LOAD, OF WHICH ONE SINGLE CONCENTRATED LOAD OF UP TO 300 LBS MAY BE PLACED BETWEEN ANY TWO TOP CHORD PANEL POINTS AND A SINGLE CONCENTRATED LOAD OF UP TO 100 LBS MAY BE PLACED BETWEEN ANY TWO BOTTOM CHORD PANEL POINTS.
   d. FOR THE POSSIBILITY OF SHEAR REVERSAL DUE TO UNBALANCED LOADING, THE JOIST DIAGONAL WEB MEMBERS LOCATED IN THE MIDDLE 1/4 OF THE SPAN SHALL BE DESIGNED FOR A MIN SHEAR, IN COMPRESSION, OF 15% OF THE END REACTION.
   e. ALL JOIST SEATS AT THE POTENTIAL DIAPHRAGM BOUNDARIES SHALL HAVE THE CAPACITY TO RESIST A LATERAL LOAD APPLIED AT THE TOP OF THE TOP CHORD, PERPENDICULAR TO THE SPAN, (ROLLOVER) AS FOLLOWS:
      i. FOR JOIST SEATS UP TO AND INCLUDING 32" DEEP, THE SEAT SHALL BE CAPABLE OF RESISTING A 8,200 LB FACTORED FORCE. NOTE THAT FOR K-SERIES JOISTS, A MINIMUM ANCHORAGE WELD LENGTH OF 1½" SHALL BE USED.
      ii. FOR JOIST SEATS GREATER THAN 32" DEEP, THE SEAT SHALL BE CAPABLE OF RESISTING A 1,200 LB UNFACTORED FORCE.

3. ALL METAL DECK SHALL BE IN ACCORDANCE WITH:
   a. SDI RD-2010, "STANDARD FOR STEEL ROOF DECK."

4. ALL WELDING TO BE PERFORMED BY CERTIFIED WELDERS AND IN ACCORDANCE WITH:
   a. AWS D1.1: 2015, STRUCTURAL WELDING CODE – STEEL
   b. AWS D1.3:2008, STRUCTURAL WELDING CODE – SHEET STEEL
   c. SJI TECHNICAL DIGEST No.8, "WELDING OF OPEN-WEB STEEL JOISTS AND JOIST GIRDERS."

5. ALL GALVANIZED STEEL SHALL BE IN ACCORDANCE WITH:
   a. ASTM A123/A123M-15, "STANDARD SPECIFICATION FOR ZINC (HOT-DIP GALVANIZED) COATINGS ON IRON AND STEEL PRODUCTS."
   b. ASTM A153/A153M-16a, "STANDARD SPECIFICATION FOR ZINC COATING (HOT-DIP) ON IRON AND STEEL HARDWARE."
   c. ASTM A780-09 (2015), "STANDARD PRACTICE FOR REPAIR OF DAMAGED AND UNCOATED AREAS OF HOT-DIP GALVANIZED COATINGS."
   d. ASTM D6386-16a, "STANDARD PRACTICE FOR PREPARATION OF ZINC (HOT-DIPPED GALVANIZED) COATED IRON AND STEEL PRODUCTS AND HARDWARE SURFACES FOR PAINTING."

6. ALL CONCRETE CONSTRUCTION SHALL CONFORM TO THE REQUIREMENTS OF:
   a. ACI 318-14 "BUILDING CODE REQUIREMENTS FOR STRUCTURAL CONCRETE"
   b. ACI 301-16 "SPECIFICATIONS FOR STRUCTURAL CONCRETE"
   c. ACI 117-10 "SPECIFICATIONS FOR TOLERANCES FOR CONCRETE CONSTRUCTION AND MATERIALS."
   d. ACI 211.1-09 "STANDARD PRACTICE FOR SELECTING PROPORTIONS FOR NORMAL, HEAVYWEIGHT, AND MASS CONCRETE – PROCEDURE FOR MIX DESIGN"
   e. CRSI 2009 "MANUAL OF STANDARD PRACTICE, 28TH ED."
   f. NON-AIR-ENTRAINED NORMAL-WEIGHT CONCRETE MIXTURES SHALL HAVE THE FOLLOWING PROPERTIES:
      i. MINIMUM 28-DAY COMPRESSIVE STRENGTH = 3000psi
         a. CLASSIFIED AS MILD EXPOSURE
         b. RECOMMENDED MAXIMUM AGGREGATE SIZE = 3"
         c. RECOMMENDED WATER/CEMENT RATIO = 0.68
         d. RECOMMENDED SLUMP (ASTM C143) = 3"
         e. AIR CONTENT = 2.0% (-1%,+2%)
   g. STEEL REINFORCEMENT SHALL COMPLY WITH THE FOLLOWING SPECIFICATIONS:
      i. REINFORCING BARS (ASTM A615), GRADE 60, DEFORMED
      ii. PLAIN-STEEL WELDED WIRE REINFORCEMENT (ASTM A185), FLAT SHEETS ONLY

7. ALL UNIT MASONRY CONSTRUCTION SHALL CONFORM TO THE REQUIREMENTS OF:
   a. ACI 530/530.1-13 "BUILDING CODE REQUIREMENTS AND SPECIFICATIONS FOR MASONRY STRUCTURES"
   b. MORTAR SHALL BE TYPE S (ASTM C270)
   c. GROUT (ASTM C476) SHALL HAVE THE FOLLOWING PROPERTIES:
      i. MINIMUM 28-DAY COMPRESSIVE STRENGTH = 2000 psi
      ii. MAXIMUM SLUMP (ASTM C143) = 11"
   d. STEEL REINFORCEMENT SHALL COMPLY WITH THE FOLLOWING SPECIFICATIONS:
      i. REINFORCING BARS (ASTM A615), GRADE 60, DEFORMED
      ii. JOINT REINFORCEMENT (ASTM A951)

8. ALL CLAY BRICK MASONRY CONSTRUCTION SHALL CONFORM TO THE REQUIREMENTS OF:
   a. ASTM C62-13a – BUILDING BRICK, 4500psi MINIMUM
   b. ASTM C216-17 – FACING BRICK, 4500psi MINIMUM
   c. MORTAR SHALL BE TYPE S (ASTM 270)
   d. JOINT REINFORCEMENT FOR MULTI-WYTHE WALLS SHALL BE LADDER TYPE CORROSION RESISTANT (HOT DIP GALVANIZED AFTER FABRICATION) AT 16" O.C. VERTICALLY.

9. ALL NON-SHRINK CEMENTITIOUS GROUT SHALL CONFORM TO THE REQUIREMENTS OF:
   a. ASTM C1107-14a "STANDARD SPECIFICATION FOR PACKAGED DRY, HYDRAULIC-CEMENT GROUT (NONSHRINK.)

10. ALL POST-INSTALLED ADHESIVE ANCHORAGE INTO HOLLOW BRICK MASONRY SHALL BE IN ACCORDANCE WITH:
    a. TMS 402/ACI 350 & ICC-ES AC58, ACCEPTANCE CRITERIA FOR ADHESIVE ANCHORS IN MASONRY ELEMENTS.

11. ALL POST-INSTALLED MECHANICAL ANCHORAGE INTO CRACKED OR UNCRACKED CONCRETE SHALL BE IN ACCORDANCE WITH:
    a. ACI 355.2 & ICC-ES AC193, ACCEPTANCE CRITERIA FOR MECHANICAL ANCHORS IN CONCRETE ELEMENTS

12. ALL POST-INSTALLED ADHESIVE ANCHORAGE INTO CRACKED OR UNCRACKED CONCRETE SHALL BE IN ACCORDANCE WITH:
    a. ACI 355.4 & ICC-ES AC308, ACCEPTANCE CRITERIA FOR POST-INSTALLED ADHESIVE ANCHORS IN CONCRETE ELEMENTS.
    b. ALL ADHESIVE ANCHORS SHALL BE INSTALLED BY A CERTIFIED ADHESIVE ANCHOR INSTALLER.

13. ALL LOW VELOCITY POWDER-ACTUATED AND LOW-VELOCITY GAS-ACTUATED FASTENERS INTO CONCRETE MASONRY AND STEEL SHALL BE IN ACCORDANCE WITH:
    a. ICC-ES AC70, ACCEPTANCE CRITERIA FOR FASTENERS POWER DRIVEN INTO CONCRETE, STEEL, AND MASONRY ELEMENTS.

14. ALL COLD-FORMED STEEL FRAMING SHALL BE IN ACCORDANCE WITH:
    a. AISI S100-07, "NORTH AMERICAN STANDARD FOR THE DESIGN OF COLD-FORMED STEEL STRUCTURAL MEMBERS."
    b. AISI D100-13, "COLD-FORMED STEEL DESIGN MANUAL."
    c. AISI D112-13, "BRICK VENEER COLD-FORMED STEEL FRAMING DESIGN GUIDE."

4
S001 | SCHEDULE

LINTEL SCHEDULE

MARK	LINTEL SIZE	MAX MO	BEARING
L1	L 3½ x 3½ x ¼	4'-0	4" EA. END
L2	L 6 x 3½ x ⅜ (LLV)	8'-0	8" EA. END
L3	L 6 x 3½ x ½ (LLV)	13'-6	12" EA. END

NOTES:
1.) SEE ARCH. DWGS FOR LINTEL ELEV ABOVE FIN. FLR
2.) ALL ANGLES TO BE HOT DIPPED GALVANIZED.
ANGLES WILL BE FIELD PAINTED (DO NOT QUENCH)

1
S001 | GENERAL SPECIFICATIONS

GENERAL CONSTRUCTION SPECIFICATION

1. THE FOLLOWING DOCUMENTS ARE THE PROPERTY OF RED ENGINEERING & DESIGN, INC. FOR USE SOLELY FOR THIS PROJECT AND SHALL NOT BE REPRODUCED, COPIED, OR USED FOR OTHER PURPOSES WITHOUT WRITTEN PERMISSION FROM RED ENGINEERING & DESIGN, INC.

2. NO OTHER PARTY MAY REVISE, ALTER, OR DELETE THESE CONSTRUCTION DOCUMENTS WITHOUT WRITTEN PERMISSION FROM RED ENGINEERING & DESIGN, INC.

3. THIS STRUCTURE IS ONLY STABLE IN ITS COMPLETED FORM. THE CONTRACTOR SHALL PROVIDE ALL REQUIRED TEMPORARY BRACING DURING CONSTRUCTION TO STABILIZE THE STRUCTURE. TEMPORARY SHORING AND BRACING METHODS ARE NOT THE RESPONSIBILITY OF RED ENGINEERING & DESIGN, INC. AND ARE BEYOND THE SCOPE OF THESE DRAWINGS.

4. THE SER IS NOT RESPONSIBLE FOR CONSTRUCTION SEQUENCES, METHODS, OR TECHNIQUES IN CONNECTION WITH THE CONSTRUCTION OF THIS STRUCTURE. THE SER WILL NOT BE HELD RESPONSIBLE FOR THE CONTRACTOR'S FAILURE TO CONFORM TO THE CONSTRUCTION DOCUMENTS, SHOULD ANY NON-CONFORMITIES OCCUR.

5. ANY STRUCTURAL ELEMENTS OR DETAILS NOT FULLY DEVELOPED ON THE CONSTRUCTION DRAWINGS SHALL BE COMPLETED UNDER THE DIRECTION OF A LICENSED PROFESSIONAL ENGINEER. THESE SHOP DRAWINGS SHALL BE SUBMITTED TO RED ENGINEERING & DESIGN, INC. FOR REVIEW BEFORE ANY CONSTRUCTION BEGINS.

6. STRUCTURAL DRAWINGS SHALL BE USED IN CONJUNCTION WITH AND COORDINATED WITH THE ARCHITECTURAL, MECHANICAL, PLUMBING, ELECTRICAL, AND CIVIL DRAWINGS. THIS COORDINATION IS NOT THE RESPONSIBILITY OF THE SER. SHOULD ANY DESCREPANCIES BECOME APPARENT THE CONTRACTOR SHALL NOTIFY RED ENGINEERING & DESIGN, INC. BEFORE ANY CONSTRUCTION BEGINS.

7. VERIFICATION OF ASSUMED FIELD CONDITIONS IS NOT THE RESPONSIBILITY OF THE STRUCTURAL ENGINEER OF RECORD. THE CONTRACTOR SHALL VERIFY THE FIELD CONDITIONS FOR ACCURACY AND REPORT ANY DESCREPANCIES TO RED ENGINEERING & DESIGN, INC. BEFORE CONSTRUCTION BEGINS.

8. THE STRUCTURAL ENGINEER OF RECORD IS NOT RESPONSIBLE FOR ANY SECONDARY STRUCTURAL ELEMENTS OR NON-STRUCTURAL ELEMENTS, EXCEPT FOR THE ELEMENTS SPECIFICALLY NOTED ON THE STRUCTURAL DRAWINGS.

2
S001 | DESIGN CRITERIA

DESIGN CRITERIA

1. BUILDING CODES
   a. NORTH CAROLINA BUILDING CODE 2018 EDITION
   b. MINIMUM DESIGN LOADS FOR BUILDING AND OTHER STRUCTURES, ASCE 7-10

2. DEAD LOAD
   ROOF
   ROOFING & INSULATION 3 PSF
   METAL DECK 2 PSF
   STRUCTURAL STEEL FRAMING 5 PSF
   SPRINKLERS 3 PSF
   ACOUSTICAL CEILING SYSTEM 2 PSF
   COLLATERAL (PM&E) 5 PSF

3. LIVE LOAD (NCBC 2018, TABLE 4-1)
   ROOF 20 PSF
   FLOOR 100 PSF

4. SOIL LOADS
   ALLOWABLE SOIL BEARING PRESSURE 2000 PSF (ASSUMED)
   SUB GRADE MODULUS (k) 100 PCI
   ULTIMATE FRICTION COEFFICIENT 0.25 (TABLE 1806.2)
   UNIT WEIGHT OF SOIL, 110 PCF

5. SNOW LOAD (ASCE 7-10)
   SNOW IMPORTANCE FACTOR, Is 1.0 (TABLE 7-4)
   GROUND SNOW LOAD, Pg 10 PSF (FIG. 7-1)
   SNOW EXPOSURE FACTOR, Ce 1.0 (TABLE 7-2)
   THERMAL FACTOR, Ct 1.0 (TABLE 7-3)
   ROOF SLOPE FACTOR, Cs 1.0 (FIG. 7-2)
   BALANCED SNOW LOAD, Pf(bal) 12 PSF (EQ. 7-1, SECT. 7.10)
   SLOPED ROOF SNOW LOAD, Ps 12 (EQ. 7-2)

6. WIND LOADS – MAIN WIND FORCE RESISTING SYSTEM (ASCE 7-10)
   ANALYSIS PROCEDURE METHOD II, ANALYTICAL
   WIND SPEED, V (3 SECOND GUST) 146 MPH (FIG. 6-1)
   RISK CATEGORY II (TABLE 6-1)
   EXPOSURE B (SECT. 6.5.6.3)
   TOPOGRAPHY FACTOR, Kzt 1.00 (FIG. 6-4)
   INTERNAL PRESSURE COEFFICIENT, GCpi +-0.18 (FIG. 6-5)
   APPLIED DIRECTIONALITY FACTOR, Kd 0.85 (TABLE 6-4)
   WIND BASE SHEAR
   DETOX:
   Wx 27 KIPS
   Wy 23 KIPS
   WOMEN'S RESIDENCE:
   Wx 15.8 KIPS
   Wy 59.6 KIPS
   MEN'S RESIDENCE:
   Wx 15.8 KIPS
   Wy 59.6 KIPS
   DINING:
   Wx 21.3 KIPS
   Wy 74 KIPS
   ADMIN:
   Wx 70 KIPS
   Wy 78.3 KIPS

7. SEISMIC LOADS (ASCE 7-10)
   ANALYSIS PROCEDURE EQUIVALENT LATERAL FORCE
   RISK CATEGORY II (IBC, TABLE 1604.5)
   SEISMIC IMPORTANCE FACTOR Is 1.0 (TABLE 1.5-2)
   SOIL SITE CLASS D, ASSUMED (TABLE 20.3-1)
   MAPPED SPECTRAL RESPONSE ACCELERATION, Ss 0.221 (FIG. 22-1)
   MAPPED SPECTRAL RESPONSE ACCELERATION, S1 0.092 (FIG. 22-2)
   LONG-PERIOD TRANSITION PERIOD, Tl 8 SEC. (FIG. 22-15)
   SEISMIC FORCE RESISTING SYSTEM STEEL SYSTEMS NOT SPECIFICALLY DETAILED FOR SEISMIC RESISTANCE (H1, TABLE 12.2-1)
   SEISMIC DESIGN CATEGORY C (TABLE 11.6-2)
   SEISMIC BASE SHEAR
   DETOX:
   Sx 12.5 KIPS
   Sy 12.5 KIPS
   WOMEN'S RESIDENCE:
   Sx 18.8 KIPS
   Sy 18.8 KIPS
   MEN'S RESIDENCE:
   Sx 18.8 KIPS
   Sy 18.8 KIPS
   DINING:
   Sx 27.1 KIPS
   Sy 27.1 KIPS
   ADMIN:
   Sx 31.5 KIPS
   Sy 31.5 KIPS

8. A PROGRAM OF SPECIAL INSPECTIONS IS NOT REQUIRED FOR THIS PROJECT. PER NORTH CAROLINA STATE BUILDING CODE, 2018 EDITION SECTION 1704.1.2.

isdesign
ARCHITECTURE + INTERIORS
1111 Haynes Street, Suite 103
Raleigh, North Carolina 27604
t. 919.833.5400
www.isdesignpa.com

RED JOB No.18-E091

RED ENGINEERING & DESIGN
STRUCTURAL ENGINEERS
126 SALEM TOWNE CT
APEX, NORTH CAROLINA 27502
TEL. (919) 833-3486
REDENGINEERINGDESIGN.COM
C-3479

Project

THE HEALING PLACE OF NEW HANOVER COUNTY

1000 MEDICAL CENTER DRIVE
WILMINGTON, NORTH CAROLINA

Client

NEW HANOVER COUNTY, NORTH CAROLINA

All reproduction & intellectual property rights reserved © 2020

Key Plan

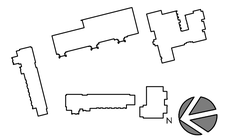

Professional Seals

NORTH CAROLINA PROFESSIONAL SEAL 21434 ENGINEER BRIAN M MOSKOW

08.25.20

No.	Description	Date
A	SCHEMATIC DESIGN	11/26/19
B	DESIGN DEVELOPMENT PACKAGE	
0	FOR CONSTRUCTION	08/25/20

Project Code: 16HTWILMING

Sheet Title

GENERAL NOTES & SCHEDULES

Original drawing is 42 x 30 Do not scale contents of this drawing

Sheet Number

S-001

Z:\Red Engineering\2018\18-E091 Healing Place - Wilmington, Is design\2-Design Development\CAD\Structural\18-E091 Healing Transitions.dwg
12/2/2020 8:48 AM

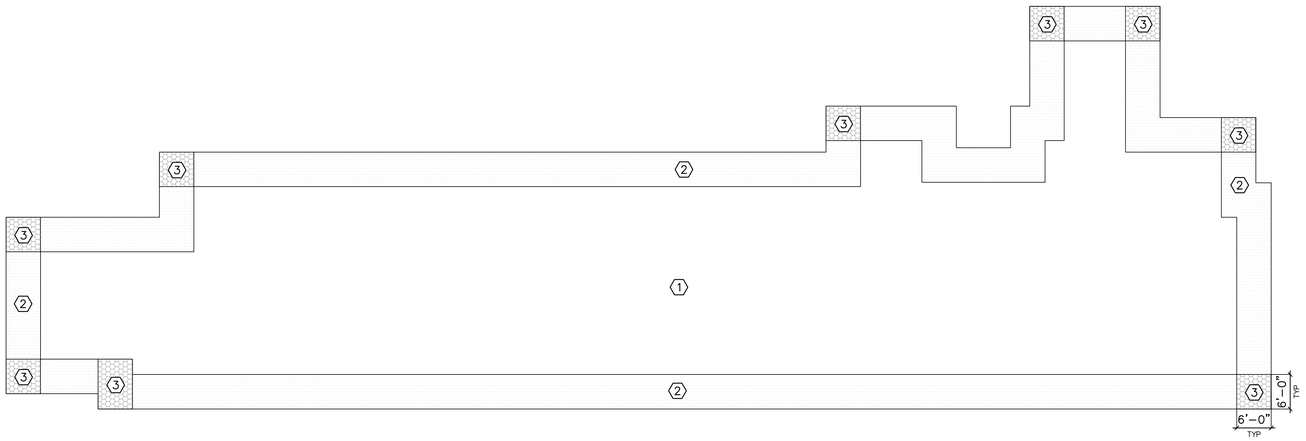

2

S002 WOMEN'S/MEN'S RESIDENCE COMPONENTS & CLADDING WIND ZONES SCALE: 3/32" = 1'-0

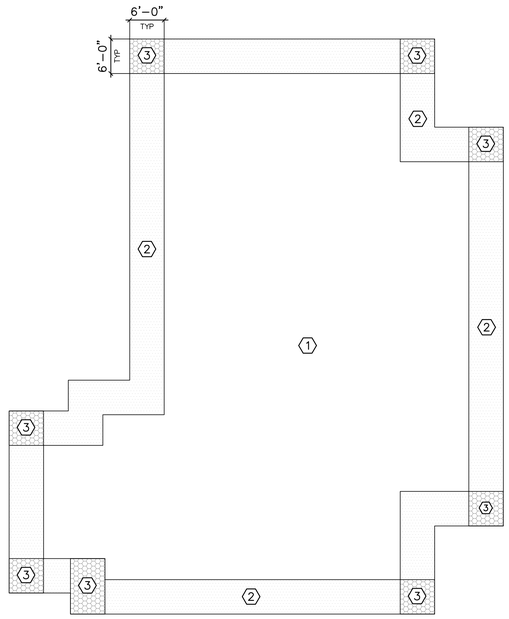

1

S002 DETOX COMPONENTS & CLADDING WIND ZONES SCALE: 3/32" = 1'-0

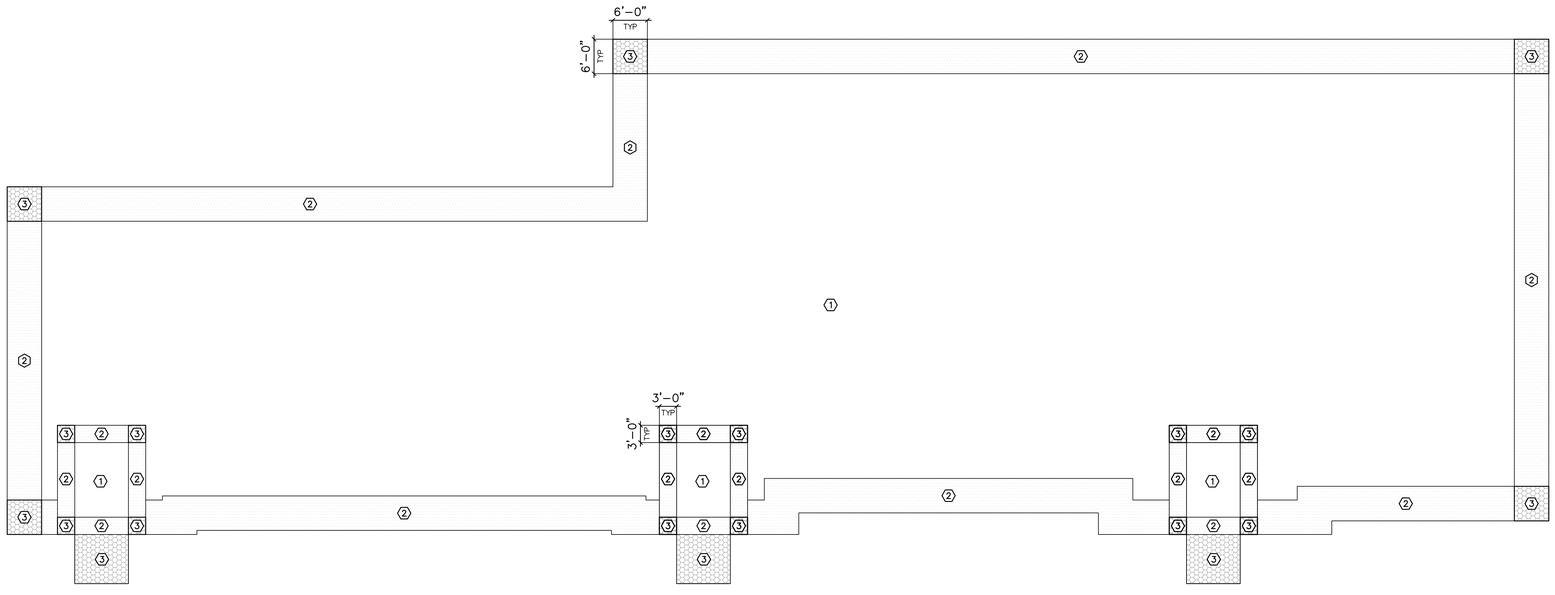

3

S002 DINING HALL COMPONENTS & CLADDING WIND ZONES SCALE: 3/32" = 1'-0

C&C DESIGN WIND PRESSURES (PSF)									
ROOF				WALLS				OVERHANG	
ZONE 1	ZONE 2	ZONE 3		ZONE 4	ZONE 5			ZONE 2	ZONE 3
+15.4	-39.4	+15.4	-60.7	+15.4	-84.7	+40.5	-43.9	+40.5	-54.2	-57.3	-75.4

NOTES:
1.) 3-SECOND GUST WIND SPEED = 146mph (ASCE 7-10)
2.)MEAN ROOF HEIGHT = 14'-8
3.)EXPOSURE B, LAMBDA = 1.0
4.)TOPOGRAPHICAL FACTOR, Kzt = 1.0
5.)BLDG CLASSIFICATION = II
6.)ROOF PITCH = 1:12 (1.19°)
7.)POSITIVE AND NEGATIVE VALUES SIGNIFY PRESSURES ACTING TOWARD AND AWAY FROM THE PROJECTED SURFACES, RESPECTIVELY.
8.)REFER TO ASCE 7-10 CHAPTER 30.

4

S002 WIND PRESSURE SCHEDULE

X

SXXX NOT USED SCALE:

is design
ARCHITECTURE + INTERIORS
1111 Haynes Street, Suite 103
Raleigh, North Carolina 27604
t. 919.833.5400
www.isdesignpa.com

RED JOB No.18-E091
RED ENGINEERING & DESIGN
STRUCTURAL ENGINEERS
C-3479
126 SALEM TOWNE CT
APEX, NORTH CAROLINA 27502
TEL. (919) 833-3406
REDENGINEERINGDESIGN.COM

Project

THE HEALING PLACE OF NEW HANOVER COUNTY

1000 MEDICAL CENTER DRIVE
WILMINGTON, NORTH CAROLINA

Client

NEW HANOVER COUNTY, NORTH CAROLINA

All reproduction & intellectual property rights reserved © 2020

Key Plan

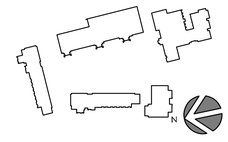

Professional Seals



08.25.20

No.	Description	Date
A	SCHEMATIC DESIGN	11/26/19
B	DESIGN DEVELOPMENT PACKAGE	
0	FOR CONSTRUCTION	08/25/20

Project Code: 16HTWILMING

Sheet Title

C&C DESIGN WIND PRESSURES

Original drawing is 42 x 30 Do not scale contents of this drawing

Sheet Number

S-002

12/2/2020 8:48 AM Z:\Red Engineering\2016\16-E091 Healing Place - Wilmington, Is design\2-Design Development\CAD\Structural\16-E091 Healing Transitions.dwg

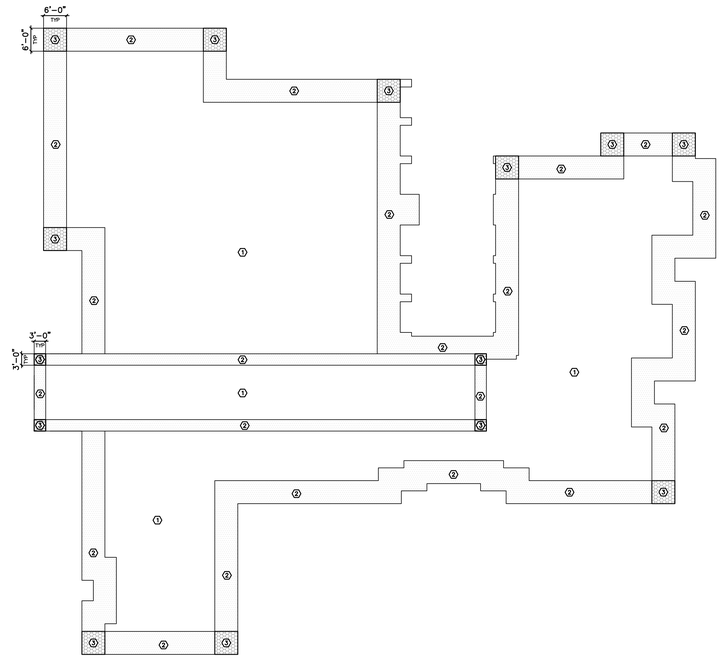

X	SXXX	NOT USED	
X	SXXX	NOT USED	
X	SXXX	NOT USED	SCALE:
1	S003	ADMIN BUILDING COMPONENTS & CLADDING WIND ZONES	SCALE: 1/16" = 1'-0
X	SXXX	NOT USED	SCALE:
X	SXXX	NOT USED	SCALE:
X	SXXX	NOT USED	SCALE:
X	SXXX	NOT USED	SCALE:
2	S003	WIND PRESSURE SCHEDULE	
X	SXXX	NOT USED	SCALE:
X	SXXX	NOT USED	SCALE:
X	SXXX	NOT USED	SCALE:
X	SXXX	NOT USED	SCALE:
X	SXXX	NOT USED	SCALE:

C&C DESIGN WIND PRESSURES (PSF)

ROOF						WALLS				OVERHANG	
ZONE 1		ZONE 2		ZONE 3		ZONE 4		ZONE 5		ZONE 2	ZONE 3
+15.4	-39.4	+15.4	-60.7	+15.4	-84.7	+40.5	-43.9	+40.5	-54.2	-57.3	-75.4

NOTES:
1.) 3-SECOND GUST WIND SPEED = 146mph (ASCE 7-10)
2.) MEAN ROOF HEIGHT = 14'-8
3.) EXPOSURE B, LAMBDA = 1.0
4.) TOPOGRAPHICAL FACTOR, Kzt = 1.0
5.) BLDG CLASSIFICATION = II
6.) ROOF PITCH = 1/4:12 (1.19°)
7.) POSITIVE AND NEGATIVE VALUES SIGNIFY PRESSURES ACTING TOWARD AND AWAY FROM THE PROJECTED SURFACES, RESPECTIVELY.
8.) REFER TO ASCE 7-10 CHAPTER 30.

12/2/2020 8:48 AM Z:\Red Engineering\2018\18-E091 Healing Place - Wilmington, is design\2-Design Development\CAD\Structural\18-E091 Healing Transitions.dwg

isdesign
ARCHITECTURE + INTERIORS
1111 Haynes Street, Suite 103
Raleigh, North Carolina 27604
t. 919.833.5400
www.isdesignpa.com

RED JOB No.18-E091

RED ENGINEERING & DESIGN
STRUCTURAL ENGINEERS
126 SALEM TOWNE CT
APEX, NORTH CAROLINA 27502
TEL: (919) 833-3486
REDENGINEERINGDESIGN.COM
C-3479

Project

THE HEALING PLACE OF NEW HANOVER COUNTY

1000 MEDICAL CENTER DRIVE
WILMINGTON, NORTH CAROLINA

Client

NEW HANOVER COUNTY, NORTH CAROLINA

All reproduction & intellectual property rights reserved © 2020

Key Plan

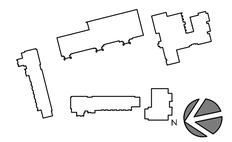

Professional Seals



08.25.20

No.	Description	Date
A	SCHEMATIC DESIGN	11/26/19
B	DESIGN DEVELOPMENT PACKAGE	
0	FOR CONSTRUCTION	08/25/20

Project Code: 16HTWILMING

Sheet Title

C&C DESIGN WIND PRESSURES CONT.

Original drawing is 42 x 30 Do not scale contents of this drawing

Sheet Number

S-003

SCHEDULE OF SPECIAL INSPECTIONS

INSPECTION DEFINITIONS:

PERFORM: Perform these tasks for each weld, fastener or bolted connection, and noted verification.

OBSERVE: Observe these items randomly during the course of each work day to insure that applicable requirements are being met. Operations need not be delayed pending these inspections at contractor's risk.

DOCUMENT: Document, with a report, that the work has been performed in accordance with the contract documents. This is in addition to any other reports required in the Special Inspections guide specification.

CONTINUOUS: Constant monitoring of identified tasks by a special inspector over the duration of performance of said tasks.

The Seismic Design Category for this project is: ☐ A, ☐ B, ☒ C, ☐ D, ☐ E, ☐ F (check appropriate box)

STRUCTURAL - STEEL – WELDING SECTION

STEEL INSPECTION PRIOR TO WELDING – VERIFY THE FOLLOWING ARE IN COMPLIANCE 2018 IBC 1705.2.1, AISC 360-16: Table C-N5.4-1		
TASK	INSPECTION TYPE[1]	DESCRIPTION
1. Verify that the welding procedures specification (WPS) is available	**PERFORM**	
2. Verify manufacturer certifications for welding consumables are available	**PERFORM**	
3. Verify material identification	**PERFORM**	Type and grade.
4. Welder Identification System	**PERFORM**	The fabricator or erector, as applicable, shall maintain a system by which a welder who has welded a joint or member can be identified. Stamps, if used, shall be the low-stress type.
5. Fit-up of groove welds (including joint geometry)	OBSERVE	✓ Joint preparation ✓ Dimensions (alignment, root opening, root face, bevel) ✓ Cleanliness (condition of steel surfaces) ✓ Tacking (tack weld quality and location) ✓ Backing type and fit (if applicable)
6. Configuration and finish of access holes	OBSERVE	
7. Fit-up of fillet welds	OBSERVE	✓ Dimensions (alignment, gaps at root) ✓ Cleanliness (condition of steel surfaces) ✓ Tacking (tack weld quality and location)
STEEL INSPECTION DURING WELDING – VERIFY THE FOLLOWING ARE IN COMPLIANCE 2018 IBC 1705.2.1, AISC 360-16: Table C-N5.4-2		
TASK	INSPECTION TYPE	DESCRIPTION
8. Use of qualified welders	**PERFORM**	Welding by welders, welding operators, and tack welders who are qualified in conformance with requirements.
9. Control and handling of welding consumables	OBSERVE	✓ Packaging ✓ Electrode atmospheric exposure control
10. No welding over cracked tack welds	OBSERVE	
11. Environmental conditions	OBSERVE	✓ Wind speed within limits ✓ Precipitation and temperature
12. Welding Procedures Specification followed	OBSERVE	✓ Settings on welding equipment ✓ Travel speed ✓ Selected welding materials ✓ Shielding gas type/flow rate ✓ Preheat applied ✓ Interpass temperature maintained (min./max.) ✓ Proper position (F, V, H, OH) ✓ Intermix of filler metals avoided
13. Welding techniques	OBSERVE	✓ Interpass and final cleaning ✓ Each pass within profile limitations ✓ Each pass meets quality requirements

STRUCTURAL - STEEL – WELDING SECTION (CONTINUED)

STEEL INSPECTION AFTER WELDING – VERIFY THE FOLLOWING ARE IN COMPLIANCE 2018 IBC 1705.2.1, AISC 360-16: Table C-N5.4-3		
TASK	INSPECTION TYPE[1]	DESCRIPTION
14. Welds cleaned	OBSERVE	
15. Size, length, and location of all welds	**PERFORM**	Size, length, and location of all welds conform to the requirements of the detail drawings.
16. Welds meet visual acceptance criteria	**PERFORM AND DOCUMENT**	✓ Crack prohibition ✓ Weld/base-metal fusion ✓ Crater cross section ✓ Weld profiles ✓ Weld size ✓ Undercut ✓ Porosity
17. Arc strikes	**PERFORM**	
18. k-area	**PERFORM**	When welding of doubler plates, continuity plates or stiffeners has been performed in the k-area, visually inspect the web k-area for cracks.
19. Backing removed, weld tabs removed and finished, and fillet welds added where required	**PERFORM**	
20. Repair activities	**PERFORM AND DOCUMENT**	
21. Document acceptance or rejection of welded joint or member	**PERFORM**	

END SECTION

STRUCTURAL - STEEL – BOLTING SECTION

STEEL INSPECTION TASKS PRIOR TO BOLTING – VERIFY THE FOLLOWING ARE IN COMPLIANCE 2018 IBC 1705.2.1, AISC 360-16: Table C-N5.6-1		
TASK	INSPECTION TYPE[1]	DESCRIPTION
1. Manufacture's certifications available for fastener materials	**PERFORM**	
2. Fasteners marked in accordance with ASTM requirements	OBSERVE	
3. Proper fasteners selected for joint detail (grade, type, bolt length if threads are to be excluded from shear plane)	OBSERVE	
4. Proper bolting procedure selected for joint detail	OBSERVE	
5. Connecting elements, including appropriate faying surface condition and hole preparation, if specified, meet applicable requirements	OBSERVE	
6. Proper storage provided for bolts, nuts, washers, and other fastener components	OBSERVE	
STEEL INSPECTION TASKS DURING BOLTING – VERIFY THE FOLLOWING ARE IN COMPLIANCE 2018 IBC 1705.2.1, AISC 360-16: Table C-N5.6-2		
TASK	INSPECTION TYPE[1]	DESCRIPTION
7. Fastener assemblies of suitable condition, placed in all holes and washers (if required) are positioned as required	OBSERVE	
8. Joint brought to the snug-tight condition prior to pretensioning operation	OBSERVE	
9. Fastener component not turned by the wrench prevented from rotating	OBSERVE	
10. Bolts are pretensioned in accordance with RCSC Specification, progressing systematically from the most rigid point toward the free edges	OBSERVE	
STEEL INSPECTION TASKS AFTER BOLTING – VERIFY THE FOLLOWING ARE IN COMPLIANCE IBC 1705.2.1, AISC 360-10: Table C-N5.6-3		
TASK	INSPECTION TYPE[1]	DESCRIPTION
11. Document acceptance or rejection of all bolted connections	**DOCUMENT**	

END SECTION

STRUCTURAL - STEEL - NON DESTRUCTIVE TESTING SECTION

NONDESTRUCTIVE TESTING OF WELDED JOINTS – VERIFY THE FOLLOWING ARE IN COMPLIANCE 2018 IBC 1705.2.1, AISC 360-16: Section N5.5		
TASK	INSPECTION TYPE[1]	DESCRIPTION
1. Use of qualified nondestructive testing personnel	**PERFORM**	Visual weld inspection and nondestructive testing (NDT) shall be conducted by personnel qualified in accordance with AWS D1.8 clause 7.2
2. CJP groove welds	OBSERVE	Ultrasonic testing (UT) shall be performed on 20% of CJP groove welds for materials greaters than 5/16" (8mm) thick. Testing rate must be increased to 100% if greater than 5% of welds tested have unacceptable defects.
3. Welded joints subject to fatigue	OBSERVE	Dye penetrant testing (DT) and Ultrasonic testing (UT) shall be performed on 100% of welded joints identified on contract drawings as being subject to fatigue.
4. Weld tab removal sites	OBSERVE	At the end of welds where weld tabs have been removed, magnetic particle testing shall be performed on the same beam-to-column joints receiving UT

END SECTION

STRUCTURAL - STEEL - OTHER INSPECTIONS

OTHER STEEL INSPECTIONS – VERIFY THE FOLLOWING ARE IN COMPLIANCE 2018 IBC 1705.2.1, AISC 341-16: Tables J8.1 & J10.1		
TASK	INSPECTION TYPE[2]	DESCRIPTION
1. Anchor rods and other embedments supporting structural steel	**PERFORM**	Verify the diameter, grade, type, and length of the anchor rod or embedded item, and the extent or depth of embedment prior to placement of concrete.
2. Fabricated steel or erected steel frame	OBSERVE	Verify compliance with the details shown on the construction documents, such as braces, stiffeners, member locations and proper application of joint details at each connection.

END SECTION

STRUCTURAL - COLD-FORMED METAL DECK - PLACEMENT SECTION

METAL DECK INSPECTION PRIOR TO DECK PLACEMENT – VERIFY THE FOLLOWING ARE IN COMPLIANCE SDI QA/QC-2011, Appendix 1, Table 1.1		
TASK	INSPECTION TYPE[1]	DESCRIPTION
1. Verify compliance of materials (deck and all deck accessories) with construction documents, including profiles, material properties, and base metal thickness	**PERFORM**	
2. Document acceptance or rejection of deck and deck accessories	**DOCUMENT**	
METAL DECK INSPECTION DURING DECK PLACEMENT – VERIFY THE FOLLOWING ARE IN COMPLIANCE SDI QA/QC-2011, Appendix 1, Table 1.2		
TASK	INSPECTION TYPE[1]	DESCRIPTION
3. Verify compliance of deck and all deck accessories installation with construction documents	**PERFORM**	
4. Verify deck materials are represented by the mill certifications that comply with the construction documents	**PERFORM**	
5. Document acceptance or rejection of installation of deck and deck accessories	**DOCUMENT**	
METAL DECK INSPECTION AFTER DECK PLACEMENT – VERIFY THE FOLLOWING ARE IN COMPLIANCE SDI QA/QC-2011, Appendix 1, Table 1.3		
TASK	INSPECTION TYPE[1]	DESCRIPTION
6. Welding procedure specification (WPS) available	**PERFORM**	
7. Manufactures certifications for welding consumables available	OBSERVE	
8. Material identification (type/grade)	OBSERVE	
9. Check welding equipment	OBSERVE	

END SECTION

STRUCTURAL - COLD-FORMED METAL DECK – WELDING SECTION

METAL DECK INSPECTION DURING WELDING – VERIFY THE FOLLOWING ARE IN COMPLIANCE SDI QA/QC-2011, Appendix 1, Table 1.4		
TASK	INSPECTION TYPE[1]	DESCRIPTION
1. Use of qualified welders	OBSERVE	
2. Control and handling of welding consumables	OBSERVE	
3. Environmental conditions (wind speed, moisture, temperature)	OBSERVE	
4. WPS followed	OBSERVE	
METAL DECK INSPECTION AFTER WELDING – VERIFY THE FOLLOWING ARE IN COMPLIANCE SDI QA/QC-2011, Appendix 1, Table 1.5		
TASK	INSPECTION TYPE[1]	DESCRIPTION
5. Verify size and location of welds, including support, sidelap, and perimeter welds.	**PERFORM**	
6. Welds meet visual acceptance criteria	**PERFORM**	
7. Verify repair activities	**PERFORM**	
8. Document acceptance or rejection of welds	**DOCUMENT**	

END SECTION

STRUCTURAL - COLD-FORMED METAL DECK – FASTENING SECTION

METAL DECK INSPECTION BEFORE MECHANICAL FASTENING – VERIFY THE FOLLOWING ARE IN COMPLIANCE SDI QA/QC-2011, Appendix 1, Table 1.6		
TASK	INSPECTION TYPE[1]	DESCRIPTION
1. Manufacturer installation instructions available for mechanical fasteners	OBSERVE	
2. Proper tools available for fastener installation	OBSERVE	
METAL DECK INSPECTION DURING MECHANICAL FASTENING – VERIFY THE FOLLOWING ARE IN COMPLIANCE SDI QA/QC-2011, Appendix 1, Table 1.7		
TASK	INSPECTION TYPE[1]	DESCRIPTION
3. Fasteners are positioned as required	OBSERVE	
4. Fasteners are installed in accordance with manufacturer's instructions	OBSERVE	
METAL DECK INSPECTION AFTER MECHANICAL FASTENING – VERIFY THE FOLLOWING ARE IN COMPLIANCE SDI QA/QC-2011, Appendix 1, Table 1.8		
TASK	INSPECTION TYPE[1]	DESCRIPTION
5. Check spacing, type, and installation of support fasteners	**PERFORM**	
6. Check spacing, type, and installation of sidelap fasteners	**PERFORM**	
7. Check spacing, type, and installation of perimeter fasteners	**PERFORM**	
8. Verify repair activities	**PERFORM**	
9. Document acceptance or rejection of mechanical fasteners	**DOCUMENT**	

END SECTION

STRUCTURAL - OPEN-WEB STEEL JOISTS SECTION

OPEN-WEB STEEL JOISTS AND JOIST GIRDERS – VERIFY THE FOLLOWING ARE IN COMPLIANCE IBC TABLE 1705.2.3		
TASK	INSPECTION TYPE[1]	DESCRIPTION
1. Installation of open-web steel joists and joist girders	OBSERVE	✓ End connections – welded or bolted ✓ Bridging – horizontal and diagonal

END SECTION

STRUCTURAL - CONCRETE CONSTRUCTION SECTION

CONCRETE CONSTRUCTION, INCLUDING COMPOSITE DECK – VERIFY THE FOLLOWING ARE IN COMPLIANCE IBC TABLE 1705.3 (ACI 318 REFERENCES NOTED IN IBC TABLE)		
TASK	INSPECTION TYPE[1]	DESCRIPTION
1. Inspect reinforcement, including prestressing tendons, and verify placement.	OBSERVE	Verify prior to placing concrete that reinforcing is of specified type, grade and size; that it is free of oil, dirt and unacceptable rust; that it is located and spaced properly; that hooks, bends, ties, stirrups and supplemental reinforcement are placed correctly; that lap lengths, stagger and offsets are provided; and that all mechanical connections are installed per the manufacturer's instructions and/or evaluation report.
2. Reinforcing bar welding	OBSERVE	✓ Verify weldability of reinforcing bars other than ASTM A 706 ✓ Inspect single-pass fillet welds, maximum 5/16" in accordance with AWS D1.4
3. All other welding	**CONTINUOUS**	Visually inspect all welds in accordance with AWS D1.4
4. Cast in place anchors and post installed drilled anchors (downward inclined)	OBSERVE	Verify prior to placing concrete that cast in place anchors and post installed drilled anchors have proper embedment, spacing and edge distance.
5. Post-installed adhesive anchors in horizontal or upward inclined orientations	**CONTINUOUS AND DOCUMENT**	✓ Inspect as required per approved ICC-ES report ✓ Verify that installer is certified for installation of horizontal and overhead installation applications ✓ Inspect proof loading as required by the contract documents
6. Verify use of required mix design	OBSERVE	Verify that all mixes used comply with the approved construction documents
7. Prior to concrete placement, fabricate specimens for strength tests, perform slump and air content tests, and determine the temperature of the concrete	**CONTINUOUS**	At the time fresh concrete is sampled to fabricate specimens for strength test verify these tests are performed by qualified technicians.
8. Inspect concrete and/or shotcrete placement for proper application techniques	**CONTINUOUS**	Verify proper application techniques are used during concrete conveyance and depositing avoids segregation or contamination. Verify that concrete is properly consolidated.
9. Verify maintenance of specified curing temperature and technique	OBSERVE	Inspect curing, cold weather protection, and hot weather protection procedures.

CONTINUED ON FOLLOWING PAGE

STRUCTURAL - CONCRETE CONSTRUCTION (CONTINUED)

CONCRETE CONSTRUCTION, INCLUDING COMPOSITE DECK – VERIFY THE FOLLOWING ARE IN COMPLIANCE IBC TABLE 1705.3 (ACI 318 REFERENCES NOTED IN IBC TABLE)		
TASK	INSPECTION TYPE[1]	DESCRIPTION
11. Inspect erection of precast concrete members	OBSERVE	
12. Verify in-situ concrete strength, prior to stressing of tendons in post-tensioned concrete and prior to removal of shores and forms from beams and structural slabs.	OBSERVE	
13. Inspect formwork for shape, location and dimensions of the concrete member being formed.	OBSERVE	

END SECTION

STRUCTURAL - MASONRY CONSTRUCTION SECTION (ALL RISK CATEGORIES)

MASONRY CONSTRUCTION – VERIFY THE FOLLOWING ARE IN COMPLIANCE AT START OF CONSTRUCTION IBC 1705.4 (ACI 530-13 TABLE 3.1.2 & 3.1.3)		
TASK	INSPECTION TYPE[1]	DESCRIPTION
1. Compliance with approved submittals prior to start	OBSERVE	
2. Proportions of site-mixed mortar.	OBSERVE	
3. Grade and type of reinforcement, anchor bolts, and prestressing tendons and anchorages	OBSERVE	
4. Prestressing technique	OBSERVE	
5. Properties of thin bed mortar for AAC masonry	OBSERVE	
MASONRY CONSTRUCTION – VERIFY THE FOLLOWING ARE IN COMPLIANCE PRIOR TO GROUTING IBC 1705.4 (ACI 530-13 TABLE 3.1.2 & 3.1.3)		
TASK	INSPECTION TYPE[1]	DESCRIPTION
6. Grout space	OBSERVE	
7. Proportions of site-prepared grout and prestressing grout for bonded tendons	OBSERVE	
8. Proportions of site-mixed grout and prestressing grout for bonded tendons	OBSERVE	
9. Placement of masonry units and mortar joints	OBSERVE	
10. Welding of reinforcement	**CONTINUOUS**	
MASONRY CONSTRUCTION – VERIFY THE FOLLOWING ARE IN COMPLIANCE DURING CONSTRUCTION IBC 1705.4 (ACI 530-13 TABLE 3.1.2 & 3.1.3)		
TASK	INSPECTION TYPE[1]	DESCRIPTION
11. Size and location of structural elements is in compliance	OBSERVE	
12. Preparation, construction, and protection of masonry during cold weather (temperature below 40°F (4.4°c) or hot weather (temp above 90°F (32.2°C))	OBSERVE	
13. Observe preparation of grout specimens, mortar specimens, and/or prisms	OBSERVE	
14. Type, size and placement of reinforcement, connectors, anchor bolts and prestressing tendons and anchorages, including details of anchorage of masonry to structural members, frames, or other construction	OBSERVE	

END SECTION

[1] **PERFORM**: Perform these tasks for each weld, fastener or bolted connection, and required verification.
OBSERVE: Observe these items on a random sampling basis daily to insure that applicable requirements are met. Operations need not be delayed pending these inspections at contractor's risk.

GEOTECHNICAL - SOILS INSPECTION SECTION

SOILS INSPECTION – VERIFY THE FOLLOWING ARE IN COMPLIANCE IBC 1705.6		
TASK	INSPECTION TYPE[1]	DESCRIPTION
1. Materials below shallow foundations are adequate to achieve the design bearing capacity.	OBSERVE	
2. Excavations are extended to proper depth and have reached proper material	OBSERVE	
3. Perform classification and testing of compacted fill materials	**OBSERVE**	
4. Verify use of proper materials, densities and lift thicknesses during placement and compaction of compacted fill	**CONTINUOUS**	
5. Prior to placement of compacted fill, inspect subgrade and verify that site has been prepared properly.	OBSERVE	During fill placement, the special inspector shall verify that proper materials and procedures are used in accordance with the provisions of the approved geotechnical report

END SECTION

isdesign
ARCHITECTURE + INTERIORS
1111 Haynes Street, Suite 103
Raleigh, North Carolina 27604
t. 919.833.5400
www.isdesignpa.com

RED JOB No.18–E091
RED ENGINEERING & DESIGN
STRUCTURAL ENGINEERS
C-3479
126 SALEM TOWNE CT
APEX, NORTH CAROLINA 27502
TEL. (919) 833-3405
REDENGINEERINGDESIGN.COM

Project
THE HEALING PLACE OF NEW HANOVER COUNTY

1000 MEDICAL CENTER DRIVE
WILMINGTON, NORTH CAROLINA

Client
NEW HANOVER COUNTY, NORTH CAROLINA

All reproduction & intellectual property rights reserved © 2020

Key Plan

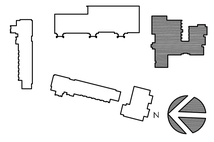

Professional Seals



08.25.20

No.	Description	Date
A	SCHEMATIC DESIGN	11/26/19
B	DESIGN DEVELOPMENT PACKAGE	
0	FOR CONSTRUCTION	08/25/20

Project Code: 16HTWILMING

Sheet Title
SPECIAL INSPECTIONS

Original drawing is 42 x 30 Do not scale contents of this drawing

Sheet Number
S-004

9/23/2020 10:43 AM Z:\Red Engineering\2018\18-E091 Healing Place - Wilmington, Is design\2-Design Development\CAD\Structural\18-E091 Healing Transitions.dwg

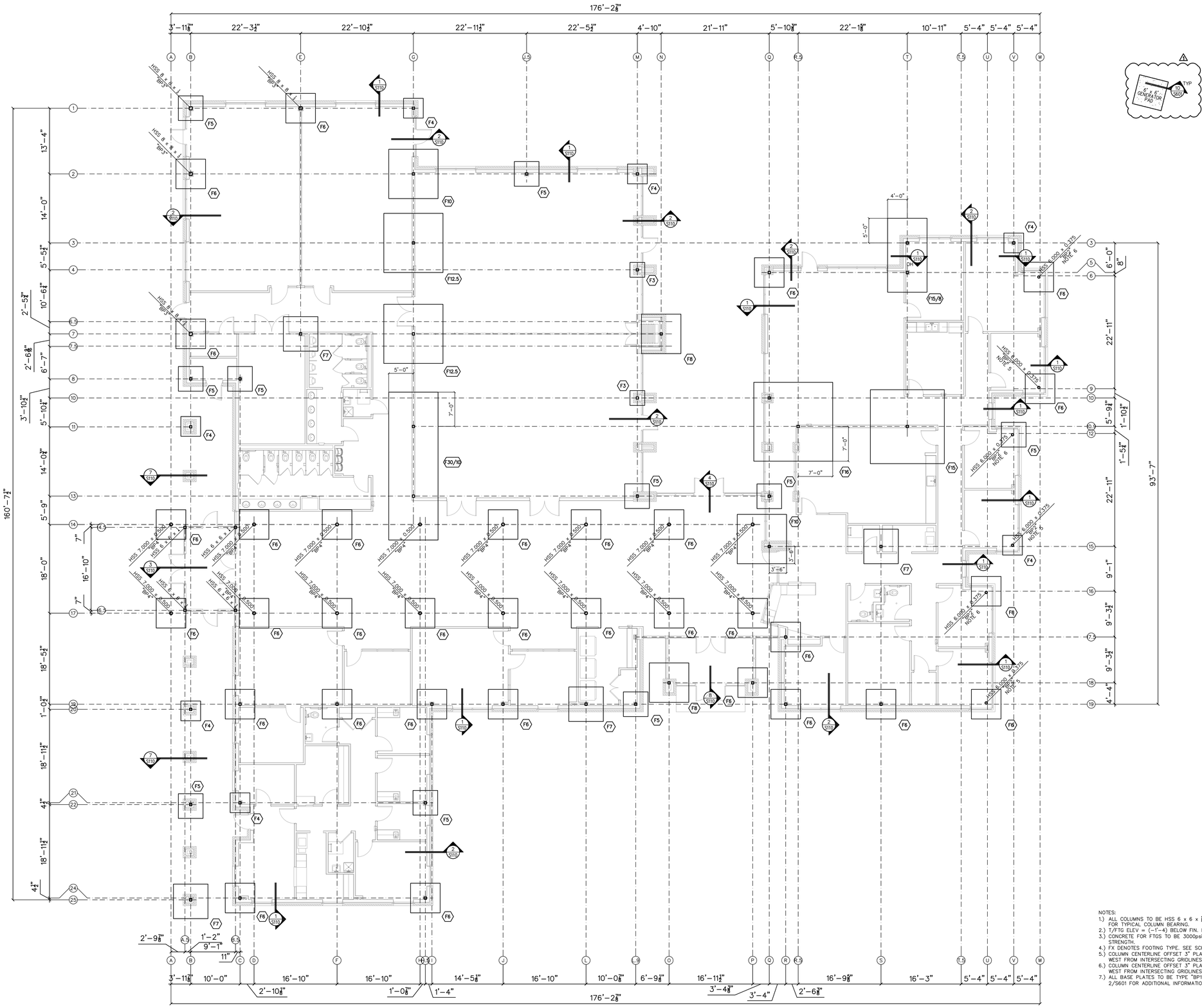

NOTES:
1.) ALL COLUMNS TO BE HSS 6 x 6 x ⅝ U.N.O. SEE 1/S601 FOR TYPICAL COLUMN BEARING.
2.) T/FTG ELEV = (–1'-4) BELOW FIN. FLR.
3.) CONCRETE FOR FTGS TO BE 3000psi 28-DAY COMPRESSIVE STRENGTH.
4.) FX DENOTES FOOTING TYPE, SEE SCHEDULE ON S001.
5.) COLUMN CENTERLINE OFFSET 3" PLAN NORTH & 3" PLAN WEST FROM INTERSECTING GRIDLINES.
6.) COLUMN CENTERLINE OFFSET 3" PLAN SOUTH & 3" PLAN WEST FROM INTERSECTING GRIDLINES.
7.) ALL BASE PLATES TO BE TYPE "BP1", TYP UNO. SEE DETAIL 2/S601 FOR ADDITIONAL INFORMATION.

1
S101 FOUNDATION PLAN

SCALE: ⅛" = 1'-0

12/2/2020 8:48 AM Z:\Red Engineering\2018\18-E091 Healing Place - Wilmington, is design\2-Design Development\CAD\Structural\18-E091 Healing Transitions.dwg

isdesign
ARCHITECTURE + INTERIORS
1111 Haynes Street, Suite 103
Raleigh, North Carolina 27604
t. 919.833.5400
www.isdesignpa.com

RED JOB No.18-E091
RED ENGINEERING & DESIGN
STRUCTURAL ENGINEERS
126 SALEM TOWNE CT
APEX, NORTH CAROLINA 27502
C-3479 TEL. (919) 833-3486
REDENGINEERINGDESIGN.COM

Project
THE HEALING PLACE OF NEW HANOVER COUNTY

1000 MEDICAL CENTER DRIVE
WILMINGTON, NORTH CAROLINA

Client
NEW HANOVER COUNTY, NORTH CAROLINA

All reproduction & intellectual property rights reserved © 2020

Key Plan

Professional Seals
NORTH CAROLINA PROFESSIONAL SEAL 21434 ENGINEER BRIAN MORROW
12.02.20

No.	Description	Date
A	SCHEMATIC DESIGN	11/26/19
B	DESIGN DEVELOPMENT PACKAGE	
0	FOR CONSTRUCTION	08/25/20
1	MCD #1	12/02/20

Project Code: 16HTWILMING

Sheet Title
ADMIN BUILDING FOUNDATION PLAN

Original drawing is 42 x 30 Do not scale contents of this drawing

Sheet Number
S-101

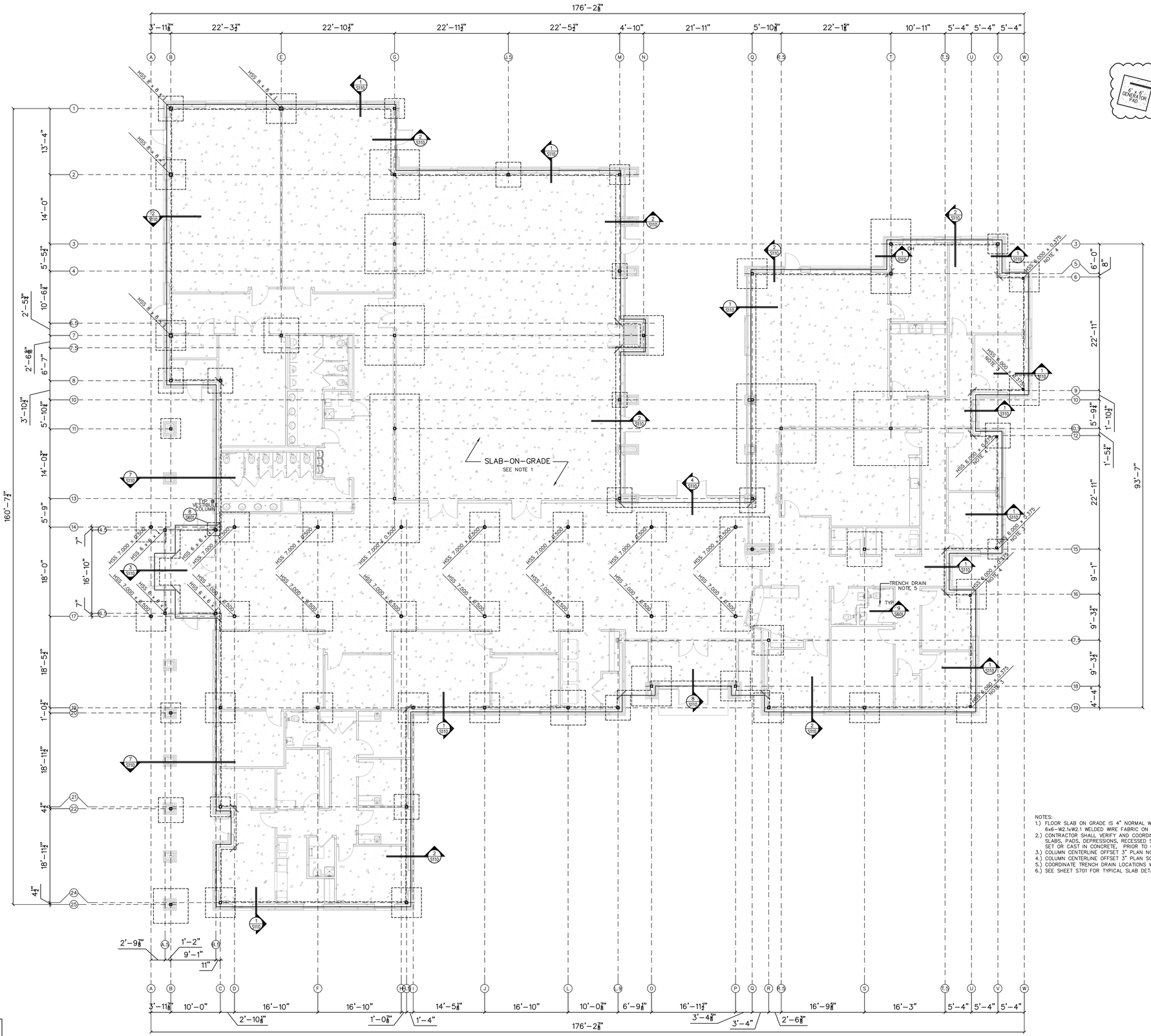

NOTES:
1.) FLOOR SLAB ON GRADE IS 4" NORMAL WEIGHT CONCRETE, 3000psi 28-DAY COMPRTESSIVE STRENGTH, WITH 6x6-W2.1xW2.1 WELDED WIRE FABRIC ON A 6" POROUS GRAVEL AND 10MIL POLY VAPER BARRIER (UNO).
2.) CONTRACTOR SHALL VERIFY AND COORDINATE THE LOCATION, SIZE, TYPE AND DIRECTION OF ALL THICKENED SLABS, PADS, DEPRESSIONS, RECESSED SLABS, BOLTS, SLEEVES, ANCHORS, INSERTS, OPENINGS, ETC. TO BE SET OR CAST IN CONCRETE, PRIOR TO CONCRETE PLACEMENT.
3.) COLUMN CENTERLINE OFFSET 3" PLAN NORTH & 3" PLAN WEST FROM INTERSECTING GRIDLINES.
4.) COLUMN CENTERLINE OFFSET 3" PLAN SOUTH & 3" PLAN WEST FROM INTERSECTING GRIDLINES.
5.) COORDINATE TRENCH DRAIN LOCATIONS WITH PLUMBING DRAWINGS.
6.) SEE SHEET S701 FOR TYPICAL SLAB DETAILS.

1
S102 SLAB-ON-GRADE PLAN

SCALE: 1/8" = 1'-0

12/2/2020 8:48 AM Z:\Red Engineering\2018\18-E091 Healing Place - Wilmington, is design\2-Design Development\CAD\Structural\18-E091 Healing Transitions.dwg

is design
ARCHITECTURE + INTERIORS
1111 Haynes Street, Suite 103
Raleigh, North Carolina 27604
t. 919.833.5400
www.isdesignpa.com

RED JOB No.18-E091
RED ENGINEERING & DESIGN
STRUCTURAL ENGINEERS
126 SALEM TOWNE CT
APEX, NORTH CAROLINA 27502
TEL. (919) 833-3405
REDENGINEERINGDESIGN.COM
C-3479

Project
THE HEALING PLACE OF NEW HANOVER COUNTY

1000 MEDICAL CENTER DRIVE
WILMINGTON, NORTH CAROLINA

Client
NEW HANOVER COUNTY, NORTH CAROLINA

All reproduction & intellectual property rights reserved © 2020

Key Plan

Professional Seals
NORTH CAROLINA PROFESSIONAL SEAL 21434 ENGINEER BRIAN MOSKOWITZ
12.02.20

No.	Description	Date
A	SCHEMATIC DESIGN	11/26/19
B	DESIGN DEVELOPMENT PACKAGE	
0	FOR CONSTRUCTION	08/25/20
1	MCD #1	12/02/20

Project Code: 16HTWILMING

Sheet Title
ADMIN BUILDING SLAB-ON-GRADE PLAN

Original drawing is 42 x 30 Do not scale contents of this drawing

Sheet Number
S-102

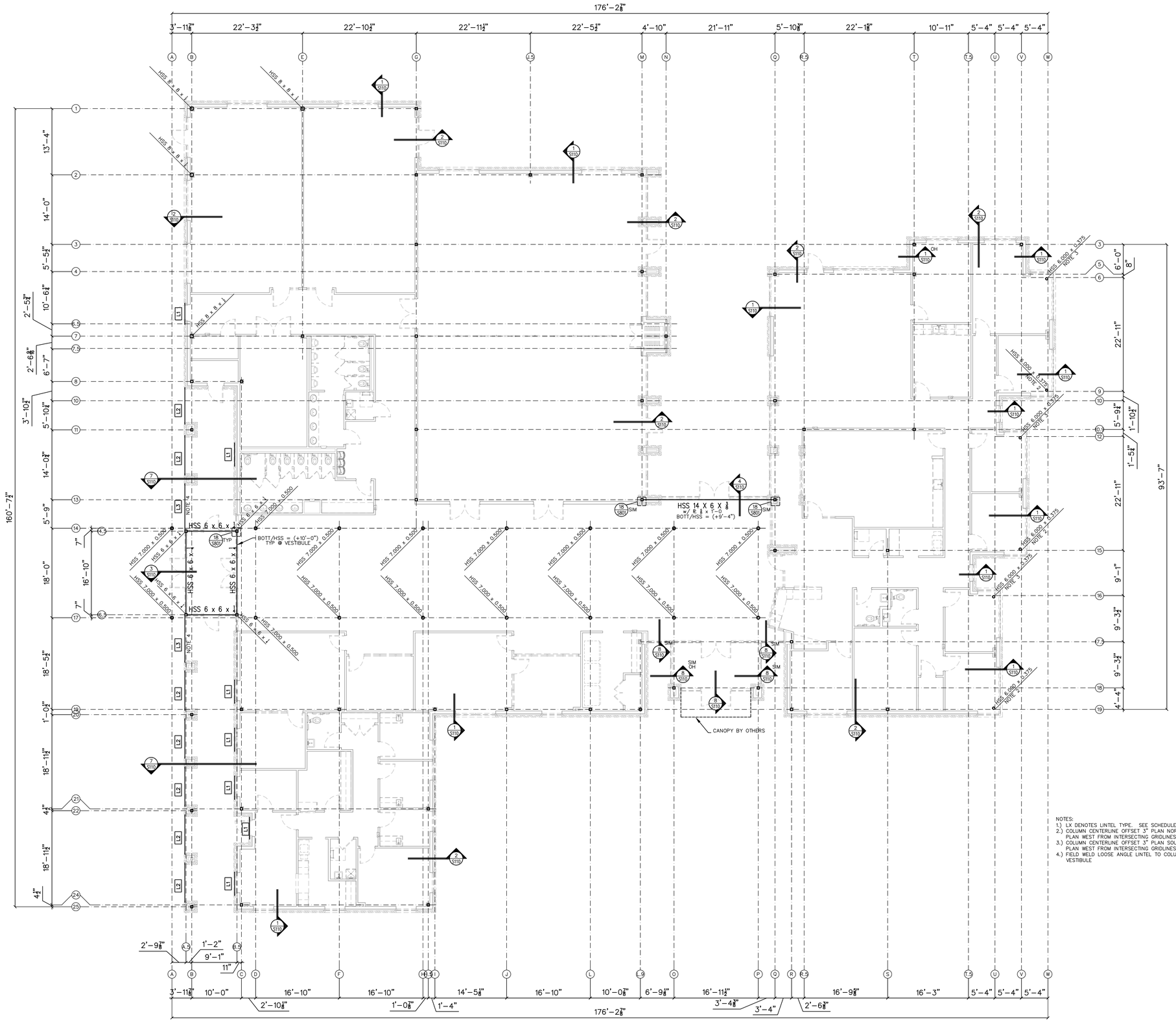

NOTES:
1.) LX DENOTES LINTEL TYPE. SEE SCHEDULE ON S001.
2.) COLUMN CENTERLINE OFFSET 3" PLAN NORTH & 3" PLAN WEST FROM INTERSECTING GRIDLINES.
3.) COLUMN CENTERLINE OFFSET 3" PLAN SOUTH & 3" PLAN WEST FROM INTERSECTING GRIDLINES.
4.) FIELD WELD LOOSE ANGLE LINTEL TO COLUMN @ VESTIBULE

1
S103 LINTEL PLAN

SCALE: 1/8" = 1'-0

12/2/2020 8:48 AM Z:\Red Engineering\2018\18-E091 Healing Place - Wilmington, is design\2-Design Development\CAD\Structural\18-E091 Healing Transitions.dwg

is design
ARCHITECTURE + INTERIORS
1111 Haynes Street, Suite 103
Raleigh, North Carolina 27604
t. 919.833.5400
www.isdesignpa.com

RED JOB No.18-E091
RED ENGINEERING & DESIGN
STRUCTURAL ENGINEERS
126 SALEM TOWNE CT
APEX, NORTH CAROLINA 27502
TEL. (919) 833-3486
REDENGINEERINGDESIGN.COM
C-3479

Project
THE HEALING PLACE OF NEW HANOVER COUNTY

1000 MEDICAL CENTER DRIVE
WILMINGTON, NORTH CAROLINA

Client
NEW HANOVER COUNTY, NORTH CAROLINA

All reproduction & intellectual property rights reserved © 2020

Key Plan

Professional Seals
NORTH CAROLINA PROFESSIONAL SEAL 21434 ENGINEER BRIAN MOSKOW
08.25.20

No.	Description	Date
A	SCHEMATIC DESIGN	11/26/19
B	DESIGN DEVELOPMENT PACKAGE	
0	FOR CONSTRUCTION	08/25/20

Project Code: 16HTWILMING

Sheet Title
ADMIN BUILDING LINTEL PLAN

Original drawing is 42 x 30 Do not scale contents of this drawing

Sheet Number
S-103

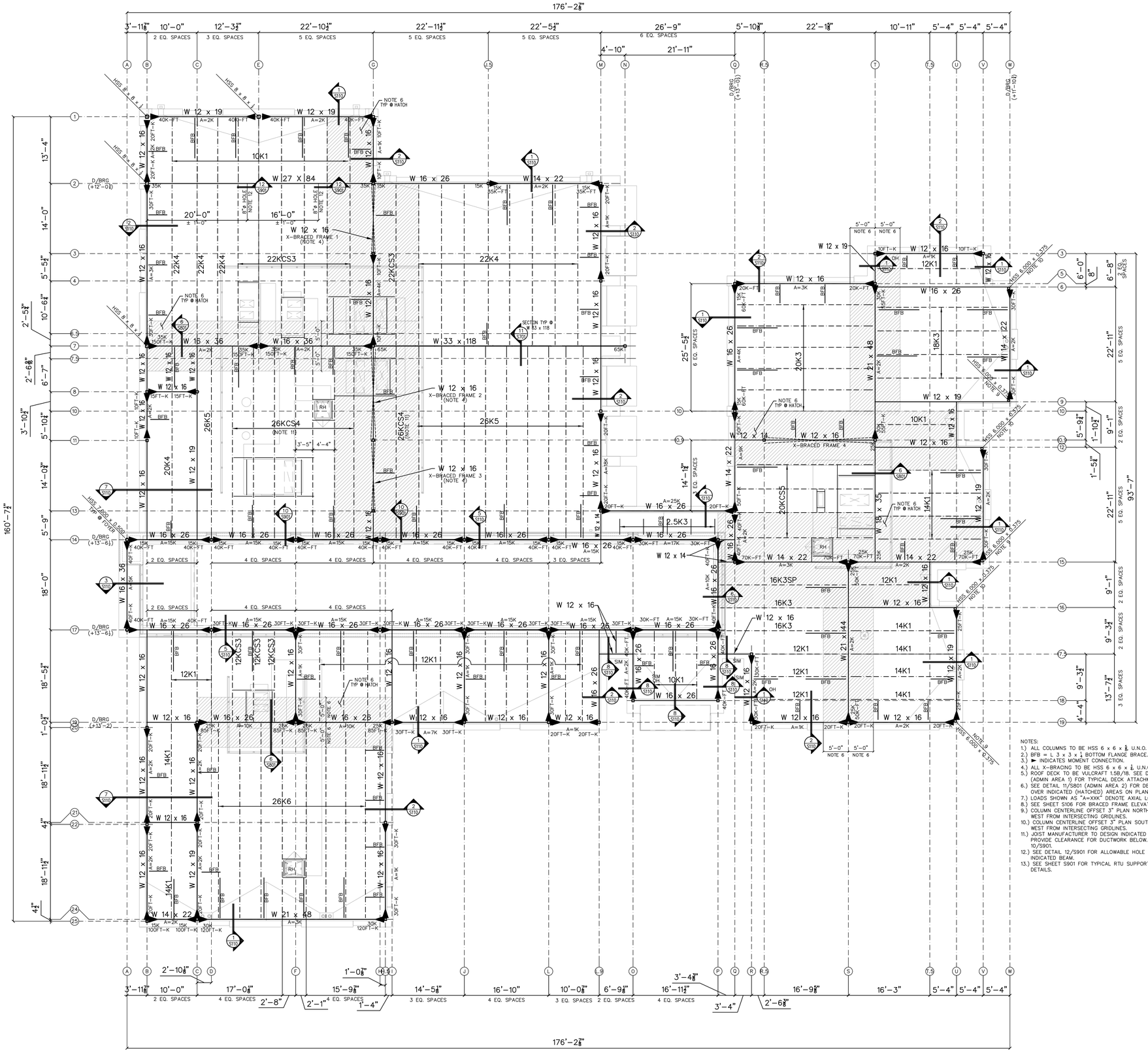

NOTES:
1.) ALL COLUMNS TO BE HSS 6 x 6 x ⅝ U.N.O.
2.) BFB = L 3 x 3 x ¼ BOTTOM FLANGE BRACE.
3.) ► INDICATES MOMENT CONNECTION.
4.) ALL X-BRACING TO BE HSS 6 x 6 x ½ U.N.O.
5.) ROOF DECK TO BE VULCRAFT 1.5B/18. SEE DETAIL 11/S801 (ADMIN AREA 1) FOR TYPICAL DECK ATTACHMENT.
6.) SEE DETAIL 11/S801 (ADMIN AREA 2) FOR DECK ATTACHMENT OVER INDICATED (HATCHED) AREAS ON PLAN.
7.) LOADS SHOWN AS "A=XXK" DENOTE AXIAL LOADS.
8.) SEE SHEET S106 FOR BRACED FRAME ELEVATIONS.
9.) COLUMN CENTERLINE OFFSET 3" PLAN NORTH & 3" PLAN WEST FROM INTERSECTING GRIDLINES.
10.) COLUMN CENTERLINE OFFSET 3" PLAN SOUTH & 3" PLAN WEST FROM INTERSECTING GRIDLINES.
11.) JOIST MANUFACTURER TO DESIGN INDICATED JOISTS TO PROVIDE CLEARANCE FOR DUCTWORK BELOW. SEE DETAIL 10/S901.
12.) SEE DETAIL 12/S901 FOR ALLOWABLE HOLE DETAIL ⊕ INDICATED BEAM.
13.) SEE SHEET S901 FOR TYPICAL RTU SUPPORT/ROOF SCREEN DETAILS.

1
S104 LOW ROOF PLAN
SCALE: ⅛" = 1'-0

isdesign
ARCHITECTURE + INTERIORS
1111 Haynes Street, Suite 103
Raleigh, North Carolina 27604
t. 919.833.5400
www.isdesignpa.com

RED JOB No.18-E091
RED ENGINEERING & DESIGN
STRUCTURAL ENGINEERS
126 SALEM TOWNE CT.
APEX, NORTH CAROLINA 27502
TEL. (919) 833-3486
REDENGINEERINGDESIGN.COM
C-3479

Project
THE HEALING PLACE OF NEW HANOVER COUNTY

1000 MEDICAL CENTER DRIVE
WILMINGTON, NORTH CAROLINA

Client
NEW HANOVER COUNTY, NORTH CAROLINA

All reproduction & intellectual property rights reserved © 2020

Key Plan

Professional Seals
NORTH CAROLINA PROFESSIONAL SEAL 034344 ENGINEER BRIAN M MOSKOW
08.25.20

No.	Description	Date
A	SCHEMATIC DESIGN	11/26/19
B	DESIGN DEVELOPMENT PACKAGE	
0	FOR CONSTRUCTION	08/25/20

Project Code: 16HTWILMING

Sheet Title
ADMIN BUILDING LOW ROOF PLAN

Original drawing is 42 x 30 Do not scale contents of this drawing

Sheet Number
S-104

Z:\Red Engineering\2018\18-E091 Healing Place - Wilmington, is design\2-Design Development\CAD\Structural\18-E091 Healing Transitions.dwg
12/2/2020 8:48 AM

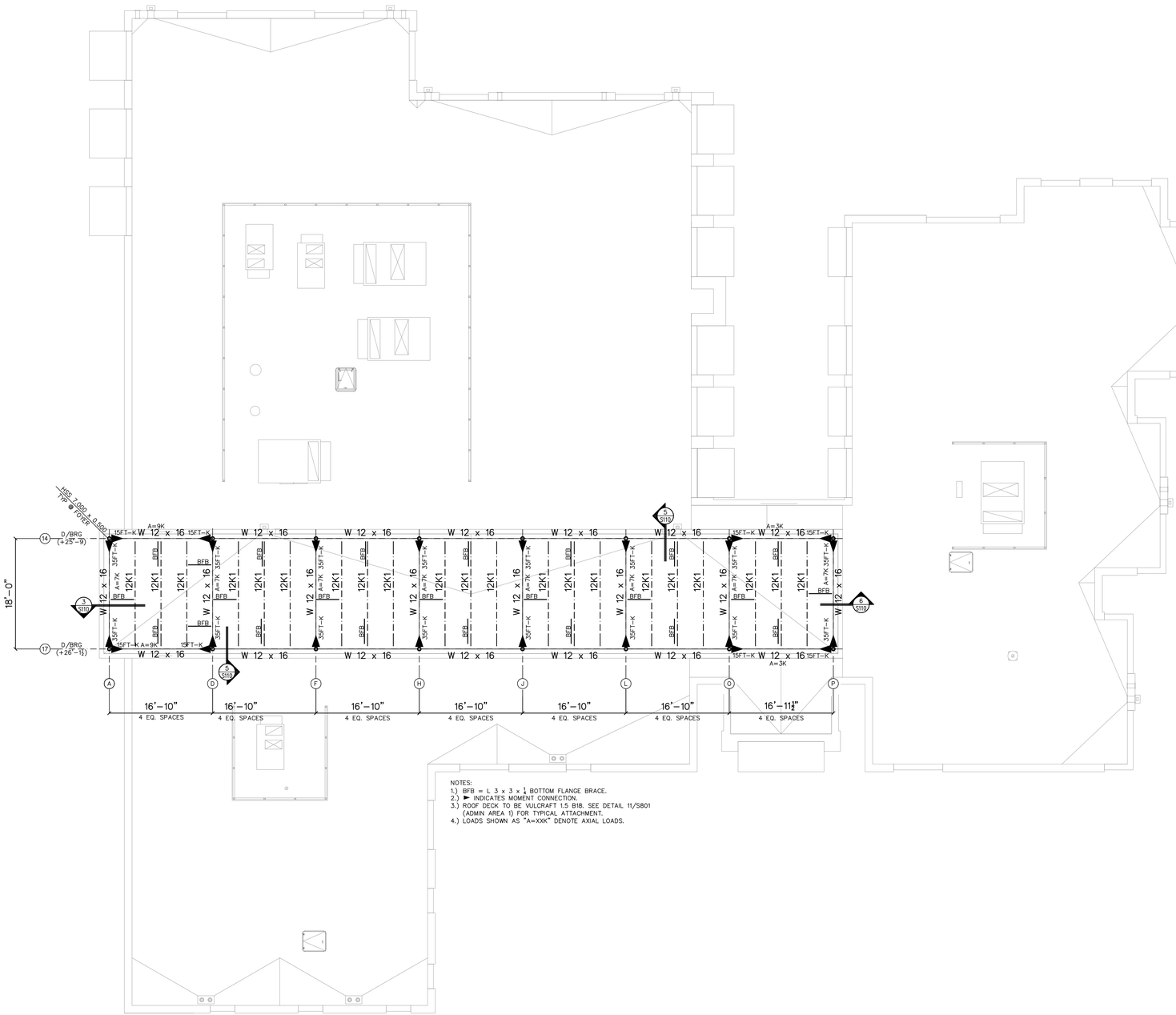

NOTES:
1.) BFB = L 3 x 3 x ¼ BOTTOM FLANGE BRACE.
2.) ► INDICATES MOMENT CONNECTION.
3.) ROOF DECK TO BE VULCRAFT 1.5 B18. SEE DETAIL 11/S801 (ADMIN AREA 1) FOR TYPICAL ATTACHMENT.
4.) LOADS SHOWN AS "A=XXK" DENOTE AXIAL LOADS.

1
S105 HIGH ROOF PLAN

SCALE: ⅛" = 1'-0

12/2/2020 8:48 AM Z:\Red Engineering\2018\18-E091 Healing Place - Wilmington, is design\2-Design Development\CAD\Structural\18-E091 Healing Transitions.dwg

is design
ARCHITECTURE + INTERIORS
1111 Haynes Street, Suite 103
Raleigh, North Carolina 27604
t. 919.833.5400
www.isdesignpa.com

RED JOB No.18-E091

RED ENGINEERING & DESIGN
STRUCTURAL ENGINEERS
126 SALEM TOWNE CT.
APEX, NORTH CAROLINA 27502
TEL. (919) 833-3405
REDENGINEERINGDESIGN.COM
C-3479

Project

THE HEALING PLACE OF NEW HANOVER COUNTY

1000 MEDICAL CENTER DRIVE
WILMINGTON, NORTH CAROLINA

Client

NEW HANOVER COUNTY, NORTH CAROLINA

All reproduction & intellectual property rights reserved © 2020

Key Plan

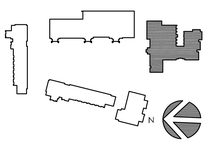

Professional Seals



08.25.20

No.	Description	Date
A	SCHEMATIC DESIGN	11/26/19
B	DESIGN DEVELOPMENT PACKAGE	
0	FOR CONSTRUCTION	08/25/20

Project Code: 1&HTWILMING

Sheet Title

ADMIN BUILDING HIGH ROOF PLAN

Original drawing is 42 x 30 Do not scale contents of this drawing

Sheet Number

S-105

X | SXXX | NOT USED | SCALE:

X | SXXX | NOT USED | SCALE:

X | SXXX | NOT USED | SCALE:

X | SXXX | NOT USED | SCALE:

1 | S106 | X–FRAME 1 | SCALE: 1/4" = 1'–0

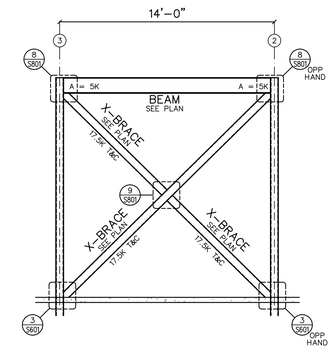

X | SXXX | NOT USED | SCALE:

X | SXXX | NOT USED | SCALE:

X | SXXX | NOT USED | SCALE:

X | SXXX | NOT USED | SCALE:

2 | S106 | X–FRAME 2 | SCALE: 1/4" = 1'–0

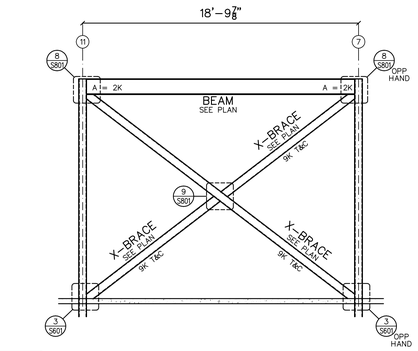

X | SXXX | NOT USED | SCALE:

X | SXXX | NOT USED | SCALE:

X | SXXX | NOT USED | SCALE:

X | SXXX | NOT USED | SCALE:

3 | S106 | X–FRAME 3 | SCALE: 1/4" = 1'–0

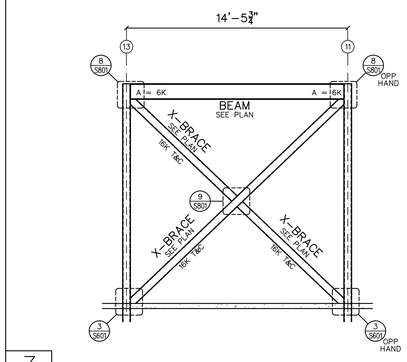

X | SXXX | NOT USED | SCALE:

X | SXXX | NOT USED | SCALE:

X | SXXX | NOT USED | SCALE:

X | SXXX | NOT USED | SCALE:

4 | S106 | X–FRAME 4 | SCALE: 1/4" = 1'–0

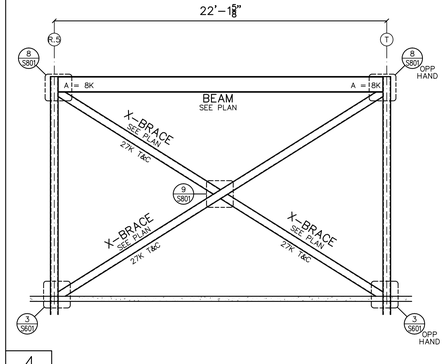

isdesign
ARCHITECTURE + INTERIORS
1111 Haynes Street, Suite 103
Raleigh, North Carolina 27604
t. 919.833.5400
www.isdesignpa.com

RED JOB No.18–E091

RED ENGINEERING & DESIGN
STRUCTURAL ENGINEERS
126 SALEM TOWNE CT
APEX, NORTH CAROLINA 27502
TEL. (919) 833-3405
REDENGINEERINGDESIGN.COM
C-3479

Project

THE HEALING PLACE OF NEW HANOVER COUNTY

1000 MEDICAL CENTER DRIVE
WILMINGTON, NORTH CAROLINA

Client

NEW HANOVER COUNTY, NORTH CAROLINA

All reproduction & intellectual property rights reserved © 2020

Key Plan

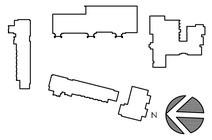

Professional Seals



No.	Description	Date
A	SCHEMATIC DESIGN	11/26/19
B	DESIGN DEVELOPMENT PACKAGE	
0	FOR CONSTRUCTION	08/25/20

Project Code: 16HTWILMNG

Sheet Title

ADMIN BUILDING
X-FRAME ELEVATIONS

Original drawing is 42 x 30 Do not scale contents of this drawing

Sheet Number

S-106

12/2/2020 8:48 AM Z:\Red Engineering\2016\18-E091 Healing Place - Wilmington, Is design\2-Design Development\CAD\Structural\18-E091 Healing Transitions.dwg

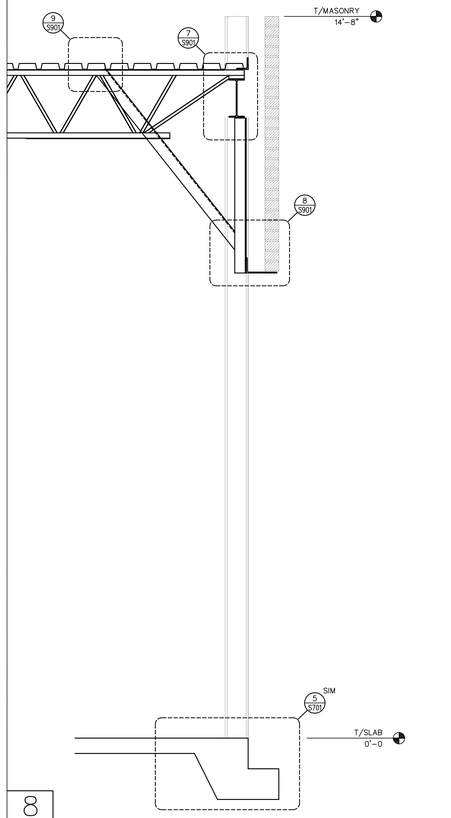

8
S110 SECTION SCALE: 3/4" = 1'-0

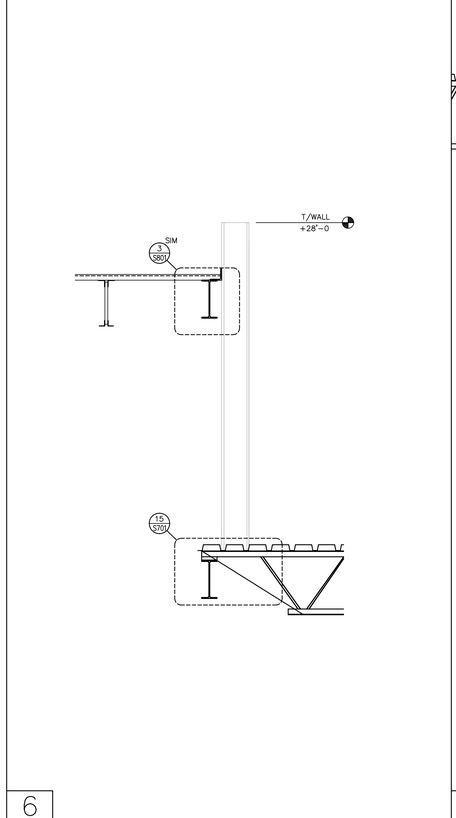

6
S110 SECTION SCALE: 3/4" = 1'-0

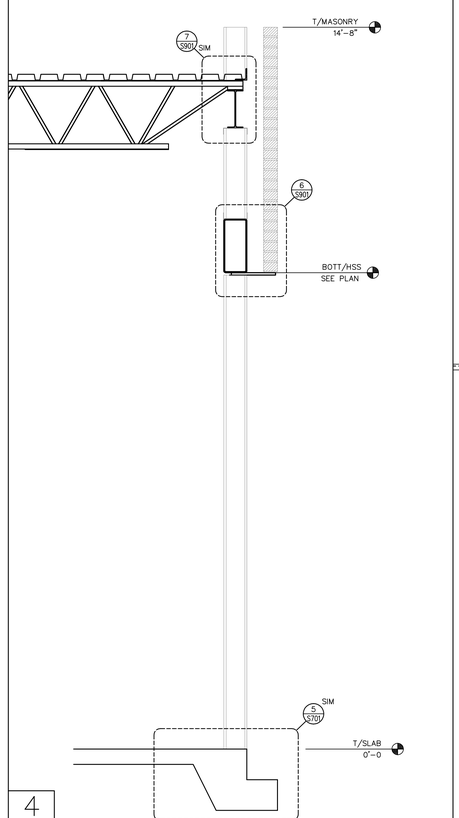

4
S110 SECTION SCALE: 3/4" = 1'-0

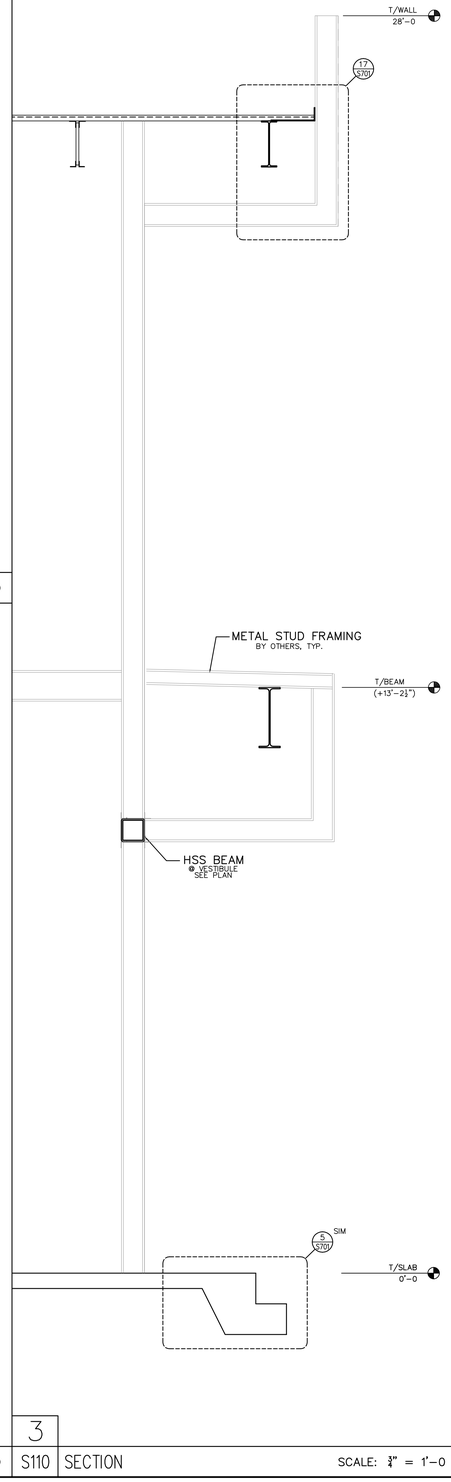

3
S110 SECTION SCALE: 3/4" = 1'-0

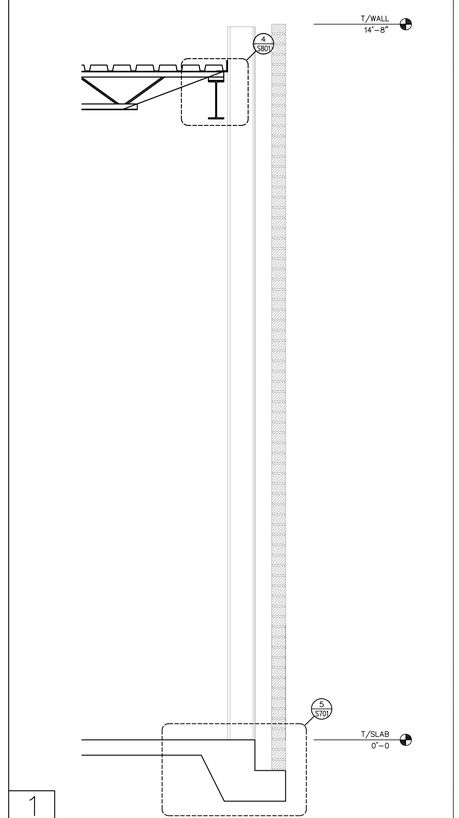

1
S110 SECTION SCALE: 3/4" = 1'-0

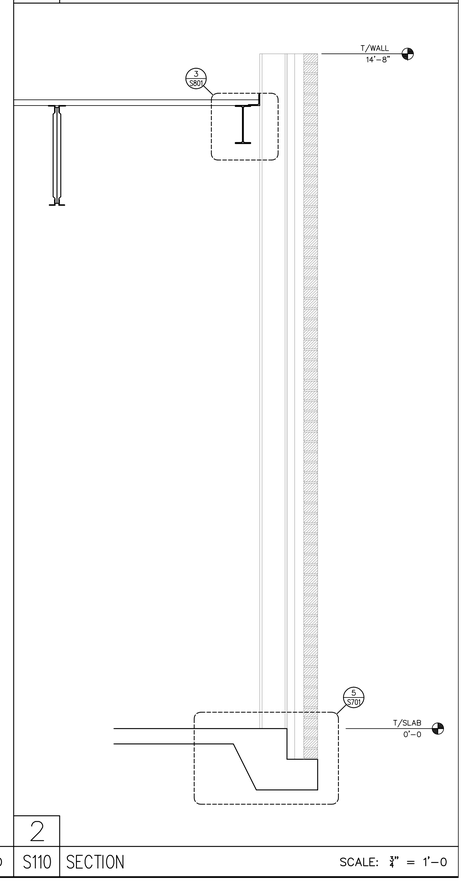

2
S110 SECTION SCALE: 3/4" = 1'-0

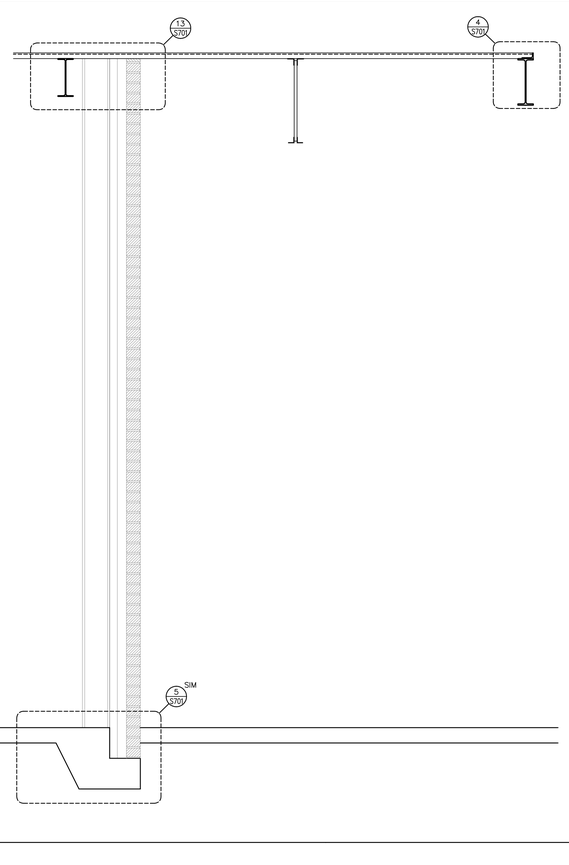

7
S110 SECTION SCALE: 3/4" = 1'-0

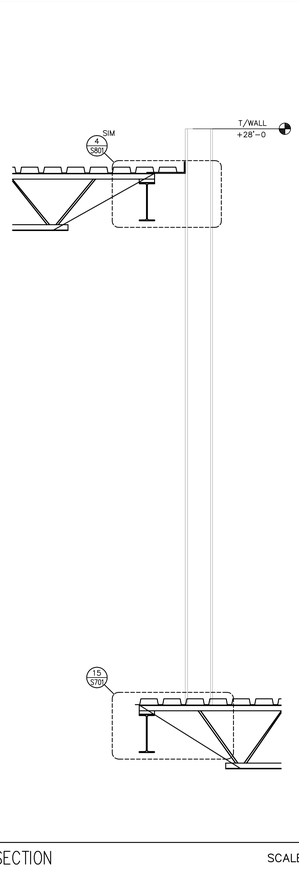

5
S110 SECTION SCALE: 3/4" = 1'-0

is design
ARCHITECTURE + INTERIORS
1111 Haynes Street, Suite 103
Raleigh, North Carolina 27604
t. 919.833.5400
www.isdesignpa.com

RED JOB No.18-E091

RED ENGINEERING & DESIGN
STRUCTURAL ENGINEERS
126 SALEM TOWNE CT
APEX, NORTH CAROLINA 27502
TEL. (919) 833-3405
REDENGINEERINGDESIGN.COM
C-3479

Project

THE HEALING PLACE OF NEW HANOVER COUNTY

1000 MEDICAL CENTER DRIVE
WILMINGTON, NORTH CAROLINA

Client

NEW HANOVER COUNTY, NORTH CAROLINA

All reproduction & intellectual property rights reserved © 2020

Key Plan

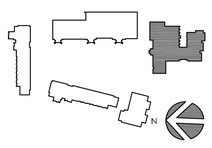

Professional Seals



08.25.20

No.	Description	Date
A	SCHEMATIC DESIGN	11/26/19
B	DESIGN DEVELOPMENT PACKAGE	
0	FOR CONSTRUCTION	08/25/20

Project Code: 16HTWILMNG

Sheet Title

ADMIN BUILDING SECTIONS

Original drawing is 42 x 30 Do not scale contents of this drawing

Sheet Number

S-110

12/2/2020 8:48 AM Z:\Red Engineering\2018\18-E091 Healing Place - Wilmington, is design\2-Design Development\CAD\Structural\18-E091 Healing Transitions.dwg

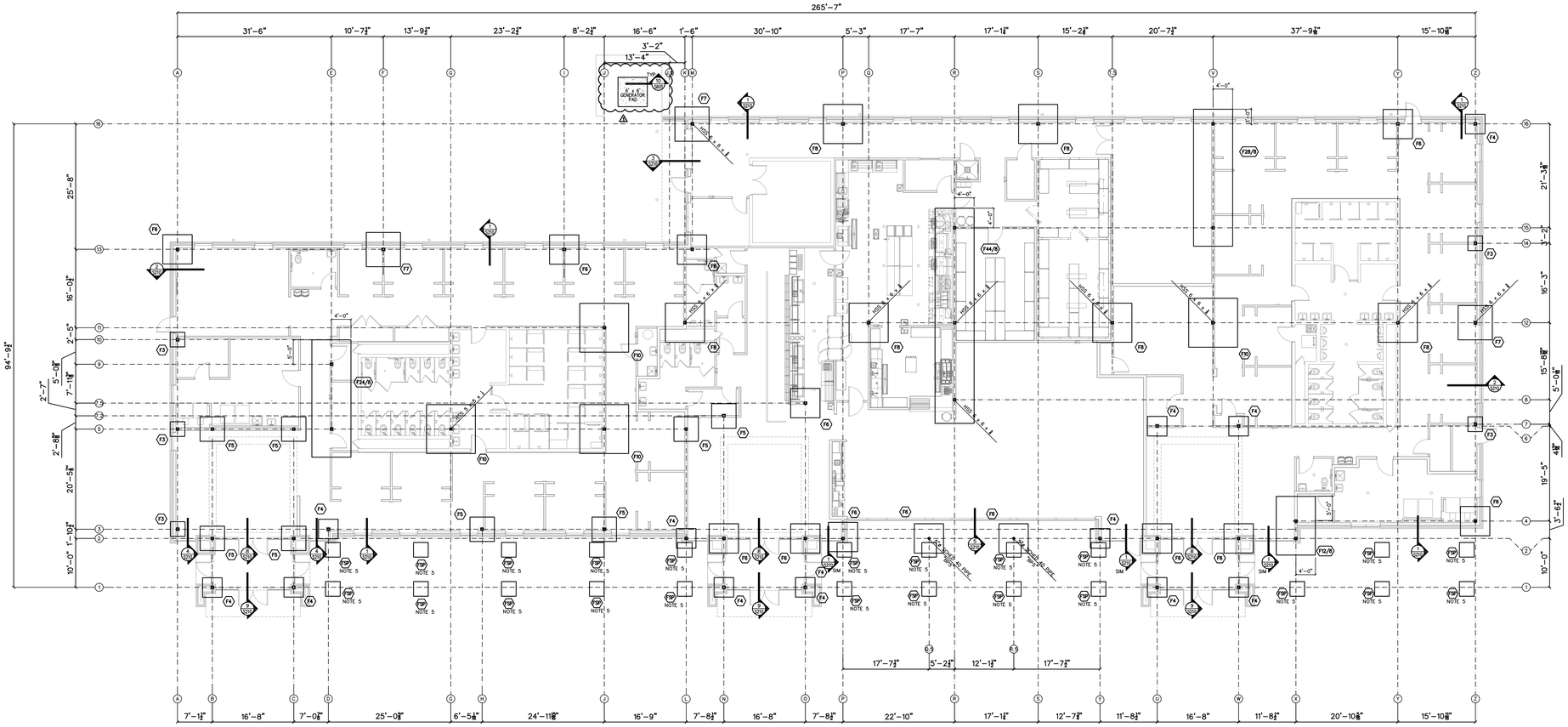
265'-7"
31'-6"
10'-7½"
13'-9½"
23'-2½"
8'-2½"
16'-6"
1'-6"
30'-10"
5'-3"
17'-7"
17'-1¼"
15'-2½"
20'-7½"
37'-9⅜"
15'-10⅜"
3'-2"
13'-4"
94'-9½"
25'-8"
16'-0"
2'-5"
5'-0"
7'-1⅛"
2'-7"
2'-8⅜"
20'-5⅜"
1'-10⅛"
10'-0"
21'-3⅜"
3'-2"
16'-3"
15'-8⅜"
5'-0⅜"
4⅜"
19'-5"
3'-6½"
10'-0"
4'-0"
5'-0"
F28/9
F44/9
F24/9
F10/9
F7
F3
F4
F5
F6
F8
F9
F10
F11
F12
F13
F14
F15
F16
F17
F18
F19
F20
F21
F22
F23
F24
F25
F26
F27
F28
F29
F30
F31
F32
F33
F34
F35
F36
F37
F38
F39
F40
F41
F42
F43
F44
F45
F46
F47

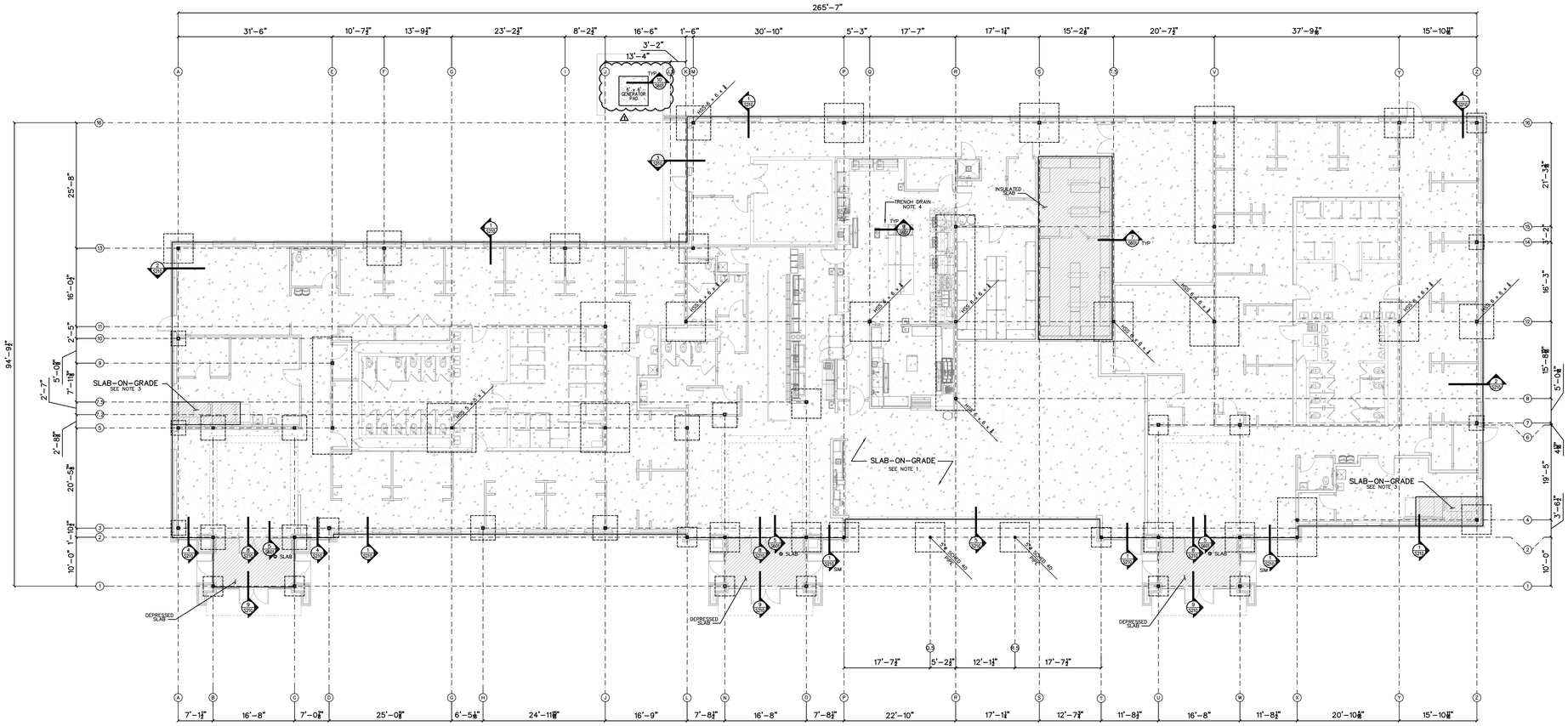

NOTES:
1.) FLOOR SLAB ON GRADE IS 4" NORMAL WEIGHT CONCRETE, 3000psi 28-DAY COMPRESSIVE STRENGTH, WITH 6x6-W2.1xW2.1 WELDED WIRE FABRIC ON A 6" POROUS GRAVEL AND 10MIL POLY VAPER BARRIER (UNO).
2.) CONTRACTOR SHALL VERIFY AND COORDINATE THE LOCATION, SIZE, TYPE AND DIRECTION OF ALL THICKENED SLABS, PADS, DEPRESSIONS, RECESSED SLABS, BOLTS, SLEEVES, ANCHORS, INSERTS, OPENINGS, ETC. TO BE SET OR CAST IN CONCRETE, PRIOR TO CONCRETE PLACEMENT.
3.) FLOOR SLAB ON GRADE IS 6" NORMAL WEIGHT CONCRETE, 3000psi 28-DAY COMPRESSIVE STRENGTH, WITH 6x6-W2.1xW2.1 WELDED WIRE FABRIC ON A 6" POROUS GRAVEL AND 10MIL POLY VAPER BARRIER (UNO).
4.) COORDINATE TRENCH DRAIN LOCATIONS w/ PLUMBING PLANS.
5.) SEE SHEET S701 FOR TYPICAL SLAB DETAILS.

1
S202 SLAB-ON-GRADE PLAN
SCALE: 3/32" = 1'-0

X SXXX NOT USED SCALE:
X SXXX NOT USED SCALE:
X SXXX NOT USED SCALE:
X SXXX NOT USED SCALE:
X SXXX NOT USED SCALE:

12/2/2020 8:48 AM Z:\Red Engineering\2018\18-E091 Heading Place - Wilmington, Is design\2-Design Development\CAD\Structural\18-E091 Heading Transitions.dwg

is design
ARCHITECTURE + INTERIORS
1111 Haynes Street, Suite 103
Raleigh, North Carolina 27604
t. 919.833.5400
www.isdesignpa.com

RED JOB No.18-E091

RED ENGINEERING & DESIGN
STRUCTURAL ENGINEERS
126 SALEM TOWNE CT
APEX, NORTH CAROLINA 27502
TEL. (919) 833-3405
REDENGINEERINGDESIGN.COM
C-3479

Project
THE HEALING PLACE OF NEW HANOVER COUNTY

1000 MEDICAL CENTER DRIVE
WILMINGTON, NORTH CAROLINA

Client
NEW HANOVER COUNTY, NORTH CAROLINA

All reproduction & intellectual property rights reserved © 2020

Key Plan

Professional Seals
NORTH CAROLINA PROFESSIONAL SEAL 31434 ENGINEER BRYAN N MOSKOW
12.02.20

No.	Description	Date
A	SCHEMATIC DESIGN	11/26/19
B	DESIGN DEVELOPMENT PACKAGE	
0	FOR CONSTRUCTION	08/25/20
1	MCD #1	12/02/20

Project Code: 16HTWILMING

Sheet Title
DINING/SHELTER/STORAGE SLAB-ON-GRADE PLAN

Original drawing is 42 x 30 Do not scale contents of this drawing

Sheet Number
S-202

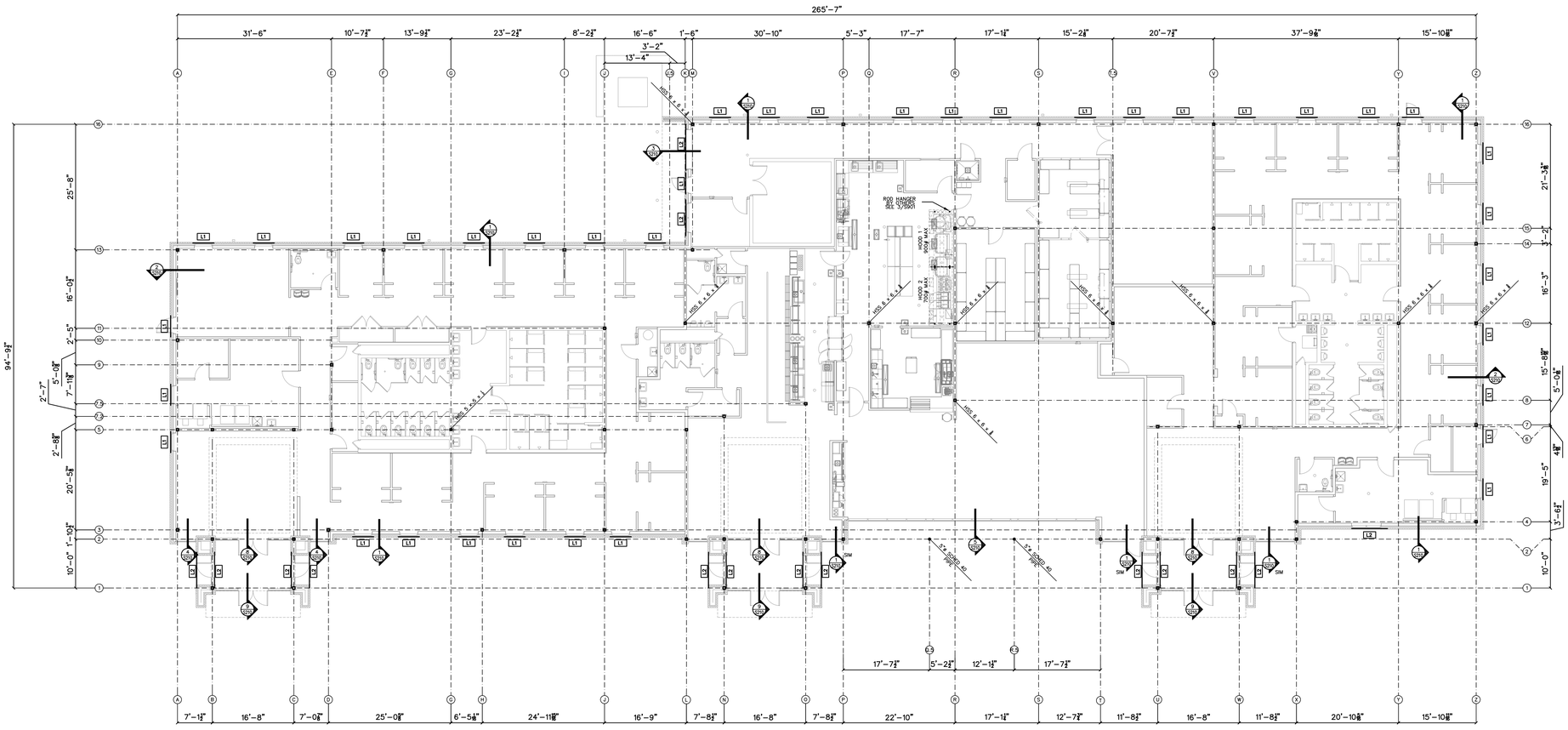

NOTES:
1.) LX DENOTES LOOSE LINTEL TYPE. SEE SCHEDULE ON S001.

1
S203 LINTEL PLAN SCALE: 3/32" = 1'-0

X
SXXX NOT USED SCALE:

X
SXXX NOT USED SCALE:

X
SXXX NOT USED SCALE:

X
SXXX NOT USED SCALE:

X
SXXX NOT USED SCALE:

12/2/2020 8:48 AM Z:\Red Engineering\2018\18-E091 Healing Place - Wilmington, is design\2-Design Development\CAD\Structural\18-E091 Healing Transitions.dwg

is design
ARCHITECTURE + INTERIORS
1111 Haynes Street, Suite 103
Raleigh, North Carolina 27604
t. 919.833.5400
www.isdesignpa.com

RED JOB No.18-E091
RED ENGINEERING & DESIGN
STRUCTURAL ENGINEERS
126 SALEM TOWNE CT
APEX, NORTH CAROLINA 27502
TEL. (919) 833-3486
REDENGINEERINGDESIGN.COM
C-3479

Project
THE HEALING PLACE OF NEW HANOVER COUNTY

1000 MEDICAL CENTER DRIVE
WILMINGTON, NORTH CAROLINA

Client
NEW HANOVER COUNTY, NORTH CAROLINA

All reproduction & intellectual property rights reserved © 2020

Key Plan

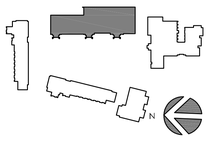

Professional Seals



No.	Description	Date
A	SCHEMATIC DESIGN	11/26/19
B	DESIGN DEVELOPMENT PACKAGE	
0	FOR CONSTRUCTION	08/25/20

Project Code: 16HTWILMING

Sheet Title
DINING/SHELTER/STORAGE BUILDING LINTEL PLAN

Original drawing is 42 x 30 Do not scale contents of this drawing

Sheet Number
S-203

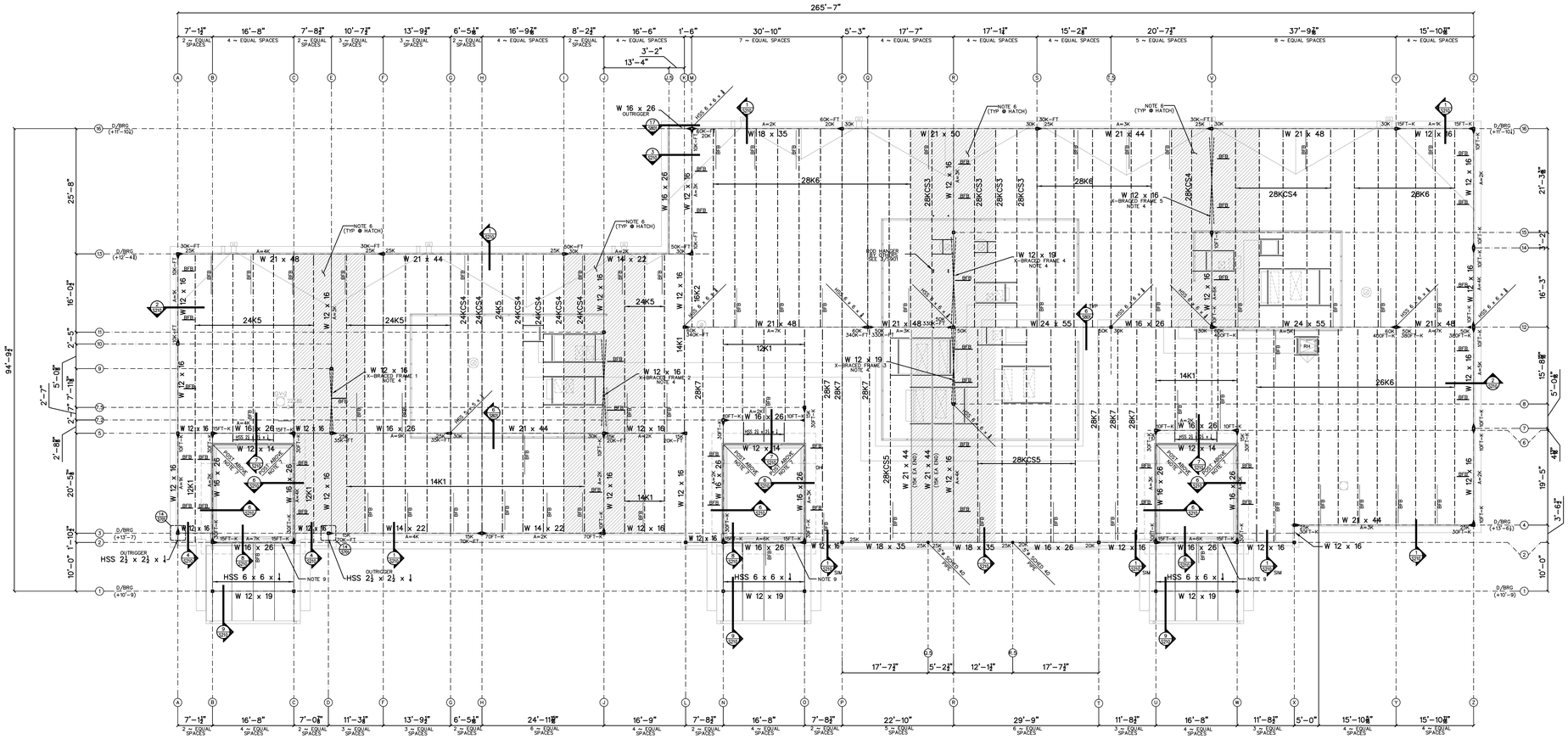

NOTES:
1.) ALL COLUMNS TO BE HSS 6 x 6 x ¼ U.N.O.
2.) BFB = L 3 x 3 x ¼ BOTTOM FLANGE BRACE.
3.) ▶ INDICATES MOMENT CONNECTION.
4.) ALL X-BRACING TO BE HSS 6 x 6 x ¼ U.N.O.
5.) ROOF DECK TO BE VULCRAFT 1.5B/20. SEE DETAIL 7/S801 (DINING AREA 1) FOR TYPICAL ATTACHMENT.
6.) SEE DETAIL 7/S801 (DINING AREA 2) FOR ROOF DECK ATTACHMENT OVER INDICATED (HATCHED) AREAS ON PLAN.
7.) SEE DETAIL 2/S801 FOR POST ABOVE ATTACHMENT TO BEAM BELOW.
8.) LOADS SHOWN AS "A=XXK" DENOTE AXIAL LOADS.
9.) TOP OF STEEL TO BE SET @ 1'-3 A.F.F., INDICATED BEAMS
10.) SEE SHEET S901 FOR TYPICAL RTU SUPPORT/ROOF SCREEN DETAILS.

1 S204 LOW ROOF PLAN — SCALE: 3/32" = 1'-0

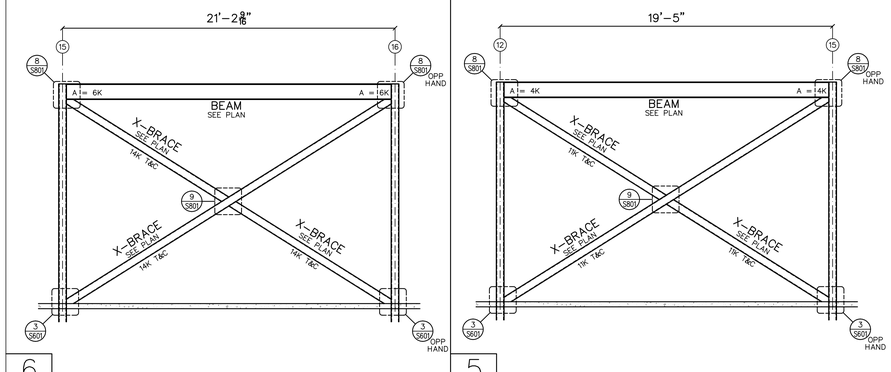

6 S204 X-FRAME 5 — SCALE: 1" = 1'-0

5 S204 X-FRAME 4 — SCALE: 1" = 1'-0

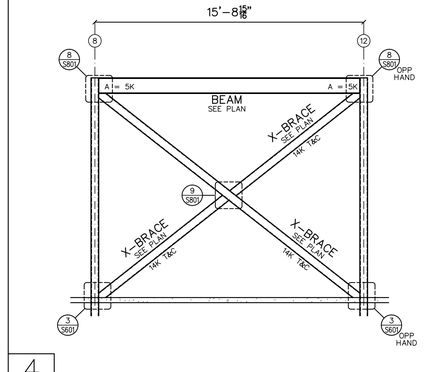

4 S204 X-FRAME 3 — SCALE: 1" = 1'-0

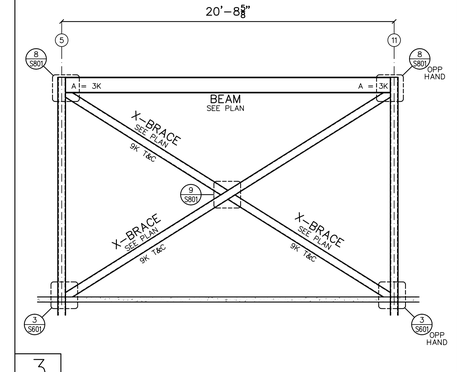

3 S204 X-FRAME 2 — SCALE: 1" = 1'-0

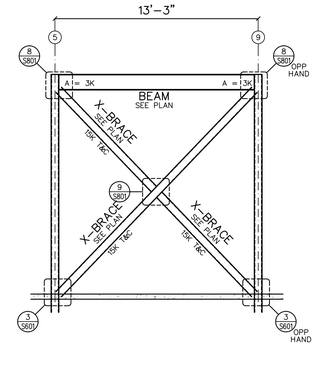

2 S204 X-FRAME 1 — SCALE: 1" = 1'-0

isdesign
ARCHITECTURE + INTERIORS
1111 Haynes Street, Suite 103
Raleigh, North Carolina 27604
t. 919.833.5400
www.isdesignpa.com

RED JOB No.18-E091

RED ENGINEERING & DESIGN
STRUCTURAL ENGINEERS
126 SALEM TOWNE CT
APEX, NORTH CAROLINA 27502
TEL. (919) 833-3486
REDENGINEERINGDESIGN.COM
C-3479

Project

THE HEALING PLACE OF NEW HANOVER COUNTY

1000 MEDICAL CENTER DRIVE
WILMINGTON, NORTH CAROLINA

Client

NEW HANOVER COUNTY, NORTH CAROLINA

All reproduction & intellectual property rights reserved © 2020

Key Plan

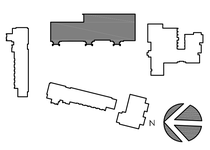

Professional Seals

NORTH CAROLINA PROFESSIONAL SEAL 21434 ENGINEER BRIAN MOSKOW
08.25.20

No.	Description	Date
A	SCHEMATIC DESIGN	11/26/19
B	DESIGN DEVELOPMENT PACKAGE	
0	FOR CONSTRUCTION	08/25/20

Project Code: 16HTWILMNG

Sheet Title

DINING/SHELTER/STORAGE BUILDING LOW ROOF PLAN

Original drawing is 42 x 30 Do not scale contents of this drawing

Sheet Number

S-204

12/2/2020 8:49 AM Z:\Red Engineering\2018\18-E091 Healing Place - Wilmington, Is design\2-Design Development\CAD\Structural\18-E091 Healing Transitions.dwg

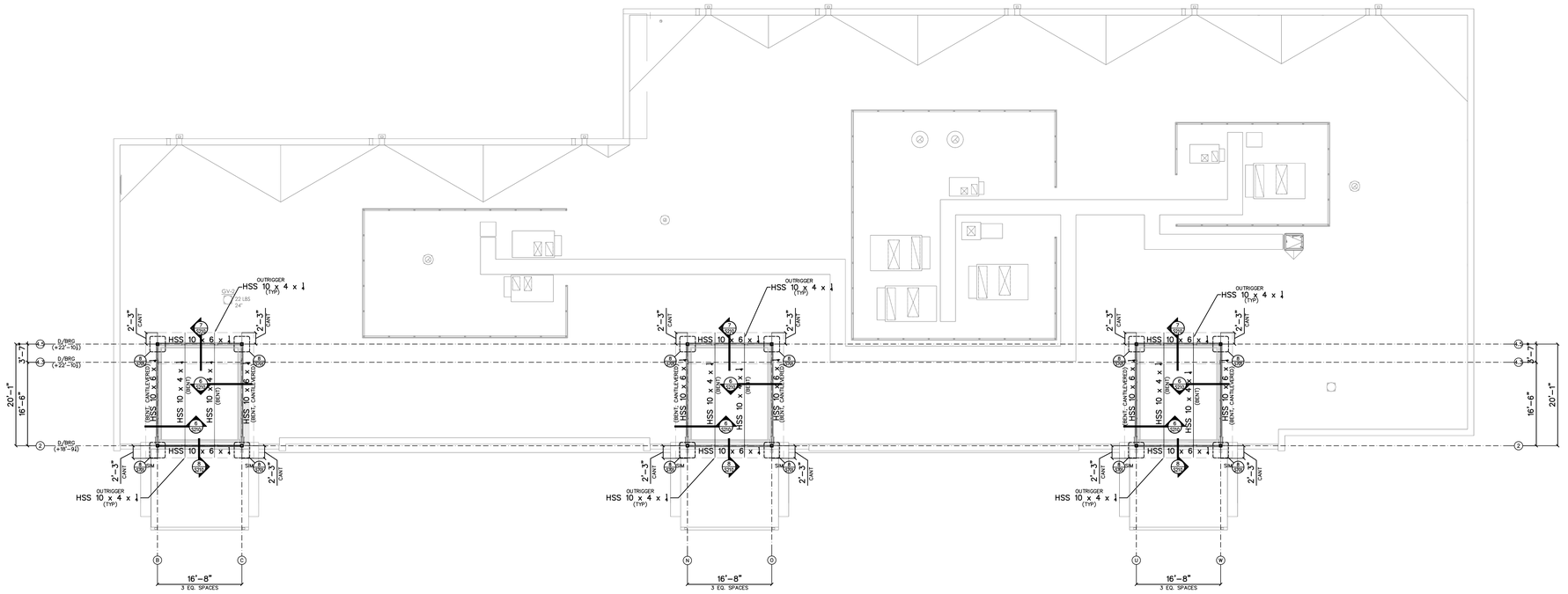

NOTES:
1.) ALL HSS BEAMS TO BE INSTALLED LONG LEG VERTICAL (LLV), U.N.O.
2.) ALL COLUMNS TO BE HSS 6 x 6 x ½ TYP, U.N.O.
3.) ROOF DECK TO BE VULCRAFT 1.5B/20. SEE DETAIL 7/S801 (DINING AREA 1) FOR TYPICAL ATTACHMENT.

1
S205 HIGH ROOF PLAN SCALE: 3/32" = 1'-0

X
SXXX NOT USED SCALE:

X
SXXX NOT USED SCALE:

X
SXXX NOT USED SCALE:

X
SXXX NOT USED SCALE:

X
SXXX NOT USED SCALE:

12/2/2020 8:49 AM Z:\Red Engineering\2018\18-E091 Healing Place - Wilmington, is design\2-Design Development\CAD\Structural\18-E091 Healing Transitions.dwg

is design
ARCHITECTURE + INTERIORS
1111 Haynes Street, Suite 103
Raleigh, North Carolina 27604
t. 919.833.5400
www.isdesignpa.com

RED JOB No.18-E091

RED ENGINEERING & DESIGN
STRUCTURAL ENGINEERS
126 SALEM TOWNE CT
APEX, NORTH CAROLINA 27502
TEL. (919) 833-3405
REDENGINEERINGDESIGN.COM
C-3479

Project

THE HEALING PLACE OF NEW HANOVER COUNTY

1000 MEDICAL CENTER DRIVE
WILMINGTON, NORTH CAROLINA

Client

NEW HANOVER COUNTY, NORTH CAROLINA

All reproduction & intellectual property rights reserved © 2020

Key Plan

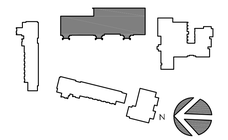

Professional Seals



08.25.20

No.	Description	Date
A	SCHEMATIC DESIGN	11/26/19
B	DESIGN DEVELOPMENT PACKAGE	
0	FOR CONSTRUCTION	08/25/20

Project Code: 16HTWILMING

Sheet Title

DINING/SHELTER/STORAGE BUILDING HIGH ROOF PLAN

Original drawing is 42 x 30 Do not scale contents of this drawing.

Sheet Number

S-205

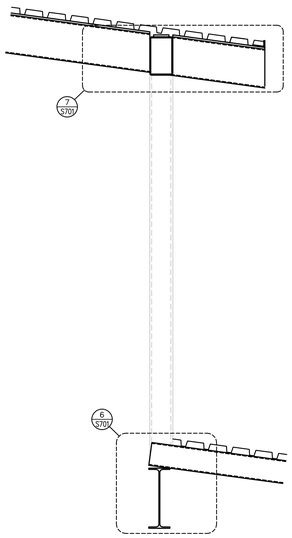

8
S210 SECTION SCALE: 3/4" = 1'-0

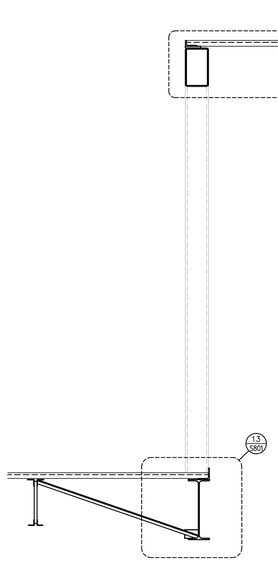

6
S210 SECTION SCALE: 3/4" = 1'-0

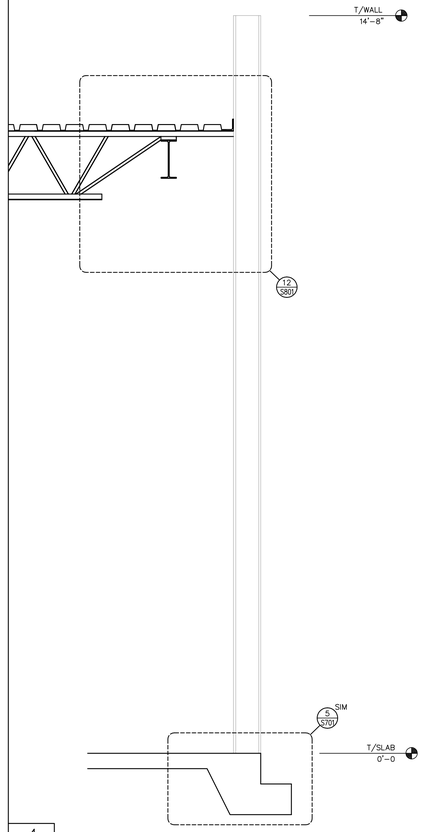

4
S210 SECTION SCALE: 3/4" = 1'-0

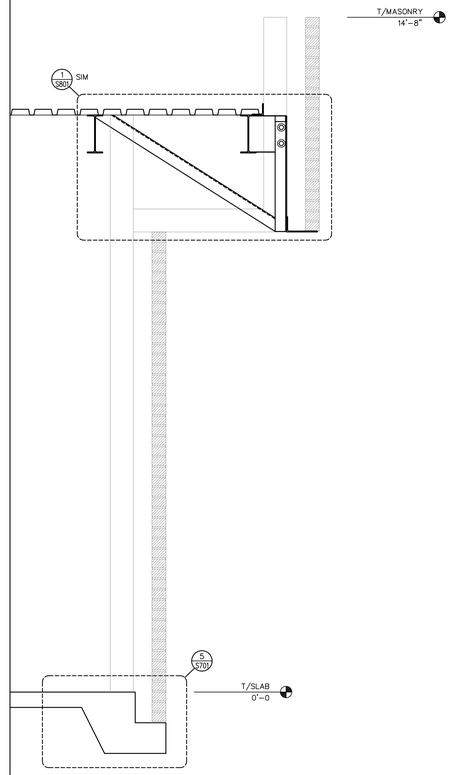

3
S210 SECTION SCALE: 3/4" = 1'-0

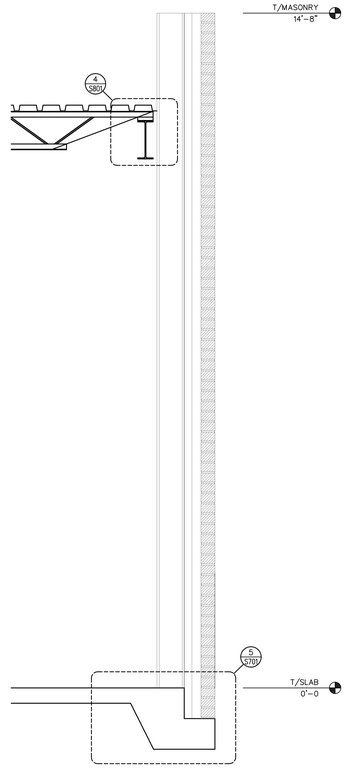

1
S210 SECTION SCALE: 3/4" = 1'-0

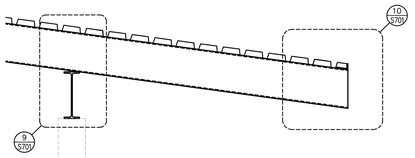

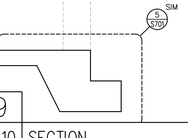

9
S210 SECTION SCALE: 3/4" = 1'-0

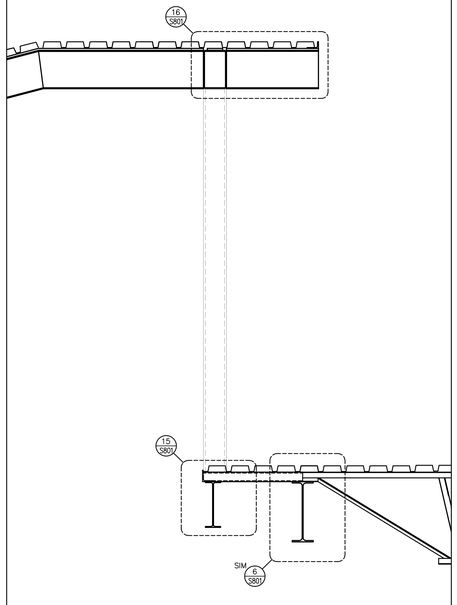

7
S210 SECTION SCALE: 3/4" = 1'-0

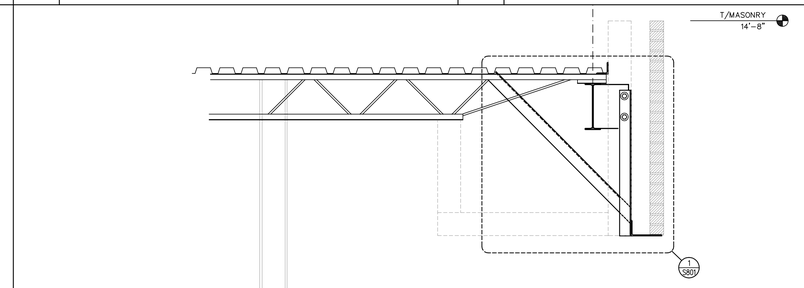

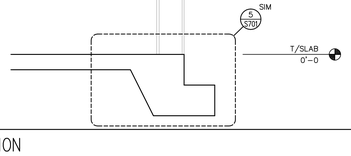

5
S210 SECTION SCALE: 3/4" = 1'-0

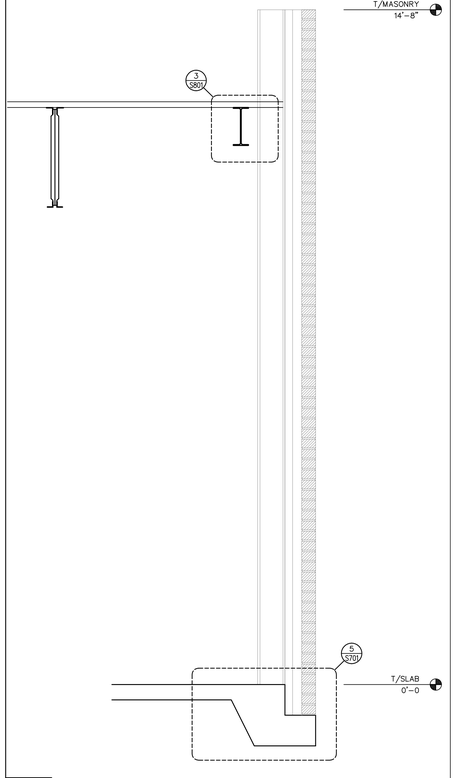

2
S210 SECTION SCALE: 3/4" = 1'-0

is design
ARCHITECTURE + INTERIORS
1111 Haynes Street, Suite 103
Raleigh, North Carolina 27604
t. 919.833.5400
www.isdesignpa.com

RED JOB No.18-E091
RED ENGINEERING & DESIGN
STRUCTURAL ENGINEERS
126 SALEM TOWNE CT
APEX, NORTH CAROLINA 27502
TEL. (919) 833-3405
REDENGINEERINGDESIGN.COM
C-3479

Project

THE HEALING PLACE OF NEW HANOVER COUNTY

1000 MEDICAL CENTER DRIVE
WILMINGTON, NORTH CAROLINA

Client

NEW HANOVER COUNTY, NORTH CAROLINA

All reproduction & intellectual property rights reserved © 2020

Key Plan

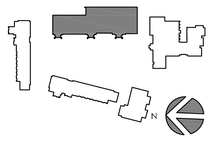

Professional Seals



No.	Description	Date
A	SCHEMATIC DESIGN	11/26/19
B	DESIGN DEVELOPMENT PACKAGE	
0	FOR CONSTRUCTION	08/25/20

Project Code: 16HTWILMING

Sheet Title

DINING/SHELTER/STORAGE BUILDING SECTIONS

Original drawing is 42 x 30 Do not scale contents of this drawing

Sheet Number

S-210

12/2/2020 8:49 AM Z:\Red Engineering\2018\18-E091 Healing Place - Wilmington, is design\2-Design Development\CAD\Structural\18-E091 Healing Transitions.dwg

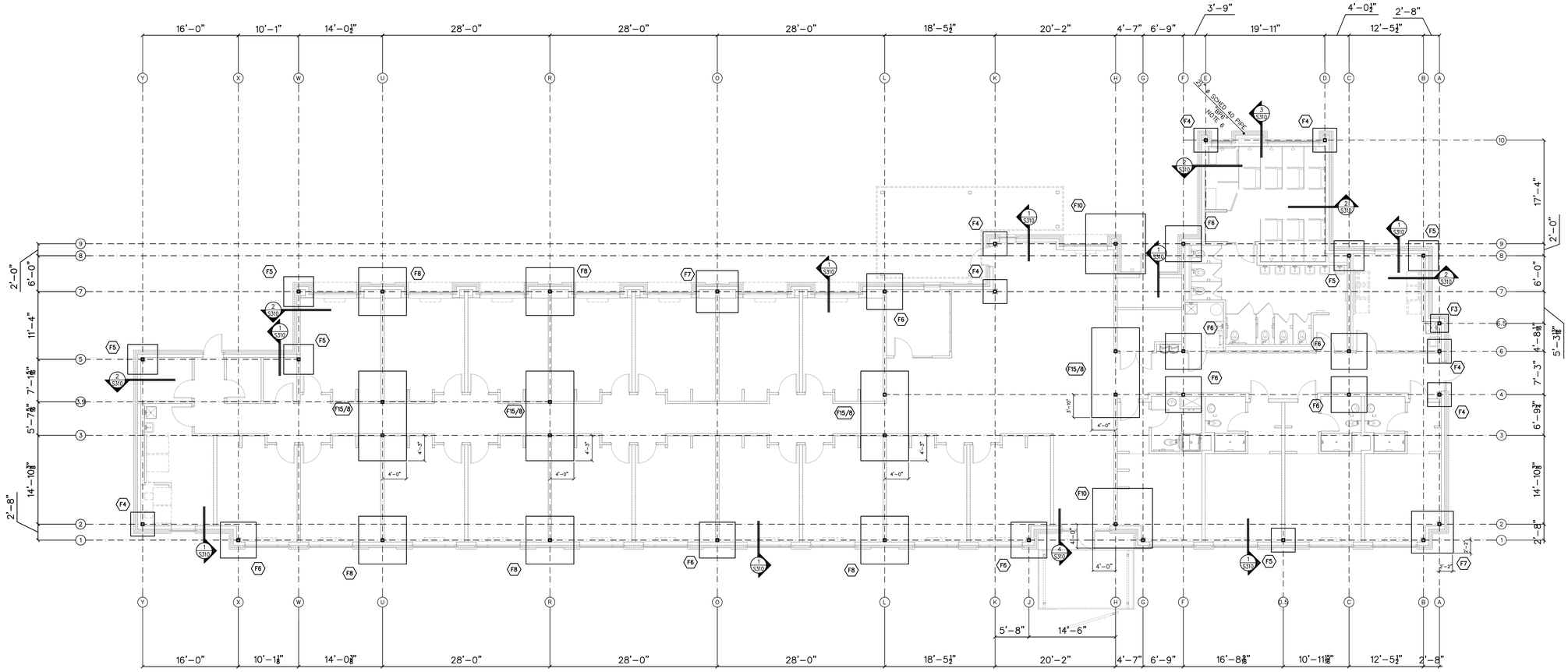

NOTES:
1.) ALL COLUMNS TO BE HSS 6 x 6 x ½ U.N.O. SEE DETAIL 1/S601 FOR TYPICAL COLUMN BEARING.
2.) T/FTG ELEV = (–1'–4) BELOW FIN. FLR.
3.) CONCRETE FOR FTGS TO BE 3000psi 28–DAY COMPRESSIVE STRENGTH.
4.) FX DENOTES FOOTING TYPE. SEE SCHEDULE ON S001.
5.) ALL BASE PLATES TO BE TYPE "BP1" TYP UNO. SEE DETAIL 2/S601 FOR ADDITIONAL INFORMATION.
6.) COLUMN IS NON–STRUCTURAL – REFER TO ARCHITECTURAL PLANS FOR LOCATION.

1

S301 FOUNDATION PLAN SCALE: ⅛" = 1'–0

X

SXXX NOT USED SCALE:

X

SXXX NOT USED SCALE:

X

SXXX NOT USED SCALE:

X

SXXX NOT USED SCALE:

X

SXXX NOT USED SCALE:

12/2/2020 8:49 AM Z:\Red Engineering\2018\18-E091 Healing Place - Wilmington, is design\2-Design Development\CAD\Structural\18-E091 Healing Transitions.dwg

is design
ARCHITECTURE + INTERIORS
1111 Haynes Street, Suite 103
Raleigh, North Carolina 27604
t. 919.833.5400
www.isdesignpa.com

RED JOB No.18–E091

RED ENGINEERING & DESIGN
STRUCTURAL ENGINEERS
C-3479
126 SALEM TOWNE CT
APEX, NORTH CAROLINA 27502
TEL. (919) 833-3405
REDENGINEERINGDESIGN.COM

Project

THE HEALING PLACE OF NEW HANOVER COUNTY

1000 MEDICAL CENTER DRIVE
WILMINGTON, NORTH CAROLINA

Client

NEW HANOVER COUNTY, NORTH CAROLINA

All reproduction & intellectual property rights reserved © 2020

Key Plan

Professional Seals

NORTH CAROLINA PROFESSIONAL SEAL 041434 ENGINEER BRIAN M MOSKOW

08.25.20

No.	Description	Date
A	SCHEMATIC DESIGN	11/26/19
B	DESIGN DEVELOPMENT PACKAGE	
0	FOR CONSTRUCTION	08/25/20

Project Code: 16HTWILMING

Sheet Title

WOMEN'S RESIDENTIAL BUILDING FOUNDATION PLAN

Original drawing is 42 x 30 Do not scale contents of this drawing

Sheet Number

S-301

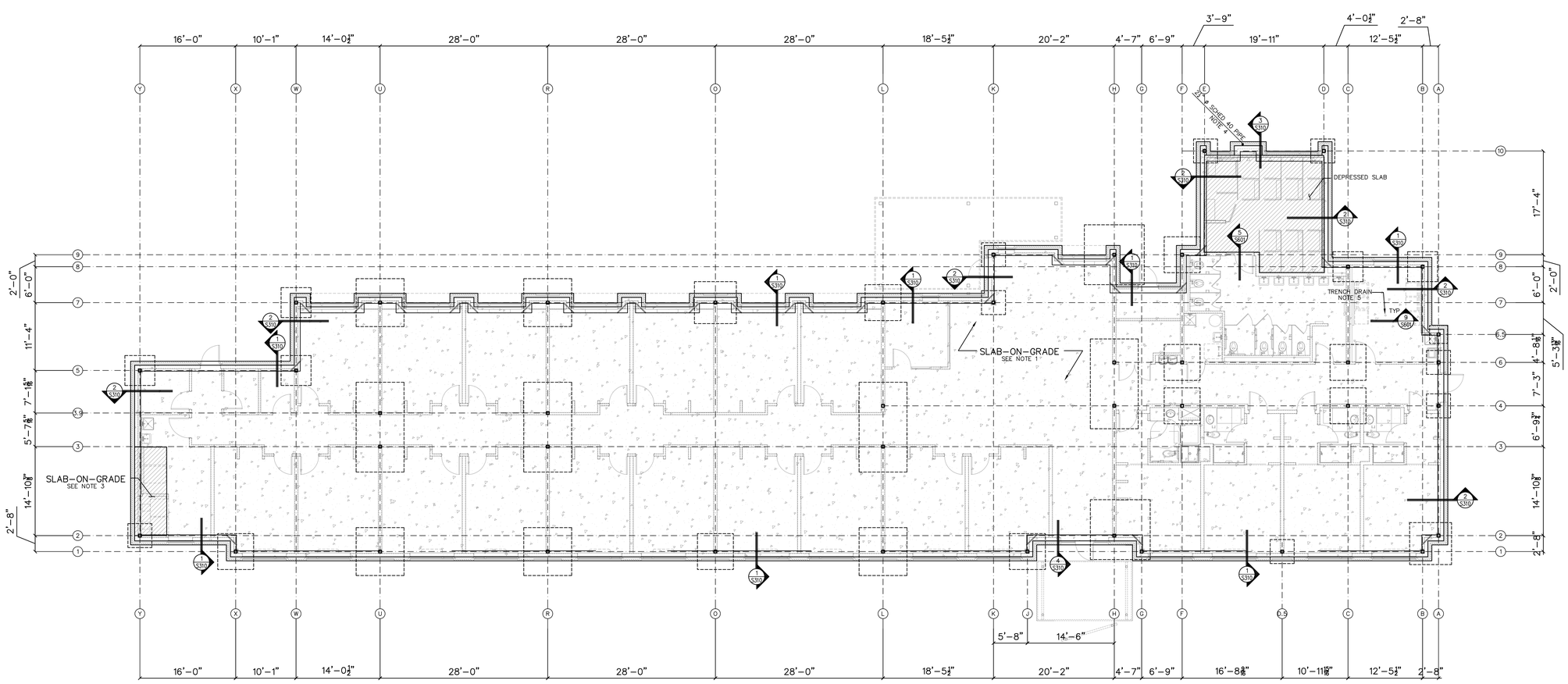

NOTES:
1.) FLOOR SLAB ON GRADE IS 4" NORMAL WEIGHT CONCRETE, 3000psi 28–DAY COMPRTESSIVE STRENGTH, WITH 6x6–W2.1xW2.1 WELDED WIRE FABRIC ON A 6" POROUS GRAVEL AND 10MIL POLY VAPER BARRIER (UNO).
2.) CONTRACTOR SHALL VERIFY AND COORDINATE THE LOCATION, SIZE, TYPE AND DIRECTION OF ALL THICKENED SLABS, PADS, DEPRESSIONS, RECESSED SLABS, BOLTS, SLEEVES, ANCHORS, INSERTS, OPENINGS, ETC. TO BE SET OR CAST IN CONCRETE, PRIOR TO CONCRETE PLACEMENT.
3.) FLOOR SLAB ON GRADE IS 6" NORMAL WEIGHT CONCRETE, 3000psi 28–DAY COMPRTESSIVE STRENGTH, WITH 6x6–W2.1xW2.1 WELDED WIRE FABRIC ON A 6" POROUS GRAVEL AND 10MIL POLY VAPER BARRIER.
4.) COLUMN IS NON–STRUCTURAL – REFER TO ARCHITECTURAL PLANS FOR LOCATION.
5.) COORDINATE TRENCH DRAIN LOCATIONS WITH PLUMBING DRAWINGS.
6.) SEE SHEET S701 FOR TYPICAL SLAB DETAILS.

1

S302 SLAB–ON–GRADE PLAN

SCALE: ⅛" = 1'–0

X	X	X
SXXX NOT USED SCALE:	SXXX NOT USED SCALE:	SXXX NOT USED SCALE:

X	X
SXXX NOT USED SCALE:	SXXX NOT USED SCALE:

is design
ARCHITECTURE + INTERIORS
1111 Haynes Street, Suite 103
Raleigh, North Carolina 27604
t. 919.833.5400
www.isdesignpa.com

RED JOB No.18–E091
RED ENGINEERING & DESIGN
STRUCTURAL ENGINEERS
126 SALEM TOWNE CT
APEX, NORTH CAROLINA 27502
TEL. (919) 833-3405
REDENGINEERINGDESIGN.COM
C-3479

Project

THE HEALING PLACE OF NEW HANOVER COUNTY

1000 MEDICAL CENTER DRIVE
WILMINGTON, NORTH CAROLINA

Client

NEW HANOVER COUNTY, NORTH CAROLINA

All reproduction & intellectual property rights reserved © 2020

Key Plan

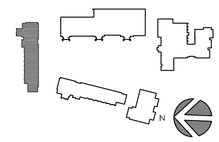

Professional Seals

NORTH CAROLINA PROFESSIONAL SEAL 21934 ENGINEER BRIAN MOSKINS
08.25.20

No.	Description	Date
A	SCHEMATIC DESIGN	11/26/19
B	DESIGN DEVELOPMENT PACKAGE	
0	FOR CONSTRUCTION	08/25/20

Project Code: 16HTWILMING

Sheet Title

WOMEN'S RESIDENTIAL BUILDING
SLAB-ON-GRADE PLAN

Original drawing is 42 x 30 Do not scale contents of this drawing.

Sheet Number

S-302

12/2/2020 8:49 AM Z:\Red Engineering\2018\18-E091 Healing Place - Wilmington, is design\2-Design Development\CAD\Structural\18-E091 Healing Transitions.dwg

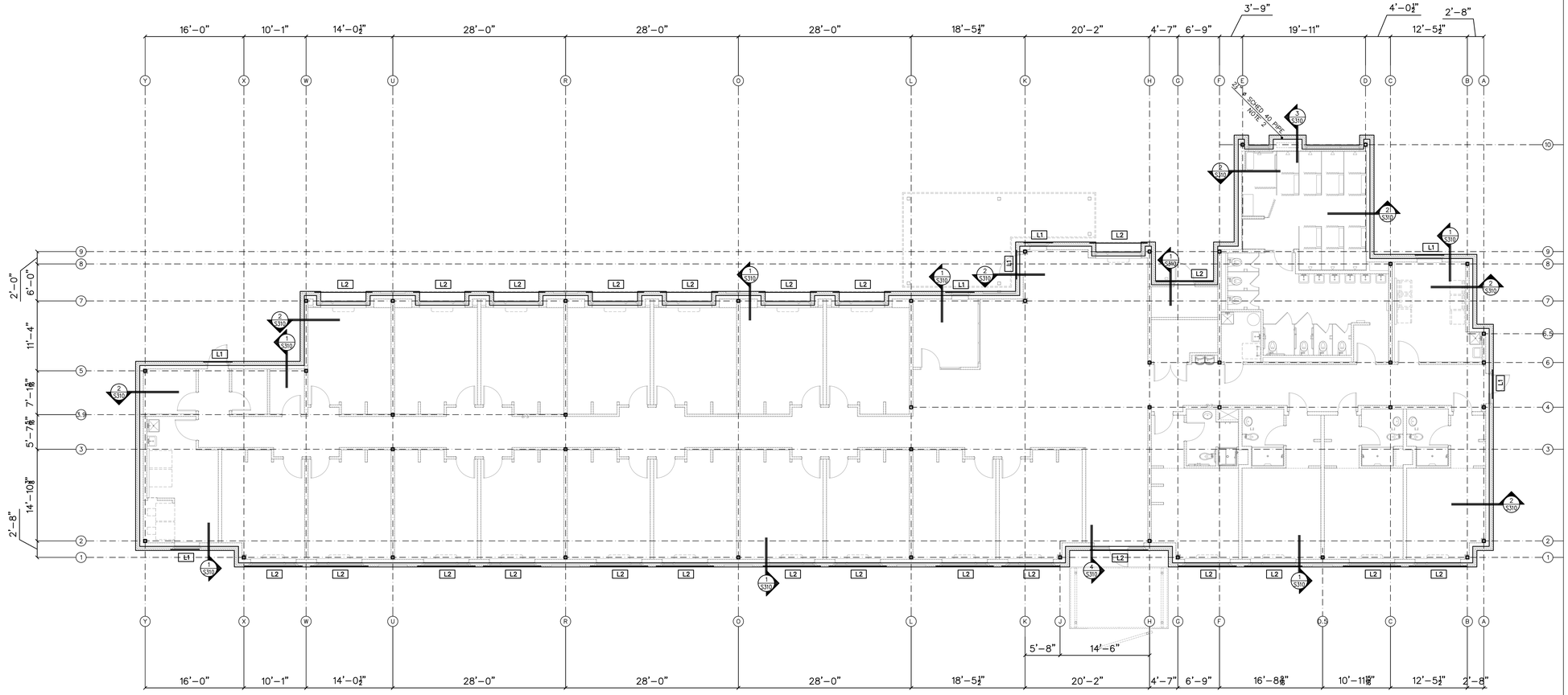

NOTES:
1.) LX DENOTES LINTEL TYPE. SEE SCHEDULE ON S001.
2.) COLUMN IS NON-STRUCTURAL - REFER TO ARCHITECTURAL PLANS FOR LOCATION.

1
S303 ROOF PLAN SCALE: ⅛" = 1'-0

X
SXXX NOT USED SCALE:

X
SXXX NOT USED SCALE:

X
SXXX NOT USED SCALE:

X
SXXX NOT USED SCALE:

X
SXXX NOT USED SCALE:

is design
ARCHITECTURE + INTERIORS
1111 Haynes Street, Suite 103
Raleigh, North Carolina 27604
t. 919.833.5400
www.isdesignpa.com

RED JOB No.18-E091

RED ENGINEERING & DESIGN
STRUCTURAL ENGINEERS
126 SALEM TOWNE CT
APEX, NORTH CAROLINA 27502
TEL. (919) 833-3486
REDENGINEERINGDESIGN.COM
C-3479

Project
THE HEALING PLACE OF NEW HANOVER COUNTY

1000 MEDICAL CENTER DRIVE
WILMINGTON, NORTH CAROLINA

Client
NEW HANOVER COUNTY, NORTH CAROLINA

All reproduction & intellectual property rights reserved © 2020

Key Plan

Professional Seals
NORTH CAROLINA PROFESSIONAL SEAL 037434 ENGINEER BRIAN MOSKOW
08.25.20

No.	Description	Date
A	SCHEMATIC DESIGN	11/26/19
B	DESIGN DEVELOPMENT PACKAGE	
0	FOR CONSTRUCTION	08/25/20

Project Code: 16HTWILMING

Sheet Title
WOMEN'S RESIDENTIAL BUILDING WALL PLAN

Original drawing is 42 x 30 Do not scale contents of this drawing

Sheet Number
S-303

12/2/2020 8:49 AM Z:\Red Engineering\2018\18-E091 Healing Place - Wilmington, is design\2-Design Development\CAD\Structural\18-E091 Healing Transitions.dwg

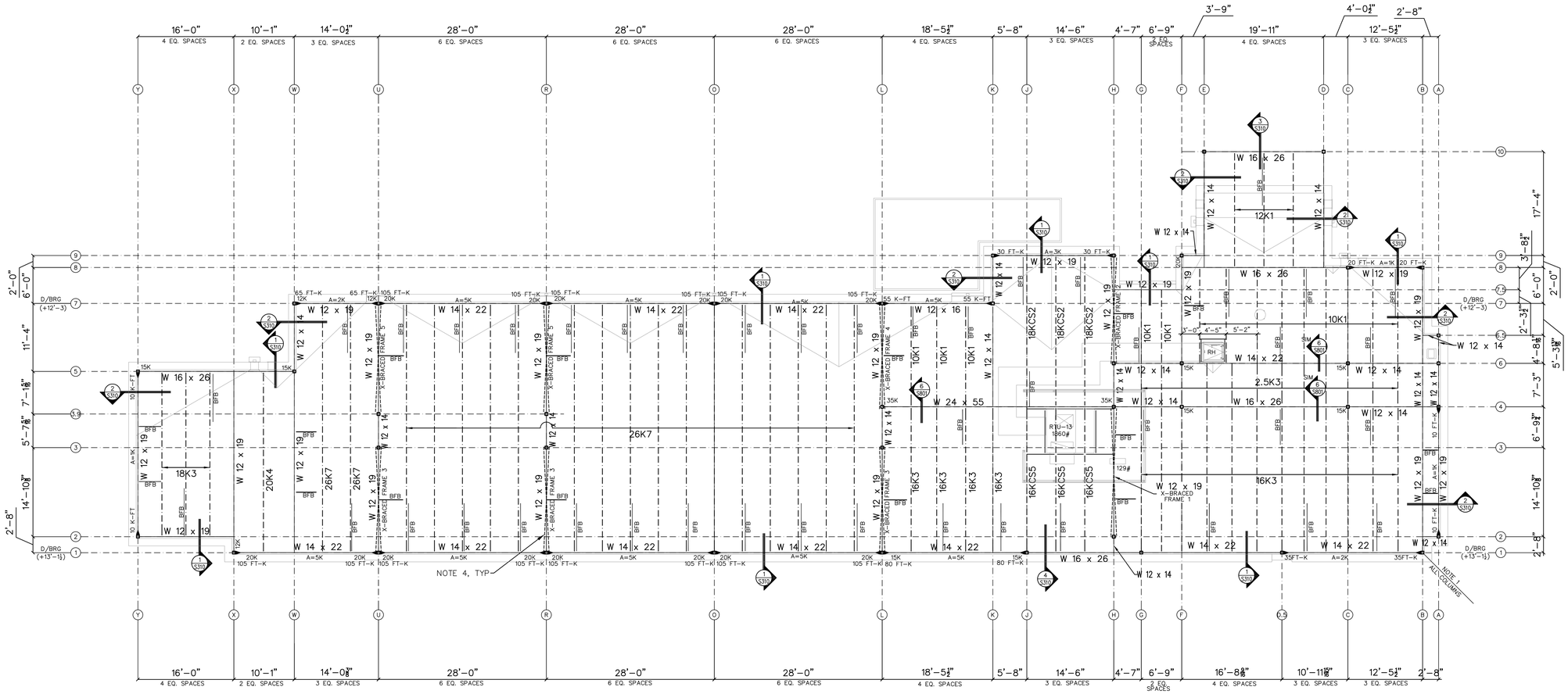

NOTES:
1.) ALL COLUMNS TO BE HSS 6 x 6 x ½ U.N.O.
2.) BFB = L 3 x 3 x ¼ BOTTOM FLANGE BRACE.
3.) ► INDICATES MOMENT CONNECTION.
4.) ALL X–BRACING TO BE HSS 6 x 6 x ¼ U.N.O.
5.) LOADS SHOWN AS "A=XXK" DENOTE AXIAL LOADS.
6.) REFER TO SHEET S304 FOR ALL BRACED FRAME ELEVATIONS.
7.) ROOF DECK TO BE VULCRAFT 1.5B/20. SEE DETAIL 5/S801.
8.) SEE SHEET S901 FOR TYPICAL RTU SUPPORT/ROOF SCREEN DETAILS.

1
S304 ROOF PLAN SCALE: ⅛" = 1'–0

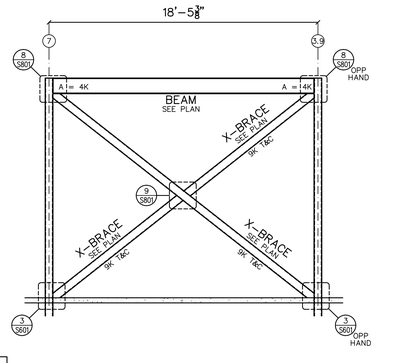

6
S304 X–FRAME 5 SCALE: ¼" = 1'–0

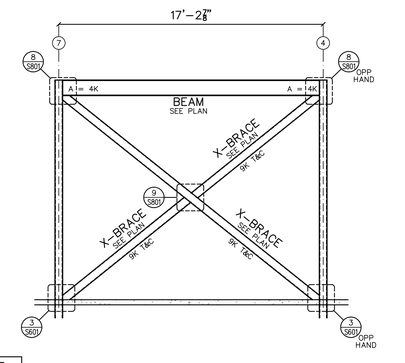

5
S304 X–FRAME 4 SCALE: ¼" = 1'–0

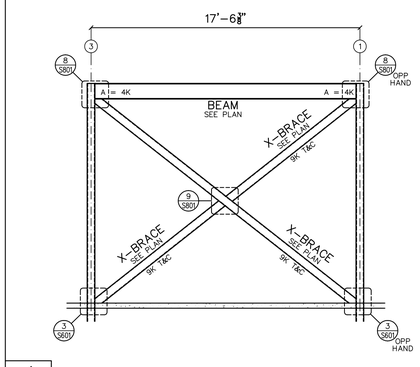

4
S304 X–FRAME 3 SCALE: ¼" = 1'–0

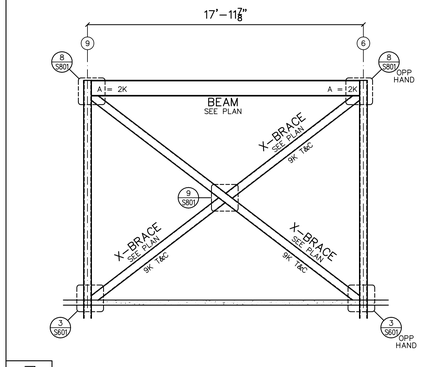

3
S304 X–FRAME 2 SCALE: ¼" = 1'–0

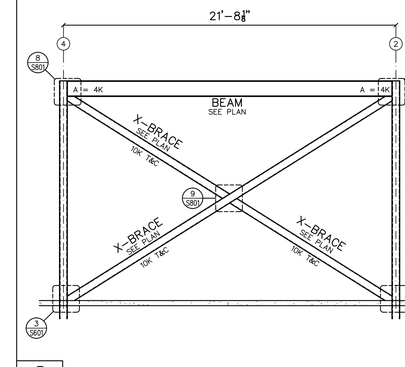

2
S304 X–FRAME 1 SCALE: ¼" = 1'–0

isdesign
ARCHITECTURE + INTERIORS
1111 Haynes Street, Suite 103
Raleigh, North Carolina 27604
t. 919.833.5400
www.isdesignpa.com

RED JOB No.18–E091
RED ENGINEERING & DESIGN
STRUCTURAL ENGINEERS
126 SALEM TOWNE CT.
APEX, NORTH CAROLINA 27502
TEL. (919) 833-3405
REDENGINEERINGDESIGN.COM
C-3479

Project
THE HEALING PLACE OF NEW HANOVER COUNTY

1000 MEDICAL CENTER DRIVE
WILMINGTON, NORTH CAROLINA

Client
NEW HANOVER COUNTY, NORTH CAROLINA

All reproduction & intellectual property rights reserved © 2020

Key Plan

Professional Seals
NORTH CAROLINA PROFESSIONAL SEAL 21434 ENGINEER BRIAN J. MOSKOW
08.25.20

No.	Description	Date
A	SCHEMATIC DESIGN	11/26/19
B	DESIGN DEVELOPMENT PACKAGE	
0	FOR CONSTRUCTION	08/25/20

Project Code: 16HTWILMING

Sheet Title
WOMEN'S RESIDENTIAL BUILDING ROOF PLAN

Original drawing is 42 x 30 Do not scale contents of this drawing.

Sheet Number
S-304

12/2/2020 8:49 AM Z:\Red Engineering\2018\18-E091 Healing Place - Wilmington, Is design\2-Design Development\CAD\Structural\18-E091 Healing Transitions.dwg

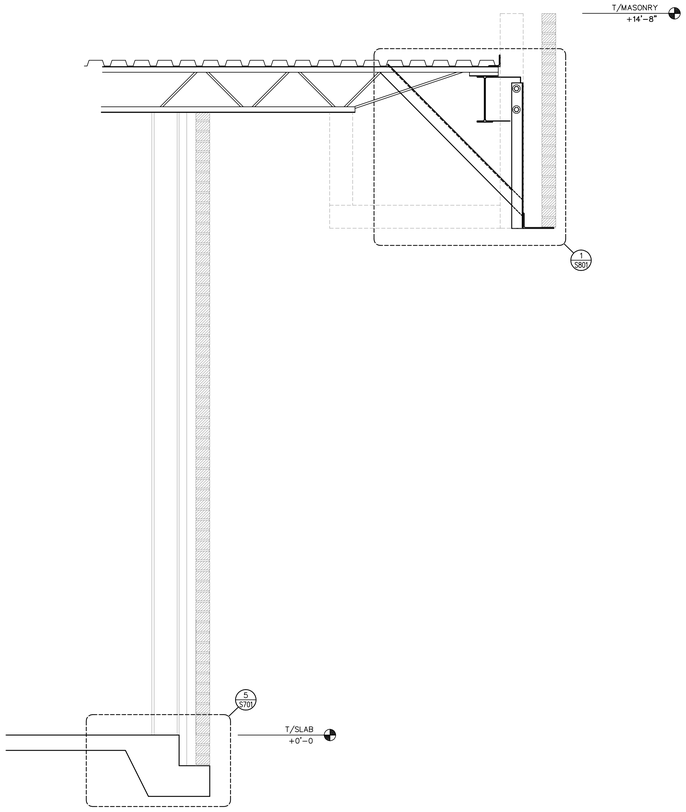

4

S310 | SECTION | SCALE: 3/4" = 1'-0

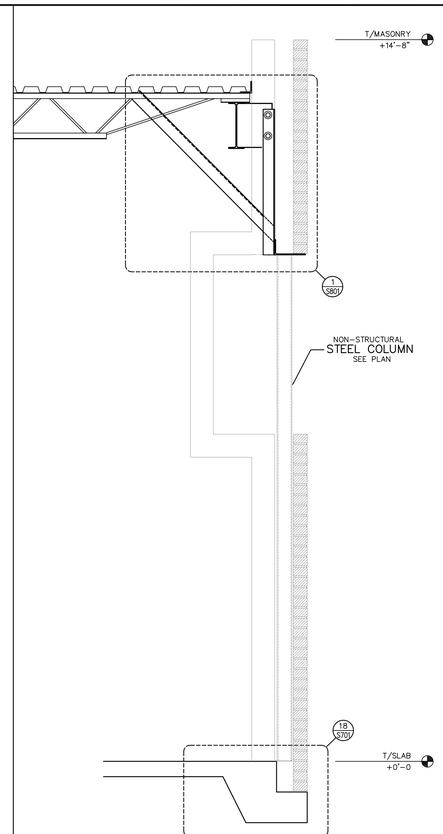

3

S310 | SECTION | SCALE: 3/4" = 1'-0

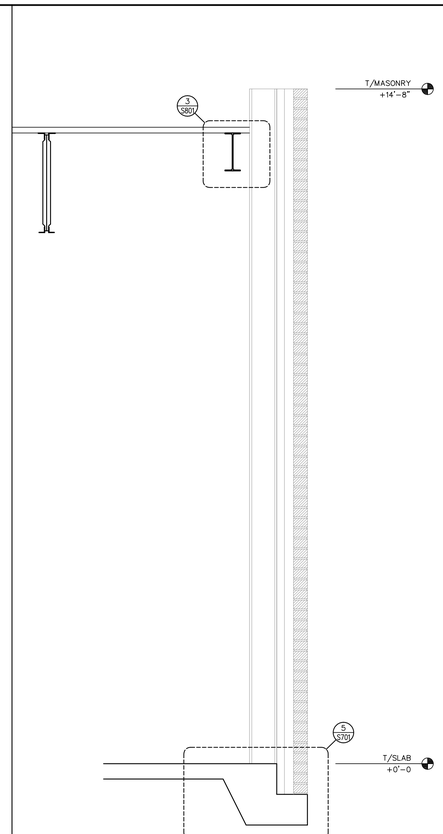

2

S310 | SECTION | SCALE: 3/4" = 1'-0

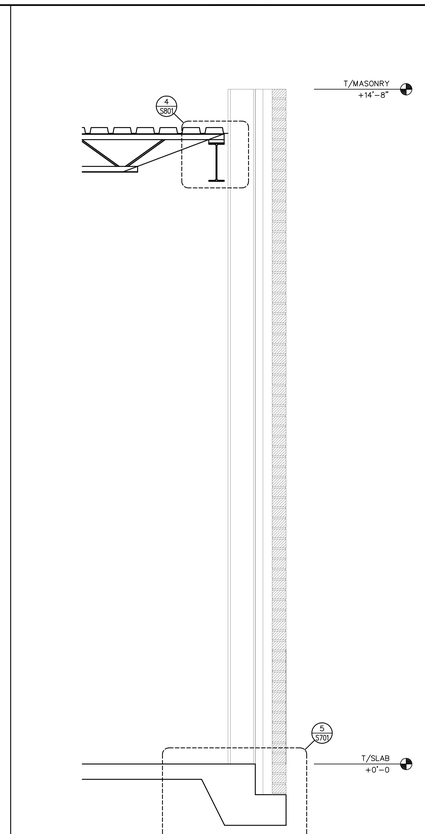

1

S310 | SECTION | SCALE: 3/4" = 1'-0

X

SXXX | NOT USED | SCALE:

X

SXXX | NOT USED | SCALE:

X

SXXX | NOT USED | SCALE:

X

SXXX | NOT USED | SCALE:

X

SXXX | NOT USED | SCALE:

12/2/2020 8:49 AM Z:\Red Engineering\2018\18-E091 Healing Place - Wilmington, is design\2-Design Development\CAD\Structural\18-E091 Healing Transitions.dwg

is design
ARCHITECTURE + INTERIORS
1111 Haynes Street, Suite 103
Raleigh, North Carolina 27604
t. 919.833.5400
www.isdesignpa.com

RED JOB No.18-E091

RED ENGINEERING & DESIGN
STRUCTURAL ENGINEERS
126 SALEM TOWNE CT.
APEX, NORTH CAROLINA 27502
TEL. (919) 833-3405
REDENGINEERINGDESIGN.COM
C-3479

Project

THE HEALING PLACE OF NEW HANOVER COUNTY

1000 MEDICAL CENTER DRIVE
WILMINGTON, NORTH CAROLINA

Client

NEW HANOVER COUNTY, NORTH CAROLINA

All reproduction & intellectual property rights reserved © 2020

Key Plan

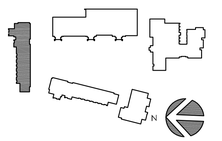

Professional Seals



08.25.20

No.	Description	Date
A	SCHEMATIC DESIGN	11/26/19
B	DESIGN DEVELOPMENT PACKAGE	
0	FOR CONSTRUCTION	08/25/20

Project Code: 16HTWILMING

Sheet Title

WOMEN'S/MEN'S RESIDENTIAL BUILDING SECTIONS

Original drawing is 42 x 30 Do not scale contents of this drawing

Sheet Number

S-310

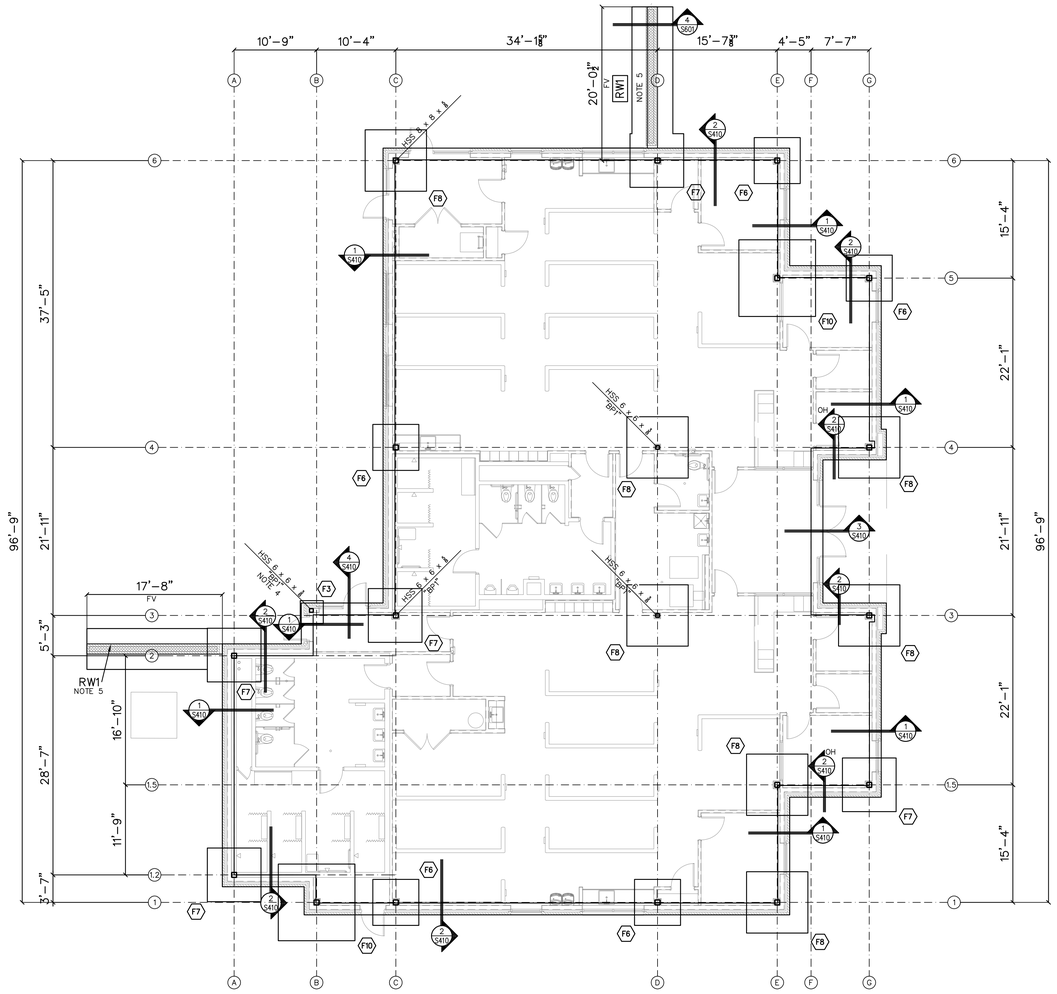

NOTES:
1.) ALL COLUMNS TO BE HSS 8 x 8 x 1/2 U.N.O. SEE DETAIL 1/S601 FOR TYPICAL COLUMN BEARING.
2.) T/FTG ELEV = (-1'-4) BELOW FIN. FLR.
3.) CONCRETE FOR FTGS TO BE 3000psi 28-DAY COMPRESSIVE STRENGTH.
4.) INDICATED COLUMN OFFSET FROM GRIDLINES (COLUMN CENTERLINE LOCATED 7 3/8" PLAN NORTH OF GRIDLINE 3 & 8 3/8" PLAN WEST OF GRIDLINE B).
5.) SEE DETAIL 4/S601 FOR SCREEN WALL REINFORCEMENT & FOOTING SIZE.
6.) FX DENOTES FOOTING SIZE, SEE SCHEDULE ON S001.
7.) ALL BASE PLATES TO BE TYPE "BP3" TYP UNO. SEE DETAIL 2/S601 FOR ADDITIONAL INFORMATION.

1
S401 FOUNDATION PLAN
SCALE: 1/8" = 1'-0

X
SXXX NOT USED SCALE:

X
SXXX NOT USED SCALE:

X
SXXX NOT USED SCALE:

X
SXXX NOT USED SCALE:

X
SXXX NOT USED SCALE:

is:design
ARCHITECTURE + INTERIORS
1111 Haynes Street, Suite 103
Raleigh, North Carolina 27604
t. 919.833.5400
www.isdesignpa.com

RED JOB No.18-E091

RED ENGINEERING & DESIGN
STRUCTURAL ENGINEERS
126 SALEM TOWNE CT
APEX, NORTH CAROLINA 27502
TEL. (919) 833-3486
REDENGINEERINGDESIGN.COM
C-3479

Project

THE HEALING PLACE OF NEW HANOVER COUNTY

1000 MEDICAL CENTER DRIVE
WILMINGTON, NORTH CAROLINA

Client

NEW HANOVER COUNTY, NORTH CAROLINA

All reproduction & intellectual property rights reserved © 2020

Key Plan

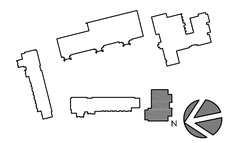

Professional Seals

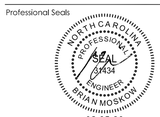

08.25.20

No.	Description	Date
A	SCHEMATIC DESIGN	11/26/19
B	DESIGN DEVELOPMENT PACKAGE	
0	FOR CONSTRUCTION	08/25/20

Project Code: 16HTWILMING

Sheet Title

DETOX BUILDING FOUNDATION PLAN

Original drawing is 42 x 30 Do not scale contents of this drawing

Sheet Number

S-401

12/2/2020 11:40 AM Z:\Red Engineering\2018\18-E091 Healing Place - Wilmington, is design\2-Design Development\CAD\Structural\18-E091 Healing Transitions.dwg

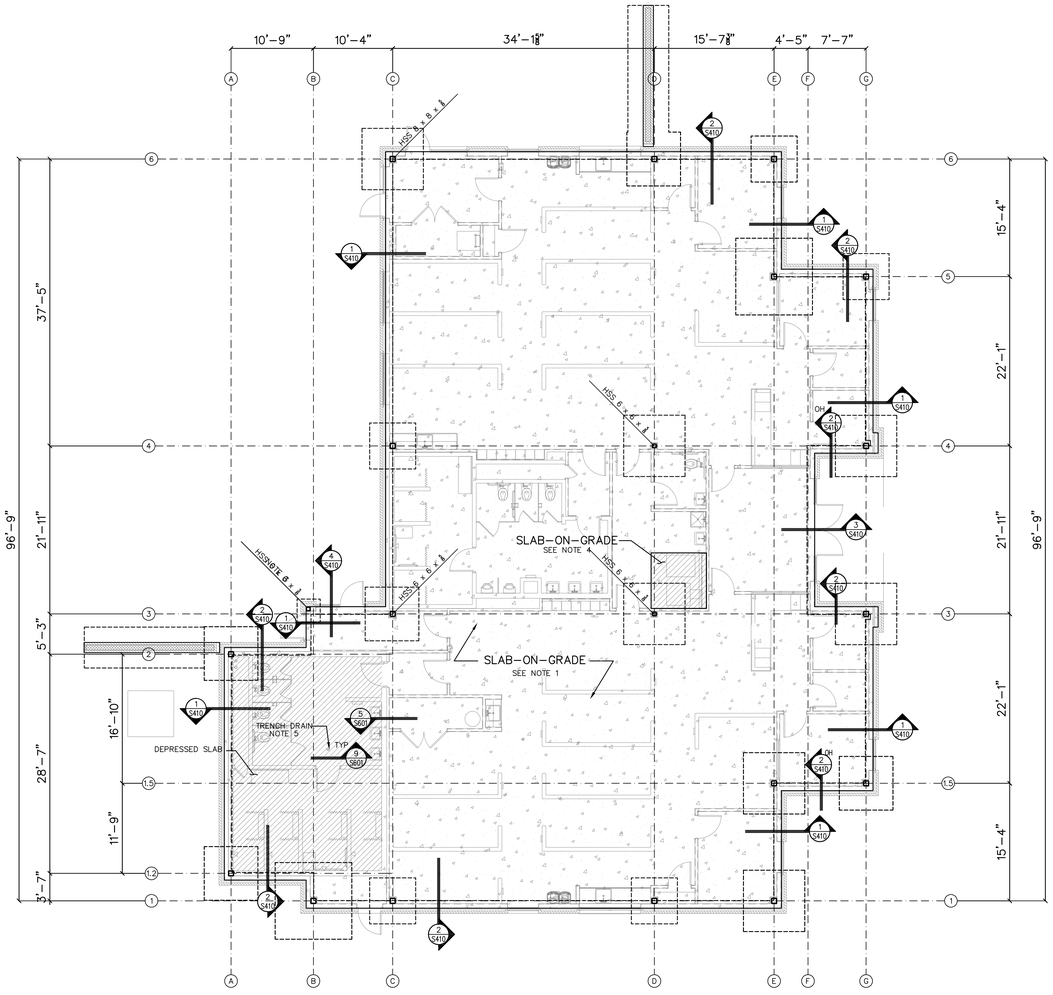

NOTES:
1.) FLOOR SLAB ON GRADE IS 4" NORMAL WEIGHT CONCRETE, 3000psi 28-DAY COMPRTESSIVE STRENGTH, WITH 6x6-W2.1xW2.1 WELDED WIRE FABRIC ON A 6" POROUS GRAVEL AND 10MIL POLY VAPER BARRIER (UNO).
2.) CONTRACTOR SHALL VERIFY AND COORDINATE THE LOCATION, SIZE, TYPE AND DIRECTION OF ALL THICKENED SLABS, PADS, DEPRESSIONS, RECESSED SLABS, BOLTS, SLEEVES, ANCHORS, INSERTS, OPENINGS, ETC. TO BE SET OR CAST IN CONCRETE, PRIOR TO CONCRETE PLACEMENT.
3.) INDICATED COLUMN OFFSET FROM GRIDLINES (COLUMN CENTERLINE LOCATED 7 7/8" PLAN NORTH OF GRIDLINE 3 & 8 1/2" PLAN WEST OF GRIDLINE B).
4.) FLOOR SLAB ON GRADE IS 6" NORMAL WEIGHT CONCRETE, 3000psi 28-DAY COMPRTESSIVE STRENGTH, WITH 6x6-W2.1xW2.1 WELDED WIRE FABRIC ON A 6" POROUS GRAVEL AND 10MIL POLY VAPER BARRIER (UNO).
5.) COORDINATE TRENCH DRAIN LOCATIONS WITH PLUMBING DRAWINGS.
6.) SEE SHEET S701 FOR TYPICAL SLAB DETAILS.

1

S402 SLAB-ON-GRADE PLAN — SCALE: 1/8" = 1'-0

X	X	X	X	X
SXXX NOT USED SCALE:	SXXX NOT USED SCALE:	SXXX NOT USED SCALE:	SXXX NOT USED SCALE:	SXXX NOT USED SCALE:

12/2/2020 11:40 AM Z:\Red Engineering\2018\18-E091 Healing Place - Wilmington, is design\2-Design Development\CAD\Structural\18-E091 Healing Transitions.dwg

is design
ARCHITECTURE + INTERIORS
1111 Haynes Street, Suite 103
Raleigh, North Carolina 27604
t. 919.833.5400
www.isdesignpa.com

RED JOB No.18-E091
RED ENGINEERING & DESIGN
STRUCTURAL ENGINEERS
126 SALEM TOWNE CT
APEX, NORTH CAROLINA 27502
TEL. (919) 833-3405
REDENGINEERINGDESIGN.COM
C-3479

Project
THE HEALING PLACE OF NEW HANOVER COUNTY

1000 MEDICAL CENTER DRIVE
WILMINGTON, NORTH CAROLINA

Client
NEW HANOVER COUNTY, NORTH CAROLINA

All reproduction & intellectual property rights reserved © 2020

Key Plan

Professional Seals
NORTH CAROLINA PROFESSIONAL SEAL 041434 ENGINEER BRIAN M OSKOIN
08.25.20

No.	Description	Date
A	SCHEMATIC DESIGN	11/26/19
B	DESIGN DEVELOPMENT PACKAGE	
0	FOR CONSTRUCTION	08/25/20

Project Code: 16HTWILMING

Sheet Title
DETOX BUILDING SLAB-ON-GRADE PLAN

Original drawing is 42 x 30 Do not scale contents of this drawing

Sheet Number
S-402

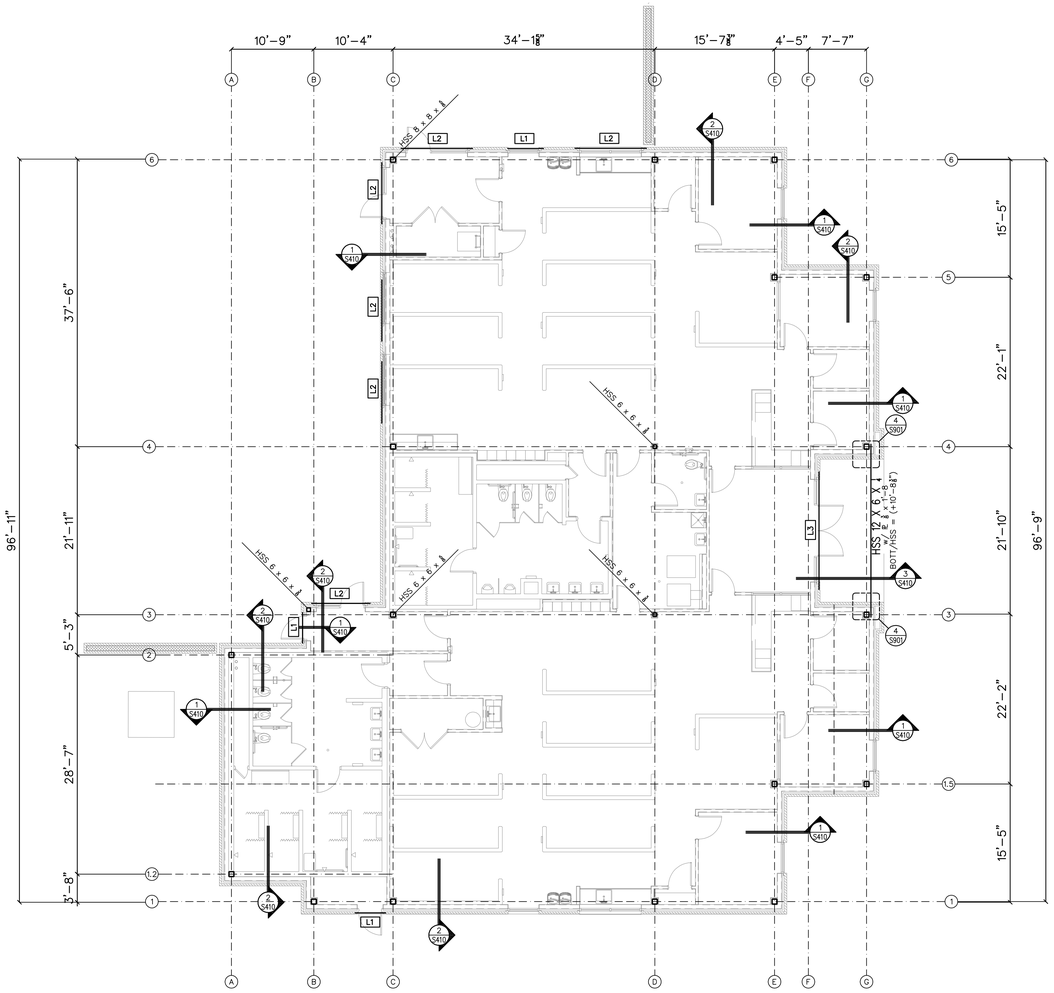

NOTES:
1.) LX DENOTES LINTEL TYPE. SEE SCHEDULE ON S001.

1
S403 WALL PLAN SCALE: ⅛" = 1'–0

X
SXXX NOT USED SCALE:

X
SXXX NOT USED SCALE:

X
SXXX NOT USED SCALE:

X
SXXX NOT USED SCALE:

X
SXXX NOT USED SCALE:

12/2/2020 11:40 AM Z:\Red Engineering\2018\18-E091 Healing Place - Wilmington, is design\2-Design Development\CAD\Structural\18-E091 Healing Transitions.dwg

is design
ARCHITECTURE + INTERIORS
1111 Haynes Street, Suite 103
Raleigh, North Carolina 27604
t. 919.833.5400
www.isdesignpa.com

RED JOB No.18–E091
RED ENGINEERING & DESIGN
STRUCTURAL ENGINEERS
126 SALEM TOWNE CT
APEX, NORTH CAROLINA 27502
TEL. (919) 833-3405
REDENGINEERINGDESIGN.COM
C-3479

Project
THE HEALING PLACE OF NEW HANOVER COUNTY

1000 MEDICAL CENTER DRIVE
WILMINGTON, NORTH CAROLINA

Client
NEW HANOVER COUNTY, NORTH CAROLINA

All reproduction & intellectual property rights reserved © 2020

Key Plan

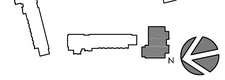

Professional Seals

NORTH CAROLINA PROFESSIONAL SEAL 37434 ENGINEER BRIAN MOSKOW
08.25.20

No.	Description	Date
A	SCHEMATIC DESIGN	11/26/19
B	DESIGN DEVELOPMENT PACKAGE	
0	FOR CONSTRUCTION	08/25/20

Project Code: 16HTWILMNG

Sheet Title
DETOX BUILDING WALL PLAN

Original drawing is 42 x 30 Do not scale contents of this drawing

Sheet Number
S-403

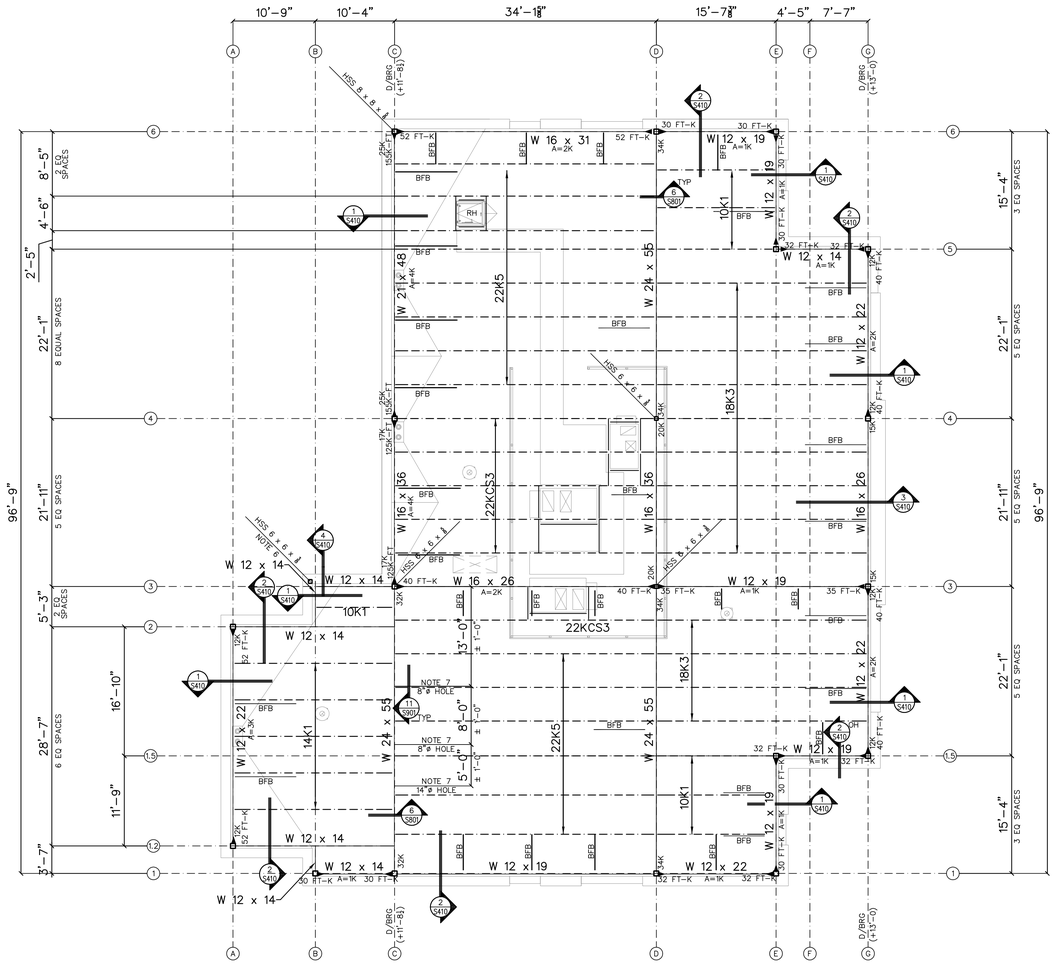

NOTES:
1.) ALL COLUMNS TO BE HSS 8 x 8 x ½ U.N.O.
2.) BFB = L 3 x 3 x ¼ BOTTOM FLANGE BRACE.
3.) ► INDICATES MOMENT CONNECTION.
4.) ROOF DECK TO BE VULCRAFT 1.5B20. SEE DETAIL 5/S801 (DETOX BUILDING).
5.) LOADS SHOWN AS "A=XXK" DENOTE AXIAL LOADS.
6.) INDICATED COLUMN LOCATED INSIDE STUD WALL (COLUMN CENTERLINE LOCATED 7⅞" PLAN NORTH OF GRIDLINE 3 & 8⅜" PLAN WEST OF GRIDLINE B).
7.) SEE DETAIL 11/S901 FOR ALLOWABLE HOLE DETAIL ❶ INDICATED BEAM.
8.) SEE SHEET S901 FOR TYPICAL RTU SUPPORT/ROOF SCREEN DETAILS.

1
S404 ROOF PLAN
SCALE: ⅛" = 1'-0

X
SXXX NOT USED SCALE:

X
SXXX NOT USED SCALE:

X
SXXX NOT USED SCALE:

X
SXXX NOT USED SCALE:

X
SXXX NOT USED SCALE:

12/2/2020 11:41 AM Z:\Red Engineering\2018\18-E091 Healing Place - Wilmington, Is design\2-Design Development\CAD\Structural\18-E091 Healing Transitions.dwg

is design
ARCHITECTURE + INTERIORS
1111 Haynes Street, Suite 103
Raleigh, North Carolina 27604
t. 919.833.5400
www.isdesignpa.com

RED JOB No.18-E091

RED ENGINEERING & DESIGN
STRUCTURAL ENGINEERS
126 SALEM TOWNE CT
APEX, NORTH CAROLINA 27502
TEL. (919) 833-3405
REDENGINEERINGDESIGN.COM
C-3479

Project
THE HEALING PLACE OF NEW HANOVER COUNTY

1000 MEDICAL CENTER DRIVE
WILMINGTON, NORTH CAROLINA

Client
NEW HANOVER COUNTY, NORTH CAROLINA

All reproduction & intellectual property rights reserved © 2020

Key Plan

Professional Seals
NORTH CAROLINA PROFESSIONAL SEAL 47434 ENGINEER BRIAN MOSKOW
08.25.20

No.	Description	Date
A	SCHEMATIC DESIGN	11/26/19
B	DESIGN DEVELOPMENT PACKAGE	08/25/20
0	FOR CONSTRUCTION	08/25/20

Project Code: 16HTWILMING

Sheet Title
DETOX BUILDING ROOF PLAN

Original drawing is 42 x 30 Do not scale contents of this drawing

Sheet Number
S-404

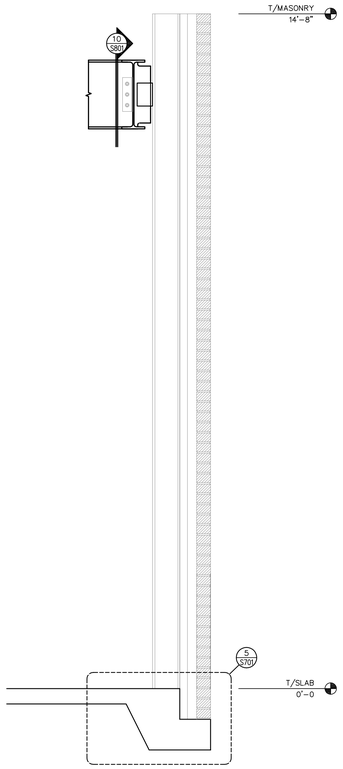

4

S410 | SECTION | SCALE: 3/4" = 1'-0

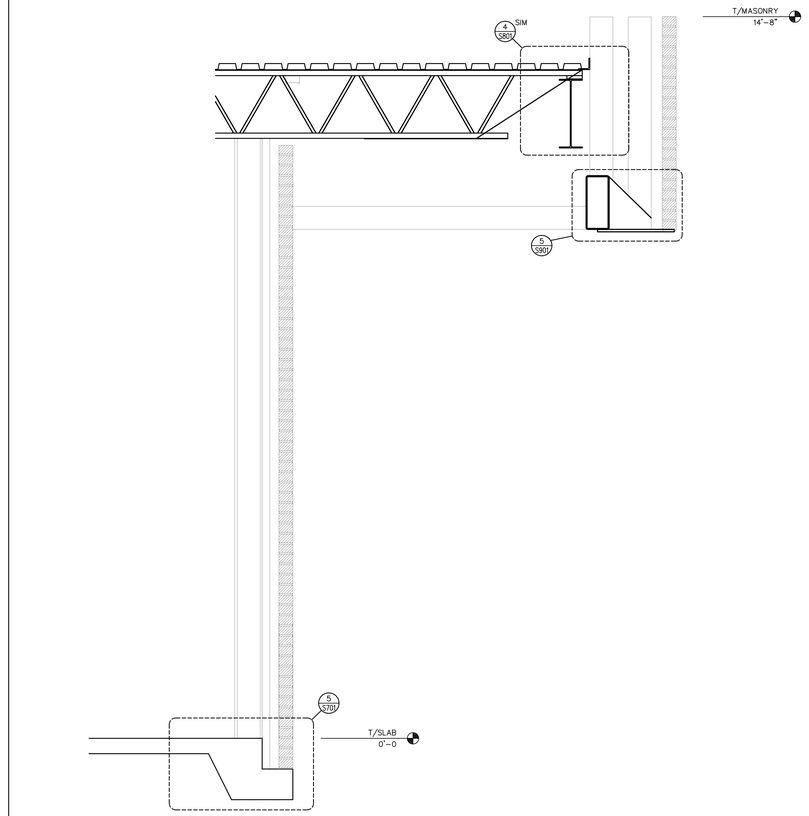

3

S410 | SECTION | SCALE: 3/4" = 1'-0

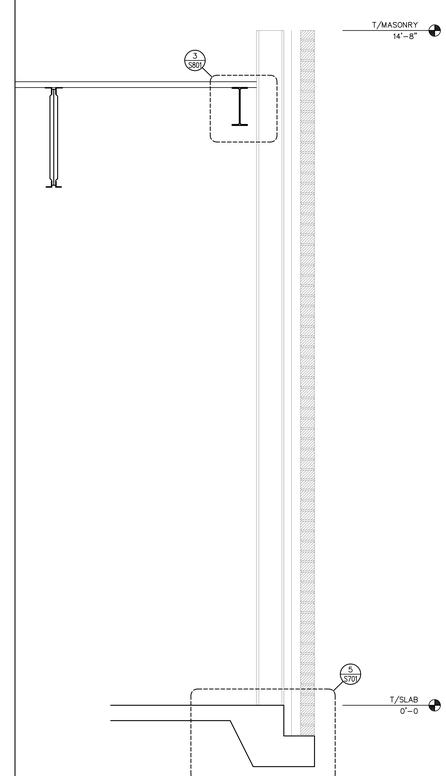

2

S410 | SECTION | SCALE: 3/4" = 1'-0

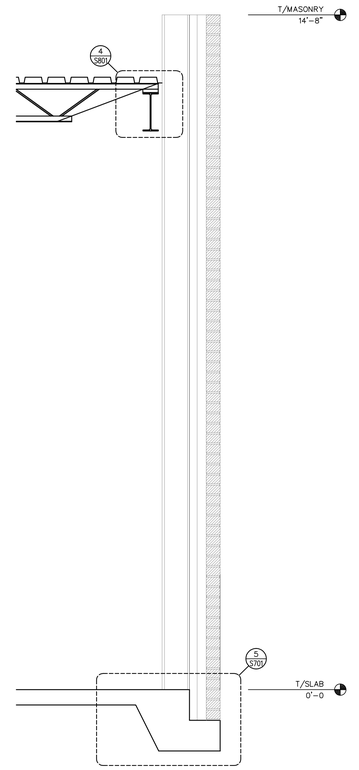

1

S410 | SECTION | SCALE: 3/4" = 1'-0

X

SXXX | NOT USED | SCALE:

X

SXXX | NOT USED | SCALE:

X

SXXX | NOT USED | SCALE:

X

SXXX | NOT USED | SCALE:

X

SXXX | NOT USED | SCALE:

12/2/2020 8:49 AM Z:\Red Engineering\2018\18-E091 Healing Place - Wilmington, is design\2-Design Development\CAD\Structural\18-E091 Healing Transitions.dwg

is design
ARCHITECTURE + INTERIORS
1111 Haynes Street, Suite 103
Raleigh, North Carolina 27604
t. 919.833.5400
www.isdesignpa.com

RED JOB No.18-E091

RED ENGINEERING & DESIGN
STRUCTURAL ENGINEERS
126 SALEM TOWNE CT
APEX, NORTH CAROLINA 27502
TEL. (919) 833-3405
REDENGINEERINGDESIGN.COM
C-3479

Project

THE HEALING PLACE OF NEW HANOVER COUNTY

1000 MEDICAL CENTER DRIVE
WILMINGTON, NORTH CAROLINA

Client

NEW HANOVER COUNTY, NORTH CAROLINA

All reproduction & intellectual property rights reserved © 2020

Key Plan

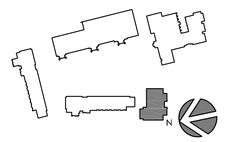

Professional Seals



08.25.20

No.	Description	Date
A	SCHEMATIC DESIGN	11/26/19
B	DESIGN DEVELOPMENT PACKAGE	
0	FOR CONSTRUCTION	08/25/20

Project Code: 16HTWILMING

Sheet Title

DETOX BUILDING SECTIONS

Original drawing is 42 x 30 Do not scale contents of this drawing

Sheet Number

S-410

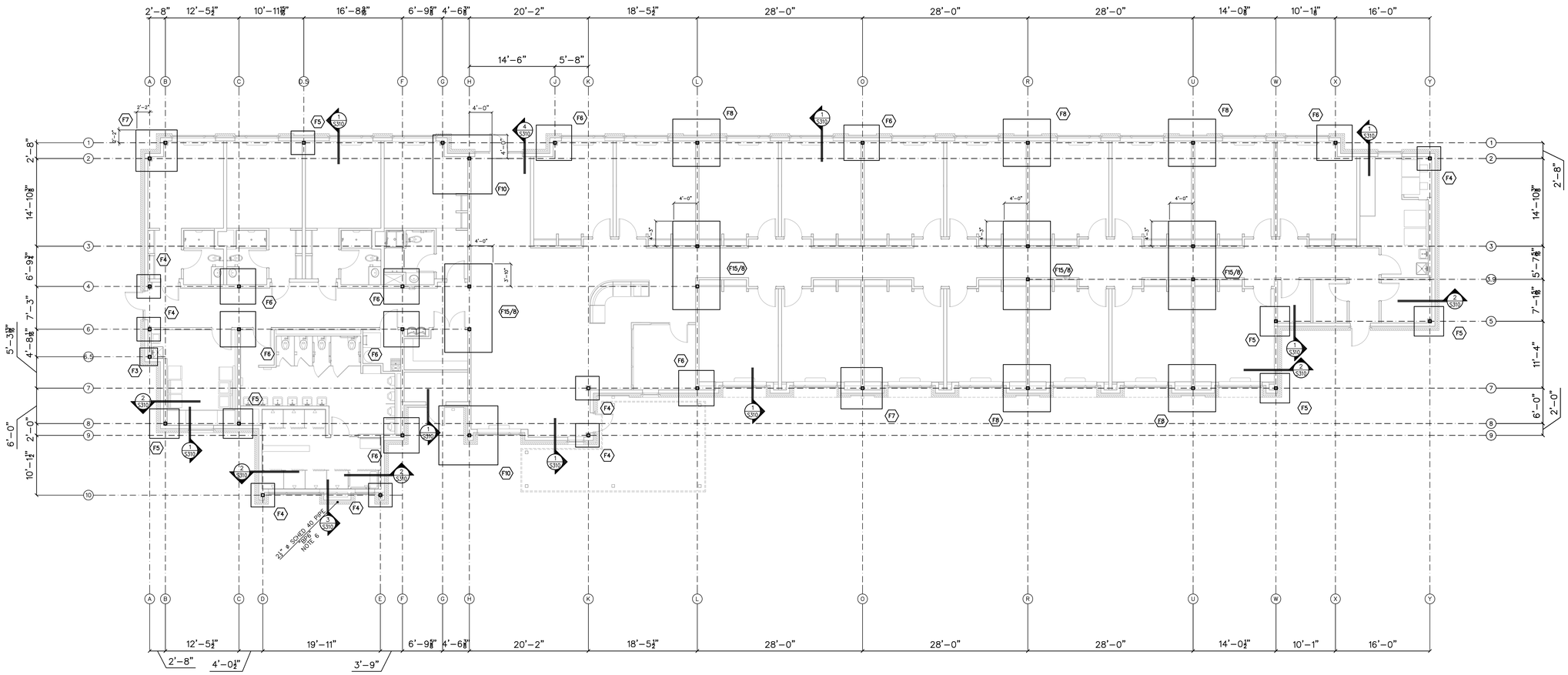

NOTES:
1.) ALL COLUMNS TO BE HSS 6 x 6 x ⅜ U.N.O. SEE DETAIL 1/S601 FOR TYPICAL COLUMN BEARING.
2.) T/FTG ELEV = (–1'–4) BELOW FIN. FLR.
3.) CONCRETE FOR FTGS TO BE 3000psi 28–DAY COMPRESSIVE STRENGTH.
4.) FX DENOTES FOOTING TYPE. SEE SCHEDULE ON S001.
5.) ALL BASE PLATES TO BE TYPE "BP1" TYP UNO. SEE DETAIL 2/S601 FOR ADDITIONAL INFORMATION.
6.) COLUMN IS NON–STRUCTURAL – REFER TO ARCHITECTURAL PLANS FOR LOCATION.

1
S501 FOUNDATION PLAN SCALE: ⅛" = 1'–0

X
SXXX NOT USED SCALE:

X
SXXX NOT USED SCALE:

X
SXXX NOT USED SCALE:

X
SXXX NOT USED SCALE:

X
SXXX NOT USED SCALE:

12/2/2020 8:49 AM Z:\Red Engineering\2018\184891 Healing Place - Wilmington, is design\2-Design Development\CAD\Structural\184891 Healing Transitions.dwg

is design
ARCHITECTURE + INTERIORS
1111 Haynes Street, Suite 103
Raleigh, North Carolina 27604
t. 919.833.5400
www.isdesignpa.com

RED JOB No.18–E091
RED ENGINEERING & DESIGN
STRUCTURAL ENGINEERS
C-3479
126 SALEM TOWNE CT
APEX, NORTH CAROLINA 27502
TEL. (919) 833-3405
REDENGINEERINGDESIGN.COM

Project
THE HEALING PLACE OF NEW HANOVER COUNTY

1000 MEDICAL CENTER DRIVE
WILMINGTON, NORTH CAROLINA

Client
NEW HANOVER COUNTY, NORTH CAROLINA

All reproduction & intellectual property rights reserved © 2020

Key Plan

Professional Seals
NORTH CAROLINA PROFESSIONAL SEAL 031434 ENGINEER BRIAN MOSKOW
08.25.20

No.	Description	Date
A	SCHEMATIC DESIGN	11/26/19
B	DESIGN DEVELOPMENT PACKAGE	
0	FOR CONSTRUCTION	08/25/20

Project Code: 16HTWILMING

Sheet Title
MEN'S RESIDENTIAL BUILDING FOUNDATION PLAN

Original drawing is 42 x 30 Do not scale contents of this drawing

Sheet Number
S-501

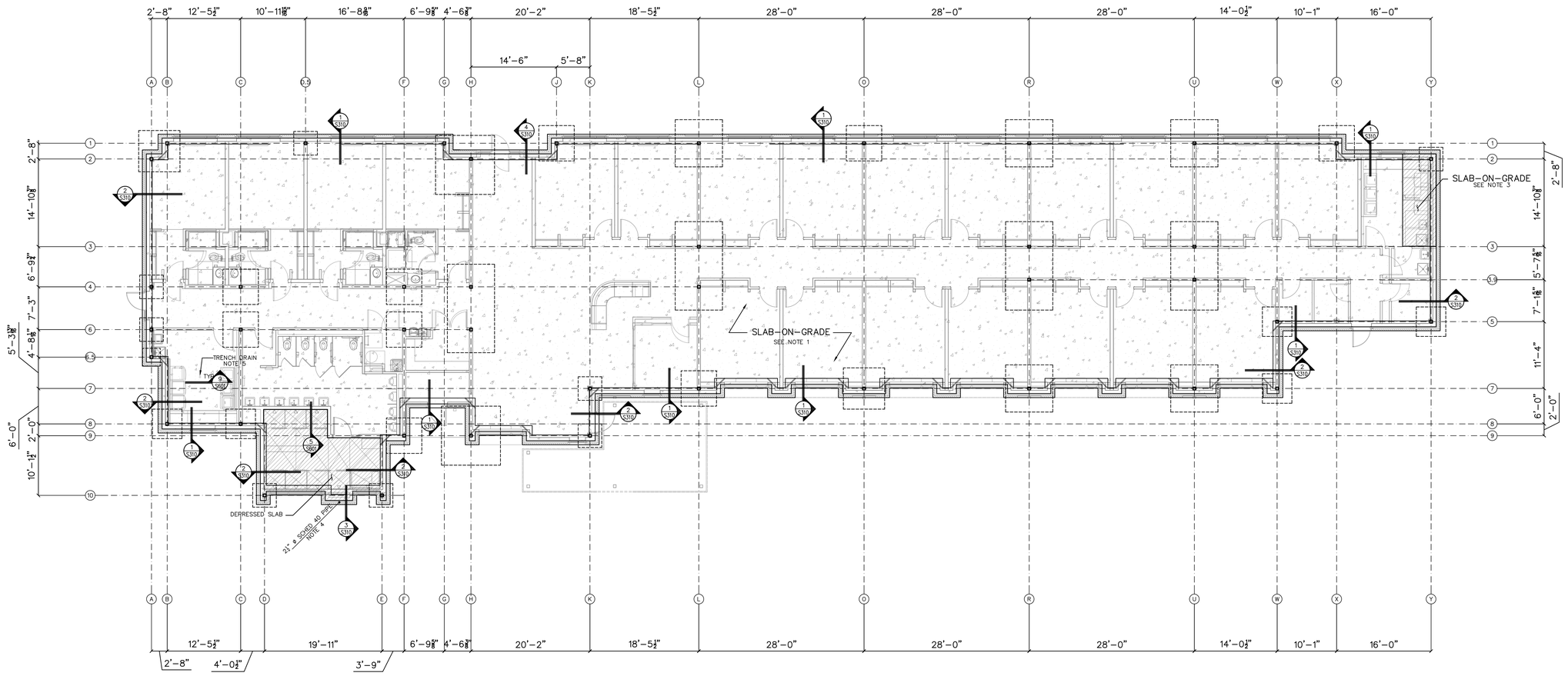

NOTES:
1.) FLOOR SLAB ON GRADE IS 4" NORMAL WEIGHT CONCRETE, 3000psi 28-DAY COMPRTESSIVE STRENGTH, WITH 6x6-W2.1xW2.1 WELDED WIRE FABRIC ON A 6" POROUS GRAVEL AND 10MIL POLY VAPER BARRIER (UNO).
2.) CONTRACTOR SHALL VERIFY AND COORDINATE THE LOCATION, SIZE, TYPE AND DIRECTION OF ALL THICKENED SLABS, PADS, DEPRESSIONS, RECESSED SLABS, BOLTS, SLEEVES, ANCHORS, INSERTS, OPENINGS, ETC. TO BE SET OR CAST IN CONCRETE, PRIOR TO CONCRETE PLACEMENT.
3.) FLOOR SLAB ON GRADE IS 6" NORMAL WEIGHT CONCRETE, 3000psi 28-DAY COMPRTESSIVE STRENGTH, WITH 6x6-W2.1xW2.1 WELDED WIRE FABRIC ON A 6" POROUS GRAVEL AND 10MIL POLY VAPER BARRIER.
4.) COLUMN IS NON-STRUCTURAL - REFER TO ARCHITECTURAL PLANS FOR LOCATION.
5.) COORDINATE WITH PLUMBING DRAWINGS FOR TRENCH DRAIN LOCATIONS.
6.) SEE SHEET S701 FOR TYPICAL SLAB DETAILS.

1
S502 SLAB-ON-GRADE PLAN
SCALE: 1/8" = 1'-0

X | SXXX | NOT USED | SCALE:
X | SXXX | NOT USED | SCALE:
X | SXXX | NOT USED | SCALE:
3 | SXXX | NOT USED | SCALE:
X | SXXX | NOT USED | SCALE:

isdesign
ARCHITECTURE + INTERIORS
1111 Haynes Street, Suite 103
Raleigh, North Carolina 27604
t. 919.833.5400
www.isdesignpa.com

RED JOB No.18-E091
RED ENGINEERING & DESIGN
STRUCTURAL ENGINEERS
C-3479
126 SALEM TOWNE CT
APEX, NORTH CAROLINA 27502
TEL. (919) 833-3405
REDENGINEERINGDESIGN.COM

Project
THE HEALING PLACE OF NEW HANOVER COUNTY

1000 MEDICAL CENTER DRIVE
WILMINGTON, NORTH CAROLINA

Client
NEW HANOVER COUNTY, NORTH CAROLINA

All reproduction & intellectual property rights reserved © 2020

Key Plan

Professional Seals
NORTH CAROLINA PROFESSIONAL SEAL 31434 ENGINEER BRIAN N MOSEOW
08.25.20

No.	Description	Date
A	SCHEMATIC DESIGN	11/26/19
B	DESIGN DEVELOPMENT PACKAGE	
0	FOR CONSTRUCTION	08/25/20

Project Code: 16HTWILMING

Sheet Title
MEN'S RESIDENTIAL BUILDING
SLAB-ON-GRADE PLAN

Original drawing is 42 x 30 Do not scale contents of this drawing

Sheet Number
S-502

12/2/2020 8:49 AM Z:\Red Engineering\2018\18-E091 Healing Place - Wilmington, Is design\2-Design Development\CAD\Structural\18-E091 Healing Transitions.dwg

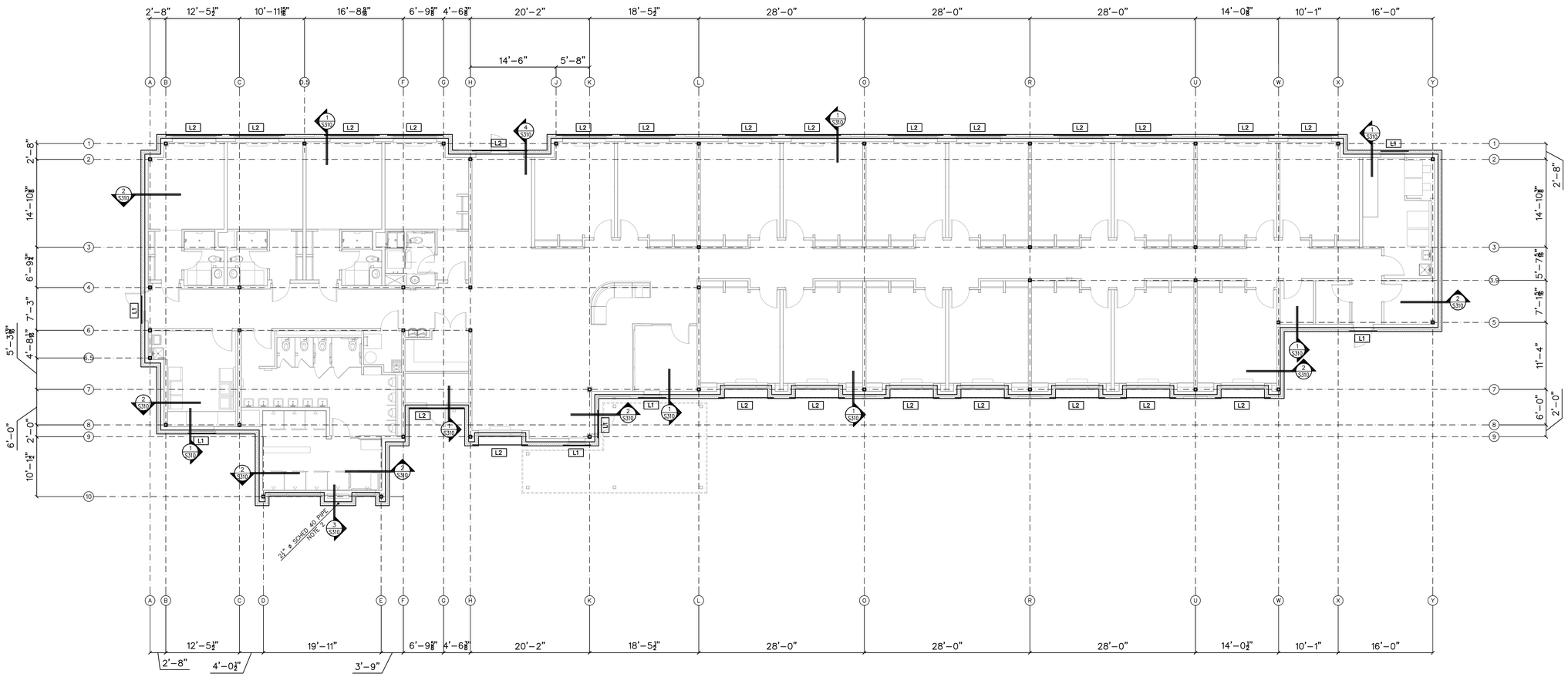

NOTES:
1.) LX DENOTES LINTEL TYPE. SEE SCHEDULE ON S001.
2.) COLUMN IS NON-STRUCTURAL - REFER TO ARCHITECTURAL PLANS FOR LOCATION.

1
S503 ROOF PLAN SCALE: ⅛" = 1'-0

X
SXXX NOT USED SCALE:

X
SXXX NOT USED SCALE:

X
SXXX NOT USED SCALE:

X
SXXX NOT USED SCALE:

X
SXXX NOT USED SCALE:

1/2/2020 8:49 AM Z:\Red Engineering\2018\18-E091 Healing Place - Wilmington, is design\2-Design Development\CAD\Structural\18-E091 Healing Transitions.dwg

is design
ARCHITECTURE + INTERIORS
1111 Haynes Street, Suite 103
Raleigh, North Carolina 27604
t. 919.833.5400
www.isdesignpa.com

RED JOB No.18-E091

RED ENGINEERING & DESIGN
STRUCTURAL ENGINEERS
126 SALEM TOWNE CT.
APEX, NORTH CAROLINA 27502
TEL. (919) 833-3405
REDENGINEERINGDESIGN.COM
C-3479

Project
THE HEALING PLACE OF NEW HANOVER COUNTY

1000 MEDICAL CENTER DRIVE
WILMINGTON, NORTH CAROLINA

Client
NEW HANOVER COUNTY, NORTH CAROLINA

All reproduction & intellectual property rights reserved © 2020

Key Plan

Professional Seals
NORTH CAROLINA PROFESSIONAL SEAL 21434 ENGINEER BRIAN MOSKINS
08.25.20

No.	Description	Date
A	SCHEMATIC DESIGN	11/26/19
B	DESIGN DEVELOPMENT PACKAGE	
0	FOR CONSTRUCTION	08/25/20

Project Code: 16HTWILMING

Sheet Title
MEN'S RESIDENTIAL BUILDING LINTEL PLAN

Original drawing is 42 x 30 Do not scale contents of this drawing.

Sheet Number
S-503

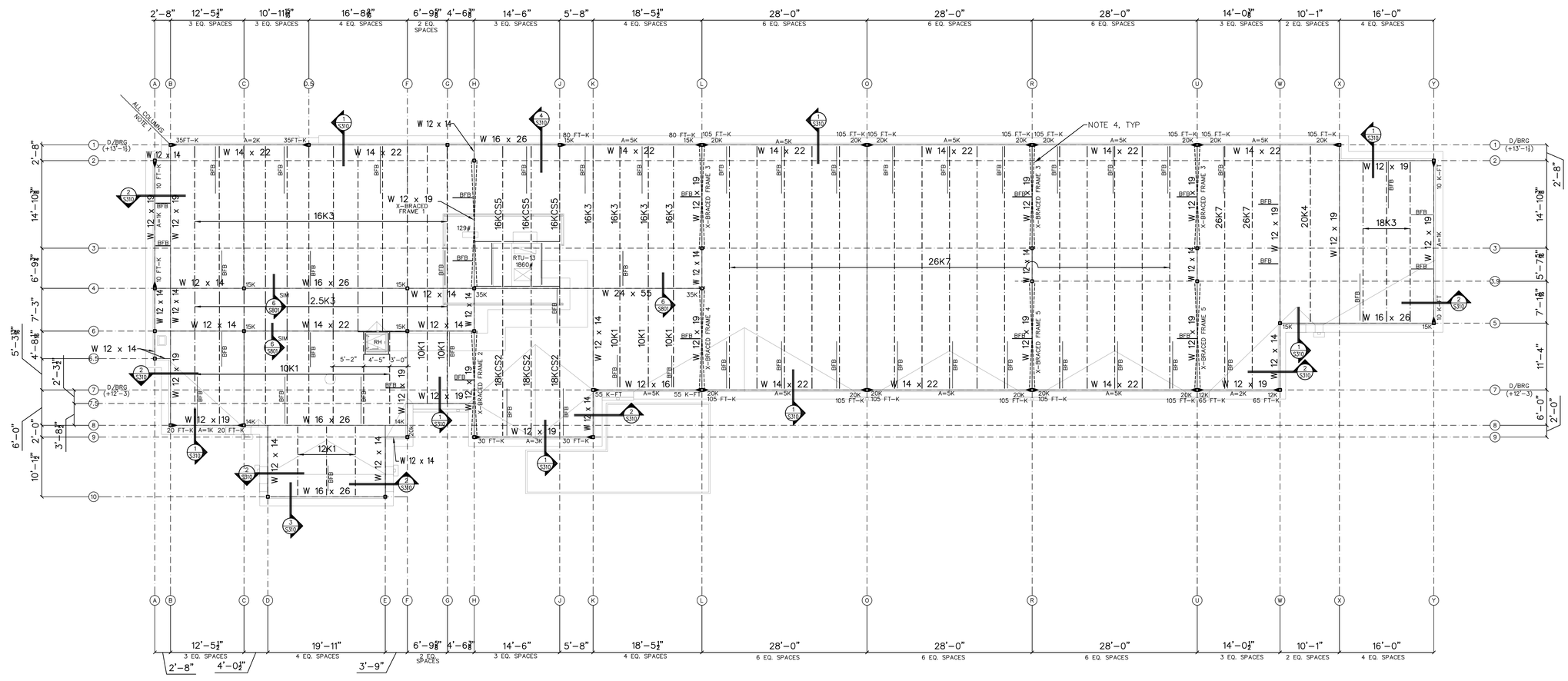

NOTES:
1.) ALL COLUMNS TO BE HSS 6 x 6 x ⅜, U.N.O.
2.) BFB = L 3 x 3 x ¼ BOTTOM FLANGE BRACE.
3.) ► INDICATES MOMENT CONNECTION.
4.) ALL X–BRACING TO BE HSS 6 x 6 x ¼, U.N.O.
5.) LOADS SHOWN AS "A=XXK" DENOTE AXIAL LOADS.
6.) REFER TO SHEET S504 FOR ALL BRACED FRAME ELEVATIONS.
7.) ROOF DECK TO BE VULCRAFT 1.5B/20. SEE DETAIL 5/S801.
8.) SEE SHEET S901 FOR TYPICAL RTU SUPPORT/ROOF SCREEN DETAILS.

1 S504 ROOF PLAN — SCALE: ⅛" = 1'–0

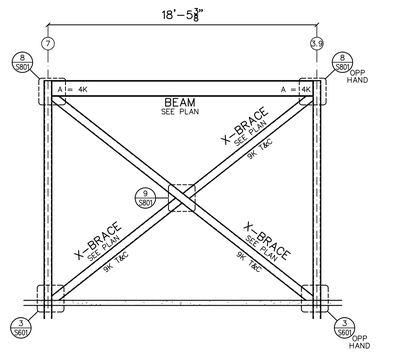

6 S504 X–FRAME 5 — SCALE: ⅛" = 1'–0

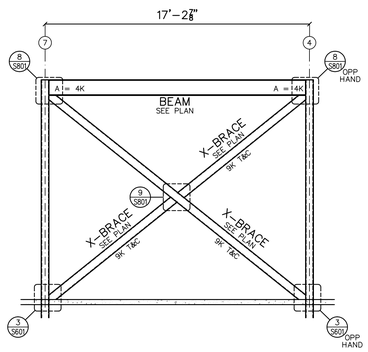

5 S504 X–FRAME 4 — SCALE: ⅛" = 1'–0

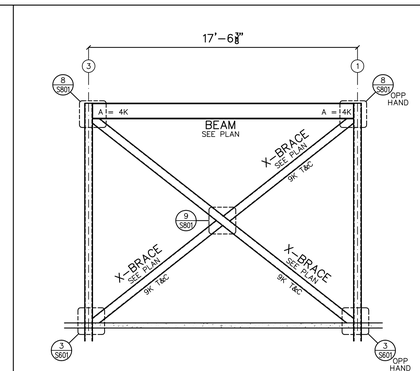

4 S504 X–FRAME 3 — SCALE: ⅛" = 1'–0

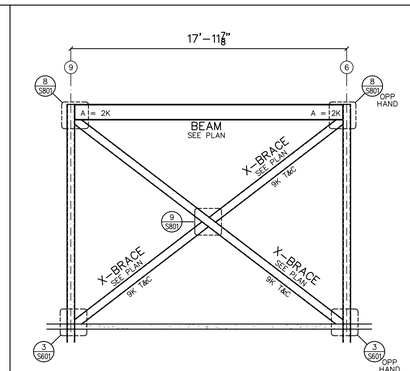

3 S504 X–FRAME 2 — SCALE: ⅛" = 1'–0

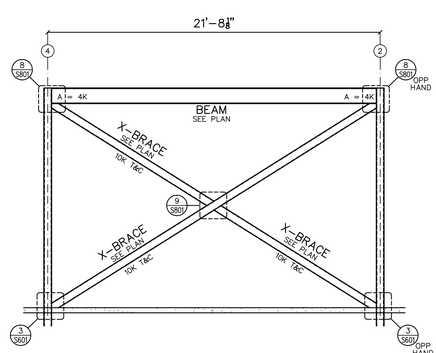

2 S504 X–FRAME 1 — SCALE: ⅛" = 1'–0

is design
ARCHITECTURE + INTERIORS
1111 Haynes Street, Suite 103
Raleigh, North Carolina 27604
t. 919.833.5400
www.isdesignpa.com

RED JOB No.18–E091
RED ENGINEERING & DESIGN
STRUCTURAL ENGINEERS
C-3479
126 SALEM TOWNE CT.
APEX, NORTH CAROLINA 27502
TEL. (919) 833-3486
REDENGINEERINGDESIGN.COM

Project
THE HEALING PLACE OF NEW HANOVER COUNTY

1000 MEDICAL CENTER DRIVE
WILMINGTON, NORTH CAROLINA

Client
NEW HANOVER COUNTY, NORTH CAROLINA

All reproduction & intellectual property rights reserved © 2020

Key Plan

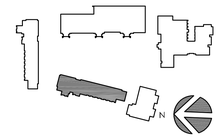

Professional Seals



No.	Description	Date
A	SCHEMATIC DESIGN	11/26/19
B	DESIGN DEVELOPMENT PACKAGE	
0	FOR CONSTRUCTION	06/25/20

Project Code: 16HTWILMING

Sheet Title
MEN'S RESIDENTIAL BUILDING ROOF PLAN

Original drawing is 42 x 30 Do not scale contents of this drawing

Sheet Number
S-504

12/2/2020 8:50 AM Z:\Red Engineering\2018\18-E091 Healing Place - Wilmington, is design\2-Design Development\CAD\Structural\18-E091 Healing Transitions.dwg

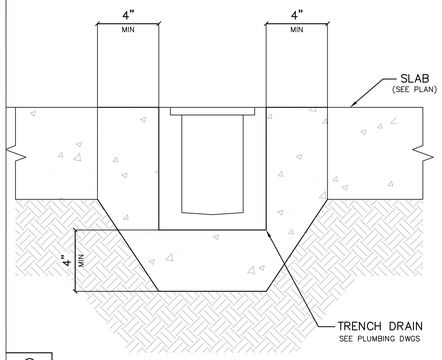

9 | S601 | DETAIL | SCALE: 3" = 1'–0

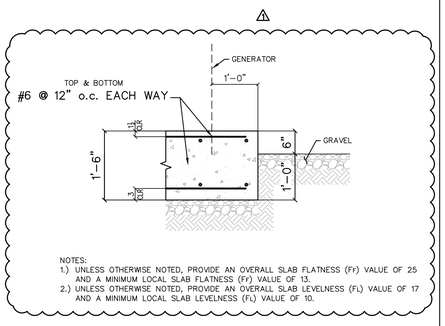

NOTES:
1.) UNLESS OTHERWISE NOTED, PROVIDE AN OVERALL SLAB FLATNESS (FF) VALUE OF 25 AND A MINIMUM LOCAL SLAB FLATNESS (FF) VALUE OF 13.
2.) UNLESS OTHERWISE NOTED, PROVIDE AN OVERALL SLAB LEVELNESS (FL) VALUE OF 17 AND A MINIMUM LOCAL SLAB LEVELNESS (FL) VALUE OF 10.

10 | S601 | DETAIL | SCALE: ¾" = 1'–0

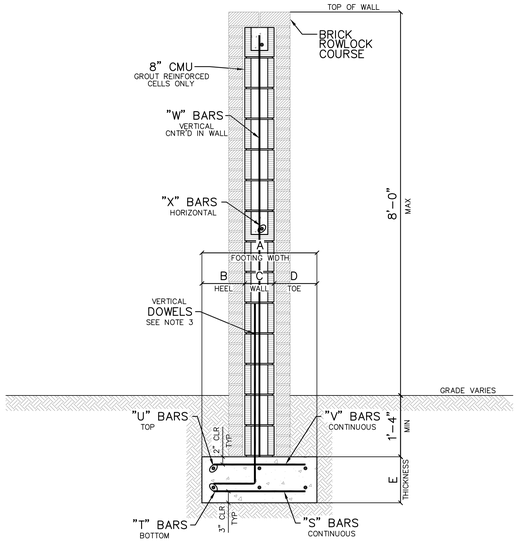

SCREEN WALL SCHEDULE												
MARK	DIMENSIONS						FOOTING REINFORCEMENT				WALL REINFORCEMENT	
	A	B	C	D	E	K	"S" BARS	"T" BARS	"U" BARS	"V" BARS	"W" BARS	"X" BARS
RW1	4'–8	2'–0	8"	2'–0	1'–0	N/A	#5 @ 8" o.c.	#5 @ 18" o.c.	#5 @ 18" o.c.	#5 @ 8" o.c.	#5 @ 8" o.c.	#5 @ 48" o.c.

NOTES:
1.) CMU BLOCK COURSING ILLUSTRATED IN THIS AND OTHER DETAILS IS FOR DIAGRAMMATIC PURPOSES ONLY. THE ACTUAL QUANTITIES OF BLOCK COURSES WILL VARY DUE TO ACTUAL TOP OF FOOTING ELEVATIONS (SEE PLAN).
2.) SPACE REINFORCING BARS EQUALLY THROUGHOUT FOOTING.,
3.) DOWELS TO MATCH WALL REINFORCEMENT. SEE WALL SCHEDULE FOR SIZE AND SPACING. ALL LAPS TO BE CLASS "A" TENSION LAPS, U.N.O. LAP FULL DEVELOPMENT LENGTH, 48 BAR DIAMETERS MINIMUM.

4 | S601 | DETAIL | SCALE: ¾" = 1'–0

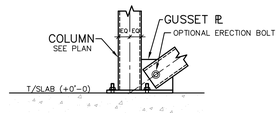

NOTES:
1.) BRACE CONNECTION SHALL BE DESIGNED BY FABRICATOR FOR MINIMUM FACTORED LOADS INDICATED ON BRACING BAY ELEVATIONS.
2.) EXTEND BASE PLATE AS NEEDED TO FULLY ENGAGE GUSSET PLATE.

3 | S601 | DETAIL | SCALE: ¾" = 1'–0

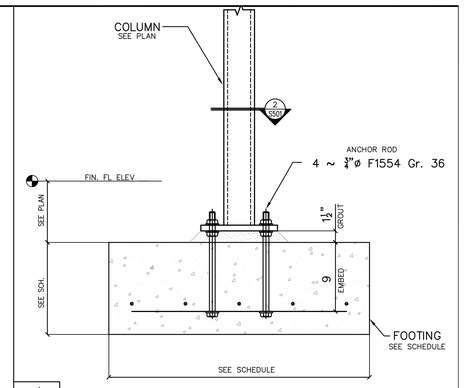

1 | S601 | DETAIL | SCALE: 1½" = 1'–0

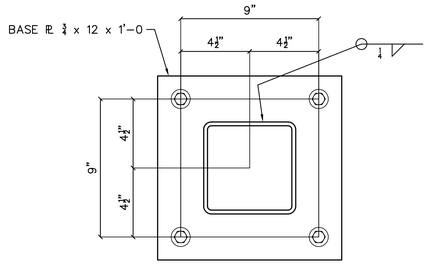

BP1
HSS 6 x 6
HSS 5 x 5

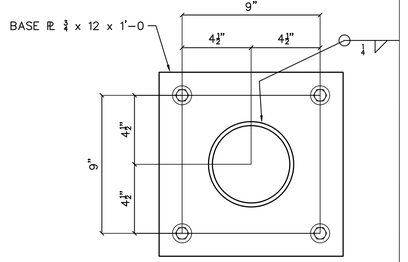

BP2
HSS 6.000

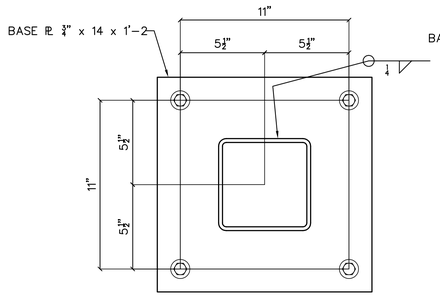

BP3
HSS 8 x 8

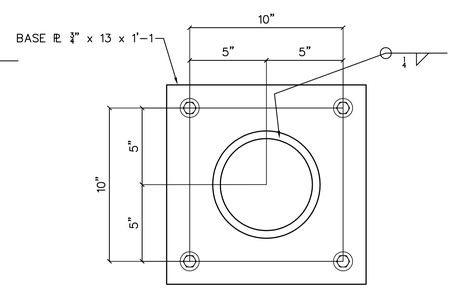

BP4
HSS 7.000

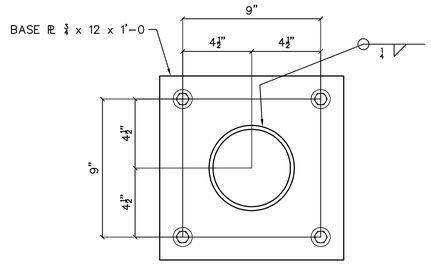

BP5
5"ø PIPE

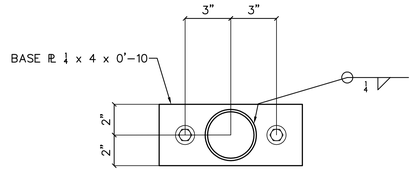

BP6
2½"ø PIPE

2 | S601 | DETAIL | SCALE: 3" = 1'–0

X | SXXX | NOT USED | SCALE:

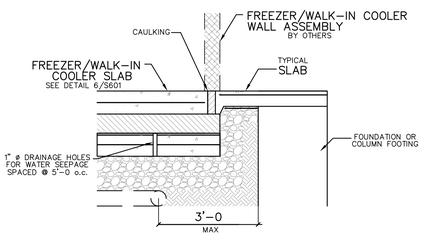

7 | S601 | DETAIL | SCALE: ¾" = 1'–0

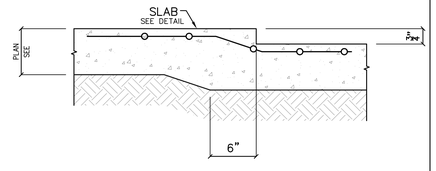

5 | S601 | DETAIL | SCALE: 1½" = 1'–0

X | SXXX | NOT USED | SCALE:

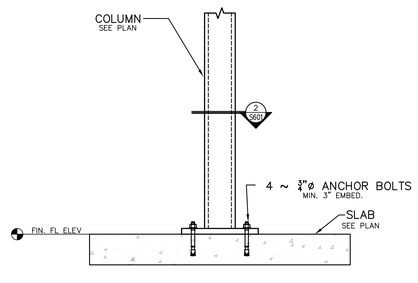

8 | S601 | DETAIL | SCALE: 1½" = 1'–0

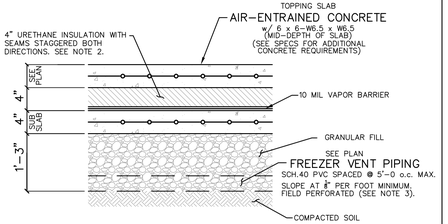

NOTES:
1.) UNLESS OTHERWISE NOTED, PROVIDE A TOPPING SLAB FLATNESS (FF) BETWEEN 25–35 AND A SLAB LEVELNESS (FL) BETWEEN 20–25.
2.) THE INSULATION STIFFNESS SHOULD BE EVALUATED ON PROPOSED SUBGRADE USING THE PROCEDURES FOR DETERMINING THE MODULUS OF SUBGRADE REACTION OF SOIL GIVEN IN ASTM D 1196. COMPRESSIVE CREEP DUE TO SUSTAINED LOADS ON THE INSULATION SHOULD BE CONSIDERED. COMPRESSIVE STRENGTH OF THE INSULATION SHOULD BE 5 TIMES THE LIVE LOADS AND 3 TIMES THE DEAD LOADS, TO LIMIT LONG–TERM CREEP TO 2% OF THE INSULATION THICKNESS OVER A 20–YEAR PERIOD.
3.) PERFORATE PVC VENT PIPE FOR CONDENSATE DRAINAGE WITH ¾" DIA. HOLES ON THE BOTTOM AT EVERY 24"
4.) VENT PIPES TO BE PLACED ON 2" MINIMUM AGGREGATE AT LOW END.

6 | S601 | DETAIL | SCALE: ¾" = 1'–0

isdesign
ARCHITECTURE + INTERIORS
1111 Haynes Street, Suite 103
Raleigh, North Carolina 27604
t. 919.833.5400
www.isdesignpa.com

RED JOB No.18–E091

RED ENGINEERING & DESIGN
STRUCTURAL ENGINEERS
126 SALEM TOWNE CT
APEX, NORTH CAROLINA 27502
TEL. (919) 833-3405
REDENGINEERINGDESIGN.COM
C-3479

Project

THE HEALING PLACE OF NEW HANOVER COUNTY

1000 MEDICAL CENTER DRIVE
WILMINGTON, NORTH CAROLINA

Client

NEW HANOVER COUNTY, NORTH CAROLINA

All reproduction & intellectual property rights reserved © 2020

Key Plan

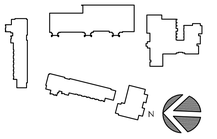

Professional Seals



12.02.20

No.	Description	Date
A	SCHEMATIC DESIGN	11/26/19
B	DESIGN DEVELOPMENT PACKAGE	
0	FOR CONSTRUCTION	08/25/20
1	MCD #1	12/02/20

Project Code: 16HTWILMING

Sheet Title

FOUNDATION DETAILS

Original drawing is 42 x 30 Do not scale contents of this drawing

Sheet Number

S-601

12/2/2020 8:50 AM Z:\Red Engineering\2018\18-E091 Healing Place - Wilmington, is design\2-Design Development\CAD\Structural\18-E091 Healing Transitions.dwg

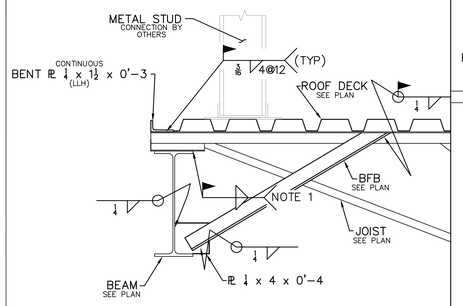

NOTES:
1.) SEE JOIST SHOP DRAWINGS FOR JOIST ATTACHMENT.

15 | S701 | DETAIL | SCALE: 1½" = 1'-0

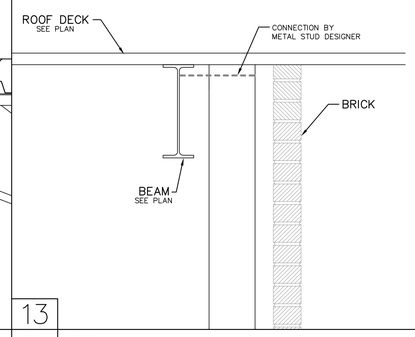

13 | S701 | DETAIL | SCALE: 1½" = 1'-0

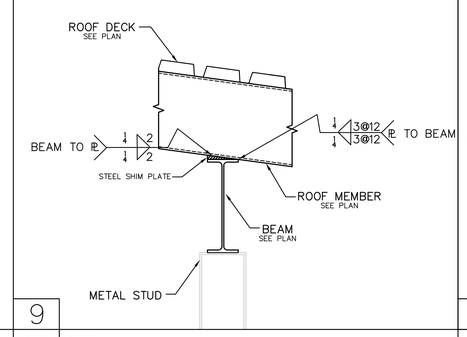

9 | S701 | DETAIL | SCALE: 1½" = 1'-0

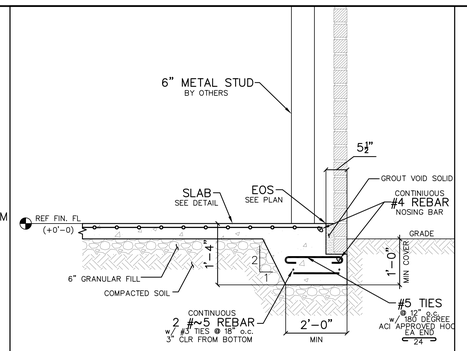

5 | S701 | DETAIL | SCALE: ¾" = 1'-0

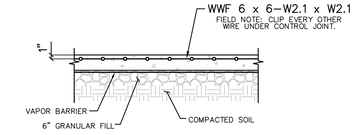

NOTES:
1.) UNLESS OTHERWISE NOTED, PROVIDE AN OVERALL SLAB FLATNESS (FF) VALUE OF 25 AND A MINIMUM LOCAL SLAB FLATNESS (FF) VALUE OF 13.
2.) UNLESS OTHERWISE NOTED, PROVIDE AN OVERALL SLAB LEVELNESS (FL) VALUE OF 17 AND A MINIMUM LOCAL SLAB LEVELNESS (FL) VALUE OF 10.

1 | S701 | DETAIL | SCALE: ¾" = 1'-0

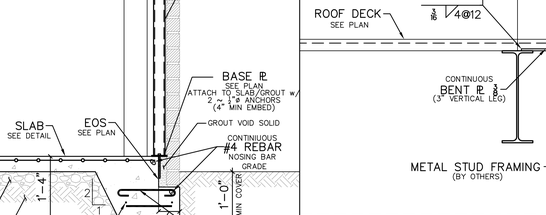

14 | S701 | DETAIL | SCALE: 1½" = 1'-0

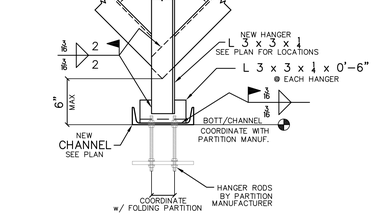

10 | S701 | DETAIL | SCALE: 1½" = 1'-0

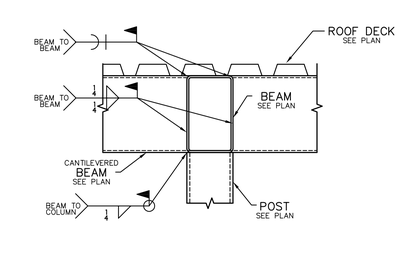

6 | S701 | DETAIL | SCALE: 1½" = 1'-0

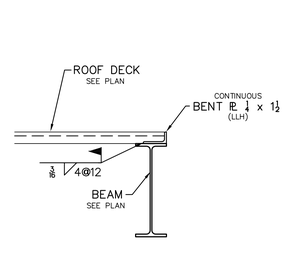

NOTES:
1.) IF CONCRETING IS INTERRUPTED LONG ENOUGH FOR THE PLACED CONCRETE TO HARDEN, PROVIDE A CONSTRUCTION JOINT AS SHOWN ON THIS DETAIL. CONSTRUCTION JOINTS SHALL NOT BE PLACED CLOSER THAN 5'-0 FROM ANY JOINT TO WHICH THEY ARE PARALLEL. THE USE OF ALTERNATE CONSTRUCTION JOINTS PER ACI 302.1R-04 MAY BE USED WITH APPROVAL FROM RED ENGINEERING & DESIGN, INC.

2 | S701 | DETAIL | SCALE: ¾" = 1'-0

18 | S701 | DETAIL | SCALE: ¾" = 1'-0

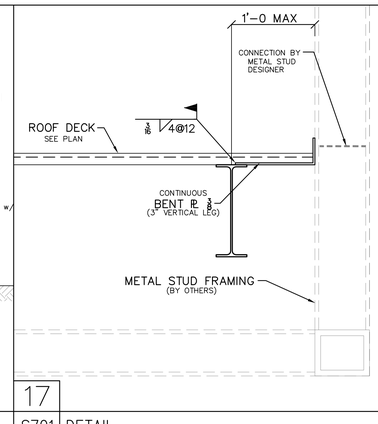

17 | S701 | DETAIL | SCALE:

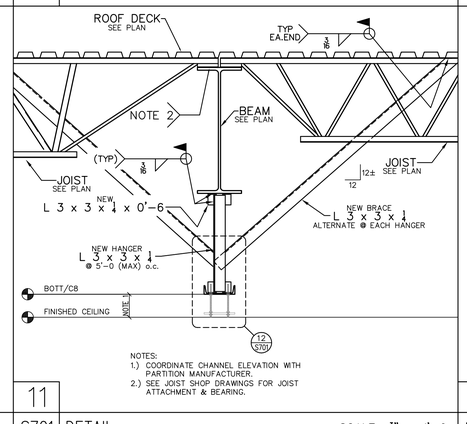

NOTES:
1.) COORDINATE CHANNEL ELEVATION WITH PARTITION MANUFACTURER.
2.) SEE JOIST SHOP DRAWINGS FOR JOIST ATTACHMENT & BEARING.

11 | S701 | DETAIL | SCALE: ¾" = 1'-0

12 | S701 | DETAIL | SCALE: 1½" = 1'-0

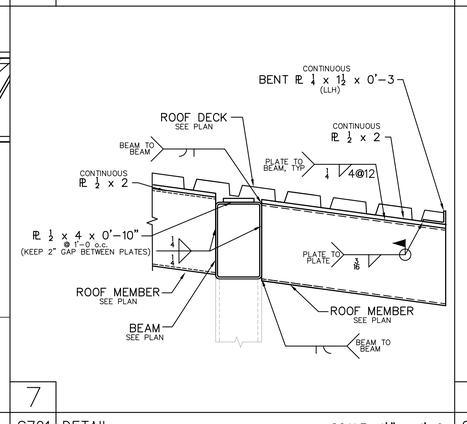

7 | S701 | DETAIL | SCALE: 1½" = 1'-0

8 | S701 | DETAIL | SCALE: 1½" = 1'-0

3 | S701 | DETAIL | SCALE: ¾" = 1'-0

4 | S701 | DETAIL | SCALE: 1½" = 1'-0

ISDESIGN
ARCHITECTURE + INTERIORS
1111 Haynes Street, Suite 103
Raleigh, North Carolina 27604
t. 919.833.5400
www.isdesignpa.com

RED JOB No.18-E091
RED ENGINEERING & DESIGN
STRUCTURAL ENGINEERS
126 SALEM TOWNE CT.
APEX, NORTH CAROLINA 27502
TEL. (919) 833-3486
REDENGINEERINGDESIGN.COM
C-3479

Project

THE HEALING PLACE OF NEW HANOVER COUNTY

1000 MEDICAL CENTER DRIVE
WILMINGTON, NORTH CAROLINA

Client

NEW HANOVER COUNTY, NORTH CAROLINA

All reproduction & intellectual property rights reserved © 2020

Key Plan

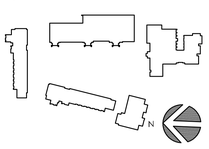

Professional Seals

NORTH CAROLINA PROFESSIONAL SEAL 031434 ENGINEER BRIAN MOSKOW
08.25.20

No.	Description	Date
A	SCHEMATIC DESIGN	11/26/19
B	DESIGN DEVELOPMENT PACKAGE	
0	FOR CONSTRUCTION	08/25/20

Project Code: 16HTWILMNG

Sheet Title

SLAB-ON-GRADE DETAILS

Original drawing is 42 x 30 Do not scale contents of this drawing.

Sheet Number

S-701

12/2/2020 8:50 AM Z:\Red Engineering\2018\18-E091 Healing Place - Wilmington, Is design\2-Design Development\CAD\Structural\18-E091 Healing Transitions.dwg

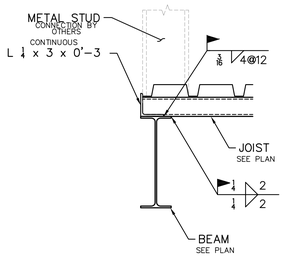

15

S801 | DETAIL | SCALE: 1½" = 1'-0

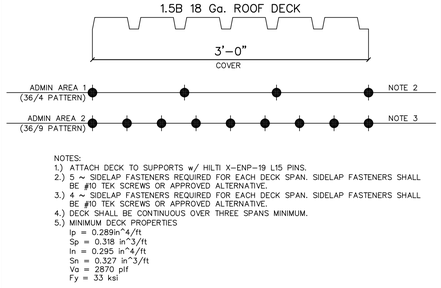

NOTES:
1.) ATTACH DECK TO SUPPORTS w/ HILTI X-ENP-19 L15 PINS.
2.) 5 ~ SIDELAP FASTENERS REQUIRED FOR EACH DECK SPAN. SIDELAP FASTENERS SHALL BE #10 TEK SCREWS OR APPROVED ALTERNATIVE.
3.) 4 ~ SIDELAP FASTENERS REQUIRED FOR EACH DECK SPAN. SIDELAP FASTENERS SHALL BE #10 TEK SCREWS OR APPROVED ALTERNATIVE.
4.) DECK SHALL BE CONTINUOUS OVER THREE SPANS MINIMUM.
5.) MINIMUM DECK PROPERTIES
Ip = 0.289in^4/ft
Sp = 0.318 in^3/ft
In = 0.295 in^4/ft
Sn = 0.327 in^3/ft
Va = 2870 plf
Fy = 33 ksi

11

S801 | DETAIL | SCALE: 1½" = 1'-0

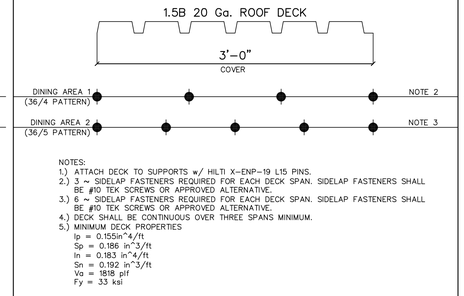

NOTES:
1.) ATTACH DECK TO SUPPORTS w/ HILTI X-ENP-19 L15 PINS.
2.) 3 ~ SIDELAP FASTENERS REQUIRED FOR EACH DECK SPAN. SIDELAP FASTENERS SHALL BE #10 TEK SCREWS OR APPROVED ALTERNATIVE.
3.) 6 ~ SIDELAP FASTENERS REQUIRED FOR EACH DECK SPAN. SIDELAP FASTENERS SHALL BE #10 TEK SCREWS OR APPROVED ALTERNATIVE.
4.) DECK SHALL BE CONTINUOUS OVER THREE SPANS MINIMUM.
5.) MINIMUM DECK PROPERTIES
Ip = 0.155in^4/ft
Sp = 0.186 in^3/ft
In = 0.183 in^4/ft
Sn = 0.192 in^3/ft
Va = 1818 plf
Fy = 33 ksi

7

S801 | DETAIL | SCALE: 1½" = 1'-0

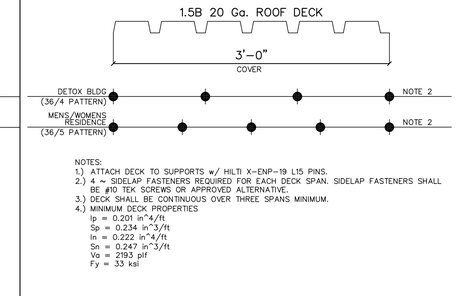

NOTES:
1.) ATTACH DECK TO SUPPORTS w/ HILTI X-ENP-19 L15 PINS.
2.) 4 ~ SIDELAP FASTENERS REQUIRED FOR EACH DECK SPAN. SIDELAP FASTENERS SHALL BE #10 TEK SCREWS OR APPROVED ALTERNATIVE.
3.) DECK SHALL BE CONTINUOUS OVER THREE SPANS MINIMUM.
4.) MINIMUM DECK PROPERTIES
Ip = 0.201 in^4/ft
Sp = 0.234 in^3/ft
In = 0.222 in^4/ft
Sn = 0.247 in^3/ft
Va = 2193 plf
Fy = 33 ksi

5

S801 | DETAIL | SCALE: 1½" = 1'-0

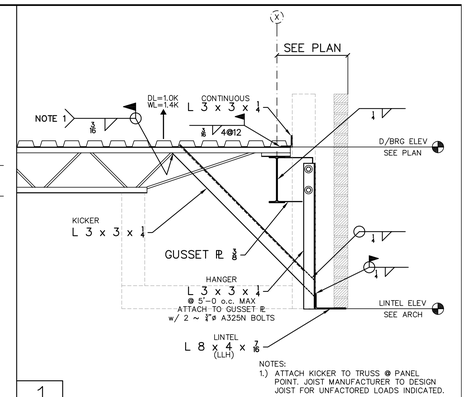

NOTES:
1.) ATTACH KICKER TO TRUSS @ PANEL POINT. JOIST MANUFACTURER TO DESIGN JOIST FOR UNFACTORED LOADS INDICATED.

1

S801 | DETAIL AT LINTEL | SCALE: ¾" = 1'-0

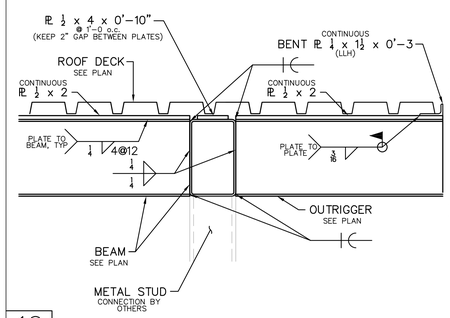

16

S801 | DETAIL | SCALE: 1½" = 1'-0

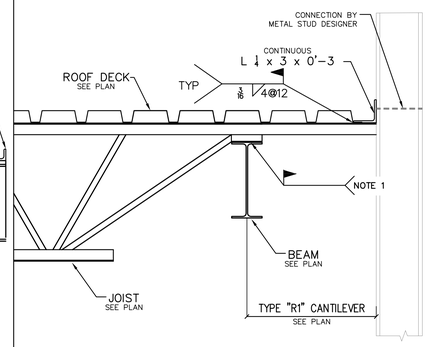

NOTES:
1.) SEE JOIST SHOP DRAWINGS FOR JOIST ATTACHMENT & BEARING.

12

S801 | DETAIL | SCALE: 1½" = 1'-0

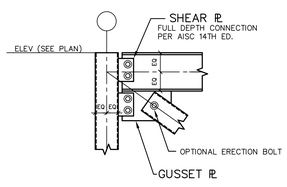

NOTES:
1.) BRACE CONNECTION SHALL BE DESIGNED BY FABRICATOR FOR MINIMUM FACTORED LOADS INDICATED ON BRACING BAY ELEVATIONS.

8

S801 | DETAIL | SCALE: ¾" = 1'-0

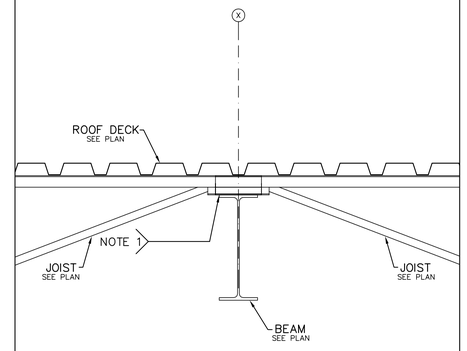

NOTES:
1.) SEE JOIST SHOP DRAWINGS FOR JOIST ATTACHMENT & BEARING.

6

S801 | DETAIL | SCALE: 1½" = 1'-0

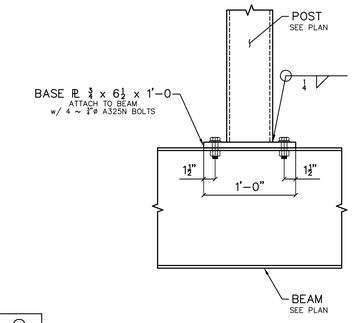

2

S801 | DETAIL | SCALE: 1½" = 1'-0

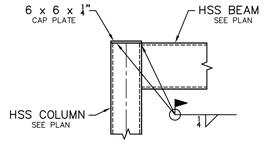

18

S801 | DETAIL | SCALE:

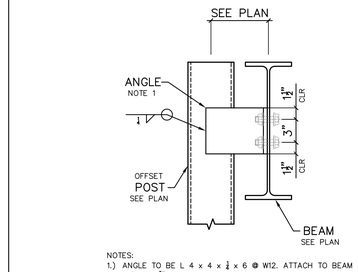

NOTES:
1.) ANGLE TO BE L 4 x 4 x ¼ x 6 @ W12. ATTACH TO BEAM w/ 2 ~ ¾" ø A325N BOLTS.
ANGLE TO BE L 4 x 4 x ¼ x 12 @ W16. ATTACH TO BEAM w/ 4 ~ ¾" ø A325N BOLTS.

14

S801 | DETAIL | SCALE: 1½" = 1'-0

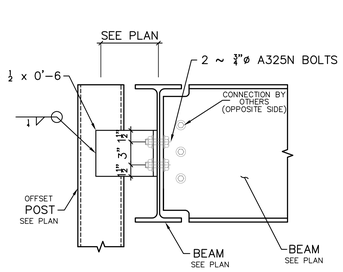

10

S801 | DETAIL | SCALE: 1½" = 1'-0

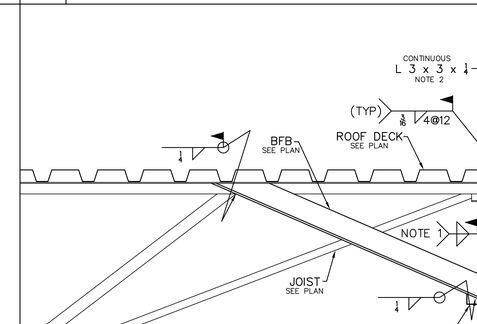

NOTES:
1.) SEE JOIST SHOP DRAWINGS FOR JOIST ATTACHMENT.
2.) AT SECTION 5/S110 SUBSTITUTE ¼ x 3 x 10" BENT PLATE IN LIEU OF ANGLE.

4

S801 | DETAIL | SCALE: 1½" = 1'-0

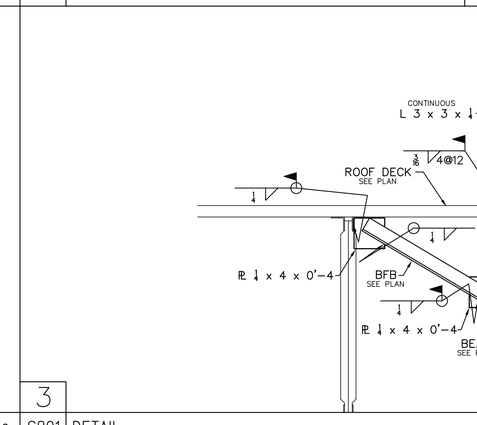

3

S801 | DETAIL | SCALE: 1½" = 1'-0

NOTES:
1.) BRACE CONNECTION SHALL BE DESIGNED BY FABRICATOR FOR MINIMUM FACTORED LOADS INDICATED ON BRACING BAY ELEVATIONS.

9

S801 | DETAIL | SCALE: ¾" = 1'-0

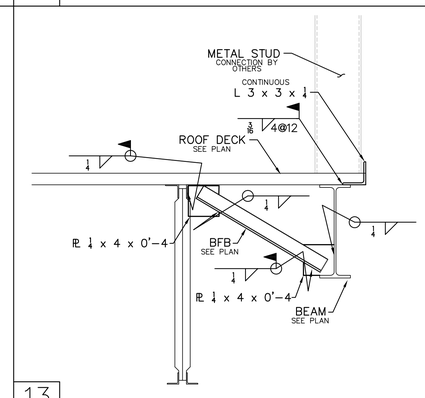

13

S801 | DETAIL | SCALE: 1½" = 1'-0

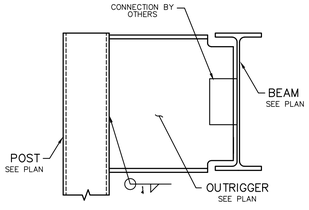

17

S801 | DETAIL | SCALE: 1½" = 1'-0

1111 Haynes Street, Suite 103
Raleigh, North Carolina 27604
t. 919.833.5400
www.isdesignpa.com

RED JOB No.18-E091

RED ENGINEERING & DESIGN
STRUCTURAL ENGINEERS
126 SALEM TOWNE CT
APEX, NORTH CAROLINA 27502
TEL. (919) 833-3405
REDENGINEERINGDESIGN.COM
C-3479

Project

THE HEALING PLACE OF NEW HANOVER COUNTY

1000 MEDICAL CENTER DRIVE
WILMINGTON, NORTH CAROLINA

Client

NEW HANOVER COUNTY, NORTH CAROLINA

All reproduction & intellectual property rights reserved © 2020

Key Plan

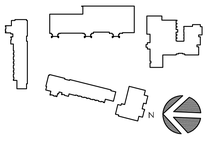

Professional Seals



08.25.20

No.	Description	Date
A	SCHEMATIC DESIGN	11/26/19
B	DESIGN DEVELOPMENT PACKAGE	
0	FOR CONSTRUCTION	08/25/20

Project Code: 16HTWILMNG

Sheet Title

DETAILS

Original drawing is 42 x 30 Do not scale contents of this drawing

Sheet Number

S-801

12/2/2020 8:50 AM Z:\Red Engineering\2018\18-E091 Healing Place - Wilmington, Is design\2-Design Development\CAD\Structural\18-E091 Healing Transitions.dwg

GENERAL PLUMBING NOTES

I. GENERAL REQUIREMENTS:

1. PLUMBING CONTRACTOR IS TO FURNISH & PAY FOR ALL LABOR, MATERIAL, EQUIPMENT, PERMITS, & FEES REQUIRED FOR THE COMPLETE INSTALLATION OF ALL SYSTEMS IN THIS SECTION OF WORK.
2. ALL WORK IS TO BE PERFORMED IN ACCORDANCE W/ 2018 NCPC & ALL OTHER APPLICABLE CODES. P.C. IS TO COORDINATE W/ G.C. IN REGARDS TO PROJECT TIMELINE, WORK HOURS, AS WELL AS ANY BONDING OR INSURANCE REQUIREMENTS.
3. ALL PLUMBING FIXTURES & PLUMBING SYSTEM EQUIPMENT SHALL BE PROVIDED COMPLETE W/ ALL ACCESSORIES, HANGERS, VALVES, STOPS, TAILPIECES, TRAPS, FAUCETS, STRAINERS, ETC. REGARDLESS OF PRESENCE ON PLANS. SEE FIXTURE SCHEDULE.
4. ALL EQUIPMENT, MATERIALS, & INSTALLATION SHALL BE GUARANTEED TO BE FREE OF DEFECTS FOR A PERIOD OF ONE (1) YEAR AFTER FINAL ACCEPTANCE OF WORK OR IN ACCORDANCE W/ THE MANUFACTURER'S STANDARD GUARANTEE. IF LONGER. EXISTING EQUIPMENT IS EXCLUDED FROM WARRANTY REQUIREMENT.
5. THESE DRAWINGS ARE DIAGRAMMATIC & SHOW GENERAL LOCATION & ARRANGEMENT OF ALL MATERIALS & EQUIPMENT. THE DRAWINGS SHALL BE FOLLOWED AS CLOSELY AS BUILDING CONSTRUCTION & ALL OTHER WORK WILL PERMIT.
6. DO NOT SCALE DRAWINGS FOR MEASUREMENT.
7. INFORMATION GIVEN IN SCHEDULES INCLUDES BOTH DESCRIPTION OF PRODUCT & MANUFACTURER'S MODEL NUMBER. IF CONFLICT IS PRESENT BETWEEN DESCRIPTION & MODEL NUMBER, EQUIPMENT DESCRIPTION SHALL TAKE PRECEDENT. IN CASE OF CONFLICT BETWEEN THE PLANS & NOTES/ SPECIFICATIONS OR CONFLICT BETWEEN INFORMATION PRESENTED ON THE PLANS OR IN THE NOTES/SPECIFICATIONS, THEN THE MOST RESTRICTIVE SHALL TAKE PRECEDENT.
8. BEFORE BID P.C. IS RESPONSIBLE FOR CLARIFYING W/ G.C. ANY CONFUSION IN REGARDS TO RESPONSIBILITY OF WORK TO BE PERFORMED OR MATERIALS TO BE PROVIDED. THE SUBMITAL OF THE BID BY THE CONTRACTOR WILL BE HELD AS PROOF THAT THE CONTRACTOR UNDERSTANDS THOROUGHLY & COMPLETELY THE SCOPE OF THE WORK INVOLVED, & HAS INCLUDED ON THE BID ALL THE NECESSARY ITEMS TO CARRY OUT THIS SECTION OF WORK.
9. AS SOON AS POSSIBLE (& NOT MORE THAN 30 DAYS) AFTER CONTRACT IS SIGNED, THE P.C. SHALL PROVIDE SUBMITALS OF PLUMBING EQUIPMENT HE/SHE INTENDS TO PURCHASE FOR REVIEW & COMMENT BY THE ENGINEER. ENGINEER IS TO APPROVE SUBMITTALS BEFORE EQUIPMENT IS ORDERED.
10. ALL QUESTIONS MUST BE SUBMITTED IN RFI FORMAT TO THE ARCHITECT & MUST BE ADDRESSED BY THE APPROPRIATE DESIGNER OF RECORD PRIOR TO BECOMING A PROPOSED CHANGE ORDER.
11. P.C. IS TO REVIEW COMPLETE DRAWING SET, P.C. IS RESPONSIBLE FOR WORK EXPLICITLY SHOWN & WORK IMPLIED. UNLESS OTHERWISE NOTED, FINAL PLUMBING CONNECTION TO ALL EQUIPMENT, FIXTURES, ETC. IS THE RESPONSIBILITY OF THE P.C..

II. DIVISION OF WORK:

1. ALL ROOF PENETRATIONS, FLASHING, ETC. ARE TO BE PERFORMED BY ROOFING CONTRACTOR.
2. ALL LOW VOLTAGE WIRING RELATED TO PLUMBING EQUIPMENT & SYSTEMS IS THE RESPONSIBILITY OF THE PLUMBING CONTRACTOR. ALL HIGH VOLTAGE CONNECTIONS TO PLUMBING EQUIPMENT, INCLUDING DISCONNECTS, TO BE PROVIDED & INSTALLED BY E.C.
3. G.C. TO BE RESPONSIBLE FOR PROVIDING & INSTALLING ANY ACCESS DOORS RELATED TO PLUMBING SYSTEM (W/ EXCEPTION OF CLEANOUT COVERS, BY P.C.). P.C. RESPONSIBLE FOR COMMUNICATING TO G.C. SIZE & LOCATION OF REQUIRED ACCESS DOOR(S).
4. PLUMBING CONTRACTOR IS TO EMPLOY THE SERVICES OF THE G.C. FOR CUTTING & PATCHING OF WALLS, FLOORS, & CEILINGS RELATED TO THE INSTALLATION OF PLUMBING EQUIPMENT & SYSTEMS.
5. G.C. TO BE RESPONSIBLE FOR PROVIDING & INSTALLING ANY WATER HEATER PLATFORMS, EITHER FLOOR/WALL MOUNTED OR SUSPENDED. P.C. TO COMMUNICATE REQUIREMENTS TO G.C.
6. ALL GAS PIPING IS BY MECHANICAL CONTRACTOR.
7. WATER HEATER VENT BY PLUMBING CONTRACTOR.

III. MATERIALS:

1. ALL MATERIALS SHALL BE NEW UNLESS OTHERWISE SHOWN OR SPECIFIED.
2. ALL MATERIALS INSTALLED IN RETURN PLENUM ARE TO BE PLENUM RATED.
3. ALL EXTERIOR EQUIPMENT, DEVICES, & MATERIALS SHALL BE RATED FOR USED IN A 150 MPH WIND ZONE.
4. PIPING MATERIALS & FITTINGS SHALL BE AS FOLLOWS:
   WASTE & VENT (ABOVE & BELOW SLAB):
   PVC PIPE, PVC SOCKET FITTINGS, & SOLVENT-CEMENTED FITTINGS. PROVIDE CAST IRON, PLENUM WRAPPED PVC OR OTHER APPROVED MATERIALS IN RETURN PLENUM.
   DOMESTIC WATER (BELOW SLAB):
   TYPE 'K' COPPER.
   OR
   CONTINUOUS PEX.
   DOMESTIC WATER (ABOVE SLAB):
   TYPE 'L' COPPER W/ SWEATED SOCKET FITTINGS. THREADED FITTINGS MAY BE USED AT VALVES, FIXTURES, & SIMILAR.
   OR
   CPVC PIPING W/ SOLVENT-CEMENTED FITTINGS. THREADED FITTINGS MAY BE USED AT VALVES, FIXTURES, & SIMILAR. PROVIDE PLENUM-RATED CPVC OR PLENUM WRAP IF USED IN RETURN PLENUM.
   OR
   PEX PIPING W/ FLARED OR MECHANICAL JOINTS/FITTINGS. DO NOT USE IN RETURN PLENUMS. DO NOT USE IN EXPOSED AREAS.
   STORM PIPING (BELOW SLAB):
   PVC PIPE, PVC SOCKET FITTINGS, & SOLVENT-CEMENTED FITTINGS.
   STORM PIPING (ABOVE SLAB):
   SERVICE WEIGHT NO-HUB CAST IRON PIPE & FITTINGS W/ NO-HUB COUPLINGS.
5. FOR AUTOMATIC-CIRCULATING HOT WATER SYSTEMS, PIPING SHALL BE INSULATED W/ 1" OF INSULATION HAVING A CONDUCTIVITY NOT EXCEEDING 0.27 BTU-IN/HR x FT² x °F. THE FIRST 8' OF PIPING IN NON-CIRCULATING SYSTEMS SERVED BY EQUIPMENT W/OUT INTEGRAL HEAT TRAPS SHALL BE INSULATED W/ 0.5" OF MATERIAL HAVING A CONDUCTIVITY NOT EXCEEDING 0.27 BTU-IN/HR x FT² x °F. (2018 NCECC C404.4)
6. INSULATION IS REQUIRED ON ALL ROOF DRAIN BODIES & PIPING (ABOVE SLAB). 1/2" THICK RIGID MOLDED FIBERGLASS W/ FITTINGS INSERTS, PVC COVERS, & VAPOR BARRIER JACKET.
7. PROVIDE HANGERS & SUPPORTS APPROVED FOR USE PER NCPC.
8. ANY PLUMBING FIXTURES W/ A COMMON SHUT-OFF VALVE (I.E. PRE-RINSE, KITCHEN SINK, MOP SINK) ARE TO INCLUDE A CHECK VALVE ON THE HOT & COLD WATER VALVES TO PREVENT INTERCONNECTION OF HOT & COLD WATER LINES.

IV. COORDINATION:

1. BEFORE BEGINNING WORK, INVERT ELEVATIONS SHALL BE ESTABLISHED. P.C. IS TO ENSURE PROPER SLOPES OF ALL WASTE & STORM PIPING CAN BE MAINTAINED. CONTACT ENGINEER IMMEDIATELY IF PROBLEM/ISSUE IS DISCOVERED.
2. P.C. TO COORDINATE LOCATION OF ALL ROOF PENETRATIONS W/ ROOFING CONTRACTOR & MECHANICAL CONTRACTOR. P.C. & M.C. TO COORDINATE TO ENSURE NO PLUMBING VENTS ARE LOCATED WITHIN 10' OF ANY OUTSIDE AIR INTAKES.
3. P.C. TO COORDINATE W/ G.C. & ARCH PLANS TO ENSURE NECESSARY BACKING/SUPPORTS ARE INSTALLED TO ALLOW INSTALLATION OF PLUMBING FIXTURES.
4. THE PLUMBING CONTRACTOR SHALL COORDINATE CLOSELY W/ ALL OTHER TRADES TO AVOID CONFLICT & ENSURE OTHER TRADES PROVIDE MEASURES TO ACCOMMODATE PLUMBING WORK (I.E. ACCESS DOORS, SLAB/WALL/ROOF OPENINGS, ELECTRICAL CONNECTIONS, ETC.)
5. PIPING SHOULD BE COORDINATED W/ ALL STRUCTURAL FOOTINGS & FOUNDATIONS. PIPE SHOULD BE OFFSET TO AVOID CONTACT W/ FOOTINGS & FOUNDATION WALLS. IF PIPING MUST RUN UNDER A FOOTING OR THROUGH A FOUNDATION WALL, THE PIPE MUST BE INSTALLED W/ A RELIEVING ARCH OR IN A PIPE SLEEVE PER SCPC 305.3.
6. P.C. TO REFER TO ARCHITECTURAL DRAWINGS FOR MOUNTING HEIGHTS OF PLUMBING FIXTURES.

V. EXECUTION:

1. P.C. TO FOLLOW MANUFACTURER'S INSTRUCTIONS WHEN INSTALLING PLUMBING EQUIPMENT. ENSURE REQUIRED MAINTENANCE ACCESS & CLEARANCES ARE MAINTAINED. IF CONFLICT EXISTS BETWEEN THESE PLANS & MANUFACTURER'S INSTRUCTIONS, CONTACT ENGINEER.
2. P.C. RESPONSIBLE FOR EXECUTING ALL CODE REQUIRED TESTS & INSPECTIONS, INCLUDING BUT NOT LIMITED TO, LEAK & PRESSURE TESTING OF WASTE, VENT, & WATER PIPING, & SANITIZING OF WATER PIPING.
3. WATER SERVICE & BUILDING SEWER PIPING MUST BE SEPARATED PER NCPC 603.2.
4. ENSURE PIPING LOCATED ON EXTERIOR WALLS (OR OTHER WALLS EXPOSED TO FREEZING CONDITIONS) IS INSTALLED ON WARM-SIDE OF WALL INSULATION PER NCPC 305.4.
5. ALL WATER PIPING INSTALLED BELOW GRADE TO BE PROTECTED AGAINST FREEZING BY BURYING NOT LESS THAN 6" BELOW THE FROST LINE OR NOT LESS THAN 12" BELOW FINISHED GRADE, WHICHEVER IS GREATER PER SCPC 305.4.
6. ANY NOTCHING, DRILLING, BORING, OR OTHER ALTERATION TO BUILDING STRUCTURE SHALL BE PERFORMED IN A CODE APPROVED METHOD & NOT THREATEN THE INTEGRITY OF THE BUILDING STRUCTURE.
7. SUPPORT ALL PIPING IN ACCORDANCE W/ NCPC. ANY SUSPENDED MATERIALS SHALL BE DIRECTLY SUPPORTED BY THE BUILDING STRUCTURE. DO NOT ATTACH ANYTHING TO THE ROOF DECK.
8. PROVIDE A U.L. LISTED ASSEMBLY FOR ALL PENETRATIONS THRU FIRE RATED WALLS, FLOORS, & CEILINGS.
9. PENETRATIONS OF ALL EXTERIOR WALLS, FLOORS, & CEILINGS SHALL BE SEALED IN AN AIR TIGHT MANNER & IN ACCORDANCE W/ 2018 NCECC.
10. CLEANOUT PLUGS SHALL BE INSTALLED IN ACCORDANCE W/ PLUMBING CODE REQUIREMENTS. PROVIDE CLEANOUTS AS PLANS INDICATED & AT THE BASE OF ALL WASTE STACKS, AT EVERY FOUR 45 DEGREE TURNS IN SERIES (W/ ONE 90° ELBOW COUNTING AS TWO 45° BENDS), AT EVERY 100 FEET, & AT THE BASE OF ALL ROOF LEADERS. CLEANOUTS SHALL BE PLACED IN READILY ACCESSIBLE LOCATIONS.
11. ANY PIPE INVERTS ARE MEASURED TO THE BOTTOM OF THE PIPE.
12. SUPPLY BRANCH LINES SERVING MORE THAN ONE (1) FIXTURE SHALL INCLUDE SHUT-OFF VALVE. LABEL VALVE & LOCATE AS CLOSE TO RISER/MAIN AS POSSIBLE. (NCPC 606.2.1)
13. VALVES NOT DIRECTLY AT EQUIPMENT SHALL BE LABELED INDICATING THE FIXTURE OR AREA SERVED. (NCPC 606.4)
14. PROVIDE SHUT-OFF VALVES ON THE FIXTURE SUPPLY TO EACH PLUMBING FIXTURE, APPLIANCE, OR MECHANICAL EQUIPMENT.
15. WATER HEATER SHALL BE FILLED W/ WATER & PURGED AS SOON AS INSTALLED OR IN NO EVENT LATER THAN GAS/ELECTRIC HOOK-UP.
16. COPPER PIPING SHALL BE PROTECTED AGAINST CONTACT W/ MASONRY OR DISSIMILAR METALS. ALL HANGERS, SUPPORTS, ANCHORS, & CLIPS SHALL BE COPPER OR COPPER PLATED. WHERE COPPER PIPING IS CARRIED ON IRON TRAPEZE HANGERS W/ OTHER PIPING, SATISFACTORY & PERMANENT ELECTROLYTIC ISOLATION MATERIAL SHALL PROTECT THE COPPER AGAINST CONTACT W/ OTHER METALS.
17. WHERE COPPER PIPING IS SLEEVED THROUGH MASONRY, SLEEVES SHALL BE COPPER OR RED BRASS. WHERE COPPER MUST BE CONCEALED IN A MASONRY PARTITION OR AGAINST MASONRY, CONTACT SHALL BE PREVENTED BY COATING THE COPPER HEAVILY W/ ASPHALTIC ENAMEL & PROVIDING 15# ASPHALT SATURATED FELT BETWEEN THE PIPE & MASONRY.
18. ALL PIPE INSULATION SHALL RUN CONTINUOUSLY THROUGH FLOORS, WALLS, & PARTITIONS. PIPE INSULATION SHALL BE MITERED AT ELBOWS & TEES TO ENSURE COMPLETE COVERAGE OF PIPING.
19. VACUUM BREAKERS SHALL BE PROVIDED FOR ALL FIXTURES TO WHICH HOSES MAY BE ATTACHED. VACUUM BREAKERS SHALL BE PERMANENTLY ATTACHED.
20. THE PLUMBING CONTRACTOR SHALL PROVIDE WATER HAMMER PROTECTION ON ALL WATER DISTRIBUTION PIPING SERVING EQUIPMENT W/ QUICK CLOSING VALVES (ICE MAKERS, DISHWASHERS, FLUSH VALVES, WASHING MACHINES, WATER COOLERS, ETC.) SEE SHOCK ARRESTOR SCHEDULE.
21. ACCESS DOORS TO BE PROVIDED FOR ALL VALVES & DEVICES REQUIRING ACCESS WHEN LOCATED IN WALLS OR ABOVE INACCESSIBLE CEILING CONSTRUCTION. ACCESS DOORS TO BE RATED WHERE INSTALLED IN RATED ASSEMBLIES.
22. P.C. IS TO ENSURE THAT THEIR INSTALLATION OF NEW CONDUITS, PIPES, DUCTWORK, & SIMILAR DOES NOT BLOCK ACCESS TO NEW OR EXISTING AREA EQUIPMENT & THAT THE FORE MENTIONED DOES NOT INTERFERE W/ THE REQUIRED SERVICE CLEARANCE OF NEW OR EXISTING EQUIPMENT. COORDINATE W/ OTHER TRADE CONTRACTORS & CONTACT ENGINEER IF UNCERTAINTY EXISTS REGARDING EQUIPMENT SERVICE CLEARANCE REQUIREMENTS.
23. THE PLUMBING CONTRACTOR SHALL BE RESPONSIBLE FOR PROTECTING ALL PLUMBING EQUIPMENT FROM FOREIGN MATERIAL DURING CONSTRUCTION (PAINT, SPACKLE, ETC.). UPON COMPLETION OF WORK, THE PLUMBING CONTRACTOR SHALL CLEAN, WASH, ETC. ALL ITEMS & EQUIPMENT WITHIN HIS SCOPE OF WORK & LEAVE ALL ITEMS BRIGHT & CLEAN.
24. NO INSULATION PERMITTED ON BACKFLOW PREVENTER ASSEMBLY.
25. PROVIDE PRESSURE REDUCING VALVE IF INCOMING WATER PRESSURE EXCEEDS 80 PSI.

PLUMBING FIXTURE SPECIFICATIONS AND CONNECTION SCHEDULE(CONTINUED ON SHEET P002)

MARK	FIXTURE	TYPE	MANUFACTURER	MODEL NO.	MATERIAL	STYLE	FAUCET/VALVE				DRAIN		SUPPLIES AND STOPS	PIPE SIZES				MOUNTING	REMARKS
							MANUFACT. MODEL NO.	SPOUT	HANDLES	CENTERS	TYPE	SIZE		WASTE	VENT	CW	HW		
P-1A	WATER CLOSET	FLUSH VALVE	AMERICAN STANDARD	3043.001	VITREOUS CHINA	ADA ELONGATED	AMER. STD. 6067.221	-	-	-	-	-	-	3"	2"	1"	–	FLOOR	PROVIDE OPEN FRONT SEAT WITH NO LID. RIM HEIGHT = 16.5" AUTO FLUSH VALVE (AC. PWR)
P-1B	WATER CLOSET	FLUSH VALVE	AMERICAN STANDARD	3461.001	VITREOUS CHINA	ADA ELONGATED	AMER. STD. 6047.161	-	-	-	-	-	-	3"	2"	1"	–	FLOOR	PROVIDE CLOSED FRONT SEAT WITH LID. RIM HEIGHT = 16.5"
P-1C	WATER CLOSET	FLUSH VALVE	AMERICAN STANDARD	3351.101	VITREOUS CHINA	ADA ELONGATED	AMER. STD. 6067.161	-	-	-	-	-	-	3"	2"	1"	–	WALL	PROVIDE OPEN FRONT SEAT WITH NO LID. W/ WC CARRIER. AUTO FLUSH VALVE (AC. PWR)
P-2	URINAL	WALL HUNG	AMERICAN STANDARD	6590.001	VITREOUS CHINA	ADA TOP-SPUD	AMER. STD. 6062.310	-	-	-	-	-	-	2"	1½"	¾"	–	WALL	SEE ARCH PLAN FOR MTG. HEIGHT. 1.0 GPF. AUTO VALVE (A.C POWERED).
P-3A	LAVATORY	UNDER MOUNT	AMERICAN STANDARD	0497.221	VITREOUS CHINA	ADA COUNTER TOP	AMER. STD. 6055.205 (W/ TV-1)	CENTER	AUTO	4" 3-HOLE	GRID	1¼"	BRASSCRAFT OCR1912A	2"	1½"	½"	½"	COUNTER	1.5 GPM. AC PWR. BARRIER FREE. W/ TV-1. SET TO 100°F.
P-3B	LAVATORY	UNDER MOUNT	AMERICAN STANDARD	0497.221	VITREOUS CHINA	ADA COUNTER TOP	CFG 40717	CENTER	LEVER	4" 3-HOLE	POP -UP	1¼"	BRASSCRAFT OCR1912A	2"	1½"	½"	½"	COUNTER	0.5 GPM. BARRIER FREE.
P-4	LAVATORY	WALL MOUNT	AMERICAN STANDARD	0355.012	VITREOUS CHINA	ADA D-SHAPE	AMER. STD. 6055.205 (W/ TV-1)	CENTER	AUTO	4" 3-HOLE	GRID	1¼"	BRASSCRAFT OCR1912A	2"	1½"	½"	½"	WALL	W/ WALL BRACKET. 0.5 GPM, MOUNT AT ADA HEIGHT. AC PWR. W/ TV-1. SET TO 100°F.
P-4A	SERVICE SINK	WALL MOUNT	ELKAY	ESSB2520C	STAINLESS STEEL	SINGLE BOWL	LK907BR03L2H	CENTER	LEVER	4" 2-HOLE	GRID	1¼"	BRASSCRAFT OCR1912A	2"	1½"	½"	½"	WALL	2.2 GPM, 12" HIGH FULL-LENGTH BACKSPLASH
P-5	MOP SINK	FLOOR MOUNT	FIAT	MSB2424	MOLDED STONE	ONE-PIECE 24x24	FIAT 830AA (W/ CHECK VALVES)	CENTER	2	8" 2-HOLE	DOME	3"	-	3"	1½"	½"	½"	FLOOR	W/ WALL BRACKET, W/ MOP HANG. W/ HOSE & HOSE BRACKET. W/ VACUUM BREAKER.
P-7	SINK (30.75" x 18.5")	UNDER MOUNT	ELKAY	ELUHAD311855	STAINLESS STEEL	ADA 2-BOWL	CFG 40513	CENTER	LEVER	4" O.C. 4-HOLE	CRUMB CUP	1½"	BRASSCRAFT OCR1912A	2"	1½"	½"	½"	COUNTER	W/ OFFSET DRAIN. REAR CENTER. BOWL DEPTH = 5-3/8" W/ SPRAYER.
P-8	SINK (21" x 15.75")	UNDER MOUNT	ELKAY	ELUH211510	STAINLESS STEEL	SINGLE BOWL	CFG 40511	CENTER	LEVER	4" O.C. 3-HOLE	CRUMB CUP	1½"	BRASSCRAFT OCR1912A	2"	1½"	½"	½"	COUNTER	BOWL DEPTH = 10"
P-9	SINK (12" x 9")	UNDER MOUNT	ELKAY	ELUH129	STAINLESS STEEL	SINGLE BOWL	CFG 40511	CENTER	LEVER	4" O.C. 3-HOLE	CRUMB CUP	1½"	BRASSCRAFT OCR1912A	2"	1½"	½"	½"	COUNTER	BOWL DEPTH = 7"
P-9A	SINK (12" x 9")	UNDER MOUNT	ELKAY	ELUH129	STAINLESS STEEL	SINGLE BOWL	AMER. STD. 6409.170	CENTER	WRIST BLADE	4" O.C. 3-HOLE	CRUMB CUP	1½"	BRASSCRAFT OCR1912A	2"	1½"	½"	½"	COUNTER	BOWL DEPTH = 7"
P-10	WATER COOLER (HANDS FREE)	HI-LO	ELKAY	LZOOTL8WSLK	STAINLESS, VINYL	ADA	-	-	-	-	-	-	BRASSCRAFT G2CR19	1½"	1½"	½"	-	WALL	120V, 6.0 AMPS, HFC-134A. MOUNT AT ADA HEIGHT. W/ HANGER BRACKET. INCLUDES FILL STATION.
P-11	SHOWER HEAD	-	-	-	-	STANDARD	SYMMONS 9601-PLR	-	LEVER	-	FLOOR	2"	-	2"	1½"	½"	½"	FLOOR	TILED SHOWER BY G.C. W/ 2.0 GPM SHOWER HEAD. SHOWER VALVE LIMITED TO 120°F.
P-11A	SHOWER	TRANSFER SHOWER	LIBERTY LINE	1138382 RSADA	GEL-COATED FIBERGLASS	ADA	-	-	LEVER	-	FLOOR	2"	-	2"	1½"	½"	½"	FLOOR	PROVIDE W/ GRAB BARS, SEAT, & SHOWER VALVE, LIMITED TO 120°F. COORD. SEAT & BARS W/ ARCH.
P-12	SHOWER	STANDARD	AQUATIC	1603STSM	GEL-COATED GELCOAT	ONE-PIECE	SYMMONS 9601-PLR	CENTER	LEVER	-	GRID	2"	-	2"	1½"	½"	½"	FLOOR	W/ 2.0 GPM SHOWER HEAD. SHOWER VALVE LIMITED TO 120°F. 60" X 36" INTERIOR. NO GRAB BARS. INCLUDE SHOWER RODS.
P-13	WASHER BOX	SUPPLY BOX	OATEY	-	PVC	PLASTIC, RECESSED	-	-	-	-	-	-	-	2" IND. 3" BR.	1½"	½"	½"	WALL	MATCH PIPING MATERIALS. W/ QTR TURN VALVE & SHOCK ARRESTORS. W/ FACEPLATE. W/ TAIL PIECE.
P-14	VALVE BOX	SUPPLY BOX	OATEY	-	POLYSTYRENE	PLASTIC, RECESSED	-	-	-	-	-	-	-	–	–	½"	–	WALL	MATCH PIPING MATERIALS. W/ QTR TURN VALVE & SHOCK ARRESTOR. W/ FACEPLATE.
P-15	WATER COOLER (HANDS FREE)	HI	ELKAY	LZO8S	STAINLESS, VINYL	STANDARD	-	-	-	-	-	-	BRASSCRAFT G2CR19	1½"	1½"	½"	-	WALL	120V, 6.0 AMPS, HFC-134A. MOUNT AT ADA HEIGHT. W/ HANGER BRACKET.
BFP-1	BACK FLOW PREVENTER	RED. PRESS. ZONE	WATTS	LF909	LEAD-FREE, BRONZE	HORIZONTAL	-	-	-	-	-	-	-	–	–	2"	–	WALL	W/ STRAINER. PROVIDE REQ'D CLEARANCES. W/ TEST PORTS & ISO VALVES. DRAIN W/ AIR GAP.
BW-1	BACKWATER VALVE	IN-LINE	ZURN	BW2930	PVC BODY	PVC FLAPPER	-	-	-	-	-	-	-	–	SEE PLN	-	–	GRADE	AUTOMATIC PVC FLAPPER.
FCO	FLOOR CLEANOUT	ADJUSTABLE	ZURN	CO-2450	PVC BODY, NICKEL CVR.	FINISHED FLOOR	-	-	-	-	-	-	-	SEE PLAN	–	–	–	FLOOR	
FD-1	FLOOR DRAIN	FINISHED FLOOR	ZURN	FD	PVC	ADJUSTABLE	-	-	-	-	-	-	-	SEE PLAN	–	–	–	FLOOR	W/ DEEP SEAL TRAP. W/ TRAP SEAL.
FD-2	FLOOR DRAIN	FINISHED FLOOR	ZURN	FD	PVC	ADJUSTABLE	-	-	-	-	-	-	-	SEE PLAN	–	–	–	FLOOR	W/ DEEP SEAL TRAP. W/ TRAP SEAL. PROVIDE W/TRAP PRIMER.
WHD	WALL HYDRANT	ENCASED, ANTI-SIPHON	WOODFORD	MODEL B65	BRASS	FREEZELESS	-	-	-	-	-	-	-	–	–	¾"	-	WALL	VERIFY WALL DEPTH. AUTOMATIC DRAINING. LOOSE KEY.
FS	FLOOR SINK	6" DEEP	ZURN	FD-2375	CAST-IRON, PORCELAIN ENAMEL	ANTI-SPLASH	-	-	-	-	-	-	-	SEE PLAN	–	–	–	FLOOR	W/ DOME STRAINER. W/ DEEP SEAL TRAP.
GCO-1	GRADE CLEANOUT	ADJUSTABLE	ZURN	CO-2450	PVC BODY, NICKEL CVR.	-	-	-	-	-	-	-	-	SEE PLAN	–	–	–	GRADE	W/ CONCRETE PAD.
HB-1	HOSE BIB	ANGLE	ZURN	Z1341	BRONZE	-	-	-	-	-	-	-	-	–	–	½"	-	WALL	W/ VACUUM BREAKER. LOOSE KEY TYPE.
HB-2	HOSE BIB	ANGLE	ZURN	Z1341	BRONZE	-	-	-	-	-	-	-	-	–	–	½"	-	WALL	W/ VACUUM BREAKER.
RD-1	ROOF DRAIN	GRAVITY	ZURN	Z121	CAST-IRON	-	-	-	-	-	-	-	-	SEE PLAN	–	–	–	ROOF	W/ C.I. DOME STRAINER. COORD. REQ'D CLAMPS, FITTINGS, ETC., W/ ROOF CONSTRUCTION.
RD-2	ROOF DRAIN	GRAVITY	ZURN	Z121	CAST-IRON	-	-	-	-	-	-	-	-	SEE PLAN	–	–	–	ROOF	W/ C.I. DOME STRAINER & 2" DAM. COORD. REQ'D CLAMPS, FITTINGS, ETC., W/ ROOF CONSTRUCTION.
RP-1	RECIRC. PUMP	DIRECT DRIVE	TACO	MODEL 006	BRONZE OR STAINLESS STEEL	MAINT. FREE	-	-	-	-	-	-	-	–	–	½"	-	IN-LINE	MAX 3.0 GPM @ 9FT TDH. 115V/1Ø. SOW. 0.43 F.L.A. W/ TIMER.
P-5A	MOP/HAND SINK COMBO	FLOOR MOUNT	IMC/TEDDY	CMS	STAINLESS STEEL	ONE-PIECE FREE STAND	-	-	-	-	GRATE	-	-	3"	1½"	½"	½"	FLOOR	INCLUDES (2) FAUCETS. W/ POT FILLER. INDIRECT DRAIN. W/ VACUUM BREAKER.

NOTES:
1. ALL FIXTURE COLORS & FINISHES TO BE APPROVED BY OWNER & ARCHITECT BEFORE PURCHASING.
2. PROVIDE P-TRAP AND SUPPLY LINE SAFETY COVERS FOR ALL ADA SINK AND LAVATORY INSTALLATIONS.
3. WATER CLOSET HANDLES TO BE LOCATED ON "WIDE SIDE" OF STALL FOR ADA FIXTURES.
4. SEE DETAIL SHEET FOR ADDITIONAL ITEMS TO BE PROVIDED/INSTALLED W/ FIXTURES LISTED ABOVE.

NOTE:
ALL WATER HEATER VENT LOCATIONS ON ROOF TO BE 10' AWAY FROM OUTSIDE AIR.

NOTE:
P.C. TO CONFIRM P-12 SHOWER SELECTION WITH ARCHITECT AND OWNER PRIOR TO PURCHASE.

SHOCK ARRESTOR SCHEDULE

FIXTURE UNITS	UNIT SIZE (CONN. SIZE)	MFG & MODEL (OR EQUAL)
1-4	AA (1/2")	SIOUX CHIEF "MINI-RESTER"
5-11	A (1/2")	SIOUX CHIEF "HYDRA-RESTER"
12 - 32	B (3/4")	SIOUX CHIEF "HYDRA-RESTER"
33-60	C (1")	SIOUX CHIEF "HYDRA-RESTER"

NOTES:
1. LOCATE SHOCK ARRESTORS IN ACCESSIBLE LOCATION OR PROVIDE SIOUX CHIEF BRAND ARRESTORS ONLY.
2. SEE PLAN, RISERS, SCHEDULES FOR ARRESTER LOCATIONS. IF LOCATION NOT INDICATED INSTALL IN ACCORDNCE W/ MFG GUIDELINES.

VALVE SCHEDULE

TAG	DESCRIPTION	MFG & MODEL (OR EQUAL)
BV-1	FULL-PORT BALL VALVE	WATTS LFB60B1 (1/2" TO 2")
BV-2	BALANCING VALVE	WATTS LFCSM-61-S (1/2" TO 2")
CV-1	DUAL CHECK VALVE	WATTS SD-2 (ASSE 1032: <1/2") WATTS 9D (ASSE 1012: 1/2" & 3/4")
CV-2	BRASS CHECK VALVE	WATTS LFWCV (1/2" TO 1")
PRV-1	PRESS. RED. VALVE	WATTS LF223-S (SET TO 50 PSI: ASSE 1003: 1/2" TO 2-1/2")
DTV-1	DRAIN TEMPERING VALVE	THERMOMEGATECH DTV 325-000000-140 (1/2")
TV-1	IND. THERMO. MIX. VALVE	WATTS LFUSG-B (0.25 TO 2.5 GPM: 3/8") (SET TO 100°F DISCHARGE: ASSE 1070)
TV-2	THERMO. MIX. VALVE	WATTS LFMMV (0.5 TO 20 GPM: 1/2" TO 1") (SET TO 110°F DISCHARGE)

NOTES:
1. SEE PLAN FOR SIZE. VALVE SIZE TO EQUAL LINE SIZE.
2. BALL VALVES TO INCLUDE REMOVABLE HANDLES.
3. IF AVAILABLE, VALVES MAY BE THREADED OR SWEATED CONNECTIONS. USE EXTREME CARE AND LOW TEMP SOLDER TO PROTECT VALVE SEATS IF SWEATED CONNECTIONS ARE USED.

PLUMBING LEGEND

DOMESTIC COLD WATER PIPING	ABV ABOVE
DOMESTIC HOT WATER PIPING	AHJ AUTHORITY HAVING JURISDICTION
140°F DOMESTIC 140°F HOT WATER PIPING	AFF ABOVE FINISHED FLOOR
HWR DOMESTIC HOT WATER RETURN	BFP BACK FLOW PREVENTER
VENT PIPING	BV BALL OR BALANCING VALVE (SEE SCHED)
WASTE (SANITARY SEWER)	CV CHECK VALVE
GW WASTE (GREASE)	CW COLD WATER
SD STORM PIPING UNDERSLAB	DN DOWN
VALVE	E.C. ELECTRICAL SUB-CONTRACTOR
VALVE	FCO FLOOR CLEAN OUT
CHECK VALVE	FD FLOOR DRAIN
PIPE UP	FR FROM
PIPE DOWN	FS FLOOR SINK
FLOOR DRAIN	G.C. GENERAL CONTRACTOR
FLOOR SINK	HB HOSE BIBB
CLEANOUT	HD HUB DRAIN
### KITCHEN EQUIPMENT TAG	HW HOT WATER
	M.C. MECHANICAL SUB-CONTRACTOR
	P.C. PLUMBING SUB-CONTRACTOR
	PRV PRESSURE REDUCING VALVE
	SS SANITARY SEWER
	TV TEMPERING VALVE
	V VENT
	W WASTE
	WH WATER HEATER
	WHD WALL HYDRANT

PLUMBING FIXTURE REQUIREMENTS

WASTE			WATER			
BUILDING DRAIN SIZE	NUMBER OF BUILDING DRAINS	TOTAL FIXTURE UNIT LOAD	WATER SERVICE SIZE	NUMBER OF WATER SERVICES	TOTAL FIXTURE UNIT LOAD	NOTES
4"	1	95	2-1/2"	1	155	ADMIN BLDG
6"	1	220	3"	1	390	DINING BLDG
4"	1	120	2-1/2"	1	285	RESIDENTIAL BLDG'S
4"	1	60	2"	1	100	DETOX BLDG

i-s design
ARCHITECTURE + INTERIORS
1111 Haynes Street, Suite 103
Raleigh, North Carolina 27604
t. 919.833.5400
www.isdesignpa.com

MAPLE ENGINEERING, PLLC
708 ST. MARYS ST
RALEIGH, NC 27605 LIC.#: P-0990
P:919-341-4247 F:919-890-3797
PLUMBING MECHANICAL ELECTRICAL

Project
THE HEALING PLACE OF NEW HANOVER COUNTY
1000 MEDICAL CENTER DRIVE
WILMINGTON, NORTH CAROLINA

Client
NEW HANOVER COU

NOTE:
DWG#1 & DWG3 ARE SERVED BY A CEILING RETURN PLENUMS. ALL MATERIALS IN PLENUM ARE TO BE PLENUM RATED OR WRAPPED W/ PLENUM WRAP.

NOTE:
SEE RISER FOR SHOCK ARRESTORS.

GENERAL NOTES - THIS SHEET

1. SEE SHEET P101.0 FOR CONTINUATION OF PIPING.

TAGGED NOTES - THIS SHEET

1. WATER HEATER HIGH IN SPACE ON PLATFORM ABOVE MOP SINK. SHOWN OFFSET FOR CLARITY. DRAIN TO MOP SINK. REMOVE CEILING TILES IF NEEDED.
2. TANKLESS WATER HEATER LOCATED BELOW SINK. ENSURE ADA CLEARANCES ARE MAINTAINED.
3. PROVIDE DISHWASHER CONNECTIONS.
4. PORTION OF BRANCH LINE IS PART OF CIRCUIT VENT SYSTEM. MAXIMUM SLOPE 8%. TURN DOWN AS NECESSARY AFTER MOST DOWNSTREAM FIXTURE. IF SLOPE REQUIREMENTS CANNOT BE MAINTAINED, ADDITIONAL VENTS WILL BE REQUIRED.
5. SEE SHEET P101.0 FOR CONTINUATION OF PIPE ROUTING.
6. CW UP IN WALL FROM BELOW SLAB TO OVER HEAD.PROVIDE WITH BV-1 AND ACCESS PANEL LOW ON WALL.
7. 1/2" HW RUNNING HORIZONTALLY IN WALL.
8. 2" WASTE DOWN IN WALL.
9. WASTE DOWN IN CHASE TO BELOW SLAB.
10. 2" WASTE RUNNING HORIZONTALLY IN WALL.
11. WASTE RUNNING HORIZONTALLY IN CHASE.
12. C.W MANIFOLD ALONG WALL. SEE P101.1. ENSURE ACCESS IS MAINTAINED.
13. C.W UP ALONG WALL TO OVERHEAD. PROVIDE BV-1 LOW ON WALL. COORDINATE PROTECTIVE CHASE WITH G.C.

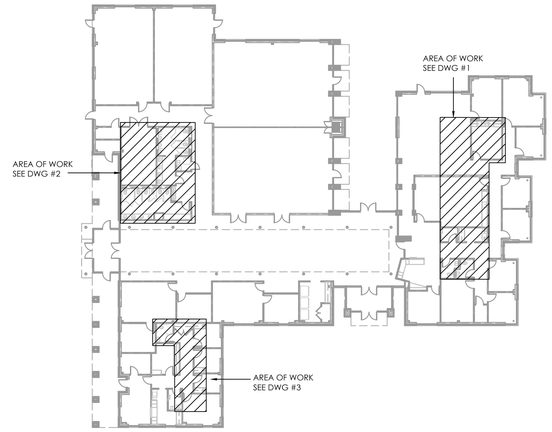

K KEY PLAN
NO SCALE

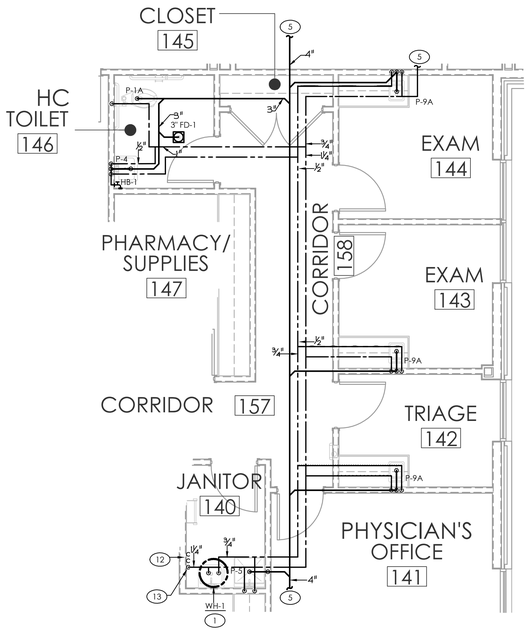

3 PLUMBING PLAN - BATHROOM ENLARGEMENT
SCALE: 1/4" = 1'-0"

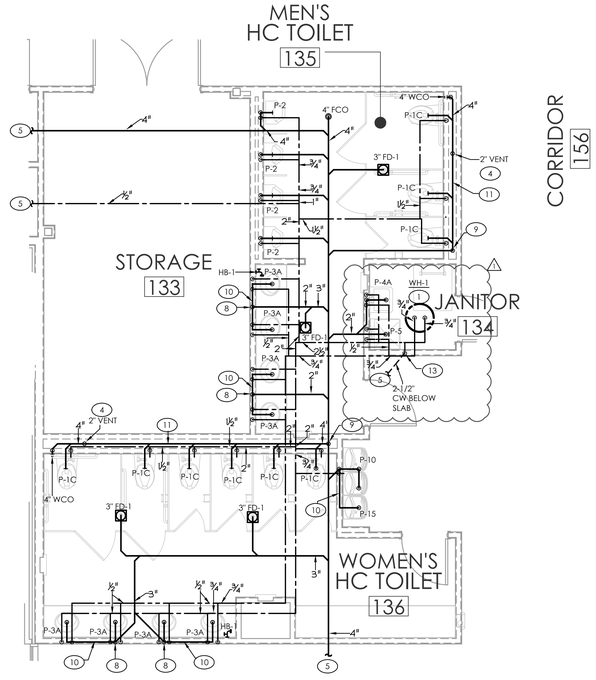

2 PLUMBING PLAN - BATHROOM ENLARGEMENT
SCALE: 1/4" = 1'-0"

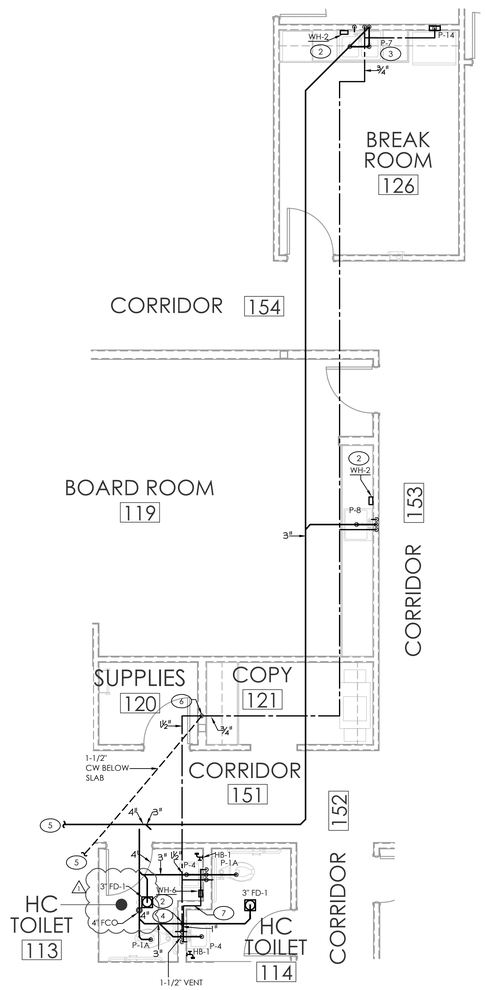

1 PLUMBING PLAN - BREAKROOM ENLARGEMENT
SCALE: 1/4" = 1'-0"

is-design
ARCHITECTURE + INTERIORS
1111 Haynes Street, Suite 103
Raleigh, North Carolina 27604
t. 919.833.5400
www.isdesignpa.com

MAPLE
ENGINEERING, PLLC
708 ST. MARYS ST
RALEIGH, NC 27605 LIC.#: P-0990
P:919-341-4247 F:919-890-3797
PLUMBING MECHANICAL ELECTRICAL

Project
THE HEALING PLACE OF NEW HANOVER COUNTY
1000 MEDICAL CENTER DRIVE
WILMINGTON, NORTH CAROLINA

Client
NEW HANOVER COUNTY, NORTH CAROLINA

All reproduction & intellectual property rights reserved © 2020

SITE PLAN

NORTH

Professional Seals
NORTH CAROLINA
ENGINEER
SEAL
044528
WILLIAM METCALF
12/2/20

No.	Description	Date
	CONSTRUCTION DOCUMENT SET	08/25/20
1	MCD #1	12/2/20

Sheet Title
PLUMBING
ADMIN BUILDING
ENLARGEMENT
PLANS

Sheet Number
P101.1

© 2020 MAPLE ENGINEERING, PLLC EXPRESSLY RESERVES ITS COMMON LAW COPYRIGHT AND OTHER PROPERTY RIGHTS IN THESE PLANS. THESE PLANS ARE NOT TO BE REPRODUCED, CHANGED OR COPIED IN ANY FORM OR MANNER WHATSOEVER, NOR ARE THEY TO BE ASSIGNED TO ANY THIRD PARTY WITHOUT FIRST OBTAINING THE EXPRESSED WRITTEN PERMISSION AND CONSENT OF MAPLE ENGINEERING, PLLC.

12/2/2020 11:42 AM
IES-1801-P101.1.DWG

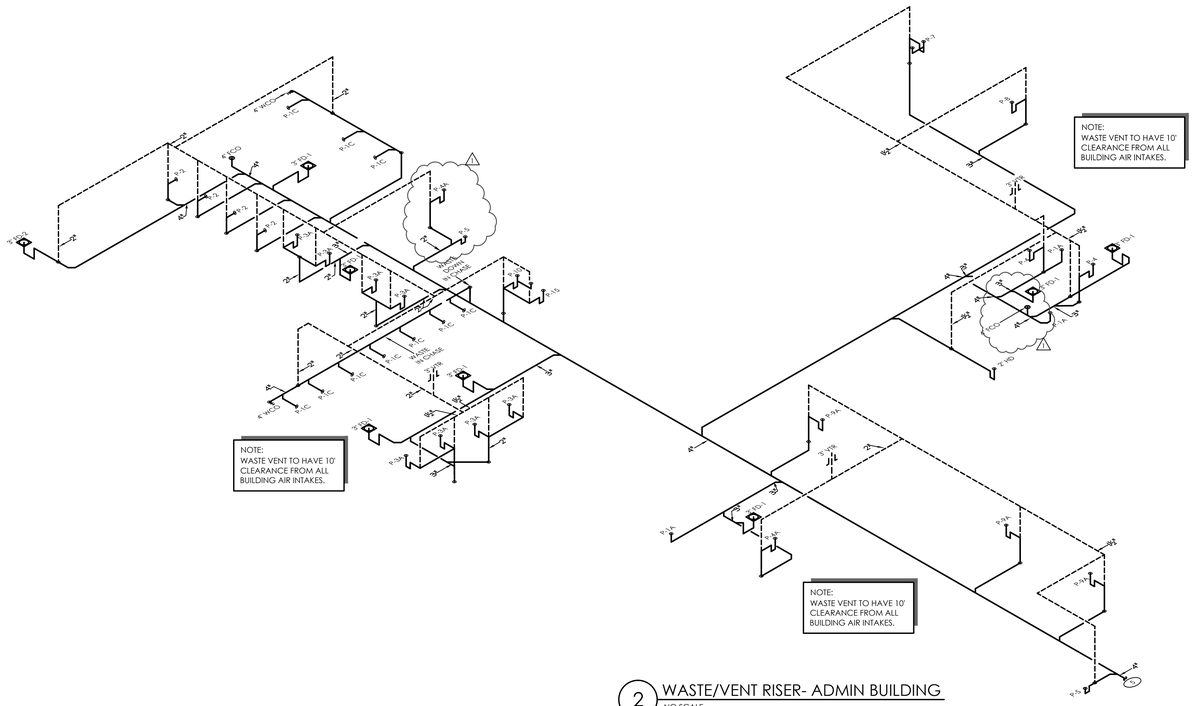
NOTE:
WASTE VENT TO HAVE 10' CLEARANCE FROM ALL BUILDING AIR INTAKES.
NOTE:
WASTE VENT TO HAVE 10' CLEARANCE FROM ALL BUILDING AIR INTAKES.
NOTE:
WASTE VENT TO HAVE 10' CLEARANCE FROM ALL BUILDING AIR INTAKES.
WASTE BELOW SLAB
WASTE BELOW SLAB
4" HDPE
4" C.I.
P-1C
P-2
P-3
P-4
P-5
P-6
P-7
P-8
P-9
P-10
P-11
P-12
P-13
P-14
P-15
P-16
P-17
P-18
P-19
P-20
P-21
P-22
P-23
P-24
P-25
P-26
P-27
P-28
P-29
P-30
P-31
P-32
P-33
P-34
P-35
P-36
P-37
P-38
P-39
P-40
P-41

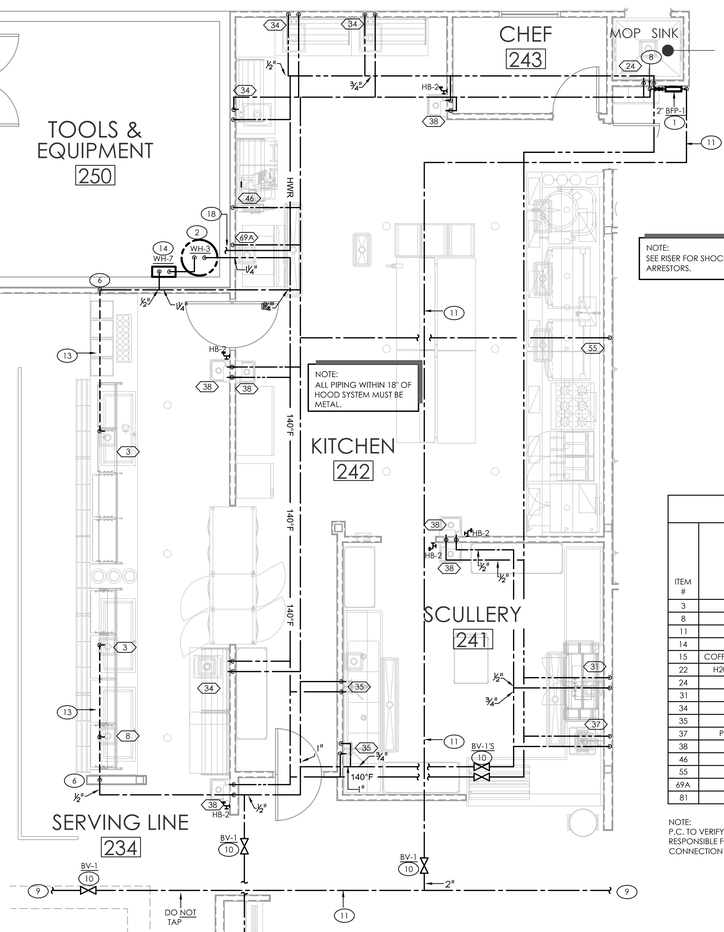

3 PLUMBING PLAN - KITCHEN ENLARGEMENT -WATER
SCALE: 1/4" = 1'-0"

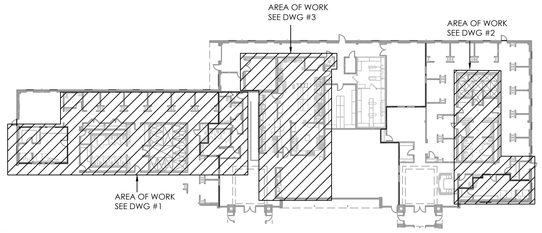

K KEY PLAN
NO SCALE

NOTE:
SEE RISER FOR SHOCK ARRESTORS.

KITCHEN EQUIPMENT SCHEDULE

ITEM #	DESCRIPTION	HOT WATER SIZE (IN.)	COLD WATER SIZE (IN.)	INDIR. DRAIN SIZE (IN)	DIRECT DRAIN SIZE (IN)	PLUMBING NOTES
3	DROP-IN, HOT/COLD WELLS	-	0.75	0.75	-	PROVIDE W SHOCK ARRESTOR & CV-1
8	DROP-IN, HOT/COLD WELLS	-	0.5	0.75	-	PROVIDE W SHOCK ARRESTOR & CV-1
11	ICE MAKER/ DISPENSER	-	0.5	0.75	-	PROVIDE W SHOCK ARRESTOR & CV-1; FILTERED WATER
14	ICED TEA BREWER	-	0.5	0.5	-	PROVIDE W SHOCK ARRESTOR & CV-1; FILTERED WATER
15	COFFEE MAKER, INSULATED SERVER, AUTOMATIC	-	0.5	0.5	-	PROVIDE W SHOCK ARRESTOR & CV-1; FILTERED WATER
22	H20 FILTRATION, COFFEE AND TEA BREWING	-	0.5	-	-	PROVIDE W SHOCK ARRESTOR & CV-1
24	FAUCET, SERVICE SINK	0.5	0.5	-	-	-
31	WAREWASHER, RACK CONVEYER	0.5	0.5	1.5	-	PROVIDE W SHOCK ARRESTOR & CV-1 & DV-1
34	FACUET, DECK MOUNT	0.5	0.5	-	-	-
35	4-COMP SINK FAUCET	0.5	0.5	-	-	-
37	PRE-RINSE FAUCET, BACKSPLASH MOUNT	0.5	0.5	-	-	PROVIDE W SHOCK ARRESTOR & CV-1
38	HAND SINK, WALL MOUNT	0.5	0.5	-	1.5	-
46	HOSE REEL WITH GUN	0.5	-	-	-	PROVIDE W SHOCK ARRESTOR & CV-1
55	FILLER, KETTLE AND POT	0.5	0.5	-	-	PROVIDE W SHOCK ARRESTOR & CV-1
69A	ICE MAKER W/O BIN	-	0.5	0.5	-	PROVIDE W SHOCK ARRESTOR & CV-1
81	FILTER, WATER	-	0.75	0.75	-	FILTERED WATER TO FEED EQUIPMENT #11 & #14

NOTE:
P.C. TO VERIFY EXACT TYPE, QTY, LOCATION OF EQUIPMENT PLUMBING CONNECTIONS BEFORE BEGINNING WORK. P.C. RESPONSIBLE FOR PROVIDING AND INSTALLING ALL REQUIRED FITTINGS, ACCESSORIES AND SIMILAR. FINAL CONNECTION TO EQUIPMENT BY P.C.

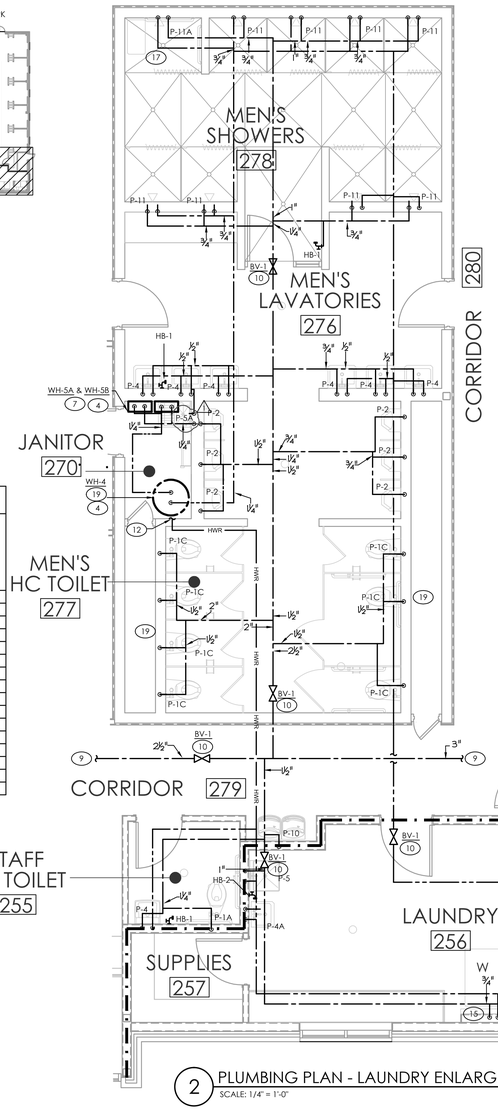

2 PLUMBING PLAN - LAUNDRY ENLARGEMENT- WATER
SCALE: 1/4" = 1'-0"

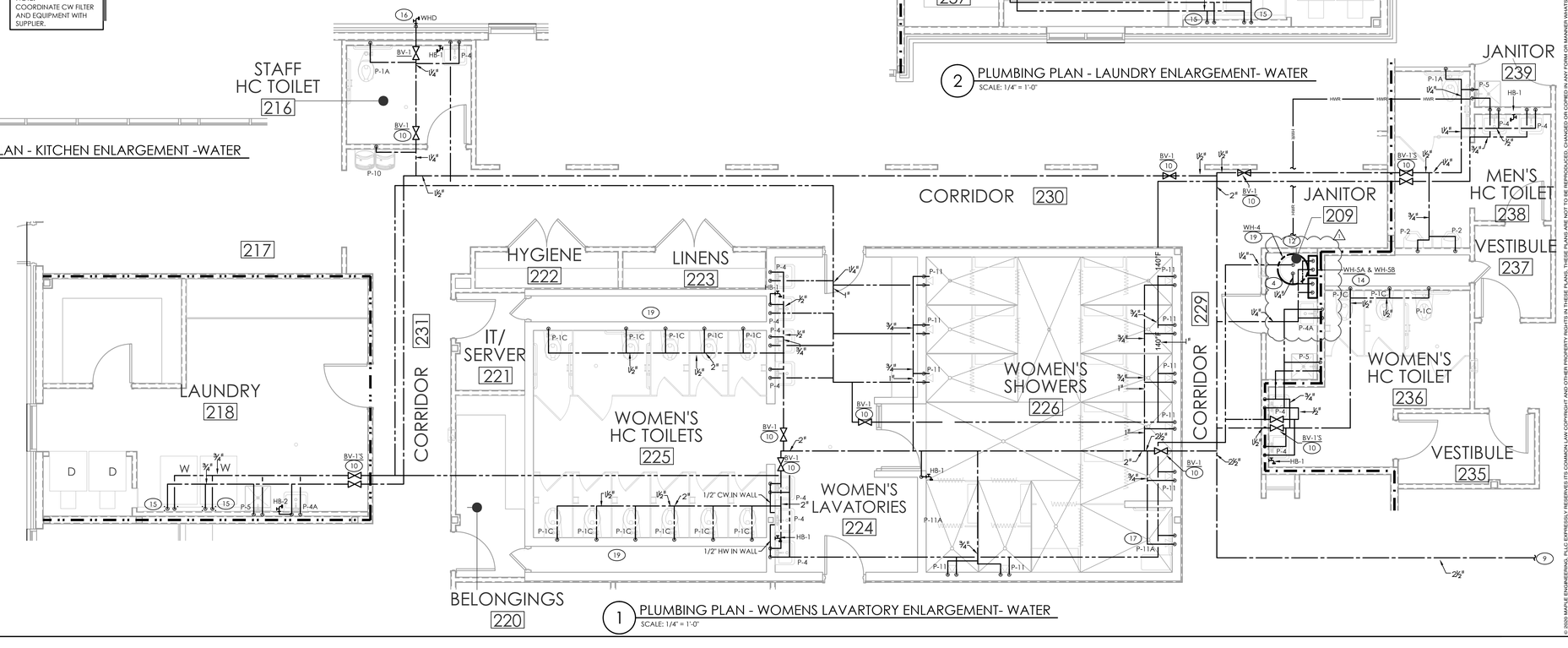

1 PLUMBING PLAN - WOMENS LAVARTORY ENLARGEMENT- WATER
SCALE: 1/4" = 1'-0"

FIRE RATING LEGEND
- 1-HR WALL
- 1-HR WALL/ SMOKE WALL
- SMOKE PARTITION

GENERAL NOTES - THIS SHEET

1. P.C. TO VERIFY THAT NO FIXTURES ARE CONNECTED UPSTREAM OF BACKFLOW PREVENTER.
2. SEE KITCHEN EQUIPMENT SCHEDULE FOR ADDITIONAL EQUIPMENT INFORMATION & REQUIRED ACCESSORIES (I.E. SHOCK ARRESTORS, CHECK VALVES).
3. SEE P102.0 FOR OVERALL PLANS AND AREAS OF WORK.
4. SEE P102.1B FOR WASTE IN AREA.
5. ALL SHOWERS, P-11 AND P-11A, TO INCLUDE SHOWER VALVE LIMITED TO 120°F.
6. ALL SINKS, P-4, TO INCLUDE TV-1. SET AT 100°F. SEE SCHEDULE.

TAGGED NOTES - THIS SHEET

1. BACKFLOW PREVENTER (FOR KITCHEN ISOLATION) LOCATED ALONG WALL. DRAIN TO SERVICE SINK. ENSURE REQ'D CLEARANCES CAN BE MAINTAINED.
2. WATER HEATER ON FLOOR. PROVIDE HOUSEKEEPING PAD. DRAIN TO FLOOR DRAIN IN AREA.
3. WATER HEATER ON FLOOR. PROVIDE HOUSEKEEPING PAD. ELEVATE DRAIN PAN AS NECESSARY. DRAIN TO MOP SINK.
4. P.C. TO PROVIDE PVC TWIN PIPE FLUE VENT & INTAKE TO ROOF. ENSURE VENT HAS 10' HORIZONTAL OR 3' VERTICAL CLEARANCE FROM ALL BUILDING AIR INTAKES/EXHAUSTS. INSTALL PER MFG. INSTRUCTIONS.
5. NOT USED.
6. CW DOWN IN WALL TO SERVE FOOD WELL. PROVIDE WITH BV-1 IN ACCESSES PANEL LOW ON WALL.
7. TWO TANKLESS WATER HEATERS ON WALL ABOVE MOP SINK. DRAIN TO MOP SINK.
8. CW UP ALONG WALL FROM BFP-1. PROVIDE WITH BV-1. SEE RISER.
9. SEE SHEET P102.0 FOR CONTINUATION.
10. PROVIDE BV-1 ON C.W. LINE ABOVE CEILING ACCESS VIA LAY IN.
11. LABEL KITCHEN PORTION OF C.W LINE "DO NOT TAP". ALL KITCHEN WATER TO BE DOWNSTREAM OF BFP-1.
12. 1/2" HOT WATER RETURN TO RP-1 AT WH-4.
13. 1/2" CW RUNNING TIGHTLY BENEATH CASEWORK/ EQUIPMENT TO SERVE HOT FOOD WELL(S). SEE RISER
14. TANKLESS WATER HEATER(S) ON WALL. DRAIN TO FLOOR DRAIN IN AREA.
15. 3/4" HW/CW TO COMMERCIAL LAUNDRY EQUIPMENT. PROVIDE W/ CV-1 & SHOCK ARRESTORS.
16. CW DOWN IN WALL TO WALL HYDRANT. ENSURE PIPING IS ON WARM SIDE OF INSULATION. PROVIDE BV-1 OVERHEAD ABOVE LAY-IN CEILING.
17. CONFIRM SEAT SIDE OF ADA SHOWER WITH OWNER AND G.C..
18. 1/2" HOT WATER RETURN TO RP-2 AT WH-4.
19. WATER HEATER ON FLOOR. PROVIDE HOUSEKEEPING PAD. ELEVATE DRAIN PAN AS NECESSARY. DRAIN TO FLOOR DRAIN.

i-s design
ARCHITECTURE + INTERIORS
1111 Haynes Street, Suite 103
Raleigh, North Carolina 27604
t. 919.833.5400
www.isdesignpa.com

MAPLE ENGINEERING, PLLC
708 ST. MARYS ST
RALEIGH, NC 27605 LIC.#: P-0990
P:919-341-4247 F:919-890-3797
PLUMBING MECHANICAL ELECTRICAL

Project
THE HEALING PLACE OF NEW HANOVER COUNTY
1000 MEDICAL CENTER DRIVE
WILMINGTON, NORTH CAROLINA

Client
NEW HANOVER COUNTY, NORTH CAROLINA

All reproduction & intellectual property rights reserved. © 2020
© 2020 MAPLE ENGINEERING, PLLC EXPRESSLY RESERVES ITS COMMON LAW COPYRIGHT AND OTHER PROPERTY RIGHTS IN THESE PLANS. THESE PLANS ARE NOT TO BE REPRODUCED, CHANGED OR COPIED IN ANY FORM OR MANNER WHATSOEVER, NOR ARE THEY TO BE ASSIGNED TO ANY THIRD PARTY WITHOUT FIRST OBTAINING THE EXPRESSED WRITTEN PERMISSION AND CONSENT OF MAPLE ENGINEERING, PLLC.

SITE PLAN

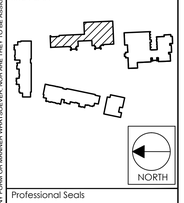

Professional Seals

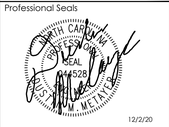

12/2/20

No.	Description	Date
	CONSTRUCTION DOCUMENT SET	08/25/20
1	MCD #1	12/2/20

Sheet Title
PLUMBING
DINING BUILDING
ENLARGEMENT PLANS
WATER

Sheet Number
P102.1A

12/2/2020 11:43 AM
ISD-1801-P102.1A.DWG

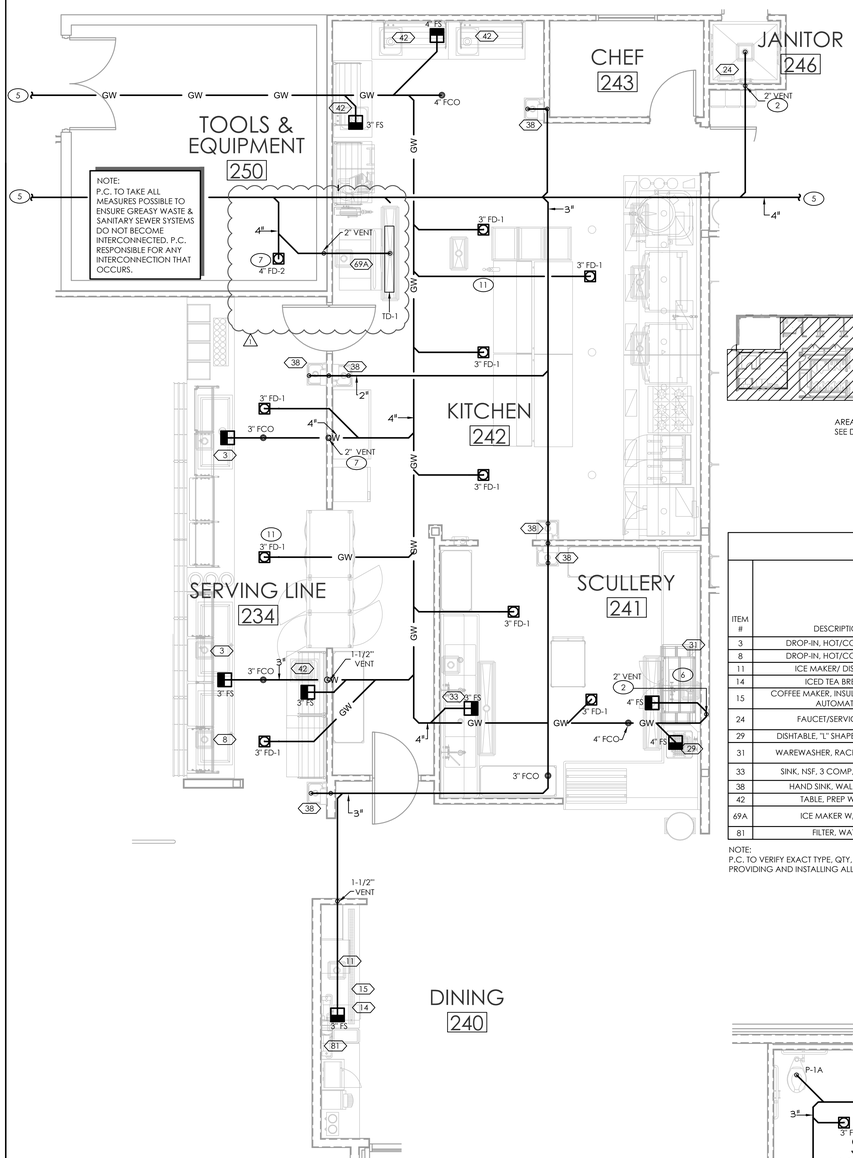

3 PLUMBING PLAN - KITCHEN ENLARGEMENT-WASTE
SCALE: 1/4" = 1'-0"

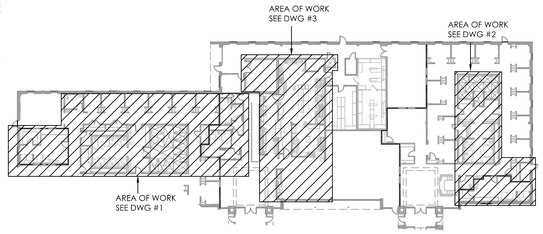

K KEY PLAN
NO SCALE

KITCHEN EQUIPMENT SCHEDULE

ITEM #	DESCRIPTION	HOT WATER SIZE (IN.)	COLD WATER SIZE (IN.)	INDIR. DRAIN SIZE (IN)	DIRECT DRAIN SIZE (IN)	PLUMBING NOTES
3	DROP-IN, HOT/COLD WELLS	-	0.75	0.75	-	DRAIN TO FLOOR SINK W/ AIR BREAK
8	DROP-IN, HOT/COLD WELLS	-	0.25	0.75	-	DRAIN TO FLOOR SINK W/ AIR BREAK
11	ICE MAKER/ DISPENSER	-	0.25	0.75	-	DRAIN TO FLOOR SINK W/ AIR BREAK
14	ICED TEA BREWER	-	0.25	0.5	-	DRAIN TO FLOOR SINK W/ AIR BREAK
15	COFFEE MAKER, INSULATED SERVER, AUTOMATIC	-	0.25	0.5	-	DRAIN TO FLOOR SINK W/ AIR BREAK
24	FAUCET/SERVICE SINK	0.50	0.50		2	-
29	DISHTABLE, "L" SHAPE, 14 GAUGE	-	-	1.50	-	DRAIN TO FLOOR SINK W/ AIR BREAK
31	WAREWASHER, RACK CONVEYER	0.50	0.50	1.50	-	DRAIN TO FLOOR SINK W/ 3" AIR GAP; PROVIDE W/ DRAIN TEMPERING VALVE.
33	SINK, NSF, 3 COMP, 16 GAUGE	-	-	1.50	-	DRAIN TO FLOOR SINK W/ AIR BREAK; W/(3) INDIVIDUAL 1.5" DRAIN LINES
38	HAND SINK, WALL MOUNT	0.50	0.50	-	1.50	-
42	TABLE, PREP W/ SINK	-	-	1.50	-	DRAIN TO FLOOR SINK W/ AIR BREAK
69A	ICE MAKER W/O BIN	-	0.25	0.50	-	DRAIN TO TRENCH DRAIN W/ 1.5" AIR GAP
81	FILTER, WATER	0.8	0.75	0.75	-	DRAIN TO FLOOR SINK W/ AIR BREAK

NOTE:
P.C. TO VERIFY EXACT TYPE, QTY, LOCATION OF EQUIPMENT PLUMBING CONNECTIONS BEFORE BEGINNING WORK. P.C. RESPONSIBLE FOR PROVIDING AND INSTALLING ALL REQUIRED FITTINGS, ACCESSORIES AND SIMILAR. FINAL CONNECTION TO EQUIPMENT BY P.C.

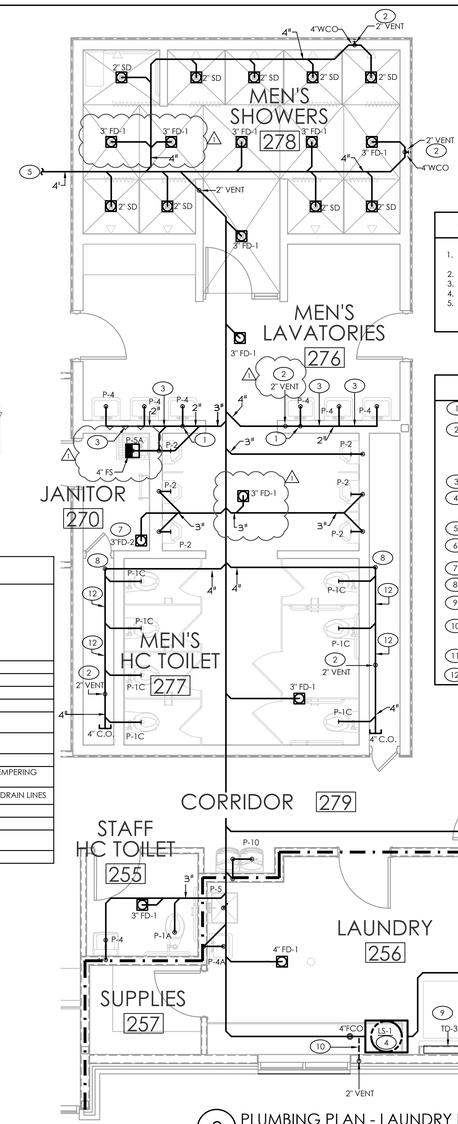

2 PLUMBING PLAN - LAUNDRY ENLARGEMENT-WASTE
SCALE: 1/4" = 1'-0"

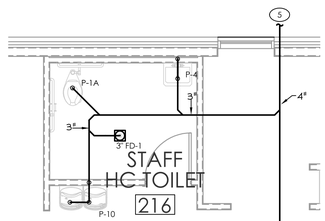

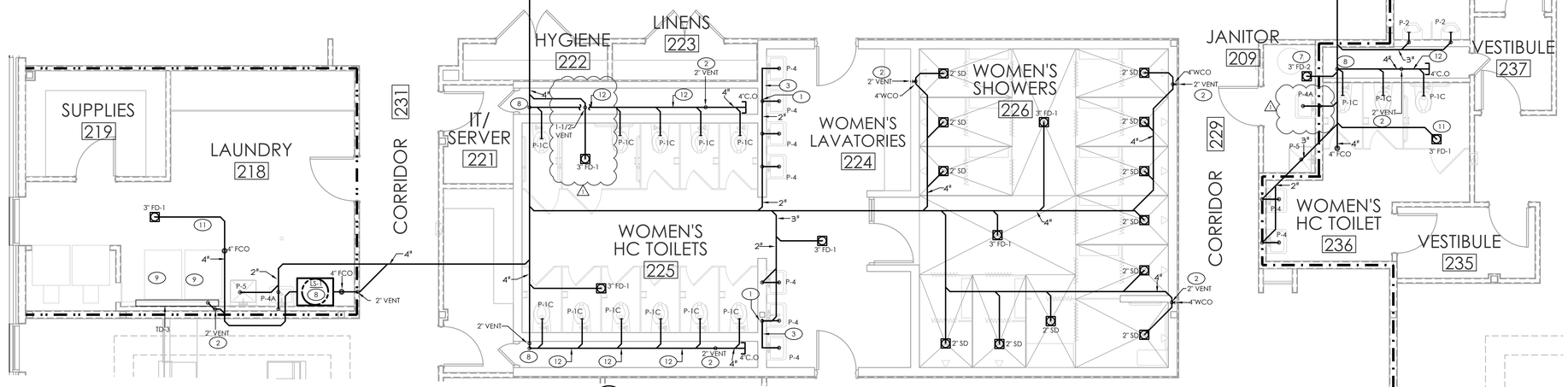

1 PLUMBING PLAN - WOMENS LAVARTORY ENLARGEMENT-WASTE
SCALE: 1/4" = 1'-0"

FIRE RATING LEGEND
- 1-HR WALL
- 1-HR WALL/ SMOKE WALL
- SMOKE PARTITION

GENERAL NOTES - THIS SHEET

1. WATER SERVICE & BUILDING SEWER PIPING MUST BE SEPARATED PER 2018 NCPC 603.2.
2. SEE SHEET P102.0 FOR CONTINUATION OF PIPING.
3. SEE SHEET P102.1A FOR WATER IN AREA.
4. ALL ABOVE SLAB INTERIOR STORM PIPING TO BE CAST IRON.
5. SEE KITCHEN EQUIPMENT SCHEDULE FOR ADDITIONAL EQUIPMENT INFORMATION & REQUIRED ACCESSORIES (I.E. SHOCK ARRESTORS, CHECK VALVES).

TAGGED NOTES - THIS SHEET

1. 2" WASTE DOWN IN WALL.
2. PORTION OF BRANCH LINE IS PART OF CIRCUIT VENT SYSTEM, MAXIMUM SLOPE 8%. TURN DOWN AS NECESSARY AFTER MOST DOWNSTREAM FIXTURE. IF SLOPE REQUIREMENTS CANNOT BE MAINTAINED, ADDITIONAL VENTS WILL BE REQUIRED.
3. 2" WASTE RUNNING HORIZONTALLY IN WALL.
4. LINT SEPARATOR INSTALLED BELOW SLAB IN AREA. MAINTAIN CLEARANCE AND ACCESS FOR MAINTENANCE.
5. SEE SHEET P102.0 FOR CONTINUATION.
6. PROVIDE DRAIN TEMPERING VALVE, DTV-1, AT FIXTURE. SEE VALVE SCHEDULE.
7. PROVIDE WITH TRAP PRIMER FROM AREA CW LINE.
8. WASTE DOWN IN CHASE ALONG WALL.
9. COMMERCIAL LAUNDRY EQUIPMENT TO DRAIN TO TRENCH DRAIN WITH 3" AIR GAP.
10. 2" VENT BELOW SLAB. VENT TO RISE 6" VERTICALLY BEFORE TURNING HORIZONTAL. ENSURE MINIMUM OF 2% SLOPE.
11. ENSURE DISTANCE FROM TRAP TO VENT DOES NOT EXCEED 12 FT.
12. WASTE RUNNING HORIZONTALLY IN CHASE.

i-sdesign
ARCHITECTURE + INTERIORS
1111 Haynes Street, Suite 103
Raleigh, North Carolina 27604
t. 919.833.5400
www.isdesignpa.com

MAPLE
ENGINEERING, PLLC
708 ST. MARYS ST
RALEIGH, NC 27605 LIC.#: P-0990
P:919-341-4247 F:919-890-3797
PLUMBING MECHANICAL ELECTRICAL

Project
THE HEALING PLACE OF NEW HANOVER COUNTY
1000 MEDICAL CENTER DRIVE
WILMINGTON, NORTH CAROLINA

Client
NEW HANOVER COUNTY, NORTH CAROLINA

All reproduction & intellectual property rights reserved © 2020

© 2020 MAPLE ENGINEERING, PLLC EXPRESSELY RESERVES ITS COMMON LAW COPYRIGHT AND OTHER PROPERTY RIGHTS IN THESE PLANS. THESE PLANS ARE NOT TO BE REPRODUCED, CHANGED OR COPIED IN ANY FORM OR MANNER WHATSOEVER, NOR ARE THEY TO BE ASSIGNED TO ANY THIRD PARTY WITHOUT FIRST OBTAINING THE EXPRESSED WRITTEN PERMISSION AND CONSENT OF MAPLE ENGINEERING, PLLC.

SITE PLAN

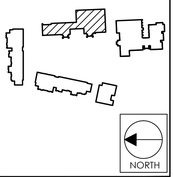

Professional Seals



12/2/20

No.	Description	Date
	CONSTRUCTION DOCUMENT SET	08/25/20
1	MCD #1	12/2/20

Sheet Title
PLUMBING
DINING BUILDING
ENLARGEMENT PLANS
WASTE

Sheet Number
P102.1B

12/2/2020 11:42 AM
I:\DS-18\01-P\102.1B.DWG

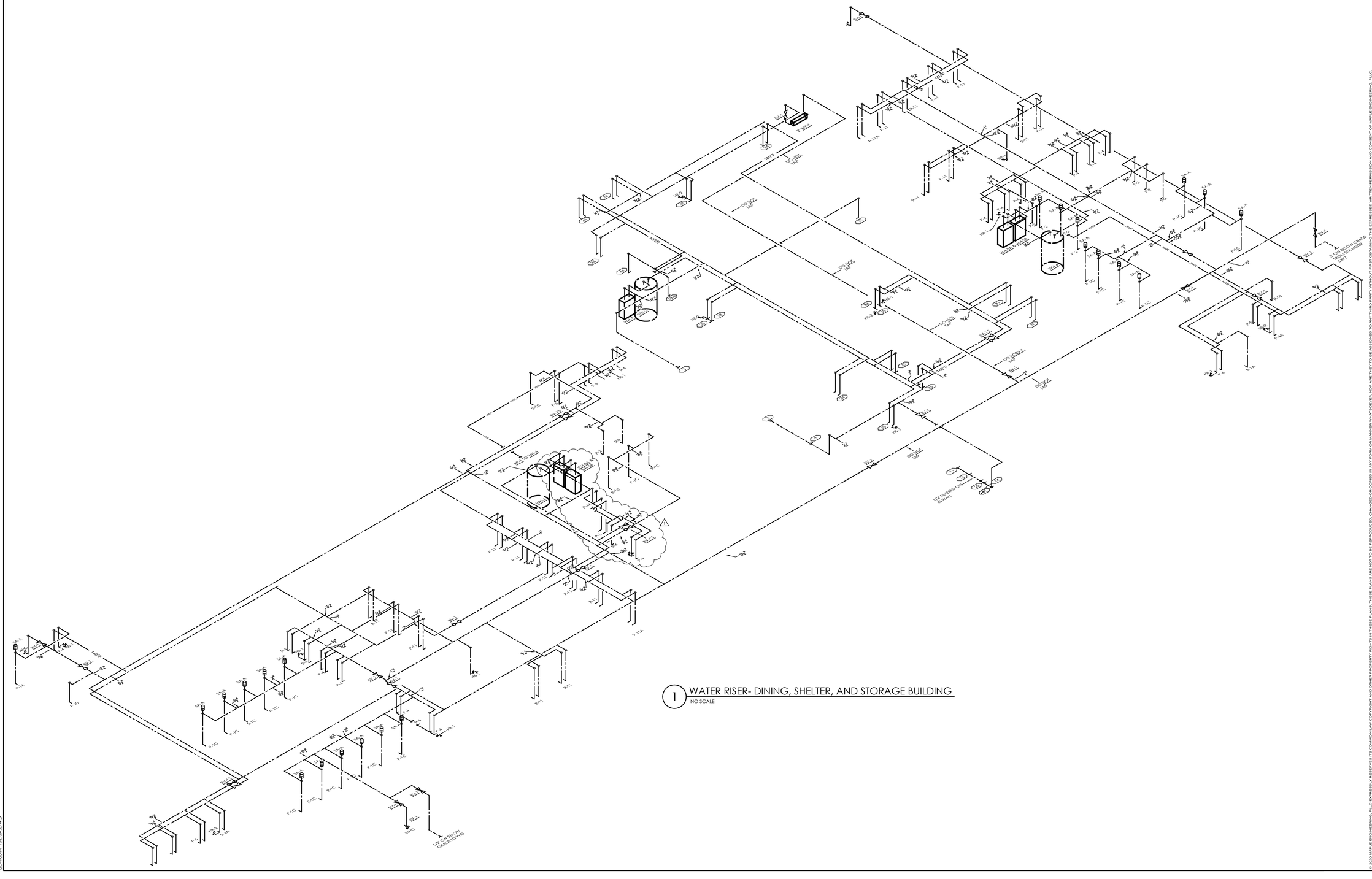
P-11
P-11A
P-1
P-2
P-3
P-4
P-5
P-6
P-7
P-7A
P-7B
P-7C
P-8
P-9
P-10
P-10A
P-11
P-11A
P-11B
P-11C
P-11D
P-11E
P-11F
P-11G
P-11H
P-11I
P-11J
P-11K
P-11L
P-11M
P-11N
P-11O
P-11P
P-11Q
P-11R
P-11S
P-11T
P-11U
P-11V
P-11W
P-11X
P-11Y
P-11Z
P-11AA
P-11AB
P-11AC
P-11AD
P-11AE
P-11AF
P-11AG
P-11AH
P-11AI
P-11AJ
P-11AK
P-11AL
P-11AM
P-11AN
P-11AO
P-11AP
P-11AQ
P-11AR
P-11AS
P-11AT
P-11AU
P-11AV
P-11AW
P-11AX
P-11AY
P-11AZ
P-11BA
P-11BB
P-11BC
P-11BD
P-11BE
P-11BF
P-11BG
P-11BH
P-11BI
P-11BJ
P-11BK
P-11BL
P-11BM
P-11BN
P-11BO
P-11BP
P-11BQ
P-11BR
P-11BS
P-11BT
P-11BU
P-11BV
P-11BW
P-11BX
P-11BY
P-11BZ
P-11CA
P-11CB
P-11CC
P-11CD
P-11CE
P-11CF
P-11CG
P-11CH
P-11CI
P-11CJ
P-11CK
P-11CL
P-11CM
P-11CN
P-11CO
P-11CP
P-11CQ
P-11CR
P-11CS
P-11CT
P-11CU
P-11CV
P-11CW
P-11CX
P-11CY
P-11CZ
P-11DA
P-11DB
P-11DC
P-11DD
P-11DE
P-11DF
P-11DG
P-11DH
P-11DI
P-11DJ
P-11DK
P-11DL
P-11DM
P-11DN
P-11DO
P-11DP
P-11DQ
P-11DR
P-11DS
P-11DT
P-11DU
P-11DV
P-11DW
P-11DX
P-11DY
P-11DZ
P-11EA
P-11EB
P-11EC
P-11ED
P-11EE
P-11EF
P-11EG
P-11EH
P-11EI
P-11EJ
P-11EK
P-11EL
P-11EM
P-11EN
P-11EO
P-11EP
P-11EQ
P-11ER
P-11ES
P-11ET
P-11EU
P-11EV
P-11EW
P-11EX
P-11EY
P-11EZ
P-11FA
P-11FB
P-11FC
P-11FD
P-11FE
P-11FF
P-11FG
P-11FH
P-11FI
P-11FJ
P-11FK
P-11FL
P-11FM
P-11FN
P-11FO
P-11FP
P-11FQ
P-11FR
P-11FS
P-11FT
P-11FU
P-11FV
P-11FW
P-11FX
P-11FY
P-11FZ
P-11GA
P-11GB
P-11GC
P-11GD
P-11GE
P-11GF
P-11GG
P-11GH
P-11GI
P-11GJ
P-11GK
P-11GL
P-11GM
P-11GN
P-11GO
P-11GP
P-11GQ
P-11GR
P-11GS
P-11GT
P-11GU
P-11GV
P-11GW
P-11GX
P-11GY
P-11GZ
P-11HA
P-11HB
P-11HC
P-11HD
P-11HE
P-11HF
P-11HG
P-11HH
P-11HI
P-11HJ
P-11HK
P-11HL
P-11HM
P-11HN
P-11HO
P-11HP
P-11HQ
P-11HR
P-11HS
P-11HT
P-11HU
P-11HV
P-11HW
P-11HX
P-11HY
P-11HZ
P-11IA
P-11IB
P-11IC
P-11ID
P-11IE
P-11IF
P-11IG
P-11IH
P-11II
P-11IJ
P-11IK
P-11IL
P-11IM
P-11IN
P-11IO
P-11IP
P-11IQ
P-11IR
P-11IS
P-11IT
P-11IU
P-11IV
P-11IW
P-11IX
P-11IY
P-11IZ
P-11JA
P-11JB
P-11JC
P-11JD
P-11JE
P-11JF
P-11JG
P-11JH
P-11JI
P-11JJ
P-11JK
P-11JL
P-11JM
P-11JN
P-11JO
P-11JP
P-11JQ
P-11JR
P-11JS
P-11JT
P-11JU
P-11JV
P-11JW
P-11JX
P-11JY
P-11JZ
P-11KA
P-11KB
P-11KC
P-11KD
P-11KE
P-11KF
P-11KG
P-11KH
P-11KI
P-11KJ
P-11KK
P-11KL
P-11KM
P-11KN
P-11KO
P-11KP
P-11KQ
P-11KR
P-11KS
P-11KT
P-11KU
P-11KV
P-11KW
P-11KX
P-11KY
P-11KZ
P-11LA
P-11LB
P-11LC
P-11LD
P-11LE
P-11LF
P-11LG
P-11LH
P-11LI
P-11LJ
P-11LK
P-11LL
P-11LM
P-11LN
P-11LO
P-11LP
P-11LQ
P-11LR
P-11LS
P-11LT
P-11LU
P-11LV
P-11LW
P-11LX
P-11LY
P-11LZ
P-11MA
P-11MB
P-11MC
P-11MD
P-11ME
P-11MF
P-11MG
P-11MH
P-11MI
P-11MJ
P-11MK
P-11ML
P-11MM
P-11MN
P-11MO
P-11MP
P-11MQ
P-11MR
P-11MS
P-11MT
P-11MU
P-11MV
P-11MW
P-11MX
P-11MY
P-11MZ
P-11NA
P-11NB
P-11NC
P-11ND
P-11NE
P-11NF
P-11NG
P-11NH
P-11NI
P-11NJ
P-11NK
P-11NL
P-11NM
P-11NN
P-11NO
P-11NP
P-11NQ
P-11NR
P-11NS
P-11NT
P-11NU
P-11NV
P-11NW
P-11NX
P-11NY
P-11NZ
P-11OA
P-11OB
P-11OC
P-11OD
P-11OE
P-11OF
P-11OG
P-11OH
P-11OI
P-11OJ
P-11OK
P-11OL
P-11OM
P-11ON
P-11OO
P-11OP
P-11OQ
P-11OR
P-11OS
P-11OT
P-11OU
P-11OV
P-11OW
P-11OX
P-11OY
P-11OZ
P-11PA
P-11PB
P-11PC
P-11PD
P-11PE
P-11PF
P-11PG
P-11PH
P-11PI
P-11PJ
P-11PK
P-11PL
P-11PM
P-11PN
P-11PO
P-11PP
P-11PQ
P-11PR
P-11PS
P-11PT
P-11PU
P-11PV
P-11PW
P-11PX
P-11PY
P-11PZ
P-11QA
P-11QB
P-11QC
P-11QD
P-11QE
P-11QF
P-11QG
P-11QH
P-11QI
P-11QJ
P-11QK
P-11QL
P-11QM
P-11QN
P-11QO
P-11QP
P-11QQ
P-11QR
P-11QS
P-11QT
P-11QU
P-11QV
P-11QW
P-11QX
P-11QY
P-11QZ
P-11RA
P-11RB
P-11RC
P-11RD
P-11RE
P-11RF
P-11RG
P-11RH
P-11RI
P-11RJ
P-11RK
P-11RL
P-11RM
P-11RN
P-11RO
P-11RP
P-11RQ
P-11RR
P-11RS
P-11RT
P-11RU
P-11RV
P-11RW
P-11RX
P-11RY
P-11RZ
P-11SA
P-11SB
P-11SC
P-11SD
P-11SE
P-11SF
P-11SG
P-11SH
P-11SI
P-11SJ
P-11SK
P-11SL
P-11SM
P-11SN
P-11SO
P-11SP
P-11SQ
P-11SR
P-11ST
P-11SU
P-11SV
P-11SW
P-11SX
P-11SY
P-11SZ
P-11TA
P-11TB
P-11TC
P-11TD
P-11TE
P-11TF
P-11TG
P-11TH
P-11TI
P-11TJ
P-11TK
P-11TL
P-11TM
P-11TN
P-11TO
P-11TP
P-11TQ
P-11TR
P-11TS
P-11TT
P-11TU
P-11TV
P-11TW
P-11TX
P-11TY
P-11TZ
P-11UA
P-11UB
P-11UC
P-11UD
P-11UE
P-11UF
P-11UG
P-11UH
P-11UI
P-11UJ
P-11UK
P-11UL
P-11UM
P-11UN
P-11UO
P-11UP
P-11UQ
P-11UR
P-11US
P-11UT
P-11UU
P-11UV
P-11UW
P-11UX
P-11UY
P-11UZ
P-11VA
P-11VB
P-11VC
P-11VD
P-11VE
P-11VF
P-11VG
P-11VH
P-11VI
P-11VJ
P-11VK
P-11VL
P-11VM
P-11VN
P-11VO
P-11VP
P-11VQ
P-11VR
P-11VS
P-11VT
P-11VU
P-11VV
P-11VW
P-11VX
P-11VY
P-11VZ
P-11WA
P-11WB
P-11WC
P-11WD
P-11WE
P-11WF
P-11WG
P-11WH
P-11WI
P-11WJ
P-11WK
P-11WL
P-11WM
P-11WN
P-11WO
P-11WP
P-11WQ
P-11WR
P-11WS
P-11WT
P-11WU
P-11WV
P-11WW
P-11WX
P-11WY
P-11WZ
P-11XA
P-11XB
P-11XC
P-11XD
P-11XE
P-11XF
P-11XG
P-11XH
P-11XI
P-11XJ
P-11XK
P-11XL
P-11XM
P-11XN
P-11XO
P-11XP
P-11XQ
P-11XR
P-11XS
P-11XT
P-11XU
P-11XV
P-11XW
P-11XX
P-11XY
P-11XZ
P-11YA
P-11YB
P-11YC
P-11YD
P-11YE
P-11YF
P-11YG
P-11YH
P-11YI
P-11YJ
P-11YK
P-11YL
P-11YM
P-11YN
P-11YO
P-11YP
P-11YQ
P-11YR
P-11YS
P-11YT
P-11YU
P-11YV
P-11YW
P-11YX
P-11YY
P-11YZ
P-11ZA
P-11ZB
P-11ZC
P-11ZD
P-11ZE
P-11ZF
P-11ZG
P-11ZH
P-11ZI
P-11ZJ
P-11ZK
P-11ZL
P-11ZM
P-11ZN
P-11ZO
P-11ZP
P-11ZQ
P-11ZR
P-11ZS
P-11ZT
P-11ZU
P-11ZV
P-11ZW
P-11ZX
P-11ZY
P-11ZZ
P-11AAA
P-11AAB
P-11AAC
P-11AAD
P-11AAE
P-11AAF
P-11AAG
P-11AAH
P-11AAI
P-11AAJ
P-11AAK
P-11AAL
P-11AAM
P-11AAN
P-11AAO
P-11AAP
P-11AAQ
P-11AAR
P-11AAS
P-11AAT
P-11AAU
P-11AAV
P-11AAW
P-11AAX
P-11AAY
P-11AAZ
P-11ABA
P-11ABB
P-11ABC
P-11ABD
P-11ABE
P-11ABF
P-11ABG
P-11ABH
P-11ABI
P-11ABJ
P-11ABK
P-11ABL
P-11ABM
P-11ABN
P-11ABO
P-11ABP
P-11ABQ
P-11ABR
P-11ABS
P-11ABT
P-11ABU
P-11ABV
P-11ABW
P-11ABX
P-11ABY
P-11ABZ
P-11ACA
P-11ACB
P-11ACC
P-11ACD
P-11ACE
P-11ACF
P-11ACG
P-11ACH
P-11ACI
P-11ACJ
P-11ACK
P-11ACL
P-11ACM
P-11ACN
P-11ACO
P-11ACP
P-11ACQ
P-11ACR
P-11ACS
P-11ACT
P-11ACU
P-11ACV
P-11ACW
P-11ACX
P-11ACY
P-11ACZ
P-11ADA
P-11ADB
P-11ADC
P-11ADD
P-11ADE
P-11ADF
P-11ADG
P-11ADH
P-11ADI
P-11ADJ
P-11ADK
P-11ADL
P-11ADM
P-11ADN
P-11ADO
P-11ADP
P-11ADQ
P-11ADR
P-11ADS
P-11ADT
P-11ADU
P-11ADV
P-11ADW
P-11ADX
P-11ADY
P-11ADZ
P-11AEA
P-11AEB
P-11AEC
P-11AED
P-11AEE
P-11AEF
P-11AEG
P-11AEH
P-11AEI
P-11AEJ
P-11AEK
P-11AEL
P-11AEM
P-11AEN
P-11AEO
P-11AEP
P-11AEQ
P-11AER
P-11AES
P-11AET
P-11AEU
P-11AEV
P-11AEW
P-11AEX
P-11AEY
P-11AEZ
P-11AFA
P-11AFB
P-11AFC
P-11AFD
P-11AFE
P-11AFF
P-11AFG
P-11AFH
P-11AFI
P-11AFJ
P-11AFK
P-11AFL
P-11AFM
P-11AFN
P-11AFO
P-11AFP
P-11AFQ
P-11AFR
P-11AFS
P-11AFT
P-11AFU
P-11AFV
P-11AFW
P-11AFX
P-11AFY
P-11AFZ
P-11AGA
P-11AGB
P-11AGC
P-11AGD
P-11AGE
P-11AGF
P-11AGG
P-11AGH
P-11AGI
P-11AGJ
P-11AGK
P-11AGL
P-11AGM
P-11AGN
P-11AGO
P-11AGP
P-11AGQ
P-11AGR
P-11AGS
P-11AGT
P-11AGU
P-11AGV
P-11AGW
P-11AGX
P-11AGY
P-11AGZ
P-11AHA
P-11AHB
P-11AHC
P-11AHD
P-11AHE
P-11AHF
P-11AHG
P-11AHH
P-11AHI
P-11AHJ
P-11AHK
P-11AHL
P-11AHM
P-11AHN
P-11AHO
P-11AHP
P-11AHQ
P-11AHR
P-11AHS
P-11AHT
P-11AHU
P-11AHV
P-11AHW
P-11AHX
P-11AHY
P-11AHZ
P-11AIA
P-11AIB
P-11AIC
P-11AID
P-11AIE
P-11AIF
P-11AIG
P-11AIH
P-11AII
P-11AIJ
P-11AIK
P-11AIL
P-11AIM
P-11AIN
P-11AIO
P-11AIP
P-11AIQ
P-11AIR
P-11AIS
P-11AIT
P-11AIU
P-11AIV
P-11AIW
P-11AIX
P-11AIY
P-11AIZ
P-11AJA
P-11AJB
P-11AJC
P-11AJD
P-11AJE
P-11AJF
P-11AJG
P-11AJH
P-11AJI
P-11AJJ
P-11AJK
P-11AJL
P-11AJM
P-11AJN
P-11AJO
P-11AJP
P-11AJQ
P-11AJR
P-11AJS
P-11AJT
P-11AJU
P-11AJV
P-11AJW
P-11AJX
P-11AJY
P-11AJZ
P-11AKA
P-11AKB
P-11AKC
P-11AKD
P-11AKE
P-11AKF
P-11AKG
P-11AKH
P-11AKI
P-11AKJ
P-11AKK
P-11AKL
P-11AKM
P-11AKN
P-11AKO
P-11AKP
P-11AKQ
P-11AKR
P-11AKS
P-11AKT
P-11AKU
P-11AKV
P-11AKW
P-11AKX
P-11AKY
P-11AKZ
P-11ALA
P-11ALB
P-11ALC
P-11ALD
P-11ALE
P-11ALF
P-11ALG
P-11ALH
P-11ALI
P-11ALJ
P-11ALK
P-11ALL
P-11ALM
P-11ALN
P-11ALO
P-11ALP
P-11ALQ
P-11ALR
P-11ALS
P-11ALT
P-11ALU
P-11ALV
P-11ALW
P-11ALX
P-11ALY
P-11ALZ
P-11AMA
P-11AMB
P-11AMC
P-11AMD
P-11AME
P-11AMF
P-11AMG
P-11AMH
P-11AMI
P-11AMJ
P-11AMK
P-11AML
P-11AMM
P-11AMN
P-11AMO
P-11AMP
P-11AMQ
P-11AMR
P-11AMS
P-11AMT
P-11AMU
P-11AMV
P-11AMW
P-11AMX
P-11AMY
P-11AMZ
P-11ANA
P-11ANB
P-11ANC
P-11AND
P-11ANE
P-11ANF
P-11ANG
P-11ANH
P-11ANI
P-11ANJ
P-11ANK
P-11ANL
P-11ANM
P-11ANN
P-11ANO
P-11ANP
P-11ANQ
P-11ANR
P-11ANS
P-11ANT
P-11ANU
P-11ANV
P-11ANW
P-11ANX
P-11ANY
P-11ANZ
P-11AOA
P-11AOB
P-11AOC
P-11AOD
P-11AOE
P-11AOF
P-11AOG
P-11AOH
P-11AOI
P-11AOJ
P-11AOK
P-11AOL
P-11AOM
P-11AON
P-11AOO
P-11AOP
P-11AOQ
P-11AOR
P-11AOS
P-11AOT
P-11AOU
P-11AOV
P-11AOW
P-11AOX
P-11AOY
P-11AOZ
P-11APA
P-11APB
P-11APC
P-11APD
P-11APE
P-11APF
P-11APG
P-11APH
P-11API
P-11APJ
P-11APK
P-11APL
P-11APM
P-11APN
P-11APO
P-11APP
P-11APQ
P-11APR
P-11APS
P-11APT
P-11APU
P-11APV
P-11APW
P-11APX
P-11APY
P-11APZ
P-11AQA
P-11AQB
P-11AQC
P-11AQD
P-11AQE
P-11AQF
P-11AQG
P-11AQH
P-11AQI
P-11AQJ
P-11AQK
P-11AQL
P-11AQM
P-11AQN
P-11AQO
P-11AQP
P-11AQQ
P-11AQR
P-11AQS
P-11AQT
P-11AQU
P-11AQV
P-11AQW
P-11AQX
P-11AQY
P-11AQZ
P-11ARA
P-11ARB
P-11ARC
P-11ARD
P-11ARE
P-11ARF
P-11ARG
P-11ARH
P-11ARI
P-11ARJ
P-11ARK
P-11ARL
P-11ARM
P-11ARN
P-11ARO
P-11ARP
P-11ARQ
P-11ARR
P-11ARS
P-11ART
P-11ARU
P-11ARV
P-11ARW
P-11ARX
P-11ARY
P-11ARZ
P-11ASA
P-11ASB
P-11ASC
P-11ASD
P-11ASE
P-11ASF
P-11ASG
P-11ASH
P-11ASI
P-11ASJ
P-11ASK
P-11ASL
P-11ASM
P-11ASN
P-11ASO
P-11ASP
P-11ASQ
P-11ASR
P-11ASS
P-11AST
P-11ASU
P-11ASV
P-11ASW
P-11ASX
P-11ASY
P-11ASZ
P-11ATA
P-11ATB
P-11ATC
P-11ATD
P-11ATE
P-11ATF
P-11ATG
P-11ATH
P-11ATI
P-11ATJ
P-11ATK
P-11ATL
P-11ATM
P-11ATN
P-11ATO
P-11ATP
P-11ATQ
P-11ATR
P-11ATS
P-11ATT
P-11ATU
P-11ATV
P-11ATW
P-11ATX
P-11ATY
P-11ATZ
P-11AUA
P-11AUB
P-11AUC
P-11AUD
P-11AUE
P-11AUF
P-11AUG
P-11AUH
P-11AUI
P-11AUJ
P-11AUK
P-11AUL
P-11AUM
P-11AUN
P-11AUO
P-11AUP
P-11AUQ
P-11AUR
P-11AUS
P-11AUT
P-11AUU
P-11AUV
P-11AUW
P-11AUX
P-11AUY
P-11AUZ
P-11AVA
P-11AVB
P-11AVC
P-11AVD
P-11AVE
P-11AVF
P-11AVG
P-11AVH
P-11AVI
P-11AVJ
P-11AVK
P-11AVL
P-11AVM
P-11AVN
P-11AVO
P-11AVP
P-11AVQ
P-11AVR
P-11AVS
P-11AVT
P-11AVU
P-11AVV
P-11AVW
P-11AVX
P-11AVY
P-11AVZ
P-11AWA
P-11AWB
P-11AWC
P-11AWD
P-11AWE
P-11AWF
P-11AWG
P-11AWH
P-11AWI
P-11AWJ
P-11AWK
P-11AWL
P-11AWM
P-11AWN
P-11AWO
P-11AWP
P-11AWQ
P-11AWR
P-11AWS
P-11AWT
P-11AWU
P-11AWV
P-11AWW
P-11AWX
P-11AWY
P-11AWZ
P-11AXA
P-11AXB
P-11AXC
P-11AXD
P-11AXE
P-11AXF
P-11AXG
P-11AXH
P-11AXI
P-11AXJ
P-11AXK
P-11AXL
P-11AXM
P-11AXN
P-11AXO
P-11AXP
P-11AXQ
P-11AXR
P-11AXS
P-11AXT
P-11AXU
P-11AXV
P-11AXW
P-11AXX
P-11AXY
P-11AXZ
P-11AYA
P-11AYB
P-11AYC
P-11AYD
P-11AYE
P-11AYF
P-11AYG
P-11AYH
P-11AYI
P-11AYJ
P-11AYK
P-11AYL
P-11AYM
P-11AYN
P-11AYO
P-11AYP
P-11AYQ
P-11AYR
P-11AYS
P-11AYT
P-11AYU
P-11AYV
P-11AYW
P-11AYX
P-11AYY
P-11AYZ
P-11AZA
P-11AZB
P-11AZC
P-11AZD
P-11AZE
P-11AZF
P-11AZG
P-11AZH
P-11AZI
P-11AZJ
P-11AZK
P-11AZL
P-11AZM
P-11AZN
P-11AZO
P-11AZP
P-11AZQ
P-11AZR
P-11AZS
P-11AZT
P-11AZU
P-11AZV
P-11AZW
P-11AZX
P-11AZY
P-11AZZ
P-11BAA
P-11BAB
P-11BAC
P-11BAD
P-11BAE
P-11BAF
P-11BAG
P-11BAH
P-11BAI
P-11BAJ
P-11BAK
P-11BAL
P-11BAM
P-11BAN
P-11BAO
P-11BAP
P-11BAQ
P-11BAR
P-11BAS
P-11BAT
P-11BAU
P-11BAV
P-11BAW
P-11BAX
P-11BAY
P-11BAZ
P-11BBA
P-11BBB
P-11BBC
P-11BBD
P-11BBE
P-11BBF
P-11BBG
P-11BBH
P-11BBI
P-11BBJ
P-11BBK
P-11BBL
P-11BBM
P-11BBN
P-11BBO
P-11BBP
P-11BBQ
P-11BBR
P-11BBS
P-11BBT
P-11BBU
P-11BBV
P-11BBW
P-11BBX
P-11BBY
P-11BBZ
P-11BCA
P-11BCB
P-11BCC
P-11BCD
P-11BCE
P-11BCF
P-11BCG
P-11BCH
P-11BCI
P-11BCJ
P-11BCK
P-11BCL
P-11BCM
P-11BCN
P-11BCO
P-11BCP
P-11BCQ
P-11BCR
P-11BCS
P-11BCT
P-11BCU
P-11BCV
P-11BCW
P-11BCX
P-11BCY
P-11BCZ
P-11BDA
P-11BDB
P-11BDC
P-11BDD
P-11BDE
P-11BDF
P-11BDG
P-11BDH
P-11BDI
P-11BDJ
P-11BDK
P-11BDL
P-11BDM
P-11BDN
P-11BDO
P-11BDP
P-11BDQ
P-11BDR
P-11BDS
P-11BDT
P-11BDU
P-11BDV
P-11BDW
P-11BDX
P-11BDY
P-11BDZ
P-11BEA
P-11BEB
P-11BEC
P-11BED
P-11BEE
P-11BEF
P-11BEG
P-11BEH
P-11BEI
P-11BEJ
P-11BEK
P-11BEL
P-11BEM
P-11BEN
P-11BEO
P-11BEP
P-11BEQ
P-11BER
P-11BES
P-11BET
P-11BEU
P-11BEV
P-11BEW
P-11BEX
P-11BEY
P-11BEZ
P-11BFA
P-11BFB
P-11BFC
P-11BFD
P-11BFE
P-11BFF
P-11BFG
P-11BFH
P-11BFI
P-11BFJ
P-11BFK
P-11BFL
P-11BFM
P-11BFN
P-11BFO
P-11BFP
P-11BFQ
P-11BFR
P-11BFS
P-11BFT
P-11BFU
P-11BFV
P-11BFW
P-11BFX
P-11BFY
P-11BFZ
P-11BGA
P-11BGB
P-11BGC
P-11BGD
P-11BGE
P-11BGF
P-11BGG
P-11BGH
P-11BGI
P-11BGJ
P-11BGK
P-11BGL
P-11BGM
P-11BGN
P-11BGO
P-11BGP
P-11BGQ
P-11BGR
P-11BGS
P-11BGT
P-11BGU
P-11BGV
P-11BGW
P-11BGX
P-11BGY
P-11BGZ
P-11BHA
P-11BHB
P-11BHC
P-11BHD
P-11BHE
P-11BHF
P-11BHG
P-11BHH
P-11BHI
P-11BHJ
P-11BHK
P-11BHL
P-11BHM
P-11BHN
P-11BHO
P-11BHP
P-11BHQ
P-11BHR
P-11BHS
P-11BHT
P-11BHU
P-11BHV
P-11BHW
P-11BHX
P-11BHY
P-11BHZ
P-11BIA
P-11BIB
P-11BIC
P-11BID
P-11BIE
P-11BIF
P-11BIG
P-11BIH
P-11BII
P-11BIJ
P-11BIK
P-11BIL
P-11BIM
P-11BIN
P-11BIO
P-11BIP
P-11BIQ
P-11BIR
P-11BIS
P-11BIT
P-11BIU
P-11BIV
P-11BIW
P-11BIX
P-11BIY
P-11BIZ
P-11BJA
P-11BJB
P-11BJC
P-11BJD
P-11BJE
P-11BJF
P-11BJG
P-11BJH
P-11BJI
P-11BJJ
P-11BJK
P-11BJL
P-11BJM
P-11BJN
P-11BJO
P-11BJP
P-11BJQ
P-11BJR
P-11BJS
P-11BJT
P-11BJU
P-11BJV
P-11BJW
P-11BJX
P-11BJY
P-11BJZ
P-11BKA
P-11BKB
P-11BKC
P-11BKD
P-11BKE
P-11BKF
P-11BKG
P-11BKH
P-11BKI
P-11BKJ
P-11BKK
P-11BKL
P-11BKM
P-11BKN
P-11BKO
P-11BKP
P-11BKQ
P-11BKR
P-11BKS
P-11BKT
P-11BKU
P-11BKV
P-11BKW
P-11BKX
P-11BKY
P-11BKZ
P-11BLA
P-11BLB
P-11BLC
P-11BLD
P-11BLE
P-11BLF
P-11BLG
P-11BLH
P-11BLI
P-11BLJ
P-11BLK
P-11BLL
P-11BLM
P-11BLN
P-11BLO
P-11BLP
P-11BLQ
P-11BLR
P-11BLS
P-11BLT
P-11BLU
P-11BLV
P-11BLW
P-11BLX
P-11BLY
P-11BLZ
P-11BMA
P-11BMB
P-11BMC
P-11BMD
P-11BME
P-11BMF
P-11BMG
P-11BMH
P-11BMI
P-11BMJ
P-11BMK
P-11BML
P-11BMM
P-11BMN
P-11BMO
P-11BMP
P-11BMQ
P-11BMR
P-11BMS
P-11BMT
P-11BMU
P-11BMV
P-11BMW
P-11BMX
P-11BMY
P-11BMZ
P-11BNA
P-11BNB
P-11BNC
P-11BND
P-11BNE
P-11BNF
P-11BNG
P-11BNH
P-11BNI
P-11BNJ
P-11BNK
P-11BNL
P-11BNM
P-11BNN
P-11BNO
P-11BNP
P-11BNQ
P-11BNR
P-11BNS
P-11BNT
P-11BNU
P-11BNV
P-11BNW
P-11BNX
P-11BNY
P-11BNZ
P-11BOA
P-11BOB
P-11BOC
P-11BOD
P-11BOE
P-11BOF
P-11BOG
P-11BOH
P-11BOI
P-11BOJ
P-11BOK
P-11BOL
P-11BOM
P-11BON
P-11BOO
P-11BOP
P-11BOQ
P-11BOR
P-11BOS
P-11BOT
P-11BOU
P-11BOV
P-11BOW
P-11BOX
P-11BOY
P-11BOZ
P-11BPA
P-11BPB
P-11BPC
P-11BPD
P-11BPE
P-11BPF
P-11BPG
P-11BPH
P-11BPI
P-11BPJ
P-11BPK
P-11BPL
P-11BPM
P-11BPN
P-11BPO
P-11BPP
P-11BPQ
P-11BPR
P-11BPS
P-11BPT
P-11BPU
P-11BPV
P-11BPW
P-11BPX
P-11BPY
P-11BPZ
P-11BQA
P-11BQB
P-11BQC
P-11BQD
P-11BQE
P-11BQF
P-11BQG
P-11BQH
P-11BQI
P-11BQJ
P-11BQK
P-11BQL
P-11BQM
P-11BQN
P-11BQO
P-11BQP
P-11BQQ
P-11BQR
P-11BQS
P-11BQT
P-11BQU
P-11BQV
P-11BQW
P-11BQX
P-11BQY
P-11BQZ
P-11BRA
P-11BRB
P-11BRC
P-11BRD
P-11BRE
P-11BRF
P-11BRG
P-11BRH
P-11BRI
P-11BRJ
P-11BRK
P-11BRL
P-11BRM
P-11BRN
P-11BRO
P-11BRP
P-11BRQ
P-11BRR
P-11BRS
P-11BRT
P-11BRU
P-11BRV
P-11BRW
P-11BRX
P-11BRY
P-11BRZ
P-11BSA
P-11BSB
P-11BSC
P-11BSD
P-11BSE
P-11BSF
P-11BSG
P-11BSH
P-11BSI
P-11BSJ
P-11BSK
P-11BSL
P-11BSM
P-11BSN
P-11BSO
P-11BSP
P-11BSQ
P-11BSR
P-11BSS
P-11BST
P-11BSU
P-11BSV
P-11BSW
P-11BSX
P-11BSY
P-11BSZ
P-11BTA
P-11BTB
P-11BTC
P-11BTD
P-11BTE
P-11BTF
P-11BTG
P-11BTH
P-11BTI
P-11BTJ
P-11BTK
P-11BTL
P-11BTM
P-11BTN
P-11BTO
P-11BTP
P-11BTQ
P-11BTR
P-11BTS
P-11BTT
P-11BTU
P-11BTV
P-11BTW
P-11BTX
P-11BTY
P-11BTZ
P-11BUA
P-11BUB
P-11BUC
P-11BUD
P-11BUE
P-11BUF
P-11BUG
P-11BUH
P-11BUI
P-11BUJ
P-11BUK
P-11BUL
P-11BUM
P-11BUN
P-11BUO
P-11BUP
P-11BUQ
P-11BUR
P-11BUS
P-11BUT
P-11BUU
P-11BUV
P-11BUW
P-11BUX
P-11BUY
P-11BUZ
P-11BVA
P-11BVB
P-11BVC
P-11BVD
P-11BVE
P-11BVF
P-11BVG
P-11BVH
P-11BVI
P-11BVJ
P-11BVK
P-11BVL
P-11BVM
P-11BVN
P-11BVO
P-11BVP
P-11BVQ
P-11BVR
P-11BVS
P-11BVT
P-11BVU
P-11BVV
P-11BVW
P-11BVX
P-11BVY
P-11BVZ
P-11BWA
P-11BWB
P-11BWC
P-11BWD
P-11BWE
P-11BWF
P-11BWG
P-11BWH
P-11BWI
P-11BWJ
P-11BWK
P-11BWL
P-11BWM
P-11BWN
P-11BWO
P-11BWP
P-11BWQ
P-11BWR
P-11BWS
P-11BWT
P-11BWU
P-11BWV
P-11BWW
P-11BWX
P-11BWY
P-11BWZ
P-11BXA
P-11BXB
P-11BXC
P-11BXD
P-11BXE
P-11BXF
P-11BXG
P-11BXH
P-11BXI
P-11BXJ
P-11BXK
P-11BXL
P-11BXM
P-11BXN
P-11BXO
P-11BXP
P-11BXQ
P-11BXR
P-11BXS
P-11BXT
P-11BXU
P-11BXV
P-11BXW
P-11BXX
P-11BXY
P-11BXZ
P-11BYA
P-11BYB
P-11BYC
P-11BYD
P-11BYE
P-11BYF
P-11BYG
P-11BYH
P-11BYI
P-11BYJ
P-11BYK
P-11BYL
P-11BYM
P-11BYN
P-11BYO
P-11BYP
P-11BYQ
P-11BYR
P-11BYS
P-11BYT
P-11BYU
P-11BYV
P-11BYW
P-11BYX
P-11BYY
P-11BYZ
P-11BZA
P-11BZB
P-11BZC
P-11BZD
P-11BZE
P-11BZF
P-11BZG
P-11BZH
P-11BZI
P-11BZJ
P-11BZK
P-11BZL
P-11BZM
P-11BZN
P-11BZO
P-11BZP
P-11BZQ
P-11BZR
P-11BZS
P-11BZT
P-11BZU
P-11BZV
P-11BZW
P-11BZX
P-11BZY
P-11BZZ
P-11CAA
P-11CAB
P-11CAC
P-11CAD
P-11CAE
P-11CAF
P-11CAG
P-11CAH
P-11CAI
P-11CAJ
P-11CAK
P-11CAL
P-11CAM
P-11CAN
P-11CAO
P-11CAP
P-11CAQ
P-11CAR
P-11CAS
P-11CAT
P-11CAU
P-11CAV
P-11CAW
P-11CAX
P-11CAY
P-11CAZ
P-11CBA
P-11CBB
P-11CBC
P-11CBD
P-11CBE
P-11CBF
P-11CBG
P-11CBH
P-11CBI
P-11CBJ
P-11CBK
P-11CBL
P-11CBM
P-11CBN
P-11CBO
P-11CBP
P-11CBQ
P-11CBR
P-11CBS
P-11CBT
P-11CBU
P-11CBV
P-11CBW
P-11CBX
P-11CBY
P-11CBZ
P-11CCA
P-11CCB
P-11CCC
P-11CCD
P-11CCE
P-11CCF
P-11CCG
P-11CCH
P-11CCI
P-11CCJ
P-11CCK
P-11CCL
P-11CCM
P-11CCN
P-11CCO
P-11CCP
P-11CCQ
P-11CCR
P-11CCS
P-11CCT
P-11CCU
P-11CCV
P-11CCW
P-11CCX
P-11CCY
P-11CCZ
P-11CDA
P-11CDB
P-11CDC
P-11CDD
P-11CDE
P-11CDF
P-11CDG
P-11CDH
P-11CDI
P-11CDJ
P-11CDK
P-11CDL
P-11CDM
P-11CDN
P-11CDO
P-11CDP
P-11CDQ
P-11CDR
P-11CDS
P-11CDT
P-11CDU
P-11CDV
P-11CDW
P-11CDX
P-11CDY
P-11CDZ
P-11CEA
P-11CEB
P-11CEC
P-11CED
P-11CEE
P-11CEF
P-11CEG
P-11CEH
P-11CEI
P-11CEJ
P-11CEK
P-11CEL
P-11CEM
P-11CEN
P-11CEO
P-11CEP
P-11CEQ
P-11CER
P-11CES
P-11CET
P-11CEU
P-11CEV
P-11CEW
P-11CEX
P-11CEY
P-11CEZ
P-11CFA
P-11CFB
P-11CFC
P-11CFD
P-11CFE
P-11CFF
P-11CFG
P-11CFH
P-11CFI
P-11CFJ
P-11CFK
P-11CFL
P-11CFM
P-11CFN
P-11CFO
P-11CFP
P-11CFQ
P-11CFR
P-11CFS
P-11CFT
P-11CFU
P-11CFV
P-11CFW
P-11CFX
P-11CFY
P-11CFZ
P-11CGA
P-11CGB
P-11CGC
P-11CGD
P-11CGE
P-11CGF
P-11CGG
P-11CGH
P-11CGI
P-11CGJ
P-11CGK
P-11CGL
P-11CGM
P-11CGN
P-11CGO
P-11CGP
P-11CGQ
P-11CGR
P-11CGS
P-11CGT
P-11CGU
P-11CGV
P-11CGW
P-11CGX
P-11CGY
P-11CGZ
P-11CHA
P-11CHB
P-11CHC
P-11CHD
P-11CHE
P-11CHF
P-11CHG
P-11CHH
P-11CHI
P-11CHJ
P-11CHK
P-11CHL
P-11CHM
P-11CHN
P-11CHO
P-11CHP
P-11CHQ
P-11CHR
P-11CHS
P-11CHT
P-11CHU
P-11CHV
P-11CHW
P-11CHX
P-11CHY
P-11CHZ
P-11CIA
P-11CIB
P-11CIC
P-11CID
P-11CIE
P-11CIF
P-11CIG
P-11CIH
P-11CII
P-11CIJ
P-11CIK
P-11CIL
P-11CIM
P-11CIN
P-11CIO
P-11CIP
P-11CIQ
P-11CIR
P-11CIS
P-11CIT
P-11CIU
P-11CIV
P-11CIW
P-11CIX
P-11CIY
P-11CIZ
P-11CJA
P-11CJB
P-11CJC
P-11CJD
P-11CJE
P-11CJF
P-11CJG
P-11CJH
P-11CJI
P-11CJJ
P-11CJK
P-11CJL
P-11CJM
P-11CJN
P-11CJO
P-11CJP
P-11CJQ
P-11CJR
P-11CJS
P-11CJT
P-11CJU
P-11CJV
P-11CJW
P-11CJX
P-11CJY
P-11CJZ
P-11CKA
P-11CKB
P-11CKC
P-11CKD
P-11CKE
P-11CKF
P-11CKG
P-11CKH
P-11CKI
P-11CKJ
P-11CKK
P-11CKL
P-11CKM
P-11CKN
P-11CKO
P-11CKP
P-11CKQ
P-11CKR
P-11CKS
P-11CKT
P-11CKU
P-11CKV
P-11CKW
P-

NOTE:
WASTE VENT TO HAVE 10' CLEARANCE FROM ALL BUILDING AIR INTAKES.

NOTE:
WASTE VENT TO HAVE 10' CLEARANCE FROM ALL BUILDING AIR INTAKES.

NOTE:
WASTE VENT TO HAVE 10' CLEARANCE FROM ALL BUILDING AIR INTAKES.

1 WASTE/VENT RISER- DINING, SHELTER, AND STORAGE BUILDING
NO SCALE

12/2/2020 11:43 AM
ISD-1801-P102.3B.DWG

i-sdesign
ARCHITECTURE + INTERIORS
1111 Haynes Street, Suite 103
Raleigh, North Carolina 27604
t. 919.833.5400
www.isdesignpa.com

MAPLE
ENGINEERING, PLLC
708 ST. MARYS ST
RALEIGH, NC 27605 LIC.#: P-0990
P:919-341-4247 F:919-890-3797
PLUMBING MECHANICAL ELECTRICAL

Project
THE HEALING PLACE OF NEW HANOVER COUNTY
1000 MEDICAL CENTER DRIVE
WILMINGTON, NORTH CAROLINA

Client
NEW HANOVER COUNTY, NORTH CAROLINA

All reproduction & intellectual property rights reserved © 2020

SITE PLAN

NORTH

Professional Seals

NORTH CAROLINA PROFESSIONAL SEAL 044528 ENGINEER KRISTIN M. METAYER
12/2/20

No.	Description	Date
	CONSTRUCTION DOCUMENT SET	08/25/20
1	MCD #1	12/2/20

Sheet Title
PLUMBING
DINING BUILDING
WASTE/VENT RISERS

Sheet Number
P102.3B

© 2020 MAPLE ENGINEERING, PLLC EXPRESSLY RESERVES ITS COMMON LAW COPYRIGHT AND OTHER PROPERTY RIGHTS IN THESE PLANS. THESE PLANS ARE NOT TO BE REPRODUCED, CHANGED OR COPIED IN ANY FORM OR MANNER WHATSOEVER, NOR ARE THEY TO BE ASSIGNED TO ANY THIRD PARTY WITHOUT FIRST OBTAINING THE EXPRESSED WRITTEN PERMISSION AND CONSENT OF MAPLE ENGINEERING, PLLC.

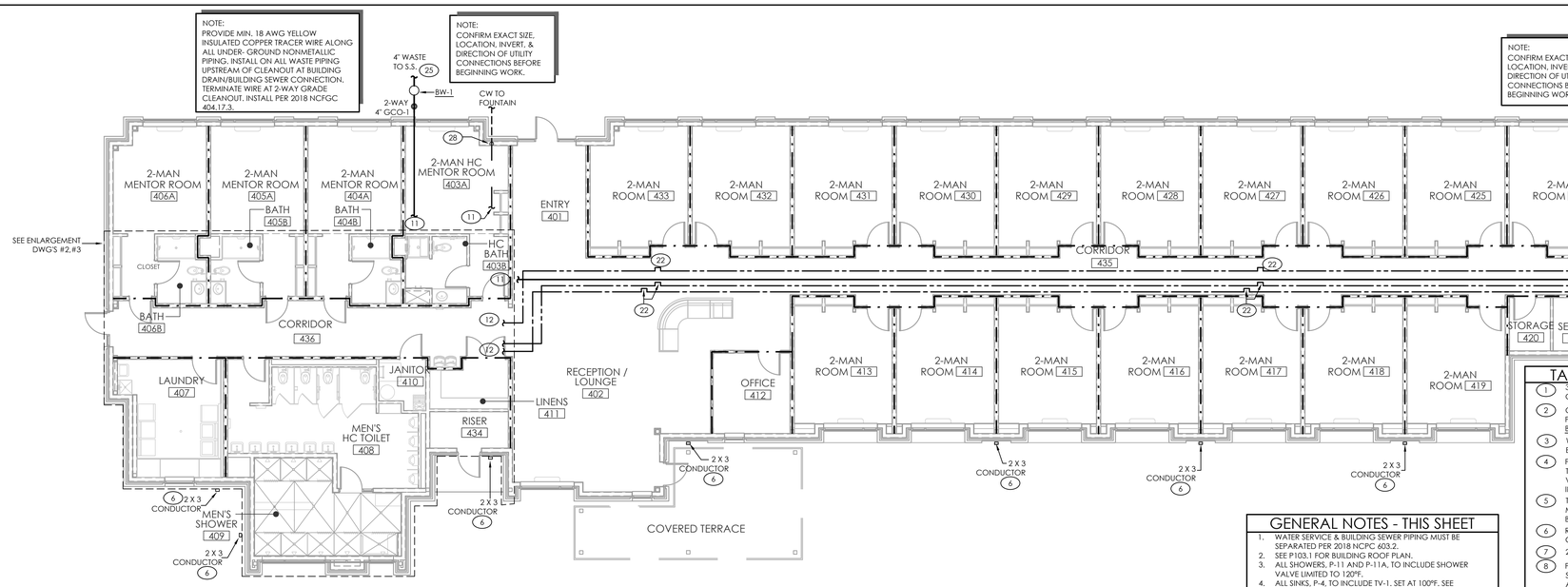

4 PLUMBING PLAN - OVERALL MEN'S RESIDENTIAL BUILDING.
SCALE: 1/8" = 1'-0"

NOTE:
ALL EXPOSED PIPING AND TRAPS IN RESTROOM TO BE COVERED WITH FLEXIBLE PVC COVER. COORDINATE EXACT SELECTION AND COVER WITH ARCHITECT.

GENERAL NOTES - THIS SHEET

1. WATER SERVICE & BUILDING SEWER PIPING MUST BE SEPARATED PER 2018 NCPC 603.2.
2. SEE P103.1 FOR BUILDING ROOF PLAN.
3. ALL SHOWERS, P-11 AND P-11A, TO INCLUDE SHOWER VALVE LIMITED TO 120ºF.
4. ALL SINKS, P-4, TO INCLUDE TV-1, SET AT 100ºF. SEE SCHEDULE.

TAGGED NOTES - THIS SHEET

1. 3/4" CW TO ELECTRIC HUMIDIFIER ABOVE CEILING.PROVIDE WITH CV-1 AND SHUTOFF.
2. CW DOWN IN WALL TO WALL HYDRANT. ENSURE PIPING IS ON WARM SIDE OF INSULATION. PROVIDE BV-1 OVERHEAD ABOVE LAY-IN CEILING.
3. WATER HEATER ON FLOOR. PROVIDE HOUSEKEEPING PAD, ELEVATE DRAIN PAN AS NECESSARY. DRAIN TO MOP SINK.
4. P.C. TO PROVIDE PVC TWIN PIPE FLUE VENT & INTAKE TO ROOF. ENSURE VENT HAS 10' HORIZONTAL OR 3' VERTICAL CLEARANCE FROM ALL BUILDING AIR INTAKES/EXHAUSTS. INSTALL PER MFG. INSTRUCTIONS.
5. TWO TANKLESS WATER HEATERS ON WALL ABOVE MOP SINK. DRAIN TO MOP SINK. HOT WATER LINES TO BE FED TO TANK, SEE DETAIL.
6. RECTANGULAR CONDUCTOR TO TRANSITION INTO CIRCULAR CONDUCTOR BEFORE TURNING BELOW GRADE.
7. 2" WASTE DOWN IN WALL.
8. PORTION OF BRANCH LINE IS PART OF CIRCUIT VENT SYSTEM, MAXIMUM SLOPE 8%. TURN DOWN AS NECESSARY AFTER MOST DOWNSTREAM FIXTURE. IF SLOPE REQUIREMENTS CANNOT BE MAINTAINED, ADDITIONAL VENTS WILL BE REQUIRED.
9. 2-1/2" CW UP ALONG WALL FROM BELOW SLAB. PROVIDE WITH BV-1, LOW ON WALL. COORDINATE WITH G.C. TO PROVIDE PROTECTIVE CHASE UP TO CEILING BEHIND DRYERS.
10. SEE DWG#4 FOR CONTINUATION.
11. SEE DWG#3 FOR CONTINUATION.
12. SEE DWG#2 FOR CONTINUATION.
13. SEE DWG#1 FOR CONTINUATION.
14. PROVIDE WITH TRAP PRIMER FROM AREA CW LINE.
15. ENSURE DISTANCE FROM TRAP TO VENT DOES NOT EXCEED MORE THAN 8 FEET.
16. WASTE DOWN IN CHASE TO BELOW SLAB
17. 1/2" HOT WATER RETURN TO RP-1 AT WH-4.
18. 2" VENT BELOW SLAB. VENT TO RISE 6" VERTICALLY BEFORE TURNING HORIZONTAL. ENSURE MINIMUM OF 2% SLOPE.
19. LINT SEPARATOR BELOW SLAB.
20. COMMERCIAL LAUNDRY EQUIPMENT TO DRAIN TO TRENCH DRAIN WITH 3" AIR GAP.
21. 3/4" HW/CW TO COMMERCIAL LAUNDRY EQUIPMENT. PROVIDE W/ CV-1 & SHOCK ARRESTORS.
22. PROVIDE EXPANSION LOOPS EVERY 50' TO 75' FOR ALL STRAIGHT RUNS OF WATER PIPE.
23. PROVIDE WITH TV-1, SET TO 110ºF.
24. 3/4" DRAIN LINE DOWN IN WALL FROM ELECTRIC HUMIDIFIER.DRAIN TO AREA MOP SINK WITH 1.5" AIR GAP.
25. RIM ELEVATION OF NEXT UPSTREAM SEWER MANHOLE IS HIGHER THAN BUILDING FINISHED FLOOR ELEVATION. P.C. TO INSTALL BACKWATER VALVE. BW-1. INSTALL PER MANUFACTURER'S INSTRUCTIONS. SEE SCHEDULE. PROVIDE ACCESS PER NCPC 715.5.
26. HUMIDIFIER WASTE OVERHEAD. PIPE TO BE COPPER. ENSURE SLOPE IS MAINTAINED.
27. ELECTRIC HUMIDIFIER OVERHEAD IN CEILING. COORDINATE EXACT LOCATION WITH M.C..
28. 3/4" CW DOWN ALONG WALL TO BELOW GRADE. PROVIDE WITH BV-1 AND CV-1. CW LINE TO CONTINUE BELOW GRADE TO SERVE WATER FOUNTAIN. COORDINATE WITH CIVIL.
29. CONFIRM SEAT SIDE OF ADA SHOWER WITH OWNER AND G.C..
30. BRANCH DRAIN FROM MOP SINK RECEIVING DISCHARGE OVER 140ºF TO BE CAST IRON A MINIMUM OF 10' DOWNSTREAM FROM THE OUTLET PRODUCING DISCHARGE & RATED FOR 180ºF.
31. WATER PIPING TO BE RUN IN MECH CHASE. TYPICAL FOR ALL SITUATIONS IN ALL BUILDINGS.

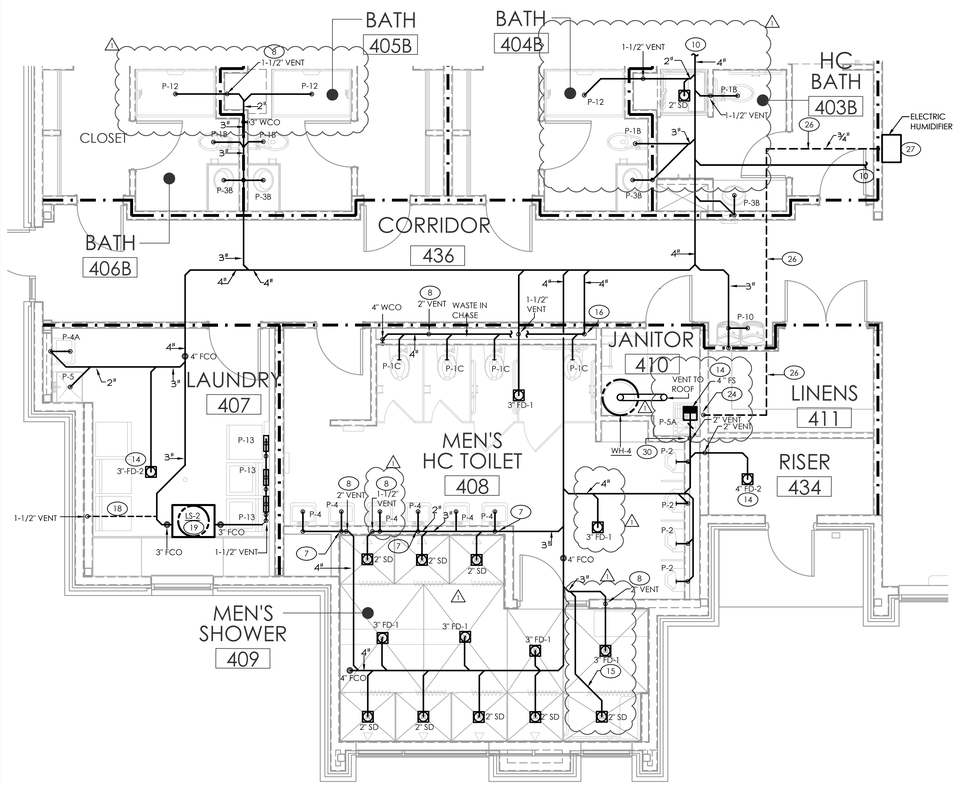

3 PLUMBING PLAN - BATHROOM ENLARGEMENT MEN'S (WASTE)
SCALE: 1/4" = 1'-0"

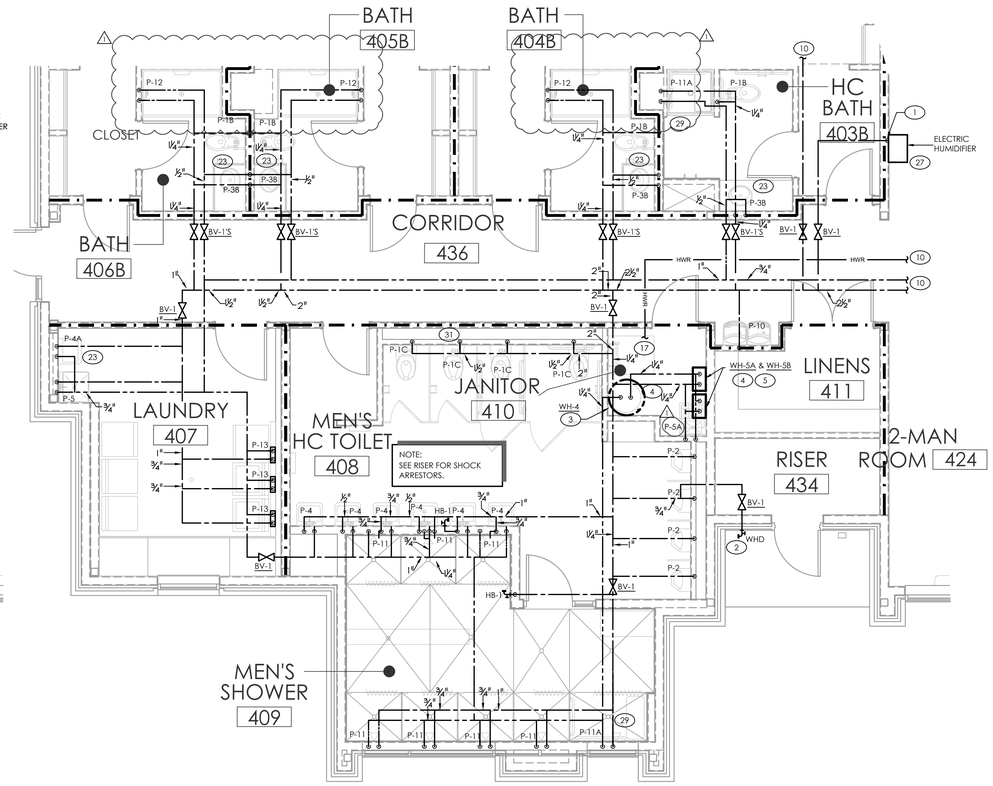

2 PLUMBING PLAN - BATHROOM ENLARGEMENT MEN'S(WATER)
SCALE: 1/4" = 1'-0"

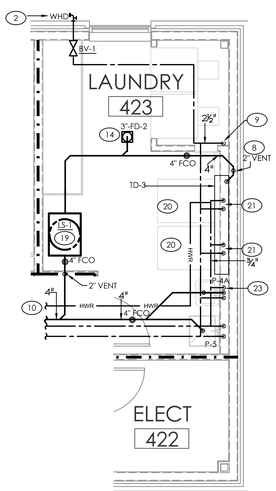

1 PLUMBING PLAN - LAUNDRY ROOM ENLARGEMENT MEN'S
SCALE: 1/4" = 1'-0"

i-s design
ARCHITECTURE + INTERIORS
1111 Haynes Street, Suite 103
Raleigh, North Carolina 27604
t. 919.833.5400
www.isdesignpa.com

MAPLE ENGINEERING, PLLC
708 ST. MARYS ST
RALEIGH, NC 27605 LIC.#: P-0990
P:919-341-4247 F:919-890-3797
PLUMBING MECHANICAL ELECTRICAL

Project
THE HEALING PLACE OF NEW HANOVER COUNTY
1000 MEDICAL CENTER DRIVE
WILMINGTON, NORTH CAROLINA

Client
NEW HANOVER COUNTY, NORTH CAROLINA

All reproduction & intellectual property rights reserved © 2020

SITE PLAN



Professional Seals

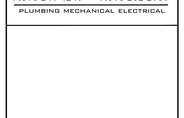

12/2/20

No.	Description	Date
1	CONSTRUCTION DOCUMENT SET MCD #1	08/25/20 12/2/20

Sheet Title
PLUMBING MEN'S RESIDENT BUILDING OVERALL & ENLARGEMENT PLANS

Sheet Number
P103.0A

© 2020 MAPLE ENGINEERING, PLLC EXPRESSLY RESERVES ITS COMMON LAW COPYRIGHT AND OTHER PROPERTY RIGHTS IN THESE PLANS. THESE PLANS ARE NOT TO BE REPRODUCED, CHANGED OR COPIED IN ANY FORM OR MANNER WHATSOEVER, NOR ARE THEY TO BE ASSIGNED TO ANY THIRD PARTY WITHOUT FIRST OBTAINING THE EXPRESSED WRITTEN PERMISSION AND CONSENT OF MAPLE ENGINEERING, PLLC

12/2/2020 11:43 AM
ASS-1801-P1103.0A.DWG

NOTE:
PROVIDE MIN. 18 AWG YELLOW INSULATED COPPER TRACER WIRE ALONG ALL UNDER- GROUND NONMETALLIC PIPING. INSTALL ON ALL WASTE PIPING UPSTREAM OF CLEANOUT AT BUILDING DRAIN/BUILDING SEWER CONNECTION. TERMINATE WIRE AT 2-WAY GRADE CLEANOUT. INSTALL PER 2018 NCFGC 404.17.3.

NOTE:
CONFIRM EXACT SIZE, LOCATION, INVERT, & DIRECTION OF UTILITY CONNECTIONS BEFORE BEGINNING WORK.

FIRE RATING LEGEND
- 1-HR WALL
- 1-HR WALL/ SMOKE WALL
- SMOKE PARTITION

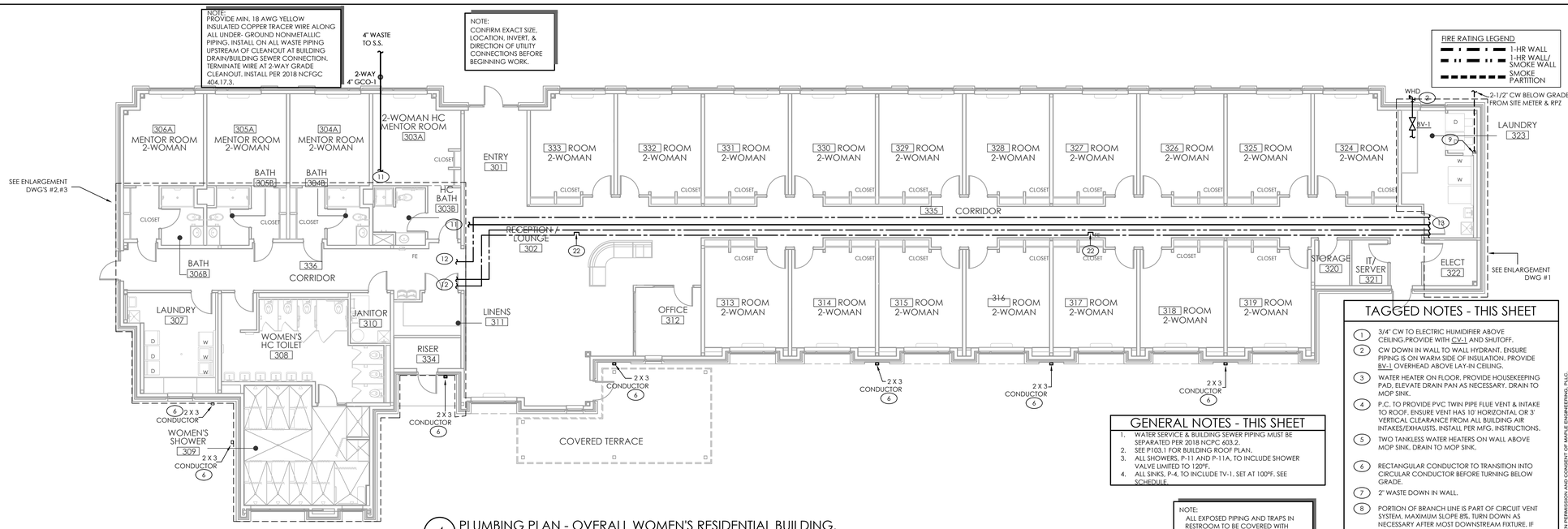

4 PLUMBING PLAN - OVERALL WOMEN'S RESIDENTIAL BUILDING.
SCALE: 1/8" = 1'-0"

GENERAL NOTES - THIS SHEET

1. WATER SERVICE & BUILDING SEWER PIPING MUST BE SEPARATED PER 2018 NCPC 603.2.
2. SEE P103.1 FOR BUILDING ROOF PLAN.
3. ALL SHOWERS, P-11 AND P-11A, TO INCLUDE SHOWER VALVE LIMITED TO 120°F.
4. ALL SINKS, P-4, TO INCLUDE TV-1, SET AT 100°F. SEE SCHEDULE

NOTE:
ALL EXPOSED PIPING AND TRAPS IN RESTROOM TO BE COVERED WITH FLEXIBLE PVC COVER. COORDINATE EXACT SELECTION AND COVER WITH ARCHITECT.

TAGGED NOTES - THIS SHEET

1. 3/4" CW TO ELECTRIC HUMIDIFIER ABOVE CEILING.PROVIDE WITH CV-1 AND SHUTOFF.
2. CW DOWN IN WALL TO WALL HYDRANT. ENSURE PIPING IS ON WARM SIDE OF INSULATION. PROVIDE BV-1 OVERHEAD ABOVE LAY-IN CEILING.
3. WATER HEATER ON FLOOR, PROVIDE HOUSEKEEPING PAD, ELEVATE DRAIN PAN AS NECESSARY. DRAIN TO MOP SINK.
4. P.C. TO PROVIDE PVC TWIN PIPE FLUE VENT & INTAKE TO ROOF. ENSURE VENT HAS 10' HORIZONTAL OR 3' VERTICAL CLEARANCE FROM ALL BUILDING AIR INTAKES/EXHAUSTS. INSTALL PER MFG. INSTRUCTIONS.
5. TWO TANKLESS WATER HEATERS ON WALL ABOVE MOP SINK. DRAIN TO MOP SINK.
6. RECTANGULAR CONDUCTOR TO TRANSITION INTO CIRCULAR CONDUCTOR BEFORE TURNING BELOW GRADE.
7. 2" WASTE DOWN IN WALL.
8. PORTION OF BRANCH LINE IS PART OF CIRCUIT VENT SYSTEM, MAXIMUM SLOPE 8%. TURN DOWN AS NECESSARY AFTER MOST DOWNSTREAM FIXTURE. IF SLOPE REQUIREMENTS CANNOT BE MAINTAINED, ADDITIONAL VENTS WILL BE REQUIRED.
9. 2-1/2" CW UP IN WALL FROM BELOW SLAB. PROVIDE WITH BV-1, LOW ON WALL.
10. SEE DWG#4 FOR CONTINUATION.
11. SEE DWG#3 FOR CONTINUATION.
12. SEE DWG#2 FOR CONTINUATION.
13. SEE DWG#1 FOR CONTINUATION.
14. PROVIDE WITH TRAP PRIMER FROM AREA CW LINE.
15. ENSURE DISTANCE FROM TRAP TO VENT DOES NOT EXCEED MORE THAN 12 FEET.
16. WASTE DOWN IN CHASE TO BELOW SLAB
17. 1/2" HOT WATER RETURN TO RP-1 AT WH-4.
18. 2" VENT BELOW SLAB. VENT TO RISE 6" VERTICALLY BEFORE TURNING HORIZONTAL. ENSURE MINIMUM OF 2% SLOPE.
19. LINT SEPARATOR BELOW SLAB.
20. COMMERCIAL LAUNDRY EQUIPMENT TO DRAIN TO TRENCH DRAIN WITH 1" AIR GAP.
21. 3/4" HW/CW TO COMMERCIAL LAUNDRY EQUIPMENT. PROVIDE W/ CV-1 & SHOCK ARRESTORS.
22. PROVIDE EXPANSION LOOPS EVERY 50' TO 75' FOR ALL STRAIGHT RUNS OF WATER PIPE.
23. PROVIDE WITH TV-1, SET TO 100°F.
24. 3/4" DRAIN LINE DOWN IN WALL FROM ELECTRIC HUMIDIFIER.DRAIN TO AREA FLOOR DRAIN WITH 1.5" AIR GAP.
25. NOT USED.
26. HUMIDIFIER WASTE OVERHEAD. PIPE TO BE COPPER. ENSURE SLOPE IS MAINTAINED.
27. ELECTRIC HUMIDIFIER OVERHEAD IN CEILING. COORDINATE EXACT LOCATION WITH M.C..
28. NOT USED.
29. CONFIRM SEAT SIDE OF ADA SHOWER WITH OWNER AND G.C.
30. BRANCH DRAIN FROM MOP SINK RECEIVING DISCHARGE OVER 140°F TO BE CAST IRON A MINIMUM OF 10' DOWNSTREAM FROM THE OUTLET PRODUCING DISCHARGE & RATED FOR 180°F.

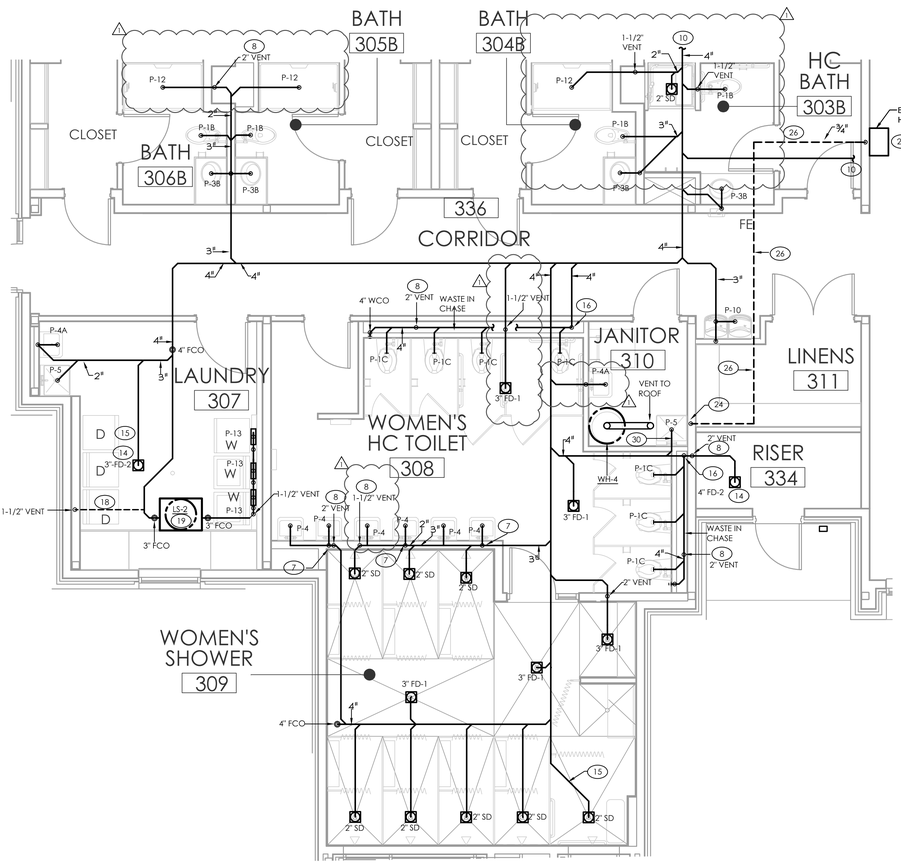

3 PLUMBING PLAN - BATHROOM ENLARGEMENT WOMEN'S (WASTE)
SCALE: 1/4" = 1'-0"

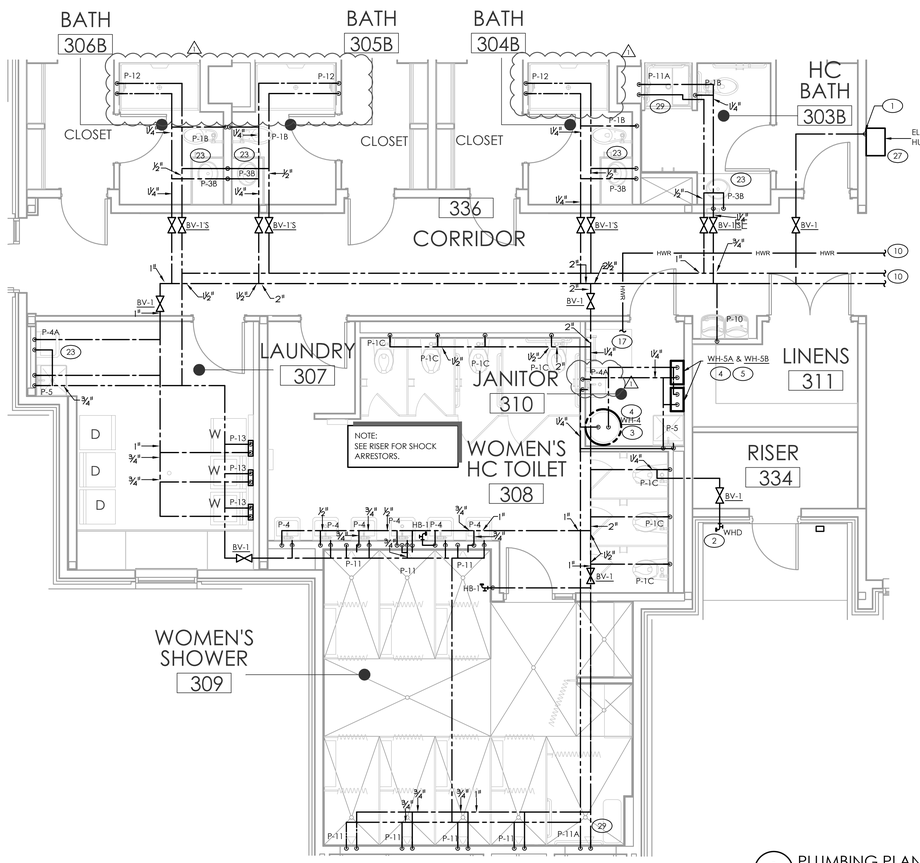

2 PLUMBING PLAN - BATHROOM ENLARGEMENT WOMEN'S(WATER)
SCALE: 1/4" = 1'-0"

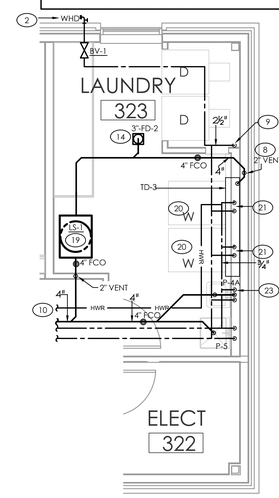

1 PLUMBING PLAN - LAUNDRY ROOM ENLARGEMENT WOMEN'S
SCALE: 1/4" = 1'-0"

i-s design
ARCHITECTURE + INTERIORS
1111 Haynes Street, Suite 103
Raleigh, North Carolina 27604
t. 919.833.5400
www.isdesignpa.com

MAPLE ENGINEERING, PLLC
708 ST. MARYS ST
RALEIGH, NC 27605 LIC.#: P-0990
P:919-341-4247 F:919-890-3797
PLUMBING MECHANICAL ELECTRICAL

Project
THE HEALING PLACE OF NEW HANOVER COUNTY
1000 MEDICAL CENTER DRIVE
WILMINGTON, NORTH CAROLINA

Client
NEW HANOVER COUNTY, NORTH CAROLINA

All reproduction & intellectual property rights reserved. © 2020

SITE PLAN

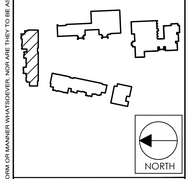

Professional Seals



12/2/20

No.	Description	Date
1	CONSTRUCTION DOCUMENT SET MCD #1	08/25/20 12/2/20

Sheet Title
PLUMBING WOMEN'S RESIDENT BUILDING OVERALL & ENLARGEMENT PLANS

Sheet Number
P103.0B

© 2020 MAPLE ENGINEERING, PLLC EXPRESSLY RESERVES ITS COMMON LAW COPYRIGHT AND OTHER PROPERTY RIGHTS IN THESE PLANS. THESE PLANS ARE NOT TO BE REPRODUCED, CHANGED OR COPIED IN ANY FORM OR MANNER WHATSOEVER, NOR ARE THEY TO BE ASSIGNED TO ANY THIRD PARTY WITHOUT FIRST OBTAINING THE EXPRESSED WRITTEN PERMISSION AND CONSENT OF MAPLE ENGINEERING, PLLC

12/2/2020 11:43 AM
RD:\180\1-P103.0B.DWG

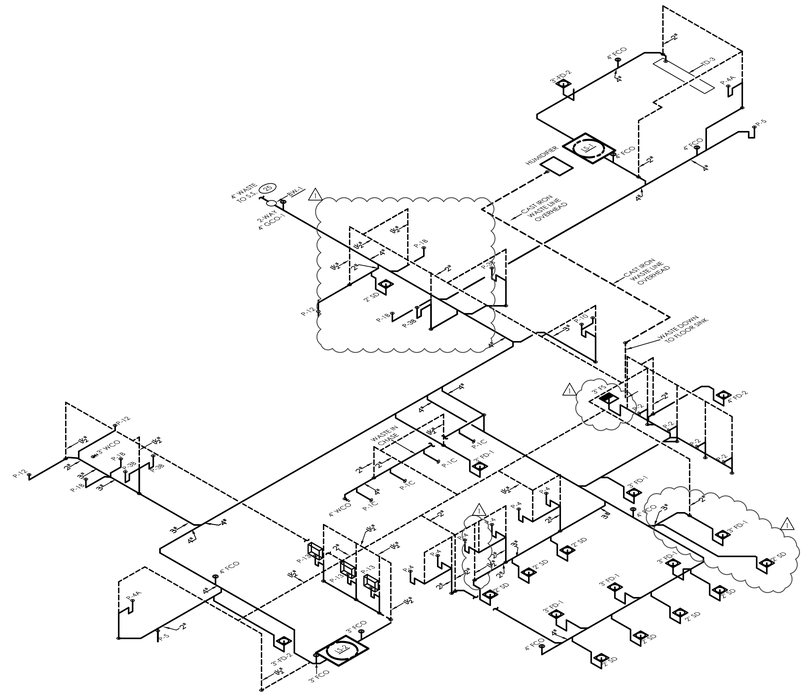
2" WASTE TO S.S.
2" VENT
4" CO
4" VENT
4" WASTE
4" CO
4" VENT
4" WASTE
4" CO
4" VENT
4" WASTE

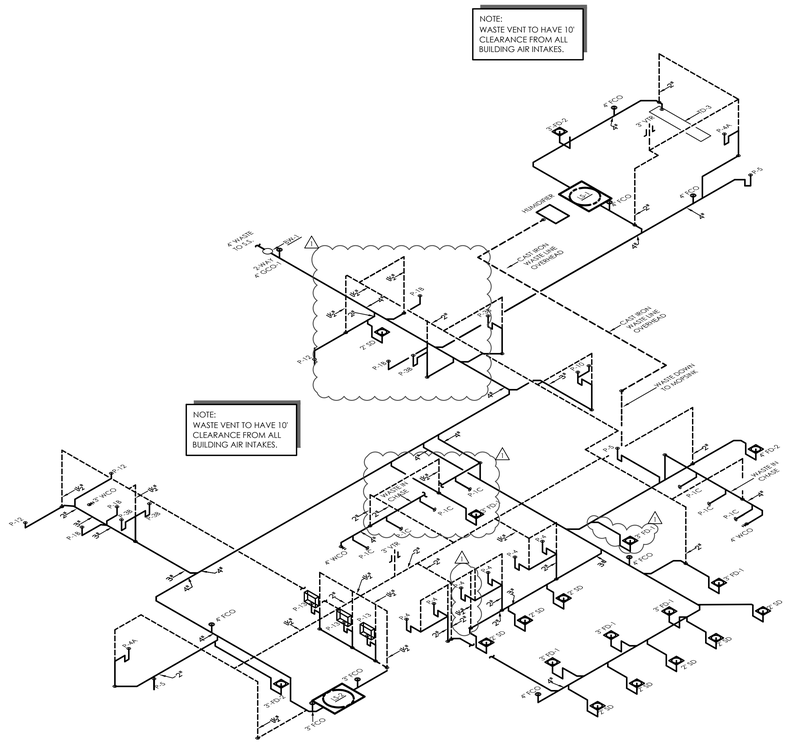
NOTE:
WASTE VENT TO HAVE 10' CLEARANCE FROM ALL BUILDING AIR INTAKES.
NOTE:
WASTE VENT TO HAVE 10' CLEARANCE FROM ALL BUILDING AIR INTAKES.
HUMIDIFIER
CAST IRON WASTE LINE OVERHEAD
WASTE DOWN TO HOSPARK
MAIN DRAIN
6" WASTE TO S.S.
3" VENT & GOOSE
6" FCO
3" VTR
4" WCO
2" FD
4" FCO
3" VTR
4" FCO
3" VTR
4" FCO
3" VTR

GENERAL NOTES - THIS SHEET

1. WATER SERVICE & BUILDING SEWER PIPING MUST BE SEPARATED PER 2018 NCPC 603.2.
2. SEE SHEET P104.0B FOR WATER PIPING PLAN.

TAGGED NOTES - THIS SHEET

1. WASTE RUNNING HORIZONTALLY IN CHASE, ROUTE TIGHTLY TO WALL.
2. WASTE DOWN IN CHASE TO BELOW SLAB.
3. PROVIDE WITH TRAP PRIMER FROM AREA CW LINE.
4. RIM ELEVATION OF NEXT UPSTREAM SEWER MANHOLE IS HIGHER THAN BUILDING FINISHED FLOOR ELEVATION, P.C. TO INSTALL BACKWATER VALVE, BW-1. INSTALL PER MANUFACTURER'S INSTRUCTIONS, SEE SCHEDULE. PROVIDE ACCESS PER NCPC 715.5.
5. NOT USED.
6. SECONDARY DRAIN DOWN IN WALL FROM ABOVE, TO DISCHARGE JUST ABOVE GRADE TO DAYLIGHT W/ WATTS RD-940 COW-TONGUE.
7. PRIMARY ROOF DRAIN DOWN IN WALL FROM ABOVE, TO CONTINUE TO BELOW SLAB TO STORM DRAIN.
8. UNIT SEPARATOR INSTALLED BELOW SLAB IN AREA. P.C. TO VERIFY LOCATION OF ELECTRICAL CONDUIT IN AREA. COORDINATE WITH ELECTRICAL CONTRACTOR.
9. WATER HEATER VENT TO ROOF.
10. NOT USED.
11. 2" WASTE DOWN IN WALL.
12. 2" WASTE RUNNING HORIZONTALLY IN WALL.
13. PORTION OF BRANCH LINE IS PART OF CIRCUIT VENT SYSTEM, MAXIMUM SLOPE 8%, TURN DOWN AS NECESSARY AFTER MOST DOWNSTREAM FIXTURE, IF SLOPE REQUIREMENTS CANNOT BE MAINTAINED, ADDITIONAL VENTS WILL BE REQUIRED.

NOTE:
ALL EXPOSED PIPING AND TRAPS IN RESTROOM TO BE COVERED WITH FLEXIBLE PVC COVER. COORDINATE EXACT SELECTION AND COVER WITH ARCHITECT.

NOTE:
PROVIDE MIN. 18 AWG YELLOW INSULATED COPPER TRACER WIRE ALONG ALL UNDER-GROUND NONMETALLIC PIPING. INSTALL ON ALL WASTE PIPING UPSTREAM OF CLEANOUT AT BUILDING DRAIN/BUILDING SEWER CONNECTION. TERMINATE WIRE AT 2-WAY GRADE CLEANOUT. INSTALL PER 2018 SCFGC 404.17.3.

NOTE:
CONFIRM EXACT SIZE, LOCATION, INVERT, & DIRECTION OF UTILITY CONNECTIONS BEFORE BEGINNING WORK.

FIRE RATING LEGEND
- 1-HR WALL
- 1-HR WALL/ SMOKE WALL
- SMOKE PARTITION

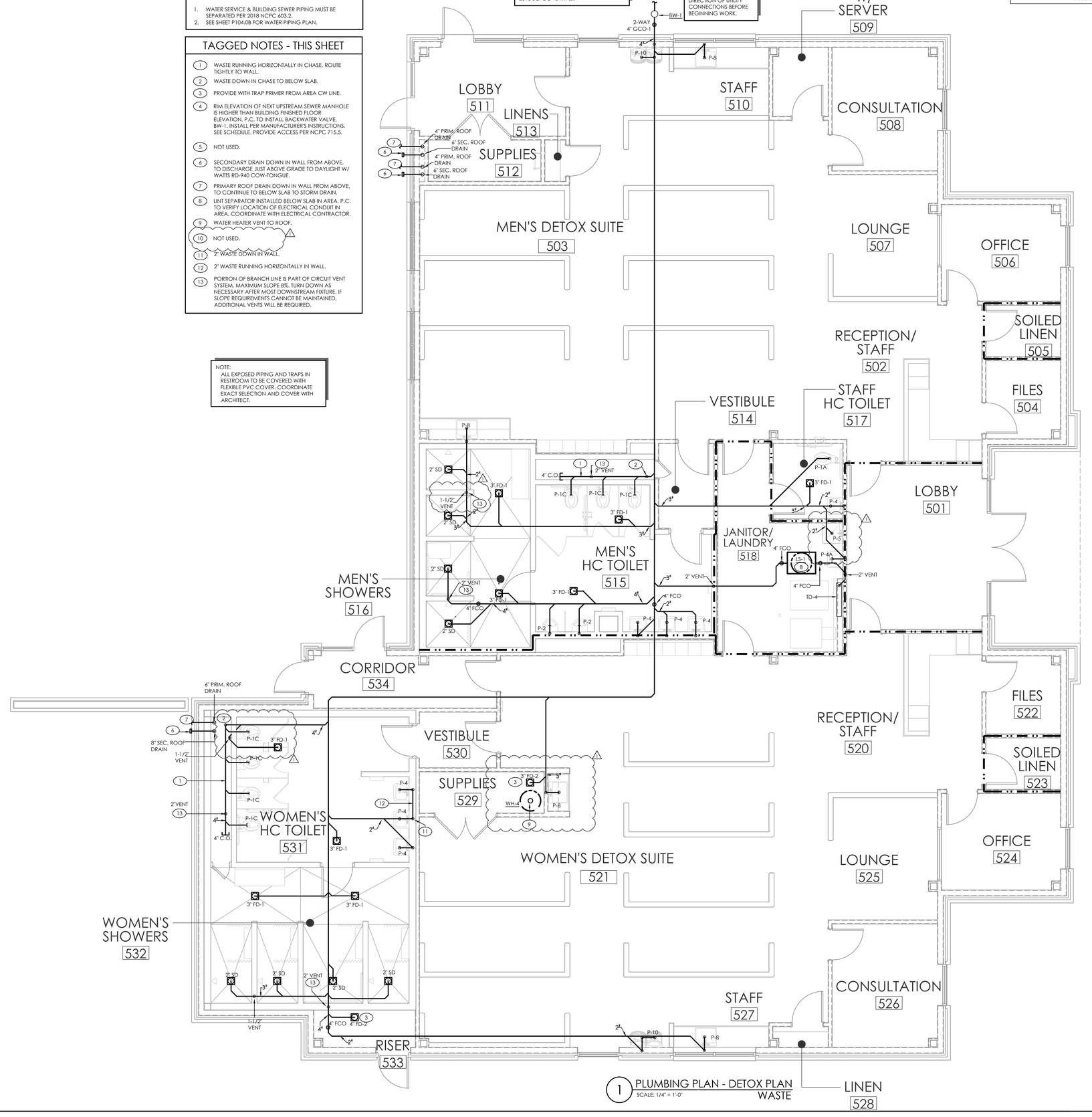

1 PLUMBING PLAN - DETOX PLAN WASTE
SCALE: 1/4" = 1'-0"

12/2/2020 11:42 AM
MDS-1801-P104.0A.DWG

i-s design ARCHITECTURE + INTERIORS
1111 Haynes Street, Suite 103
Raleigh, North Carolina 27604
t. 919.833.5400
www.isdesignpa.com

MAPLE ENGINEERING, PLLC
708 ST. MARYS ST
RALEIGH, NC 27605 LIC.#: P-0990
P:919-341-4247 F:919-890-3797
PLUMBING MECHANICAL ELECTRICAL

Project
THE HEALING PLACE OF NEW HANOVER COUNTY
1000 MEDICAL CENTER DRIVE
WILMINGTON, NORTH CAROLINA

Client
NEW HANOVER COUNTY, NORTH CAROLINA

All reproduction & intellectual property rights reserved © 2020

SITE PLAN

NORTH

Professional Seals
NORTH CAROLINA PROFESSIONAL ENGINEER SEAL 44528 JUSTIN METAYER
12/2/20

No.	Description	Date
	CONSTRUCTION DOCUMENT SET	08/25/20
1	MCD #1	12/2/20

Sheet Title
PLUMBING DETOX BUILDING PLAN WASTE

Sheet Number
P104.0A

© 2020 MAPLE ENGINEERING, PLLC EXPRESSLY RESERVES ITS COMMON LAW COPYRIGHT AND OTHER PROPERTY RIGHTS IN THESE PLANS. THESE PLANS ARE NOT TO BE REPRODUCED, CHANGED OR COPIED IN ANY FORM OR MANNER WHATSOEVER, NOR ARE THEY TO BE ASSIGNED TO ANY THIRD PARTY WITHOUT FIRST OBTAINING THE EXPRESSED WRITTEN PERMISSION AND CONSENT OF MAPLE ENGINEERING, PLLC.

NOTE:
SEE RISER FOR SHOCK ARRESTORS.

GENERAL NOTES - THIS SHEET

1. WATER SERVICE & BUILDING SEWER PIPING MUST BE SEPARATED PER 2018 NCPC 603.2.
2. SEE SHEET P104.0A FOR WASTE PIPING PLAN.
3. WASHER MACHINE TO RECEIVE DEDICATED 140°F HOT WATER LINE. FIXTURES ON RECIRC LOOP TO RECEIVE 110°F HOT WATER, SEE DETAIL.
4. ALL SINKS, P-4, TO INCLUDE TV-1. SET AT 100°F. SEE SCHEDULE.

TAGGED NOTES - THIS SHEET

1. CW UP IN WALL FROM BELOW SLAB TO OVERHEAD. PROVIDE WITH BV-1 AND ACCESS PANEL LOW ON WALL. SEE RISER.
2. CW DOWN IN WALL TO WALL HYDRANT. ENSURE PIPING IS ON WARM SIDE OF INSULATION. PROVIDE BV-1 OVERHEAD ABOVE LAY-IN CEILING.
3. HW/CW DOWN IN WALL TO BELOW COUNTER TO SERVE SINK.
4. NOT USED.
5. TANKLESS WATER HEATER LOCATED BELOW SINK. ENSURE ADA CLEARANCES ARE MAINTAINED.
6. NOT USED.
7. CONFIRM SEAT SIDE OF ADA SHOWER WITH OWNER AND G.C..
8. WATER HEATER ON FLOOR. PROVIDE HOUSEKEEPING PAD. ELEVATE DRAIN PAN AS NECESSARY. DRAIN TO MOP SINK.
9. TANKLESS WATER HEATER ON WALL. DRAIN TO FLOOR DRAIN.
10. P.C. TO PROVIDE PVC TWIN PIPE FLUE VENT & INTAKE TO ROOF. ENSURE VENT HAS 10' HORIZONTAL OR 3' VERTICAL CLEARANCE FROM ALL BUILDING AIR INTAKES/EXHAUSTS. INSTALL PER MFG. INSTRUCTIONS.
11. 1/2" HOT WATER RETURN TO RP-2 AT WH-4.
12. PROVIDE WITH TV-1. SET TO 100°F.
13. 3/4" HW/CW TO COMMERCIAL LAUNDRY EQUIPMENT. PROVIDE W/ CV-1 & SHOCK ARRESTORS.
14. L.S. SHOWN FOR REFERENCE. MAIN ACCESS TO COVER. SEE WASTE PLAN.
15. DEDICATED 140°F HOT WATER LINE FOR COMMERCIAL WASHER.
16. WATER PIPING TO BE RUN IN MECH CHASE. TYPICAL FOR ALL SITUATIONS IN ALL BUILDINGS.

FIRE RATING LEGEND
- 1-HR WALL
- 1-HR WALL/ SMOKE WALL
- SMOKE PARTITION

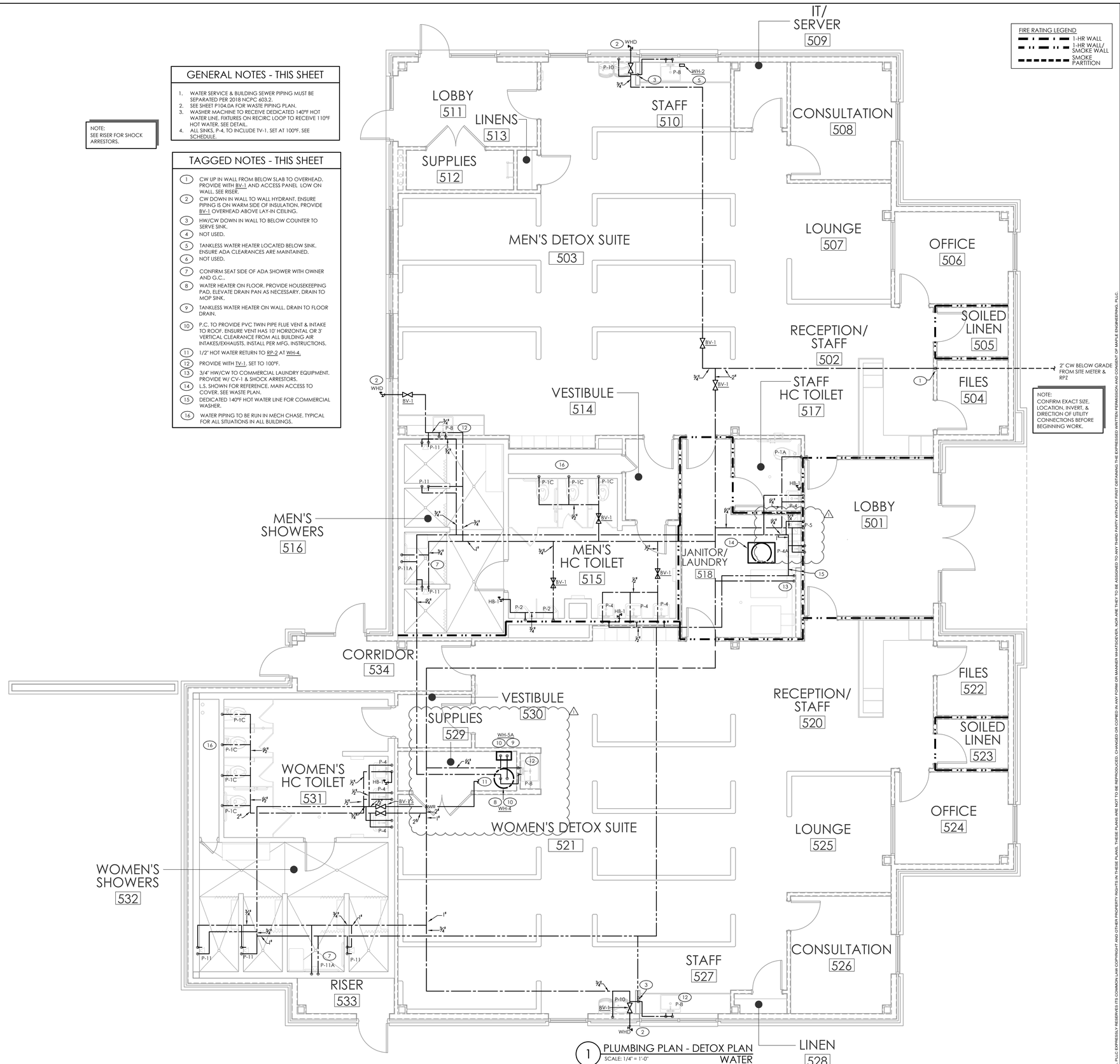

1 PLUMBING PLAN - DETOX PLAN WATER
SCALE: 1/4" = 1'-0"

i-s design ARCHITECTURE + INTERIORS
1111 Haynes Street, Suite 103
Raleigh, North Carolina 27604
t. 919.833.5400
www.isdesignpa.com

MAPLE ENGINEERING, PLLC
708 ST. MARYS ST
RALEIGH, NC 27605 LIC.#: P-0990
P:919-341-4247 F:919-890-3797
PLUMBING MECHANICAL ELECTRICAL

Project
THE HEALING PLACE OF NEW HANOVER COUNTY
1000 MEDICAL CENTER DRIVE
WILMINGTON, NORTH CAROLINA

Client
NEW HANOVER COUNTY, NORTH CAROLINA

All reproduction & intellectual property rights reserved © 2020

SITE PLAN

NORTH

Professional Seals
NORTH CAROLINA REGISTERED LANDSCAPE ARCHITECT SEAL 4528 JAMES M. MCKAY
12/2/20

No.	Description	Date
	CONSTRUCTION DOCUMENT SET	08/25/20
△	MCD #1	12/2/20

Sheet Title
PLUMBING DETOX BUILDING PLAN WATER

Sheet Number
P104.0B

© 2020 MAPLE ENGINEERING, PLLC EXPRESSLY RESERVES ITS COMMON LAW COPYRIGHT AND OTHER PROPERTY RIGHTS IN THESE PLANS. THESE PLANS ARE NOT TO BE REPRODUCED, CHANGED OR COPIED IN ANY FORM OR MANNER WHATSOEVER, NOR ARE THEY TO BE ASSIGNED TO ANY THIRD PARTY WITHOUT FIRST OBTAINING THE EXPRESSED WRITTEN PERMISSION AND CONSENT OF MAPLE ENGINEERING, PLLC.

12/2/2020 11:43 AM
I:\0-18\18-P104.0B.DWG

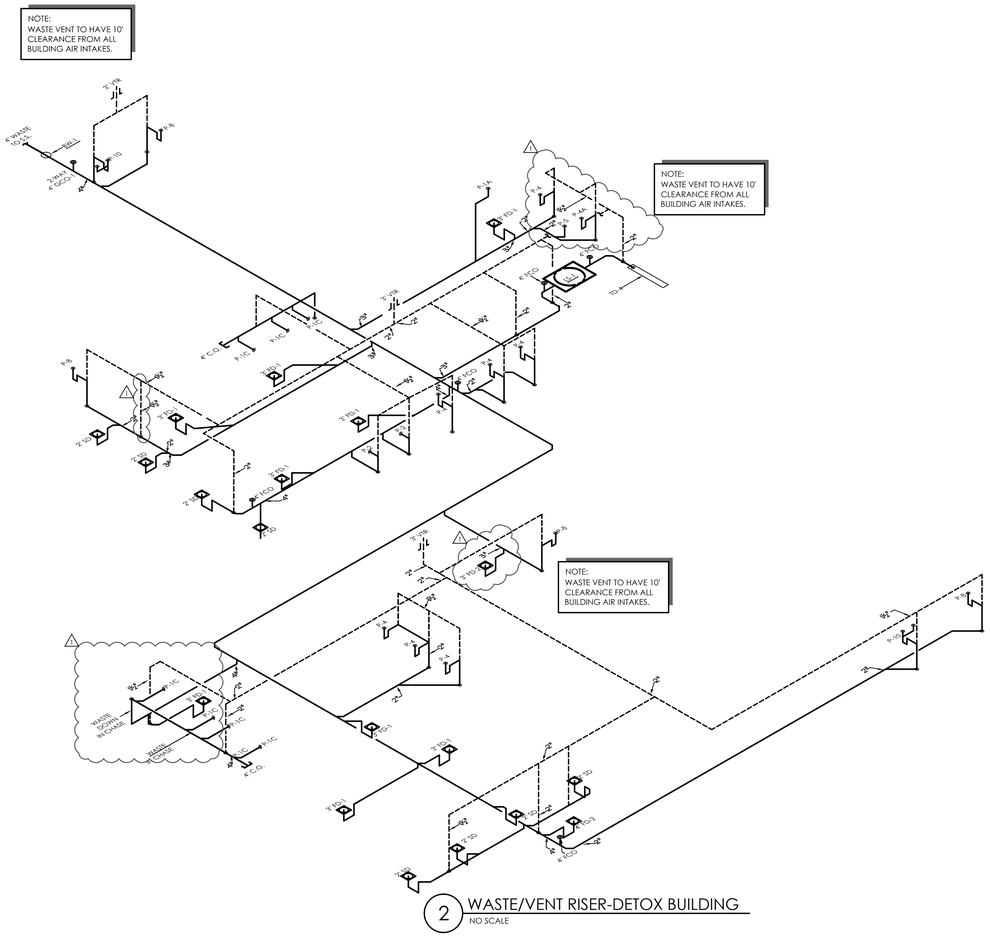

2 WASTE/VENT RISER-DETOX BUILDING
NO SCALE

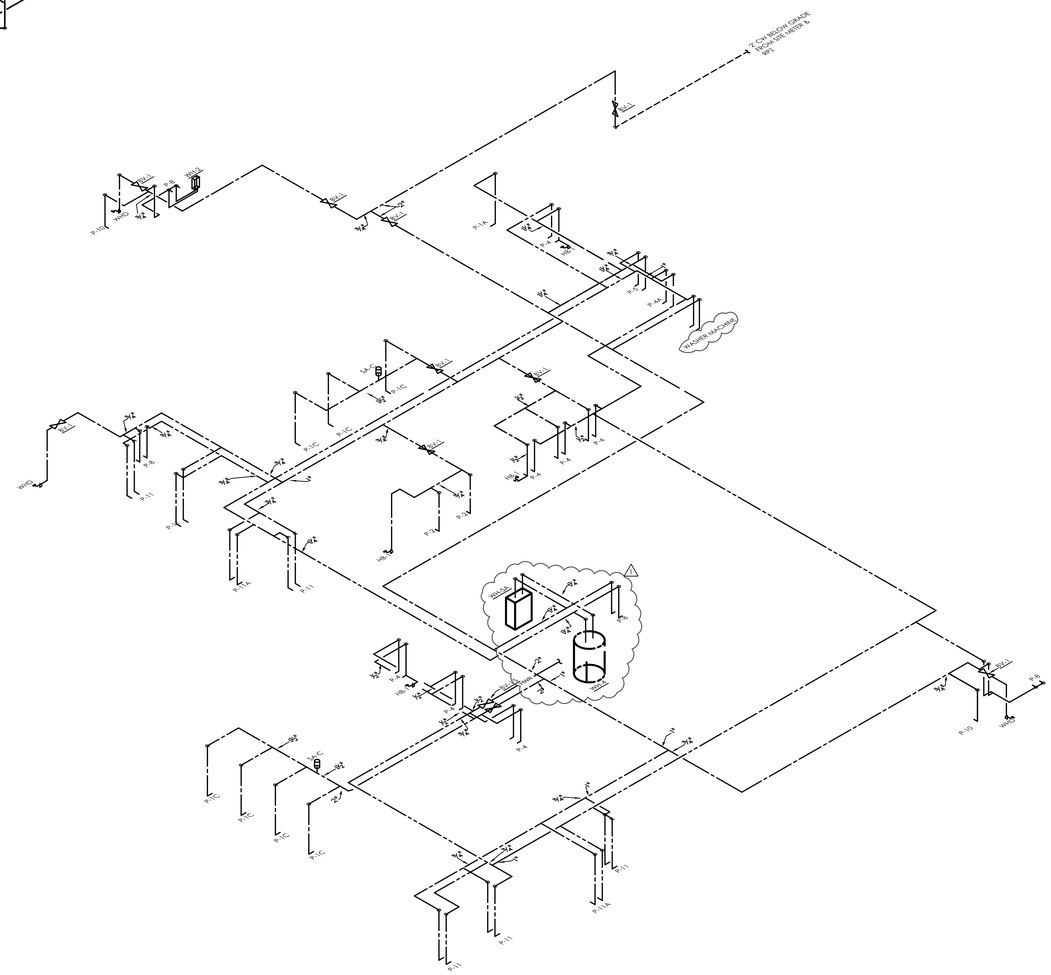

1 WATER RISER-DETOX BUILDING.
NO SCALE

is-design
ARCHITECTURE + INTERIORS
1111 Haynes Street, Suite 103
Raleigh, North Carolina 27604
t. 919.833.5400
www.isdesignpa.com

MAPLE
ENGINEERING, PLLC
708 ST. MARYS ST
RALEIGH, NC 27605 LIC.#: P-0990
P:919-341-4247 F:919-890-3797
PLUMBING MECHANICAL ELECTRICAL

Project
THE HEALING PLACE OF NEW HANOVER COUNTY
1000 MEDICAL CENTER DRIVE
WILMINGTON, NORTH CAROLINA

Client
NEW HANOVER COUNTY, NORTH CAROLINA

All reproduction & intellectual property rights reserved © 2020

SITE PLAN

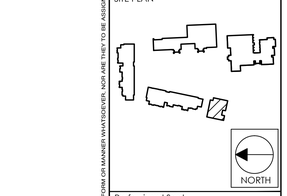

Professional Seals



12/2/20

No.	Description	Date
	CONSTRUCTION DOCUMENT SET	08/25/20
1	MCD #1	12/2/20

Sheet Title
PLUMBING
DETOX BUILDING
RISER

Sheet Number
P104.3

© 2020 MAPLE ENGINEERING, PLLC EXPRESSLY RESERVES ITS COMMON LAW COPYRIGHT AND OTHER PROPERTY RIGHTS IN THESE PLANS. THESE PLANS ARE NOT TO BE REPRODUCED, CHANGED OR COPIED IN ANY FORM OR MANNER WHATSOEVER, NOR ARE THEY TO BE ASSIGNED TO ANY THIRD PARTY WITHOUT FIRST OBTAINING THE EXPRESSED WRITTEN PERMISSION AND CONSENT OF MAPLE ENGINEERING, PLLC.

12/2/2020 11:42 AM
ISD-1801-P104.3.DWG

GENERAL NOTES - THIS SHEET

1. ENSURE THAT ALL SOURCES OF BUILDING EXHAUST ARE A MINIMUM OF 10' HORIZONTALLY FROM OR A MINIMUM OF 3' ABOVE ANY AREA OUTSIDE AIR INTAKES.
2. SEE SHEET M104.1 FOR GAS PIPING TABLES AND ROOF PLAN.

NOTE:
COORDINATE DUCT ROUTING WITH STRUCTURE, OVERHEAD PIPING, AND LIGHTS.

TAGGED NOTES - THIS SHEET

1. SUPPLY AND RETURN DUCTS DOWN FROM RTU ON ROOF. DUCTS ELBOW HORIZONTALLY ABOVE CEILING. SEE DETAIL.
2. GAS LINE DOWN FROM ROOF. LINE ELBOWS HORIZONTALLY ABOVE CEILING.
3. ROUTE DUCTWORK THROUGH WEBBING OF JOISTS.
4. INSTALL FIRE-SMOKE DAMPER AND ACCESS DOOR IN DUCT.
5. TRANSFER GRILLES AND DUCTWORK.
6. PROVIDE 1" DOOR UNDERCUT.
7. WIRELESS REMOTE SENSOR FOR RTU. THERMOSTAT CONTROLS IN STAFF CORRIDOR.
8. EXHAUST DUCT ELBOWS UP TO EXHAUST FAN ON ROOF. MAINTAIN 10' HORIZONTAL OR 3' VERTICAL CLEARANCE FROM BUILDING AIR INTAKES. SEE DETAIL.
9. INSTALL SURFACE MOUNTED UNIT HEATER 12" AFF. COORDINATE EXACT LOCATION WITH AREA EQUIPMENT AND G.C..
10. RE-CIRC FAN TO DISCHARGE TO TRANSFER GRILLE.
11. EXHAUST DUCT RUNS FROM INLINE EXHAUST FAN ABOVE CEILING TO MFG'S ROOF JACK. MAINTAIN 10' HORIZONTAL OR 3' VERTICAL CLEARANCE FROM BUILDING AIR INTAKES. SEE DETAIL.
12. ROOF ACCESS HATCH BY G.C..
13. GAS METER LOCATION. SEE SHEET M104.1 FOR GAS PIPING PLAN.
14. 10Ø DRYER VENT UP THROUGH VERTICAL SOFFIT TO MFG'S GOOSENECK TERMINATION WITH BDD (NO SCREEN). MAINTAIN 2" MINIMUM CLEARANCE ON ALL SIDES OF DUCT AT ROOF PENETRATION. DUCT TO TERMINATE A MINIMUM OF 3' ABOVE ROOF.
15. 8Ø DOWN FROM GRAVITY VENTILATOR TO CEILING DIFFUSER. SEE DETAIL.
16. ROUTE DUCT THROUGH OPENING IN STRUCTURAL BEAM. COORDINATE WITH STRUCTURE.
17. INSTALL RECESSED MOUNTED UNIT HEATER 12" AFF. COORDINATE EXACT LOCATION WITH G.C..
18. CONCENTRIC WATER HEATER VENTS BY P.C..
19. EXHAUST UP TO ROOF JACK. PROVIDE WITH INSECT SCREEN AND BDD. MAINTAIN 10' CLEARANCE FROM ALL BUILDING AIR INTAKES.
20. DOOR UNDERCUT SHALL NOT EXCEED 3/4".
21. NOT USED.
22. RELAY TO TURN OFF RTU UPON ACTIVATION OF BUILDING FIRE ALARM SYSTEM. COORDINATE W/ E.C.. RELAY PROVIDED BY FA CONTRACTOR.
23. TAP RUNS FROM BOTTOM OF RETURN DUCT TO RETURN DIFFUSER.

COMBUSTION AIR CALC'S

BASED ON 2018 NCFGC SEC 304

SPACE	MBH (INPUT)
APPLIANCES	MBH (INPUT)
DRYER	112.0
TOTAL:	112.0
ONE OPENING (SEC 304.6.2)	
REQ'D FREE AREA @ 1 SQIN PER 3,000 BTUH:	37

FIRE RATING LEGEND
- 1-HR WALL
- 1-HR WALL/ SMOKE WALL
- SMOKE PARTITION

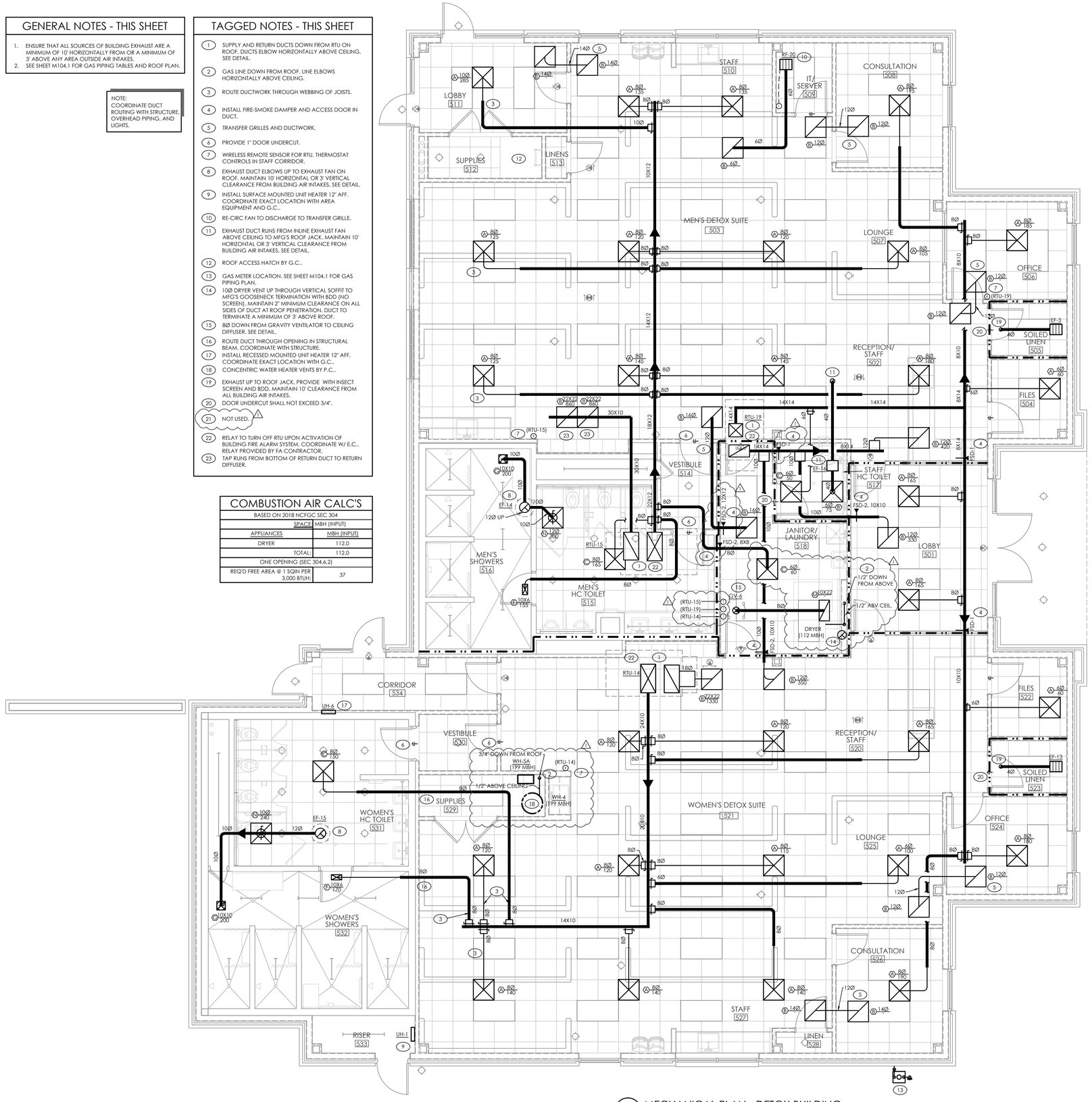

1 MECHANICAL PLAN - DETOX BUILDING
SCALE: 1/4" = 1'-0"

i-s design
ARCHITECTURE + INTERIORS
1111 Haynes Street, Suite 103
Raleigh, North Carolina 27604
t. 919.833.5400
www.isdesignpa.com

MAPLE ENGINEERING, PLLC
708 ST. MARYS ST
RALEIGH, NC 27605 LIC.#: P-0990
P:919-341-4247 F:919-890-3797
PLUMBING MECHANICAL ELECTRICAL

Project
THE HEALING PLACE OF NEW HANOVER COUNTY
1000 MEDICAL CENTER DRIVE
WILMINGTON, NORTH CAROLINA

Client
NEW HANOVER COUNTY, NORTH CAROLINA

All reproduction & intellectual property rights reserved © 2020

SITE PLAN

NORTH

Professional Seals
NORTH CAROLINA PROFESSIONAL SEAL 049756 ENGINEER VICTOR M SWEET
12/2/20

No.	Description	Date
	CONSTRUCTION DOCUMENT SET	08/25/20
1	MCD #1	12/2/20

Sheet Title
MECHANICAL DETOX BUILDING PLAN

Sheet Number
M104.0

© 2020 MAPLE ENGINEERING, PLLC EXPRESSLY RESERVES ITS COMMON LAW COPYRIGHT AND OTHER PROPERTY RIGHTS IN THESE PLANS. THESE PLANS ARE NOT TO BE REPRODUCED, CHANGED OR COPIED IN ANY FORM OR MANNER WHATSOEVER, NOR ARE THEY TO BE ASSIGNED TO ANY THIRD PARTY WITHOUT FIRST OBTAINING THE EXPRESSED WRITTEN PERMISSION AND CONSENT OF MAPLE ENGINEERING, PLLC.

12/2/2020 11:54 AM
053-1801-M104.0.DWG

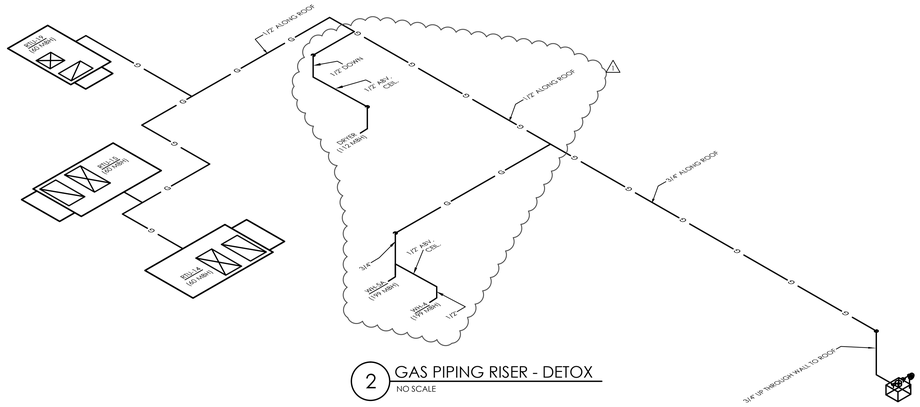

2 GAS PIPING RISER - DETOX
NO SCALE

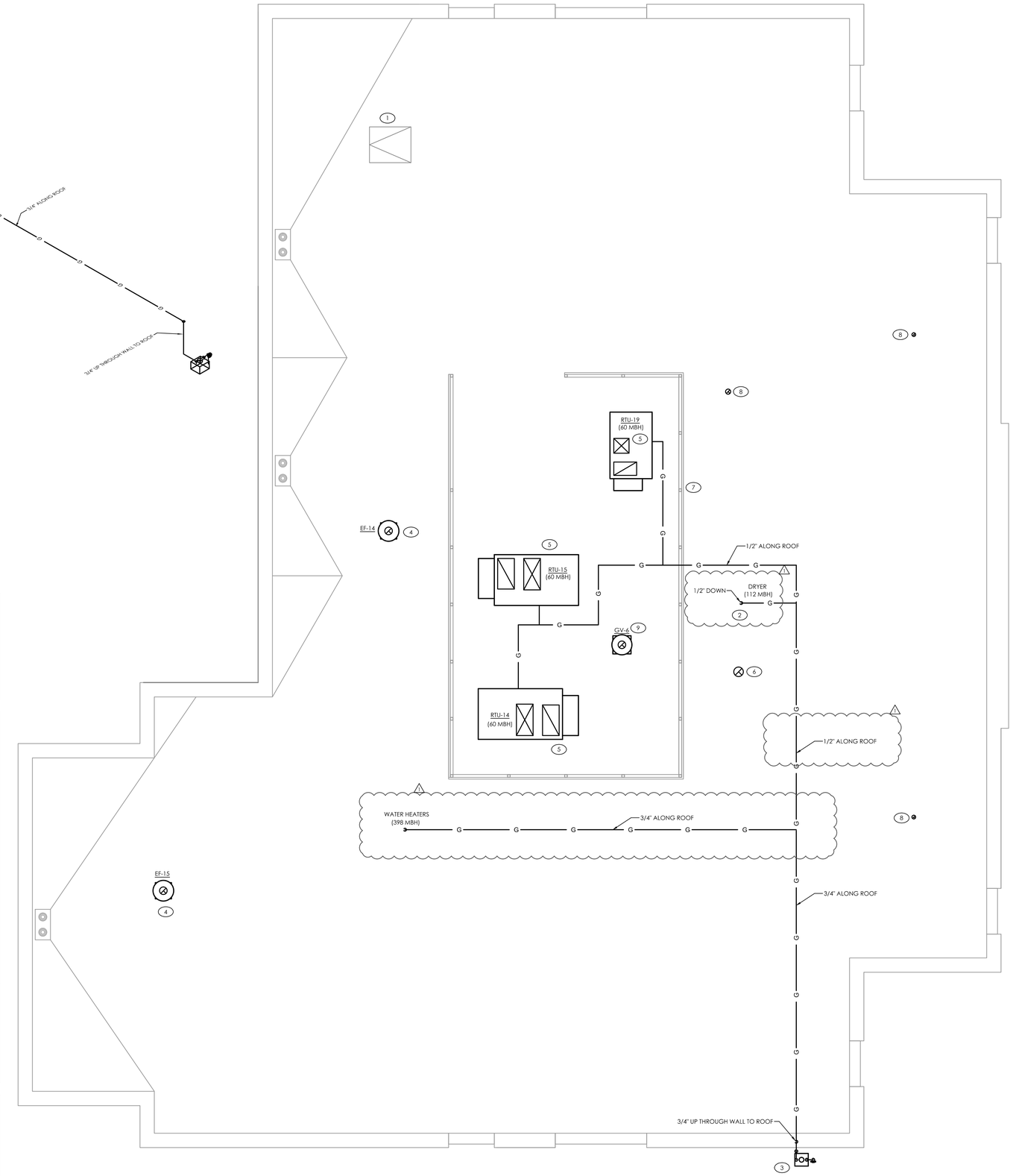

1 MECHANICAL ROOF PLAN - DETOX PLAN
SCALE: 1/4" = 1'-0"

GENERAL NOTES - THIS SHEET

1. SEE SHEET M002 FOR ADDITIONAL GAS PIPING NOTES.
2. COORDINATE EXACT LOCATION OF ROOF EQUIPMENT W/ STRUCTURE BELOW. POSITION EQUIPMENT AS CLOSE TO SUPPORTING ELEMENTS AS POSSIBLE.
3. ENSURE THAT ROOF MOUNTED EQUIPMENT IS A MINIMUM OF 6' FROM ROOF EDGE IF PARAPET WALL IS LESS THAN 42" IN HEIGHT.
4. ENSURE THAT ALL SOURCES OF BUILDING EXHAUST ARE A MINIMUM OF 10' HORIZONTALLY FROM OR A MINIMUM OF 3' ABOVE ANY AREA OUTSIDE AIR INTAKES.

TAGGED NOTES - THIS SHEET

1. ROOF ACCESS HATCH BY G.C..
2. GAS LINE RUNS DOWN THROUGH ROOF TO BELOW. SEE SHEET M104.0 FOR CONTINUATION OF DOWNSTREAM PIPING.
3. NEW GAS METER AND 2.0 PSI REGULATOR BY UTILITY. M.C. TO COORDINATE. GAS PIPING SYSTEM DESIGNED FOR 690 MBH TOTAL LOAD AND 150 FT EQUIVALENT LENGTH. GAS PIPING TO TRAVEL UP THROUGH WALL TO ROOF.
4. EXHAUST DUCT DOWN TO BELOW FROM EXHAUST FAN ON ROOF. MAINTAIN 10' HORIZONTAL OR 3' VERTICAL CLEARANCE FROM ALL BUILDING AIR INTAKES. SEE DETAIL.
5. SUPPLY AND RETURN DUCTS DOWN TO BELOW FROM RTU ON ROOF. SEE DETAIL.
6. 10Ø DRYER VENT UP THROUGH VERTICAL SOFFIT TO MFG'S GOOSENECK TERMINATION WITH BDD (NO SCREEN). DUCT TO TERMINATE A MINIMUM OF 3' ABOVE ROOF. MAINTAIN 10' HORIZONTAL OR 3' VERTICAL CLEARANCE FROM ALL BUILDING AIR INTAKES.
7. ROOF EQUIPMENT SCREEN.
8. EXHAUST DUCT UP TO ROOF JACK FROM EXHAUST FAN BELOW. MAINTAIN 10' HORIZONTAL OR 3' VERTICAL CLEARANCE FROM ALL BUILDING AIR INTAKES
9. DUCT DOWN FROM GRAVITY VENTILATOR ON ROOF. SEE DETAIL.

GAS SYSTEM LOAD

EQUIPMENT	MBH (INPUT)
WH-4	199.0
WH-5A	199.0
RTU-14	60.0
RTU-15	60.0
RTU-19	60.0
DRYER	112.0
TOTAL:	690.0

NATURAL GAS CALCULATIONS TABLE 402.4(5)

PIPE SIZE (IN.)	MAX CAPACITY OF PIPE IN MBH		
	EQUIV. LENGTH = 150 FT		
1/2"	372 MBH		
3/4"	751 MBH		
1"	1370 MBH		

BASED UPON CHAPTER 4 OF THE 2018 NORTH CAROLINA FUEL GAS CODE, 2.0 PSI INLET PRESSURE, 1.0 PSI PRESSURE DROP.

12/2/2020 11:51 AM
RSS-1801-M104.1.DWG

i-s design
ARCHITECTURE + INTERIORS
1111 Haynes Street, Suite 103
Raleigh, North Carolina 27604
t. 919.833.5400
www.isdesignpa.com

MAPLE
ENGINEERING, PLLC
708 ST. MARYS ST
RALEIGH, NC 27605 LIC.#: P-0990
P:919-341-4247 F:919-890-3797
PLUMBING MECHANICAL ELECTRICAL

Project
THE HEALING PLACE OF NEW HANOVER COUNTY
1000 MEDICAL CENTER DRIVE
WILMINGTON, NORTH CAROLINA

Client
NEW HANOVER COUNTY, NORTH CAROLINA

All reproduction & intellectual property rights reserved © 2020

SITE PLAN

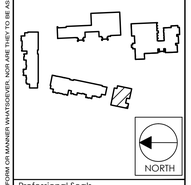

Professional Seals



12/2/20

No.	Description	Date
	CONSTRUCTION DOCUMENT SET	08/25/20
△	MCD #1	12/2/20

Sheet Title
MECHANICAL ROOF AND GAS PIPING PLAN - DETOX BUILDING

Sheet Number
M104.1

© 2020 MAPLE ENGINEERING, PLLC EXPRESSLY RESERVES ITS COMMON LAW COPYRIGHT AND OTHER PROPERTY RIGHTS IN THESE PLANS. THESE PLANS ARE NOT TO BE REPRODUCED, CHANGED OR COPIED IN ANY FORM OR MANNER WHATSOEVER, NOR ARE THEY TO BE ASSIGNED TO ANY THIRD PARTY WITHOUT FIRST OBTAINING THE EXPRESSED WRITTEN PERMISSION AND CONSENT OF MAPLE ENGINEERING, PLLC.

HOOD INFORMATION – JOB#4505267

HOOD NO	TAG	MODEL	LENGTH	MAX COOKING TEMP	TYPE	APPLIANCE DUTY	DESIGN CFM/FT	TOTAL EXH CFM	EXHAUST PLENUM RISER(S) WIDTH	LENG	HEIGHT	DIA	CFM	VEL	SP	TOTAL SUPPLY CFM	HOOD CONSTRUCTION	HOOD CONFIG END TO END	ROW
1	HD-1; Left	6024 ND-2-PSP-F	10' 8"	600 DEG	I	HEAVY	275	2933			4"	16"	2933	2101	-1.251"	2346	430 SS WHERE EXPOSED	LEFT	ALONE
2	HD-2; Right	6024 ND-2-PSP-F	12' 0"	600 DEG	I	HEAVY	250	3000			4"	18"	3000	1698	-0.951"	2400	430 SS WHERE EXPOSED	RIGHT	ALONE

HOOD INFORMATION

HOOD NO	TAG	FILTER(S) TYPE	QTY	HEIGHT	LENGTH	EFFICIENCY @ 7 MICRONS	LIGHT(S) QTY	TYPE	WIRE GUARD	UTILITY CABINET(S) LOCATION	SIZE	FIRE SYSTEM TYPE	FIRE SYSTEM SIZE	ELECTRICAL MODEL #	SWITCHES QUANTITY	FIRE SYSTEM PIPING	HOOD HANGING WEIGHT
1	HD-1; Left	CAPTRATE SOLO FILTER	8	20"	16"	85% SEE FILTER SPEC	4	L55 SERIES E26	NO	LEFT	12"x60"x24"	ANSUL R102	3.0/3.0/1.5	DCV-1111	1 LIGHT 1 FAN	YES	826 LBS
2	HD-2; Right	CAPTRATE SOLO FILTER	9	20"	16"	85% SEE FILTER SPEC	4	L55 SERIES E26	NO							YES	698 LBS

HOOD OPTIONS

HOOD NO	TAG	OPTION
1	HD-1; Left	FIELD WRAPPER 18.00" HIGH FRONT, LEFT.
		BACKSPLASH 122.00" HIGH X 303.00" LONG 430 SS VERTICAL.
		BALANCE DAMPERS.
		RISER SENSOR INSTALL 3IN DBL.
2	HD-2; Right	FIELD WRAPPER 18.00" HIGH FRONT, RIGHT.
		RIGHT SIDESPLASH 122.00" HIGH X 78.00" LONG 430 SS VERTICAL.
		RIGHT END STANDOFF (FINISHED) 1" WIDE 60" LONG INSULATED.
		BALANCE DAMPERS.
		RISER SENSOR INSTALL 3IN DBL.

PERFORATED SUPPLY PLENUM(S)

HOOD NO	TAG	POS	LENGTH	WIDTH	HEIGHT	TYPE	RISER(S) WIDTH	LENG	DIA	CFM	SP
1	HD-1; Left	Front	140"	18"	6"	MUA	12"	28"		782	0.228"
						MUA	12"	28"		782	0.228"
						MUA	12"	28"		782	0.228"
2	HD-2; Right	Front	145"	18"	6"	MUA	12"	28"		800	0.238"
						MUA	12"	28"		800	0.238"
						MUA	12"	28"		800	0.238"

PATENT NUMBERS

AC-PSP (UNITED STATES) - US PATENT 7963830 B2.
AC-PSP WALL (CANADA) - CA PATENT 2820509.
AC-PSP ISLAND (CANADA) - CA PATENT 2520330.

SPECIFICATION: CAPTRATE® GREASE-STOP® SOLO FILTER

THE CAPTRATE GREASE-STOP SOLO FILTER IS A SINGLE-STAGE FILTER FEATURING A UNIQUE S-BAFFLE DESIGN IN CONJUNCTION WITH A SLOTTED REAR BAFFLE DESIGN, TO DELIVER EXCEPTIONAL FILTRATION EFFICIENCY.

FILTER IS STAINLESS STEEL CONSTRUCTION, AND SIZED TO FIT INTO STANDARD 2-INCH DEEP HOOD CHANNEL(S).

UNITS SHALL INCLUDE STAINLESS STEEL HANDLES AND A FASTENING DEVICE TO SECURE THE TWO COMPONENTS WHEN ASSEMBLED.

GREASE EXTRACTION EFFICIENCY PERFORMANCE SHALL REMOVE AT LEAST 75% OF GREASE PARTICLES FIVE MICRONS IN SIZE, AND 85% GREASE PARTICLES SEVEN MICRONS IN SIZE AND LARGER, WITH A CORRESPONDING PRESSURE DROP NOT TO EXCEED 1.0 INCHES OF WATER GAUGE.

THE CAPTRATE GREASE-STOP SOLO WAS TESTED TO ASTM STANDARD ASTM F2519-05. MANUFACTURER APPROVED FOR USE IN SOLID FUEL APPLICATIONS AS A SPARK ARRESTER.

EFFICIENCY VS. PARTICLE DIAMETER

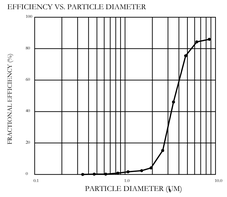

PRESSURE DROP VS. FLOW RATE

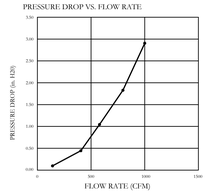

CAPTRATE FILTERS ARE BUILT IN COMPLIANCE WITH:
NFPA #96.
NSF STANDARD #2.
UL STANDARD #1046.
INT. MECH. CODE (IMC).
ULC-S649.

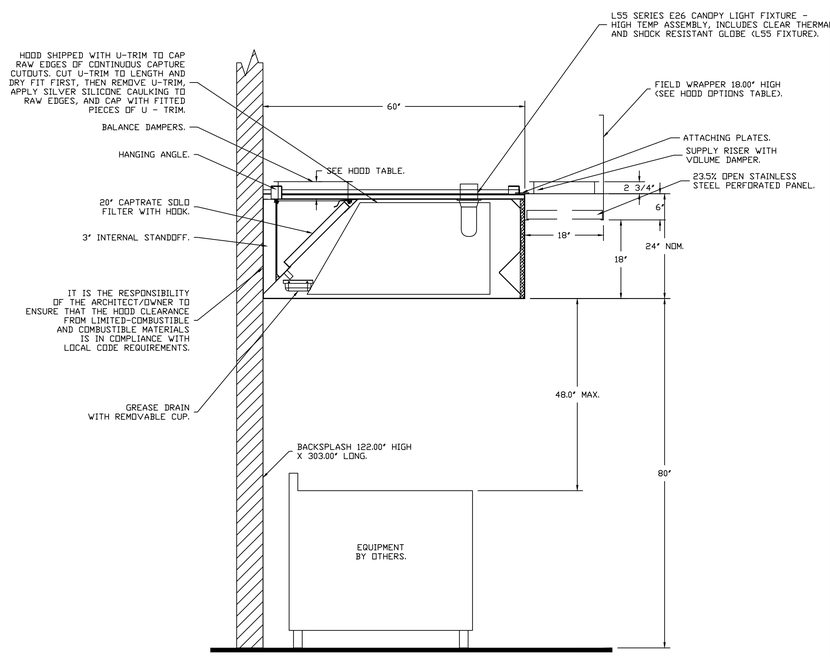

SECTION VIEW – MODEL 6024ND-2-PSP-F
HOOD – #1 (HD-1; Left)

FIRE SYSTEM INFORMATION – JOB#4505267

FIRE SYSTEM NO	TAG	TYPE	SIZE	FLOW POINTS	INSTALLATION SYSTEM	INSTALLATION LOCATION ON HOOD
1		ANSUL R102	3.0/3.0/1.5	16	FIRE CABINET LEFT	LEFT, HOOD 1

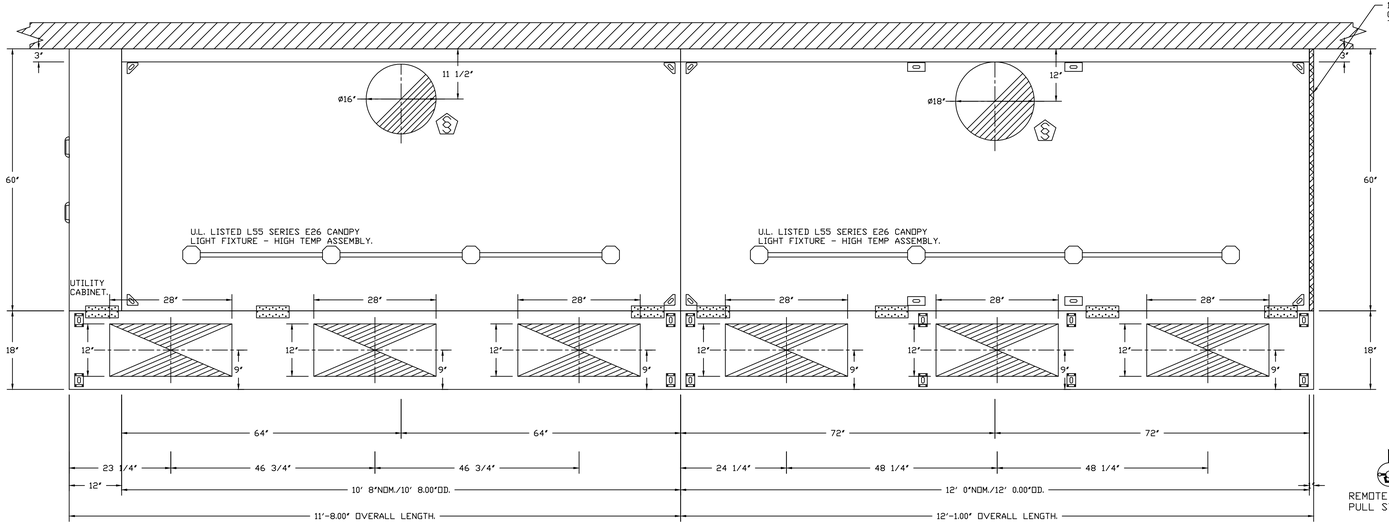

PLAN VIEW – HOOD #1 (HD-1; Left)
10' 8.00" LONG 6024ND-2-PSP-F

PLAN VIEW – HOOD #2 (HD-2; Right)
12' 0.00" LONG 6024ND-2-PSP-F
NOTE: ADDITIONAL HANGING ANGLES PROVIDED FOR HOODS 12' AND LONGER.

Continuous Capture	
Hood No.	Location
1	Right
2	Left

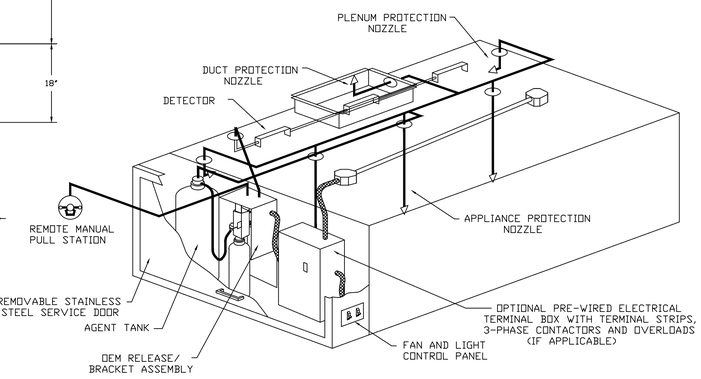

TYPICAL ANSUL R-102 SYSTEM LAYOUT

NOTE:
HOOD DRAWINGS UPDATED TO MATCH PLANS.

NOTE:
SEE ADDITIONAL HOOD DRAWINGS & MECHANICAL DRAWINGS FOR ADDITIONAL INFORMATION.

NOTE:
HOOD & FAN DESIGN IS BY OTHERS. HOOD & FAN INFORMATION SUPPLIED BY OTHERS AND PRESENTED ON THIS DRAWING HAS ONLY BEEN REVIEWED TO THE EXTENT OF IT'S ACCEPTABILITY GIVEN THE REQUIREMENTS OF THE OVERALL MECHANICAL SYSTEM.

12/2/2020 11:51 AM
ASD-1801-HOOD1.DWG

i-sdesign ARCHITECTURE + INTERIORS
1111 Haynes Street, Suite 103
Raleigh, North Carolina 27604
t. 919.833.5400
www.isdesignpa.com

MAPLE ENGINEERING, PLLC
708 ST. MARYS ST
RALEIGH, NC 27605 LIC.#: P-0990
P:919-341-4247 F:919-890-3797
PLUMBING MECHANICAL ELECTRICAL

REVISIONS

	DESCRIPTION	DATE:
△		
△		
△		
△		

CAPTIVE-AIRE
Blue Ridge
607 5th St. NW, Hickory, NC, 28601 PHONE: (800) 445-1869 FAX: (919) 227-5993 EMAIL: reg16@captiveaire.com
www.captiveaire.com

Project
THE HEALING PLACE OF NEW HANOVER COUNTY
1000 MEDICAL CENTER DRIVE
WILMINGTON, NORTH CAROLINA

Client
NEW HANOVER COUNTY, NORTH CAROLINA

All reproduction & intellectual property rights reserved © 2020

SITE PLAN

Professional Seals
NORTH CAROLINA PROFESSIONAL SEAL 049762 ENGINEER KEVIN M SWEENEY
12/2/20

No.	Description	Date
	CONSTRUCTION DOCUMENT SET	08/25/20
△	MCD #1	12/2/20

Healing Places v3090220
WILMINGTON, NC, 28402

DATE: 9/4/2020
DWG.#: 4505267
DRAWN BY: MHB - 16
SCALE:
MASTER DRAWING
SHEET NO. 1

Sheet Title
HOOD DRAWINGS

Sheet Number
HD001

© 2020 MAPLE ENGINEERING, PLLC EXPRESSLY RESERVES ITS COMMON LAW COPYRIGHT AND OTHER PROPERTY RIGHTS IN THESE PLANS. THESE PLANS ARE NOT TO BE REPRODUCED, CHANGED OR COPIED IN ANY FORM OR MANNER WHATSOEVER, NOR ARE THEY TO BE ASSIGNED TO ANY THIRD PARTY WITHOUT FIRST OBTAINING THE EXPRESSED WRITTEN PERMISSION AND CONSENT OF MAPLE ENGINEERING, PLLC.

EXHAUST FAN INFORMATION – JOB#4505267

FAN UNIT NO	TAG	QTY	FAN UNIT MODEL #	CFM	ESP	RPM	MOTOR ENCL	HP	BHP	ø	VOLT	FLA	DISCHARGE VELOCITY	WEIGHT (LBS)	SONES
1		1	DU300HFA	5933	1.400	701	ODP,PREMIUM	5.000	2.4700	3	208	15.8	924 FPM	480	14.9

MUA FAN INFORMATION – JOB#4505267

FAN UNIT NO	TAG	QTY	FAN UNIT MODEL #	BLOWER	HOUSING	MIN CFM	DESIGN CFM	ESP	RPM	MOTOR ENCL	HP	BHP	ø	VOLT	FLA	MCA	MOCP	WEIGHT (LBS)	SONES
2		1	A2-D.250-20D	20MF-2-MOD	A2-D.250	2500	4746	0.500	1730	ODP,PREMIUM	5.000	3.0200	3	208	15.0	18.8A	30A	710	18.5

GAS FIRED MAKE-UP AIR UNIT(S)

FAN UNIT NO	TAG	INPUT BTUs	OUTPUT BTUs	TEMP RISE	REQUIRED INPUT GAS PRESSURE	GAS TYPE	BURNER EFFICIENCY(%)
2		273915	252002	50°F	7 IN. W.C. - 14 IN. W.C.	NATURAL	92

FAN OPTIONS

FAN UNIT NO	TAG	QTY	DESCRIPTION
1		1	GREASE BOX.
2		1	AC INTERLOCK RELAY - 24VAC COIL.
		1	MOTORIZED BACKDRAFT DAMPER FOR A2-D HOUSING.
		1	LOW FIRE START.
		1	INLET PRESSURE GAUGE, 0-35".
		1	MANIFOLD PRESSURE GAUGE, -5 TO 15" WC.
		1	SEPARATE 120V WIRING PACKAGE (REQUIRED AND USED ONLY FOR DCV OR PREWIRE WITH VFD) - THREE PHASE ONLY.

CURB ASSEMBLIES

NO	ON FAN	WEIGHT	ITEM	SIZE
1	# 1	72 LBS	CURB	38.500"W X 38.500"L X 24.000"H RIGHT VENTED HINGED.
2	# 2	76 LBS	CURB	31.000"W X 79.000"L X 14.000"H RIGHT INSULATED.

FAN #1 DU300HFA - EXHAUST FAN

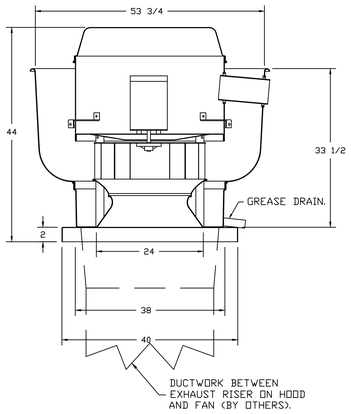

FEATURES:

- DIRECT DRIVE CONSTRUCTION (NO BELTS/PULLEYS).
- ROOF MOUNTED FANS.
- RESTAURANT MODEL.
- UL705 AND UL762 AND ULC-S645
- VARIABLE SPEED CONTROL.
- INTERNAL WIRING.
- WEATHERPROOF DISCONNECT.
- THERMAL OVERLOAD PROTECTION (SINGLE PHASE).
- HIGH HEAT OPERATION 300°F (149°C).
- GREASE CLASSIFICATION TESTING

NORMAL TEMPERATURE TEST
EXHAUST FAN MUST OPERATE CONTINUOUSLY WHILE EXHAUSTING AIR AT 300°F (149°C) UNTIL ALL FAN PARTS HAVE REACHED THERMAL EQUILIBRIUM, AND WITHOUT ANY DETERIORATING EFFECTS TO THE FAN WHICH WOULD CAUSE UNSAFE OPERATION.

ABNORMAL FLARE-UP TEST
EXHAUST FAN MUST OPERATE CONTINUOUSLY WHILE EXHAUSTING BURNING GREASE VAPORS AT 600°F (316°C) FOR A PERIOD OF 15 MINUTES WITHOUT THE FAN BECOMING DAMAGED TO ANY EXTENT THAT COULD CAUSE AN UNSAFE CONDITION.

OPTIONS

GREASE BOX.

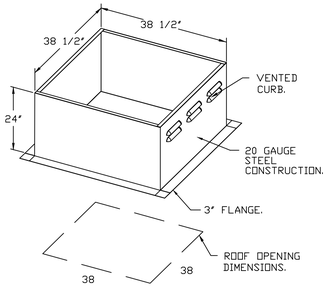

PITCHED CURBS ARE AVAILABLE FOR PITCHED ROOFS.

SPECIFY PITCH:
EXAMPLE: 7/12 PITCH = 30° SLOPE.

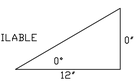

NOTE:
PROVIDE MAKE UP AIR FAN WITH AIR INTAKE EXTENSION TO ENSURE 10' HORIZONTAL SEPARATION BETWEEN GREASE EXHAUST TERMINATION AND MAKE-UP AIR INLET.

SUPPLY SIDE HEATER INFORMATION:

WINTER TEMPERATURE = 28°F. TEMP. RISE = 50°F.
BTUs CALCULATED OFF ACTUAL AIR DENSITY.
OUTPUT BTUs AT ALTITUDE OF 0.0 FT. = 252103.
INPUT BTUs AT ALTITUDE OF 0.0 FT. = 274025.
OUTPUT BTUs AT ALTITUDE OF 11 FT. = 252002.
INPUT BTUs AT ALTITUDE OF 11 FT. = 273916.

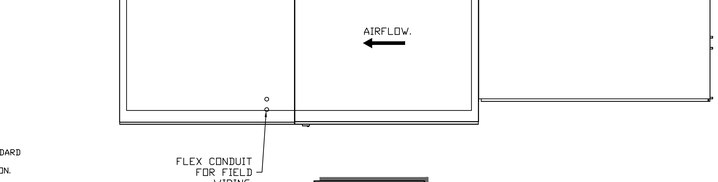

NOTE:
MAKE-UP AIR UNIT TO UTILIZE DOWNFLOW CONFIGURATION, NOT HORIZONTAL FLOW CONFIGURATION. EXACT SPECIFICATIONS BY HOOD SUPPLIER.

FAN #2 A2-D.250-20D - HEATER
1. DIRECT GAS FIRED HEATED MAKE UP AIR UNIT WITH 20" DIRECT DRIVE FAN.
2. INTAKE HOOD WITH EZ FILTERS.
3. SIDE DISCHARGE - AIR FLOW RIGHT -> LEFT.
4. COOLING INTERLOCK RELAY. 24VAC COIL. 120V CONTACTS. LOCKS OUT BURNER CIRCUIT WHEN AC IS ENERGIZED.
5. MOTORIZED BACK DRAFT DAMPER 22.75" X 24" FOR SIZE 2 STANDARD & MODULAR HEATER UNITS W/EXTENDED SHAFT, STANDARD GALVANIZED CONSTRUCTION, 3/4" REAR FLANGE, LOW LEAKAGE, LF120S ACTUATOR INCLUDED.
6. LOW FIRE START. ALLOWS THE BURNER CIRCUIT TO ENERGIZE WHEN THE MODULATION CONTROL IS IN A LOW FIRE POSITION.
7. GAS PRESSURE GAUGE, 0-35", 2.5" DIAMETER, 1/4" THREAD SIZE.
8. GAS PRESSURE GAUGE, -5 TO +15 INCHES WC, 2.5" DIAMETER, 1/4" THREAD SIZE.
9. SEPARATE 120VAC WIRING PACKAGE FOR MAKE-UP AIR UNITS. OPTION MUST BE SELECTED WHEN MOUNTING VFD IN PREWIRE PANEL OR WITH DCV PACKAGE. PROVIDES SEPARATE 120VAC INPUT TO SUPPLY FAN. THIS 120V SIGNAL MUST BE RUN BY ELECTRICIAN FROM DCV TO MUA SWITCH.
10. HINGED DOUBLE WALL INSULATED DOOR ASSEMBLY (BURNER/BLOWER SECTION).

*NOTE: SUPPLY DUCT MUST BE INSTALLED TO MEET SMACNA STANDARDS. A MINIMUM STRAIGHT DUCT LENGTH MUST BE MAINTAINED DOWNSTREAM OF UNIT DISCHARGE AS OUTLINED IN AMCA PUBLICATION 201. WHEN USING RECTANGULAR DUCTWORK, ELBOWS MUST BE RADIUS THROAT, RADIUS BACK WITH TURNING VANES. FLEXIBLE DUCTWORK AND SQUARE THROAT/SQUARE BACK ELBOWS SHOULD NOT BE USED. ANY TRANSITION AND/OR TURNS IN THE DUCTWORK WILL CAUSE SYSTEM EFFECT. SYSTEM EFFECT WILL DRASTICALLY INCREASE STATIC PRESSURE AND REDUCE AIRFLOW. DO NOT RELY ON UNIT TO SUPPORT DUCT IN ANY WAY. FAILURE TO PROPERLY SIZE DUCTWORK MAY CAUSE SYSTEM EFFECTS AND REDUCE PERFORMANCE OF THE EQUIPMENT.
SUGGESTED STRAIGHT DUCT SIZE IS 26" x 26".

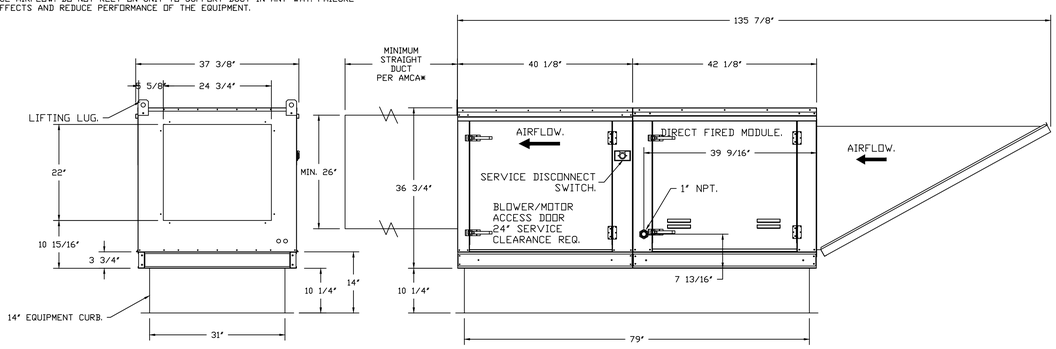

NOTE:
HOOD DRAWINGS UPDATED TO MATCH PLANS.

NOTE:
SEE ADDITIONAL HOOD DRAWINGS & MECHANICAL DRAWINGS FOR ADDITIONAL INFORMATION.

NOTE:
HOOD & FAN DESIGN IS BY OTHERS. HOOD & FAN INFORMATION SUPPLIED BY OTHERS AND PRESENTED ON THIS DRAWING HAS ONLY BEEN REVIEWED TO THE EXTENT OF IT'S ACCEPTABILITY GIVEN THE REQUIREMENTS OF THE OVERALL MECHANICAL SYSTEM.

12/2/2020 11:51 AM
ASD-1801-HOOD2.DWG

is-design
ARCHITECTURE + INTERIORS
1111 Haynes Street, Suite 103
Raleigh, North Carolina 27604
t. 919.833.5400
www.isdesignpa.com

MAPLE ENGINEERING, PLLC
708 ST. MARYS ST
RALEIGH, NC 27605 LIC.#: P-0990
P:919-341-4247 F:919-890-3797
PLUMBING MECHANICAL ELECTRICAL

REVISIONS

	DESCRIPTION	DATE:
△		
△		
△		
△		

CAPTIVEAIRE
Blue Ridge
607 5th St. NW, Hickory, NC, 28601 PHONE: (800) 445-1869 FAX: (919) 227-5993 EMAIL: reg16@captiveaire.com
www.captiveaire.com

Project
THE HEALING PLACE OF NEW HANOVER COUNTY
1000 MEDICAL CENTER DRIVE
WILMINGTON, NORTH CAROLINA

Client
NEW HANOVER COUNTY, NORTH CAROLINA

All reproduction & intellectual property rights reserved © 2020

SITE PLAN

Professional Seals
NORTH CAROLINA PROFESSIONAL ENGINEER SEAL 049762 ENGINEER KEVIN SWEENEY
12/2/20

No.	Description	Date
	CONSTRUCTION DOCUMENT SET	08/25/20
△	MCD #1	12/2/20

Healing Places v3090220
WILMINGTON, NC, 28402

DATE: 9/4/2020

DWG.#: 4505267

DRAWN BY: MHB - 16

SCALE:

MASTER DRAWING

SHEET NO. 2

Sheet Title
HOOD DRAWINGS

Sheet Number
HD002

© 2020 MAPLE ENGINEERING, PLLC EXPRESSLY RESERVES ITS COMMON LAW COPYRIGHT AND OTHER PROPERTY RIGHTS IN THESE PLANS. THESE PLANS ARE NOT TO BE REPRODUCED, CHANGED OR COPIED IN ANY FORM OR MANNER WHATSOEVER. NOR ARE THEY TO BE ASSIGNED TO ANY THIRD PARTY WITHOUT FIRST OBTAINING THE EXPRESSED WRITTEN PERMISSION AND CONSENT OF MAPLE ENGINEERING, PLLC.

ELECTRICAL PACKAGE – JOB#4505267

NO	TAG	PACKAGE #	LOCATION	SWITCHES		OPTION	FANS CONTROLLED				
				LOCATION	QUANTITY		TYPE	Φ	HP	VOLT	FLA
1		DCV-1111	UTILITY CABINET LEFT	03 – UTILITY CABINET LEFT	1 LIGHT	SMART CONTROLS DCV	EXHAUST	3	5.000	208	15.8
				HOOD # 1	1 FAN		SUPPLY	3	5.000	208	15.0

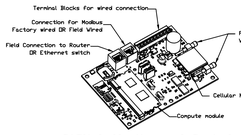

CASlink Monitor and Control

- *Hood control panel to support communications to cloud-based Building Management System.*
- *Hood Control Panel to allow cloud-based Building Management System to monitor real time parameters outlined as MONITOR in the points list.*
- *Hood Control Panel to allow cloud-based Building Management System to control parameters outlined as CONTROL in the points list.*
- *Hood Control Panel to allow cloud-based Building Management System to implement SYSTEM ECONOMIZER control strategies for fully integrated Building Management.*

MONITORING AND CONTROL POINTS LIST

DCV Packages	Function
Room Temperature	MONITOR
Duct Temperature(s)	MONITOR
MUA Discharge Temperature	MONITOR
Kitchen RTU Discharge Temperature	MONITOR
Fan Speed	MONITOR
Fan Amperage	MONITOR
Fan Power	MONITOR
VFD Faults	MONITOR
Controller Faults	MONITOR
Fan Faults	MONITOR
Fan Status	MONITOR
PCU Faults	MONITOR
PCU Filter Clog Percentages	MONITOR
Fire Condition	MONITOR
CORE Fire System	MONITOR
Building Pressures	MONITOR
Prep Time Button	MONITOR & CONTROL
Fans Button	MONITOR & CONTROL
Lights Button	MONITOR & CONTROL
Wash Button	MONITOR & CONTROL

SC Packages	Function
Room Temperature(s)	MONITOR
Duct Temperature(s)	MONITOR
MUA Discharge Temperature	MONITOR
Kitchen RTU Discharge Temperature	MONITOR
Controller Faults	MONITOR
Fan Faults	MONITOR
Fan Status	MONITOR
PCU Faults	MONITOR
PCU Filter Clog Percentages	MONITOR
Fire Condition	MONITOR
CORE Fire System	MONITOR
Building Pressures	MONITOR
Fans Button(s)	MONITOR & CONTROL
Lights Button(s)	MONITOR & CONTROL
Wash Button	MONITOR & CONTROL

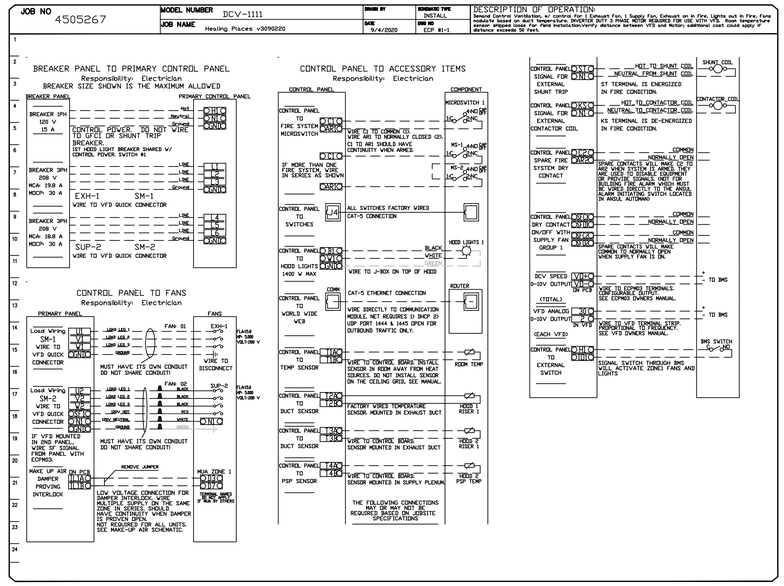

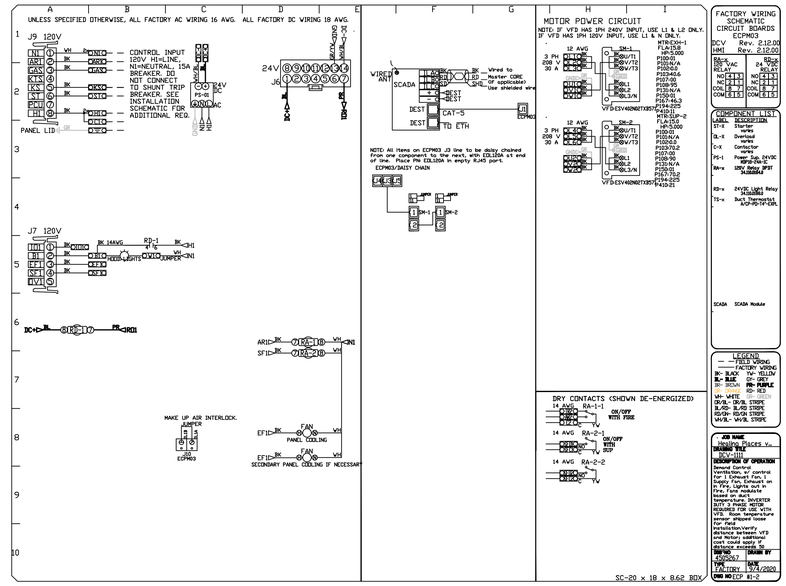

DEMAND CONTROL VENTILATION HOOD CONTROL PANEL SPECIFICATIONS:

- CONTROLS SHALL BE LISTED BY ETL (UL 508A) AND SHALL COMPLY WITH DEMAND VENTILATION SYSTEM TURNDOWN REQUIREMENTS OUTLINED IN IECC 403.2.8 (2015).
- THE CONTROL ENCLOSURE SHALL BE NEMA 1 RATED AND LISTED FOR INSTALLATION INSIDE OF THE EXHAUST HOOD UTILITY CABINET. THE CONTROL ENCLOSURE MAY BE CONSTRUCTED OF STAINLESS STEEL OR PAINTED STEEL.
- TEMPERATURE PROBE(S) LOCATED IN THE EXHAUST DUCT RISER(S) SHALL BE CONSTRUCTED OF STAINLESS STEEL.
- A DIGITAL CONTROLLER SHALL BE PROVIDED TO ACTIVATE THE HOOD EXHAUST FANS DYNAMICALLY BASED ON A FIXED DIFFERENTIAL BETWEEN THE AMBIENT AND DUCT TEMPERATURES SENSORS. THIS FUNCTION SHALL MEET THE REQUIREMENTS OF IMC 507.1.1.
- A DIGITAL CONTROLLER SHALL PROVIDE ADJUSTABLE HYSTERESIS SETTINGS TO PREVENT CYCLING OF THE FANS AFTER THE COOKING APPLIANCES HAVE BEEN TURNED OFF AND/OR THE HEAT IN THE EXHAUST SYSTEM IS REDUCED.
- A DIGITAL CONTROLLER SHALL PROVIDE AN ADJUSTABLE MINIMUM FAN RUN-TIME SETTING TO PREVENT FAN CYCLING.
- VARIABLE FREQUENCY DRIVES (VFDS) SHALL BE PROVIDED FOR FANS AS REQUIRED. THE DIGITAL CONTROLLER SHALL MODULATE THE VFDS BETWEEN A MINIMUM SETPOINT AND A MAXIMUM SETPOINT ON DEMAND. THE DUCT TEMPERATURE SENSOR INPUT(S) TO THE DIGITAL CONTROLLER SHALL BE USED TO CALCULATE THE SPEED REFERENCE SIGNAL.
- THE VFD SPEED RANGE OF OPERATION SHALL BE FROM 0% TO 100% FOR THE SYSTEM, WITH THE ACTUAL MINIMUM SPEED SET AS REQUIRED TO MEET MINIMUM VENTILATION REQUIREMENTS.
- AN INTERNAL ALGORITHM TO THE DIGITAL CONTROLLER SHALL MODULATE SUPPLY FAN VFD SPEED PROPORTIONAL TO ALL EXHAUST FANS THAT ARE LOCATED IN THE SAME FAN GROUP AS THE SUPPLY FAN.
- THE SYSTEM SHALL OPERATE IN PREP MODE DURING LIGHT COOKING LOAD OR COOL DOWN MODE WHEN SUFFICIENT HEAT REMAINS UNDERNEATH THE HOOD SYSTEM AFTER COOKING OPERATIONS HAVE COMPLETED. OPERATION DURING EITHER OF THESE PERIODS WILL DISABLE THE SUPPLY FANS AND PROVIDE AN EXHAUST FAN SPEED THAT IS EQUAL TO THE MINIMUM VENTILATION REQUIREMENT.
- A DIGITAL CONTROLLER SHALL DISABLE THE SUPPLY FAN(S), ACTIVATE THE EXHAUST FAN(S), ACTIVATE THE APPLIANCE SHUNT TRIP, AND DISABLE AN ELECTRIC GAS VALVE AUTOMATICALLY WHEN FIRE CONDITION IS DETECTED ON A COVERED HOOD.
- A DIGITAL CONTROLLER SHALL ALLOW FOR EXTERNAL BMS FAN CONTROL VIA DRY CONTACT (EXTERNAL CONTROL SHALL NOT OVERRIDE FAN OPERATION LOGIC AS REQUIRED BY CODE).
- AN LCD INTERFACE SHALL BE PROVIDED WITH THE FOLLOWING FEATURES:
  - A. ON/OFF PUSH BUTTON FAN & LIGHT SWITCH ACTIVATION.
  - B. INTEGRATED GAS VALVE RESET FOR ELECTRONIC GAS VALVES (NO RESET RELAY REQUIRED).
  - C. VFD FAULT DISPLAY WITH AUDIBLE & VISUAL ALARM NOTIFICATION.
  - D. DUCT TEMPERATURE SENSOR FAILURE DETECTION WITH AUDIBLE & VISUAL ALARM NOTIFICATION.
  - E. MIS-WIRED DUCT TEMPERATURE SENSOR DETECTION WITH AUDIBLE & VISUAL ALARM NOTIFICATION.
  - F. A SINGLE LOW VOLTAGE CAT-5 RJ45 WIRING CONNECTION.
  - G. AN ENERGY SAVINGS INDICATOR THAT UTILIZES MEASURED KWH FROM THE VFDS.

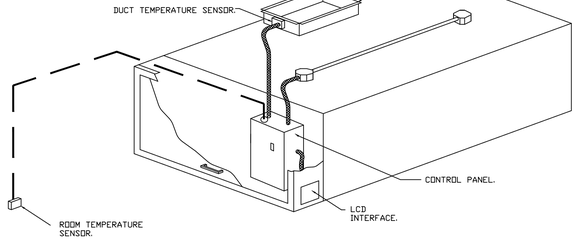

TYPICAL HOOD CONTROL PANEL INSTALLATION

SEQUENCE OF OPERATIONS:

THE HOOD CONTROL PANEL IS CAPABLE OF OPERATING IN ONE OR MORE OF THE FOLLOWING STATES AT ANY GIVEN TIME:

- AUTOMATIC: THE SYSTEM OPERATES BASED ON THE DIFFERENTIAL BETWEEN ROOM TEMPERATURE AND THE TEMPERATURE AT THE HOOD CAVITY OR EXHAUST DUCT COLLAR. FANS ACTIVATE AT A CONFIGURABLE TEMPERATURE DIFFERENTIAL THRESHOLD. DEPENDING ON THE JOB CONFIGURATION EACH FAN ZONE CAN BE CONFIGURED AS STATIC OR DYNAMIC. THESE TERMS REFER TO WHETHER A VARIABLE MOTOR (SUCH AS EC MOTORS OR VFD DRIVEN MOTORS) MODULATE WITH TEMPERATURE. IF THE PANEL IS EQUIPPED WITH VARIABLE SPEED FANS AND THE ZONE IS DEFINED AS "DYNAMIC", THESE WILL MODULATE WITHIN A USER-DEFINED RANGE BASED ON THE TEMPERATURE DIFFERENTIAL. PANELS EQUIPPED WITH VARIABLE SPEED FANS AND A FAN ZONE DEFINED AS "STATIC", FANS WILL RUN AT A SET SPEED CALCULATED FOR THE DRIVE. DEMAND CONTROL VENTILATION SYSTEMS ARE CAPABLE OF MODULATING EXHAUST AND MAKE UP AIR FAN SPEEDS PER THE REQUIREMENTS OUTLINED IN IECC 403.2.8.
- MANUAL: THE SYSTEM OPERATES BASED ON HUMAN INPUT FROM AN HMI.
- SCHEDULE: A WEEKLY SCHEDULE CAN BE SET TO RUN FANS FOR A SPECIFIED PERIOD THROUGHOUT THE DAY. THERE ARE THREE OCCUPIED TIMES PER DAY TO ALLOW FOR THE USER TO SET UP A TIME THAT IS SUITABLE TO THEIR NEEDS. ANY TIME THAT IS WITHIN THE DEFINED OCCUPIED TIME, THE SYSTEM WILL RUN AT MODULATION MODE AND FOLLOW THE FAN PROCEDURE ALGORITHM BASED ON TEMPERATURE DURING THIS TIME. DURING UNOCCUPIED TIME, THE SYSTEM WILL HAVE AN EXTRA OFFSET TO PREVENT UNINTENDED ACTIVATION OF THE SYSTEM DURING A TIME WHERE THE SYSTEM IS NOT BEING OCCUPIED.
- OTHER: THE SYSTEM OPERATES BASED ON THE INPUT FROM AN EXTERNAL SOURCE (DDC, BMS OR HARD-WIRED INTERLOCK).

NOTE: HOOD DRAWINGS UPDATED TO MATCH PLANS.

NOTE: SEE ADDITIONAL HOOD DRAWINGS & MECHANICAL DRAWINGS FOR ADDITIONAL INFORMATION.

NOTE: HOOD & FAN DESIGN IS BY OTHERS. HOOD & FAN INFORMATION SUPPLIED BY OTHERS AND PRESENTED ON THIS DRAWING HAS ONLY BEEN REVIEWED TO THE EXTENT OF IT'S ACCEPTABILITY GIVEN THE REQUIREMENTS OF THE OVERALL MECHANICAL SYSTEM.

12/2/2020 11:51 AM
ISD-1801-HOOD3.DWG

i-s design
ARCHITECTS + INTERIORS
1111 Haynes Street, Suite 103
Raleigh, North Carolina 27604
t. 919.833.5400
www.isdesignpa.com

MAPLE ENGINEERING, PLLC
708 ST. MARYS ST
RALEIGH, NC 27605 LIC.#: P-0990
P:919-341-4247 F:919-890-3797
PLUMBING MECHANICAL ELECTRICAL

REVISIONS

	DESCRIPTION	DATE:
△		
△		
△		
△		

CAPTIVE-AIRE
Blue Ridge
607 5th St NW, Hickory, NC, 28601 PHONE: (800) 445-1869 FAX: (919) 227-5993 EMAIL: reg1@captiveaire.com
www.captiveaire.com

Project
THE HEALING PLACE OF NEW HANOVER COUNTY
1000 MEDICAL CENTER DRIVE
WILMINGTON, NORTH CAROLINA

Client
NEW HANOVER COUNTY, NORTH CAROLINA

Healing Places v3090220
WILMINGTON, NC, 28402

DATE: 9/4/2020

DWG.#: 4505267

DRAWN BY: MHB – 16

SCALE: [redacted]

MASTER DRAWING

SHEET NO. 3

Professional Seals
NORTH CAROLINA PROFESSIONAL ENGINEER SEAL 049762 ENGINEER LEANN SWEENEY
12/2/20

No.	Description	Date
	CONSTRUCTION DOCUMENT SET	08/25/20
△	MCD #1	12/2/20

Sheet Title
HOOD DRAWINGS

Sheet Number
HD003

All reproduction & intellectual property rights reserved © 2020
© 2020 MAPLE ENGINEERING, PLLC EXPRESSLY RESERVES ITS COMMON LAW COPYRIGHT AND OTHER PROPERTY RIGHTS IN THESE PLANS. THESE PLANS ARE NOT TO BE REPRODUCED, CHANGED OR COPIED IN ANY FORM OR MANNER WHATSOEVER, NOR ARE THEY TO BE ASSIGNED TO ANY THIRD PARTY WITHOUT FIRST OBTAINING THE EXPRESSED WRITTEN PERMISSION AND CONSENT OF MAPLE ENGINEERING, PLLC.

GENERAL NOTES - THIS SHEET

1. ENSURE THAT ALL EXIT AND EMERGENCY LIGHTS ARE CONNECTED TO LOCAL NORMALLY ON LIGHTING CIRCUIT AND ARE WIRED UPSTREAM OF ALL SWITCHES, CONTACTORS, AND SIMILAR.
2. ALL PROGRAM BED AREA WALLS ARE PARTIAL HEIGHT. SEE ARCHITECTURE PLANS.

TAGGED NOTES - THIS SHEET

1. POWER CIRCUIT FOR AREA LIGHT FIXTURE TO BE WIRED VIA AREA MOTION SENSOR. MOTION SENSOR TO BE UPSTREAM OF AREA SWITCHES. SEE DETAIL.
2. FIXTURE TO BE WIRED AS A NIGHT LIGHT. NIGHT LIGHT CIRCUIT TO BE WIRED VIA CENTRAL EMERGENCY INVERTER WITH BATTERY BACK-UP. SEE PANEL SCHEDULE.
3. FIXTURE TO INCLUDE INTEGRAL EMERGENCY BATTERY BACK-UP.
4. FIXTURE TO BE CONTROLLED VIA PHOTOCELL. LIGHTING CIRCUIT TO BE WIRED VIA EMERGENCY LIGHTING INVERTER WITH BATTERY BACKUP. SEE PANEL SCHEDULE AND DETAIL.
5. NOT USED.
6. PROVIDE DAYLIGHTING SENSOR WITH AUTOMATIC DIMMING CONTROL. SENSOR TO CONTROL LIGHTS NEAR WINDOWS.
7. PROPOSED SWITCH BANK LOCATION (1 OF 2). E.C. TO VERIFY W/ OWNER.
8. LIGHTING CIRCUIT TO BE CONTROLLED VIA PHOTOCELL. SEE PANEL SCHEDULE.
9. HOOD PROVIDED WITH INTEGRAL LIGHTING.
10. COORDINATE FIXTURE 'I' LOCATION AND INSTALLATION WITH OWNER AND FIXTURE SUPPLIER.
11. FIXTURE TO BE WIRED AS A NIGHT LIGHT.
12. PROPOSED SWITCH BANK LOCATION (2 OF 2). E.C. TO VERIFY W/ OWNER.
13. LIGHT TO BE MOUNTED ABOVE "EGG CRATE" LOUVERS IN BATHROOMS.
14. LIGHTING CIRCUIT TO BE CONTROLLED VIA TIME CLOCK. SEE PANEL SCHEDULE.
15. SWITCHES TO BE KEY LOCK TYPE SWITCH.
16. MOTION SENSOR TO BE SET TO 20 MINUTE TIMER.
17. LIGHT TO BE RECESSED LINEAR FIXTURE. CORD. WITH ARCH./G.C., TYPICAL OF ALL "Q" LIGHTS.
18. POWER CIRCUIT FOR AREA LIGHT FIXTURES TO BE WIRED VIA LOW VOLTAGE AREA MOTION SENSOR. WIRE VIA DOUBLE POLE RELAY. MOTION SENSOR TO BE UPSTREAM OF AREA SWITCHES. AREA MOTION SENSOR TO TURN ON LIGHTS AND AREA EXHAUST FAN. SEE DETAIL SHEET E002.
19. FIXTURE "CL" IS COVE LIGHT. CORD. INSTALL WITH ARCH./G.C., TYPICAL OF ALL "CL" FIXTURES.
20. PROPOSED SWITCH BANK LOCATION IS IN RATED WALL. BOXES FOR AREA DEVICES TO BE NO LARGER THAN 16 SQIN (TWO-GANG BOX). ENSURE THERE ARE NO MORE THAN 100 SQIN OF BOXES IN ANY 100 SQFT AREA.
21. TO PROGRAM BEDS ON OPPOSITE SIDE OF ROOM. ALL PROGRAM BEDS ON A SINGLE SWITCH.
22. NOT USED.
23. NIGHT LIGHT FIXTURE TO BE WIRED VIA TIME CLOCK TO TURN ON NIGHT LIGHTS FROM SUNSET TO SUNRISE. COORDINATE EXACT SCHEDULE WITH BUILDING OWNER. LIGHTS TO BE OFF DURING THE DAYTIME.
24. PROGRAMMABLE TIME SWITCH TO BE WIRED TO LIGHTING CONTACTOR. SEE DETAIL. SWITCH TO BE EQUAL TO LEVITON VPT24-1PZ, 7-DAY PROGRAMMABLE W/ HOLIDAY SCHEDULING & DAYLIGHT SAVINGS TIME ADJUSTMENT. SWITCH TO INCLUDE TIME OVERRIDE FEATURE (2-HOUR MAXIMUM) AND BATTERY BACK-UP.

FIRE RATING LEGEND

- 1-HR WALL
- 1-HR WALL/ SMOKE WALL
- SMOKE PARTITION

NOTE:
"W" FIXTURES ARE TO BE RECESSED MOUNTED IN PARTIAL HEIGHT WALLS. COORDINATE LOCATION AND ROUTING WITH OWNER AND G.C..

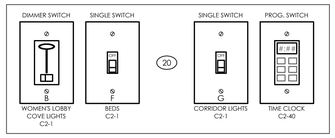

SWITCH BANK NOTES:

1. COORDINATE EXACT SWITCH TYPE W/ OWNER AND FIXTURES & BALLAST(S) BEING CONTROLLED.
2. LABEL SWITCHES W/ DESIGNATION SHOWN (I.E. "A", "AN", "W", ETC) & CIRCUIT #.
3. PROVIDE PLACARD AT EACH SWITCH INDICATING AREA CONTROLLED.
4. DIMMER SWITCH TO INCLUDE ON-OFF SWITCH AT BOTTOM TO ALLOW FOR ONE-TIME ADJUSTMENT OF LIGHT LEVELS.
5. HIGHEST POSITION OF HIGHEST SWITCH TO BE NO GREATER THAN 48" AFF (ANSI A117.1)
6. PROGRAMMABLE TIME SWITCH TO BE WIRED TO LIGHTING CONTACTOR. SEE DETAIL. SWITCH TO BE EQUAL TO LEVITON VPT24-1PZ, 7-DAY PROGRAMMABLE W/ HOLIDAY SCHEDULING & DAYLIGHT SAVINGS TIME ADJUSTMENT. SWITCH TO INCLUDE TIME OVERRIDE FEATURE (2-HOUR MAXIMUM) AND BATTERY BACK-UP.

3 SWITCH BANK DETAIL (2 OF 2)
NO SCALE

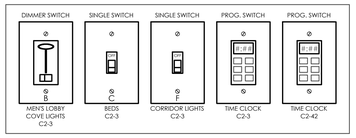

SWITCH BANK NOTES:

1. COORDINATE EXACT SWITCH TYPE W/ OWNER AND FIXTURES & BALLAST(S) BEING CONTROLLED.
2. LABEL SWITCHES W/ DESIGNATION SHOWN (I.E. "A", "AN", "W", ETC) & CIRCUIT #.
3. PROVIDE PLACARD AT EACH SWITCH INDICATING AREA CONTROLLED.
4. DIMMER SWITCH TO INCLUDE ON-OFF SWITCH AT BOTTOM TO ALLOW FOR ONE-TIME ADJUSTMENT OF LIGHT LEVELS.
5. HIGHEST POSITION OF HIGHEST SWITCH TO BE NO GREATER THAN 48" AFF (ANSI A117.1)
6. PROGRAMMABLE TIME SWITCH TO BE WIRED TO LIGHTING CONTACTOR. SEE DETAIL. SWITCH TO BE EQUAL TO LEVITON VPT24-1PZ, 7-DAY PROGRAMMABLE W/ HOLIDAY SCHEDULING & DAYLIGHT SAVINGS TIME ADJUSTMENT. SWITCH TO INCLUDE TIME OVERRIDE FEATURE (2-HOUR MAXIMUM) AND BATTERY BACK-UP.

2 SWITCH BANK DETAIL (1 OF 2)
NO SCALE

NOTE:
SEE SITE PLAN. ADDITIONAL LIGHTING ALONG ROADS BY UTILITY.

NOTE:
SEE SITE PLAN FOR ADDITIONAL EXTERIOR LIGHTS.

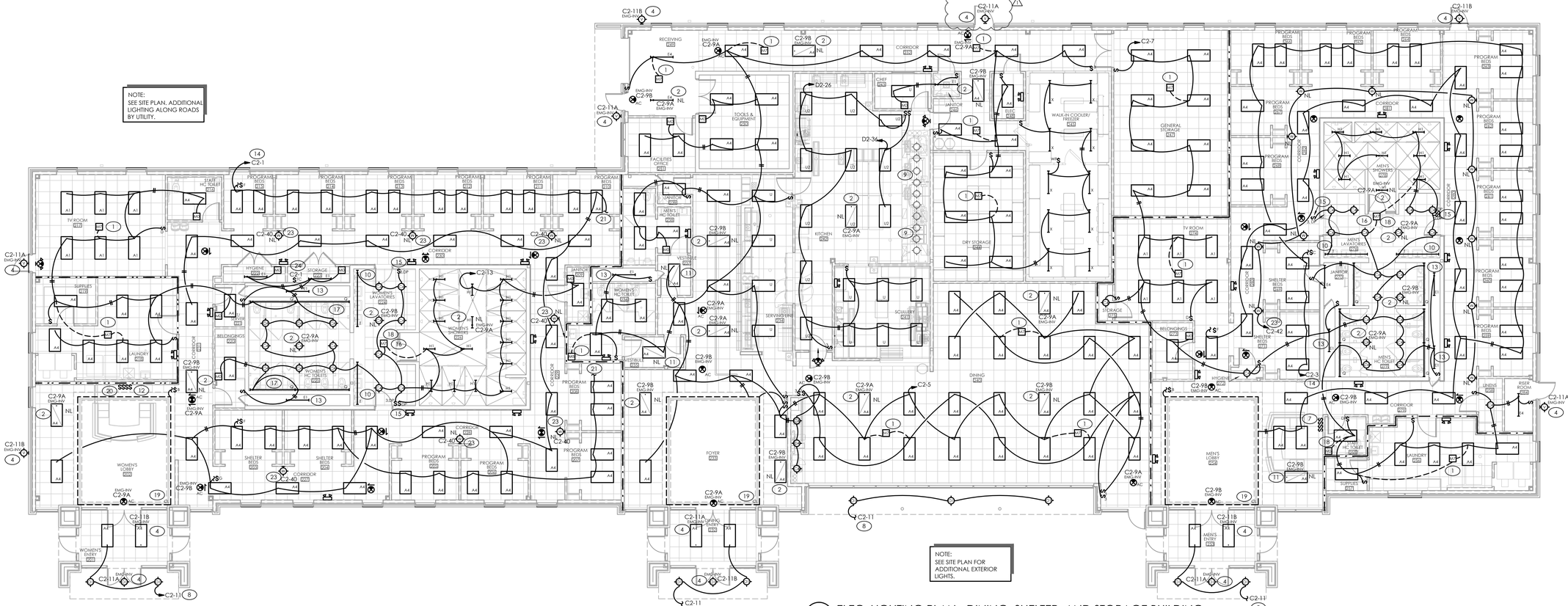

1 ELEC. LIGHTING PLAN - DINING, SHELTER, AND STORAGE BUILDING
SCALE: 1/8" = 1'-0"

i-sdesign
ARCHITECTURE + INTERIORS
1111 Haynes Street, Suite 103
Raleigh, North Carolina 27604
t. 919.833.5400
www.isdesignpa.com

MAPLE
ENGINEERING, PLLC
708 ST. MARYS ST
RALEIGH, NC 27605 LIC.#: P-0990
P:919-341-4247 F:919-890-3797
PLUMBING MECHANICAL ELECTRICAL

Project
THE HEALING PLACE OF NEW HANOVER COUNTY
1000 MEDICAL CENTER DRIVE
WILMINGTON, NORTH CAROLINA

Client
NEW HANOVER COUNTY, NORTH CAROLINA

All reproduction & intellectual property rights reserved © 2020

SITE PLAN



Professional Seals

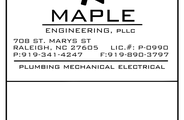

12/2/20

No.	Description	Date
	CONSTRUCTION DOCUMENT SET	08/25/20
1	MCD #1	12/2/20

Sheet Title
ELECTRICAL DINING BUILDING LIGHTING PLAN

Sheet Number
E102.0L

© 2020 MAPLE ENGINEERING, PLLC EXPRESSLY RESERVES ITS COMMON LAW COPYRIGHT AND OTHER PROPERTY RIGHTS IN THESE PLANS. THESE PLANS ARE NOT TO BE REPRODUCED, CHANGED OR COPIED IN ANY FORM OR MANNER WHATSOEVER, NOR ARE THEY TO BE ASSIGNED TO ANY THIRD PARTY WITHOUT FIRST OBTAINING THE EXPRESSED WRITTEN PERMISSION AND CONSENT OF MAPLE ENGINEERING, PLLC.

12/2/2020 11:42 AM
ASS-1801-E1102.0L.DWG

GENERAL NOTES - THIS SHEET

1. ENSURE THAT ALL EXIT AND EMERGENCY LIGHTS ARE CONNECTED TO LOCAL NORMALLY ON LIGHTING CIRCUIT AND ARE WIRED UPSTREAM OF ALL SWITCHES, CONTACTORS, AND SIMILAR.
2. SEE PANEL SCHEDULES FOR GFI PROTECTION OF SOME OUTLETS.
3. FINAL CONNECTION TO ALL EQUIPMENT/FURNITURE BY E.C..
4. OUTLETS LABELED "USB" TO INCLUDE INTEGRAL UNIVERSAL SERIAL BUS PORT. SIMILAR TO LEGRAND TM826USB.
5. COORDINATE EXACT 120V POWER AND RECEPTACLES WITH ARCHITECT AND FINAL FURNITURE LOCATIONS.
6. ALL OUTLETS IN ROOMS TO BE OFFSET WHEN BACK TO BACK.
7. COORDINATE LOCATION OF BESIDE SWITCH FOR RECEPTACLE WITH ARCH..
8. COORDINATE EXACT IT POWER NEEDS WITH STATE OF NORTH CAROLINA STRUCTURED CABLING GUIDLINES. ARCHITECT AND LOW VOLTAGE CONTRACTOR.

TAGGED NOTES - THIS SHEET

1. POWER CIRCUIT FOR AREA LIGHT FIXTURE TO BE WIRED VIA AREA MOTION SENSOR. MOTION SENSOR TO BE UPSTREAM OF AREA SWITCHES. SEE DETAIL.
2. COORDINATE POWER AT RECEPTION WITH ARCHITECT AND FURNITURE LAYOUT.
3. PROVIDE (3) 4" CONDUITS W/ PULL STRING FROM MAIN ADMIN BUILDING IT ROOM. SEE SITE PLAN COORDINATE W/ G.C. AND OWNER.
4. FIXTURE "T" TO BE RECESSED COVE. COORDINATE WITH ARCHITECT. TYPICAL ALL "T" LIGHTS.
5. AIR HANDLER UNIT TO BE WIRED VIA OUTDOOR UNIT. E.C. TO INSTALL HIGH VOLTAGE WIRING. PROVIDE LOCKABLE DISCONNECT AT OUTDOOR UNIT TO SERVE AS AIR HANDLER DISCONNECT (LESS THAN 300 WATTS).
6. FIXTURE TO BE WIRED AS A NIGHT LIGHT. NIGHT LIGHT CIRCUIT TO BE WIRED VIA CENTRAL EMERGENCY INVERTER WITH BATTERY BACK-UP. SEE PANEL SCHEDULE.
7. (2) TANKLESS WATER HEATERS STACKED. PROVIDE SWITCH FOR EACH WATER HEATER.
8. SWITCHES TO BE KEY LOCK TYPE SWITCH. CORD. W/ BUILDING OWNER.
9. MOTION SENSOR TO BE ON 20 MINUTE TIMER.
10. LIGHTING CIRCUIT TO BE CONTROLLED VIA PHOTOCELL. CIRCUIT TO BE WIRED VIA CENTRAL EMERGENCY INVERTER WITH BATTERY BACK-UP. SEE PANEL SCHEDULE.
11. LIGHTING CIRCUIT TO BE CONTROLLED VIA PHOTOCELL. SEE PANEL SCHEDULE.
12. ROOF EXHAUST FAN TO BE ON WHEN LIGHTS IN EITHER BATHROOM ARE ON. SEE DETAIL FOR WIRING INFORMATION.
13. PROVIDE POWER TO WEATHER PROOF GFI RECEPTACLE AT HOT BOX FOR HEAT TAPE. COORDINATE EXACT LOCATION W/ CIVIL.
14. LIGHTING CIRCUIT TO BE CONTROLLED VIA TIME CLOCK. SEE PANEL SCHEDULE.
15. LIGHT TO BE RECESSED LINEAR FIXTURE. CORD. WITH ARCH./G.C., TYPICAL OF ALL "Q" LIGHTS.
16. SWITCH TO CONTROL BOTTOM HALF OF RECEPTACLE SHOWN.
17. PROVIDE POWER FOR FIRE ALARM CONTROL PANEL.
18. PROVIDE POWER FOR 4G DIALER.
19. PROVIDE POWER FOR PTHP VIA 208V RECEPTACLE. TYPICAL OF ALL PTHP'S
20. PROVIDE POWER FOR PTAC VIA 208V RECEPTACLE. TYPICAL OF ALL PTAC'S
21. EXHAUST FAN TO BE WIRED VIA AREA T-STAT. COORDINATE W/ M.C.. T-STAT PROVIDED BY M.C..
22. (3) EMERGENCY LIGHTING INVERTER/BATTERY BACK-UP HIGH IN RISER ROOM. SEE LIGHTING PLAN, PANEL SCHEDULES, AND RISER FOR MORE INFORMATION.
23. PROVIDE POWER FOR COMMERCIAL GAS DRYER. COORDINATE EXACT ELECTRICAL REQUIREMENTS WITH EQUIPMENT SUPPLIER.
24. PROVIDE POWER FOR COMMERCIAL WASHER. COORDINATE EXACT ELECTRICAL REQUIREMENTS WITH EQUIPMENT SUPPLIER. EQUIPMENT IS IN LINE OF SIGHT OF PANEL.
25. PROVIDE POWER FOR FIRE SMOKE DAMPER. WIRE VIA FIRE ALARM RELAY.
26. PROVIDE POWER FOR WATER CLOSET AUTOFLUSH. COORDINATE LOCATION AND REQUIREMENTS W/ P.C.
27. PROVIDE POWER FOR AUTOFLUSH. COORDINATE LOCATION AND REQUIREMENTS W/ P.C..
28. PROVIDE POWER FOR LAVATORY JUST BELOW SINK. COORDINATE W/ P.C..
29. E.C. TO PROVIDE POWER ADJACENT TO WATER HEATERS FOR RECIRC PUMPS. COORDINATE EXACT LOCATION WITH P.C.
30. PROVIDE POWER FOR HUMIDIFIER ABOVE CEILING. COORDINATE WITH M.C.
31. PROVIDE POWER FOR RESIDENTIAL GAS DRYER.
32. PROVIDE POWER FOR RESIDENTIAL WASHER.
33. PROVIDE POWER AND DATA FOR WALL MOUNTED TELEVISION AND CABLE BOX IN CABINET BELOW WALL. COORDINATE WITH ARCHITECT.
34. PROVIDE JUNCTION BOX IN FLOOR FOR POWER AND DATA. COORDINATE POWER BELOW FLOOR WITH G.C.
35. PROVIDE POWER AND DATA AT CEILING FOR WIFI-BOOSTER.
36. TIME CLOCK FOR HALLWAY LIGHTING CIRCUIT C3-1 WITH 2-HOUR OVERRIDE.
37. PROVIDE FIRE RATED PLYWOOD FOR TELE/DATA BOARD. PROVIDE #6 CU BONDING WIRE TO BUILDING GROUNDING SYSTEM.

FIRE RATING LEGEND
- 1-HR WALL
- 1-HR WALL/ SMOKE WALL
- SMOKE PARTITION

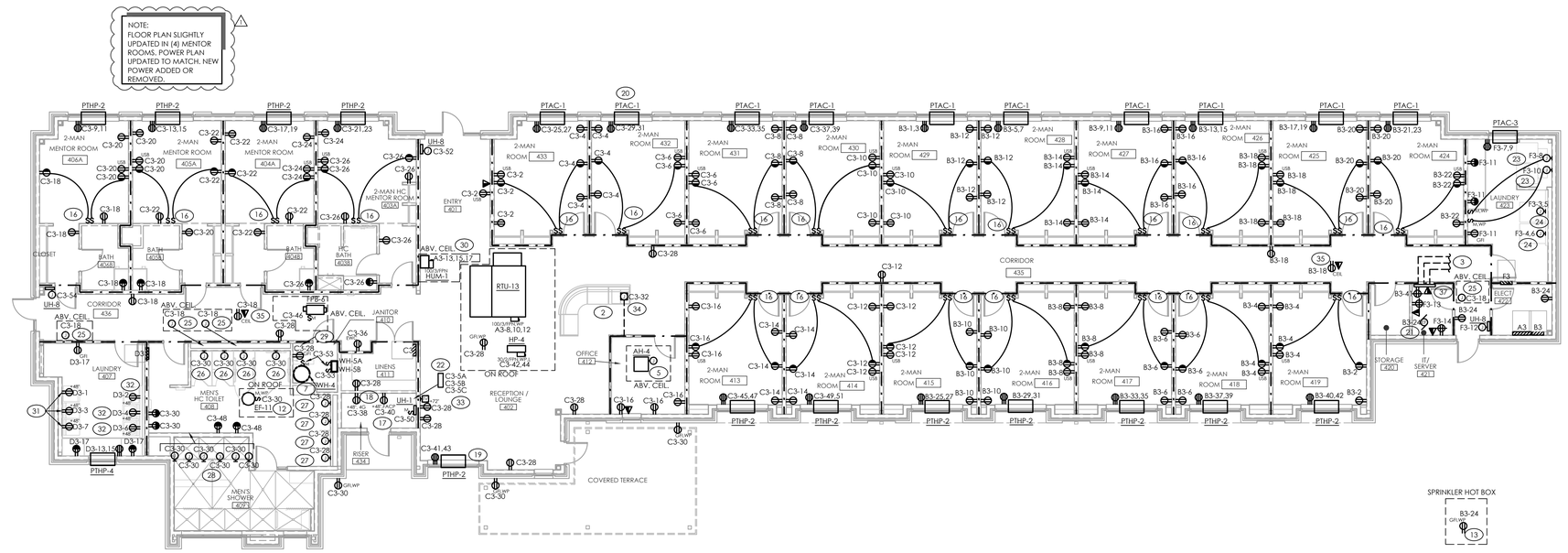

2 ELEC. POWER PLAN - MENS RESIDENTIAL BUILDING
SCALE: 1/8" = 1'-0"

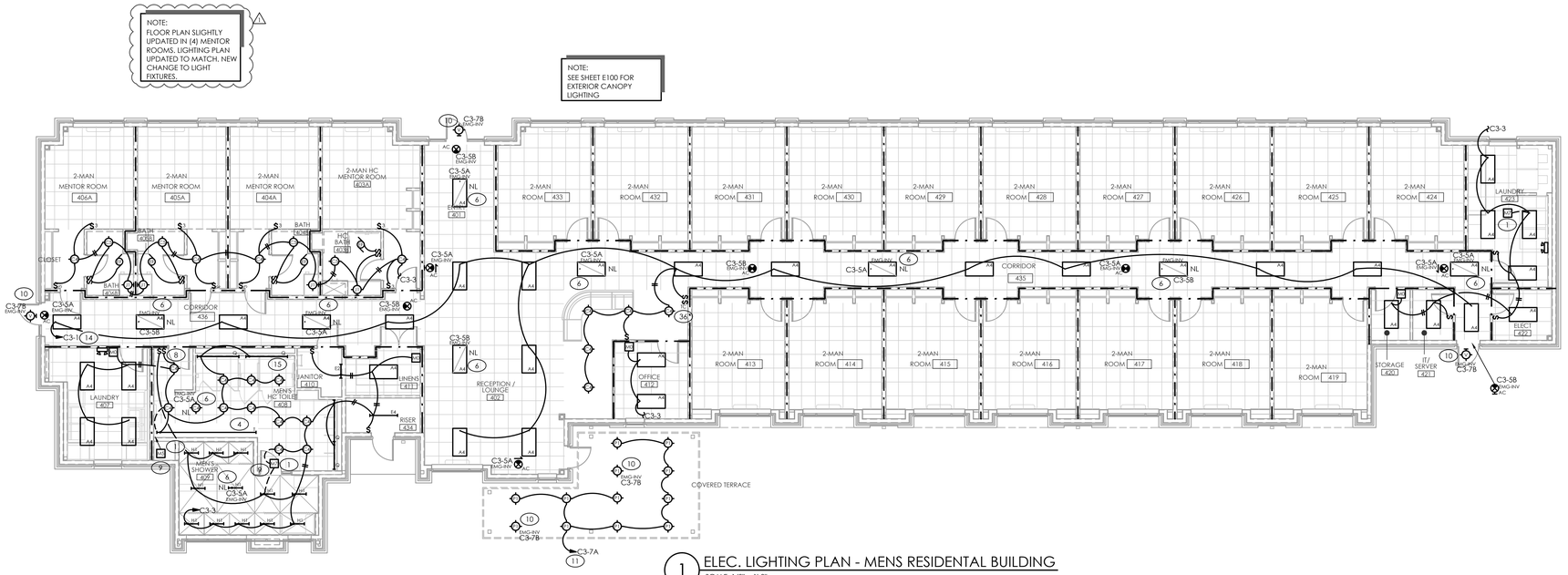

1 ELEC. LIGHTING PLAN - MENS RESIDENTAL BUILDING
SCALE: 1/8" = 1'-0"

isdesign
ARCHITECTURE • INTERIORS
1111 Haynes Street, Suite 103
Raleigh, North Carolina 27604
t: 919.833.5400
www.isdesignpa.com

MAPLE ENGINEERING, PLLC
708 ST. MARYS ST
RALEIGH, NC 27605 LIC.#: P-0990
P:919-341-4247 F:919-890-3797
PLUMBING MECHANICAL ELECTRICAL

Project
THE HEALING PLACE OF NEW HANOVER COUNTY
1000 MEDICAL CENTER DRIVE
WILMINGTON, NORTH CAROLINA

Client
NEW HANOVER COUNTY, NORTH CAROLINA

All reproduction & intellectual property rights reserved © 2020

SITE PLAN

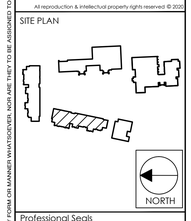

Professional Seals



No.	Description	Date
	CONSTRUCTION DOCUMENT SET	08/25/20
1	MCD #1	12/2/20

Sheet Title
ELECTRICAL MENS RESIDENTIAL BUILDING PLANS

Sheet Number
E103.0

© 2020 MAPLE ENGINEERING, PLLC EXPRESSLY RESERVES ITS COMMON LAW COPYRIGHT AND OTHER PROPERTY RIGHTS IN THESE PLANS. THESE PLANS ARE NOT TO BE REPRODUCED, CHANGED OR COPIED IN ANY FORM OR MANNER WHATSOEVER, NOR ARE THEY TO BE ASSIGNED TO ANY THIRD PARTY WITHOUT FIRST OBTAINING THE EXPRESSED WRITTEN PERMISSION AND CONSENT OF MAPLE ENGINEERING, PLLC.

12/2/2020 11:42 AM
ISD-1691-E103.0.DWG

GENERAL NOTES - THIS SHEET

1. ENSURE THAT ALL EXIT AND EMERGENCY LIGHTS ARE CONNECTED TO LOCAL NORMALLY ON LIGHTING CIRCUIT AND ARE WIRED UPSTREAM OF ALL SWITCHES, CONTACTORS, AND SIMILAR.
2. SEE PANEL SCHEDULES FOR GFI PROTECTION OF SOME OUTLETS.
3. FINAL CONNECTION TO ALL EQUIPMENT/FURNITURE BY E.C..
4. OUTLETS LABELED "USB" TO INCLUDE INTEGRAL UNIVERSAL SERIAL BUS PORT, SIMILAR TO LEGRAND TM2616USB.
5. COORDINATE EXACT 120V POWER AND RECEPTACLES WITH ARCHITECT AND FINAL FURNITURE LOCATIONS.
6. ALL OUTLETS IN ROOMS TO BE OFFSET WHEN BACK TO BACK.
7. COORDINATE LOCATION OF SWITCH FOR BEDSIDE RECEPTACLE WITH ARCH..
8. COORDINATE EXACT IT POWER NEEDS WITH STATE OF NORTH CAROLINA STRUCTURED CABLING GUIDLINES, ARCHITECT AND LOW VOLTAGE CONTRACTOR.

TAGGED NOTES - THIS SHEET

1. POWER CIRCUIT FOR AREA LIGHT FIXTURE TO BE WIRED VIA AREA MOTION SENSOR. MOTION SENSOR TO BE UPSTREAM OF AREA SWITCHES. SEE DETAIL.
2. COORDINATE POWER AT RECEPTION WITH ARCHITECT AND FURNITURE LAYOUT.
3. PROVIDE (3) 4" CONDUITS W/ PULL STRING FROM MAIN ADMIN BUILDING IT ROOM. SEE SITE PLAN COORDINATE W/ G.C. AND OWNER.
4. FIXTURE "T" TO BE RECESSED COVE. COORDINATE WITH ARCHITECT. TYPICAL ALL "T" LIGHTS.
5. AIR HANDLER UNIT TO BE WIRED VIA OUTDOOR UNIT, E.C. TO INSTALL HIGH VOLTAGE WIRING. PROVIDE LOCKABLE DISCONNECT AT OUTDOOR UNIT TO SERVE AS AIR HANDLER DISCONNECT (LESS THAN 300 WATTS).
6. FIXTURE TO BE WIRED AS A NIGHT LIGHT. NIGHT LIGHT CIRCUIT TO BE WIRED VIA CENTRAL EMERGENCY INVERTER WITH BATTERY BACK-UP. SEE PANEL SCHEDULE.
7. (2) TANKLESS WATER HEATERS STACKED. PROVIDE SWITCH FOR EACH WATER HEATER.
8. SWITCHES TO BE KEY LOCK TYPE SWITCH. CORD. W/ BUILDING OWNER.
9. MOTION SENSOR TO BE ON 20 MINUTE TIMER.
10. LIGHTING CIRCUIT TO BE CONTROLLED VIA PHOTOCELL. CIRCUIT TO BE WIRED VIA CENTRAL EMERGENCY INVERTER WITH BATTERY BACK-UP. SEE PANEL SCHEDULE.
11. LIGHTING CIRCUIT TO BE CONTROLLED VIA PHOTOCELL. SEE PANEL SCHEDULE.
12. ROOF EXHAUST FAN TO BE ON WHEN LIGHTS IN EITHER BATHROOM ARE ON. SEE DETAIL FOR WIRING INFORMATION.
13. PROVIDE POWER TO WEATHER PROOF GFI RECEPTACLE AT HOT BOX FOR HEAT TAPE. COORDINATE EXACT LOCATION W/ CIVIL.
14. LIGHTING CIRCUIT TO BE CONTROLLED VIA TIME CLOCK. SEE PANEL SCHEDULE.
15. LIGHT TO BE RECESSED LINEAR FIXTURE. CORD. WITH ARCH./G.C., TYPICAL OF ALL "Q" LIGHTS.
16. SWITCH TO CONTROL BOTTOM HALF OF RECEPTACLE SHOWN.
17. PROVIDE POWER FOR FIRE ALARM CONTROL PANEL.
18. PROVIDE POWER FOR 4G DIALER.
19. PROVIDE POWER FOR PTHP VIA 208V RECEPTACLE. TYPICAL OF ALL PTHP'S
20. PROVIDE POWER FOR PTAC VIA 208V RECEPTACLE. TYPICAL OF ALL PTAC'S
21. EXHAUST FAN TO BE WIRED VIA AREA T-STAT, COORDINATE W/ M.C., T-STAT PROVIDED BY M.C..
22. (3) EMERGENCY LIGHTING INVERTER/BATTERY BACK-UP HIGH IN RISER ROOM. SEE LIGHTING PLAN, PANEL SCHEDULES, AND RISER FOR MORE INFORMATION.
23. PROVIDE POWER FOR COMMERCIAL GAS DRYER. COORDINATE EXACT ELECTRICAL REQUIREMENTS WITH EQUIPMENT SUPPLIER.
24. PROVIDE POWER FOR COMMERCIAL WASHER. COORDINATE EXACT ELECTRICAL REQUIREMENTS WITH EQUIPMENT SUPPLIER. EQUIPMENT IS IN LINE OF SIGHT OF PANEL.
25. PROVIDE POWER FOR FIRE SMOKE DAMPER. COORDINATE WITH M.C.
26. PROVIDE POWER FOR WATER CLOSET AUTOFLUSH. COORDINATE LOCATION AND REQUIREMENTS W/ P.C.
27. SERVICE ENTRANCE RATED MANUAL TRANSFER SWITCH. SEE RISER.
28. PROVIDE POWER FOR LAVATORY JUST BELOW SINK. COORDINATE W/ P.C..
29. E.C. TO PROVIDE POWER ADJACENT TO WATER HEATERS FOR RECIRC PUMPS. COORDINATE EXACT LOCATION WITH P.C.
30. PROVIDE POWER FOR HUMIDIFIER ABOVE CEILING. COORDINATE WITH M.C..
31. PROVIDE POWER FOR RESIDENTIAL GAS DRYER.
32. PROVIDE POWER FOR RESIDENTIAL WASHER.
33. PROVIDE POWER AND DATA FOR WALL MOUNTED TELEVISION AND CABLE BOX IN CABINET BELOW WALL. COORDINATE WITH ARCHITECT.
34. PROVIDE JUNCTION BOX IN FLOOR FOR POWER AND DATA. COORDINATE POWER BELOW FLOOR WITH G.C.
35. PROVIDE POWER AND DATA AT CEILING FOR WIFI-BOOSTER.
36. TIME CLOCK FOR HALLWAY LIGHTING CIRCUIT C3-1 WITH 2-HOUR OVERRIDE.
37. PROVIDE FIRE RATED PLYWOOD FOR TELE/DATA BOARD. PROVIDE #6 CU BONDING WIRE TO BUILDING GROUNDING SYSTEM.

FIRE RATING LEGEND

1-HR FIRE/ SMOKE WALL

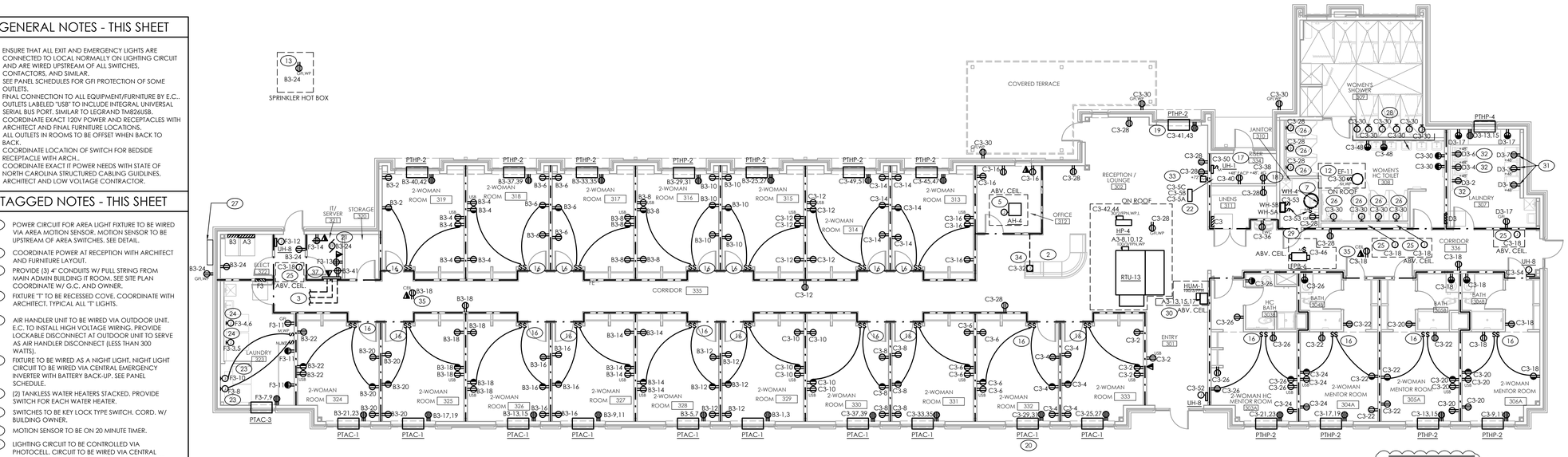

2 ELEC. POWER PLAN - WOMENS RESIDENTAL BUILDING
SCALE: 1/8" = 1'-0"

NOTE:
FLOOR PLAN SLIGHTLY UPDATED IN (4) MENTOR ROOMS. POWER PLAN UPDATED TO MATCH. NEW POWER ADDED OR REMOVED.

NOTE:
SEE SHEET E100 FOR EXTERIOR CANOPY LIGHTING

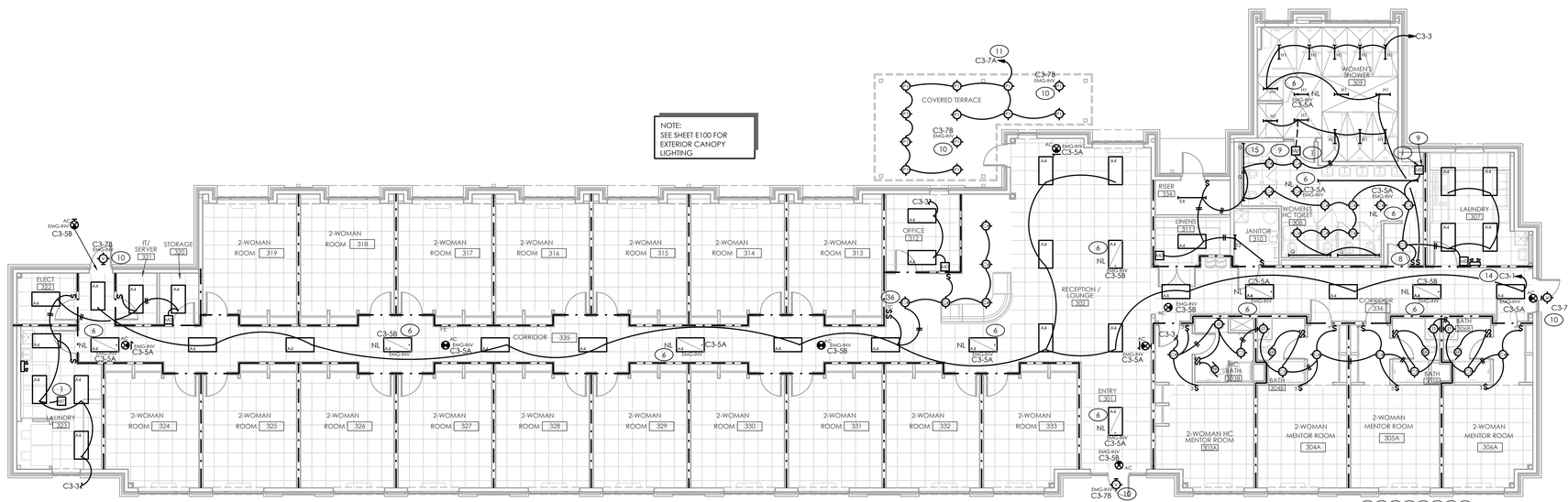

1 ELEC. LIGHTING PLAN - WOMEN RESIDENTAL BUILDING
SCALE: 1/8" = 1'-0"

NOTE:
FLOOR PLAN SLIGHTLY UPDATED IN (4) MENTOR ROOMS. LIGHTING PLAN UPDATED TO MATCH. NEW CHANGE TO LIGHT FIXTURES.

12/2/2020 11:43 AM
ISD-1801-E103.1.DWG

isdesign
ARCHITECTURE • INTERIORS
1111 Haynes Street, Suite 103
Raleigh, North Carolina 27604
t. 919.833.5400
www.isdesignpa.com

MAPLE ENGINEERING, PLLC
708 ST. MARYS ST
RALEIGH, NC 27605 LIC.#: P-0990
P:919-341-4247 F:919-890-3797
PLUMBING MECHANICAL ELECTRICAL

Project
THE HEALING PLACE OF NEW HANOVER COUNTY
1000 MEDICAL CENTER DRIVE
WILMINGTON, NORTH CAROLINA

Client
NEW HANOVER COUNTY, NORTH CAROLINA

All reproduction & intellectual property rights reserved © 2020

SITE PLAN



NORTH

Professional Seals



12/2/20

No.	Description	Date
1	CONSTRUCTION DOCUMENT SET MCD #1	08/25/20 12/2/20

Sheet Title
ELECTRICAL WOMENS RESIDENTIAL BUILDING PLANS

Sheet Number
E103.1

© 2020 MAPLE ENGINEERING, PLLC EXPRESSLY RESERVES ITS COMMON LAW COPYRIGHT AND OTHER PROPERTY RIGHTS IN THESE PLANS. THESE PLANS ARE NOT TO BE REPRODUCED, CHANGED OR COPIED IN ANY FORM OR MANNER WHATSOEVER, NOR ARE THEY TO BE ASSIGNED TO ANY THIRD PARTY WITHOUT FIRST OBTAINING THE EXPRESSED WRITTEN PERMISSION AND CONSENT OF MAPLE ENGINEERING, PLLC.

GENERAL NOTES - THIS SHEET

1. ENSURE THAT ALL EXIT AND EMERGENCY LIGHTS ARE CONNECTED TO LOCAL NORMALLY ON LIGHTING CIRCUIT AND ARE WIRED UPSTREAM OF ALL SWITCHES, CONTACTORS, AND SIMILAR.
2. BUILDING TO BE 24 HOUR OPERATION, NO TIME CLOCK PROVIDED.
3. ALL INTERIOR WALLS IN MEN'S DETOX SUITE 503 AND WOMEN'S DETOX SUITE 519 ARE PARTIAL HEIGHT. COORDINATE W/ ARCH.
4. SEE E100 FOR SITE PLAN AND ADDITIONAL EXTERIOR LIGHTING.

TAGGED NOTES - THIS SHEET

1. FIXTURE 'T' TO BE RECESSED COVE, COORDINATE WITH ARCHITECT, TYPICAL ALL 'T' LIGHTS.
2. POWER CIRCUIT FOR AREA LIGHT FIXTURE TO BE WIRED VIA AREA MOTION SENSOR. MOTION SENSOR TO BE UPSTREAM OF AREA SWITCHES. SEE DETAIL.
3. CIRCUIT TO BE WIRED VIA PHOTOCELL. SEE PANEL SCHEDULE.
4. FIXTURE TO BE WIRED AS A NIGHT LIGHT. NIGHT LIGHT CIRCUIT TO BE WIRED VIA CENTRAL EMERGENCY INVERTER WITH BATTERY BACK-UP. SEE PANEL SCHEDULE.
5. LIGHTING CIRCUIT TO BE CONTROLLED VIA PHOTOCELL. CIRCUIT TO BE WIRED VIA CENTRAL EMERGENCY INVERTER WITH BATTERY BACK-UP. SEE PANEL SCHEDULE.
6. LIGHT TO BE MOUNTED ABOVE "EGG CRATE" LOUVERS IN BATHROOMS.
7. SWITCHES TO BE KEY LOCK TYPE SWITCH. COORDINATE WITH OWNER.
8. FIXTURE TO INCLUDE INTEGRAL EMERGENCY BATTERY BACK-UP.
9. LIGHT TO BE RECESSED LINEAR FIXTURE. CORD. WITH ARCH./G.C., TYPICAL OF ALL "Q" LIGHTS.
10. FIXTURE TO BE WIRED AS A NIGHT LIGHT.
11. FIXTURE "W" TO BE MOUNTED IN PARTIAL HEIGHT WALL IN DETOX SUITE'S. CORD. MOUNTING WITH ARCH./G.C., TYPICAL OF ALL "W" FIXTURES.
12. NIGHT LIGHT FIXTURE TO BE WIRED VIA TIME CLOCK TO TURN ON NIGHT LIGHTS FROM SUNSET TO SUNRISE. COORDINATE EXACT SCHEDULE WITH BUILDING OWNER. LIGHTS TO BE OFF DURING THE DAYTIME.
12. SERVICE ENTRANCE RATED MANUAL TRANSFER SWITCH. SEE RISER.

FIRE RATING LEGEND

1-HR FIRE/ SMOKE WALL

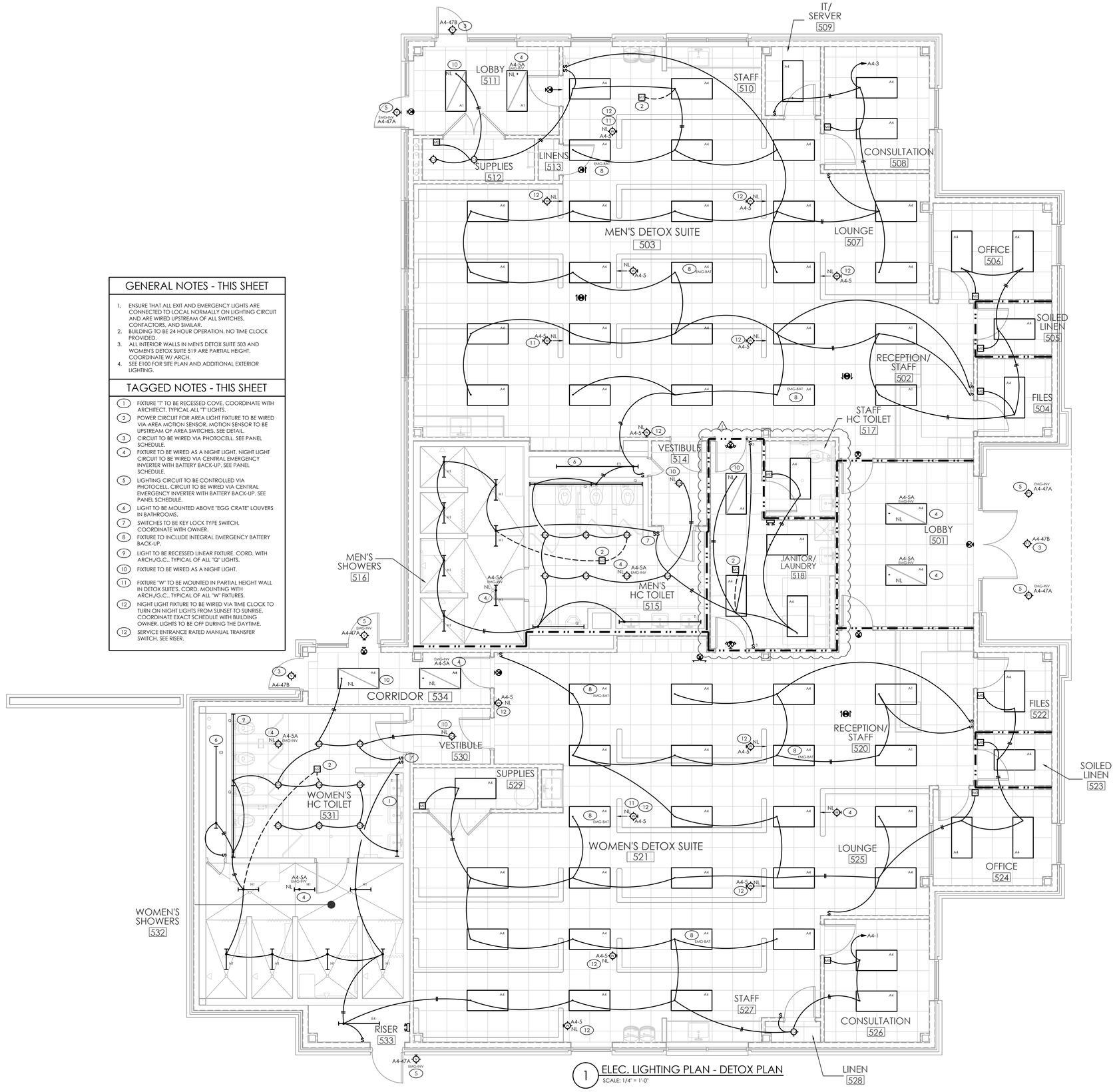

1 ELEC. LIGHTING PLAN - DETOX PLAN
SCALE: 1/4" = 1'-0"

is+design
ARCHITECTURE + INTERIORS
1111 Haynes Street, Suite 103
Raleigh, North Carolina 27604
t. 919.833.5400
www.isdesignpa.com

MAPLE ENGINEERING, PLLC
708 ST. MARYS ST
RALEIGH, NC 27605 LIC.#: P-0990
P:919-341-4247 F:919-890-3797
PLUMBING MECHANICAL ELECTRICAL

Project
THE HEALING PLACE OF NEW HANOVER COUNTY
1000 MEDICAL CENTER DRIVE
WILMINGTON, NORTH CAROLINA

Client
NEW HANOVER COUNTY, NORTH CAROLINA

All reproduction & intellectual property rights reserved © 2020

SITE PLAN

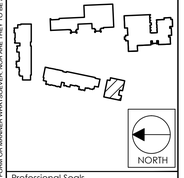

Professional Seals



12/2/20

No.	Description	Date
	CONSTRUCTION DOCUMENT SET	08/25/20
1	MCD #1	12/2/20

Sheet Title
ELECTRICAL DETOX BUILDING LIGHTING PLAN

Sheet Number
E104.0L

© 2020 MAPLE ENGINEERING, PLLC EXPRESSLY RESERVES ITS COMMON LAW COPYRIGHT AND OTHER PROPERTY RIGHTS IN THESE PLANS. THESE PLANS ARE NOT TO BE REPRODUCED, CHANGED OR COPIED IN ANY FORM OR MANNER WHATSOEVER, NOR ARE THEY TO BE ASSIGNED TO ANY THIRD PARTY WITHOUT FIRST OBTAINING THE EXPRESSED WRITTEN PERMISSION AND CONSENT OF MAPLE ENGINEERING, PLLC.

12/2/2020 11:43 AM
ASD-1801-E1104.0L.DWG

GENERAL NOTES - THIS SHEET

1. SEE PANEL SCHEDULES FOR GFI PROTECTION OF SOME OUTLETS.
2. FINAL CONNECTION TO ALL EQUIPMENT/FURNITURE BY E.C..
3. COORDINATE EXACT IT POWER NEEDS WITH STATE OF NORTH CAROLINA STRUCTURED CABLING GUIDLINES, ARCHITECT AND LOW VOLTAGE CONTRACTOR.

TAGGED NOTES - THIS SHEET

1. PROVIDE FIRE RATED PLYWOOD FOR TELE/DATA BOARD. PROVIDE #6 CU BONDING WIRE TO BUILDING GROUNDING SYSTEM.
2. PROVIDE POWER FOR HEAT TAPE AT HOT BOX. COORDINATE WITH CIVIL DRAWINGS.
3. PROVIDE (3) 4" CONDUITS W/ PULL STRING FROM MAIN ADMIN BUILDING IT ROOM. SEE SITE PLAN COORDINATE W/ G.C. AND OWNER.
4. EXHAUST FAN TO BE WIRED VIA AREA T-STAT. COORDINATE W/ M.C.. T-STAT PROVIDED BY M.C..
5. E.C. TO PROVIDE POWER ADJACENT TO WATER HEATER FOR RECIRC PUMP. COORDINATE EXACT LOCATION WITH P.C..
6. ENSURE THAT SERVICE RECEPTACLE IS PRESENT WITHIN 25' AND LINE OF SIGHT OF EQUIPMENT.
7. COORDINATE EXACT POWER AND DATA AT STAFF DESK WITH OWNER AND ARCH..
8. PROVIDE POWER FOR WATER HEATERS. COORDINATE WITH P.C..
9. PROVIDE POWER FOR FIRE ALARM CONTROL PANEL.
10. PROVIDE POWER FOR 4G DIALER.
11. EXHAUST FAN TO BE WIRED FOR CONTINOUS OPERATION. COORDINATE WITH M.C..
12. (2) EMERGENCY LIGHTING INVERTER/BATTERY BACK-UP HIGH IN SPACE. SEE LIGHTING PLAN, PANEL SCHEDULES, AND RISER FOR MORE INFORMATION.
13. PROVIDE POWER FOR COMMERCIAL GAS DRYER. COORDINATE EXACT ELECTRICAL REQUIREMENTS WITH EQUIPMENT SUPPLIER.
14. PROVIDE POWER FOR COMMERCIAL WASHER. COORDINATE EXACT ELECTRICAL REQUIREMENTS WITH EQUIPMENT SUPPLIER.
15. PROVIDE POWER FOR WATER CLOSET. COORDINATE LOCATION AND REQUIREMENTS W/ P.C..
16. PROVIDE POWER FOR URINAL. COORDINATE LOCATION AND REQUIREMENTS W/ P.C..
17. PROVIDE POWER FOR LAVATORY JUST BELOW SINK. COORDINATE W/ P.C..
18. PROVIDE POWER FOR UNDER SINK WATER HEATER. PROVIDE LOCKABLE BREAKER AT PANEL. SEE PANEL SCHEDULES.
19. PROVIDE POWER FOR FIRE SMOKE DAMPER. COORDINATE WITH M.C.
20. PROVIDE POWER FOR FAN. FAN TO BE CIRCUITED AND CONTROLLED WITH BATHROOM LIGHTS.
21. PROVIDE (2) DEDICATED 20A RECEPTACLES AND CIRCUITS. COORDINATE EXACT IT NEEDS WITH OWNER.
22. PROVIDE CONDUIT AND JUNCTION BOXES AT DOORS, AND AT RECEPTION DESK. FOR PUSH BUTTON ELECTRICAL DOOR LOCK AND DOOR BELLS. PROVIDE 120V POWER FROM LOCAL CIRCUIT. FINAL INSTALLATION AN D 24V CONNECTION BY EQUIPMENT SUPPLIER.
23. PROVIDE JUNCTION JUNCTION BOX AT WALL FOR POWER AND DATA. DESK TO INCLUDE INTEGRAL CONNECTIONS. FINAL CONNECTION BY FURNITURE SUPPLIER.
24. PROVIDE FLOOR BOX FOR POWER AND DATA. COORDINATE CONDUIT WITH G.C.. FINAL FURNITURE LOCATIONS TO BE COORDINATED WITH ARCHITECT.
25. SERVICE ENTRANCE RATED MANUAL TRANSFER SWITCH. SEE RISER.

FIRE RATING LEGEND

1-HR FIRE/ SMOKE WALL

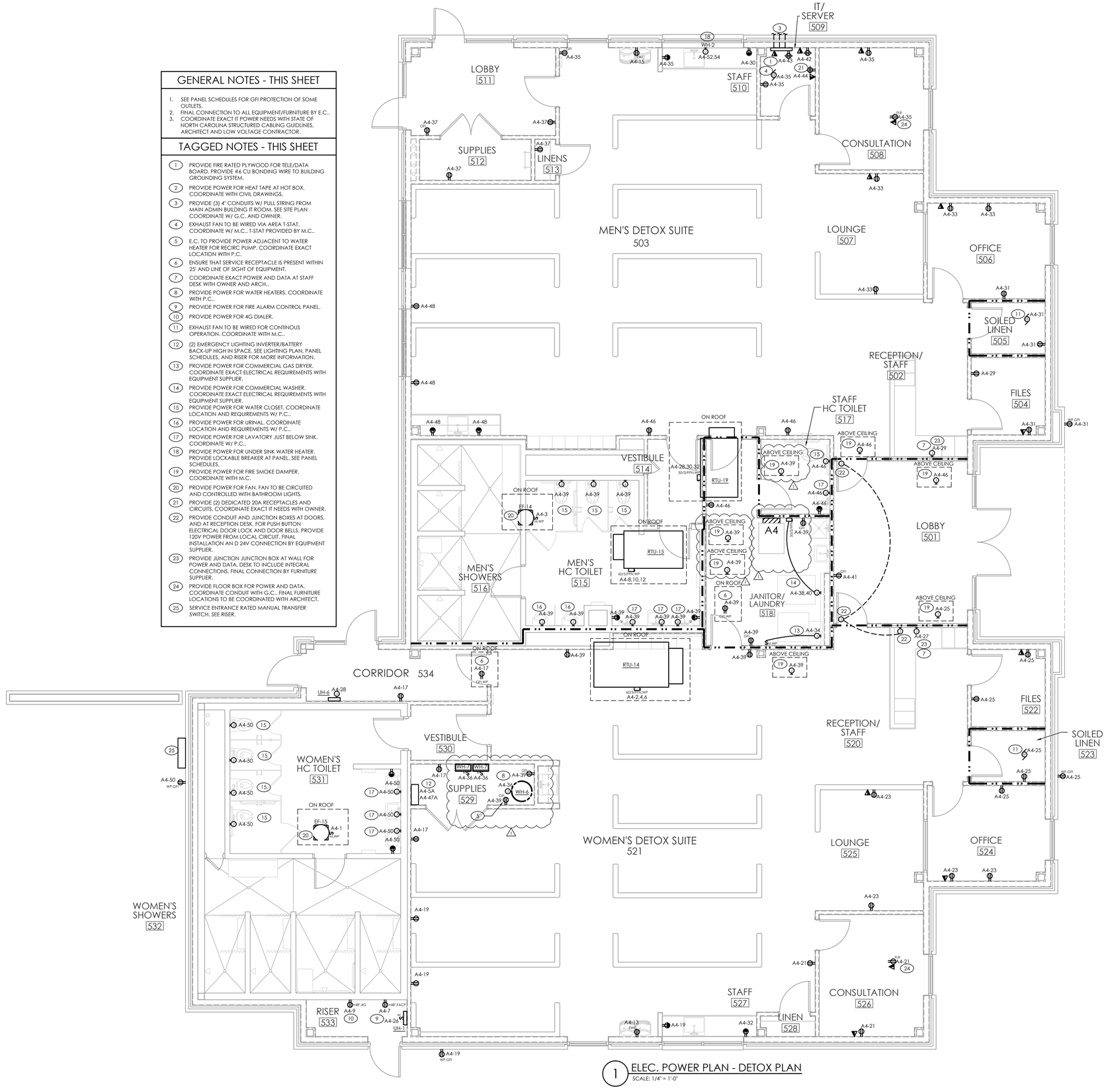

1 ELEC. POWER PLAN - DETOX PLAN
SCALE: 1/4" = 1'-0"

is-design
ARCHITECTURE + INTERIORS
1111 Haynes Street, Suite 103
Raleigh, North Carolina 27604
t. 919.833.5400
www.isdesignpa.com

MAPLE ENGINEERING, PLLC
708 ST. MARYS ST
RALEIGH, NC 27605 LIC.#: P-0990
P:919-341-4247 F:919-890-3797
PLUMBING MECHANICAL ELECTRICAL

Project
THE HEALING PLACE OF NEW HANOVER COUNTY
1000 MEDICAL CENTER DRIVE
WILMINGTON, NORTH CAROLINA

Client
NEW HANOVER COUNTY, NORTH CAROLINA

All reproduction & intellectual property rights reserved © 2020

SITE PLAN

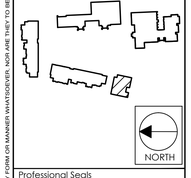

Professional Seals



12/2/20

No.	Description	Date
	CONSTRUCTION DOCUMENT SET	08/25/20
1	MCD #1	12/2/20

Sheet Title
ELECTRICAL DETOX BUILDING POWER PLAN

Sheet Number
E104.0P

© 2020 MAPLE ENGINEERING, PLLC EXPRESSLY RESERVES ITS COMMON LAW COPYRIGHT AND OTHER PROPERTY RIGHTS IN THESE PLANS. THESE PLANS ARE NOT TO BE REPRODUCED, CHANGED OR COPIED IN ANY FORM OR MANNER WHATSOEVER, NOR ARE THEY TO BE ASSIGNED TO ANY THIRD PARTY WITHOUT FIRST OBTAINING THE EXPRESSED WRITTEN PERMISSION AND CONSENT OF MAPLE ENGINEERING, PLLC.

12/2/2020 11:43 AM
I:\DS-18\E104.0P.DWG

TAGGED NOTES - THIS SHEET

1. COORDINATE LOCATION OF SPRINKLER RPZ WITH CIVIL PLANS.
2. COORDINATE LOCATION OF ANNUNCIATOR PANELWITH LOCAL AHJ.
3. MANUAL PULLSTATIONS OMITTED AS THEY ARE NOT REQUIRED PER 2012 NCFC SEC (907.2.1 GROUP A, 907.2.2 GROUP B, 907.2.2 GROUP E, 907.2.2 GROUP F, 907.2.7 GROUP M EXCEPTION), BUILDING FIRE SPRINKLER SYSTEM IS INTERLOCKED WITH BLDG FA SYSTEM. CONTRACTOR TO VERIFY INTERLOCK BEFORE BEGINNING WORK.
4. PROVIDE 120V WEATHERPROOF SPRINKLER BELL FOR SPRINKLER RISER ROOM, E.C. TO WIRE VIA FLOW SWITCH.
5. PROVIDE DUCT SMOKE DETECTOR.

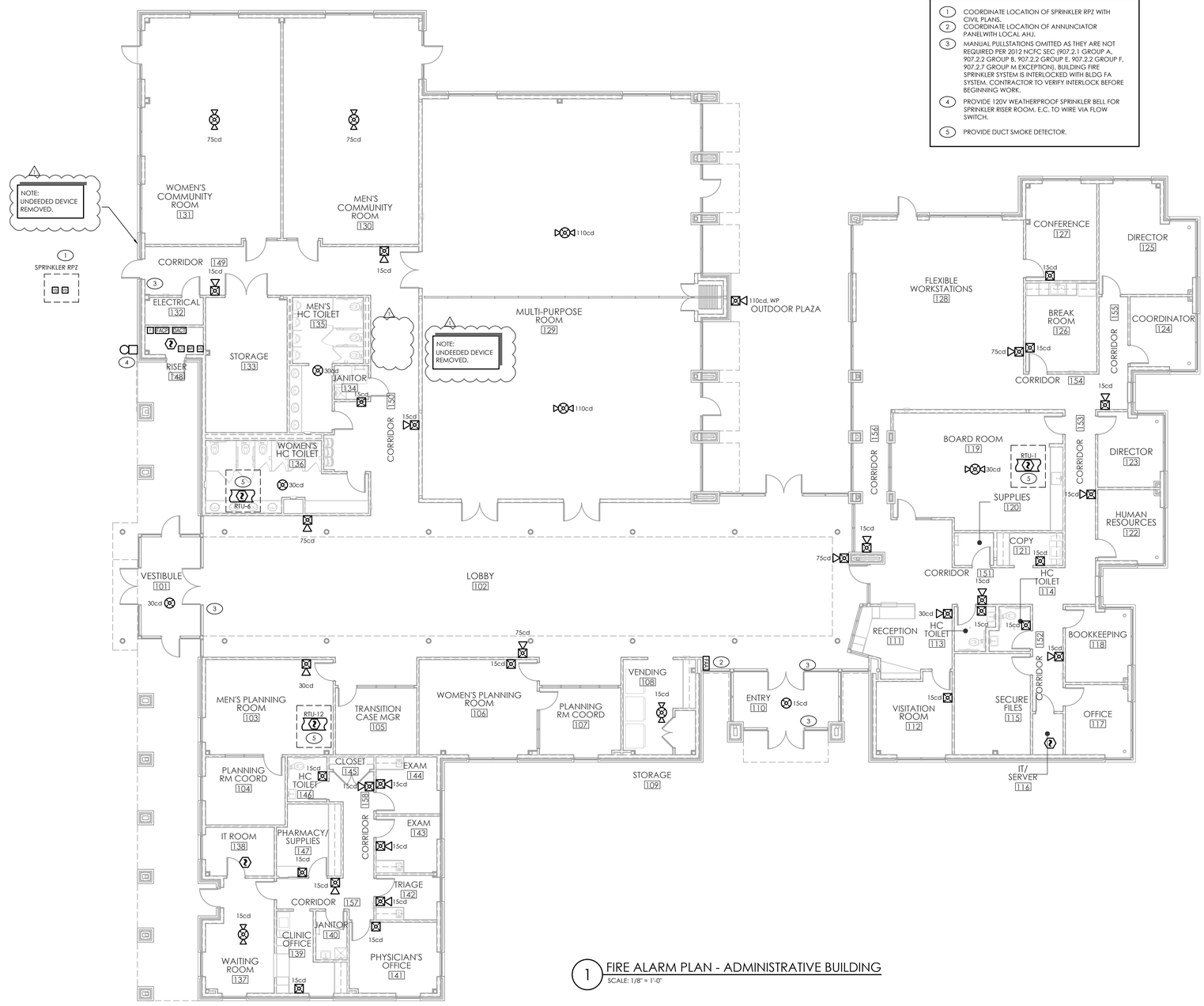

1 FIRE ALARM PLAN - ADMINISTRATIVE BUILDING
SCALE: 1/8" = 1'-0"

is-design
ARCHITECTURE + INTERIORS
1111 Haynes Street, Suite 103
Raleigh, North Carolina 27604
t. 919.833.5400
www.isdesignpa.com

MAPLE ENGINEERING, PLLC
708 ST. MARYS ST
RALEIGH, NC 27605 LIC.#: P-0990
P:919-341-4247 F:919-890-3797
PLUMBING MECHANICAL ELECTRICAL

Project
THE HEALING PLACE OF NEW HANOVER COUNTY
1000 MEDICAL CENTER DRIVE
WILMINGTON, NORTH CAROLINA

Client
NEW HANOVER COUNTY, NORTH CAROLINA

All reproduction & intellectual property rights reserved © 2020

SITE PLAN

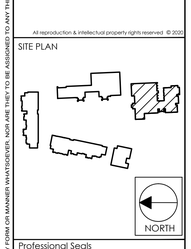

Professional Seals



12/2/20

No.	Description	Date
	CONSTRUCTION DOCUMENT SET	08/25/20
1	MCD #1	12/2/20

Sheet Title
FIRE ALARM ADMIN BUILDING PLAN

Sheet Number
FA101.0

© 2020 MAPLE ENGINEERING, PLLC EXPRESSLY RESERVES ITS COMMON LAW COPYRIGHT AND OTHER PROPERTY RIGHTS IN THESE PLANS. THESE PLANS ARE NOT TO BE REPRODUCED, CHANGED OR COPIED IN ANY FORM OR MANNER WHATSOEVER, NOR ARE THEY TO BE ASSIGNED TO ANY THIRD PARTY WITHOUT FIRST OBTAINING THE EXPRESSED WRITTEN PERMISSION AND CONSENT OF MAPLE ENGINEERING, PLLC.

12/2/2020 11:43 AM
IES-1801-FA101.0.DWG

FIRE RATING LEGEND

- 1-HR WALL
- 1-HR WALL/ SMOKE WALL
- SMOKE PARTITION

TAGGED NOTES - THIS SHEET

1. COORDINATE LOCATION OF SPRINKLER RPZ WITH CIVIL PLANS.
2. COORDINATE LOCATION OF ANNUNCIATOR PANELWITH LOCAL AHJ.
3. HOOD FIRE SUPPRESSION SYSTEM TO BE INTERLOCKED TO BLDG FIRE ALARM SYSTEM. UPON ACTIVATION OF HOOD SUPPRESSION SYSTEM BLDG FIRE ALARM SYSTEM IS TO ACTIVATE.
4. MANUAL PULLSTATIONS OMITTED AS THEY ARE NOT REQUIRED PER 2012 NCFC SEC (907.2.1 GROUP A, 907.2.2 GROUP B, 907.2.2 GROUP E, 907.2.2 GROUP F, 907.2.7 GROUP M EXCEPTION). BUILDING FIRE SPRINKLER SYSTEM IS INTERLOCKED WITH BLDG FA SYSTEM. CONTRACTOR TO VERIFY INTERLOCK BEFORE BEGINNING WORK.
5. PROVIDE CARBON MONOXIDE DETECTOR 5'-0" FROM FIRST SUPPLY GRILL OFF MAIN DUCT IN AREA. COORDINATE WITH M.C..
6. PROVIDE 120V WEATHERPROOF SPRINKLER BELL FOR SPRINKLER RISER ROOM. E.C. TO WIRE VIA FLOW SWITCH.
7. PROVIDE DUCT SMOKE DETECTOR.

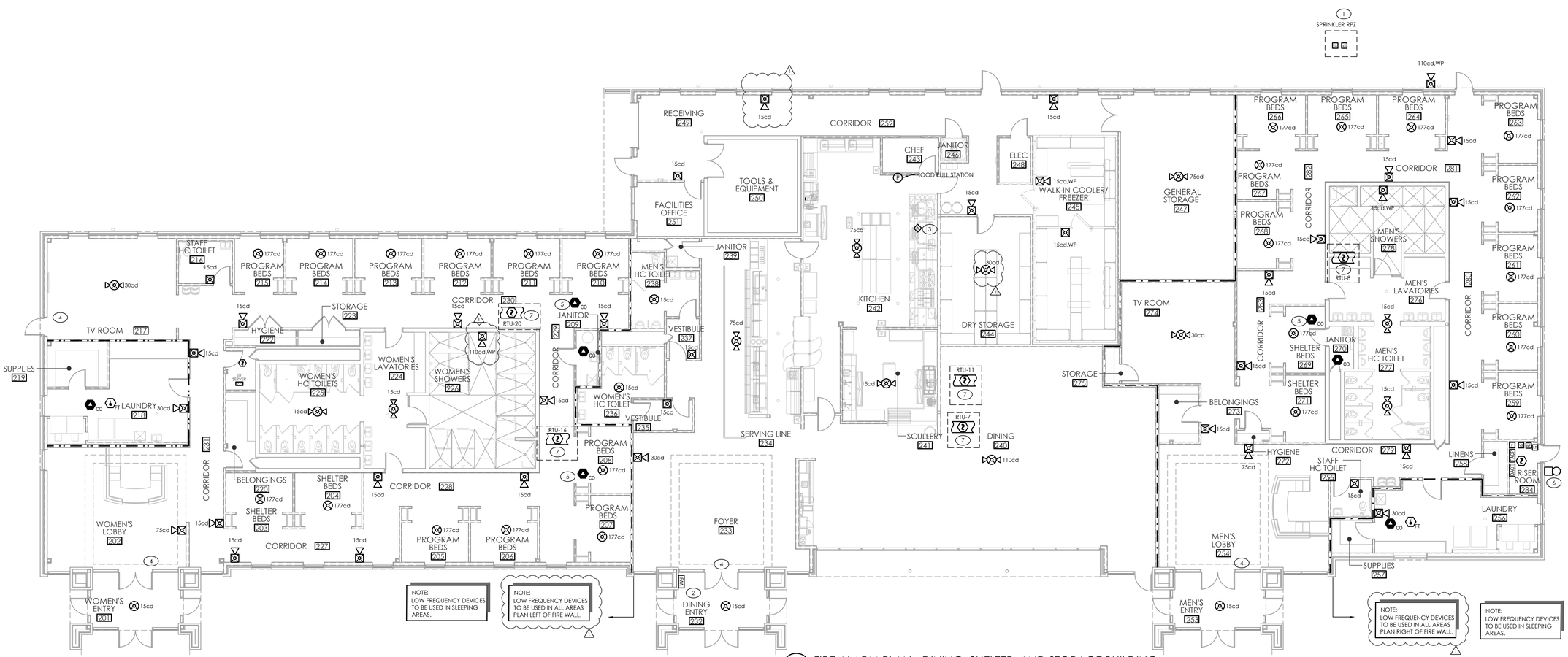

1 FIRE ALARM PLAN - DINING, SHELTER, AND STORAGE BUILDING
SCALE: 1/8" = 1'-0"

12/2/2020 11:43 AM
RDS>-1801-FA-A102.0.DWG

i-s design
ARCHITECTURE + INTERIORS
1111 Haynes Street, Suite 103
Raleigh, North Carolina 27604
t. 919.833.5400
www.isdesignpa.com

MAPLE ENGINEERING, PLLC
708 ST. MARYS ST
RALEIGH, NC 27605 LIC.#: P-0990
P:919-341-4247 F:919-890-3797
PLUMBING MECHANICAL ELECTRICAL

Project
THE HEALING PLACE OF NEW HANOVER COUNTY
1000 MEDICAL CENTER DRIVE
WILMINGTON, NORTH CAROLINA

Client
NEW HANOVER COUNTY, NORTH CAROLINA

All reproduction & intellectual property rights reserved © 2020
THIS DRAWING IS NOT TO BE ASSIGNED TO ANY THIRD PARTY WITHOUT FIRST OBTAINING THE EXPRESSED WRITTEN PERMISSION AND CONSENT OF MAPLE ENGINEERING, PLLC.
© 2020 MAPLE ENGINEERING, PLLC EXPRESSLY RESERVES ITS COMMON LAW COPYRIGHT AND OTHER PROPERTY RIGHTS IN THESE PLANS. THESE PLANS ARE NOT TO BE REPRODUCED, CHANGED OR COPIED IN ANY FORM OR MANNER WHATSOEVER, NOR ARE THEY TO BE ASSIGNED TO ANY THIRD PARTY

SITE PLAN



Professional Seals

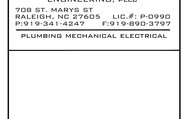

12/2/20

No.	Description	Date
	CONSTRUCTION DOCUMENT SET	08/25/20
1	MCD #1	12/2/20

Sheet Title
FIRE ALARM DINING BUILDING PLAN

Sheet Number
FA102.0

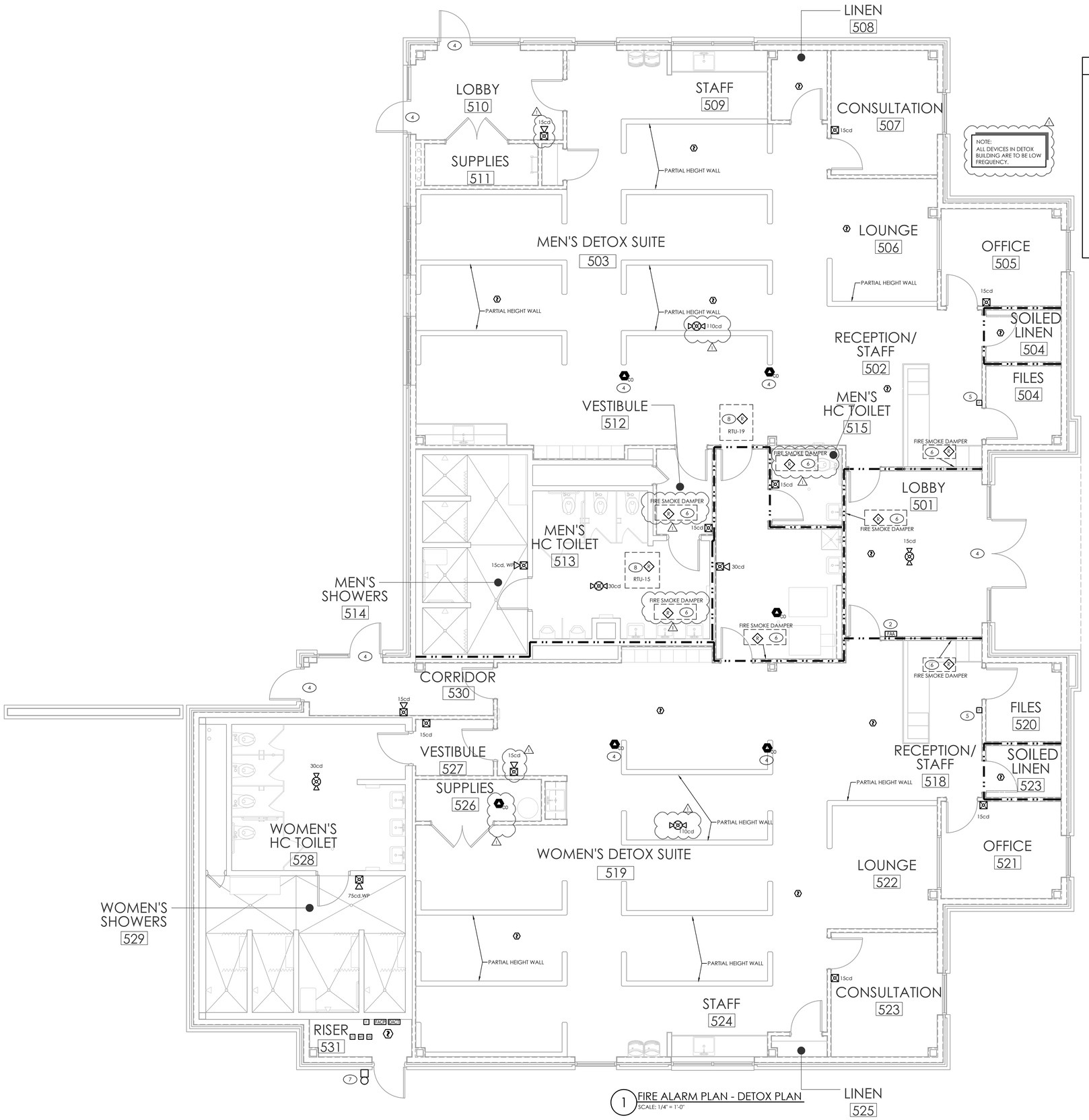

1 FIRE ALARM PLAN - DETOX PLAN
SCALE: 1/4" = 1'-0"

FIRE RATING LEGEND

1-HR FIRE/ SMOKE WALL

NOTE:
ALL DEVICES IN DETOX BUILDING ARE TO BE LOW FREQUENCY.

TAGGED NOTES - THIS SHEET

1. COORDINATE LOCATION OF SPRINKLER RPZ WITH CIVIL PLANS.
2. COORDINATE LOCATION OF ANNUNCIATOR PANELWITH LOCAL AHJ.
4. MANUAL PULLSTATIONS OMITTED AS THEY ARE NOT REQUIRED PER 2018 NCFC. BUILDING FIRE SPRINKLER SYSTEM IS INTERLOCKED WITH BLDG FA SYSTEM. CONTRACTOR TO VERIFY INTERLOCK BEFORE BEGINNING WORK.
4. PROVIDE CARBON MONOXIDE DETECTOR 5'-0" FROM FIRST SUPPLY GRILLE OFF MAIN DUCT IN AREA. COORDINATE WITH M.C..
5. PROVIDE FIRE ALARM PULL STATION.
6. PROVIDE FIRE ALARM CONNECTION TO AREA SMOKE DAMPER. DAMPER HAS INTEGRAL SMOKE DETECTOR. MONITOR FOR ALARM AND TROUBLE CONDITIONS.
7. PROVIDE 120V WEATHERPROOF SPRINKLER BELL FOR SPRINKLER RISER ROOM. E.C. TO WIRE VIA FLOW SWITCH.
8. PROVIDE FIRE ALARM RELAY FOR RTU SHUT DOWN. RTU TO SHUT DOWN UPON ACTIVATION OF FIRE ALARM. COORDINATE RELAY LOCATION W/ G.C..

1 SPRINKLER RPZ

isdesign
ARCHITECTURE + INTERIORS
1111 Haynes Street, Suite 103
Raleigh, North Carolina 27604
t. 919.833.5400
www.isdesignpa.com

MAPLE
ENGINEERING, PLLC
708 ST. MARYS ST
RALEIGH, NC 27605 LIC.#: P-0990
P:919-341-4247 F:919-890-3797
PLUMBING MECHANICAL ELECTRICAL

Project
THE HEALING PLACE OF NEW HANOVER COUNTY
1000 MEDICAL CENTER DRIVE
WILMINGTON, NORTH CAROLINA

Client
NEW HANOVER COUNTY, NORTH CAROLINA

All reproduction & intellectual property rights reserved © 2020

SITE PLAN

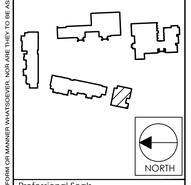

Professional Seals



12/2/20

No.	Description	Date
	CONSTRUCTION DOCUMENT SET	08/25/20
△	MCD #1	12/2/20

Sheet Title
FIRE ALARM DETOX BUILDING PLAN

Sheet Number
FA104.0

© 2020 MAPLE ENGINEERING, PLLC EXPRESSLY RESERVES ITS COMMON LAW COPYRIGHT AND OTHER PROPERTY RIGHTS IN THESE PLANS. THESE PLANS ARE NOT TO BE REPRODUCED, CHANGED OR COPIED IN ANY FORM OR MANNER WHATSOEVER, NOR ARE THEY TO BE ASSIGNED TO ANY THIRD PARTY WITHOUT FIRST OBTAINING THE EXPRESSED WRITTEN PERMISSION AND CONSENT OF MAPLE ENGINEERING, PLLC.

12/2/2020 11:43 AM
ISD-1801-FA104.0.DWG

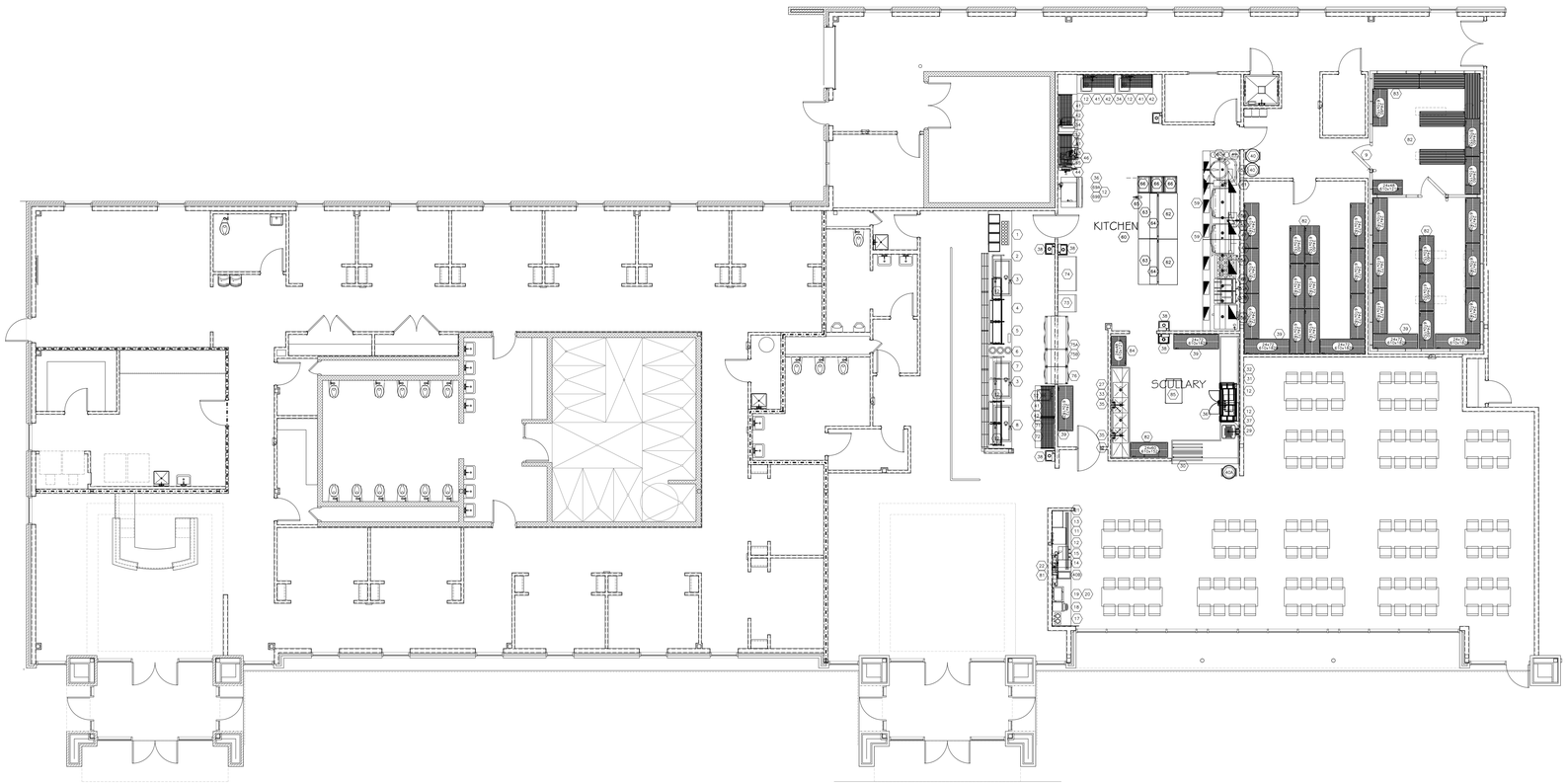

MSHCG EQUIPMENT SCHEDULE

Item No	Qty	Equipment Category	Manufacturer	Model Number
1	1	TRAY & SILVER	BSI	CUSTOM
2	1	CAFETERIA, BUFFET SHIELD	BSI	DECO-259-N
3	2	Drop-In, Hot/Cold Wells	Hatco	HCWBI-4DA
4	1	CAFETERIA, BUFFET SHIELD	BSI	DECO-302-N
5	1	TRAY w. SILVER	BSI	25'-6" CUSTOM COUNTER
6	3	DROP-IN, DISH DISPENSERS, UNHEATED	ATLAS METAL INDUSTRIES	PDS-8 1/8
7	8	CAFETERIA, BUFFET SHIELD	BSI	DECO- 106-N
8	1	Drop-In, Hot/Cold Wells	Hatco	HCWBI-4DA
9	1	INDOOR COMB REFR/FREEZER, WALK-IN UNT	TAFCO	37'-1" X 14'-11"
11	1	Ice Maker/Dispenser	Manitowoc America	DCM-500BAH-OX W/6" LEGS
12	12	FLOOR DRAIN	ADVANCE TABCO	FDR-1212
13	1	DISPENSER, MILK	SILVER KING	SKMA2
14	1	ICED TEA BREWER	FETCO	TBS-2121XTS
15	1	COFFEE MAKER, INSULATED SERVER, AUTOMATIC	FETCO	CBS-52H-20
17	1	WARMER, FOOD, ELECTRIC	APW WYOTT	WH-2
18	1	TOASTER, CONVEYOR	STAR MANUFACTURING	QCSE2-600H
19	1	SHELF, MICROWVE	ADVANCE TABCO	MS-18-24
20	2	OVEN, MICROWAVE	PANASONIC	NE-1054F
21	1	BEVERAGE COUNTER	BSI	96-BT-EB
22	1	H2O FILTRATION SYSTEM, COFFEE & TEA BREWING	DORMONT MANUFACTURING	BRIMAX-1525
24	1	FAUCET, SERVICE SINK	FISHER	8253
25	2	MOP HOLDER	EAGLE GROUP/METAL MASTERS	321561
26	1	FLOOR DRAIN	ADVANCE TABCO	FDR-1212
27	1	Pot Rack, Wall Mount	Advance Tabco	PS-18-120
28	1	AIR CURTAIN, UNHEATED	MARS AIR DOORS	EF236-2LP
29	1	DISHTABLE, 'L' SHAPE, 14 GAUGE	ADVANCE TABCO	DTS-030-108R
30	1	DISHTABLE, SOILING SHELF	ADVANCE TABCO	DTA-79
31	1	WAREWASHER, RACK CONVEYOR	CHAMPION INDUSTRIES	44 PRO VHR
32	1	Dishtable, Straight, 14 gauge	Advance Tabco	DTC-S30-84L
33	1	Sink, NSF, 3 comp, 16 gauge	Advance Tabco	FC-3-2424-24RL
34	1	FAUCET, DECK MOUNT	FISHER	53880
34	1	FAUCET, DECK MOUNT	FISHER	53880
35	2	PRE-RINSE FAUCET, BACKSPLASH MOUNT	FISHER	99643
36	3	FLOOR TROUGH	ADVANCE TABCO	FFTG-1272
37	1	PRE-RINSE FAUCET, BACKSPLASH MOUNT	FISHER	99708
38	6	HAND SINK, WALL MOUNT	ADVANCE TABCO	7-PS-80
39	22	SHELVING, PLASTIC, LOUVERED	METRO	MQ24720
40	2	32 GAL CONTAINER	RUBBERMAID	2262
40A	1	32 GAL CONTAINER	RUBBERMAID	2262
40B	1	23 GAL SLIM JIM CONTAINER	RUBBERMAID	FG354060BLA
41	5	SHELVING, MODULAR WALL SYSTEM	EAGLE GROUP/METAL MASTERS	WAL-2-1848
42	4	TABLE, PREP W/ SINK	ADVANCE TABCO	KMS-118-30SR
43	2	BIN, INGREDIENT	CAMBRO	18H418
44	1	TABLE, WORK, 14 GAUGE, BACK SPLASH	ADVANCE TABCO	1KSS-304
45	1	SLICER, FOOD	HOBART US FOODSERVICE	2812
46	1	HOSE REEL WITH GUN	T & S BRASS	B-7142-05
47	1	HOOD, EXHAUST #1	CAPTIVE AIRE	6024ND-2-PSP-F
48	1	HOOD, EXHAUST #2	CAPTIVE AIRE	6024ND-2-PSP-F
49	1	MCC STARTERS	CAPTIVE AIRE	DCV-1111
50	1	ANSUL FIRE SYSTEM	CAPTIVE AIRE	ANSUL R102 / DCV-1111
53	1	KETTLE, STEAM JACKETED, GAS, TILT	VULCAN	K40GLT
54	1	Range, Restaurant, Gas	Southbend	A36TD
55	1	FILLER, KETTLE & POT	FISHER	2040
56	1	Oven, Convection, Gas	BLODGETT	DFG100 DOUBLE
57A	1	Fryer, Deep Fat, Gas w/Filter	Pitco	1-SF-SSH75L
57B	1	Fryer, Deep Fat, Gas w/Filter	Pitco	1-SF-SSH75R
58	2	TILT SKILLET	Southbend	SGMTS-40
59	3	FLOOR TROUGH	ADVANCE TABCO	FFTG-1224
60	1	SUPPLY FAN, ROOF TOP	CAPTIVE AIRE	A2-0.250-200
61	2	EXHAUST FAN, ROOF TOP	CAPTIVE AIRE	GLD50HFA
62	2	Refrigerator, Undercounter	True Manufacturing Co., Inc.	TUC-72
63	2	Table, Enclosed Base, Open Front	Advance Tabco	EB-55-30RM
64	2	OVERSHELF, TABLE MOUNT	ADVANCE TABCO	DTS-12-172
65	1	CAN OPENER	NEMCO FOOD EQUIPMENT	56050-1
66	3	RACK, PAN	CHANNEL MANUFACTURING	4015
69A	1	Ice Maker w/o Bin	Manitowoc Ice	DT1200A-261
69B	1	Bin, Ice	Manitowoc Ice	D-870
71	1	TABLE, WORK, 14 GAUGE, BACK SPLASH	ADVANCE TABCO	1KSS-304
72	1	SHELVING, MODULAR WALL SYSTEM	EAGLE GROUP/METAL MASTERS	WAL-2-1848
73	1	Freezer, Reach-in	True Manufacturing Co., Inc.	T-23F
74	1	Refrigerator, Reach-in	True Manufacturing Co., Inc.	T-49
75A	1	CABINET, HEATED, PASS-THRU	TRUE MANUFACTURING CO., INC.	STR2HPT-2S-2S
75B	1	Cabinet, Heated, Pass-Thru	True Manufacturing Co., Inc.	STR1HPT-1S-1S
76	1	Refrigerator, Pass-Thru	True Manufacturing Co., Inc.	STR1RPT-1S-1S
77	–			
81	1	FILTER, WATER	ANTUNES	VZN-4414C-TS (3700733)
82	10	SHELVING, PLASTIC, LOUVERED	METRO	MQ24600
83	5	SHELVING, MAX iQ STARTER SYSTEM	METRO	MQ24720
84	1	SHELVING, MAX iQ STARTER SYSTEM	METRO	MQ24480
85	1	Cart, Utility	METRO	BC2636-24G

FLOOR PLAN - KITCHEN EQUIPMENT

SCALE: 1/8" = 1'-0"

1

N

isdesign
ARCHITECTURE + INTERIORS
1111 Haynes Street, Suite 103
Raleigh, North Carolina 27604
t. 919.833.5400
www.isdesignpa.com

MSHConsultant Group
Food Service Consultant Design & Planning

Project

THE HEALING PLACE OF NEW HANOVER COUNTY

1000 MEDICAL CENTER DRIVE
WILMINGTON, NORTH CAROLINA

Client

NEW HANOVER COUNTY, NORTH CAROLINA

All reproduction & intellectual property rights reserved © 2020

Key Plan

Professional Seals

No.	Description	Date
1	SCHEMATIC DESIGN	11/26/19
2	DESIGN DEVELOPMENT SET	04/09/20
3	CONSTRUCTION DOCUMENT SET	08/25/20

Project Code: 16HTWILMING

Sheet Title

KITCHEN EQUIPMENT PLAN

Original drawing is 42 x 30 Do not scale contents of this drawing

Sheet Number

FS-100

11/17/2020 7:10 PM C:\Users\Robert Herman\Google Drive (mshcg.mark@gmail.com)\MSHCG Projects\Healing Transitions\Wilmington\CAD\Revised A-100 v2.dwg

GENERAL NOTES:

1. MATERIALS AND INSTALLATION SHALL COMPLY WITH NFPA 13 (2013), STATE BUILDING CODE, LOCAL AUTHORITY HAVING JURISDICTION.

2. ALL MATERIALS AND EQUIPMENT SHALL BE NEW, UL LISTED FOR THE INTENDED USE AND SHALL BE INSTALLED IN FULL COMPLIANCE WITH MANUFACTURER'S RECOMMENDATIONS.

3. THESE DRAWINGS ARE DIAGRAMMATIC IN NATURE AND MAY NOT SHOW EVERY SPRINKLER AND/OR FITTING. IT SHALL BE THE RESPONSIBILITY OF THE INSTALLING CONTRACTOR TO PROVIDE A COMPLETE WORKING SYSTEM THAT MEETS THE REQUIREMENTS OF NFPA CODES, STATE BUILDING CODES, AND THE TOWN OF CARY REQUIREMENTS.

4. ALL NEW 1" AND SMALLER IS SCHEDULE-40 BLACK STEEL WITH THREADED ENDS AND FITTINGS. ALL NEW SPRINKLER PIPE 1¼" AND LARGER IS SCHEDULE-10 BLACK STEEL WITH GROOVED ENDS AND FITTINGS.

5. LOCATIONS OF PIPING AS SHOWN ON THE DRAWINGS ARE APPROXIMATE AND SUBJECT TO MINOR ADJUSTMENTS IN THE FIELD.

6. SPRINKLER CONTRACTOR TO SUBMIT SHOP DRAWINGS AND HYDRAULIC CALCULATIONS FOR APPROVAL TO THE DESIGNER OF RECORD PRIOR TO BEGINNING WORK.

7. SPRINKLER CONTRACTOR TO OBTAIN NEW FIRE HYDRANT FLOW TEST FOR HYDRAULIC CALCULATIONS PRIOR TO BEGINNING DESIGN WORK.

8. PRIOR TO BEGINNING WORK THE SPRINKLER CONTRACTOR SHALL APPLY FOR AND RECEIVE ALL NECESSARY PERMITS FROM THE AUTHORITY HAVING JURISDICTION.

9. SPRINKLER CONTRACTOR SHALL PROVIDE LOW POINT DRAINS AS REQUIRED AND COORDINATE DISCHARGE WITH OWNER AND LOCATION OF DRAIN PIPING WITH OTHER TRADES.

10. SPRINKLER CONTRACTOR SHALL COORDINATE THE INSTALLATION OF SPRINKLER PIPE WITH ELECTRICAL AND MECHANICAL CONTRACTOR AND PROVIDE ADEQUATE CLEARANCES.

11. ALL COORDINATION BETWEEN TRADES AND OF INTENDED INSTALLATION PROCEDURES SHALL BE COMPLETED AND ALL CONFLICTS RESOLVED PRIOR TO BEGINNING WORK.

12. A SUFFICIENT SAFETY FACTOR HAS BEEN IMPLEMENTED INTO THIS DESIGN. CSCO IS NOT RESPONSIBLE FOR CHANGES IN THE CITY WATER SUPPLY THAT MAY ADVERSELY AFFECT THIS SYSTEM IN THE FUTURE.

13. THE FIRE FLOW TEST INFORMATION HAS BEEN PROVIDED BY NEW HANOVER FIRE MARSHALL OFFICE DATED 6/24/20 INDICATES THE FOLLOWING...

STATIC: 65 PSI
RESIDUAL: 60 PSI
FLOW: 1165 GPM

HEAD LEGEND

SYM	CNT	NAME	METAL	TEMP	K	NPT	ORIF	MFG.	MODEL#	APPRVL	MIN SPACING	MAX SPACING	RESPONSE	ESCUT	SIN.
⚠	8	NEW DRY PENDENTS	CHROME	200	5.60	1/2"	1/2	VIKING	M	UL/FM/ULC/MEA	6'-0"	15'-0"	QUICK RESPONSE	ADJ. STANDARD	VK 178
	23	NEW UPRIGHTS	BRASS	155	5.60	1/2"	1/2	VIKING	M	UL/FM/ULC/MEA	6'-0"	15'-0"	QUICK RESPONSE	N/A	VK 3001
	58	NEW RESIDENTIAL PENDENTS	WHITE	155	5.8	1/2"	1/2	VIKING	VK472	UL/FM/ULC/MEA	8'-0"	18'X18'	QUICK RESPONSE	WHITE PLATE	VK 472
	51	NEW CONCEALED PENDENTS	BRASS	155	5.60	1/2"	1/2	VIKING	M	UL/FM/ULC/MEA	6'-0"	15'-0"	QUICK RESPONSE	WHITE PLATE	VK 462
	465	NEW PENDENTS	WHITE	155	5.60	1/2"	1/2	VIKING	M	UL/FM/ULC/MEA	6'-0"	15'-0"	QUICK RESPONSE	RECESSED	VK 3021
	32	NEW PENDENTS	WHITE	200	5.60	1/2"	1/2	VIKING	M	UL/FM/ULC/MEA	6'-0"	15'-0"	QUICK RESPONSE	RECESSED	VK 3021
TOTAL	637														

SYMBOLS:

- (XXX) DENOTES A HYDRAULIC CALCULATION POINT OF REFERENCE
- DENOTES A HYDRAULIC REMOTE AREA
- DENOTES NEW SPRINKLER PIPE
- DENOTES NEW UNDERGROUND PIPE
- EX WL — DENOTES EXISTING UNDERGROUND PIPE
- DENOTES A WET SYSTEM RISER LOCATION
- DENOTES THE STANDPIPE LOCATION
- [X-X] DENOTES PIPE CENTERLINE ELEVATION AFF
- DENOTES A BUILDING MOUNTED FIRE DEPARTMENT CONNECTION
- DENOTES A CITY 3-OUTLET FIRE HYDRANT
- DENOTES A ROAD WAY GATE VALVE
- DENOTES A CHECK VALVE

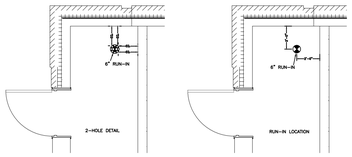

2 FP 1 RUN-IN DETAIL – TYP.
NTS

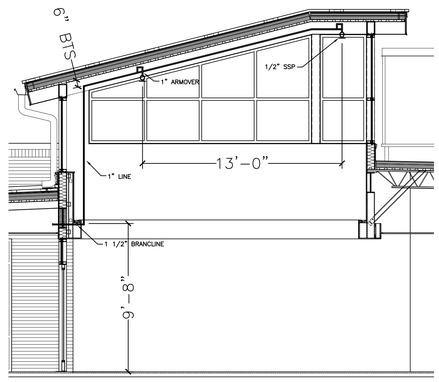

3 FP 1 SECTION DETAIL
NTS

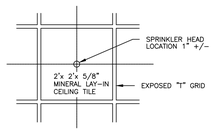

TYP. CENTER OF TILE SPRINKLER HEAD DETAIL
N.T.S.

HANGER INSTALLATION REQUIREMENTS

	MAXIMUM DISTANCE BETWEEN HANGERS								
NOMINAL PIPE SIZE	3/4"	1"	1-1/4"	1-1/2"	2"	2-1/2"	3"	4"	6"
BLAZEMASTER CPVC	5' 6"	6' 0"	6' 6"	7' 0"	8' 0"	9' 0"	10' 0"	N/A	N/A
THREADABLE LIGHTWALL	N/A	12' 0"	12' 0"	12' 0"	12' 0"	12' 0"	12' 0"	N/A	N/A
STEEL PIPE (10/ 40)	N/A	12' 0"	12' 0"	15' 0"	15' 0"	15' 0"	15' 0"	15' 0"	15' 0"

100 PSI STATIC PRESSURE ON SYSTEM REQUIRES UP-LIFT RESTRAINT WITHIN 12 INCHES HORIZONTALLY OF HEAD FOR ARM-OVERS AND END OF BRANCH LINE

THE UNSUPPORTED LENGTH BETWEEN THE END SPRINKLER AND THE LAST HANGER ON THE LINE SHALL NOT EXCEED 36" FOR 1" PIPE, 48" FOR 1 1/4" PIPE AND 60" FOR 1 1/2" PIPE OR LARGER

THE CUMULATIVE HORIZONTAL LENGTH OF AN UNSUPPORTED ARMOVER TO A SPRINKLER, SPRINKLER DROP, OR SPRIG-UP SHALL NOT EXCEED 24"

TRAPEZE INSTALLATION REQUIREMENTS

SPAN OF TRAPEZE (Schedule 10)	NOMINAL PIPE SIZE SUPPORTED							
	1"	1-1/4"	1-1/2"	2"	2-1/2"	3"	4"	6"
1 FT. 6 IN.	1"	1"	1"	1"	1"	1"	1-1/4"	1-1/4"
2 FT. 0 IN.	1"	1"	1"	1-1/4"	1-1/4"	1-1/4"	1-1/4"	1-1/2"
2 FT. 6 IN.	1-1/4"	1-1/4"	1-1/4"	1-1/4"	1-1/4"	1-1/4"	1-1/2"	2"
3 FT. 0 IN.	1-1/4"	1-1/4"	1-1/4"	1-1/4"	1-1/2"	1-1/2"	1-1/2"	2"
4 FT. 0 IN.	1-1/2"	1-1/2"	1-1/2"	1-1/2"	2"	2"	2"	2-1/2"
5 FT. 0 IN.	2"	2"	2"	2"	2"	2"	2-1/2"	2-1/2"
6 FT. 0 IN.	2"	2"	2"	2"	2"	2-1/2"	2-1/2"	3"
7 FT. 0 IN.	2"	2"	2"	2-1/2"	2-1/2"	2-1/2"	2-1/2"	3"
8 FT. 0 IN.	2-1/2"	2-1/2"	2-1/2"	2-1/2"	2-1/2"	2-1/2"	2-1/2"	3"
9 FT. 0 IN.	2-1/2"	2-1/2"	2-1/2"	2-1/2"	2-1/2"	2-1/2"	3"	4"
10 FT. 0 IN.	2-1/2"	2-1/2"	2-1/2"	2-1/2"	2-1/2"	3"	3"	4"

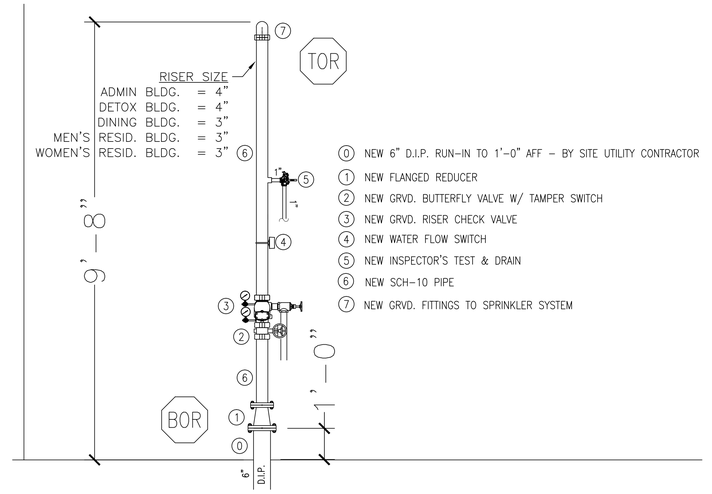

1 FP 1 NEW RISER DETAIL – TYP.
1/2" = 1'-0"

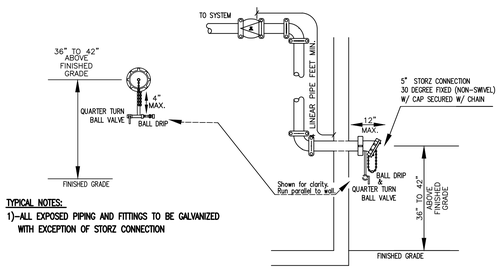

TYPICAL NOTES:
1)-ALL EXPOSED PIPING AND FITTINGS TO BE GALVANIZED WITH EXCEPTION OF STORZ CONNECTION

FLUSH FDC DETAIL

TYP. RETURN BEND DETAIL
N.T.S.

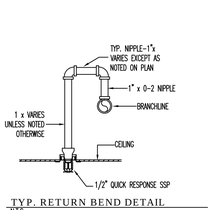

TYP. RETURN BEND DETAIL
N.T.S.

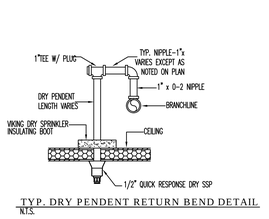

TYP. DRY PENDENT RETURN BEND DETAIL
N.T.S.

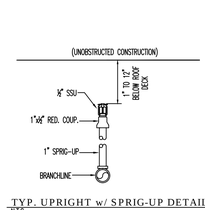

TYP. UPRIGHT w/ SPRIG-UP DETAIL
N.T.S.

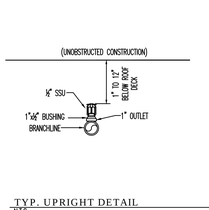

TYP. UPRIGHT DETAIL
N.T.S.

Sprinkler Design Data

Project Name: THE HEALING PLACE OF NEW HANOVER COUNTY		System: –	
Project Street Address: 1000 MEDICAL CENTER DRIVE		Sys. Sq. Ft.: –	
Suite: –	Floor#: –	Ceiling Height: VARIES	
Designed By: CRAWFORD SPRINKLER	Phone: 919-828-9346	Total Bldg. Hgt.: N/A	
Occupancy: VARIES	Hazard: VARIES		

Design Summary

	System #1	System #2	System #3	System #4	System #5
Design Method	CALCULATED	CALCULATED	CALCULATED	CALCULATED	CALCULATED
Design Area #	REMOTE AREA #1	REMOTE AREA #2	REMOTE AREA #3	REMOTE AREA #1	REMOTE AREA #1
Location	ADMIN. BUILDING	ADMIN. BUILDING	ADMIN. BUILDING	DINING BUILDING	DETOX BUILDING
Type of System	WET	WET	WET	WET	WET
Hazard Class	LIGHT	LIGHT	LIGHT	ORD. HAZ. GRP. I	LIGHT
Criteria From	NFPA 13 (2013)	NFPA 13 (2013)	NFPA 13 (2013)	NFPA 13 (2013)	NFPA 13 (2013)
Design Area	1500 SF	1500 SF	1500 SF	1500 SF	1500 SF
Sprinkler Spacing	225 SF	225 SF	225 SF	130 SF	225 SF
Density	.10	.10	.10	.15	.10
K-factor	5.6	5.6	5.6	5.6	5.6
Hose Allowance	100 GPM	100 GPM	100 GPM	250 GPM	100 GPM
# Design Sprinklers	12	16	21	20	16
Special Application Spk.	–	–	–	–	–
Requirement ❶ BASE					
G.P.M. Req'd	192.85	308.19	448.24	337.02	360.47
P.S.I. Req'd	38.846	30.566	38.567	21.056	31.530
Requirement ❷ TEST					
GPM Required	292.855	408.191	548.240	587.021	360.465
PSI Required	50.022	42.995	53.131	37.043	44.104
Safety factor ❷ TEST	14.589	21.287	10.629	26.550	20.325
Dry Sys. Volume (gal)	–	–	–	–	–

	System #6	System #7	System #8	System #9	System #10
Design Method	CALCULATED	CALCULATED	CALCULATED	CALCULATED	CALCULATED
Design Area #	REMOTE AREA #1	REMOTE AREA #2	REMOTE AREA #1	REMOTE AREA #2	REMOTE AREA #3
Location	MEN'S RES. BLDG	MEN'S RES. BLDG	WOMEN'S RES. BLDG	WOMEN'S RES. BLDG	WOMEN'S RES. BLDG
Type of System	WET	WET	WET	WET	WET
Hazard Class	ORD. HAZ. GRP. I	LIGHT	ORD. HAZ. GRP. I	LIGHT	RESIDENTIAL
Criteria From	NFPA 13 (2013)	NFPA 13 (2013)	NFPA 13R (2013)	NFPA 13R (2013)	NFPA 13R (2013)
Design Area	3 HEAD – LAUNDRY	5 HEAD – COR.	3 HEAD – LAUNDRY	4 HEAD – CORR.	3 HEAD – UNIT
Sprinkler Spacing	130 SF	225 SF	130 SF	225 SF	225 SF
Density	.15	.10	.15	.05	.05
K-factor	5.6	5.6	5.6	5.6	5.8
Hose Allowance	250 GPM	100 GPM	250 GPM	100 GPM	100 GPM
# Design Sprinklers	3 HEAD	5 HEAD – COR.	3 HEAD	4 HEAD – CORR.	3 HEAD – UNIT
Special Application Spk.	–	–	–	–	–
Requirement ❶ BASE					
G.P.M. Req'd	44.95	90.93	44.95	90.93	51.49
P.S.I. Req'd	14.910	23.190	14.910	23.190	13.119
Requirement ❷ TEST					
GPM Required	294.953	190.925	294.953	190.925	151.487
PSI Required	21.584	33.912	21.584	33.912	23.621
Safety factor ❷ TEST	43.022	30.912	43.022	30.912	41.264
Dry Sys. Volume (gal)	–	–	–	–	–

Water Supply Information

Tested by	CRAWFORD SPRINKLER	Date/Time	6/24/2020	Pressure Hydrant	–
Hydrant Elevation	1'	Flow Hydrant # 1	–	Flow Hydrant #2	–
Static (PSI)	65 PSI	Residiual (PSI)	60 PSI	Flow (gpm)	1165 GPM
Copy of Water Test Data Included with Calculation is required					

CAJ 1154

System No. C-AJ-1154

Classified by Underwriters Laboratories, Inc. to UL 1479 and CAN/ULC-S115

ANSI/UL1479 (ASTM E814)	CAN/ULC S115
F Rating - 3 Hr	F Rating - 3 Hr
T Rating -1/4 Hr	FT Rating - 1/4 Hr
L Rating At Ambient - Less Than 1 CFM/sq ft	FH Rating - 3 Hr
L Rating At 400 F - 4 CFM/sq ft	FTH Rating - 1/4 Hr
	L Rating At Ambient - Less Than 1 CFM/sq ft
	L Rating At 400 F - 4 CFM/sq ft

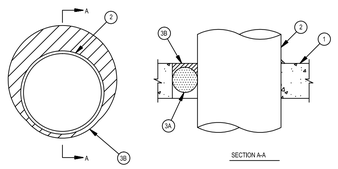

1. Floor or Wall Assembly - Min 4-1/2 in. (114 mm) thick reinforced lightweight or normal weight (100-150 pcf or 1600-2400 kg/m3) concrete. Wall may also be constructed of any UL Classified Concrete Blocks*. Max diam of opening is 14 in. (356 mm). See Concrete Blocks (CAZT) category in the Fire Resistance Directory for names of manufacturers.
2. Through-Penetrants - One metallic pipe, conduit or tubing to installed either concentrically or eccentrically within the firestop system. The annular space shall be min 0 in. to max 3-1/4 in. (83 mm). Pipe, conduit or tubing to be rigidly supported on both sides of wall assembly. The following types and sizes of metallic pipes, conduits or tubing may be used:
   A. Steel Pipe - Nom 10 in. (254 mm) diam (or smaller) Schedule 10 (or heavier) steel pipe.
   B. Conduit - Nom 4 in. (254 mm) diam (or smaller) steel electrical metallic tubing or steel conduit.
   C. Copper Tubing - Nom 4 in. (102 mm) diam (or smaller) Type L (or heavier) copper tubing.
   D. Copper Pipe - Nom 4 in. (102 mm) diam (or smaller) Regular (or heavier) copper pipe.
3. Firestop System - The firestop system shall consist of the following:
   A. Packing Material - Mineral wool batt insulation firmly packed into opening as a permanent form. Packing material to be recessed from top surface of floor or from both surfaces of wall to accommodate the required thickness of fill material. As an option to the above, backer rod and/or foamed plastic backer material may be used.
   B. Fill, Void or Cavity Material* - Sealant - Min 1/2 in. (13 mm) thickness of fill material applied within the annulus, flush with top surface of floor or with both surfaces of wall. At the point contact location between pipe and concrete, a min 1/2 in. (13 mm) diam bead of fill material shall be applied at the concrete/pipe interface on the top surface of floor and on both surfaces of wall.
   HILTI CONSTRUCTION CHEMICALS, DIV OF HILTI INC - FS ONE Sealant or FS ONE MAX Intumescent Sealant

* Indicates such products shall bear the UL or cUL Certification Mark for jurisdictions employing the UL or cUL Certification (such as Canada), respectively.

HILTI Hilti Firestop Systems

Reproduced by HILTI, Inc. Courtesy of Underwriters Laboratories, Inc. January 06, 2015

WL 1054

System No. W-L-1054

Classified by Underwriters Laboratories, Inc. to UL 1479 and CAN/ULC-S115

ANSI/UL1479 (ASTM E814)	CAN/ULC S115
F Ratings - 1 and 2 Hr (See Items 1 and 3)	F Ratings - 1 and 2 Hr (See Items 1 and 3)
T Rating - 0 Hr	FT Rating - 0 Hr
L Rating at Ambient - Less Than 1 CFM/sq ft	FH Ratings - 1 and 2 Hr (See Items 1 and 3)
L Rating at 400 F - Less Than 1 CFM/sq ft	FTH Rating - 0 Hr
	L Rating at Ambient - Less Than 1 CFM/sq ft
	L Rating at 400 F - Less Than 1 CFM/sq ft

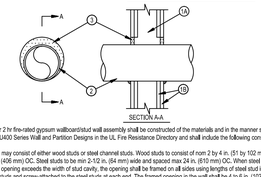

1. Wall Assembly - The 1 or 2 hr fire-rated gypsum wallboard/stud wall assembly shall be constructed of the materials and in the manner specified in the individual U300 or U400 Series Wall and Partition Designs in the UL Fire Resistance Directory and shall include the following construction features:
   A. Studs - Wall framing may consist of either wood studs or steel channel studs. Wood studs to consist of nom 2 by 4 in. (51 by 102 mm) lumber spaced 16 in. (406 mm) OC. Steel studs to be min 2-1/2 in. (64 mm) wide and spaced max 24 in. (610 mm) OC. When steel studs are used and the diam of opening exceeds the width of stud cavity, the opening shall be framed on all sides using lengths of steel stud installed between the vertical studs and screw-attached to the steel studs at each end. The framed opening in the wall shall be 4 to 6 in. (102 to 152 mm) wider and 4 to 6 in. (102 to 152 mm) higher than the diam of the penetrating item such that, when the penetrating item is installed in the opening, a 2 to 3 in. (51 to 76 mm) clearance is present between the penetrating item and the framing on all four sides.
   B. Gypsum Board* - 5/8 in. (16 mm) thick, 4 ft (122 cm) wide with square or tapered edges. The gypsum board type, thickness, number of layers, fastener type and sheet orientation shall be as specified in the individual U300 or U400 Series Design in the UL Fire Resistance Directory. Max diam of opening is 32-1/4 in. (819 mm) for steel stud walls. Max diam of opening is 14-1/2 in. (368 mm) for wood stud walls. The F and FH Ratings of the firestop system are equal to the fire rating of the wall assembly.
2. Through-Penetrants - One metallic pipe, conduit or tubing to be installed either concentrically or eccentrically within the firestop system. The annular space shall be min 0 in. to max 2-1/4 in. (57 mm). Pipe may be installed with continuous point contact. Pipe, conduit or tubing to be rigidly supported on both sides of wall assembly. The following types and sizes of metallic pipes, conduits or tubing may be used:
   A. Steel Pipe - Nom 30 in. (762 mm) diam (or smaller) Schedule 10 (or heavier) steel pipe.
   B. Iron Pipe - Nom 30 in. (762 mm) diam (or smaller) cast or ductile iron pipe.
   C. Conduit - Nom 4 in. (102 mm) diam (or smaller) steel electrical metallic tubing or 6 in. (152 mm) , diam steel conduit.
   D. Copper Tubing - Nom 6 in. (152 mm) diam (or smaller) Type L (or heavier) copper tubing.
   E. Copper Pipe - Nom 6 in. (152 mm) diam (or smaller) regular (or heavier) copper pipe.
3. Fill, Void or Cavity Material* - Sealant - Min 5/8 in. (16 mm) thickness of fill material applied within the annulus, flush with both surfaces of wall. At the point or continuous contact locations between pipe and wall, a min 1/2 in. (13 mm) diam bead of fill material shall be applied at the pipe wall interface on both surfaces of wall.
   HILTI CONSTRUCTION CHEMICALS, DIV OF HILTI INC - FS-ONE Sealant or FS-ONE MAX Intumescent Sealant

* Indicates such products shall bear the UL or cUL Certification Mark for jurisdictions employing the UL or cUL Certification (such as Canada), respectively.

HILTI Hilti Firestop Systems

Reproduced by HILTI, Inc. Courtesy of Underwriters Laboratories, Inc. October 14, 2015

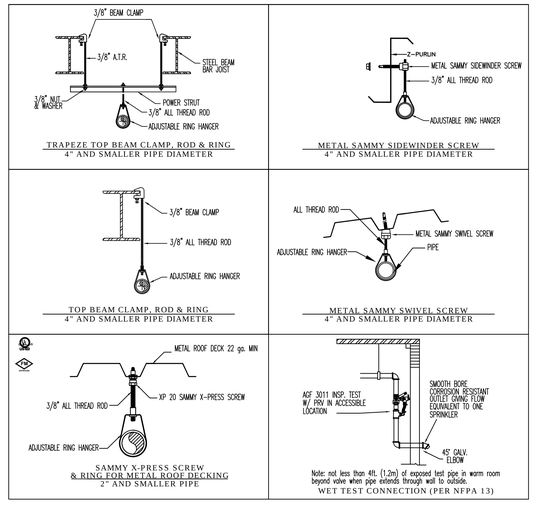

NICET CERTIFIED
NICET#107492
WATER BASED SYSTEMS LAYOUT LEVEL III
BRIAN THOMAS CRAWFORD
N.C License No. 29772 FS-I

Important: In locations subject to freezing conditions, it is the owner's responsibility to provide adequate heat throughout wet pipe sprinkler system areas and enclosures for dry-pipe, deluge and other types of valves controlling water supplies to sprinkler systems

By Others	By CSCO	Item
X		City Water Connection
X		Valve House or Pit
	N/A	Connection to Plant Air
	N/A	Air Compressor
	N/A	Air Maintenance Device
X		Electric Alarm
X		Electric Wire
X		Hose Cabinet and Equip
X		Painting
X		Sleeves
X		Cutting Hole and Patch
	N/A	Trench and Backfill
	N/A	Repaving
X		Underground Piping

This drawing and the information hereon is the property of Crawford Sprinkler Company of Raleigh, and may not be reproduced, altered or used in any form without consent from Crawford Sprinkler Company of Raleigh.

Crawford SPRINKLER CO. OF RALEIGH, INC
2725 S. SAUNDERS STREET-RALEIGH, NC 27603 • PO BOX 26207-RALEIGH, NC 27611
PHONE 919-828-9346 • FAX 919-839-8164

THE HEALING PLACE OF NEW HANOVER COUNTY
NOTES AND DETAILS
1000 MEDICAL CENTER DRIVE
WILMINGTON, NORTH CAROLINA

UNDERWRITERS:
INDEX NO.
REVISIONS:
⚠ MCD #1 - 12/2/2020

DESIGN CRITERIA

SYSTEM TYPE	Wet
SYSTEM DESIGN	Calculated
DESIGN DENSITY	VARIES
MAX HEAD CVRG	VARIES
HOSE ALLOWANCE	VARIES
DRAWN BY: DJM	DATE: 12/2/2020
CHECK BY:	DATE:
SCALE: AS NOTED	
CONTRACT NO: JIB1208	
FILE NO:	
DWG. NO: FP1 OF 12	

12/2/2020

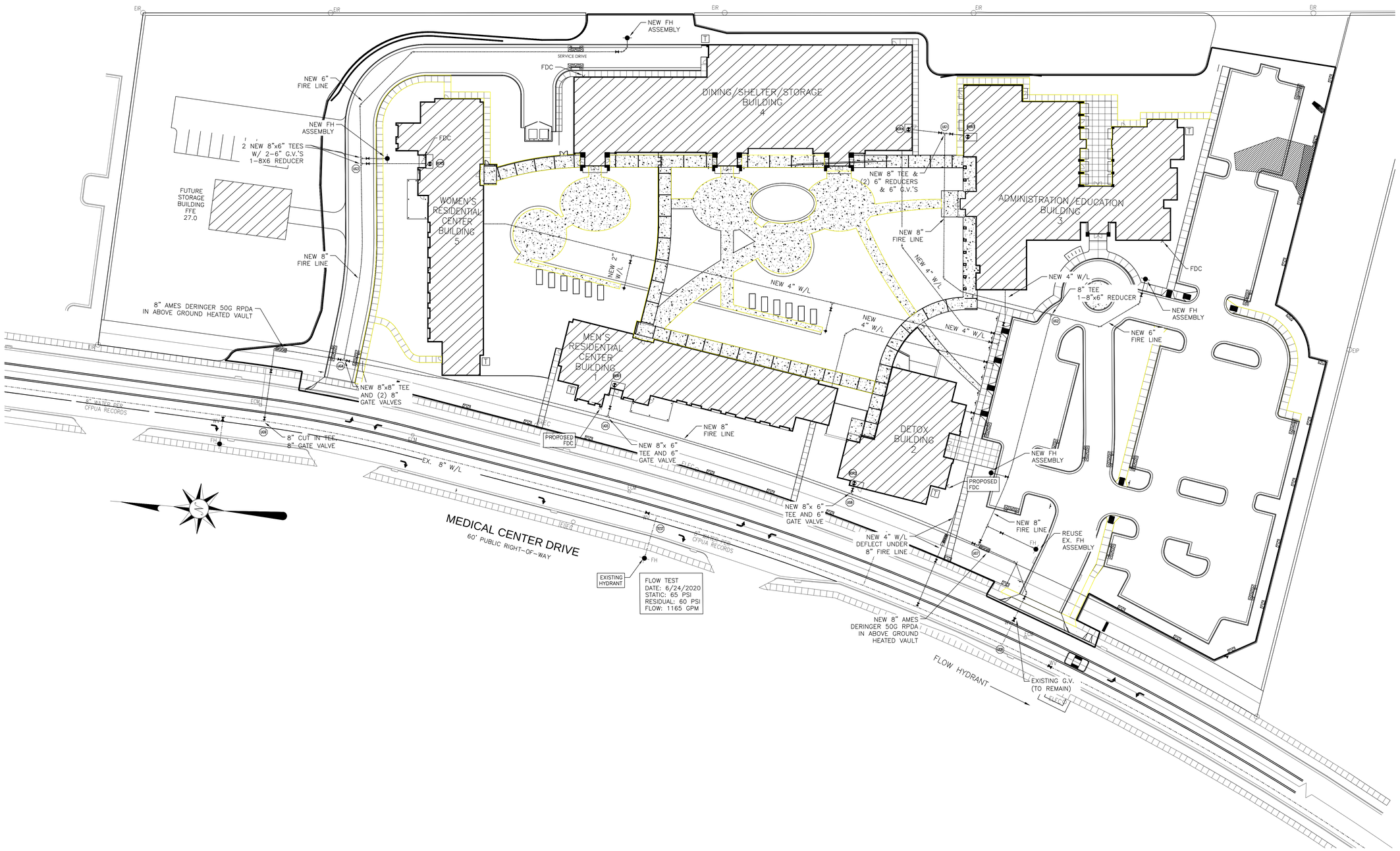

1 FP 2 SITE UTILITY PLAN
1/32"=1'-0"

Important: In locations subject to freezing conditions, it is the owner's responsibility to provide adequate heat throughout wet pipe sprinkler system areas and enclosures for dry-pipe, deluge and other types of valves controlling water supplies to sprinkler systems

By Others	By CSCO	Item
X		City Water Connection
X		Valve House or Pit
	N/A	Connection to Plant Air
	N/A	Air Compressor
	N/A	Air Maintenance Device
X		Electric Alarm
X		Electric Wire
X		Hose Cabinet and Equip
X		Painting
X		Sleeves
X		Cutting Hole and Patch
	N/A	Trench and Backfill
	N/A	Repaving
X		Underground Piping

This drawing and the information hereon is the property of Crawford Sprinkler Company of Raleigh, and may not be reproduced, altered or used in any form without consent from Crawford Sprinkler Company of Raleigh.

Crawford SPRINKLER CO. OF RALEIGH, INC.
2725 S. SAUNDERS STREET-RALEIGH, NC 27603 • PO BOX 26207-RALEIGH, NC 27611
PHONE 919-828-9346 • FAX 919-839-8164

THE HEALING PLACE OF NEW HANOVER COUNTY
SITE UTILITY PLAN
1000 MEDICAL CENTER DRIVE
WILMINGTON, NORTH CAROLINA

UNDERWRITERS:
INDEX NO.
REVISIONS:
1 MCD #1 - 12/2/2020

DESIGN CRITERIA

SYSTEM TYPE	Wet
SYSTEM DESIGN	Calculated
DESIGN DENSITY	VARIES
MAX HEAD CVRG	VARIES
HOSE ALLOWANCE	VARIES

DRAWN BY: DJM DATE: 12/2/2020
CHECK BY: DATE:
SCALE: AS NOTED

CONTRACT NO: J1181208
FILE NO:

DWG. NO: FP 2 OF 12

NICET CERTIFIED
NICET#107492
WATER BASED SYSTEMS
LAYOUT LEVEL III
BRIAN THOMAS CRAWFORD

11/25/2020
N.C License No. 29772 FS-I

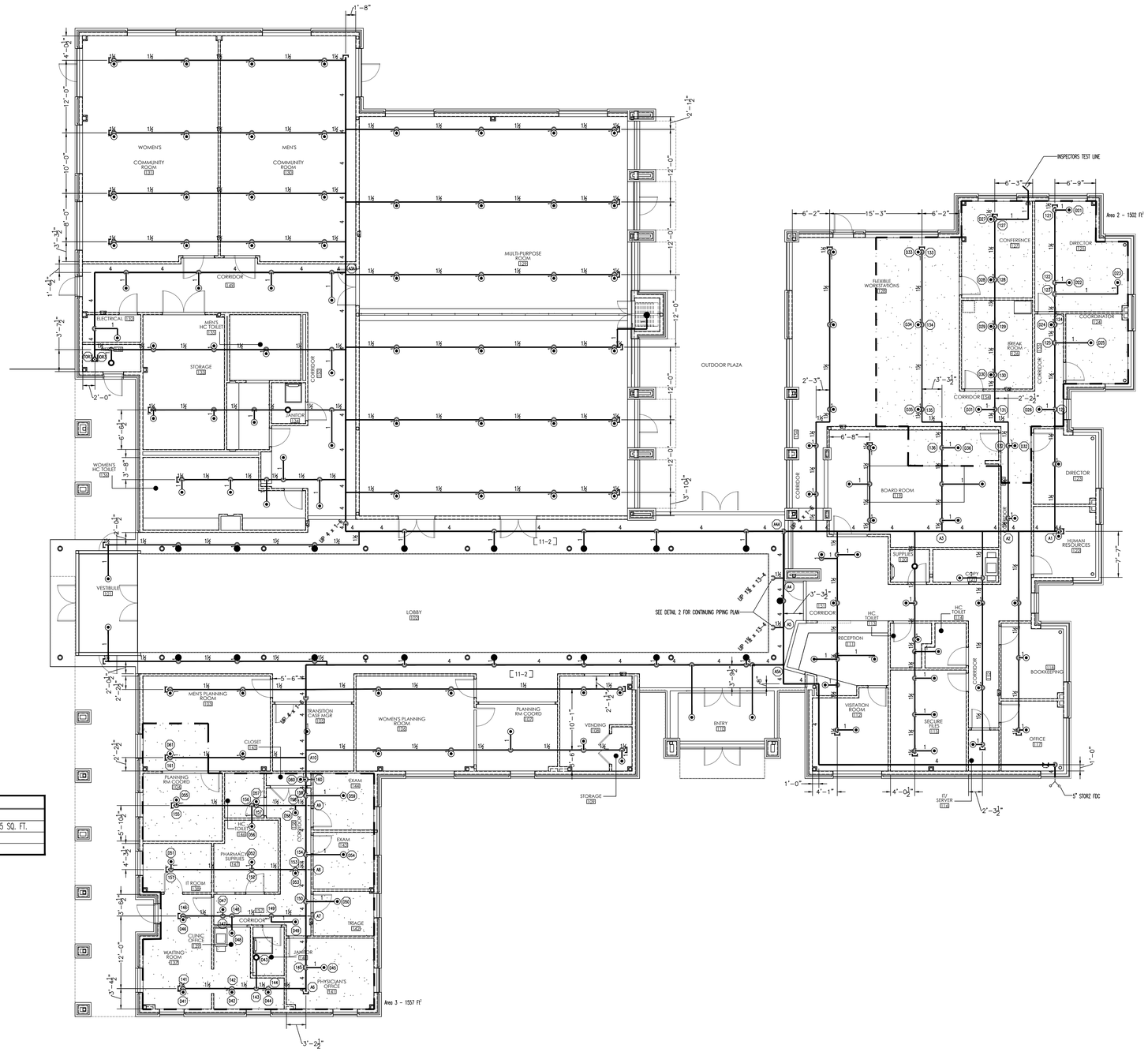

HYDRAULIC DESIGN CRITERIA		
AREA NUMBER: 2	CODE REF.: NFPA 13	HAZARD: LIGHT HAZARD
REMOTE AREA: 1500 SQFT	DENSITY: .10 GPM	AREA PER SPRINKLER: 225 SQ. FT.
SYSTEM TYPE: WET	INSIDE HOSE: 0	OUTSIDE HOSE: 100 GPM
TOTAL SYS. DEMAND: 408.191	PSI: 42.995	SAFETY MARGIN: 21.287

HYDRAULIC DESIGN CRITERIA		
AREA NUMBER: 3	CODE REF.: NFPA 13	HAZARD: LIGHT HAZARD
REMOTE AREA: 1500 SQFT	DENSITY: .10 GPM	AREA PER SPRINKLER: 225 SQ. FT.
SYSTEM TYPE: WET	INSIDE HOSE: 0	OUTSIDE HOSE: 100 GPM
TOTAL SYS. DEMAND: 548.240	PSI: 53.131	SAFETY MARGIN: 10.629

1 FP 5 ADMIN. BUILDING – PIPING PLAN
1/8" = 1'-0"

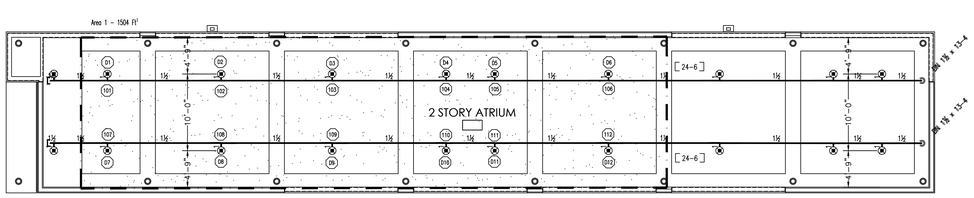

HYDRAULIC DESIGN CRITERIA		
AREA NUMBER: 1	CODE REF.: NFPA 13	HAZARD: LIGHT HAZARD
REMOTE AREA: 1500 SQFT	DENSITY: .10 GPM	AREA PER SPRINKLER: 225 SQ. FT.
SYSTEM TYPE: WET	INSIDE HOSE: 0	OUTSIDE HOSE: 100 GPM
TOTAL SYS. DEMAND: 292.855	PSI: 50.022	SAFETY MARGIN: 14.589

2 FP 3 ADMIN. BUILDING – ATRIUM PIPING
1/8" = 1'-0"

HEAD LEGEND

SYM	CNT	NAME	METAL	TEMP	K	NPT	ORIF	MFG.	MODEL#	APPRVL	MIN SPACING	MAX SPACING	RESPONSE	ESCUT	SIN.
▲	8	NEW DRY PENDENTS	CHROME	200	5.60	1/2"	1/2	VIKING	M	UL/FM/ULC/MEA	6'-0"	15'-0"	QUICK RESPONSE	ADJ. STANDARD	VK 178
○	23	NEW UPRIGHTS	BRASS	155	5.60	1/2"	1/2	VIKING	M	UL/FM/ULC/MEA	6'-0"	15'-0"	QUICK RESPONSE	N/A	VK 3001
◐	58	NEW RESIDENTIAL PENDENTS	WHITE	155	5.8	1/2"	1/2	VIKING	VK472	UL/FM/ULC/MEA	8'-0"	18'X18'	QUICK RESPONSE	WHITE PLATE	VK 472
●	51	NEW CONCEALED PENDENTS	BRASS	155	5.60	1/2"	1/2	VIKING	M	UL/FM/ULC/MEA	6'-0"	15'-0"	QUICK RESPONSE	WHITE PLATE	VK 462
◉	465	NEW PENDENTS	WHITE	155	5.60	1/2"	1/2	VIKING	M	UL/FM/ULC/MEA	6'-0"	15'-0"	QUICK RESPONSE	RECESSED	VK 3021
⊗	32	NEW PENDENTS	WHITE	200	5.60	1/2"	1/2	VIKING	M	UL/FM/ULC/MEA	6'-0"	15'-0"	QUICK RESPONSE	RECESSED	VK 3021
TOTAL	637														

NOTE

1. ALL PIPE ELEVATIONS ARE 9'-8" AFF UNLESS OTHERWISE SPECIFIED.

Important: In locations subject to freezing conditions, it is the owner's responsibility to provide adequate heat throughout wet pipe sprinkler system areas and enclosures for dry-pipe, deluge and other types of valves controlling water supplies to sprinkler systems

By Others	By CSCO	Item
X		City Water Connection
X		Valve House or Pit
	N/A	Connection to Plant Air
	N/A	Air Compressor
	N/A	Air Maintenance Device
X		Electric Alarm
X		Electric Wire
X		Hose Cabinet and Equip
X		Painting
X		Sleeves
X		Cutting Hole and Patch
	N/A	Trench and Backfill
	N/A	Repaving
X		Underground Piping

This drawing and the information hereon is the property of Crawford Sprinkler Company of Raleigh, and may not be reproduced, altered or used in any form without consent from Crawford Sprinkler Company of Raleigh.

Crawford SPRINKLER CO. OF RALEIGH, INC
2725 S. SAUNDERS STREET-RALEIGH, NC 27603 • PO BOX 26207-RALEIGH, NC 27611
PHONE 919-828-9346 • FAX 919-839-8164

THE HEALING PLACE OF NEW HANOVER COUNTY
ADMIN. BUILDING - PIPING PLAN
1000 MEDICAL CENTER DRIVE
WILMINGTON, NORTH CAROLINA

UNDERWRITERS:
INDEX NO.
REVISIONS:
△ MCD #1 - 12/2/2020

DESIGN CRITERIA

SYSTEM TYPE	Wet
SYSTEM DESIGN	Calculated
DESIGN DENSITY	VARIES
MAX HEAD CVRG	VARIES
HOSE ALLOWANCE	VARIES
DRAWN BY: DJM	DATE: 12/2/2020
CHECK BY:	DATE:
SCALE: AS NOTED	
CONTRACT NO: JIB1238	
FILE NO:	
DWG. NO: FP 3 OF 12	

NICET CERTIFIED
NICET#107492
WATER BASED SYSTEMS
LAYOUT LEVEL III
BRIAN THOMAS CRAWFORD
11/25/2020

N.C License No. 29772 FS-I

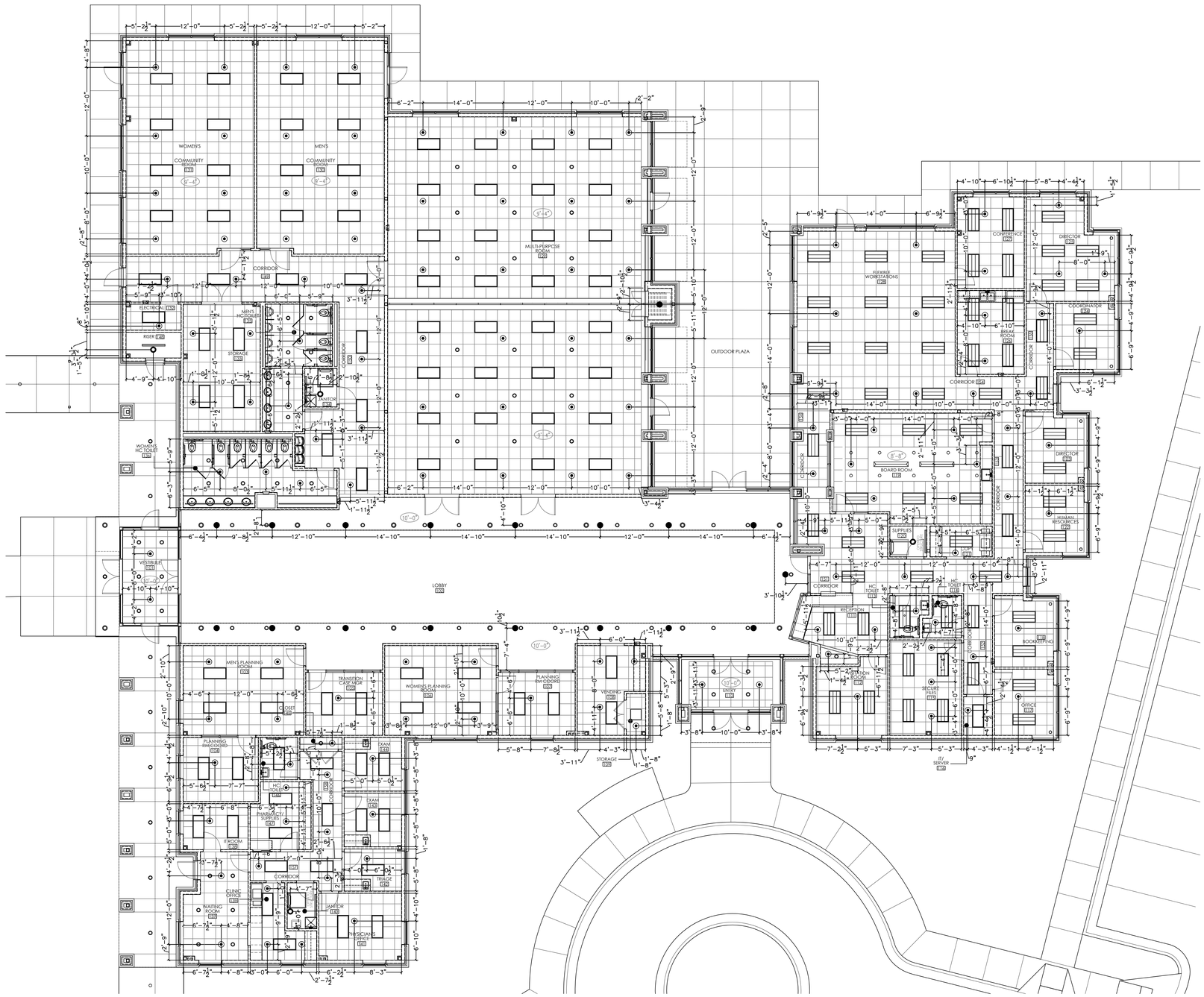

1 FP 4 ADMIN. BUILDING – RCP
1/8" = 1'-0"

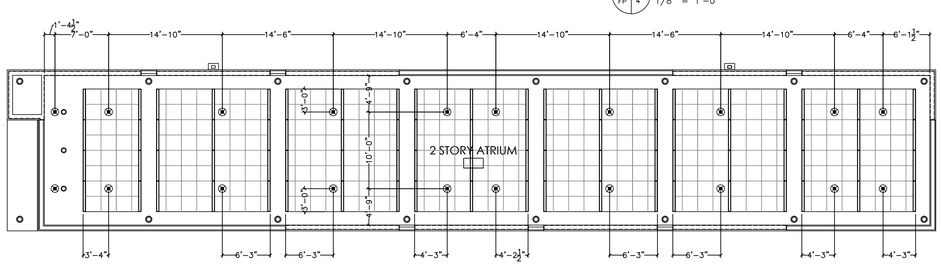

2 FP 4 ADMIN. BUILDING – ATRIUM RCP
1/8" = 1'-0"

HEAD LEGEND

SYM	CNT	NAME	METAL	TEMP	K	NPT	ORIF	MFG.	MODEL#	APPROVL	MIN SPACING	MAX SPACING	RESPONSE	ESCUT	SIN.
⊕	8	NEW DRY PENDENTS	CHROME	200	5.60	1/2"	1/2	VIKING	M	UL/FM/ULC/MEA	6'-0"	15'-0"	QUICK RESPONSE	ADJ. STANDARD	VK 178
○	23	NEW UPRIGHTS	BRASS	155	5.60	1/2"	1/2	VIKING	M	UL/FM/ULC/MEA	6'-0"	15'-0"	QUICK RESPONSE	N/A	VK 3001
◐	58	NEW RESIDENTIAL PENDENTS	WHITE	155	5.8	1/2"	1/2	VIKING	VK472	UL/FM/ULC/MEA	8'-0"	18'X18'	QUICK RESPONSE	WHITE PLATE	VK 472
●	51	NEW CONCEALED PENDENTS	BRASS	155	5.60	1/2"	1/2	VIKING	M	UL/FM/ULC/MEA	6'-0"	15'-0"	QUICK RESPONSE	WHITE PLATE	VK 462
⊙	465	NEW PENDENTS	WHITE	155	5.60	1/2"	1/2	VIKING	M	UL/FM/ULC/MEA	6'-0"	15'-0"	QUICK RESPONSE	RECESSED	VK 3021
⊗	32	NEW PENDENTS	WHITE	200	5.60	1/2"	1/2	VIKING	M	UL/FM/ULC/MEA	6'-0"	15'-0"	QUICK RESPONSE	RECESSED	VK 3021
TOTAL	637														

1

NOTE

1. ALL CEILING HEIGHTS ARE 9'-0" AFF UNLESS OTHERWISE SPECIFIED.

NICET#107492
WATER BASED SYSTEMS
LAYOUT LEVEL III
BRIAN THOMAS CRAWFORD

Important: In locations subject to freezing conditions, it is the owner's responsibility to provide adequate heat throughout wet pipe sprinkler system areas and enclosures for dry-pipe, deluge and other types of valves controlling water supplies to sprinkler systems

By Others	By CSCO	Item
X		City Water Connection
X		Valve House or Pit
	N/A	Connection to Plant Air
	N/A	Air Compressor
	N/A	Air Maintenance Device
X		Electric Alarm
X		Electric Wire
X		Hose Cabinet and Equip
X		Painting
X		Sleeves
X		Cutting Hole and Patch
	N/A	Trench and Backfill
	N/A	Repaving
X		Underground Piping

This drawing and the information hereon is the property of Crawford Sprinkler Company of Raleigh, and may not be reproduced, altered or used in any form without consent from Crawford Sprinkler Company of Raleigh.

Crawford SPRINKLER CO.
OF RALEIGH, INC.
2725 S. SAUNDERS STREET–RALEIGH, NC 27603 • PO BOX 26307–RALEIGH, NC 27611
PHONE 919-828-9346 • FAX 919-839-8164

THE HEALING PLACE OF NEW HANOVER COUNTY
ADMIN. BUILDING – RCP
1000 MEDICAL CENTER DRIVE
WILMINGTON, NORTH CAROLINA

UNDERWRITERS:
INDEX NO.
REVISIONS:

1 MCD #1 – 12/2/2020

DESIGN CRITERIA

SYSTEM TYPE	Wet
SYSTEM DESIGN	Calculated
DESIGN DENSITY	VARIES
MAX HEAD CVRG	VARIES
HOSE ALLOWANCE	VARIES

DRAWN BY: DJM DATE: 12/2/2020
CHECK BY: DATE:
SCALE: AS NOTED

CONTRACT NO: J181238
FILE NO:
DWG. NO: FP 4 OF 12

Brian Crawford 11/25/2020

N.C License No. 29772 FS-I

HYDRAULIC DESIGN CRITERIA		
AREA NUMBER: 1	CODE REF.: NFPA 13	HAZARD: ORDINARY HAZARD (GROUP 1)
REMOTE AREA: 1500 SQFT	DENSITY: .15 GPM	AREA PER SPRINKLER: 130 SQ. FT.
SYSTEM TYPE: WET	INSIDE HOSE: 0	OUTSIDE HOSE: 250 GPM
TOTAL SYS. DEMAND: 587.021	PSI: 37.043	SAFETY MARGIN: 26.550

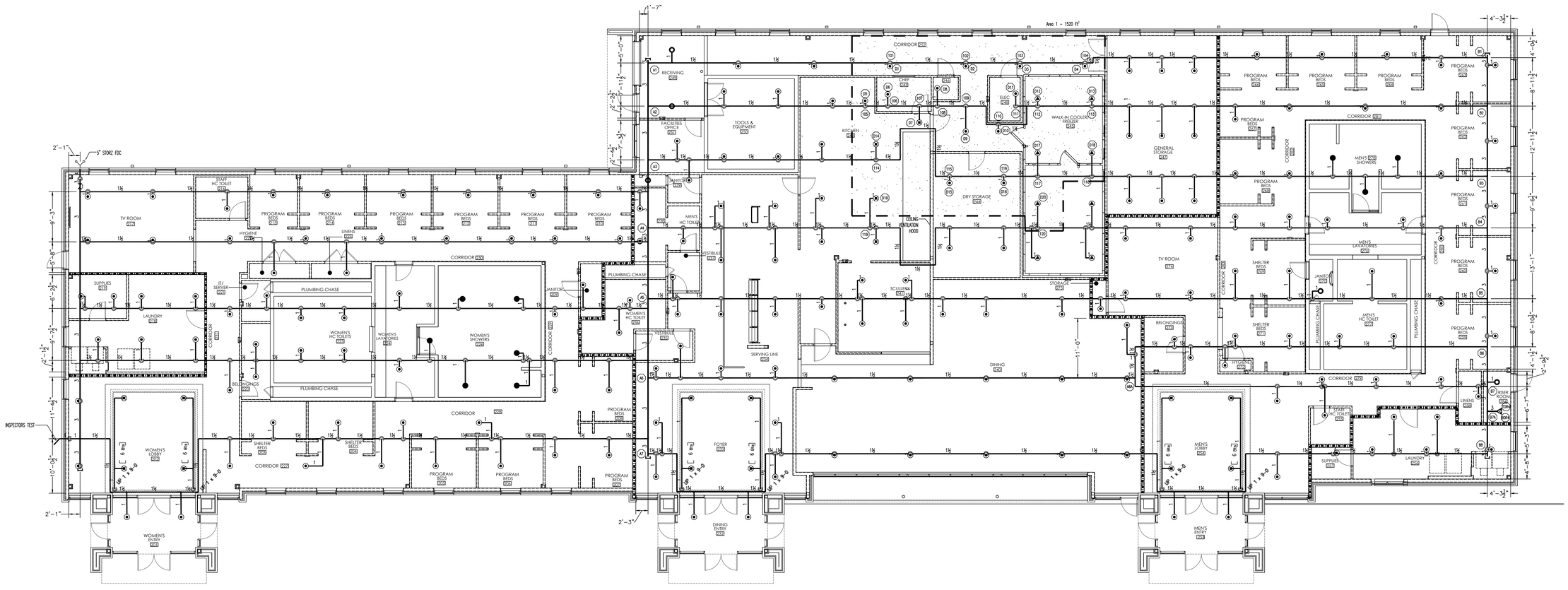

1 FP 5 DINING, SHELTER & STORAGE BUILDING – PIPING PLAN
1/8" = 1'-0"

HEAD LEGEND

SYM	CNT	NAME	METAL	TEMP	K	NPT	ORIF	MFG.	MODEL#	APPRVL	MIN SPACING	MAX SPACING	RESPONSE	ESCUT	SIN
A	8	NEW DRY PENDENTS	CHROME	200	5.60	1/2"	1/2	VIKING	M	UL/FM/ULC/MEA	6'-0"	15'-0"	QUICK RESPONSE	ADJ. STANDARD	VK 178
O	23	NEW UPRIGHTS	BRASS	155	5.60	1/2"	1/2	VIKING	M	UL/FM/ULC/MEA	6'-0"	15'-0"	QUICK RESPONSE	N/A	VK 3001
C	58	NEW RESIDENTIAL PENDENTS	WHITE	155	5.8	1/2"	1/2	VIKING	VK472	UL/FM/ULC/MEA	8'-0"	18'X18'	QUICK RESPONSE	WHITE PLATE	VK 472
●	51	NEW CONCEALED PENDENTS	BRASS	155	5.60	1/2"	1/2	VIKING	M	UL/FM/ULC/MEA	6'-0"	15'-0"	QUICK RESPONSE	WHITE PLATE	VK 462
⊙	465	NEW PENDENTS	WHITE	155	5.60	1/2"	1/2	VIKING	M	UL/FM/ULC/MEA	6'-0"	15'-0"	QUICK RESPONSE	RECESSED	VK 3021
⊗	32	NEW PENDENTS	WHITE	200	5.60	1/2"	1/2	VIKING	M	UL/FM/ULC/MEA	6'-0"	15'-0"	QUICK RESPONSE	RECESSED	VK 3021
TOTAL	637														

1

NOTE

1. ALL PIPE ELEVATIONS ARE 9'-8" AFF UNLESS OTHERWISE SPECIFIED.

Important: In locations subject to freezing conditions, it is the owner's responsibility to provide adequate heat throughout wet pipe sprinkler system areas and enclosures for dry-pipe, deluge and other types of valves controlling water supplies to sprinkler systems

By Others	By CSCO	Item
X		City Water Connection
X		Valve House or Pit
	N/A	Connection to Plant Air
	N/A	Air Compressor
	N/A	Air Maintenance Device
X		Electric Alarm
X		Electric Wire
X		Hose Cabinet and Equip
X		Painting
X		Sleeves
X		Cutting Hole and Patch
	N/A	Trench and Backfill
	N/A	Repaving
X		Underground Piping

This drawing and the information hereon is the property of Crawford Sprinkler Company of Raleigh, and may not be reproduced, altered or used in any form without consent from Crawford Sprinkler Company of Raleigh.

Crawford SPRINKLER CO.
OF RALEIGH, INC
2725 S. SAUNDERS STREET-RALEIGH, NC 27603 • PO BOX 26207-RALEIGH, NC 27611
PHONE 919-828-8346 • FAX 919-839-8164

THE HEALING PLACE OF NEW HANOVER COUNTY
DINING, SHELTER & STORAGE BUILDING – PPING PLAN
1000 MEDICAL CENTER DRIVE
WILMINGTON, NORTH CAROLINA

UNDERWRITERS:
INDEX NO.
REVISIONS:
1 MCD #1 - 12/2/2020

DESIGN CRITERIA

SYSTEM TYPE	Wet
SYSTEM DESIGN	Calculated
DESIGN DENSITY	VARIES
MAX HEAD CVRG	VARIES
HOSE ALLOWANCE	VARIES
DRAWN BY: DJM	DATE: 12/2/2020
CHECK BY:	DATE:
SCALE: AS NOTED	
CONTRACT NO: J181258	
FILE NO:	
DWG. NO: FP 5 OF 12	

NICET CERTIFIED
NICET#107492
WATER BASED SYSTEMS
LAYOUT LEVEL III
BRIAN THOMAS CRAWFORD

N.C License No. 29772 FS-I

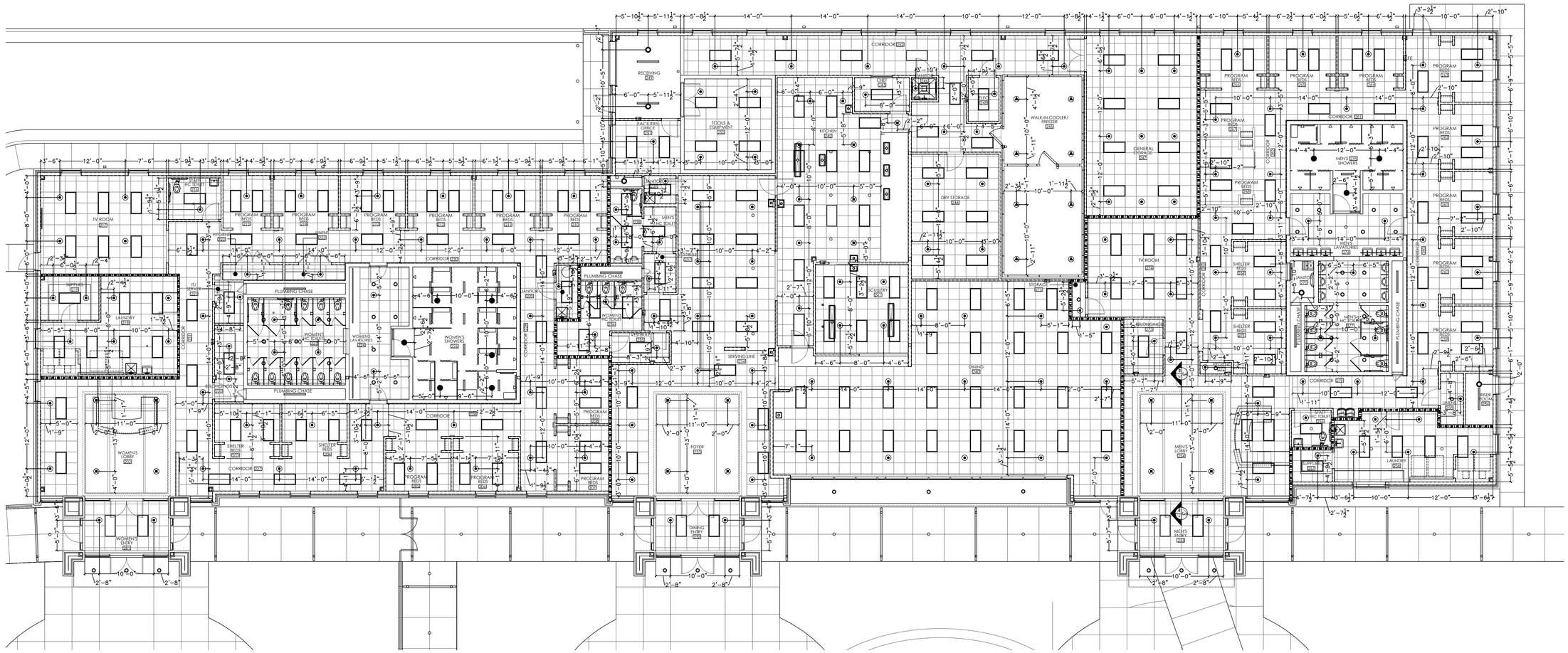

1 FP 6 DINING, SHELTER & STORAGE BUILDING – RCP
1/8" = 1'-0"

HEAD LEGEND

SYM	CNT	NAME	METAL	TEMP	K	NPT	ORIF	MFG.	MODEL#	APPRVL	MIN. SPACING	MAX. SPACING	RESPONSE	ESCUT	SIN.
ⓐ	8	NEW DRY PENDENTS	CHROME	200	5.60	1/2"	1/2	VIKING	M	UL/FM/ULC/MEA	6'-0"	15'-0"	QUICK RESPONSE	ADJ. STANDARD	VK 178
○	23	NEW UPRIGHTS	BRASS	155	5.60	1/2"	1/2	VIKING	M	UL/FM/ULC/MEA	6'-0"	15'-0"	QUICK RESPONSE	N/A	VK 3001
◐	58	NEW RESIDENTIAL PENDENTS	WHITE	155	5.8	1/2"	1/2	VIKING	VK472	UL/FM/ULC/MEA	8'-0"	18'X18'	QUICK RESPONSE	WHITE PLATE	VK 472
●	51	NEW CONCEALED PENDENTS	BRASS	155	5.60	1/2"	1/2	VIKING	M	UL/FM/ULC/MEA	6'-0"	15'-0"	QUICK RESPONSE	WHITE PLATE	VK 462
⊙	465	NEW PENDENTS	WHITE	155	5.60	1/2"	1/2	VIKING	M	UL/FM/ULC/MEA	6'-0"	15'-0"	QUICK RESPONSE	RECESSED	VK 3021
⊗	32	NEW PENDENTS	WHITE	200	5.60	1/2"	1/2	VIKING	M	UL/FM/ULC/MEA	6'-0"	15'-0"	QUICK RESPONSE	RECESSED	VK 3021
TOTAL	637														

1

NOTE

1. ALL CEILING HEIGHTS ARE 9'-0" AFF UNLESS OTHERWISE SPECIFIED.

Important: In locations subject to freezing conditions, it is the owner's responsibility to provide adequate heat throughout wet pipe sprinkler system areas and enclosures for dry-pipe, deluge and other types of valves controlling water supplies to sprinkler systems

By Others	By CSCO	Item
X		City Water Connection
X		Valve House or Pit
	N/A	Connection to Plant Air
	N/A	Air Compressor
	N/A	Air Maintenance Device
X		Electric Alarm
X		Electric Wire
X		Hose Cabinet and Equip
X		Painting
X		Sleeves
X		Cutting Hole and Patch
	N/A	Trench and Backfill
	N/A	Repaving
X		Underground Piping

This drawing and the information hereon is the property of Crawford Sprinkler Company of Raleigh, and may not be reproduced, altered or used in any form without consent from Crawford Sprinkler Company of Raleigh.

Crawford SPRINKLER CO. OF RALEIGH, INC.
2725 S. SAUNDERS STREET-RALEIGH, NC 27603 • PO BOX 26207-RALEIGH, NC 27611
PHONE 919-828-9346 • FAX 919-839-8164

THE HEALING PLACE OF NEW HANOVER COUNTY
DINING, SHELTER & STORAGE BUILDING - RCP
1000 MEDICAL CENTER DRIVE
WILMINGTON, NORTH CAROLINA

UNDERWRITERS:
INDEX NO.
REVISIONS:
1 MCD #1 - 12/2/2020

DESIGN CRITERIA

SYSTEM TYPE	Wet
SYSTEM DESIGN	Calculated
DESIGN DENSITY	VARIES
MAX HEAD CVRG	VARIES
HOSE ALLOWANCE	VARIES

DRAWN BY: DJM	DATE: 12/2/2020
CHECK BY:	DATE:
SCALE: AS NOTED	
CONTRACT NO: J181258	
FILE NO:	
DWG. NO: FP 6 OF 12	

NICET CERTIFIED
NICET#107492
WATER BASED SYSTEMS
LAYOUT LEVEL III
BRIAN THOMAS CRAWFORD

N.C License No. 29772 FS-I

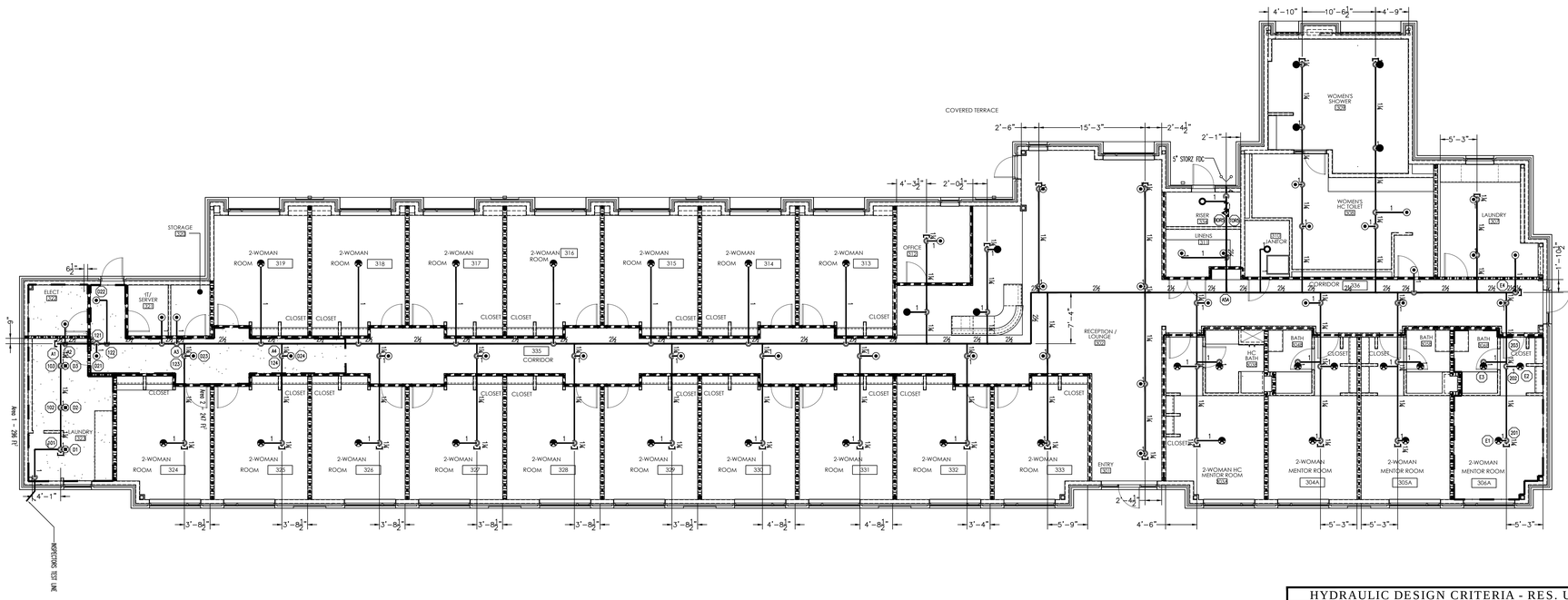

HYDRAULIC DESIGN CRITERIA - LAUNDRY		
AREA NUMBER: 1	CODE REF.: NFPA 13	HAZARD: ORDINARY HAZARD (GROUP 1)
REMOTE AREA: 3-HEAD	DENSITY: .15 GPM	AREA PER SPRINKLER: 130 SQ. FT.
SYSTEM TYPE: WET	INSIDE HOSE: 0	OUTSIDE HOSE: 250 GPM
TOTAL SYS. DEMAND: 294.953	PSI: 21.584	SAFETY MARGIN: 43.022

HYDRAULIC DESIGN CRITERIA - CORRIDOR		
AREA NUMBER: 2	CODE REF.: NFPA 13	HAZARD: LIGHT HAZARD
REMOTE AREA: 4-HEAD CORR.	DENSITY: .10 GPM	AREA PER SPRINKLER: 225 SQ. FT.
SYSTEM TYPE: WET	INSIDE HOSE: 0	OUTSIDE HOSE: 100 GPM
TOTAL SYS. DEMAND: 190.925	PSI: 33.912	SAFETY MARGIN: 30.912

HYDRAULIC DESIGN CRITERIA - RES. UNIT		
AREA NUMBER: 3	CODE REF.: NFPA 13	HAZARD: RESIDENTIAL
REMOTE AREA: 3 HEAD - UNIT	DENSITY: .05 GPM	AREA PER SPRINKLER: 324
SYSTEM TYPE: WET	INSIDE HOSE: 0	OUTSIDE HOSE: 100 GPM
TOTAL SYS. DEMAND: 151.487	PSI: 23.621	SAFETY MARGIN: 41.264

1 FP 7 WOMEN'S RESIDENTIAL BUILDING – PIPING PLAN
1/8" = 1'-0"

HEAD LEGEND

SYM	CNT	NAME	METAL	TEMP	K	NPT	ORIF	MFG.	MODEL#	APPRVL	MIN SPACING	MAX SPACING	RESPONSE	ESCUT	SIN.
▲	8	NEW DRY PENDENTS	CHROME	200	5.60	1/2"	1/2	VIKING	M	UL/FM/ULC/MEA	6'-0"	15'-0"	QUICK RESPONSE	ADJ. STANDARD	VK 178
○	23	NEW UPRIGHTS	BRASS	155	5.60	1/2"	1/2	VIKING	M	UL/FM/ULC/MEA	6'-0"	15'-0"	QUICK RESPONSE	N/A	VK 3001
◐	58	NEW RESIDENTIAL PENDENTS	WHITE	155	5.8	1/2"	1/2	VIKING	VK472	UL/FM/ULC/MEA	8'-0"	18'X18'	QUICK RESPONSE	WHITE PLATE	VK 472
●	51	NEW CONCEALED PENDENTS	BRASS	155	5.60	1/2"	1/2	VIKING	M	UL/FM/ULC/MEA	6'-0"	15'-0"	QUICK RESPONSE	WHITE PLATE	VK 462
◉	465	NEW PENDENTS	WHITE	155	5.60	1/2"	1/2	VIKING	M	UL/FM/ULC/MEA	6'-0"	15'-0"	QUICK RESPONSE	RECESSED	VK 3021
⊗	32	NEW PENDENTS	WHITE	200	5.60	1/2"	1/2	VIKING	M	UL/FM/ULC/MEA	6'-0"	15'-0"	QUICK RESPONSE	RECESSED	VK 3021
TOTAL	637														

△

NOTE

1. ALL PIPE ELEVATIONS ARE 9'-8" AFF UNLESS OTHERWISE SPECIFIED.

Important: In locations subject to freezing conditions, it is the owner's responsibility to provide adequate heat throughout wet pipe sprinkler system areas and enclosures for dry-pipe, deluge and other types of valves controlling water supplies to sprinkler systems

By Others	By CSCO	Item
X		City Water Connection
X		Valve House or Pit
	N/A	Connection to Plant Air
	N/A	Air Compressor
	N/A	Air Maintenance Device
X		Electric Alarm
X		Electric Wire
X		Hose Cabinet and Equip
X		Painting
X		Sleeves
X		Cutting Hole and Patch
	N/A	Trench and Backfill
	N/A	Repaving
X		Underground Piping

This drawing and the information hereon is the property of Crawford Sprinkler Company of Raleigh, and may not be reproduced, altered or used in any form without consent from Crawford Sprinkler Company of Raleigh.

Crawford SPRINKLER CO.
OF RALEIGH, INC
2725 S. SAUNDERS STREET-RALEIGH, NC 27603 • PO BOX 26207-RALEIGH, NC 27611
PHONE 919-828-9346 • FAX 919-839-8164

THE HEALING PLACE OF NEW HANOVER COUNTY
WOMEN'S RESIDENTIAL BUILDING – PIPING PLAN
1000 MEDICAL CENTER DRIVE
WILMINGTON, NORTH CAROLINA

UNDERWRITERS:
INDEX NO.
REVISIONS:
△ MCD #1 - 12/2/2020

DESIGN CRITERIA

SYSTEM TYPE	Wet
SYSTEM DESIGN	Calculated
DESIGN DENSITY	VARIES
MAX HEAD CVRG	VARIES
HOSE ALLOWANCE	VARIES
DRAWN BY: DJM	DATE: 12/2/2020
CHECK BY:	DATE:
SCALE: AS NOTED	
CONTRACT NO: J181258	
FILE NO:	
DWG. NO: FP 7 OF 12	

NICET CERTIFIED
NICET#107492
WATER BASED SYSTEMS
LAYOUT LEVEL III
BRIAN THOMAS CRAWFORD
11/25/2020
N.C License No. 29772 FS-I

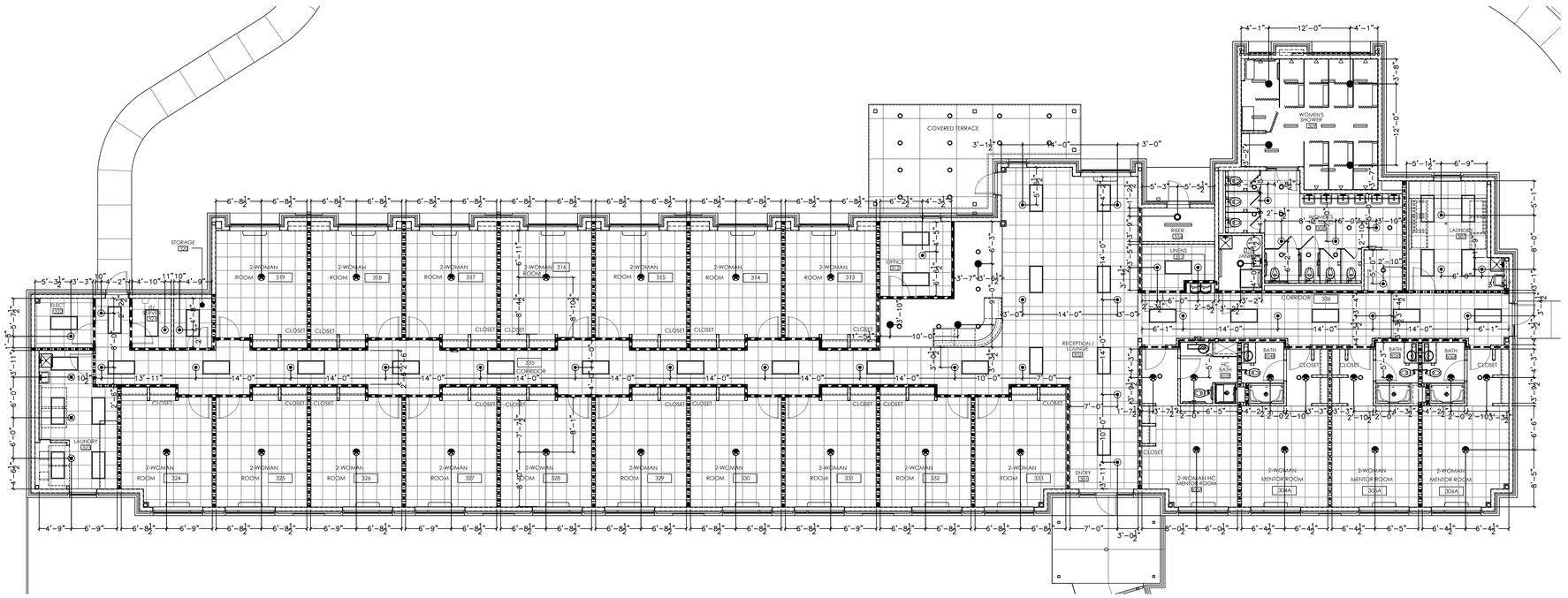

1 FP 8 WOMEN'S RESIDENTIAL BUILDING – RCP
1/8" = 1'-0"

HEAD LEGEND

SYM	CNT	NAME	METAL	TEMP	K	NPT	ORIF	MFG.	MODEL#	APPRVL	MIN SPACING	MAX SPACING	RESPONSE	ESCUT	SIN.
▲	8	NEW DRY PENDENTS	CHROME	200	5.60	1/2"	1/2	VIKING	M	UL/FM/ULC/MEA	6'-0"	15'-0"	QUICK RESPONSE	ADJ. STANDARD	VK 178
○	23	NEW UPRIGHTS	BRASS	155	5.60	1/2"	1/2	VIKING	M	UL/FM/ULC/MEA	6'-0"	15'-0"	QUICK RESPONSE	N/A	VK 3001
◐	58	NEW RESIDENTIAL PENDENTS	WHITE	155	5.8	1/2"	1/2	VIKING	VK472	UL/FM/ULC/MEA	6'-0"	18'X18'	QUICK RESPONSE	WHITE PLATE	VK 472
●	51	NEW CONCEALED PENDENTS	BRASS	155	5.60	1/2"	1/2	VIKING	M	UL/FM/ULC/MEA	6'-0"	15'-0"	QUICK RESPONSE	WHITE PLATE	VK 482
⊙	465	NEW PENDENTS	WHITE	155	5.60	1/2"	1/2	VIKING	M	UL/FM/ULC/MEA	6'-0"	15'-0"	QUICK RESPONSE	RECESSED	VK 3021
⊗	32	NEW PENDENTS	WHITE	200	5.60	1/2"	1/2	VIKING	M	UL/FM/ULC/MEA	6'-0"	15'-0"	QUICK RESPONSE	RECESSED	VK 3021
TOTAL	637														

NOTE

1. ALL CEILING HEIGHTS ARE 9'-0" AFF UNLESS OTHERWISE SPECIFIED.

Important: In locations subject to freezing conditions, it is the owner's responsibility to provide adequate heat throughout wet pipe sprinkler system areas and enclosures for dry-pipe, deluge and other types of valves controlling water supplies to sprinkler systems

By Others	By CSCO	Item
X		City Water Connection
X		Valve House or Pit
	N/A	Connection to Plant Air
	N/A	Air Compressor
	N/A	Air Maintenance Device
X		Electric Alarm
X		Electric Wire
X		Hose Cabinet and Equip
X		Painting
X		Sleeves
X		Cutting Hole and Patch
	N/A	Trench and Backfill
	N/A	Repaving
X		Underground Piping

This drawing and the information hereon is the property of Crawford Sprinkler Company of Raleigh, and may not be reproduced, altered or used in any form without consent from Crawford Sprinkler Company of Raleigh.

Crawford SPRINKLER CO. of RALEIGH, INC
2725 S. SAUNDERS STREET–RALEIGH, NC 27603 • PO BOX 26207–RALEIGH, NC 27611
PHONE 919-828-9346 • FAX 919-839-8164

THE HEALING PLACE OF NEW HANOVER COUNTY
WOMEN'S RESIDENTIAL BUILDING – RCP
1000 MEDICAL CENTER DRIVE
WILMINGTON, NORTH CAROLINA

UNDERWRITERS:
INDEX NO.
REVISIONS:
1 MCD #1 - 12/2/2020

DESIGN CRITERIA

SYSTEM TYPE	Wet
SYSTEM DESIGN	Calculated
DESIGN DENSITY	VARIES
MAX HEAD CVRG	VARIES
HOSE ALLOWANCE	VARIES

DRAWN BY: DJM DATE: 12/2/2020
CHECK BY: DATE:
SCALE: AS NOTED
CONTRACT NO: J1181238
FILE NO:
DWG. NO: FP 8 OF 12

NICET CERTIFIED
NICET#107492
WATER BASED SYSTEMS
LAYOUT LEVEL III
BRIAN THOMAS CRAWFORD
11/25/2020

N.C License No. 29772 FS-I

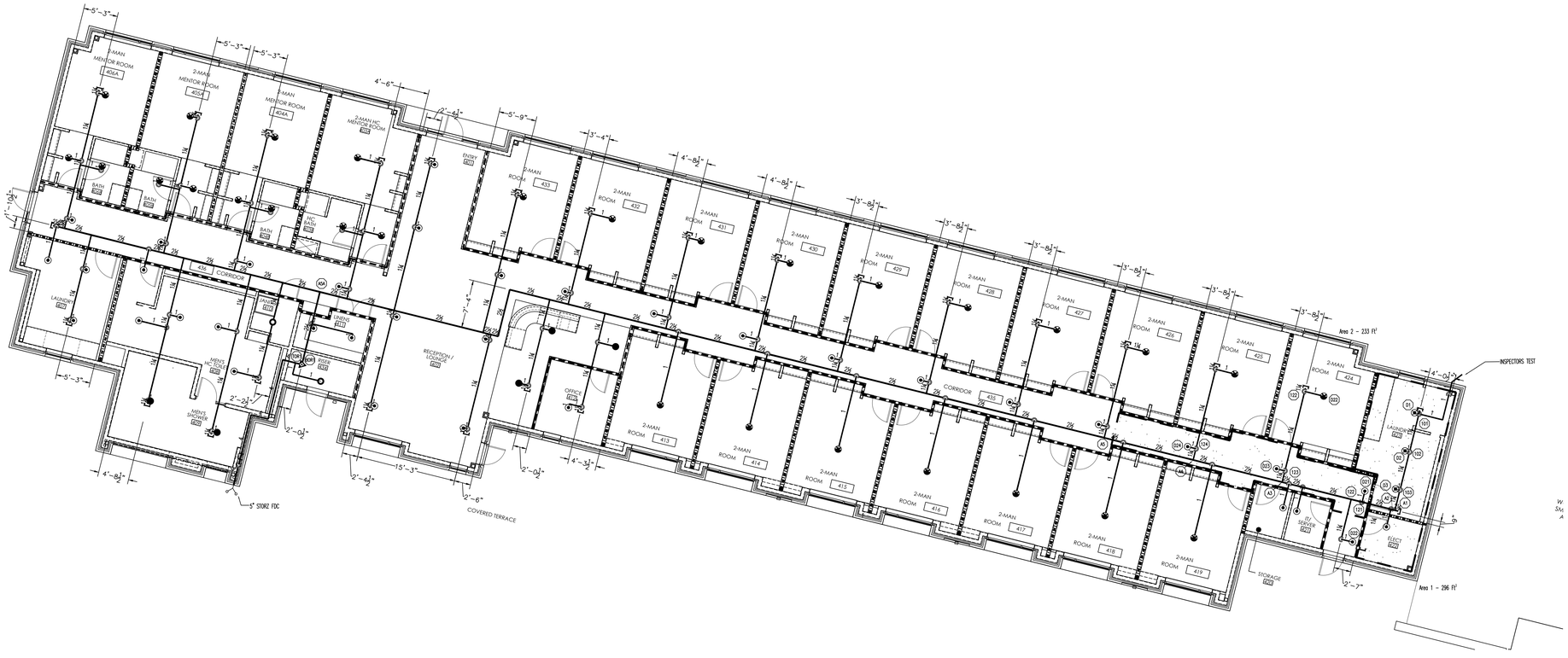

1 / FP 9 MEN'S RESIDENTIAL BUILDING – PIPING PLAN
1/8" = 1'-0"

HYDRAULIC DESIGN CRITERIA - LAUNDRY		
AREA NUMBER: 1	CODE REF.: NFPA 13	HAZARD: ORDINARY HAZARD (GROUP 1)
REMOTE AREA: 3-HEAD	DENSITY: .15 GPM	AREA PER SPRINKLER: 130 SQ. FT.
SYSTEM TYPE: WET	INSIDE HOSE: 0	OUTSIDE HOSE: 250 GPM
TOTAL SYS. DEMAND: 294.953	PSI: 21.584	SAFETY MARGIN: 43.022

HYDRAULIC DESIGN CRITERIA - CORRIDOR		
AREA NUMBER: 2	CODE REF.: NFPA 13	HAZARD: LIGHT HAZARD
REMOTE AREA: 4-HEAD CORR.	DENSITY: .10 GPM	AREA PER SPRINKLER: 225 SQ. FT.
SYSTEM TYPE: WET	INSIDE HOSE: 0	OUTSIDE HOSE: 100 GPM
TOTAL SYS. DEMAND: 190.925	PSI: 33.912	SAFETY MARGIN: 30.912

HEAD LEGEND

SYM	CNT	NAME	METIAL	TEMP	K	NPT	ORIF	MFG.	MODEL#	APPRVL	MIN SPACING	MAX SPACING	RESPONSE	ESCUT	SIN.
▲	8	NEW DRY PENDENTS	CHROME	200	5.60	1/2"	1/2	VIKING	M	UL/FM/ULC/MEA	6'-0"	15'-0"	QUICK RESPONSE	ADJ. STANDARD	VK 178
○	23	NEW UPRIGHTS	BRASS	155	5.60	1/2"	1/2	VIKING	M	UL/FM/ULC/MEA	6'-0"	15'-0"	QUICK RESPONSE	N/A	VK 3001
◐	58	NEW RESIDENTIAL PENDENTS	WHITE	155	5.8	1/2"	1/2	VIKING	VK472	UL/FM/ULC/MEA	8'-0"	18'X18'	QUICK RESPONSE	WHITE PLATE	VK 472
●	51	NEW CONCEALED PENDENTS	BRASS	155	5.60	1/2"	1/2	VIKING	M	UL/FM/ULC/MEA	6'-0"	15'-0"	QUICK RESPONSE	WHITE PLATE	VK 462
⊙	465	NEW PENDENTS	WHITE	155	5.60	1/2"	1/2	VIKING	M	UL/FM/ULC/MEA	6'-0"	15'-0"	QUICK RESPONSE	RECESSED	VK 3021
⊗	32	NEW PENDENTS	WHITE	200	5.60	1/2"	1/2	VIKING	M	UL/FM/ULC/MEA	6'-0"	15'-0"	QUICK RESPONSE	RECESSED	VK 3021
TOTAL	637														

△

NOTE

1. ALL PIPE ELEVATIONS ARE 9'-8" AFF UNLESS OTHERWISE SPECIFIED.

NICET CERTIFIED
NICET#107492
WATER BASED SYSTEMS
LAYOUT LEVEL III
BRIAN THOMAS CRAWFORD

Important: In locations subject to freezing conditions, it is the owner's responsibility to provide adequate heat throughout wet pipe sprinkler system areas and enclosures for dry-pipe, deluge and other types of valves controlling water supplies to sprinkler systems

By Others	By CSCO	Item
X		City Water Connection
X		Valve House or Pit
	N/A	Connection to Plant Air
	N/A	Air Compressor
	N/A	Air Maintenance Device
X		Electric Alarm
X		Electric Wire
X		Hose Cabinet and Equip
X		Painting
X		Sleeves
X		Cutting Hole and Patch
	N/A	Trench and Backfill
	N/A	Repaving
X		Underground Piping

This drawing and the information hereon is the property of Crawford Sprinkler Company of Raleigh, and may not be reproduced, altered or used in any form without consent from Crawford Sprinkler Company of Raleigh.

Crawford SPRINKLER CO. OF RALEIGH, INC
2725 S. SAUNDERS STREET-RALEIGH, NC 27603 • PO BOX 26207-RALEIGH, NC 27611
PHONE 919-828-9346 • FAX 919-839-8164

THE HEALING PLACE OF NEW HANOVER COUNTY
MEN'S RESIDENTIAL BUILDING - PIPING PLAN
1000 MEDICAL CENTER DRIVE
WILMINGTON, NORTH CAROLINA

UNDERWRITERS:
INDEX NO.
REVISIONS:
△ MCD #1 - 12/2/2020

DESIGN CRITERIA

SYSTEM TYPE	Wet
SYSTEM DESIGN	Calculated
DESIGN DENSITY	VARIES
MAX HEAD CVRG	VARIES
HOSE ALLOWANCE	VARIES

DRAWN BY: DJM	DATE: 12/2/2020
CHECK BY:	DATE:
SCALE: AS NOTED	
CONTRACT NO: J181238	
FILE NO:	
DWG. NO: FP 9 OF 12	

11/25/2020

N.C License No. 29772 FS-I



1 FP 10 MEN'S RESIDENTIAL BUILDING – RCP
1/8" = 1'-0"

HEAD LEGEND

SYM	CNT	NAME	METAL	TEMP	K	NPT	ORIF	MFG.	MODEL#	APPRVL	MIN SPACING	MAX SPACING	RESPONSE	ESCUT	SIN.
	8	NEW DRY PENDENTS	CHROME	200	5.60	1/2"	1/2	VIKING	M	UL/FM/ULC/MEA	6'-0"	15'-0"	QUICK RESPONSE	ADJ. STANDARD	VK 178
	23	NEW UPRIGHTS	BRASS	155	5.60	1/2"	1/2	VIKING	M	UL/FM/ULC/MEA	6'-0"	15'-0"	QUICK RESPONSE	N/A	VK 3001
	58	NEW RESIDENTIAL PENDENTS	WHITE	155	5.8	1/2"	1/2	VIKING	VK472	UL/FM/ULC/MEA	8'-0"	18'X18'	QUICK RESPONSE	WHITE PLATE	VK 472
	51	NEW CONCEALED PENDENTS	BRASS	155	5.60	1/2"	1/2	VIKING	M	UL/FM/ULC/MEA	6'-0"	15'-0"	QUICK RESPONSE	WHITE PLATE	VK 462
	465	NEW PENDENTS	WHITE	155	5.60	1/2"	1/2	VIKING	M	UL/FM/ULC/MEA	6'-0"	15'-0"	QUICK RESPONSE	RECESSED	VK 3021
	32	NEW PENDENTS	WHITE	200	5.60	1/2"	1/2	VIKING	M	UL/FM/ULC/MEA	6'-0"	15'-0"	QUICK RESPONSE	RECESSED	VK 3021
TOTAL	637														

NOTE

1. ALL CEILING HEIGHTS ARE 9'-0" AFF UNLESS OTHERWISE SPECIFIED.

Important: In locations subject to freezing conditions, it is the owner's responsibility to provide adequate heat throughout wet pipe sprinkler system areas and enclosures for dry-pipe, deluge and other types of valves controlling water supplies to sprinkler systems

By Others	By CSCO	Item
X		City Water Connection
X		Valve House or Pit
	N/A	Connection to Plant Air
	N/A	Air Compressor
	N/A	Air Maintenance Device
X		Electric Alarm
X		Electric Wire
X		Hose Cabinet and Equip
X		Painting
X		Sleeves
X		Cutting Hole and Patch
	N/A	Trench and Backfill
	N/A	Repaving
X		Underground Piping

This drawing and the information hereon is the property of Crawford Sprinkler Company of Raleigh, and may not be reproduced, altered or used in any form without consent from Crawford Sprinkler Company of Raleigh.

Crawford SPRINKLER CO.
OF RALEIGH, INC
2725 S. SAUNDERS STREET–RALEIGH, NC 27603 • PO BOX 26207–RALEIGH, NC 27611
PHONE 919-828-9346 • FAX 919-839-8164

THE HEALING PLACE OF NEW HANOVER COUNTY
MEN'S RESIDENTIAL BUILDING – RCP
1000 MEDICAL CENTER DRIVE
WILMINGTON, NORTH CAROLINA

UNDERWRITERS:
INDEX NO.
REVISIONS:
1 MCD #1 – 12/2/2020

DESIGN CRITERIA

SYSTEM TYPE	Wet
SYSTEM DESIGN	Calculated
DESIGN DENSITY	VARIES
MAX HEAD CVRG	VARIES
HOSE ALLOWANCE	VARIES

DRAWN BY: DJM DATE: 12/2/2020
CHECK BY: DATE:
SCALE: AS NOTED
CONTRACT NO: J181258
FILE NO:
DWG. NO: FP 10 OF 12

NICET CERTIFIED
NICET#107492
WATER BASED SYSTEMS
LAYOUT LEVEL III
BRIAN THOMAS CRAWFORD

11/25/2020
N.C License No. 29772 FS-I



1 FP 11 DETOX BUILDING – PIPING PLAN
3/16" = 1'-0"

HYDRAULIC DESIGN CRITERIA		
AREA NUMBER: 1	CODE REF.: NFPA 13	HAZARD: LIGHT HAZARD
REMOTE AREA: 1500 SQFT	DENSITY: .10 GPM	AREA PER SPRINKLER: 225 SQ. FT.
SYSTEM TYPE: WET	INSIDE HOSE: 0	OUTSIDE HOSE: 100 GPM
TOTAL SYS. DEMAND: 360.465	PSI: 44.104	SAFETY MARGIN: 20.325

HEAD LEGEND

SYM	CNT	NAME	METAL	TEMP	K	NPT	ORIF	MFG.	MODEL#	APPRVL	MIN SPACING	MAX SPACING	RESPONSE	ESCUT	SIN.
⊕	8	NEW DRY PENDENTS	CHROME	200	5.60	1/2"	1/2	VIKING	M	UL/FM/ULC/MEA	6'-0"	15'-0"	QUICK RESPONSE	ADJ. STANDARD	VK 178
○	23	NEW UPRIGHTS	BRASS	155	5.60	1/2"	1/2	VIKING	M	UL/FM/ULC/MEA	6'-0"	15'-0"	QUICK RESPONSE	N/A	VK 3001
◐	58	NEW RESIDENTIAL PENDENTS	WHITE	155	5.8	1/2"	1/2	VIKING	VK472	UL/FM/ULC/MEA	8'-0"	18'X18'	QUICK RESPONSE	WHITE PLATE	VK 472
●	51	NEW CONCEALED PENDENTS	BRASS	155	5.60	1/2"	1/2	VIKING	M	UL/FM/ULC/MEA	6'-0"	15'-0"	QUICK RESPONSE	WHITE PLATE	VK 462
⊙	465	NEW PENDENTS	WHITE	155	5.60	1/2"	1/2	VIKING	M	UL/FM/ULC/MEA	6'-0"	15'-0"	QUICK RESPONSE	RECESSED	VK 3021
⊗	32	NEW PENDENTS	WHITE	200	5.60	1/2"	1/2	VIKING	M	UL/FM/ULC/MEA	6'-0"	15'-0"	QUICK RESPONSE	RECESSED	VK 3021
TOTAL	637														

NOTE

1. ALL PIPE ELEVATIONS ARE 9'-8" AFF UNLESS OTHERWISE SPECIFIED.

Important: In locations subject to freezing conditions, it is the owner's responsibility to provide adequate heat throughout wet pipe sprinkler system areas and enclosures for dry-pipe, deluge and other types of valves controlling water supplies to sprinkler systems

By Others	By CSCO	Item
X		City Water Connection
X		Valve House or Pit
	N/A	Connection to Plant Air
	N/A	Air Compressor
	N/A	Air Maintenance Device
X		Electric Alarm
X		Electric Wire
X		Hose Cabinet and Equip
X		Painting
X		Sleeves
X		Cutting Hole and Patch
	N/A	Trench and Backfill
	N/A	Repaving
X		Underground Piping

This drawing and the information hereon is the property of Crawford Sprinkler Company of Raleigh, and may not be reproduced, altered or used in any form without consent from Crawford Sprinkler Company of Raleigh.

Crawford SPRINKLER CO.
BFP RALEIGH INC
2725 S. SAUNDERS STREET-RALEIGH, NC 27603 • PO BOX 26207-RALEIGH, NC 27611
PHONE 919-828-9346 • FAX 919-839-8164

THE HEALING PLACE OF NEW HANOVER COUNTY
DETOX BUILDING - PIPING PLAN
1000 MEDICAL CENTER DRIVE
WILMINGTON, NORTH CAROLINA

UNDERWRITERS:
INDEX NO.
REVISIONS:
△ MCD #1 - 12/2/2020

DESIGN CRITERIA

SYSTEM TYPE	Wet
SYSTEM DESIGN	Calculated
DESIGN DENSITY	VARIES
MAX HEAD CVRG	VARIES
HOSE ALLOWANCE	VARIES
DRAWN BY: DJM	DATE: 12/2/2020
CHECK BY:	DATE:
SCALE: AS NOTED	
CONTRACT NO: J1B1238	
FILE NO:	
DWG. NO: FP 11 OF 12	

NICET #107492
WATER BASED SYSTEMS
LAYOUT LEVEL III
BRIAN THOMAS CRAWFORD
11/25/2020

N.C License No. 29772 FS-I



1 FP 12 DETOX BUILDING – RCP
3/16" = 1'-0"

HEAD LEGEND

SYM	CNT	NAME	METAL	TEMP	K	NPT	ORIF	MFG.	MODEL#	APPRVL	MIN. SPACING	MAX. SPACING	RESPONSE	ESCUT	SIN.
A	8	NEW DRY PENDENTS	CHROME	200	5.60	1/2"	1/2	VIKING	M	UL/FM/ULC/MEA	6'-0"	15'-0"	QUICK RESPONSE	ADJ. STANDARD	VK 178
B	23	NEW UPRIGHTS	BRASS	155	5.60	1/2"	1/2	VIKING	M	UL/FM/ULC/MEA	6'-0"	15'-0"	QUICK RESPONSE	N/A	VK 3001
C	58	NEW RESIDENTIAL PENDENTS	WHITE	155	5.8	1/2"	1/2	VIKING	VK472	UL/FM/ULC/MEA	8'-0"	18'X18'	QUICK RESPONSE	WHITE PLATE	VK 472
D	51	NEW CONCEALED PENDENTS	BRASS	155	5.60	1/2"	1/2	VIKING	M	UL/FM/ULC/MEA	6'-0"	15'-0"	QUICK RESPONSE	WHITE PLATE	VK 462
E	465	NEW PENDENTS	WHITE	155	5.60	1/2"	1/2	VIKING	M	UL/FM/ULC/MEA	6'-0"	15'-0"	QUICK RESPONSE	RECESSED	VK 3021
F	32	NEW PENDENTS	WHITE	200	5.60	1/2"	1/2	VIKING	M	UL/FM/ULC/MEA	6'-0"	15'-0"	QUICK RESPONSE	RECESSED	VK 3021
TOTAL	637														

NOTE

1. ALL CEILING HEIGHTS ARE 9'-0" AFF UNLESS OTHERWISE SPECIFIED.

Important: In locations subject to freezing conditions, it is the owner's responsibility to provide adequate heat throughout wet pipe sprinkler system areas and enclosures for dry-pipe, deluge and other types of valves controlling water supplies to sprinkler systems

By Others	By CSCO	Item
X		City Water Connection
X		Valve House or Pit
	N/A	Connection to Plant Air
	N/A	Air Compressor
	N/A	Air Maintenance Device
X		Electric Alarm
X		Electric Wire
X		Hose Cabinet and Equip
X		Painting
X		Sleeves
X		Cutting Hole and Patch
	N/A	Trench and Backfill
	N/A	Repaving
X		Underground Piping

This drawing and the information hereon is the property of Crawford Sprinkler Company of Raleigh, and may not be reproduced, altered or used in any form without consent from Crawford Sprinkler Company of Raleigh.

Crawford SPRINKLER CO. OF RALEIGH, INC.
2725 S. SAUNDERS STREET–RALEIGH, NC 27603 • PO BOX 26207–RALEIGH, NC 27611
PHONE 919–828–9346 • FAX 919–839–8164

THE HEALING PLACE OF NEW HANOVER COUNTY
DETOX BUILDING – RCP
1000 MEDICAL CENTER DRIVE
WILMINGTON, NORTH CAROLINA

UNDERWRITERS:
INDEX NO.
REVISIONS:
1 MCD #1 – 12/2/2020

DESIGN CRITERIA

SYSTEM TYPE	Wet
SYSTEM DESIGN	Calculated
DESIGN DENSITY	VARIES
MAX HEAD CVRG	VARIES
HOSE ALLOWANCE	VARIES

DRAWN BY: DJM	DATE: 12/2/2020
CHECK BY:	DATE:
SCALE: AS NOTED	
CONTRACT NO: JIB1238	
FILE NO:	
DWG. NO: FP 12 OF 12	

NICET CERTIFIED
NICET#107492
WATER BASED SYSTEMS
LAYOUT LEVEL III
BRIAN THOMAS CRAWFORD
11/25/2020
N.C License No. 29772 FS-I

THE HEALING PLACE
of New Hanover County

Wilmington, NC

Construction Documents

August 25, 2020

(Revised November 30, 2020)

VOLUME ONE

(Divisions 01-14)

isdesign
ARCHITECTURE + INTERIORS
219 North Boylan Avenue Suite 100
Raleigh, North Carolina 27603

919 833 5400
www.isdesignpa.com

PR FINE NT

ARCHITECTURAL SPECIFICATIONS

Architectural Specifications Consultant

Joleen Alison Fuentes, AIA
Architect (NC, NCARB)

Joleen@FinePrintSpecs.com

Direct 919 622 4129

1249 Kildaire Farm Rd. #363
Cary, NC 27511

www.FinePrintSpecs.com

DESIGN TEAM

The Healing Place of New Hanover County

Wilmington, North Carolina

Owner----------New Hanover County
Wilmington, North Carolina

Architect ----------iS Design, PA
Raleigh, North Carolina

Architectural Specifications---------- Fine Print Architectural Specifications PLLC
Cary, North Carolina

Structural Engineer ----------RED Engineering & Design
Raleigh, North Carolina

Fire Suppression ----------Crawford Sprinkler
Raleigh, North Carolina

MEP Engineer ---------- Maple Engineering, PLLC
Raleigh, North Carolina

Civil Engineer ----------The Site Group
Raleigh, North Carolina

Foodservice Consultant ---------- MSH Consultant Group
Hillsborough, North Carolina

Specification Sections or Divisions provided by the following firms as indicated in the Table of Contents:

Architectural Specifications: ---------- *Fine Print Architectural Specifications – "**fpas**"*
Structural Specifications: ----------*RED Engineering & Design – "**red**"*
Fountain Specifications: ---------- *Roman Fountains – "**rf**"*
Fire Suppression Specifications: ---------- *Crawford Sprinkler – "**cs**"*
MEP Specifications: ----------*Maple Engineering, PLLC – "**me**"*
Civil Specifications: ----------*The Site Group – "**tsg**"*
Foodservice Specifications: ----------*MSH Consultant Group – "**msh**"*

VOLUME ONE

Project Manual Table of Contents

DIVISION 00 – CONTRACT DOCUMENTS

000000 – Covers ..... 2 Pages
000103 – Design Team ..... 1 Page
000105 – Table of Contents ..... 8 Pages
000107.01 – Certification and Seal Sheet – Architectural ..... 3 Pages
000107.02 – Certification and Seal Sheet – Structural ..... 1 Page
000107.04 – Certification and Seal Sheet – Plumbing ..... 2 Pages
000107.05 – Certification and Seal Sheet – Mechanical ..... 2 Pages
000107.06 – Certification and Seal Sheet – Electrical ..... 2 Pages
000107.07 – Certification and Seal Sheet – Civil ..... 1 Page
003132 – Geotechnical Exploration Report ..... 32 Pages

DIVISION 01 – GENERAL REQUIREMENTS (**fpas**) (See Appendix for Cape Fear Public Utility Authority Specifications)

Section 011000 – Summary ..... 3 Pages
Section 012100 – Allowances ..... 4 Pages
Section 012200 – Unit Prices ..... 3 Pages
Section 012500 – Substitution Procedures ..... 4 Pages
Section 012600 – Contract Modification Procedures ..... 3 Pages
Section 012900 – Payment Procedures ..... 5 Pages
Section 013100 – Project Management and Coordination ..... 10 Pages
Section 013200 – Construction Progress Documentation ..... 10 Pages
Section 013300 – Submittal Procedures ..... 10 Pages
Section 014000 – Quality Requirements ..... 11 Pages
Document 014100 – Special Inspections ..... 1 Page
Section 014200 – References ..... 3 Pages
Section 015000 – Temporary Facilities and Controls ..... 11 Pages
Section 016000 – Product Requirements ..... 7 Pages
Section 017300 – Execution ..... 10 Pages

Section 017700 – Closeout Procedures....7 Pages
Section 017823 – Operation and Maintenance Data....9 Pages
Section 017839 – Project Record Documents....5 Pages
Section 017900 – Demonstration and Training....6 Pages

DIVISION 02 – **EXISTING CONDITIONS** (See Appendix for Cape Fear Public Utility Authority Specifications)

DIVISION 03 – **CONCRETE**

Section 033000 – Cast-in-Place Concrete (**red**)....12 Pages
Section 034900 – Glass-Fiber-Reinforced Concrete (GFRC) (**fpas**)....11 Pages

DIVISION 04 – **MASONRY** (**fpas**)

Section 042000 – Unit Masonry....27 Pages
Section 047200 – Cast Stone Masonry....9 Pages

DIVISION 05 – **METALS**

Section 051200 – Structural Steel Framing (**red**)....7 Pages
Section 052100 – Steel Joist Framing (**red**)....5 Pages
Section 053100 – Steel Decking (**red**)....8 Pages
Section 054000 – Cold-Formed Metal Framing (**red**)....8 Pages
Section 055000 – Metal Fabrications (**fpas**)....12 Pages
Section 055800 – Formed Stainless Steel Kitchen Wall Panels (**fpas**)....2 Pages
Section 057300 – Decorative Metal Railings (**fpas**)....8 Pages

DIVISION 06 – **WOOD, PLASTICS AND COMPOSITES** (**fpas**)

Section 061053 – Miscellaneous Rough Carpentry....10 Pages
Section 061600 – Sheathing....7 Pages
Section 062023 – Interior Finish Carpentry....7 Pages
Section 066116 – Plastic-Laminate-Faced Architectural Cabinets....7 Pages
Section 066400 – Plastic Paneling....3 Pages

DIVISION 07 – **THERMAL AND MOISTURE PROTECTION** (**fpas**)

Section 071113 – Bituminous Dampproofing....5 Pages
Section 071614 – Acrylic-Modified Flexible Cementitious Waterproofing....7 Pages
Section 072100 – Thermal Insulation....5 Pages
Section 072413 – Polymer-Based Exterior Insulation and Finish System (EIFS)....11 Pages
Section 072500 – Weather Barriers....4 Pages

Section 072600 – Vapor Retarders ..... 2 Pages
Section 074113.16 – Standing-Seam Metal Roof Panels ..... 11 Pages
Section 074213.13 – Formed Metal Wall Panels ..... 10 Pages
Section 075423 – Thermoplastic Polyolefin (TPO) Roofing ..... 11 Pages
Section 076200 – Sheet Metal Flashing and Trim ..... 14 Pages
Section 077100 – Roof Specialties ..... 10 Pages
Section 077200 – Roof Accessories ..... 8 Pages
Section 078413 – Penetration Firestopping ..... 8 Pages
Section 078443 – Joint Firestopping ..... 6 Pages
Section 079200 – Joint Sealants ..... 13 Pages
Section 079219 – Acoustical Joint Sealants ..... 4 Pages

DIVISION 08 – **OPENINGS** (**fpas**)

Section 081113 – Hollow Metal Doors and Frames ..... 10 Pages
Section 081416 – Flush Wood Doors ..... 7 Pages
Section 083113 – Access Doors and Frames ..... 5 Pages
Section 083323 – Overhead Coiling Doors ..... 8 Pages
Section 083800 – Traffic Doors ..... 4 Pages
Section 084113 – Aluminum-Framed Entrances and Storefronts ..... 14 Pages
Section 087100 – Door Hardware ..... 15 Pages
Section 088000 – Glazing ..... 12 Pages
Section 088300 – Mirrors ..... 6 Pages

DIVISION 09 – **FINISHES** (**fpas**)

Section 092216 – Non-Structural Metal Framing ..... 8 Pages
Section 092713 – Glass-Fiber-Reinforced Plaster Fabrications ..... 4 Pages
Section 092900 – Gypsum Board ..... 10 Pages
Section 093013 – Tiling ..... 12 Pages
Section 095113 – Acoustical Panel Ceilings ..... 8 Pages
Section 096513 – Resilient Base and Accessories ..... 5 Pages
Section 096516 – Resilient Sheet Flooring ..... 6 Pages
Section 096519 – Resilient Tile Flooring ..... 6 Pages
Section 096723 – Resinous Flooring ..... 6 Pages
Section 096813 – Tile Carpeting ..... 7 Pages
Section 096816 – Sheet Carpeting ..... 7 Pages
Section 097200 – Wall Covering ..... 5 Pages
Section 099113 – Exterior Painting ..... 8 Pages
Section 099123 – Interior Painting ..... 9 Pages

DIVISION 10 – **SPECIALTIES** (**fpas**)

Section 101419 – Dimensional Letter Signage ..... 6 Pages
Section 101423 – Panel Signage ..... 8 Pages
Section 101426 – Post and Panel Signage ..... 8 Pages
Section 102113.19 – Plastic Toilet Compartments ..... 5 Pages
Section 102116.19 – Plastic Shower and Dressing Compartments ..... 6 Pages
Section 102239 – Folding Panel Partitions ..... 8 Pages
Section 102600 – Wall Protection ..... 6 Pages
Section 102800 – Toilet and Bath Accessories ..... 8 Pages
Section 104413 – Fire Protection Cabinets ..... 5 Pages
Section 104416 – Fire Extinguishers ..... 4 Pages
Section 105126 – Plastic Lockers ..... 8 Pages
Section 107300 – Aluminum Walkway Covers ..... 8 Pages

DIVISION 11 – **EQUIPMENT**

Section 113100 – Residential Appliances (**fpas**) ..... 6 Pages
Section 114000 – Foodservice Equipment (**msh**) ..... 27 Pages
Attachment 114001 – Foodservice Equipment Cutsheets (**msh**) ..... 194 Pages
Section 115213 – Projection Screens (**fpas**) ..... 3 Pages

DIVISION 12 – **FURNISHINGS** (**fpas**)

Section 122113 – Horizontal Louver Blinds ..... 6 Pages
Section 122413 – Roller Window Shades ..... 6 Pages
Section 123623.13 – Plastic-Laminate-Clad Countertops ..... 5 Pages
Section 123661.19 – Quartz Agglomerate Countertops ..... 4 Pages
Section 128413 – Entrance Floor Mats and Frames ..... 4 Pages

DIVISION 13 – **SPECIAL CONSTRUCTION**

Section 131200 – Fountains (**rf**) ..... 14 Pages
Cutsheets 131201 – Fountain Cutsheets (**rf**) ..... 16 Pages

DIVISION 14 – **CONVEYING EQUIPMENT** (Not Used)

VOLUME TWO

DIVISION 21 – **FIRE SUPPRESSION** (**cs**)

Section 210000 – Wet-Pipe Sprinkler Systems ..... 22 Pages

DIVISION 22 – **PLUMBING** (**me**)

Section 220513 – Common Motor Requirements for Plumbing Equipment ..... 2 Pages
Section 220516 – Expansion Fittings and Loops for Plumbing Piping ..... 4 Pages
Section 220517 – Sleeves and Sleeve Seals for Plumbing Piping ..... 5 Pages
Section 220518 – Escutcheons for Plumbing Piping ..... 2 Pages
Section 220523.12 – Ball Valves for Plumbing Piping ..... 3 Pages
Section 220523.14 – Check Valves for Plumbing Piping ..... 3 Pages
Section 220529 – Hangers and Supports for Plumbing Piping and Equipment ..... 9 Pages
Section 220553 – Identification for Plumbing Piping and Equipment ..... 4 Pages
Section 220719 – Plumbing Piping Insulation ..... 20 Pages
Section 221116 – Domestic Water Piping ..... 12 Pages
Section 221119 – Domestic Water Piping Specialties ..... 7 Pages
Section 221316 – Sanitary Waste and Vent Piping ..... 9 Pages
Section 221319 – Sanitary Waste Piping Specialties ..... 3 Pages
Section 221319.13 – Sanitary Drains ..... 2 Pages
Section 221413 – Facility Strom Drainage Piping ..... 7 Pages
Section 221423 – Storm Drainage Piping Specialties ..... 4 Pages
Section 223300 – Electric, Domestic-Water Heaters ..... 6 Pages
Section 223400 – Fuel-Fired, Domestic-Water Heaters ..... 8 Pages
Section 224213.13 – Commercial Water Closets ..... 4 Pages
Section 224213.16 – Commercial Urinals ..... 4 Pages
Section 224216.13 – Commercial Lavatories ..... 4 Pages
Section 224216.16 – Commercial Sinks ..... 6 Pages
Section 224716 – Pressure Water Coolers ..... 3 Pages

DIVISION 23 – **HEATING, VENTILATION, AND AIR CONDITIONING (HVAC)** (**me**)

Section 230513 – Common Motor Requirements for HVAC Equipment ..... 3 Pages
Section 230517 – Sleeves and Sleeve Seals for HVAC Piping ..... 4 Pages
Section 230518 – Escutcheons for HVAC Piping ..... 2 Pages
Section 230529 – Hangers and Supports for HVAC Piping and Equipment ..... 9 Pages
Section 230553 – Identification for HVAC Piping and Equipment ..... 3 Pages
Section 230593 – Testing, Adjusting and Balancing for HVAC ..... 18 Pages
Section 230713 – Duct Insulation ..... 13 Pages
Section 231123 – Facility Natural-Gas Piping ..... 10 Pages
Section 232300 – Refrigerant Piping ..... 10 Pages
Section 233113 – Metal Ducts ..... 12 Pages
Section 233300 – Air Duct Accessories ..... 10 Pages

Section 233346 – Flexible Ducts ..... 3 Pages
Section 233423 – HVAC Power Ventilators ..... 5 Pages
Section 233433.13 – Commercial Air Curtains ..... 5 Pages
Section 233600 – Air Terminal Units ..... 8 Pages
Section 233713.13 – Air Diffusers ..... 3 Pages
Section 233713.23 – Registers and Grilles ..... 3 Pages
Section 233723 – HVAC Gravity Ventilators ..... 4 Pages
Section 233813 – Commercial-Kitchen Hoods ..... 6 Pages
Section 235123 – Gas Vents ..... 2 Pages
Section 235533.16 – Gas-Fired Unit Heaters ..... 5 Pages
Section 237313.13 – Indoor, Basic Air-Handling Units ..... 7 Pages
Section 237416.11– Packaged, Small-Capacity, Rooftop Air-Conditioning Units ..... 9 Pages
Section 237433 – Dedicated Outdoor-Air Units ..... 16 Pages
Section 238113.11 – Packaged Terminal Air-Conditioners, Through-Wall Units ..... 4 Pages
Section 238126 – Split-System Air-Conditioners ..... 5 Pages
Section 238239.19 – Wall and Ceiling Unit Heaters ..... 3 Pages

DIVISION 26 – **ELECTRICAL** (**me**)

Section 260519 – Low-Voltage Electrical Conductors and Cables ..... 7 Pages
Section 260526 – Grounding and Bonding for Electrical Systems ..... 6 Pages
Section 260529 – Hangers and Supports for Electrical Systems ..... 4 Pages
Section 260533 – Raceway and Boxes for Electrical Systems ..... 12 Pages
Section 260544 – Sleeves and Sleeve Seals for Electrical Raceways and Cabling ..... 4 Pages
Section 260553 – Identification for Electrical Systems ..... 12 Pages
Section 260923 – Lighting Control Devices ..... 7 Pages
Section 262413 – Switchboards ..... 6 Pages
Section 262416 – Panelboards ..... 7 Pages
Section 262713 – Electricity Metering ..... 3 Pages
Section 262719 – Multi-Outlet Assemblies ..... 4 Pages
Section 262726 – Wiring Devices ..... 11 Pages
Section 262813 – Fuses ..... 2 Pages
Section 262816 – Enclosed Switches and Circuit Breakers ..... 7 Pages
Section 263213.13 – Diesel-Engine-Driven Generator Sets ..... 5 Pages
Section 263323.11 – Central Battery Equipment for Emergency Lighting ..... 5 Pages
Section 263343 – Battery Chargers ..... 3 Pages
Section 263600 – Transfer Switches ..... 6 Pages
Section 264113 – Lightning Protection for Structures ..... 2 Pages
Section 265119 – LED Interior Lighting ..... 6 Pages
Section 265213 – Emergency and Exit Lighting ..... 6 Pages
Section 265619 – LED Exterior Lighting ..... 6 Pages

DIVISION 27 – **COMMUNICATIONS** (**me**)

Document 270000 – STS-100 Telecommunications Wiring Guidelines.....45 Pages
Section 270526 – Grounding and Bonding for Communication Systems.....7 Pages
Section 270528 – Pathways for Communication Systems .....9 Pages
Section 270529 – Hangers and Supports for Communication Systems.....4 Pages
Section 270544 – Sleeves and Sleeve Seals for Communication Pathways and Cabling .....5 Pages

DIVISION 28 – **ELECTRONIC SAFETY AND SECURITY** (**me**)

Section 281500 – Access Control Hardware Devices .....4 Pages
Section 284621.11 – Addressable Fire-Alarm Systems .....19 Pages

DIVISION 31 – **EARTHWORK** (See Appendix for Cape Fear Public Utility Authority Specifications)

Section 312000 – Excavation and Grading (**tsg**) .....8 Pages
Section 313116 – Termite Control (**fpas**).....4 Pages
Section 315000 – Excavation Support Systems (**tsg**).....3 Pages

DIVISION 32 – **EXTERIOR IMPROVEMENTS** (See Appendix for Cape Fear Public Utility Authority Specifications)

Section 321216 – Asphalt Paving (**tsg**) .....7 Pages
Section 321313 – Portland Cement Concrete Paving (**tsg**).....9 Pages
Section 323117 – Ornamental Welded Wire Fencing and Gates (**fpas**).....11 Pages
Section 323119 – Decorative Metal Gates (**fpas**).....5 Pages
Section 329300 – Landscaping (**tsg**) .....4 Pages
Section 329400 – Modular Concrete Block Wall System (**tsg**) (New Section).....11 Pages

DIVISION 33 – **UTILITIES** (See Appendix for Cape Fear Public Utility Authority Specifications)

Section 331200 – Water Piping (**tsg**).....7 Pages
Section 333000 – Sanitary Sewers (**tsg**) .....5 Pages
Section 334100 – Storm Sewers (**tsg**).....5 Pages
Section 334600 – Subdrainage (**fpas**).....6 Pages

APPENDIX

CAPE FEAR PUBLIC UTILITY AUTHORITY SPECIFICATIONS

01 00 00 – CFPUA Table of Contents .....1 Page
01 00 10 – CFPUA Pre-Con Checklist .....3 Pages

Section 01 30 00 – Administrative Requirements ..... 5 Pages
Section 01 33 00 – Submittals ..... 5 Pages
Section 01 35 00 – Special Procedures ..... 8 Pages
Section 01 40 00 – Quality Requirements ..... 3 Pages
Section 01 60 00 – Product Requirements ..... 2 Pages
Section 01 70 00 – Execution and Closeout Requirements ..... 9 Pages
Section 02 41 00 – Demolition ..... 5 Pages
Section 02 82 13 – Asbestos Abatement for Utilities ..... 3 Pages
Section 31 23 34.01 – Excavating, Trenching, Dewatering and Backfilling for Utility Work ..... 21 Pages
Section 33 01 12 – Identification for Utilities Piping ..... 5 Pages
Section 33 01 30.86 – Manhole Rim Adjustment ..... 2 Pages
Section 33 05 05.31 – Hydrostatic Testing ..... 3 Pages
Section 33 05 07.23 – Jacking and Boring ..... 9 Pages
Section 33 05 09.33 – Thrust Restraint for Utility Piping ..... 3 Pages
Section 33 05 13 – Precast Concrete Manholes and Utility Structures ..... 7 Pages
Section 33 14 13 – Water Distribution Piping, Valves, Hydrants, and Appurtenances ..... 10 Pages
Section 33 14 14 – Public Water Service Connections ..... 7 Pages
Section 33 14 20 – Disinfection of Water Pipelines, Facilities, and Appurtenances ..... 8 Pages
Section 33 14 22 – Testing of Sanitary Sewer Mains and Manholes ..... 7 Pages
Section 33 31 11 – Sanitary Sewer Gravity Mains ..... 9 Pages

CAPE FEAR PUBLIC UTILITY AUTHORITY MATERIALS

Section A – Pipe ..... 18 Pages
Section B – Fittings and Accessories ..... 18 Pages
Section C – Joint Restraints ..... 13 Pages
Section D – Valves and Accessories ..... 19 Pages
Section E – Fire Hydrants ..... 3 Pages
Section F – Service Saddles and Tapping Devices ..... 7 Pages
Section G – Brass Service Materials ..... 11 Pages
Section H – Repair Sleeves Coupling Clamps & Non-Pressure Adapters ..... 9 Pages
Section I – Castings and Access Covers ..... 5 Pages
Section J – Service Boxes ..... 11 Pages
Section K – Miscellaneous ..... 10 Pages
Section L – Electrical ..... 4 Pages
Section M – Coatings and Sealants ..... 10 Pages
Section N – Concrete ..... 6 Pages
Section O – Structures ..... 10 Pages

END OF TABLE OF CONTENTS

DOCUMENT 000107.01 – CERTIFICATION AND SEAL SHEET – ARCHITECTURAL

I hereby certify that the Specifications indicated below and included within the Project Manual for the project titled **The Healing Place of New Hanover County** and dated **August 25, 2020** were prepared by me or under my direct supervision, and that I am a duly registered Architect under the Laws of the State of **North Carolina** and hereby affix my Professional Seal.

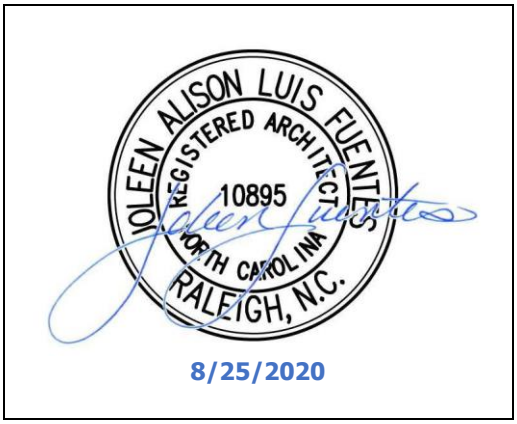

Architectural Specifications

Joleen Alison Luis Fuentes, AIA
License No. 10895

Section 011000 – Summary
Section 012100 – Allowances
Section 012200 – Unit Prices
Section 012500 – Substitution Procedures
Section 012600 – Contract Modification Procedures
Section 012900 – Payment Procedures
Section 013100 – Project Management and Coordination
Section 013200 – Construction Progress Documentation
Section 013300 – Submittal Procedures
Section 014000 – Quality Requirements
Section 014200 – References
Section 015000 – Temporary Facilities and Controls
Section 016000 – Product Requirements
Section 017300 – Execution
Section 017700 – Closeout Procedures
Section 017823 – Operation and Maintenance Data
Section 017839 – Project Record Documents
Section 017900 – Demonstration and Training
Section 034900 – Glass-Fiber-Reinforced Concrete (GFRC)
Section 042000 – Unit Masonry
Section 047200 – Cast Stone Masonry

Section 055000 – Metal Fabrications
Section 055800 – Formed Stainless Steel Kitchen Wall Panels
Section 057300 – Decorative Metal Railings
Section 061053 – Miscellaneous Rough Carpentry
Section 061600 – Sheathing
Section 062023 – Interior Finish Carpentry
Section 066116 – Plastic-Laminate-Faced Architectural Cabinets
Section 066400 – Plastic Paneling
Section 071113 – Bituminous Dampproofing
Section 071614 – Acrylic-Modified Flexible Cementitious Waterproofing
Section 072100 – Thermal Insulation
Section 072413 – Polymer-Based Exterior Insulation and Finish System (EIFS)
Section 072500 – Weather Barriers
Section 072600 – Vapor Retarders
Section 074113.16 – Standing-Seam Metal Roof Panels
Section 074213.13 – Formed Metal Wall Panels
Section 075423 – Thermoplastic Polyolefin (TPO) Roofing
Section 076200 – Sheet Metal Flashing and Trim
Section 077100 – Roof Specialties
Section 077200 – Roof Accessories
Section 078413 – Penetration Firestopping
Section 078443 – Joint Firestopping
Section 079200 – Joint Sealants
Section 079219 – Acoustical Joint Sealants
Section 081113 – Hollow Metal Doors and Frames
Section 081416 – Flush Wood Doors
Section 083113 – Access Doors and Frames
Section 083323 – Overhead Coiling Doors
Section 083800 – Traffic Doors
Section 084113 – Aluminum-Framed Entrances and Storefronts
Section 087100 – Door Hardware
Section 088000 – Glazing
Section 088300 – Mirrors
Section 092216 – Non-Structural Metal Framing
Section 092713 – Glass-Fiber-Reinforced Plaster Fabrications
Section 092900 – Gypsum Board
Section 093013 – Tiling
Section 095113 – Acoustical Panel Ceilings
Section 096513 – Resilient Base and Accessories
Section 096516 – Resilient Sheet Flooring
Section 096519 – Resilient Tile Flooring
Section 096723 – Resinous Flooring
Section 096813 – Tile Carpeting
Section 096816 – Sheet Carpeting
Section 097200 – Wall Covering
Section 099113 – Exterior Painting
Section 099123 – Interior Painting
Section 101419 – Dimensional Letter Signage
Section 101423 – Panel Signage
Section 101426 – Post and Panel Signage

Section 102113.19 – Plastic Toilet Compartments
Section 102116.19 – Plastic Shower and Dressing Compartments
Section 102239 – Folding Panel Partitions
Section 102600 – Wall Protection
Section 102800 – Toilet and Bath Accessories
Section 104413 – Fire Protection Cabinets
Section 104416 – Fire Extinguishers
Section 105126 – Plastic Lockers
Section 107300 – Aluminum Walkway Covers
Section 113100 – Residential Appliances
Section 115213 – Projection Screens
Section 122113 – Horizontal Louver Blinds
Section 122413 – Roller Window Shades
Section 123623.13 – Plastic-Laminate-Clad Countertops
Section 123661.19 – Quartz Agglomerate Countertops
Section 128413 – Entrance Floor Mats and Frames
Section 313116 – Termite Control
Section 323117 – Ornamental Welded Wire Fencing and Gates
Section 323119 – Decorative Metal Gates
Section 334600 – Subdrainage

END OF DOCUMENT 000107.01

DOCUMENT 000107.02 – CERTIFICATION AND SEALS PAGE – STRUCTURAL

I hereby certify that the Specifications indicated below and included within the Project Manual for the project titled **The Healing Place of New Hanover County** and dated **August 25, 2020** were prepared by me or under my direct supervision, and that I am a duly registered Professional Engineer under the Laws of the State of **North Carolina** and hereby affix my Professional Seal.

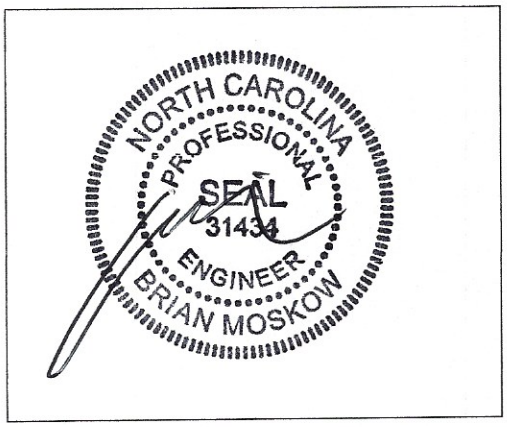

Structural Engineer

Brian Moskow, P.E.
License No. 031434

Section 033000 – Cast-in-Place Concrete
Section 051200 – Structural Steel Framing
Section 052100 – Steel Joist Framing
Section 053100 – Steel Decking
Section 054000 – Cold-Formed Metal Framing

END OF DOCUMENT 000107.02

DOCUMENT 000107.04 – CERTIFICATION AND SEAL SHEET – PLUMBING

I hereby certify that the Specifications indicated below and included within the Project Manual for the project titled **The Healing Place of New Hanover County** and dated **August 25, 2020** were prepared by me or under my direct supervision, and that I am a duly registered Professional Engineer under the Laws of the State of **North Carolina** and hereby affix my Professional Seal.

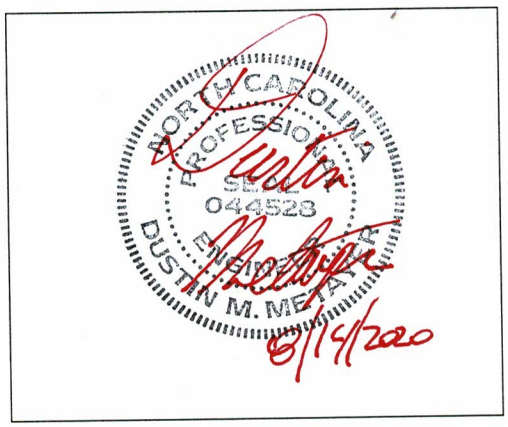

Plumbing Engineer

Dustin Metayer, P.E.
License No. 044528

Division	Section Title	Pages
DIVISION 22 – PLUMBING		
220513	COMMON MOTOR REQUIREMENTS FOR PLUMBING EQUIPMENT	2
220516	EXPANSION FITTINGS AND LOOPS FOR PLUMBING PIPING	4
220517	SLEEVES AND SLEEVE SEALS FOR PLUMBING PIPING	5
220518	ESCUTCHEONS FOR PLUMBING PIPING	2
22052312	BALL VALVES FOR PLUMBING PIPING	3
22052314	CHECK VALVES FOR PLUMBING PIPING	3
220529	HANGERS AND SUPPORTS FOR PLUMBING PIPING AND EQUIPMENT	9
220553	IDENTIFICATION FOR PLUMBING PIPING AND EQUIPMENT	4
220719	PLUMBING PIPING INSULATION	20
221116	DOMESTIC WATER PIPING	12
221119	DOMESTIC WATER PIPING SPECIALTIES	7
221316	SANITARY WASTE AND VENT PIPING	9
221319	SANITARY WASTE PIPING SPECIALTIES	3
22131913	SANITARY DRAINS	2
221413	FACILITY STORM DRAINAGE PIPING	7
221423	STORM DRAINAGE PIPING SPECIALTIES	4
223300	ELECTRIC, DOMESTIC-WATER HEATERS	6

223400	FUEL-FIRED, DOMESTIC-WATER HEATERS	8
22421313	COMMERCIAL WATER CLOSETS	4
22421316	COMMERCIAL URINALS	4
22421613	COMMERCIAL LAVATORIES	4
22421616	COMMERCIAL SINKS	6
224716	PRESSURE WATER COOLERS	3

END OF DOCUMENT 000107.04

DOCUMENT 000107.05 – CERTIFICATION AND SEAL SHEET – MECHANICAL

I hereby certify that the Specifications indicated below and included within the Project Manual for the project titled **The Healing Place of New Hanover County** and dated **August 25, 2020** were prepared by me or under my direct supervision, and that I am a duly registered Professional Engineer under the Laws of the State of **North Carolina** and hereby affix my Professional Seal.

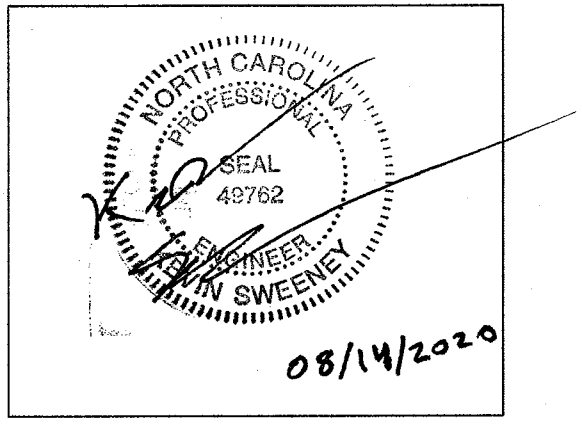

Mechanical Engineer — Kevin Sweeney, P.E.
License No. 049762

Division	Section Title	Pages
DIVISION 23 - HEATING, VENTILATING, AND AIR CONDITIONING (HVAC)		
230513	COMMON MOTOR REQUIREMENTS FOR HVAC EQUIPMENT	3
230517	SLEEVES AND SLEEVE SEALS FOR HVAC PIPING	4
230518	ESCUTCHEONS FOR HVAC PIPING	2
230529	HANGERS AND SUPPORTS FOR HVAC PIPING AND EQUIPMENT	9
230553	IDENTIFICATION FOR HVAC PIPING AND EQUIPMENT	4
230593	TESTING, ADJUSTING, AND BALANCING FOR HVAC	19
230713	DUCT INSULATION	13
231123	FACILITY NATURAL-GAS PIPING	12
232300	REFRIGERANT PIPING	12
233113	METAL DUCTS	17
233300	AIR DUCT ACCESSORIES	12
233346	FLEXIBLE DUCTS	4
233423	HVAC POWER VENTILATORS	7
233433.13	COMMERCIAL AIR CURTAINS	6
233600	AIR TERMINAL UNITS	12
233713.13	AIR DIFFUSERS	4

233713.23	REGISTERS AND GRILLES	4
233723	HVAC GRAVITY VENTILATORS	6
233813	COMMERCIAL-KITCHEN HOODS	8
235123	GAS VENTS	3
235533.16	GAS-FIRED UNIT HEATERS	7
237313.13	INDOOR, BASIC AIR-HANDLING UNITS	9
237416.11	PACKAGED, SMALL-CAPACITY, ROOFTOP AIR-CONDITIONING UNITS	13
237433	DEDICATED OUTDOOR-AIR UNITS	22
238113.11	PACKAGED TERMINAL AIR-CONDITIONERS, THROUGH-WALL UNITS	5
238126	SPLIT-SYSTEM AIR-CONDITIONERS	7
238239.19	WALL AND CEILING UNIT HEATERS	3

END OF DOCUMENT 000107.05

DOCUMENT 000107.06 – CERTIFICATION AND SEAL SHEET – ELECTRICAL

I hereby certify that the Specifications indicated below and included within the Project Manual for the project titled **The Healing Place of New Hanover County** and dated **August 25, 2020** were prepared by me or under my direct supervision, and that I am a duly registered Professional Engineer under the Laws of the State of **North Carolina** and hereby affix my Professional Seal.

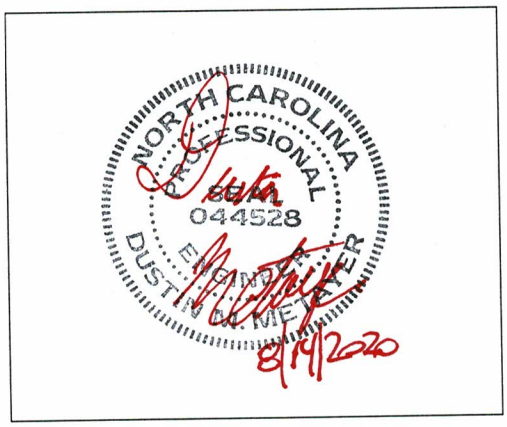

Electrical Engineer

Dustin Metayer, P.E.
License No. 044528

Division	Section Title	Pages
DIVISION 26 - ELECTRICAL		
260519	LOW-VOLTAGE ELECTRICAL POWER CONDUCTORS AND CABLES	7
260526	GROUNDING AND BONDING FOR ELECTRICAL SYSTEMS	6
260529	HANGERS AND SUPPORTS FOR ELECTRICAL SYSTEMS	4
260533	RACEWAYS AND BOXES FOR ELECTRICAL SYSTEMS	12
260544	SLEEVES AND SLEEVE SEALS FOR ELECTRICAL RACEWAYS AND CABLING	4
260553	IDENTIFICATION FOR ELECTRICAL SYSTEMS	12
260923	LIGHTING CONTROL DEVICES	7
262413	SWITCHBOARDS	6
262416	PANELBOARDS	7
262713	ELECTRICITY METERING	3
262719	MULTI-OUTLET ASSEMBLIES	4
262726	WIRING DEVICES	11
262813	FUSES	2
262816	ENCLOSED SWITCHES AND CIRCUIT BREAKERS	7
263213.13	DIESEL-ENGINE-DRIVEN GENERATOR SETS	5
263323.11	CENTRAL BATTERY EQUIPMENT FOR EMERGENCY LIGHTING	5

263343	BATTERY CHARGERS	3
263600	TRANSFER SWITCHES	6
264113	LIGHTNING PROTECTION FOR STRUCTURES	2
265119	LED INTERIOR LIGHTING	6
265213	EMERGENCY AND EXIT LIGHTING	6
265619	LED EXTERIOR LIGHTING	6
DIVISION 27 - COMMUNICATIONS		
270526	GROUNDING AND BONDING FOR COMMUNICATIONS SYSTEMS	7
270528	PATHWAYS FOR COMMUNICATIONS SYSTEMS	9
270529	HANGERS AND SUPPORTS FOR COMMUNICATIONS SYSTEMS	4
270544	SLEEVES AND SLEEVE SEALS FOR COMMUNICATIONS PATHWAYS AND CABLING	5
DIVISION 28 - ELECTRONIC SAFETY AND SECURITY		
281500	ACCESS CONTROL HARDWARE DEVICES	4
284621.11	ADDRESSABLE FIRE-ALARM SYSTEMS	19

END OF DOCUMENT 000107.06

DOCUMENT 000107.07 – CERTIFICATION AND SEAL SHEET – CIVIL

I hereby certify that the Specifications indicated below and included within the Project Manual for the project titled **The Healing Place of New Hanover County** and dated **July 23, 2020** were prepared by me or under my direct supervision, and that I am a duly registered Professional Engineer under the Laws of the State of **North Carolina** and hereby affix my Professional Seal.



Civil Engineer

Edwin F. Sconfienza, P.E.
License No. 18303

Section 312000 – Excavation and Grading
Section 315000 – Excavation Support Systems
Section 321216 – Asphalt Paving
Section 321313 – Portland Cement Concrete Paving
Section 329300 – Landscaping
Section 331200 – Water Piping
Section 333000 – Sanitary Sewers
Section 334100 – Storm Sewers

Cape Fear Public Utility Authority Specifications
(SEE ATTACHED SPECIFICATIONS DATED 1 JULY 2020)

END OF DOCUMENT 000107.07

Geotechnical Exploration Report
The Healing Place
Wilmington, North Carolina
S&ME Project No. 1306-19-006

PREPARED FOR:

J.M. Thompson
P.O. Box 33066
Raleigh, North Carolina 27636

PREPARED BY:

S&ME, Inc.
3006 Hall Waters Drive, Suite 100
Wilmington, North Carolina 28405

April 30, 2019

April 30, 2019

J. M. Thompson
P.O. Box 33066
Raleigh, North Carolina 27636

Attention: Mr. Dickie Thompson

Reference: **Geotechnical Exploration Report**
The Healing Place of New Hanover County
Wilmington, North Carolina
S&ME Project No. 1306-19-006
NC PE Firm License No. F-0176

Dear Mr. Thompson:

S&ME, Inc. (S&ME) is pleased to submit this geotechnical exploration report for the referenced project site. The work was completed in general accordance with our proposal number 13-1900153, dated March 29, 2019. The purpose of our geotechnical services is to explore the subsurface conditions at the site, evaluate those conditions, and provide recommendations for site preparation and foundation support of the proposed structures. This report presents a summary of pertinent project information, results of field testing, and our geotechnical engineering conclusions and recommendations. A Site Vicinity Plan, Field Test Location Plan, CPT sounding logs, and hand-auger boring logs are included in the appendix.

S&ME appreciates the opportunity to provide our services on this project. Please contact us if you have any questions regarding this report or if we may be of further assistance.

Sincerely,

S&ME, Inc.

Nate Buffum, P.E.
Senior Geotechnical Engineer

Keith C. Brown, P.E.
Vice President
Registration No. 022540

♦ Project And Site Information

We understand that a new medical development is planned at 1000 Medical Center Drive in Wilmington, North Carolina. Based on the site grading plan provided, the development proposed will consist of four new buildings and three future proposed buildings. The proposed building plan footprints range from approximately 4,300 to 16,000 square feet. We anticipate the buildings will be single-story buildings with maximum column loads on the order of 100 kips and maximum wall loads on the order of 2 kips per foot. Associated access drives and parking areas are also planned. Based on the site grading plan, maximum excavation and fill depths planned appear to be on the order of 4 feet.

Specific structural information was not available at the time of our report preparation. Based on experience with similar construction, S&ME has assumed maximum column and wall loads will be on the order of 100 kips and 2 kip per foot, respectively. We also assume maximum fill heights of 4 to 5 feet will be required to grade some of the proposed building areas.

At the time of our exploration, the site was moderately to heavily wooded with some minor underbrush. The site ranges in elevation from 23 to 30 feet.

♦ Methods Of Exploration

Our exploration included a site reconnaissance by a geotechnical professional and the performance of nine cone penetrometer test (CPT) soundings (B-1 through B-7 and P-1 and P-2) including one seismic cone penetrometer test (SCPT) sounding (B-2). The near-surface soils were further evaluated with a hand-auger boring adjacent to soundings B-1, B-4, B-5 and B-7. Sounding locations were selected and established in the field by S&ME by hand held GPS unit and should be considered approximate. Approximate test locations are shown on Figure 2 in the Appendix.

Cone Penetration Test Soundings

S&ME advanced seven CPT soundings (B-1, B-3 through B-7 and P-1 and P-2) as shown on the Field Test Location Plan (Figure 2) in the Appendix. In a CPT sounding (ASTM D5778), an electronically instrumented cone penetrometer is hydraulically pushed through the soil to measure point stress, pore water pressure, and sleeve friction. The CPT data is used to determine soil stratigraphy and to estimate soil parameters such as, friction angle, and undrained shear strength. Soil types presented on CPT sounding logs are derived from Robertson's (1990) Soil Behavior Type (SBT) Index. The soil type determined from the SBT index is more representative of soil behavior characteristics than traditional soil classification that is based on grain size and plasticity. Sounding logs are included in the Appendix.

Seismic Cone Penetration Test Soundings

In a SCPT (B-2) sounding the travel times of shear waves generated by an impulsive force applied to the ground surface are measured by geophones mounted within the cone penetrometer. For each measurement, the distance traveled and travel time of the first shear wave arrival was determined. Interval velocities were calculated by

dividing the distance between adjacent depths by the difference in travel times. Measurements are collected every 3 feet.

Hand-Auger Boring

A 4-ft deep hand-auger boring was performed adjacent to soundings B-1, B-4, B-5 and B-7 to evaluate and classify the near-surface soils. The borings were drilled by manually turning a steel auger into the ground, and the soils encountered were visually classified in the field using the Unified Soil Classification System (USCS). Upon completion of the borings, each bore hole was backfilled with soil cuttings.

♦ Surface And Subsurface Conditions

Physiography

Figure 1 - Physiography

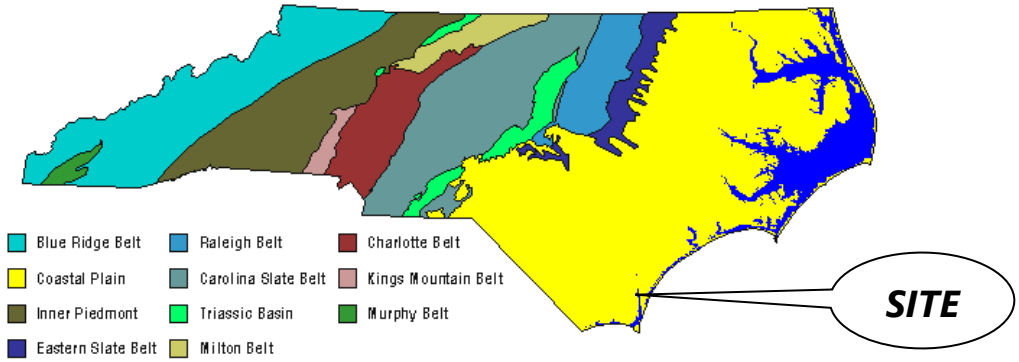

The site is located within the Coastal Plain Physiographic Province of North Carolina as shown in Figure 1. The Coastal Plain Province is typically characterized by marine, alluvial, and aeolian sediments that were deposited during periods of fluctuating sea levels and moving shorelines. The soils and basal formations in the North Carolina Coastal Plain Physiographic Province are typical of those laid down in a shallow sloping sea bottom; interbedded sands and clays with irregular deposits of shells and layers of limestone and cemented sands. Alluvial sands, silts, and clays are typically present near rivers and creeks. Deposits of peat, organic silt, and organic clay are also typically present in or near current or former tidal marsh areas in the outer portion of the Coastal Plain.

According to the 1985 Geologic Map of North Carolina, the site is underlain by the Peedee Formation of Cretaceous age. This formation consists of fossiliferous and calcareous sand, clayey sand, and greenish gray to olive black clay. This type of formation is capable of developing solution cavities and voids. The top of the coastal formations on the geologic map are typically on the order of 30 to 100 feet below the ground surface. They represent basal, relatively hard formations with consistency over large areas.

Subsurface Conditions

Details of the subsurface conditions encountered by the soundings and borings are shown on the logs in the Appendix. These logs represent our interpretation of the subsurface conditions based upon field data. Stratification lines on the logs represent approximate boundaries between soil types[1]; however, the actual transition may be gradual. The general subsurface conditions and their pertinent characteristics are discussed in the following paragraphs.

The exploration initially encountered approximately 6 to 8 inches of organic laden topsoil in HA-1, HA-4, HA-5 and HA-7. Beneath the surface materials, the hand auger boring exploration generally encountered very loose to loose relatively clean sand to the termination depth. From this depth, the exploration generally encountered medium dense to dense sand to a depth of approximately 18 to 20 ft below the existing ground surface. Very loose silty sand was encountered to approximately 29 to 31 ft below the existing ground surface.

Water levels were measured upon completion of the CPT soundings and hand-auger borings. Groundwater was encountered at a depth of 6 to 11 feet below the existing ground surface in all soundings.

♦ Conclusions And Recommendations

The following conclusions and recommendations are based on our field exploration, our understanding of the proposed construction, our engineering analyses, experience with similar projects and subsurface conditions, and our correspondence with you. If structural loads and/or proposed site grades are different from those assumed or indicated, we should be provided the opportunity to review and comment upon the recommendations of this report so that they may be confirmed, extended, or modified as necessary. If subsurface conditions adverse to those indicated by this report are encountered during construction, those differences should be reported to us for review and comment.

General Discussion

Based on our review of the provided project information and geotechnical analyses of field testing data, this site is suitable for the planned construction provided that site preparation recommendations presented herein are implemented during construction.

To reduce potential earthwork problems, site preparation and grading should be scheduled during the typically drier months of May through November, if possible. If late fall or winter grading is attempted, repair of near-surface soils and possible use of select off-site borrow will be necessary to adequately prepare subgrades for new construction. Heavy rubber-tired construction equipment should not be allowed to operate on exposed subgrades during wet conditions. Even during drier periods of the year, we recommend that exposed subgrades be sloped and sealed at the end of each day to promote runoff and reduce infiltration from rainfall. To further reduce potential deterioration of exposed subgrades, construction traffic patterns should be managed to limit

[1] Soil Behavior Type is calculated based on empirical correlations with tip resistance, sleeve friction, and pore pressure. A CPT may define a soil based on its behavior as one type while its grain size and plasticity, the traditional basis for soil classification (USCS), may define it as a different type.

equipment passes across the site. An all-weather surface may be necessary for heavy construction traffic to reduce degrading the soil subgrade during construction.

The following sections present our geotechnical conclusions and recommendations regarding site development.

Earthwork

Site Preparation

Initial site preparation should begin by clearing vegetation and stripping of organics and topsoil, and any other deleterious materials for a lateral distance of at least 5 feet beyond the limits of new construction. Based on the hand-auger borings and past experience, we anticipate topsoil thicknesses will typically range from 4 to 6 inches. Stripping depths of 10 to 12 inches in heavily wooded areas are anticipated to remove roots and stumps. Any voids created from stripping and removing of trees or existing utilities should be cleaned and filled with well-compacted controlled fill.

After the required initial site work has been completed, we recommend that the exposed subgrade soils be proofrolled with a 10-ton smooth-drum self-propelled roller operating in the static mode or a loaded dump truck to locate any areas of soft, very loose, or otherwise unsuitable surface conditions. Any area that ruts or pumps should be disced, moisture conditioned to near the soil's optimum moisture content by drying or wetting, and recompacted. If groundwater is at its seasonal high (1.5 to 2.5 feet below the ground surface), operating the roller in the vibratory mode should be avoided. Alternatively, unstable soils could be undercut and replaced with compacted backfill, as discussed below.

The total amount of undercutting will depend on the design grades and the weather conditions at the time of proofrolling and site earthwork. It is typically more practical and economical to undercut and replace soft, wet subgrade soils, rather than disc, dry and recompact them, especially during the typically cooler, wetter months of the year (November through March) where the groundwater is at or near the seasonal high water table elevation. We recommend that the construction contract include an allowance for the undercutting of unsuitable soils and replacement with compacted structural fill. It should also include an allowance for the use of geotextile, such as a woven stabilization fabrics or geogrids (Mirafi 500x or equivalent). The use of geotextiles could be limited by proposed footing and utility depths below finish grade. Once the design grades have been determined S&ME should be contacted to discuss earthwork contract options with the design team.

Construction Dewatering

During construction, we anticipate that the use of temporary wellpoints or pumps within the excavations will be required to lower and control groundwater levels. Depending on the depth of the excavations, in underground utility trenches, numerous wells, both internal and external to the excavations, in addition to internal sump pumps, may be necessary to keep the water table below the bottom of the excavations. Groundwater should be maintained a minimum of 2 to 3 feet below the excavation bottom throughout construction to maintain bottom stability. The dewatering system designer should also consider the influence of dewatering on any nearby structures and roadways.

The responsibility for dewatering of construction excavations should lie solely with the contractor. This information is provided only as a service and under no circumstance should S&ME be assumed to be responsible for the effectiveness of the construction dewatering method(s) selected by the contractor

Structural Fill

We recommend that soils used as structural fill meet the following requirements:

- Contain less than 5 percent organics.
- Be free of trash or other deleterious materials.
- Have a maximum particle size of 2 inches or less.
- Have a minimum standard Proctor maximum dry density of 100 pounds per cubic foot.
- Contain no more than 20 percent fines (silt/clay) (Unified Soil Classification of SP, SP-SM, SP-SC or SM)

Based on the near-surface soils encountered in the hand augers and CPT soundings, the on-site soils down to a depth of approximately 6 feet should be suitable for use as structural fill and backfill. Groundwater was encountered within 6 to 11 feet of existing ground surface in the majority of the soundings. Soils excavated from below the water table will most likely require discing and drying prior to reuse as compacted structural fill.

Please note that the site contains clean sand (SP) and slightly silty sand (SP-SM) with less than 12% fines that have very little "binder" and can be difficult to compact and maintain a stable fill surface upon. Clean fine sands (SP) are common in the vicinity of the site and are locally known as "sugar sands". These soils typically require the addition of large amounts of water, even during wet, cool weather conditions, to achieve compaction. Also, the fill surfaces need to be covered with additional fill or ABC stone base immediately, as they will tend to degrade upon drying and rut under construction traffic. Alternatively, they can be moisture conditioned and re-compacted prior to subsequent fill or pavement material placement.

Fill Placement and Compaction

All new structural fill soil should be placed in 8 to 10-inch loose lifts and compacted to at least 95 percent of the standard Proctor maximum dry density (MDD) (ASTM D 698). The top 12 inches should be compacted to at least 98 percent of the materials standard Proctor MDD. The moisture content of structural fill should be maintained at +/- 5 percent for SP-SM and within +/-3 percent for SP-SC, SC and SM materials of optimum moisture during compaction. A qualified soil technician working under the supervision of the geotechnical engineer should observe fill placement and compaction. An appropriate number of soil density tests should be conducted to confirm that adequate fill compaction is achieved.

Subgrade Repair and Improvement Methods

The exposed subgrade of both cut and fill areas can deteriorate and lose support when exposed to construction traffic and adverse weather conditions. Deterioration can occur in the form of rutting, pumping, freezing, or erosion. We recommend that, during construction, exposed subgrade surfaces be sealed at the end of each day or when wet weather is forecast. Water should not be allowed to pond in fill or cut areas. Immediately prior to floor slab or pavement construction, exposed subgrade soils should be evaluated by proofrolling to determine their stability. Soils which rut, pump, or deflect under proofrolling should be repaired prior to ABC stone placement.

Repair measures may include scarifying/drying/recompacting, undercutting, placement of geotextiles, or some combination of these. Actual repair measures will be influenced by project schedule and weather conditions and can only be determined in the field.

Pavement Recommendations

Pavement design procedures are based on AASHTO "Guide for Design of Pavement Structures" (1993) and associated literature. At the time of this report, traffic loading information was not available. For the purpose of our analysis, we have considered the following traffic loading.

Vehicle Type	Volume & Frequency
Small Delivery Trucks	1 per day
Trash Trucks	2 per week
Fire Trucks	1 per month
Automobiles	200 per day

The pavement analysis was based on an initial serviceability index of 4.2 (4.5 for concrete), a terminal serviceability index of 2.0, and a 20-year design life.

Asphalt Pavement

Based on the field testing, and past experience, a design CBR value of 8 percent was used for pavement design. This CBR value is based on the subgrade soils consisting of sandy soils and the top 12 inches being uniformly compacted to at least 98% of the soil's standard Proctor MDD. For the light-duty pavement areas (i.e. parking stalls) an 18-kip equivalent single axle loads (ESAL) value of 10,000 was used. For heavy-duty pavement area (i.e. access drives and route to dumpster pad) an ESAL value of 30,000 was used.

Recommendations for the standard and heavy duty pavements are provided in the table below.

Material Type	Light Duty	Heavy Duty
Asphalt Surface Course	2.0 inches (S-9.5B)	3.0 inches* (S-9.5B)
Aggregate Base Course	6 inches	8 inches

*Placed in two lifts

All materials and construction methods should conform to the 2012 edition of the NCDOT "Standard Specifications for Roads and Structures." The aggregate base course (ABC) stone should consist of stone meeting the requirements under Section 520. ABC stone should be compacted to at least 98 percent of the maximum dry density as determined by the modified Proctor compaction test, AASHTO T-180M as modified by NCDOT. To confirm that the base course stone has been uniformly compacted, in place density tests should be performed by a qualified soils technician and the area should be thoroughly proofrolled under his observation.

Asphaltic concrete should conform to Section 610 in the 2012 edition of the NCDOT "Standard Specifications for Roads and Structures." Sufficient testing and observation should be performed during pavement construction to confirm that the required thickness, density, and quality requirements of the specifications are achieved.

Although our analysis was based on traffic loading for a 20-year design life, our experience indicates that pavement maintenance is necessary due to normal weathering of the asphaltic concrete. Normal weathering (i.e., oxidation) causes asphalt to become more brittle resulting in loss of tensional strength. This loss in strength can cause minor cracking which provides access for water infiltration into the stone base and subgrade. As the degree of saturation of the subgrade increases, the strength of the subgrade decreases leading to pavement failure. Routine maintenance in the form of sealing, patching, and maintaining proper drainage is required to increase pavement life. It is not uncommon for overlays to be required after 10 to 12 years.

Concrete Pavement (Dumpster Pad)

The concrete pavement design was performed using the same design traffic as in the heavy-duty asphalt pavement areas (30,000 ESALs). The compressive strength of the concrete was assumed to be 4,000 psi. A modulus of subgrade reaction of 150 pci was used for design assuming 6 inches of compacted ABC stone is placed beneath the concrete pavement. We have assumed that load transfer across contraction (saw) joints will be handled by aggregate interlock. ABC should meet the material and compaction requirements stated in the "Flexible (Asphalt) Pavement" section above.

Concrete pavement is recommended for heavily loaded traffic and dumpster pad areas. The table below presents our recommended concrete pavement section thicknesses.

Material Type	Concrete Pavement Design
Air Entrained Concrete (4000 psi)	4.0 inches
Aggregate Base Course (ABC) stone	6.0 inches
Maximum Joint Spacing	12 feet in all directions

Saw joints should be cut to a depth of at least ¼ of the thickness of the concrete pavement to promote shrinkage cracking along the joint. The ABC stone should be compacted to at least 98 percent of its modified Proctor maximum dry density.

Foundation Recommendations

We have assumed maximum column and wall loads for the new building will be 100 kips and 2 kips per linear foot, respectively. Please let us know if assumed structural loads are different than our assumptions.

Foundations can be supported on shallow spread footings designed for a net allowable bearing pressure of 2,000 pounds per square foot (psf). This bearing pressure assumes that footings will bear in compacted structural fill or natural soils, and that the site is prepared as recommended above.

Footings should bear at least 18 inches below exterior grade to avoid frost penetration and develop the design bearing capacity. Continuous wall footings should be at least 18 inches wide, and isolated column footing should be at least 24 inches wide. This recommendation is made to prevent a localized or "punching" shear failure condition which can occur with very narrow footings.

Based on encountered subsurface conditions and assumed structural loads, we estimate that total settlement of building foundations will be 1 inch or less. These estimates assume that all structural fill is properly placed and compacted. A detailed foundation layout with structural loads is required to estimate differential settlement; however, based on the maximum column load and subsurface conditions encountered, we would estimate differential settlements of one half of the total settlement between adjacent columns.

Footing Evaluations

The bottom of all footing excavations for the structure should be evaluated by the project geotechnical engineer or a soils technician working under the direction of the geotechnical engineer using a hand auger and dynamic cone penetrometer (DCP) to gauge the consistency of subgrade soils. Footing subgrades that are unstable should be overexcavated and replaced with NCDOT #57 stone or lean concrete.

Floor Slabs

The ground floor slab may be constructed above suitable compacted fill or stable natural soils provided that the recommendations described above are implemented. The slab should be separated from footings to allow for relative displacement.

We recommend that at least 6 inches of compacted select granular material be placed beneath all ground floor slabs to provide a capillary break, provide more uniform slab support, and reduce damage to subgrade soils during construction. The select granular fill should classify as SP, SP-SM, SW, or SW-SM in accordance with the Unified Soil Classification System, which requires that these soils have less than 12 percent passing the No. 200 sieve. Manufactured materials such as aggregate base course (ABC) or processed fill (i.e., screenings) meeting this specification can be used. A modulus of subgrade reaction value of 175 psi/in may be used to design floor slab on subgrades consisting of these soils compacted to at least 98 percent of the soil's standard Proctor maximum dry density.

Exposure to the environment and construction activities will weaken the floor slab subgrade soils. Therefore, we recommend that subgrade soils in slab areas be evaluated prior to placement of the select granular fill. If near surface deterioration of the soils has occurred, undercutting or reworking of the fill may be necessary.

Based on the results of our exploration and the assumed finish floor elevation, the floor slab will not be below the exterior grade and will not be subjected to hydrostatic pressure from groundwater. However, water vapor transmission through the slab is still a design consideration. Evaluating the need for and design of a vapor retarder or vapor barrier for moisture control is outside our scope of services and should be determined by the project architect/structural engineer based on the planned floor coverings and the corresponding design constraints, as outlined in ACI 302.1R-04 Guide for Concrete Floor and Slab Construction. Further, health and

environmental considerations with respect to any potentially harmful vapor transmission are also outside of our scope.

Seismic Design Considerations

The following sections pertain to seismic considerations.

Seismic Site Class

Seismic site classification is based on the top 100 feet of a site's subsurface profile. Based on the Shear Wave velocity values in the Seismic CPT sounding recorded during the field exploration and S&ME's knowledge of the local geology, per Section 1613 of the *2018 North Carolina State Building Code* the site is considered as Seismic Site Class D.

Design Spectral Accelerations

The current North Carolina Building Code (NCBC) references the 2015 International Building Code and ASCE 7-10 for determining the design spectral accelerations and liquefaction potential. However, Seismic Ground Motion Maps were updated in 2014 and are incorporated into ASCE 7-16. The updated maps, which result in lower spectral accelerations, represent the latest understanding of the seismic hazard and will presumably be eventually incorporated into the NCBC. Listed in the table below are the ground motion parameters from both resources.

Ground Motion Parameters

Method	Site Class	S_S	S_1	S_{DS}	S_{D1}	PGA	Seismic Design Category
2018 North Carolina Building Code (ASCE 7-10)	D	0.221g	0.092g	0.236g	0.148g	0.178g	C
ASCE 7-16	D	0.157g	0.069g	0.168g	0.11g	0.127g	B

Liquefaction Triggering

We performed a seismic liquefaction triggering evaluation using the methods presented by Youd et. al. (2001) and Boulanger and Idriss (2014) based on the design earthquake (M=7.3). The design earthquake has a 2 percent probability of exceedance in a 50 year period. This is equivalent to an earthquake that has the likelihood of occurring once every 2,475 years.

To help evaluate the consequences of liquefaction, the Liquefaction Potential Index (LPI) was computed. The LPI is an empirical tool used to evaluate the site liquefaction hazard and the potential for liquefaction-induced damages[2]. The LPI considers the factor of safety against liquefaction, the depth to the liquefiable soils, and the

[2] Iwasaki et al. 1982, Toprak & Holzer (2003).

thickness of the liquefiable soils to compute an index that ranges from 0 to 100. An LPI of 0 means there is no risk of liquefaction; an LPI of 100 means the entire profile is expected to liquefy. The level of risk is generally defined as:

- LPI < 5 – surface manifestation and liquefaction-induced damage not expected.
- 5 ≤ LPI ≤ 15 – moderate liquefaction with some surface manifestation possible.
- LPI > 15 – severe liquefaction and foundation damage is likely.

Based on the results of our analyses, we conclude that the site has a low potential for liquefaction for the design earthquake, with the exception of near soundings B-2 and B-5 under the 2018 NCBC. Liquefaction potential calculated with ASCE 7-10 and 7-16 are approximately 5 and 1, respectively. With the ground motions based on the most up-to-date maps, the liquefaction potential index is less than 5; therefore, liquefaction-induced damage is not expected. Maximum liquefaction settlement is estimated to be between 2 to 4 inches.

Liquefaction Mitigation – Earthquake Drains

The project owner may elect to mitigate the liquefaction potential discussed above. Earthquake drain installation can mitigate liquefaction potential and reduce seismic settlement to acceptable levels (less than 2 inches); however, the drains cannot totally eliminate seismic settlement. The drains allow for the rapid dissipation of excess soil porewater pressures generated during a seismic event thus reducing liquefaction. The drains are composed of corrugated, perforated plastic pipe encased in a filter fabric which prevents migration of fines into the pipe. Pipe diameters and spacing's vary according to the anticipated liquefaction risk and may be supplemented with man-made gravel reservoirs for additional water storage. The drains are installed by vibrating a steel casing into the ground which helps densify the surrounding loose sands and allows insertion of the drain pipe.

Earthquake drains are typically provided in a design-build contract by a specialty contractor experienced with the design and installation of the system. If the owner decides to take measures to mitigate liquefaction potential, requests be submitted to qualified contractors to prepare a proposal to furnish all necessary labor, equipment, and materials to design and install EQ drains to reduce liquefaction-induced deformations for the IBC 2015 design earthquake in building areas to a magnitude acceptable to the structural engineer. The IBC 2015 design event comprises a 7.3 magnitude earthquake with a peak ground acceleration (PGA) of 0.178. A copy of this report should be submitted with the request to provide the necessary subsurface data to perform the design. The proposals should be evaluated by the project Geotechnical and Structural Engineers, and then a contractor should be selected based on technical approach, past experience, and cost.

If performed, EQ drain installation should be observed by a representative of the Geotechnical Engineer to confirm that 1) earthquake drains are installed in all locations, 2) earthquake drains are installed to the design depth, and 3) note any non-conformance with the EQ drain design.

If requested, S&ME can be retained to design the earthquake drain program, which in turn could then be provided to specialty contractors.

Retaining Wall Recommendations

General

Retaining walls must be designed to resist lateral earth pressures from backfill. In addition to the lateral stresses from backfill, walls may be subjected to surcharge loading from adjacent traffic, stockpiled materials, or stresses from nearby footings or floor slabs. If present, these surcharge stresses should be resolved into appropriate lateral stress distributions and added to the earth pressures outlined below. Walls should have adequate factors of safety against overturning, sliding, and global failure.

We recommend placing a drainage medium, such as washed stone (NCDOT #57) wrapped in geotextile fabric or a prefabricated geocomposite drain, behind the wall. The drainage medium should be connected to a footing drain or weep holes to reduce potential buildup of hydrostatic pressure due to surface water, perched water, or utility leaks.

Backfill materials placed behind retaining walls should be compacted to at least 95 percent of the soil's standard Proctor maximum dry density (ASTM D 698) and within 3 percent of optimum moisture. Operating heavy compaction equipment within 5 feet behind the retaining structures can create lateral earth pressures far in excess of those recommended for design. As such, we recommend that hand-operated equipment be used within 5 feet from walls.

We understand the site contractor intends to use quarry screenings as reinforced backfill (backfill containing mechanical reinforcement or geogrid) behind MSE walls. Recommended properties for reinforced backfill, retained soil, and foundation soils are provided in the table below. The parameters assume that soils are properly compacted in accordance with project specifications.

Recommended Parameters for Segmental Block Wall Backfill

Material	Friction Angle	Cohesion	Moist Unit Weight
Reinforced Material (Quarry Screenings)	42^0	0	125 pcf
Retained Soils (onsite SM-SP)	30^0	0psf	115 pcf
Foundation Soils: Onsite SM-SP	30^0	0	115 pcf

♦ Qualifications Of Report

This report has been prepared in accordance with generally accepted geotechnical engineering practice for specific application to this project. The conclusions and recommendations contained in this report are based upon applicable standards of our practice in this geographic area at the time this report was prepared. No other representation or warranty either express or implied, is made.

We relied on project information given to us to develop our conclusions and recommendations. If project information described in this report is not accurate, or if it changes during project development, we should be notified of the changes so that we can modify our recommendations based on this additional information if necessary.

Our conclusions and recommendations are based on limited data from a field exploration program. Subsurface conditions can vary widely between explored areas. Some variations may not become evident until construction. If conditions are encountered which appear different than those described in our report, we should be notified. This report should not be construed to represent subsurface conditions for the entire site.

Unless specifically noted otherwise, our field exploration program did not include an assessment of regulatory compliance, environmental conditions or pollutants or presence of any biological materials (mold, fungi, bacteria). If there is a concern about these items, other studies should be performed. S&ME can provide a proposal and perform these services if requested.

S&ME should be retained to review the final plans and specifications to confirm that earthwork, foundation, and other recommendations are properly interpreted and implemented. The recommendations in this report are contingent on S&ME's review of final plans and specifications followed by our observation and monitoring of earthwork and foundation construction activities.

Appendices

Appendix I – Figures

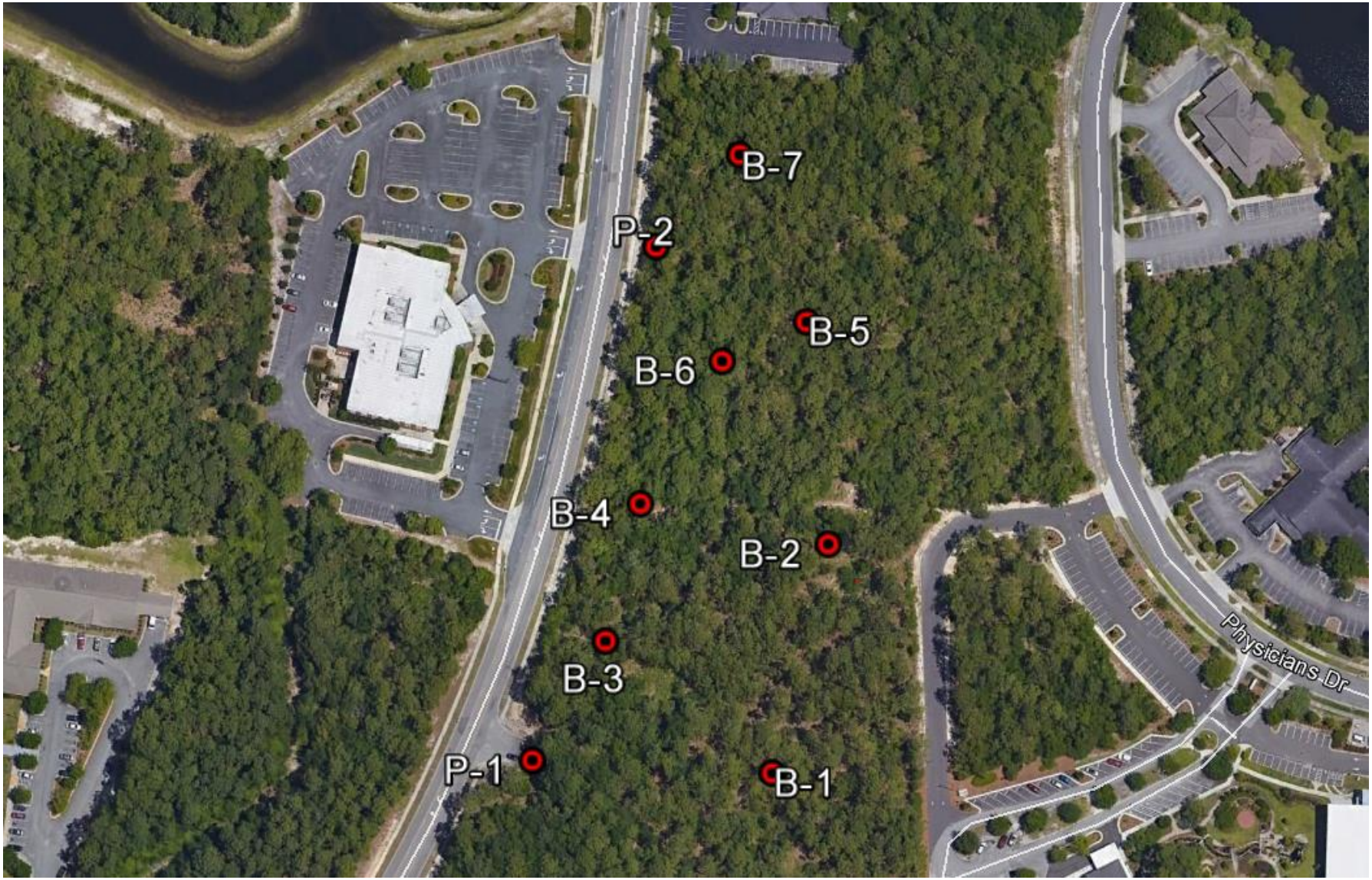

REFERENCE: GOOGLE EARTH

	PROPOSED TEST LOCATION PLAN	SCALE: NOT TO SCALE	FIGURE NO. 1
	HEALING PLACE OF NEW HANOVER COUNTY MEDICAL CENTER DRIVE WILMINGTON, NORTH CAROLINA	DATE: 3/29/2019 PROJECT NUMBER 13-1900153	

Appendix II – CPT Sounding and Hand-auger Boring Logs

Sounding ID: P-1

The Healing Place of New Hanover County
Wilmington, North Carolina
S&ME Project No: 1306-19-006

Date:	Apr. 15, 2019	**Total Depth:**	10.3 ft
Estimated Water Depth:	9.5 ft	**Termination Criteria:**	Target Depth
Rig/Operator:	Mid Atlantic/A. Fowler	**Cone Size:**	1.75

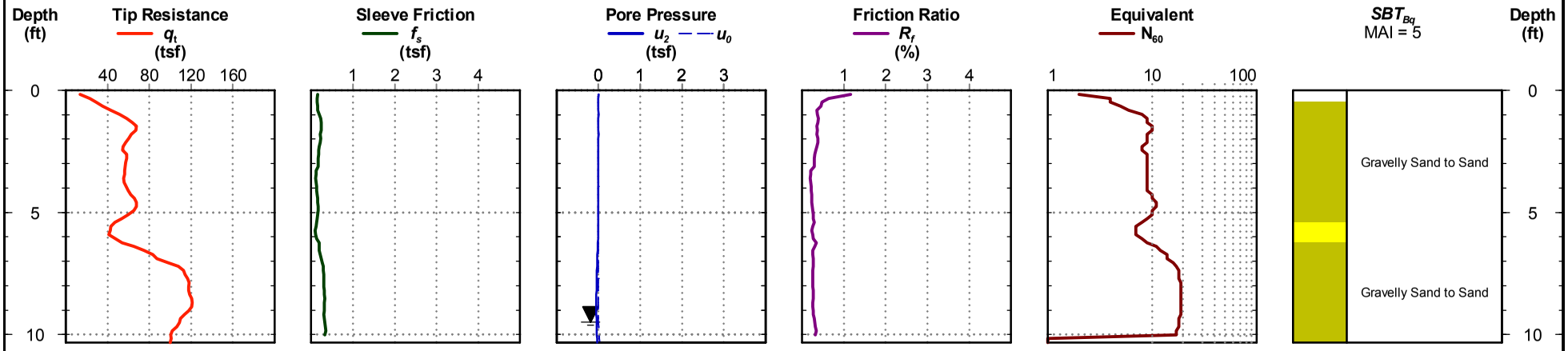

Cone Penetration Test

Electronic Filename: HP P-1.cpt

CPT REPORT - STANDARD - SBT BQ \ 1306-19-006.GPJ \ LIBRARY 2011_06_28.GDT \ 4/16/19

Sounding ID: P-2

The Healing Place of New Hanover County
Wilmington, North Carolina
S&ME Project No: 1306-19-006

Date:	Apr. 15, 2019	**Total Depth:**	10.3 ft
Estimated Water Depth:	9.5 ft	**Termination Criteria:**	Target Depth
Rig/Operator:	Mid Atlantic/A. Fowler	**Cone Size:**	1.75

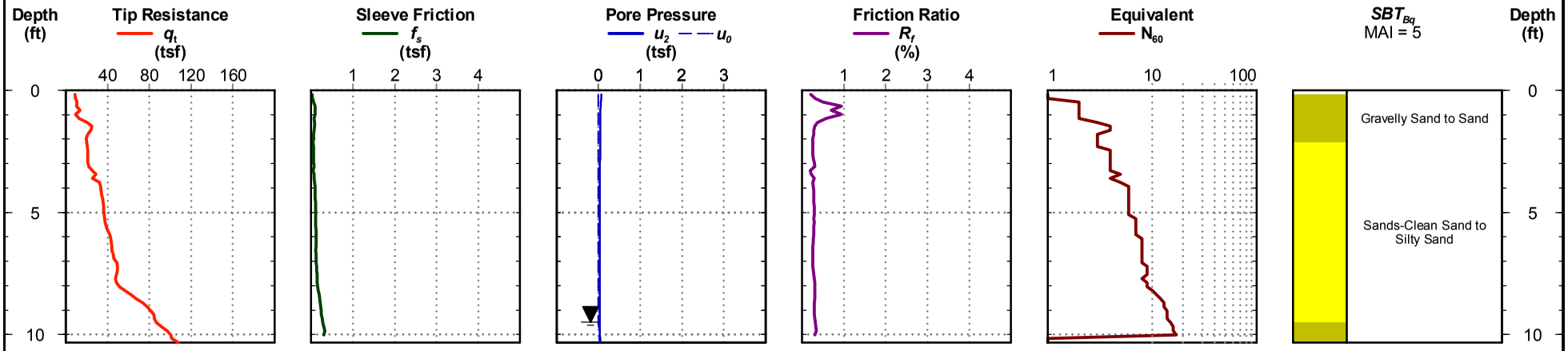

Cone Penetration Test

Electronic Filename: HP P-2.cpt

CPT REPORT - STANDARD - SBT BQ \ 1306-19-006.GPJ \ LIBRARY 2011_06_28.GDT \ 4/16/19

Sounding ID: S-1

The Healing Place of New Hanover County
Wilmington, North Carolina
S&ME Project No: 1306-19-006

Date:	Apr. 15, 2019	**Total Depth:**	20.3 ft
Estimated Water Depth:	9 ft	**Termination Criteria:**	Target Depth
Rig/Operator:	Mid Atlantic/A. Fowler	**Cone Size:**	1.75

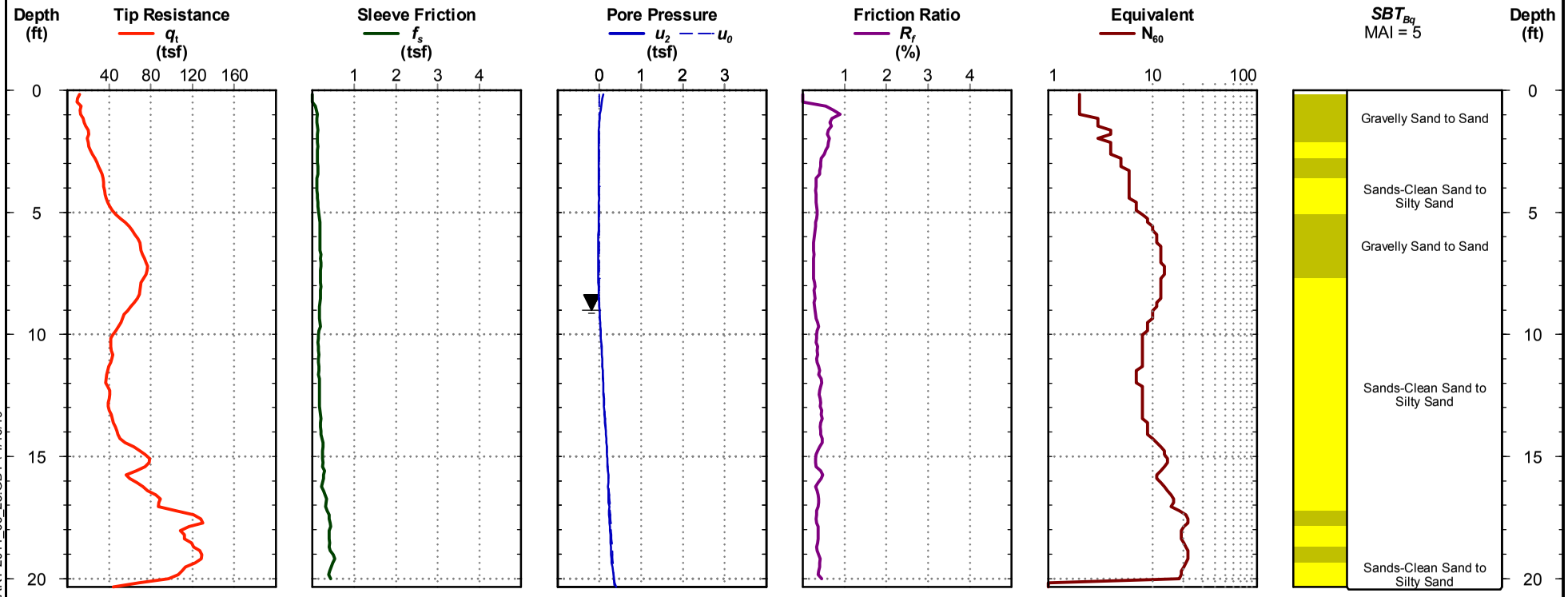

Cone Penetration Test

Electronic Filename: HP S-1.cpt

CPT REPORT - STANDARD - SBT BQ \ 1306-19-006.GPJ \ LIBRARY 2011_06_28.GDT \ 4/16/19

Sounding ID: S-2

The Healing Place of New Hanover County
Wilmington, North Carolina
S&ME Project No: 1306-19-006

Date: Apr. 15, 2019
Estimated Water Depth: 5.75 ft
Rig/Operator: Mid Atlantic/A. Fowler

Total Depth: 29.4 ft
Termination Criteria: Maximum Reaction Force
Cone Size: 1.75

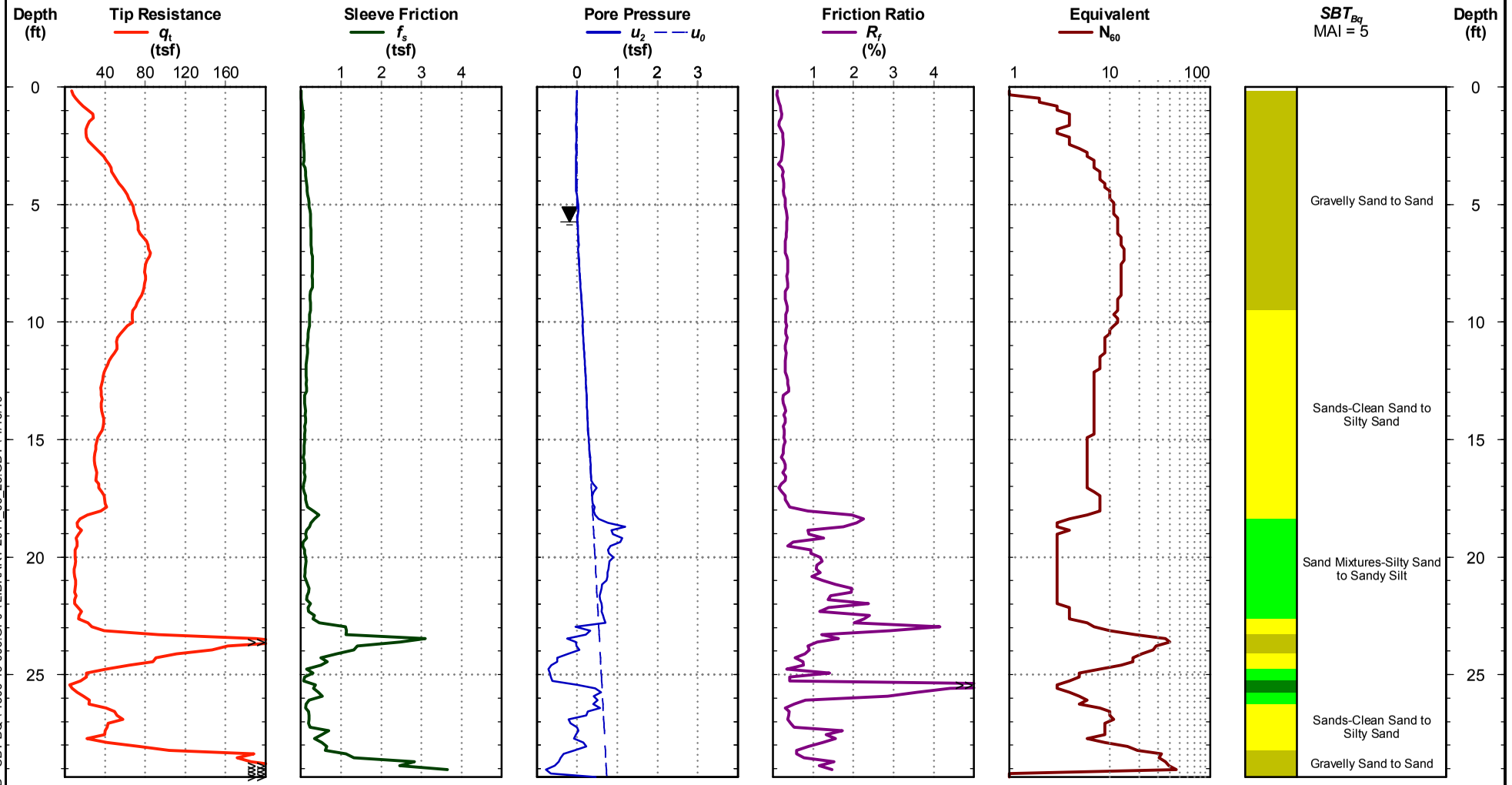

Cone Penetration Test

CPT REPORT - STANDARD - SBT BQ \ 1306-19-006.GPJ \ LIBRARY 2011_06_28.GDT \ 4/16/19

Electronic Filename: HP S-2.cpt

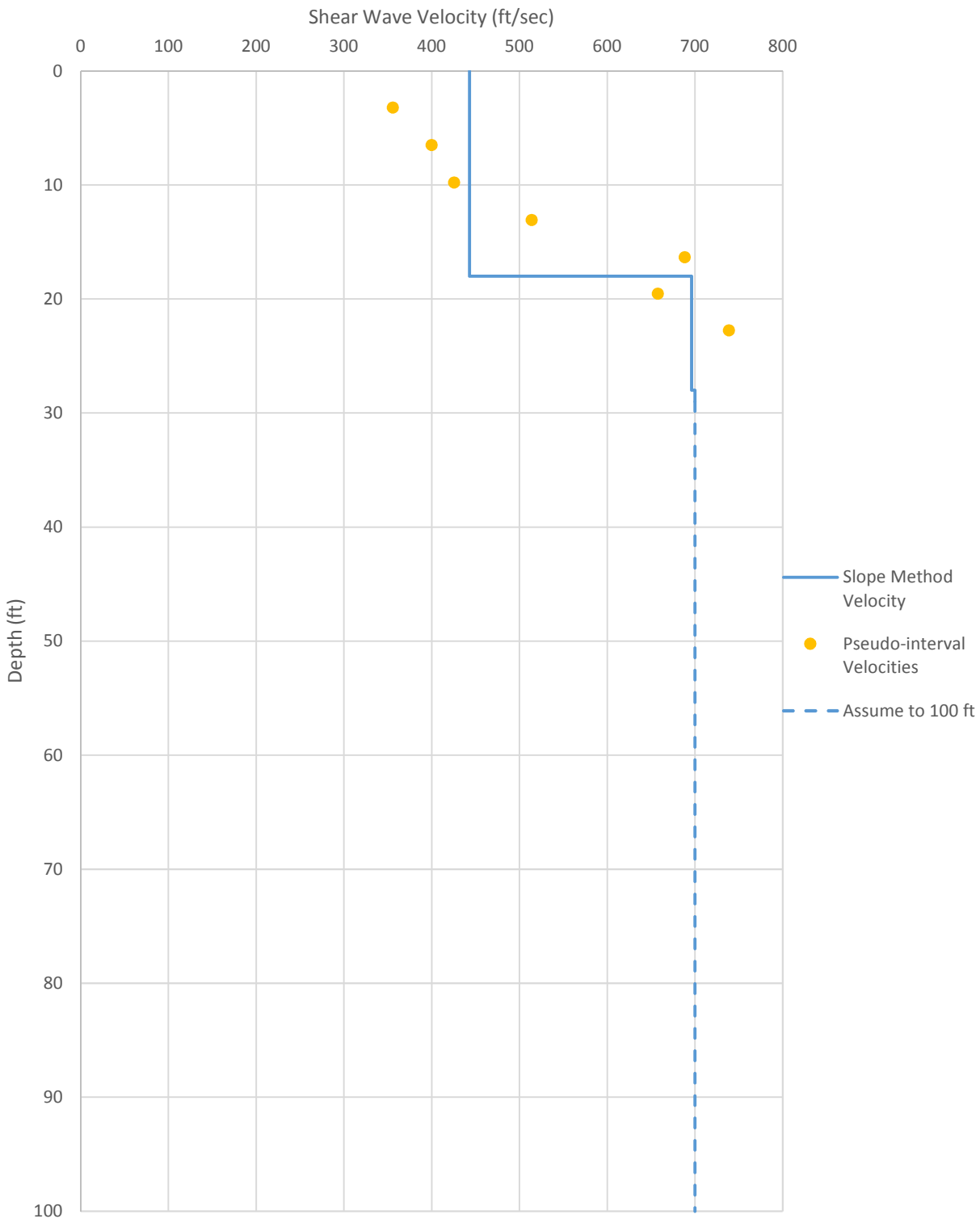

Drawn by: A. Yetman		**Shear Wave Velocity Profile**	Fig. No. 2
Checked by: K. Brown		The Healing Place of New Hanover County Wilmington, NC	
Date: 4/15/2019		Proj. No. 1306-19-006 S-2	

Sounding ID: S-3

The Healing Place of New Hanover County
Wilmington, North Carolina
S&ME Project No: 1306-19-006

Date:	Apr. 15, 2019	**Total Depth:**	23.0 ft
Estimated Water Depth:	9.5 ft	**Termination Criteria:**	Target Depth
Rig/Operator:	Mid Atlantic/A. Fowler	**Cone Size:**	1.75

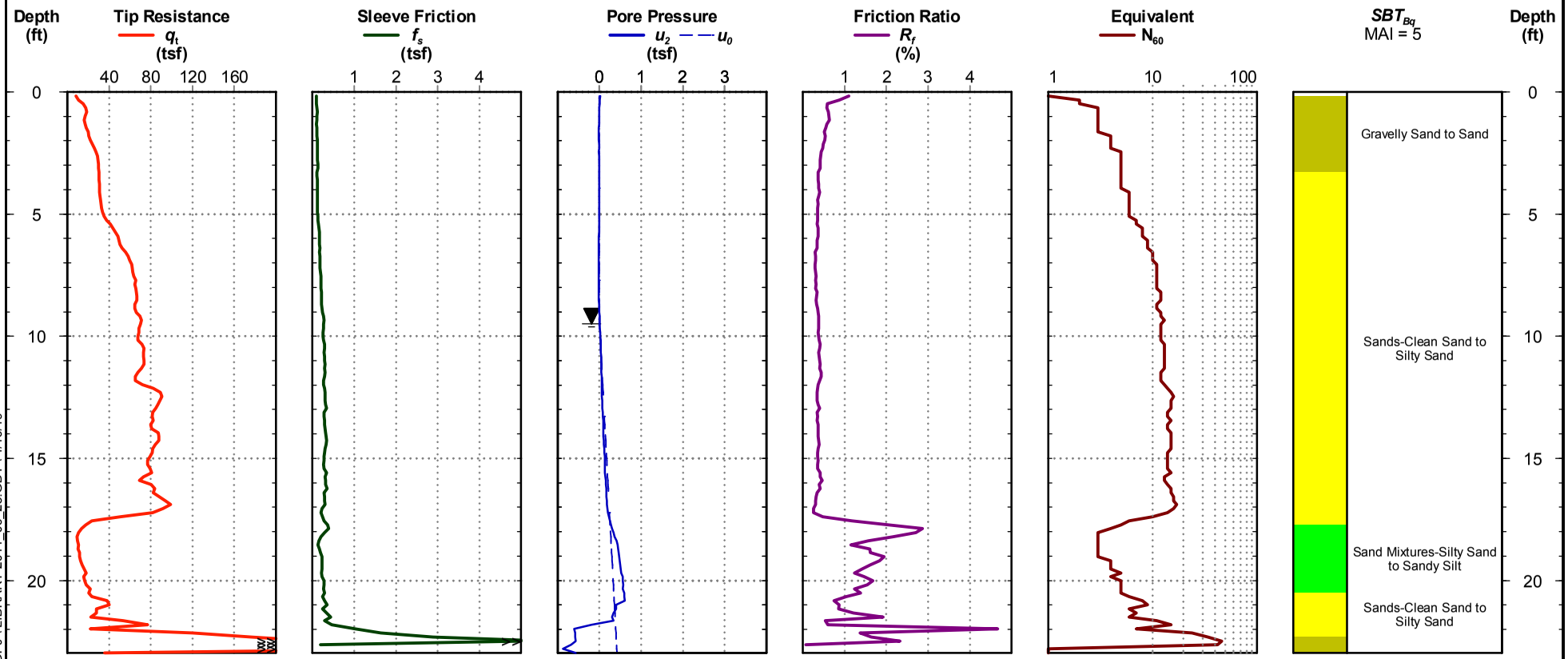

Cone Penetration Test

Electronic Filename: HP S-3.cpt

CPT REPORT - STANDARD - SBT BQ \ 1306-19-006.GPJ \ LIBRARY 2011_06_28.GDT \ 4/16/19

Sounding ID: S-4

The Healing Place of New Hanover County
Wilmington, North Carolina
S&ME Project No: 1306-19-006

Date:	Apr. 15, 2019	**Total Depth:**	20.3 ft
Estimated Water Depth:	9.75 ft	**Termination Criteria:**	Target Depth
Rig/Operator:	Mid Atlantic/A. Fowler	**Cone Size:**	1.75

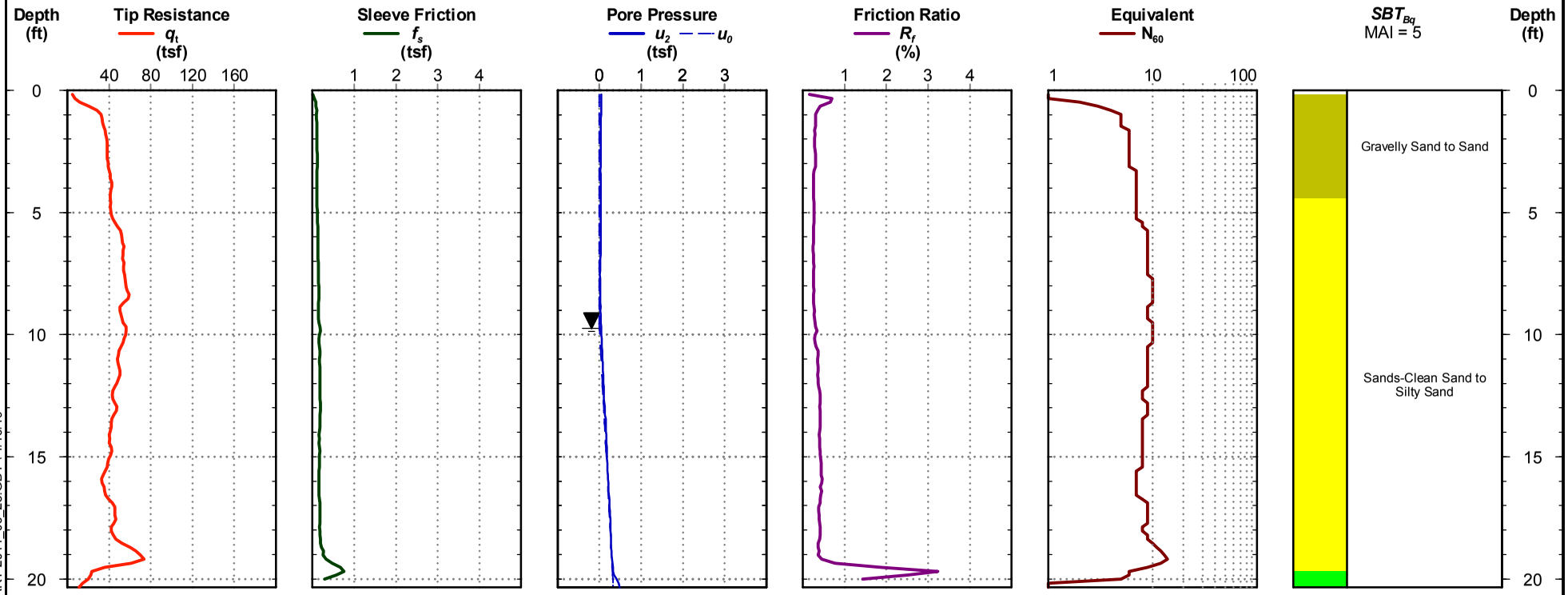

Cone Penetration Test

Electronic Filename: HP S-4.cpt

CPT REPORT - STANDARD - SBT BQ \ 1306-19-006.GPJ \ LIBRARY 2011_06_28.GDT \ 4/16/19

Sounding ID: S-5

The Healing Place of New Hanover County
Wilmington, North Carolina
S&ME Project No: 1306-19-006

Date:	Apr. 15, 2019	**Total Depth:**	20.3 ft
Estimated Water Depth:	11 ft	**Termination Criteria:**	Target Depth
Rig/Operator:	Mid Atlantic/A. Fowler	**Cone Size:**	1.75

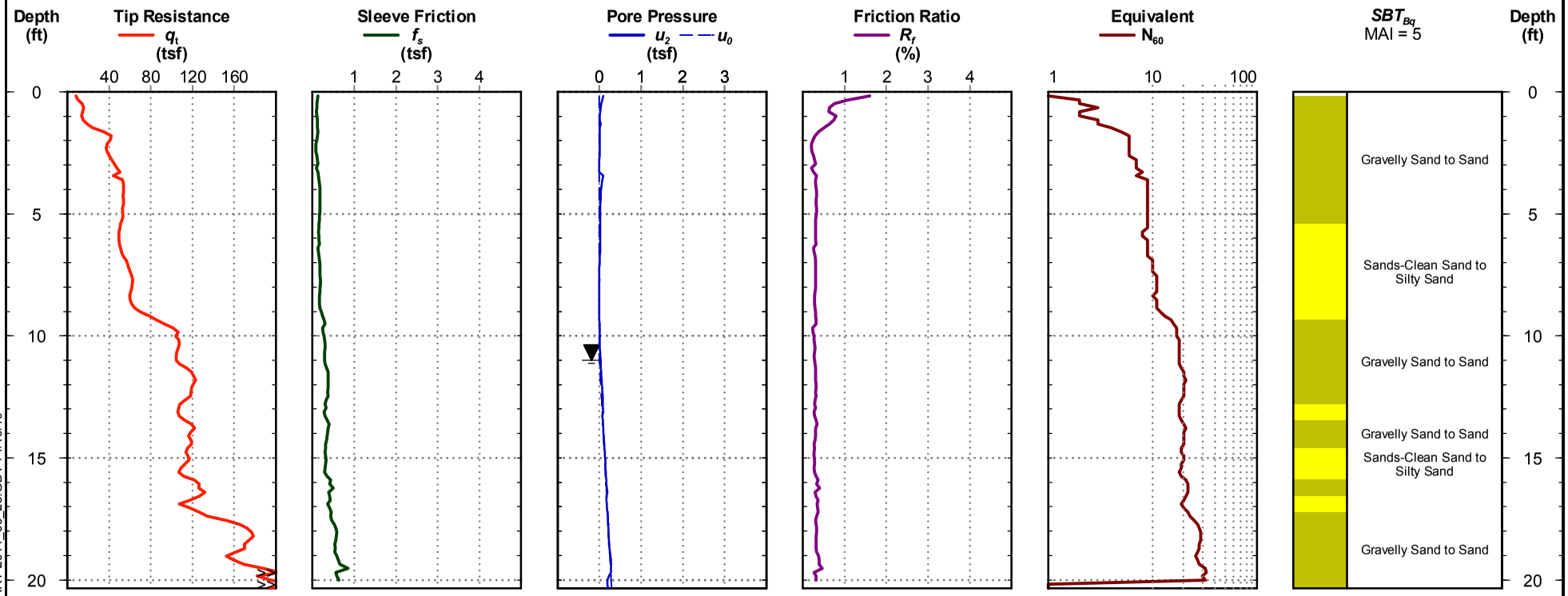

Cone Penetration Test

Electronic Filename: HP S-5.cpt

CPT REPORT - STANDARD - SBT BQ \ 1306-19-006.GPJ \ LIBRARY 2011_06_28.GDT \ 4/16/19

Sounding ID: S-6

The Healing Place of New Hanover County
Wilmington, North Carolina
S&ME Project No: 1306-19-006

Date:	Apr. 15, 2019	**Total Depth:**	32.0 ft
Estimated Water Depth:	8.67 ft	**Termination Criteria:**	Maximum Reaction Force
Rig/Operator:	Mid Atlantic/A. Fowler	**Cone Size:**	1.75

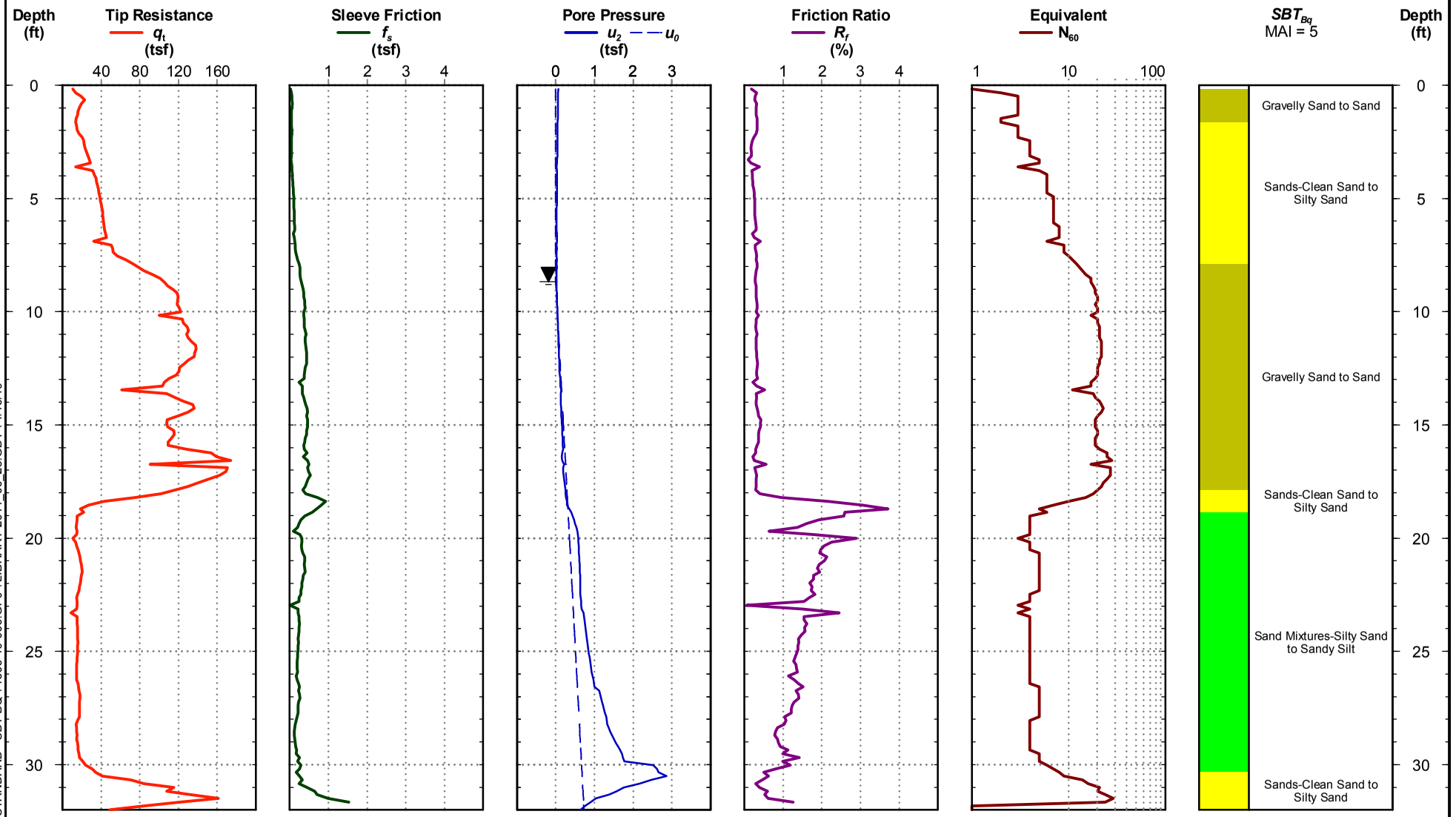

Cone Penetration Test

Electronic Filename: HP S-6.cpt

CPT REPORT - STANDARD - SBT BQ \ 1306-19-006.GPJ \ LIBRARY 2011_06_28.GDT \ 4/16/19

Sounding ID: S-7

The Healing Place of New Hanover County
Wilmington, North Carolina
S&ME Project No: 1306-19-006

Date:	Apr. 15, 2019	**Total Depth:**	20.3 ft
Estimated Water Depth:	11.5 ft	**Termination Criteria:**	Target Depth
Rig/Operator:	Mid Atlantic/A. Fowler	**Cone Size:**	1.75

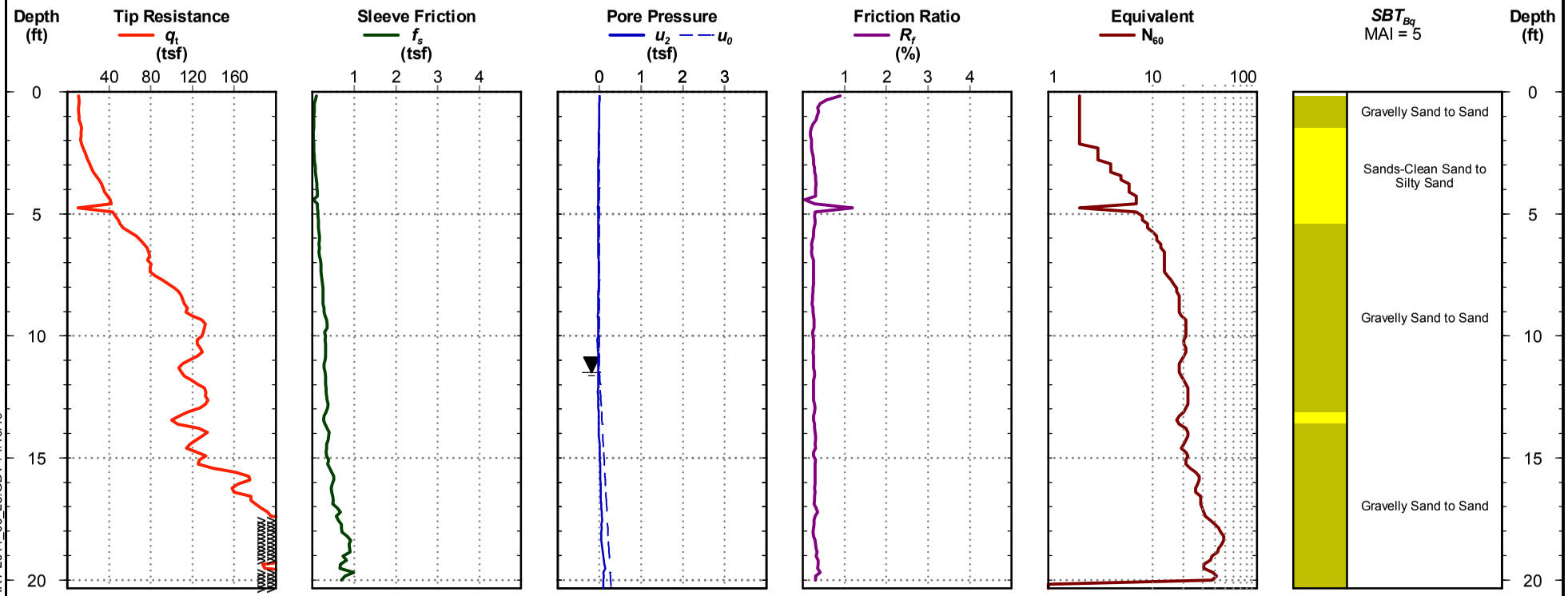

Cone Penetration Test

Electronic Filename: HP S-7.cpt

CPT REPORT - STANDARD - SBT BQ \ 1306-19-006.GPJ \ LIBRARY 2011_06_28.GDT \ 4/16/19

FIELD TESTING PROCEDURES

Cone Penetrometer Test (CPT) Sounding

The cone penetrometer test soundings (ASTM D 5778) were performed by hydraulically pushing an electronically instrumented cone penetrometer through the soil at a constant rate. As the cone penetrometer tip was advanced through the soil, nearly continuous readings of point stress, sleeve friction and pore water pressure were recorded and stored in the on-site computers. Using theoretical and empirical relationships, CPT data can be used to determine soil stratigraphy and estimate soil properties and parameters such as effective stress, friction angle, Young's Modulus and undrained shear strength.

The consistency and relative density designations, which are based on the cone tip resistance, q_t for sands and cohesive soils (silts and clays) are as follows:

SANDS		**SILTS AND CLAYS**	
Cone Tip Resistance, q_t (tsf)	**Relative Density**	**Cone Tip Resistance, q_t (tsf)**	**Consistency**
<20	Very Loose	<5	Very Soft
20 – 40	Loose	5 – 10	Soft
40 – 120	Medium Dense	10 – 15	Firm
		15 – 30	Stiff
120 – 200	Dense	30 –60	Very Stiff
>200	Very Dense	>60	Hard

CPT Correlations

References are in parenthesis next to the appropriate equation.

General

p_a = atmospheric pressure (for unit normalization)
q_t = corrected cone tip resistance (tsf)
f_s = friction sleeve resistance (tsf)
$R_f = 100\% * (f_s/q_t)$
u_2 = pore pressure behind cone tip (tsf)
u_0 = hydrostatic pressure
$B_q = (u_2-u_0)/(q_t-\sigma_{v0})$
$Q_t = (q_t-\sigma_{v0})/ \sigma'_{v0}$
$F_r = 100\% * f_s/(q_t- \sigma_{v0})$
$I_c = ((3.47-\log Q_t)^2+(\log F_r+1.22)^2)^{0.5}$

N-Value
$N_{60} = (q_t/pa)/[8.5(1-I_c/4.6)]$ (6)

(6) Jefferies, M.G. and Davies, M.P., (1993), "Use of CPTu to estimate equivalent SPT N60", ASTM Geotechnical Testing Journal, Vol. 16, No. 4

CPT Soil Classification Legend

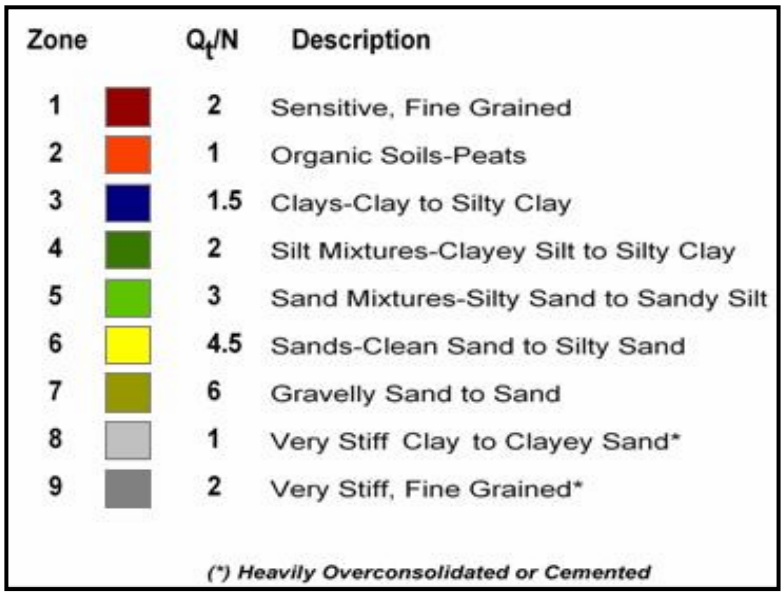

Robertson's Soil Behavior Type (SBT), 1990			
Group #	**Description**	**Ic**	
		Min	**Max**
1	Sensitive, fine grained	N/A	
2	Organic soils - peats	3.60	N/A
3	Clays - silty clay to clay	2.95	3.60
4	Silt mixtures - clayey silt to silty clay	2.60	2.95
5	Sand mixtures - silty sand to sandy silt	2.05	2.60
6	Sands - clean sand to silty sand	1.31	2.05
7	Gravelly sand to dense sand	N/A	1.31
8	Very stiff sand to clayey sand (High OCR or cemented)	N/A	
9	Very stiff, fine grained (High OCR or cemented)	N/A	

Soil behavior type is based on empirical data and may not be representative of soil classification based on plasticity and grain size distribution.

Relative Density and Consistency Table			
SANDS		SILTS and CLAYS	
Cone Tip Stress, qt (tsf)	Relative Density	Cone Tip Stress, qt (tsf)	Consistency
Less than 20	Very Loose	Less than 5	Very Soft
20 - 40	Loose	5 - 15	Soft to Firm
40 - 120	Medium Dense	15 - 30	Stiff
120 - 200	Dense	30 - 60	Very Stiff
Greater than 200	Very Dense	Greater than 60	Hard

FIELD TESTING PROCEDURES

Hand-auger Borings

Hand-auger borings are performed by manually turning a steel auger into the ground. The soils encountered are visually classified in the field using the Unified Soil Classification System (USCS). If encountered, subsurface water level depths are measured from the existing ground surface at the time of boring. Upon completion, the bore hole was immediately backfilled with the cuttings.

Form No. TR-HAPT-01
Revision No. : 0
Revision Date: 6/11/10

HAND AUGER & PENETROMETER TESTING

Reference

S&ME, Inc. - Wilmington 3006 Hall Waters Drive, Suite 100, Wilmington, NC 28405

Project No.: **1306-19-007** Project Name: **The Healing Place** Report Date:

Client: New Hanover County Address: Medical Center Drive Test Date(s):

Project Location: Wilmington, NC

Technicians: Nate Buffum, P.E. Hammer Weight:

Stratification			Hammer Blows				
Test Location	Depth	Soil Description	Depth	Increment			Average
	feet		feet	1st	2nd	3rd	
B-01	0-0.8	Topsoil - Organically stained no roots					
	0.4-4.0	Brown to Gray, Fine, Silty Sand (SP-SM)					
B-04	0-0.6	Topsoil - Organically stained no roots					
	0.4-4	Brown to Gray, Fine, Silty Sand (SP-SM)					
B-05	0-0.7	Topsoil - Organically stained no roots					
	0.4-4	Brown to Gray, Fine, Silty Sand (SP-SM)					
B-07	0-0.8	Topsoil - Organically stained no roots					
	0.4-4	Brown to Gray, Fine, Silty Sand (SP-SM)					

References / Comments / Deviations:

Nathan Buffum, P.E. _____ _____ _____ _____

Technician Name *Certification / No.* *Date* *Technical Responsibility* *Position* *Date*

This report shall not be reproduced, except in full without the written approval of S&ME, Inc.

SECTION 011000 - SUMMARY

PART 1 - GENERAL

1.1 RELATED DOCUMENTS

A. Drawings and general provisions of the Contract, including General and Supplementary Conditions and other Division 01 Specification Sections, apply to this Section.

1.2 SUMMARY

A. Section Includes:

1. Project information.
2. Work covered by Contract Documents.
3. Access to site.
4. Work restrictions.
5. Specification and Drawing conventions.
6. Miscellaneous provisions.

B. Related Requirements:

1. Section 015000 "Temporary Facilities and Controls" for limitations and procedures governing temporary use of Owner's facilities.

1.3 PROJECT INFORMATION

A. Project Identification: The Healing Place of New Hanover County.

1. Project Location: Wilmington, North Carolina.

B. Owner: New Hanover County.

C. Architect: iS Design, P.A.

D. Construction Manager:

1. Construction Manager has been engaged for this Project to serve as an advisor to Owner and to provide assistance in administering the Contract for construction between Owner and Contractor, according to a separate contract between Owner and Construction Manager.
2. Construction Manager for this Project is Project's constructor. The terms "Construction Manager" and "Contractor" are synonymous.

1.4 WORK COVERED BY CONTRACT DOCUMENTS

A. The Work of Project is defined as indicated on the Drawings.

B. Type of Contract:

1. Project will be constructed under a single prime contract.

1.5 ACCESS TO SITE

A. General: Contractor shall have limited use of Project site for construction operations as indicated on Drawings by the Contract limits and as indicated by requirements of this Section.

B. Use of Site: Limit use of Project site to Work in areas indicated. Do not disturb portions of Project site beyond areas in which the Work is indicated.

1. Driveways, Walkways and Entrances: Keep driveways and entrances serving premises clear and available to Owner, Owner's employees, and emergency vehicles at all times. Do not use these areas for parking or for storage of materials.

1.6 WORK RESTRICTIONS

A. Work Restrictions, General: Comply with restrictions on construction operations.

1. Comply with limitations on use of public streets and with other requirements of authorities having jurisdiction.

B. On-Site Work Hours: Limit work to normal business working hours of 7 a.m. to 6 p.m., Monday through Friday, unless otherwise allowed by the Owner and the local jurisdiction.

C. Existing Utility Interruptions: Do not interrupt utilities serving facilities occupied by Owner or others unless permitted under the following conditions and then only after providing temporary utility services according to requirements indicated:

1. Notify Owner not less than two days in advance of proposed utility interruptions.
2. Obtain Owner's written permission before proceeding with utility interruptions.

1.7 SPECIFICATION AND DRAWING CONVENTIONS

A. Specification Content: The Specifications use certain conventions for the style of language and the intended meaning of certain terms, words, and phrases when used in particular situations. These conventions are as follows:

1. Imperative mood and streamlined language are generally used in the Specifications. The words "shall," "shall be," or "shall comply with," depending on the context, are implied where a colon (:) is used within a sentence or phrase.

2. Specification requirements are to be performed by Contractor unless specifically stated otherwise.

B. Division 01 General Requirements: Requirements of Sections in Division 01 apply to the Work of all Sections in the Specifications.

C. Drawing Coordination: Requirements for materials and products identified on Drawings are described in detail in the Specifications. One or more of the following are used on Drawings to identify materials and products:

1. Terminology: Materials and products are identified by the typical generic terms used in the individual Specifications Sections.
2. Abbreviations: Materials and products are identified by abbreviations published as part of the U.S. National CAD Standard and scheduled on Drawings.

PART 2 - PRODUCTS (Not Used)

PART 3 - EXECUTION (Not Used)

END OF SECTION 011000

SECTION 012100 - ALLOWANCES

PART 1 - GENERAL

1.1 RELATED DOCUMENTS

A. Drawings and general provisions of the Contract, including General and Supplementary Conditions and other Division 01 Specification Sections, apply to this Section.

1.2 SUMMARY

A. Section includes administrative and procedural requirements governing allowances.

B. Types of allowances include the following:

1. Lump-sum allowances.
2. Unit-cost allowances.

C. Related Requirements:

1. Section 014000 "Quality Requirements" for procedures governing the use of allowances for field testing by an independent testing agency.

1.3 DEFINITIONS

A. Allowance is a quantity of work or dollar amount established in lieu of additional requirements, used to defer selection of actual materials and equipment to a later date when direction will be provided to Contractor. If necessary, additional requirements will be issued by Change Order.

1.4 SELECTION AND PURCHASE

A. At the earliest practical date after award of the Contract, advise Architect of the date when final selection, or purchase and delivery, of each product or system described by an allowance must be completed by the Owner to avoid delaying the Work.

B. At Architect's request, obtain proposals for each allowance for use in making final selections. Include recommendations that are relevant to performing the Work.

C. Purchase products and systems selected by Architect from the designated supplier.

1.5 ACTION SUBMITTALS

A. Submit proposals for purchase of products or systems included in allowances in the form specified for Change Orders.

1.6 INFORMATIONAL SUBMITTALS

A. Submit invoices or delivery slips to show actual quantities of materials delivered to the site for use in fulfillment of each allowance.

B. Submit time sheets and other documentation to show labor time and cost for installation of allowance items that include installation as part of the allowance.

C. Coordinate and process submittals for allowance items in same manner as for other portions of the Work.

1.7 LUMP-SUM ALLOWANCES

A. Allowance shall include cost to Contractor of specific products and materials ordered by Owner or selected by Architect under allowance and shall include taxes, freight, and delivery to Project site.

B. Unless otherwise indicated, Contractor's costs for receiving and handling at Project site, labor, installation, overhead and profit, and similar costs related to products and materials ordered by Owner or selected by Architect under allowance shall be included as part of the Contract Sum and not part of the allowance.

C. Unused Materials: Return unused materials purchased under an allowance to manufacturer or supplier for credit to Owner, after installation has been completed and accepted.

1. If requested by Architect, retain and prepare unused material for storage by Owner. Deliver unused material to Owner's storage space as directed.

1.8 UNIT-COST ALLOWANCES

A. Allowance shall include cost to Contractor of specific products and materials ordered by Owner or selected by Architect under allowance and shall include taxes, freight, and delivery to Project site.

B. Unless otherwise indicated, Contractor's costs for receiving and handling at Project site, labor, installation, overhead and profit, and similar costs related to products and materials ordered by Owner or selected by Architect under allowance shall be included as part of the Contract Sum and not part of the allowance.

C. Unused Materials: Return unused materials purchased under an allowance to manufacturer or supplier for credit to Owner, after installation has been completed and accepted.

1. If requested by Architect, retain and prepare unused material for storage by Owner. Deliver unused material to Owner's storage space as directed.

1.9 ADJUSTMENT OF ALLOWANCES

A. Allowance Adjustment: To adjust allowance amounts, prepare a Change Order proposal based on the difference between purchase amount and the allowance, multiplied by final measurement of work-in-place where applicable. If applicable, include reasonable allowances for cutting losses, tolerances, mixing wastes, normal product imperfections, and similar margins.

1. Include installation costs in purchase amount only where indicated as part of the allowance.
2. If requested, prepare explanation and documentation to substantiate distribution of overhead costs and other markups.
3. Submit substantiation of a change in scope of Work, if any, claimed in Change Orders related to unit-cost allowances.
4. Owner reserves the right to establish the quantity of work-in-place by independent quantity survey, measure, or count.

B. Submit claims for increased costs because of a change in scope or nature of the allowance described in the Contract Documents, whether for the purchase order amount or Contractor's handling, labor, installation, overhead, and profit.

1. Do not include Contractor's or subcontractor's indirect expense in the Change Order cost amount unless it is clearly shown that the nature or extent of Work has changed from what could have been foreseen from information in the Contract Documents.
2. No change to Contractor's indirect expense is permitted for selection of higher- or lower-priced materials or systems of the same scope and nature as originally indicated.

PART 2 - PRODUCTS (Not Used)

PART 3 - EXECUTION

3.1 EXAMINATION

A. Examine products covered by an allowance promptly on delivery for damage or defects. Return damaged or defective products to manufacturer for replacement.

3.2 PREPARATION

A. Coordinate materials and their installation for each allowance with related materials and installations to ensure that each allowance item is completely integrated and interfaced with related work.

3.3 SCHEDULE OF ALLOWANCES

A. Allowance No. 1: Lump-Sum Allowance: Fountain.

1. Description: Include fountain design, fountain materials, fountain materials delivery, and installation as specified in Section 131200 "Fountains" and as shown on Drawings. Include the lump sums as indicated below:

a. Fountain Design, Fountain Materials, and Fountain Materials Delivery: Include the lump sum of $35,000.
b. Fountain Installation: Include the sum of $15,000.

2. This allowance includes material cost, receiving, handling, and installation, and Contractor overhead and profit.

B. Allowance No. 2: Lump-Sum Allowance: Signage.

1. Description: Include exterior and interior signage as indicated on the Architect's signage quote from ASI, as shown on the Drawings, and as specified in Section 101400 "Panel Signage," Section 101419 "Dimensional Letter Signage," and Section 101426 "Post and Panel Signage." Include the lump sums as indicated below:

a. Exterior and Interior Signage: Include the lump sum of $60,000.

2. This allowance includes design, material cost, delivery, permits, and installation. It does not include Contractor overhead and profit.

C. Allowance No. 3: Unit-Cost Allowance: Brick.

1. Description: Include brick as specified in Section 042000 "Unit Masonry" and as shown on Drawings, include the unit-cost items as indicated below:

a. Modular Size Brick: Include the unit-cost of $450 per thousand.

2. This allowance includes material cost, receiving, handling, and installation, and Contractor overhead and profit.

END OF SECTION 012100

SECTION 012200 - UNIT PRICES

PART 1 - GENERAL

1.1 RELATED DOCUMENTS

A. Drawings and general provisions of the Contract, including General and Supplementary Conditions and other Division 01 Specification Sections, apply to this Section.

1.2 SUMMARY

A. Section includes administrative and procedural requirements for unit prices.

B. Related Requirements:

1. Section 012100 "Allowances" for procedures for using unit prices to adjust quantity allowances.
2. Section 012600 "Contract Modification Procedures" for procedures for submitting and handling Change Orders.
3. Section 014000 "Quality Requirements" for field testing by an independent testing agency.

1.3 DEFINITIONS

A. Unit price is an amount incorporated into the Agreement, applicable during the duration of the Work as a price per unit of measurement for materials, equipment, or services, or a portion of the Work, added to or deducted from the Contract Sum by appropriate modification, if the scope of Work or estimated quantities of Work required by the Contract Documents are increased or decreased.

1.4 PROCEDURES

A. Unit prices include all necessary material, plus cost for delivery, installation, insurance, applicable taxes, overhead, and profit.

B. Measurement and Payment: See individual Specification Sections for work that requires establishment of unit prices. Methods of measurement and payment for unit prices are specified in those Sections.

C. Owner reserves the right to reject Contractor's measurement of work-in-place that involves use of established unit prices and to have this work measured, at Owner's expense, by an independent surveyor acceptable to Contractor.

D. List of Unit Prices: A schedule of unit prices is included in Part 3. Specification Sections referenced in the schedule contain requirements for materials described under each unit price.

PART 2 - PRODUCTS (Not Used)

PART 3 - EXECUTION

3.1 SCHEDULE OF UNIT PRICES

A. Unit Price No. 1: Rock removal in Open Areas (Mass Rock), on-site and off-site disposal as indicated on the Drawings, and replacement with off-site suitable soils compacted in place.

1. Purpose: To adjust the contract sum in case a quantity different from that indicated in the base bid quantity is required.
2. Unit of measurement: Cubic yard.
3. Include the following in the unit price:

    a. Suitable soil from Contractor's off-site source.
    b. Excavation, loading, transport, placement and compaction of all materials.
    c. Disposal fees.
    d. Overhead and profit.

4. Include all other related costs in the contract sum.
5. Method of measurement: Quantities will be verified by a soils and materials engineer employed by the Owner.
6. Base Bid Quantity: To be determined.

B. Unit Price No. 2: Rock removal in Trenches and Pits (Trench Rock), on-site and off-site disposal as indicated on the Drawings, and replacement with off-site suitable soils compacted in place.

1. Purpose: To adjust the contract sum in case a quantity different from that indicated in the base bid quantity is required.
2. Unit of measurement: Cubic yard.
3. Include the following in the unit price:

    a. Suitable soil from Contractor's off-site source.
    b. Excavation, loading, transport, placement and compaction of all materials.
    c. Disposal fees.
    d. Overhead and profit.

4. Include all other related costs in the contract sum.
5. Method of measurement: Quantities will be verified by a soils and materials engineer employed by the Owner.
6. Base Bid Quantity: To be determined.

C. Unit Price No. 3: Unsuitable soils removal, on-site and off-site disposal as indicated on the Drawings, and replacement with off-site suitable soil, and compacted in place.

1. Purpose: To adjust the contract sum in case a quantity different from that indicated in the base bid quantity is required.
2. Unit of measurement: Cubic yard.
3. Include the following in the unit price:

    a. Suitable soil materials from off-site source.
    b. Excavation, loading, transport, placement and compaction of all materials.
    c. Overhead and profit.

4. Include all other related costs in the contract sum.
5. Method of measurement: Quantities will be verified by a soils and materials engineer employed by the Owner.
6. Base Bid Quantity: To be determined.

END OF SECTION 012200

SECTION 012500 - SUBSTITUTION PROCEDURES

PART 1 - GENERAL

1.1 RELATED DOCUMENTS

A. Drawings and general provisions of the Contract, including General and Supplementary Conditions and other Division 01 Specification Sections, apply to this Section.

1.2 SUMMARY

A. Section includes administrative and procedural requirements for substitutions.

B. Related Requirements:

1. Section 012100 "Allowances" for products selected under an allowance.
2. Section 016000 "Product Requirements" for requirements for submitting comparable product submittals for products by listed manufacturers.

1.3 DEFINITIONS

A. Substitutions: Changes in products, materials, equipment, and methods of construction from those required by the Contract Documents and proposed by Contractor.

1. Substitutions for Cause: Changes proposed by Contractor that are required due to changed Project conditions, such as unavailability of product, regulatory changes, or unavailability of required warranty terms.
2. Substitutions for Convenience: Changes proposed by Contractor or Owner that are not required in order to meet other Project requirements but may offer advantage to Contractor or Owner.

1.4 ACTION SUBMITTALS

A. Substitution Requests: Submit three copies of each request for consideration. Identify product or fabrication or installation method to be replaced. Include Specification Section number and title and Drawing numbers and titles.

1. Substitution Request Form: Use CSI Form 13.1A, or comparable form as acceptable to the Architect.
2. Documentation: Show compliance with requirements for substitutions and the following, as applicable:

a. Statement indicating why specified product or fabrication or installation method cannot be provided, if applicable.

b. Coordination of information, including a list of changes or revisions needed to other parts of the Work and to construction performed by Owner and separate contractors that will be necessary to accommodate proposed substitution.
c. Detailed comparison of significant qualities of proposed substitutions with those of the Work specified. Include annotated copy of applicable Specification Section. Significant qualities may include attributes, such as performance, weight, size, durability, visual effect, sustainable design characteristics, warranties, and specific features and requirements indicated. Indicate deviations, if any, from the Work specified.
d. Product Data, including drawings and descriptions of products and fabrication and installation procedures.
e. Samples, where applicable or requested.
f. Certificates and qualification data, where applicable or requested.
g. List of similar installations for completed projects, with project names and addresses as well as names and addresses of architects and owners.
h. Material test reports from a qualified testing agency, indicating and interpreting test results for compliance with requirements indicated.
i. Research reports evidencing compliance with building code in effect for Project, from ICC-ES.
j. Detailed comparison of Contractor's construction schedule using proposed substitutions with products specified for the Work, including effect on the overall Contract Time. If specified product or method of construction cannot be provided within the Contract Time, include letter from manufacturer, on manufacturer's letterhead, stating date of receipt of purchase order, lack of availability, or delays in delivery.
k. Cost information, including a proposal of change, if any, in the Contract Sum.
l. Contractor's certification that proposed substitution complies with requirements in the Contract Documents, except as indicated in substitution request, is compatible with related materials and is appropriate for applications indicated.
m. Contractor's waiver of rights to additional payment or time that may subsequently become necessary because of failure of proposed substitution to produce indicated results.

3. Architect's Action: If necessary, Architect will request additional information or documentation for evaluation within seven days of receipt of a request for substitution. Architect will notify Contractor through Construction Manager of acceptance or rejection of proposed substitution within 15 days of receipt of request, or seven days of receipt of additional information or documentation, whichever is later.

   a. Forms of Acceptance: Change Order, Construction Change Directive, or Architect's Supplemental Instructions for minor changes in the Work.
   b. Use product specified if Architect does not issue a decision on use of a proposed substitution within time allocated.

1.5 QUALITY ASSURANCE

A. Compatibility of Substitutions: Investigate and document compatibility of proposed substitution with related products and materials. Engage a qualified testing agency to perform compatibility tests recommended by manufacturers.

1.6 PROCEDURES

A. Coordination: Revise or adjust affected work as necessary to integrate work of the approved substitutions.

1.7 SUBSTITUTIONS

A. Substitutions for Cause: Submit requests for substitution immediately on discovery of need for change, but not later than 15 days prior to time required for preparation and review of related submittals.

1. Conditions: Architect will consider Contractor's request for substitution when the following conditions are satisfied. If the following conditions are not satisfied, Architect will return requests without action, except to record noncompliance with these requirements:

a. Requested substitution is consistent with the Contract Documents and will produce indicated results.
b. Substitution request is fully documented and properly submitted.
c. Requested substitution will not adversely affect Contractor's construction schedule.
d. Requested substitution has received necessary approvals of authorities having jurisdiction.
e. Requested substitution is compatible with other portions of the Work.
f. Requested substitution has been coordinated with other portions of the Work.
g. Requested substitution provides specified warranty.
h. If requested substitution involves more than one contractor, requested substitution has been coordinated with other portions of the Work, is uniform and consistent, is compatible with other products, and is acceptable to all contractors involved.

B. Substitutions for Convenience: Architect will consider requests for substitution if received within 60 days after the Notice to Proceed. Requests received after that time may be considered or rejected at discretion of Architect.

1. Conditions: Architect will consider Contractor's request for substitution when the following conditions are satisfied. If the following conditions are not satisfied, Architect will return requests without action, except to record noncompliance with these requirements:

a. Requested substitution offers Owner a substantial advantage in cost, time, energy conservation, or other considerations, after deducting additional responsibilities Owner must assume. Owner's additional responsibilities may include compensation to Architect for redesign and evaluation services, increased cost of other construction by Owner, and similar considerations.
b. Requested substitution does not require extensive revisions to the Contract Documents.
c. Requested substitution is consistent with the Contract Documents and will produce indicated results.
d. Substitution request is fully documented and properly submitted.
e. Requested substitution will not adversely affect Contractor's construction schedule.
f. Requested substitution has received necessary approvals of authorities having jurisdiction.
g. Requested substitution is compatible with other portions of the Work.
h. Requested substitution has been coordinated with other portions of the Work.
i. Requested substitution provides specified warranty.
j. If requested substitution involves more than one contractor, requested substitution has been coordinated with other portions of the Work, is uniform and consistent, is compatible with other products, and is acceptable to all contractors involved.

PART 2 - PRODUCTS (Not Used)

PART 3 - EXECUTION (Not Used)

END OF SECTION 012500

SECTION 012600 - CONTRACT MODIFICATION PROCEDURES

PART 1 - GENERAL

1.1 RELATED DOCUMENTS

A. Drawings and general provisions of the Contract, including General and Supplementary Conditions and other Division 01 Specification Sections, apply to this Section.

1.2 SUMMARY

A. Section includes administrative and procedural requirements for handling and processing Contract modifications.

B. Related Requirements:

1. Section 012500 "Substitution Procedures" for administrative procedures for handling requests for substitutions made after the Contract award.

1.3 MINOR CHANGES IN THE WORK

A. Architect will issue through Construction Manager supplemental instructions authorizing minor changes in the Work, not involving adjustment to the Contract Sum or the Contract Time, on AIA Document G710, or comparable form acceptable to the Architect.

1.4 PROPOSAL REQUESTS

A. Owner-Initiated Proposal Requests: Construction Manager will issue a detailed description of proposed changes in the Work that may require adjustment to the Contract Sum or the Contract Time. If necessary, the description will include supplemental or revised Drawings and Specifications.

1. Work Change Proposal Requests issued by Construction Manager are not instructions either to stop work in progress or to execute the proposed change.
2. Within time specified in Proposal Request or 20 days, when not otherwise specified, after receipt of Proposal Request, submit a quotation estimating cost adjustments to the Contract Sum and the Contract Time necessary to execute the change.

    a. Include a list of quantities of products required or eliminated and unit costs, with total amount of purchases and credits to be made. If requested, furnish survey data to substantiate quantities.
    b. Indicate applicable taxes, delivery charges, equipment rental, and amounts of trade discounts.
    c. Include costs of labor and supervision directly attributable to the change.

d. Include an updated Contractor's construction schedule that indicates the effect of the change, including, but not limited to, changes in activity duration, start and finish times, and activity relationship. Use available total float before requesting an extension of the Contract Time.
e. Quotation Form: Use forms acceptable to Architect.

B. Contractor-Initiated Proposals: If latent or changed conditions require modifications to the Contract, Contractor may initiate a claim by submitting a request for a change to Construction Manager.

1. Include a statement outlining reasons for the change and the effect of the change on the Work. Provide a complete description of the proposed change. Indicate the effect of the proposed change on the Contract Sum and the Contract Time.
2. Include a list of quantities of products required or eliminated and unit costs, with total amount of purchases and credits to be made. If requested, furnish survey data to substantiate quantities.
3. Indicate applicable taxes, delivery charges, equipment rental, and amounts of trade discounts.
4. Include costs of labor and supervision directly attributable to the change.
5. Include an updated Contractor's construction schedule that indicates the effect of the change, including, but not limited to, changes in activity duration, start and finish times, and activity relationship. Use available total float before requesting an extension of the Contract Time.
6. Comply with requirements in Section 012500 "Substitution Procedures" if the proposed change requires substitution of one product or system for product or system specified.
7. Proposal Request Form: Use form acceptable to Architect.

1.5 CHANGE ORDER PROCEDURES

A. On Owner's approval of a Work Change Proposal Request, Construction Manager will issue a Change Order for signatures of Owner and Contractor on AIA Document G701, or comparable form acceptable to the Architect.

1.6 CONSTRUCTION CHANGE DIRECTIVE

A. Construction Change Directive: Construction Manager may issue a Construction Change Directive on AIA Document G714CMa or comparable form acceptable to the Construction Manager. Construction Change Directive instructs Contractor to proceed with a change in the Work, for subsequent inclusion in a Change Order.

1. Construction Change Directive contains a complete description of change in the Work. It also designates method to be followed to determine change in the Contract Sum or the Contract Time.

B. Documentation: Maintain detailed records on a time and material basis of work required by the Construction Change Directive.

1. After completion of change, submit an itemized account and supporting data necessary to substantiate cost and time adjustments to the Contract.

PART 2 - PRODUCTS (Not Used)

PART 3 - EXECUTION (Not Used)

END OF SECTION 012600

SECTION 012900 - PAYMENT PROCEDURES

PART 1 - GENERAL

1.1 RELATED DOCUMENTS

A. Drawings and general provisions of the Contract, including General and Supplementary Conditions and other Division 01 Specification Sections, apply to this Section.

1.2 SUMMARY

A. Section includes administrative and procedural requirements necessary to prepare and process Applications for Payment.

B. Related Requirements:

1. Section 012100 "Allowances" for procedural requirements governing the handling and processing of allowances.
2. Section 012200 "Unit Prices" for administrative requirements governing the use of unit prices.
3. Section 012600 "Contract Modification Procedures" for administrative procedures for handling changes to the Contract.
4. Section 013200 "Construction Progress Documentation" for administrative requirements governing the preparation and submittal of the Contractor's construction schedule.

1.3 DEFINITIONS

A. Schedule of Values: A statement furnished by Contractor allocating portions of the Contract Sum to various portions of the Work and used as the basis for reviewing Contractor's Applications for Payment.

1.4 SCHEDULE OF VALUES

A. Coordination: Coordinate preparation of the schedule of values with preparation of Contractor's construction schedule. Cost-loaded Critical Path Method Schedule may serve to satisfy requirements for the schedule of values.

1. Coordinate line items in the schedule of values with items required to be indicated as separate activities in Contractor's construction schedule.
2. Submit the schedule of values to Architect through Construction Manager at earliest possible date, but no later than seven days before the date scheduled for submittal of initial Applications for Payment.

B. Format and Content: Use Project Manual table of contents as a guide to establish line items for the schedule of values. Provide at least one line item for each Specification Section.

1. Identification: Include the following Project identification on the schedule of values:

    a. Project name and location.
    b. Name of Architect.
    c. Architect's Project number.
    d. Contractor's name and address.
    e. Date of submittal.

2. Arrange the schedule of values in tabular form, with separate columns to indicate the following for each item listed:

    a. Related Specification Section or Division.
    b. Description of the Work.
    c. Name of subcontractor.
    d. Name of manufacturer or fabricator.
    e. Name of supplier.
    f. Change Orders (numbers) that affect value.
    g. Dollar value of the following, as a percentage of the Contract Sum to nearest one-hundredth percent, adjusted to total 100 percent. Round dollar amounts to whole dollars, with total equal to Contract Sum.

        1) Labor.
        2) Materials.
        3) Equipment.

3. Provide a breakdown of the Contract Sum in enough detail to facilitate continued evaluation of Applications for Payment and progress reports. Provide multiple line items for principal subcontract amounts in excess of five percent of the Contract Sum.
4. Provide a separate line item in the schedule of values for each part of the Work where Applications for Payment may include materials or equipment purchased or fabricated and stored, but not yet installed.

    a. Differentiate between items stored on-site and items stored off-site.

5. Overhead Costs: Include total cost and proportionate share of general overhead and profit for each line item.
6. Closeout Costs. Include separate line items under Contractor and principal subcontracts for Project closeout requirements in an amount totaling five percent of the Contract Sum and subcontract amount.
7. Schedule of Values Revisions: Revise the schedule of values when Change Orders or Construction Change Directives result in a change in the Contract Sum. Include at least one separate line item for each Change Order and Construction Change Directive.

1.5 APPLICATIONS FOR PAYMENT

A. Each Application for Payment following the initial Application for Payment shall be consistent with previous applications and payments as certified by Architect and Construction Manager and paid for by Owner.

B. Payment Application Times: The date for each progress payment is indicated in the Agreement between Owner and Contractor. The period of construction work covered by each Application for Payment is the period indicated in the Agreement.

C. Application for Payment Forms: Use AIA Document G702 and AIA Document G703 as forms for Applications for Payment.

1. Other Application for Payment forms proposed by the Contractor shall be acceptable to Construction Manager and Owner. Submit forms for approval with initial submittal of schedule of values.

D. Application Preparation: Complete every entry on form. Notarize and execute by a person authorized to sign legal documents on behalf of Contractor. Construction Manager will return incomplete applications without action.

1. Entries shall match data on the schedule of values and Contractor's construction schedule. Use updated schedules if revisions were made.
2. Include amounts for work completed following previous Application for Payment, whether or not payment has been received. Include only amounts for work completed at time of Application for Payment.
3. Include amounts of Change Orders and Construction Change Directives issued before last day of construction period covered by application.
4. Indicate separate amounts for work being carried out under Owner-requested project acceleration.

E. Stored Materials: Include in Application for Payment amounts applied for materials or equipment purchased or fabricated and stored, but not yet installed. Differentiate between items stored on-site and items stored off-site.

1. Provide certificate of insurance, evidence of transfer of title to Owner, and consent of surety to payment for stored materials.
2. Provide supporting documentation that verifies amount requested, such as paid invoices. Match amount requested with amounts indicated on documentation; do not include overhead and profit on stored materials.
3. Provide summary documentation for stored materials indicating the following:

a. Value of materials previously stored and remaining stored as of date of previous Applications for Payment.
b. Value of previously stored materials put in place after date of previous Application for Payment and on or before date of current Application for Payment.
c. Value of materials stored since date of previous Application for Payment and remaining stored as of date of current Application for Payment.

F. Transmittal: Submit three signed and notarized original copies of each Application for Payment to Construction Manager by a method ensuring receipt within 24 hours. One copy shall include waivers of lien and similar attachments if required.

1. Transmit each copy with a transmittal form listing attachments and recording appropriate information about application.

G. Waivers of Mechanic's Lien: With each Application for Payment, submit waivers of mechanic's lien from entities lawfully entitled to file a mechanic's lien arising out of the Contract and related to the Work covered by the payment.

1. Submit partial waivers on each item for amount requested in previous application, after deduction for retainage, on each item.
2. When an application shows completion of an item, submit conditional final or full waivers.
3. Owner reserves the right to designate which entities involved in the Work must submit waivers.
4. Submit final Application for Payment with or preceded by conditional final waivers from every entity involved with performance of the Work covered by the application who is lawfully entitled to a lien.
5. Waiver Forms: Submit executed waivers of lien on forms acceptable to Owner.

H. Initial Application for Payment: Administrative actions and submittals that must precede or coincide with submittal of first Application for Payment include the following:

1. List of subcontractors.
2. Schedule of values.
3. Contractor's construction schedule (preliminary if not final).
4. Products list (preliminary if not final).
5. Schedule of unit prices.
6. Submittal schedule (preliminary if not final).
7. List of Contractor's staff assignments.
8. List of Contractor's principal consultants.
9. Copies of building permits.
10. Copies of authorizations and licenses from authorities having jurisdiction for performance of the Work.
11. Initial progress report.
12. Report of preconstruction conference.
13. Certificates of insurance and insurance policies, if not submitted before executing the Contract.
14. Performance and payment bonds, if not submitted before executing the Contract.
15. Data needed to acquire Owner's insurance, if not submitted before executing the Contract.

I. Application for Payment at Substantial Completion: After Architect issues the Certificate of Substantial Completion, submit an Application for Payment showing 100 percent completion for portion of the Work claimed as substantially complete.

1. Include documentation supporting claim that the Work is substantially complete and a statement showing an accounting of changes to the Contract Sum.
2. This application shall reflect Certificate(s) of Substantial Completion issued previously for Owner occupancy of designated portions of the Work.

J. Final Payment Application: After completing Project closeout requirements, submit final Application for Payment with releases and supporting documentation not previously submitted and accepted, including, but not limited, to the following:

1. Evidence of completion of Project closeout requirements.
2. Insurance certificates for products and completed operations where required and proof that taxes, fees, and similar obligations were paid.
3. Updated final statement, accounting for final changes to the Contract Sum.
4. AIA Document G706.
5. AIA Document G706A.
6. AIA Document G707.
7. Evidence that claims have been settled.
8. Final meter readings for utilities, a measured record of stored fuel, and similar data as of date of Substantial Completion or when Owner took possession of and assumed responsibility for corresponding elements of the Work.
9. Final liquidated damages settlement statement.

PART 2 - PRODUCTS (Not Used)

PART 3 - EXECUTION (Not Used)

END OF SECTION 012900

SECTION 013100 - PROJECT MANAGEMENT AND COORDINATION

PART 1 - GENERAL

1.1 RELATED DOCUMENTS

A. Drawings and general provisions of the Contract, including General and Supplementary Conditions and other Division 01 Specification Sections, apply to this Section.

1.2 SUMMARY

A. Section includes administrative provisions for coordinating construction operations on Project including, but not limited to, the following:

1. General coordination procedures.
2. RFIs.
3. Digital project management procedures.
4. Project meetings.

B. Each contractor shall participate in coordination requirements. Certain areas of responsibility are assigned to a specific contractor.

C. Related Requirements:

1. Section 013200 "Construction Progress Documentation" for preparing and submitting Contractor's construction schedule.
2. Section 017300 "Execution" for procedures for coordinating general installation and field-engineering services, including establishment of benchmarks and control points.
3. Section 017700 "Closeout Procedures" for coordinating closeout of the Contract.

1.3 DEFINITIONS

A. BIM: Building Information Modeling.

B. RFI: Request for Information. Request from Owner, Construction Manager, Architect, or Contractor seeking information required by or clarifications of the Contract Documents.

1.4 INFORMATIONAL SUBMITTALS

A. Subcontract List: Prepare a written summary identifying individuals or firms proposed for each portion of the Work, including those who are to furnish products or equipment fabricated to a special design. Include the following information in tabular form:

1. Name, address, telephone number, and email address of entity performing subcontract or supplying products.
2. Number and title of related Specification Section(s) covered by subcontract.
3. Drawing number and detail references, as appropriate, covered by subcontract.

B. Key Personnel Names: Within 15 days of starting construction operations, submit a list of key personnel assignments, including superintendent and other personnel in attendance at Project site. Identify individuals and their duties and responsibilities; list addresses and cellular telephone numbers and e-mail addresses. Provide names, addresses, and telephone numbers of individuals assigned as alternates in the absence of individuals assigned to Project.

1. Post copies of list in project meeting room, in temporary field office,and in prominent location inbuilt facility. Keep list current at all times.

1.5 GENERAL COORDINATION PROCEDURES

A. Coordination: Coordinate construction operations included in different Sections of the Specifications to ensure efficient and orderly installation of each part of the Work. Coordinate construction operations included in different Sections that depend on each other for proper installation, connection, and operation.

1. Schedule construction operations in sequence required to obtain the best results where installation of one part of the Work depends on installation of other components, before or after its own installation.
2. Coordinate installation of different components to ensure maximum performance and accessibility for required maintenance, service, and repair.
3. Make adequate provisions to accommodate items scheduled for later installation.

B. Prepare memoranda for distribution to each party involved, outlining special procedures required for coordination. Include such items as required notices, reports, and list of attendees at meetings.

1. Prepare similar memoranda for Owner and separate contractors if coordination of their Work is required.

C. Administrative Procedures: Coordinate scheduling and timing of required administrative procedures with other construction activities to avoid conflicts and to ensure orderly progress of the Work. Such administrative activities include, but are not limited to, the following:

1. Preparation of Contractor's construction schedule.
2. Preparation of the schedule of values.
3. Installation and removal of temporary facilities and controls.
4. Delivery and processing of submittals.

5. Progress meetings.
6. Preinstallation conferences.
7. Project closeout activities.
8. Startup and adjustment of systems.

1.6 REQUEST FOR INFORMATION (RFI)

A. General: Immediately on discovery of the need for additional information, clarification, or interpretation of the Contract Documents, Contractor shall prepare and submit an RFI in the form specified.

1. Architect will return without response those RFIs submitted to Architect by other entities controlled by Contractor.
2. Coordinate and submit RFIs in a prompt manner so as to avoid delays in Contractor's work or work of subcontractors.

B. Content of the RFI: Include a detailed, legible description of item needing information or interpretation and the following:

1. Project name.
2. Project number.
3. Date.
4. Name of Contractor.
5. Name of Architect and Construction Manager.
6. RFI number, numbered sequentially.
7. RFI subject.
8. Specification Section number and title and related paragraphs, as appropriate.
9. Drawing number and detail references, as appropriate.
10. Field dimensions and conditions, as appropriate.
11. Contractor's suggested resolution. If Contractor's suggested resolution impacts the Contract Time or the Contract Sum, Contractor shall state impact in the RFI.
12. Contractor's signature.
13. Attachments: Include sketches, descriptions, measurements, photos, Product Data, Shop Drawings, coordination drawings, and other information necessary to fully describe items needing interpretation.

    a. Include dimensions, thicknesses, structural grid references, and details of affected materials, assemblies, and attachments on attached sketches.

C. RFI Forms: AIA Document G716 or comparable form acceptable to the Architect.

1. Attachments shall be electronic files in PDF format.

D. Architect's and Construction Manager's Action: Architect and Construction Manager will review each RFI, determine action required, and respond. Allow seven working days for Architect's response for each RFI. RFIs received by Architect or Construction Manager after 1:00 p.m. will be considered as received the following working day.

1. The following Contractor-generated RFIs will be returned without action:

    a. Requests for approval of submittals.
    b. Requests for approval of substitutions.
    c. Requests for approval of Contractor's means and methods.
    d. Requests for coordination information already indicated in the Contract Documents.
    e. Requests for adjustments in the Contract Time or the Contract Sum.
    f. Requests for interpretation of Architect's actions on submittals.
    g. Incomplete RFIs or inaccurately prepared RFIs.

2. Architect's action may include a request for additional information, in which case Architect's time for response will date from time of receipt by Architect or Construction Manager of additional information.
3. Architect's action on RFIs that may result in a change to the Contract Time or the Contract Sum may be eligible for Contractor to submit Change Proposal according to Section 012600 "Contract Modification Procedures."

    a. If Contractor believes the RFI response warrants change in the Contract Time or the Contract Sum, notify Architect and Construction Manager in writing within 10 days of receipt of the RFI response.

E. RFI Log: Prepare, maintain, and submit a tabular log of RFIs organized by the RFI number. Submit log weekly. Include the following:

1. Project name.
2. Name and address of Contractor.
3. Name and address of Architect and Construction Manager.
4. RFI number including RFIs that were returned without action or withdrawn.
5. RFI description.
6. Date the RFI was submitted.
7. Date Architect's and Construction Manager's response was received.
8. Identification of related Minor Change in the Work, Construction Change Directive, and Proposal Request, as appropriate.

F. On receipt of Architect's and Construction Manager's action, update the RFI log and immediately distribute the RFI response to affected parties. Review response and notify Architect and Construction Manager within seven days if Contractor disagrees with response.

1.7 DIGITAL PROJECT MANAGEMENT PROCEDURES

A. Architect's Data Files Not Available: Architect will not provide Architect's BIM model or CAD drawing digital data files for Contractor's use during construction.

B. PDF Document Preparation: Where PDFs are required to be submitted to Architect, prepare as follows:

1. Assemble complete submittal package into a single indexed file incorporating submittal requirements of a single Specification Section and transmittal form with links enabling navigation to each item.
2. Name file with submittal number or other unique identifier, including revision identifier.
3. Certifications: Where digitally submitted certificates and certifications are required, provide a digital signature with digital certificate on where indicated.

1.8 PROJECT MEETINGS

A. General: Construction Manager will schedule and conduct meetings and conferences at Project site unless otherwise indicated.

1. Attendees: Inform participants and others involved, and individuals whose presence is required, of date and time of each meeting. Notify Owner and Architect of scheduled meeting dates and times a minimum of 10 working days prior to meeting.
2. Agenda: Prepare the meeting agenda. Distribute the agenda to all invited attendees.
3. Minutes: Entity responsible for conducting meeting will record significant discussions and agreements achieved. Distribute the meeting minutes to everyone concerned, including Owner, Construction Manager, and Architect, within three days of the meeting.

B. Preconstruction Conference: Construction Manager will schedule and conduct a preconstruction conference before starting construction, at a time convenient to Owner and Architect, but no later than 15 days after execution of the Agreement.

1. Attendees: Authorized representatives of Owner, Construction Manager, Architect, and their consultants; Contractor and its superintendent; major subcontractors; suppliers; and other concerned parties shall attend the conference. Participants at the conference shall be familiar with Project and authorized to conclude matters relating to the Work.
2. Agenda: Discuss items of significance that could affect progress, including the following:

a. Responsibilities and personnel assignments.
b. Tentative construction schedule.
c. Phasing.
d. Critical work sequencing and long lead items.
e. Designation of key personnel and their duties.
f. Lines of communications.
g. Use of web-based Project software.
h. Procedures for processing field decisions and Change Orders.
i. Procedures for RFIs.
j. Procedures for testing and inspecting.
k. Procedures for processing Applications for Payment.
l. Distribution of the Contract Documents.
m. Submittal procedures.
n. Preparation of Record Documents.
o. Use of the premises.
p. Work restrictions.

q. Working hours.
r. Owner's occupancy requirements.
s. Responsibility for temporary facilities and controls.
t. Procedures for moisture and mold control.
u. Procedures for disruptions and shutdowns.
v. Construction waste management and recycling.
w. Parking availability.
x. Office, work, and storage areas.
y. Equipment deliveries and priorities.
z. First aid.
aa. Security.
bb. Progress cleaning.

3. Minutes: Entity responsible for conducting meeting will record and distribute meeting minutes.

C. Preinstallation Conferences: Conduct a preinstallation conference at Project site before each construction activity when required by other sections and when required for coordination with other construction.

1. Attendees: Installer and representatives of manufacturers and fabricators involved in or affected by the installation and its coordination or integration with other materials and installations that have preceded or will follow, shall attend the meeting. Advise Architect, Construction Manager of scheduled meeting dates.
2. Agenda: Review progress of other construction activities and preparations for the particular activity under consideration, including requirements for the following:

a. Contract Documents.
b. Options.
c. Related RFIs.
d. Related Change Orders.
e. Purchases.
f. Deliveries.
g. Submittals.
h. Review of mockups.
i. Possible conflicts.
j. Compatibility requirements.
k. Time schedules.
l. Weather limitations.
m. Manufacturer's written instructions.
n. Warranty requirements.
o. Compatibility of materials.
p. Acceptability of substrates.
q. Temporary facilities and controls.
r. Space and access limitations.
s. Regulations of authorities having jurisdiction.
t. Testing and inspecting requirements.
u. Installation procedures.
v. Coordination with other work.

w. Required performance results.
x. Protection of adjacent work.
y. Protection of construction and personnel.

3. Record significant conference discussions, agreements, and disagreements, including required corrective measures and actions.
4. Reporting: Distribute minutes of the meeting to each party present and to other parties requiring information.
5. Do not proceed with installation if the conference cannot be successfully concluded. Initiate whatever actions are necessary to resolve impediments to performance of the Work and reconvene the conference at earliest feasible date.

D. Project Closeout Conference: Construction Manager will schedule and conduct a project closeout conference, at a time convenient to Owner and Architect, but no later than 90 days prior to the scheduled date of Substantial Completion.

1. Conduct the conference to review requirements and responsibilities related to Project closeout.
2. Attendees: Authorized representatives of Owner, Construction Manager, Architect, and their consultants; Contractor and its superintendent; major subcontractors; suppliers; and other concerned parties shall attend the meeting. Participants at the meeting shall be familiar with Project and authorized to conclude matters relating to the Work.
3. Agenda: Discuss items of significance that could affect or delay Project closeout, including the following:

a. Preparation of Record Documents.
b. Procedures required prior to inspection for Substantial Completion and for final inspection for acceptance.
c. Procedures for completing and archiving web-based Project software site data files.
d. Submittal of written warranties.
e. Requirements for preparing operations and maintenance data.
f. Requirements for delivery of material samples, attic stock, and spare parts.
g. Requirements for demonstration and training.
h. Preparation of Contractor's punch list.
i. Procedures for processing Applications for Payment at Substantial Completion and for final payment.
j. Submittal procedures.
k. Coordination of separate contracts.
l. Owner's partial occupancy requirements.
m. Installation of Owner's furniture, fixtures, and equipment.
n. Responsibility for removing temporary facilities and controls.

4. Minutes: Entity conducting meeting will record and distribute meeting minutes.

E. Progress Meetings: Construction Manager will conduct progress meetings at regular intervals approved by the Architect.

1. Coordinate dates of meetings with preparation of payment requests.
2. Attendees: In addition to representatives of Owner, Construction Manager, and Architect, each contractor, subcontractor, supplier, and other entity concerned with current progress or involved in planning, coordination, or performance of future activities shall be represented at these meetings. All participants at the meeting shall be familiar with Project and authorized to conclude matters relating to the Work.
3. Agenda: Review and correct or approve minutes of previous progress meeting. Review other items of significance that could affect progress. Include topics for discussion as appropriate to status of Project.

    a. Contractor's Construction Schedule: Review progress since the last meeting. Determine whether each activity is on time, ahead of schedule, or behind schedule, in relation to Contractor's construction schedule. Determine how construction behind schedule will be expedited; secure commitments from parties involved to do so. Discuss whether schedule revisions are required to ensure that current and subsequent activities will be completed within the Contract Time.

        1) Review schedule for next period.

    b. Review present and future needs of each entity present, including the following:

        1) Interface requirements.
        2) Sequence of operations.
        3) Status of submittals.
        4) Deliveries.
        5) Off-site fabrication.
        6) Access.
        7) Site use.
        8) Temporary facilities and controls.
        9) Progress cleaning.
        10) Quality and work standards.
        11) Status of correction of deficient items.
        12) Field observations.
        13) Status of RFIs.
        14) Status of Proposal Requests.
        15) Pending changes.
        16) Status of Change Orders.
        17) Pending claims and disputes.
        18) Documentation of information for payment requests.

4. Minutes: Entity responsible for conducting the meeting will record and distribute the meeting minutes to each party present and to parties requiring information.

    a. Schedule Updating: Revise Contractor's construction schedule after each progress meeting where revisions to the schedule have been made or recognized. Issue revised schedule concurrently with the report of each meeting.

F. Coordination Meetings: Construction Manager will conduct Project coordination meetings at regular intervals approved by the Construction Manager. Project coordination meetings are in addition to specific meetings held for other purposes, such as progress meetings and preinstallation conferences.

1. Attendees: In addition to representatives of Owner, Construction Manager, and Architect, each contractor, subcontractor, supplier, and other entity concerned with current progress or involved in planning, coordination, or performance of future activities shall be represented at these meetings. All participants at the meetings shall be familiar with Project and authorized to conclude matters relating to the Work.
2. Agenda: Review and correct or approve minutes of the previous coordination meeting. Review other items of significance that could affect progress. Include topics for discussion as appropriate to status of Project.

    a. Combined Contractor's Construction Schedule: Review progress since the last coordination meeting. Determine whether each contract is on time, ahead of schedule, or behind schedule, in relation to combined Contractor's construction schedule. Determine how construction behind schedule will be expedited; secure commitments from parties involved to do so. Discuss whether schedule revisions are required to ensure that current and subsequent activities will be completed within the Contract Time.
    b. Schedule Updating: Revise combined Contractor's construction schedule after each coordination meeting where revisions to the schedule have been made or recognized. Issue revised schedule concurrently with report of each meeting.
    c. Review present and future needs of each contractor present, including the following:

        1) Interface requirements.
        2) Sequence of operations.
        3) Status of submittals.
        4) Deliveries.
        5) Off-site fabrication.
        6) Access.
        7) Site use.
        8) Temporary facilities and controls.
        9) Work hours.
        10) Hazards and risks.
        11) Progress cleaning.
        12) Quality and work standards.
        13) Status of RFIs.
        14) Proposal Requests.
        15) Change Orders.
        16) Pending changes.

3. Reporting: Record meeting results and distribute copies to everyone in attendance and to others affected by decisions or actions resulting from each meeting.

PART 2 - PRODUCTS (Not Used)

PART 3 - EXECUTION (Not Used)

END OF SECTION 013100

SECTION 013200 - CONSTRUCTION PROGRESS DOCUMENTATION

PART 1 - GENERAL

1.1 RELATED DOCUMENTS

A. Drawings and general provisions of the Contract, including General and Supplementary Conditions and other Division 01 Specification Sections, apply to this Section.

1.2 SUMMARY

A. Section includes administrative and procedural requirements for documenting the progress of construction during performance of the Work, including the following:

1. Startup construction schedule.
2. Contractor's Construction Schedule.
3. Construction schedule updating reports.
4. Daily construction reports.
5. Material location reports.
6. Site condition reports.
7. Unusual event reports.

1.3 DEFINITIONS

A. Activity: A discrete part of a project that can be identified for planning, scheduling, monitoring, and controlling the construction Project. Activities included in a construction schedule consume time and resources.

1. Critical Activity: An activity on the critical path that must start and finish on the planned early start and finish times.
2. Predecessor Activity: An activity that precedes another activity in the network.
3. Successor Activity: An activity that follows another activity in the network.

B. Cost Loading: The allocation of the schedule of values for completing an activity as scheduled. The sum of costs for all activities must equal the total Contract Sum.

C. CPM: Critical path method, which is a method of planning and scheduling a construction project where activities are arranged based on activity relationships. Network calculations determine when activities can be performed and the critical path of Project.

D. Critical Path: The longest connected chain of interdependent activities through the network schedule that establishes the minimum overall Project duration and contains no float.

E. Event: The starting or ending point of an activity.

F. Float: The measure of leeway in starting and completing an activity.

1. Float time is not for the exclusive use or benefit of either Owner or Contractor, but is a jointly owned, expiring Project resource available to both parties as needed to meet schedule milestones and Contract completion date.
2. Free float is the amount of time an activity can be delayed without adversely affecting the early start of the successor activity.
3. Total float is the measure of leeway in starting or completing an activity without adversely affecting the planned Project completion date.

G. Resource Loading: The allocation of manpower and equipment necessary for completing an activity as scheduled.

1.4 INFORMATIONAL SUBMITTALS

A. Format for Submittals: Submit required submittals in one of the following formats as acceptable to the Architect:

1. Working electronic copy of schedule file, where indicated.
2. PDF file.
3. Two paper copies, of sufficient size to display entire period or schedule, as required.

B. Startup construction schedule.

1. Submittal of cost-loaded, startup construction schedule will not constitute approval of schedule of values for cost-loaded activities.

C. Startup Network Diagram: Of size required to display entire network for entire construction period. Show logic ties for activities.

D. Contractor's Construction Schedule: Initial schedule, of size required to display entire schedule for entire construction period.

1. Submit a working digital copy of schedule, using software indicated, and labeled to comply with requirements for submittals.

E. CPM Reports: Concurrent with CPM schedule, submit each of the following reports. Format for each activity in reports shall contain activity number, activity description, cost and resource loading, original duration, remaining duration, early start date, early finish date, late start date, late finish date, and total float in calendar days.

1. Activity Report: List of activities sorted by activity number and then early start date, or actual start date if known.
2. Logic Report: List of preceding and succeeding activities for each activity, sorted in ascending order by activity number and then by early start date, or actual start date if known.
3. Total Float Report: List of activities sorted in ascending order of total float.
4. Earnings Report: Compilation of Contractor's total earnings from the Notice to Proceed until most recent Application for Payment.

F. Construction Schedule Updating Reports: Submit with Applications for Payment.

G. Daily Construction Reports: Submit at weekly intervals.

H. Material Location Reports: Submit at weekly intervals.

I. Site Condition Reports: Submit at time of discovery of differing conditions.

J. Unusual Event Reports: Submit at time of unusual event.

K. Qualification Data: For scheduling consultant.

1.5 QUALITY ASSURANCE

A. Scheduling Consultant Qualifications: An experienced specialist in CPM scheduling and reporting, with capability of producing CPM reports and diagrams within 24 hours of Architect's request.

B. Prescheduling Conference: Conduct conference at Project site to comply with requirements in Section 013100 "Project Management and Coordination." Review methods and procedures related to the preliminary construction schedule and Contractor's Construction Schedule, including, but not limited to, the following:

1. Review software limitations and content and format for reports.
2. Verify availability of qualified personnel needed to develop and update schedule.
3. Discuss constraints, including work stages, area separations, and interim milestones.
4. Review delivery dates for Owner-furnished products.
5. Review schedule for work of Owner's separate contracts.
6. Review submittal requirements and procedures.
7. Review time required for review of submittals and resubmittals.
8. Review requirements for tests and inspections by independent testing and inspecting agencies.
9. Review time required for Project closeout and Owner startup procedures.
10. Review and finalize list of construction activities to be included in schedule.
11. Review procedures for updating schedule.

1.6 COORDINATION

A. Coordinate Contractor's Construction Schedule with the schedule of values, list of subcontracts, submittal schedule, progress reports, payment requests, and other required schedules and reports.

1. Secure time commitments for performing critical elements of the Work from entities involved.
2. Coordinate each construction activity in the network with other activities and schedule them in proper sequence.

1.7 CONTRACTOR'S CONSTRUCTION SCHEDULE, GENERAL

A. Computer Scheduling Software: Prepare schedules using current version of a program that has been developed specifically to manage construction schedules.

B. Time Frame: Extend schedule from date established for the Notice to Proceed to date of final completion.

1. Contract completion date shall not be changed by submission of a schedule that shows an early completion date, unless specifically authorized by Change Order.

C. Activities: Treat each floor or separate area as a separate numbered activity for each main element of the Work. Comply with the following:

1. Activity Duration: Define activities so no activity is longer than 20 days, unless specifically allowed by Architect.
2. Procurement Activities: Include procurement process activities for the following long lead items and major items, requiring a cycle of more than 60 days, as separate activities in schedule. Procurement cycle activities include, but are not limited to, submittals, approvals, purchasing, fabrication, and delivery.

3. Submittal Review Time: Include review and resubmittal times indicated in Section 013300 "Submittal Procedures" in schedule. Coordinate submittal review times in Contractor's Construction Schedule with submittal schedule.
4. Startup and Testing Time: Include no fewer than 15 days for startup and testing.
5. Substantial Completion: Indicate completion in advance of date established for Substantial Completion, and allow time for Architect's and Construction Manager's administrative procedures necessary for certification of Substantial Completion.
6. Punch List and Final Completion: Include not more than 30 days for completion of punch list items and final completion.

D. Constraints: Include constraints and work restrictions indicated in the Contract Documents and as follows in schedule, and show how the sequence of the Work is affected.

1. Products Ordered in Advance: Include a separate activity for each product. Delivery dates indicated stipulate the earliest possible delivery date.
2. Work Restrictions: Show the effect of the following items on the schedule:

a. Coordination with existing construction.
b. Limitations of continued occupancies.
c. Uninterruptible services.
d. Use-of-premises restrictions.
e. Provisions for future construction.
f. Seasonal variations.
g. Environmental control.

3. Work Stages: Indicate important stages of construction for each major portion of the Work, including, but not limited to, the following:

a. Subcontract awards.

b. Submittals.
c. Purchases.
d. Mockups.
e. Fabrication.
f. Sample testing.
g. Deliveries.
h. Installation.
i. Tests and inspections.
j. Adjusting.
k. Curing.
l. Building flush-out.
m. Startup and placement into final use and operation.
n. Commissioning.

4. Construction Areas: Identify each major area of construction for each major portion of the Work. Indicate where each construction activity within a major area must be sequenced or integrated with other construction activities to provide for the following:

a. Structural completion.
b. Temporary enclosure and space conditioning.
c. Permanent space enclosure.
d. Completion of mechanical installation.
e. Completion of electrical installation.
f. Substantial Completion.

E. Milestones: Include milestones indicated in the Contract Documents in schedule, including, but not limited to, the Notice to Proceed, Substantial Completion, and final completion.

F. Cost Correlation: Superimpose a cost correlation timeline, indicating planned and actual costs. On the line, show planned and actual dollar volume of the Work performed as of planned and actual dates used for preparation of payment requests.

1. See Section 012900 "Payment Procedures" for cost reporting and payment procedures.

G. Upcoming Work Summary: Prepare summary report indicating activities scheduled to occur or commence prior to submittal of next schedule update. Summarize the following issues:

1. Unresolved issues.
2. Unanswered Requests for Information.
3. Rejected or unreturned submittals.
4. Notations on returned submittals.
5. Pending modifications affecting the Work and the Contract Time.

H. Contractor's Construction Schedule Updating: At monthly intervals, update schedule to reflect actual construction progress and activities. Issue schedule one week before each regularly scheduled progress meeting.

1. Revise schedule immediately after each meeting or other activity where revisions have been recognized or made. Issue updated schedule concurrently with the report of each such meeting.

2. Include a report with updated schedule that indicates every change, including, but not limited to, changes in logic, durations, actual starts and finishes, and activity durations.
3. As the Work progresses, indicate final completion percentage for each activity.

I. Recovery Schedule: When periodic update indicates the Work is 14 or more calendar days behind the current approved schedule, submit a separate recovery schedule indicating means by which Contractor intends to regain compliance with the schedule. Indicate changes to working hours, working days, crew sizes, equipment required to achieve compliance, and date by which recovery will be accomplished.

J. Distribution: Distribute copies of approved schedule to Architect, Construction Manager, Owner, separate contractors, testing and inspecting agencies, and other parties identified by Contractor with a need-to-know schedule responsibility.

1. Post copies in Project meeting rooms and temporary field offices.
2. When revisions are made, distribute updated schedules to the same parties and post in the same locations. Delete parties from distribution when they have completed their assigned portion of the Work and are no longer involved in performance of construction activities.

1.8 STARTUP CONSTRUCTION SCHEDULE

A. Gantt-Chart Schedule: Submit startup, horizontal, Gantt-chart-type construction schedule within seven days of date established for the Notice to Proceed.

B. Preparation: Indicate each significant construction activity separately. Identify first workday of each week with a continuous vertical line. Outline significant construction activities for first 90 days of construction. Include skeleton diagram for the remainder of the Work and a cash requirement prediction based on indicated activities.

1.9 CPM SCHEDULE REQUIREMENTS

A. General: Prepare network diagrams using AON (activity-on-node) format.

B. Startup Network Diagram: Submit diagram within 14 days of date established for the Notice to Proceed. Outline significant construction activities for the first 90 days of construction. Include skeleton diagram for the remainder of the Work and a cash requirement prediction based on indicated activities.

C. CPM Schedule: Prepare Contractor's Construction Schedule using a cost- and resource-loaded, time-scaled CPM network analysis diagram for the Work.

1. Develop network diagram in sufficient time to submit CPM schedule so it can be accepted for use no later than 60 days after date established for the Notice to Proceed.

    a. Failure to include any work item required for performance of this Contract shall not excuse Contractor from completing all work within applicable completion dates.

2. Conduct educational workshops to train and inform key Project personnel, including subcontractors' personnel, in proper methods of providing data and using CPM schedule information.
3. Establish procedures for monitoring and updating CPM schedule and for reporting progress. Coordinate procedures with progress meeting and payment request dates.
4. Use "one workday" as the unit of time for individual activities. Indicate nonworking days and holidays incorporated into the schedule to coordinate with the Contract Time.

D. CPM Schedule Preparation: Prepare a list of all activities required to complete the Work. Using the startup network diagram, prepare a skeleton network to identify probable critical paths.

1. Activities: Indicate the estimated time duration, sequence requirements, and relationship of each activity in relation to other activities. Include estimated time frames for the following activities:

    a. Preparation and processing of submittals.
    b. Mobilization and demobilization.
    c. Purchase of materials.
    d. Delivery.
    e. Fabrication.
    f. Utility interruptions.
    g. Installation.
    h. Work by Owner that may affect or be affected by Contractor's activities.
    i. Testing and inspection.
    j. Commissioning.
    k. Punch list and final completion.
    l. Activities occurring following final completion.

2. Critical Path Activities: Identify critical path activities, including those for interim completion dates. Scheduled start and completion dates shall be consistent with Contract milestone dates.
3. Processing: Process data to produce output data on a computer-drawn, time-scaled network. Revise data, reorganize activity sequences, and reproduce as often as necessary to produce the CPM schedule within the limitations of the Contract Time.
4. Format: Mark the critical path. Locate the critical path near center of network; locate paths with most float near the edges.

    a. Subnetworks on separate sheets are permissible for activities clearly off the critical path.

5. Cost- and Resource-Loading of CPM Schedule: Assign cost to construction activities on the CPM schedule. Do not assign costs to submittal activities. Obtain Architect's approval prior to assigning costs to fabrication and delivery activities. Assign costs under main subcontracts for testing and commissioning activities, operation and maintenance manuals, punch list activities, Project record documents,and demonstration and training (if applicable), in the amount of 5 percent of the Contract Sum.

    a. Each activity cost shall reflect an appropriate value subject to approval by Architect.
    b. Total cost assigned to activities shall equal the total Contract Sum.

E. Contract Modifications: For each proposed contract modification and concurrent with its submission, prepare a time-impact analysis using a network fragment to demonstrate the effect of the proposed change on the overall Project schedule.

F. Initial Issue of Schedule: Prepare initial network diagram from a sorted activity list indicating straight "early start-total float." Identify critical activities. Prepare tabulated reports showing the following:

1. Contractor or subcontractor and the Work or activity.
2. Description of activity.
3. Main events of activity.
4. Immediate preceding and succeeding activities.
5. Early and late start dates.
6. Early and late finish dates.
7. Activity duration in workdays.
8. Total float or slack time.
9. Average size of workforce.
10. Dollar value of activity (coordinated with the schedule of values).

G. Schedule Updating: Concurrent with making revisions to schedule, prepare tabulated reports showing the following:

1. Identification of activities that have changed.
2. Changes in early and late start dates.
3. Changes in early and late finish dates.
4. Changes in activity durations in workdays.
5. Changes in the critical path.
6. Changes in total float or slack time.
7. Changes in the Contract Time.

H. Value Summaries: Prepare two cumulative value lists, sorted by finish dates.

1. In first list, tabulate activity number, early finish date, dollar value, and cumulative dollar value.
2. In second list, tabulate activity number, late finish date, dollar value, and cumulative dollar value.
3. In subsequent issues of both lists, substitute actual finish dates for activities completed as of list date.

4. Prepare list for ease of comparison with payment requests; coordinate timing with progress meetings.

    a. In both value summary lists, tabulate "actual percent complete" and "cumulative value completed" with total at bottom.
    b. Submit value summary printouts one week before each regularly scheduled progress meeting.

1.10 REPORTS

A. Daily Construction Reports: Prepare a daily construction report recording the following information concerning events at Project site:

1. List of subcontractors at Project site.
2. List of separate contractors at Project site.
3. Approximate count of personnel at Project site.
4. Equipment at Project site.
5. Material deliveries.
6. High and low temperatures and general weather conditions, including presence of rain or snow.
7. Testing and inspection.
8. Accidents.
9. Meetings and significant decisions.
10. Unusual events.
11. Stoppages, delays, shortages, and losses.
12. Meter readings and similar recordings.
13. Emergency procedures.
14. Orders and requests of authorities having jurisdiction.
15. Change Orders received and implemented.
16. Construction Change Directives received and implemented.
17. Services connected and disconnected.
18. Equipment or system tests and startups.
19. Partial completions and occupancies.
20. Substantial Completions authorized.

B. Material Location Reports: At weekly intervals, prepare and submit a comprehensive list of materials delivered to and stored at Project site. List shall be cumulative, showing materials previously reported plus items recently delivered. Include with list a statement of progress on and delivery dates for materials or items of equipment fabricated or stored away from Project site. Indicate the following categories for stored materials:

1. Material stored prior to previous report and remaining in storage.
2. Material stored prior to previous report and since removed from storage and installed.
3. Material stored following previous report and remaining in storage.

C. Site Condition Reports: Immediately on discovery of a difference between site conditions and the Contract Documents, prepare and submit a detailed report. Submit with a Request for Information. Include a detailed description of the differing conditions, together with recommendations for changing the Contract Documents.

D. Unusual Event Reports: When an event of an unusual and significant nature occurs at Project site, whether or not related directly to the Work, prepare and submit a special report. List chain of events, persons participating, responses by Contractor's personnel, evaluation of results or effects, and similar pertinent information. Advise Owner in advance when these events are known or predictable.

1. Submit unusual event reports directly to Owner within one day(s) of an occurrence. Distribute copies of report to parties affected by the occurrence.

PART 2 - PRODUCTS (Not Used)

PART 3 - EXECUTION (Not Used)

END OF SECTION 013200

SECTION 013300 - SUBMITTAL PROCEDURES

PART 1 - GENERAL

1.1 RELATED DOCUMENTS

A. Drawings and general provisions of the Contract, including General and Supplementary Conditions and other Division 01 Specification Sections, apply to this Section.

1.2 SUMMARY

A. Section Includes:

1. Submittal schedule requirements.
2. Administrative and procedural requirements for submittals.

B. Related Requirements:

1. Section 012900 "Payment Procedures" for submitting Applications for Payment and the schedule of values.
2. Section 013100 "Project Management and Coordination" for submitting coordination drawings and subcontract list and for requirements for web-based Project software.
3. Section 013200 "Construction Progress Documentation" for submitting schedules and reports, including Contractor's construction schedule.
4. Section 014000 "Quality Requirements" for submitting test and inspection reports, and schedule of tests and inspections.
5. Section 017700 "Closeout Procedures" for submitting closeout submittals and maintenance material submittals.
6. Section 017823 "Operation and Maintenance Data" for submitting operation and maintenance manuals.
7. Section 017839 "Project Record Documents" for submitting record Drawings, record Specifications, and record Product Data.
8. Section 017900 "Demonstration and Training" for submitting video recordings of demonstration of equipment and training of Owner's personnel.

1.3 DEFINITIONS

A. Action Submittals: Written and graphic information and physical samples that require Architect's and Construction Manager's responsive action. Action submittals are those submittals indicated in individual Specification Sections as "action submittals."

B. Informational Submittals: Written and graphic information and physical samples that do not require Architect's and Construction Manager's responsive action. Submittals may be rejected for not complying with requirements. Informational submittals are those submittals indicated in individual Specification Sections as "informational submittals."

1.4 SUBMITTAL SCHEDULE

A. Submittal Schedule: Submit, as an action submittal, a list of submittals, arranged in chronological order by dates required by construction schedule. Include time required for review, ordering, manufacturing, fabrication, and delivery when establishing dates. Include additional time required for making corrections or revisions to submittals noted by Architect and Construction Manager and additional time for handling and reviewing submittals required by those corrections.

1. Coordinate submittal schedule with list of subcontracts, the schedule of values, and Contractor's construction schedule.
2. Initial Submittal: Submit concurrently with startup construction schedule. Include submittals required during the first 60 days of construction. List those submittals required to maintain orderly progress of the Work and those required early because of long lead time for manufacture or fabrication.
3. Final Submittal: Submit concurrently with the first complete submittal of Contractor's construction schedule.

    a. Submit revised submittal schedule to reflect changes in current status and timing for submittals.

4. Format: Arrange the following information in a tabular format:

    a. Scheduled date for first submittal.
    b. Specification Section number and title.
    c. Submittal Category: Action; informational.
    d. Name of subcontractor.
    e. Description of the Work covered.
    f. Scheduled date for Architect's and Construction Manager's final release or approval.
    g. Scheduled dates for purchasing.
    h. Scheduled date of fabrication.
    i. Scheduled dates for installation.
    j. Activity or event number.

1.5 SUBMITTAL FORMATS

A. Submittal Information: Include the following information in each submittal:

1. Project name.
2. Date.
3. Name of Architect.
4. Name of Contractor.

5. Name of firm or entity that prepared submittal.
6. Names of subcontractor, manufacturer, and supplier.
7. Unique submittal number, including revision identifier. Include Specification Section number with sequential alphanumeric identifier; and alphanumeric suffix for resubmittals.
8. Category and type of submittal.
9. Submittal purpose and description.
10. Number and title of Specification Section, with paragraph number and generic name for each of multiple items.
11. Drawing number and detail references, as appropriate.
12. Indication of full or partial submittal.
13. Location(s) where product is to be installed, as appropriate.
14. Other necessary identification.
15. Remarks.
16. Signature of transmitter.

B. Options: Identify options requiring selection by Architect.

C. Deviations and Additional Information: On each submittal, clearly indicate deviations from requirements in the Contract Documents, including minor variations and limitations; include relevant additional information and revisions, other than those requested by Architect and Construction Manager on previous submittals. Indicate by highlighting on each submittal or noting on attached separate sheet.

D. Paper Submittals: Digital submittals may be provided in lieu of paper submittals if permitted by the Architect.

1. Place a permanent label or title block on each submittal item for identification; include name of firm or entity that prepared submittal.
2. Provide a space approximately 6 by 8 inches on label or beside title block to record Contractor's review and approval markings and action taken by Architect and Construction Manager.
3. Action Submittals: Submit three paper copies of each submittal unless otherwise indicated. Architect, through Construction Manager, will return two copies.
4. Informational Submittals: Submit two paper copies of each submittal unless otherwise indicated. Architect and Construction Manager will not return copies.
5. Additional Copies: Unless additional copies are required for final submittal, and unless Architect or Construction Manager observes noncompliance with provisions in the Contract Documents, initial submittal may serve as final submittal.
6. Transmittal for Submittals: Assemble each submittal individually and appropriately for transmittal and handling. Transmit each submittal using AIA Document G810 transmittal form or comparable form acceptable to the Architect.

E. PDF Submittals: Prepare submittals as PDF package, incorporating complete information into each PDF file. Name PDF file with submittal number.

1.6 SUBMITTAL PROCEDURES

A. Prepare and submit submittals required by individual Specification Sections. Types of submittals are indicated in individual Specification Sections.

1. Email: Prepare submittals as PDF package, and transmit to Architect by sending via email. Include PDF transmittal form. Include information in email subject line as requested by Architect.

a. Architect, through Construction Manager, will return annotated file. Annotate and retain one copy of file as a digital Project Record Document file.

2. Paper: Prepare submittals in paper form, and deliver to Architect.

B. Coordination: Coordinate preparation and processing of submittals with performance of construction activities.

1. Coordinate each submittal with fabrication, purchasing, testing, delivery, other submittals, and related activities that require sequential activity.
2. Submit all submittal items required for each Specification Section concurrently unless partial submittals for portions of the Work are indicated on approved submittal schedule.
3. Submit action submittals and informational submittals required by the same Specification Section as separate packages under separate transmittals.
4. Coordinate transmittal of submittals for related parts of the Work specified in different Sections so processing will not be delayed because of need to review submittals concurrently for coordination.

a. Architect and Construction Manager reserve the right to withhold action on a submittal requiring coordination with other submittals until related submittals are received.

C. Processing Time: Allow time for submittal review, including time for resubmittals, as follows. Time for review shall commence on Construction Manager's receipt of submittal. No extension of the Contract Time will be authorized because of failure to transmit submittals enough in advance of the Work to permit processing, including resubmittals.

1. Initial Review: Allow 15 days for initial review of each submittal. Allow additional time if coordination with subsequent submittals is required. Construction Manager will advise Contractor when a submittal being processed must be delayed for coordination.
2. Intermediate Review: If intermediate submittal is necessary, process it in same manner as initial submittal.
3. Resubmittal Review: Allow 15 days for review of each resubmittal.
4. Sequential Review: Where sequential review of submittals by Architect's consultants, Owner, or other parties is indicated, allow 21 days for initial review of each submittal.

5. Concurrent Consultant Review: Where the Contract Documents indicate that submittals may be transmitted simultaneously to Architect and to Architect's consultants, allow 15 days for review of each submittal. Submittal will be returned to Construction Manager, through Architect, before being returned to Contractor.

    a. Submit one copy of submittal to concurrent reviewer in addition to specified number of copies to Architect and Construction Manager.

D. Resubmittals: Make resubmittals in same form and number of copies as initial submittal.

1. Note date and content of previous submittal.
2. Note date and content of revision in label or title block and clearly indicate extent of revision.
3. Resubmit submittals until they are marked with approval notation from Architect's and Construction Manager's action stamp.

E. Distribution: Furnish copies of final submittals to manufacturers, subcontractors, suppliers, fabricators, installers, authorities having jurisdiction, and others as necessary for performance of construction activities. Show distribution on transmittal forms.

F. Use for Construction: Retain complete copies of submittals on Project site. Use only final action submittals that are marked with approval notation from Architect's and Construction Manager's action stamp.

1.7 SUBMITTAL REQUIREMENTS

A. Product Data: Collect information into a single submittal for each element of construction and type of product or equipment.

1. If information must be specially prepared for submittal because standard published data are unsuitable for use, submit as Shop Drawings, not as Product Data.
2. Mark each copy of each submittal to show which products and options are applicable.
3. Include the following information, as applicable:

    a. Manufacturer's catalog cuts.
    b. Manufacturer's product specifications.
    c. Standard color charts.
    d. Statement of compliance with specified referenced standards.
    e. Testing by recognized testing agency.
    f. Application of testing agency labels and seals.
    g. Notation of coordination requirements.
    h. Availability and delivery time information.

4. For equipment, include the following in addition to the above, as applicable:

    a. Wiring diagrams that show factory-installed wiring.
    b. Printed performance curves.

c. Operational range diagrams.
d. Clearances required to other construction, if not indicated on accompanying Shop Drawings.

5. Submit Product Data before Shop Drawings, and before or concurrent with Samples.

B. Shop Drawings: Prepare Project-specific information, drawn accurately to scale. Do not base Shop Drawings on reproductions of the Contract Documents or standard printed data unless submittal based on Architect's digital data drawing files is otherwise permitted.

1. Preparation: Fully illustrate requirements in the Contract Documents. Include the following information, as applicable:

a. Identification of products.
b. Schedules.
c. Compliance with specified standards.
d. Notation of coordination requirements.
e. Notation of dimensions established by field measurement.
f. Relationship and attachment to adjoining construction clearly indicated.
g. Seal and signature of professional engineer if specified.

2. Paper Sheet Size: Except for templates, patterns, and similar full-size Drawings, submit Shop Drawings on sheets at least 8-1/2 by 11 inches, but no larger than 30 by 42 inches.

a. Two opaque (bond) copies of each submittal. Architect, through Construction Manager, will return one copy.
b. Three opaque copies of each submittal. Architect and Construction Manager will retain two copies; remainder will be returned.

C. Samples: Submit Samples for review of kind, color, pattern, and texture for a check of these characteristics with other materials.

1. Transmit Samples that contain multiple, related components such as accessories together in one submittal package.
2. Identification: Permanently attach label on unexposed side of Samples that includes the following:

a. Project name and submittal number.
b. Generic description of Sample.
c. Product name and name of manufacturer.
d. Sample source.
e. Number and title of applicable Specification Section.
f. Specification paragraph number and generic name of each item.

3. Email Transmittal: Provide PDF transmittal. Include digital image file illustrating Sample characteristics, and identification information for record.
4. Paper Transmittal: Include paper transmittal including complete submittal information indicated.

5. Disposition: Maintain sets of approved Samples at Project site, available for quality-control comparisons throughout the course of construction activity. Sample sets may be used to determine final acceptance of construction associated with each set.

    a. Samples that may be incorporated into the Work are indicated in individual Specification Sections. Such Samples must be in an undamaged condition at time of use.
    b. Samples not incorporated into the Work, or otherwise designated as Owner's property, are the property of Contractor.

6. Samples for Initial Selection: Submit manufacturer's color charts consisting of units or sections of units showing the full range of colors, textures, and patterns available.

    a. Number of Samples: Submit one full set(s) of available choices where color, pattern, texture, or similar characteristics are required to be selected from manufacturer's product line. Architect, through Construction Manager, will return submittal with options selected.

7. Samples for Verification: Submit full-size units or Samples of size indicated, prepared from same material to be used for the Work, cured and finished in manner specified, and physically identical with material or product proposed for use, and that show full range of color and texture variations expected. Samples include, but are not limited to, the following: partial sections of manufactured or fabricated components; small cuts or containers of materials; complete units of repetitively used materials; swatches showing color, texture, and pattern; color range sets; and components used for independent testing and inspection.

    a. Number of Samples: Submit three sets of Samples. Architect and Construction Manager will retain two Sample sets; remainder will be returned. Mark up and retain one returned Sample set as a project record Sample.

        1) Submit a single Sample where assembly details, workmanship, fabrication techniques, connections, operation, and other similar characteristics are to be demonstrated.
        2) If variation in color, pattern, texture, or other characteristic is inherent in material or product represented by a Sample, submit at least three sets of paired units that show approximate limits of variations.

D. Product Schedule: As required in individual Specification Sections, prepare a written summary indicating types of products required for the Work and their intended location. Include the following information in tabular form:

1. Type of product. Include unique identifier for each product indicated in the Contract Documents or assigned by Contractor if none is indicated.
2. Manufacturer and product name, and model number if applicable.
3. Number and name of room or space.
4. Location within room or space.

E. Qualification Data: Prepare written information that demonstrates capabilities and experience of firm or person. Include lists of completed projects with project names and addresses, contact information of architects and owners, and other information specified.

F. Design Data: Prepare and submit written and graphic information indicating compliance with indicated performance and design criteria in individual Specification Sections. Include list of assumptions and summary of loads. Include load diagrams if applicable. Provide name and version of software, if any, used for calculations. Number each page of submittal.

G. Certificates:

1. Certificates and Certifications Submittals: Submit a statement that includes signature of entity responsible for preparing certification. Certificates and certifications shall be signed by an officer or other individual authorized to sign documents on behalf of that entity. Provide a notarized signature where indicated.
2. Installer Certificates: Submit written statements on manufacturer's letterhead certifying that Installer complies with requirements in the Contract Documents and, where required, is authorized by manufacturer for this specific Project.
3. Manufacturer Certificates: Submit written statements on manufacturer's letterhead certifying that manufacturer complies with requirements in the Contract Documents. Include evidence of manufacturing experience where required.
4. Material Certificates: Submit written statements on manufacturer's letterhead certifying that material complies with requirements in the Contract Documents.
5. Product Certificates: Submit written statements on manufacturer's letterhead certifying that product complies with requirements in the Contract Documents.
6. Welding Certificates: Prepare written certification that welding procedures and personnel comply with requirements in the Contract Documents. Submit record of Welding Procedure Specification and Procedure Qualification Record on AWS forms. Include names of firms and personnel certified.

H. Test and Research Reports:

1. Compatibility Test Reports: Submit reports written by a qualified testing agency, on testing agency's standard form, indicating and interpreting results of compatibility tests performed before installation of product. Include written recommendations for primers and substrate preparation needed for adhesion.
2. Field Test Reports: Submit written reports indicating and interpreting results of field tests performed either during installation of product or after product is installed in its final location, for compliance with requirements in the Contract Documents.
3. Material Test Reports: Submit reports written by a qualified testing agency, on testing agency's standard form, indicating and interpreting test results of material for compliance with requirements in the Contract Documents.
4. Preconstruction Test Reports: Submit reports written by a qualified testing agency, on testing agency's standard form, indicating and interpreting results of tests performed before installation of product, for compliance with performance requirements in the Contract Documents.

5. Product Test Reports: Submit written reports indicating that current product produced by manufacturer complies with requirements in the Contract Documents. Base reports on evaluation of tests performed by manufacturer and witnessed by a qualified testing agency, or on comprehensive tests performed by a qualified testing agency.
6. Research Reports: Submit written evidence, from a model code organization acceptable to authorities having jurisdiction, that product complies with building code in effect for Project. Include the following information:

    a. Name of evaluation organization.
    b. Date of evaluation.
    c. Time period when report is in effect.
    d. Product and manufacturers' names.
    e. Description of product.
    f. Test procedures and results.
    g. Limitations of use.

1.8 DELEGATED-DESIGN SERVICES

A. Performance and Design Criteria: Where professional design services or certifications by a design professional are specifically required of Contractor by the Contract Documents, provide products and systems complying with specific performance and design criteria indicated.

    1. If criteria indicated are insufficient to perform services or certification required, submit a written request for additional information to Architect.

B. Delegated-Design Services Certification: In addition to Shop Drawings, Product Data, and other required submittals, submit digitally signed PDF file and three paper copies of certificate, signed and sealed by the responsible design professional, for each product and system specifically assigned to Contractor to be designed or certified by a design professional.

    1. Indicate that products and systems comply with performance and design criteria in the Contract Documents. Include list of codes, loads, and other factors used in performing these services.

1.9 CONTRACTOR'S REVIEW

A. Action Submittals and Informational Submittals: Review each submittal and check for coordination with other Work of the Contract and for compliance with the Contract Documents. Note corrections and field dimensions. Mark with approval stamp before submitting to Architect and Construction Manager.

B. Contractor's Approval: Indicate Contractor's approval for each submittal with a uniform approval stamp. Include name of reviewer, date of Contractor's approval, and statement certifying that submittal has been reviewed, checked, and approved for compliance with the Contract Documents.

    1. Architect and Construction Manager will not review submittals received from Contractor that do not have Contractor's review and approval.

1.10 ARCHITECT'S AND CONSTRUCTION MANAGER'S REVIEW

A. Action Submittals: Architect and Construction Manager will review each submittal, indicate corrections or revisions required, and return it.

1. PDF Submittals: Architect and Construction Manager will indicate, via markup on each submittal, the appropriate action.

2. Paper Submittals: Architect and Construction Manager will stamp each submittal with an action stamp and will mark stamp appropriately to indicate action.

B. Informational Submittals: Architect and Construction Manager will review each submittal and will not return it, or will return it if it does not comply with requirements. Architect and Construction Manager will forward each submittal to appropriate party.

C. Partial submittals prepared for a portion of the Work will be reviewed when use of partial submittals has received prior approval from Architect and Construction Manager.

D. Incomplete submittals are unacceptable, will be considered nonresponsive, and will be returned for resubmittal without review.

E. Architect and Construction Manager will return without review submittals received from sources other than Contractor.

F. Submittals not required by the Contract Documents will be returned by Architect without action.

PART 2 - PRODUCTS (Not Used)

PART 3 - EXECUTION (Not Used)

END OF SECTION 013300

SECTION 014000 - QUALITY REQUIREMENTS

PART 1 - GENERAL

1.1 RELATED DOCUMENTS

A. Drawings and general provisions of the Contract, including General and Supplementary Conditions and other Division 01 Specification Sections, apply to this Section.

1.2 SUMMARY

A. Section includes administrative and procedural requirements for quality assurance and quality control.

B. Testing and inspection services are required to verify compliance with requirements specified or indicated. These services do not relieve Contractor of responsibility for compliance with the Contract Document requirements.

1. Specific quality-assurance and quality-control requirements for individual work results are specified in their respective Specification Sections. Requirements in individual Sections may also cover production of standard products.
2. Specified tests, inspections, and related actions do not limit Contractor's other quality-assurance and quality-control procedures that facilitate compliance with the Contract Document requirements.
3. Requirements for Contractor to provide quality-assurance and quality-control services required by Architect, Owner, Construction Manager, or authorities having jurisdiction are not limited by provisions of this Section.
4. Specific test and inspection requirements are not specified in this Section.

1.3 DEFINITIONS

A. Experienced: When used with an entity or individual, "experienced" unless otherwise further described means having successfully completed a minimum of five previous projects similar in nature, size, and extent to this Project; being familiar with special requirements indicated; and having complied with requirements of authorities having jurisdiction.

B. Field Quality-Control Tests: Tests and inspections that are performed on-site for installation of the Work and for completed Work.

C. Installer/Applicator/Erector: Contractor or another entity engaged by Contractor as an employee, Subcontractor, or Sub-subcontractor, to perform a particular construction operation, including installation, erection, application, assembly, and similar operations.

1. Use of trade-specific terminology in referring to a trade or entity does not require that certain construction activities be performed by accredited or unionized individuals, or that requirements specified apply exclusively to specific trade(s).

D. Mockups: Full-size physical assemblies that are constructed on-site either as freestanding temporary built elements or as part of permanent construction. Mockups are constructed to verify selections made under Sample submittals; to demonstrate aesthetic effects and qualities of materials and execution; to review coordination, testing, or operation; to show interface between dissimilar materials; and to demonstrate compliance with specified installation tolerances. Mockups are not Samples. Unless otherwise indicated, approved mockups establish the standard by which the Work will be judged.

1. Integrated Exterior Mockups: Mockups of the exterior envelope constructed on-site as freestanding temporary built elements or as part of permanent construction, consisting of multiple products, assemblies, and subassemblies.

E. Preconstruction Testing: Tests and inspections performed specifically for Project before products and materials are incorporated into the Work, to verify performance or compliance with specified criteria.

F. Product Tests: Tests and inspections that are performed by a nationally recognized testing laboratory (NRTL) according to 29 CFR 1910.7, by a testing agency accredited according to NIST's National Voluntary Laboratory Accreditation Program (NVLAP), or by a testing agency qualified to conduct product testing and acceptable to authorities having jurisdiction, to establish product performance and compliance with specified requirements.

G. Source Quality-Control Tests: Tests and inspections that are performed at the source; for example, plant, mill, factory, or shop.

H. Testing Agency: An entity engaged to perform specific tests, inspections, or both. Testing laboratory shall mean the same as testing agency.

I. Quality-Assurance Services: Activities, actions, and procedures performed before and during execution of the Work to guard against defects and deficiencies and substantiate that proposed construction will comply with requirements.

J. Quality-Control Services: Tests, inspections, procedures, and related actions during and after execution of the Work to evaluate that actual products incorporated into the Work and completed construction comply with requirements. Contractor's quality-control services do not include contract administration activities performed by Architect or Construction Manager.

1.4 DELEGATED-DESIGN SERVICES

A. Performance and Design Criteria: Where professional design services or certifications by a design professional are specifically required of Contractor by the Contract Documents, provide products and systems complying with specific performance and design criteria indicated.

1. If criteria indicated are not sufficient to perform services or certification required, submit a written request for additional information to Architect.

1.5 CONFLICTING REQUIREMENTS

A. Conflicting Standards and Other Requirements: If compliance with two or more standards or requirements are specified and the standards or requirements establish different or conflicting requirements for minimum quantities or quality levels, comply with the most stringent requirement. Refer conflicting requirements that are different, but apparently equal, to Architect for direction before proceeding.

B. Minimum Quantity or Quality Levels: The quantity or quality level shown or specified shall be the minimum provided or performed. The actual installation may comply exactly with the minimum quantity or quality specified, or it may exceed the minimum within reasonable limits. To comply with these requirements, indicated numeric values are minimum or maximum, as appropriate, for the context of requirements. Refer uncertainties to Architect for a decision before proceeding.

1.6 ACTION SUBMITTALS

A. Shop Drawings: For integrated exterior mockups.

1. Include plans, sections, and elevations, indicating materials and size of mockup construction.
2. Indicate manufacturer and model number of individual components.
3. Provide axonometric drawings for conditions difficult to illustrate in two dimensions.

B. Delegated-Design Services Submittal: In addition to Shop Drawings, Product Data, and other required submittals, submit a statement signed and sealed by the responsible design professional, for each product and system specifically assigned to Contractor to be designed or certified by a design professional, indicating that the products and systems are in compliance with performance and design criteria indicated. Include list of codes, loads, and other factors used in performing these services.

1.7 INFORMATIONAL SUBMITTALS

A. Contractor's Quality-Control Plan: For quality-assurance and quality-control activities and responsibilities.

B. Qualification Data: For Contractor's quality-control personnel.

C. Contractor's Statement of Responsibility: When required by authorities having jurisdiction, submit copy of written statement of responsibility submitted to authorities having jurisdiction before starting work on the following systems:

1. Seismic-force-resisting system, designated seismic system, or component listed in the Statement of Special Inspections.
2. Main wind-force-resisting system or a wind-resisting component listed in the Statement of Special Inspections.

D. Testing Agency Qualifications: For testing agencies specified in "Quality Assurance" Article to demonstrate their capabilities and experience. Include proof of qualifications in the form of a recent report on the inspection of the testing agency by a recognized authority.

E. Schedule of Tests and Inspections: Prepare in tabular form and include the following:

1. Specification Section number and title.
2. Entity responsible for performing tests and inspections.
3. Description of test and inspection.
4. Identification of applicable standards.
5. Identification of test and inspection methods.
6. Number of tests and inspections required.
7. Time schedule or time span for tests and inspections.
8. Requirements for obtaining samples.
9. Unique characteristics of each quality-control service.

F. Reports: Prepare and submit certified written reports and documents as specified.

G. Permits, Licenses, and Certificates: For Owner's record, submit copies of permits, licenses, certifications, inspection reports, releases, jurisdictional settlements, notices, receipts for fee payments, judgments, correspondence, records, and similar documents established for compliance with standards and regulations bearing on performance of the Work.

1.8 CONTRACTOR'S QUALITY-CONTROL PLAN

A. Quality-Control Plan, General: Submit quality-control plan within 10 days of Notice to Proceed, and not less than five days prior to preconstruction conference. Submit in format acceptable to Architect. Identify personnel, procedures, controls, instructions, tests, records, and forms to be used to carry out Contractor's quality-assurance and quality-control responsibilities. Coordinate with Contractor's Construction Schedule.

B. Quality-Control Personnel Qualifications: Engage qualified personnel trained and experienced in managing and executing quality-assurance and quality-control procedures similar in nature and extent to those required for Project.

1. Project quality-control manager may also serve as Project superintendent.

C. Submittal Procedure: Describe procedures for ensuring compliance with requirements through review and management of submittal process. Indicate qualifications of personnel responsible for submittal review.

D. Testing and Inspection: In quality-control plan, include a comprehensive schedule of Work requiring testing or inspection, including the following:

1. Contractor-performed tests and inspections including Subcontractor-performed tests and inspections. Include required tests and inspections and Contractor-elected tests and inspections. Distinguish source quality-control tests and inspections from field quality-control tests and inspections.
2. Special inspections required by authorities having jurisdiction and indicated on the Statement of Special Inspections.
3. Owner-performed tests and inspections indicated in the Contract Documents.

E. Continuous Inspection of Workmanship: Describe process for continuous inspection during construction to identify and correct deficiencies in workmanship in addition to testing and inspection specified. Indicate types of corrective actions to be required to bring work into compliance with standards of workmanship established by Contract requirements and approved mockups.

F. Monitoring and Documentation: Maintain testing and inspection reports including log of approved and rejected results. Include work Architect has indicated as nonconforming or defective. Indicate corrective actions taken to bring nonconforming work into compliance with requirements. Comply with requirements of authorities having jurisdiction.

1.9 REPORTS AND DOCUMENTS

A. Test and Inspection Reports: Prepare and submit certified written reports specified in other Sections. Include the following:

1. Date of issue.
2. Project title and number.
3. Name, address, telephone number, and email address of testing agency.
4. Dates and locations of samples and tests or inspections.
5. Names of individuals making tests and inspections.
6. Description of the Work and test and inspection method.
7. Identification of product and Specification Section.
8. Complete test or inspection data.
9. Test and inspection results and an interpretation of test results.
10. Record of temperature and weather conditions at time of sample taking and testing and inspection.
11. Comments or professional opinion on whether tested or inspected Work complies with the Contract Document requirements.
12. Name and signature of laboratory inspector.
13. Recommendations on retesting and reinspecting.

B. Manufacturer's Technical Representative's Field Reports: Prepare written information documenting manufacturer's technical representative's tests and inspections specified in other Sections. Include the following:

1. Name, address, telephone number, and email address of technical representative making report.
2. Statement on condition of substrates and their acceptability for installation of product.
3. Statement that products at Project site comply with requirements.
4. Summary of installation procedures being followed, whether they comply with requirements and, if not, what corrective action was taken.
5. Results of operational and other tests and a statement of whether observed performance complies with requirements.
6. Statement whether conditions, products, and installation will affect warranty.
7. Other required items indicated in individual Specification Sections.

C. Factory-Authorized Service Representative's Reports: Prepare written information documenting manufacturer's factory-authorized service representative's tests and inspections specified in other Sections. Include the following:

1. Name, address, telephone number, and email address of factory-authorized service representative making report.
2. Statement that equipment complies with requirements.
3. Results of operational and other tests and a statement of whether observed performance complies with requirements.
4. Statement whether conditions, products, and installation will affect warranty.
5. Other required items indicated in individual Specification Sections.

1.10 QUALITY ASSURANCE

A. General: Qualifications paragraphs in this article establish the minimum qualification levels required; individual Specification Sections specify additional requirements.

B. Manufacturer Qualifications: A firm experienced in manufacturing products or systems similar to those indicated for this Project and with a record of successful in-service performance, as well as sufficient production capacity to produce required units. As applicable, procure products from manufacturers able to meet qualification requirements, warranty requirements, and technical or factory-authorized service representative requirements.

C. Fabricator Qualifications: A firm experienced in producing products similar to those indicated for this Project and with a record of successful in-service performance, as well as sufficient production capacity to produce required units.

D. Installer Qualifications: A firm or individual experienced in installing, erecting, applying, or assembling work similar in material, design, and extent to that indicated for this Project, whose work has resulted in construction with a record of successful in-service performance.

E. Professional Engineer Qualifications: A professional engineer who is legally qualified to practice in jurisdiction where Project is located and who is experienced in providing engineering services of the kind indicated. Engineering services are defined as those performed for installations of the system, assembly, or products that are similar in material, design, and extent to those indicated for this Project.

F. Specialists: Certain Specification Sections require that specific construction activities shall be performed by entities who are recognized experts in those operations. Specialists shall satisfy qualification requirements indicated and shall be engaged for the activities indicated.

1. Requirements of authorities having jurisdiction shall supersede requirements for specialists.

G. Testing Agency Qualifications: An NRTL, an NVLAP, or an independent agency with the experience and capability to conduct testing and inspection indicated, as documented according to ASTM E 329; and with additional qualifications specified in individual Sections; and, where required by authorities having jurisdiction, that is acceptable to authorities.

H. Manufacturer's Technical Representative Qualifications: An authorized representative of manufacturer who is trained and approved by manufacturer to observe and inspect installation of manufacturer's products that are similar in material, design, and extent to those indicated for this Project.

I. Factory-Authorized Service Representative Qualifications: An authorized representative of manufacturer who is trained and approved by manufacturer to inspect installation of manufacturer's products that are similar in material, design, and extent to those indicated for this Project.

J. Preconstruction Testing: Where testing agency is indicated to perform preconstruction testing for compliance with specified requirements for performance and test methods, comply with the following:

1. Contractor responsibilities include the following:

a. Provide test specimens representative of proposed products and construction.
b. Submit specimens in a timely manner with sufficient time for testing and analyzing results to prevent delaying the Work.
c. Provide sizes and configurations of test assemblies, mockups, and laboratory mockups to adequately demonstrate capability of products to comply with performance requirements.
d. Build site-assembled test assemblies and mockups using installers who will perform same tasks for Project.
e. Build laboratory mockups at testing facility using personnel, products, and methods of construction indicated for the completed Work.
f. When testing is complete, remove test specimens and test assemblies, and mockups; do not reuse products on Project.

2. Testing Agency Responsibilities: Submit a certified written report of each test, inspection, and similar quality-assurance service to Architect, through Construction Manager, with copy to Contractor. Interpret tests and inspections and state in each report whether tested and inspected work complies with or deviates from the Contract Documents.

K. Mockups: Before installing portions of the Work requiring mockups, build mockups for each form of construction and finish required to comply with the following requirements, using materials indicated for the completed Work:

1. Build mockups of size indicated.
2. Build mockups in location indicated or, if not indicated, as directed by Architect or Construction Manager.
3. Notify Architect and Construction Manager seven days in advance of dates and times when mockups will be constructed.
4. Employ supervisory personnel who will oversee mockup construction. Employ workers that will be employed to perform same tasks during the construction at Project.
5. Demonstrate the proposed range of aesthetic effects and workmanship.
6. Obtain Architect's and Construction Manager's approval of mockups before starting corresponding work, fabrication, or construction.

    a. Allow seven days for initial review and each re-review of each mockup.

7. Maintain mockups during construction in an undisturbed condition as a standard for judging the completed Work.
8. Demolish and remove mockups when directed unless otherwise indicated.

L. Integrated Exterior Mockups: Construct integrated exterior mockup according to approved Shop Drawings. Coordinate installation of exterior envelope materials and products for which mockups are required in individual Specification Sections, along with supporting materials. Comply with requirements in "Mockups" Paragraph.

1.11 QUALITY CONTROL

A. Owner Responsibilities: Where quality-control services are indicated as Owner's responsibility, Owner will engage a qualified testing agency to perform these services.

1. Owner will furnish Contractor with names, addresses, and telephone numbers of testing agencies engaged and a description of types of testing and inspection they are engaged to perform.
2. Costs for retesting and reinspecting construction that replaces or is necessitated by work that failed to comply with the Contract Documents will be charged to Contractor, and the Contract Sum will be adjusted by Change Order.

B. Contractor Responsibilities: Tests and inspections not explicitly assigned to Owner are Contractor's responsibility. Perform additional quality-control activities, whether specified or not, to verify and document that the Work complies with requirements.

1. Unless otherwise indicated, provide quality-control services specified and those required by authorities having jurisdiction. Perform quality-control services required of Contractor by authorities having jurisdiction, whether specified or not.
2. Engage a qualified testing agency to perform quality-control services.

    a. Contractor shall not employ same entity engaged by Owner, unless agreed to in writing by Owner.

3. Notify testing agencies at least 24 hours in advance of time when Work that requires testing or inspection will be performed.
4. Where quality-control services are indicated as Contractor's responsibility, submit a certified written report, in duplicate, of each quality-control service.
5. Testing and inspection requested by Contractor and not required by the Contract Documents are Contractor's responsibility.
6. Submit additional copies of each written report directly to authorities having jurisdiction, when they so direct.

C. Retesting/Reinspecting: Regardless of whether original tests or inspections were Contractor's responsibility, provide quality-control services, including retesting and reinspecting, for construction that replaced Work that failed to comply with the Contract Documents.

D. Testing Agency Responsibilities: Cooperate with Architect, Construction Manager, and Contractor in performance of duties. Provide qualified personnel to perform required tests and inspections.

1. Notify Architect, Construction Manager, and Contractor promptly of irregularities or deficiencies observed in the Work during performance of its services.
2. Determine the locations from which test samples will be taken and in which in-situ tests are conducted.
3. Conduct and interpret tests and inspections and state in each report whether tested and inspected work complies with or deviates from requirements.
4. Submit a certified written report, in duplicate, of each test, inspection, and similar quality-control service through Contractor.
5. Do not release, revoke, alter, or increase the Contract Document requirements or approve or accept any portion of the Work.
6. Do not perform duties of Contractor.

E. Manufacturer's Field Services: Where indicated, engage a factory-authorized service representative to inspect field-assembled components and equipment installation, including service connections. Report results in writing as specified in Section 013300 "Submittal Procedures."

F. Manufacturer's Technical Services: Where indicated, engage a manufacturer's technical representative to observe and inspect the Work. Manufacturer's technical representative's services include participation in preinstallation conferences, examination of substrates and conditions, verification of materials, observation of Installer activities, inspection of completed portions of the Work, and submittal of written reports.

G. Associated Contractor Services: Cooperate with agencies and representatives performing required tests, inspections, and similar quality-control services, and provide reasonable auxiliary services as requested. Notify agency sufficiently in advance of operations to permit assignment of personnel. Provide the following:

1. Access to the Work.
2. Incidental labor and facilities necessary to facilitate tests and inspections.
3. Adequate quantities of representative samples of materials that require testing and inspection. Assist agency in obtaining samples.
4. Facilities for storage and field curing of test samples.
5. Delivery of samples to testing agencies.
6. Preliminary design mix proposed for use for material mixes that require control by testing agency.
7. Security and protection for samples and for testing and inspection equipment at Project site.

H. Coordination: Coordinate sequence of activities to accommodate required quality-assurance and quality-control services with a minimum of delay and to avoid necessity of removing and replacing construction to accommodate testing and inspection.

1. Schedule times for tests, inspections, obtaining samples, and similar activities.

I. Schedule of Tests and Inspections: Prepare a schedule of tests, inspections, and similar quality-control services required by the Contract Documents as a component of Contractor's quality-control plan. Coordinate and submit concurrently with Contractor's Construction Schedule. Update as the Work progresses.

1. Distribution: Distribute schedule to Owner, Architect, Construction Manager, testing agencies, and each party involved in performance of portions of the Work where tests and inspections are required.

1.12 SPECIAL TESTS AND INSPECTIONS

A. Special Tests and Inspections: Owner will engage a qualified testing agency or special inspector to conduct special tests and inspections required by authorities having jurisdiction as the responsibility of Owner, and as follows:

1. Verifying that manufacturer maintains detailed fabrication and quality-control procedures and reviewing the completeness and adequacy of those procedures to perform the Work.
2. Notifying Architect, Construction Manager, and Contractor promptly of irregularities and deficiencies observed in the Work during performance of its services.

3. Submitting a certified written report of each test, inspection, and similar quality-control service to Architect, through Construction Manager, with copy to Contractor and to authorities having jurisdiction.
4. Submitting a final report of special tests and inspections at Substantial Completion, which includes a list of unresolved deficiencies.
5. Interpreting tests and inspections and stating in each report whether tested and inspected work complies with or deviates from the Contract Documents.
6. Retesting and reinspecting corrected work.

PART 2 - PRODUCTS (Not Used)

PART 3 - EXECUTION

3.1 TEST AND INSPECTION LOG

A. Test and Inspection Log: Prepare a record of tests and inspections. Include the following:

1. Date test or inspection was conducted.
2. Description of the Work tested or inspected.
3. Date test or inspection results were transmitted to Architect.
4. Identification of testing agency or special inspector conducting test or inspection.

B. Maintain log at Project site. Post changes and revisions as they occur. Provide access to test and inspection log for Architect's and Construction Manager's reference during normal working hours.

1. Submit log at Project closeout as part of Project Record Documents.

3.2 REPAIR AND PROTECTION

A. General: On completion of testing, inspection, sample taking, and similar services, repair damaged construction and restore substrates and finishes.

1. Provide materials and comply with installation requirements specified in other Specification Sections or matching existing substrates and finishes. Restore patched areas and extend restoration into adjoining areas with durable seams that are as invisible as possible. Comply with the Contract Document requirements for cutting and patching in Section 017300 "Execution."

B. Protect construction exposed by or for quality-control service activities.

C. Repair and protection are Contractor's responsibility, regardless of the assignment of responsibility for quality-control services.

END OF SECTION 014000

DOCUMENT 014100 – SPECIAL INSPECTIONS

1.1 All testing will be by the Owner. The scope of inspections will include:

A. Earthwork and Foundations:

1. Site Utilities and Building Pad Observations and Testing.
2. Shallow Foundation Bearing Evaluations.
3. Proofroll Observations.
4. Building Pad Field Observations and In-Place Field Density Testing.
5. Sitework In-Place Field Density Testing.
6. Laboratory Testing.
7. Undercutting Observations.
8. Shallow Foundations Evaluations.

B. Structural Reinforced Concrete:

1. Sitework Concrete.
2. Building Concrete.

C. Structural Observations:

1. Structural Steel.
2. Cold Formed Steel Framing.

D. Fire Resistant Penetrations and Stops.

E. Building Envelope:

1. Roofing.
2. Windows.
3. Curtainwall.
4. Brick Veneer Cavity Inspection.
5. Pull Testing of Sealant Installations.
6. Review of Mockup Panels prepared by the Contractor and approved by the Design Team for acceptance criteria.
7. EIFS Inspections.

F. Special Inspections as listed in the Structural Drawings.

END OF DOCUMENT 014100

SECTION 014200 - REFERENCES

PART 1 - GENERAL

1.1 RELATED DOCUMENTS

A. Drawings and general provisions of the Contract, including General and Supplementary Conditions and other Division 01 Specification Sections, apply to this Section.

1.2 DEFINITIONS

A. General: Basic Contract definitions are included in the Conditions of the Contract.

B. "Approved": When used to convey Architect's action on Contractor's submittals, applications, and requests, "approved" is limited to Architect's duties and responsibilities as stated in the Conditions of the Contract.

C. "Directed": A command or instruction by Architect. Other terms including "requested," "authorized," "selected," "required," and "permitted" have the same meaning as "directed."

D. "Indicated": Requirements expressed by graphic representations or in written form on Drawings, in Specifications, and in other Contract Documents. Other terms including "shown," "noted," "scheduled," and "specified" have the same meaning as "indicated."

E. "Regulations": Laws, ordinances, statutes, and lawful orders issued by authorities having jurisdiction, and rules, conventions, and agreements within the construction industry that control performance of the Work.

F. "Furnish": Supply and deliver to Project site, ready for unloading, unpacking, assembly, installation, and similar operations.

G. "Install": Unload, temporarily store, unpack, assemble, erect, place, anchor, apply, work to dimension, finish, cure, protect, clean, and similar operations at Project site.

H. "Provide": Furnish and install, complete and ready for the intended use.

I. "Project Site": Space available for performing construction activities. The extent of Project site is shown on Drawings and may or may not be identical with the description of the land on which Project is to be built.

1.3 INDUSTRY STANDARDS

A. Applicability of Standards: Unless the Contract Documents include more stringent requirements, applicable construction industry standards have the same force and effect as if

bound or copied directly into the Contract Documents to the extent referenced. Such standards are made a part of the Contract Documents by reference.

B. Publication Dates: Comply with standards in effect as of date of the Contract Documents unless otherwise indicated.

C. Copies of Standards: Each entity engaged in construction on Project should be familiar with industry standards applicable to its construction activity. Copies of applicable standards are not bound with the Contract Documents.

1. Where copies of standards are needed to perform a required construction activity, obtain copies directly from publication source.

1.4 ABBREVIATIONS AND ACRONYMS

A. Industry Organizations: Where abbreviations and acronyms are used in Specifications or other Contract Documents, they shall mean the recognized name of the entities indicated in Gale's "Encyclopedia of Associations: National Organizations of the U.S." or in Columbia Books' "National Trade & Professional Associations of the United States."

B. Code Agencies: Where abbreviations and acronyms are used in Specifications or other Contract Documents, they shall mean the recognized name of the entities in the following list. This information is believed to be accurate as of the date of the Contract Documents.

1. IAPMO - International Association of Plumbing and Mechanical Officials; www.iapmo.org.
2. ICC - International Code Council; www.iccsafe.org.
3. ICC-ES - ICC Evaluation Service, LLC; www.icc-es.org.

C. Federal Government Agencies: Where abbreviations and acronyms are used in Specifications or other Contract Documents, they shall mean the recognized name of the entities in the following list. Information is subject to change and is up to date as of the date of the Contract Documents.

1. CPSC - Consumer Product Safety Commission; www.cpsc.gov.
2. DOC - Department of Commerce; National Institute of Standards and Technology; www.nist.gov.
3. DOE - Department of Energy; www.energy.gov.
4. EPA - Environmental Protection Agency; www.epa.gov.
5. HUD - Department of Housing and Urban Development; www.hud.gov.
6. OSHA - Occupational Safety & Health Administration; www.osha.gov.
7. USDA - Department of Agriculture; Agriculture Research Service; U.S. Salinity Laboratory; www.ars.usda.gov.
8. USDA - Department of Agriculture; Rural Utilities Service; www.usda.gov.
9. USPS - United States Postal Service; www.usps.com.

D. Standards and Regulations: Where abbreviations and acronyms are used in Specifications or other Contract Documents, they shall mean the recognized name of the standards and regulations in the following list. This information is subject to change and is believed to be accurate as of the date of the Contract Documents.

1. USAB - United States Access Board; www.access-board.gov.
2. USATBCB - U.S. Architectural & Transportation Barriers Compliance Board; (See USAB).

PART 2 - PRODUCTS (Not Used)

PART 3 - EXECUTION (Not Used)

END OF SECTION 014200

SECTION 015000 - TEMPORARY FACILITIES AND CONTROLS

PART 1 - GENERAL

1.1 RELATED DOCUMENTS

A. Drawings and general provisions of the Contract, including General and Supplementary Conditions and other Division 01 Specification Sections, apply to this Section.

1.2 SUMMARY

A. Section includes requirements for temporary utilities, support facilities, and security and protection facilities.

B. Related Requirements:

1. Section 011000 "Summary" for work restrictions and limitations on utility interruptions.

1.3 USE CHARGES

A. General: Installation and removal of and use charges for temporary facilities shall be included in the Contract Sum unless otherwise indicated. Allow other entities engaged in the Project to use temporary services and facilities without cost, including, but not limited to, Owner's construction forces, Architect, testing agencies, and authorities having jurisdiction.

B. Sewer Service: Pay sewer-service use charges for sewer usage by all entities for construction operations.

C. Water Service: Pay water-service use charges for water used by all entities for construction operations.

D. Electric Power Service: Pay electric-power-service use charges for electricity used by all entities for construction operations.

1.4 INFORMATIONAL SUBMITTALS

A. Site Utilization Plan: Show temporary facilities, temporary utility lines and connections, staging areas, construction site entrances, vehicle circulation, and parking areas for construction personnel.

B. Implementation and Termination Schedule: Within 15 days of date established for commencement of the Work, submit schedule indicating implementation and termination dates of each temporary utility.

C. Project Identification and Temporary Signs: Show fabrication and installation details, including plans, elevations, details, layouts, typestyles, graphic elements, and message content.

D. Fire-Safety Program: Show compliance with requirements of NFPA 241 and authorities having jurisdiction. Indicate Contractor personnel responsible for management of fire-prevention program.

E. Moisture- and Mold-Protection Plan: Describe procedures and controls for protecting materials and construction from water absorption and damage and mold.

F. Dust- and HVAC-Control Plan: Submit coordination drawing and narrative that indicates the dust- and HVAC-control measures proposed for use, proposed locations, and proposed time frame for their operation. Include the following:

1. Locations of dust-control partitions at each phase of work.
2. HVAC system isolation schematic drawing.
3. Location of proposed air-filtration system discharge.
4. Waste-handling procedures.
5. Other dust-control measures.

1.5 QUALITY ASSURANCE

A. Electric Service: Comply with NECA, NEMA, and UL standards and regulations for temporary electric service. Install service to comply with NFPA 70.

B. Tests and Inspections: Arrange for authorities having jurisdiction to test and inspect each temporary utility before use. Obtain required certifications and permits.

C. Accessible Temporary Egress: Comply with applicable provisions in the United States Access Board's ADA-ABA Accessibility Guidelines and ICC/ANSI A117.1.

1.6 PROJECT CONDITIONS

A. Temporary Use of Permanent Facilities: Engage Installer of each permanent service to assume responsibility for operation, maintenance, and protection of each permanent service during its use as a construction facility before Owner's acceptance, regardless of previously assigned responsibilities.

PART 2 - PRODUCTS

2.1 MATERIALS

A. Portable Chain-Link Fencing: Minimum 2-inch, 0.148-inch-thick, galvanized-steel, chain-link fabric fencing; minimum 6 feet high with galvanized-steel pipe posts; minimum 2-3/8-inch-OD line posts and 2-7/8-inch-OD corner and pull posts, with 1-5/8-inch-OD top and bottom rails. Provide concrete or galvanized-steel bases for supporting posts.

2.2 TEMPORARY FACILITIES

A. Field Offices, General: Prefabricated or mobile units with serviceable finishes, temperature controls, and foundations adequate for normal loading.

B. Common-Use Field Office: Of sufficient size to accommodate needs of Owner, Architect, Construction Manager, and construction personnel office activities and to accommodate Project meetings specified in other Division 01 Sections. Keep office clean and orderly. Furnish and equip offices as follows:

1. Furniture required for Project-site documents including file cabinets, plan tables, plan racks, and bookcases.
2. Conference room of sufficient size to accommodate meetings of 10 individuals. Provide electrical power service and 120-V ac duplex receptacles, with no fewer than one receptacle on each wall. Furnish room with conference table, chairs, and 4-foot-square tack and marker boards.
3. Drinking water and private toilet.
4. Heating and cooling equipment necessary to maintain a uniform indoor temperature of 68 to 72 deg F.
5. Lighting fixtures capable of maintaining average illumination of 20 fc at desk height.

C. Storage and Fabrication Sheds: Provide sheds sized, furnished, and equipped to accommodate materials and equipment for construction operations.

1. Store combustible materials apart from building.

2.3 EQUIPMENT

A. Fire Extinguishers: Portable, UL rated; with class and extinguishing agent as required by locations and classes of fire exposures.

B. HVAC Equipment: Unless Owner authorizes use of permanent HVAC system, provide vented, self-contained, liquid-propane-gas or fuel-oil heaters with individual space thermostatic control.

1. Use of gasoline-burning space heaters, open-flame heaters, or salamander-type heating units is prohibited.
2. Heating Units: Listed and labeled for type of fuel being consumed, by a qualified testing agency acceptable to authorities having jurisdiction, and marked for intended location and application.
3. Permanent HVAC System: If Owner authorizes use of permanent HVAC system for temporary use during construction, provide filter with MERV of 8 at each return-air grille in system and remove at end of construction and clean HVAC system as required in Section 017700 "Closeout Procedures."

PART 3 - EXECUTION

3.1 TEMPORARY FACILITIES, GENERAL

A. Conservation: Coordinate construction and use of temporary facilities with consideration given to conservation of energy, water, and materials. Coordinate use of temporary utilities to minimize waste.

1. Salvage materials and equipment involved in performance of, but not actually incorporated into, the Work. See other Sections for disposition of salvaged materials that are designated as Owner's property.

3.2 INSTALLATION, GENERAL

A. Locate facilities where they will serve Project adequately and result in minimum interference with performance of the Work. Relocate and modify facilities as required by progress of the Work.

1. Locate facilities to limit site disturbance as specified in Section 011000 "Summary."

B. Provide each facility ready for use when needed to avoid delay. Do not remove until facilities are no longer needed or are replaced by authorized use of completed permanent facilities.

3.3 TEMPORARY UTILITY INSTALLATION

A. General: Install temporary service or connect to existing service.

1. Arrange with utility company, Owner, and existing users for time when service can be interrupted, if necessary, to make connections for temporary services.

B. Sewers and Drainage: Provide temporary utilities to remove effluent lawfully.

1. Connect temporary sewers to municipal system or private system as directed by authorities having jurisdiction.

C. Water Service: Install water service and distribution piping in sizes and pressures adequate for construction.

D. Sanitary Facilities: Provide temporary toilets, wash facilities, and drinking water for use of construction personnel. Comply with requirements of authorities having jurisdiction for type, number, location, operation, and maintenance of fixtures and facilities.

E. Temporary Heating and Cooling: Provide temporary heating and cooling required by construction activities for curing or drying of completed installations or for protecting installed construction from adverse effects of low temperatures or high humidity. Select equipment that will not have a harmful effect on completed installations or elements being installed.

1. Provide temporary dehumidification systems when required to reduce ambient and substrate moisture levels to level required to allow installation or application of finishes and their proper curing or drying.

F. Electric Power Service: Provide electric power service and distribution system of sufficient size, capacity, and power characteristics required for construction operations.

G. Lighting: Provide temporary lighting with local switching that provides adequate illumination for construction operations, observations, inspections, and traffic conditions.

1. Install and operate temporary lighting that fulfills security and protection requirements without operating entire system.

H. Telephone Service: Provide temporary telephone service in common-use facilities for use by all construction personnel. Install WiFi cell phone access equipment and one land-based telephone line(s) for each field office.

1. Provide additional telephone lines for the following:

2. At each telephone, post a list of important telephone numbers.

a. Police and fire departments.
b. Ambulance service.
c. Contractor's home office.
d. Contractor's emergency after-hours telephone number.
e. Architect's office.
f. Construction Manager's home office.
g. Engineers' offices.
h. Owner's office.
i. Principal subcontractors' field and home offices.

I. Electronic Communication Service: Provide a desktop computer in the primary field office adequate for use by Architect and Owner to access Project electronic documents and maintain electronic communications. Equip computer with not less than the following:

1. Printer: "All-in-one" unit equipped with printer server, combining color printing, photocopying, scanning, and faxing, or separate units for each of these three functions.
2. Internet Service: Broadband modem, router and ISP, equipped with hardware firewall.
3. Internet Security: Integrated software, providing software firewall, virus, spyware, phishing, and spam protection in a combined application.

3.4 SUPPORT FACILITIES INSTALLATION

A. General: Comply with the following:

1. Provide construction for temporary offices, shops, and sheds located within construction area or within 30 feet of building lines that is noncombustible according to ASTM E 136. Comply with NFPA 241.
2. Maintain support facilities until Architect schedules Substantial Completion inspection. Remove before Substantial Completion. Personnel remaining after Substantial Completion will be permitted to use permanent facilities, under conditions acceptable to Owner.

B. Temporary Roads and Paved Areas: Construct and maintain temporary roads and paved areas adequate for construction operations. Locate temporary roads and paved areas within construction limits indicated on Drawings.

1. Provide dust-control treatment that is nonpolluting and nontracking. Reapply treatment as required to minimize dust.

C. Temporary Use of Planned Permanent Roads and Paved Areas: Locate temporary roads and paved areas in same location as permanent roads and paved areas. Construct and maintain temporary roads and paved areas adequate for construction operations. Extend temporary roads and paved areas, within construction limits indicated, as necessary for construction operations.

1. Coordinate elevations of temporary roads and paved areas with permanent roads and paved areas.
2. Prepare subgrade and install subbase and base for temporary roads and paved areas as indicated on the Civil Drawings.
3. Recondition base after temporary use, including removing contaminated material, regrading, proofrolling, compacting, and testing.
4. Delay installation of final course of permanent hot-mix asphalt pavement until immediately before Substantial Completion. Repair hot-mix asphalt base-course pavement before installation of final course according to Section 321216 "Asphalt Paving."

D. Traffic Controls: Comply with requirements of authorities having jurisdiction.

1. Protect existing site improvements to remain including curbs, pavement, and utilities.
2. Maintain access for fire-fighting equipment and access to fire hydrants.

E. Parking: Provide temporary parking areas for construction personnel.

F. Dewatering Facilities and Drains: Comply with requirements of authorities having jurisdiction. Maintain Project site, excavations, and construction free of water.

1. Dispose of rainwater in a lawful manner that will not result in flooding Project or adjoining properties or endanger permanent Work or temporary facilities.
2. Remove snow and ice as required to minimize accumulations.

G. Project Signs: Provide Project signs as indicated. Unauthorized signs are not permitted.

1. Identification Signs: Provide Project identification signs as indicated on Drawings.
2. Temporary Signs: Provide other signs as indicated and as required to inform public and individuals seeking entrance to Project.

    a. Provide temporary, directional signs for construction personnel and visitors.

3. Maintain and touch up signs so they are legible at all times.

H. Waste Disposal Facilities: Provide waste-collection containers in sizes adequate to handle waste from construction operations. Comply with requirements of authorities having jurisdiction. Comply with progress cleaning requirements in Section 017300 "Execution."

I. Lifts and Hoists: Provide facilities necessary for hoisting materials and personnel.

1. Truck cranes and similar devices used for hoisting materials are considered "tools and equipment" and not temporary facilities.

J. Temporary Stairs: Until permanent stairs are available, provide temporary stairs where ladders are not adequate.

K. Temporary Use of Permanent Stairs: Use of new stairs for construction traffic will be permitted, provided stairs are protected and finishes restored to new condition at time of Substantial Completion.

3.5 SECURITY AND PROTECTION FACILITIES INSTALLATION

A. Protection of Existing Facilities: Protect existing vegetation, equipment, structures, utilities, and other improvements at Project site and on adjacent properties, except those indicated to be removed or altered. Repair damage to existing facilities.

1. Where access to adjacent properties is required in order to affect protection of existing facilities, obtain written permission from adjacent property owner to access property for that purpose.

B. Environmental Protection: Provide protection, operate temporary facilities, and conduct construction as required to comply with environmental regulations and that minimize possible air, waterway, and subsoil contamination or pollution or other undesirable effects.

1. Comply with work restrictions specified in Section 011000 "Summary."

C. Temporary Erosion and Sedimentation Control: Provide measures to prevent soil erosion and discharge of soil-bearing water runoff and airborne dust to undisturbed areas and to adjacent properties and walkways, according to erosion- and sedimentation-control Drawings.

1. Verify that flows of water redirected from construction areas or generated by construction activity do not enter or cross tree- or plant-protection zones.

2. Inspect, repair, and maintain erosion- and sedimentation-control measures during construction until permanent vegetation has been established.
3. Clean, repair, and restore adjoining properties and roads affected by erosion and sedimentation from Project site during the course of Project.
4. Remove erosion and sedimentation controls and restore and stabilize areas disturbed during removal.

D. Stormwater Control: Comply with requirements of authorities having jurisdiction. Provide barriers in and around excavations and subgrade construction to prevent flooding by runoff of stormwater from heavy rains.

E. Tree and Plant Protection: Install temporary fencing located as indicated or outside the drip line of trees to protect vegetation from damage from construction operations. Protect tree root systems from damage, flooding, and erosion.

F. Pest Control: Engage pest-control service to recommend practices to minimize attraction and harboring of rodents, roaches, and other pests and to perform extermination and control procedures at regular intervals so Project will be free of pests and their residues at Substantial Completion. Perform control operations lawfully, using materials approved by authorities having jurisdiction.

G. Site Enclosure Fence: Prior to commencing earthwork, furnish and install site enclosure fence in a manner that will prevent people from easily entering site except by entrance gates.

1. Extent of Fence: As required to enclose entire Project site or portion determined sufficient to accommodate construction operations.
2. Maintain security by limiting number of keys and restricting distribution to authorized personnel. Furnish one set of keys to Owner.

H. Security Enclosure and Lockup: Install temporary enclosure around partially completed areas of construction. Provide lockable entrances to prevent unauthorized entrance, vandalism, theft, and similar violations of security. Lock entrances at end of each workday.

I. Barricades, Warning Signs, and Lights: Comply with requirements of authorities having jurisdiction for erecting structurally adequate barricades, including warning signs and lighting.

J. Temporary Egress: Maintain temporary egress from existing occupied facilities as indicated and as required by authorities having jurisdiction.

K. Temporary Enclosures: Provide temporary enclosures for protection of construction, in progress and completed, from exposure, foul weather, other construction operations, and similar activities. Provide temporary weathertight enclosure for building exterior.

1. Where heating or cooling is needed and permanent enclosure is incomplete, insulate temporary enclosures.

L. Temporary Fire Protection: Install and maintain temporary fire-protection facilities of types needed to protect against reasonably predictable and controllable fire losses. Comply with NFPA 241; manage fire-prevention program.

1. Prohibit smoking in construction areas. Comply with additional limits on smoking specified in other Sections.
2. Supervise welding operations, combustion-type temporary heating units, and similar sources of fire ignition according to requirements of authorities having jurisdiction.
3. Develop and supervise an overall fire-prevention and -protection program for personnel at Project site. Review needs with local fire department and establish procedures to be followed. Instruct personnel in methods and procedures. Post warnings and information.
4. Provide temporary standpipes and hoses for fire protection. Hang hoses with a warning sign stating that hoses are for fire-protection purposes only and are not to be removed. Match hose size with outlet size and equip with suitable nozzles.

3.6 MOISTURE AND MOLD CONTROL

A. Contractor's Moisture-Protection Plan: Describe delivery, handling, storage, installation, and protection provisions for materials subject to water absorption or water damage.

1. Indicate procedures for discarding water-damaged materials, protocols for mitigating water intrusion into completed Work, and replacing water-damaged Work.
2. Indicate sequencing of work that requires water, such as sprayed fire-resistive materials, plastering, and terrazzo grinding, and describe plans for dealing with water from these operations. Show procedures for verifying that wet construction has dried sufficiently to permit installation of finish materials.
3. Indicate methods to be used to avoid trapping water in finished work.

B. Exposed Construction Period: Before installation of weather barriers, when materials are subject to wetting and exposure and to airborne mold spores, protect as follows:

1. Protect porous materials from water damage.
2. Protect stored and installed material from flowing or standing water.
3. Keep porous and organic materials from coming into prolonged contact with concrete.
4. Remove standing water from decks.
5. Keep deck openings covered or dammed.

C. Partially Enclosed Construction Period: After installation of weather barriers but before full enclosure and conditioning of building, when installed materials are still subject to infiltration of moisture and ambient mold spores, protect as follows:

1. Do not load or install drywall or other porous materials or components, or items with high organic content, into partially enclosed building.
2. Keep interior spaces reasonably clean and protected from water damage.
3. Periodically collect and remove waste containing cellulose or other organic matter.
4. Discard or replace water-damaged material.
5. Do not install material that is wet.

6. Discard and replace stored or installed material that begins to grow mold.
7. Perform work in a sequence that allows wet materials adequate time to dry before enclosing the material in gypsum board or other interior finishes.

D. Controlled Construction Period: After completing and sealing of the building enclosure but prior to the full operation of permanent HVAC systems, maintain as follows:

1. Control moisture and humidity inside building by maintaining effective dry-in conditions.
2. Use temporary or permanent HVAC system to control humidity within ranges specified for installed and stored materials.
3. Comply with manufacturer's written instructions for temperature, relative humidity, and exposure to water limits.

    a. Hygroscopic materials that may support mold growth, including wood and gypsum-based products, that become wet during the course of construction and remain wet for 48 hours are considered defective and require replacing.
    b. Measure moisture content of materials that have been exposed to moisture during construction operations or after installation. Record readings beginning at time of exposure and continuing daily for 48 hours. Identify materials containing moisture levels higher than allowed. Report findings in writing to Architect.
    c. Remove and replace materials that cannot be completely restored to their manufactured moisture level within 48 hours.

3.7 OPERATION, TERMINATION, AND REMOVAL

A. Supervision: Enforce strict discipline in use of temporary facilities. To minimize waste and abuse, limit availability of temporary facilities to essential and intended uses.

B. Maintenance: Maintain facilities in good operating condition until removal.

1. Maintain operation of temporary enclosures, heating, cooling, humidity control, ventilation, and similar facilities on a 24-hour basis where required to achieve indicated results and to avoid possibility of damage.

C. Temporary Facility Changeover: Do not change over from using temporary security and protection facilities to permanent facilities until Substantial Completion.

D. Termination and Removal: Remove each temporary facility when need for its service has ended, when it has been replaced by authorized use of a permanent facility, or no later than Substantial Completion. Complete or, if necessary, restore permanent construction that may have been delayed because of interference with temporary facility. Repair damaged Work, clean exposed surfaces, and replace construction that cannot be satisfactorily repaired.

1. Materials and facilities that constitute temporary facilities are property of Contractor. Owner reserves right to take possession of Project identification signs.

2. Remove temporary roads and paved areas not intended for or acceptable for integration into permanent construction. Where area is intended for landscape development, remove soil and aggregate fill that do not comply with requirements for fill or subsoil. Remove materials contaminated with road oil, asphalt and other petrochemical compounds, and other substances that might impair growth of plant materials or lawns. Repair or replace street paving, curbs, and sidewalks at temporary entrances, as required by authorities having jurisdiction.
3. At Substantial Completion, repair, renovate, and clean permanent facilities used during construction period. Comply with final cleaning requirements specified in Section 017700 "Closeout Procedures."

END OF SECTION 015000

SECTION 016000 - PRODUCT REQUIREMENTS

PART 1 - GENERAL

1.1 RELATED DOCUMENTS

A. Drawings and general provisions of the Contract, including General and Supplementary Conditions and other Division 01 Specification Sections, apply to this Section.

1.2 SUMMARY

A. Section includes administrative and procedural requirements for selection of products for use in Project; product delivery, storage, and handling; manufacturers' standard warranties on products; special warranties; and comparable products.

B. Related Requirements:

1. Section 012100 "Allowances" for products selected under an allowance.
2. Section 012500 "Substitution Procedures" for requests for substitutions.
3. Section 014200 "References" for applicable industry standards for products specified.

1.3 DEFINITIONS

A. Products: Items obtained for incorporating into the Work, whether purchased for Project or taken from previously purchased stock. The term "product" includes the terms "material," "equipment," "system," and terms of similar intent.

1. Named Products: Items identified by manufacturer's product name, including make or model number or other designation shown or listed in manufacturer's published product literature that is current as of date of the Contract Documents.
2. New Products: Items that have not previously been incorporated into another project or facility. Products salvaged or recycled from other projects are not considered new products.
3. Comparable Product: Product that is demonstrated and approved by Architect through submittal process to have the indicated qualities related to type, function, dimension, in-service performance, physical properties, appearance, and other characteristics that equal or exceed those of specified product.

B. Basis-of-Design Product Specification: A specification in which a single manufacturer's product is named and accompanied by the words "basis-of-design product," including make or model number or other designation. In addition to the basis-of-design product description, product attributes and characteristics may be listed to establish the significant qualities related to type, function, in-service performance and physical properties, weight, dimension, durability, visual characteristics, and other special features and requirements for purposes of evaluating comparable products of additional manufacturers named in the specification.

C. Subject to Compliance with Requirements: Where the phrase "Subject to compliance with requirements" introduces a product selection procedure in an individual Specification Section, provide products qualified under the specified product procedure. In the event that a named product or product by a named manufacturer does not meet the other requirements of the specifications, select another named product or product from another named manufacturer that does meet the requirements of the specifications. Submit a comparable product request, if applicable.

1.4 ACTION SUBMITTALS

A. Comparable Product Request Submittal: Submit request for consideration of each comparable product. Identify basis-of-design product or fabrication or installation method to be replaced. Include Specification Section number and title and Drawing numbers and titles.

1. Include data to indicate compliance with the requirements specified in "Comparable Products" Article.
2. Architect's Action: If necessary, Architect will request additional information or documentation for evaluation within seven days of receipt of a comparable product request. Architect will notify Contractor of approval or rejection of proposed comparable product request within 15 days of receipt of request, or seven days of receipt of additional information or documentation, whichever is later.

    a. Form of Architect's Approval of Submittal: As specified in Section 013300 "Submittal Procedures."
    b. Use product specified if Architect does not issue a decision on use of a comparable product request within time allocated.

B. Basis-of-Design Product Specification Submittal: Comply with requirements in Section 013300 "Submittal Procedures." Show compliance with requirements.

1.5 QUALITY ASSURANCE

A. Compatibility of Options: If Contractor is given option of selecting between two or more products for use on Project, select product compatible with products previously selected, even if previously selected products were also options.

B. Identification of Products: Except for required labels and operating data, do not attach or imprint manufacturer or product names or trademarks on exposed surfaces of products or equipment that will be exposed to view in occupied spaces or on the exterior.

1. Labels: Locate required product labels and stamps on a concealed surface, or, where required for observation following installation, on a visually accessible surface that is not conspicuous.

2. Equipment Nameplates: Provide a permanent nameplate on each item of service-connected or power-operated equipment. Locate on a visually accessible but inconspicuous surface. Include information essential for operation, including the following:

    a. Name of product and manufacturer.
    b. Model and serial number.
    c. Capacity.
    d. Speed.
    e. Ratings.

3. See individual identification sections in Divisions 21, 22, 23, and 26 for additional identification requirements.

1.6 PRODUCT DELIVERY, STORAGE, AND HANDLING

A. Deliver, store, and handle products using means and methods that will prevent damage, deterioration, and loss, including theft and vandalism. Comply with manufacturer's written instructions.

B. Delivery and Handling:

1. Schedule delivery to minimize long-term storage at Project site and to prevent overcrowding of construction spaces.
2. Coordinate delivery with installation time to ensure minimum holding time for items that are flammable, hazardous, easily damaged, or sensitive to deterioration, theft, and other losses.
3. Deliver products to Project site in an undamaged condition in manufacturer's original sealed container or other packaging system, complete with labels and instructions for handling, storing, unpacking, protecting, and installing.
4. Inspect products on delivery to determine compliance with the Contract Documents and to determine that products are undamaged and properly protected.

C. Storage:

1. Store products to allow for inspection and measurement of quantity or counting of units.
2. Store materials in a manner that will not endanger Project structure.
3. Store products that are subject to damage by the elements, under cover in a weathertight enclosure above ground, with ventilation adequate to prevent condensation.
4. Protect foam plastic from exposure to sunlight, except to extent necessary for period of installation and concealment.
5. Comply with product manufacturer's written instructions for temperature, humidity, ventilation, and weather-protection requirements for storage.
6. Protect stored products from damage and liquids from freezing.
7. Provide a secure location and enclosure at Project site for storage of materials and equipment by Owner's construction forces. Coordinate location with Owner.

1.7 PRODUCT WARRANTIES

A. Warranties specified in other Sections shall be in addition to, and run concurrent with, other warranties required by the Contract Documents. Manufacturer's disclaimers and limitations on product warranties do not relieve Contractor of obligations under requirements of the Contract Documents.

1. Manufacturer's Warranty: Written warranty furnished by individual manufacturer for a particular product and specifically endorsed by manufacturer to Owner.
2. Special Warranty: Written warranty required by the Contract Documents to provide specific rights for Owner.

B. Special Warranties: Prepare a written document that contains appropriate terms and identification, ready for execution.

1. Manufacturer's Standard Form: Modified to include Project-specific information and properly executed.
2. Specified Form: When specified forms are included with the Specifications, prepare a written document using indicated form properly executed.
3. See other Sections for specific content requirements and particular requirements for submitting special warranties.

C. Submittal Time: Comply with requirements in Section 017700 "Closeout Procedures."

PART 2 - PRODUCTS

2.1 PRODUCT SELECTION PROCEDURES

A. General Product Requirements: Provide products that comply with the Contract Documents, are undamaged and, unless otherwise indicated, are new at time of installation.

1. Provide products complete with accessories, trim, finish, fasteners, and other items needed for a complete installation and indicated use and effect.
2. Standard Products: If available, and unless custom products or nonstandard options are specified, provide standard products of types that have been produced and used successfully in similar situations on other projects.
3. Owner reserves the right to limit selection to products with warranties meeting requirements of the Contract Documents.
4. Where products are accompanied by the term "as selected," Architect will make selection.
5. Descriptive, performance, and reference standard requirements in the Specifications establish salient characteristics of products.

6. Or Equal: For products specified by name and accompanied by the term "or equal," or "or approved equal," or "or approved," or “or comparable,” comply with requirements in "Comparable Products" Article to obtain approval for use of an unnamed product.

    a. Submit additional documentation required by Architect through Construction Manager in order to establish equivalency of proposed products. Evaluation of "or equal" product status is by the Architect, whose determination is final.

B. Product Selection Procedures:

1. Sole Product: Where Specifications name a single manufacturer and product, provide the named product that complies with requirements. Comparable products or substitutions for Contractor's convenience will not be considered.

    a. Sole product may be indicated by the phrase: "Subject to compliance with requirements, provide the following: …"

2. Sole Manufacturer/Source: Where Specifications name a single manufacturer or source, provide a product by the named manufacturer or source that complies with requirements. Comparable products or substitutions for Contractor's convenience will not be considered.

    a. Sole manufacturer/source may be indicated by the phrase: "Subject to compliance with requirements, provide products by the following: …"

3. Limited List of Products: Where Specifications include a list of names of both manufacturers and products, provide one of the products listed that complies with requirements. Comparable products or substitutions for Contractor's convenience will be considered unless otherwise indicated.

    a. Limited list of products may be indicated by the phrase: "Subject to compliance with requirements, provide one of the following: …"

4. Non-Limited List of Products: Where Specifications include a list of names of both available manufacturers and products, provide one of the products listed, or an unnamed product, which complies with requirements.

    a. Non-limited list of products is indicated by the phrase: "Subject to compliance with requirements, available products that may be incorporated in the Work include, but are not limited to, the following: …"

5. Limited List of Manufacturers: Where Specifications include a list of manufacturers' names, provide a product by one of the manufacturers listed that complies with requirements. Comparable products or substitutions for Contractor's convenience will be considered unless otherwise indicated.

    a. Limited list of manufacturers is indicated by the phrase: "Subject to compliance with requirements, provide products by one of the following: …"

6. Non-Limited List of Manufacturers: Where Specifications include a list of available manufacturers, provide a product by one of the manufacturers listed, or a product by an unnamed manufacturer, which complies with requirements.

    a. Non-limited list of manufacturers is indicated by the phrase: "Subject to compliance with requirements, available manufacturers whose products may be incorporated in the Work include, but are not limited to, the following: …"

7. Basis-of-Design Product: Where Specifications name a product, or refer to a product indicated on Drawings, and include a list of manufacturers, provide the specified or indicated product or a comparable product by one of the other named manufacturers. Drawings and Specifications indicate sizes, profiles, dimensions, and other characteristics that are based on the product named. Comply with requirements in "Comparable Products" Article for consideration of an unnamed product by one of the other named manufacturers.

    a. For approval of products by unnamed manufacturers, comply with requirements in Section 012500 "Substitution Procedures" for substitutions for convenience.

C. Visual Matching Specification: Where Specifications require "match Architect's sample," provide a product that complies with requirements and matches Architect's sample. Architect's decision will be final on whether a proposed product matches.

1. If no product available within specified category matches and complies with other specified requirements, comply with requirements in Section 012500 "Substitution Procedures" for proposal of product.

D. Visual Selection Specification: Where Specifications include the phrase "as selected by Architect from manufacturer's full range" or similar phrase, select a product that complies with requirements. Architect will select color, gloss, pattern, density, or texture from manufacturer's product line that includes both standard and premium items.

2.2 COMPARABLE PRODUCTS

A. Conditions for Consideration of Comparable Products: Architect will consider Contractor's request for comparable product when the following conditions are satisfied. If the following conditions are not satisfied, Architect may return requests without action, except to record noncompliance with these requirements:

1. Evidence that proposed product does not require revisions to the Contract Documents, is consistent with the Contract Documents, will produce the indicated results, and is compatible with other portions of the Work. Detailed comparison of significant qualities of proposed product with those named in the Specifications. Significant product qualities include attributes such as type, function, in-service performance and physical properties, weight, dimension, durability, visual characteristics, and other specific features and requirements.
2. Evidence that proposed product provides specified warranty.
3. List of similar installations for completed projects with project names and addresses and names and addresses of architects and owners, if requested.

4. Samples, if requested.

B. Submittal Requirements: Approval by the Architect of Contractor's request for use of comparable product is not intended to satisfy other submittal requirements. Comply with specified submittal requirements.

PART 3 - EXECUTION (Not Used)

END OF SECTION 016000

SECTION 017300 - EXECUTION

PART 1 - GENERAL

1.1 RELATED DOCUMENTS

A. Drawings and general provisions of the Contract, including General and Supplementary Conditions and other Division 01 Specification Sections, apply to this Section.

1.2 SUMMARY

A. Section includes general administrative and procedural requirements governing execution of the Work including, but not limited to, the following:

1. Construction layout.
2. Field engineering and surveying.
3. Installation of the Work.
4. Cutting and patching.
5. Progress cleaning.
6. Starting and adjusting.
7. Protection of installed construction.

B. Related Requirements:

1. Section 011000 "Summary" for limits on use of Project site.
2. Section 013300 "Submittal Procedures" for submitting surveys.
3. Section 017700 "Closeout Procedures" for submitting final property survey with Project Record Documents, recording of Owner-accepted deviations from indicated lines and levels, replacing defective work, and final cleaning.
4. Section 078413 "Penetration Firestopping" for patching penetrations in fire-rated construction.

1.3 DEFINITIONS

A. Cutting: Removal of in-place construction necessary to permit installation or performance of subsequent work.

B. Patching: Fitting and repair work required to restore construction to original conditions after installation of subsequent work.

1.4 INFORMATIONAL SUBMITTALS

A. Qualification Data: For professional engineer.

B. Certificates: Submit certificate signed by professional engineer certifying that location and elevation of improvements comply with requirements.

C. Landfill Receipts: Submit copy of receipts issued by a landfill facility, licensed to accept hazardous materials, for hazardous waste disposal.

D. Certified Surveys: Submit two copies signed by land surveyor or professional engineer.

E. Final Property Survey: Submit 10 copies showing the Work performed and record survey data.

1.5 QUALITY ASSURANCE

A. Cutting and Patching: Comply with requirements for and limitations on cutting and patching of construction elements.

1. Structural Elements: When cutting and patching structural elements, notify Architect of locations and details of cutting and await directions from Architect before proceeding. Shore, brace, and support structural elements during cutting and patching. Do not cut and patch structural elements in a manner that could change their load-carrying capacity or increase deflection.
2. Operational Elements: Do not cut and patch operating elements and related components in a manner that results in reducing their capacity to perform as intended or that results in increased maintenance or decreased operational life or safety. Operational elements include the following:

    a. Primary operational systems and equipment.
    b. Fire separation assemblies.
    c. Air or smoke barriers.
    d. Fire-suppression systems.
    e. Plumbing piping systems.
    f. Mechanical systems piping and ducts.
    g. Control systems.
    h. Communication systems.
    i. Fire-detection and -alarm systems.
    j. Conveying systems.
    k. Electrical wiring systems.
    l. Operating systems of special construction.

3. Other Construction Elements: Do not cut and patch other construction elements or components in a manner that could change their load-carrying capacity, that results in reducing their capacity to perform as intended, or that results in increased maintenance or decreased operational life or safety. Other construction elements include but are not limited to the following:

    a. Water, moisture, or vapor barriers.
    b. Membranes and flashings.
    c. Equipment supports.

d. Piping, ductwork, vessels, and equipment.
e. Noise- and vibration-control elements and systems.

4. Visual Elements: Do not cut and patch construction in a manner that results in visual evidence of cutting and patching. Do not cut and patch exposed construction in a manner that would, in Architect's opinion, reduce the building's aesthetic qualities. Remove and replace construction that has been cut and patched in a visually unsatisfactory manner.

B. Manufacturer's Installation Instructions: Obtain and maintain on-site manufacturer's written recommendations and instructions for installation of products and equipment.

PART 2 - PRODUCTS

2.1 MATERIALS

A. General: Comply with requirements specified in other Sections.

1. For projects requiring compliance with sustainable design and construction practices and procedures, use products for patching that comply with sustainable design requirements.

B. In-Place Materials: Use materials for patching identical to in-place materials. For exposed surfaces, use materials that visually match in-place adjacent surfaces to the fullest extent possible.

1. If identical materials are unavailable or cannot be used, use materials that, when installed, will provide a match acceptable to Architect for the visual and functional performance of in-place materials.

PART 3 - EXECUTION

3.1 EXAMINATION

A. Existing Conditions: The existence and location of underground and other utilities and construction indicated as existing are not guaranteed. Before beginning sitework, investigate and verify the existence and location of underground utilities, mechanical and electrical systems, and other construction affecting the Work.

1. Before construction, verify the location and invert elevation at points of connection of sanitary sewer, storm sewer, and water-service piping; underground electrical services; and other utilities.
2. Furnish location data for work related to Project that must be performed by public utilities serving Project site.

B. Examination and Acceptance of Conditions: Before proceeding with each component of the Work, examine substrates, areas, and conditions, with Installer or Applicator present where indicated, for compliance with requirements for installation tolerances and other conditions affecting performance. Record observations.

1. Examine roughing-in for mechanical and electrical systems to verify actual locations of connections before equipment and fixture installation.
2. Examine walls, floors, and roofs for suitable conditions where products and systems are to be installed.
3. Verify compatibility with and suitability of substrates, including compatibility with existing finishes or primers.

C. Written Report: Where a written report listing conditions detrimental to performance of the Work is required by other Sections, include the following:

1. Description of the Work.
2. List of detrimental conditions, including substrates.
3. List of unacceptable installation tolerances.
4. Recommended corrections.

D. Proceed with installation only after unsatisfactory conditions have been corrected. Proceeding with the Work indicates acceptance of surfaces and conditions.

3.2 PREPARATION

A. Existing Utility Information: Furnish information to local utility and Owner that is necessary to adjust, move, or relocate existing utility structures, utility poles, lines, services, or other utility appurtenances located in or affected by construction. Coordinate with authorities having jurisdiction.

B. Field Measurements: Take field measurements as required to fit the Work properly. Recheck measurements before installing each product. Where portions of the Work are indicated to fit to other construction, verify dimensions of other construction by field measurements before fabrication. Coordinate fabrication schedule with construction progress to avoid delaying the Work.

C. Space Requirements: Verify space requirements and dimensions of items shown diagrammatically on Drawings.

D. Review of Contract Documents and Field Conditions: Immediately on discovery of the need for clarification of the Contract Documents caused by differing field conditions outside the control of Contractor, submit a request for information to Architect according to requirements in Section 013100 "Project Management and Coordination."

3.3 CONSTRUCTION LAYOUT

A. Verification: Before proceeding to lay out the Work, verify layout information shown on Drawings, in relation to the property survey and existing benchmarks. If discrepancies are discovered, notify Architect and Construction Manager promptly.

B. General: Engage a professional engineer to lay out the Work using accepted surveying practices.

1. Establish benchmarks and control points to set lines and levels at each story of construction and elsewhere as needed to locate each element of Project.
2. Establish limits on use of Project site.
3. Establish dimensions within tolerances indicated. Do not scale Drawings to obtain required dimensions.
4. Inform installers of lines and levels to which they must comply.
5. Check the location, level and plumb, of every major element as the Work progresses.
6. Notify Architect and Construction Manager when deviations from required lines and levels exceed allowable tolerances.
7. Close site surveys with an error of closure equal to or less than the standard established by authorities having jurisdiction.

C. Site Improvements: Locate and lay out site improvements, including pavements, grading, fill and topsoil placement, utility slopes, and rim and invert elevations.

D. Building Lines and Levels: Locate and lay out control lines and levels for structures, building foundations, column grids, and floor levels, including those required for mechanical and electrical work. Transfer survey markings and elevations for use with control lines and levels. Level foundations and piers from two or more locations.

E. Record Log: Maintain a log of layout control work. Record deviations from required lines and levels. Include beginning and ending dates and times of surveys, weather conditions, name and duty of each survey party member, and types of instruments and tapes used. Make the log available for reference by Architect and Construction Manager.

3.4 FIELD ENGINEERING

A. Identification: Owner will identify existing benchmarks, control points, and property corners.

B. Reference Points: Locate existing permanent benchmarks, control points, and similar reference points before beginning the Work. Preserve and protect permanent benchmarks and control points during construction operations.

1. Do not change or relocate existing benchmarks or control points without prior written approval of Architect or Construction Manager. Report lost or destroyed permanent benchmarks or control points promptly. Report the need to relocate permanent benchmarks or control points to Architect and Construction Manager before proceeding.
2. Replace lost or destroyed permanent benchmarks and control points promptly. Base replacements on the original survey control points.

C. Benchmarks: Establish and maintain a minimum of two permanent benchmarks on Project site, referenced to data established by survey control points. Comply with authorities having jurisdiction for type and size of benchmark.

1. Record benchmark locations, with horizontal and vertical data, on Project Record Documents.
2. Where the actual location or elevation of layout points cannot be marked, provide temporary reference points sufficient to locate the Work.
3. Remove temporary reference points when no longer needed. Restore marked construction to its original condition.

D. Certified Survey: On completion of foundation walls, major site improvements, and other work requiring field-engineering services, prepare a certified survey showing dimensions, locations, angles, and elevations of construction and sitework.

E. Final Property Survey: Engage a professional engineer to prepare a final property survey showing significant features (real property) for Project. Include on the survey a certification, signed by professional engineer, that principal metes, bounds, lines, and levels of Project are accurately positioned as shown on the survey.

1. Show boundary lines, monuments, streets, site improvements and utilities, existing improvements and significant vegetation, adjoining properties, acreage, grade contours, and the distance and bearing from a site corner to a legal point.
2. Recording: At Substantial Completion, have the final property survey recorded by or with authorities having jurisdiction as the official "property survey."

3.5 INSTALLATION

A. General: Locate the Work and components of the Work accurately, in correct alignment and elevation, as indicated.

1. Make vertical work plumb and make horizontal work level.
2. Where space is limited, install components to maximize space available for maintenance and ease of removal for replacement.
3. Conceal pipes, ducts, and wiring in finished areas unless otherwise indicated.
4. Maintain minimum headroom clearance of 96 inches in occupied spaces and 90 inches in unoccupied spaces.

B. Comply with manufacturer's written instructions and recommendations for installing products in applications indicated.

C. Install products at the time and under conditions that will ensure the best possible results. Maintain conditions required for product performance until Substantial Completion.

D. Conduct construction operations so no part of the Work is subjected to damaging operations or loading in excess of that expected during normal conditions of occupancy.

E. Sequence the Work and allow adequate clearances to accommodate movement of construction items on site and placement in permanent locations.

F. Tools and Equipment: Where possible, select tools or equipment that minimize production of excessive noise levels.

G. Templates: Obtain and distribute to the parties involved templates for work specified to be factory prepared and field installed. Check Shop Drawings of other portions of the Work to confirm that adequate provisions are made for locating and installing products to comply with indicated requirements.

H. Attachment: Provide blocking and attachment plates and anchors and fasteners of adequate size and number to securely anchor each component in place, accurately located and aligned with other portions of the Work. Where size and type of attachments are not indicated, verify size and type required for load conditions.

1. Mounting Heights: Where mounting heights are not indicated, mount components at heights directed by Architect.
2. Allow for building movement, including thermal expansion and contraction.
3. Coordinate installation of anchorages. Furnish setting drawings, templates, and directions for installing anchorages, including sleeves, concrete inserts, anchor bolts, and items with integral anchors, that are to be embedded in concrete or masonry. Deliver such items to Project site in time for installation.

I. Joints: Make joints of uniform width. Where joint locations in exposed work are not indicated, arrange joints for the best visual effect. Fit exposed connections together to form hairline joints.

J. Repair or remove and replace damaged, defective, or nonconforming Work.

1. Comply with Section 017700 "Closeout Procedures" for repairing or removing and replacing defective Work.

3.6 CUTTING AND PATCHING

A. Cutting and Patching, General: Employ skilled workers to perform cutting and patching. Proceed with cutting and patching at the earliest feasible time, and complete without delay.

1. Cut in-place construction to provide for installation of other components or performance of other construction, and subsequently patch as required to restore surfaces to their original condition.

B. Existing Warranties: Remove, replace, patch, and repair materials and surfaces cut or damaged during installation or cutting and patching operations, by methods and with materials so as not to void existing warranties.

C. Temporary Support: Provide temporary support of work to be cut.

D. Protection: Protect in-place construction during cutting and patching to prevent damage. Provide protection from adverse weather conditions for portions of Project that might be exposed during cutting and patching operations.

E. Cutting: Cut in-place construction by sawing, drilling, breaking, chipping, grinding, and similar operations, including excavation, using methods least likely to damage elements retained or adjoining construction. If possible, review proposed procedures with original Installer; comply with original Installer's written recommendations.

1. In general, use hand or small power tools designed for sawing and grinding, not hammering and chopping. Cut holes and slots neatly to minimum size required, and with minimum disturbance of adjacent surfaces. Temporarily cover openings when not in use.
2. Finished Surfaces: Cut or drill from the exposed or finished side into concealed surfaces.
3. Concrete and Masonry: Cut using a cutting machine, such as an abrasive saw or a diamond-core drill.
4. Excavating and Backfilling: Comply with requirements in applicable Sections where required by cutting and patching operations.
5. Mechanical and Electrical Services: Cut off pipe or conduit in walls or partitions to be removed. Cap, valve, or plug and seal remaining portion of pipe or conduit to prevent entrance of moisture or other foreign matter after cutting.
6. Proceed with patching after construction operations requiring cutting are complete.

F. Patching: Patch construction by filling, repairing, refinishing, closing up, and similar operations following performance of other work. Patch with durable seams that are as invisible as practicable. Provide materials and comply with installation requirements specified in other Sections, where applicable.

1. Inspection: Where feasible, test and inspect patched areas after completion to demonstrate physical integrity of installation.
2. Exposed Finishes: Restore exposed finishes of patched areas and extend finish restoration into retained adjoining construction in a manner that will minimize evidence of patching and refinishing.

    a. Clean piping, conduit, and similar features before applying paint or other finishing materials.
    b. Restore damaged pipe covering to its original condition.

3. Floors and Walls: Where walls or partitions that are removed extend one finished area into another, patch and repair floor and wall surfaces in the new space. Provide an even surface of uniform finish, color, texture, and appearance. Remove in-place floor and wall coverings and replace with new materials, if necessary, to achieve uniform color and appearance.

    a. Where patching occurs in a painted surface, prepare substrate and apply primer and intermediate paint coats appropriate for substrate over the patch, and apply final paint coat over entire unbroken surface containing the patch. Provide additional coats until patch blends with adjacent surfaces.

4. Ceilings: Patch, repair, or rehang in-place ceilings as necessary to provide an even-plane surface of uniform appearance.
5. Exterior Building Enclosure: Patch components in a manner that restores enclosure to a weathertight condition and ensures thermal and moisture integrity of building enclosure.

G. Cleaning: Clean areas and spaces where cutting and patching are performed. Remove paint, mortar, oils, putty, and similar materials from adjacent finished surfaces.

3.7 PROGRESS CLEANING

A. General: Clean Project site and work areas daily, including common areas. Enforce requirements strictly. Dispose of materials lawfully.

1. Comply with requirements in NFPA 241 for removal of combustible waste materials and debris.
2. Do not hold waste materials more than seven days during normal weather or three days if the temperature is expected to rise above 80 deg F.
3. Containerize hazardous and unsanitary waste materials separately from other waste. Mark containers appropriately and dispose of legally, according to regulations.

    a. Use containers intended for holding waste materials of type to be stored.

B. Site: Maintain Project site free of waste materials and debris.

C. Work Areas: Clean areas where work is in progress to the level of cleanliness necessary for proper execution of the Work.

1. Remove liquid spills promptly.
2. Where dust would impair proper execution of the Work, broom-clean or vacuum the entire work area, as appropriate.

D. Installed Work: Keep installed work clean. Clean installed surfaces according to written instructions of manufacturer or fabricator of product installed, using only cleaning materials specifically recommended. If specific cleaning materials are not recommended, use cleaning materials that are not hazardous to health or property and that will not damage exposed surfaces.

E. Concealed Spaces: Remove debris from concealed spaces before enclosing the space.

F. Exposed Surfaces in Finished Areas: Clean exposed surfaces and protect as necessary to ensure freedom from damage and deterioration at time of Substantial Completion.

G. Waste Disposal: Do not bury or burn waste materials on-site. Do not wash waste materials down sewers or into waterways. Comply with waste disposal requirements in Section 015000 "Temporary Facilities and Controls."

H. During handling and installation, clean and protect construction in progress and adjoining materials already in place. Apply protective covering where required to ensure protection from damage or deterioration at Substantial Completion.

I. Clean and provide maintenance on completed construction as frequently as necessary through the remainder of the construction period. Adjust and lubricate operable components to ensure operability without damaging effects.

J. Limiting Exposures: Supervise construction operations to ensure that no part of the construction, completed or in progress, is subject to harmful, dangerous, damaging, or otherwise deleterious exposure during the construction period.

3.8 STARTING AND ADJUSTING

A. Start equipment and operating components to confirm proper operation. Remove malfunctioning units, replace with new units, and retest.

B. Adjust equipment for proper operation. Adjust operating components for proper operation without binding.

C. Test each piece of equipment to verify proper operation. Test and adjust controls and safeties. Replace damaged and malfunctioning controls and equipment.

D. Manufacturer's Field Service: Comply with qualification requirements in Section 014000 "Quality Requirements."

3.9 PROTECTION OF INSTALLED CONSTRUCTION

A. Provide final protection and maintain conditions that ensure installed Work is without damage or deterioration at time of Substantial Completion.

B. Comply with manufacturer's written instructions for temperature and relative humidity.

END OF SECTION 017300

SECTION 017700 - CLOSEOUT PROCEDURES

PART 1 - GENERAL

1.1 RELATED DOCUMENTS

A. Drawings and general provisions of the Contract, including General and Supplementary Conditions and other Division 01 Specification Sections, apply to this Section.

1.2 SUMMARY

A. Section includes administrative and procedural requirements for contract closeout, including, but not limited to, the following:

1. Substantial Completion procedures.
2. Final completion procedures.
3. Warranties.
4. Final cleaning.
5. Repair of the Work.

B. Related Requirements:

1. Section 017823 "Operation and Maintenance Data" for additional operation and maintenance manual requirements.
2. Section 017839 "Project Record Documents" for submitting Record Drawings, Record Specifications, and Record Product Data.
3. Section 017900 "Demonstration and Training" for requirements to train the Owner's maintenance personnel to adjust, operate, and maintain products, equipment, and systems.

1.3 ACTION SUBMITTALS

A. Product Data: For each type of cleaning agent.

B. Contractor's List of Incomplete Items: Initial submittal at Substantial Completion.

C. Certified List of Incomplete Items: Final submittal at final completion.

1.4 CLOSEOUT SUBMITTALS

A. Certificates of Release: From authorities having jurisdiction.

B. Certificate of Insurance: For continuing coverage.

C. Field Report: For pest control inspection.

1.5 MAINTENANCE MATERIAL SUBMITTALS

A. Schedule of Maintenance Material Items: For maintenance material submittal items specified in other Sections.

1.6 SUBSTANTIAL COMPLETION PROCEDURES

A. Contractor's List of Incomplete Items: Prepare and submit a list of items to be completed and corrected (Contractor's punch list), indicating the value of each item on the list and reasons why the Work is incomplete.

B. Submittals Prior to Substantial Completion: Complete the following a minimum of 10 days prior to requesting inspection for determining date of Substantial Completion. List items below that are incomplete at time of request.

1. Certificates of Release: Obtain and submit releases from authorities having jurisdiction permitting Owner unrestricted use of the Work and access to services and utilities. Include occupancy permits, operating certificates, and similar releases.
2. Submit closeout submittals specified in other Division 01 Sections, including project record documents, operation and maintenance manuals, damage or settlement surveys, property surveys, and similar final record information.
3. Submit closeout submittals specified in individual Sections, including specific warranties, workmanship bonds, maintenance service agreements, final certifications, and similar documents.
4. Submit maintenance material submittals specified in individual Sections, including tools, spare parts, extra materials, and similar items, and deliver to location designated by Construction Manager. Label with manufacturer's name and model number.

    a. Schedule of Maintenance Material Items: Prepare and submit schedule of maintenance material submittal items, including name and quantity of each item and name and number of related Specification Section. Obtain Construction Manager's signature for receipt of submittals.

5. Submit testing, adjusting, and balancing records.
6. Submit sustainable design submittals not previously submitted.
7. Submit changeover information related to Owner's occupancy, use, operation, and maintenance.

C. Procedures Prior to Substantial Completion: Complete the following a minimum of 10 days prior to requesting inspection for determining date of Substantial Completion. List items below that are incomplete at time of request.

1. Advise Owner of pending insurance changeover requirements.
2. Make final changeover of permanent locks and deliver keys to Owner. Advise Owner's personnel of changeover in security provisions.

3. Instruct Owner's personnel in operation, adjustment, and maintenance of products, equipment, and systems. Submit demonstration and training video recordings specified in Section 017900 "Demonstration and Training."
4. Terminate and remove temporary facilities from Project site, along with mockups, construction tools, and similar elements.
5. Complete final cleaning requirements.
6. Touch up paint and otherwise repair and restore marred exposed finishes to eliminate visual defects.

D. Inspection: Submit a written request for inspection to determine Substantial Completion a minimum of 10 days prior to date the Work will be completed and ready for final inspection and tests. On receipt of request, Architect and Construction Manager will either proceed with inspection or notify Contractor of unfulfilled requirements. Architect will prepare the Certificate of Substantial Completion after inspection or will notify Contractor of items, either on Contractor's list or additional items identified by Architect, that must be completed or corrected before certificate will be issued.

1. Request reinspection when the Work identified in previous inspections as incomplete is completed or corrected.
2. Results of completed inspection will form the basis of requirements for final completion.

1.7 FINAL COMPLETION PROCEDURES

A. Submittals Prior to Final Completion: Before requesting final inspection for determining final completion, complete the following:

1. Submit a final Application for Payment according to Section 012900 "Payment Procedures."
2. Certified List of Incomplete Items: Submit certified copy of Architect's Substantial Completion inspection list of items to be completed or corrected (punch list), endorsed and dated by Architect. Certified copy of the list shall state that each item has been completed or otherwise resolved for acceptance.
3. Certificate of Insurance: Submit evidence of final, continuing insurance coverage complying with insurance requirements.
4. Submit pest-control final inspection report.
5. Submit final completion photographic documentation.

B. Inspection: Submit a written request for final inspection to determine acceptance a minimum of 10 days prior to date the work will be completed and ready for final inspection and tests. On receipt of request, Architect and Construction Manager will either proceed with inspection or notify Contractor of unfulfilled requirements. Architect will prepare a final Certificate for Payment after inspection or will notify Contractor of construction that must be completed or corrected before certificate will be issued.

1. Request reinspection when the Work identified in previous inspections as incomplete is completed or corrected.

1.8 LIST OF INCOMPLETE ITEMS (PUNCH LIST)

A. Organization of List: Include name and identification of each space and area affected by construction operations for incomplete items and items needing correction including, if necessary, areas disturbed by Contractor that are outside the limits of construction.

1. Organize list of spaces in sequential order, starting with exterior areas first and proceeding from lowest floor to highest floor.
2. Organize items applying to each space by major element, including categories for ceiling, individual walls, floors, equipment, and building systems.
3. Include the following information at the top of each page:

a. Project name.
b. Date.
c. Name of Architect and Construction Manager.
d. Name of Contractor.
e. Page number.

4. Submit list of incomplete items in one of the following formats as acceptable to the Architect:

a. MS Excel electronic file. Architect, through Construction Manager, will return annotated file.
b. PDF electronic file. Architect, through Construction Manager, will return annotated file.
c. Three paper copies. Architect, through Construction Manager, will return two copies.

1.9 SUBMITTAL OF PROJECT WARRANTIES

A. Time of Submittal: Submit written warranties on request of Architect for designated portions of the Work where warranties are indicated to commence on dates other than date of Substantial Completion, or when delay in submittal of warranties might limit Owner's rights under warranty.

B. Partial Occupancy: Submit properly executed warranties within 15 days of completion of designated portions of the Work that are completed and occupied or used by Owner during construction period by separate agreement with Contractor.

C. Organize warranty documents into an orderly sequence based on the table of contents of Project Manual.

D. Warranty Electronic File: Provide warranties and bonds in PDF format. Assemble complete warranty and bond submittal package into a single electronic PDF file with bookmarks enabling navigation to each item. Provide bookmarked table of contents at beginning of document.

1. Submit on digital media acceptable to Architect or by email to Architect.

E. Warranties in Paper Form:

1. Bind warranties and bonds in heavy-duty, three-ring, vinyl-covered, loose-leaf binders, thickness as necessary to accommodate contents, and sized to receive 8-1/2-by-11-inch paper.
2. Provide heavy paper dividers with plastic-covered tabs for each separate warranty. Mark tab to identify the product or installation. Provide a typed description of the product or installation, including the name of the product and the name, address, and telephone number of Installer.
3. Identify each binder on the front and spine with the typed or printed title "WARRANTIES," Project name, and name of Contractor.

F. Provide additional copies of each warranty to include in operation and maintenance manuals.

PART 2 - PRODUCTS

2.1 MATERIALS

A. Cleaning Agents: Use cleaning materials and agents recommended by manufacturer or fabricator of the surface to be cleaned. Do not use cleaning agents that are potentially hazardous to health or property or that might damage finished surfaces.

PART 3 - EXECUTION

3.1 FINAL CLEANING

A. General: Perform final cleaning. Conduct cleaning and waste-removal operations to comply with local laws and ordinances and Federal and local environmental and antipollution regulations.

B. Cleaning: Employ experienced workers or professional cleaners for final cleaning. Clean each surface or unit to condition expected in an average commercial building cleaning and maintenance program. Comply with manufacturer's written instructions.

1. Complete the following cleaning operations before requesting inspection for certification of Substantial Completion for entire Project or for a designated portion of Project:

a. Clean Project site, yard, and grounds, in areas disturbed by construction activities, including landscape development areas, of rubbish, waste material, litter, and other foreign substances.
b. Sweep paved areas broom clean. Remove petrochemical spills, stains, and other foreign deposits.
c. Rake grounds that are not planted, mulched, or paved to a smooth, even-textured surface.
d. Remove tools, construction equipment, machinery, and surplus material from Project site.

e. Remove snow and ice to provide safe access to building.
f. Clean exposed exterior and interior hard-surfaced finishes to a dirt-free condition, free of stains, films, and similar foreign substances. Avoid disturbing natural weathering of exterior surfaces. Restore reflective surfaces to their original condition.
g. Remove debris and surface dust from limited access spaces, including roofs, plenums, shafts, trenches, equipment vaults, manholes, attics, and similar spaces.
h. Sweep concrete floors broom clean in unoccupied spaces.
i. Vacuum carpet and similar soft surfaces, removing debris and excess nap; clean according to manufacturer's recommendations if visible soil or stains remain.
j. Clean transparent materials, including mirrors and glass in doors and windows. Remove glazing compounds and other noticeable, vision-obscuring materials. Polish mirrors and glass, taking care not to scratch surfaces.
k. Remove labels that are not permanent.
l. Wipe surfaces of mechanical and electrical equipment, elevator equipment, and similar equipment. Remove excess lubrication, paint and mortar droppings, and other foreign substances.
m. Clean plumbing fixtures to a sanitary condition, free of stains, including stains resulting from water exposure.
n. Replace disposable air filters and clean permanent air filters. Clean exposed surfaces of diffusers, registers, and grills.
o. Clean ducts, blowers, and coils if units were operated without filters during construction or that display contamination with particulate matter on inspection.
p. Clean light fixtures, lamps, globes, and reflectors to function with full efficiency.
q. Leave Project clean and ready for occupancy.

C. Pest Control: Comply with pest control requirements in Section 015000 "Temporary Facilities and Controls." Prepare written report.

D. Construction Waste Disposal: Comply with waste disposal requirements in Section 015000 "Temporary Facilities and Controls."

3.2 REPAIR OF THE WORK

A. Complete repair and restoration operations before requesting inspection for determination of Substantial Completion.

B. Repair, or remove and replace, defective construction. Repairing includes replacing defective parts, refinishing damaged surfaces, touching up with matching materials, and properly adjusting operating equipment. Where damaged or worn items cannot be repaired or restored, provide replacements. Remove and replace operating components that cannot be repaired. Restore damaged construction and permanent facilities used during construction to specified condition.

1. Remove and replace chipped, scratched, and broken glass, reflective surfaces, and other damaged transparent materials.

2. Touch up and otherwise repair and restore marred or exposed finishes and surfaces. Replace finishes and surfaces that that already show evidence of repair or restoration.

    a. Do not paint over "UL" and other required labels and identification, including mechanical and electrical nameplates. Remove paint applied to required labels and identification.

3. Replace parts subject to operating conditions during construction that may impede operation or reduce longevity.
4. Replace burned-out bulbs, bulbs noticeably dimmed by hours of use, and defective and noisy starters in fluorescent and mercury vapor fixtures to comply with requirements for new fixtures.

END OF SECTION 017700

SECTION 017823 - OPERATION AND MAINTENANCE DATA

PART 1 - GENERAL

1.1 RELATED DOCUMENTS

A. Drawings and general provisions of the Contract, including General and Supplementary Conditions and other Division 01 Specification Sections, apply to this Section.

1.2 SUMMARY

A. Section includes administrative and procedural requirements for preparing operation and maintenance manuals, including the following:

1. Operation and maintenance documentation directory manuals.
2. Emergency manuals.
3. Systems and equipment operation manuals.
4. Systems and equipment maintenance manuals.
5. Product maintenance manuals.

B. Related Requirements:

1. Section 013300 "Submittal Procedures" for submitting copies of submittals for operation and maintenance manuals.

1.3 DEFINITIONS

A. System: An organized collection of parts, equipment, or subsystems united by regular interaction.

B. Subsystem: A portion of a system with characteristics similar to a system.

1.4 CLOSEOUT SUBMITTALS

A. Submit operation and maintenance manuals indicated. Provide content for each manual as specified in individual Specification Sections, and as reviewed and approved at the time of Section submittals. Submit reviewed manual content formatted and organized as required by this Section.

1. Architect will comment on whether content of operation and maintenance submittals is acceptable.
2. Where applicable, clarify and update reviewed manual content to correspond to revisions and field conditions.

B. Format: Submit operation and maintenance manuals in one of the following formats as acceptable to the Owner and the Architect:

1. Submit on digital media acceptable to Architect by email to Architect. Enable reviewer comments on draft submittals.
2. Submit three paper copies. Architect, through Construction Manager, will return two copies.

C. Initial Manual Submittal: Submit draft copy of each manual at least 30 days before commencing demonstration and training. Architect will comment on whether general scope and content of manual are acceptable.

D. Final Manual Submittal: Submit each manual in final form prior to requesting inspection for Substantial Completion and at least 15 days before commencing demonstration and training. Architect will return copy with comments.

1. Correct or revise each manual to comply with Architect's comments. Submit copies of each corrected manual within 15 days of receipt of Architect's comments and prior to commencing demonstration and training.

E. Comply with Section 017700 "Closeout Procedures" for schedule for submitting operation and maintenance documentation.

1.5 FORMAT OF OPERATION AND MAINTENANCE MANUALS

A. Manuals, Electronic Files: Submit manuals in the form of a multiple file composite electronic PDF file for each manual type required.

1. Electronic Files: Use electronic files prepared by manufacturer where available. Where scanning of paper documents is required, configure scanned file for minimum readable file size.
2. File Names and Bookmarks: Bookmark individual documents based on file names. Name document files to correspond to system, subsystem, and equipment names used in manual directory and table of contents. Group documents for each system and subsystem into individual composite bookmarked files, then create composite manual, so that resulting bookmarks reflect the system, subsystem, and equipment names in a readily navigated file tree. Configure electronic manual to display bookmark panel on opening file.

B. Manuals, Paper Copy: Submit manuals in the form of hard-copy, bound and labeled volumes.

1. Binders: Heavy-duty, three-ring, vinyl-covered, loose-leaf or post-type binders, in thickness necessary to accommodate contents, sized to hold 8-1/2-by-11-inch paper; with clear plastic sleeve on spine to hold label describing contents and with pockets inside covers to hold folded oversize sheets.

a. If two or more binders are necessary to accommodate data of a system, organize data in each binder into groupings by subsystem and related components. Cross-reference other binders if necessary to provide essential information for proper operation or maintenance of equipment or system.

b. Identify each binder on front and spine, with printed title "OPERATION AND MAINTENANCE MANUAL," Project title or name, and subject matter of contents, and indicate Specification Section number on bottom of spine. Indicate volume number for multiple-volume sets.

2. Dividers: Heavy-paper dividers with plastic-covered tabs for each section of the manual. Mark each tab to indicate contents. Include typed list of products and major components of equipment included in the section on each divider, cross-referenced to Specification Section number and title of Project Manual.
3. Protective Plastic Sleeves: Transparent plastic sleeves designed to enclose diagnostic software storage media for computerized electronic equipment. Enclose title pages and directories in clear plastic sleeves.
4. Supplementary Text: Prepared on 8-1/2-by-11-inch white bond paper.
5. Drawings: Attach reinforced, punched binder tabs on drawings and bind with text.

a. If oversize drawings are necessary, fold drawings to same size as text pages and use as foldouts.
b. If drawings are too large to be used as foldouts, fold and place drawings in labeled envelopes and bind envelopes in rear of manual. At appropriate locations in manual, insert typewritten pages indicating drawing titles, descriptions of contents, and drawing locations.

1.6 REQUIREMENTS FOR EMERGENCY, OPERATION, AND MAINTENANCE MANUALS

A. Organization of Manuals: Unless otherwise indicated, organize each manual into a separate section for each system and subsystem, and a separate section for each piece of equipment not part of a system. Each manual shall contain the following materials, in the order listed:

1. Title page.
2. Table of contents.
3. Manual contents.

B. Title Page: Include the following information:

1. Subject matter included in manual.
2. Name and address of Project.
3. Name and address of Owner.
4. Date of submittal.
5. Name and contact information for Contractor.
6. Name and contact information for Construction Manager.
7. Name and contact information for Architect.
8. Names and contact information for major consultants to the Architect that designed the systems contained in the manuals.

C. Table of Contents: List each product included in manual, identified by product name, indexed to the content of the volume, and cross-referenced to Specification Section number in Project Manual.

1. If operation or maintenance documentation requires more than one volume to accommodate data, include comprehensive table of contents for all volumes in each volume of the set.

D. Manual Contents: Organize into sets of manageable size. Arrange contents alphabetically by system, subsystem, and equipment. If possible, assemble instructions for subsystems, equipment, and components of one system into a single binder.

E. Identification: In the documentation directory and in each operation and maintenance manual, identify each system, subsystem, and piece of equipment with same designation used in the Contract Documents. If no designation exists, assign a designation according to ASHRAE Guideline 4, "Preparation of Operating and Maintenance Documentation for Building Systems."

1.7 OPERATION AND MAINTENANCE DOCUMENTATION DIRECTORY MANUAL

A. Operation and Maintenance Documentation Directory: Prepare a separate manual that provides an organized reference to emergency, operation, and maintenance manuals. List items and their location to facilitate ready access to desired information. Include the following:

1. List of Systems and Subsystems: List systems alphabetically. Include references to operation and maintenance manuals that contain information about each system.
2. List of Equipment: List equipment for each system, organized alphabetically by system. For pieces of equipment not part of system, list alphabetically in separate list.
3. Tables of Contents: Include a table of contents for each emergency, operation, and maintenance manual.

1.8 EMERGENCY MANUALS

A. Emergency Manual: Assemble a complete set of emergency information indicating procedures for use by emergency personnel and by Owner's operating personnel for types of emergencies indicated.

B. Content: Organize manual into a separate section for each of the following:

1. Type of emergency.
2. Emergency instructions.
3. Emergency procedures.

C. Type of Emergency: Where applicable for each type of emergency indicated below, include instructions and procedures for each system, subsystem, piece of equipment, and component:

1. Fire.
2. Flood.

3. Gas leak.
4. Water leak.
5. Power failure.
6. Water outage.
7. System, subsystem, or equipment failure.
8. Chemical release or spill.

D. Emergency Instructions: Describe and explain warnings, trouble indications, error messages, and similar codes and signals. Include responsibilities of Owner's operating personnel for notification of Installer, supplier, and manufacturer to maintain warranties.

E. Emergency Procedures: Include the following, as applicable:

1. Instructions on stopping.
2. Shutdown instructions for each type of emergency.
3. Operating instructions for conditions outside normal operating limits.
4. Required sequences for electric or electronic systems.
5. Special operating instructions and procedures.

1.9 SYSTEMS AND EQUIPMENT OPERATION MANUALS

A. Systems and Equipment Operation Manual: Assemble a complete set of data indicating operation of each system, subsystem, and piece of equipment not part of a system. Include information required for daily operation and management, operating standards, and routine and special operating procedures.

1. Engage a factory-authorized service representative to assemble and prepare information for each system, subsystem, and piece of equipment not part of a system.
2. Prepare a separate manual for each system and subsystem, in the form of an instructional manual for use by Owner's operating personnel.

B. Content: In addition to requirements in this Section, include operation data required in individual Specification Sections and the following information:

1. System, subsystem, and equipment descriptions. Use designations for systems and equipment indicated on Contract Documents.
2. Performance and design criteria if Contractor has delegated design responsibility.
3. Operating standards.
4. Operating procedures.
5. Operating logs.
6. Wiring diagrams.
7. Control diagrams.
8. Piped system diagrams.
9. Precautions against improper use.
10. License requirements including inspection and renewal dates.

C. Descriptions: Include the following:

1. Product name and model number. Use designations for products indicated on Contract Documents.
2. Manufacturer's name.
3. Equipment identification with serial number of each component.
4. Equipment function.
5. Operating characteristics.
6. Limiting conditions.
7. Performance curves.
8. Engineering data and tests.
9. Complete nomenclature and number of replacement parts.

D. Operating Procedures: Include the following, as applicable:

1. Startup procedures.
2. Equipment or system break-in procedures.
3. Routine and normal operating instructions.
4. Regulation and control procedures.
5. Instructions on stopping.
6. Normal shutdown instructions.
7. Seasonal and weekend operating instructions.
8. Required sequences for electric or electronic systems.
9. Special operating instructions and procedures.

E. Systems and Equipment Controls: Describe the sequence of operation, and diagram controls as installed.

F. Piped Systems: Diagram piping as installed, and identify color coding where required for identification.

1.10 SYSTEMS AND EQUIPMENT MAINTENANCE MANUALS

A. Systems and Equipment Maintenance Manuals: Assemble a complete set of data indicating maintenance of each system, subsystem, and piece of equipment not part of a system. Include manufacturers' maintenance documentation, preventive maintenance procedures and frequency, repair procedures, wiring and systems diagrams, lists of spare parts, and warranty information.

1. Engage a factory-authorized service representative to assemble and prepare information for each system, subsystem, and piece of equipment not part of a system.
2. Prepare a separate manual for each system and subsystem, in the form of an instructional manual for use by Owner's operating personnel.

B. Content: For each system, subsystem, and piece of equipment not part of a system, include source information, manufacturers' maintenance documentation, maintenance procedures, maintenance and service schedules, spare parts list and source information, maintenance service contracts, and warranties and bonds as described below.

C. Source Information: List each system, subsystem, and piece of equipment included in manual, identified by product name and arranged to match manual's table of contents. For each product, list name, address, and telephone number of Installer or supplier and maintenance service agent, and cross-reference Specification Section number and title in Project Manual and drawing or schedule designation or identifier where applicable.

D. Manufacturers' Maintenance Documentation: Include the following information for each component part or piece of equipment:

1. Standard maintenance instructions and bulletins; include only sheets pertinent to product or component installed. Mark each sheet to identify each product or component incorporated into the Work. If data include more than one item in a tabular format, identify each item using appropriate references from the Contract Documents. Identify data applicable to the Work and delete references to information not applicable.

    a. Prepare supplementary text if manufacturers' standard printed data are not available and where the information is necessary for proper operation and maintenance of equipment or systems.

2. Drawings, diagrams, and instructions required for maintenance, including disassembly and component removal, replacement, and assembly.
3. Identification and nomenclature of parts and components.
4. List of items recommended to be stocked as spare parts.

E. Maintenance Procedures: Include the following information and items that detail essential maintenance procedures:

1. Test and inspection instructions.
2. Troubleshooting guide.
3. Precautions against improper maintenance.
4. Disassembly; component removal, repair, and replacement; and reassembly instructions.
5. Aligning, adjusting, and checking instructions.
6. Demonstration and training video recording, if available.

F. Maintenance and Service Schedules: Include service and lubrication requirements, list of required lubricants for equipment, and separate schedules for preventive and routine maintenance and service with standard time allotment.

1. Scheduled Maintenance and Service: Tabulate actions for daily, weekly, monthly, quarterly, semiannual, and annual frequencies.
2. Maintenance and Service Record: Include manufacturers' forms for recording maintenance.

G. Spare Parts List and Source Information: Include lists of replacement and repair parts, with parts identified and cross-referenced to manufacturers' maintenance documentation and local sources of maintenance materials and related services.

H. Maintenance Service Contracts: Include copies of maintenance agreements with name and telephone number of service agent.

I. Warranties and Bonds: Include copies of warranties and bonds and lists of circumstances and conditions that would affect validity of warranties or bonds.

1. Include procedures to follow and required notifications for warranty claims.

J. Drawings: Prepare drawings supplementing manufacturers' printed data to illustrate the relationship of component parts of equipment and systems and to illustrate control sequence and flow diagrams. Coordinate these drawings with information contained in record Drawings to ensure correct illustration of completed installation.

1. Do not use original project record documents as part of maintenance manuals.

1.11 PRODUCT MAINTENANCE MANUALS

A. Product Maintenance Manual: Assemble a complete set of maintenance data indicating care and maintenance of each product, material, and finish incorporated into the Work.

B. Content: Organize manual into a separate section for each product, material, and finish. Include source information, product information, maintenance procedures, repair materials and sources, and warranties and bonds, as described below.

C. Source Information: List each product included in manual, identified by product name and arranged to match manual's table of contents. For each product, list name, address, and telephone number of Installer or supplier and maintenance service agent, and cross-reference Specification Section number and title in Project Manual and drawing or schedule designation or identifier where applicable.

D. Product Information: Include the following, as applicable:

1. Product name and model number.
2. Manufacturer's name.
3. Color, pattern, and texture.
4. Material and chemical composition.
5. Reordering information for specially manufactured products.

E. Maintenance Procedures: Include manufacturer's written recommendations and the following:

1. Inspection procedures.
2. Types of cleaning agents to be used and methods of cleaning.
3. List of cleaning agents and methods of cleaning detrimental to product.
4. Schedule for routine cleaning and maintenance.
5. Repair instructions.

F. Repair Materials and Sources: Include lists of materials and local sources of materials and related services.

G. Warranties and Bonds: Include copies of warranties and bonds and lists of circumstances and conditions that would affect validity of warranties or bonds.

1. Include procedures to follow and required notifications for warranty claims.

PART 2 - PRODUCTS (Not Used)

PART 3 - EXECUTION (Not Used)

END OF SECTION 017823

SECTION 017839 - PROJECT RECORD DOCUMENTS

PART 1 - GENERAL

1.1 RELATED DOCUMENTS

A. Drawings and general provisions of the Contract, including General and Supplementary Conditions and other Division 01 Specification Sections, apply to this Section.

1.2 SUMMARY

A. Section includes administrative and procedural requirements for project record documents, including the following:

1. Record Drawings.
2. Record Specifications.
3. Record Product Data.
4. Miscellaneous record submittals.

B. Related Requirements:

1. Section 017300 "Execution" for final property survey.
2. Section 017700 "Closeout Procedures" for general closeout procedures.
3. Section 017823 "Operation and Maintenance Data" for operation and maintenance manual requirements.

1.3 CLOSEOUT SUBMITTALS

A. Record Drawings: Comply with the following:

1. Number of Copies: Submit copies of record Drawings as follows:

a. Initial Submittal:

1) Submit PDF electronic files of scanned record prints and one of file prints.
2) Architect will indicate whether general scope of changes, additional information recorded, and quality of drafting are acceptable.

b. Final Submittal:

1) Submit PDF electronic files of scanned record prints and three set(s) of prints.
2) Print each drawing, whether or not changes and additional information were recorded.

B. Record Specifications: Submit one paper copy or annotated PDF electronic files of Project's Specifications as acceptable to the Architect, including addenda and contract modifications.

C. Record Product Data: Submit one paper copy or annotated PDF electronic files and directories of each submittal as acceptable to the Architect.

1. Where record Product Data are required as part of operation and maintenance manuals, submit duplicate marked-up Product Data as a component of manual.

D. Miscellaneous Record Submittals: See other Specification Sections for miscellaneous record-keeping requirements and submittals in connection with various construction activities. Submit one paper copy annotated PDF electronic files and directories of each submittal as acceptable to the Architect.

E. Reports: Submit written report weekly indicating items incorporated into project record documents concurrent with progress of the Work, including revisions, concealed conditions, field changes, product selections, and other notations incorporated.

1.4 RECORD DRAWINGS

A. Record Prints: Maintain one set of marked-up paper copies of the Contract Drawings and Shop Drawings, incorporating new and revised drawings as modifications are issued.

1. Preparation: Mark record prints to show the actual installation where installation varies from that shown originally. Require individual or entity who obtained record data, whether individual or entity is Installer, subcontractor, or similar entity, to provide information for preparation of corresponding marked-up record prints.

a. Give particular attention to information on concealed elements that would be difficult to identify or measure and record later.
b. Accurately record information in an acceptable drawing technique.
c. Record data as soon as possible after obtaining it.
d. Record and check the markup before enclosing concealed installations.
e. Cross-reference record prints to corresponding photographic documentation.

2. Content: Types of items requiring marking include, but are not limited to, the following:

a. Dimensional changes to Drawings.
b. Revisions to details shown on Drawings.
c. Depths of foundations.
d. Locations and depths of underground utilities.
e. Revisions to routing of piping and conduits.
f. Revisions to electrical circuitry.
g. Actual equipment locations.
h. Duct size and routing.
i. Locations of concealed internal utilities.
j. Changes made by Change Order or Construction Change Directive.
k. Changes made following Architect's written orders.
l. Details not on the original Contract Drawings.

m. Field records for variable and concealed conditions.
n. Record information on the Work that is shown only schematically.

3. Mark the Contract Drawings and Shop Drawings completely and accurately. Use personnel proficient at recording graphic information in production of marked-up record prints.
4. Mark record sets with erasable, red-colored pencil. Use other colors to distinguish between changes for different categories of the Work at same location.
5. Mark important additional information that was either shown schematically or omitted from original Drawings.
6. Note Construction Change Directive numbers, alternate numbers, Change Order numbers, and similar identification, where applicable.

B. Record Digital Data Files: Immediately before inspection for Certificate of Substantial Completion, review marked-up record prints with Architect and Construction Manager. When authorized, prepare a full set of corrected digital data files of the Contract Drawings, as follows:

1. Format: Annotated PDF electronic file with comment function enabled.
2. Incorporate changes and additional information previously marked on record prints. Delete, redraw, and add details and notations where applicable.
3. Refer instances of uncertainty to Architect through Construction Manager for resolution.

C. Format: Identify and date each record Drawing; include the designation "PROJECT RECORD DRAWING" in a prominent location.

1. Record Prints: Organize record prints into manageable sets. Bind each set with durable paper cover sheets. Include identification on cover sheets.
2. Format: Annotated PDF electronic file with comment function enabled.
3. Identification: As follows:

a. Project name.
b. Date.
c. Designation "PROJECT RECORD DRAWINGS."
d. Name of Architect and Construction Manager.
e. Name of Contractor.

1.5 RECORD SPECIFICATIONS

A. Preparation: Mark Specifications to indicate the actual product installation where installation varies from that indicated in Specifications, addenda, and contract modifications.

1. Give particular attention to information on concealed products and installations that cannot be readily identified and recorded later.
2. Mark copy with the proprietary name and model number of products, materials, and equipment furnished, including substitutions and product options selected.
3. Record the name of manufacturer, supplier, Installer, and other information necessary to provide a record of selections made.
4. For each principal product, indicate whether record Product Data has been submitted in operation and maintenance manuals instead of submitted as record Product Data.

5. Note related Change Orders, record Product Data, and record Drawings where applicable.

B. Format: Submit record Specifications as annotated PDF electronic file, paper copy, or scanned PDF electronic file(s) of marked-up paper copy of Specifications as acceptable to the Architect and the Owner.

1.6 RECORD PRODUCT DATA

A. Recording: Maintain one copy of each submittal during the construction period for project record document purposes. Post changes and revisions to project record documents as they occur; do not wait until end of Project.

B. Preparation: Mark Product Data to indicate the actual product installation where installation varies substantially from that indicated in Product Data submittal.

1. Give particular attention to information on concealed products and installations that cannot be readily identified and recorded later.
2. Include significant changes in the product delivered to Project site and changes in manufacturer's written instructions for installation.
3. Note related Change Orders, record Specifications, and record Drawings where applicable.

C. Format: Submit record Product Data as annotated PDF electronic file, paper copy, or scanned PDF electronic file(s) of marked-up paper copy of Product Data as acceptable to the Architect and the Owner.

1. Include record Product Data directory organized by Specification Section number and title, electronically linked to each item of record Product Data.

1.7 MISCELLANEOUS RECORD SUBMITTALS

A. Assemble miscellaneous records required by other Specification Sections for miscellaneous record keeping and submittal in connection with actual performance of the Work. Bind or file miscellaneous records and identify each, ready for continued use and reference.

B. Format: Submit miscellaneous record submittals as PDF electronic file, paper copy, or scanned PDF electronic file(s) of marked-up miscellaneous record submittals as acceptable to the Architect and the Owner.

1. Include miscellaneous record submittals directory organized by Specification Section number and title, electronically linked to each item of miscellaneous record submittals.

1.8 MAINTENANCE OF RECORD DOCUMENTS

A. Maintenance of Record Documents: Store record documents in the field office apart from the Contract Documents used for construction. Do not use project record documents for construction purposes. Maintain record documents in good order and in a clean, dry, legible

condition, protected from deterioration and loss. Provide access to project record documents for Architect's and Construction Manager's reference during normal working hours.

PART 2 - PRODUCTS

PART 3 - EXECUTION

END OF SECTION 017839

SECTION 017900 - DEMONSTRATION AND TRAINING

PART 1 - GENERAL

1.1 RELATED DOCUMENTS

A. Drawings and general provisions of the Contract, including General and Supplementary Conditions and other Division 01 Specification Sections, apply to this Section.

1.2 SUMMARY

A. Section includes administrative and procedural requirements for instructing Owner's personnel, including the following:

1. Instruction in operation and maintenance of systems, subsystems, and equipment.
2. Demonstration and training video recordings.

1.3 INFORMATIONAL SUBMITTALS

A. Instruction Program: Submit outline of instructional program for demonstration and training, including a list of training modules and a schedule of proposed dates, times, length of instruction time, and instructors' names for each training module. Include learning objective and outline for each training module.

1. Indicate proposed training modules using manufacturer-produced demonstration and training video recordings for systems, equipment, and products in lieu of video recording of live instructional module.

B. Qualification Data: For facilitator and instructor.

C. Attendance Record: For each training module, submit list of participants and length of instruction time.

D. Evaluations: For each participant and for each training module, submit results and documentation of performance-based test.

1.4 CLOSEOUT SUBMITTALS

A. Demonstration and Training Video Recordings: Submit two copies within seven days of end of each training module.

1. Identification: On each copy, provide an applied label with the following information:

a. Name of Project.

b. Name and address of videographer.
c. Name of Architect.
d. Name of Construction Manager.
e. Name of Contractor.
f. Date of video recording.

2. Transcript: Prepared and bound in format matching operation and maintenance manuals. Mark appropriate identification on front and spine of each binder. Include a cover sheet with same label information as the corresponding video recording. Include name of Project and date of video recording on each page.
3. Transcript: Prepared in PDF electronic format. Include a cover sheet with same label information as the corresponding video recording and a table of contents with links to corresponding training components. Include name of Project and date of video recording on each page.
4. At completion of training, submit complete training manual(s) for Owner's use prepared in same paper and PDF file format required for operation and maintenance manuals specified in Section 017823 "Operation and Maintenance Data."

1.5 QUALITY ASSURANCE

A. Facilitator Qualifications: A firm or individual experienced in training or educating maintenance personnel in a training program similar in content and extent to that indicated for this Project, and whose work has resulted in training or education with a record of successful learning performance.

B. Instructor Qualifications: A factory-authorized service representative, complying with requirements in Section 014000 "Quality Requirements," experienced in operation and maintenance procedures and training.

C. Preinstruction Conference: Conduct conference at Project site to comply with requirements in Section 013100 "Project Management and Coordination." Review methods and procedures related to demonstration and training including, but not limited to, the following:

1. Inspect and discuss locations and other facilities required for instruction.
2. Review and finalize instruction schedule and verify availability of educational materials, instructors' personnel, audiovisual equipment, and facilities needed to avoid delays.
3. Review required content of instruction.
4. For instruction that must occur outside, review weather and forecasted weather conditions and procedures to follow if conditions are unfavorable.

1.6 COORDINATION

A. Coordinate instruction schedule with Owner's operations. Adjust schedule as required to minimize disrupting Owner's operations and to ensure availability of Owner's personnel.

B. Coordinate instructors, including providing notification of dates, times, length of instruction time, and course content.

C. Coordinate content of training modules with content of approved emergency, operation, and maintenance manuals. Do not submit instruction program until operation and maintenance data have been reviewed and approved by Architect.

1.7 INSTRUCTION PROGRAM

A. Program Structure: Develop an instruction program that includes individual training modules for each system and for equipment not part of a system, as required by individual Specification Sections.

B. Training Modules: Develop a learning objective and teaching outline for each module. Include a description of specific skills and knowledge that participant is expected to master. For each module, include instruction for the following as applicable to the system, equipment, or component:

1. Basis of System Design, Operational Requirements, and Criteria: Include the following:

    a. System, subsystem, and equipment descriptions.
    b. Performance and design criteria if Contractor is delegated design responsibility.
    c. Operating standards.
    d. Regulatory requirements.
    e. Equipment function.
    f. Operating characteristics.
    g. Limiting conditions.
    h. Performance curves.

2. Documentation: Review the following items in detail:

    a. Emergency manuals.
    b. Systems and equipment operation manuals.
    c. Systems and equipment maintenance manuals.
    d. Product maintenance manuals.
    e. Project Record Documents.
    f. Identification systems.
    g. Warranties and bonds.
    h. Maintenance service agreements and similar continuing commitments.

3. Emergencies: Include the following, as applicable:

    a. Instructions on meaning of warnings, trouble indications, and error messages.
    b. Instructions on stopping.
    c. Shutdown instructions for each type of emergency.
    d. Operating instructions for conditions outside of normal operating limits.
    e. Sequences for electric or electronic systems.
    f. Special operating instructions and procedures.

4. Operations: Include the following, as applicable:

    a. Startup procedures.

b. Equipment or system break-in procedures.
c. Routine and normal operating instructions.
d. Regulation and control procedures.
e. Control sequences.
f. Safety procedures.
g. Instructions on stopping.
h. Normal shutdown instructions.
i. Operating procedures for emergencies.
j. Operating procedures for system, subsystem, or equipment failure.
k. Seasonal and weekend operating instructions.
l. Required sequences for electric or electronic systems.
m. Special operating instructions and procedures.

5. Adjustments: Include the following:

a. Alignments.
b. Checking adjustments.
c. Noise and vibration adjustments.
d. Economy and efficiency adjustments.

6. Troubleshooting: Include the following:

a. Diagnostic instructions.
b. Test and inspection procedures.

7. Maintenance: Include the following:

a. Inspection procedures.
b. Types of cleaning agents to be used and methods of cleaning.
c. List of cleaning agents and methods of cleaning detrimental to product.
d. Procedures for routine cleaning.
e. Procedures for preventive maintenance.
f. Procedures for routine maintenance.
g. Instruction on use of special tools.

8. Repairs: Include the following:

a. Diagnosis instructions.
b. Repair instructions.
c. Disassembly; component removal, repair, and replacement; and reassembly instructions.
d. Instructions for identifying parts and components.
e. Review of spare parts needed for operation and maintenance.

1.8 PREPARATION

A. Assemble educational materials necessary for instruction, including documentation and training module. Assemble training modules into a training manual organized in coordination with requirements in Section 017823 "Operation and Maintenance Data."

B. Set up instructional equipment at instruction location.

1.9 INSTRUCTION

A. Facilitator: Engage a qualified facilitator to prepare instruction program and training modules, to coordinate instructors, and to coordinate between Contractor and Owner for number of participants, instruction times, and location.

B. Engage qualified instructors to instruct Owner's personnel to adjust, operate, and maintain systems, subsystems, and equipment not part of a system.

1. Architect will furnish an instructor to describe basis of system design, operational requirements, criteria, and regulatory requirements.
2. At Owner’s option, the Owner may furnish an instructor to describe Owner's operational philosophy.
3. Owner will furnish Contractor with names and positions of participants.

C. Scheduling: Provide instruction at mutually agreed-on times. For equipment that requires seasonal operation, provide similar instruction at start of each season.

1. Schedule training with Owner, through Architect, through Construction Manager, with at least seven days' advance notice.

D. Training Location and Reference Material: Conduct training on-site in the completed and fully operational facility using the actual equipment in-place. Conduct training using final operation and maintenance data submittals.

E. Evaluation: At conclusion of each training module, assess and document each participant's mastery of module by use of an oral, a written, or a demonstration performance-based test.

F. Cleanup: Collect used and leftover educational materials and give to Owner. Remove instructional equipment. Restore systems and equipment to condition existing before initial training use.

1.10 DEMONSTRATION AND TRAINING VIDEO RECORDINGS

A. Digital Video Recordings: Provide high-resolution, digital video in MPEG format, produced by a digital camera with minimum sensor resolution of 12 megapixels and capable of recording in full HD mode with vibration reduction technology.

1. Submit video recordings on CD-ROM or thumb drive.
2. File Hierarchy: Organize folder structure and file locations according to Project Manual table of contents. Provide complete screen-based menu.
3. File Names: Utilize file names based on name of equipment generally described in video segment, as identified in Project specifications.

4. Contractor and Installer Contact File: Using appropriate software, create a file for inclusion on the equipment demonstration and training recording that describes the following for each Contractor involved on the Project, arranged according to Project Manual table of contents:

    a. Name of Contractor/Installer.
    b. Business address.
    c. Business phone number.
    d. Point of contact.
    e. Email address.

B. Recording: Mount camera on tripod before starting recording, unless otherwise necessary to adequately cover area of demonstration and training. Display continuous running time.

1. Film training session(s) in segments not to exceed 15 minutes.

    a. Produce segments to present a single significant piece of equipment per segment.
    b. Organize segments with multiple pieces of equipment to follow order of Project Manual table of contents.
    c. Where a training session on a particular piece of equipment exceeds 15 minutes, stop filming and pause training session. Begin training session again upon commencement of new filming segment.

C. Light Levels: Verify light levels are adequate to properly light equipment. Verify equipment markings are clearly visible prior to recording.

1. Furnish additional portable lighting as required.

D. Narration: Describe scenes on video recording by audio narration by microphone while or dubbing audio narration off-site after video recording is recorded. Include description of items being viewed.

E. Transcript: Provide a transcript of the narration. Display images and running time captured from videotape opposite the corresponding narration segment.

F. Preproduced Video Recordings: Provide video recordings used as a component of training modules in same format as recordings of live training.

PART 2 - PRODUCTS

PART 3 - EXECUTION

END OF SECTION 017900

SECTION 03 30 00
CAST-IN-PLACE CONCRETE

PART 1 - GENERAL

1.1 SUMMARY

A. Section Includes:
   1. Cast-in-place structural concrete.
   2. Slab on grade.
   3. Foundation walls.
   4. Footings.
   5. Equipment pads.
   6. Preparation of existing surfaces to receive concrete.
   7. Preparation of existing surface to received concrete topping.

1.2 RELATED REQUIREMENTS

1.3 APPLICABLE PUBLICATIONS

A. Comply with references to extent specified in this Section.

B. American Concrete Institute (ACI):
   1. 117-15 - Tolerances for Concrete Construction, Materials and Commentary.
   2. 117M-10(R2015) - Tolerances for Concrete Construction, Materials and Commentary.
   3. 211.1-91(R2009) - Proportions for Normal, Heavyweight, and Mass Concrete.
   4. 211.2-98(R2004) - Selecting Proportions for Structural Lightweight Concrete.
   5. 301/310M-10 - Structural Concrete.
   6. 305.1-14 - Hot Weather Concreting.
   7. 306.1-90(R2002) - Cold Weather Concreting.
   8. 318/318M-14 - Building Code Requirements for Structural Concrete and SP-66-04-ACI Detailing Manual.
   9. 347-04 - Guide to Formwork for Concrete.

C. ASTM International(ASTM):
   1. A615/A615M-15ae1 - Deformed and Plain Carbon-Steel Bars for Concrete Reinforcement.

2. A996/A996M-15 - Rail-Steel and Axle-Steel Deformed Bars for Concrete Reinforcement.
3. A1064/A1064M-15 - Carbon-Steel Wire and Welded Wire Reinforcement, Plain and Deformed, for Concrete.
4. C33/C33M-13 - Concrete Aggregates.
5. C39/C39M-15a - Compressive Strength of Cylindrical Concrete Specimens.
6. C94/C94M-15a - Ready-Mixed Concrete.
7. C143/C143M-15 - Slump of Hydraulic Cement Concrete.
8. C150/C150M-15 - Portland Cement.
9. C171-07 - Sheet Material for Curing Concrete.
10. C192/C192M-15 - Making and Curing Concrete Test Specimens in the Laboratory.
11. C219-14a - Terminology Relating to Hydraulic Cement.
12. C260/C260M-10a - Air-Entraining Admixtures for Concrete.
13. C330/C330M-14 - Lightweight Aggregates for Structural Concrete.
14. C494/C494M-15 - Chemical Admixtures for Concrete.
15. C618-15 - Coal Fly Ash and Raw or Calcined Natural Pozzolan for Use in Concrete.
16. C881/C881M-14 - Epoxy-Resin-Base Bonding Systems for Concrete.
17. C989/C989M-14 - Slag Cement for Use in Concrete and Mortars.
18. C1240-15 - Silica Fume Used in Cementitious Mixtures.
19. D1751-04(2013el) - Preformed Expansion Joint Fillers for Concrete Paving and Structural Construction (Non-extruding and Resilient Bituminous Types).
20. E1155-14 - Determining FF Floor Flatness and FL Floor Levelness Numbers.
21. E1745-11 - Water Vapor Retarders Used in Contact with Soil or Granular Fill under Concrete Slabs.

D. International Concrete Repair Institute:
1. 310.2R-2013 - Selecting and Specifying Concrete Surface Preparation for Sealers, Coatings, Polymer Overlays, and Concrete Repair.

1.4 SUBMITTALS

A. Submittal Procedures: Section 01 33 23, SHOP DRAWINGS, PRODUCT DATA, AND SAMPLES.

B. Submittal Drawings:

1. Large scale drawings of reinforcing steel.

C. Manufacturer's Literature and Data:
   1. Concrete Mix Design.
   2. Air-entraining admixture, chemical admixtures, and curing compounds.
   3. Indicate manufacturer's recommendation for each application.

D. Sustainable Construction Submittals:
   1. Recycled Content: Identify post-consumer and pre-consumer recycled content percentage by weight.

E. Certificates: Certify products comply with specifications.
   a. Each ready mix concrete batch delivered to site.

1.5 DELIVERY

A. Deliver each ready-mixed concrete batch with mix certification in duplicate according to ASTM C94/C94M.

1.6 WARRANTY

A. Construction Warranty: FAR clause 52.246-21, "Warranty of Construction."

PART 2 - PRODUCTS

2.1 MATERIALS

A. Portland Cement: ASTM C150/C150M, Type I or II.

B. Pozzolans:
   1. Fly Ash: ASTM C618, Class C or F including supplementary optional physical requirements.
   2. Slag: ASTM C989/C989M; Grade 80.
   3. Silica Fume: ASTM C1240.

C. Coarse Aggregate: ASTM C33/C33M.
   1. Size 467 for footings and walls over 300 mm (12 inches) thick.
   2. Size 7 for coarse aggregate for applied topping and metal pan stair fill.
   3. Size 67 for other applications.

D. Fine Aggregate: ASTM C33/C33M.

E. Lightweight Aggregate for Structural Concrete: ASTM C330/C330M, Table 1.

F. Mixing Water: Fresh, clean, and potable.

G. Air-Entraining Admixture: ASTM C260/C260M.

H. Chemical Admixtures: ASTM C494/C494M.

I. Vapor Barrier: ASTM E1745, Class A with a minimum puncture resistance of 2200 g (3000 lbs.); minimum 0.38 mm (15 mil) thick.

J. Reinforcing Steel: ASTM A615/A615M or ASTM A996/A996M, deformed. See Structural Drawings for grade.

K. Forms: Wood, plywood, metal, or other materials, approved by COR, of grade or type suitable to obtain type of finish specified.

1. Plywood: Exterior grade, free of defects and patches on contact surface.
2. Lumber: Sound, grade-marked, S4S stress graded softwood.
3. Form coating: As recommended by Contractor.

L. Welded Wire Fabric: ASTM A1064/A1064M, plain, sized as indicated.

M. Expansion Joint Filler: ASTM D1751.

N. Sheet Materials for Curing Concrete: ASTM C171.

O. Abrasive Aggregates: Aluminum oxide grains or emery grits.

P. Liquid Densifier/Sealer: 100 percent active colorless aqueous siliconate solution.

Q. Grout, Non-Shrinking: Premixed ferrous or non-ferrous. Grout to show no settlement or vertical drying shrinkage at 3 days. Compressive strength for grout, at least 18 MPa (2500 psi) at 3 days and 35 MPa (5000 psi) at 28 days.

2.2 ACCESSORIES

A. Bonding Agent: ASTM C 1059/C 1059M, Type II.

B. Structural Adhesive: ASTM C881, 2-component material suitable for use on dry or damp surfaces. Provide material Type, Grade, and Class to suit Project requirements.

C. Water Stops: Rubber base with self-healing properties. Expanding clay based products not acceptable.

D. Weeps: Geotextile type as recommended by Contractor and approved by COR

2.3 CONCRETE MIXES

A. Design concrete mixes according to ASTM C94/C94M, Option C.

B. Compressive strength at 28 days: minimum 25 MPa (3,000 psi).

C. Submit mix design and results of compression tests to the COR for his evaluation. Identify all materials, including admixtures, making-up the concrete.

D. Maximum Slump for Vibrated Concrete: 100 mm (4 inches) tested according to ASTM C143.

E. Cement and Water Factor (See Table I):

TABLE I - CEMENT AND WATER FACTORS FOR CONCRETE				
Concrete: Strength	Non-Air-Entrained		Air-Entrained	
Min. 28 Day Comp. Str. MPa (psi)	Min. Cement kg/cu. m (lbs./cu. yd.)	Max. Water Cement Ratio	Min. Cement kg/cu. m (lbs./cu. yd.)	Max. Water Cement Ratio
35 (5000)1,3	375 (630)	0.45	385 (650)	0.40
30 (4000)1,3	325 (550)	0.55	340 (570)	0.50
25 (3000)1,3	280 (470)	0.65	290 (490)	0.55
25 (3000)1,2	300 (500)	*	310 (520)	*

Footnotes:

1. If trial mixes are used, achieve a compressive strength 8.3 MPa (1 200 psi) in excess of f'c. For concrete strengths greater than 35 MPa (5,000 psi), achieve a compressive strength 9.7 MPa (1,400 psi) in excess of f'c.
2. Lightweight Structural Concrete: Pump mixes may require higher cement values as specified in ACI 318/318M.
3. For Concrete Exposed to High Sulfate Content Soils: Maximum water cement ratio is 0.44.

* Laboratory Determined according to ACI 211.1 for normal weight concrete or ACI 211.2 for lightweight structural concrete.

F. Air-entrainment as specified, and conform with the following for air content table:

TABLE II - TOTAL AIR CONTENT FOR VARIOUS SIZES OF COARSE AGGREGATES	
Nominal Maximum Size of Coarse Aggregate	Total Air Content, percent
10 mm (3/8 inches)	6 Moderate exposure; 7.5 severe exposure
13 mm (1/2 inches)	5.5 Moderate exposure; 7 severe exposure
19 mm (3/4 inches)	5 Moderate exposure; 6 severe exposure

TABLE II - TOTAL AIR CONTENT FOR VARIOUS SIZES OF COARSE AGGREGATES	
Nominal Maximum Size of Coarse Aggregate	Total Air Content, percent
25 mm (1 inches)	4.5 Moderate exposure; 6 severe exposure
40 mm (1 1/2 inches)	4.5 Moderate exposure; 5.5 severe exposure

2.4 BATCHING AND MIXING

A. Store, batch, and mix materials according to ASTM C94/C94M.
   1. Job-Mixed: Batch mix concrete in stationary mixers as specified in ASTM C94/C94M.
   2. Ready-Mixed Concrete: Comply with ASTM C94/C94M, except use of non-agitating equipment for transporting concrete to Site is not acceptable.
   3. Mixing Structural Lightweight Concrete: Charge mixer with 2/3 of total mixing water and total aggregate for each batch. Mix ingredients minimum 30 seconds in stationary mixer or minimum 10 revolutions at mixing speed in truck mixer. Add remaining mixing water and other ingredients and continue mixing. Above procedure shall be modified as recommended by aggregate producer.
   4. When aggregate producer's instructions deviate from specifications, submit proposed resolution for Contracting Officer's Representative consideration.

PART 3 - EXECUTION

3.1 FORMWORK

A. Installation: Conform to ACI 347. Construct forms to obtain concrete of the shapes, dimensions and profiles indicated, with tight joints.
B. Design and construct forms to prevent bowing-out of forms between supports and to be removable without prying against or otherwise damaging fresh concrete.
C. When patching formed concrete, seal form edges against existing surface to prevent leakage; set forms so that patch is flush with adjacent surfaces.
D. Treating and Wetting: Treat or wet concrete contact surfaces:

1. Coat plywood and lumber forms with non-staining form sealer.
2. Wet wood forms thoroughly when they are not treated with form release agent.
3. Prevent water from accumulating and remaining within forms.
4. Clean and coat removable metal forms with light form oil before reinforcement is placed.
5. In hot weather, cool metal forms by thoroughly wetting with water just before placing concrete.
6. Prevent water from accumulating and remaining within forms.

E. Inserts, Sleeves, and Similar Items: Install flashing reglets, masonry ties, anchors, inserts, wires, hangers, sleeves, boxes for floor hinges, and other cast-in items specified in other Sections. Place where indicated, square, flush and secured to formwork.

F. Construction Tolerances - General: Install and maintain concrete formwork to assure completion of work within specified tolerances.

G. Adjust or replace completed work exceeding specified tolerances before placing concrete.

3.2 REINFORCEMENT

A. Install concrete reinforcement according to ACI 318 and ACI SP-66.

B. Support and securely tie reinforcing steel to prevent displacement during placing of concrete.

C. Drilling for Dowels in Existing Concrete: Use sharp bits, drill hole slightly oversize, fill with epoxy grout, inset the dowel, and remove excess epoxy.

3.3 VAPOR BARRIER

A. Except where membrane waterproofing is required, place interior concrete slabs on a continuous vapor barrier.

B. Lap joints 150 mm (6 inches) and seal with a compatible pressure-sensitive tape.

C. Patch punctures and tears.

3.4 PLACING CONCRETE

A. Remove water from excavations before concrete is placed. Remove hardened concrete, debris and other foreign materials from interior of forms, and from inside of mixing and conveying equipment. Obtain

approval from Contracting Officer's Representative before placing concrete.

B. Install screeds at required elevations for concrete slabs.

C. Roughen and clean free from laitance, foreign matter, and loose particles before placing new concrete on existing concrete.

1. Blow-out areas with compressed air and immediately coat contact areas with adhesive in compliance with manufacturer's instructions.

D. Place structural concrete according to ACI 301 and ACI 318.

E. Convey concrete from mixer to final place of deposit by method that shall prevent segregation or loss of ingredients. Do not deposit, in Work, concrete that has attained its initial set or has contained its water or cement more than 1 1/2 hours. Do not allow concrete to drop freely more than 1500 mm (5 feet) in unexposed work nor more than 900 mm (3 feet) in exposed work.

F. Place and consolidate concrete in horizontal layers not exceeding 300 mm (12 inches) in thickness. Consolidate concrete by spading, rodding, and mechanical vibrator. Do not secure vibrator to forms or reinforcement. Continuously vibrate during placement of concrete.

G. Concrete Fill in Stair Tread and Landing Pans: Coat steel with bonding agent and fill pans with concrete. Reinforce with 2 inch by 2 inch by 1.6 mm (0.06 inch) welded wire mesh at midpoint.

H. Hot Weather Concrete Placement: As recommended by ACI 305.1 to prevent adversely affecting properties and serviceability of hardened concrete.

I. Cold Weather Concrete Placement: As recommended by ACI 306.1, to prevent freezing of thin sections less than 300 mm (12 inches) and to permit concrete to gain strength properly.

1. Do not use calcium chloride without written approval from Contracting Officer's Representative.

3.5 TOLERANCES

A. Slab on Grade Finish Tolerance: Comply with ACI 117, FF-number and FL-number method.

1. Paragraph 4.8.3, Class A 3 mm (1/8 inches) for offset in form-work.
2. Table R4.8.4, "Flat" 6 mm (1/4 inch) in 3 m (10 feet) for slabs.

3.6 PROTECTION AND CURING

A. Protect exposed surfaces of concrete from premature drying, wash by rain or running water, wind, mechanical damage, and excessive hot or cold temperatures.

B. Curing Methods: Cure concrete with curing compound using wet method with sheets.

C. Formed Concrete Curing: Wet the tops and exposed portions of formed concrete and keep moist until forms are removed.

1. If forms are removed before 14 days after concrete is cast, install sheet curing materials as specified above.

D. Concrete Flatwork Curing:

1. Install sheet materials according to the manufacturer's instructions.

a. When manufacturer's instructions deviate from specifications, submit proposed resolution for Contracting Officer's Representative consideration.

3.7 FORM REMOVAL

A. Maintain forms in place until concrete is self-supporting, with construction operation loads.

B. Remove fins, laitance and loose material from concrete surfaces when forms are removed. Repair honeycombs, rock pockets, sand runs, spalls, or otherwise damaged surfaces by patching with the same mix as concrete minus the coarse aggregates.

C. Finish to match adjacent surfaces.

3.8 FINISHES

A. Vertical and Overhead Surface Finishes:

1. Surfaces Concealed in Completed Construction: As-cast; no additional finishing required.

2. Surfaces Exposed in Unfinished Areas: As-cast; no additional finishing required.

a. Mechanical rooms.

b. Electrical rooms.

3. Surfaces Exposed to View Scheduled for Paint Finish: Remove fins, burrs and similar projections by mechanical means approved by Contracting Officer's Representative flush with adjacent surface. Lightly rub with fine abrasive stone or hone. Use ample amount of

water during rubbing without working up a lather of mortar or changing texture of concrete.

4. Surfaces Exposed to View in Finished Areas: Grout finish, unless otherwise shown, for uniform color and smooth finish treated.
   a. Remove laitance, fins and burrs.
   b. Scrub concrete with wire brushes. Clean stained concrete surfaces with hone or stone.
   c. Apply grout composed of 1 part Portland cement and 1 part clean, fine sand (smaller than 600 micro-m (No. 30) sieve). Work grout into surface of concrete with cork floats or fiber brushes until pits and honeycomb are filled.
   d. After grout has hardened, but is still plastic, remove surplus grout with sponge rubber float and by rubbing with clean burlap.
   e. In hot, dry weather fog spray surfaces with water to keep grout wet during setting period. Complete finished areas in same day. Confine limits of finished areas to natural breaks in wall surface. Do not leave grout on concrete surface overnight.

B. Slab Finishes:
   1. Allow bleed water to evaporate before surface is finished. Do not sprinkle dry cement on surface to absorb water.
   2. Scratch Finish: Rake or wire broom after partial setting slab surfaces to received bonded applied cementitious application, within 2 hours after placing, to roughen surface and provide permanent bond between base slab and applied cementitious materials.
   3. Float Finish: Interior ramps, interior stair treads, and platforms, both equipment pads, and slabs to receive non-cementitious materials, except as specified.
      a. Screen and float to smooth dense finish.
      b. After first floating, while surface is still soft, check surfaces for alignment using straightedge or template. Correct high spots by cutting down with trowel or similar tool. Correct low spots by filling in with material same composition as floor finish. Remove any surface projections on floated finish by rubbing or dry grinding. Refloat slab to uniform sandy texture.
   4. Steel Trowel Finish: Applied toppings, concrete surfaces to receive resilient floor covering or carpet, future floor roof and other

monolithic concrete floor slabs exposed to view without other finish indicated or specified.

a. Delay final steel troweling to secure smooth, dense surface, usually when surface can no longer be dented by fingers. During final troweling, tilt steel trowel at slight angle and exert heavy pressure on trowel to compact cement paste and form dense, smooth surface.

b. Finished surface: Free from trowel marks. Uniform in texture and appearance.

5. Broom Finish: Finish exterior slabs, ramps, and stair treads with bristle brush moistened with clear water after surfaces have been floated.

6. Finished Slab Flatness (FF) and Levelness (FL):

a. Slab on Grade: Specified overall value FF 25/FL 20. Minimum local value FF 17/FL 15.

b. Test flatness and levelness according to ASTM E1155.

3.9 SURFACE TREATMENTS

A. Mix and apply the following surface treatments according to manufacturer's instructions.

1. When manufacturer's instructions deviate from specifications, submit proposed resolution for Contracting Officer's Representative consideration.

B. Liquid Densifier/Sealer: Use for exposed concrete floors and concrete floors to receive carpeting except those specified to receive non-slip finish.

C. Slip Resistant Finish:

1. Except where safety nosing and tread coverings are shown, apply abrasive aggregate to treads and platforms of concrete steps and stairs, and to surfaces of exterior concrete ramps and platforms.

a. Broadcast aggregate uniformly over concrete surface. Trowel concrete surface to smooth dense finish. After curing, rub treated surface with abrasive brick and water sufficiently to slightly expose abrasive aggregate.

3.10 APPLIED TOPPING

A. Install concrete topping with thickness and strength shown with only enough water to ensure stiff, workable, plastic mix.

B. Continuously place applied topping until entire area is complete, struck off with straightedge, compact by rolling or tamping, float and steel trowel to hard smooth finish.

3.11 RESURFACING FLOORS

A. Remove existing flooring by abrasive blasting or grinding, in areas to receive resurfacing, to expose existing structural slab. Achieve a surface profile of 2 to 4 according to ICRI 310.2R for the condition found at Site.

B. Prepare exposed structural slab surface by cleaning, wetting, and applying adhesive according to manufacturer's instructions as specified in the flooring section.

3.12 FOUNDATION WALL INFILL

A. Install air-entrained concrete at foundation wall infill, as indicated.

B. Install expansion and contraction joints, waterstops, weep holes, reinforcement and railing sleeves, as indicated.

C. Finish exposed surfaces to match adjacent concrete surfaces, new or existing.

D. Place porous backfill, as indicated on Drawings.

- - E N D - -

SECTION 034900 - GLASS-FIBER-REINFORCED CONCRETE (GFRC)

PART 1 - GENERAL

1.1 RELATED DOCUMENTS

A. Drawings and general provisions of the Contract, including General and Supplementary Conditions and Division 01 Specification Sections, apply to this Section.

1.2 SUMMARY

A. Section includes glass-fiber-reinforced concrete (GFRC) shapes consisting of GFRC, shape frames, anchors, and connection hardware.

1. GFRC shapes include exterior column covers.

B. Related Requirements:

1. Section 033000 "Cast-in-Place Concrete" for embedding weld plates and angles in concrete for attaching connection devices.
2. Section 051200 "Structural Steel Framing" for attaching connection devices to steel framing.
3. Section 079200 "Joint Sealants" for elastomeric joint sealants and sealant backings.

1.3 ACTION SUBMITTALS

A. Product Data: For each type of product. Include GFRC design mixes.

B. Shop Drawings: Show fabrication and installation details for GFRC shapes including the following:

1. Shape elevations, sections, and dimensions.
2. Thickness of facing mix, GFRC backing, and bonding pads for typical shapes.
3. Finishes.
4. Joint and connection details.
5. Erection details.
6. Shape frame details for typical shapes including sizes, spacings, thicknesses, and yield strengths of various members.
7. Locations and details of connection hardware attached to structure.
8. Sizes, locations, and details of flex, gravity, and seismic anchors for typical shapes.
9. Other items sprayed into shapes.
10. Erection sequence for special conditions.
11. Relationship to adjacent materials.
12. Description of loose, cast-in, and field hardware.

C. Samples for Verification: For each type of finish indicated on exposed GFRC surfaces, representative of finish, color, and texture variations expected, approximately 12 by 12 inches by actual thickness.

1.4 INFORMATIONAL SUBMITTALS

A. Qualification Data: For manufacturer.

B. Welding certificates.

C. Mill Certificates: For structural-steel shapes and hollow structural sections used in shape framing.

D. Source Quality-Control Program: For GFRC manufacturer.

E. Source Quality-Control Test Reports: For GFRC, inserts, and anchors.

1.5 QUALITY ASSURANCE

A. Manufacturer Qualifications: Designated a PCI-certified plant for Group G - Glass Fiber Reinforced Concrete or designated an APA-certified plant for GFRC production.

B. Installer Qualifications: Manufacturer of GFRC shapes.

C. Welding Qualifications: Qualify procedures and personnel according to AWS D1.1/D1.1M, "Structural Welding Code - Steel," and AWS D1.3/D1.3M, "Structural Welding Code - Sheet Steel."

D. Mockups: Build mockups to demonstrate aesthetic effects and to set quality standards for fabrication and installation.

1. Build mockup of typical wall area as shown on Drawings.

    a. Include typical components, attachments to building structure, and methods of installation.
    b. Include window opening with GFRC returns.
    c. Include sealant-filled joint complying with requirements in Section 079200 "Joint Sealants."

2. Subject to compliance with requirements, approved mockups may become part of the completed Work if undisturbed at time of Substantial Completion.

1.6 DELIVERY, STORAGE, AND HANDLING

A. Handle and transport GFRC shapes supported on nonstaining material and with nonstaining resilient spacers between shapes.

B. Store GFRC shapes off of ground on firm, level, and smooth surfaces supported on nonstaining material and with nonstaining resilient spacers between shapes. Place stored shapes so identification marks are clearly visible.

PART 2 - PRODUCTS

2.1 MANUFACTURERS

A. Source Limitations: Obtain GFRC shapes from single source from single manufacturer.

2.2 PERFORMANCE REQUIREMENTS

A. Structural Performance: GFRC shapes, including shape frames, anchors, and connections, shall withstand the following design loads as well as the effects of thermal- and moisture-induced dimensional changes within limits and under conditions indicated:

1. Loads: As indicated on Structural Drawings.
2. Deflection Limits: Design shape frames to withstand design loads without lateral deflections greater than 1/240 of wall span.
3. Thermal Movements: Provide for thermal movements resulting from annual ambient temperature changes of 80 deg F.

B. PCI Manuals: Comply with requirements and recommendations in the following PCI manuals unless more stringent requirements are indicated:

1. PCI MNL 130, "Manual for Quality Control for Plants and Production of Glass Fiber Reinforced Concrete Products."

C. AISI Specifications: Comply with AISI's "North American Specification for the Design of Cold-Formed Steel Structural Members."

2.3 MOLD MATERIALS

A. Molds: Rigid, dimensionally stable, non-absorptive material, warp and buckle free, that provides continuous GFRC surfaces within tolerances; nonreactive with GFRC and capable of producing required finish surfaces.

1. Mold-Release Agent: Commercially produced liquid-release agent that does not bond with, stain, or adversely affect GFRC surfaces and does not impair subsequent surface or joint treatments of GFRC.

B. Form Liners: Units of face design, texture, arrangement, and configuration indicated. Provide solid backing and form supports to ensure that form liners remain in place during GFRC application. Use with manufacturer's recommended liquid-release agent that does not bond with, stain, or adversely affect GFRC surfaces and does not impair subsequent surface or joint treatments of GFRC.

C. Surface Retarder: Chemical liquid-set retarder capable of temporarily delaying hardening of newly placed GFRC face mix to depth of reveal specified.

2.4 GFRC MATERIALS

A. Portland Cement: ASTM C 150/C 150M; Type I, II, or III.

1. For surfaces exposed to view in finished structure, use gray or white of same type, brand, and source throughout GFRC production.

B. Glass Fibers: Alkali resistant, with a minimum zirconia content of 16 percent, 1 to 2 inches long, specifically produced for use in GFRC, and complying with ASTM C 1666/C 1666M.

C. Sand: Washed and dried silica, complying with composition requirements in ASTM C 144; passing a No. 20 sieve with a maximum of 2 percent passing a No. 100 sieve.

D. Facing Aggregate: ASTM C 33/C 33M, except for gradation, and PCI MNL 130, 1/4-inch maximum size.

1. Aggregates: Selected, hard, and durable; free of material that reacts with cement or causes staining; to match sample.
2. Fine Aggregate: Natural or manufactured sand with a maximum of 5 percent passing a No. 100 sieve and a maximum of 3 percent passing a No. 200 sieve.

E. Coloring Admixture: ASTM C 979/C 979M, synthetic mineral-oxide pigments or colored water-reducing admixtures, temperature stable, nonfading, and alkali resistant.

F. Water: Potable; free from deleterious material that may affect color stability, setting, or strength of GFRC and complying with chemical limits in PCI MNL 130.

G. Polymer-Curing Admixture: Acrylic thermoplastic copolymer dispersion complying with PCI MNL 130.

H. Air-Entraining Admixture: ASTM C 260/C 260M, containing not more than 0.1 percent chloride ions.

I. Chemical Admixtures: ASTM C 494/C 494M, containing not more than 0.1 percent chloride ions.

2.5 ANCHORS, CONNECTORS, AND MISCELLANEOUS MATERIALS

A. Stainless-Steel Plates: ASTM A 240/A 240M or ASTM A 666, Type 304.

B. Carbon-Steel Shapes and Plates: ASTM A 36/A 36M, finished as follows:

1. Finish: Zinc coated by hot-dip process according to ASTM A 123/A 123M, after fabrication, or ASTM A 153/A 153M, as applicable.

C. Stainless-Steel Bars and Shapes: ASTM A 276, Type 304.

D. Carbon-Steel Bars: ASTM A 108, Grade 1018, not less than 1/4 inch in diameter, finished as follows:

1. Finish: Zinc coated by hot-dip process according to ASTM A 123/A 123M, after fabrication, or ASTM A 153/A 153M, as applicable.

E. Malleable-Iron Castings: ASTM A 47/ A 47M, Grade 32510.

F. Carbon-Steel Castings: ASTM A 27/A 27M, Grade 60-30.

G. Bolts: ASTM A 307 or ASTM A 325, finished as follows:

1. Finish: Zinc coated by hot-dip process according to ASTM A 123/A 123M, after fabrication, and ASTM A 153/A 153M, as applicable.

2.6 SHAPE FRAME MATERIALS

A. Cold-Formed Steel Framing: Manufacturer's standard C-shaped steel studs, complying with AISI's "North American Specification for the Design of Cold-Formed Steel Structural Members," with minimum uncoated steel thickness of 0.053 inch [**of web depth indicated**]; with stiffened flanges, U-shaped steel track; and of the following steel sheet:

1. Metallic-Coated Steel Sheet: ASTM A 653/A 653M, structural-steel sheet, [**G60**] [**G90**] zinc coating, of grade required by structural performance of framing.
2. Painted, Nonmetallic-Coated Steel Sheet: ASTM A 1011/A 1011M, hot rolled; or ASTM A 1008/A 1008M, cold rolled; nonmetallic coated according to ASTM A 1003/A 1003M; of grade required by structural performance of framing.

B. Hollow Structural Sections: Steel tubing, ASTM A 500/A 500M, Grade B, or ASTM A 513, finished as follows:

1. Finish: Shop primed with organic zinc-rich primer complying with SSPC-Paint 20 on surfaces prepared to comply with SSPC-SP 6/NACE No. 3, "Commercial Blast Cleaning."
2. Finish: Shop primed with paint complying with MPI#79 on surfaces prepared to comply with SSPC-SP 2, "Hand Tool Cleaning," or better.

C. Steel Channels and Angles: ASTM A 36/A 36M, finished as follows:

1. Finish: Shop primed with organic zinc-rich primer complying with SSPC-Paint 20 on surfaces prepared to comply with SSPC-SP 6/NACE No. 3, "Commercial Blast Cleaning."
2. Finish: Shop primed with paint complying with MPI#79 on surfaces prepared to comply with SSPC-SP 2, "Hand Tool Cleaning," or better.

2.7 GFRC MIXES

A. Mist Coat: Portland cement, sand slurry, and admixtures; of same proportions as backing mix without glass fibers.

B. Face Mix: Proportion face mix of portland cement, sand, facing aggregates, and admixtures to comply with design requirements.

C. Backing Mix: Proportion backing mix of portland cement, glass fibers, sand, and admixtures to comply with design requirements. Provide nominal glass-fiber content of not less than 5 percent by weight of total mix.

D. Polymer-Curing Admixture: 6 to 7 percent by weight of polymer-curing admixture solids to dry portland cement.

E. Air Content: 8 to 10 percent; ASTM C 185.

F. Coloring Admixture: Not to exceed 10 percent of cement weight.

2.8 SHAPE FRAME FABRICATION

A. Fabricate shape frames and accessories plumb, square, true to line, and with components securely fastened.

1. Fabricate shape frames using jigs or templates.
2. Cut cold-formed metal framing members by sawing or shearing; do not torch cut.
3. Fasten cold-formed metal framing members by welding. Comply with AWS D1.3/D1.3M.
4. Fasten framing members of hollow structural sections, steel channels, or steel angles by welding. Comply with AWS D1.1/D1.1M.
5. Weld anchors to shape frames.

B. Reinforce framing assemblies, as necessary, to withstand erection stresses.

C. Galvanizing Repair: Touch up damaged galvanized surfaces according to ASTM A 780/A 780M.

D. Painting Repair: Touch up damaged painted surfaces using same primer.

2.9 MOLD FABRICATION

A. Construct molds that result in finished GFRC complying with profiles, dimensions, and tolerances indicated, without damaging GFRC during stripping. Construct molds to prevent water leakage and loss of cement paste.

1. Coat contact surfaces of molds with form-release agent.

B. Place form liners accurately to provide finished surface texture indicated. Provide solid backing and supports to maintain stability of liners during GFRC application. Coat form liner with form-release agent.

C. Locate, place, and secure flashing reglets accurately.

2.10 GFRC FABRICATION

A. Proportioning and Mixing: For backing mix, meter sand/cement slurry and glass fibers to spray head at rates to achieve design mix proportions and glass-fiber content according to PCI MNL 130 procedures.

B. Spray Application: Comply with general procedures as follows:

1. Spray or place face mix in thickness indicated on Shop Drawings.
2. Proceed with spraying backing mix before face mix has set, using procedures that produce a uniform thickness and even distribution of glass fibers and matrix.
3. Consolidate backing mix by rolling or other technique to achieve complete encapsulation of glass fibers and compaction.
4. Measure thickness with a pin gage or other acceptable method at least once for every 5 sq. ft. of shape surface. Take no fewer than six measurements per shape.

C. Hand form and consolidate intricate details, incorporate formers or infill materials, and overspray before material reaches initial set to ensure complete bonding.

D. Attach shape frame to GFRC before initial set of GFRC backing, maintaining a minimum clearance of 1/2 inch from GFRC backing, and without anchors protruding into GFRC backing.

E. Build up homogeneous GFRC bonding pads over anchor feet, maintaining a minimum thickness of 1/2 inch over tops of anchor feet, before initial set of GFRC backing. Measure bonding pad thickness at 25 percent of anchor locations.

F. Inserts and Embedments: Build up homogeneous GFRC bosses or bonding pads over inserts and embedments to provide enough anchorage and embedment to comply with design requirements.

G. Curing: Employ initial curing method that ensures sufficient strength for removing units from mold. Comply with PCI MNL 130 procedures.

1. Keep moisture off of the surfaces of mixes with polymer curing admixtures during the first three hours of curing. Maintain temperature between 60 and 120 deg F during the first 16 hours.
2. Prevent drying of moist curing mixes during the first 24 hours. Maintain units in surface-damp condition at a temperature above 60 deg F and 95 percent relative humidity for seven days.

H. Shape Identification: Mark each GFRC shape to correspond with identification mark on Shop Drawings. Mark each shape with its casting date.

2.11 FABRICATION TOLERANCES

A. Manufacturing Tolerances: Manufacture GFRC shapes so each finished unit complies with PCI MNL 130 for dimension, position, and tolerances.

B. Position Tolerances: Measured from datum line locations, as indicated on Shop Drawings.

1. Shape Frame: Plus or minus 1/4 inch.
2. Flashing Reglets at Edge of Shape: Plus or minus 1/4 inch.
3. Inserts: Plus or minus 1/2 inch.
4. Special Handling Devices: Plus or minus 3 inches.
5. Location of Bearing Devices: Plus or minus 1/4 inch.
6. Blockouts: Plus or minus 3/8 inch.

C. Shape Frame Tolerances: As follows:

1. Vertical and Horizontal Alignment: 1/4 inch per 10 feet.
2. Spacing of Framing Member: Plus or minus 3/8 inch.
3. Squareness of Frame: Difference in length of diagonals of 3/8 inch.
4. Overall Size of Frame: Plus or minus 3/8 inch.

2.12 FINISHES

A. Exposed faces shall be free of joint marks, grain, and other obvious defects. Corners, including false joints, shall be uniform, straight, and sharp. Finish exposed-face surfaces of GFRC to match approved mockups and as selected by the Architect from the following:

1. As-Cast-Surface Finish: Provide surfaces to match approved sample for acceptable surface, air voids, sand streaks, and honeycomb, with uniform color and texture.
2. Textured-Surface Finish: Impart by form liners.
3. Retarded Finish: Use chemical-retarding agents applied to concrete forms and washing and brushing procedures to expose aggregate and surrounding matrix surfaces after form removal.
4. Sand- or Abrasive-Blast Finish: Use abrasive grit, equipment, application techniques, and cleaning procedures to expose aggregate and surrounding matrix surfaces.
5. Acid-Etched Finish: Use acid and hot-water solution equipment, application techniques, and cleaning procedures to expose aggregate and surrounding matrix surfaces.

2.13 SOURCE QUALITY CONTROL

A. Quality-Control Testing: Establish and maintain a quality-control program for manufacturing GFRC shapes according to PCI MNL 130.

1. Test materials and inspect production techniques.
2. Quality-control program shall monitor glass-fiber content, spray rate, unit weight, product physical properties, anchor pull-off and shear strength, and curing period and conditions.

3. Prepare test specimens and test according to ASTM C 1228, PCI MNL 130, and PCI MNL 128 procedures.
4. Test GFRC inserts and anchors according to ASTM C 1230 to validate design values.
5. Produce test boards at a rate of no fewer than one per work shift per operator for each spray machine and for each mix design.

    a. For each test board, determine glass-fiber content according to ASTM C 1229 and flexural yield and ultimate strength according to ASTM C 947.

PART 3 - EXECUTION

3.1 EXAMINATION

A. Examine structure and conditions for compliance with requirements for installation tolerances, bearing surfaces, and other conditions affecting performance of the Work.

B. Proceed with installation only after unsatisfactory conditions have been corrected.

3.2 ERECTION

A. Install clips, hangers, and other accessories required for connecting GFRC shapes to supporting members and backup materials.

B. Install GFRC shapes level, plumb, square, and in alignment. Provide temporary supports and bracing as required to maintain position, stability, and alignment of shapes until permanent connections are completed.

1. Maintain horizontal and vertical joint alignment and uniform joint width.
2. Remove projecting hoisting devices.

C. Connect GFRC shapes in position by bolting or welding, or both, as indicated on Shop Drawings. Remove temporary shims, wedges, and spacers as soon as possible after connecting is completed.

D. Welding: Comply with applicable AWS D1.1/D1.1M and AWS D1.3/D1.3M requirements for welding, appearance, quality of welds, and methods used in correcting welding work.

1. Protect GFRC shapes from damage by field welding or cutting operations, and provide noncombustible shields as required.

E. At bolted connections, use lock washers or other acceptable means to prevent loosening of nuts.

3.3 ERECTION TOLERANCES

A. Erect GFRC shapes to comply with the following noncumulative tolerances:

1. Plan Location from Building Grid Datum: Plus or minus 1/2 inch.
2. Top Elevation from Nominal Top Elevation: As follows:

    a. Exposed Individual Shape: Plus or minus 1/4 inch.
    b. Nonexposed Individual Shape: Plus or minus 1/2 inch.
    c. Exposed Shape Relative to Adjacent Shape: 1/4 inch.
    d. Nonexposed Shape Relative to Adjacent Shape: 1/2 inch.

3. Support Elevation from Nominal Elevation: As follows:

    a. Maximum Low: 1/2 inch.
    b. Maximum High: 1/4 inch.

4. Maximum Plumb Variation over the Lesser of Height of Structure or 100 Feet: 1 inch.
5. Plumb in Any 10 Feet of Element Height: 1/4 inch.
6. Maximum Offset in Alignment of Matching Edges: 1/4 inch.
7. Face Width of Joint: As follows (governs over joint taper):

    a. Shape Dimension 20 Feet or Less: Plus or minus 1/4 inch.
    b. Shape Dimension More Than 20 Feet: Plus or minus 3/8 inch.

8. Maximum Joint Taper: 3/8 inch.
9. Maximum Joint Taper in 10 Feet: 1/4 inch.
10. Differential Bowing, as Erected, between Adjacent Members of Same Design: 1/4 inch.

3.4 REPAIRS

A. Repairs are permitted provided structural adequacy of GFRC shape and appearance are not impaired, as approved by Architect.

B. Mix patching materials and repair GFRC so cured patches blend with color, texture, and uniformity of adjacent exposed surfaces.

C. Prepare and repair accessible damaged galvanized coatings with galvanizing repair paint according to ASTM A 780/A 780M.

D. Wire brush and clean accessible weld areas on prime-painted components and paint with same type of shop primer.

E. Remove and replace damaged GFRC shapes when repairs do not comply with requirements.

3.5 CLEANING AND PROTECTION

A. Perform cleaning procedures, if necessary, according to GFRC manufacturer's written instructions. Clean soiled GFRC surfaces with detergent and water, using soft fiber brushes and sponges, and rinse with clean water. Prevent damage to GFRC surfaces and staining of adjacent materials.

END OF SECTION 034900

SECTION 042000 - UNIT MASONRY

PART 1 - GENERAL

1.1 RELATED DOCUMENTS

A. Drawings and general provisions of the Contract, including General and Supplementary Conditions and Division 01 Specification Sections, apply to this Section.

1.2 SUMMARY

A. Section Includes:

1. Concrete masonry units.
2. Clay face brick.
3. Mortar and grout.
4. Steel reinforcing bars.
5. Masonry-joint reinforcement.
6. Ties and anchors.
7. Embedded flashing.
8. Miscellaneous masonry accessories.

B. Products Installed but not Furnished under This Section:

1. Cast-stone trim in unit masonry.
2. Steel lintels in unit masonry.
3. Steel shelf angles for supporting unit masonry.
4. Cavity wall insulation.

C. Related Requirements:

1. Section 012100 “Allowances” for brick unit price allowance.
2. Section 072100 "Thermal Insulation" for cavity wall insulation.
3. Section 076200 "Sheet Metal Flashing and Trim" for exposed sheet metal flashing and for furnishing manufactured reglets installed in masonry joints.

1.3 DEFINITIONS

A. CMU(s): Concrete masonry unit(s).

B. Reinforced Masonry: Masonry containing reinforcing steel in grouted cells.

1.4 ACTION SUBMITTALS

A. Product Data: For each type of product.

B. Shop Drawings: For the following:

1. Masonry Units: Show sizes, profiles, coursing, and locations of special shapes.
2. Stone Trim Units: Show sizes, profiles, and locations of each stone trim unit required.
3. Reinforcing Steel: Detail bending, lap lengths, and placement of unit masonry reinforcing bars. Comply with ACI 315. Show elevations of reinforced walls.
4. Fabricated Flashing: Detail corner units, end-dam units, and other special applications.

C. Samples for Initial Selection:

1. Clay face brick, in the form of straps of five or more bricks.
2. Colored mortar.
3. Weep holes/cavity vents.

1.5 INFORMATIONAL SUBMITTALS

A. List of Materials Used in Constructing Mockups: List generic product names together with manufacturers, manufacturers' product names, model numbers, lot numbers, batch numbers, source of supply, and other information as required to identify materials used. Include mix proportions for mortar and grout and source of aggregates.

1. Submittal is for information only. Receipt of list does not constitute approval of deviations from the Contract Documents unless such deviations are specifically brought to the attention of Architect and approved in writing.

B. Qualification Data: For testing agency.

C. Material Certificates: For each type and size of the following:

1. Masonry units.

a. Include data on material properties and, if required by authorities having jurisdiction, material test reports substantiating compliance with requirements.
b. For brick, include size-variation data verifying that actual range of sizes falls within specified tolerances.
c. For exposed brick, include test report for efflorescence according to ASTM C 67.
d. For surface-coated brick, include test report for durability of surface appearance after 50 cycles of freezing and thawing according to ASTM C 67 or a list of addresses of buildings in Project's area where proposed brick has been used successfully and with a history of durability.
e. For masonry units used in structural masonry, include data and calculations establishing average net-area compressive strength of units.

2. Cementitious materials. Include name of manufacturer, brand name, and type.
3. Mortar admixtures.

4. Preblended, dry mortar mixes. Include description of type and proportions of ingredients.
5. Grout mixes. Include description of type and proportions of ingredients.
6. Reinforcing bars.
7. Joint reinforcement.
8. Anchors, ties, and metal accessories.

D. Mix Designs: For each type of mortar and grout. Include description of type and proportions of ingredients.

1. Include test reports for mortar mixes required to comply with property specification. Test according to ASTM C 109/C 109M for compressive strength, ASTM C 1506 for water retention, and ASTM C 91/C 91M for air content.
2. Include test reports, according to ASTM C 1019, for grout mixes required to comply with compressive strength requirement.

E. Cold-Weather and Hot-Weather Procedures: Detailed description of methods, materials, and equipment to be used to comply with requirements.

1.6 QUALITY ASSURANCE

A. Testing Agency Qualifications: Qualified according to ASTM C 1093 for testing indicated.

B. Sample Panels: Build sample panels to verify selections made under Sample submittals and to demonstrate aesthetic effects. Comply with requirements in Section 014000 "Quality Requirements" for mockups.

1. Build sample panels for each type of exposed unit masonry construction in sizes approximately 60 inches long by 48 inches high by full thickness.
2. Build sample panels facing south.
3. Where masonry is to match existing, build panels adjacent and parallel to existing surface.
4. Clean one-half of exposed faces of panels with masonry cleaner indicated.
5. Protect approved sample panels from the elements with weather-resistant membrane.
6. Approval of sample panels is for color, texture, and blending of masonry units; relationship of mortar and sealant colors to masonry unit colors; tooling of joints; aesthetic qualities of workmanship; and other material and construction qualities specifically approved by Architect in writing.

    a. Approval of sample panels does not constitute approval of deviations from the Contract Documents contained in sample panels unless Architect specifically approves such deviations in writing.

C. Mockups: Build mockups to verify selections made under Sample submittals, to demonstrate aesthetic effects, and to set quality standards for materials and execution.

1. Build mockups for each type of exposed unit masonry construction in sizes approximately 60 inches long by 60 inches high by full thickness, including face and backup wythes and accessories.

    a. Include a sealant-filled joint at least 16 inches long in exterior wall mockup.
    b. Include lower corner of window opening at upper corner of exterior wall mockup. Make opening approximately 12 inches wide by 16 inches high.
    c. Include through-wall flashing installed for a 24-inch length in corner of exterior wall mockup approximately 16 inches down from top of mockup, with a 12-inch length of flashing left exposed to view (omit masonry above half of flashing).
    d. Include studs, sheathing, water-resistive barrier, sheathing joint-and-penetration treatment, air barrier, veneer anchors, flashing, cavity drainage material, and weep holes in exterior masonry-veneer wall mockup.
    e. Include clay face brick on one face of interior unit masonry wall mockup.

2. Where masonry is to match existing, erect mockups adjacent and parallel to existing surface.
3. Clean one-half of exposed faces of mockups with masonry cleaner as indicated.
4. Protect accepted mockups from the elements with weather-resistant membrane.
5. Approval of mockups is for color, texture, and blending of masonry units; relationship of mortar and sealant colors to masonry unit colors; tooling of joints; and aesthetic qualities of workmanship.

    a. Approval of mockups is also for other material and construction qualities specifically approved by Architect in writing.
    b. Approval of mockups does not constitute approval of deviations from the Contract Documents contained in mockups unless Architect specifically approves such deviations in writing.

6. Subject to compliance with requirements, approved mockups may become part of the completed Work if undisturbed at time of Substantial Completion.

1.7 DELIVERY, STORAGE, AND HANDLING

A. Store masonry units on elevated platforms in a dry location. If units are not stored in an enclosed location, cover tops and sides of stacks with waterproof sheeting, securely tied. If units become wet, do not install until they are dry.

B. Store cementitious materials on elevated platforms, under cover, and in a dry location. Do not use cementitious materials that have become damp.

C. Store aggregates where grading and other required characteristics can be maintained and contamination avoided.

D. Deliver preblended, dry mortar mix in moisture-resistant containers. Store preblended, dry mortar mix in delivery containers on elevated platforms in a dry location or in covered weatherproof dispensing silos.

E. Store masonry accessories, including metal items, to prevent corrosion and accumulation of dirt and oil.

1.8 FIELD CONDITIONS

A. Protection of Masonry: During construction, cover tops of walls, projections, and sills with waterproof sheeting at end of each day's work. Cover partially completed masonry when construction is not in progress.

1. Extend cover a minimum of 24 inches down both sides of walls, and hold cover securely in place.
2. Where one wythe of multiwythe masonry walls is completed in advance of other wythes, secure cover a minimum of 24 inches down face next to unconstructed wythe, and hold cover in place.

B. Do not apply uniform floor or roof loads for at least 12 hours and concentrated loads for at least three days after building masonry walls or columns.

C. Stain Prevention: Prevent grout, mortar, and soil from staining the face of masonry to be left exposed or painted. Immediately remove grout, mortar, and soil that come in contact with such masonry.

1. Protect base of walls from rain-splashed mud and from mortar splatter by spreading coverings on ground and over wall surface.
2. Protect sills, ledges, and projections from mortar droppings.
3. Protect surfaces of window and door frames, as well as similar products with painted and integral finishes, from mortar droppings.
4. Turn scaffold boards near the wall on edge at the end of each day to prevent rain from splashing mortar and dirt onto completed masonry.

D. Cold-Weather Requirements: Do not use frozen materials or materials mixed or coated with ice or frost. Do not build on frozen substrates. Remove and replace unit masonry damaged by frost or by freezing conditions. Comply with cold-weather construction requirements contained in TMS 602/ACI 530.1/ASCE 6.

1. Cold-Weather Cleaning: Use liquid cleaning methods only when air temperature is 40 deg F and higher and will remain so until masonry has dried, but not less than seven days after completing cleaning.

E. Hot-Weather Requirements: Comply with hot-weather construction requirements contained in TMS 602/ACI 530.1/ASCE 6.

PART 2 - PRODUCTS

2.1 MANUFACTURERS

A. Source Limitations for Masonry Units: Obtain exposed masonry units of a uniform texture and color, or a uniform blend within the ranges accepted for these characteristics, from single source from single manufacturer for each product required.

B. Source Limitations for Mortar Materials: Obtain mortar ingredients of a uniform quality, including color for exposed masonry, from single manufacturer for each cementitious component and from single source or producer for each aggregate.

2.2 PERFORMANCE REQUIREMENTS

A. Provide unit masonry that develops indicated net-area compressive strengths at 28 days.

1. Determine net-area compressive strength of masonry from average net-area compressive strengths of masonry units and mortar types (unit-strength method) according to TMS 602/ACI 530.1/ASCE 6.
2. Determine net-area compressive strength of masonry by testing masonry prisms according to ASTM C 1314.

2.3 UNIT MASONRY, GENERAL

A. Masonry Standard: Comply with TMS 602/ACI 530.1/ASCE 6, except as modified by requirements in the Contract Documents.

B. Defective Units: Referenced masonry unit standards may allow a certain percentage of units to contain chips, cracks, or other defects exceeding limits stated. Do not use units where such defects are exposed in the completed Work and will be within 20 feet vertically and horizontally of a walking surface.

C. Fire-Resistance Ratings: Comply with requirements for fire-resistance-rated assembly designs indicated.

1. Where fire-resistance-rated construction is indicated, units shall be listed and labeled by a qualified testing agency acceptable to authorities having jurisdiction.

2.4 CONCRETE MASONRY UNITS

A. Shapes: Provide shapes indicated and as follows, with exposed surfaces matching exposed faces of adjacent units unless otherwise indicated.

1. Provide special shapes for lintels, corners, jambs, sashes, movement joints, headers, bonding, and other special conditions.
2. Provide bullnose units for all exposed outside corners unless otherwise indicated.

B. CMUs: ASTM C 90.

1. Unit Compressive Strength: Provide units with minimum average net-area compressive strength of 2150 psi unless otherwise indicated on the Structural Drawings.
2. Density Classification: Lightweight unless otherwise indicated on the Structural Drawings.
3. Size (Width): Manufactured to dimensions 3/8 inch less than nominal dimensions.

2.5 CONCRETE AND MASONRY LINTELS

A. General: Provide one of the following:

B. Concrete Lintels: ASTM C 1623, matching CMUs in color, texture, and density classification; and with reinforcing bars indicated. Provide lintels with net-area compressive strength not less than that of CMUs. Comply with requirements indicated on the Structural Drawings.

C. Masonry Lintels: Prefabricated or built-in-place masonry lintels made from bond beam CMUs matching adjacent CMUs in color, texture, and density classification, with reinforcing bars placed as indicated and filled with coarse grout. Cure precast lintels before handling and installing. Temporarily support built-in-place lintels until cured.

2.6 BRICK

A. General: Provide shapes indicated and as follows, with exposed surfaces matching finish and color of exposed faces of adjacent units:

1. For ends of sills and caps and for similar applications that would otherwise expose unfinished brick surfaces, provide units without cores or frogs and with exposed surfaces finished.
2. Provide special shapes for applications where stretcher units cannot accommodate special conditions, including those at corners, movement joints, bond beams, sashes, and lintels.
3. Provide special shapes for applications requiring brick of size, form, color, and texture on exposed surfaces that cannot be produced by sawing.
4. Provide special shapes for applications where shapes produced by sawing would result in sawed surfaces being exposed to view.

B. Clay Face Brick: Facing brick complying with ASTM C 216.

1. Brick Type:

   a. Product: As selected by the Architect from the manufacturer's full range.
   b. Color: As selected by the Architect from the manufacturer's full range.
   c. Style: As selected by the Architect from the manufacturer's full range.
   d. Size: As selected by the Architect from the manufacturer's full range.

2. Grade: SW.
3. Type: FBX or FBS.

4. Unit Compressive Strength: Provide units with minimum average net-area compressive strength of 3350 psi unless otherwise indicated on the Structural Drawings.
5. Initial Rate of Absorption: Less than 30 g/30 sq. in. per minute when tested according to ASTM C 67.
6. Efflorescence: Provide brick that has been tested according to ASTM C 67 and is rated "not effloresced."
7. Surface Coating: Brick with colors or textures produced by application of coatings shall withstand 50 cycles of freezing and thawing according to ASTM C 67 with no observable difference in the applied finish when viewed from 10 feet.

2.7 MORTAR AND GROUT MATERIALS

A. Portland Cement: ASTM C 150/C 150M, Type I or II, except Type III may be used for cold-weather construction. Provide natural color or white cement as required to produce mortar color indicated.

1. Alkali content shall not be more than 0.1 percent when tested according to ASTM C 114.

B. Hydrated Lime: ASTM C 207, Type S.

C. Portland Cement-Lime Mix: Packaged blend of portland cement and hydrated lime containing no other ingredients.

D. Masonry Cement: ASTM C 91/C 91M.

E. Mortar Cement: ASTM C 1329/C 1329M.

F. Mortar Pigments: Natural and synthetic iron oxides and chromium oxides, compounded for use in mortar mixes and complying with ASTM C 979/C 979M. Use only pigments with a record of satisfactory performance in masonry mortar.

G. Colored Cement Products: Packaged blend made from portland cement and hydrated lime or masonry cement and mortar pigments, all complying with specified requirements, and containing no other ingredients.

1. Formulate blend as required to produce color indicated or, if not indicated, as selected from manufacturer's standard colors.
2. Pigments shall not exceed 10 percent of portland cement by weight.
3. Pigments shall not exceed 5 percent of masonry cement or mortar cement by weight.

H. Aggregate for Mortar: ASTM C 144.

1. For mortar that is exposed to view, use washed aggregate consisting of natural sand or crushed stone.
2. For joints less than 1/4 inch thick, use aggregate graded with 100 percent passing the No. 16 sieve.
3. White-Mortar Aggregates: Natural white sand or crushed white stone.

I. Aggregate for Grout: ASTM C 404.

J. Cold-Weather Admixture: Nonchloride, noncorrosive, accelerating admixture complying with ASTM C 494/C 494M, Type C, and recommended by manufacturer for use in masonry mortar of composition indicated.

K. Water: Potable.

2.8 REINFORCEMENT

A. Uncoated-Steel Reinforcing Bars: ASTM A 615/A 615M or ASTM A 996/A 996M, Grade 60.

B. Reinforcing Bar Positioners: Wire units designed to fit into mortar bed joints spanning masonry unit cells and to hold reinforcing bars in center of cells. Units are formed from 0.148-inch steel wire, hot-dip galvanized after fabrication. Provide units designed for number of bars indicated.

C. Masonry-Joint Reinforcement, General: ASTM A 951/A 951M.

1. Interior Walls: Hot-dip galvanized carbon steel.
2. Exterior Walls: Hot-dip galvanized carbon steel.
3. Wire Size for Side Rods: 0.187-inch diameter.
4. Wire Size for Cross Rods: 0.148-inch diameter.
5. Wire Size for Veneer Ties: 0.148-inch diameter.
6. Spacing of Cross Rods, Tabs, and Cross Ties: Not more than 16 inches o.c.
7. Provide in lengths of not less than 10 feet, with prefabricated corner and tee units.

D. Masonry-Joint Reinforcement for Single-Wythe Masonry: Ladder or truss type with single pair of side rods.

E. Masonry-Joint Reinforcement for Multiwythe Masonry:

1. Ladder type with one side rod at each face shell of hollow masonry units more than 4 inches wide, plus one side rod at each wythe of masonry 4 inches wide or less.
2. Tab type, either ladder or truss design, with one side rod at each face shell of backing wythe and with rectangular tabs sized to extend at least halfway through facing wythe, but with at least 5/8-inch cover on outside face.
3. Adjustable (two-piece) type, either ladder or truss design, with one side rod at each face shell of backing wythe and with separate adjustable ties with pintle-and-eye connections having a maximum horizontal play of 1/16 inch and maximum vertical adjustment of 1-1/4 inches. Size ties to extend at least halfway through facing wythe but with at least 5/8-inch cover on outside face. Ties have hooks or clips to engage a continuous horizontal wire in the facing wythe.

2.9 TIES AND ANCHORS

A. General: Ties and anchors shall extend at least 1-1/2 inches into veneer but with at least a 5/8-inch cover on outside face.

B. Materials: Provide ties and anchors specified in this article that are made from materials that comply with the following unless otherwise indicated:

1. Hot-Dip Galvanized, Carbon-Steel Wire: ASTM A 82/A 82M, with ASTM A 153/A 153M, Class B-2 coating.

2. Steel Sheet, Galvanized after Fabrication: ASTM A 1008/A 1008M, Commercial Steel, with ASTM A 153/A 153M, Class B coating.
3. Steel Plates, Shapes, and Bars: ASTM A 36/A 36M.

C. Corrugated-Metal Ties: Metal strips not less than 7/8 inch wide with corrugations having a wavelength of 0.3 to 0.5 inch and an amplitude of 0.06 to 0.10 inch made from 0.060-inch-thick steel sheet, galvanized after fabrication.

D. Individual Wire Ties: Rectangular units with closed ends and not less than 4 inches wide.

1. Z-shaped ties with ends bent 90 degrees to provide hooks not less than 2 inches long may be used for masonry constructed from solid units.
2. Where wythes do not align or are of different materials, use adjustable ties with pintle-and-eye connections having a maximum adjustment of 1-1/4 inches.
3. Wire: Fabricate from 3/16-inch- diameter, hot-dip galvanized steel wire.

E. Adjustable Anchors for Connecting to Structural Steel Framing: Provide anchors that allow vertical or horizontal adjustment but resist tension and compression forces perpendicular to plane of wall.

1. Anchor Section for Welding to Steel Frame: Crimped 1/4-inch-diameter, hot-dip galvanized steel wire.
2. Tie Section: Triangular-shaped wire tie made from 0.187-inch- diameter, hot-dip galvanized steel wire.

F. Adjustable Anchors for Connecting to Concrete: Provide anchors that allow vertical or horizontal adjustment but resist tension and compression forces perpendicular to plane of wall.

1. Connector Section: Dovetail tabs for inserting into dovetail slots in concrete and attached to tie section; formed from 0.105-inch-thick steel sheet, galvanized after fabrication.

    a. 0.064-inch- thick, galvanized-steel sheet may be used at interior walls unless otherwise indicated.

2. Tie Section: Triangular-shaped wire tie made from 0.187-inch- diameter, hot-dip galvanized steel wire.
3. Corrugated-Metal Ties: Metal strips not less than 7/8 inch wide with corrugations having a wavelength of 0.3 to 0.5 inch and an amplitude of 0.06 to 0.10 inch made from 0.060-inch-thick steel sheet, galvanized after fabrication with dovetail tabs for inserting into dovetail slots in concrete.

    a. 0.064-inch- thick galvanized sheet may be used at interior walls unless otherwise indicated.

G. Partition Top Anchors: 0.105-inch-thick metal plate with a 3/8-inch-diameter metal rod 6 inches long welded to plate and with closed-end plastic tube fitted over rod that allows rod to move in and out of tube. Fabricate from steel, hot-dip galvanized after fabrication.

H. Rigid Anchors: Fabricate from steel bars 1-1/2 inches wide by 1/4 inch thick by 24 inches long, with ends turned up 2 inches or with cross pins unless otherwise indicated.

1. Corrosion Protection: Hot-dip galvanized to comply with ASTM A 153/A 153M.

I. Adjustable Masonry-Veneer Anchors:

1. General: Provide anchors that allow vertical adjustment but resist a 100-lbf load in both tension and compression perpendicular to plane of wall without deforming or developing play in excess of 1/16 inch.
2. Fabricate sheet metal anchor sections and other sheet metal parts from 0.075-inch-thick steel sheet, galvanized after fabrication.
3. Fabricate wire ties from 0.187-inch- diameter, hot-dip galvanized-steel wire unless otherwise indicated.
4. Contractor's Option: Unless otherwise indicated, provide any of the adjustable masonry-veneer anchors specified.
5. Screw-Attached, Masonry-Veneer Anchors: Wire tie and a rib-stiffened, sheet metal anchor section with screw holes top and bottom, with a projecting vertical tab having a slotted hole for inserting wire tie.
6. Screw-Attached, Masonry-Veneer Anchors: Wire tie and a rib-stiffened, sheet metal anchor section with screw holes top and bottom, with projecting tabs having holes for inserting vertical legs of wire tie formed to fit anchor section.
7. Screw-Attached, Masonry-Veneer Anchors: Wire tie and a sheet metal anchor section, 1-1/4 inches wide by 9 inches long, with screw holes top and bottom and with raised rib-stiffened strap, 5/8 inch wide by 5-1/2 inches long, stamped into center to provide a slot between strap and base for inserting wire tie.
8. Screw-Attached, Masonry-Veneer Anchors: Wire tie and a sheet metal anchor section, 1-1/4 inches wide by 6 inches long, with screw holes top and bottom and with raised rib-stiffened strap, 5/8 inch wide by 3-5/8 inches long, stamped into center to provide a slot between strap and base for inserting wire tie.
9. Screw-Attached, Masonry-Veneer Anchors: Wire tie and a gasketed sheet metal anchor section, 1-1/4 inches wide by 6 inches long, with screw holes top and bottom; top and bottom ends bent to form pronged legs of length to match thickness of insulation or sheathing; and raised rib-stiffened strap, 5/8 inch wide by 6 inches long, stamped into center to provide a slot between strap and base for inserting wire tie. Self-adhering, modified bituminous gasket fits behind anchor plate and extends beyond pronged legs.
10. Screw-Attached, Masonry-Veneer Anchors: Wire tie and a corrosion-resistant, self-drilling, eye-screw designed to receive wire tie. Eye-screw has spacer that seats directly against framing and is same thickness as sheathing and has gasketed washer head that covers hole in sheathing.
11. Seismic Masonry-Veneer Anchors: Connector section and rib-stiffened, sheet metal anchor section with screw holes top and bottom, with projecting tabs having slotted holes for inserting vertical leg of connector section. Connector section consists of a rib-stiffened, sheet metal bent plate with down-turned leg designed to fit in anchor section slot and with integral tabs designed to engage continuous wire.
12. Seismic Masonry-Veneer Anchors: Wire tie and a rib-stiffened, sheet metal anchor section with screw holes top and bottom, with projecting tabs having holes for inserting vertical legs of wire tie formed to fit anchor section. Wire tie has sheet metal clip welded to it with integral tabs designed to engage continuous wire.

13. Seismic Masonry-Veneer Anchors: Connector section and a gasketed sheet metal anchor section, 1-1/4 inches wide by 6 inches long, with screw holes top and bottom; top and bottom ends bent to form pronged legs of length to match thickness of insulation or sheathing; and raised rib-stiffened strap, 5/8 inch wide by 6 inches long, stamped into center to provide a slot between strap and base for inserting connector section. Self-adhering, modified bituminous gasket fits behind anchor plate and extends beyond pronged legs. Connector section consists of a triangular wire tie and rigid PVC extrusion with snap-in grooves for inserting continuous wire. Fabricate wire connector sections from 0.187-inch- diameter, hot-dip galvanized, carbon-steel wire.
14. Polymer-Coated, Steel Drill Screws for Steel Studs: ASTM C 954 except manufactured with hex washer head and neoprene or EPDM washer, No. 10 diameter by length required to penetrate steel stud flange with not less than three exposed threads, and with organic polymer coating with salt-spray resistance to red rust of more than 800 hours according to ASTM B 117.
15. Stainless-Steel Drill Screws for Steel Studs: ASTM C 954 except manufactured with hex washer head and neoprene or EPDM washer, No. 10 diameter by length required to penetrate steel stud flange with not less than three exposed threads; either made from Type 410 stainless steel or made with a carbon-steel drill point and 300 Series stainless-steel shank.

2.10 EMBEDDED FLASHING MATERIALS

A. Metal Flashing: Provide metal flashing complying with Section 076200 "Sheet Metal Flashing and Trim" and as follows:

1. Stainless Steel: ASTM A 240/A 240M or ASTM A 666, Type 304, 0.016 inch thick.
2. Copper: ASTM B 370, Temper H00, cold-rolled copper sheet, 16-oz./sq. ft. weight or 0.0216 inch thick or ASTM B 370, Temper H01, high-yield copper sheet, 12-oz./sq. ft. weight or 0.0162 inch thick.
3. Fabricate continuous flashings in sections 96 inches long minimum, but not exceeding 12 feet. Provide splice plates at joints of formed, smooth metal flashing.
4. Fabricate through-wall flashing with drip edge unless otherwise indicated. Fabricate by extending flashing 1/2 inch out from wall, with outer edge bent down 30 degrees and hemmed.
5. Fabricate through-wall flashing with sealant stop where indicated. Fabricate by bending metal back on itself 3/4 inch at exterior face of wall and down into joint 1/4 inch to form a stop for retaining sealant backer rod.
6. Fabricate metal drip edges from stainless steel. Extend at least 3 inches into wall and 1/2 inch out from wall, with outer edge bent down 30 degrees and hemmed.
7. Fabricate metal sealant stops from stainless steel. Extend at least 3 inches into wall and out to exterior face of wall. At exterior face of wall, bend metal back on itself for 3/4 inch and down into joint 1/4 inch to form a stop for retaining sealant backer rod.
8. Fabricate metal expansion-joint strips from stainless steel or copper to shapes indicated.
9. Solder metal items at corners.

B. Flexible Flashing: Use one of the following unless otherwise indicated:

1. Copper-Laminated Flashing: 5-oz./sq. ft. copper sheet bonded between two layers of glass-fiber cloth. Use only where flashing is fully concealed in masonry.

a. Products: Subject to compliance with requirements, provide one of the following:

1) Advanced Building Products Inc.; Copper Fabric Flashing or Copper Sealtite 2000.
2) Hohmann & Barnard, Inc; Copper Fabric Flashing.
3) Wire-Bond; Copper Seal Flashing #4140.
4) York Manufacturing, Inc; Multi-Flash 500.

2. Elastomeric Thermoplastic Flashing: Composite flashing product consisting of a polyester-reinforced ethylene interpolymer alloy.

a. Products: Subject to compliance with requirements, provide one of the following:

1) Du Pont; Thru-Wall Flashing.
2) Hohmann & Barnard, Inc; Flex-Flash.
3) Hyload, Inc.; Hyload Cloaked Flashing System.
4) Mortar Net Solutions; Total Flash.
5) Wire-Bond; Rhino Bond Flashing #4123.

b. Monolithic Sheet: Elastomeric thermoplastic flashing, 0.040 inch thick.
c. Self-Adhesive Sheet: Elastomeric thermoplastic flashing, 0.025 inch thick, with a 0.015-inch-thick coating of adhesive.
d. Self-Adhesive Sheet with Drip Edge: Elastomeric thermoplastic flashing, 0.025 inch thick, with a 0.015-inch-thick coating of rubberized-asphalt adhesive. Where flashing extends to face of masonry, rubberized-asphalt coating is held back approximately 1-1/2 inches from edge.

1) Color: As selected by the Architect.

e. Accessories: Provide preformed corners, end dams, other special shapes, and seaming materials produced by flashing manufacturer.

C. Application: Unless otherwise indicated, use the following:

1. Where flashing is indicated to receive counterflashing, use metal flashing.
2. Where flashing is indicated to be turned down at or beyond the wall face, use metal flashing.
3. Where flashing is partly exposed and is indicated to terminate at the wall face, use metal flashing with a drip edge or flexible flashing with a metal drip edge.
4. Where flashing is fully concealed, use metal flashing or flexible flashing.

D. Single-Wythe CMU Flashing System: System of CMU cell flashing pans and interlocking CMU web covers made from UV-resistant, high-density polyethylene. Cell flashing pans have integral weep spouts designed to be built into mortar bed joints and that extend into the cell to prevent clogging with mortar.

E. Solder and Sealants for Sheet Metal Flashings: As specified in Section 076200 "Sheet Metal Flashing and Trim."

F. Adhesives, Primers, and Seam Tapes for Flashings: Flashing manufacturer's standard products or products recommended by flashing manufacturer for bonding flashing sheets to each other and to substrates.

G. Termination Bars for Flexible Flashing:

1. Aluminum or stainless steel bars 0.075 inch by 1 inch.
2. Stainless-steel sheet 0.019 inch by 1-1/2 inches with a 3/8 inch sealant flange at top.
3. Aluminum sheet 0.064 inch by 1-1/2 inches with a 3/8-inch sealant flange at top.

2.11 MISCELLANEOUS MASONRY ACCESSORIES

A. Compressible Filler: Premolded filler strips complying with ASTM D 1056, Grade 2A1; compressible up to 35 percent; of width and thickness indicated; formulated from neoprene, urethane, or PVC.

B. Preformed Control-Joint Gaskets: Made from styrene-butadiene-rubber compound, complying with ASTM D 2000, Designation M2AA-805 or PVC, complying with ASTM D 2287, Type PVC-65406 and designed to fit standard sash block and to maintain lateral stability in masonry wall; size and configuration as indicated.

C. Bond-Breaker Strips: Asphalt-saturated felt complying with ASTM D 226/D 226M, Type I (No. 15 asphalt felt).

D. Weep/Cavity Vent Products: Use the following unless otherwise indicated:

1. Cellular Plastic Weep/Vent: One-piece, flexible extrusion made from UV-resistant polypropylene copolymer, full height and width of head joint and depth 1/8 inch less than depth of outer wythe, in color selected from manufacturer's standard.

a. Products: Subject to compliance with requirements, provide one of the following:

1) Advanced Building Products Inc.; Mortar Maze Cell Vent.
2) Heckmann Building Products, Inc.; No. 85 Cell Vent.
3) Hohmann & Barnard, Inc; QV Quadro-Vent.
4) Wire-Bond; Cell Vent (#3601).

E. Cavity Drainage Material: Free-draining mesh, made from polymer strands that will not degrade within the wall cavity.

1. Products: Subject to compliance with requirements, provide one of the following:

a. Advanced Building Products Inc.; Mortar Break or Mortar Break II.
b. CavClear/Archovations, Inc.; CavClear Masonry Mat.
c. Heckmann Building Products, Inc.; Weep-Thru Mortar Deflector.
d. Hohmann & Barnard, Inc; Mortar Trap.

e. Mortar Net Solutions; Mortar Net.
f. Wire-Bond; Cavity Net or Cavity Net II.

2. Configuration: Provide one of the following:

a. Strips, full depth of cavity and 10 inches high, with dovetail-shaped notches 7 inches deep that prevent clogging with mortar droppings.
b. Strips, not less than 3/4 inch thick and 10 inches high, with dimpled surface designed to catch mortar droppings and prevent weep holes from clogging with mortar.
c. Sheets or strips, full depth of cavity and installed to full height of cavity.
d. Sheets or strips not less than 3/4 inch thick and installed to full height of cavity, with additional strips 4 inches high at weep holes and thick enough to fill entire depth of cavity and prevent weep holes from clogging with mortar.

2.12 MASONRY CLEANERS

A. Proprietary Acidic Cleaner: Manufacturer's standard-strength cleaner designed for removing mortar/grout stains, efflorescence, and other new construction stains from new masonry without discoloring or damaging masonry surfaces. Use product expressly approved for intended use by cleaner manufacturer and manufacturer of masonry units being cleaned.

1. Products: Subject to compliance with requirements, provide one of the following:

a. Diedrich Technologies, Inc.; a division of Sandell Construction Solutions.
b. EaCo Chem, Inc.
c. PROSOCO, Inc; Sure Klean® 600.

2.13 MORTAR AND GROUT MIXES

A. General: Do not use admixtures, including pigments, air-entraining agents, accelerators, retarders, water-repellent agents, antifreeze compounds, or other admixtures unless otherwise indicated.

1. Do not use calcium chloride in mortar or grout.
2. Use portland cement-lime mortar unless otherwise indicated.
3. For exterior masonry, use portland cement-lime mortar.
4. For reinforced masonry, use portland cement-lime mortar.
5. Add cold-weather admixture (if used) at same rate for all mortar that will be exposed to view, regardless of weather conditions, to ensure that mortar color is consistent.

B. Preblended, Dry Mortar Mix: Furnish dry mortar ingredients in form of a preblended mix. Measure quantities by weight to ensure accurate proportions, and thoroughly blend ingredients before delivering to Project site.

C. Mortar for Unit Masonry: Comply with ASTM C 270, Proportion Specification. Provide the following types of mortar for applications stated unless another type is indicated.

1. For masonry below grade or in contact with earth, use Type M.
2. For reinforced masonry, use Type S.
3. For mortar parge coats, use Type S or Type N.
4. For exterior, above-grade, load-bearing and nonload-bearing walls and parapet walls; for interior load-bearing walls; for interior nonload-bearing partitions; and for other applications where another type is not indicated, use Type N.
5. For interior nonload-bearing partitions, Type O may be used instead of Type N.

D. Pigmented Mortar: Use colored cement product or select and proportion pigments with other ingredients to produce color required. Do not add pigments to colored cement products.

1. Pigments shall not exceed 10 percent of portland cement by weight.
2. Pigments shall not exceed 5 percent of masonry cement or mortar cement by weight.
3. Mix to match Architect's sample.
4. Application: Use pigmented mortar for exposed mortar joints with the following units:

    a. Clay face brick.
    b. Cast-stone trim units.

E. Grout for Unit Masonry: Comply with ASTM C 476.

1. Use grout of type indicated or, if not otherwise indicated, of type (fine or coarse) that will comply with TMS 602/ACI 530.1/ASCE 6 for dimensions of grout spaces and pour height.
2. Proportion grout in accordance with ASTM C 476, Table 1 or paragraph 4.2.2 for specified 28-day compressive strength indicated, but not less than 2000 psi.
3. Provide grout with a slump of 8 to 11 inches as measured according to ASTM C 143/C 143M.

PART 3 - EXECUTION

3.1 EXAMINATION

A. Examine conditions, with Installer present, for compliance with requirements for installation tolerances and other conditions affecting performance of the Work.

1. For the record, prepare written report, endorsed by Installer, listing conditions detrimental to performance of the Work.
2. Verify that foundations are within tolerances specified.
3. Verify that reinforcing dowels are properly placed.
4. Verify that substrates are free of substances that impair mortar bond.

B. Before installation, examine rough-in and built-in construction for piping systems to verify actual locations of piping connections.

C. Proceed with installation only after unsatisfactory conditions have been corrected.

3.2 INSTALLATION, GENERAL

A. Thickness: Build cavity and composite walls and other masonry construction to full thickness shown. Build single-wythe walls to actual widths of masonry units, using units of widths indicated.

B. Build chases and recesses to accommodate items specified in this and other Sections.

C. Leave openings for equipment to be installed before completing masonry. After installing equipment, complete masonry to match construction immediately adjacent to opening.

D. Use full-size units without cutting if possible. If cutting is required to provide a continuous pattern or to fit adjoining construction, cut units with motor-driven saws; provide clean, sharp, unchipped edges. Allow units to dry before laying unless wetting of units is specified. Install cut units with cut surfaces and, where possible, cut edges concealed.

E. Select and arrange units for exposed unit masonry to produce a uniform blend of colors and textures. Mix units from several pallets or cubes as they are placed.

F. Wetting of Brick: Wet brick before laying if initial rate of absorption exceeds 30 g/30 sq. in. per minute when tested according to ASTM C 67. Allow units to absorb water so they are damp but not wet at time of laying.

3.3 TOLERANCES

A. Dimensions and Locations of Elements:

1. For dimensions in cross section or elevation, do not vary by more than plus 1/2 inch or minus 1/4 inch.
2. For location of elements in plan, do not vary from that indicated by more than plus or minus 1/2 inch.
3. For location of elements in elevation, do not vary from that indicated by more than plus or minus 1/4 inch in a story height or 1/2 inch total.

B. Lines and Levels:

1. For bed joints and top surfaces of bearing walls, do not vary from level by more than 1/4 inch in 10 feet, or 1/2-inch maximum.
2. For conspicuous horizontal lines, such as lintels, sills, parapets, and reveals, do not vary from level by more than 1/8 inch in 10 feet, 1/4 inch in 20 feet, or 1/2-inch maximum.
3. For vertical lines and surfaces, do not vary from plumb by more than 1/4 inch in 10 feet, 3/8 inch in 20 feet, or 1/2-inch maximum.
4. For conspicuous vertical lines, such as external corners, door jambs, reveals, and expansion and control joints, do not vary from plumb by more than 1/8 inch in 10 feet, 1/4 inch in 20 feet, or 1/2-inch maximum.
5. For lines and surfaces, do not vary from straight by more than 1/4 inch in 10 feet, 3/8 inch in 20 feet, or 1/2-inch maximum.
6. For vertical alignment of exposed head joints, do not vary from plumb by more than 1/4 inch in 10 feet or 1/2-inch maximum.

7. For faces of adjacent exposed masonry units, do not vary from flush alignment by more than 1/16 inch except due to warpage of masonry units within tolerances specified for warpage of units.

C. Joints:

1. For bed joints, do not vary from thickness indicated by more than plus or minus 1/8 inch, with a maximum thickness limited to 1/2 inch.
2. For exposed bed joints, do not vary from bed-joint thickness of adjacent courses by more than 1/8 inch.
3. For head and collar joints, do not vary from thickness indicated by more than plus 3/8 inch or minus 1/4 inch.
4. For exposed head joints, do not vary from thickness indicated by more than plus or minus 1/8 inch. Do not vary from adjacent bed-joint and head-joint thicknesses by more than 1/8 inch.
5. For exposed bed joints and head joints of stacked bond, do not vary from a straight line by more than 1/16 inch from one masonry unit to the next.

3.4 LAYING MASONRY WALLS

A. Lay out walls in advance for accurate spacing of surface bond patterns with uniform joint thicknesses and for accurate location of openings, movement-type joints, returns, and offsets. Avoid using less-than-half-size units, particularly at corners, jambs, and, where possible, at other locations.

B. Bond Pattern for Exposed Masonry: Unless otherwise indicated, lay exposed masonry in bond pattern indicated on Drawings; do not use units with less-than-nominal 4-inch horizontal face dimensions at corners or jambs.

C. Lay concealed masonry with all units in a wythe in running bond or bonded by lapping not less than 4 inches. Bond and interlock each course of each wythe at corners. Do not use units with less-than-nominal 4-inch horizontal face dimensions at corners or jambs.

D. Stopping and Resuming Work: Stop work by stepping back units in each course from those in course below; do not tooth. When resuming work, clean masonry surfaces that are to receive mortar, remove loose masonry units and mortar, and wet brick if required before laying fresh masonry.

E. Built-in Work: As construction progresses, build in items specified in this and other Sections. Fill in solidly with masonry around built-in items.

F. Fill space between steel frames and masonry solidly with mortar unless otherwise indicated.

G. Where built-in items are to be embedded in cores of hollow masonry units, place a layer of metal lath, wire mesh, or plastic mesh in the joint below, and rod mortar or grout into core.

H. Fill cores in hollow CMUs with grout 24 inches under bearing plates, beams, lintels, posts, and similar items unless otherwise indicated.

I. Build nonload-bearing interior partitions full height of story to underside of solid floor or roof structure above unless otherwise indicated.

1. Install compressible filler in joint between top of partition and underside of structure above.
2. Fasten partition top anchors to structure above and build into top of partition. Grout cells of CMUs solidly around plastic tubes of anchors and push tubes down into grout to provide 1/2-inch clearance between end of anchor rod and end of tube. Space anchors 48 inches o.c. unless otherwise indicated.
3. Wedge nonload-bearing partitions against structure above with small pieces of tile, slate, or metal. Fill joint with mortar after dead-load deflection of structure above approaches final position.
4. At fire-rated partitions, treat joint between top of partition and underside of structure above to comply with Section 078443 "Joint Firestopping."

3.5 MORTAR BEDDING AND JOINTING

A. Lay hollow brick and CMUs as follows:

1. Bed face shells in mortar and make head joints of depth equal to bed joints.
2. Bed webs in mortar in all courses of piers, columns, and pilasters.
3. Bed webs in mortar in grouted masonry, including starting course on footings.
4. Fully bed entire units, including areas under cells, at starting course on footings where cells are not grouted.
5. Fully bed units and fill cells with mortar at anchors and ties as needed to fully embed anchors and ties in mortar.

B. Lay solid masonry units and hollow brick with completely filled bed and head joints; butter ends with sufficient mortar to fill head joints and shove into place. Do not deeply furrow bed joints or slush head joints.

C. Set cast-stone trim units in full bed of mortar with full vertical joints. Fill dowel, anchor, and similar holes.

1. Clean soiled surfaces with fiber brush and soap powder and rinse thoroughly with clear water.
2. Allow cleaned surfaces to dry before setting.
3. Wet joint surfaces thoroughly before applying mortar.
4. Rake out mortar joints for pointing with sealant.

D. Tool exposed joints slightly concave when thumbprint hard, using a jointer larger than joint thickness unless otherwise indicated.

1. For glazed masonry units, use a nonmetallic jointer 3/4 inch or more in width.

E. Cut joints flush for masonry walls to receive plaster or other direct-applied finishes (other than paint) unless otherwise indicated.

F. Cut joints flush where indicated to receive waterproofing, cavity wall insulation, and air barriers unless otherwise indicated.

3.6 CAVITY WALLS

A. Bond wythes of cavity walls together using one of the following methods:

1. Individual Metal Ties: Provide ties as shown installed in horizontal joints, but not less than one metal tie for 1.77 sq. ft. of wall area spaced not to exceed 16 inches o.c. horizontally and 16 inches o.c. vertically. Stagger ties in alternate courses. Provide additional ties within 12 inches of openings and space not more than 36 inches apart around perimeter of openings. At intersecting and abutting walls, provide ties at no more than 24 inches o.c. vertically.

    a. Where bed joints of wythes do not align, use adjustable-type (two-piece-type) ties.
    b. Where one wythe is of clay masonry and the other of concrete masonry, use adjustable-type (two-piece-type) ties to allow for differential movement regardless of whether bed joints align.

2. Masonry-Joint Reinforcement: Installed in horizontal mortar joints.

    a. Where bed joints of both wythes align, use ladder-type reinforcement extending across both wythes.
    b. Where bed joints of wythes do not align, use adjustable-type (two-piece-type) reinforcement with continuous horizontal wire in facing wythe attached to ties.
    c. Where one wythe is of clay masonry and the other of concrete masonry, use adjustable-type (two-piece-type) reinforcement with continuous horizontal wire in facing wythe attached to ties to allow for differential movement regardless of whether bed joints align.

3. Header Bonding: Provide masonry unit headers extending not less than 3 inches into each wythe. Space headers not more than 8 inches clear horizontally and 16 inches clear vertically.
4. Masonry-Veneer Anchors: Comply with requirements for anchoring masonry veneers.

B. Bond wythes of cavity walls together using bonding system indicated on Drawings.

C. Keep cavities clean of mortar droppings and other materials during construction. Bevel beds away from cavity, to minimize mortar protrusions into cavity. Do not attempt to trowel or remove mortar fins protruding into cavity.

D. Parge cavity face of backup wythe in a single coat approximately 3/8 inch thick. Trowel face of parge coat smooth.

E. Installing Cavity Wall Insulation: Place small dabs of adhesive, spaced approximately 12 inches o.c. both ways, on inside face of insulation boards, or attach with plastic fasteners designed for this purpose. Fit courses of insulation between wall ties and other confining obstructions in cavity, with edges butted tightly both ways. Press units firmly against inside wythe of masonry or other construction as shown.

1. Fill cracks and open gaps in insulation with crack sealer compatible with insulation and masonry.

3.7 ANCHORED MASONRY VENEERS

A. Anchor masonry veneers to wall framing and concrete and masonry backup with masonry-veneer anchors to comply with the following requirements:

1. Fasten screw-attached and seismic anchors through sheathing to wall framing and to concrete and masonry backup with metal fasteners of type indicated. Use two fasteners unless anchor design only uses one fastener.
2. Embed tie sections, connector sections, and continuous wire in masonry joints.
3. Locate anchor sections to allow maximum vertical differential movement of ties up and down.
4. Space anchors as indicated, but not more than 16 inches o.c. vertically and horizontally. Install additional anchors within 12 inches of openings and at intervals, not exceeding 24 inches, around perimeter.

B. Provide not less than 2 inches of airspace between back of masonry veneer and face of sheathing and insulation, unless otherwise indicated on the Drawings.

1. Keep airspace clean of mortar droppings and other materials during construction. Bevel beds away from airspace, to minimize mortar protrusions into airspace. Do not attempt to trowel or remove mortar fins protruding into airspace.

3.8 MASONRY-JOINT REINFORCEMENT

A. General: Install entire length of longitudinal side rods in mortar with a minimum cover of 5/8 inch on exterior side of walls, 1/2 inch elsewhere. Lap reinforcement a minimum of 6 inches.

1. Space reinforcement not more than 16 inches o.c.
2. Space reinforcement not more than 8 inches o.c. in foundation walls and parapet walls.
3. Provide reinforcement not more than 8 inches above and below wall openings and extending 12 inches beyond openings in addition to continuous reinforcement.

B. Interrupt joint reinforcement at control and expansion joints unless otherwise indicated.

C. Provide continuity at wall intersections by using prefabricated T-shaped units.

D. Provide continuity at corners by using prefabricated L-shaped units.

E. Cut and bend reinforcing units as directed by manufacturer for continuity at corners, returns, offsets, column fireproofing, pipe enclosures, and other special conditions.

3.9 ANCHORING MASONRY TO STRUCTURAL STEEL AND CONCRETE

A. Anchor masonry to structural steel and concrete, where masonry abuts or faces structural steel or concrete, to comply with the following:

1. Provide an open space not less than 1 inch wide between masonry and structural steel or concrete unless otherwise indicated. Keep open space free of mortar and other rigid materials.
2. Anchor masonry with anchors embedded in masonry joints and attached to structure.
3. Space anchors as indicated, but not more than 24 inches o.c. vertically and 36 inches o.c. horizontally.

3.10 CONTROL AND EXPANSION JOINTS

A. General: Install control- and expansion-joint materials in unit masonry as masonry progresses. Do not allow materials to span control and expansion joints without provision to allow for in-plane wall or partition movement.

B. Form control joints in concrete masonry using one of the following methods:

1. Fit bond-breaker strips into hollow contour in ends of CMUs on one side of control joint. Fill resultant core with grout, and rake out joints in exposed faces for application of sealant.
2. Install preformed control-joint gaskets designed to fit standard sash block.
3. Install interlocking units designed for control joints. Install bond-breaker strips at joint. Keep head joints free and clear of mortar, or rake out joint for application of sealant.
4. Install temporary foam-plastic filler in head joints, and remove filler when unit masonry is complete for application of sealant.

C. Form expansion joints in brick as follows:

1. Build flanges of metal expansion strips into masonry. Lap each joint 4 inches in direction of water flow. Seal joints below grade and at junctures with horizontal expansion joints if any.
2. Build flanges of factory-fabricated, expansion-joint units into masonry.
3. Build in compressible joint fillers where indicated.
4. Form open joint full depth of brick wythe and of width indicated, but not less than 3/8 inch for installation of sealant and backer rod specified in Section 079200 "Joint Sealants."

D. Provide horizontal, pressure-relieving joints by either leaving an airspace or inserting a compressible filler of width required for installing sealant and backer rod specified in Section 079200 "Joint Sealants," but not less than 3/8 inch.

1. Locate horizontal, pressure-relieving joints beneath shelf angles supporting masonry.

3.11 LINTELS

A. Install steel lintels where indicated.

B. Provide concrete or masonry lintels where shown and where openings of more than 12 inches for brick-size units and 24 inches for block-size units are shown without structural steel or other supporting lintels.

C. Provide minimum bearing of 8 inches at each jamb unless otherwise indicated.

3.12 FLASHING, WEEP HOLES, AND CAVITY VENTS

A. General: Install embedded flashing and weep holes in masonry at shelf angles, lintels, ledges, other obstructions to downward flow of water in wall, and where indicated. Install cavity vents at shelf angles, ledges, and other obstructions to upward flow of air in cavities, and where indicated.

B. Install flashing as follows unless otherwise indicated:

1. Prepare masonry surfaces so they are smooth and free from projections that could puncture flashing. Where flashing is within mortar joint, place through-wall flashing on sloping bed of mortar and cover with mortar. Before covering with mortar, seal penetrations in flashing with adhesive, sealant, or tape as recommended by flashing manufacturer.
2. At multiwythe masonry walls, including cavity walls, extend flashing through outer wythe, turned up a minimum of 8 inches, and through inner wythe to within 1/2 inch of the interior face of wall in exposed masonry. Where interior face of wall is to receive furring or framing, carry flashing completely through inner wythe and turn flashing up approximately 2 inches on interior face.
3. At masonry-veneer walls, extend flashing through veneer, across airspace behind veneer, and up face of sheathing at least 8 inches; with upper edge tucked under water-resistive barrier or air barrier, lapping at least 4 inches. Fasten upper edge of flexible flashing to sheathing through termination bar.
4. At lintels and shelf angles, extend flashing a minimum of 6 inches into masonry at each end. At heads and sills, extend flashing 6 inches at ends and turn up not less than 2 inches to form end dams.
5. Interlock end joints of ribbed sheet metal flashing by overlapping ribs not less than 1-1/2 inches or as recommended by flashing manufacturer, and seal lap with elastomeric sealant complying with requirements in Section 079200 "Joint Sealants" for application indicated.
6. Install metal drip edges and sealant stops with ribbed sheet metal flashing by interlocking hemmed edges to form hooked seam. Seal seam with elastomeric sealant complying with requirements in Section 079200 "Joint Sealants" for application indicated.
7. Install metal drip edges beneath flexible flashing at exterior face of wall. Stop flexible flashing 1/2 inch back from outside face of wall, and adhere flexible flashing to top of metal drip edge.

C. Install single-wythe CMU flashing system in bed joints of CMU walls where indicated to comply with manufacturer's written instructions. Install CMU cell pans with upturned edges

located below face shells and webs of CMUs above and with weep spouts aligned with face of wall. Install CMU web covers so that they cover upturned edges of CMU cell pans at CMU webs and extend from face shell to face shell.

D. Install reglets and nailers for flashing and other related construction where they are shown to be built into masonry.

E. Install weep holes in exterior wythes and veneers in head joints of first course of masonry immediately above embedded flashing.

1. Use specified weep/cavity vent products to form weep holes.
2. Space weep holes 24 inches o.c. unless otherwise indicated.
3. Cover cavity side of weep holes with plastic insect screening at cavities insulated with loose-fill insulation.

F. Place pea gravel in cavities as soon as practical to a height equal to height of first course above top of flashing, but not less than 2 inches, to maintain drainage.

1. Fill cavities full height by placing pea gravel in cavities as masonry is laid, so that at any point, masonry does not extend more than 24 inches above top of pea gravel.

G. Place cavity drainage material in cavities or airspace behind veneers to comply with configuration requirements for cavity drainage material in "Miscellaneous Masonry Accessories" Article.

H. Install cavity vents in head joints in exterior wythes at spacing indicated. Use specified weep/cavity vent products to form cavity vents.

1. Close cavities off vertically and horizontally with blocking in manner indicated. Install through-wall flashing and weep holes above horizontal blocking.

3.13 REINFORCED UNIT MASONRY INSTALLATION

A. Temporary Formwork and Shores: Construct formwork and shores as needed to support reinforced masonry elements during construction.

1. Construct formwork to provide shape, line, and dimensions of completed masonry as indicated. Make forms sufficiently tight to prevent leakage of mortar and grout. Brace, tie, and support forms to maintain position and shape during construction and curing of reinforced masonry.
2. Do not remove forms and shores until reinforced masonry members have hardened sufficiently to carry their own weight and that of other loads that may be placed on them during construction.

B. Placing Reinforcement: Comply with requirements in TMS 602/ACI 530.1/ASCE 6.

C. Grouting: Do not place grout until entire height of masonry to be grouted has attained enough strength to resist grout pressure.

1. Comply with requirements in TMS 602/ACI 530.1/ASCE 6 for cleanouts and for grout placement, including minimum grout space and maximum pour height.
2. Limit height of vertical grout pours to not more than 60 inches.

3.14 FIELD QUALITY CONTROL

A. Testing and Inspecting: Owner will engage special inspectors to perform tests and inspections and prepare reports. Allow inspectors access to scaffolding and work areas as needed to perform tests and inspections. Retesting of materials that fail to comply with specified requirements shall be done at Contractor's expense.

B. Inspections: Special inspections according to Level B in TMS 402/ACI 530/ASCE 5.

1. Begin masonry construction only after inspectors have verified proportions of site-prepared mortar.
2. Place grout only after inspectors have verified compliance of grout spaces and of grades, sizes, and locations of reinforcement.
3. Place grout only after inspectors have verified proportions of site-prepared grout.

C. Testing Prior to Construction: One set of tests.

D. Clay Masonry Unit Test: For each type of unit provided, according to ASTM C 67 for compressive strength.

E. Concrete Masonry Unit Test: For each type of unit provided, according to ASTM C 140 for compressive strength.

F. Mortar Aggregate Ratio Test (Proportion Specification): For each mix provided, according to ASTM C 780.

G. Grout Test (Compressive Strength): For each mix provided, according to ASTM C 1019.

3.15 PARGING

A. Parge exterior faces of below-grade masonry walls, where indicated, in two uniform coats to a total thickness of 3/4 inch. Dampen wall before applying first coat, and scarify first coat to ensure full bond to subsequent coat.

B. Use a steel-trowel finish to produce a smooth, flat, dense surface with a maximum surface variation of 1/8 inch per foot. Form a wash at top of parging and a cove at bottom.

C. Damp-cure parging for at least 24 hours and protect parging until cured.

3.16 REPAIRING, POINTING, AND CLEANING

A. Remove and replace masonry units that are loose, chipped, broken, stained, or otherwise damaged or that do not match adjoining units. Install new units to match adjoining units; install in fresh mortar, pointed to eliminate evidence of replacement.

B. Pointing: During the tooling of joints, enlarge voids and holes, except weep holes, and completely fill with mortar. Point up joints, including corners, openings, and adjacent construction, to provide a neat, uniform appearance. Prepare joints for sealant application, where indicated.

C. In-Progress Cleaning: Clean unit masonry as work progresses by dry brushing to remove mortar fins and smears before tooling joints.

D. Final Cleaning: After mortar is thoroughly set and cured, clean exposed masonry as follows:

1. Remove large mortar particles by hand with wooden paddles and nonmetallic scrape hoes or chisels.
2. Test cleaning methods on sample wall panel; leave one-half of panel uncleaned for comparison purposes. Obtain Architect's approval of sample cleaning before proceeding with cleaning of masonry.
3. Protect adjacent stone and nonmasonry surfaces from contact with cleaner by covering them with liquid strippable masking agent or polyethylene film and waterproof masking tape.
4. Wet wall surfaces with water before applying cleaners; remove cleaners promptly by rinsing surfaces thoroughly with clear water.
5. Clean brick by bucket-and-brush hand-cleaning method described in BIA Technical Notes 20.
6. Clean concrete masonry by applicable cleaning methods indicated in NCMA TEK 8-4A.
7. Clean masonry with a proprietary acidic cleaner applied according to manufacturer's written instructions.

3.17 MASONRY WASTE DISPOSAL

A. Salvageable Materials: Unless otherwise indicated, excess masonry materials are Contractor's property. At completion of unit masonry work, remove from Project site.

B. Waste Disposal as Fill Material: Dispose of clean masonry waste, including excess or soil-contaminated sand, waste mortar, and broken masonry units, by crushing and mixing with fill material as fill is placed.

1. Crush masonry waste to less than 4 inches in each dimension.
2. Mix masonry waste with at least two parts of specified fill material for each part of masonry waste.
3. Do not dispose of masonry waste as fill within 18 inches of finished grade.

C. Masonry Waste Recycling: Return broken CMUs not used as fill to manufacturer for recycling.

D. Excess Masonry Waste: Remove excess clean masonry waste that cannot be used as fill, as described above or recycled, and other masonry waste, and legally dispose of off Owner's property.

END OF SECTION 042000

SECTION 047200 - CAST STONE MASONRY

PART 1 - GENERAL

1.1 RELATED DOCUMENTS

A. Drawings and general provisions of the Contract, including General and Supplementary Conditions and Division 01 Specification Sections, apply to this Section.

1.2 SUMMARY

A. Section Includes:

1. Cast stone trim.

B. Related Requirements:

1. Section 042000 "Unit Masonry" for installing cast-stone units in unit masonry.

1.3 ACTION SUBMITTALS

A. Product Data: For each type of product.

1. For cast stone units, include construction details, material descriptions, dimensions of individual components and profiles, and finishes.

B. Shop Drawings: Show fabrication and installation details for cast stone units. Include dimensions, details of reinforcement and anchorages if any, and indication of finished faces.

1. Include building elevations showing layout of units and locations of joints and anchors.

C. Samples for Initial Selection: For colored mortar.

D. Samples for Verification:

1. For each color and texture of cast stone required, 4 inches square in size.
2. For each trim shape required, 4 inches in length.
3. For colored mortar, make Samples using same sand and mortar ingredients to be used on Project.

E. Full-Size Samples: For each color, texture, and shape of cast stone unit required.

1. Make available for Architect's review at Project site or at manufacturing plant, if acceptable to Architect.
2. Make Samples from materials to be used for units used on Project.

3. Approved Samples may be installed in the Work.

1.4 INFORMATIONAL SUBMITTALS

A. Qualification Data: For manufacturer and testing agency.

1. Include copies of material test reports, indicating compliance of cast stone with ASTM C1364.

B. Material Test Reports: For each mix required to produce cast stone, based on testing according to ASTM C1364.

1. Provide test reports based on testing within previous six months.

1.5 QUALITY ASSURANCE

A. Manufacturer Qualifications: A qualified manufacturer of cast stone units similar to those indicated for this Project, that has sufficient production capacity to manufacture required units, and is a plant certified by the Cast Stone Institute, the Architectural Precast Association, or the Precast/Prestressed Concrete Institute for Group A, Category AT.

B. Testing Agency Qualifications: Qualified according to ASTM E329 for testing indicated. Retain one of two paragraphs below if mockups are required. First paragraph is for supplying trim units for installation within a masonry wall. Second is for larger or standalone installations.

C. Furnish cast stone for installation in mockups specified in Section 042000 "Unit Masonry."

D. Mockups: Build mockups to verify selections made under Sample submittals and to demonstrate aesthetic effects and to set quality standards for materials and execution.

1. Approval of mockups does not constitute approval of deviations from the Contract Documents contained in mockups unless Architect specifically approves such deviations in writing.
2. Subject to compliance with requirements, approved mockups may become part of the completed Work if undisturbed at time of Substantial Completion.

1.6 DELIVERY, STORAGE, AND HANDLING

A. Coordinate delivery of cast stone with unit masonry work to avoid delaying the Work.

B. Pack, handle, and ship cast stone units in suitable packs or pallets.

1. Lift with wide-belt slings; do not use wire rope or ropes that might cause staining. Move cast stone units if required, using dollies with wood supports.
2. Store cast stone units on wood skids or pallets with nonstaining, waterproof covers, securely tied. Arrange to distribute weight evenly and to prevent damage to units. Ventilate under covers to prevent condensation.

PART 2 - PRODUCTS

2.1 MANUFACTURERS

A. Source Limitations for Cast Stone: Obtain cast stone units from single source from single manufacturer.

2.2 CAST STONE MATERIALS

A. General: Comply with ASTM C1364.

B. Portland Cement: ASTM C150/C150M, Type I or Type III, containing not more than 0.60 percent total alkali when tested according to ASTM C114. Provide natural color or white cement as required to produce cast stone color indicated.

C. Coarse Aggregates: Granite, quartz, or limestone complying with ASTM C33/C33M; gradation and colors as needed to produce required cast stone textures and colors.

D. Fine Aggregates: Natural sand or crushed stone complying with ASTM C33/C33M, gradation and colors as needed to produce required cast stone textures and colors.

E. Color Pigment: ASTM C979/C979M, synthetic mineral-oxide pigments or colored water-reducing admixtures; color stable, free of carbon black, nonfading, and resistant to lime and other alkalis.

F. Admixtures: Use only admixtures specified or approved in writing by Architect.

1. Do not use admixtures that contain more than 0.1 percent water-soluble chloride ions by mass of cementitious materials. Do not use admixtures containing calcium chloride.
2. Use only admixtures that are certified by manufacturer to be compatible with cement and other admixtures used.
3. Air-Entraining Admixture: ASTM C260/C260M. Add to mixes for units exposed to the exterior at manufacturer's prescribed rate to result in an air content of 4 to 6 percent, except do not add to zero-slump concrete mixes.
4. Water-Reducing Admixture: ASTM C494/C494M, Type A.
5. Water-Reducing, Retarding Admixture: ASTM C494/C494M, Type D.
6. Water-Reducing, Accelerating Admixture: ASTM C494/C494M, Type E.

G. Reinforcement:

1. Deformed steel bars complying with ASTM A615/A615M, Grade 40. Use galvanized or epoxy-coated reinforcement when covered with less than 1-1/2 inches of cast stone material.

    a. Epoxy Coating: ASTM A775/A775M.
    b. Galvanized Coating: ASTM A767/A767M.

2. Plain-Steel, Welded-Wire Reinforcement: ASTM A1064/A1064M, plain, fabricated from as-drawn steel wire into flat sheets.
3. Galvanized-Steel, Welded-Wire Reinforcement: ASTM A1064/A1064M, plain, fabricated from galvanized-steel wire into flat sheets.
4. Fiber Reinforcement: ASTM C1116/C1116M.

H. Embedded Anchors and Other Inserts: Fabricated from stainless steel complying with ASTM A240/A240M, ASTM A276/A276M, or ASTM A666, Type 304 or steel complying with ASTM A36/A36M and hot-dip galvanized to comply with ASTM A123/A123M.

2.3 CAST STONE UNITS

A. Cast Stone Type: As indicated on the Drawings.

1. Style: As selected by the Architect from the manufacturer's full range.
2. Texture: As selected by the Architect from the manufacturer's full range.
3. Color: As selected by the Architect from the manufacturer's full range.
4. Size: As indicated on the Drawings.

B. Cast Stone Units: Comply with ASTM C1364.

1. Units shall be manufactured using the wet-cast method.

C. Fabricate units with sharp arris and accurately reproduced details, with indicated texture on all exposed surfaces unless otherwise indicated.

1. Slope exposed horizontal surfaces 1:12 to drain unless otherwise indicated.
2. Provide raised fillets at backs of sills and at ends indicated to be built into jambs.
3. Provide drips on projecting elements unless otherwise indicated.

D. Fabrication Tolerances:

1. Variation in Cross Section: Do not vary from indicated dimensions by more than 1/8 inch.
2. Variation in Length: Do not vary from indicated dimensions by more than 1/360 of the length of unit or 1/8 inch, whichever is greater, but in no case by more than 1/4 inch.
3. Warp, Bow, and Twist: Not to exceed 1/360 of the length of unit or 1/8 inch, whichever is greater.
4. Location of Grooves, False Joints, Holes, Anchorages, and Similar Features: Do not vary from indicated position by more than 1/8 inch on formed surfaces of units and 3/8 inch on unformed surfaces.

E. Cure Units as Follows:

1. Cure units in enclosed, moist curing room at 95 percent relative humidity and temperature of 100 deg F for 12 hours or 70 deg F for 16 hours.
2. Keep units damp and continue curing to comply with one of the following:

a. No fewer than five days at mean daily temperature of 70 deg F or above.

b. No fewer than seven days at mean daily temperature of 50 deg F or above.

F. Acid etch units after curing to remove cement film from surfaces to be exposed to view.

2.4 MORTAR MATERIALS

A. Provide mortar materials that comply with Section 042000 "Unit Masonry."

B. Portland Cement: ASTM C150/C150M, Type I or II, except Type III may be used for cold-weather construction. Provide natural color or white cement as required to produce mortar color indicated.

C. Hydrated Lime: ASTM C207, Type S.

D. Portland Cement-Lime Mix: Packaged blend of portland cement and hydrated lime containing no other ingredients.

E. Colored Cement Products: Packaged blend made from portland cement and hydrated lime and mortar pigments, all complying with specified requirements, and containing no other ingredients.

1. Formulate blend as required to produce color indicated or, if not indicated, as selected from manufacturer's standard colors.
2. Pigments shall not exceed 10 percent of portland cement by weight.

F. Preblended Dry Mortar Mix: Packaged blend made from portland cement and hydrated lime, sand, mortar pigments, water repellents, and admixtures and complying with ASTM C1714/C1714M.

G. Aggregate for Mortar: ASTM C144.

1. For mortar that is exposed to view, use washed aggregate consisting of natural sand or crushed stone.
2. For joints less than 1/4 inch thick, use aggregate graded with 100 percent passing the No. 16 sieve.
3. White-Mortar Aggregates: Natural white sand or crushed white stone.
4. Colored Aggregates: Natural sand or crushed stone of color necessary to produce required mortar color.

H. Water: Potable.

2.5 ACCESSORIES

A. Anchors: Type and size indicated, fabricated from Type 304 stainless steel complying with ASTM A240/A240M, ASTM A276/A276M, or ASTM A666 or steel complying with ASTM A36/A36M and hot-dip galvanized to comply with ASTM A123/A123M.

B. Dowels: 1/2-inch-diameter round bars, fabricated from Type 304 stainless steel complying with ASTM A240/A240M, ASTM A276/A276M, or ASTM A666 or steel complying with ASTM A36/A36M and hot-dip galvanized to comply with ASTM A123/A123M.

2.6 MORTAR MIXES

A. Comply with requirements in Section 042000 "Unit Masonry" for mortar mixes.

B. Comply with ASTM C270, Proportion Specification.

1. For setting mortar, use Type N.
2. For pointing mortar, use Type N.

C. Preblended dry mortar mix complying with ASTM C1714/C1714M and capable of producing mortar strength as indicated in ASTM C270.

1. For setting mortar, use Type N.
2. For pointing mortar, use Type N.

D. Pigmented Mortar: Use colored cement product or select and proportion pigments with other ingredients to produce color required. Do not add pigments to colored cement products.

1. Pigments shall not exceed 10 percent of portland cement by weight.
2. Mix to match Architect's sample.
3. Application: Use pigmented mortar for exposed mortar joints.

E. Colored-Aggregate Mortar: Produce required mortar color by using colored aggregates and natural color or white cement as necessary to produce required mortar color.

1. Mix to match Architect's sample.
2. Application: Use colored-aggregate mortar for exposed mortar joints.

2.7 SOURCE QUALITY CONTROL

A. Engage a qualified independent testing agency to sample and test cast stone units according to ASTM C1364.

PART 3 - EXECUTION

3.1 EXAMINATION

A. Examine substrates and conditions, with Installer present, for compliance with requirements for installation tolerances and other conditions affecting performance of the Work.

B. Proceed with installation only after unsatisfactory conditions have been corrected.

3.2 SETTING CAST STONE IN MORTAR

A. Set cast stone as indicated in TMS 604.

B. Install cast stone units to comply with requirements in Section 042000 "Unit Masonry."

C. Set cast stone as indicated on Drawings. Set units accurately in locations indicated, with edges and faces aligned according to established relationships and indicated tolerances.

1. Install anchors, supports, fasteners, and other attachments indicated or necessary to secure units in place.
2. Coordinate installation of cast stone with installation of flashing specified in other Sections.

D. Wet joint surfaces thoroughly before applying mortar or setting in mortar.

E. Set units in full bed of mortar with full head joints unless otherwise indicated.

1. Set units with joints 1/4 to 3/8 inch wide unless otherwise indicated.
2. Build anchors and ties into mortar joints as units are set.
3. Fill dowel holes and anchor slots with mortar.
4. Fill collar joints solid as units are set.
5. Build concealed flashing into mortar joints as units are set.
6. Keep head joints in copings and between other units with exposed horizontal surfaces open to receive sealant.
7. Keep joints at shelf angles open to receive sealant.

F. Rake out joints for pointing with mortar to depths of not less than 3/4 inch. Rake joints to uniform depths with square bottoms and clean sides. Scrub faces of units to remove excess mortar as joints are raked.

G. Point mortar joints by placing and compacting mortar in layers not greater than 3/8 inch. Compact each layer thoroughly and allow it to become thumbprint hard before applying next layer.

H. Tool exposed joints slightly concave when thumbprint hard. Use a smooth plastic jointer larger than joint thickness.

I. Rake out joints for pointing with sealant to depths of not less than 3/4 inch. Scrub faces of units to remove excess mortar as joints are raked.

J. Point joints with sealant to comply with applicable requirements in Section 079200 "Joint Sealants."

1. Prime cast stone surfaces to receive sealant and install compressible backer rod in joints before applying sealant unless otherwise indicated.

K. Provide sealant joints at head joints of copings and other horizontal surfaces; at expansion, control, and pressure-relieving joints; and at locations indicated.

1. Keep joints free of mortar and other rigid materials.
2. Build in compressible foam-plastic joint fillers where indicated.
3. Form joint of width indicated, but not less than 3/8 inch <**Insert dimension**>.
4. Prime cast stone surfaces to receive sealant and install compressible backer rod in joints before applying sealant unless otherwise indicated.
5. Prepare and apply sealant of type and at locations indicated to comply with applicable requirements in Section 079200 "Joint Sealants."

3.3 SETTING ANCHORED CAST STONE WITH SEALANT-FILLED JOINTS

A. Set cast stone as indicated in TMS 604.

B. Set cast stone as indicated on Drawings. Set units accurately in locations indicated, with edges and faces aligned according to established relationships and indicated tolerances.

1. Install anchors, supports, fasteners, and other attachments indicated or necessary to secure units in place.
2. Shim and adjust anchors, supports, and accessories to set cast stone in locations indicated with uniform joints.

C. Keep cavities open where unfilled space is indicated between back of cast stone units and backup wall; do not fill cavities with mortar or grout.

D. Fill anchor holes with sealant.

1. Where dowel holes occur at pressure-relieving joints, provide compressible material at ends of dowels.

E. Set cast stone supported on clip or continuous angles on resilient setting shims. Use material of thickness required to maintain uniform joint widths. Hold shims back from face of cast stone a distance at least equal to width of joint.

F. Keep joints free of mortar and other rigid materials. Remove temporary shims and spacers from joints after anchors and supports are secured in place and cast stone units are anchored. Do not begin sealant installation until temporary shims and spacers are removed.

1. Form open joint of width indicated, but not less than 3/8 inch.

G. Prime cast stone surfaces to receive sealant and install compressible backer rod in joints before applying sealant unless otherwise indicated.

H. Prepare and apply sealant of type and at locations indicated to comply with applicable requirements in Section 079200 "Joint Sealants."

3.4 INSTALLATION TOLERANCES

A. Variation from Plumb: Do not exceed 1/8 inch in 10 ft., or 1/2 inch maximum.

B. Variation from Level: Do not exceed 1/8 inch in 10 ft., or 1/2 inch maximum.

C. Variation in Joint Width: Do not vary joint thickness more than 1/8 inch in 36 inches or one-fourth of nominal joint width, whichever is less.

D. Variation in Plane between Adjacent Surfaces (Lipping): Do not vary from flush alignment with adjacent units or adjacent surfaces indicated to be flush with units by more than 1/16 inch, except where variation is due to warpage of units within tolerances specified.

3.5 ADJUSTING AND CLEANING

A. Remove and replace stained and otherwise damaged units and units not matching approved Samples. Cast stone may be repaired if methods and results are approved by Architect.

B. Replace units in a manner that results in cast stone matching approved Samples, complying with other requirements, and showing no evidence of replacement.

C. In-Progress Cleaning: Clean cast stone as work progresses.

1. Remove mortar fins and smears before tooling joints.
2. Remove excess sealant immediately, including spills, smears, and spatter.

D. Final Cleaning: After mortar is thoroughly set and cured, clean exposed cast stone as follows:

1. Remove large mortar particles by hand with wooden paddles and nonmetallic scrape hoes or chisels.
2. Test cleaning methods on sample; leave one sample uncleaned for comparison purposes. Obtain Architect's approval of sample cleaning before proceeding with cleaning of cast stone.
3. Protect adjacent surfaces from contact with cleaner by covering them with liquid strippable masking agent or polyethylene film and waterproof masking tape.
4. Wet surfaces with water before applying cleaners; remove cleaners promptly by rinsing thoroughly with clear water.
5. Clean cast stone by methods described in Cast Stone Institute Technical Bulletin #39.
6. Clean cast stone with proprietary acidic cleaner applied according to manufacturer's written instructions.

END OF SECTION 047200

SECTION 05 12 00
STRUCTURAL STEEL FRAMING

PART 1 - GENERAL

1.1 SUMMARY

A. Section Includes:
   1. Structural steel shapes, plates, and bars.
   2. Structural pipe.
   3. Bolts, nuts, and washers.

1.2 RELATED REQUIREMENTS

A. Materials Testing And Inspection During Construction: Section 01 45 29, TESTING LABORATORY SERVICES.
B. Steel Joist: Section 05 21 00, STEEL JOIST FRAMING.
C. Steel Decking: Section 05 31 00, STEEL DECKING.
D. Steel Framing: Section 05 55 00, METAL FABRICATIONS.
E. Steel Finishes: Section 09 06 00, SCHEDULE FOR FINISHES.
F. Painting: Section 09 91 00, PAINTING.

1.3 APPLICABLE PUBLICATIONS

A. Comply with references to extent specified in this section.
B. American Institute of Steel Construction (AISC):
   1. AISC Manual - Steel Construction Manual, 14th Ed.
   2. 303-10 - Code of Structural Steel Buildings and Bridges.
   3. 360-10: Specification for Structural Steel Buildings.
C. The American Society of Mechanical Engineers (ASME):
   1. B18.22.1-09 - Washers: Helical Spring-Lock, Tooth Lock, and Plain Washers.
D. American Welding Society (AWS):
   1. D1.1/D1.1M-15 - Structural Welding Code - Steel.
E. ASTM International (ASTM):
   1. A6/A6M-14 - General Requirements for Rolled Structural Steel Bars, Plates, Shapes, and Sheet Piling.
   2. A36/A36M-14 - Carbon Structural Steel.
   3. A53/A53M-12 - Pipe, Steel, Black and Hot-Dip, Zinc-Coated, Welded and Seamless.
   4. A123/A123M-15 - Zinc (Hot-Dip Galvanized) Coatings on Iron and Steel Products.

5. A242/A242M-13 - High-Strength Low-Alloy Structural Steel.
6. A283/A283M-13 - Low and Intermediate Tensile Strength Carbon Steel Plates.
7. A307-14 - Carbon Steel Bolts, Studs, and Threaded Rod 60,000 PSI Tensile Strength.
8. A325-14 - Structural Bolts, Steel, Heat Treated, 120/105 ksi Minimum Tensile Strength.
9. A490-14a - Structural Bolts, Alloy Steel, Heat Treated, 150 ksi Minimum Tensile Strength.
10. A500/A500M-13 - Cold-Formed Welded and Seamless Carbon Steel Structural Tubing and Rounds and Shapes.
11. A501/A501M-14 - Hot-Formed Welded and Seamless Carbon Steel Structural Tubing and Rounds and Shapes.
12. A572/A572M-15 - High-Strength Low-Alloy Columbium-Vanadium Structural Steel.
13. A992/A992M-15 - Structural Shapes.
14. F2329/F2329M-15 - Zinc Coating, Hot-Dip, Requirements for Application to Carbon and Alloy steel Bolts, Screws, washers, Nuts, and Special Threaded Fasteners.

F. Master Painters Institute (MPI):
   1. No. 18 - Primer, Zinc Rich, Organic.

G. Military Specifications (Mil. Spec.):
   1. MIL-P-21035 - Paint, High Zinc Dust Content, Galvanizing, Repair.

H. Occupational Safety and Health Administration (OSHA):
   1. 29 CFR 1926.752(e) - Guidelines For Establishing The Components Of A Site-Specific Erection Plan.
   2. 29 CFR 1926-2001 - Safety Standards for Steel Erection.

I. Research Council on Structural Connections (RCSC) of The Engineering Foundation:
   1. Specification for Structural Joints Using ASTM A325 or A490 Bolts.

1.4 SUBMITTALS

A. Submittal Procedures: Section 01 33 23, SHOP DRAWINGS, PRODUCT DATA, AND SAMPLES.

B. Submittal Drawings:
   1. Show size, configuration, and fabrication and installation details.

C. Sustainable Construction Submittals:

1. Recycled Content: Identify post-consumer and pre-consumer recycled content percentage by weight.

D. Test Reports: Certify products comply with specifications.
   1. Welders' qualifying tests.

E. Certificates: Certify each product complies with specifications.
   1. Structural steel.
   2. Steel connections.
   3. Welding materials.
   4. Shop coat primer paint.

F. Qualifications: Substantiate qualifications comply with specifications.
   1. Fabricator .
   2. Installer.
   3. Welders and welding procedures.

G. Delegated Design Drawings and Calculations: Signed and sealed by responsible Architect/Engineer.
   1. Connection calculations.

H. Record Surveys: Signed and sealed by responsible surveyor or engineer.

1.5 QUALITY ASSURANCE

A. Fabricator Qualifications: AISC Quality Certification participant designated as AISC Certified Plant, Category STD.
   1. Regularly fabricates specified products.
   2. Fabricated specified products with satisfactory service on five similar installations for minimum five years.

B. Installer Qualifications: AISC Quality Certification Program participant designated as AISC-Certified Erector, Category ACSE.
   1. Regularly installs specified products.
   2. Installed specified products with satisfactory service on five similar installations for minimum five years.

C. Before commencement of Work, ensure steel erector provides written notification required by OSHA 29 CFR 1926.752(e). Submit a copy of the notification to Contracting Officer's Representative.

D. Welders and Welding Procedures Qualifications: AWS D1.1/D1.1M.

1.6 WARRANTY

A. Construction Warranty: FAR clause 52.246-21, "Warranty of Construction."

PART 2 - PRODUCTS

2.1 SYSTEM PERFORMANCE

A. Delegated Design: Prepare submittal documents including design calculations and drawings signed and sealed by registered design professional, licensed in state where project is located.

B. Design structural steel framing connections complying with specified performance:

1. Load Capacity: Resist loads indicated on drawings. Account for connection and member loads and eccentricities.
    a. Request additional design criteria when necessary to complete connection design.
2. Configuration: Design and detail all connections for each member size, steel grade and connection type to resist the loads and reactions indicated on the drawings or specified herein. Use details consistent with details shown on drawings, supplementing where necessary. The details shown on drawings are conceptual and do not indicate the required weld sizes or number of bolts unless specifically noted. Use rational engineering design and standard practice in detailing, accounting for all loads and eccentricities in both the connection and the members. Promptly notify the Contracting Officer Representative of any location where the connection design criteria is not clearly indicated. The design of all connections is subject to the review and acceptance of the Contracting Officer's Representative. Submit structural calculations prepared and sealed by a qualified engineer registered in the state where the project is located. Submit calculations for review before preparation of detail drawings.

2.2 MATERIALS

A. W-Shapes:

1. ASTM A992/A992M.
2. ASTM A572/A572M; Grade 50.
3. ASTM A529; Grade 50.

B. S-Shapes:

1. ASTM A36/A36M.
2. ASTM A572/A572M; Grade 50.
3. ASTM A529; Grade 50.

C. Channel and Angles:
   1. ASTM A36/A36M.
   2. ASTM A572/A572M; Grade 50.
   3. ASTM A529; Grade 50.

D. Plates and Bars:
   1. ASTM A36/A36M.
   2. ASTM A572/A572M; Grade 50.
   3. ASTM A529; Grade 50.

E. Hollow Structural Sections:
   1. ASTM A500/A500M.
   2. ASTM A501/A501M.

F. Structural Pipe: ASTM A53/A53M, Grade B.

G. Bolts, Nuts and Washers: Galvanized for galvanized framing and plain finish for other framing.
   1. High-strength bolts, including nuts and washers: ASTM A325.
   2. Bolts and nuts, other than high-strength: ASTM A307, Grade A.
   3. Plain washers, other than those in contact with high-strength bolt heads and nuts: ASME B18.22.1.

H. Welding Materials: AWS D1.1, type to suit application.

2.3 PRODUCTS - GENERAL

A. Basis of Design: Section 09 06 00, SCHEDULE FOR FINISHES.

B. Sustainable Construction Requirements:
   1. Steel Recycled Content: 30 percent total recycled content, minimum.
   2. Low Pollutant-Emitting Materials: Comply with VOC limits specified in Section 01 81 13, SUSTAINABLE CONSTRUCTION REQUIREMENTS for the following products:
      a. Paints and coatings.

2.4 FABRICATION

A. Fabricate structural steel according to Chapter M, AISC 360.

B. Shop and Field Connections:
   1. Weld connections according to AWS D1.1/D1.1M. Welds shall be made only by welders and welding operators who have been previously qualified by tests as prescribed in AWS D1.1 to perform type of work required.
   2. High-Strength Bolts: High-strength bolts tightened to a bolt tension minimum 70 percent of their minimum tensile strength. Tightening

done with properly calibrated wrenches, by turn-of-nut method or by use of direct tension indicators (bolts or washers). Tighten bolts in connections identified as slip-critical using Direct Tension Indicators. Twist-off torque bolts are not an acceptable alternate fastener for slip critical connections.

2.5 FINISHES

A. Shop Priming:
   1. Prime paint structural steel according to AISC 303, Section 6.
      a. Interstitial Space Structural Steel: Prime paint, unless indicated to receive sprayed on fireproofing.

B. Shop Finish Painting: Apply primer and finish paint as specified in Section 09 91 00, PAINTING.

C. Do not paint:
   1. Surfaces within 50 mm (2 inches) of field welded joints.
   2. Surfaces indicated to be encased in concrete.
   3. Surfaces receiving sprayed on fireproofing.
   4. Beam top flanges receiving shear connector studs applied.

D. Structural Steel Galvanizing: ASTM A123/A123M, hot dipped, after fabrication. Touch-up after erection: Clean and wire brush any abraded and other spots worn through zinc coating, including threaded portions of bolts and welds and touch-up with galvanizing repair paint.
   1. Galvanize structural steel framing installed at exterior locations.

E. Bolts, Nuts, and Washers Galvanizing: ASTM F2329, hot-dipped.

2.6 ACCESSORIES

A. General: Shop paint steel according to AISC 303, Section 6.

B. Finish Paint System: Primer and finish as specified in Section 09 91 00, PAINTING.

C. Galvanizing Repair Paint: MPI No. 18.

PART 3 - EXECUTION

3.1 ERECTION

A. Erect structural steel according to AISC 303 and AISC 360.

B. Set structural steel accurately at locations and elevations indicated on drawings.

C. Maintain erection tolerances of structural steel within AISC 303 requirements.

1. Pour Stop Elevation Tolerance: 6 mm (1/4 inch), maximum, before concrete placement.

D. Weld and bolt connections as specified for shop connections.

3.2 FIELD PAINTING

A. After welding, clean and prime weld areas to match adjacent finish.

B. Touch-up primer damaged by construction operations.

C. Apply galvanizing repair paint to galvanized coatings damaged by construction operations.

D. Finish Painting: As specified in Section 09 91 00, PAINTING.

3.3 FIELD QUALITY CONTROL

A. Record Survey:

1. Engage registered land surveyor or registered civil engineer as specified in Section 01 00 00, GENERAL REQUIREMENTS to perform survey.
2. Measure and record structural steel framing plumbness, level, and alignment after completing bolting and welding and before installation of work supported by structural steel.
3. Identify deviations from allowable tolerances specified in AISC Manual.

- - E N D - -

SECTION 05 21 00
STEEL JOIST FRAMING

PART 1 - GENERAL

1.1 DESCRIPTION:

This section specifies open web, longspan, and deep longspan steel joists and joist girders.

1.2 RELATED WORK:

A. Structural Steel: Section 05 12 00, STRUCTURAL STEEL FRAMING.

B. Finish Painting: Section 09 91 00, PAINTING.

1.3 DESIGN REQUIREMENTS:

Design all elements with the latest published version of applicable Codes.

1.3 TOLERANCES:

Deviation from a straight line between ends of any installed joist shall not exceed 10 mm in 3 m (3/8 inch in 10 feet).

1.4 REGULATORY REQUIREMENTS:

STEEL JOIST INSTITUTE: Standard Specifications, Load Tables and Weight Tables for Steel Joists and Joist Girders, (Latest Edition).

1.5 SUBMITTALS:

A. Submit in accordance with Section 01 33 23, SHOP DRAWINGS, PRODUCT DATA, AND SAMPLES.

B. Shop and Erection Drawings: Complete.

1. Fabrication drawings including details and schedules for the fabrication and assembly of each joist.
2. Erection drawings showing the size and location of each joist, bridging, cross bracing, bearing details, connections, welds, bolts and bearing plates.

C. Certificates: STEEL JOIST INSTITUTE compliance.

D. Design Calculations: If requested by the Resident Engineer, submit complete calculations covering the design of all members and connections. Calculations must be specifically applicable to the joists supplied.

1.6 QUALITY ASSURANCE:

Provide documentation that the joist manufacturer is a member of the Steel Joist Institute and has satisfactorily completed work of a similar scope and nature.

1.7 APPLICABLE PUBLICATIONS:

A. Publications listed below form a part of this specification to extent referenced. Publications are referenced in text by basic designation only.

B. American Institute of Steel Construction (AISC):

1. Specification for Structural Steel Buildings – Allowable Stress Design and Plastic Design (Latest Edition).
2. Load and Resistance Factor Design Specification for Structural Steel Buildings (Latest Edition).

C. American Society for Testing and Materials (ASTM):

A307-07.....Carbon Steel Bolts and Studs, 400 MPa (60,000 psi) Tensile Strength

F3125/F3125M-15.....Standard Specification for High Strength Structural Bolts, Steel and Alloy Steel, Heat Treated, 120 ksi (830 MPa) and 150 ksi (1040 MPa) Minimum Tensile Strength, Inch and Metric Dimensions

D. American Welding Society (AWS):

D1.1-15.....Structural Welding Code – Steel

E. SSPC: The Society for Protective Coatings:

Steel Structures Painting Manual, Volumes 1 and 2

F. Steel Joist Institute (STEEL JOIST INSTITUTE):

Standard Specifications, Load Tables and Weight Tables for Steel Joists and Joist Girders (Latest Edition).

PART 2 - PRODUCTS

2.1 OPEN WEB STEEL JOISTS:

K-Series conforming to STEEL JOIST INSTITUTE standard specifications.

2.2 LONGSPAN STEEL JOISTS AND DEEP LONGSPAN STEEL JOISTS:

LH-Series and DLH-Series conforming to STEEL JOIST INSTITUTE standard specifications.

2.3 ACCESSORIES – FITTINGS:

A. Accessories and fittings, including end supports and bridging, in accordance with standard STEEL JOIST INSTITUTE specification under which joists were designed.

B. Unfinished Threaded Fasteners: ASTM A307, Grade A, regular hexagon type, low carbon steel.

C. High-strength bolts, including nuts and washers: ASTM F3125 heavy hexagon structural bolts.

SPEC WRITER NOTE: Select bedding mortar type to suit project standards, or retain all as contractor's option.

2.4 BEDDING MORTAR:

A. For joist ends bearing on concrete or masonry, provide bedding mortar as follows:
   1. Portland cement and sand, mixed at a ratio of 1 part cement to 3 parts sand, by volume, with enough water for placement and hydration.
   2. Non-metallic, shrinkage-resistant mortar; premixed, non-corrosive, non-staining product containing selected silica sands, portland cement, shrinkage compensating agents, plasticizing and water reducing agents, complying with CRD-C-621.

PART 3 - EXECUTION

3.1 FABRICATION:

A. Fabrication and assembly in accordance with applicable standard STEEL JOIST INSTITUTE specification:
   1. Make chord splices with full penetration welds capable of developing the ultimate strength in tension of the parent material. Make no allowance for the strength of back-up bars or other material incidental to welding.
   2. Provide shop-welded connection plates at panel points to receive supplemental framing.
   3. Holes in Chord Members: Provide holes in chord members where shown for securing other work to steel joists; however, deduct area of holes from the area of chord when calculating strength of member.
   4. Extended Ends: Provide extended ends on joists where shown, complying with manufacturer's standards and requirements of applicable STEEL JOIST INSTITUTE specifications.
   5. Ceiling Extensions: Provide ceiling extension in areas having ceilings attached directly to joist bottom chord. Provide either an extended bottom chord element or a separate unit, to suit manufacturer's standards, of sufficient strength to support ceiling construction. Extend ends to within 12 mm (1/2 inch) of finished wall surface unless otherwise indicated.

6. Bridging: Provide horizontal or diagonal type bridging for joists and joist girders, complying with STEEL JOIST INSTITUTE specifications. Provide bridging anchors for ends of bridging lines terminating at walls or beams. Provide bridging adequate to resist the loads indicated on the Contract Documents.
7. End Anchorage: Provide end anchorages, including bearing plates, to secure joists to adjacent construction, complying with STEEL JOIST INSTITUTE specifications, unless otherwise indicated. Design all end anchorages to resist a minimum net uplift of 1.6 kPa (35 pounds per square foot) of supported area.
8. Header Units: Provide header units to support all joists at openings in floor or roof system not framed with steel shapes.
9. Provide supplemental steel support framing for metal deck where normal deck bearing is precluded by other framing members and minor openings.

3.2 SHOP PAINTING:

A. Shop painting in accordance with applicable STEEL JOIST INSTITUTE standard specification.

B. Shop paint joists and accessories with a rust-inhibiting primer paint. For joists which will be finish painted, limit paint to a primer which is compatible with specified finish paint. In high humidity areas, shop paint joists with a zinc-rich primer to receive top coats per the paint system manufacturer’s recommendations.

3.3 ERECTION:

A. Installation of joists in accordance with applicable STEEL JOIST INSTITUTE standard specification.

B. Handle joists in a manner to avoid damaging of joists. Remove damaged joists from site, except when field repair is approved and such repairs are satisfactorily made in accordance with manufacturer's recommendations.

C. Accurately set joists and end anchorage in accordance with the applicable STEEL JOIST INSTITUTE standard specification. Secure joists resting on masonry or concrete bearing surfaces by welding or bolting to the steel bearing plates as indicated on the Contract Documents. Secure bridging and anchoring in place prior to application of any construction loads. Distribute any temporary loads so that carrying capacity of any joist is not exceeded. Loads shall not be applied to bridging where joist lengths are 12 m (40 feet) and longer. Where joist

lengths are 12 m (40 feet) and longer, install a center row of bolted diagonal bridging to provide lateral stability before slackening of hoisting lines.

3.4 FIELD PAINTING:

A. Clean abraded, corroded, and field welded areas and touch up with same type of paint used in shop painting.

B. Finish painting of steel surfaces is specified in Section 09 91 00, PAINTING.

- - - E N D - - -

SECTION 05 31 00
STEEL DECKING

PART 1 - GENERAL

1.1 SUMMARY

A. Section Includes:
   1. Single pan fluted metal form deck supporting concrete fill as roof substrate.
   2. Corrugated metal form deck supporting concrete fill as roof substrate.
   3. Single pan fluted metal roof deck as roof substrate.
   4. Acoustic metal roof deck as roof substrate.

1.2 RELATED REQUIREMENTS

A. Structural Steel Shapes: Section 05 21 00, STRUCTURAL STEEL FRAMING.
B. Color: Section 09 06 00, SCHEDULE FOR FINISHES.
C. Finish Painting: Section 09 91 00, PAINTING.

1.3 APPLICABLE PUBLICATIONS

A. Comply with references to extent specified in this section.
B. AISI - American Iron and Steel Institute.
   1. S100-12 - Specification for the Design of Cold-formed Steel Structural Members.
C. American Welding Society (AWS):
   1. D1.1/D1.1M-15 - Structural Welding Code - Steel.
   2. D1.3/D1.3M-08 - Structural Welding Code - Sheet Steel.
D. ASTM International (ASTM):
   1. A36/A36M-14 - Carbon Structural Steel.
   2. A653/A653M-15 - Steel Sheet, Zinc-Coated (Galvanized) or Zinc-Iron Alloy-Coated (Galvannealed) by the Hot-Dip Process.
   3. A1008/A1008M-15 - Steel, Sheet, Cold-Rolled, Carbon, Structural, High-Strength Low-Alloy, High-Strength Low-Alloy with Improved Formability, Solution Hardened, and Baked Hardenable.
   4. C423-09a - Sound Absorption and Sound Absorption Coefficients by the Reverberation Room Method.
   5. E119-15 - Fire Tests of Building Construction and Materials.
E. FM Global (FM):
   1. 1-28-15 - Wind Design.

2. Factory Mutual Research Approval Guide.

F. Master Painters Institute (MPI):

1. No. 18 - Primer, Zinc Rich, Organic.

G. Military Specifications (Mil. Spec.):

1. MIL-P-21035B - Paint, High Zinc Dust Content, Galvanizing Repair.

H. Steel Deck Institute (SDI):

1. No. 31-07 - Design Manual for Composite Deck, Form Decks, and Roof Decks.

I. UL LLC (UL):

1. Listed - Online Certifications Directory.
2. 580-13 - Tests for Uplift Resistance of Roof Assemblies.

1.4 SUBMITTALS

A. Submittal Procedures: Section 01 33 23, SHOP DRAWINGS, PRODUCT DATA, AND SAMPLES.

B. Submittal Drawings:

1. Show layout, connections to supporting members, anchorage, sump pans, accessories, deck openings and reinforcements.
2. Show similar information necessary for completing installation as shown and specified, including supplementary framing, ridge and valley plates, cant strips, cut openings, special jointing or other accessories.
3. Show welding, side lap, closure, deck reinforcing and closure reinforcing details.
4. Show openings required for work of other trades, including openings not shown on structural drawings. Indicate where temporary shoring is required to satisfy design criteria.

C. Manufacturer's Literature and Data:

1. Description of each product.
2. Show steel decking section properties and structural characteristics.

D. Sustainable Construction Submittals:

1. Recycled Content: Identify post-consumer and pre-consumer recycled content percentage by weight.

E. Certificates: Certify each product complies with specifications.

1. Fire Resistance Product Listing: For each metal deck type and thickness supporting concrete slab or fill.

F. Qualifications: Substantiate qualifications comply with specifications.
   1. Welders and welding procedures.

1.5 QUALITY ASSURANCE

A. Welders and Welding Procedures Qualifications: AWS D1.3/D1.3M.

1.6 WARRANTY

A. Construction Warranty: FAR clause 52.246-21, "Warranty of Construction."

PART 2 - PRODUCTS

2.1 SYSTEM PERFORMANCE

A. Design steel decking and accessories according to AISI S100.
   1. Wind Uplift Resistance and Corner Conditions:
      a. Eave Overhang: 2.1 kPa (45 psf), minimum.
      b. Other Roof Areas: 1.4 kPa (30 psf), minimum.
   2. Wind Uplift Resistance and Corner Conditions: UL 580, Class 90.
   3. Wind Uplift Resistance and Corner Conditions: FM 1-28; Class 1-90.
   4. Fire Resistance: ASTM E119; as component of 1 hour rated roof assembly.
   5. Noise Reduction Coefficient (NRC): Minimum 0.90 when tested according to ASTM C423.
   6. Design side and end closures and attachment to supporting steel to safely support wet weight of concrete and construction loads.
      a. Cantilever Closure Deflection: 3 mm (1/8 inch), maximum.

2.2 MATERIALS

A. Galvanized Steel Sheet: ASTM A653/A653M; G90 coating.
B. Painted Steel Sheet: ASTM A1008/A1008M, Grade C or D, shop primed.
C. Primer for Shop Painted Sheets: Manufacturer's standard primer (2 coats). When finish painting of steel decking is specified in Section 09 91 00, PAINTING primer coating shall be compatible with specified finish painting.
D. Steel Shapes: ASTM A36/A36M.

2.3 PRODUCTS - GENERAL

A. Basis of Design: Section 09 06 00, SCHEDULE FOR FINISHES.
B. Sustainable Construction Requirements:
   1. Steel Recycled Content: 30 percent total recycled content, minimum.

2.4 METAL ROOF DECK

A. Metal Roof Deck: UL Listed as metal roof deck panels.
   1. Steel decking of the type, depth, thickness, and section properties as shown.

B. Metal Form Deck - Type 1: Single pan fluted units as permanent form for reinforced concrete slabs.
   1. Depth and Thickness: As indicated on drawings.
   2. Material: Painted sheet steel.

C. Metal Form Deck - Type 2: Corrugated deck units as permanent form for reinforced concrete slabs.
   1. Depth and Thickness: As indicated on drawings.
   2. Material: Painted sheet steel.

D. Metal Roof Deck: Single pan fluted units with flat horizontal top surfaces as permanent support for superimposed loads.
   1. Deck Style:
      a. Wide Rib (Type B) deck.
   2. Depth and Thickness: As indicated on drawings.
   3. Material: Galvanized sheet steel.

E. Acoustic Metal Roof Deck Units: Single-pan fluted units with perforated vertical webs.
   1. Depth and Thickness: As indicated on drawings.
   2. Material: Galvanized sheet steel.
   3. Provide acoustical insulation to fill roof deck flutes.

F. Do not use steel deck for hanging supports of building components including suspended ceilings, electrical light fixtures, plumbing, heating, or air conditioning pipes or ducts or electrical conduits.

G. Include integral system for steel decking units used for interstitial levels.
   1. Provide system suitable for simple point of attachment for light duty hanger devices.
   2. Provide system suitable to allow for flexibility for attaching hangers for support of suspended ceilings, electrical, plumbing, heating, or air conditioning items, weight not to exceed 50 kg/m2 (10 psf).
   3. Provide a minimum spacing pattern of 300 mm (12 inches) on centers longitudinally and 600 mm (24 inches) on centers transversely.
   4. Maximum allowable load suspended from any hanger: 23 kg (50 pounds).

5. System consisting of fold-down type hanger tabs or lip hanger is acceptable.

2.5 FABRICATION

A. Fabricate steel decking in sufficient lengths to extend over 3 or more supports, except for interstitial levels.
   1. Cut metal deck units to proper length in shop.

B. Fabricate accessories required to complete installation of steel decking.
   1. Exposed to View: Fabricate from sheet steel matching metal decking.
   2. Concealed from View: Fabricate from galvanized sheet steel.

C. Sheet Metal Accessories:
   1. Metal Cover Plates: For end-abutting decking, to close gaps at changes in deck direction, columns, walls and openings.
      a. Sheet Steel: Minimum 1.0 mm (0.04 inch) thick.
   2. Continuous Sheet Metal Edging: At openings, concrete slab edges and roof deck edges.
      a. Sheet Steel: Minimum 1.0 mm (0.04 inch) thick.
   3. Metal Closure Strips: For openings between decking and other construction. Form to configurations required to provide tight-fitting closures at open ends of flutes and sides of decking.
      a. Sheet Steel: Minimum 1.0 mm (0.04 inch) thick.
   4. Ridge and Valley Plates: Minimum 100 mm (4 inch) wide ridge and valley plates where roof slope exceeds 1/24 (1/2 inch per foot).
      a. Sheet Steel: Minimum 1.0 mm (0.04 inch) thick.
   5. Cant Strips: Provide bent metal 45 degree leg cant strips where indicated on the drawings. Fabricate cant strips with minimum 125 mm (5 inch) face width.
      a. Sheet Steel: Minimum 0.8 mm (0.03 inch) thick.
   6. Seat Angles for Deck: Provide where beam does not frame into column.
   7. Sump Pans for Roof Drains: Fabricated from single piece galvanized sheet steel with level bottoms and sloping sides to direct water flow to drain. Provide sump pans of adequate size to receive roof drains and with bearing flanges minimum 75 mm (3 inches) wide. Recess pans minimum 38 mm (1-1/2 inches) below roof deck surface, unless otherwise shown or required by deck configuration. Drain holes will be field cut.

a. Sheet Steel: Minimum 1.7 mm (0.06 inch) thick.

2.6 FINISHES

A. Shop prime painted sheet steel with two coats of primer.

2.7 ACCESSORIES

A. Primer: Manufacturer's standard primer compatible with finish painting specified in Section 09 91 00, PAINTING.

B. Welding Materials: AWS D1.1, type to suit application.

C. Galvanizing Repair Paint: MPI No. 18.

D. Touch-Up Paint: Match shop finish.

PART 3 - EXECUTION

3.1 PREPARATION

A. Examine and verify substrate suitability for product installation.

B. Protect existing construction and completed work from damage.

C. Remove contaminates from structural steel surfaces where steel decking will be welded.

D. Verify structural steel framing installation is completed, plumbed, and aligned with temporary bracing installed where required.

E. Coordinate with structural steel erector to prevent overloading of structural members when placing steel decking for installation.

3.2 ERECTION

A. Do not use floor deck units for storage or working platforms until permanently secured. Do not overload deck units once placed. Replace deck units that become damaged after erection and before casting concrete at no cost additional to the Government.

B. Place steel decking at right angles to supporting members with ends located over supports.

C. Lap end joints 50 mm (2 inches), minimum.

D. Fluted Form Deck Fastening:

1. Fasten form deck to steel supporting members by welding.
   a. Welds: 16 mm (5/8 inch) diameter puddle welds or elongated welds of equal strength.
   b. Weld Spacing: Maximum 300 mm (12 inches) on center with minimum two welds per unit at each support.

c. Where two units abut, fasten each unit individually to supporting steel framework.

2. End Closure Fastening: Tack weld or self-tapping No. 8 or larger machine screws at 900 mm (3 feet) on center.
   a. Longitudinal End Closure Fastening: Tack weld only.
3. Weld side laps of adjacent decking units.
   a. Fastener Locations: Mid-span and maximum 900 mm (3 feet) on center.

E. Corrugated Form Deck Fastening:
1. Weld end laps of corrugated form deck units in valley of side lap and at middle of sheet.
   a. Weld Spacing: Maximum 380 mm (15 inches) on center.
2. Weld corrugated deck to intermediate supports in X-pattern. Weld in valley of side laps on every other support and in valley of center corrugation on remaining support.
   a. Weld Spacing: Maximum 760 mm (30 inches) on center.

F. Roof Deck Fastening:
1. Fasten decking to steel supporting members by welding.
   a. Welds: 16 mm (5/8 inch) diameter puddle welds or elongated welds of equal strength.
   b. Weld Spacing: Maximum 300 mm (12 inches) on center at every support. Use closer spacing where required for lateral force resistance by diaphragm action.
2. Fasten split or partial decking panels to structure in every valley.
3. Fasten decking to each supporting member at ribs where side laps occur.
   a. Power driven fasteners are acceptable in lieu of welding if strength equivalent to welding specified above is provided. Submit test data and design calculations verifying equivalent design strength.
4. Mechanically fasten decking side laps with self-tapping No. 8 or larger machine screws.
   a. Fastener Locations: Mid-span and maximum 900 mm (3 feet) on center.
5. Provide additional fastening necessary to comply with UL Listing for specified performance.

G. Cutting and Fitting:

1. Field cut steel decking to accommodate columns and other penetrating items.
2. Cut openings located and dimensioned on Structural Drawings.
3. Coordinate openings for other penetrations shown on approved submittal drawings but not shown on Structural Drawings.
   a. Cut and reinforce required opening.
4. Make cuts neat and trim using metal saw, drill or punch-out device. Cutting with torches is prohibited.
5. Do not make cuts in the metal deck that are not shown on the approved metal decking submittal drawings.
   a. When additional openings are required, submit scaled drawing, locating required opening and other openings and supports in immediate area.
   b. Do not cut the opening until drawing is approved by Contracting Officer's Representative.
   c. Provide additional reinforcing and framing required for opening.
   d. Failure to comply with these requirements is cause for rejection of the work and removal and replacement of the affected steel decking.
6. Opening Reinforcement: Provide additional metal reinforcement and closure pieces as required for strength, continuity of decking, and support of other work.

H. Touch up damaged factory finishes.
   1. Apply galvanizing repair paint to damaged galvanized surfaces.
   2. Apply touch up paint to damaged shop painted surfaces.

- - E N D - -

SECTION 05 40 00
COLD-FORMED METAL FRAMING

PART 1 - GENERAL

1.1 DESCRIPTION:

A. This section specifies materials and services required for installation of cold-formed steel, including tracks and required accessories as shown and specified. This Section includes the following:

1. Exterior load-bearing steel stud walls.

2. Interior load-bearing steel stud walls.

3. Exterior non-load-bearing steel stud curtain wall.

4. Steel joists.

5. Steel trusses.

1.2 RELATED WORK:

A. Structural steel framing: Section 05 12 00, STRUCTURAL STEEL FRAMING.

B. Open web steel joists: Section 05 21 00, STEEL JOIST FRAMING.

C. Non-load-bearing metal stud framing assemblies: Section 09 22 16, NON-STRUCTURAL METAL FRAMING.

D. Gypsum board assemblies: Section 09 29 00, GYPSUM BOARD.

1.3 DESIGN REQUIREMENTS:

A. Design steel in accordance with American Iron and Steel Institute Publication "Specification for the Design of Cold-Formed Steel Structural Members", except as otherwise shown or specified.

B. Structural Performance: Engineer, fabricate and erect cold-formed metal framing with the minimum physical and structural properties indicated.

C. Structural Performance: Engineer, fabricate, and erect cold-formed metal framing to withstand design loads within limits and under conditions required.

1. Design Loads: As indicated.

2. Design framing systems to withstand design loads without deflections greater than the following:

a. Exterior Load-Bearing Walls: Lateral deflection of 1/360 of the wall height.

b. Interior Load-Bearing Walls: Lateral deflection of 1/360 of wall height.

c. Exterior Non-load-Bearing Curtain wall: Lateral deflection of 1/360 of the wall height.

d. Floor Joists: Vertical deflection of 1/360 of the span.

e. Roof Trusses: Vertical deflection of 1/240 of the span.

3. Design framing systems to provide for movement of framing members without damage or overstressing, sheathing failure, connection failure, undue strain on fasteners and anchors, or other detrimental effects when subject to a maximum ambient temperature change (range) of 67 degrees C (120 degrees F).

4. Design framing system to accommodate deflection of primary building structure and construction tolerances, and to maintain clearances at openings.

5. Design exterior non-load-bearing curtain wall framing to accommodate lateral deflection without regard to contribution of sheathing materials.

6. Engineering Responsibility: Engage a fabricator who assumes undivided responsibility for engineering cold-formed metal framing by employing a qualified professional engineer to prepare design calculations, shop drawings, and other structural data.

1.4 SUBMITTALS:

A. Submit in accordance with Section 01 33 23, SHOP DRAWINGS, PRODUCT DATA, AND SAMPLES.

B. Shop Drawings: Shop and erection drawings showing steel unit layout, connections to supporting members, and information necessary to complete installation as shown and specified.

C. Manufacturer's Literature and Data: Showing steel component sections and specifying structural characteristics.

D. For cold-formed metal framing indicated to comply with certain design loadings, include structural analysis data sealed and signed by the qualified professional engineer who was responsible for its preparation.

1.5 APPLICABLE PUBLICATIONS:

A. Publications listed below form a part of this specification to extent referenced. Publications are referenced in text by basic designation only.

B. American Iron and Steel Institute (AISI):

Specification and Commentary for the Design of Cold-Formed Steel Structural Members (1996)

C. American Society of Testing and Materials (ASTM):

A36/A36M-08.....Standard Specifications for Carbon Structural Steel

A123/A123M-09.....Standard Specifications for Zinc (Hot-Dip Galvanized) Coatings on Iron and Steel Products

A153/A153M-09.....Standard Specifications for Zinc Coating (Hot-Dip) on Iron and Steel Hardware

A307-10.....Standard Specifications for Carbon Steel Bolts and Studs

A653/A653M-10.....Standard Specifications for Steel Sheet, Zinc-Coated (Galvanized) or Zinc-Iron Alloy-Coated (Galvannealed) by the Hot-Dip Process

C1107/C1107M-08.....Standard Specifications for Packaged Dry, Hydraulic-Cement Grout (Non-shrink)

E488-96(R2003).....Standard Test Methods for Strength of Anchors in Concrete and Masonry Elements

E1190-95(R2007).....Standard Test Methods for Strength of Power-Actuated Fasteners Installed in Structural Members

D. American Welding Society (AWS):

D1.3/D1.3M-08.....Structural Welding Code-Sheet Steel

E. Military Specifications (Mil. Spec.):

MIL-P-21035B.....Paint, High Zinc Dust Content, Galvanizing Repair

PART 2 - PRODUCTS

2.1 MATERIALS:

A. Sheet Steel for joists, studs and accessories 16 gage and heavier: ASTM A653, structural steel, zinc coated G60, with a yield of 340 MPa (50 ksi) minimum.

B. Sheet Steel for joists, studs and accessories 18 gage and lighter: ASTM A653, structural steel, zinc coated G60, with a yield of 230 MPa (33 ksi) minimum.

C. Galvanizing Repair Paint: MIL-P-21035B.

D. Nonmetallic, Non-shrink Grout: Premixed, nonmetallic, noncorrosive, nonstaining grout containing selected silica sands, Portland cement, shrinkage-compensating agents, plasticizing and water-reducing agents, complying with ASTM C1107, with fluid consistency and a 30 minute working time.

2.2 WALL FRAMING:

A. Steel Studs: Manufacturer’s standard C-shaped steel studs of web depth indicated, with lipped flanges, and complying with the following minimum:

1. Design Uncoated-Steel Thickness:

   0.91 mm (0.0358 inch)

2. Flange Width:

   1-3/8 inches

3. Web: Punched.

B. Steel Track: Manufacturer’s standard U-shaped steel track, unpunched, of web depths indicated, with straight flanges, and complying with the following minimum:

1. Design Uncoated-Steel Thickness: Matching steel studs.

2. Flange Width: Manufacturer’s standard deep flange where indicated, standard flange elsewhere.

2.3 JOIST FRAMING:

A. Steel Joists: Manufacturer's standard C-shaped steel joists, unpunched, of web depths indicated, with lipped flanges, and complying with the following:

1. Design Uncoated-Steel Thickness: 0.91 mm (0.0358 inch).
2. Flange Width: 41 mm (1 5/8 inches) minimum.

B. Steel Joist Track: Manufacturer's standard U-shaped steel joist track, unpunched, of web depths indicated, with straight flanges, and complying with the following:

1. Design Uncoated-Steel Thickness: Matching steel joists.
2. Flange Width: 41 mm (1 5/8-inches) minimum.

2.4 FRAMING ACCESSORIES:

A. Fabricate steel framing accessories of the same material and finish used for framing members, with a minimum yield strength of 230 MPa (33 ksi).

B. Provide accessories of manufacturer's standard thickness and configuration, unless otherwise indicated, as follows:

1. Supplementary framing.
2. Bracing, bridging, and solid blocking.
3. Web stiffeners.
4. Gusset plates.
5. Deflection track and vertical slide clips.
6. Stud kickers and girts.
7. Joist hangers and end closures.
8. Reinforcement plates.

2.5 ANCHORS, CLIPS, AND FASTENERS:

A. Steel Shapes and Clips: ASTM A36, zinc coated by the hot-dip process according to ASTM A123.

B. Cast-in-Place Anchor Bolts and Studs: ASTM A307, Grade A, zinc coated by the hot-dip process according to ASTM A153.

C. Expansion Anchors: Fabricated from corrosion-resistant materials, with capability to sustain, without failure, a load equal to 5 times the design load, as determined by testing per ASTM E488 conducted by a qualified independent testing agency.

D. Power-Actuated Anchors: Fastener system of type suitable for application indicated, fabricated from corrosion-resistant materials, with capability to sustain, without failure, a load equal to 10 times the design load, as determined by testing per ASTM E1190 conducted by a qualified independent testing agency.

E. Mechanical Fasteners: Corrosion-resistant coated, self-drilling, self-threading steel drill screws. Low-profile head beneath sheathing, manufacturer's standard elsewhere.

2.6 REQUIREMENTS:

A. Welding in accordance with AWS D1.3

B. Furnish members and accessories by one manufacturer only.

PART 3 - EXECUTION

3.1 FABRICATION:

A. Framing components shall be preassembled into panels. Panels shall be square with components attached.

B. Cut framing components squarely or as required for attachment. Cut framing members by sawing or shearing; do not torch cut.

C. Hold members in place until fastened.

D. Fasten cold-formed metal framing members by welding or screw fastening, as standard with fabricator. Wire tying of framing members is not permitted.

1. Comply with AWS requirements and procedures for welding, appearance and quality of welds, and methods used in correcting welding work.

2. Locate mechanical fasteners and install according to cold-formed metal framing manufacturer's instructions with screw penetrating joined members by not less than 3 exposed screw threads.

E. Where required, provide specified insulation in double header members and double jamb studs which shall not be accessible after erection.

3.2 ERECTION:

A. Handle and lift prefabricated panels in a manner as to not distort any member.

B. Securely anchor tracks to supports as shown.

C. At butt joints, securely anchor two pieces of track to same supporting member or butt-weld or splice together.

D. Plumb, align, and securely attach studs to flanges or webs of both upper and lower tracks.

E. All axially loaded members shall be aligned vertically to allow for full transfer of the loads down to the foundation. Vertical alignment shall be maintained at floor/wall intersections.

F. Install jack studs above and below openings and as required to furnish support. Securely attach jack studs to supporting members.

G. Install headers in all openings that are larger than the stud spacing in that wall.

H. Attach bridging for studs in a manner to prevent stud rotation. Space bridging rows as shown.

I. Studs in one piece for their entire length, splices shall not be permitted.

J. Provide a load distribution member at top track where joist is not located directly over bearing stud.

K. Provide joist bridging and web stiffeners at reaction points where shown.

L. Provide end blocking where joist ends are not restrained from rotation.

M. Provide an additional joist under parallel partitions, unless otherwise shown, when partition length exceeds one-half joist span and when floor and roof openings interrupt one or more spanning members.

N. Provide temporary bracing and leave in place until framing is permanently stabilized.

O. Do not bridge building expansion joints with cold-formed metal framing. Independently frame both sides of joints.

P. Fasten reinforcement plate over web penetrations that exceed size of manufacturer's standard punched openings.

3.3 TOLERANCES:

A. Vertical alignment (plumbness) of studs shall be within 1/960th of the span.

B. Horizontal alignment (levelness) of walls shall be within 1/960th of their respective lengths.

C. Spacing of studs shall not be more than 3 mm (1/8 inch) +/- from the designed spacing providing that the cumulative error does not exceed the requirements of the finishing materials.

D. Prefabricated panels shall be not more than 3 mm (1/8 inch) +/- out of square within the length of that panel.

3.4 FIELD REPAIR:

A. Touch-up damaged galvanizing with galvanizing repair paint.

- - - E N D - - -

SECTION 055000 - METAL FABRICATIONS

PART 1 - GENERAL

1.1 RELATED DOCUMENTS

A. Drawings and general provisions of the Contract, including General and Supplementary Conditions and Division 01 Specification Sections, apply to this Section.

1.2 SUMMARY

A. Section Includes:

1. Steel framing and supports for operable partitions.
2. Steel tube reinforcement for low partitions.
3. Steel framing and supports for mechanical and electrical equipment.
4. Steel framing and supports for applications where framing and supports are not specified in other Sections.
5. Shelf angles.
6. Metal bollards.
7. Metal downspout boots.
8. Loose bearing and leveling plates for applications where they are not specified in other Sections.

B. Products furnished, but not installed, under this Section include the following:

1. Loose steel lintels.
2. Anchor bolts, steel pipe sleeves, slotted-channel inserts, and wedge-type inserts indicated to be cast into concrete or built into unit masonry.
3. Steel weld plates and angles for casting into concrete for applications where they are not specified in other Sections.

C. Related Requirements:

1. Section 033000 "Cast-in-Place Concrete" for installing anchor bolts, steel pipe sleeves, slotted-channel inserts, wedge-type inserts, and other items cast into concrete.
2. Section 042000 "Unit Masonry" for installing loose lintels, anchor bolts, and other items built into unit masonry.
3. Section 051200 "Structural Steel Framing."

1.3 COORDINATION

A. Coordinate selection of shop primers with topcoats to be applied over them. Comply with paint and coating manufacturers' written recommendations to ensure that shop primers and topcoats are compatible with one another.

B. Coordinate installation of metal fabrications that are anchored to or that receive other work. Furnish setting drawings, templates, and directions for installing anchorages, including sleeves, concrete inserts, anchor bolts, and items with integral anchors, that are to be embedded in concrete or masonry. Deliver such items to Project site in time for installation.

1.4 ACTION SUBMITTALS

A. Product Data: For the following:

1. Nonslip aggregates and nonslip-aggregate surface finishes.
2. Prefabricated building columns.
3. Paint products.
4. Grout.

B. Shop Drawings: Show fabrication and installation details. Include plans, elevations, sections, and details of metal fabrications and their connections. Show anchorage and accessory items. Provide Shop Drawings for the following:

1. Steel framing and supports for operable partitions.
2. Steel tube reinforcement for low partitions.
3. Steel framing and supports for mechanical and electrical equipment.
4. Steel framing and supports for applications where framing and supports are not specified in other Sections.
5. Shelf angles.
6. Metal bollards.
7. Metal downspout boots.
8. Loose steel lintels.

1.5 INFORMATIONAL SUBMITTALS

A. Qualification Data: For professional engineer.

B. Mill Certificates: Signed by stainless-steel manufacturers, certifying that products furnished comply with requirements.

C. Welding certificates.

D. Paint Compatibility Certificates: From manufacturers of topcoats applied over shop primers, certifying that shop primers are compatible with topcoats.

E. Research/Evaluation Reports: For post-installed anchors, from ICC-ES.

1.6 QUALITY ASSURANCE

A. Welding Qualifications: Qualify procedures and personnel according to the following:

1. AWS D1.1/D1.1M, "Structural Welding Code - Steel."

2. AWS D1.2/D1.2M, "Structural Welding Code - Aluminum."
3. AWS D1.6/D1.6M, "Structural Welding Code - Stainless Steel."

1.7 FIELD CONDITIONS

A. Field Measurements: Verify actual locations of walls and other construction contiguous with metal fabrications by field measurements before fabrication.

PART 2 - PRODUCTS

2.1 PERFORMANCE REQUIREMENTS

A. Thermal Movements: Allow for thermal movements from ambient and surface temperature changes acting on exterior metal fabrications by preventing buckling, opening of joints, overstressing of components, failure of connections, and other detrimental effects.

1. Temperature Change: 120 deg F, ambient; 180 deg F, material surfaces.

2.2 METALS

A. Metal Surfaces, General: Provide materials with smooth, flat surfaces unless otherwise indicated. For metal fabrications exposed to view in the completed Work, provide materials without seam marks, roller marks, rolled trade names, or blemishes.

B. Steel Plates, Shapes, and Bars: ASTM A 36/A 36M.

C. Stainless-Steel Sheet, Strip, and Plate: ASTM A 240/A 240M or ASTM A 666, Type 304.

D. Stainless-Steel Bars and Shapes: ASTM A 276, Type 304.

E. Steel Tubing: ASTM A 500/A 500M, cold-formed steel tubing.

F. Steel Pipe: ASTM A 53/A 53M, Standard Weight (Schedule 40) unless otherwise indicated.

G. Slotted Channel Framing: Cold-formed metal box channels (struts) complying with MFMA-4.

1. Size of Channels: 1-5/8 by 1-5/8 inches, unless otherwise indicated.
2. Material: Galvanized steel, ASTM A 653/A 653M, structural steel, Grade 33, with G90 coating; 0.108-inch nominal thickness.

H. Cast Iron: Either gray iron, ASTM A 48/A 48M, or malleable iron, ASTM A 47/A 47M, unless otherwise indicated.

I. Aluminum Plate and Sheet: ASTM B 209, Alloy 6061-T6.

J. Aluminum Extrusions: ASTM B 221, Alloy 6063-T6.

K. Aluminum Castings: ASTM B 26/B 26M, Alloy 443.0-F.

2.3 FASTENERS

A. General: Unless otherwise indicated, provide Type 304 stainless-steel fasteners for exterior use and zinc-plated fasteners with coating complying with ASTM B 633 or ASTM F 1941, Class Fe/Zn 5, at exterior walls. Select fasteners for type, grade, and class required.

1. Provide stainless-steel fasteners for fastening aluminum.
2. Provide stainless-steel fasteners for fastening stainless steel.

B. Steel Bolts and Nuts: Regular hexagon-head bolts, ASTM A 307, Grade A; with hex nuts, ASTM A 563; and, where indicated, flat washers.

C. Stainless-Steel Bolts and Nuts: Regular hexagon-head annealed stainless-steel bolts, ASTM F 593; with hex nuts, ASTM F 594; and, where indicated, flat washers; Alloy Group 1.

D. Anchor Bolts: ASTM F 1554, Grade 36, of dimensions indicated; with nuts, ASTM A 563; and, where indicated, flat washers.

1. Hot-dip galvanize or provide mechanically deposited, zinc coating where item being fastened is indicated to be galvanized.

E. Cast-in-Place Anchors in Concrete: Either threaded type or wedge type unless otherwise indicated; galvanized ferrous castings, either ASTM A 47/A 47M malleable iron or ASTM A 27/A 27M cast steel. Provide bolts, washers, and shims as needed, all hot-dip galvanized per ASTM F 2329.

F. Post-Installed Anchors: Torque-controlled expansion anchors or chemical anchors.

1. Material for Interior Locations: Carbon-steel components zinc plated to comply with ASTM B 633 or ASTM F 1941, Class Fe/Zn 5, unless otherwise indicated.
2. Material for Exterior Locations and Where Stainless Steel Is Indicated: Alloy Group 1 stainless-steel bolts, ASTM F 593, and nuts, ASTM F 594.

G. Slotted-Channel Inserts: Cold-formed, hot-dip galvanized-steel box channels (struts) complying with MFMA-4, 1-5/8 by 7/8 inches by length indicated with anchor straps or studs not less than 3 inches long at not more than 8 inches o.c. Provide with temporary filler and tee-head bolts, complete with washers and nuts, all zinc-plated to comply with ASTM B 633, Class Fe/Zn 5, as needed for fastening to inserts.

2.4 MISCELLANEOUS MATERIALS

A. Shop Primers: Provide primers that comply with Section 099113 "Exterior Painting."

B. Universal Shop Primer: Fast-curing, lead- and chromate-free, universal modified-alkyd primer complying with MPI#79 and compatible with topcoat.

1. Use primer containing pigments that make it easily distinguishable from zinc-rich primer.

C. Epoxy Zinc-Rich Primer: Complying with MPI#20 and compatible with topcoat.

D. Shop Primer for Galvanized Steel: Primer formulated for exterior use over zinc-coated metal and compatible with finish paint systems indicated.

E. Galvanizing Repair Paint: High-zinc-dust-content paint complying with SSPC-Paint 20 and compatible with paints specified to be used over it.

F. Bituminous Paint: Cold-applied asphalt emulsion complying with ASTM D 1187/D 1187M.

G. Nonshrink, Nonmetallic Grout: Factory-packaged, nonstaining, noncorrosive, nongaseous grout complying with ASTM C 1107/C 1107M. Provide grout specifically recommended by manufacturer for interior and exterior applications.

H. Concrete: Comply with requirements in Section 033000 "Cast-in-Place Concrete" for normal-weight, air-entrained, concrete with a minimum 28-day compressive strength of 3000 psi.

2.5 FABRICATION, GENERAL

A. Shop Assembly: Preassemble items in the shop to greatest extent possible. Disassemble units only as necessary for shipping and handling limitations. Use connections that maintain structural value of joined pieces. Clearly mark units for reassembly and coordinated installation.

B. Cut, drill, and punch metals cleanly and accurately. Remove burrs and ease edges to a radius of approximately 1/32 inch unless otherwise indicated. Remove sharp or rough areas on exposed surfaces.

C. Form bent-metal corners to smallest radius possible without causing grain separation or otherwise impairing work.

D. Form exposed work with accurate angles and surfaces and straight edges.

E. Weld corners and seams continuously to comply with the following:

1. Use materials and methods that minimize distortion and develop strength and corrosion resistance of base metals.
2. Obtain fusion without undercut or overlap.
3. Remove welding flux immediately.
4. At exposed connections, finish exposed welds and surfaces smooth and blended so no roughness shows after finishing and contour of welded surface matches that of adjacent surface.

F. Form exposed connections with hairline joints, flush and smooth, using concealed fasteners or welds where possible. Where exposed fasteners are required, use Phillips flat-head (countersunk) fasteners unless otherwise indicated. Locate joints where least conspicuous.

G. Fabricate seams and other connections that are exposed to weather in a manner to exclude water. Provide weep holes where water may accumulate.

H. Cut, reinforce, drill, and tap metal fabrications as indicated to receive finish hardware, screws, and similar items.

I. Provide for anchorage of type indicated; coordinate with supporting structure. Space anchoring devices to secure metal fabrications rigidly in place and to support indicated loads.

J. Where units are indicated to be cast into concrete or built into masonry, equip with integrally welded steel strap anchors, 1/8 by 1-1/2 inches, with a minimum 6-inch embedment and 2-inch hook, not less than 8 inches from ends and corners of units and 24 inches o.c., unless otherwise indicated.

2.6 MISCELLANEOUS FRAMING AND SUPPORTS

A. General: Provide steel framing and supports not specified in other Sections as needed to complete the Work.

B. Fabricate units from steel shapes, plates, and bars of welded construction unless otherwise indicated. Fabricate to sizes, shapes, and profiles indicated and as necessary to receive adjacent construction.

1. Fabricate units from slotted channel framing where indicated.
2. Furnish inserts for units installed after concrete is placed.

C. Galvanize miscellaneous framing and supports where indicated.

D. Prime miscellaneous framing and supports with zinc-rich primer where indicated.

2.7 SHELF ANGLES

A. Fabricate shelf angles from steel angles of sizes indicated and for attachment to concrete framing. Provide horizontally slotted holes to receive 3/4-inch bolts, spaced not more than 6 inches from ends and 24 inches o.c., unless otherwise indicated.

1. Provide mitered and welded units at corners.
2. Provide open joints in shelf angles at expansion and control joints. Make open joint approximately 2 inches larger than expansion or control joint.

B. For cavity walls, provide vertical channel brackets to support angles from backup masonry and concrete.

C. Galvanize shelf angles located in exterior walls.

D. Furnish wedge-type concrete inserts, complete with fasteners, to attach shelf angles to cast-in-place concrete.

2.8 MISCELLANEOUS STEEL TRIM

A. Unless otherwise indicated, fabricate units from steel shapes, plates, and bars of profiles shown with continuously welded joints and smooth exposed edges. Miter corners and use concealed field splices where possible.

B. Provide cutouts, fittings, and anchorages as needed to coordinate assembly and installation with other work.

1. Provide with integrally welded steel strap anchors for embedding in concrete or masonry construction.

C. Galvanize miscellaneous steel trim.

2.9 METAL BOLLARDS

A. Fabricate metal bollards from Schedule 40 steel pipe.

1. Cap bollards with 1/4-inch-thick steel plate.
2. Where bollards are indicated to receive controls for door operators, provide cutouts for controls and holes for wire.
3. Where bollards are indicated to receive light fixtures, provide cutouts for fixtures and holes for wire.

B. Fabricate bollards with 3/8-inch-thick steel baseplates for bolting to concrete slab. Drill baseplates at all four corners for 3/4-inch anchor bolts.

1. Where bollards are to be anchored to sloping concrete slabs, angle baseplates for plumb alignment of bollards.

C. Fabricate sleeves for bollard anchorage from steel pipe or tubing with 1/4-inch-thick steel plate welded to bottom of sleeve. Make sleeves not less than 8 inches deep and 3/4 inch larger than OD of bollard.

D. Fabricate internal sleeves for removable bollards from Schedule 40 steel pipe or 1/4-inch wall-thickness steel tubing with an OD approximately 1/16 inch less than ID of bollards. Match drill sleeve and bollard for 3/4-inch steel machine bolt.

E. Prime bollards with zinc-rich primer.

2.10 METAL DOWNSPOUT BOOTS

A. Provide downspout boots made from cast iron in heights indicated with inlets of size and shape to suit downspouts. Provide units with flanges and holes for countersunk anchor bolts.

B. Prime cast-iron downspout boots with zinc-rich primer.

2.11 LOOSE BEARING AND LEVELING PLATES

A. Provide loose bearing and leveling plates for steel items bearing on masonry or concrete construction. Drill plates to receive anchor bolts and for grouting.

B. Galvanize plates.

2.12 LOOSE STEEL LINTELS

A. Fabricate loose steel lintels from steel angles and shapes of size indicated for openings and recesses in masonry walls and partitions at locations indicated. Fabricate in single lengths for each opening unless otherwise indicated. Weld adjoining members together to form a single unit where indicated.

B. Size loose lintels to provide bearing length at each side of openings equal to 1/12 of clear span, but not less than 8 inches unless otherwise indicated.

C. Galvanize loose steel lintels located in exterior walls.

2.13 STEEL WELD PLATES AND ANGLES

A. Provide steel weld plates and angles not specified in other Sections, for items supported from concrete construction as needed to complete the Work. Provide each unit with no fewer than two integrally welded steel strap anchors for embedding in concrete.

2.14 FINISHES, GENERAL

A. Finish metal fabrications after assembly.

B. Finish exposed surfaces to remove tool and die marks and stretch lines, and to blend into surrounding surface.

2.15 STEEL AND IRON FINISHES

A. Galvanizing: Hot-dip galvanize items as indicated to comply with ASTM A 153/A 153M for steel and iron hardware and with ASTM A 123/A 123M for other steel and iron products.

1. Do not quench or apply post galvanizing treatments that might interfere with paint adhesion.

B. Preparation for Shop Priming Galvanized Items: After galvanizing, thoroughly clean railings of grease, dirt, oil, flux, and other foreign matter, and treat with metallic phosphate process.

C. Shop prime iron and steel items unless they are to be embedded in concrete, sprayed-on fireproofing, or masonry, or unless otherwise indicated.

1. Shop prime with universal shop primer unless primers specified in Section 099600 "High-Performance Coatings" are indicated.

D. Preparation for Shop Priming: Prepare surfaces to comply with SSPC-SP 6/NACE No. 3, "Commercial Blast Cleaning."

E. Shop Priming: Apply shop primer to comply with SSPC-PA 1, "Paint Application Specification No. 1: Shop, Field, and Maintenance Painting of Steel," for shop painting.

1. Stripe paint corners, crevices, bolts, welds, and sharp edges.

2.16 ALUMINUM FINISHES

A. As-Fabricated Finish: AA-M12.

B. Clear Anodic Finish: AAMA 611, Class I, AA-M12C22A41.

PART 3 - EXECUTION

3.1 INSTALLATION, GENERAL

A. Cutting, Fitting, and Placement: Perform cutting, drilling, and fitting required for installing metal fabrications. Set metal fabrications accurately in location, alignment, and elevation; with edges and surfaces level, plumb, true, and free of rack; and measured from established lines and levels.

B. Fit exposed connections accurately together to form hairline joints. Weld connections that are not to be left as exposed joints but cannot be shop welded because of shipping size limitations. Do not weld, cut, or abrade surfaces of exterior units that have been hot-dip galvanized after fabrication and are for bolted or screwed field connections.

C. Field Welding: Comply with the following requirements:

1. Use materials and methods that minimize distortion and develop strength and corrosion resistance of base metals.
2. Obtain fusion without undercut or overlap.
3. Remove welding flux immediately.
4. At exposed connections, finish exposed welds and surfaces smooth and blended so no roughness shows after finishing and contour of welded surface matches that of adjacent surface.

D. Fastening to In-Place Construction: Provide anchorage devices and fasteners where metal fabrications are required to be fastened to in-place construction. Provide threaded fasteners for use with concrete and masonry inserts, toggle bolts, through bolts, lag screws, wood screws, and other connectors.

E. Provide temporary bracing or anchors in formwork for items that are to be built into concrete, masonry, or similar construction.

F. Corrosion Protection: Coat concealed surfaces of aluminum that come into contact with grout, concrete, masonry, wood, or dissimilar metals with the following:

1. Cast Aluminum: Heavy coat of bituminous paint.
2. Extruded Aluminum: Two coats of clear lacquer.

3.2 INSTALLING MISCELLANEOUS FRAMING AND SUPPORTS

A. General: Install framing and supports to comply with requirements of items being supported, including manufacturers' written instructions and requirements indicated on Shop Drawings.

B. Anchor supports for operable partitions securely to, and rigidly brace from, building structure.

3.3 INSTALLING METAL BOLLARDS

A. Fill metal-capped bollards solidly with concrete and allow concrete to cure seven days before installing.

1. Do not fill removable bollards with concrete.

B. Anchor bollards to existing construction with expansion anchors, anchor bolts, or through bolts. Provide four 3/4-inch bolts at each bollard unless otherwise indicated.

1. Embed anchor bolts at least 4 inches in concrete.

C. Anchor bollards in concrete with pipe sleeves preset and anchored into concrete or in formed or core-drilled holes not less than 8 inches deep and 3/4 inch larger than OD of bollard. Fill annular space around bollard solidly with nonshrink grout; mixed and placed to comply with grout manufacturer's written instructions. Slope grout up approximately 1/8 inch toward bollard.

D. Anchor bollards located in landscaping or unit pavers in place with concrete footings. Center and align bollards in holes 3 inches above bottom of excavation. Place concrete and vibrate or tamp for consolidation. Support and brace bollards in position until concrete has cured.

E. Place removable bollards over internal sleeves and secure with 3/4-inch machine bolts and nuts. After tightening nuts, drill holes in bolts for inserting padlocks. Owner furnishes padlocks.

3.4 INSTALLING BEARING AND LEVELING PLATES

A. Clean concrete and masonry bearing surfaces of bond-reducing materials, and roughen to improve bond to surfaces. Clean bottom surface of plates.

B. Set bearing and leveling plates on wedges, shims, or leveling nuts. After bearing members have been positioned and plumbed, tighten anchor bolts. Do not remove wedges or shims but, if

protruding, cut off flush with edge of bearing plate before packing with nonshrink grout. Pack grout solidly between bearing surfaces and plates to ensure that no voids remain.

3.5 ADJUSTING AND CLEANING

A. Touchup Painting: Immediately after erection, clean field welds, bolted connections, and abraded areas. Paint uncoated and abraded areas with the same material as used for shop painting to comply with SSPC-PA 1 for touching up shop-painted surfaces.

1. Apply by brush or spray to provide a minimum 2.0-mil dry film thickness.

B. Galvanized Surfaces: Clean field welds, bolted connections, and abraded areas and repair galvanizing to comply with ASTM A 780/A 780M.

END OF SECTION 055000

SECTION 055800 – FORMED STAINLESS STEEL KITCHEN WALL PANELS

PART 1 - GENERAL

1.1 RELATED DOCUMENTS

A. Drawings and general provisions of the Contract, including General and Supplementary Conditions and Division 01 Specification Sections, apply to this Section.

1.2 SUMMARY

A. Section includes formed stainless steel wall panels at kitchen and food prep areas.

1.3 ACTION SUBMITTALS

A. Product Data: For each type of product, including finishing materials.

B. Shop Drawings: Show fabrication and installation details for stainless steel kitchen wall panels.

C. Samples: For each type of exposed finish required, prepared on 6-inch-square Samples of metal of same thickness and material indicated for the Work.

PART 2 - PRODUCTS

2.1 FORMED STAINLESS STEEL KITCHEN WALL PANELS

A. Performance Requirements: Comply with ASTM A480 Standard Specification for General Requirements for Flat-Rolled Stainless and Heat-Resisting Steel Plate, Sheet, and Strip.

1. Provide antimicrobial wall covering which has been manufactured and installed to maintain performance criteria stated by manufacturer without defects, damage or failure.

B. Stainless Steel Wall Covering:

1. Basis-of-Design: Subject to compliance with requirements, provide product indicated on the Finish Schedule, or a comparable product as approved by the Architect.

    a. Provide matching trim moldings and custom angles as selected by the Architect from the manufacturer's full range.

2. Material: Type 304 stainless steel sheet. Consult manufacturer for recommended gauge.
3. Sizes and Configurations: As indicated on the Drawings.
4. Finish: No. 4 Brushed Finish.

5. Accessories: Provide Type 304 stainless steel inside corners, outside corners, edge bars, and top caps as required.

    a. Finish to match adjacent panels.

6. Mounting Method: Adhesive or mechanical fasteners as selected by the Architect.

    a. Adhesive: As recommended by the manufacturer.
    b. Mechanical Fasteners: Stainless steel.

        1) Drilling requirements as recommend by the manufacturer.
        2) Fasteners as selected by the Architect.

2.2 STAINLESS-STEEL FINISHES

A. Surface Preparation: Remove tool and die marks and stretch lines, or blend into finish.

B. Directional Satin Finish: No. 4.

PART 3 - EXECUTION

3.1 INSTALLATION

A. Comply with manufacturer’s product data and written installation instructions.

END OF SECTION 055800

SECTION 057300 - DECORATIVE METAL RAILINGS

PART 1 - GENERAL

1.1 RELATED DOCUMENTS

A. Drawings and general provisions of the Contract, including General and Supplementary Conditions and Division 01 Specification Sections, apply to this Section.

1.2 SUMMARY

A. Section Includes:

1. Stainless-steel decorative railings for Café que railing.

1.3 DEFINITIONS

A. Railings: Guards, handrails, and similar devices used for protection of occupants at open-sided floor areas and for pedestrian guidance and support, visual separation, or wall protection.

1.4 COORDINATION AND SCHEDULING

A. Coordinate selection of shop primers with topcoats to be applied over them. Comply with paint and coating manufacturers' written instructions to ensure that shop primers and topcoats are compatible.

B. Coordinate installation of anchorages for railings. Furnish setting drawings, templates, and directions for installing anchorages, including sleeves, concrete inserts, anchor bolts, and items with integral anchors, that are to be embedded in concrete or masonry. Deliver items to Project site in time for installation.

1.5 ACTION SUBMITTALS

A. Product Data: For the following:

1. Manufacturer's product lines of railings assembled from standard components.

B. Shop Drawings: Include plans, elevations, sections, and attachment details.

C. Samples for Initial Selection: For products involving selection of color, texture, or design, including mechanical finishes.

D. Delegated-Design Submittal: For installed products indicated to comply with performance requirements and design criteria, including analysis data signed and sealed by the qualified professional engineer responsible for their preparation.

1.6 INFORMATIONAL SUBMITTALS

A. Qualification Data: For professional engineer and testing agency.

B. Mill Certificates: Signed by manufacturers of stainless-steel products certifying that products furnished comply with requirements.

C. Product Test Reports: Based on evaluation of comprehensive tests performed by a qualified testing agency, according to ASTM E 894 and ASTM E 935.

D. Preconstruction test reports.

E. Evaluation Reports: For post-installed anchors, from ICC-ES.

1.7 QUALITY ASSURANCE

A. Mockups: Build mockups to verify selections made under Sample submittals, to demonstrate aesthetic effects, and to set quality standards for fabrication and installation.

1. Build mockups for each form and finish of railing consisting of two posts, top rail, infill area, and anchorage system components that are full height and are not less than 24 inches in length.
2. Subject to compliance with requirements, approved mockups may become part of the completed Work if undisturbed at time of Substantial Completion.

1.8 FIELD CONDITIONS

A. Field Measurements: Verify actual locations of walls and other construction contiguous with railings by field measurements before fabrication and indicate measurements on Shop Drawings.

PART 2 - PRODUCTS

2.1 MANUFACTURERS

A. Stainless-Steel Decorative Railings:

1. Basis-of-Design: Subject to compliance with requirements, provide product indicated below or a comparable product as approved by the Architect:

a. Product: Alvarado; Vogue Post Modular Post and Rail.

b. Style: 35” Double Rail.
c. Finish: Stainless steel satin.
d. Attachment: Reo Anchoring Package.

B. Source Limitations: Obtain each type of railing from single source from single manufacturer.

C. Product Options: Information on Drawings and in Specifications establishes requirements for system's aesthetic effects and performance characteristics. Aesthetic effects are indicated by dimensions, arrangements, alignment, and profiles of components and assemblies as they relate to sightlines, to one another, and to adjoining construction. Performance characteristics are indicated by criteria subject to verification by one or more methods, including structural analysis, preconstruction testing, field testing, and in-service performance.

1. Do not modify intended aesthetic effects, as judged solely by Architect, except with Architect's approval. If modifications are proposed, submit comprehensive explanatory data to Architect for review.

2.2 PERFORMANCE REQUIREMENTS

A. Delegated Design: Engage a qualified professional engineer, as defined in Section 014000 "Quality Requirements," to design railings, including attachment to building construction.

B. General: In engineering railings to withstand structural loads indicated, determine allowable design working stresses of railing materials based on the following:

1. Stainless Steel: 60 percent of minimum yield strength.

C. Structural Performance: Railings, including attachment to building construction, shall withstand the effects of gravity loads and the following loads and stresses within limits and under conditions indicated:

1. Handrails and Top Rails of Guards:

a. Uniform load of 50 lbf/ft. applied in any direction.
b. Concentrated load of 200 lbf applied in any direction.
c. Uniform and concentrated loads need not be assumed to act concurrently.

2. Infill of Guards:

a. Concentrated load of 50 lbf applied horizontally on an area of 1 sq. ft.
b. Infill load and other loads need not be assumed to act concurrently.

2.3 METALS, GENERAL

A. Metal Surfaces, General: Provide materials with smooth surfaces, without seam marks, roller marks, rolled trade names, stains, discolorations, or blemishes.

B. Brackets, Flanges, and Anchors: Same metal and finish as supported rails unless otherwise indicated.

2.4 STAINLESS STEEL

A. Tubing: ASTM A 554, Grade MT 304.

B. Pipe: ASTM A 312/A 312M, Grade TP 304.

C. Castings: ASTM A 743/A 743M, Grade CF 8 or CF 20.

D. Sheet, Strip, Plate, and Flat Bar: ASTM A 666, Type 304.

E. Bars and Shapes: ASTM A 276, Type 304.

2.5 FASTENERS

A. Fastener Materials: Unless otherwise indicated, provide the following:

1. Stainless-Steel Components: Type 304 stainless-steel fasteners.
2. Dissimilar Metals: Type 304 stainless-steel fasteners.

B. Fasteners for Anchoring to Other Construction: Select fasteners of type, grade, and class required to produce connections suitable for anchoring railings to other types of construction indicated and capable of withstanding design loads.

C. Provide concealed fasteners for interconnecting railing components and for attaching railings to other work unless otherwise indicated.

D. Post-Installed Anchors: Fastener systems with working capacity greater than or equal to the design load, according to an evaluation report acceptable to authorities having jurisdiction, based on ICC-ES AC193 or ICC-ES AC308.

1. Material for Where Stainless Steel Is Indicated: Alloy Group 1 stainless-steel bolts, ASTM F 593, and nuts, ASTM F 594.

2.6 MISCELLANEOUS MATERIALS

2.7 FABRICATION

A. General: Fabricate railings to comply with requirements indicated for design, dimensions, member sizes and spacing, details, finish, and anchorage, but not less than that required to support structural loads.

B. Assemble railings in the shop to greatest extent possible to minimize field splicing and assembly. Disassemble units only as necessary for shipping and handling limitations. Clearly

mark units for reassembly and coordinated installation. Use connections that maintain structural value of joined pieces.

C. Make up wire-rope assemblies in the shop to field-measured dimensions with fittings machine swaged. Minimize amount of turnbuckle take-up used for dimensional adjustment so maximum amount is available for tensioning wire ropes. Tag wire-rope assemblies and fittings to identify installation locations and orientations for coordinated installation.

D. Cut, drill, and punch metals cleanly and accurately. Remove burrs and ease edges to a radius of approximately 1/32 inch unless otherwise indicated. Remove sharp or rough areas on exposed surfaces.

E. Form work true to line and level with accurate angles and surfaces.

F. Fabricate connections that will be exposed to weather in a manner to exclude water. Provide weep holes where water may accumulate. Locate weep holes in inconspicuous locations.

G. Cut, reinforce, drill, and tap as indicated to receive finish hardware, screws, and similar items.

H. Connections: Fabricate railings with nonwelded connections unless otherwise indicated.

I. Mechanical Connections: Connect members with concealed mechanical fasteners and fittings. Fabricate members and fittings to produce flush, smooth, rigid, hairline joints.

1. Fabricate splice joints for field connection using an epoxy structural adhesive if this is manufacturer's standard splicing method.

J. Form changes in direction as follows:

1. As detailed.
2. By bending or by inserting prefabricated elbow fittings.

K. Bend members in jigs to produce uniform curvature for each configuration required; maintain cross section of member throughout entire bend without buckling, twisting, cracking, or otherwise deforming exposed surfaces of components.

L. Close exposed ends of hollow railing members with prefabricated end fittings.

M. Provide inserts and other anchorage devices for connecting railings to concrete or masonry work. Fabricate anchorage devices capable of withstanding loads imposed by railings. Coordinate anchorage devices with supporting structure.

N. For removable railing posts, fabricate slip-fit sockets from stainless-steel tube or pipe whose ID is sized for a close fit with posts; limit movement of post without lateral load, measured at top, to not more than one-fortieth of post height. Provide socket covers designed and fabricated to resist being dislodged.

1. Provide chain with eye, snap hook, and staple across gaps formed by removable railing sections at locations indicated. Fabricate from same metal as railings.

2.8 GENERAL FINISH REQUIREMENTS

A. Comply with NAAMM's "Metal Finishes Manual for Architectural and Metal Products" recommendations for applying and designating finishes.

B. Protect mechanical finishes on exposed surfaces from damage by applying a strippable, temporary protective covering before shipment.

C. Appearance of Finished Work: Noticeable variations in same piece are not acceptable. Variations in appearance of abutting or adjacent pieces are acceptable if they are within one-half of the range of approved Samples. Variations in appearance of other components are acceptable if they are within the range of approved Samples and are assembled or installed to minimize contrast.

D. Provide exposed fasteners with finish matching appearance, including color and texture, of railings.

2.9 STAINLESS-STEEL FINISHES

A. Surface Preparation: Remove tool and die marks and stretch lines, or blend into finish.

B. Directional Satin Finish: No. 4.

PART 3 - EXECUTION

3.1 EXAMINATION

A. Examine plaster and gypsum board assemblies, where reinforced to receive anchors, to verify that locations of concealed reinforcements have been clearly marked for Installer. Locate reinforcements and mark locations if not already done.

3.2 INSTALLATION, GENERAL

A. Fit exposed connections together to form tight, hairline joints.

B. Perform cutting, drilling, and fitting required for installing railings. Set railings accurately in location, alignment, and elevation; measured from established lines and levels and free of rack.

1. Do not weld, cut, or abrade surfaces of railing components that have been coated or finished after fabrication and that are intended for field connection by mechanical or other means without further cutting or fitting.
2. Set posts plumb within a tolerance of 1/16 inch in 3 feet.
3. Align rails so variations from level for horizontal members and variations from parallel with rake of steps and ramps for sloping members do not exceed 1/4 inch in 12 feet.

C. Control of Corrosion: Prevent galvanic action and other forms of corrosion by insulating metals and other materials from direct contact with incompatible materials.

D. Adjust railings before anchoring to ensure matching alignment at abutting joints.

E. Fastening to In-Place Construction: Use anchorage devices and fasteners where necessary for securing railings and for properly transferring loads to in-place construction.

3.3 RAILING CONNECTIONS

A. Nonwelded Connections: Use mechanical or adhesive joints for permanently connecting railing components. Use wood blocks and padding to prevent damage to railing members and fittings. Seal recessed holes of exposed locking screws using plastic cement filler colored to match finish of railings.

B. Expansion Joints: Install expansion joints at locations indicated but not farther apart than required to accommodate thermal movement. Provide slip-joint internal sleeve extending 2 inches beyond joint on either side, fasten internal sleeve securely to one side, and locate joint within 6 inches of post.

3.4 ANCHORING POSTS

A. Anchor posts to metal surfaces with flanges, angle type, or floor type as required by conditions, connected to posts and to metal supporting members as follows:

1. For stainless-steel railings, weld flanges to posts and bolt to metal-supporting surfaces.

B. Install removable railing sections, where indicated, in slip-fit metal sockets cast in concrete.

3.5 FIELD QUALITY CONTROL

A. Testing Agency: Owner will engage a qualified testing agency to perform tests and inspections and to prepare test reports. Payment for these services will be made by Owner.

B. Extent and Testing Methodology: Testing agency will randomly select completed railing assemblies for testing that are representative of different railing designs and conditions in the completed Work. Test railings according to ASTM E 894 and ASTM E 935 for compliance with performance requirements.

C. Remove and replace railings where test results indicate that they do not comply with specified requirements unless they can be repaired in a manner satisfactory to Architect and comply with specified requirements.

D. Perform additional testing and inspecting, at Contractor's expense, to determine compliance of replaced or additional work with specified requirements.

3.6 CLEANING

A. Clean stainless steel by washing thoroughly with clean water and soap, rinsing with clean water, and wiping dry.

3.7 PROTECTION

A. Protect finishes of railings from damage during construction period with temporary protective coverings approved by railing manufacturer. Remove protective coverings at time of Substantial Completion.

B. Restore finishes damaged during installation and construction period so no evidence remains of correction work. Return items that cannot be refinished in the field to the shop; make required alterations and refinish entire unit, or provide new units.

END OF SECTION 057300

SECTION 061053 - MISCELLANEOUS ROUGH CARPENTRY

PART 1 - GENERAL

1.1 RELATED DOCUMENTS

A. Drawings and general provisions of the Contract, including General and Supplementary Conditions and Division 01 Specification Sections, apply to this Section.

1.2 SUMMARY

A. Section Includes:

1. Framing with dimension lumber.
2. Rooftop equipment bases and support curbs.
3. Wood blocking, cants, and nailers.
4. Wood furring and grounds.
5. Utility shelving.
6. Plywood backing panels.

B. Related Requirements:

1. Section 061600 "Sheathing" for sheathing, subflooring, and underlayment.

1.3 DEFINITIONS

A. Boards or Strips: Lumber of less than 2 inches nominal size in least dimension.

B. Dimension Lumber: Lumber of 2 inches nominal or greater size but less than 5 inches nominal size in least dimension.

1.4 ACTION SUBMITTALS

A. Product Data: For each type of process and factory-fabricated product. Indicate component materials and dimensions and include construction and application details.

1. Include data for wood-preservative treatment from chemical treatment manufacturer and certification by treating plant that treated materials comply with requirements. Indicate type of preservative used and net amount of preservative retained.

2. Include data for fire-retardant treatment from chemical treatment manufacturer and certification by treating plant that treated materials comply with requirements. Include physical properties of treated materials based on testing by a qualified independent testing agency.
3. For fire-retardant treatments, include physical properties of treated lumber both before and after exposure to elevated temperatures, based on testing by a qualified independent testing agency according to ASTM D 5664.
4. For products receiving a waterborne treatment, include statement that moisture content of treated materials was reduced to levels specified before shipment to Project site.

1.5 INFORMATIONAL SUBMITTALS

A. Evaluation Reports: For the following, from ICC-ES:

1. Preservative-treated wood.
2. Fire-retardant-treated wood.
3. Power-driven fasteners.
4. Post-installed anchors.
5. Metal framing anchors.

1.6 QUALITY ASSURANCE

A. Testing Agency Qualifications: For testing agency providing classification marking for fire-retardant-treated material, an inspection agency acceptable to authorities having jurisdiction that periodically performs inspections to verify that the material bearing the classification marking is representative of the material tested.

1.7 DELIVERY, STORAGE, AND HANDLING

A. Stack lumber flat with spacers beneath and between each bundle to provide air circulation. Protect lumber from weather by covering with waterproof sheeting, securely anchored. Provide for air circulation around stacks and under coverings.

PART 2 - PRODUCTS

2.1 WOOD PRODUCTS, GENERAL

A. Lumber: DOC PS 20 and applicable rules of grading agencies indicated. If no grading agency is indicated, provide lumber that complies with the applicable rules of any rules-writing agency certified by the ALSC Board of Review. Provide lumber graded by an agency certified by the ALSC Board of Review to inspect and grade lumber under the rules indicated.

1. Factory mark each piece of lumber with grade stamp of grading agency.

2. For exposed lumber indicated to receive a stained or natural finish, mark grade stamp on end or back of each piece or omit grade stamp and provide certificates of grade compliance issued by grading agency.
3. Dress lumber, S4S, unless otherwise indicated.

B. Maximum Moisture Content of Lumber: 15 percent for 2-inch nominal thickness or less, 19 percent for more than 2-inch nominal thickness unless otherwise indicated.

2.2 WOOD-PRESERVATIVE-TREATED MATERIALS

A. Preservative Treatment by Pressure Process: AWPA U1; Use Category UC2 for interior construction not in contact with ground, Use Category UC3b for exterior construction not in contact with ground, and Use Category UC4a for items in contact with ground.

1. Preservative Chemicals: Acceptable to authorities having jurisdiction and containing no arsenic or chromium. Do not use inorganic boron (SBX) for sill plates.
2. For exposed items indicated to receive a stained or natural finish, chemical formulations shall not require incising, contain colorants, bleed through, or otherwise adversely affect finishes.

B. Kiln-dry lumber after treatment to a maximum moisture content of 19 percent. Do not use material that is warped or does not comply with requirements for untreated material.

C. Mark lumber with treatment quality mark of an inspection agency approved by the ALSC Board of Review.

1. For exposed lumber indicated to receive a stained or natural finish, mark end or back of each piece or omit marking and provide certificates of treatment compliance issued by inspection agency.

D. Application: Treat items indicated on Drawings, and the following:

1. Wood cants, nailers, curbs, equipment support bases, blocking, stripping, and similar members in connection with roofing, flashing, vapor barriers, and waterproofing.
2. Wood sills, blocking, furring, stripping, and similar concealed members in contact with masonry or concrete.
3. Wood framing and furring attached directly to the interior of below-grade exterior masonry or concrete walls.
4. Wood framing members that are less than 18 inches above the ground in crawlspaces or unexcavated areas.
5. Wood floor plates that are installed over concrete slabs-on-grade.

2.3 FIRE-RETARDANT-TREATED MATERIALS

A. General: Where fire-retardant-treated materials are indicated, materials shall comply with requirements in this article, that are acceptable to authorities having jurisdiction, and with fire-test-response characteristics specified as determined by testing identical products per test method indicated by a qualified testing agency.

B. Fire-Retardant-Treated Lumber and Plywood by Pressure Process: Products with a flame-spread index of 25 or less when tested according to ASTM E 84, and with no evidence of significant progressive combustion when the test is extended an additional 20 minutes, and with the flame front not extending more than 10.5 feet beyond the centerline of the burners at any time during the test.

1. Treatment shall not promote corrosion of metal fasteners.
2. Exterior Type: Treated materials shall comply with requirements specified above for fire-retardant-treated lumber and plywood by pressure process after being subjected to accelerated weathering according to ASTM D 2898. Use for exterior locations and where indicated.
3. Interior Type A: Treated materials shall have a moisture content of 28 percent or less when tested according to ASTM D 3201 at 92 percent relative humidity. Use where exterior type is not indicated.
4. Design Value Adjustment Factors: Treated lumber shall be tested according to ASTM D 5664, and design value adjustment factors shall be calculated according to ASTM D 6841. For enclosed roof framing, framing in attic spaces, and where high-temperature fire-retardant treatment is indicated, provide material with adjustment factors of not less than 0.85 modulus of elasticity and 0.75 for extreme fiber in bending for Project's climatological zone.

C. Kiln-dry lumber after treatment to a maximum moisture content of 19 percent. Kiln-dry plywood after treatment to a maximum moisture content of 15 percent.

D. Identify fire-retardant-treated wood with appropriate classification marking of qualified testing agency.

1. For exposed lumber indicated to receive a stained or natural finish, mark end or back of each piece or omit marking and provide certificates of treatment compliance issued by inspection agency.

E. For exposed items indicated to receive a stained or natural finish, chemical formulations shall not bleed through, contain colorants, or otherwise adversely affect finishes.

F. Application: Treat items indicated on Drawings, and the following:

1. Framing for raised platforms.
2. Concealed blocking.
3. Roof framing and blocking.

4. Wood cants, nailers, curbs, equipment support bases, blocking, and similar members in connection with roofing.
5. Plywood backing panels.

2.4 DIMENSION LUMBER FRAMING

A. Non-Load-Bearing Interior Partitions: Construction or No. 2 grade of any of the following species:

1. Hem-fir (north); NLGA.
2. Mixed southern pine or southern pine; SPIB.
3. Spruce-pine-fir; NLGA.
4. Hem-fir; WCLIB or WWPA.
5. Spruce-pine-fir (south); NeLMA, WCLIB, or WWPA.

B. Other Framing: Construction or No. 2 grade of any of the following species:

1. Hem-fir (north); NLGA.
2. Douglas fir-larch; WCLIB or WWPA.
3. Southern pine or mixed southern pine; SPIB.
4. Spruce-pine-fir; NLGA.
5. Douglas fir-south; WWPA.
6. Hem-fir; WCLIB or WWPA.
7. Douglas fir-larch (north); NLGA.
8. Spruce-pine-fir (south); NeLMA, WCLIB, or WWPA.

2.5 MISCELLANEOUS LUMBER

A. General: Provide miscellaneous lumber indicated and lumber for support or attachment of other construction, including the following:

1. Blocking.
2. Nailers.
3. Rooftop equipment bases and support curbs.
4. Cants.
5. Furring.
6. Grounds.
7. Utility shelving.

B. Dimension Lumber Items: Construction or No. 2 grade lumber of any of the following species:

1. Hem-fir (north); NLGA.
2. Mixed southern pine or southern pine; SPIB.
3. Spruce-pine-fir; NLGA.
4. Hem-fir; WCLIB or WWPA.

5. Spruce-pine-fir (south); NeLMA, WCLIB, or WWPA.
6. Northern species; NLGA.

C. Utility Shelving: Lumber with 15 percent maximum moisture content of any of the following species and grades:

1. Eastern white pine, Idaho white, lodgepole, ponderosa, or sugar pine; Premium or No. 2 Common (Sterling) grade; NeLMA, NLGA, WCLIB, or WWPA.
2. Mixed southern pine or southern pine No. 1 grade; SPIB.
3. Hem-fir or hem-fir (north), Select Merchantable or No. 1 Common grade; NLGA, WCLIB, or WWPA.
4. Spruce-pine-fir (south) or spruce-pine-fir, Select Merchantable or No. 1 Common grade; NeLMA, NLGA, WCLIB, or WWPA.

D. Concealed Boards: 15 percent maximum moisture content of any of the following species and grades:

1. Mixed southern pine or southern pine, No. 2 grade; SPIB.
2. Hem-fir or hem-fir (north), Construction or No. 2 Common grade; NLGA, WCLIB, or WWPA.
3. Spruce-pine-fir (south) or spruce-pine-fir, Construction or No. 2 Common grade; NeLMA, NLGA, WCLIB, or WWPA.

E. For blocking not used for attachment of other construction, Utility, Stud, or No. 3 grade lumber of any species may be used provided that it is cut and selected to eliminate defects that will interfere with its attachment and purpose.

F. For blocking and nailers used for attachment of other construction, select and cut lumber to eliminate knots and other defects that will interfere with attachment of other work.

G. For furring strips for installing plywood or hardboard paneling, select boards with no knots capable of producing bent-over nails and damage to paneling.

2.6 PLYWOOD BACKING PANELS

A. Equipment Backing Panels: Plywood, DOC PS 1, Exterior, A-C, fire-retardant treated, in thickness indicated or, if not indicated, not less than 1/2-inch nominal thickness.

2.7 FASTENERS

A. General: Provide fasteners of size and type indicated that comply with requirements specified in this article for material and manufacture.

1. Where carpentry is exposed to weather, in ground contact, pressure-preservative treated, or in area of high relative humidity, provide fasteners with hot-dip zinc coating complying with ASTM A 153/A 153M or of Type 304 stainless steel.

B. Nails, Brads, and Staples: ASTM F 1667.

C. Screws for Fastening to Metal Framing: ASTM C 1002, length as recommended by screw manufacturer for material being fastened.

D. Power-Driven Fasteners: Fastener systems with an evaluation report acceptable to authorities having jurisdiction, based on ICC-ES AC70.

E. Post-Installed Anchors: Fastener systems with an evaluation report acceptable to authorities having jurisdiction, based on ICC-ES AC01, ICC-ES AC58, ICC-ES AC193, or ICC-ES AC308 as appropriate for the substrate.

1. Material: Carbon-steel components, zinc plated to comply with ASTM B 633, Class Fe/Zn 5.
2. Material: Stainless steel with bolts and nuts complying with ASTM F 593 and ASTM F 594, Alloy Group 1 or 2.

2.8 METAL FRAMING ANCHORS

A. Galvanized-Steel Sheet: Hot-dip, zinc-coated steel sheet complying with ASTM A 653/A 653M, G60 coating designation.

1. Use for interior locations unless otherwise indicated.

B. Hot-Dip, Heavy-Galvanized Steel Sheet: ASTM A 653/A 653M; Structural Steel (SS), high-strength low-alloy steel Type A (HSLAS Type A), or high-strength low-alloy steel Type B (HSLAS Type B); G185 coating designation; and not less than 0.036 inch thick.

1. Use for wood-preservative-treated lumber and where indicated.

C. Stainless-Steel Sheet: ASTM A 666, Type 304.

1. Use for exterior locations and where indicated.

2.9 MISCELLANEOUS MATERIALS

A. Adhesives for Gluing Furring to Concrete or Masonry: Formulation complying with ASTM D 3498 that is approved for use indicated by adhesive manufacturer.

B. Flexible Flashing: Composite, self-adhesive, flashing product consisting of a pliable, butyl rubber or rubberized-asphalt compound, bonded to a high-density polyethylene film, aluminum foil, or spunbonded polyolefin to produce an overall thickness of not less than 0.025 inch.

PART 3 - EXECUTION

3.1 INSTALLATION, GENERAL

A. Framing Standard: Comply with AF&PA's WCD 1, "Details for Conventional Wood Frame Construction," unless otherwise indicated.

B. Set carpentry to required levels and lines, with members plumb, true to line, cut, and fitted. Fit carpentry accurately to other construction. Locate furring, nailers, blocking, grounds, and similar supports to comply with requirements for attaching other construction.

C. Install plywood backing panels by fastening to studs; coordinate locations with utilities requiring backing panels. Install fire-retardant-treated plywood backing panels with classification marking of testing agency exposed to view.

D. Install metal framing anchors to comply with manufacturer's written instructions. Install fasteners through each fastener hole.

E. Do not splice structural members between supports unless otherwise indicated.

F. Provide blocking and framing as indicated and as required to support facing materials, fixtures, specialty items, and trim.

1. Provide metal clips for fastening gypsum board or lath at corners and intersections where framing or blocking does not provide a surface for fastening edges of panels. Space clips not more than 16 inches o.c.

G. Provide fire blocking in furred spaces, stud spaces, and other concealed cavities as indicated and as follows:

1. Fire block furred spaces of walls, at each floor level, at ceiling, and at not more than 96 inches o.c. with solid wood blocking or noncombustible materials accurately fitted to close furred spaces.
2. Fire block concealed spaces of wood-framed walls and partitions at each floor level, at ceiling line of top story, and at not more than 96 inches o.c. Where fire blocking is not inherent in framing system used, provide closely fitted solid wood blocks of same width as framing members and 2-inch nominal thickness.
3. Fire block concealed spaces between floor sleepers with same material as sleepers to limit concealed spaces to not more than 100 sq. ft. and to solidly fill space below partitions.
4. Fire block concealed spaces behind combustible cornices and exterior trim at not more than 20 feet o.c.

H. Sort and select lumber so that natural characteristics do not interfere with installation or with fastening other materials to lumber. Do not use materials with defects that interfere with function of member or pieces that are too small to use with minimum number of joints or optimum joint arrangement.

I. Comply with AWPA M4 for applying field treatment to cut surfaces of preservative-treated lumber.

1. Use inorganic boron for items that are continuously protected from liquid water.
2. Use copper naphthenate for items not continuously protected from liquid water.

J. Where wood-preservative-treated lumber is installed adjacent to metal decking, install continuous flexible flashing separator between wood and metal decking.

K. Securely attach carpentry work to substrate by anchoring and fastening as indicated, complying with the following:

1. Table 2304.9.1, "Fastening Schedule," in ICC's International Building Code.
2. Table R602.3(1), "Fastener Schedule for Structural Members," and Table R602.3(2), "Alternate Attachments," in ICC's International Residential Code for One- and Two-Family Dwellings.
3. ICC-ES evaluation report for fastener.

L. Use steel common nails unless otherwise indicated. Select fasteners of size that will not fully penetrate members where opposite side will be exposed to view or will receive finish materials. Make tight connections between members. Install fasteners without splitting wood. Drive nails snug but do not countersink nail heads unless otherwise indicated.

3.2 WOOD BLOCKING AND NAILER INSTALLATION

A. Install where indicated and where required for screeding or attaching other work. Form to shapes indicated and cut as required for true line and level of attached work. Coordinate locations with other work involved.

B. Attach items to substrates to support applied loading. Recess bolts and nuts flush with surfaces unless otherwise indicated.

C. Provide permanent grounds of dressed, pressure-preservative-treated, key-beveled lumber not less than 1-1/2 inches wide and of thickness required to bring face of ground to exact thickness of finish material. Remove temporary grounds when no longer required.

3.3 WOOD FURRING INSTALLATION

A. Install level and plumb with closure strips at edges and openings. Shim with wood as required for tolerance of finish work.

B. Furring to Receive Plywood or Hardboard Paneling: Install 1-by-3-inch nominal-size furring horizontally and vertically at 24 inches o.c.

C. Furring to Receive Gypsum Board: Install 1-by-2-inch nominal-size furring vertically at 16 inches o.c.

3.4 PROTECTION

A. Protect wood that has been treated with inorganic boron (SBX) from weather. If, despite protection, inorganic boron-treated wood becomes wet, apply EPA-registered borate treatment. Apply borate solution by spraying to comply with EPA-registered label.

B. Protect miscellaneous rough carpentry from weather. If, despite protection, miscellaneous rough carpentry becomes wet, apply EPA-registered borate treatment. Apply borate solution by spraying to comply with EPA-registered label.

END OF SECTION 061053

SECTION 061600 - SHEATHING

PART 1 - GENERAL

1.1 RELATED DOCUMENTS

A. Drawings and general provisions of the Contract, including General and Supplementary Conditions and Division 01 Specification Sections, apply to this Section.

1.2 SUMMARY

A. Section Includes:

1. Wall sheathing.
2. Parapet sheathing.
3. Composite nail base insulated roof sheathing.
4. Sheathing joint and penetration treatment.

B. Related Requirements:

1. Section 061053 "Miscellaneous Rough Carpentry" for plywood backing panels.
2. Section 072500 "Weather Barriers" for water-resistive barrier applied over wall sheathing.

1.3 ACTION SUBMITTALS

A. Product Data: For each type of process and factory-fabricated product. Indicate component materials and dimensions and include construction and application details.

1. Include data for wood-preservative treatment from chemical treatment manufacturer and certification by treating plant that treated plywood complies with requirements. Indicate type of preservative used and net amount of preservative retained.
2. Include data for fire-retardant treatment from chemical treatment manufacturer and certification by treating plant that treated plywood complies with requirements. Include physical properties of treated materials.
3. For fire-retardant treatments, include physical properties of treated plywood both before and after exposure to elevated temperatures, based on testing by a qualified independent testing agency according to ASTM D 5516.
4. For products receiving waterborne treatment, include statement that moisture content of treated materials was reduced to levels specified before shipment to Project site.

1.4 INFORMATIONAL SUBMITTALS

A. Evaluation Reports: For the following, from ICC-ES:

1. Wood-preservative-treated plywood.
2. Fire-retardant-treated plywood.

1.5 QUALITY ASSURANCE

A. Testing Agency Qualifications: For testing agency providing classification marking for fire-retardant-treated material, an inspection agency acceptable to authorities having jurisdiction that periodically performs inspections to verify that the material bearing the classification marking is representative of the material tested.

1.6 DELIVERY, STORAGE, AND HANDLING

A. Stack panels flat with spacers beneath and between each bundle to provide air circulation. Protect sheathing from weather by covering with waterproof sheeting, securely anchored. Provide for air circulation around stacks and under coverings.

PART 2 - PRODUCTS

2.1 PERFORMANCE REQUIREMENTS

A. Fire-Resistance Ratings: As tested according to ASTM E 119; testing by a qualified testing agency. Identify products with appropriate markings of applicable testing agency.

1. Fire-Resistance Ratings: Indicated by design designations from UL's "Fire Resistance Directory" or from the listings of another qualified testing agency.

2.2 WOOD PANEL PRODUCTS

A. Thickness: As needed to comply with requirements specified, but not less than thickness indicated.

B. Factory mark panels to indicate compliance with applicable standard.

2.3 PRESERVATIVE-TREATED PLYWOOD

A. Preservative Treatment by Pressure Process: AWPA U1; Use Category UC2 for interior construction not in contact with ground, Use Category UC3b for exterior construction not in contact with ground, and Use Category UC4a for items in contact with ground.

1. Preservative Chemicals: Acceptable to authorities having jurisdiction and containing no arsenic or chromium.

B. Mark plywood with appropriate classification marking of an inspection agency acceptable to authorities having jurisdiction.

C. Application: Treat items indicated on Drawings and plywood in contact with masonry or concrete or used with roofing, flashing, vapor barriers, and waterproofing.

2.4 FIRE-RETARDANT-TREATED PLYWOOD

A. General: Where fire-retardant-treated materials are indicated, use materials complying with requirements in this article that are acceptable to authorities having jurisdiction and with fire-test-response characteristics specified as determined by testing identical products per test method indicated by a qualified testing agency.

B. Fire-Retardant-Treated Plywood by Pressure Process: Products with a flame-spread index of 25 or less when tested according to ASTM E 84, and with no evidence of significant progressive combustion when the test is extended an additional 20 minutes, and with the flame front not extending more than 10.5 feet beyond the centerline of the burners at any time during the test.

1. Use treatment that does not promote corrosion of metal fasteners.
2. Exterior Type: Treated materials shall comply with requirements specified above for fire-retardant-treated plywood by pressure process after being subjected to accelerated weathering according to ASTM D 2898. Use for exterior locations and where indicated.
3. Interior Type A: Treated materials shall have a moisture content of 28 percent or less when tested according to ASTM D 3201/D 3201M at 92 percent relative humidity. Use where exterior type is not indicated.
4. Design Value Adjustment Factors: Treated lumber plywood shall be tested according to ASTM D 5516 and design value adjustment factors shall be calculated according to ASTM D 6305. Span ratings after treatment shall be not less than span ratings specified. For roof sheathing and where high-temperature fire-retardant treatment is indicated, span ratings for temperatures up to 170 deg F shall be not less than span ratings specified.

C. Kiln-dry material after treatment to a maximum moisture content of 15 percent. Do not use material that is warped or does not comply with requirements for untreated material.

D. Identify fire-retardant-treated plywood with appropriate classification marking of qualified testing agency.

E. Application: Treat plywood indicated on Drawings, and the following:

1. Roof and wall sheathing within 48 inches of fire and party walls.
2. Roof sheathing.
3. Subflooring and underlayment for raised platforms.

2.5 WALL SHEATHING

A. Glass-Mat Gypsum Sheathing: ASTM C 1177/1177M.

1. Type: Regular, unless Type X is indicated.
2. Thickness: 5/8-inch, unless otherwise indicated.

2.6 PARAPET SHEATHING

A. Plywood Sheathing: DOC PS 1, Exterior, Structural I sheathing.

1. Span Rating: Not less than 16/0, unless otherwise required for structural performance`.
2. Nominal Thickness: Not less than 15/32 inch, unless otherwise required for structural performance.

B. Glass-Mat Gypsum Sheathing: ASTM C 1177/1177M.

1. Type: Regular, unless Type X is indicated.
2. Thickness: 5/8-inch, unless otherwise indicated.

2.7 COMPOSITE NAIL BASE INSULATED ROOF SHEATHING

A. Vented, Oriented-Strand-Board-Surfaced, Polyisocyanurate-Foam Sheathing: ASTM C 1289, Type II, Class 1, with DOC PS 2, Exposure 1 oriented strand board adhered to spacers on one face.

1. Basis-of-Design: Subject to compliance with requirements, provide product indicated below by Atlas Roofing Corporation, or a comparable product as approved by the Architect:

a. Product: ACFoam Nail Base.
b. Style: Nailable Roof Insulation.
c. Polyisocyanurate-Foam Thickness: As required to meet R-25.
d. Fire-Treated CDX Plywood Nominal Thickness: 9/16 inch.
e. Overall Composite Thickness: As required to meet R-25. Provide multiple layers if necessary in thicknesses as approved by the Architect.
f. Long Term Thermal Resistance Value: R-25 minimum.

2.8 FASTENERS

A. General: Provide fasteners of size and type indicated that comply with requirements specified in this article for material and manufacture.

1. For roof, parapet, and wall sheathing, provide fasteners with hot-dip zinc coating complying with ASTM A 153/A 153M or of Type 304 stainless steel.

B. Nails, Brads, and Staples: ASTM F 1667.

C. Power-Driven Fasteners: Fastener systems with an evaluation report acceptable to authorities having jurisdiction, based on ICC-ES AC70.

D. Screws for Fastening Wood Structural Panels to Cold-Formed Metal Framing: ASTM C 954, except with wafer heads and reamer wings, length as recommended by screw manufacturer for material being fastened.

E. Screws for Fastening Gypsum Sheathing to Cold-Formed Metal Framing: Steel drill screws, in length recommended by sheathing manufacturer for thickness of sheathing to be attached.

1. For steel framing less than 0.0329 inch thick, use screws that comply with ASTM C 1002.
2. For steel framing from 0.033 to 0.112 inch thick, use screws that comply with ASTM C 954.

2.9 SHEATHING JOINT-AND-PENETRATION TREATMENT MATERIALS

A. Sealant for Glass-Mat Gypsum Sheathing: Silicone emulsion sealant complying with ASTM C 834, compatible with sheathing tape and sheathing and recommended by tape and sheathing manufacturers for use with glass-fiber sheathing tape and for covering exposed fasteners.

1. Sheathing Tape: Self-adhering glass-fiber tape, minimum 2 inches wide, 10 by 10 or 10 by 20 threads/inch, of type recommended by sheathing and tape manufacturers for use with silicone emulsion sealant in sealing joints in glass-mat gypsum sheathing and with a history of successful in-service use.

PART 3 - EXECUTION

3.1 INSTALLATION, GENERAL

A. Do not use materials with defects that impair quality of sheathing or pieces that are too small to use with minimum number of joints or optimum joint arrangement. Arrange joints so that pieces do not span between fewer than three support members.

B. Cut panels at penetrations, edges, and other obstructions of work; fit tightly against abutting construction unless otherwise indicated.

C. Securely attach to substrate by fastening as indicated, complying with the following:

1. Table 2304.9.1, "Fastening Schedule," in the ICC's International Building Code.
2. ICC-ES evaluation report for fastener.

D. Use common wire nails unless otherwise indicated. Select fasteners of size that will not fully penetrate members where opposite side will be exposed to view or will receive finish materials. Make tight connections. Install fasteners without splitting wood.

E. Coordinate wall and parapet sheathing installation with flashing and joint-sealant installation so these materials are installed in sequence and manner that prevent exterior moisture from passing through completed assembly.

F. Do not bridge building expansion joints; cut and space edges of panels to match spacing of structural support elements.

G. Coordinate sheathing installation with installation of materials installed over sheathing so sheathing is not exposed to precipitation or left exposed at end of the workday when rain is forecast.

3.2 WOOD STRUCTURAL PANEL INSTALLATION

A. General: Comply with applicable recommendations in APA Form No. E30, "Engineered Wood Construction Guide," for types of structural-use panels and applications indicated.

B. Fastening Methods: Fasten panels as indicated below:

1. Parapet Sheathing:

    a. Screw to cold-formed metal framing.
    b. Space panels 1/8 inch apart at edges and ends.

3.3 GYPSUM SHEATHING INSTALLATION

A. Comply with GA-253 and with manufacturer's written instructions.

1. Fasten gypsum sheathing to wood framing with nails or screws.
2. Fasten gypsum sheathing to cold-formed metal framing with screws.
3. Install panels with a 3/8-inch gap where non-load-bearing construction abuts structural elements.
4. Install panels with a 1/4-inch gap where they abut masonry or similar materials that might retain moisture, to prevent wicking.

B. Apply fasteners so heads bear tightly against face of sheathing, but do not cut into facing.

C. Horizontal Installation: Install sheathing with V-grooved edge down and tongue edge up. Interlock tongue with groove to bring long edges in contact with edges of adjacent panels without forcing. Abut ends over centers of studs, and stagger end joints of adjacent panels not less than one stud spacing. Attach at perimeter and within field of panel to each stud.

1. Space fasteners approximately 8 inches o.c. and set back a minimum of 3/8 inch from edges and ends of panels.
2. For sheathing under stucco cladding, panels may be initially tacked in place with screws if overlying self-furring metal lath is screw-attached through sheathing to studs immediately after sheathing is installed.

D. Vertical Installation: Install vertical edges centered over studs. Abut ends and edges with those of adjacent panels. Attach at perimeter and within field of panel to each stud.

1. Space fasteners approximately 8 inches o.c. and set back a minimum of 3/8 inch from edges and ends of panels.
2. For sheathing under stucco cladding, panels may be initially tacked in place with screws if overlying self-furring metal lath is screw-attached through sheathing to studs immediately after sheathing is installed.

E. Seal sheathing joints according to sheathing manufacturer's written instructions.

1. Apply elastomeric sealant to joints and fasteners and trowel flat. Apply sufficient amount of sealant to completely cover joints and fasteners after troweling. Seal other penetrations and openings.
2. Apply glass-fiber sheathing tape to glass-mat gypsum sheathing joints and apply and trowel sealant to embed entire face of tape in sealant. Apply sealant to exposed fasteners with a trowel so fasteners are completely covered. Seal other penetrations and openings.

END OF SECTION 061600

SECTION 062023 - INTERIOR FINISH CARPENTRY

PART 1 - GENERAL

1.1 RELATED DOCUMENTS

A. Drawings and general provisions of the Contract, including General and Supplementary Conditions and Division 01 Specification Sections, apply to this Section.

1.2 SUMMARY

A. Section Includes:

1. Interior trim, including interior door frames.

B. Related Requirements:

1. Section 061053 "Miscellaneous Rough Carpentry" for furring, blocking, and other carpentry work not exposed to view and for framing exposed to view.
2. Section 099123 "Interior Painting" for priming and backpriming of interior finish carpentry.

1.3 ACTION SUBMITTALS

A. Product Data: For each type of process and factory-fabricated product. Indicate component materials, dimensions, profiles, textures, and colors and include construction and application details.

1. Include data for wood-preservative treatment from chemical-treatment manufacturer and certification by treating plant that treated materials comply with requirements. Indicate type of preservative used and net amount of preservative retained. Include chemical-treatment manufacturer's written instructions for finishing treated material.
2. Include data for fire-retardant treatment from chemical-treatment manufacturer and certification by treating plant that treated materials comply with requirements.
3. For products receiving a waterborne treatment, include statement that moisture content of treated materials was reduced before shipment to Project site to levels specified.

B. Samples for Initial Selection: For each type of product involving selection of colors, profiles, or textures.

C. Samples for Verification:

1. For each species and cut of lumber and panel products with nonfactory-applied finish, with half of exposed surface finished, 50 sq. in. for lumber and 8 by 10 inches for panels.
2. For each finish system and color of lumber and panel products with factory-applied finish, 50 sq. in. for lumber and 8 by 10 inches for panels.

1.4 INFORMATIONAL SUBMITTALS

A. Evaluation Reports: For fire-retardant-treated wood, from ICC-ES.

B. Sample Warranty: For manufacturer's warranty.

1.5 DELIVERY, STORAGE, AND HANDLING

A. Stack lumber, plywood, and other panels flat with spacers between each bundle to provide air circulation. Protect materials from weather by covering with waterproof sheeting, securely anchored. Provide for air circulation around stacks and under coverings.

B. Deliver interior finish carpentry materials only when environmental conditions comply with requirements specified for installation areas. If interior finish carpentry materials must be stored in other than installation areas, store only where environmental conditions comply with requirements specified for installation areas.

1.6 FIELD CONDITIONS

A. Environmental Limitations: Do not deliver or install interior finish carpentry materials until building is enclosed and weatherproof, wet work in space is completed and nominally dry, and HVAC system is operating and maintaining temperature and relative humidity at occupancy levels during the remainder of the construction period.

B. Do not install finish carpentry materials that are wet, moisture damaged, or mold damaged.

1. Indications that materials are wet or moisture damaged include, but are not limited to, discoloration, sagging, or irregular shape.
2. Indications that materials are mold damaged include, but are not limited to, fuzzy or splotchy surface contamination and discoloration.

PART 2 - PRODUCTS

2.1 MATERIALS, GENERAL

A. Lumber: DOC PS 20 and applicable rules of grading agencies indicated. If no grading agency is indicated, comply with the applicable rules of any rules-writing agency certified by the American Lumber Standard Committee's Board of Review. Grade lumber by an agency certified by the American Lumber Standard Committee's Board of Review to inspect and grade lumber under the rules indicated.

1. Factory mark each piece of lumber with grade stamp of grading agency.
2. For exposed lumber, mark grade stamp on end or back of each piece, or omit grade stamp and provide certificates of grade compliance issued by grading agency.

B. MDF: ANSI A208.2, Grade 130.

2.2 WOOD-PRESERVATIVE-TREATED MATERIALS

A. Preservative Treatment by Pressure Process: AWPA U1; Use Category UC2.

1. Kiln dry lumber and plywood after treatment to a maximum moisture content of 19 and 18 percent, respectively.
2. Preservative Chemicals: Acceptable to authorities having jurisdiction and containing no arsenic or chromium.
3. For exposed items indicated to receive transparent finish, do not use chemical formulations that contain colorants or that bleed through or otherwise adversely affect finishes.
4. Do not use material that is warped or does not comply with requirements for untreated material.
5. Mark lumber with treatment-quality mark of an inspection agency approved by the American Lumber Standard Committee's Board of Review.

    a. For exposed lumber indicated to receive a stained or natural finish, mark end or back of each piece or omit marking and provide certificates of treatment compliance issued by inspection agency.

6. Mark plywood with appropriate classification marking of an inspection agency acceptable to authorities having jurisdiction.

    a. For exposed plywood indicated to receive a stained or natural finish, mark back of each piece.

7. Application: Where indicated.

2.3 FIRE-RETARDANT-TREATED MATERIALS

A. General: For applications indicated, use materials complying with requirements in this article that are acceptable to authorities having jurisdiction and comply with testing requirements; testing will be conducted by a qualified testing agency.

B. Fire-Retardant-Treated Lumber and Plywood by Pressure Process: Products with a flame-spread index of 25 or less when tested according to ASTM E 84, with no evidence of significant progressive combustion when the test is extended an additional 20 minutes, and with the flame front not extending more than 10.5 feet beyond the centerline of the burners at any time during the test.

1. Kiln dry lumber and plywood after treatment to a maximum moisture content of 19 and 15 percent, respectively.

C. For exposed items indicated to receive a stained or natural finish, use organic resin chemical formulations that do not contain colorants, and provide materials that do not have marks from spacer sticks on exposed face.

D. Do not use material that does not comply with requirements for untreated material or is warped or discolored.

E. Identify fire-retardant-treated wood with appropriate classification marking of testing and inspecting agency acceptable to authorities having jurisdiction.

1. For exposed lumber indicated to receive a stained or natural finish, mark end or back of each piece or omit marking and provide certificates of treatment compliance issued by inspection agency.
2. For exposed plywood indicated to receive a stained or natural finish, mark back of each piece.

F. Application: Where indicated.

2.4 INTERIOR TRIM

A. Hardwood Lumber Trim for Transparent Finish (Stain or Clear Finish):

1. Species: As selected by the Architect.

2. Grade: Clear; NHLA.
3. Maximum Moisture Content: 13 percent.
4. Finger Jointing: Not allowed.
5. Gluing for Width: Not allowed.
6. Veneered Material: Not allowed, unless otherwise indicated.
7. Face Surface: Surfaced (smooth).
8. Matching: Selected for compatible grain and color.

B. Lumber Trim for Opaque Finish (Painted Finish):

1. Species and Grade: Eastern white, Idaho white, lodgepole, ponderosa, radiata, or sugar pine, D Select (Quality); NeLMA, NLGA, or WWPA.
2. Maximum Moisture Content: 15 percent.
3. Finger Jointing: Allowed.
4. Face Surface: Surfaced (smooth).
5. Optional Material: Primed MDF of same actual dimensions as lumber indicated may be used in lieu of lumber.

C. Hardwood Moldings for Transparent Finish (Stain or Clear Finish): MMPA HWM 4, N-grade wood moldings made to patterns included in MMPA's "HWM/Series Hardwood Moulding Patterns."

1. Species: As selected by the Architect.
2. Maximum Moisture Content: 9 percent.
3. Finger Jointing: Not allowed.
4. Matching: Selected for compatible grain and color.

D. Moldings for Opaque Finish (Painted Finish): Made to patterns included in MMPA's "WM/Series Wood Moulding Patterns."

1. Softwood Moldings: MMPA WM 4, P grade.

    a. Species: Eastern white, Idaho white, lodgepole, ponderosa, radiata, or sugar pine.
    b. Maximum Moisture Content: 15 percent with at least 85 percent of shipment at 12 percent or less.

2. Hardwood Moldings: MMPA HWM 4, P-grade.

    a. Species: Aspen, basswood, cottonwood, gum, magnolia, soft maple, tupelo, or yellow poplar.
    b. Maximum Moisture Content: 9 percent.

3. Optional Material: Primed MDF.
4. Finger Jointing: Allowed.

2.5 MISCELLANEOUS MATERIALS

A. Fasteners for Interior Finish Carpentry: Nails, screws, and other anchoring devices of type, size, material, and finish required for application indicated to provide secure attachment, concealed where possible.

2.6 FABRICATION

A. Back out or kerf backs of the following members, except those with ends exposed in finished work:

1. Interior standing and running trim, except shoe and crown molds.

B. Ease edges of lumber less than 1 inch in nominal thickness to 1/16-inch radius and edges of lumber 1 inch or more in nominal thickness to 1/8-inch radius.

PART 3 - EXECUTION

3.1 EXAMINATION

A. Examine substrates, with Installer present, for compliance with requirements for installation tolerances and other conditions affecting performance of the Work.

B. Examine finish carpentry materials before installation. Reject materials that are wet, moisture damaged, and mold damaged.

C. Proceed with installation only after unsatisfactory conditions have been corrected.

3.2 PREPARATION

A. Clean substrates of projections and substances detrimental to application.

B. Before installing interior finish carpentry, condition materials to average prevailing humidity in installation areas for a minimum of 24 hours unless longer conditioning is recommended by manufacturer.

3.3 INSTALLATION, GENERAL

A. Do not use materials that are unsound; warped; improperly treated or finished; inadequately seasoned; too small to fabricate with proper jointing arrangements; or with defective surfaces, sizes, or patterns.

B. Install interior finish carpentry level, plumb, true, and aligned with adjacent materials. Use concealed shims where necessary for alignment.

1. Scribe and cut interior finish carpentry to fit adjoining work. Refinish and seal cuts as recommended by manufacturer.
2. Where face fastening is unavoidable, countersink fasteners, fill surface flush, and sand unless otherwise indicated.
3. Install to tolerance of 1/8 inch in 96 inches for level and plumb. Install adjoining interior finish carpentry with 1/32-inch maximum offset for flush installation and 1/16-inch maximum offset for reveal installation.

4. Coordinate interior finish carpentry with materials and systems in or adjacent to it. Provide cutouts for mechanical and electrical items that penetrate interior finish carpentry.

3.4 STANDING AND RUNNING TRIM INSTALLATION

A. Install with minimum number of joints practical, using full-length pieces from maximum lengths of lumber available. Do not use pieces less than 24 inches long, except where necessary. Stagger joints in adjacent and related standing and running trim. Miter at returns, miter at outside corners, and cope at inside corners to produce tight-fitting joints with full-surface contact throughout length of joint. Use scarf joints for end-to-end joints. Plane backs of casings to provide uniform thickness across joints where necessary for alignment.

1. Match color and grain pattern of trim for transparent finish (stain or clear finish) across joints.
2. Install trim after gypsum-board joint finishing operations are completed.
3. Install without splitting; drill pilot holes before fastening where necessary to prevent splitting. Fasten to prevent movement or warping. Countersink fastener heads on exposed carpentry work and fill holes.

3.5 ADJUSTING

A. Replace interior finish carpentry that is damaged or does not comply with requirements. Interior finish carpentry may be repaired or refinished if work complies with requirements and shows no evidence of repair or refinishing. Adjust joinery for uniform appearance.

3.6 CLEANING

A. Clean interior finish carpentry on exposed and semiexposed surfaces. Restore damaged or soiled areas and touch up factory-applied finishes if any.

3.7 PROTECTION

A. Protect installed products from damage from weather and other causes during construction.

B. Remove and replace finish carpentry materials that are wet, moisture damaged, and mold damaged.

1. Indications that materials are wet or moisture damaged include, but are not limited to, discoloration, sagging, or irregular shape.
2. Indications that materials are mold damaged include, but are not limited to, fuzzy or splotchy surface contamination and discoloration.

END OF SECTION 062023

SECTION 064116 - PLASTIC-LAMINATE-FACED ARCHITECTURAL CABINETS

PART 1 - GENERAL

1.1 RELATED DOCUMENTS

A. Drawings and general provisions of the Contract, including General and Supplementary Conditions and Division 01 Specification Sections, apply to this Section.

1.2 SUMMARY

A. Section Includes:

1. Plastic-laminate-faced architectural cabinets.
2. Wood furring, blocking, shims, and hanging strips for installing plastic-laminate-faced architectural cabinets that are not concealed within other construction.

B. Related Requirements:

1. Section 061053 "Miscellaneous Rough Carpentry" for wood furring, blocking, shims, and hanging strips required for installing cabinets that are concealed within other construction before cabinet installation.

1.3 COORDINATION

A. Coordinate sizes and locations of framing, blocking, furring, reinforcements, and other related units of Work specified in other Sections to support loads imposed by installed and fully loaded cabinets.

1.4 ACTION SUBMITTALS

A. Product Data: For each type of product.

1. Include data for fire-retardant treatment from chemical-treatment manufacturer and certification by treating plant that treated materials comply with requirements.

B. Shop Drawings: For plastic-laminate-faced architectural cabinets.

1. Include plans, elevations, sections, and attachment details.
2. Show locations and sizes of furring, blocking, and hanging strips, including concealed blocking and reinforcement specified in other Sections.
3. Show locations and sizes of cutouts and holes for items installed in plastic-laminate architectural cabinets.
4. Apply AWI Quality Certification Program label to Shop Drawings.

C. Samples: For each exposed product and for each color and texture specified, in manufacturer's or fabricator's standard size.

1.5 INFORMATIONAL SUBMITTALS

A. Qualification Data: For Installer and fabricator.

B. Product Certificates: For the following:

1. Composite wood and agrifiber products.
2. Thermoset decorative panels.
3. High-pressure decorative laminate.
4. Adhesives.

C. Quality Standard Compliance Certificates: AWI Quality Certification Program.

D. Evaluation Reports: For fire-retardant-treated materials, from ICC-ES.

1.6 QUALITY ASSURANCE

A. Fabricator Qualifications: Shop that employs skilled workers who custom fabricate products similar to those required for this Project and whose products have a record of successful in-service performance.

1. Shop Certification: AWI's Quality Certification Program accredited participant.

B. Installer Qualifications: Fabricator of products or AWI's Quality Certification Program accredited participant.

C. Mockups: Build mockups to verify selections made under Sample submittals, to demonstrate aesthetic effects, and to set quality standards for materials and execution.

1. Build mockups of typical architectural cabinets as directed by the Architect.
2. Subject to compliance with requirements, approved mockups may become part of the completed Work if undisturbed at time of Substantial Completion.

1.7 DELIVERY, STORAGE, AND HANDLING

A. Do not deliver cabinets until painting and similar finish operations that might damage architectural cabinets have been completed in installation areas. Store cabinets in installation areas or in areas where environmental conditions comply with requirements specified in "Field Conditions" Article.

1.8 FIELD CONDITIONS

A. Environmental Limitations: Do not deliver or install cabinets until building is enclosed, wet-work is complete, and HVAC system is operating and maintaining temperature and relative humidity at levels planned for building occupants during the remainder of the construction period.

B. Field Measurements: Where cabinets are indicated to fit to other construction, verify dimensions of other construction by field measurements before fabrication, and indicate measurements on Shop Drawings. Coordinate fabrication schedule with construction progress to avoid delaying the Work.

1. Locate concealed framing, blocking, and reinforcements that support cabinets by field measurements before being enclosed/concealed by construction, and indicate measurements on Shop Drawings.

C. Established Dimensions: Where cabinets are indicated to fit to other construction, establish dimensions for areas where cabinets are to fit. Provide allowance for trimming at site, and coordinate construction to ensure that actual dimensions correspond to established dimensions.

PART 2 - PRODUCTS

2.1 PLASTIC-LAMINATE-FACED ARCHITECTURAL CABINETS

A. Quality Standard: Unless otherwise indicated, comply with the "Architectural Woodwork Standards" for grades of cabinets indicated for construction, finishes, installation, and other requirements.

1. Provide inspections of fabrication and installation together with labels and certificates from AWI certification program indicating that woodwork complies with requirements of grades specified.
2. The Contract Documents contain requirements that are more stringent than the referenced quality standard. Comply with requirements of Contract Documents in addition to those of the referenced quality standard.

B. Grade: Custom.

C. Type of Construction: Frameless.

D. Door and Drawer-Front Style: Flush overlay.

E. High-Pressure Decorative Laminate: NEMA LD 3, grades as indicated or if not indicated, as required by quality standard.

1. Basis-of-Design: Subject to compliance with requirements, provide products indicated on the Finish Schedule, or comparable products as approved by the Architect.

F. Laminate Cladding for Exposed Surfaces:

1. Horizontal Surfaces: Grade HGS.
2. Vertical Surfaces: Grade VGS.
3. Edges: Grade VGS.
4. Pattern Direction: Vertically for drawer fronts, doors, and fixed panels, unless otherwise indicated.

G. Materials for Semiexposed Surfaces:

1. Surfaces Other Than Drawer Bodies: Thermoset decorative panels.
   a. Edges of Thermoset Decorative Panel Shelves: PVC or polyester edge banding.
2. Drawer Sides and Backs: Solid-hardwood lumber.
3. Drawer Bottoms: Hardwood plywood.

H. Concealed Backs of Panels with Exposed Plastic-Laminate Surfaces: High-pressure decorative laminate, NEMA LD 3, Grade BKL.

I. Drawer Construction: Fabricate with exposed fronts fastened to subfront with mounting screws from interior of body.

1. Join subfronts, backs, and sides with glued dovetail joints.

J. Colors, Patterns, and Finishes: Provide materials and products that result in colors and textures of exposed laminate surfaces complying with the following requirements:

1. As indicated on the Finish Schedule.

2.2 WOOD MATERIALS

A. Wood Products: Provide materials that comply with requirements of referenced quality standard for each type of architectural cabinet and quality grade specified unless otherwise indicated.

1. Wood Moisture Content: 8 to 13 percent.

B. Composite Wood and Agrifiber Products: Provide materials that comply with requirements of referenced quality standard for each type of architectural cabinet and quality grade specified unless otherwise indicated.

1. Medium-Density Fiberboard (MDF): ANSI A208.2, Grade 130.
2. Particleboard: ANSI A208.1, Grade M-2-Exterior Glue.
3. Softwood Plywood: DOC PS 1, medium-density overlay.
4. Thermoset Decorative Panels: Particleboard or MDF finished with thermally fused, melamine-impregnated decorative paper and complying with requirements of NEMA LD 3, Grade VGL, for Test Methods 3.3, 3.4, 3.6, 3.8, and 3.10.

2.3 CABINET HARDWARE AND ACCESSORIES

A. Frameless Concealed Hinges (European Type): BHMA A156.9, B01602, 170 degrees of opening, self-closing.

B. Decorative Pulls: As selected by the Architect.

C. Catches: Push-in magnetic catches, BHMA A156.9, B03131.

D. Shelf Rests: BHMA A156.9, B04013; metal.

E. Drawer Slides: BHMA A156.9.

1. Grade 1 and Grade 2: Side mounted and extending under bottom edge of drawer.

    a. Type: Full extension.
    b. Material: Epoxy-coated steel with polymer rollers.

2. Grade 1HD-100 and Grade 1HD-200: Side mounted; full-extension type; zinc-plated-steel ball-bearing slides.
3. For drawers not more than 3 inches high and not more than 24 inches wide, provide Grade 1.
4. For drawers more than 3 inches high, but not more than 6 inches high and not more than 24 inches wide, provide Grade 1HD-100.
5. For drawers more than 6 inches high or more than 24 inches wide, provide Grade 1HD-200.

F. Door Locks: BHMA A156.11, E07121.

G. Drawer Locks: BHMA A156.11, E07041.

H. Door and Drawer Silencers: BHMA A156.16, L03011.

I. Exposed Hardware Finishes: For exposed hardware, provide finish that complies with BHMA A156.18 for BHMA finish number indicated.

1. Hardware Finish: As selected by the Architect from the manufacturer’s full range.

J. For concealed hardware, provide manufacturer's standard finish that complies with product class requirements in BHMA A156.9.

2.4 MISCELLANEOUS MATERIALS

A. Furring, Blocking, Shims, and Hanging Strips: Softwood or hardwood lumber, kiln-dried to less than 15 percent moisture content.

B. Anchors: Select material, type, size, and finish required for each substrate for secure anchorage. Provide metal expansion sleeves or expansion bolts for post-installed anchors. Use nonferrous-metal or hot-dip galvanized anchors and inserts at inside face of exterior walls and at floors.

C. Adhesive for Bonding Plastic Laminate: Contact cement.

2.5 FABRICATION

A. Fabricate architectural cabinets to dimensions, profiles, and details indicated.

B. Complete fabrication, including assembly and hardware application, to maximum extent possible before shipment to Project site. Disassemble components only as necessary for shipment and installation. Where necessary for fitting at site, provide ample allowance for scribing, trimming, and fitting.

1. Notify Architect seven days in advance of the dates and times architectural cabinet fabrication will be complete.
2. Trial fit assemblies at fabrication shop that cannot be shipped completely assembled. Install dowels, screws, bolted connectors, and other fastening devices that can be removed after trial fitting. Verify that various parts fit as intended and check measurements of assemblies against field measurements before disassembling for shipment.

C. Shop-cut openings to maximum extent possible to receive hardware, appliances, electrical work, and similar items. Locate openings accurately and use templates or roughing-in diagrams to produce accurately sized and shaped openings. Sand edges of cutouts to remove splinters and burrs.

PART 3 - EXECUTION

3.1 PREPARATION

A. Before installation, condition cabinets to humidity conditions in installation areas for not less than 72 hours.

3.2 INSTALLATION

A. Grade: Install cabinets to comply with quality standard grade of item to be installed.

B. Assemble cabinets and complete fabrication at Project site to extent that it was not completed in the shop.

C. Anchor cabinets to anchors or blocking built in or directly attached to substrates. Secure with wafer-head cabinet installation screws.

D. Install cabinets level, plumb, and true in line to a tolerance of 1/8 inch in 96 inchesusing concealed shims.

1. Scribe and cut cabinets to fit adjoining work, refinish cut surfaces, and repair damaged finish at cuts.

2. Install cabinets without distortion so doors and drawers fit openings and are accurately aligned. Adjust hardware to center doors and drawers in openings and to provide unencumbered operation. Complete installation of hardware and accessory items as indicated.
3. Fasten wall cabinets through back, near top and bottom, and at ends not more than 16 inches o.c. with No. 10 wafer-head screws sized for not less than 1-1/2-inch penetration into wood framing, blocking, or hanging strips or No. 10 wafer-head sheet metal screws through metal backing or metal framing behind wall finish.

3.3 ADJUSTING AND CLEANING

A. Repair damaged and defective cabinets, where possible, to eliminate functional and visual defects. Where not possible to repair, replace architectural cabinets. Adjust joinery for uniform appearance.

B. Clean, lubricate, and adjust hardware.

C. Clean cabinets on exposed and semiexposed surfaces.

END OF SECTION 064116

SECTION 066400 - PLASTIC PANELING

PART 1 - GENERAL

1.1 RELATED DOCUMENTS

A. Drawings and general provisions of the Contract, including General and Supplementary Conditions and Division 01 Specification Sections, apply to this Section.

1.2 SUMMARY

A. Section Includes:

1. Plastic sheet paneling.

B. Related Requirements:

1. Section 061053 " Miscellaneous Rough Carpentry" for wood furring for installing plastic paneling.

1.3 ACTION SUBMITTALS

A. Product Data: For each type of product.

B. Samples: For plastic paneling and trim accessories, in manufacturer's standard sizes.

1.4 QUALITY ASSURANCE

A. Testing Agency: Acceptable to authorities having jurisdiction.

1.5 PROJECT CONDITIONS

A. Environmental Limitations: Do not deliver or install plastic paneling until spaces are enclosed and weathertight and temporary HVAC system is operating and maintaining ambient temperature and humidity conditions at occupancy levels during the remainder of the construction period.

PART 2 - PRODUCTS

2.1 MANUFACTURERS

A. Source Limitations: Obtain plastic paneling and trim accessories from single manufacturer.

2.2 PLASTIC SHEET PANELING

A. Glass-Fiber-Reinforced Plastic Paneling: Gelcoat-finished, glass-fiber-reinforced plastic panels complying with ASTM D 5319. Panels shall be USDA accepted for incidental food contact.

1. Basis-of-Design: Subject to compliance with requirements, provide product indicated on the Finish Schedule, or a comparable product as approved by the Architect.

2. Surface-Burning Characteristics: As follows when tested by a qualified testing agency according to ASTM E 84. Identify products with appropriate markings of applicable testing agency.

a. Flame-Spread Index: 25 or less.
b. Smoke-Developed Index: 450 or less.

3. Nominal Thickness: Not less than 0.09 inch.
4. Surface Finish: As indicated on the Finish Schedule.
5. Color: As indicated on the Finish Schedule.

2.3 ACCESSORIES

A. Trim Accessories: Manufacturer's standard two-piece, snap-on vinyl extrusions designed to retain and cover edges of panels. Provide division bars, inside corners, outside corners, and caps as needed to conceal edges.

1. Color: As selected by Architect from manufacturer's full range.

B. Exposed Fasteners: Nylon drive rivets recommended by panel manufacturer.

C. Concealed Mounting Splines: Continuous, H-shaped aluminum extrusions designed to fit into grooves routed in edges of factory-laminated panels and to be fastened to substrate.

D. Adhesive: As recommended by plastic paneling manufacturer.

E. Sealant: Mildew-resistant, single-component, neutral-curing silicone sealant recommended by plastic paneling manufacturer and complying with requirements in Section 079200 "Joint Sealants."

PART 3 - EXECUTION

3.1 EXAMINATION

A. Examine substrates and conditions, with Installer present, for compliance with requirements for installation tolerances and other conditions affecting performance of the Work.

B. Proceed with installation only after unsatisfactory conditions have been corrected.

3.2 PREPARATION

A. Clean substrates of substances that could impair adhesive bond, including oil, grease, dirt, and dust.

B. Condition panels by unpacking and placing in installation space before installation according to manufacturer's written recommendations.

C. Lay out paneling before installing. Locate panel joints to provide equal panels at ends of walls not less than half the width of full panels and so that trimmed panels at corners are not less than 12 inches wide.

1. Mark plumb lines on substrate at trim accessory and panel joint locations for accurate installation.
2. Locate trim accessories and panel joints to allow clearance at panel edges according to manufacturer's written instructions.

3.3 INSTALLATION

A. Install plastic paneling according to manufacturer's written instructions.

B. Install panels with fasteners. Layout fastener locations and mark on face of panels so that fasteners are accurately aligned.

1. Drill oversized fastener holes in panels and center fasteners in holes.
2. Apply sealant to fastener holes before installing fasteners.

C. Install trim accessories with adhesive and nails or staples. Do not fasten through panels.

D. Fill grooves in trim accessories with sealant before installing panels, and bed inside corner trim in a bead of sealant.

E. Maintain uniform space between panels and wall fixtures. Fill space with sealant.

F. Remove excess sealant and smears as paneling is installed. Clean with solvent recommended by sealant manufacturer and then wipe with clean dry cloths until no residue remains.

END OF SECTION 066400

SECTION 071113 - BITUMINOUS DAMPPROOFING

PART 1 - GENERAL

1.1 RELATED DOCUMENTS

A. Drawings and general provisions of the Contract, including General and Supplementary Conditions and Division 01 Specification Sections, apply to this Section.

1.2 SUMMARY

A. Section Includes:

1. Cold-applied, cut-back-asphalt dampproofing.

B. Related Requirements:

1. Section 033000 "Cast-in-Place Concrete" for bituminous vapor retarders.
2. Section 042000 "Unit Masonry" for mortar parge coat on masonry surfaces.

1.3 ACTION SUBMITTALS

A. Product Data: For each type of product.

1.4 FIELD CONDITIONS

A. Weather Limitations: Proceed with application only when existing and forecasted weather conditions permit dampproofing to be performed according to manufacturers' written instructions.

PART 2 - PRODUCTS

2.1 MATERIALS, GENERAL

A. Source Limitations: Obtain primary dampproofing materials and primers from single source from single manufacturer. Provide protection course, molded-sheet drainage panels, and auxiliary materials recommended in writing by manufacturer of primary materials.

B. VOC Content: Products shall comply with VOC content limits of authorities having jurisdiction unless otherwise required.

2.2 COLD-APPLIED, CUT-BACK-ASPHALT DAMPPROOFING

A. Manufacturers: Subject to compliance with requirements, provide products by one of the following:

1. APOC, Inc; a division of Gardner Industries.
2. Brewer Company (The).
3. ChemMasters, Inc.
4. Henry Company.
5. Karnak Corporation.
6. W. R. Meadows, Inc.

B. Trowel Coats: ASTM D 4586, Type I, Class 1, fibered.

C. Brush and Spray Coats: ASTM D 4479, Type I, fibered or nonfibered.

2.3 AUXILIARY MATERIALS

A. General: Furnish auxiliary materials recommended in writing by dampproofing manufacturer for intended use and compatible with bituminous dampproofing.

B. Cut-Back-Asphalt Primer: ASTM D 41.

C. Asphalt-Coated Glass Fabric: ASTM D 1668, Type I.

D. Patching Compound: Epoxy or latex-modified repair mortar or asbestos-free fibered mastic of type recommended in writing by dampproofing manufacturer.

E. Protection Course: Smooth-surfaced roll roofing complying with ASTM D 6380, Class S, Type III.

2.4 MOLDED-SHEET DRAINAGE PANELS

A. Nonwoven-Geotextile-Faced, Molded-Sheet Drainage Panel: Composite subsurface drainage panel consisting of a studded, nonbiodegradable, molded-plastic-sheet drainage core; with a nonwoven, needle-punched geotextile facing with an apparent opening size not exceeding No. 70 sieve laminated to one side of the core; and with a vertical flow rate of 9 to 15 gpm per ft..

1. Manufacturers: Subject to compliance with requirements, provide products by one of the following:

a. American Hydrotech, Inc.
b. Carlisle Coatings & Waterproofing Inc.
c. GCP Applied Technologies (formerly Grace Construction Products).
d. Protecto Wrap Company.

PART 3 - EXECUTION

3.1 EXAMINATION

A. Examine substrates, areas, and conditions with Applicator present, for compliance with requirements for surface smoothness, surface moisture, and other conditions affecting performance of bituminous dampproofing work.

B. Proceed with application only after substrate construction and penetrating work have been completed and unsatisfactory conditions have been corrected.

3.2 PREPARATION

A. Mask or otherwise protect adjoining exposed surfaces from being stained, spotted, or coated with dampproofing. Prevent dampproofing materials from entering and clogging weep holes and drains.

B. Clean substrates of projections and substances detrimental to the dampproofing work; fill voids, seal joints, and remove bond breakers if any, as recommended in writing by prime material manufacturer.

C. Apply patching compound to patch and fill tie holes, honeycombs, reveals, and other imperfections; cover with asphalt-coated glass fabric.

3.3 APPLICATION, GENERAL

A. Comply with manufacturer's written instructions for dampproofing application, cure time between coats, and drying time before backfilling unless more stringent requirements are indicated.

1. Apply dampproofing to provide continuous plane of protection.
2. Apply additional coats if recommended in writing by manufacturer or to achieve a smooth surface and uninterrupted coverage.

B. Where dampproofing footings and foundation walls, apply from finished-grade line to top of footing; extend over top of footing and down a minimum of 6 inches over outside face of footing.

1. Extend dampproofing 12 inches onto intersecting walls and footings, but do not extend onto surfaces exposed to view when Project is completed.
2. Install flashings and corner protection stripping at internal and external corners, changes in plane, construction joints, cracks, and where shown as "reinforced," by embedding an 8-inch-wide strip of asphalt-coated glass fabric in a heavy coat of dampproofing. Dampproofing coat for embedding fabric is in addition to other coats required.

C. Where dampproofing exterior face of inner wythe of exterior masonry cavity walls, lap dampproofing at least 1/4 inch onto flashing, masonry reinforcement, veneer ties, and other items that penetrate inner wythe.

1. Extend dampproofing over outer face of structural members and concrete slabs that interrupt inner wythe.
2. Lap dampproofing at least 1/4 inch onto shelf angles supporting veneer.

D. Where dampproofing interior face of above-grade, exterior concrete and masonry walls, continue dampproofing through intersecting walls by keeping vertical mortar joints at intersection temporarily open or by dampproofing wall before constructing intersecting walls.

3.4 COLD-APPLIED, CUT-BACK-ASPHALT DAMPPROOFING

A. Concrete Foundations and Parged Masonry Foundation Walls: Apply two brush or spray coats at not less than 1.25 gal./100 sq. ft. for first coat and 1 gal./100 sq. ft. for second coat or one trowel coat at not less than 4 gal./100 sq. ft.

B. Unparged Masonry Foundation Walls: Apply primer and two brush or spray coats at not less than 1.25 gal./100 sq. ft. for first coat and 1 gal./100 sq. ft. for second coat or primer and one trowel coat at not less than 4 gal./100 sq. ft.

C. Unexposed Face of Masonry Retaining Walls: Apply primer and one brush or spray coat at not less than 1.25 gal./100 sq. ft.

D. Masonry Backup for Brick Veneer Assemblies: Apply primer and one brush or spray coat at not less than 1 gal./100 sq. ft..

E. Exterior Face of Inner Wythe of Cavity Walls: Apply primer and one brush or spray coat at not less than 1 gal./100 sq. ft..

3.5 INSTALLATION OF PROTECTION COURSE

A. Where indicated, install protection course over completed-and-cured dampproofing. Comply with dampproofing-material and protection-course manufacturers' written instructions for attaching protection course.

1. Support protection course over cured coating with spot application of adhesive type recommended in writing by protection-board manufacturer.
2. Install protection course on same day or within 24 hours of installation of dampproofing (while coating is tacky) to ensure adhesion.

3.6 INSTALLATION OF MOLDED-SHEET DRAINAGE PANELS

A. Place and secure molded-sheet drainage panels, with geotextile facing away from wall substrate, according to manufacturer's written instructions. Use adhesives or other methods that do not penetrate dampproofing. Lap edges and ends of geotextile to maintain continuity. Protect installed molded-sheet drainage panels during subsequent construction.

1. Install protection course before installing drainage panels.

3.7 CLEANING

A. Clean spillage and soiling from adjacent construction using cleaning agents and procedures recommended in writing by manufacturer of affected construction.

END OF SECTION 071113

SECTION 071614 – ACRYLIC MODIFIED (FLEXIBLE) CEMENTITOUS WATERPROOFING

PART 1 - GENERAL

1.1 RELATED DOCUMENTS

A. Drawings and general provisions of the Contract, including General and Supplementary Conditions and Division 01 Specification Sections, apply to this Section.

1.2 SUMMARY

A. Section includes acrylic-modified flexible cementitious waterproofing used at Fountain.

1.3 PREINSTALLATION MEETINGS

A. Preinstallation Conference: Conduct conference at Project site.

1.4 SUBMITTALS

A. Product Data:

1. Submit manufacturer's literature and installation instructions for each product.

1.5 QUALITY ASSURANCE

A. Manufacturer Qualifications: Company specializing in marketing or manufacturing acrylic-modified flexible cementitious waterproofing with a minimum of 10 years documented experience.

B. Installer Qualifications: Acceptable to manufacturer with documented experience on at least 5 projects of similar nature in past 5 years and/or training provided by the product manufacturer.

C. Mockups: Build mockups to verify selections made under Sample submittals, to demonstrate aesthetic effects, and to set quality standards for materials and execution.

1. Build mockup of typical vertical and horizontal surfaces 10 sq. ft. in size.
2. Approval of mockups does not constitute approval of deviations from the Contract Documents contained in mockups unless Architect specifically approves such deviations in writing.
3. Subject to compliance with requirements, approved mockups may become part of the completed Work if undisturbed at time of Substantial Completion.

1.6 DELIVERY, STORAGE AND HANDLING

A. Deliver and store in a dry area between 40°F and 90°F. Handle and protect from freezing and direct sun light in accordance with manufacturer's instructions.

B. Deliver materials in manufacturer's unopened containers, fully identified with brand, type, grade, class, and all other qualifying information.

C. Provide Material Safety Data Sheets for each product.

D. Take necessary precautions to keep products clean, dry and free of damage.

1.7 SYSTEM REQUIREMENTS

A. Coordinate waterproofing installation with other trades.

B. Provide materials and accessories in timely manner so as not to delay Work.

1.8 PROJECT CONDITIONS

A. Maintain surfaces to be waterproofed and surrounding air temperature at not less than 40°F.

B. Apply only when temperatures are steady or rising.

C. Do not apply materials to frozen or frost-filled surfaces.

D. Exercise caution when temperatures exceed 90°F.

1.9 WARRANTY

A. Manufacturer’s Warranty: Manufacturer shall provide standard product warranty executed by authorized company official.

1. Term of Warranty: 5 years from date of Substantial Completion.

PART 2 - PRODUCTS

2.1 BASIS-OF-DESIGN MANUFACTURER

A. Basis-of-Design: Subject to compliance with requirements, provide product indicated below by Aquafin, or a comparable product as approved by the Architect:

1. Product: AQUAFIN-2K/M.
2. Finish: As selected by the Architect from the manufacturer's full range.
3. Color: As selected by the Architect from the manufacturer's full range.

2.2 MATERIALS

A. Waterproofing Material - Acrylic Modified Cement Waterproofing: Cementitious, two-component, acrylic emulsion based, highly flexible, crack bridging waterproof membrane barrier against positive water pressure, with the following characteristics:

1. Dry Component-A: Precise blend of cementitious material.
2. Liquid Component-B: White acrylic emulsion and admixtures.
3. Working Time: Approximately 45 minutes.
4. Shore A Hardness: (ASTM D-2240) ~ 85.
5. VOC: 0 g/L.
6. Flammability: (ASTM E-108) Class A – Spread of Flame – Passed.
7. Bond/Adhesion: (ASTM C-321) 215 psi (1.5 MPa) @ 28 days.
8. Tensile Strength: (ASTM C-412) 600 psi (4.1 MPa) @ 28 days @ 80 mils.
9. Elongation: 70 percent (gray); 40 percent (white) at 68°f.
10. Static crack bridging capacity: 1/16-inch (gray).
11. Vapor Permeability: (ASTM E-96) 1.4 perms at 3/32” thickness.
12. Waterproofing: (CRD C 48-92) Withstands 200 psi = 460 feet hydrostatic pressure (positive side) at 3/32” thickness.

2.3 ACCESSORY MATERIALS

A. Patching Compound: Pre-blended, cementitious structural waterproofing and repair mortar recommended or approved by waterproofing manufacturer for patching honeycombs, installing coves, etc.

1. Basis-of-Design Product: AQUAFIN MORTAR-LN or MORTAR-40.
2. Color: Gray.
3. Aggregate: Powder.
4. Compressive Strength: (ASTM C-109) 6000 psi @ 28 days.
5. Flexural Strength: (ASTM C-348) 1160 psi @ 28 days.

B. Crack and static joint sealing tape: Elastomeric, tear resistant, breathable waterproofing tape.

1. Basis-of-Design Product: AQUAFIN JOINT SEALING TAPE-2000.
2. Thickness: approx. 14 mils.
3. Width: 4.75" or 8".
4. Elongation: 60%.
5. Tear Strength: 725 psi.

C. Expansion joint sealing tape: Elastomeric, tear resistant, breathable waterproofing tape.

1. Basis-of-Design Product: AQUAFIN JOINT SEALING TAPE-2000-S.
2. Thickness: approx. 16 mils.
3. Width: 4.75" or 8".
4. Elongation: 600%.
5. Tear resistance: 2,175 psi.

D. Sealing Gasket for PVC pipe and other penetrations: Elastomeric, tear resistant, breathable waterproofing sealing gasket.

1. Basis-of-Design Product: AQUAFIN-GASKET 18/18.
2. Thickness: approx. 1/64".
3. Color: White.
4. Size: Approx. 18" x 18".

E. One-component Waterproofing Material for negative side water pressure in combination with two-component Waterproofing Material with the following characteristics:

1. Basis-of-Design Product: AQUAFIN-1K.
2. Color: Gray.
3. Aggregate: Powde.r
4. Compressive Strength: (ASTM C-109) 4000 psi @ 28 days.
5. Flexural Strength: (ASTM C-348) 440 psi @ 28 days.
6. Bond/Adhesion: (ASTM C-321) 220 psi @ 28 days.
7. Vapor Permeability: (US Perms) 8 (ASTM E-96) (control = 10).

F. Protective Clear Sealer: V.O.C. compliant, ready-to-use 100% acrylic liquid applied over two-component Waterproofing Material, protecting it from environmental influences.

1. Basis-of-Design Product: AQUAFIN-CS/250.
2. Color: Milky.
3. Aggregate: Liquid.
4. Solids Content: 25%.
5. Bond/Adhesion: Cohesive film failure.
6. Abrasion Resistance: (ASTM D-658-44) 225 to 350 g/mil on glass.

PART 3 - EXECUTION

3.1 EXAMINATION

A. Examine all construction substrates and conditions under which waterproofing materials are to be installed. Do not proceed with the waterproofing application until unsatisfactory conditions are corrected.

3.2 PREPARATION

A. Protect adjacent surfaces not designated to receive waterproofing.

B. Substrate preparation:

1. Remove oil, grease, dirt, loose particles, remains of form oils, water repellents, rust or other coatings by high-pressure water blasting (>3000 psi), wet or dry sand blasting, or other mechanical means to produce surface profile ICRI CSP 3 to 5 for application of waterproofing.

2. Follow manufacturer's instructions to clean and prepare surfaces and seal cracks and joints.
3. Voids in concrete substrates: 1/4-inch diameter and larger, pre-treat with patching compound. Less than 1/4-inch diameter can be filled with a scratch coat of one-component waterproofing material.

C. Rinse surfaces to be waterproofed (excluding drywall or similar) with clean water to saturated surface dry (SSD) condition, with no standing water on horizontal surfaces.

3.3 INSTALLATION

A. Mix two-component waterproofing material in proportions recommended by manufacturer.

B. Cavity Fill, Honeycombs and Form-Tie holes:

1. Fill voids at cleaned and prepared faulty construction joints, cracks, formtie holes, etc. with patching compound in mortar consistency flush to surface.
2. Laminate patching compound in 2 to 3 layers as per manufacturer's instructions for larger spalled or honeycombed areas.

C. Taping Horizontal and Vertical Construction Joints and Cracks (Positive Side Waterproofing Only): Install joint and crack sealing tape, embedded in waterproofing material as follows:

1. Apply two-component waterproofing material by brush in a six to seven inch wide strip coat centered over all joints, cracks, penetrations and changes of plane to be taped.
2. While this coat is still wet, unroll joint sealing tape into the coating and apply a coat of two-component waterproofing material over the tape, smoothing out wrinkles and fish mouths.

D. Sealing around PVC pipe penetrations:

1. Abrade (sand) PVC pipes and degrease with isopropanol or acetone.
2. Place sealing gasket over pipe and mark size of penetration, then cut out necessary opening (penetration).
3. Apply one prime coat two-component waterproofing material over concrete and exposed PVC pipe.
4. While this coat is still wet, immediately place and firmly press sealing gasket into the coating and cover it with a top coat of two-component waterproofing material, after prime coat has set-up and sufficiently hardened.

E. Negative Side Waterproofing:

1. Follow manufacturer’s specifications and instructions for below grade structures (i.e. water and waste water tanks, swimming pools and gutters, basement and retaining walls) where infiltration from ground water is expected:

a. Apply first (base) coat one-component waterproofing material at 60 mils thickness.
b. After 24 hrs waiting period, apply seconde (top) coat two-component waterproofing material at 60 mils as soon as base coat has reached initial set.

F. Surface Finish: Provide one of the following as selected by the Architect.

1. Surface finish shall be standard (regular) two-component waterproofing material finish.
2. Surface finish shall be "fine" by applying a top coating of 10 – 20 mils special fine powder mix of two-component waterproofing material.
3. Surface finish shall be "smooth" by applying a top coating of 10 – 20 mils special smooth powder mix of two-component waterproofing material.

G. Application considerations:

1. Apply, using stainless steel trowel, tampico brush, short nap roller, or appropriate compressed-air spray equipment.
2. Apply only when surface and ambient temperatures are 40°F and rising. At high temperatures (i.e. 86°F and above) protect application from direct sun and wind to prevent premature surface drying and shrinkage cracks. Apply material in two coats minimum.
3. Application thickness should not exceed 1/8-inch (120 mils).
4. If needed, such as in zones posed to movement or cracking, plaza decks, etc., the waterproofing material can be additionally reinforced with a reinforcing mesh (supplied by waterproofing manufacturer), embedded between two waterproofing layers.
5. Do not bridge cracks greater than 1/16-inch.
6. Bridge dynamic cracks or joints with elastomeric joint sealing tape, as supplied by waterproofing manufacturer.
7. Do not overcoat waterproofing material with solvent-based materials.
8. Where a uniform color is desired (i.e. balconies, walkways, etc.), application of an elastomeric paint or water based acrylic stain is recommended.
9. Prime and protect alkali sensitive metals such as copper, aluminum, galvanized or zinc treated metal first with a primer, before over-coating with waterproofing material. Follow manufacturer's recommendations for primer material.

3.4 CURING

A. Follow manufacturer's general instructions for curing and hardening of waterproofing material. Do not use water for curing. Waterproofing material is self-curing.

B. Protect surfaces from rain, frost and premature dehydration.

3.5 TESTING OF WATER INCLUDING STRUCTURES

Following application and completion of related work, as required, but well prior to completion of entire project, fill tanks to capacity and allow to stand not less than 3 days. Fill larger structures at a uniform rate not greater than 6.5 feet in 24 hours. The temperature of the fill water shall be plus or minus 10°F of the ambient air and/or the tank structure at the time of filling. Extreme caution is urged if the temperature is greater than 10°F. Should leakage occur after this period, drain tanks to perform repairs. Notify Owner prior to draining tanks.

3.6 ACCEPTANCE

A. Remove left over materials and any foreign material resulting from the work from the site.

B. Clean adjacent surfaces and materials.

END OF SECTION 071614

SECTION 072100 - THERMAL INSULATION

PART 1 - GENERAL

1.1 RELATED DOCUMENTS

A. Drawings and general provisions of the Contract, including General and Supplementary Conditions and Division 01 Specification Sections, apply to this Section.

1.2 SUMMARY

A. Section Includes:

1. Extruded polystyrene foam-plastic board.
2. Glass-fiber blanket.

B. Related Requirements:

1. Section 042000 "Unit Masonry" for insulation installed in masonry cells.
2. Section 061600 "Sheathing" for foam-plastic board sheathing installed directly over framing and composite nail base insulated roof sheathing installed under standing-seam metal roof panels.
3. Section 075423 "Thermoplastic Polyolefin (TPO) Roofing" for insulation specified as part of roofing construction.
4. Section 092900 "Gypsum Board" for sound attenuation blanket used as acoustic insulation.

1.3 ACTION SUBMITTALS

A. Product Data: For each type of product.

1.4 INFORMATIONAL SUBMITTALS

A. Product Test Reports: For each product, for tests performed by a qualified testing agency.

B. Evaluation Reports: For foam-plastic insulation, from ICC-ES.

1.5 DELIVERY, STORAGE, AND HANDLING

A. Protect insulation materials from physical damage and from deterioration due to moisture, soiling, and other sources. Store inside and in a dry location. Comply with manufacturer's written instructions for handling, storing, and protecting during installation.

B. Protect foam-plastic board insulation as follows:

1. Do not expose to sunlight except to necessary extent for period of installation and concealment.
2. Protect against ignition at all times. Do not deliver foam-plastic board materials to Project site until just before installation time.
3. Quickly complete installation and concealment of foam-plastic board insulation in each area of construction.

PART 2 - PRODUCTS

2.1 EXTRUDED POLYSTYRENE FOAM-PLASTIC BOARD

A. Extruded-Polystyrene Board Insulation: ASTM C 578, of type and minimum compressive strength indicated below, with maximum flame-spread and smoke-developed indexes of 75 and 450, respectively, per ASTM E 84.

1. Basis-of-Design: Subject to compliance with requirements, provide STYROFOAM™ by the Dow Chemical Company or a comparable product by one of the following:

   a. DiversiFoam Products.
   b. Owens Corning.
   c. Pactiv Building Products.

2. Type and Compression Rating: As recommended by the manufacturer for the specific application.
3. Thickness: As required to meet the indicated R-Value.
4. Fire Propagation Characteristics: Passes NFPA 285 testing as part of an approved assembly.

2.2 GLASS-FIBER BLANKET

A. Glass-Fiber Blanket, Unfaced: ASTM C 665, Type I; with maximum flame-spread and smoke-developed indexes of 25 and 50, respectively, per ASTM E 84; passing ASTM E 136 for combustion characteristics.

B. Glass-Fiber Blanket, Kraft Faced: ASTM C 665, Type II (nonreflective faced), Class C (faced surface not rated for flame propagation); Category 1 (membrane is a vapor barrier).

C. Glass-Fiber Blanket, Reinforced-Foil Faced <**Insert drawing designation**>: ASTM C 665, Type III (reflective faced), Class A (faced surface with a flame-spread index of 25 or less); Category 1 (membrane is a vapor barrier), faced with foil scrim, foil-scrim kraft, or foil-scrim polyethylene.

1. Basis-of-Design: Subject to compliance with requirements, provide product indicated below or a comparable product as approved by the Architect:

a. JohnsManville; FSK-25 Faced.

1) Location: Provide in above ceiling exposed conditions as indicated on the Drawings.

2.3 INSULATION FASTENERS

A. Adhesively Attached, Spindle-Type Anchors: Plate welded to projecting spindle; capable of holding insulation of specified thickness securely in position with self-locking washer in place.

1. Plate: Perforated, galvanized carbon-steel sheet, 0.030 inch thick by 2 inches square.
2. Spindle: Copper-coated, low-carbon steel; fully annealed; 0.105 inch in diameter; length to suit depth of insulation.

B. Adhesively Attached, Angle-Shaped, Spindle-Type Anchors: Angle welded to projecting spindle; capable of holding insulation of specified thickness securely in position with self-locking washer in place.

1. Angle: Formed from 0.030-inch-thick, perforated, galvanized carbon-steel sheet with each leg 2 inches square.
2. Spindle: Copper-coated, low-carbon steel; fully annealed; 0.105 inch in diameter; length to suit depth of insulation.

C. Insulation-Retaining Washers: Self-locking washers formed from 0.016-inch-thick galvanized-steel sheet, with beveled edge for increased stiffness, sized as required to hold insulation securely in place, but not less than 1-1/2 inches square or in diameter.

1. Protect ends with capped self-locking washers incorporating a spring steel insert to ensure permanent retention of cap in the following locations:

a. Ceiling plenums.
b. Attic spaces.

D. Insulation Standoff: Spacer fabricated from galvanized mild-steel sheet for fitting over spindle of insulation anchor to maintain air space of 1 inchminimum between face of insulation and substrate to which anchor is attached.

E. Anchor Adhesive: Product with demonstrated capability to bond insulation anchors securely to substrates without damaging insulation, fasteners, or substrates.

2.4 ACCESSORIES

A. Adhesive for Bonding Insulation: Product compatible with insulation and air and water barrier materials, and with demonstrated capability to bond insulation securely to substrates without damaging insulation and substrates.

B. Eave Ventilation Troughs: Preformed, rigid fiberboard or plastic sheets designed and sized to fit between roof framing members and to provide ventilation between insulated attic spaces and vented eaves.

PART 3 - EXECUTION

3.1 PREPARATION

A. Clean substrates of substances that are harmful to insulation, including removing projections capable of puncturing insulation or vapor retarders, or that interfere with insulation attachment.

3.2 INSTALLATION, GENERAL

A. Comply with insulation manufacturer's written instructions applicable to products and applications.

B. Install insulation that is undamaged, dry, and unsoiled and that has not been left exposed to ice, rain, or snow at any time.

C. Extend insulation to envelop entire area to be insulated. Fit tightly around obstructions and fill voids with insulation. Remove projections that interfere with placement.

D. Provide sizes to fit applications and selected from manufacturer's standard thicknesses, widths, and lengths. Apply single layer of insulation units unless multiple layers are otherwise shown or required to make up total thickness or to achieve R-value.

3.3 INSTALLATION OF CAVITY-WALL INSULATION

A. Foam-Plastic Board Insulation: Install pads of adhesive spaced approximately 24 inches o.c. both ways on inside face and as recommended by manufacturer. Fit courses of insulation between wall ties and other obstructions, with edges butted tightly in both directions. Press units firmly against inside substrates.

1. Supplement adhesive attachment of insulation by securing boards with two-piece wall ties designed for this purpose and specified in Section 042000 "Unit Masonry."

3.4 INSTALLATION OF INSULATION IN FRAMED CONSTRUCTION

A. Blanket Insulation: Install in cavities formed by framing members according to the following requirements:

1. Use insulation widths and lengths that fill the cavities formed by framing members. If more than one length is required to fill the cavities, provide lengths that will produce a snug fit between ends.

2. Place insulation in cavities formed by framing members to produce a friction fit between edges of insulation and adjoining framing members.
3. Maintain 3-inch clearance of insulation around recessed lighting fixtures not rated for or protected from contact with insulation.
4. Attics: Install eave ventilation troughs between roof framing members in insulated attic spaces at vented eaves.
5. For metal-framed wall cavities where cavity heights exceed 96 inches, support unfaced blankets mechanically and support faced blankets by taping flanges of insulation to flanges of metal studs.
6. For wood-framed construction, install blankets according to ASTM C 1320 and as follows:

    a. With faced blankets having stapling flanges, lap blanket flange over flange of adjacent blanket to maintain continuity of vapor retarder once finish material is installed over it.

7. Vapor-Retarder-Faced Blankets: Tape joints and ruptures in vapor-retarder facings, and seal each continuous area of insulation to ensure airtight installation.

    a. Exterior Walls: Set units with facing placed toward exterior of construction.
    b. Interior Walls: Set units with facing placed toward areas of high humidity.

B. Miscellaneous Voids: Install insulation in miscellaneous voids and cavity spaces where required to prevent gaps in insulation using the following materials:

1. Glass-Fiber Insulation: Compact to approximately 40 percent of normal maximum volume equaling a density of approximately 2.5 lb/cu. ft..
2. Spray Polyurethane Insulation: Apply according to manufacturer's written instructions.

3.5 PROTECTION

A. Protect installed insulation from damage due to harmful weather exposures, physical abuse, and other causes. Provide temporary coverings or enclosures where insulation is subject to abuse and cannot be concealed and protected by permanent construction immediately after installation.

END OF SECTION 072100

SECTION 072413 - POLYMER-BASED EXTERIOR INSULATION AND FINISH SYSTEM (EIFS)

PART 1 - GENERAL

1.1 RELATED DOCUMENTS

A. Drawings and general provisions of the Contract, including General and Supplementary Conditions and Division 01 Specification Sections, apply to this Section.

1.2 SUMMARY

A. Section Includes:

1. EIFS-clad barrier-wall assemblies that are field applied over substrate.

B. Related Requirements:

1. Section 079200 "Joint Sealants" for sealing joints in EIFS with elastomeric joint sealants and for perimeter joints between EIFS and other materials.

1.3 DEFINITIONS

A. Definitions in ASTM E 2110 apply to Work of this Section.

B. EIFS: Exterior insulation and finish system(s).

C. IBC: International Building Code.

D. Polymer-Based Exterior Insulation and Finish System: Class PB EIFS, as defined in ASTM E 2568.

1.4 PREINSTALLATION MEETINGS

A. Preinstallation Conference: Conduct conference at Project site.

1.5 ACTION SUBMITTALS

A. Product Data: For each EIFS component, trim, and accessory.

B. Samples: For each exposed product and for each color and texture specified, 8 inches square in size.

1.6 INFORMATIONAL SUBMITTALS

A. Manufacturer Certificates: Signed by EIFS manufacturer certifying the following:

1. EIFS substrate is acceptable to EIFS manufacturer.
2. Accessory products installed with EIFS, including joint sealants, flashing, water-resistant barriers, and trim, whether or not furnished by EIFS manufacturer and whether or not specified in this Section, are acceptable to EIFS manufacturer.

B. Product Certificates: For cementitious materials and aggregates and for insulation.

C. Product Test Reports: For each EIFS assembly and component, for tests performed by a qualified testing agency.

D. Field quality-control reports and special inspection reports.

E. Evaluation Reports: For EIFS, including insulation fasteners, and flexible membrane flashing, from ICC-ES.

F. Sample Warranty: For manufacturer's special warranty.

1.7 CLOSEOUT SUBMITTALS

A. Maintenance Data: For EIFS to include in maintenance manuals.

1.8 QUALITY ASSURANCE

A. Mockups: Build mockups to verify selections made under Sample submittals, to demonstrate aesthetic effects, to set quality standards for materials and execution, and to set quality standards for fabrication and installation.

1. Subject to compliance with requirements, approved mockups may become part of the completed Work if undisturbed at time of Substantial Completion.

1.9 DELIVERY, STORAGE, AND HANDLING

A. Deliver materials in original, unopened packages with manufacturers' labels intact and clearly identifying products.

B. Store materials inside and under cover; keep them dry and protected from weather, direct sunlight, surface contamination, aging, corrosion, damaging temperatures, construction traffic, and other causes.

1. Stack insulation board flat and off the ground.
2. Protect plastic insulation against ignition at all times. Do not deliver plastic insulating materials to Project site before installation time.

3. Complete installation and concealment of plastic materials as rapidly as possible in each area of construction.

1.10 FIELD CONDITIONS

A. Weather Limitations: Maintain ambient temperatures above 40 deg F for a minimum of 24 hours before, during, and after adhesives or coatings are applied. Do not apply EIFS adhesives or coatings during rainfall. Proceed with installation only when existing and forecasted weather conditions and ambient outdoor air, humidity, and substrate temperatures permit EIFS to be applied, dried, and cured according to manufacturers' written instructions and warranty requirements.

1.11 WARRANTY

A. Manufacturer's Special Warranty: Manufacturer agrees to repair or replace EIFS that fail in materials or workmanship within specified warranty period.

1. Failures include, but are not limited to, the following:

a. Bond integrity and weathertightness.
b. Deterioration of EIFS finishes and other EIFS materials beyond normal weathering.

2. Warranty coverage includes the following EIFS components:

a. EIFS finish, including base and finish coats and reinforcing mesh.
b. Insulation installed as part of EIFS including build-outs.
c. Insulation adhesive and mechanical fasteners.
d. EIFS accessories, including trim components and flashing.

3. Warranty Period: Five years from date of Substantial Completion.

PART 2 - PRODUCTS

2.1 MANUFACTURERS

A. Source Limitations: Obtain EIFS from single source from single EIFS manufacturer and from sources approved by EIFS manufacturer as tested and compatible with EIFS components.

B. Basis-of-Design: Subject to compliance with requirements, provide products indicated below by Sto Corp., or comparable products as approved by the Architect:

1. Product: StoTherm ci Classic.

a. Finish: Sto Limestone.
b. Color: As selected by the Architect from the manufacturer's full range.

2.2 PERFORMANCE REQUIREMENTS

A. EIFS Performance: Comply with ASTM E 2568 and with the following:

1. Weathertightness: Resistant to water penetration from exterior.
2. Insulation Fire Propagation Characteristics: Passes NFPA 285 testing as part of an approved assembly.
3. System Fire Performance: Fire-resistance rating of wall assembly.
4. Structural Performance: EIFS assembly and components shall comply with ICC-ES AC219 when tested according to ASTM E 2568.

    a. Wind Loads: Uniform pressure as indicated on Structural Drawings.

5. Impact Performance: ASTM E 2568, Standard impact resistance unless otherwise indicated.
6. Bond Integrity: Free from bond failure within EIFS components or between EIFS and substrates, resulting from exposure to fire, wind loads, weather, or other in-service conditions.
7. Abrasion Resistance of Finish Coat: Sample consisting of 1-inch-thick EIFS mounted on 1/2-inch-thick gypsum board; cured for a minimum of 28 days and shows no cracking, checking, or loss of film integrity after exposure to 528 quarts of sand when tested according to ASTM D 968, Method A.
8. Mildew Resistance of Finish Coat: Sample applied to 2-by-2-inch clean glass substrate; cured for 28 days and shows no growth when tested according to ASTM D 3273 and evaluated according to ASTM D 3274.

2.3 EIFS MATERIALS

A. Primer/Sealer: EIFS manufacturer's standard substrate conditioner designed to protect substrates from moisture penetration and to improve the bond between substrate and insulation adhesive.

B. Flexible-Membrane Flashing: Cold-applied, self-adhering, self-healing, rubberized-asphalt and polyethylene-film composite sheet or tape and primer; EIFS manufacturer's standard or product recommended in writing by EIFS manufacturer.

C. Insulation Adhesive: EIFS manufacturer's standard formulation designed for indicated use; compatible with substrate and complying with one of the following:

1. Job-mixed formulation of portland cement complying with ASTM C 150/C 150M, Type I, and polymer-based adhesive specified for base coat.
2. Factory-blended dry formulation of portland cement, dry polymer admixture, and fillers specified for base coat.
3. Factory-mixed noncementitious formulation designed for adhesive attachment of insulation to substrates of type indicated, as recommended by EIFS manufacturer.

D. Molded, (Expanded) Rigid Cellular Polystyrene Board Insulation (EPS): Comply with ASTM C 578, Type I; and with EIFS manufacturer's requirements for most stringent requirements for material performance and qualities of insulation, including dimensions and permissible variations, and the following:

1. Aging: Before cutting and shipping, age insulation in block form by air drying for not less than six weeks.
2. Flame-Spread and Smoke-Developed Indexes: 25 and 450 or less, respectively, according to ASTM E 84.
3. Dimensions: Provide insulation boards of not more than 24 by 48 inches and in thickness indicated, but not more than 4 inches thick or less than the thickness allowed by ASTM C 1397.
4. Foam Build-Outs: Provide with profiles and dimensions indicated on Drawings.

E. Reinforcing Mesh: Balanced, alkali-resistant, open-weave, glass-fiber mesh treated for compatibility with other EIFS materials, made from continuous multiend strands with retained mesh tensile strength of not less than 120 lbf/in. according to ASTM E 2098 and the following:

1. Reinforcing Mesh for EIFS, General: Not less than weight required to meet impact-performance level specified in "Performance Requirements" Article.
2. Strip Reinforcing Mesh: As recommended by EIFS manufacturer.
3. Detail Reinforcing Mesh: As recommended by EIFS manufacturer.
4. Corner Reinforcing Mesh: As recommended by EIFS manufacturer.

F. Base-Coat Materials: EIFS manufacturer's standard mixture complying with one of the following:

1. Job-mixed formulation of portland cement complying with ASTM C 150/C 150M, Type I, white or natural color; and manufacturer's standard polymer-emulsion adhesive designed for use with portland cement.
2. Job-combined formulation of manufacturer's standard polymer-emulsion adhesive and manufacturer's standard dry mix containing portland cement.
3. Factory-blended dry formulation of portland cement, dry polymer admixture, and inert fillers to which only water is added at Project site.
4. Factory-mixed noncementitious formulation of polymer-emulsion adhesive and inert fillers that is ready to use without adding other materials.

G. Waterproof Adhesive/Base-Coat Materials: EIFS manufacturer's standard waterproof formulation and complying with one of the following:

1. Job-mixed formulation of portland cement complying with ASTM C 150/C 150M, Type I, white or natural color; and manufacturer's standard polymer-emulsion adhesive designed for use with portland cement.
2. Job-combined formulation of manufacturer's standard polymer-emulsion adhesive and manufacturer's standard dry mix containing portland cement.

H. Mechanical Fasteners: EIFS manufacturer's standard corrosion-resistant fasteners consisting of thermal cap, standard washer and shaft attachments, and fastener indicated below; designed to resist Project's design loads; capable of pulling fastener head below surface of insulation board; and complying with the following:

1. For attachment to steel studs from 0.033 to 0.112 inch in thickness, provide steel drill screws complying with ASTM C 954.
2. For attachment to light-gage steel framing members not less than 0.0179 inch in thickness, provide steel drill screws complying with ASTM C 1002.

3. For attachment to wood framing members and plywood sheathing, provide steel drill screws complying with ASTM C 1002, Type W.
4. For attachment to masonry and concrete substrates, provide sheathing dowel in form of a plastic wing-tipped fastener with thermal cap, sized to fit insulation thickness indicated and to penetrate substrate to depth required to secure anchorage.
5. For attachment to other indicated substrates, provide manufacturer's standard fasteners suitable for substrate.

I. Primer: EIFS manufacturer's standard factory-mixed, elastomeric-polymer primer for preparing base-coat surface for application of finish coat.

J. Finish-Coat Materials: EIFS manufacturer's standard acrylic-based coating with enhanced mildew resistance complying with the following:

1. Factory-mixed formulation of polymer-emulsion binder, colorfast mineral pigments, sound stone particles, and fillers.
2. Colors: As selected by Architect from manufacturer's full range.
3. Textures: As selected by Architect from manufacturer's full range.

K. Sealer: Manufacturer's waterproof, clear acrylic-based sealer for protecting finish coat.

L. Water: Potable.

M. Trim Accessories: Type as designated or required to suit conditions indicated and to comply with EIFS manufacturer's written instructions; manufactured from UV-stabilized PVC; and complying with ASTM D 1784 and ASTM C 1063.

1. Casing Bead: Prefabricated, one-piece type for attachment behind insulation, of depth required to suit thickness of coating and insulation, with face leg perforated for bonding to coating and back leg.
2. Drip Screed/Track: Prefabricated, one-piece type for attachment behind insulation with face leg extended to form a drip, of depth required to suit thickness of coating and insulation, with face leg perforated for bonding to coating and back leg.
3. Expansion Joint: Prefabricated, one-piece V profile; designed to relieve stress of movement.
4. Windowsill Flashing: Prefabricated type for both flashing and sloping sill over framing beneath windows; with end and back dams; designed to direct water to exterior.
5. Parapet Cap Flashing: Type for both flashing and covering parapet top with design complying with ASTM C 1397.

2.4 MIXING

A. Comply with EIFS manufacturer's requirements for combining and mixing materials. Do not introduce admixtures, water, or other materials except as recommended by EIFS manufacturer. Mix materials in clean containers. Use materials within time period specified by EIFS manufacturer or discard.

PART 3 - EXECUTION

3.1 EXAMINATION

A. Examine substrates, areas, and conditions, with Installer present, for compliance with requirements for installation tolerances and other conditions affecting performance of the Work.

B. Examine roof edges, wall framing, flashings, openings, substrates, and junctures at other construction for suitable conditions where EIFS will be installed.

C. Proceed with installation only after unsatisfactory conditions have been corrected.

1. Begin coating application only after surfaces are dry.
2. Application of coating indicates acceptance of surfaces and conditions.

3.2 PREPARATION

A. Protect contiguous work from moisture deterioration and soiling caused by application of EIFS. Provide temporary covering and other protection needed to prevent spattering of exterior finish coats on other work.

B. Protect EIFS, substrates, and wall construction behind them from inclement weather during installation. Prevent penetration of moisture behind EIFS and deterioration of substrates.

C. Prepare and clean substrates to comply with EIFS manufacturer's written instructions to obtain optimum bond between substrate and adhesive for insulation.

1. Concrete Substrates: Provide clean, dry, neutral-pH substrate for insulation installation. Verify suitability of substrate by performing bond and moisture tests recommended by EIFS manufacturer.

3.3 EIFS INSTALLATION, GENERAL

A. Comply with ASTM C 1397, ASTM E 2511, and EIFS manufacturer's written instructions for installation of EIFS as applicable to each type of substrate.

3.4 SUBSTRATE PROTECTION APPLICATION

A. Primer/Sealer: Apply over gypsum sheathing substrates and where required by EIFS manufacturer for improving adhesion of insulation to substrate.

B. Flexible-Membrane Flashing: Apply and lap to shed water; seal at openings, penetrations, terminations, and where required by EIFS manufacturer. Prime substrates if required and install flashing to comply with EIFS manufacturer's written instructions and details.

3.5 TRIM INSTALLATION

A. Trim: Apply trim accessories at perimeter of EIFS, at expansion joints, at windowsills, and elsewhere as indicated. Coordinate with installation of insulation.

1. Drip Screed/Track: Use at bottom edges of EIFS unless otherwise indicated.
2. Windowsill Flashing: Use at windows unless otherwise indicated.
3. Expansion Joint: Use where indicated on Drawings.
4. Casing Bead: Use at other locations.
5. Parapet Cap Flashing: Use where indicated on Drawings.

3.6 INSULATION INSTALLATION

A. Board Insulation: Adhesively attach insulation to substrate in compliance with ASTM C 1397 and the following:

1. Sheathing: Apply adhesive to insulation by notched-trowel method in a manner that results in coating the entire surface of sheathing with adhesive once insulation is adhered to substrate. Apply adhesive to a thickness of not less than 1/4 inch for factory mixed and not less than 3/8 inch for field mixed, measured from surface of insulation before placement.
2. Concrete or Masonry: Apply adhesive by ribbon-and-dab method.
3. Press and slide insulation into place. Apply pressure over the entire surface of insulation to accomplish uniform contact, high initial grab, and overall level surface.
4. Allow adhered insulation to remain undisturbed for not less than 24 hours, before beginning rasping and sanding insulation or before applying base coat and reinforcing mesh.
5. Apply insulation over dry substrates in courses with long edges of boards oriented horizontally.
6. Begin first course of insulation from screed/track and work upward. Work from perimeter casing beads toward interior of panels if possible.
7. Stagger vertical joints of insulation boards in successive courses to produce running bond pattern. Locate joints so no piece of insulation is less than 12 inches wide or 6 inches high. Offset joints not less than 6 inches from corners of window and door openings and not less than 4 inches from aesthetic reveals.

    a. Adhesive Attachment: Offset joints of insulation not less than 6 inches from horizontal and 4 inches from vertical joints in sheathing.

8. Interlock ends at internal and external corners.
9. Abut insulation tightly at joints within and between each course to produce flush, continuously even surfaces without gaps or raised edges between boards. If gaps greater than 1/16 inch occur, fill with insulation cut to fit gaps exactly; insert insulation without using adhesive or other material.
10. Cut insulation to fit openings, corners, and projections precisely and to produce edges and shapes complying with details indicated.
11. Rasp or sand flush entire surface of insulation to remove irregularities projecting more than 1/32 inch from surface of insulation and to remove yellowed areas due to sun

exposure; do not create depressions deeper than 1/16 inch. Prevent airborne dispersal and immediately collect insulation raspings or sandings.

12. Cut aesthetic reveals in outside face of insulation with high-speed router and bit configured to produce grooves, rabbets, and other features that comply with profiles and locations indicated. Do not reduce insulation thickness at aesthetic reveals to less than 3/4 inch.
13. Install foam build-outs and attach to sheathing or structure.
14. Interrupt insulation for expansion joints where indicated.
15. Form joints for sealant application by leaving gaps between adjoining insulation edges and between insulation edges and dissimilar adjoining surfaces. Make gaps wide enough to produce joint widths indicated after encapsulating joint substrates with base coat and reinforcing mesh.
16. Form joints for sealant application with back-to-back casing beads for joints within EIFS and with perimeter casing beads at dissimilar adjoining surfaces. Make gaps between casing beads and between perimeter casing beads and adjoining surfaces of width indicated.
17. Fully wrap board edges with strip reinforcing mesh.
18. Treat exposed edges of insulation as follows:

    a. Except for edges forming substrates of sealant joints, encapsulate with base coat, reinforcing mesh, and finish coat.
    b. Encapsulate edges forming substrates of sealant joints within EIFS or between EIFS and other work with base coat and reinforcing mesh.
    c. At edges trimmed by accessories, extend base coat, reinforcing mesh, and finish coat over face leg of accessories.

19. Coordinate installation of flashing and insulation to produce wall assembly that does not allow water to penetrate behind flashing and EIFS lamina.

B. Expansion Joints: Install at locations indicated, where required by EIFS manufacturer, and as follows:

1. At expansion joints in substrates behind EIFS.
2. Where EIFS adjoin dissimilar substrates, materials, and construction, including other EIFS.
3. At floor lines in multilevel wood-framed construction.
4. Where wall height or building shape changes.
5. Where EIFS manufacturer requires joints in long continuous elevations.

3.7 BASE-COAT INSTALLATION

A. Waterproof Adhesive/Base Coat: To exposed surfaces of insulation, apply in minimum thickness recommended in writing by EIFS manufacturer over sloped surfaces, windowsills, parapets, foam build-outs, and where indicated on Drawings.

B. Base Coat: Apply to exposed surfaces of insulation and foam build-outs in minimum thickness recommended in writing by EIFS manufacturer, but not less than 1/16-inch dry-coat thickness.

C. Reinforcing Mesh: Embed reinforcing mesh in wet base coat to produce wrinkle-free installation with mesh continuous at corners, overlapped not less than 2-1/2 inches or otherwise treated at joints to comply with ASTM C 1397 and EIFS manufacturer's written instructions. Do not lap reinforcing mesh within 8 inches of corners. Completely embed mesh, applying additional base-coat material if necessary, so reinforcing-mesh color and pattern are invisible.

D. Double-Layer Reinforcing-Mesh Application: Where indicated or required, apply second base coat and second layer of reinforcing mesh, overlapped not less than 2-1/2 inches or otherwise treated at joints to comply with ASTM C 1397 and EIFS manufacturer's written instructions in same manner as first application. Do not apply until first base coat has cured.

E. Additional Reinforcing Mesh: Apply strip reinforcing mesh around openings, extending 4 inches beyond perimeter. Apply additional 9-by-12-inch strip reinforcing mesh diagonally at corners of openings (re-entrant corners). Apply 8-inch-wide, strip reinforcing mesh at both inside and outside corners unless base layer of mesh is lapped not less than 4 inches on each side of corners.

1. At aesthetic reveals, apply strip reinforcing mesh not less than 8 inches wide.
2. Embed strip reinforcing mesh in base coat before applying first layer of reinforcing mesh.

F. Foam Build-Outs: Fully embed reinforcing mesh in base coat.

G. Double Base-Coat Application: Where indicated, apply second base coat in same manner and thickness as first application, except without reinforcing mesh. Do not apply until first base coat has cured.

3.8 FINISH-COAT INSTALLATION

A. Primer: Apply over dry base coat according to EIFS manufacturer's written instructions.

B. Finish Coat: Apply over dry primed base coat, maintaining a wet edge at all times for uniform appearance, in thickness required by EIFS manufacturer to produce a uniform finish of color and texture matching approved sample and free of cold joints, shadow lines, and texture variations.

C. Sealer Coat: Apply over dry finish coat, in number of coats and thickness required by EIFS manufacturer.

3.9 FIELD QUALITY CONTROL

A. Special Inspections: Owner will engage a qualified special inspector to perform the following special inspections:

1. As stipulated in Ch. 17 of the IBC and as required by the local authorities having jurisdiction.
2. According to ICC-ES AC24.

B. Testing Agency: Owner will engage a qualified testing agency to perform tests and inspections.

C. EIFS Tests and Inspections: According to ASTM E 2568 and ICC-ES AC24.

D. EIFS will be considered defective if it does not pass tests and inspections.

E. Prepare test and inspection reports.

3.10 CLEANING AND PROTECTION

A. Remove temporary covering and protection of other work. Promptly remove coating materials from window and door frames and other surfaces outside areas indicated to receive EIFS coatings.

END OF SECTION 072413

SECTION 072500 - WEATHER BARRIERS

PART 1 - GENERAL

1.1 RELATED DOCUMENTS

A. Drawings and general provisions of the Contract, including General and Supplementary Conditions and Division 01 Specification Sections, apply to this Section.

1.2 SUMMARY

A. Section Includes:

1. Building wrap.
2. Flexible flashing.
3. Drainage material.

1.3 ACTION SUBMITTALS

A. Product Data: For each type of product.

1. For building wrap, include data on air and water-vapor permeance based on testing according to referenced standards.

B. Shop Drawings: Show details of building wrap at terminations, openings, and penetrations. Show details of flexible flashing applications.

1.4 INFORMATIONAL SUBMITTALS

A. Evaluation Reports: For water-resistive barrier and flexible flashing, from ICC-ES.

PART 2 - PRODUCTS

2.1 WATER-RESISTIVE BARRIER

A. Building Wrap: ASTM E 1677, Type I air barrier; with flame-spread and smoke-developed indexes of less than 25 and 450, respectively, when tested according to ASTM E 84; UV stabilized; and acceptable to authorities having jurisdiction.

1. Manufacturers: Subject to compliance with requirements, provide products by one of the following:

a. Dow Chemical Company (The).
b. DuPont Building Innovations: E. I. du Pont de Nemours and Company.
c. Kingspan Insulation.
d. Ludlow Coated Products.
e. Raven Industries, Inc.
f. Reemay, Inc.

2. Water-Vapor Permeance: Not less than 75 perms per ASTM E 96/E 96M, Desiccant Method (Procedure A).
3. Allowable UV Exposure Time: Not less than three months.
4. Flame Propagation Test: Materials and construction shall be as tested according to NFPA 285.

B. Building-Wrap Tape: Pressure-sensitive plastic tape recommended by building-wrap manufacturer for sealing joints and penetrations in building wrap.

2.2 FLEXIBLE FLASHING

A. Rubberized-Asphalt Flashing: Composite, self-adhesive, flashing product consisting of a pliable, rubberized-asphalt compound, bonded to a high-density polyethylene film, aluminum foil, or spunbonded polyolefin to produce an overall thickness of not less than 0.025 inch.

1. Basis-of-Design: Subject to compliance with requirements, provide Vycor Plus Self-Adhered Flashing or Vycor V40 Self-Adhered Flashing by GCP Applied Technologies (formerly Grace Construction Products), or a comparable product as approved by the Architect.
2. Flame Propagation Test: Materials and construction shall be as tested according to NFPA 285.

B. Primer for Flexible Flashing: Product recommended in writing by flexible flashing manufacturer for substrate.

C. Nails and Staples: Product recommended in writing by flexible flashing manufacturer and complying with ASTM F 1667.

2.3 DRAINAGE MATERIAL

A. Drainage Material: Product shall maintain a continuous open space between water-resistive barrier and exterior cladding to create a drainage plane and shall be used under siding .

1. Products: Subject to compliance with requirements, provide one of the following:

a. CavClear/Archovations, Inc.; CavClear Rainscreen Mat.
b. DuPont Building Innovations: E. I. du Pont de Nemours and Company; Tyvek Stucco Wrap.
c. Keene Building Products; 10 mm or 20-1.
d. Stuc-O-Flex International, Inc.; 11 mm, 3 mm, or 7 mm.

2. Flame Propagation Test: Materials and construction shall be as tested according to NFPA 285.

B. Prefabricated Self-Adhered Flashing Corners: Provide at all windows and door openings.

1. Basis-of-Design: Subject to compliance with requirements, provide VYCORner by GCP Applied Technologies (formerly Grace Construction Products), or a comparable product as approved by the Architect.

C. Primer for Flexible Flashing: Product recommended in writing by flexible flashing manufacturer for substrate.

D. Nails and Staples: Product recommended in writing by flexible flashing manufacturer and complying with ASTM F 1667.

PART 3 - EXECUTION

3.1 WATER-RESISTIVE BARRIER INSTALLATION

A. Cover exposed exterior surface of sheathing with water-resistive barrier securely fastened to framing immediately after sheathing is installed.

B. Cover sheathing with water-resistive barrier as follows:

1. Cut back barrier 1/2 inch on each side of the break in supporting members at expansion- or control-joint locations.
2. Apply barrier to cover vertical flashing with a minimum 4-inch overlap unless otherwise indicated.

C. Building Wrap: Comply with manufacturer's written instructions and warranty requirements.

1. Seal seams, edges, fasteners, and penetrations with tape.
2. Extend into jambs of openings and seal corners with tape.

3.2 FLEXIBLE FLASHING INSTALLATION

A. Apply flexible flashing where indicated to comply with manufacturer's written instructions.

1. Prime substrates as recommended by flashing manufacturer.
2. Lap seams and junctures with other materials at least 4 inches except that at flashing flanges of other construction, laps need not exceed flange width.
3. Lap flashing over water-resistive barrier at bottom and sides of openings.
4. Lap water-resistive barrier over flashing at heads of openings.
5. After flashing has been applied, roll surfaces with a hard rubber or metal roller to ensure that flashing is completely adhered to substrates.

3.3 DRAINAGE MATERIAL INSTALLATION

A. Install drainage material over building wrap and flashing to comply with manufacturer's written instructions.

3.4 FIELD QUALITY CONTROL

A. Testing Agency: Owner will engage a qualified testing agency to perform tests and inspections of windows and related adjacent construction for water intrusion as specified in Section 084113 “Aluminum-Framed Entrances and Storefronts.”

END OF SECTION 072500

SECTION 072600 - VAPOR RETARDERS

PART 1 - GENERAL

1.1 RELATED DOCUMENTS

A. Drawings and general provisions of the Contract, including General and Supplementary Conditions and Division 01 Specification Sections, apply to this Section.

1.2 SUMMARY

A. Section Includes:

1. Underslab vapor retarders.

1.3 ACTION SUBMITTALS

A. Product Data: For each type of product.

1.4 INFORMATIONAL SUBMITTALS

A. Product Test Reports: For each product, for tests performed by a qualified testing agency.

PART 2 - PRODUCTS

2.1 UNDERSLAB VAPOR RETARDERS

A. Underslab Vapor Retarders: ASTM F1249 and ASTM D1709, with maximum permeance rating of 0.1 perm.

1. Basis-of-Design: Subject to compliance with requirements, provide Stego Wrap by Stego Industries, or a comparable product as approved by the Architect.

a. Thickness: 10 mils minimum, unless otherwise indicated.

2.2 ACCESSORIES

A. Vapor-Retarder Tape: Pressure-sensitive tape of type recommended by vapor-retarder manufacturer for sealing joints and penetrations in vapor retarder.

B. Adhesive for Vapor Retarders: Product recommended by vapor-retarder manufacturer and has demonstrated capability to bond vapor retarders securely to substrates indicated.

C. Vapor-Retarder Fasteners: Pancake-head, self-tapping steel drill screws; with fender washers.

PART 3 - EXECUTION

3.1 PREPARATION

A. Clean substrates of substances that are harmful to vapor retarders, including removing projections capable of puncturing vapor retarders.

3.2 INSTALLATION OF UNDERSLAB VAPOR RETARDERS

A. Sheet Vapor Retarders: Place, protect, and repair sheet vapor retarder according to ASTM E 1643 and manufacturer's written instructions.

1. Lap joints 6 inches and seal with manufacturer's recommended tape.

B. Provide vapor barriers as indicated on the Drawings.

3.3 PROTECTION

A. Protect vapor retarders from damage until concealed by permanent construction.

END OF SECTION 072600

SECTION 074113.16 - STANDING-SEAM METAL ROOF PANELS

PART 1 - GENERAL

1.1 RELATED DOCUMENTS

A. Drawings and general provisions of the Contract, including General and Supplementary Conditions and Division 01 Specification Sections, apply to this Section.

1.2 SUMMARY

A. Section includes standing-seam metal roof panels.

B. Related Sections:

1. Section 061600 "Sheathing" for composite nail base insulated roof sheathing installed under standing-seam metal roof panels.

1.3 PREINSTALLATION MEETINGS

A. Preinstallation Conference: Conduct conference at [**Project site**] <**Insert location**>.

1. Meet with Owner, Architect, Owner's insurer if applicable, metal panel Installer, metal panel manufacturer's representative, structural-support Installer, and installers whose work interfaces with or affects metal panels, including installers of roof accessories and roof-mounted equipment.
2. Review and finalize construction schedule and verify availability of materials, Installer's personnel, equipment, and facilities needed to make progress and avoid delays.
3. Review methods and procedures related to metal panel installation, including manufacturer's written instructions.
4. Examine support conditions for compliance with requirements, including alignment between and attachment to structural members.
5. Review structural loading limitations of [**deck**] [**purlins and rafters**] during and after roofing.
6. Review flashings, special details, drainage, penetrations, equipment curbs, and condition of other construction that affect metal panels.
7. Review governing regulations and requirements for insurance, certificates, and tests and inspections if applicable.
8. Review temporary protection requirements for metal panel systems during and after installation.
9. Review procedures for repair of metal panels damaged after installation.
10. Document proceedings, including corrective measures and actions required, and furnish copy of record to each participant.

1.4 ACTION SUBMITTALS

A. Product Data: For each type of product.

1. Include construction details, material descriptions, dimensions of individual components and profiles, and finishes for each type of panel and accessory.

B. Shop Drawings:

1. Include fabrication and installation layouts of metal panels; details of edge conditions, joints, panel profiles, corners, anchorages, attachment system, trim, flashings, closures, and accessories; and special details.
2. Accessories: Include details of the flashing, trim, and anchorage systems, at a scale of not less than 1-1/2 inches per 12 inches.

C. Samples for Initial Selection: For each type of metal panel indicated with factory-applied color finishes.

1. Include similar Samples of trim and accessories involving color selection.

1.5 INFORMATIONAL SUBMITTALS

A. Qualification Data: For Installer.

B. Product Test Reports: For each product, for tests performed by a qualified testing agency.

C. Field quality-control reports.

D. Sample Warranties: For special warranties.

1.6 CLOSEOUT SUBMITTALS

A. Maintenance Data: For metal panels to include in maintenance manuals.

1.7 QUALITY ASSURANCE

A. Installer Qualifications: An entity that employs installers and supervisors who are trained and approved by manufacturer.

B. UL-Certified, Portable Roll-Forming Equipment: UL-certified, portable roll-forming equipment capable of producing metal panels warranted by manufacturer to be the same as factory-formed products. Maintain UL certification of portable roll-forming equipment for duration of work.

C. Mockups: Build mockups to verify selections made under Sample submittals and to demonstrate aesthetic effects and set quality standards for fabrication and installation.
1. Build mockups for typical roof area only, including accessories.

a. Size: 12 feet long by 6 feet.
b. Each type of exposed seam and seam termination.

2. Approval of mockups does not constitute approval of deviations from the Contract Documents contained in mockups unless Architect specifically approves such deviations in writing.
3. Approved mockups may become part of the completed Work if undisturbed at time of Substantial Completion.

1.8 DELIVERY, STORAGE, AND HANDLING

A. Deliver components, metal panels, and other manufactured items so as not to be damaged or deformed. Package metal panels for protection during transportation and handling.

B. Unload, store, and erect metal panels in a manner to prevent bending, warping, twisting, and surface damage.

C. Stack metal panels horizontally on platforms or pallets, covered with suitable weathertight and ventilated covering. Store metal panels to ensure dryness, with positive slope for drainage of water. Do not store metal panels in contact with other materials that might cause staining, denting, or other surface damage.

D. Retain strippable protective covering on metal panels during installation.

1.9 FIELD CONDITIONS

A. Weather Limitations: Proceed with installation only when existing and forecasted weather conditions permit assembly of metal panels to be performed according to manufacturers' written instructions and warranty requirements.

1.10 COORDINATION

A. Coordinate sizes and locations of roof curbs, equipment supports, and roof penetrations with actual equipment provided.

B. Coordinate metal panel installation with rain drainage work, flashing, trim, construction of soffits, and other adjoining work to provide a leakproof, secure, and noncorrosive installation.

1.11 WARRANTY

A. Special Warranty: Manufacturer's standard form in which manufacturer agrees to repair or replace components of metal panel systems that fail in materials or workmanship within specified warranty period.

1. Failures include, but are not limited to, the following:

a. Structural failures including rupturing, cracking, or puncturing.
b. Deterioration of metals and other materials beyond normal weathering.

2. Warranty Period: Two years from date of Substantial Completion.

B. Special Warranty on Panel Finishes: Manufacturer's standard form in which manufacturer agrees to repair finish or replace metal panels that show evidence of deterioration of factory-applied finishes within specified warranty period.

1. Exposed Panel Finish: Deterioration includes, but is not limited to, the following:

a. Color fading more than 5 Hunter units when tested according to ASTM D 2244.
b. Chalking in excess of a No. 8 rating when tested according to ASTM D 4214.
c. Cracking, checking, peeling, or failure of paint to adhere to bare metal.

2. Finish Warranty Period: 20 years from date of Substantial Completion.

PART 2 - PRODUCTS

2.1 PERFORMANCE REQUIREMENTS

A. Structural Performance: Provide metal panel systems capable of withstanding the effects of the following loads, based on testing according to ASTM E 1592:

1. Wind Loads: As indicated on Structural Drawings.
2. Other Design Loads: As indicated on Structural Drawings.
3. Deflection Limits: For wind loads, no greater than 1/180 of the span.

B. Air Infiltration: Air leakage of not more than 0.06 cfm/sq. ft. when tested according to ASTM E 1680 or ASTM E 283 at the following test-pressure difference:

1. Test-Pressure Difference: 6.24 lbf/sq. ft.

C. Water Penetration under Static Pressure: No water penetration when tested according to ASTM E 1646 or ASTM E 331 at the following test-pressure difference:

1. Test-Pressure Difference: 6.24 lbf/sq. ft.

D. Hydrostatic-Head Resistance: No water penetration when tested according to ASTM E 2140.

E. Thermal Movements: Allow for thermal movements from ambient and surface temperature changes by preventing buckling, opening of joints, overstressing of components, failure of joint sealants, failure of connections, and other detrimental effects. Base calculations on surface temperatures of materials due to both solar heat gain and nighttime-sky heat loss.

1. Temperature Change (Range): 120 deg F, ambient; 180 deg F, material surfaces.

2.2 STANDING-SEAM METAL ROOF PANELS

A. General: Provide factory-formed metal roof panels designed to be installed by lapping and interconnecting raised side edges of adjacent panels with joint type indicated and mechanically attaching panels to supports using concealed clips in side laps. Include clips, cleats, pressure plates, and accessories required for weathertight installation.

1. Aluminum Panel Systems: Unless more stringent requirements are indicated, comply with ASTM E 1637.

B. Vertical-Rib, Seamed-Joint, Standing-Seam Metal Roof Panels: Formed with vertical ribs at panel edges and intermediate stiffening ribs symmetrically spaced between ribs; designed for sequential installation by mechanically attaching panels to supports using concealed clips located under one side of panels, engaging opposite edge of adjacent panels, and mechanically seaming panels together.

1. Manufacturers: Subject to compliance with requirements, provide products by one of the following:

a. Advanced Architectural Products.
b. Advanced Building Products Inc.
c. AEP Span; A BlueScope Steel Company.
d. Architectural Building Components.
e. Architectural Metal Systems.
f. ATAS International, Inc.
g. Berridge Manufacturing Company.
h. CENTRIA Architectural Systems.
i. Dimensional Metals, Inc.
j. Drexel Metals.
k. Englert, Inc.
l. Fabral.
m. Firestone Building Products.
n. Firestone Metal Products, LLC.
o. Flexospan Steel Buildings, Inc.
p. Garland Company, Inc. (The).
q. IMETCO.
r. MBCI; a division of NCI Group, Inc.
s. McElroy Metal, Inc.
t. Merchant & Evans Inc.
u. Metal Sales Manufacturing Corporation.
v. Morin - A Kingspan Group Company.
w. Petersen Aluminum Corporation.
x. Ryerson Tull, Inc.
y. Ultra Seam Incorporated.
z. Union Corrugating Company.

2. Aluminum Sheet: Coil-coated sheet, ASTM B 209, alloy as standard with manufacturer, with temper as required to suit forming operations and structural performance required.

a. Thickness: 0.032 inch.
b. Surface: Smooth, flat finish.
c. Exterior Finish: Clear anodized.
d. Color: As selected by Architect from manufacturer's full range.

3. Clips: One-piece fixed to accommodate thermal movement.

a. Material: 0.028-inch- nominal thickness, zinc-coated (galvanized) or aluminum-zinc alloy-coated steel sheet.
b. Material: 0.025-inch- thick, stainless-steel sheet.

4. Joint Type: As standard with manufacturer.
5. Panel Coverage: As selected by the Architect.
6. Panel Height: As selected by the Architect.

2.3 UNDERLAYMENT MATERIALS

A. Self-Adhering, High-Temperature Underlayment: Provide self-adhering, cold-applied, sheet underlayment, a minimum of 40 mils thick, consisting of slip-resistant, polyethylene-film top surface laminated to a layer of butyl or SBS-modified asphalt adhesive, with release-paper backing. Provide primer when recommended by underlayment manufacturer.

1. Thermal Stability: Stable after testing at 240 deg F; ASTM D 1970.
2. Low-Temperature Flexibility: Passes after testing at minus 20 deg F; ASTM D 1970.
3. Basis-of-Design Product: Subject to compliance with requirements, provide GCP Applied Technologies (formerly Grace Construction Products); Grace Ice and Water Shield HT or a comparable product by one of the following:

a. Carlisle Residential; a division of Carlisle Construction Materials.
b. Drexel Metals.
c. Henry Company.
d. Kirsch Building Products, LLC.
e. Owens Corning.

B. Slip Sheet: Manufacturer's recommended slip sheet, of type required for application.

2.4 MISCELLANEOUS MATERIALS

A. Miscellaneous Metal Subframing and Furring: ASTM C 645; cold-formed, metallic-coated steel sheet, ASTM A 653/A 653M, G90 coating designation or ASTM A 792/A 792M, Class AZ50 coating designation unless otherwise indicated. Provide manufacturer's standard sections as required for support and alignment of metal panel system.

B. Panel Accessories: Provide components required for a complete, weathertight panel system including trim, copings, fasciae, mullions, sills, corner units, clips, flashings, sealants, gaskets, fillers, closure strips, and similar items. Match material and finish of metal panels unless otherwise indicated.

1. Closures: Provide closures at eaves and ridges, fabricated of same metal as metal panels.
2. Backing Plates: Provide metal backing plates at panel end splices, fabricated from material recommended by manufacturer.
3. Closure Strips: Closed-cell, expanded, cellular, rubber or crosslinked, polyolefin-foam or closed-cell laminated polyethylene; minimum 1-inch-thick, flexible closure strips; cut or premolded to match metal panel profile. Provide closure strips where indicated or necessary to ensure weathertight construction.

C. Flashing and Trim: Provide flashing and trim formed from same material as metal panels as required to seal against weather and to provide finished appearance. Locations include, but are not limited to, eaves, rakes, corners, bases, framed openings, ridges, fasciae, and fillers. Finish flashing and trim with same finish system as adjacent metal panels.

D. Panel Fasteners: Self-tapping screws designed to withstand design loads.

E. Panel Sealants: Provide sealant type recommended by manufacturer that are compatible with panel materials, are nonstaining, and do not damage panel finish.

1. Sealant Tape: Pressure-sensitive, 100 percent solids, gray polyisobutylene compound sealant tape with release-paper backing. Provide permanently elastic, nonsag, nontoxic, nonstaining tape 1/2 inch wide and 1/8 inch thick.
2. Joint Sealant: ASTM C 920; elastomeric polyurethane or silicone sealant; of type, grade, class, and use classifications required to seal joints in metal panels and remain weathertight; and as recommended in writing by metal panel manufacturer.
3. Butyl-Rubber-Based, Solvent-Release Sealant: ASTM C 1311.

2.5 FABRICATION

A. General: Fabricate and finish metal panels and accessories at the factory, by manufacturer's standard procedures and processes, as necessary to fulfill indicated performance requirements demonstrated by laboratory testing. Comply with indicated profiles and with dimensional and structural requirements.

B. On-Site Fabrication: Subject to compliance with requirements of this Section, metal panels may be fabricated on-site using UL-certified, portable roll-forming equipment if panels are of same profile and warranted by manufacturer to be equal to factory-formed panels. Fabricate according to equipment manufacturer's written instructions and to comply with details shown.

C. Provide panel profile, including major ribs and intermediate stiffening ribs, if any, for full length of panel.

D. Fabricate metal panel joints with factory-installed captive gaskets or separator strips that provide a weathertight seal and prevent metal-to-metal contact, and that minimize noise from movements.

E. Sheet Metal Flashing and Trim: Fabricate flashing and trim to comply with manufacturer's recommendations and recommendations in SMACNA's "Architectural Sheet Metal Manual" that apply to design, dimensions, metal, and other characteristics of item indicated.

1. Form exposed sheet metal accessories that are without excessive oil canning, buckling, and tool marks and that are true to line and levels indicated, with exposed edges folded back to form hems.
2. Seams for Aluminum: Fabricate nonmoving seams with flat-lock seams. Form seams and seal with epoxy seam sealer. Rivet joints for additional strength.
3. Sealed Joints: Form nonexpansion, but movable, joints in metal to accommodate sealant and to comply with SMACNA standards.
4. Conceal fasteners and expansion provisions where possible. Exposed fasteners are not allowed on faces of accessories exposed to view.
5. Fabricate cleats and attachment devices from same material as accessory being anchored or from compatible, noncorrosive metal recommended in writing by metal panel manufacturer.

    a. Size: As recommended by SMACNA's "Architectural Sheet Metal Manual" or metal panel manufacturer for application, but not less than thickness of metal being secured.

2.6 FINISHES

A. Protect mechanical and painted finishes on exposed surfaces from damage by applying a strippable, temporary protective covering before shipping.

B. Appearance of Finished Work: Variations in appearance of abutting or adjacent pieces are acceptable if they are within one-half of the range of approved Samples. Noticeable variations in same piece are unacceptable. Variations in appearance of other components are acceptable if they are within the range of approved Samples and are assembled or installed to minimize contrast.

C. Aluminum Panels and Accessories:

1.

2. Exposed Anodized Finish:

    a. Clear Anodic Finish: AAMA 611, AA-M12C22A41, Class I, 0.018 mm or thicker.

PART 3 - EXECUTION

3.1 EXAMINATION

A. Examine substrates, areas, and conditions, with Installer present, for compliance with requirements for installation tolerances, metal panel supports, and other conditions affecting performance of the Work.

1. Examine primary and secondary roof framing to verify that rafters, purlins, angles, channels, and other structural panel support members and anchorages have been installed within alignment tolerances required by metal roof panel manufacturer.

2. Examine solid roof sheathing to verify that sheathing joints are supported by framing or blocking and that installation is within flatness tolerances required by metal roof panel manufacturer.

    a. Verify that air- or water-resistive barriers have been installed over sheathing or backing substrate to prevent air infiltration or water penetration.

B. Examine roughing-in for components and systems penetrating metal panels to verify actual locations of penetrations relative to seam locations of metal panels before installation.

C. Proceed with installation only after unsatisfactory conditions have been corrected.

3.2 PREPARATION

A. Miscellaneous Supports: Install subframing, furring, and other miscellaneous panel support members and anchorages according to ASTM C 754 and metal panel manufacturer's written recommendations.

3.3 UNDERLAYMENT INSTALLATION

A. Self-Adhering Sheet Underlayment: Apply primer if required by manufacturer. Comply with temperature restrictions of underlayment manufacturer for installation. Apply at locations indicated below, wrinkle free, in shingle fashion to shed water, and with end laps of not less than 6 inches staggered 24 inches between courses. Overlap side edges not less than 3-1/2 inches. Extend underlayment into gutter trough. Roll laps with roller. Cover underlayment within 14 days.

1. Apply over the entire roof surface.

B. Flashings: Install flashings to cover underlayment to comply with requirements specified in Section 076200 "Sheet Metal Flashing and Trim."

3.4 METAL PANEL INSTALLATION

A. General: Install metal panels according to manufacturer's written instructions in orientation, sizes, and locations indicated. Install panels perpendicular to supports unless otherwise indicated. Anchor metal panels and other components of the Work securely in place, with provisions for thermal and structural movement.

1. Shim or otherwise plumb substrates receiving metal panels.
2. Flash and seal metal panels at perimeter of all openings. Fasten with self-tapping screws. Do not begin installation until air- or water-resistive barriers and flashings that will be concealed by metal panels are installed.
3. Install screw fasteners in predrilled holes.
4. Locate and space fastenings in uniform vertical and horizontal alignment.
5. Install flashing and trim as metal panel work proceeds.

6. Locate panel splices over, but not attached to, structural supports. Stagger panel splices and end laps to avoid a four-panel lap splice condition.
7. Align bottoms of metal panels and fasten with blind rivets, bolts, or self-tapping screws. Fasten flashings and trim around openings and similar elements with self-tapping screws.
8. Provide weathertight escutcheons for pipe- and conduit-penetrating panels.

B. Fasteners:

1. Aluminum Panels: Use aluminum or stainless-steel fasteners for surfaces exposed to the exterior; use aluminum or galvanized-steel fasteners for surfaces exposed to the interior.

C. Anchor Clips: Anchor metal roof panels and other components of the Work securely in place, using manufacturer's approved fasteners according to manufacturers' written instructions.

D. Metal Protection: Where dissimilar metals contact each other or corrosive substrates, protect against galvanic action as recommended in writing by metal panel manufacturer.

E. Standing-Seam Metal Roof Panel Installation: Fasten metal roof panels to supports with concealed clips at each standing-seam joint at location, spacing, and with fasteners recommended in writing by manufacturer.

1. Install clips to supports with self-tapping fasteners.
2. Install pressure plates at locations indicated in manufacturer's written installation instructions.
3. Seamed Joint: Crimp standing seams with manufacturer-approved, motorized seamer tool so clip, metal roof panel, and factory-applied sealant are completely engaged.
4. Watertight Installation:

    a. Apply a continuous ribbon of sealant or tape to seal joints of metal panels, using sealant or tape as recommend in writing by manufacturer as needed to make panels watertight.
    b. Provide sealant or tape between panels and protruding equipment, vents, and accessories.
    c. At panel splices, nest panels with minimum 6-inch end lap, sealed with sealant and fastened together by interlocking clamping plates.

F. Accessory Installation: Install accessories with positive anchorage to building and weathertight mounting, and provide for thermal expansion. Coordinate installation with flashings and other components.

1. Install components required for a complete metal panel system including trim, copings, corners, seam covers, flashings, sealants, gaskets, fillers, closure strips, and similar items. Provide types indicated by metal roof panel manufacturers; or, if not indicated, types recommended by metal roof panel manufacturer.

G. Flashing and Trim: Comply with performance requirements, manufacturer's written installation instructions, and SMACNA's "Architectural Sheet Metal Manual." Provide concealed fasteners where possible, and set units true to line and level as indicated. Install work with laps, joints, and seams that will be permanently watertight and weather resistant.

1. Install exposed flashing and trim that is without buckling and tool marks, and that is true to line and levels indicated, with exposed edges folded back to form hems. Install sheet metal flashing and trim to fit substrates and achieve waterproof and weather-resistant performance.
2. Expansion Provisions: Provide for thermal expansion of exposed flashing and trim. Space movement joints at a maximum of 10 feet with no joints allowed within 24 inches of corner or intersection. Where lapped expansion provisions cannot be used or would not be sufficiently weather resistant and waterproof, form expansion joints of intermeshing hooked flanges, not less than 1 inch deep, filled with mastic sealant (concealed within joints).

H. Pipe Flashing: Form flashing around pipe penetration and metal roof panels. Fasten and seal to metal roof panels as recommended by manufacturer.

3.5 ERECTION TOLERANCES

A. Installation Tolerances: Shim and align metal panel units within installed tolerance of 1/4 inch in 20 feet on slope and location lines as indicated and within 1/8-inch offset of adjoining faces and of alignment of matching profiles.

3.6 FIELD QUALITY CONTROL

A. Manufacturer's Field Service: Engage a factory-authorized service representative to test and inspect metal roof panel installation, including accessories. Report results in writing.

B. Remove and replace applications of metal roof panels where tests and inspections indicate that they do not comply with specified requirements.

C. Additional tests and inspections, at Contractor's expense, are performed to determine compliance of replaced or additional work with specified requirements.

D. Prepare test and inspection reports.

3.7 CLEANING AND PROTECTION

A. Remove temporary protective coverings and strippable films, if any, as metal panels are installed, unless otherwise indicated in manufacturer's written installation instructions. On completion of metal panel installation, clean finished surfaces as recommended by metal panel manufacturer. Maintain in a clean condition during construction.

B. Replace metal panels that have been damaged or have deteriorated beyond successful repair by finish touchup or similar minor repair procedures.

END OF SECTION 074113.16

SECTION 074213.13 - FORMED METAL WALL PANELS

PART 1 - GENERAL

1.1 RELATED DOCUMENTS

A. Drawings and general provisions of the Contract, including General and Supplementary Conditions and Division 01 Specification Sections, apply to this Section.

1.2 SUMMARY

A. Section Includes:

1. Concealed-fastener, lap-seam metal wall panels.
2. Concealed-fastener, lap-seam perforated metal wall panels at mechanical equipment screen.

1.3 ACTION SUBMITTALS

A. Product Data: For each type of product.

1. Include construction details, material descriptions, dimensions of individual components and profiles, and finishes for each type of panel and accessory.

B. Shop Drawings:

1. Include fabrication and installation layouts of metal panels; details of edge conditions, joints, panel profiles, corners, anchorages, attachment system, trim, flashings, closures, and accessories; and special details.
2. Accessories: Include details of the flashing, trim, and anchorage systems, at a scale of not less than 1-1/2 inches per 12 inches.

C. Samples for Initial Selection: For each type of metal panel indicated with factory-applied finishes.

1. Include Samples of trim and accessories involving color selection.

1.4 INFORMATIONAL SUBMITTALS

A. Qualification Data: For Installer.

B. Product Test Reports: For each product, for tests performed by a qualified testing agency.

C. Field quality-control reports.

D. Sample Warranties: For special warranties.

1.5 CLOSEOUT SUBMITTALS

A. Maintenance Data: For metal panels to include in maintenance manuals.

1.6 QUALITY ASSURANCE

A. Installer Qualifications: An entity that employs installers and supervisors who are trained and approved by manufacturer.

B. UL-Certified, Portable Roll-Forming Equipment: UL-certified, portable roll-forming equipment capable of producing metal panels warranted by manufacturer to be the same as factory-formed products. Maintain UL certification of portable roll-forming equipment for duration of work.

C. Mockups: Build mockups to verify selections made under Sample submittals and to demonstrate aesthetic effects and set quality standards for fabrication and installation.

1. Build mockup of typical metal panel assembly, including corner, supports, attachments, and accessories.
2. Water-Spray Test: Conduct water-spray test of metal panel assembly mockup, testing for water penetration according to AAMA 501.2.
3. Approval of mockups does not constitute approval of deviations from the Contract Documents contained in mockups unless Architect specifically approves such deviations in writing.
4. Subject to compliance with requirements, approved mockups may become part of the completed Work if undisturbed at time of Substantial Completion.

1.7 DELIVERY, STORAGE, AND HANDLING

A. Deliver components, metal panels, and other manufactured items so as not to be damaged or deformed. Package metal panels for protection during transportation and handling.

B. Unload, store, and erect metal panels in a manner to prevent bending, warping, twisting, and surface damage.

C. Stack metal panels horizontally on platforms or pallets, covered with suitable weathertight and ventilated covering. Store metal panels to ensure dryness, with positive slope for drainage of water. Do not store metal panels in contact with other materials that might cause staining, denting, or other surface damage.

D. Retain strippable protective covering on metal panels during installation.

1.8 FIELD CONDITIONS

A. Weather Limitations: Proceed with installation only when existing and forecasted weather conditions permit assembly of metal panels to be performed according to manufacturers' written instructions and warranty requirements.

1.9 COORDINATION

A. Coordinate metal panel installation with rain drainage work, flashing, trim, construction of soffits, and other adjoining work to provide a leakproof, secure, and noncorrosive installation.

1.10 WARRANTY

A. Special Warranty: Manufacturer's standard form in which manufacturer agrees to repair or replace components of metal panel systems that fail in materials or workmanship within specified warranty period.

1. Failures include, but are not limited to, the following:

a. Structural failures including rupturing, cracking, or puncturing.
b. Deterioration of metals and other materials beyond normal weathering.

2. Warranty Period: Two years from date of Substantial Completion.

B. Special Warranty on Panel Finishes: Manufacturer's standard form in which manufacturer agrees to repair finish or replace metal panels that show evidence of deterioration of factory-applied finishes within specified warranty period.

1. Exposed Panel Finish: Deterioration includes, but is not limited to, the following:

a. Color fading more than 5 Hunter units when tested according to ASTM D 2244.
b. Chalking in excess of a No. 8 rating when tested according to ASTM D 4214.
c. Cracking, checking, peeling, or failure of paint to adhere to bare metal.

2. Finish Warranty Period: 20 years from date of Substantial Completion.

PART 2 - PRODUCTS

2.1 PERFORMANCE REQUIREMENTS

A. Structural Performance: Provide metal panel systems capable of withstanding the effects of the following loads, based on testing according to ASTM E 1592:

1. Wind Loads: As indicated on Structural Drawings.
2. Other Design Loads: As indicated on Structural Drawings.
3. Deflection Limits: For wind loads, no greater than 1/180 of the span.

B. Air Infiltration: Air leakage of not more than 0.06 cfm/sq. ft. when tested according to ASTM E 283 at the following test-pressure difference:

1. Test-Pressure Difference: 6.24 lbf/sq. ft.

C. Water Penetration under Static Pressure: No water penetration when tested according to ASTM E 331 at the following test-pressure difference:

1. Test-Pressure Difference: 6.24 lbf/sq. ft.

D. Thermal Movements: Allow for thermal movements from ambient and surface temperature changes by preventing buckling, opening of joints, overstressing of components, failure of joint sealants, failure of connections, and other detrimental effects. Base calculations on surface temperatures of materials due to both solar heat gain and nighttime-sky heat loss.

1. Temperature Change (Range): 120 deg F, ambient; 180 deg F, material surfaces.

E. Fire-Resistance Ratings: Comply with ASTM E 119; testing by a qualified testing agency. Identify products with appropriate markings of applicable testing agency.

1. Indicate design designations from UL's "Fire Resistance Directory" or from the listings of another qualified testing agency.

2.2 CONCEALED-FASTENER, LAP-SEAM METAL WALL PANELS

A. General: Provide factory-formed metal panels designed to be field assembled by lapping and interconnecting side edges of adjacent panels and mechanically attaching through panel to supports using concealed fasteners and factory-applied sealant in side laps. Include accessories required for weathertight installation.

B. Horizontal Creased-Rib-Profile, Concealed-Fastener Metal Wall Panels: Formed with raised, center-creased, trapezoidal major ribs; with reveal joint between panels.

1. Basis-of-Design: Subject to compliance with requirements, provide product indicated below, or a comparable product as approved by the Architect:

a. Product: CENTRIA; Concept Series; CS-660.

2. Metallic-Coated Steel Sheet: Zinc-coated (galvanized) steel sheet complying with ASTM A 653/A 653M, G90 coating designation, or aluminum-zinc alloy-coated steel sheet complying with ASTM A 792/A 792M, Class AZ50 coating designation; structural quality. Prepainted by the coil-coating process to comply with ASTM A 755/A 755M.

a. Nominal Thickness: As selected by the Architect from the manufacturer's full range.
b. Exterior Finish: Metallic fluoropolymer.
c. Color: As selected by Architect from manufacturer's full range.

3. Panel Coverage: 16 inches.
4. Panel Height: 7/8-inch.

C. Concealed-Fastener Perforated Horizontal Metal Wall Panels at Mechanical Equipment Screen: Formed with perforated panels; with reveal joint between panels.

1. Basis-of-Design: Subject to compliance with requirements, provide product as approved by the Architect:

   a. Perforation Pattern: As selected by Architect from manufacturer's full range.

2. Metallic-Coated Steel Sheet: Zinc-coated (galvanized) steel sheet complying with ASTM A 653/A 653M, G90 coating designation, or aluminum-zinc alloy-coated steel sheet complying with ASTM A 792/A 792M, Class AZ50 coating designation; structural quality. Prepainted by the coil-coating process to comply with ASTM A 755/A 755M.

   a. Nominal Thickness: As selected by the Architect from the manufacturer's full range.
   b. Exterior Finish: As selected by Architect from manufacturer's full range.
   c. Color: As selected by Architect from manufacturer's full range.

3. Panel Coverage: As selected by Architect from manufacturer's full range.
4. Panel Height: As selected by Architect from manufacturer's full range.
5. Fasteners: Concealed.

2.3 MISCELLANEOUS MATERIALS

A. Miscellaneous Metal Subframing and Furring: ASTM C 645, cold-formed, metallic-coated steel sheet, ASTM A 653/A 653M, G90 coating designation or ASTM A 792/A 792M, Class AZ50 aluminum-zinc-alloy coating designation unless otherwise indicated. Provide manufacturer's standard sections as required for support and alignment of metal panel system.

B. Panel Accessories: Provide components required for a complete, weathertight panel system including trim, copings, fasciae, mullions, sills, corner units, clips, flashings, sealants, gaskets, fillers, closure strips, and similar items. Match material and finish of metal panels unless otherwise indicated.

1. Closures: Provide closures at eaves and rakes, fabricated of same metal as metal panels.
2. Backing Plates: Provide metal backing plates at panel end splices, fabricated from material recommended by manufacturer.
3. Closure Strips: Closed-cell, expanded, cellular, rubber or crosslinked, polyolefin-foam or closed-cell laminated polyethylene; minimum 1-inch-thick, flexible closure strips; cut or premolded to match metal panel profile. Provide closure strips where indicated or necessary to ensure weathertight construction.

C. Flashing and Trim: Provide flashing and trim formed from same material as metal panels as required to seal against weather and to provide finished appearance. Locations include, but are not limited to, bases, drips, sills, jambs, corners, endwalls, framed openings, rakes, fasciae, parapet caps, soffits, reveals, and fillers. Finish flashing and trim with same finish system as adjacent metal panels.

D. Panel Fasteners: Self-tapping screws designed to withstand design loads. Provide exposed fasteners with heads matching color of metal panels by means of plastic caps or factory-applied coating. Provide EPDM or PVC sealing washers for exposed fasteners.

E. Panel Sealants: Provide sealant type recommended by manufacturer that are compatible with panel materials, are nonstaining, and do not damage panel finish.

1. Sealant Tape: Pressure-sensitive, 100 percent solids, gray polyisobutylene compound sealant tape with release-paper backing. Provide permanently elastic, nonsag, nontoxic, nonstaining tape 1/2 inch wide and 1/8 inch thick.
2. Joint Sealant: ASTM C 920; elastomeric polyurethane or silicone sealant; of type, grade, class, and use classifications required to seal joints in metal panels and remain weathertight; and as recommended in writing by metal panel manufacturer.
3. Butyl-Rubber-Based, Solvent-Release Sealant: ASTM C 1311.

2.4 FABRICATION

A. General: Fabricate and finish metal panels and accessories at the factory, by manufacturer's standard procedures and processes, as necessary to fulfill indicated performance requirements demonstrated by laboratory testing. Comply with indicated profiles and with dimensional and structural requirements.

B. On-Site Fabrication: Subject to compliance with requirements of this Section, metal panels may be fabricated on-site using UL-certified, portable roll-forming equipment if panels are of same profile and warranted by manufacturer to be equal to factory-formed panels. Fabricate according to equipment manufacturer's written instructions and to comply with details shown.

C. Provide panel profile, including major ribs and intermediate stiffening ribs, if any, for full length of panel.

D. Fabricate metal panel joints with factory-installed captive gaskets or separator strips that provide a weathertight seal and prevent metal-to-metal contact, and that minimize noise from movements.

E. Sheet Metal Flashing and Trim: Fabricate flashing and trim to comply with manufacturer's recommendations and recommendations in SMACNA's "Architectural Sheet Metal Manual" that apply to design, dimensions, metal, and other characteristics of item indicated.

1. Form exposed sheet metal accessories that are without excessive oil canning, buckling, and tool marks and that are true to line and levels indicated, with exposed edges folded back to form hems.
2. Seams for Aluminum: Fabricate nonmoving seams with flat-lock seams. Form seams and seal with epoxy seam sealer. Rivet joints for additional strength.

3. Seams for Other Than Aluminum: Fabricate nonmoving seams in accessories with flat-lock seams. Tin edges to be seamed, form seams, and solder.
4. Sealed Joints: Form nonexpansion, but movable, joints in metal to accommodate sealant and to comply with SMACNA standards.
5. Conceal fasteners and expansion provisions where possible. Exposed fasteners are not allowed on faces of accessories exposed to view.
6. Fabricate cleats and attachment devices from same material as accessory being anchored or from compatible, noncorrosive metal recommended in writing by metal panel manufacturer.

    a. Size: As recommended by SMACNA's "Architectural Sheet Metal Manual" or metal wall panel manufacturer for application but not less than thickness of metal being secured.

2.5 FINISHES

A. Protect mechanical and painted finishes on exposed surfaces from damage by applying a strippable, temporary protective covering before shipping.

B. Appearance of Finished Work: Variations in appearance of abutting or adjacent pieces are acceptable if they are within one-half of the range of approved Samples. Noticeable variations in same piece are not acceptable. Variations in appearance of other components are acceptable if they are within the range of approved Samples and are assembled or installed to minimize contrast.

C. Steel Panels and Accessories:

1. Metallic Fluoropolymer: AAMA 621. Three-coat fluoropolymer finish with suspended metallic flakes containing not less than 70 percent PVDF resin by weight in both color coat and clear topcoat. Prepare, pretreat, and apply coating to exposed metal surfaces to comply with coating and resin manufacturers' written instructions.
2. Concealed Finish: Apply pretreatment and manufacturer's standard white or light-colored acrylic or polyester backer finish consisting of prime coat and wash coat with a minimum total dry film thickness of 0.5 mil.

PART 3 - EXECUTION

3.1 EXAMINATION

A. Examine substrates, areas, and conditions, with Installer present, for compliance with requirements for installation tolerances, metal panel supports, and other conditions affecting performance of the Work.

1. Examine wall framing to verify that girts, angles, channels, studs, and other structural panel support members and anchorage have been installed within alignment tolerances required by metal wall panel manufacturer.

2. Examine wall sheathing to verify that sheathing joints are supported by framing or blocking and that installation is within flatness tolerances required by metal wall panel manufacturer.

    a. Verify that air- or water-resistive barriers have been installed over sheathing or backing substrate to prevent air infiltration or water penetration.

B. Examine roughing-in for components and systems penetrating metal panels to verify actual locations of penetrations relative to seam locations of metal panels before installation.

C. Proceed with installation only after unsatisfactory conditions have been corrected.

3.2 PREPARATION

A. Miscellaneous Supports: Install subframing, furring, and other miscellaneous panel support members and anchorages according to ASTM C 754 and metal panel manufacturer's written recommendations.

3.3 METAL PANEL INSTALLATION

A. General: Install metal panels according to manufacturer's written instructions in orientation, sizes, and locations indicated. Install panels perpendicular to supports unless otherwise indicated. Anchor metal panels and other components of the Work securely in place, with provisions for thermal and structural movement.

1. Shim or otherwise plumb substrates receiving metal panels.
2. Flash and seal metal panels at perimeter of all openings. Fasten with self-tapping screws. Do not begin installation until air- or water-resistive barriers and flashings that will be concealed by metal panels are installed.
3. Install screw fasteners in predrilled holes.
4. Locate and space fastenings in uniform vertical and horizontal alignment.
5. Install flashing and trim as metal panel work proceeds.
6. Locate panel splices over, but not attached to, structural supports. Stagger panel splices and end laps to avoid a four-panel lap splice condition.
7. Align bottoms of metal panels and fasten with blind rivets, bolts, or self-tapping screws. Fasten flashings and trim around openings and similar elements with self-tapping screws.
8. Provide weathertight escutcheons for pipe- and conduit-penetrating panels.

B. Fasteners:

1. Steel Panels: Use stainless-steel fasteners for surfaces exposed to the exterior; use galvanized-steel fasteners for surfaces exposed to the interior.

C. Metal Protection: Where dissimilar metals contact each other or corrosive substrates, protect against galvanic action as recommended in writing by metal panel manufacturer.

D. Lap-Seam Metal Panels: Fasten metal panels to supports with fasteners at each lapped joint at location and spacing recommended by manufacturer.

1. Lap ribbed or fluted sheets one full rib. Apply panels and associated items true to line for neat and weathertight enclosure.
2. Provide metal-backed washers under heads of exposed fasteners bearing on weather side of metal panels.
3. Locate and space exposed fasteners in uniform vertical and horizontal alignment. Use proper tools to obtain controlled uniform compression for positive seal without rupture of washer.
4. Install screw fasteners with power tools having controlled torque adjusted to compress washer tightly without damage to washer, screw threads, or panels. Install screws in predrilled holes.
5. Flash and seal panels with weather closures at perimeter of all openings.

E. Accessory Installation: Install accessories with positive anchorage to building and weathertight mounting, and provide for thermal expansion. Coordinate installation with flashings and other components.

1. Install components required for a complete metal panel system including trim, copings, corners, seam covers, flashings, sealants, gaskets, fillers, closure strips, and similar items. Provide types indicated by metal wall panel manufacturer; or, if not indicated, provide types recommended by metal panel manufacturer.

F. Flashing and Trim: Comply with performance requirements, manufacturer's written installation instructions, and SMACNA's "Architectural Sheet Metal Manual." Provide concealed fasteners where possible, and set units true to line and level as indicated. Install work with laps, joints, and seams that are permanently watertight.

1. Install exposed flashing and trim that is without buckling and tool marks, and that is true to line and levels indicated, with exposed edges folded back to form hems. Install sheet metal flashing and trim to fit substrates and achieve waterproof performance.
2. Expansion Provisions: Provide for thermal expansion of exposed flashing and trim. Space movement joints at a maximum of 10 feet with no joints allowed within 24 inches of corner or intersection. Where lapped expansion provisions cannot be used or would not be sufficiently waterproof, form expansion joints of intermeshing hooked flanges, not less than 1 inch deep, filled with mastic sealant (concealed within joints).

3.4 FIELD QUALITY CONTROL

A. Testing Agency: Owner will engage a qualified testing agency to perform tests and inspections.

B. Water-Spray Test: After installation, test area of assembly as directed by Architect for water penetration according to AAMA 501.2.

C. Manufacturer's Field Service: Engage a factory-authorized service representative to test and inspect completed metal wall panel installation, including accessories.

D. Remove and replace metal wall panels where tests and inspections indicate that they do not comply with specified requirements.

E. Additional tests and inspections, at Contractor's expense, are performed to determine compliance of replaced or additional work with specified requirements.

F. Prepare test and inspection reports.

3.5 CLEANING AND PROTECTION

A. Remove temporary protective coverings and strippable films, if any, as metal panels are installed, unless otherwise indicated in manufacturer's written installation instructions. On completion of metal panel installation, clean finished surfaces as recommended by metal panel manufacturer. Maintain in a clean condition during construction.

B. After metal panel installation, clear weep holes and drainage channels of obstructions, dirt, and sealant.

C. Replace metal panels that have been damaged or have deteriorated beyond successful repair by finish touchup or similar minor repair procedures.

END OF SECTION 074213.13

SECTION 075423 - THERMOPLASTIC POLYOLEFIN (TPO) ROOFING

PART 1 - GENERAL

1.1 RELATED DOCUMENTS

A. Drawings and general provisions of the Contract, including General and Supplementary Conditions and Division 01 Specification Sections, apply to this Section.

1.2 SUMMARY

A. Section Includes:

1. Adhered thermoplastic polyolefin (TPO) roofing system.
2. Vapor retarder.
3. Roof insulation.

B. Related Requirements:

1. Section 061053 " Miscellaneous Rough Carpentry" for wood nailers, curbs, and blocking; and for wood-based, structural-use roof deck panels.
2. Section 061600 "Sheathing" for wood-based, structural-use roof deck panels.
3. Section 072100 "Thermal Insulation" for insulation beneath the roof deck.
4. Section 076200 "Sheet Metal Flashing and Trim" for metal roof flashings and counterflashings.
5. Section 079200 "Joint Sealants" for joint sealants, joint fillers, and joint preparation.

1.3 DEFINITIONS

A. Roofing Terminology: Definitions in ASTM D 1079 and glossary in NRCA's "The NRCA Roofing and Waterproofing Manual" apply to work of this Section.

1.4 PREINSTALLATION MEETINGS

A. Preinstallation Roofing Conference: Conduct conference at Project site.

1. Meet with Owner, Architect, Owner's insurer if applicable, testing and inspecting agency representative, roofing Installer, roofing system manufacturer's representative, deck Installer, and installers whose work interfaces with or affects roofing, including installers of roof accessories and roof-mounted equipment.
2. Review methods and procedures related to roofing installation, including manufacturer's written instructions.
3. Review and finalize construction schedule, and verify availability of materials, Installer's personnel, equipment, and facilities needed to make progress and avoid delays.

4. Examine deck substrate conditions and finishes for compliance with requirements, including flatness and fastening.
5. Review structural loading limitations of roof deck during and after roofing.
6. Review base flashings, special roofing details, roof drainage, roof penetrations, equipment curbs, and condition of other construction that affects roofing system.
7. Review governing regulations and requirements for insurance and certificates if applicable.
8. Review temporary protection requirements for roofing system during and after installation.
9. Review roof observation and repair procedures after roofing installation.

1.5 ACTION SUBMITTALS

A. Product Data: For each type of product.

B. Shop Drawings: For roofing system. Include plans, elevations, sections, details, and attachments to other work, including:

1. Base flashings and membrane terminations.
2. Tapered insulation, including slopes.
3. Roof plan showing orientation of steel roof deck and orientation of roofing, fastening spacings, and patterns for mechanically fastened roofing.
4. Insulation fastening patterns for corner, perimeter, and field-of-roof locations.

C. Samples for Verification: For the following products:

1. Sheet roofing, of color required.
2. Walkway pads or rolls, of color required.

1.6 INFORMATIONAL SUBMITTALS

A. Qualification Data: For Installer.

B. Product Test Reports: For components of roofing system, tests performed by manufacturer and witnessed by a qualified testing agency.

C. Research/Evaluation Reports: For components of roofing system, from ICC-ES.

D. Field quality-control reports.

E. Sample Warranties: For manufacturer's special warranties.

1.7 CLOSEOUT SUBMITTALS

A. Maintenance Data: For roofing system to include in maintenance manuals.

1.8 QUALITY ASSURANCE

A. Installer Qualifications: A qualified firm that is approved, authorized, or licensed by roofing system manufacturer to install manufacturer's product and that is eligible to receive manufacturer's special warranty.

1.9 DELIVERY, STORAGE, AND HANDLING

A. Deliver roofing materials to Project site in original containers with seals unbroken and labeled with manufacturer's name, product brand name and type, date of manufacture, approval or listing agency markings, and directions for storing and mixing with other components.

B. Store liquid materials in their original undamaged containers in a clean, dry, protected location and within the temperature range required by roofing system manufacturer. Protect stored liquid material from direct sunlight.

1. Discard and legally dispose of liquid material that cannot be applied within its stated shelf life.

C. Protect roof insulation materials from physical damage and from deterioration by sunlight, moisture, soiling, and other sources. Store in a dry location. Comply with insulation manufacturer's written instructions for handling, storing, and protecting during installation.

D. Handle and store roofing materials, and place equipment in a manner to avoid permanent deflection of deck.

1.10 FIELD CONDITIONS

A. Weather Limitations: Proceed with installation only when existing and forecasted weather conditions permit roofing system to be installed according to manufacturer's written instructions and warranty requirements.

1.11 WARRANTY

A. Special Warranty: Manufacturer agrees to repair or replace components of roofing system that fail in materials or workmanship within specified warranty period.

1. Special warranty includes roofing, base flashings, roof insulation, fasteners, cover boards, roofing accessories, and other components of roofing system.
2. Warranty Period: 15 years from date of Substantial Completion.

PART 2 - PRODUCTS

2.1 MANUFACTURERS

A. Source Limitations: Obtain components including roof insulation and fasteners for roofing system from same manufacturer as membrane roofing or manufacturer approved by membrane roofing manufacturer.

2.2 PERFORMANCE REQUIREMENTS

A. General Performance: Installed roofing and base flashings shall withstand specified uplift pressures, thermally induced movement, and exposure to weather without failure due to defective manufacture, fabrication, installation, or other defects in construction. Roofing and base flashings shall remain watertight.

1. Accelerated Weathering: Roofing system shall withstand 2000 hours of exposure when tested according to ASTM G 152, ASTM G 154, or ASTM G 155.
2. Impact Resistance: Roofing system shall resist impact damage when tested according to ASTM D 3746 or ASTM D 4272.

B. Material Compatibility: Roofing materials shall be compatible with one another and adjacent materials under conditions of service and application required, as demonstrated by roofing manufacturer based on testing and field experience.

C. Exterior Fire-Test Exposure: ASTM E 108 or UL 790, Class A; for application and roof slopes indicated; testing by a qualified testing agency. Identify products with appropriate markings of applicable testing agency.

D. Fire-Resistance Ratings: Comply with fire-resistance-rated assembly designs indicated. Identify products with appropriate markings of applicable testing agency.

2.3 TPO ROOFING

A. Fabric-Reinforced TPO Sheet: ASTM D 6878, internally fabric- or scrim-reinforced, uniform, flexible TPO sheet.

1. Basis-of-Design: Subject to compliance with requirements, provide product indicated below by Firestone Building Products, or a comparable product as approved by the Architect:

a. Product: UltraPly TPO Membrane.
b. Thickness: 60 mils, nominal.
c. Exposed Face Color: White.

2.4 AUXILIARY ROOFING MATERIALS

A. General: Auxiliary materials recommended by roofing system manufacturer for intended use and compatible with roofing.

1. Liquid-type auxiliary materials shall comply with VOC limits of authorities having jurisdiction.

B. Sheet Flashing: Manufacturer's standard unreinforced TPO sheet flashing, 55 mils thick, minimum, of same color as TPO sheet.

C. Bonding Adhesive: Manufacturer's standard.

D. Metal Termination Bars: Manufacturer's standard, predrilled stainless-steel or aluminum bars, approximately 1 by 1/8 inch thick; with anchors.

E. Metal Battens: Manufacturer's standard, aluminum-zinc-alloy-coated or zinc-coated steel sheet, approximately 1 inch wide by 0.05 inch thick, prepunched.

F. Fasteners: Factory-coated steel fasteners and metal or plastic plates complying with corrosion-resistance provisions in FM Global 4470, designed for fastening roofing to substrate, and acceptable to roofing system manufacturer.

G. Miscellaneous Accessories: Provide pourable sealers, preformed cone and vent sheet flashings, preformed inside and outside corner sheet flashings, T-joint covers, lap sealants, termination reglets, and other accessories.

2.5 VAPOR RETARDER

A. Polyethylene Film: ASTM D 4397, 6 mils thick, minimum, with maximum permeance rating of 0.13 perm.

1. Tape: Pressure-sensitive tape of type recommended by vapor-retarder manufacturer for sealing joints and penetrations in vapor retarder.
2. Adhesive: Manufacturer's standard lap adhesive, FM Global approved for vapor-retarder application.

2.6 ROOF INSULATION

A. General: Preformed roof insulation boards manufactured or approved by TPO roofing manufacturer, selected from manufacturer's standard sizes suitable for application, of thicknesses indicated.

B. Polyisocyanurate Board Insulation: ASTM C 1289, Type II, Class 1, Grade 2, felt or glass-fiber mat facer on both major surfaces.

1. Manufacturers: Subject to compliance with requirements, provide products by one of the following:

a. Atlas Roofing Corporation.
b. Carlisle SynTec Incorporated.
c. Dyplast Products.
d. Firestone Building Products.
e. GAF Materials Corporation.
f. Hunter Panels.
g. Insulfoam LLC; a Carlisle company.
h. Johns Manville; a Berkshire Hathaway company.
i. Rmax, Inc.

C. Tapered Insulation: Provide factory-tapered insulation boards fabricated to slope of 1/4 inch per 12 inches unless otherwise indicated.

D. Provide preformed saddles, crickets, tapered edge strips, and other insulation shapes where indicated for sloping to drain. Fabricate to slopes indicated.

2.7 INSULATION ACCESSORIES

A. General: Roof insulation accessories recommended by insulation manufacturer for intended use and compatibility with roofing.

B. Fasteners: Factory-coated steel fasteners and metal or plastic plates complying with corrosion-resistance provisions in FM Global 4470, designed for fastening roof insulation and cover boards to substrate, and acceptable to roofing system manufacturer.

C. Insulation Adhesive: Insulation manufacturer's recommended adhesive formulated to attach roof insulation to substrate or to another insulation layer as follows:

1. Bead-applied, low-rise, one-component or multicomponent urethane adhesive.

D. Cover Board: ASTM C 1177/C 1177M, glass-mat, water-resistant gypsum substrate, 1/2 inch thick.

1. Products: Subject to compliance with requirements, provide one of the following:

a. CertainTeed Corporation; GlasRoc Roof Board.
b. Georgia-Pacific Building Products; Dens Deck or Dens Deck Prime.
c. National Gypsum Company; DEXcell FA Glass Mat Roof Board or DEXcell Glass Mat Roof Board.
d. United States Gypsum Company; Securock Glass Mat Roof Board or Securock Glass-Fiber Roof Board.

2.8 ASPHALT MATERIALS

A. Asphalt Primer: ASTM D 41/D 41M.

2.9 WALKWAYS

A. Flexible Walkways: Factory-formed, nonporous, heavy-duty, slip-resisting, surface-textured walkway pads or rolls, approximately 3/16 inch thick and acceptable to roofing system manufacturer.

2.10 GREASE GUARD

A. Grease Guard: Provide grease guard for all kitchen exhaust to protect TPO membrane.

1. Basis-of-Design: Subject to compliance with requirements, provide G2 Grease Guard XD Rooftop Defense Systems by Facilitec, or a comparable product as approved by the Owner.

PART 3 - EXECUTION

3.1 EXAMINATION

A. Examine substrates, areas, and conditions, with Installer present, for compliance with requirements and other conditions affecting performance of the Work:

1. Verify that roof openings and penetrations are in place, curbs are set and braced, and roof-drain bodies are securely clamped in place.
2. Verify that wood blocking, curbs, and nailers are securely anchored to roof deck at penetrations and terminations and that nailers match thicknesses of insulation.
3. Verify that surface plane flatness and fastening of steel roof deck complies with requirements in Section 053100 "Steel Decking."
4. Verify that minimum concrete drying period recommended by roofing system manufacturer has passed.
5. Verify that concrete substrate is visibly dry and free of moisture. Test for capillary moisture by plastic sheet method according to ASTM D 4263.
6. Verify that concrete-curing compounds that will impair adhesion of roofing components to roof deck have been removed.

B. Proceed with installation only after unsatisfactory conditions have been corrected.

3.2 PREPARATION

A. Clean substrate of dust, debris, moisture, and other substances detrimental to roofing installation according to roofing system manufacturer's written instructions. Remove sharp projections.

B. Prevent materials from entering and clogging roof drains and conductors and from spilling or migrating onto surfaces of other construction. Remove roof-drain plugs when no work is taking place or when rain is forecast.

C. Install insulation strips according to acoustical roof deck manufacturer's written instructions.

3.3 ROOFING INSTALLATION, GENERAL

A. Install roofing system according to roofing system manufacturer's written instructions.

B. Complete terminations and base flashings and provide temporary seals to prevent water from entering completed sections of roofing system at the end of the workday or when rain is forecast. Remove and discard temporary seals before beginning work on adjoining roofing.

3.4 VAPOR-RETARDER INSTALLATION

A. Polyethylene Film: Loosely lay polyethylene-film vapor retarder in a single layer over area to receive vapor retarder, side and end lapping each sheet a minimum of 2 inches and 6 inches, respectively. Continuously seal side and end laps with tape or adhesive.

B. Completely seal vapor retarder at terminations, obstructions, and penetrations to prevent air movement into roofing system.

3.5 INSULATION INSTALLATION

A. Coordinate installing roofing system components so insulation is not exposed to precipitation or left exposed at the end of the workday.

B. Comply with roofing system and insulation manufacturer's written instructions for installing roof insulation.

C. Install tapered insulation under area of roofing to conform to slopes indicated.

D. Install insulation under area of roofing to achieve required thickness. Where overall insulation thickness is 2.7 inches or greater, install two or more layers with joints of each succeeding layer staggered from joints of previous layer a minimum of 6 inches in each direction.

E. Trim surface of insulation where necessary at roof drains so completed surface is flush and does not restrict flow of water.

F. Install insulation with long joints of insulation in a continuous straight line with end joints staggered between rows, abutting edges and ends between boards. Fill gaps exceeding 1/4 inch with insulation.

1. Cut and fit insulation within 1/4 inch of nailers, projections, and penetrations.

G. Adhered Insulation: Install each layer of insulation and adhere to substrate as follows:

1. Prime surface of concrete deck with asphalt primer at rate of 3/4 gal./100 sq. ft., and allow primer to dry.
2. Set each layer of insulation in a solid mopping of hot roofing asphalt, applied within plus or minus 25 deg F of equiviscous temperature.
3. Set each layer of insulation in ribbons of bead-applied insulation adhesive, firmly pressing and maintaining insulation in place.

H. Install cover boards over insulation with long joints in continuous straight lines with end joints staggered between rows. Offset joints of insulation below a minimum of 6 inches in each direction. Loosely butt cover boards together and fasten to roof deck.

1. Fasten cover boards to resist uplift pressure at corners, perimeter, and field of roof.

3.6 ADHERED ROOFING INSTALLATION

A. Adhere roofing over area to receive roofing according to roofing system manufacturer's written instructions. Unroll roofing and allow to relax before retaining.

B. Start installation of roofing in presence of roofing system manufacturer's technical personnel.

C. Accurately align roofing, and maintain uniform side and end laps of minimum dimensions required by manufacturer. Stagger end laps.

D. Bonding Adhesive: Apply to substrate and underside of roofing at rate required by manufacturer, and allow to partially dry before installing roofing. Do not apply to splice area of roofing.

E. In addition to adhering, mechanically fasten roofing securely at terminations, penetrations, and perimeter of roofing.

F. Apply roofing with side laps shingled with slope of roof deck where possible.

G. Seams: Clean seam areas, overlap roofing, and hot-air weld side and end laps of roofing and sheet flashings according to manufacturer's written instructions, to ensure a watertight seam installation.

1. Test lap edges with probe to verify seam weld continuity. Apply lap sealant to seal cut edges of sheet.
2. Verify field strength of seams a minimum of twice daily, and repair seam sample areas.
3. Repair tears, voids, and lapped seams in roofing that do not comply with requirements.

H. Spread sealant bed over deck-drain flange at roof drains, and securely seal roofing in place with clamping ring.

3.7 BASE FLASHING INSTALLATION

A. Install sheet flashings and preformed flashing accessories, and adhere to substrates according to roofing system manufacturer's written instructions.

B. Apply bonding adhesive to substrate and underside of sheet flashing at required rate, and allow to partially dry. Do not apply to seam area of flashing.

C. Flash penetrations and field-formed inside and outside corners with cured or uncured sheet flashing.

D. Clean seam areas, overlap, and firmly roll sheet flashings into the adhesive. Hot-air weld side and end laps to ensure a watertight seam installation.

E. Terminate and seal top of sheet flashings and mechanically anchor to substrate through termination bars.

3.8 WALKWAY INSTALLATION

A. Flexible Walkways: Install walkway products in locations indicated. Heat weld to substrate or adhere walkway products to substrate with compatible adhesive according to roofing system manufacturer's written instructions.

3.9 FIELD QUALITY CONTROL

A. Testing Agency: Owner will engage a qualified testing agency to inspect substrate conditions, surface preparation, membrane application, flashings, protection, and drainage components, and to furnish reports to Architect.

1. Electric Field Vector Mapping (EFVM): Testing agency shall survey entire roof area for potential leaks using electric field vector mapping (EFVM).

B. Flood Testing: Flood test each roofing area for leaks, according to recommendations in ASTM D 5957, after completing roofing and flashing but before overlying construction is placed. Install temporary containment assemblies, plug or dam drains, and flood with potable water.

1. Flood to an average depth of 2-1/2 inches with a minimum depth of 1 inch and not exceeding a depth of 4 inches. Maintain 2 inches of clearance from top of base flashing.
2. Flood each area for 48 hours.
3. After flood testing, repair leaks, repeat flood tests, and make further repairs until roofing and flashing installations are watertight.

C. Final Roof Inspection: Arrange for roofing system manufacturer's technical personnel to inspect roofing installation on completion.

D. Repair or remove and replace components of roofing system where inspections indicate that they do not comply with specified requirements.

E. Additional testing and inspecting, at Contractor's expense, will be performed to determine if replaced or additional work complies with specified requirements.

3.10 PROTECTING AND CLEANING

A. Protect roofing system from damage and wear during remainder of construction period. When remaining construction does not affect or endanger roofing, inspect roofing for deterioration and damage, describing its nature and extent in a written report, with copies to Architect and Owner.

B. Correct deficiencies in or remove roofing system that does not comply with requirements, repair substrates, and repair or reinstall roofing system to a condition free of damage and deterioration at time of Substantial Completion and according to warranty requirements.

C. Clean overspray and spillage from adjacent construction using cleaning agents and procedures recommended by manufacturer of affected construction.

END OF SECTION 075423

SECTION 076200 - SHEET METAL FLASHING AND TRIM

PART 1 - GENERAL

1.1 RELATED DOCUMENTS

A. Drawings and general provisions of the Contract, including General and Supplementary Conditions and Division 01 Specification Sections, apply to this Section.

1.2 SUMMARY

A. Section Includes:

1. Manufactured through-wall flashing with counterflashing.
2. Manufactured reglets with counterflashing.
3. Formed low-slope roof sheet metal fabrications.
4. Formed steep-slope roof sheet metal fabrications.
5. Formed wall sheet metal fabrications.
6. Formed equipment support flashing.

B. Related Requirements:

1. Section 061053 " Miscellaneous Rough Carpentry" for wood nailers, curbs, and blocking.
2. Section 077200 "Roof Accessories" for set-on-type curbs, equipment supports, roof hatches, vents, and other manufactured roof accessory units.

1.3 COORDINATION

A. Coordinate sheet metal flashing and trim layout and seams with sizes and locations of penetrations to be flashed, and joints and seams in adjacent materials.

B. Coordinate sheet metal flashing and trim installation with adjoining roofing and wall materials, joints, and seams to provide leakproof, secure, and noncorrosive installation.

1.4 ACTION SUBMITTALS

A. Product Data: For each type of product.

1. Include construction details, material descriptions, dimensions of individual components and profiles, and finishes for each manufactured product and accessory.

B. Shop Drawings: For sheet metal flashing and trim.

1. Include plans, elevations, sections, and attachment details.
2. Detail fabrication and installation layouts, expansion-joint locations, and keyed details. Distinguish between shop- and field-assembled work.
3. Include identification of material, thickness, weight, and finish for each item and location in Project.
4. Include details for forming, including profiles, shapes, seams, and dimensions.
5. Include details for joining, supporting, and securing, including layout and spacing of fasteners, cleats, clips, and other attachments. Include pattern of seams.
6. Include details of termination points and assemblies.
7. Include details of expansion joints and expansion-joint covers, including showing direction of expansion and contraction from fixed points.
8. Include details of roof-penetration flashing.
9. Include details of edge conditions, including eaves, ridges, valleys, rakes, crickets, and counterflashings as applicable.
10. Include details of special conditions.
11. Include details of connections to adjoining work.

C. Samples for Initial Selection: For each type of sheet metal and accessory indicated with factory-applied finishes.

D. Samples for Verification: For each type of exposed finish.

1. Sheet Metal Flashing: 12 inches long by actual width of unit, including finished seam and in required profile. Include fasteners, cleats, clips, closures, and other attachments.
2. Trim, Metal Closures, Expansion Joints, Joint Intersections, and Miscellaneous Fabrications: 12 inches long and in required profile. Include fasteners and other exposed accessories.
3. Unit-Type Accessories and Miscellaneous Materials: Full-size Sample.
4. Anodized Aluminum Samples: Samples to show full range to be expected for each color required.

1.5 INFORMATIONAL SUBMITTALS

A. Qualification Data: For fabricator.

B. Product Certificates: For each type of coping and roof edge flashing that is SPRI ES-1 tested.

C. Product Test Reports: For each product, for tests performed by a qualified testing agency.

D. Sample Warranty: For special warranty.

1.6 CLOSEOUT SUBMITTALS

A. Maintenance Data: For sheet metal flashing and trim, and its accessories, to include in maintenance manuals.

1.7 QUALITY ASSURANCE

A. Fabricator Qualifications: Employs skilled workers who custom fabricate sheet metal flashing and trim similar to that required for this Project and whose products have a record of successful in-service performance.

B. Mockups: Build mockups to verify selections made under Sample submittals, to demonstrate aesthetic effects, and to set quality standards for fabrication and installation.

1. Build mockup of typical roof, approximately 10 feet long, including supporting construction cleats, seams, attachments, underlayment, and accessories.
2. Approval of mockups does not constitute approval of deviations from the Contract Documents contained in mockups unless Architect specifically approves such deviations in writing.
3. Subject to compliance with requirements, approved mockups may become part of the completed Work if undisturbed at time of Substantial Completion.

1.8 DELIVERY, STORAGE, AND HANDLING

A. Do not store sheet metal flashing and trim materials in contact with other materials that might cause staining, denting, or other surface damage. Store sheet metal flashing and trim materials away from uncured concrete and masonry.

B. Protect strippable protective covering on sheet metal flashing and trim from exposure to sunlight and high humidity, except to extent necessary for period of sheet metal flashing and trim installation.

1.9 WARRANTY

A. Special Warranty on Finishes: Manufacturer agrees to repair finish or replace sheet metal flashing and trim that shows evidence of deterioration of factory-applied finishes within specified warranty period.

1. Exposed Panel Finish: Deterioration includes, but is not limited to, the following:

a. Color fading more than 5 Hunter units when tested according to ASTM D 2244.
b. Chalking in excess of a No. 8 rating when tested according to ASTM D 4214.
c. Cracking, checking, peeling, or failure of paint to adhere to bare metal.

2. Finish Warranty Period: 20 years from date of Substantial Completion.

PART 2 - PRODUCTS

2.1 PERFORMANCE REQUIREMENTS

A. General: Sheet metal flashing and trim assemblies shall withstand wind loads, structural movement, thermally induced movement, and exposure to weather without failure due to defective manufacture, fabrication, installation, or other defects in construction. Completed sheet metal flashing and trim shall not rattle, leak, or loosen, and shall remain watertight.

B. Sheet Metal Standard for Flashing and Trim: Comply with NRCA's "The NRCA Roofing Manual" and SMACNA's "Architectural Sheet Metal Manual" requirements for dimensions and profiles shown unless more stringent requirements are indicated.

C. Thermal Movements: Allow for thermal movements from ambient and surface temperature changes to prevent buckling, opening of joints, overstressing of components, failure of joint sealants, failure of connections, and other detrimental effects. Base calculations on surface temperatures of materials due to both solar heat gain and nighttime-sky heat loss.

1. Temperature Change: 120 deg F, ambient; 180 deg F, material surfaces.

2.2 SHEET METALS

A. General: Protect mechanical and other finishes on exposed surfaces from damage by applying strippable, temporary protective film before shipping.

B. Aluminum Sheet: ASTM B 209, alloy as standard with manufacturer for finish required, with temper as required to suit forming operations and performance required; with smooth, flat surface.

1. Exposed Coil-Coated Finish:

a. Three-Coat Fluoropolymer: AAMA 2605. Fluoropolymer finish containing not less than 70 percent PVDF resin by weight in both color coat and clear topcoat. Prepare, pretreat, and apply coating to exposed metal surfaces to comply with coating and resin manufacturers' written instructions.

2. Color: As selected by Architect from manufacturer's full range.
3. Concealed Finish: Pretreat with manufacturer's standard white or light-colored acrylic or polyester backer finish, consisting of prime coat and wash coat with minimum total dry film thickness of 0.5 mil.

C. Stainless-Steel Sheet: ASTM A 240/A 240M, Type 304, dead soft, fully annealed; with smooth, flat surface.

1. Finish: 2D (dull, cold rolled).

D. Metallic-Coated Steel Sheet: Provide zinc-coated (galvanized) steel sheet according to ASTM A 653/A 653M, G90 coating designation or aluminum-zinc alloy-coated steel sheet according to ASTM A 792/A 792M, Class AZ50 coating designation, Grade 40; prepainted by coil-coating process to comply with ASTM A 755/A 755M.

1. Surface: Smooth, flat.
2. Exposed Coil-Coated Finish:

    a. Three-Coat Fluoropolymer: AAMA 621. Fluoropolymer finish containing not less than 70 percent PVDF resin by weight in both color coat and clear topcoat. Prepare, pretreat, and apply coating to exposed metal surfaces to comply with coating and resin manufacturers' written instructions.

3. Color: As selected by Architect from manufacturer's full range.

2.3 UNDERLAYMENT MATERIALS

A. Self-Adhering, High-Temperature Sheet: Minimum 40 mils thick, consisting of a slip-resistant polyethylene- or polypropylene-film top surface laminated to a layer of butyl- or SBS-modified asphalt adhesive, with release-paper backing; specifically designed to withstand high metal temperatures beneath metal roofing. Provide primer according to written recommendations of underlayment manufacturer.

1. Manufacturers: Subject to compliance with requirements, provide products by one of the following:

    a. Carlisle Coatings & Waterproofing Inc.
    b. Carlisle Residential; a division of Carlisle Construction Materials.
    c. Drexel Metals.
    d. GCP Applied Technologies (formerly Grace Construction Products).
    e. Henry Company.
    f. Kirsch Building Products, LLC.
    g. Owens Corning.
    h. Polyguard Products, Inc.
    i. Protecto Wrap Company.
    j. SDP Advanced Polymer Products Inc.

2. Thermal Stability: ASTM D 1970; stable after testing at 240 deg F or higher.
3. Low-Temperature Flexibility: ASTM D 1970; passes after testing at minus 20 deg F or lower.

B. Slip Sheet: Rosin-sized building paper, 3 lb/100 sq. ft. minimum.

2.4 MISCELLANEOUS MATERIALS

A. General: Provide materials and types of fasteners, solder, protective coatings, sealants, and other miscellaneous items as required for complete sheet metal flashing and trim installation and as recommended by manufacturer of primary sheet metal or manufactured item unless otherwise indicated.

B. Fasteners: Wood screws, annular threaded nails, self-tapping screws, self-locking rivets and bolts, and other suitable fasteners designed to withstand design loads and recommended by manufacturer of primary sheet metal or manufactured item.

1. General: Blind fasteners or self-drilling screws, gasketed, with hex-washer head.

a. Exposed Fasteners: Heads matching color of sheet metal using plastic caps or factory-applied coating. Provide metal-backed EPDM or PVC sealing washers under heads of exposed fasteners bearing on weather side of metal.
b. Blind Fasteners: High-strength aluminum or stainless-steel rivets suitable for metal being fastened.

2. Fasteners for Aluminum Sheet: Aluminum or Series 300 stainless steel.
3. Fasteners for Zinc-Coated (Galvanized) or Aluminum-Zinc Alloy-Coated Steel Sheet: Series 300 stainless steel or hot-dip galvanized steel according to ASTM A 153/A 153M or ASTM F 2329.

C. Solder:

1. For Stainless Steel: ASTM B 32, Grade Sn60, with acid flux of type recommended by stainless-steel sheet manufacturer.
2. For Zinc-Coated (Galvanized) Steel: ASTM B 32, Grade Sn50, 50 percent tin and 50 percent lead or Grade Sn60, 60 percent tin and 40 percent lead with maximum lead content of 0.2 percent.

D. Sealant Tape: Pressure-sensitive, 100 percent solids, polyisobutylene compound sealant tape with release-paper backing. Provide permanently elastic, nonsag, nontoxic, nonstaining tape 1/2 inch wide and 1/8 inch thick.

E. Elastomeric Sealant: ASTM C 920, elastomeric silicone polymer sealant; of type, grade, class, and use classifications required to seal joints in sheet metal flashing and trim and remain watertight.

F. Butyl Sealant: ASTM C 1311, single-component, solvent-release butyl rubber sealant; polyisobutylene plasticized; heavy bodied for hooked-type expansion joints with limited movement.

G. Epoxy Seam Sealer: Two-part, noncorrosive, aluminum seam-cementing compound, recommended by aluminum manufacturer for exterior nonmoving joints, including riveted joints.

H. Bituminous Coating: Cold-applied asphalt emulsion according to ASTM D 1187.

I. Asphalt Roofing Cement: ASTM D 4586, asbestos free, of consistency required for application.

2.5 MANUFACTURED SHEET METAL FLASHING AND TRIM

A. Reglets: Units of type, material, and profile required, formed to provide secure interlocking of separate reglet and counterflashing pieces, and compatible with flashing indicated with factory-mitered and -welded corners and junctions andwith interlocking counterflashing on exterior face, of same metal as reglet.

1. Manufacturers: Subject to compliance with requirements, provide products by one of the following:

    a. Cheney Flashing Company.
    b. Fry Reglet Corporation.
    c. Heckmann Building Products, Inc.
    d. Hickman Company, W. P.
    e. Hohmann & Barnard, Inc.
    f. Keystone Flashing Company, Inc.
    g. National Sheet Metal Systems, Inc.
    h. Sandell Manufacturing Co., Inc.

2. Material: Stainless steel, 0.019 inch thick.
3. Surface-Mounted Type: Provide with slotted holes for fastening to substrate, with neoprene or other suitable weatherproofing washers, and with channel for sealant at top edge.
4. Concrete Type: Provide temporary closure tape to keep reglet free of concrete materials, special fasteners for attaching reglet to concrete forms, and guides to ensure alignment of reglet section ends.
5. Masonry Type: Provide with offset top flange for embedment in masonry mortar joint.
6. Accessories:

    a. Flexible-Flashing Retainer: Provide resilient plastic or rubber accessory to secure flexible flashing in reglet where clearance does not permit use of standard metal counterflashing or where Drawings show reglet without metal counterflashing.
    b. Counterflashing Wind-Restraint Clips: Provide clips to be installed before counterflashing to prevent wind uplift of counterflashing's lower edge.

2.6 FABRICATION, GENERAL

A. General: Custom fabricate sheet metal flashing and trim to comply with details shown and recommendations in cited sheet metal standard that apply to design, dimensions, geometry, metal thickness, and other characteristics of item required. Fabricate sheet metal flashing and trim in shop to greatest extent possible.

1. Fabricate sheet metal flashing and trim in thickness or weight needed to comply with performance requirements, but not less than that specified for each application and metal.
2. Obtain field measurements for accurate fit before shop fabrication.

3. Form sheet metal flashing and trim to fit substrates without excessive oil canning, buckling, and tool marks; true to line, levels, and slopes; and with exposed edges folded back to form hems.
4. Conceal fasteners and expansion provisions where possible. Do not use exposed fasteners on faces exposed to view.

B. Fabrication Tolerances: Fabricate sheet metal flashing and trim that is capable of installation to a tolerance of 1/4 inch in 20 feet on slope and location lines indicated on Drawings and within 1/8-inch offset of adjoining faces and of alignment of matching profiles.

C. Expansion Provisions: Form metal for thermal expansion of exposed flashing and trim.

1. Form expansion joints of intermeshing hooked flanges, not less than 1 inch deep, filled with butyl sealant concealed within joints.
2. Use lapped expansion joints only where indicated on Drawings.

D. Sealant Joints: Where movable, nonexpansion-type joints are required, form metal to provide for proper installation of elastomeric sealant according to cited sheet metal standard.

E. Fabricate cleats and attachment devices from same material as accessory being anchored or from compatible, noncorrosive metal.

F. Fabricate cleats and attachment devices of sizes as recommended by cited sheet metal standard for application, but not less than thickness of metal being secured.

G. Seams: Fabricate nonmoving seams with flat-lock seams. Form seams and seal with elastomeric sealant unless otherwise recommended by sealant manufacturer for intended use. Rivet joints where necessary for strength.

H. Do not use graphite pencils to mark metal surfaces.

2.7 LOW-SLOPE ROOF SHEET METAL FABRICATIONS

A. Roof and Roof-to-Wall Transition Expansion-Joint Cover: Fabricate from the following materials: Shop fabricate interior and exterior corners.

1. Aluminum: 0.050 inch thick.
2. Stainless Steel: 0.025 inch thick.
3. Galvanized Steel: 0.034 inch thick.
4. Aluminum-Zinc Alloy-Coated Steel: 0.034 inch thick.

B. Base Flashing: Shop fabricate interior and exterior corners. Fabricate from the following materials:

1. Aluminum: 0.040 inch thick.
2. Stainless Steel: 0.019 inch thick.
3. Galvanized Steel: 0.028 inch thick.
4. Aluminum-Zinc Alloy-Coated Steel: 0.028 inch thick.

C. Counterflashing: Shop fabricate interior and exterior corners. Fabricate from the following materials:

1. Aluminum: 0.032 inch thick.
2. Stainless Steel: 0.019 inch thick.
3. Galvanized Steel: 0.022 inch thick.
4. Aluminum-Zinc Alloy-Coated Steel: 0.022 inch thick.

D. Flashing Receivers: Fabricate from the following materials:

1. Aluminum: 0.032 inch thick.
2. Stainless Steel: 0.016 inch thick.
3. Galvanized Steel: 0.022 inch thick.
4. Aluminum-Zinc Alloy-Coated Steel: 0.022 inch thick.

E. Roof-Penetration Flashing: Fabricate from the following materials:

1. Stainless Steel: 0.019 inch thick.
2. Galvanized Steel: 0.028 inch thick.
3. Aluminum-Zinc Alloy-Coated Steel: 0.028 inch thick.

F. Roof-Drain Flashing: Fabricate from the following materials:

1. Stainless Steel: 0.016 inch thick.
2. Zinc-Tin Alloy-Coated Stainless Steel: 0.015 inch thick.

2.8 STEEP-SLOPE ROOF SHEET METAL FABRICATIONS

A. Apron, Step, Cricket, and Backer Flashing: Fabricate from the following materials:

1. Aluminum: 0.032 inch thick.
2. Stainless Steel: 0.016 inch thick.
3. Galvanized Steel: 0.022 inch thick.
4. Aluminum-Zinc Alloy-Coated Steel: 0.022 inch thick.

B. Valley Flashing: Fabricate from the following materials:

1. Stainless Steel: 0.019 inch thick.
2. Galvanized Steel: 0.028 inch thick.
3. Aluminum-Zinc Alloy-Coated Steel: 0.028 inch thick.

C. Drip Edges: Fabricate from the following materials:

1. Aluminum: 0.032 inch thick.
2. Stainless Steel: 0.016 inch thick.
3. Galvanized Steel: 0.022 inch thick.
4. Aluminum-Zinc Alloy-Coated Steel: 0.022 inch thick.

D. Eave, Rake, Ridge, and Hip Flashing: Fabricate from the following materials:

1. Aluminum: 0.032 inch thick.
2. Stainless Steel: 0.016 inch thick.
3. Galvanized Steel: 0.022 inch thick.
4. Aluminum-Zinc Alloy-Coated Steel: 0.022 inch thick.

E. Counterflashing: Shop fabricate interior and exterior corners. Fabricate from the following materials:

1. Aluminum: 0.032 inch thick.
2. Stainless Steel: 0.019 inch thick.
3. Galvanized Steel: 0.022 inch thick.
4. Aluminum-Zinc Alloy-Coated Steel: 0.022 inch thick.

F. Flashing Receivers: Fabricate from the following materials:

1. Aluminum: 0.032 inch thick.
2. Stainless Steel: 0.016 inch thick.
3. Galvanized Steel: 0.022 inch thick.
4. Aluminum-Zinc Alloy-Coated Steel: 0.022 inch thick.

G. Roof-Penetration Flashing: Fabricate from the following materials:

1. Stainless Steel: 0.019 inch thick.
2. Galvanized Steel: 0.028 inch thick.
3. Aluminum-Zinc Alloy-Coated Steel: 0.028 inch thick.

2.9 WALL SHEET METAL FABRICATIONS

A. Through-Wall Flashing: Fabricate continuous flashings in minimum 96-inch-long, but not exceeding 12-foot-long, sections, under copings, and at shelf angles. Fabricate discontinuous lintel, sill, and similar flashings to extend 6 inches beyond each side of wall openings; and form with 2-inch-high, end dams. Fabricate from the following materials:

1. Stainless Steel: 0.016 inch thick.

B. Opening Flashings in Frame Construction: Fabricate head, sill, jamb, and similar flashings to extend 4 inches beyond wall openings. Form head and sill flashing with 2-inch-high, end dams. Fabricate from the following materials:

1. Aluminum: 0.032 inch thick.
2. Stainless Steel: 0.016 inch thick.
3. Galvanized Steel: 0.022 inch thick.
4. Aluminum-Zinc Alloy-Coated Steel: 0.022 inch thick.

C. Wall Expansion-Joint Cover: Fabricate from the following materials:

1. Aluminum: 0.040 inch thick.
2. Stainless Steel: 0.019 inch thick.
3. Galvanized Steel: 0.028 inch thick.
4. Aluminum-Zinc Alloy-Coated Steel: 0.028 inch thick.

PART 3 - EXECUTION

3.1 EXAMINATION

A. Examine substrates, areas, and conditions, with Installer present, for compliance with requirements for installation tolerances, substrate, and other conditions affecting performance of the Work.

1. Verify compliance with requirements for installation tolerances of substrates.
2. Verify that substrate is sound, dry, smooth, clean, sloped for drainage, and securely anchored.
3. Verify that air- or water-resistant barriers have been installed over sheathing or backing substrate to prevent air infiltration or water penetration.

B. Proceed with installation only after unsatisfactory conditions have been corrected.

3.2 UNDERLAYMENT INSTALLATION

A. Self-Adhering Sheet Underlayment: Install self-adhering sheet underlayment, wrinkle free. Prime substrate if recommended by underlayment manufacturer. Comply with temperature restrictions of underlayment manufacturer for installation; use primer for installing underlayment at low temperatures. Apply in shingle fashion to shed water, with end laps of not less than 6 inches staggered 24 inches between courses. Overlap side edges not less than 3-1/2 inches. Roll laps and edges with roller. Cover underlayment within 14 days.

3.3 INSTALLATION, GENERAL

A. General: Anchor sheet metal flashing and trim and other components of the Work securely in place, with provisions for thermal and structural movement. Use fasteners, solder, protective coatings, separators, sealants, and other miscellaneous items as required to complete sheet metal flashing and trim system.

1. Install sheet metal flashing and trim true to line, levels, and slopes. Provide uniform, neat seams with minimum exposure of solder, welds, and sealant.
2. Install sheet metal flashing and trim to fit substrates and to result in watertight performance. Verify shapes and dimensions of surfaces to be covered before fabricating sheet metal.
3. Space cleats not more than 12 inches apart. Attach each cleat with at least two fasteners. Bend tabs over fasteners.

4. Install exposed sheet metal flashing and trim with limited oil canning, and free of buckling and tool marks.
5. Torch cutting of sheet metal flashing and trim is not permitted.
6. Do not use graphite pencils to mark metal surfaces.

B. Metal Protection: Where dissimilar metals contact each other, or where metal contacts pressure-treated wood or other corrosive substrates, protect against galvanic action or corrosion by painting contact surfaces with bituminous coating or by other permanent separation as recommended by sheet metal manufacturer or cited sheet metal standard.

1. Coat concealed side of uncoated-aluminum and stainless-steel sheet metal flashing and trim with bituminous coating where flashing and trim contact wood, ferrous metal, or cementitious construction.
2. Underlayment: Where installing sheet metal flashing and trim directly on cementitious or wood substrates, install underlayment and cover with slip sheet.

C. Expansion Provisions: Provide for thermal expansion of exposed flashing and trim. Space movement joints at maximum of 10 feet with no joints within 24 inches of corner or intersection.

1. Form expansion joints of intermeshing hooked flanges, not less than 1 inch deep, filled with sealant concealed within joints.
2. Use lapped expansion joints only where indicated on Drawings.

D. Fasteners: Use fastener sizes that penetrate substrate not less than recommended by fastener manufacturer to achieve maximum pull-out resistance.

E. Conceal fasteners and expansion provisions where possible in exposed work and locate to minimize possibility of leakage. Cover and seal fasteners and anchors as required for a tight installation.

F. Seal joints as required for watertight construction.

1. Use sealant-filled joints unless otherwise indicated. Embed hooked flanges of joint members not less than 1 inch into sealant. Form joints to completely conceal sealant. When ambient temperature at time of installation is between 40 and 70 deg F, set joint members for 50 percent movement each way. Adjust setting proportionately for installation at higher ambient temperatures. Do not install sealant-type joints at temperatures below 40 deg F.
2. Prepare joints and apply sealants to comply with requirements in Section 079200 "Joint Sealants."

G. Soldered Joints: Clean surfaces to be soldered, removing oils and foreign matter. Pre-tin edges of sheets with solder to width of 1-1/2 inches; however, reduce pre-tinning where pre-tinned surface would show in completed Work.

1. Do not solder metallic-coated steel and aluminum sheet.
2. Do not use torches for soldering.
3. Heat surfaces to receive solder, and flow solder into joint. Fill joint completely. Completely remove flux and spatter from exposed surfaces.

4. Stainless-Steel Soldering: Tin edges of uncoated sheets, using solder for stainless steel and acid flux. Promptly remove acid flux residue from metal after tinning and soldering. Comply with solder manufacturer's recommended methods for cleaning and neutralization.

H. Rivets: Rivet joints in uncoated aluminum where necessary for strength.

3.4 ROOF FLASHING INSTALLATION

A. General: Install sheet metal flashing and trim to comply with performance requirements, sheet metal manufacturer's written installation instructions, and cited sheet metal standard. Provide concealed fasteners where possible, and set units true to line, levels, and slopes. Install work with laps, joints, and seams that are permanently watertight and weather resistant.

B. Roof Edge Flashing: Anchor to resist uplift and outward forces according to recommendations in cited sheet metal standard unless otherwise indicated. Interlock bottom edge of roof edge flashing with continuous cleat anchored to substrate at staggered 3-inch centers.

C. Pipe or Post Counterflashing: Install counterflashing umbrella with close-fitting collar with top edge flared for elastomeric sealant, extending minimum of 4 inches over base flashing. Install stainless-steel draw band and tighten.

D. Counterflashing: Coordinate installation of counterflashing with installation of base flashing. Insert counterflashing in reglets or receivers and fit tightly to base flashing. Extend counterflashing 4 inches over base flashing. Lap counterflashing joints minimum of 4 inches. Secure in waterproof manner by means of snap-in installation and sealant or lead wedges and sealant or interlocking folded seam or blind rivets and sealant unless otherwise indicated.

E. Roof-Penetration Flashing: Coordinate installation of roof-penetration flashing with installation of roofing and other items penetrating roof. Seal with elastomeric sealant and clamp flashing to pipes that penetrate roof.

3.5 WALL FLASHING INSTALLATION

A. General: Install sheet metal wall flashing to intercept and exclude penetrating moisture according to cited sheet metal standard unless otherwise indicated. Coordinate installation of wall flashing with installation of wall-opening components such as windows, doors, and louvers.

B. Through-Wall Flashing: Installation of through-wall flashing is specified in Section 042000 "Unit Masonry."

C. Reglets: Installation of reglets is specified in Section 042000 "Unit Masonry."

D. Opening Flashings in Frame Construction: Install continuous head, sill, jamb, and similar flashings to extend 4 inches beyond wall openings.

3.6 ERECTION TOLERANCES

A. Installation Tolerances: Shim and align sheet metal flashing and trim within installed tolerance of 1/4 inch in 20 feet on slope and location lines indicated on Drawings and within 1/8-inch offset of adjoining faces and of alignment of matching profiles.

3.7 CLEANING AND PROTECTION

A. Clean exposed metal surfaces of substances that interfere with uniform oxidation and weathering.

B. Clean and neutralize flux materials. Clean off excess solder.

C. Clean off excess sealants.

D. Remove temporary protective coverings and strippable films as sheet metal flashing and trim are installed unless otherwise indicated in manufacturer's written installation instructions. On completion of sheet metal flashing and trim installation, remove unused materials and clean finished surfaces as recommended by sheet metal flashing and trim manufacturer. Maintain sheet metal flashing and trim in clean condition during construction.

E. Replace sheet metal flashing and trim that have been damaged or that have deteriorated beyond successful repair by finish touchup or similar minor repair procedures.

END OF SECTION 076200

SECTION 077100 - ROOF SPECIALTIES

PART 1 - GENERAL

1.1 RELATED DOCUMENTS

A. Drawings and general provisions of the Contract, including General and Supplementary Conditions and Division 01 Specification Sections, apply to this Section.

1.2 SUMMARY

A. Section Includes:

1. Copings.
2. Roof-edge drainage systems.

B. Related Requirements:

1. Section 055000 "Metal Fabrications" for downspout boots.
2. Section 061053 " Miscellaneous Rough Carpentry" for wood nailers, curbs, and blocking.
3. Section 074113.16 "Standing-Seam Metal Roof Panels" for roof-edge drainage-system components provided by metal-roof-panel manufacturer.
4. Section 076200 "Sheet Metal Flashing and Trim" for custom- and site-fabricated sheet metal flashing and trim.
5. Section 077200 "Roof Accessories" for set-on-type curbs, equipment supports, roof hatches, vents, and other manufactured roof accessory units.
6. Section 079200 "Joint Sealants" for field-applied sealants between roof specialties and adjacent materials.

1.3 ACTION SUBMITTALS

A. Product Data: For each type of product.

1. Include construction details, material descriptions, dimensions of individual components and profiles, and finishes.

B. Shop Drawings: For roof specialties.

1. Include plans, elevations, expansion-joint locations, keyed details, and attachments to other work. Distinguish between plant- and field-assembled work.
2. Include details for expansion and contraction; locations of expansion joints, including direction of expansion and contraction.
3. Indicate profile and pattern of seams and layout of fasteners, cleats, clips, and other attachments.

4. Detail termination points and assemblies, including fixed points.
5. Include details of special conditions.

C. Samples: For each type of roof specialty and for each color and texture specified.

D. Samples for Initial Selection: For each type of roof specialty indicated with factory-applied color finishes.

1.4 INFORMATIONAL SUBMITTALS

A. Product Certificates: For each type of roof specialty.

B. Product Test Reports: For copings and roof-edge flashings, for tests performed by a qualified testing agency.

C. Sample Warranty: For manufacturer's special warranty.

1.5 CLOSEOUT SUBMITTALS

A. Maintenance Data: For roofing specialties to include in maintenance manuals.

1.6 QUALITY ASSURANCE

A. Mockups: Build mockups to verify selections made under Sample submittals, to demonstrate aesthetic effects, and set quality standards for fabrication and installation.

1. Build mockup of typical roof edge, including gutter and downspout, approximately 10 feet long, including supporting construction, seams, attachments, underlayment, and accessories.
2. Approval of mockups does not constitute approval of deviations from the Contract Documents contained in mockups unless Architect specifically approves such deviations in writing.
3. Subject to compliance with requirements, approved mockups may become part of the completed Work if undisturbed at time of Substantial Completion.

1.7 DELIVERY, STORAGE, AND HANDLING

A. Do not store roof specialties in contact with other materials that might cause staining, denting, or other surface damage. Store roof specialties away from uncured concrete and masonry.

B. Protect strippable protective covering on roof specialties from exposure to sunlight and high humidity, except to extent necessary for the period of roof-specialty installation.

1.8 FIELD CONDITIONS

A. Field Measurements: Verify profiles and tolerances of roof-specialty substrates by field measurements before fabrication, and indicate measurements on Shop Drawings.

B. Coordination: Coordinate roof specialties with flashing, trim, and construction of parapets, roof deck, roof and wall panels, and other adjoining work to provide a leakproof, secure, and noncorrosive installation.

1.9 WARRANTY

A. Special Warranty on Painted Finishes: Manufacturer agrees to repair finish or replace roof specialties that show evidence of deterioration of factory-applied finishes within specified warranty period.

1. Fluoropolymer Finish: Deterioration includes, but is not limited to, the following:

a. Color fading more than 5 Hunter units when tested according to ASTM D 2244.
b. Chalking in excess of a No. 8 rating when tested according to ASTM D 4214.
c. Cracking, checking, peeling, or failure of paint to adhere to bare metal.

2. Finish Warranty Period: 20 years from date of Substantial Completion.

PART 2 - PRODUCTS

2.1 PERFORMANCE REQUIREMENTS

A. General Performance: Roof specialties shall withstand exposure to weather and resist thermally induced movement without failure, rattling, leaking, or fastener disengagement due to defective manufacture, fabrication, installation, or other defects in construction.

B. Thermal Movements: Allow for thermal movements from ambient and surface temperature changes to prevent buckling, opening of joints, hole elongation, overstressing of components, failure of joint sealants, failure of connections, and other detrimental effects. Provide clips that resist rotation and avoid shear stress as a result of thermal movements. Base calculations on surface temperatures of materials due to both solar heat gain and nighttime-sky heat loss.

1. Temperature Change (Range): 120 deg F, ambient; 180 deg F, material surfaces.

2.2 COPINGS

A. Metal Copings: Manufactured coping system consisting of metal coping cap in section lengths not exceeding 12 feet, concealed anchorage; with corner units, end cap units, and concealed splice plates with finish matching coping caps.

1. Manufacturers: Subject to compliance with requirements, provide products by one of the following:

a. Architectural Products Company.
b. ATAS International, Inc.
c. Castle Metal Products.
d. Cheney Flashing Company.
e. Drexel Metals.
f. Firestone.
g. Hickman Company, W. P.
h. Merchant & Evans Inc.
i. Metal-Era, Inc.
j. Perimeter Systems; a division of SAF.
k. Petersen Aluminum Corporation.

2. Formed Aluminum Sheet Coping Caps: Aluminum sheet, thickness as required to meet performance requirements.

a. Surface: Smooth, flat finish.
b. Finish: Three-coat fluoropolymer.
c. Color: As selected by Architect from manufacturer's full range.

3. Extruded-Aluminum Coping Caps: Extruded aluminum, thickness as required to meet performance requirements.

a. Finish: Three-coat fluoropolymer.
b. Color: As selected by Architect from manufacturer's full range.

4. Corners: Factory mitered and soldered, continuously welded, or mechanically clinched and sealed watertight.
5. Coping-Cap Attachment Method: Snap-on or face leg hooked to continuous cleat with back leg fastener exposed, fabricated from coping-cap material.

a. Snap-on Coping Anchor Plates: Concealed, galvanized-steel sheet, 12 inches wide, with integral cleats.
b. Face-Leg Cleats: Concealed, continuous stainless steel.

2.3 ROOF-EDGE DRAINAGE SYSTEMS

A. Manufacturers: Subject to compliance with requirements, provide products by one of the following:

1. Architectural Products Company.

2. ATAS International, Inc.
3. Berger Building Products, Inc.
4. Castle Metal Products.
5. Cheney Flashing Company.
6. CopperCraft by FABRAL.
7. Drexel Metals.
8. Hickman Company, W. P.
9. Merchant & Evans Inc.
10. Metal-Era, Inc.
11. Perimeter Systems; a division of SAF.

B. Downspouts: Plain rectangular, unless otherwise indicated, complete with machine-crimped elbows, manufactured from the following exposed metal. Furnish with metal hangers, from same material as downspouts, and anchors.

1. Formed Aluminum: 0.032 inch thick minimum.

C. Parapet Scuppers: Manufactured with closure flange trim to exterior, 4-inch-wide wall flanges to interior, and base extending 4 inches beyond cant or tapered strip into field of roof.

1. Formed Aluminum: 0.032 inch thick.

D. Conductor Heads: Manufactured conductor heads, each with flanged back and stiffened top edge, and of dimensions and shape indicated, complete with outlet tube that nests into upper end of downspout, exterior flange trim, and built-in overflow.

1. Formed Aluminum: 0.032 inch thick.

E. Splash Pans: Fabricate from the following exposed metal:

1. Formed Aluminum: 0.040 inch thick.

F. Aluminum Finish: Three-coat fluoropolymer.

1. Color: As selected by Architect from manufacturer's full range.

2.4 MATERIALS

A. Aluminum Sheet: ASTM B 209, alloy as standard with manufacturer for finish required, with temper to suit forming operations and performance required.

2.5 UNDERLAYMENT MATERIALS

A. Self-Adhering, High-Temperature Sheet: Minimum 30 to 40 mils thick, consisting of slip-resisting polyethylene-film top surface laminated to layer of butyl or SBS-modified asphalt adhesive, with release-paper backing; cold applied. Provide primer when recommended by underlayment manufacturer.

1. Manufacturers: Subject to compliance with requirements, provide products by one of the following:

    a. Carlisle Coatings & Waterproofing Inc.
    b. GCP Applied Technologies (formerly Grace Construction Products).
    c. Henry Company.
    d. Metal-Fab Manufacturing, a Drexel Metals Company.
    e. Owens Corning.

2. Thermal Stability: ASTM D 1970/D 1970M; stable after testing at 240 deg F.
3. Low-Temperature Flexibility: ASTM D 1970/D 1970M; passes after testing at minus 20 deg F.

B. Felt: ASTM D 226/D 226M, Type II (No. 30), asphalt-saturated organic felt, nonperforated.

C. Slip Sheet: Rosin-sized building paper, 3-lb/100 sq. ft. minimum.

2.6 MISCELLANEOUS MATERIALS

A. Fasteners: Manufacturer's recommended fasteners, suitable for application and designed to meet performance requirements. Furnish the following unless otherwise indicated:

1. Exposed Penetrating Fasteners: Gasketed screws with hex washer heads matching color of sheet metal.
2. Fasteners for Aluminum: Aluminum or Series 300 stainless steel.

B. Elastomeric Sealant: ASTM C 920, elastomeric silicone polymer sealant of type, grade, class, and use classifications required by roofing-specialty manufacturer for each application.

C. Bituminous Coating: Cold-applied asphalt emulsion complying with ASTM D 1187/D 1187M.

D. Asphalt Roofing Cement: ASTM D 4586, asbestos free, of consistency required for application.

2.7 FINISHES

A. Comply with NAAMM's "Metal Finishes Manual for Architectural and Metal Products" for recommendations for applying and designating finishes.

B. Protect mechanical and painted finishes on exposed surfaces from damage by applying a strippable, temporary protective covering before shipping.

C. Appearance of Finished Work: Noticeable variations in same piece are unacceptable. Variations in appearance of adjoining components are acceptable if they are within the range of approved Samples and are assembled or installed to minimize contrast.

D. Coil-Coated Aluminum Sheet Finishes:

1. High-Performance Organic Finish: Prepare, pretreat, and apply coating to exposed metal surfaces to comply with coating and resin manufacturers' written instructions.

    a. Three-Coat Fluoropolymer: AAMA 2605. Fluoropolymer finish containing not less than 70 percent PVDF resin by weight in both color coat and clear topcoat. Prepare, pretreat, and apply coating to exposed metal surfaces to comply with coating and resin manufacturers' written instructions.
    b. Concealed Surface Finish: Apply pretreatment and manufacturer's standard acrylic or polyester backer finish consisting of prime coat and wash coat with a minimum total dry film thickness of 0.5 mil.

PART 3 - EXECUTION

3.1 EXAMINATION

A. Examine substrates, areas, and conditions, with Installer present, to verify actual locations, dimensions, and other conditions affecting performance of the Work.

B. Examine walls, roof edges, and parapets for suitable conditions for roof specialties.

C. Verify that substrate is sound, dry, smooth, clean, sloped for drainage where applicable, and securely anchored.

D. Proceed with installation only after unsatisfactory conditions have been corrected.

3.2 UNDERLAYMENT INSTALLATION

A. Self-Adhering Sheet Underlayment: Apply primer if required by manufacturer. Comply with temperature restrictions of underlayment manufacturer for installation. Apply wrinkle free, in shingle fashion to shed water, and with end laps of not less than 6 inches staggered 24 inches between courses. Overlap side edges not less than 3-1/2 inches. Roll laps with roller. Cover underlayment within 14 days.

1. Apply continuously under copings and roof-edge specialties.
2. Coordinate application of self-adhering sheet underlayment under roof specialties with requirements for continuity with adjacent air barrier materials.

3.3 INSTALLATION, GENERAL

A. General: Install roof specialties according to manufacturer's written instructions. Anchor roof specialties securely in place, with provisions for thermal and structural movement. Use fasteners, solder, protective coatings, separators, underlayments, sealants, and other miscellaneous items as required to complete roof-specialty systems.

1. Install roof specialties level, plumb, true to line and elevation; with limited oil-canning and without warping, jogs in alignment, buckling, or tool marks.

2. Provide uniform, neat seams with minimum exposure of solder and sealant.
3. Install roof specialties to fit substrates and to result in weathertight performance. Verify shapes and dimensions of surfaces to be covered before manufacture.
4. Torch cutting of roof specialties is not permitted.
5. Do not use graphite pencils to mark metal surfaces.

B. Metal Protection: Protect metals against galvanic action by separating dissimilar metals from contact with each other or with corrosive substrates by painting contact surfaces with bituminous coating or by other permanent separation as recommended by manufacturer.

1. Coat concealed side of uncoated aluminum and stainless-steel roof specialties with bituminous coating where in contact with wood, ferrous metal, or cementitious construction.
2. Bed flanges in thick coat of asphalt roofing cement where required by manufacturers of roof specialties for waterproof performance.

C. Expansion Provisions: Allow for thermal expansion of exposed roof specialties.

1. Space movement joints at a maximum of 12 feet with no joints within 18 inches of corners or intersections unless otherwise indicated on Drawings.
2. When ambient temperature at time of installation is between 40 and 70 deg F, set joint members for 50 percent movement each way. Adjust setting proportionately for installation at higher ambient temperatures.

D. Fastener Sizes: Use fasteners of sizes that penetrate substrate not less than recommended by fastener manufacturer to achieve maximum pull-out resistance.

E. Seal concealed joints with butyl sealant as required by roofing-specialty manufacturer.

F. Seal joints as required for weathertight construction. Place sealant to be completely concealed in joint. Do not install sealants at temperatures below 40 deg F.

G. Soldered Joints: Clean surfaces to be soldered, removing oils and foreign matter. Pre-tin edges of sheets to be soldered to a width of 1-1/2 inches; however, reduce pre-tinning where pre-tinned surface would show in completed Work. Tin edges of uncoated copper sheets using solder for copper. Do not use torches for soldering. Heat surfaces to receive solder and flow solder into joint. Fill joint completely. Completely remove flux and spatter from exposed surfaces.

3.4 COPING INSTALLATION

A. Install cleats, anchor plates, and other anchoring and attachment accessories and devices with concealed fasteners.

B. Anchor copings with manufacturer's required devices, fasteners, and fastener spacing to meet performance requirements.

1. Interlock face and back leg drip edges of snap-on coping cap into cleated anchor plates anchored to substrate at manufacturer's required spacing that meets performance requirements.
2. Interlock face-leg drip edge into continuous cleat anchored to substrate at manufacturer's required spacing that meets performance requirements. Anchor back leg of coping with screw fasteners and elastomeric washers at manufacturer's required spacing that meets performance requirements.

3.5 ROOF-EDGE DRAINAGE-SYSTEM INSTALLATION

A. General: Install components to produce a complete roof-edge drainage system according to manufacturer's written instructions. Coordinate installation of roof perimeter flashing with installation of roof-edge drainage system.

B. Downspouts: Join sections with manufacturer's standard telescoping joints. Provide hangers with fasteners designed to hold downspouts securely to walls and 1 inch away from walls; locate fasteners at top and bottom and at approximately 60 inches o.c.

1. Connect downspouts to underground drainage system indicated, unless otherwise indicated.

C. Splash Pans: Install where downspouts discharge on low-slope roofs. Set in asphalt roofing cement or elastomeric sealant.

D. Parapet Scuppers: Install scuppers through parapet where indicated. Continuously support scupper, set to correct elevation, and seal flanges to interior wall face, over cants or tapered edge strips, and under roofing membrane.

1. Anchor scupper closure trim flange to exterior wall and seal or solder to scupper.
2. Loosely lock front edge of scupper with conductor head.
3. Seal or solder exterior wall scupper flanges into back of conductor head.

E. Conductor Heads: Anchor securely to wall with elevation of conductor top edge 1 inch below scupper discharge.

3.6 CLEANING AND PROTECTION

A. Clean exposed metal surfaces of substances that interfere with uniform oxidation and weathering.

B. Clean and neutralize flux materials. Clean off excess solder and sealants.

C. Remove temporary protective coverings and strippable films as roof specialties are installed. On completion of installation, clean finished surfaces, including removing unused fasteners, metal filings, pop rivet stems, and pieces of flashing. Maintain roof specialties in a clean condition during construction.

D. Replace roof specialties that have been damaged or that cannot be successfully repaired by finish touchup or similar minor repair procedures.

END OF SECTION 077100

SECTION 077200 - ROOF ACCESSORIES

PART 1 - GENERAL

1.1 RELATED DOCUMENTS

A. Drawings and general provisions of the Contract, including General and Supplementary Conditions and Division 01 Specification Sections, apply to this Section.

1.2 SUMMARY

A. Section Includes:

1. Equipment supports.
2. Roof hatches.

B. Related Sections:

1. Section 076200 "Sheet Metal Flashing and Trim" for shop- and field-formed metal flashing, roof-drainage systems, roof expansion-joint covers, and miscellaneous sheet metal trim and accessories.
2. Section 077100 "Roof Specialties" for manufactured fasciae, copings, gravel stops, gutters and downspouts, and counterflashing.

1.3 COORDINATION

A. Coordinate layout and installation of roof accessories with roofing membrane and base flashing and interfacing and adjoining construction to provide a leakproof, weathertight, secure, and noncorrosive installation.

B. Coordinate dimensions with rough-in information or Shop Drawings of equipment to be supported.

1.4 ACTION SUBMITTALS

A. Product Data: For each type of roof accessory.

1. Include construction details, material descriptions, dimensions of individual components and profiles, and finishes.

B. Samples: For each exposed product and for each color and texture specified, prepared on Samples of size to adequately show color.

C. Delegated-Design Submittal: For equipment supports indicated to comply with performance requirements and design criteria, including analysis data signed and sealed by the qualified professional engineer responsible for their preparation.

1. Detail mounting, securing, and flashing of roof-mounted items to roof structure. Indicate coordinating requirements with roof membrane system.
2. Wind-Restraint Details: Detail fabrication and attachment of wind restraints. Show anchorage details and indicate quantity, diameter, and depth of penetration of anchors.

1.5 INFORMATIONAL SUBMITTALS

A. Sample Warranties: For manufacturer's special warranties.

1.6 CLOSEOUT SUBMITTALS

A. Operation and Maintenance Data: For roof accessories to include in operation and maintenance manuals.

1.7 WARRANTY

A. Special Warranty on Painted Finishes: Manufacturer's standard form in which manufacturer agrees to repair finishes or replace roof accessories that show evidence of deterioration of factory-applied finishes within specified warranty period.

1. Fluoropolymer Finish: Deterioration includes, but is not limited to, the following:

a. Color fading more than 5 Hunter units when tested according to ASTM D 2244.
b. Chalking in excess of a No. 8 rating when tested according to ASTM D 4214.
c. Cracking, checking, peeling, or failure of paint to adhere to bare metal.

2. Finish Warranty Period: 20 years from date of Substantial Completion.

PART 2 - PRODUCTS

2.1 PERFORMANCE REQUIREMENTS

A. General Performance: Roof accessories shall withstand exposure to weather and resist thermally induced movement without failure, rattling, leaking, or fastener disengagement due to defective manufacture, fabrication, installation, or other defects in construction.

B. Delegated Design: Engage a qualified professional engineer, as defined in Section 014000 "Quality Requirements," to design equipment supports to comply with wind performance requirements, including comprehensive engineering analysis by a qualified professional engineer, using performance requirements and design criteria indicated.

2.2 EQUIPMENT SUPPORTS

A. Equipment Supports: Internally reinforced perimeter metal equipment supports capable of supporting superimposed live and dead loads between structural supports, including equipment loads and other construction indicated on Drawings, spanning between structural supports; capable of meeting performance requirements; with welded or mechanically fastened and sealed corner joints, stepped integral metal cant raised the thickness of roof insulation, and integrally formed structure-mounting flange at bottom.

1. Manufacturers: Subject to compliance with requirements, provide products by one of the following:

a. Adaptable Air Products.
b. AES Industries, Inc.
c. Air Balance Inc.; a division of MESTEK, Inc.
d. Conn-Fab Sales, Inc.
e. Curbs Plus, Inc.
f. Custom Solution Roof and Metal Products.
g. Greenheck Fan Corporation.
h. KCC International Inc.
i. Lloyd Industries, Inc.
j. LMCurbs.
k. Louvers & Dampers, Inc.; a division of Mestek, Inc.
l. Milcor; Commercial Products Group of Hart & Cooley, Inc.
m. Pate Company (The).
n. Plenums Incorporated.
o. Roof Curb Systems.
p. Roof Products and Systems (RPS); a division of Hart & Cooley, Inc.
q. Roof Products, Inc.
r. Thybar Corporation.
s. Vent Products Co., Inc.

B. Size: Coordinate dimensions with roughing-in information or Shop Drawings of equipment to be supported.

C. Supported Load Capacity: As required by supported equipment.

D. Material: Stainless-steel sheet, 0.078 inch thick.

1. Finish: No. 2D, directional polish finish.

E. Construction:

1. Curb Profile: Manufacturer's standard compatible with roofing system.
2. Insulation: Factory insulated with 1-1/2-inch- thick glass-fiber board insulation.
3. Liner: Same material as equipment support, of manufacturer's standard thickness and finish.
4. Nailer: Factory-installed continuous wood nailers 3-1/2 inches wide on top flange of equipment supports, continuous around support perimeter.

5. Platform Cap: Where portion of equipment support is not covered by equipment, provide weathertight platform cap formed from 3/4-inch thick plywood covered with metal sheet of same type, thickness, and finish as required for curb.
6. Metal Counterflashing: Manufacturer's standard, removable, fabricated of same metal and finish as equipment support.
7. On ribbed or fluted metal roofs, form deck-mounting flange at perimeter bottom to conform to roof profile.
8. Fabricate equipment supports to minimum height of 12 inches above roofing surface unless otherwise indicated.
9. Sloping Roofs: Where roof slope exceeds 1:48, fabricate each support with height to accommodate roof slope so that tops of supports are level with each other. Equip supports with water diverters or crickets on sides that obstruct water flow.
10. Security Grille: Provide for all units, unless otherwise indicated.

2.3 ROOF HATCH

A. Roof Hatches: Metal roof-hatch units with lids and insulated double-walled curbs, welded or mechanically fastened and sealed corner joints, continuous lid-to-curb counterflashing and weathertight perimeter gasketing, stepped integral metal cant raised the thickness of roof insulation, and integrally formed deck-mounting flange at perimeter bottom.

1. Basis-of-Design: Subject to compliance with requirements, provide product indicated below or a comparable product as approved by the Architect:

    a. Manufacturer: The Bilco Company.
    b. Style: Thermally Broken Roof Hatch.
    c. Product: Type S-50TB.

B. Type and Size: As indicated on the Drawings.

C. Loads: Minimum 40-lbf/sq. ft. external live load and 20-lbf/sq. ft. internal uplift load.

D. Hatch Material: Aluminum sheet.

1. Thickness: Manufacturer's standard thickness for hatch size indicated.
2. Finish: Two-coat fluoropolymer.
3. Color: As selected by Architect from manufacturer's full range.

E. Construction:

1. Insulation: Manufacturer’s standard.

    a. R-Value: 12.0 according to ASTM C 1363, unless otherwise indicated.

2. Nailer: Factory-installed wood nailer continuous around hatch perimeter.
3. Hatch Lid: Opaque, insulated, and double walled, with manufacturer's standard metal liner of same material and finish as outer metal lid.
4. Curb Liner: Manufacturer's standard, of same material and finish as metal curb.

5. On ribbed or fluted metal roofs, form flange at perimeter bottom to conform to roof profile.
6. Fabricate curbs to minimum height of 12 inches above roofing surface unless otherwise indicated.
7. Sloping Roofs: Where slope or roof deck exceeds 1:48, fabricate curb with perimeter curb height that is tapered to accommodate roof slope so that top surfaces of perimeter curb are level. Equip hatch with water diverter or cricket on side that obstructs water flow.

F. Hardware: Spring operators, hold-open arm, stainless-steel spring latch with turn handles, stainless-steel butt- or pintle-type hinge system, and padlock hasps inside and outside.

1. Provide two-point latch on lids larger than 84 inches.

2.4 METAL MATERIALS

A. Aluminum Sheet: ASTM B 209, manufacturer's standard alloy for finish required, with temper to suit forming operations and performance required.
1. Exposed Coil-Coated Finish: Prepare, pretreat, and apply coating to exposed metal surfaces to comply with coating and resin manufacturers' written instructions.

a. Two-Coat Fluoropolymer Finish: AAMA 2605. System consisting of primer and fluoropolymer color topcoat containing not less than 70 percent PVDF resin by weight.

2. Baked-Enamel or Powder-Coat Finish: AAMA 2603 except with a minimum dry film thickness of 1.5 mils. Comply with coating manufacturer's written instructions for cleaning, conversion coating, and applying and baking finish.
3. Concealed Finish: Pretreat with manufacturer's standard white or light-colored acrylic or polyester-backer finish consisting of prime coat and wash coat, with a minimum total dry film thickness of 0.5 mil.

B. Aluminum Extrusions and Tubes: ASTM B 221, manufacturer's standard alloy and temper for type of use, finished to match assembly where used; otherwise mill finished.

C. Stainless-Steel Sheet and Shapes: ASTM A 240/A 240M or ASTM A 666, Type 304.

D. Steel Shapes: ASTM A 36/A 36M, hot-dip galvanized according to ASTM A 123/A 123M unless otherwise indicated.

E. Steel Tube: ASTM A 500/A 500M, round tube.

F. Galvanized-Steel Tube: ASTM A 500/A 500M, round tube, hot-dip galvanized according to ASTM A 123/A 123M.

G. Steel Pipe: ASTM A 53/A 53M, galvanized.

2.5 MISCELLANEOUS MATERIALS

A. General: Provide materials and types of fasteners, protective coatings, sealants, and other miscellaneous items required by manufacturer for a complete installation.

B. Cellulosic-Fiber Board Insulation: ASTM C 208, Type II, Grade 1, thickness as indicated.

C. Glass-Fiber Board Insulation: ASTM C 726, nominal density of 3 lb/cu. ft., thermal resistivity of 4.3 deg F x h x sq. ft./Btu x in. at 75 deg F, thickness as indicated.

D. Polyisocyanurate Board Insulation: ASTM C 1289, thickness and thermal resistivity as indicated.

E. Wood Nailers: Softwood lumber, pressure treated with waterborne preservatives for aboveground use, acceptable to authorities having jurisdiction, containing no arsenic or chromium, and complying with AWPA C2; not less than 1-1/2 inches thick.

F. Security Grilles: 3/4-inch diameter, ASTM A 1011/A 1011M steel bars spaced 6 inches o.c. in one direction and 12 inches o.c. in the other; factory finished as follows:

1. Surface Preparation: Remove mill scale and rust, if any, from uncoated steel, complying with SSPC-SP 5/NACE No. 1, "White Metal Blast Cleaning," or SSPC-SP 8, "Pickling."
2. Factory Priming for Field-Painted Finish: Apply shop primer specified below immediately after surface preparation and pretreatment.
3. Shop Primer: Manufacturer's or fabricator's standard, fast-curing, lead- and chromate-free, universal primer; selected for resistance to normal atmospheric corrosion, for compatibility with substrate and field-applied finish paint system indicated, and for capability to provide a sound foundation for field-applied topcoats under prolonged exposure.

G. Bituminous Coating: Cold-applied asphalt emulsion complying with ASTM D 1187/D 1187M.

H. Underlayment:

1. Self-Adhering, High-Temperature Sheet: Minimum 30 to 40 mils thick, consisting of slip-resisting polyethylene-film top surface laminated to layer of butyl or SBS-modified asphalt adhesive, with release-paper backing; cold applied. Provide primer when recommended by underlayment manufacturer.
2. Fasteners: Roof accessory manufacturer's recommended fasteners suitable for application and metals being fastened. Match finish of exposed fasteners with finish of material being fastened. Provide nonremovable fastener heads to exterior exposed fasteners. Furnish the following unless otherwise indicated:
3. Fasteners for Aluminum Sheet: Aluminum or Series 300 stainless steel.
4. Fasteners for Stainless-Steel Sheet: Series 300 stainless steel.

I. Gaskets: Manufacturer's standard tubular or fingered design of neoprene, EPDM, PVC, or silicone or a flat design of foam rubber, sponge neoprene, or cork.

J. Elastomeric Sealant: ASTM C 920, elastomeric silicone polymer sealant as recommended by roof accessory manufacturer for installation indicated; low modulus; of type, grade, class, and use classifications required to seal joints and remain watertight.

K. Butyl Sealant: ASTM C 1311, single-component, solvent-release butyl rubber sealant; polyisobutylene plasticized; heavy bodied for expansion joints with limited movement.

L. Asphalt Roofing Cement: ASTM D 4586/D 4586M, asbestos free, of consistency required for application.

2.6 GENERAL FINISH REQUIREMENTS

A. Comply with NAAMM's "Metal Finishes Manual for Architectural and Metal Products" for recommendations for applying and designating finishes.

B. Appearance of Finished Work: Noticeable variations in same piece are not acceptable. Variations in appearance of adjoining components are acceptable if they are within the range of approved Samples and are assembled or installed to minimize contrast.

PART 3 - EXECUTION

3.1 EXAMINATION

A. Examine substrates, areas, and conditions, with Installer present, to verify actual locations, dimensions, and other conditions affecting performance of the Work.

B. Verify that substrate is sound, dry, smooth, clean, sloped for drainage, and securely anchored.

C. Verify dimensions of roof openings for roof accessories.

D. Proceed with installation only after unsatisfactory conditions have been corrected.

3.2 INSTALLATION

A. General: Install roof accessories according to manufacturer's written instructions.

1. Install roof accessories level; plumb; true to line and elevation; and without warping, jogs in alignment, buckling, or tool marks.
2. Anchor roof accessories securely in place so they are capable of resisting indicated loads.
3. Use fasteners, separators, sealants, and other miscellaneous items as required to complete installation of roof accessories and fit them to substrates.
4. Install roof accessories to resist exposure to weather without failing, rattling, leaking, or loosening of fasteners and seals.

B. Metal Protection: Protect metals against galvanic action by separating dissimilar metals from contact with each other or with corrosive substrates by painting contact surfaces with bituminous coating or by other permanent separation as recommended by manufacturer.

1. Coat concealed side of uncoated aluminum and stainless-steel roof accessories with bituminous coating where in contact with wood, ferrous metal, or cementitious construction.
2. Underlayment: Where installing roof accessories directly on cementitious or wood substrates, install a course of underlayment and cover with manufacturer's recommended slip sheet.
3. Bed flanges in thick coat of asphalt roofing cement where required by manufacturers of roof accessories for waterproof performance.

C. Equipment Support Installation: Install equipment supports so top surfaces are level with each other.

D. Roof-Hatch Installation:

1. Verify that roof hatch operates properly. Clean, lubricate, and adjust operating mechanism and hardware.
2. Attach safety railing system to roof-hatch curb.
3. Attach ladder-assist post according to manufacturer's written instructions.

E. Security Grilles: Weld bar intersections and, using tamper-resistant bolts, attach the ends of bars to structural frame or primary curb walls.

F. Seal joints with elastomeric or butyl sealant as required by roof accessory manufacturer.

3.3 REPAIR AND CLEANING

A. Galvanized Surfaces: Clean field welds, bolted connections, and abraded areas and repair galvanizing according to ASTM A 780/A 780M.

B. Touch up factory-primed surfaces with compatible primer ready for field painting according to Section 099113 "Exterior Painting."

C. Clean exposed surfaces according to manufacturer's written instructions.

D. Clean off excess sealants.

E. Replace roof accessories that have been damaged or that cannot be successfully repaired by finish touchup or similar minor repair procedures.

END OF SECTION 077200

SECTION 078413 - PENETRATION FIRESTOPPING

PART 1 - GENERAL

1.1 RELATED DOCUMENTS

A. Drawings and general provisions of the Contract, including General and Supplementary Conditions and Division 01 Specification Sections, apply to this Section.

1.2 SUMMARY

A. Section Includes:

1. Penetrations in fire-resistance-rated walls.
2. Penetrations in horizontal assemblies.
3. Penetrations in smoke barriers.

B. Related Requirements:

1. Section 078443 "Joint Firestopping" for joints in or between fire-resistance-rated construction, and in smoke barriers.

1.3 ACTION SUBMITTALS

A. Product Data: For each type of product.

B. Product Schedule: For each penetration firestopping system. Include location, illustration of firestopping system, and design designation of qualified testing and inspecting agency.

1. Engineering Judgments: Where Project conditions require modification to a qualified testing and inspecting agency's illustration for a particular penetration firestopping system, submit illustration, with modifications marked, approved by penetration firestopping system manufacturer's fire-protection engineer as an engineering judgment or equivalent fire-resistance-rated assembly. Obtain approval of authorities having jurisdiction prior to submittal.

1.4 INFORMATIONAL SUBMITTALS

A. Qualification Data: For Installer.

B. Product Test Reports: For each penetration firestopping system, for tests performed by a qualified testing agency.

1.5 CLOSEOUT SUBMITTALS

A. Installer Certificates: From Installer indicating that penetration firestopping systems have been installed in compliance with requirements and manufacturer's written instructions.

1.6 PROJECT CONDITIONS

A. Environmental Limitations: Do not install penetration firestopping system when ambient or substrate temperatures are outside limits permitted by penetration firestopping system manufacturers or when substrates are wet because of rain, frost, condensation, or other causes.

B. Install and cure penetration firestopping materials per manufacturer's written instructions using natural means of ventilations or, where this is inadequate, forced-air circulation.

1.7 COORDINATION

A. Coordinate construction of openings and penetrating items to ensure that penetration firestopping systems can be installed according to specified firestopping system design.

B. Coordinate sizing of sleeves, openings, core-drilled holes, or cut openings to accommodate penetration firestopping systems.

PART 2 - PRODUCTS

2.1 PERFORMANCE REQUIREMENTS

A. Fire-Test-Response Characteristics:

1. Perform penetration firestopping system tests by a qualified testing agency acceptable to authorities having jurisdiction.
2. Test per testing standards referenced in "Penetration Firestopping Systems" Article. Provide rated systems complying with the following requirements:

a. Penetration firestopping systems shall bear classification marking of a qualified testing agency.

1) UL in its "Fire Resistance Directory."

2.2 PENETRATION FIRESTOPPING SYSTEMS

A. Penetration Firestopping Systems: Systems that resist spread of fire, passage of smoke and other gases, and maintain original fire-resistance rating of construction penetrated. Penetration firestopping systems shall be compatible with one another, with the substrates forming openings, and with penetrating items if any.

1. Manufacturers: Subject to compliance with requirements, provide products by one of the following:

a. 3M Fire Protection Products.
b. A/D Fire Protection Systems Inc.
c. Construction Solutions.
d. Grabber Construction Products.
e. Hilti, Inc.
f. HOLDRITE.
g. NUCO Inc.
h. Passive Fire Protection Partners.
i. RectorSeal.
j. Specified Technologies, Inc.
k. STC Architectural Products.
l. Tremco, Inc.

B. Penetrations in Fire-Resistance-Rated Walls: Penetration firestopping systems with ratings determined per ASTM E 814 or UL 1479, based on testing at a positive pressure differential of 0.01-inch wg.

1. F-Rating: Not less than the fire-resistance rating of constructions penetrated.

C. Penetrations in Horizontal Assemblies: Penetration firestopping systems with ratings determined per ASTM E 814 or UL 1479, based on testing at a positive pressure differential of 0.01-inch wg.

1. F-Rating: At least one hour, but not less than the fire-resistance rating of constructions penetrated.
2. T-Rating: At least one hour, but not less than the fire-resistance rating of constructions penetrated except for floor penetrations within the cavity of a wall.
3. W-Rating: Provide penetration firestopping systems showing no evidence of water leakage when tested according to UL 1479.

D. Penetrations in Smoke Barriers: Penetration firestopping systems with ratings determined per UL 1479, based on testing at a positive pressure differential of 0.30-inch wg.

1. L-Rating: Not exceeding 5.0 cfm/sq. ft. of penetration opening at and no more than 50-cfm cumulative total for any 100 sq. ft. at both ambient and elevated temperatures.

E. Exposed Penetration Firestopping Systems: Flame-spread and smoke-developed indexes of less than 25 and 450, respectively, per ASTM E 84.

F. Accessories: Provide components for each penetration firestopping system that are needed to install fill materials and to maintain ratings required. Use only those components specified by penetration firestopping system manufacturer and approved by qualified testing and inspecting agency for conditions indicated.

1. Permanent forming/damming/backing materials.
2. Substrate primers.
3. Collars.
4. Steel sleeves.

2.3 FILL MATERIALS

A. Cast-in-Place Firestop Devices: Factory-assembled devices for use in cast-in-place concrete floors and consisting of an outer sleeve lined with an intumescent strip, a flange attached to one end of the sleeve for fastening to concrete formwork, and a neoprene gasket.

B. Latex Sealants: Single-component latex formulations that do not re-emulsify after cure during exposure to moisture.

C. Firestop Devices: Factory-assembled collars formed from galvanized steel and lined with intumescent material sized to fit specific diameter of penetrant.

D. Intumescent Composite Sheets: Rigid panels consisting of aluminum-foil-faced intumescent elastomeric sheet bonded to galvanized-steel sheet.

E. Intumescent Putties: Nonhardening, water-resistant, intumescent putties containing no solvents or inorganic fibers.

F. Intumescent Wrap Strips: Single-component intumescent elastomeric sheets with aluminum foil on one side.

G. Mortars: Prepackaged dry mixes consisting of a blend of inorganic binders, hydraulic cement, fillers and lightweight aggregate formulated for mixing with water at Project site to form a nonshrinking, homogeneous mortar.

H. Pillows/Bags: Reusable heat-expanding pillows/bags consisting of glass-fiber cloth cases filled with a combination of mineral-fiber, water-insoluble expansion agents, and fire-retardant additives. Where exposed, cover openings with steel-reinforcing wire mesh to protect pillows/bags from being easily removed.

I. Silicone Foams: Multicomponent, silicone-based liquid elastomers that, when mixed, expand and cure in place to produce a flexible, nonshrinking foam.

J. Silicone Sealants: Single-component, silicone-based, neutral-curing elastomeric sealants.

2.4 MIXING

A. Penetration Firestopping Materials: For those products requiring mixing before application, comply with penetration firestopping system manufacturer's written instructions for accurate proportioning of materials, water (if required), type of mixing equipment, selection of mixer speeds, mixing containers, mixing time, and other items or procedures needed to produce products of uniform quality with optimum performance characteristics for application indicated.

PART 3 - EXECUTION

3.1 EXAMINATION

A. Examine substrates and conditions, with Installer present, for compliance with requirements for opening configurations, penetrating items, substrates, and other conditions affecting performance of the Work.

B. Proceed with installation only after unsatisfactory conditions have been corrected.

3.2 PREPARATION

A. Surface Cleaning: Before installing penetration firestopping systems, clean out openings immediately to comply with manufacturer's written instructions and with the following requirements:

1. Remove from surfaces of opening substrates and from penetrating items foreign materials that could interfere with adhesion of penetration firestopping materials.
2. Clean opening substrates and penetrating items to produce clean, sound surfaces capable of developing optimum bond with penetration firestopping materials. Remove loose particles remaining from cleaning operation.
3. Remove laitance and form-release agents from concrete.

B. Prime substrates where recommended in writing by manufacturer using that manufacturer's recommended products and methods. Confine primers to areas of bond; do not allow spillage and migration onto exposed surfaces.

3.3 INSTALLATION

A. General: Install penetration firestopping systems to comply with manufacturer's written installation instructions and published drawings for products and applications.

B. Install forming materials and other accessories of types required to support fill materials during their application and in the position needed to produce cross-sectional shapes and depths required to achieve fire ratings.

1. After installing fill materials and allowing them to fully cure, remove combustible forming materials and other accessories not forming permanent components of firestopping.

C. Install fill materials by proven techniques to produce the following results:

1. Fill voids and cavities formed by openings, forming materials, accessories and penetrating items to achieve required fire-resistance ratings.
2. Apply materials so they contact and adhere to substrates formed by openings and penetrating items.
3. For fill materials that will remain exposed after completing the Work, finish to produce smooth, uniform surfaces that are flush with adjoining finishes.

3.4 IDENTIFICATION

A. Wall Identification: Permanently label walls containing penetration firestopping systems with the words "FIRE AND/OR SMOKE BARRIER - PROTECT ALL OPENINGS," using lettering not less than 3 inches high and with minimum 0.375-inch strokes.

1. Locate in accessible concealed floor, floor-ceiling, or attic space at 15 feet from end of wall and at intervals not exceeding 30 feet.

B. Penetration Identification: Identify each penetration firestopping system with legible metal or plastic labels. Attach labels permanently to surfaces adjacent to and within 6 inches of penetration firestopping system edge so labels are visible to anyone seeking to remove penetrating items or firestopping systems. Use mechanical fasteners or self-adhering-type labels with adhesives capable of permanently bonding labels to surfaces on which labels are placed. Include the following information on labels:

1. The words "Warning - Penetration Firestopping - Do Not Disturb. Notify Building Management of Any Damage."
2. Contractor's name, address, and phone number.
3. Designation of applicable testing and inspecting agency.
4. Date of installation.
5. Manufacturer's name.
6. Installer's name.

3.5 FIELD QUALITY CONTROL

A. Owner will engage a qualified testing agency to perform tests and inspections according to ASTM E 2174.

B. Where deficiencies are found or penetration firestopping system is damaged or removed because of testing, repair or replace penetration firestopping system to comply with requirements.

C. Proceed with enclosing penetration firestopping systems with other construction only after inspection reports are issued and installations comply with requirements.

3.6 CLEANING AND PROTECTION

A. Clean off excess fill materials adjacent to openings as the Work progresses by methods and with cleaning materials that are approved in writing by penetration firestopping system manufacturers and that do not damage materials in which openings occur.

B. Provide final protection and maintain conditions during and after installation that ensure that penetration firestopping systems are without damage or deterioration at time of Substantial Completion. If, despite such protection, damage or deterioration occurs, immediately cut out and remove damaged or deteriorated penetration firestopping material and install new materials to produce systems complying with specified requirements.

3.7 PENETRATION FIRESTOPPING SYSTEM SCHEDULE

A. Where UL-classified systems are indicated, they refer to system numbers in UL's "Fire Resistance Directory" under product Category XHEZ.

A. Penetration Firestopping with No Penetrating Items:

1. UL-Classified Systems: C-AJ-0001-0999 and W-L-0001-0999.
2. Type of Fill Materials: As required to achieve rating.

B. Penetration Firestopping for Metallic Pipes, Conduit, or Tubing:

1. UL-Classified Systems: C-AJ-1001-1999 and W-L-1001-1999.
2. Type of Fill Materials: As required to achieve rating.

C. Penetration Firestopping for Nonmetallic Pipe, Conduit, or Tubing:

1. UL-Classified Systems: C-AJ-2001-2999 and W-L-2001-2999.
2. Type of Fill Materials: As required to achieve rating.

D. Penetration Firestopping for Electrical Cables:

1. UL-Classified Systems: C-AJ-3001-3999 and W-L-3001-3999.

E. Penetration Firestopping for Cable Trays with Electric Cables:

1. UL-Classified Systems: C-AJ-4001-4999 and W-L-4001-4999.
2. Type of Fill Materials: As required to achieve rating.

F. Penetration Firestopping for Insulated Pipes:

1. UL-Classified Systems: C-AJ-5001-5999 and W-L-5001-5999.
2. Type of Fill Materials: As required to achieve rating.

G. Penetration Firestopping for Miscellaneous Electrical Penetrants:

1. UL-Classified Systems: C-AJ-6001-6999 and W-L-6001-6999.
2. Type of Fill Materials: As required to achieve rating.

H. Penetration Firestopping for Miscellaneous Mechanical Penetrants:

1. UL-Classified Systems: C-AJ-7001-7999 and W-L-7001-7999.
2. Type of Fill Materials: As required to achieve rating.

I. Penetration Firestopping for Groupings of Penetrants:

1. UL-Classified Systems: C-AJ-8001-8999 and W-L-8001-8999.
2. Type of Fill Materials: As required to achieve rating.

END OF SECTION 078413

SECTION 078443 - JOINT FIRESTOPPING

PART 1 - GENERAL

1.1 RELATED DOCUMENTS

A. Drawings and general provisions of the Contract, including General and Supplementary Conditions and Division 01 Specification Sections, apply to this Section.

1.2 SUMMARY

A. Section Includes:

1. Joints in or between fire-resistance-rated constructions.
2. Joints in smoke barriers.

B. Related Requirements:

1. Section 078413 "Penetration Firestopping" for penetrations in fire-resistance-rated walls, horizontal assemblies, and smoke barriers and for wall identification.
2. Section 092216 "Non-Structural Metal Framing" for firestop tracks for metal-framed partition heads.

1.3 ACTION SUBMITTALS

A. Product Data: For each type of product.

B. Product Schedule: For each joint firestopping system. Include location, illustration of firestopping system, and design designation of qualified testing agency.

1. Engineering Judgments: Where Project conditions require modification to a qualified testing agency's illustration for a particular joint firestopping system condition, submit illustration, with modifications marked, approved by joint firestopping system manufacturer's fire-protection engineer as an engineering judgment or equivalent fire-resistance-rated assembly.

1.4 INFORMATIONAL SUBMITTALS

A. Qualification Data: For Installer.

B. Product Test Reports: For each joint firestopping system, for tests performed by a qualified testing agency.

1.5 CLOSEOUT SUBMITTALS

A. Installer Certificates: From Installer indicating that joint firestopping systems have been installed in compliance with requirements and manufacturer's written instructions.

1.6 QUALITY ASSURANCE

A. Installer Qualifications: A firm that has been approved by FM Global according to FM Global 4991, "Approval of Firestop Contractors," or been evaluated by UL and found to comply with UL's "Qualified Firestop Contractor Program Requirements."

1.7 PROJECT CONDITIONS

A. Environmental Limitations: Do not install joint firestopping systems when ambient or substrate temperatures are outside limits permitted by joint firestopping system manufacturers or when substrates are wet due to rain, frost, condensation, or other causes.

B. Install and cure joint firestopping systems per manufacturer's written instructions using natural means of ventilation or, where this is inadequate, forced-air circulation.

1.8 COORDINATION

A. Coordinate construction of joints to ensure that joint firestopping systems can be installed according to specified firestopping system design.

B. Coordinate sizing of joints to accommodate joint firestopping systems.

PART 2 - PRODUCTS

2.1 PERFORMANCE REQUIREMENTS

A. Fire-Test-Response Characteristics:

1. Perform joint firestopping system tests by a qualified testing agency acceptable to authorities having jurisdiction.
2. Test per testing standards referenced in "Joint Firestopping Systems" Article. Provide rated systems complying with the following requirements:

a. Joint firestopping systems shall bear classification marking of a qualified testing agency.

1) UL in its "Fire Resistance Directory."

2.2 JOINT FIRESTOPPING SYSTEMS

A. Joint Firestopping Systems: Systems that resist spread of fire, passage of smoke and other gases, and maintain original fire-resistance rating of assemblies in or between which joint firestopping systems are installed. Joint firestopping systems shall accommodate building movements without impairing their ability to resist the passage of fire and hot gases.

B. Joints in or between Fire-Resistance-Rated Construction: Provide joint firestopping systems with ratings determined per ASTM E 1966 or UL 2079.

1. Manufacturers: Subject to compliance with requirements, provide products by one of the following:

a. 3M Fire Protection Products.
b. A/D Fire Protection Systems Inc.
c. Blazeframe Industries.
d. Grabber Construction Products.
e. Hilti, Inc.
f. Metal-Lite.
g. Nelson Firestop; a brand of Emerson Industrial Automation.
h. NUCO Inc.
i. Passive Fire Protection Partners.
j. RectorSeal.
k. Roxul Inc.
l. Specified Technologies, Inc.
m. Thermafiber, Inc.; an Owens Corning company.
n. Tremco, Inc.

2. Fire-Resistance Rating: Equal to or exceeding the fire-resistance rating of the wall, floor, or roof in or between which it is installed.

C. Joints in Smoke Barriers: Provide fire-resistive joint systems with ratings determined per UL 2079 based on testing at a positive pressure differential of 0.30-inch wg.

1. Manufacturers: Subject to compliance with requirements, provide products by one of the following:

a. 3M Fire Protection Products.
b. A/D Fire Protection Systems Inc.
c. Hilti, Inc.
d. Nelson Firestop; a brand of Emerson Industrial Automation.
e. NUCO Inc.
f. Passive Fire Protection Partners.
g. RectorSeal.
h. Roxul Inc.
i. Specified Technologies, Inc.
j. Thermafiber, Inc.; an Owens Corning company.
k. Tremco, Inc.

2. L-Rating: Not exceeding 5.0 cfm/ft. of joint at both ambient and elevated temperatures.

D. Exposed Joint Firestopping Systems: Flame-spread and smoke-developed indexes of less than 25 and 450, respectively, as determined per ASTM E 84.

E. Accessories: Provide components of fire-resistive joint systems, including primers and forming materials, that are needed to install elastomeric fill materials and to maintain ratings required. Use only components specified by joint firestopping system manufacturer and approved by the qualified testing agency for conditions indicated.

PART 3 - EXECUTION

3.1 EXAMINATION

A. Examine substrates and conditions, with Installer present, for compliance with requirements for joint configurations, substrates, and other conditions affecting performance of the Work.

B. Proceed with installation only after unsatisfactory conditions have been corrected.

3.2 PREPARATION

A. Surface Cleaning: Before installing fire-resistive joint systems, clean joints immediately to comply with fire-resistive joint system manufacturer's written instructions and the following requirements:

1. Remove from surfaces of joint substrates foreign materials that could interfere with adhesion of elastomeric fill materials or compromise fire-resistive rating.
2. Clean joint substrates to produce clean, sound surfaces capable of developing optimum bond with elastomeric fill materials. Remove loose particles remaining from cleaning operation.
3. Remove laitance and form-release agents from concrete.

B. Prime substrates where recommended in writing by joint firestopping system manufacturer using that manufacturer's recommended products and methods. Confine primers to areas of bond; do not allow spillage and migration onto exposed surfaces.

3.3 INSTALLATION

A. General: Install fire-resistive joint systems to comply with manufacturer's written installation instructions and published drawings for products and applications indicated.

B. Install forming materials and other accessories of types required to support elastomeric fill materials during their application and in position needed to produce cross-sectional shapes and depths required to achieve fire ratings indicated.

1. After installing elastomeric fill materials and allowing them to fully cure, remove combustible forming materials and other accessories not indicated as permanent components of fire-resistive joint system.

C. Install elastomeric fill materials for fire-resistive joint systems by proven techniques to produce the following results:

1. Elastomeric fill voids and cavities formed by joints and forming materials as required to achieve fire-resistance ratings indicated.
2. Apply elastomeric fill materials so they contact and adhere to substrates formed by joints.
3. For elastomeric fill materials that will remain exposed after completing the Work, finish to produce smooth, uniform surfaces that are flush with adjoining finishes.

3.4 IDENTIFICATION

A. Joint Identification: Identify joint firestopping systems with legible metal or plastic labels. Attach labels permanently to surfaces adjacent to and within 6 inches of joint edge so labels are visible to anyone seeking to remove or joint firestopping system. Use mechanical fasteners or self-adhering-type labels with adhesives capable of permanently bonding labels to surfaces on which labels are placed. Include the following information on labels:

1. The words "Warning - Joint Firestopping - Do Not Disturb. Notify Building Management of Any Damage."
2. Contractor's name, address, and phone number.
3. Designation of applicable testing agency.
4. Date of installation.
5. Manufacturer's name.
6. Installer's name.

3.5 FIELD QUALITY CONTROL

A. Inspecting Agency: Owner will engage a qualified testing agency to perform tests and inspections according to ASTM E 2393.

B. Where deficiencies are found or joint firestopping systems are damaged or removed due to testing, repair or replace joint firestopping systems so they comply with requirements.

C. Proceed with enclosing joint firestopping systems with other construction only after inspection reports are issued and installations comply with requirements.

3.6 CLEANING AND PROTECTION

A. Clean off excess elastomeric fill materials adjacent to joints as the Work progresses by methods and with cleaning materials that are approved in writing by joint firestopping system manufacturers and that do not damage materials in which joints occur.

B. Provide final protection and maintain conditions during and after installation that ensure joint firestopping systems are without damage or deterioration at time of Substantial Completion. If damage or deterioration occurs despite such protection, cut out and remove damaged or deteriorated fire-resistive joint systems immediately and install new materials to produce fire-resistive joint systems complying with specified requirements.

3.7 JOINT FIRESTOPPING SYSTEM SCHEDULE

A. Where UL-classified systems are indicated, they refer to system numbers in UL's "Fire Resistance Directory" under product Category XHBN.

A. Floor-to-Floor, Joint Firestopping Systems:

1. UL-Classified Systems: FF-S (D as required)-0000-0999.

B. Wall-to-Wall, Joint Firestopping Systems:

1. UL-Classified Systems: WW-S (D as required)-0000-0999.

C. Floor-to-Wall, Joint Firestopping Systems:

1. UL-Classified Systems: FW-S (D as required)-0000-0999.

D. Head-of-Wall, Joint Firestopping Systems:

1. UL-Classified Systems: HW-S (D as required)-0000-0999.

E. Bottom-of-Wall, Joint Firestopping Systems:

1. UL-Classified Systems: BW-S (D as required)-0000-0999.

F. Wall-to-Wall, Joint Firestopping Systems Intended for Use as Corner Guards:

1. UL-Classified Systems: CG-S (D as required)-0000-0999.

G. Perimeter Joint Firestopping Systems:

1. UL-Classified Perimeter Fire-Containment Systems: CW-S (D as required)-0000-0999.

END OF SECTION 078443

SECTION 079200 - JOINT SEALANTS

PART 1 - GENERAL

1.1 RELATED DOCUMENTS

A. Drawings and general provisions of the Contract, including General and Supplementary Conditions and Division 01 Specification Sections, apply to this Section.

1.2 SUMMARY

A. Section Includes:

1. Silicone joint sealants.
2. Nonstaining silicone joint sealants.
3. Immersible joint sealants.
4. Silyl-terminated polyether joint sealants.
5. Mildew-resistant joint sealants.
6. Butyl joint sealants.
7. Latex joint sealants.

B. Related Requirements:

1. Section 079100 "Preformed Joint Seals" for preformed compressible foam and precured joint seals.
2. Section 079219 "Acoustical Joint Sealants" for sealing joints in sound-rated construction.

1.3 ACTION SUBMITTALS

A. Product Data: For each joint-sealant product.

B. Samples for Initial Selection: Manufacturer's color charts consisting of strips of cured sealants showing the full range of colors available for each product exposed to view.

C. Joint-Sealant Schedule: Include the following information:

1. Joint-sealant application, joint location, and designation.
2. Joint-sealant manufacturer and product name.
3. Joint-sealant formulation.
4. Joint-sealant color.

1.4 INFORMATIONAL SUBMITTALS

A. Qualification Data: For qualified testing agency.

B. Product Test Reports: For each kind of joint sealant, for tests performed by manufacturer and witnessed by a qualified testing agency or a qualified testing agency.

C. Preconstruction Field-Adhesion-Test Reports: Indicate which sealants and joint preparation methods resulted in optimum adhesion to joint substrates based on testing specified in "Preconstruction Testing" Article.

D. Field-Adhesion-Test Reports: For each sealant application tested.

E. Sample Warranties: For special warranties.

1.5 QUALITY ASSURANCE

A. Installer Qualifications: An authorized representative who is trained and approved by manufacturer.

B. Product Testing: Test joint sealants using a qualified testing agency.

1. Testing Agency Qualifications: Qualified according to ASTM C 1021 to conduct the testing indicated.

C. Mockups: Install sealant in mockups of assemblies specified in other Sections that are indicated to receive joint sealants specified in this Section. Use materials and installation methods specified in this Section.

1.6 PRECONSTRUCTION TESTING

A. Preconstruction Laboratory Testing: Submit to joint-sealant manufacturers, for testing indicated below, samples of materials that will contact or affect joint sealants.

1. Adhesion Testing: Use ASTM C 794 to determine whether priming and other specific joint preparation techniques are required to obtain rapid, optimum adhesion of joint sealants to joint substrates.
2. Compatibility Testing: Use ASTM C 1087 to determine sealant compatibility when in contact with glazing and gasket materials.
3. Stain Testing: Use ASTM C 1248 to determine stain potential of sealant when in contact with masonry substrates.
4. Submit manufacturer's recommended number of pieces of each type of material, including joint substrates, joint-sealant backings, and miscellaneous materials.
5. Schedule sufficient time for testing and analyzing results to prevent delaying the Work.
6. For materials failing tests, obtain joint-sealant manufacturer's written instructions for corrective measures, including use of specially formulated primers.
7. Testing will not be required if joint-sealant manufacturers submit data that are based on previous testing, not older than 24 months, of sealant products for adhesion to, staining of, and compatibility with joint substrates and other materials matching those submitted.

B. Preconstruction Field-Adhesion Testing: Before installing sealants, field test their adhesion to Project joint substrates as follows:

1. Locate test joints where indicated on Project or, if not indicated, as directed by Architect.
2. Conduct field tests for each kind of sealant and joint substrate.
3. Notify Architect seven days in advance of dates and times when test joints will be erected.
4. Arrange for tests to take place with joint-sealant manufacturer's technical representative present.

    a. Test Method: Test joint sealants according to Method A, Field-Applied Sealant Joint Hand Pull Tab, in Appendix X1.1 in ASTM C 1193 or Method A, Tail Procedure, in ASTM C 1521.

        1) For joints with dissimilar substrates, verify adhesion to each substrate separately; extend cut along one side, verifying adhesion to opposite side. Repeat procedure for opposite side.

5. Report whether sealant failed to adhere to joint substrates or tore cohesively. Include data on pull distance used to test each kind of product and joint substrate. For sealants that fail adhesively, retest until satisfactory adhesion is obtained.
6. Evaluation of Preconstruction Field-Adhesion-Test Results: Sealants not evidencing adhesive failure from testing, in absence of other indications of noncompliance with requirements, will be considered satisfactory. Do not use sealants that fail to adhere to joint substrates during testing.

1.7 FIELD CONDITIONS

A. Do not proceed with installation of joint sealants under the following conditions:

1. When ambient and substrate temperature conditions are outside limits permitted by joint-sealant manufacturer or are below 40 deg F.
2. When joint substrates are wet.
3. Where joint widths are less than those allowed by joint-sealant manufacturer for applications indicated.
4. Where contaminants capable of interfering with adhesion have not yet been removed from joint substrates.

1.8 WARRANTY

A. Special Installer's Warranty: Installer agrees to repair or replace joint sealants that do not comply with performance and other requirements specified in this Section within specified warranty period.

1. Warranty Period: Two years from date of Substantial Completion.

B. Special Manufacturer's Warranty: Manufacturer agrees to furnish joint sealants to repair or replace those joint sealants that do not comply with performance and other requirements specified in this Section within specified warranty period.

1. Warranty Period: Five years from date of Substantial Completion.

C. Special warranties specified in this article exclude deterioration or failure of joint sealants from the following:

1. Movement of the structure caused by stresses on the sealant exceeding sealant manufacturer's written specifications for sealant elongation and compression.
2. Disintegration of joint substrates from causes exceeding design specifications.
3. Mechanical damage caused by individuals, tools, or other outside agents.
4. Changes in sealant appearance caused by accumulation of dirt or other atmospheric contaminants.

PART 2 - PRODUCTS

2.1 JOINT SEALANTS, GENERAL

A. Compatibility: Provide joint sealants, backings, and other related materials that are compatible with one another and with joint substrates under conditions of service and application, as demonstrated by joint-sealant manufacturer, based on testing and field experience.

B. Colors of Exposed Joint Sealants: As selected by Architect from manufacturer's full range.

2.2 SILICONE JOINT SEALANTS

A. Silicone, S, NS, 100/50, NT: Single-component, nonsag, plus 100 percent and minus 50 percent movement capability, nontraffic-use, neutral-curing silicone joint sealant; ASTM C 920, Type S, Grade NS, Class 100/50, Use NT.

1. Products: Subject to compliance with requirements, provide one of the following:

a. GE Construction Sealants; Momentive Performance Materials Inc.; SCS2700 SilPruf LM.
b. Sika Corporation; Joint Sealants; Sikasil WS-290 or Sikasil WS-290 FPS.

B. Silicone, S, NS, 100/50, T, NT: Single-component, nonsag, plus 100 percent and minus 50 percent movement capability, traffic- and nontraffic-use, neutral-curing silicone joint sealant; ASTM C 920, Type S, Grade NS, Class 100/50, Uses T and NT.

1. Products: Subject to compliance with requirements, provide one of the following:

a. Dow Corning Corporation; DOW CORNING® NS PARKING STRUCTURE SEALANT.

b. May National Associates, Inc.; a subsidiary of Sika Corporation; Bondaflex Sil 728 NS.
c. Sika Corporation; Joint Sealants; Sikasil 728 NS.

C. Silicone, S, P, 100/50, T, NT: Single-component, pourable, plus 100 percent and minus 50 percent movement capability traffic- and nontraffic-use, neutral-curing silicone joint sealant; ASTM C 920, Type S, Grade P, Class 100/50, Uses T and NT.

1. Products: Subject to compliance with requirements, provide one of the following:

a. May National Associates, Inc.; a subsidiary of Sika Corporation; Bondaflex Sil 728 SG or Bondaflex Sil 728 SL.
b. Sika Corporation; Joint Sealants; Sikasil 728 SL.

2.3 NONSTAINING SILICONE JOINT SEALANTS

A. Nonstaining Joint Sealants: No staining of substrates when tested according to ASTM C 1248.

B. Silicone, Nonstaining, S, NS, 100/50, NT: Nonstaining, single-component, nonsag, plus 100 percent and minus 50 percent movement capability, nontraffic-use, neutral-curing silicone joint sealant; ASTM C 920, Type S, Grade NS, Class 100/50, Use NT.

1. Products: Subject to compliance with requirements, provide one of the following:

a. May National Associates, Inc.; a subsidiary of Sika Corporation; Bondaflex Sil 290 FPS-NB or Bondaflex Sil 290 NB.
b. Pecora Corporation; 890 NST or 890FTS/TXTR.
c. Tremco Incorporated; Spectrem 1.

2.4 IMMERSIBLE JOINT SEALANTS

A. Immersible Joint Sealants. Suitable for immersion in liquids; ASTM C 1247, Class 1; tested in deionized water unless otherwise indicated

B. Urethane, Immersible, S, P, 50, T, NT, I: Immersible, single-component, pourable, plus 50 percent and minus 50 percent movement capability, traffic- and nontraffic-use, urethane joint sealant; ASTM C 920, Type S, Grade P, Class 50, Uses T, NT, and I.

1. Products: Subject to compliance with requirements, provide the following:

a. Tremco Incorporated; Vulkem 45 SSL.

2.5 SILYL-TERMINATED POLYETHER (STPE) JOINT SEALANTS

A. STPE, S, NS, 100/50, T, NT: Single-component, nonsag, plus 100 percent and minus 50 percent movement capability, traffic- and nontraffic-use, silyl-terminated polyether joint sealant; ASTM C 920, Type S, Grade NS, Class 100, Uses T and NT.

1. Products: Subject to compliance with requirements, provide the following:

a. Soudal USA; SoudaSeal 150LM.

2.6 MILDEW-RESISTANT JOINT SEALANTS

A. Mildew-Resistant Joint Sealants: Formulated for prolonged exposure to humidity with fungicide to prevent mold and mildew growth.

B. Silicone, Mildew Resistant, Acid Curing, S, NS, 25, NT: Mildew-resistant, single-component, nonsag, plus 25 percent and minus 25 percent movement capability, nontraffic-use, acid-curing silicone joint sealant; ASTM C 920, Type S, Grade NS, Class 25, Use NT.

1. Products: Subject to compliance with requirements, provide one of the following:

a. Dow Corning Corporation; DOW CORNING® 786 SILICONE SEALANT -.
b. GE Construction Sealants; Momentive Performance Materials Inc.; SCS1700 Sanitary.
c. May National Associates, Inc.; a subsidiary of Sika Corporation; Bondaflex Sil 100 WF.
d. Soudal USA; RTV GP.
e. Tremco Incorporated; Tremsil 200.

C. STPE, Mildew Resistant, S, NS, 50, NT: Mildew-resistant, single-component, nonsag, plus 50 percent and minus 50 percent movement capability, nontraffic-use, silyl-terminated polyether joint sealant; ASTM C 920, Type S, Grade NS, Class 50, Use NT.

1. Products: Subject to compliance with requirements, provide the following:

a. BASF Corporation; Construction Systems; MasterSeal NP 150 (Pre-2014: Sonolastic 150VLM).

2.7 BUTYL JOINT SEALANTS

A. Butyl-Rubber-Based Joint Sealants: ASTM C 1311.

1. Manufacturers: Subject to compliance with requirements, provide products by one of the following:

a. Bostik, Inc.
b. Pecora Corporation.

2.8 LATEX JOINT SEALANTS

A. Acrylic Latex: Acrylic latex or siliconized acrylic latex, ASTM C 834, Type OP, Grade NF.

1. Products: Subject to compliance with requirements, provide one of the following:

a. Product by BASF Corporation; Construction Systems.
b. Franklin International; Titebond Painter's Plus Caulk or Titebond UA 920 Sealant.
c. May National Associates, Inc.; a subsidiary of Sika Corporation; Bondaflex 600 or Bondaflex Sil-A 700.
d. Pecora Corporation; AC-20.
e. Sherwin-Williams Company (The); 850A Siliconized Acrylic Latex Caulk, 950A Siliconized Acrylic Latex Caulk, White, or PowerHouse Siliconized Acrylic Latex Sealant.
f. Tremco Incorporated; Tremflex 834.

2.9 JOINT-SEALANT BACKING

A. Sealant Backing Material, General: Nonstaining; compatible with joint substrates, sealants, primers, and other joint fillers; and approved for applications indicated by sealant manufacturer based on field experience and laboratory testing.

1. Products: Subject to compliance with requirements, provide one of the following:

a. Alcot Plastics Ltd.; ALCOT Soft Type Backer Rod or ALCOT Standard Backer Rod.
b. BASF Corporation; Construction Systems; MasterSeal 920 & 921(Pre-2014: Sonolastic Backer Rod).
c. Product by Construction Foam Products; a division of Nomaco, Inc.

B. Cylindrical Sealant Backings: ASTM C 1330, of the types indicated below, or as approved in writing by joint-sealant manufacturer for joint application indicated, and of size and density to control sealant depth and otherwise contribute to producing optimum sealant performance:

1. Exterior Joints: Type B (bicellular material with a surface skin.)
2. All Other Locations: Type C (closed cell materials with a surface skin.)

C. Bond-Breaker Tape: Polyethylene tape or other plastic tape recommended by sealant manufacturer for preventing sealant from adhering to rigid, inflexible joint-filler materials or joint surfaces at back of joint. Provide self-adhesive tape where applicable.

2.10 MISCELLANEOUS MATERIALS

A. Primer: Material recommended by joint-sealant manufacturer where required for adhesion of sealant to joint substrates indicated, as determined from preconstruction joint-sealant-substrate tests and field tests.

B. Cleaners for Nonporous Surfaces: Chemical cleaners acceptable to manufacturers of sealants and sealant backing materials, free of oily residues or other substances capable of staining or harming joint substrates and adjacent nonporous surfaces in any way, and formulated to promote optimum adhesion of sealants to joint substrates.

C. Masking Tape: Nonstaining, nonabsorbent material compatible with joint sealants and surfaces adjacent to joints.

PART 3 - EXECUTION

3.1 EXAMINATION

A. Examine joints indicated to receive joint sealants, with Installer present, for compliance with requirements for joint configuration, installation tolerances, and other conditions affecting performance of the Work.

B. Proceed with installation only after unsatisfactory conditions have been corrected.

3.2 PREPARATION

A. Surface Cleaning of Joints: Clean out joints immediately before installing joint sealants to comply with joint-sealant manufacturer's written instructions and the following requirements:

1. Remove all foreign material from joint substrates that could interfere with adhesion of joint sealant, including dust, paints (except for permanent, protective coatings tested and approved for sealant adhesion and compatibility by sealant manufacturer), old joint sealants, oil, grease, waterproofing, water repellents, water, surface dirt, and frost.
2. Clean porous joint substrate surfaces by brushing, grinding, mechanical abrading, or a combination of these methods to produce a clean, sound substrate capable of developing optimum bond with joint sealants. Remove loose particles remaining after cleaning operations above by vacuuming or blowing out joints with oil-free compressed air. Porous joint substrates include the following:

    a. Concrete.
    b. Masonry.
    c. Unglazed surfaces of ceramic tile.

3. Remove laitance and form-release agents from concrete.
4. Clean nonporous joint substrate surfaces with chemical cleaners or other means that do not stain, harm substrates, or leave residues capable of interfering with adhesion of joint sealants. Nonporous joint substrates include the following:

    a. Metal.
    b. Glass.
    c. Porcelain enamel.
    d. Glazed surfaces of ceramic tile.

B. Joint Priming: Prime joint substrates where recommended by joint-sealant manufacturer or as indicated by preconstruction joint-sealant-substrate tests or prior experience. Apply primer to comply with joint-sealant manufacturer's written instructions. Confine primers to areas of joint-sealant bond; do not allow spillage or migration onto adjoining surfaces.

C. Masking Tape: Use masking tape where required to prevent contact of sealant or primer with adjoining surfaces that otherwise would be permanently stained or damaged by such contact or by cleaning methods required to remove sealant smears. Remove tape immediately after tooling without disturbing joint seal.

3.3 INSTALLATION OF JOINT SEALANTS

A. General: Comply with joint-sealant manufacturer's written installation instructions for products and applications indicated, unless more stringent requirements apply.

B. Sealant Installation Standard: Comply with recommendations in ASTM C 1193 for use of joint sealants as applicable to materials, applications, and conditions indicated.

C. Install sealant backings of kind indicated to support sealants during application and at position required to produce cross-sectional shapes and depths of installed sealants relative to joint widths that allow optimum sealant movement capability.

1. Do not leave gaps between ends of sealant backings.
2. Do not stretch, twist, puncture, or tear sealant backings.
3. Remove absorbent sealant backings that have become wet before sealant application, and replace them with dry materials.

D. Install bond-breaker tape behind sealants where sealant backings are not used between sealants and backs of joints.

E. Install sealants using proven techniques that comply with the following and at the same time backings are installed:

1. Place sealants so they directly contact and fully wet joint substrates.
2. Completely fill recesses in each joint configuration.
3. Produce uniform, cross-sectional shapes and depths relative to joint widths that allow optimum sealant movement capability.

F. Tooling of Nonsag Sealants: Immediately after sealant application and before skinning or curing begins, tool sealants according to requirements specified in subparagraphs below to form smooth, uniform beads of configuration indicated; to eliminate air pockets; and to ensure contact and adhesion of sealant with sides of joint.

1. Remove excess sealant from surfaces adjacent to joints.
2. Use tooling agents that are approved in writing by sealant manufacturer and that do not discolor sealants or adjacent surfaces.
3. Provide concave joint profile per Figure 8A in ASTM C 1193 unless otherwise indicated.
4. Provide flush joint profile at locations indicated on Drawings according to Figure 8B in ASTM C 1193.

5. Provide recessed joint configuration of recess depth and at locations indicated on Drawings according to Figure 8C in ASTM C 1193.

    a. Use masking tape to protect surfaces adjacent to recessed tooled joints.

3.4 FIELD QUALITY CONTROL

A. Field-Adhesion Testing: Field test joint-sealant adhesion to joint substrates as follows:

1. Extent of Testing: Test completed and cured sealant joints as follows:

    a. Perform 10 tests for the first 1000 feet of joint length for each kind of sealant and joint substrate.
    b. Perform one test for each 1000 feet of joint length thereafter or one test per each floor per elevation.

2. Test Method: Test joint sealants according to Method A, Field-Applied Sealant Joint Hand Pull Tab, in Appendix X1 in ASTM C 1193 or Method A, Tail Procedure, in ASTM C 1521.

    a. For joints with dissimilar substrates, verify adhesion to each substrate separately; extend cut along one side, verifying adhesion to opposite side. Repeat procedure for opposite side.

3. Inspect tested joints and report on the following:

    a. Whether sealants filled joint cavities and are free of voids.
    b. Whether sealant dimensions and configurations comply with specified requirements.
    c. Whether sealants in joints connected to pulled-out portion failed to adhere to joint substrates or tore cohesively. Include data on pull distance used to test each kind of product and joint substrate. Compare these results to determine if adhesion complies with sealant manufacturer's field-adhesion hand-pull test criteria.

4. Record test results in a field-adhesion-test log. Include dates when sealants were installed, names of persons who installed sealants, test dates, test locations, whether joints were primed, adhesion results and percent elongations, sealant material, sealant configuration, and sealant dimensions.
5. Repair sealants pulled from test area by applying new sealants following same procedures used originally to seal joints. Ensure that original sealant surfaces are clean and that new sealant contacts original sealant.

B. Evaluation of Field-Adhesion-Test Results: Sealants not evidencing adhesive failure from testing or noncompliance with other indicated requirements will be considered satisfactory. Remove sealants that fail to adhere to joint substrates during testing or to comply with other requirements. Retest failed applications until test results prove sealants comply with indicated requirements.

3.5 CLEANING

A. Clean off excess sealant or sealant smears adjacent to joints as the Work progresses by methods and with cleaning materials approved in writing by manufacturers of joint sealants and of products in which joints occur.

3.6 PROTECTION

A. Protect joint sealants during and after curing period from contact with contaminating substances and from damage resulting from construction operations or other causes so sealants are without deterioration or damage at time of Substantial Completion. If, despite such protection, damage or deterioration occurs, cut out, remove, and repair damaged or deteriorated joint sealants immediately so installations with repaired areas are indistinguishable from original work.

3.7 JOINT-SEALANT SCHEDULE

A. Joint-Sealant Application: Exterior joints in horizontal traffic surfaces.

1. Joint Locations:

    a. Isolation and contraction joints in cast-in-place concrete slabs.
    b. Tile control and expansion joints.
    c. Joints between different materials listed above.
    d. Other joints as indicated on Drawings.

2. Joint Sealant: Silicone, S, NS, 100/50, T.
3. Joint-Sealant Color: As selected by Architect from manufacturer's full range of colors.

B. Joint-Sealant Application: Exterior joints in horizontal traffic surfaces subject to water immersion.

1. Joint Locations:

    a. Joints in pedestrian plazas.
    b. Other joints as indicated on Drawings.

2. Joint Sealant: Urethane, immersible, S, P, 50, T, NT, I.
3. Joint-Sealant Color: As selected by Architect from manufacturer's full range of colors.

C. Joint-Sealant Application: Exterior joints in vertical surfaces and horizontal nontraffic surfaces.

1. Joint Locations:

    a. Construction joints in cast-in-place concrete.
    b. Control and expansion joints in unit masonry.
    c. Joints between metal panels.
    d. Joints between different materials listed above.

e. Perimeter joints between materials listed above and frames of doors, windows, and louvers.
f. Control and expansion joints in ceilings and other overhead surfaces.
g. Other joints as indicated on Drawings.

2. Joint Sealant: Silicone, nonstaining, S, NS, 100/50, NT or paintable STPE, S, NS, 100/50, T, NT.
3. Joint-Sealant Color: As selected by Architect from manufacturer's full range of colors.

D. Joint-Sealant Application: Interior joints in horizontal traffic surfaces.

1. Joint Locations:

a. Isolation joints in cast-in-place concrete slabs.
b. Control and expansion joints in tile flooring.
c. Other joints as indicated on Drawings.

2. Joint Sealant: Silicone, S, P, 100/50, T, NT or paintable STPE, S, NS, 100/50, T, NT. .
3. Joint-Sealant Color: As selected by Architect from manufacturer's full range of colors.

E. Joint-Sealant Application: Interior joints in vertical surfaces and horizontal nontraffic surfaces.

1. Joint Locations:

a. Control and expansion joints on exposed interior surfaces of exterior walls.
b. Tile control and expansion joints.
c. Vertical joints on exposed surfaces of unit masonry walls and partitions.
d. Other joints as indicated on Drawings.

2. Joint Sealant: Silicone, S, NS, 100/50, NT or paintable STPE, S, NS, 100/50, T, NT.
3. Joint-Sealant Color: As selected by Architect from manufacturer's full range of colors.

F. Joint-Sealant Application: Interior joints in vertical surfaces and horizontal nontraffic surfaces not subject to significant movement.

1. Joint Locations:

a. Control joints on exposed interior surfaces of exterior walls.
b. Perimeter joints between interior wall surfaces and frames of interior doors, windows.
c. Other joints as indicated on Drawings.

2. Joint Sealant: Acrylic latex.
3. Joint-Sealant Color: As selected by Architect from manufacturer's full range of colors.

G. Joint-Sealant Application: Mildew-resistant interior joints in vertical surfaces and horizontal nontraffic surfaces.

1. Joint Locations:

a. Joints between plumbing fixtures and adjoining walls, floors, and counters.
b. Tile control and expansion joints where indicated.
c. Other joints as indicated on Drawings.

2. Joint Sealant: Silicone, mildew resistant, acid curing, S, NS, 25, NT or paintable STPE, Mildew Resistant, S, NS, 50, NT.
3. Joint-Sealant Color: As selected by Architect from manufacturer's full range of colors.

H. Joint-Sealant Application: Concealed mastics.

1. Joint Locations:

a. Aluminum thresholds.
b. Sill plates.
c. Other joints as indicated on Drawings.

2. Joint Sealant: Butyl-rubber based.
3. Joint-Sealant Color: As selected by Architect from manufacturer's full range of colors.

END OF SECTION 079200

SECTION 079219 - ACOUSTICAL JOINT SEALANTS

PART 1 - GENERAL

1.1 RELATED DOCUMENTS

A. Drawings and general provisions of the Contract, including General and Supplementary Conditions and Division 01 Specification Sections, apply to this Section.

1.2 SUMMARY

A. Section includes acoustical joint sealants.

B. Related Requirements:

1. Section 079200 "Joint Sealants" for elastomeric, latex, and butyl-rubber-based joint sealants for nonacoustical applications.

1.3 ACTION SUBMITTALS

A. Product Data: For each acoustical joint sealant.

B. Samples for Initial Selection: Manufacturer's color charts consisting of strips of cured sealants showing the full range of colors available for each product exposed to view.

C. Acoustical-Joint-Sealant Schedule: Include the following information:

1. Joint-sealant application, joint location, and designation.
2. Joint-sealant manufacturer and product name.
3. Joint-sealant formulation.
4. Joint-sealant color.

1.4 INFORMATIONAL SUBMITTALS

A. Product Test Reports: For each kind of acoustical joint sealant, for tests performed by manufacturer and witnessed by a qualified testing agency or a qualified testing agency.

B. Sample Warranties: For special warranties.

1.5 WARRANTY

A. Special Installer's Warranty: Installer agrees to repair or replace acoustical joint sealants that do not comply with performance and other requirements specified in this Section within specified warranty period.

1. Warranty Period: Two years from date of Substantial Completion.

B. Special Manufacturer's Warranty: Manufacturer agrees to furnish acoustical joint sealants to repair or replace those joint sealants that do not comply with performance and other requirements specified in this Section within specified warranty period.

1. Warranty Period: years from date of Substantial Completion.

PART 2 - PRODUCTS

2.1 PERFORMANCE REQUIREMENTS

A. Provide acoustical joint-sealant products that effectively reduce airborne sound transmission through perimeter joints and openings in building construction, as demonstrated by testing representative assemblies according to ASTM E 90.

2.2 ACOUSTICAL JOINT SEALANTS

A. Acoustical Sealant for Exposed Joints: Manufacturer's standard nonsag, paintable, nonstaining latex acoustical sealant complying with ASTM C 834.

1. Products: Subject to compliance with requirements, provide one of the following:

a. Accumetric LLC; BOSS 826 Acoustical Sound Sealant.
b. Franklin International; Titebond GREENchoice Professional Acoustical Smoke & Sound Sealant.
c. GE Construction Sealants; Momentive Performance Materials Inc.; RCS20 Acoustical.
d. Grabber Construction Products; Acoustical Sealant GSC.
e. Hilti, Inc.; CP 506 Smoke and Acoustical Sealant.
f. OSI Sealants; Henkel Corporation; OSI Pro-Series SC-175 Acoustical Sound Sealant.
g. Pecora Corporation; AC-20 FTR or AIS-919.
h. Serious Energy Inc.; Quiet Seal Pro.
i. Tremco Incorporated; Tremco Acoustical Sealant.
j. United States Gypsum Company; SHEETROCK Acoustical Sealant.

2. Colors of Exposed Acoustical Joint Sealants: As selected by Architect from manufacturer's full range of colors.

B. Acoustical Sealant for Concealed Joints: Manufacturer's standard nonsag, nondrying, nonhardening, nonskinning, nonstaining, gunnable, synthetic-rubber acoustical sealant.

1. Products: Subject to compliance with requirements, provide one of the following:

a. Pecora Corporation; BA-98.
b. Serious Energy Inc.; Quiet Seal 350.

2.3 MISCELLANEOUS MATERIALS

A. Primer: Material recommended by acoustical-joint-sealant manufacturer where required for adhesion of sealant to joint substrates.

B. Cleaners for Nonporous Surfaces: Chemical cleaners acceptable to manufacturers of sealants and sealant backing materials, free of oily residues or other substances capable of staining or harming joint substrates and adjacent nonporous surfaces in any way, and formulated to promote optimum adhesion of sealants to joint substrates.

C. Masking Tape: Nonstaining, nonabsorbent material compatible with joint sealants and surfaces adjacent to joints.

PART 3 - EXECUTION

3.1 EXAMINATION

A. Examine joints indicated to receive acoustical joint sealants, with Installer present, for compliance with requirements for joint configuration, installation tolerances, and other conditions affecting performance of the Work.

B. Proceed with installation only after unsatisfactory conditions have been corrected.

3.2 PREPARATION

A. Surface Cleaning of Joints: Clean out joints immediately before installing acoustical joint sealants to comply with joint-sealant manufacturer's written instructions.

B. Joint Priming: Prime joint substrates where recommended by acoustical-joint-sealant manufacturer. Apply primer to comply with joint-sealant manufacturer's written instructions. Confine primers to areas of joint-sealant bond; do not allow spillage or migration onto adjoining surfaces.

C. Masking Tape: Use masking tape where required to prevent contact of sealant or primer with adjoining surfaces that otherwise would be permanently stained or damaged by such contact or by cleaning methods required to remove sealant smears. Remove tape immediately after tooling without disturbing joint seal.

3.3 INSTALLATION OF ACOUSTICAL JOINT SEALANTS

A. Comply with acoustical joint-sealant manufacturer's written installation instructions unless more stringent requirements apply.

B. STC-Rated Assemblies: Seal construction at perimeters, behind control joints, and at openings and penetrations with a continuous bead of acoustical joint sealant. Install acoustical joint sealants at both faces of partitions, at perimeters, and through penetrations. Comply with ASTM C 919, ASTM C 1193, and manufacturer's written recommendations for closing off sound-flanking paths around or through assemblies, including sealing partitions to underside of floor slabs above acoustical ceilings.

C. Acoustical Ceiling Areas: Apply acoustical joint sealant at perimeter edge moldings of acoustical ceiling areas in a continuous ribbon concealed on back of vertical legs of moldings before they are installed.

3.4 CLEANING

A. Clean off excess sealant or sealant smears adjacent to joints as the Work progresses by methods and with cleaning materials approved in writing by manufacturers of acoustical joint sealants and of products in which joints occur.

3.5 PROTECTION

A. Protect acoustical joint sealants during and after curing period from contact with contaminating substances and from damage resulting from construction operations or other causes so sealants are without deterioration or damage at time of Substantial Completion. If, despite such protection, damage or deterioration occurs, cut out, remove, and repair damaged or deteriorated acoustical joint sealants immediately so installations with repaired areas are indistinguishable from original work.

END OF SECTION 079219

SECTION 081113 - HOLLOW METAL DOORS AND FRAMES

PART 1 - GENERAL

1.1 RELATED DOCUMENTS

A. Drawings and general provisions of the Contract, including General and Supplementary Conditions and Division 01 Specification Sections, apply to this Section.

1.2 SUMMARY

A. Section includes hollow-metal work.

B. Related Requirements:

1. Section 087100 "Door Hardware" for door hardware for hollow-metal doors.

1.3 DEFINITIONS

A. Minimum Thickness: Minimum thickness of base metal without coatings according to NAAMM-HMMA 803 or SDI A250.8.

1.4 COORDINATION

A. Coordinate anchorage installation for hollow-metal frames. Furnish setting drawings, templates, and directions for installing anchorages, including sleeves, concrete inserts, anchor bolts, and items with integral anchors. Deliver such items to Project site in time for installation.

1.5 ACTION SUBMITTALS

A. Product Data: For each type of product.

1. Include construction details, material descriptions, core descriptions, fire-resistance ratings, and finishes.

B. Shop Drawings: Include the following:

1. Elevations of each door type.
2. Details of doors, including vertical- and horizontal-edge details and metal thicknesses.
3. Frame details for each frame type, including dimensioned profiles and metal thicknesses.
4. Locations of reinforcement and preparations for hardware.
5. Details of each different wall opening condition.
6. Details of anchorages, joints, field splices, and connections.

7. Details of accessories.
8. Details of moldings, removable stops, and glazing.
9. Details of conduit and preparations for power, signal, and control systems.

C. Samples for Initial Selection: For units with factory-applied color finishes.

D. Schedule: Provide a schedule of hollow-metal work prepared by or under the supervision of supplier, using same reference numbers for details and openings as those on Drawings. Coordinate with final Door Hardware Schedule.

1.6 INFORMATIONAL SUBMITTALS

A. Product Test Reports: For each type of hollow-metal door and frame assembly, for tests performed by a qualified testing agency.

1.7 DELIVERY, STORAGE, AND HANDLING

A. Deliver hollow-metal work palletized, packaged, or crated to provide protection during transit and Project-site storage. Do not use nonvented plastic.

1. Provide additional protection to prevent damage to factory-finished units.

B. Deliver welded frames with two removable spreader bars across bottom of frames, tack welded to jambs and mullions.

C. Store hollow-metal work vertically under cover at Project site with head up. Place on minimum 4-inch-high wood blocking. Provide minimum 1/4-inch space between each stacked door to permit air circulation.

PART 2 - PRODUCTS

2.1 MANUFACTURERS

A. Manufacturers: Subject to compliance with requirements, provide products by one of the following:

1. Baron Metal Industries Inc.; an Assa Abloy Group company.
2. Ceco Door; ASSA ABLOY.
3. Curries Company; ASSA ABLOY.
4. DKS Steel Door & Frame Systems, Inc.
5. Fleming Door Products Ltd.; Assa Abloy Group Company.
6. Karpen Steel Custom Doors & Frames.
7. Mesker Door Inc.
8. Pioneer Industries.
9. Republic Doors and Frames.
10. Steelcraft; an Allegion brand.

B. Source Limitations: Obtain hollow-metal work from single source from single manufacturer.

2.2 REGULATORY REQUIREMENTS

A. Fire-Rated Assemblies: Complying with NFPA 80 and listed and labeled by a qualified testing agency acceptable to authorities having jurisdiction for fire-protection ratings indicated, based on testing at positive pressure according to NFPA 252 or UL 10C.

1. Smoke- and Draft-Control Assemblies: Provide an assembly with gaskets listed and labeled for smoke and draft control by a qualified testing agency acceptable to authorities having jurisdiction, based on testing according to UL 1784 and installed in compliance with NFPA 105.

B. Fire-Rated, Borrowed-Lite Assemblies: Complying with NFPA 80 and listed and labeled by a testing and inspecting agency acceptable to authorities having jurisdiction for fire-protection ratings indicated, based on testing according to NFPA 257 or UL 9.

2.3 INTERIOR DOORS AND FRAMES

A. Construct interior doors and frames to comply with the standards indicated for materials, fabrication, hardware locations, hardware reinforcement, tolerances, and clearances, and as specified.

B. Heavy-Duty Doors and Frames: SDI A250.8, Level 2..

1. Physical Performance: Level B according to SDI A250.4.
2. Doors:

    a. Type: As indicated in the Door and Frame Schedule.
    b. Thickness: 1-3/4 inches.
    c. Face: Uncoated, cold-rolled steel sheet, minimum thickness of 0.042 inch.
    d. Edge Construction: Model 1, Full Flush.
    e. Core: Manufacturer's standard kraft-paper honeycomb, polystyrene, polyurethane, polyisocyanurate, mineral-board, or vertical steel-stiffener core at manufacturer's discretion.

3. Frames:

    a. Materials: Uncoated steel sheet, minimum thickness of 0.053 inch.
    b. Frames: Fabricated from same thickness material as adjacent door frame.
    c. Construction: Full profile welded.

4. Exposed Finish: Prime.

2.4 EXTERIOR HOLLOW-METAL DOORS AND FRAMES

A. Construct exterior doors and frames to comply with the standards indicated for materials, fabrication, hardware locations, hardware reinforcement, tolerances, and clearances, and as specified.

B. Extra-Heavy-Duty Doors and Frames: SDI A250.8, Level 3..

1. Physical Performance: Level A according to SDI A250.4.
2. Doors:

    a. Type: As indicated in the Door and Frame Schedule.
    b. Thickness: 1-3/4 inches
    c. Face: Metallic-coated steel sheet, minimum thickness of 0.053 inch, with minimum A40 coating.
    d. Edge Construction: Model 1, Full Flush.
    e. Core: Manufacturer's standard kraft-paper honeycomb, polystyrene, polyurethane, polyisocyanurate, mineral-board, or vertical steel-stiffener core at manufacturer's discretion.

        1) Thermal-Rated Doors: Provide doors fabricated with thermal-resistance value (R-value) of not less than 2.1 deg F x h x sq. ft./Btu when tested according to ASTM C 1363.

3. Frames:

    a. Materials: Metallic-coated steel sheet, minimum thickness of 0.053 inch, with minimum A40 coating.
    b. Construction: Full profile welded.

4. Exposed Finish: Prime.

2.5 BORROWED LITES

A. Hollow-metal frames of uncoated or metallic-coated steel sheet to match adjacent door and frame, minimum thickness of 0.053 inch.

B. Construction: Full profile welded.

2.6 FRAME ANCHORS

A. Jamb Anchors:

1. Masonry Type: Adjustable strap-and-stirrup or T-shaped anchors to suit frame size, not less than 0.042 inch thick, with corrugated or perforated straps not less than 2 inches wide by 10 inches long; or wire anchors not less than 0.177 inch thick.
2. Stud-Wall Type: Designed to engage stud, welded to back of frames; not less than 0.042 inch thick.

3. Compression Type for Drywall Slip-on Frames: Adjustable compression anchors.
4. Postinstalled Expansion Type for In-Place Concrete or Masonry: Minimum 3/8-inch-diameter bolts with expansion shields or inserts. Provide pipe spacer from frame to wall, with throat reinforcement plate, welded to frame at each anchor location.

B. Floor Anchors: Formed from same material as frames, minimum thickness of 0.042 inch, and as follows:

1. Monolithic Concrete Slabs: Clip-type anchors, with two holes to receive fasteners.
2. Separate Topping Concrete Slabs: Adjustable-type anchors with extension clips, allowing not less than 2-inch height adjustment. Terminate bottom of frames at finish floor surface.

2.7 MATERIALS

A. Cold-Rolled Steel Sheet: ASTM A 1008/A 1008M, Commercial Steel (CS), Type B; suitable for exposed applications.

B. Metallic-Coated Steel Sheet: ASTM A 653/A 653M, Commercial Steel (CS), Type B.

C. Frame Anchors: ASTM A 879/A 879M, Commercial Steel (CS), 04Z coating designation; mill phosphatized.

1. For anchors built into exterior walls, steel sheet complying with ASTM A 1008/A 1008M or ASTM A 1011/A 1011M, hot-dip galvanized according to ASTM A 153/A 153M, Class B.

D. Inserts, Bolts, and Fasteners: Hot-dip galvanized according to ASTM A 153/A 153M.

E. Power-Actuated Fasteners in Concrete: Fastener system of type suitable for application indicated, fabricated from corrosion-resistant materials, with clips or other accessory devices for attaching hollow-metal frames of type indicated.

F. Grout: ASTM C 476, except with a maximum slump of 4 inches, as measured according to ASTM C 143/C 143M.

G. Mineral-Fiber Insulation: ASTM C 665, Type I (blankets without membrane facing); consisting of fibers manufactured from slag or rock wool; with maximum flame-spread and smoke-developed indexes of 25 and 50, respectively; passing ASTM E 136 for combustion characteristics.

H. Glazing: Comply with requirements in Section 088000 "Glazing."

I. Bituminous Coating: Cold-applied asphalt mastic, compounded for 15-mil dry film thickness per coat. Provide inert-type noncorrosive compound free of asbestos fibers, sulfur components, and other deleterious impurities.

2.8 FABRICATION

A. Fabricate hollow-metal work to be rigid and free of defects, warp, or buckle. Accurately form metal to required sizes and profiles, with minimum radius for metal thickness. Where practical, fit and assemble units in manufacturer's plant. To ensure proper assembly at Project site, clearly identify work that cannot be permanently factory assembled before shipment.

B. Hollow-Metal Doors:

1. Steel-Stiffened Door Cores: Provide minimum thickness 0.026 inch, steel vertical stiffeners of same material as face sheets extending full-door height, with vertical webs spaced not more than 6 inches apart. Spot weld to face sheets no more than 5 inches o.c. Fill spaces between stiffeners with glass- or mineral-fiber insulation.
2. Fire Door Cores: As required to provide fire-protection ratings indicated.
3. Vertical Edges for Single-Acting Doors: Bevel edges 1/8 inch in 2 inches.
4. Top Edge Closures: Close top edges of doors with inverted closures, except provide flush closures at exterior doors of same material as face sheets.
5. Bottom Edge Closures: Close bottom edges of doors where required for attachment of weather stripping with end closures or channels of same material as face sheets.
6. Exterior Doors: Provide weep-hole openings in bottoms of exterior doors to permit moisture to escape. Seal joints in top edges of doors against water penetration.
7. Astragals: Provide overlapping astragal on one leaf of pairs of doors where required by NFPA 80 for fire-performance rating or where indicated. Extend minimum 3/4 inch beyond edge of door on which astragal is mounted or as required to comply with published listing of qualified testing agency.

C. Hollow-Metal Frames: Where frames are fabricated in sections due to shipping or handling limitations, provide alignment plates or angles at each joint, fabricated of same thickness metal as frames.

1. Frames: Provide closed tubular members with no visible face seams or joints, fabricated from same material as door frame. Fasten members at crossings and to jambs by butt welding.
2. Provide countersunk, flat- or oval-head exposed screws and bolts for exposed fasteners unless otherwise indicated.
3. Grout Guards: Weld guards to frame at back of hardware mortises in frames to be grouted.
4. Floor Anchors: Weld anchors to bottoms of jambs with at least four spot welds per anchor; however, for slip-on drywall frames, provide anchor clips or countersunk holes at bottoms of jambs.
5. Jamb Anchors: Provide number and spacing of anchors as follows:

    a. Masonry Type: Locate anchors not more than 16 inches from top and bottom of frame. Space anchors not more than 32 inches o.c., to match coursing, and as follows:

        1) Two anchors per jamb up to 60 inches high.
        2) Three anchors per jamb from 60 to 90 inches high.

3) Four anchors per jamb from 90 to 120 inches high.
4) Four anchors per jamb plus one additional anchor per jamb for each 24 inches or fraction thereof above 120 inches high.

b. Stud-Wall Type: Locate anchors not more than 18 inches from top and bottom of frame. Space anchors not more than 32 inches o.c. and as follows:

1) Three anchors per jamb up to 60 inches high.
2) Four anchors per jamb from 60 to 90 inches high.
3) Five anchors per jamb from 90 to 96 inches high.
4) Five anchors per jamb plus one additional anchor per jamb for each 24 inches or fraction thereof above 96 inches high.

c. Compression Type: Not less than two anchors in each frame.
d. Postinstalled Expansion Type: Locate anchors not more than 6 inches from top and bottom of frame. Space anchors not more than 26 inches o.c.

6. Head Anchors: Two anchors per head for frames more than 42 inches wide and mounted in metal-stud partitions.
7. Door Silencers: Except on weather-stripped frames, drill stops to receive door silencers as follows. Keep holes clear during construction.

a. Single-Door Frames: Drill stop in strike jamb to receive three door silencers.
b. Double-Door Frames: Drill stop in head jamb to receive two door silencers.

8. Terminated Stops: Terminate stops 6 inches above finish floor with a 45-degree angle cut, and close open end of stop with steel sheet closure. Cover opening in extension of frame with welded-steel filler plate, with welds ground smooth and flush with frame.

D. Fabricate concealed stiffeners and edge channels from either cold- or hot-rolled steel sheet.

E. Hardware Preparation: Factory prepare hollow-metal work to receive templated mortised hardware; include cutouts, reinforcement, mortising, drilling, and tapping according to SDI A250.6, the Door Hardware Schedule, and templates.

1. Reinforce doors and frames to receive nontemplated, mortised, and surface-mounted door hardware.
2. Comply with applicable requirements in SDI A250.6 and BHMA A156.115 for preparation of hollow-metal work for hardware.

F. Stops and Moldings: Provide stops and moldings around glazed lites and louvers where indicated. Form corners of stops and moldings with mitered hairline joints.

1. Single Glazed Lites: Provide fixed stops and moldings welded on secure side of hollow-metal work.
2. Multiple Glazed Lites: Provide fixed and removable stops and moldings so that each glazed lite is capable of being removed independently.
3. Provide fixed frame moldings on outside of exterior and on secure side of interior doors and frames.

4. Provide loose stops and moldings on inside of hollow-metal work.
5. Coordinate rabbet width between fixed and removable stops with glazing and installation types indicated.

2.9 STEEL FINISHES

A. Prime Finish: Clean, pretreat, and apply manufacturer's standard primer.

1. Shop Primer: Manufacturer's standard, fast-curing, lead- and chromate-free primer complying with SDI A250.10; recommended by primer manufacturer for substrate; compatible with substrate and field-applied coatings despite prolonged exposure.

2.10 ACCESSORIES

A. Louvers: Provide louvers for interior doors, where indicated, which comply with SDI 111C, with blades or baffles formed of 0.020-inch-thick, cold-rolled steel sheet set into 0.032-inch-thick steel frame.

1. Sightproof Louver: Stationary louvers constructed with inverted-V or inverted-Y blades.

B. Mullions and Transom Bars: Join to adjacent members by welding or rigid mechanical anchors.

C. Grout Guards: Formed from same material as frames, not less than 0.016 inch thick.

PART 3 - EXECUTION

3.1 EXAMINATION

A. Examine substrates, areas, and conditions, with Installer present, for compliance with requirements for installation tolerances and other conditions affecting performance of the Work.

B. Examine roughing-in for embedded and built-in anchors to verify actual locations before frame installation.

C. Proceed with installation only after unsatisfactory conditions have been corrected.

3.2 PREPARATION

A. Remove welded-in shipping spreaders installed at factory. Restore exposed finish by grinding, filling, and dressing, as required to make repaired area smooth, flush, and invisible on exposed faces.

B. Drill and tap doors and frames to receive nontemplated, mortised, and surface-mounted door hardware.

3.3 INSTALLATION

A. General: Install hollow-metal work plumb, rigid, properly aligned, and securely fastened in place. Comply with Drawings and manufacturer's written instructions.

B. Hollow-Metal Frames: Install hollow-metal frames for doors, transoms, sidelites, borrowed lites, and other openings, of size and profile indicated. Comply with SDI A250.11 or NAAMM-HMMA 840 as required by standards specified.

1. Set frames accurately in position; plumbed, aligned, and braced securely until permanent anchors are set. After wall construction is complete, remove temporary braces, leaving surfaces smooth and undamaged.

    a. At fire-rated openings, install frames according to NFPA 80.
    b. Where frames are fabricated in sections because of shipping or handling limitations, field splice at approved locations by welding face joint continuously; grind, fill, dress, and make splice smooth, flush, and invisible on exposed faces.
    c. Install frames with removable stops located on secure side of opening.
    d. Install door silencers in frames before grouting.
    e. Remove temporary braces necessary for installation only after frames have been properly set and secured.
    f. Check plumb, square, and twist of frames as walls are constructed. Shim as necessary to comply with installation tolerances.
    g. Field apply bituminous coating to backs of frames that will be filled with grout containing antifreezing agents.

2. Floor Anchors: Provide floor anchors for each jamb and mullion that extends to floor, and secure with postinstalled expansion anchors.

    a. Floor anchors may be set with power-actuated fasteners instead of postinstalled expansion anchors if so indicated and approved on Shop Drawings.

3. Metal-Stud Partitions: Solidly pack mineral-fiber insulation inside frames.
4. Masonry Walls: Coordinate installation of frames to allow for solidly filling space between frames and masonry with grout.
5. Installation Tolerances: Adjust hollow-metal door frames for squareness, alignment, twist, and plumb to the following tolerances:

    a. Squareness: Plus or minus 1/16 inch, measured at door rabbet on a line 90 degrees from jamb perpendicular to frame head.
    b. Alignment: Plus or minus 1/16 inch, measured at jambs on a horizontal line parallel to plane of wall.
    c. Twist: Plus or minus 1/16 inch, measured at opposite face corners of jambs on parallel lines, and perpendicular to plane of wall.
    d. Plumbness: Plus or minus 1/16 inch, measured at jambs at floor.

C. Hollow-Metal Doors: Fit hollow-metal doors accurately in frames, within clearances specified below. Shim as necessary.

1. Non-Fire-Rated Steel Doors:

a. Between Door and Frame Jambs and Head: 1/8 inch plus or minus 1/32 inch.
b. Between Edges of Pairs of Doors: 1/8 inch to 1/4 inch plus or minus 1/32 inch.
c. At Bottom of Door: 3/4 inch plus or minus 1/32 inch.
d. Between Door Face and Stop: 1/16 inch to 1/8 inch plus or minus 1/32 inch.

2. Fire-Rated Doors: Install doors with clearances according to NFPA 80.
3. Smoke-Control Doors: Install doors and gaskets according to NFPA 105.

D. Glazing: Comply with installation requirements in Section 088000 "Glazing" and with hollow-metal manufacturer's written instructions.

1. Secure stops with countersunk flat- or oval-head machine screws spaced uniformly not more than 9 inches o.c. and not more than 2 inches o.c. from each corner.

3.4 ADJUSTING AND CLEANING

A. Final Adjustments: Check and readjust operating hardware items immediately before final inspection. Leave work in complete and proper operating condition. Remove and replace defective work, including hollow-metal work that is warped, bowed, or otherwise unacceptable.

B. Remove grout and other bonding material from hollow-metal work immediately after installation.

C. Prime-Coat Touchup: Immediately after erection, sand smooth rusted or damaged areas of prime coat and apply touchup of compatible air-drying, rust-inhibitive primer.

D. Metallic-Coated Surface Touchup: Clean abraded areas and repair with galvanizing repair paint according to manufacturer's written instructions.

E. Touchup Painting: Cleaning and touchup painting of abraded areas of paint are specified in painting Sections.

END OF SECTION 081113

SECTION 081416 - FLUSH WOOD DOORS

PART 1 - GENERAL

1.1 RELATED DOCUMENTS

A. Drawings and general provisions of the Contract, including General and Supplementary Conditions and Division 01 Specification Sections, apply to this Section.

1.2 SUMMARY

A. Section Includes:

1. Solid-core doors with wood-veneer faces.
2. Solid-core doors with plastic-laminate faces.
3. Factory finishing flush wood doors.
4. Factory fitting flush wood doors to frames and factory machining for hardware.

B. Related Requirements:

1. Section 062023 "Interior Finish Carpentry" for wood door frames.
2. Section 088000 "Glazing" for glass view panels in flush wood doors.

1.3 ACTION SUBMITTALS

A. Product Data: For each type of door. Include details of core and edge construction, louvers, and trim for openings. Include factory-finishing specifications.

B. Shop Drawings: Indicate location, size, and hand of each door; elevation of each kind of door; construction details not covered in Product Data; and the following:

1. Dimensions and locations of blocking.
2. Dimensions and locations of mortises and holes for hardware.
3. Dimensions and locations of cutouts.
4. Undercuts.
5. Requirements for veneer matching.
6. Doors to be factory finished and finish requirements.
7. Fire-protection ratings for fire-rated doors.

C. Samples for Initial Selection: For plastic-laminate door faces and factory-finished doors.

D. Samples for Verification:

1. Factory finishes applied to actual door face materials, approximately 8 by 10 inches, for each material and finish**.** For each wood species and transparent finish, provide set of three Samples showing typical range of color and grain to be expected in finished Work.
2. Plastic laminate, 6 inches square, for each color, texture, and pattern selected.
3. Corner sections of doors, approximately 8 by 10 inches, with door faces and edges representing actual materials to be used.

    a. Provide Samples for each species of veneer and solid lumber required.
    b. Provide Samples for each color, texture, and pattern of plastic laminate required.
    c. Finish veneer-faced door Samples with same materials proposed for factory-finished doors.

4. Louver blade and frame sections, 6 inches long, for each material and finish specified.
5. Frames for light openings, 6 inches long, for each material, type, and finish required.

1.4 INFORMATIONAL SUBMITTALS

A. Sample Warranty: For special warranty.

1.5 DELIVERY, STORAGE, AND HANDLING

A. Comply with requirements of referenced standard and manufacturer's written instructions.

B. Package doors individually in plastic bags or cardboard cartons.

C. Mark each door on bottom rail with opening number used on Shop Drawings.

1.6 FIELD CONDITIONS

A. Environmental Limitations: Do not deliver or install doors until spaces are enclosed and weathertight, wet work in spaces is complete and dry, and HVAC system is operating and maintaining ambient temperature and humidity conditions at occupancy levels during remainder of construction period.

1.7 WARRANTY

A. Special Warranty: Manufacturer agrees to repair or replace doors that fail in materials or workmanship within specified warranty period.

1. Failures include, but are not limited to, the following:

    a. Warping (bow, cup, or twist) more than 1/4 inch in a 42-by-84-inch section.
    b. Telegraphing of core construction in face veneers exceeding 0.01 inch in a 3-inch span.

2. Warranty shall also include installation and finishing that may be required due to repair or replacement of defective doors.
3. Warranty Period for Solid-Core Interior Doors: Life of installation.

PART 2 - PRODUCTS

2.1 MANUFACTURERS

A. Basis-of-Design: Subject to compliance with requirements, provide product indicated below or a comparable product as approved by the Architect:

1. Manufacturer: Mohawk by Masonite Architectural.
2. Style: Cendura Series Commercial Doors.
3. Surface Types: Wood veneer and plastic laminate.

B. Source Limitations: Obtain flush wood doors from single manufacturer.

2.2 FLUSH WOOD DOORS, GENERAL

A. Quality Standard: In addition to requirements specified, comply with AWI's, AWMAC's, and WI's "Architectural Woodwork Standards."

1. Contract Documents contain selections chosen from options in quality standard and additional requirements beyond those of quality standard. Comply with those selections and requirements in addition to quality standard.

B. WDMA I.S.1-A Performance Grade: Extra Heavy Duty, unless otherwise indicated.

C. Fire-Rated Wood Doors: Doors complying with NFPA 80 that are listed and labeled by a qualified testing agency, for fire-protection ratings indicated, based on testing at positive pressure according to NFPA 252 or UL 10C.

1. Temperature-Rise Limit: At vertical exit enclosures and exit passageways, provide doors that have a maximum transmitted temperature end point of not more than 450 deg F (250 deg C) above ambient after 30 minutes of standard fire-test exposure.
2. Cores: Provide core specified or mineral core as needed to provide fire-protection rating indicated.
3. Edge Construction: Provide edge construction with intumescent seals concealed by outer stile. Comply with specified requirements for exposed edges.
4. Pairs: Provide fire-retardant stiles that are listed and labeled for applications indicated without formed-steel edges and astragals. Provide stiles with concealed intumescent seals. Comply with specified requirements for exposed edges.

D. Smoke- and Draft-Control Door Assemblies: Listed and labeled for smoke and draft control, based on testing according to UL 1784.

E. Structural-Composite-Lumber-Core Doors:

1. Structural Composite Lumber: WDMA I.S.10.

a. Screw Withdrawal, Face: 700 lbf.
b. Screw Withdrawal, Edge: 400 lbf.

2.3 VENEER-FACED DOORS FOR TRANSPARENT FINISH

A. Interior Solid-Core Doors:

1. Grade: Premium, with Grade AA faces.
2. Species: Birch.
3. Cut: Plain sliced.
4. Match between Veneer Leaves: Book match.
5. Assembly of Veneer Leaves on Door Faces: Balance match.
6. Pair and Set Match: Provide for doors hung in same opening.
7. Transom Match: Continuous match.
8. Exposed Vertical and Top Edges: Same species as faces - edge Type A.
9. Core: Either glued wood stave or structural composite lumber.
10. Construction: Five plies. Stiles and rails are bonded to core, then entire unit is abrasive planed before veneering. Faces are bonded to core using a hot press.
11. WDMA I.S.1-A Performance Grade: Extra Heavy Duty.

2.4 PLASTIC-LAMINATE-FACED DOORS

A. Interior Solid-Core Doors:

1. Grade: Premium.
2. Plastic-Laminate Faces: High-pressure decorative laminates complying with NEMA LD 3, Grade HGS.
3. Colors, Patterns, and Finishes: As indicated on the Finish Schedule.
4. Exposed Vertical and Top Edges: Plastic laminate that matches faces, applied before faces.

5. Core: Either glued wood stave or structural composite lumber.
6. Construction: Five plies. Stiles and rails are bonded to core, then entire unit is abrasive planed before faces and crossbands are applied.
7. WDMA I.S.1-A Performance Grade: Extra Heavy Duty.

2.5 LIGHT FRAMES AND LOUVERS

A. Wood Beads for Light Openings in Wood Doors: Provide manufacturer's standard wood beads unless otherwise indicated.

1. Wood Species: Same species as door faces.
2. Profile: Flush rectangular beads.

3. At wood-core doors with 20-minute fire-protection ratings, provide wood beads and metal glazing clips approved for such use.

B. Wood-Veneered Beads for Light Openings in Fire-Rated Doors: Manufacturer's standard wood-veneered noncombustible beads matching veneer species of door faces and approved for use in doors of fire-protection rating indicated. Include concealed metal glazing clips where required for opening size and fire-protection rating indicated.

C. Metal Frames for Light Openings in Fire-Rated Doors: Manufacturer's standard frame formed of 0.048-inch-thick, cold-rolled steel sheet; factory primed for paint or with baked-enamel- or powder-coated finish; and approved for use in doors of fire-protection rating indicated.

D. Wood Louvers: Door manufacturer's standard solid-wood louvers unless otherwise indicated.

1. Wood Species: Same species as door faces.

E. Louvers for Fire-Rated Doors: Metal louvers with fusible link and closing device, listed and labeled for use in doors with fire-protection rating of 1-1/2 hours and less.

1. Metal and Finish: Hot-dip galvanized steel, 0.040 inch thick, factory primed for paint or with baked-enamel- or powder-coated finish.

2.6 FABRICATION

A. Factory fit doors to suit frame-opening sizes indicated. Comply with clearance requirements of referenced quality standard for fitting unless otherwise indicated.

1. Comply with NFPA 80 requirements for fire-rated doors.

B. Factory machine doors for hardware that is not surface applied. Locate hardware to comply with DHI-WDHS-3. Comply with final hardware schedules, door frame Shop Drawings, BHMA-156.115-W, and hardware templates.

1. Coordinate with hardware mortises in metal frames to verify dimensions and alignment before factory machining.
2. Metal Astragals: Factory machine astragals and formed-steel edges for hardware for pairs of fire-rated doors.

C. Transom and Side Panels: Fabricate matching panels with same construction, exposed surfaces, and finish as specified for associated doors. Finish bottom edges of transoms and top edges of rabbeted doors same as door stiles.

1. Fabricate door and transom panels with full-width, solid-lumber, rabbeted, meeting rails. Provide factory-installed spring bolts for concealed attachment into jambs of metal door frames.

D. Openings: Factory cut and trim openings through doors.

1. Light Openings: Trim openings with moldings of material and profile indicated.

2. Glazing: Factory install glazing in doors indicated to be factory finished. Comply with applicable requirements in Section 088000 "Glazing."
3. Louvers: Factory install louvers in prepared openings.

2.7 FACTORY FINISHING

A. General: Comply with referenced quality standard for factory finishing. Complete fabrication, including fitting doors for openings and machining for hardware that is not surface applied, before finishing.

1. Finish faces, all four edges, edges of cutouts, and mortises. Stains and fillers may be omitted on top and bottom edges, edges of cutouts, and mortises.

B. Factory finish doors that are indicated to receive transparent finish.

C. Transparent Finish:

1. Grade: Premium.
2. Finish: As selected by the Architect from the manufacturer's full range.

PART 3 - EXECUTION

3.1 EXAMINATION

A. Examine doors and installed door frames, with Installer present, before hanging doors.

1. Verify that installed frames comply with indicated requirements for type, size, location, and swing characteristics and have been installed with level heads and plumb jambs.
2. Reject doors with defects.

B. Proceed with installation only after unsatisfactory conditions have been corrected.

3.2 INSTALLATION

A. Hardware: For installation, see Section 087100 "Door Hardware."

B. Installation Instructions: Install doors to comply with manufacturer's written instructions and referenced quality standard, and as indicated.

1. Install fire-rated doors according to NFPA 80.
2. Install smoke- and draft-control doors according to NFPA 105.

C. Job-Fitted Doors: Align and fit doors in frames with uniform clearances and bevels as indicated below; do not trim stiles and rails in excess of limits set by manufacturer or permitted for fire-rated doors. Machine doors for hardware. Seal edges of doors, edges of cutouts, and mortises after fitting and machining.

1. Clearances: Provide 1/8 inch at heads, jambs, and between pairs of doors. Provide 1/8 inch from bottom of door to top of decorative floor finish or covering unless otherwise indicated. Where threshold is shown or scheduled, provide1/4 inch from bottom of door to top of threshold unless otherwise indicated.

    a. Comply with NFPA 80 for fire-rated doors.
    b. Bevel non-fire-rated doors 1/8 inch in 2 inches at lock and hinge edges.

2. Bevel fire-rated doors 1/8 inch in 2 inches at lock edge; trim stiles and rails only to extent permitted by labeling agency.

D. Factory-Fitted Doors: Align in frames for uniform clearance at each edge.

E. Factory-Finished Doors: Restore finish before installation if fitting or machining is required at Project site.

3.3 ADJUSTING

A. Operation: Rehang or replace doors that do not swing or operate freely.

B. Finished Doors: Replace doors that are damaged or that do not comply with requirements. Doors may be repaired or refinished if Work complies with requirements and shows no evidence of repair or refinishing.

END OF SECTION 081416

SECTION 083113 - ACCESS DOORS AND FRAMES

PART 1 - GENERAL

1.1 RELATED DOCUMENTS

A. Drawings and general provisions of the Contract, including General and Supplementary Conditions and Division 01 Specification Sections, apply to this Section.

1.2 SUMMARY

A. Section includes access doors and frames for walls and ceilings.

1.3 ACTION SUBMITTALS

A. Product Data: For each type of product.

1. Include construction details, fire ratings, material descriptions, dimensions of individual components and profiles, and finishes.

B. Samples: For each type of access door and frame and for each finish specified, complete assembly minimum 6 by 6 inches in size.

C. Product Schedule: For access doors and frames. Use same designations indicated on Drawings.

PART 2 - PRODUCTS

2.1 PERFORMANCE REQUIREMENTS

A. Fire-Rated Access Doors and Frames: Assemblies complying with NFPA 80 that are listed and labeled by a qualified testing agency, for fire-protection and temperature-rise limit ratings indicated, according to NFPA 252 or UL 10B.

2.2 ACCESS DOORS AND FRAMES

A. Flush Access Doors with Concealed Flanges:

1. Manufacturers: Subject to compliance with requirements, provide products by one of the following:

a. Acudor Products, Inc.
b. Babcock-Davis.

c. Cendrex Inc.
d. Elmdor/Stoneman Manufacturing Company; a division of Acorn Engineering Company.
e. JL Industries, Inc.; a division of the Activar Construction Products Group.
f. Karp Associates, Inc.
g. Lane-Aire Manufacturing Corp.
h. Larsens Manufacturing Company.
i. Maxam Metal Products Limited.
j. Metropolitan Door Industries Corp.
k. MIFAB, Inc.
l. Milcor; Commercial Products Group of Hart & Cooley, Inc.
m. Nystrom, Inc.
n. Williams Bros. Corporation of America (The).

2. Description: Face of door flush with frame; with concealed flange for gypsum board installation and concealed hinge.
3. Locations: Wall and ceiling.
4. Door Size: As indicated on the Drawings.
5. Metallic-Coated Steel Sheet for Door: Nominal 0.064 inch, 16 gage factory primed.
6. Frame Material: Same material and thickness as door.
7. Latch and Lock: Cam latch, screwdriver operated.

B. Recessed Access Doors with Concealed Flanges:

1. Manufacturers: Subject to compliance with requirements, provide products by one of the following:

a. Acudor Products, Inc.
b. Babcock-Davis.
c. Cendrex Inc.
d. Elmdor/Stoneman Manufacturing Company; a division of Acorn Engineering Company.
e. JL Industries, Inc.; a division of the Activar Construction Products Group.
f. Karp Associates, Inc.
g. Lane-Aire Manufacturing Corp.
h. Larsens Manufacturing Company.
i. Maxam Metal Products Limited.
j. Metropolitan Door Industries Corp.
k. MIFAB, Inc.
l. Milcor; Commercial Products Group of Hart & Cooley, Inc.
m. Nystrom, Inc.
n. Williams Bros. Corporation of America (The).

2. Description: Door face recessed 1/2 inch for gypsum board infill; with concealed flange for gypsum board installation and concealed hinge.
3. Locations: Wall and ceiling.
4. Door Size: As indicated on the Drawings.
5. Metallic-Coated Steel Sheet for Door: Nominal 0.064 inch, 16 gage, factory primed.
6. Latch and Lock: Cam latch, screwdriver operated.

2.3 FIRE-RATED ACCESS DOORS AND FRAMES

A. Fire-Rated, Flush Access Doors with Concealed Flanges:

1. Manufacturers: Subject to compliance with requirements, provide products by one of the following:

    a. Acudor Products, Inc.
    b. Babcock-Davis.
    c. Cendrex Inc.
    d. JL Industries, Inc.; a division of the Activar Construction Products Group.
    e. Karp Associates, Inc.
    f. Maxam Metal Products Limited.
    g. Metropolitan Door Industries Corp.
    h. MIFAB, Inc.
    i. Nystrom, Inc.
    j. Williams Bros. Corporation of America (The).

2. Description: Door face flush with frame, with a core of mineral-fiber insulation enclosed in sheet metal; with concealed flange for gypsum board installation, self-closing door, and concealed hinge.
3. Locations: Wall and ceiling.
4. Door Size:As indicated on the Drawings..
5. Fire-Resistance Rating: Not less than that of adjacent construction.
6. Temperature-Rise Rating: 450 deg F at the end of 30 minutes.
7. Metallic-Coated Steel Sheet for Door: Nominal 0.040 inch, 20 gage, factory primed.
8. Frame Material: Same material, thickness, and finish as door.
9. Latch and Lock: Self-closing, self-latching door hardware, operated by knurled-knob.

2.4 MATERIALS

A. Steel Plates, Shapes, and Bars: ASTM A 36/A 36M.

B. Steel Sheet: Uncoated or electrolytic zinc coated, ASTM A 879/A 879M, with cold-rolled steel sheet substrate complying with ASTM A 1008/A 1008M, Commercial Steel (CS), exposed.

C. Metallic-Coated Steel Sheet: ASTM A 653/A 653M, Commercial Steel (CS), Type B; with minimum G60 or A60 metallic coating.

D. Frame Anchors: Same material as door face.

E. Inserts, Bolts, and Anchor Fasteners: Hot-dip galvanized steel according to ASTM A 153/A 153M or ASTM F 2329.

2.5 FABRICATION

A. General: Provide access door and frame assemblies manufactured as integral units ready for installation.

B. Metal Surfaces: For metal surfaces exposed to view in the completed Work, provide materials with smooth, flat surfaces without blemishes. Do not use materials with exposed pitting, seam marks, roller marks, rolled trade names, or roughness.

C. Doors and Frames: Grind exposed welds smooth and flush with adjacent surfaces. Furnish mounting holes, attachment devices and fasteners of type required to secure access doors to types of supports indicated.

1. For concealed flanges with drywall bead, provide edge trim for gypsum panels securely attached to perimeter of frames.

D. Recessed Access Doors: Form face of panel to provide recess for application of applied finish. Reinforce panel as required to prevent buckling. Provide access sleeves for each latch operator and install in holes cut through finish.

E. Latch and Lock Hardware:

1. Quantity: Furnish number of latches and locks required to hold doors tightly closed.

2.6 FINISHES

A. Comply with NAAMM's "Metal Finishes Manual for Architectural and Metal Products" for recommendations for applying and designating finishes.

B. Protect mechanical finishes on exposed surfaces from damage by applying a strippable, temporary protective covering before shipping.

C. Appearance of Finished Work: Noticeable variations in same piece are not acceptable. Variations in appearance of adjoining components are acceptable if they are within the range of approved Samples and are assembled or installed to minimize contrast.

D. Painted Finishes: Comply with coating manufacturer's written instructions for cleaning, conversion coating, and applying and baking finish.

1. Factory Primed: Apply manufacturer's standard, lead- and chromate-free, universal primer immediately after surface preparation and pretreatment.

PART 3 - EXECUTION

3.1 EXAMINATION

A. Examine substrates for compliance with requirements for installation tolerances and other conditions affecting performance of the Work.

B. Proceed with installation only after unsatisfactory conditions have been corrected.

3.2 INSTALLATION

A. Comply with manufacturer's written instructions for installing access doors and frames.

3.3 ADJUSTING

A. Adjust doors and hardware, after installation, for proper operation.

END OF SECTION 083113

SECTION 083323 - OVERHEAD COILING DOORS

PART 1 - GENERAL

1.1 RELATED DOCUMENTS

A. Drawings and general provisions of the Contract, including General and Supplementary Conditions and Division 01 Specification Sections, apply to this Section.

1.2 SUMMARY

A. Section Includes:

1. Insulated service doors.

B. Related Requirements:

1. Section 055000 "Metal Fabrications" for miscellaneous steel supports.
2. Section 099113 "Exterior Painting" for finish painting of factory-primed doors.

1.3 ACTION SUBMITTALS

A. Product Data: For each type and size of overhead coiling door and accessory.

1. Include construction details, material descriptions, dimensions of individual components, profiles for slats, and finishes.
2. Include rated capacities, operating characteristics, electrical characteristics, and furnished accessories.
3. Fire-Rated Doors: Include description of automatic closing device and testing and resetting instructions.

B. Shop Drawings: For each installation and for special components not dimensioned or detailed in manufacturer's product data.

1. Include plans, elevations, sections, and mounting details.
2. Include details of equipment assemblies, and indicate dimensions, required clearances, method of field assembly, components, and location and size of each field connection.
3. Include points of attachment and their corresponding static and dynamic loads imposed on structure.
4. For exterior components, include details of provisions for assembly expansion and contraction and for excluding and draining moisture to the exterior.
5. Show locations of controls, locking devices, detectors or replaceable fusible links for fire-rated doors, and other accessories.
6. Include diagrams for power, signal, and control wiring.

C. Samples for Initial Selection: Manufacturer's finish charts showing full range of colors and textures available for units with factory-applied finishes.

1. Include similar Samples of accessories involving color selection.

1.4 INFORMATIONAL SUBMITTALS

A. Qualification Data: For Installer.

1.5 CLOSEOUT SUBMITTALS

A. Maintenance Data: For overhead coiling doors to include in maintenance manuals.

1.6 QUALITY ASSURANCE

A. Installer Qualifications: An entity that employs installers and supervisors who are trained and approved by manufacturer for both installation and maintenance of units required for this Project.

B. Fire-Rated Door Assemblies: Assemblies complying with NFPA 80 that are listed and labeled by a qualified testing agency, for fire-protection ratings indicated, based on testing at as close to neutral pressure as possible according to NFPA 252 or UL 10B.

1. Temperature-Rise Limit: Where indicated and at exit enclosures and exit passageways, provide doors that have a maximum transmitted temperature end point of not more than 450 deg F above ambient after 30 minutes of standard fire-test exposure.
2. Smoke Control: Where indicated and in corridors and smoke barriers, provide doors that are listed and labeled with the letter "S" on the fire-rating label by a qualified testing agency for smoke- and draft-control based on testing according to UL 1784; with maximum air-leakage rate of 3.0 cfm/sq. ft. of door opening at 0.10-inch wg for both ambient and elevated temperature tests.

C. Sound-Control Doors: Assemblies tested in a laboratory for sound-transmission-loss performance according to ASTM E 90, calculated according to ASTM E 413, and rated for not less than the STC value indicated.

D. Regulatory Requirements: Comply with applicable provisions in the U.S. Architectural & Transportation Barriers Compliance Board's ADA-ABA Accessibility Guidelines and ICC A117.1.

PART 2 - PRODUCTS

2.1 MANUFACTURERS, GENERAL

A. Source Limitations: Obtain overhead coiling doors from single source from single manufacturer.

1. Obtain operators and controls from overhead coiling door manufacturer.

2.2 PERFORMANCE REQUIREMENTS

A. Structural Performance, Exterior Doors: Capable of withstanding the design wind loads.

1. Design Wind Load: Uniform pressure (velocity pressure) of 20 lbf/sq. ft., acting inward and outward.
2. Testing: According to ASTM E 330.
3. Deflection Limits: Design overhead coiling doors to withstand design wind load without evidencing permanent deformation or disengagement of door components.

2.3 DOOR ASSEMBLY

A. Insulated Service Door: Overhead coiling door formed with curtain of interlocking metal slats.

1. Basis-of-Design: Subject to compliance with requirements, provide product indicated below or a comparable product as approved by the Architect:

a. Product: Model ESD30 by Cookson.

2.4 MATERIALS

A. Curtain: Air infiltration rate of less than .3 CFM/FT2, as tested per ASTM E283 validated by an independent testing agency. Test report required.

1. Fabrication:

a. Slat Material: No. 6F, (Listed Exterior/Interior):

1) Galvanized Steel/Galvanized Steel: Manufacturer recommended gauge based on performance requirements. Minimum 24/24 gauge,

b. Insulation: 7/8 inch (22 mm) foamed-in-place, closed cell urethane
c. Total Slat Thickness: 15/16 inch (24 mm)
d. Flame Spread Index of 0 and a Smoke Developed Index of 10 as tested per ASTM E84
e. R-value: 8.0

f. STC Rating: Sound Transmission Class (STC) rating up to 30 for the curtain and up to 22 for the entire assembly. If an STC of 32 is desired, additional options are required. All configurations are evaluated per ASTM E90 and based on testing a complete, operable assembly

2. Exterior Slat Finish:

a. GalvaNex™ Coating System (Stock Colors):

1) ASTM A 653 galvanized base coating treated with dual process rinsing agents in preparation for chemical bonding baked-on base coat and white baked-on polyester enamel finish coat

3. Interior Slat Finish:

a. GalvaNex™ Coating System (Stock Colors):

1) ASTM A 653 galvanized base coating treated with dual process rinsing agents in preparation for chemical bonding baked-on base coat and white baked-on polyester finish coat

B. Endlocks: Fabricate interlocking sections with high strength galvanized cast iron endlocks on alternate slats each secured with two ¼" (6.35 mm) rivets. Provide windlocks as required to meet specified wind load.

1. Galvanized cast iron: Required if above 21'-5" width (DBG - Distance Between Guides)

C. Bottom Bar:

1. Configuration:

a. Insulated Bottom Bar: Reinforced extruded aluminum interior face with full depth insulation and exterior skin slat to match curtain material and gauge. Minimum 4" tall x 1-1/16" thickness.

2. Finish:

a. Exterior: Match slats

3. Air Infiltration Certification Label: Must be affixed to bottom bar

D. Guides:

1. Fabrication:

a. Thermal break required. Minimum 3/16 inch (4.76 mm) structural steel angles. Provide windlock bars of same material when windlocks are required to meet specified wind load. Top of inner and outer guide angles to be flared outwards to form bellmouth for smooth entry of curtain into guides. Provide removable guide stoppers to prevent over travel of curtain and bottom bar.

b. Top 16 ½" (419.10 mm) of coil side guide angles to be removable for ease of curtain installation and as needed for future curtain service

2. Finish:

a. Powder Coat (Stock Colors): Zirconium treatment followed by a white baked-on polyester powder coat; minimum 2.5 mils (0.065 mm) cured film thickness

E. Counterbalance Shaft Assembly:

1. Barrel: Steel pipe capable of supporting curtain load with maximum deflection of 0.03 inches per foot (2.5 mm per meter) of width
2. Spring Balance: Oil-tempered, heat-treated steel helical torsion spring assembly designed for proper balance of door to ensure that maximum effort to operate will not exceed 25 lbs (110 N). Provide wheel for applying and adjusting spring torque.

F. Brackets: Fabricate from minimum 3/16 inch (5 mm) steel plate with permanently lubricated ball or roller bearings at rotating support points to support counterbalance shaft assembly and form end closures.

1. Finish:

a. Powder Coat (Stock Colors): Zirconium treatment followed by a white baked-on polyester powder coat; minimum 2.5 mils (0.065 mm) cured film thickness

G. Hood: Minimum 24 gauge galvanized steel with reinforced top and bottom edges. Provide minimum 1/4 inch (6.35 mm) steel intermediate support brackets as required to prevent excessive sag.

1. Finish:

a. GalvaNex Coating System (Stock Colors):

1) ASTM A 653 galvanized base coating treated with dual process rinsing agents in preparation for chemical bonding baked-on base coat and white baked-on polyester finish coat

H. Weatherstripping:

1. Bottom Bar:

a. Motor Operated Doors: Sensing/weather edge with neoprene astragal extending full width of door bottom bar

2. Guides: Replaceable vinyl strip on guides sealing against both sides of curtain
3. Lintel Seal: Double brush seal with EPDM sandwiched between the two brush seals at door header to impede air flow.
4. Hood: Neoprene/rayon baffle to impede air flow above coil

2.5 OPERATION

A. Manual ControlGard Chain Hoist: Provide chain hoist operator with endless steel chain, chain pocket wheel and guard, geared reduction unit, and chain keeper secured to guide. Chain hoist to include integral brake mechanism that will immediately stop upward or downward travel and maintain the door in a stationary position when the hand chain is released by the user.

B. Motor – Standard Use – Model MG (Industrial Duty Gear Head) Operator: The operator must not extend above or below the door coil when mounted front-of-coil. Rated for a maximum of 20 cycles per hour (not to be used for consecutive hours) cULus listed (to comply with UL requirements in The United States and Canada), Totally Enclosed Non Ventilated gear head operator(s) rated (1/3) (1/2) or (3/4) hp as recommended by door manufacture for size and type of door, 120 Volts, 3 Phase. Provide complete with electric motor and factory pre-wired motor control terminals, maintenance free solenoid actuated brake, emergency manual chain hoist and control station(s). Motor shall be high starting torque, industrial type, protected against overload with an auto-reset thermal sensing device. Primary speed reduction shall be heavy-duty, lubricated gears with mechanical braking to hold the door in any position. Operator shall be equipped with an emergency manual chain hoist assembly that safely cuts operator power when engaged. A disconnect chain shall not be required to engage or release the manual chain hoist. Operator drive and door driven sprockets shall be provided with #50 roller chain. Provide an integral Motor Mounted Interlock system to prevent damage to door and operator when mechanical door locking devices are provided. Operator shall be capable of driving the door at a speed of 8 to 9 inches per second (20 to 23 cm/sec). Fully adjustable, driven linear screw type cam limit switch mechanism shall synchronize the operator with the door. The electrical contractor shall mount the control station(s) and supply the appropriate disconnect switch, all conduit and wiring per the overhead door wiring instructions.

C. Control Station: Provide one of the following as approved by the Architect.

1. Flush mounted: "Open/Close/Stop" push buttons; NEMA 1B.
2. Flush mounted: "Open/Close" key switch with "Stop" push button; NEMA 1B.

D. Control Operation:

1. Momentary Contact to Close: Fail-safe, UL325-2010 Compliant Entrapment Protection for Motor Operation.

    a. NEMA 4X photo eye sensors consisting of a transmitter and receiver that are to be mounted within 6” (152.4 mm) of the floor, projecting an IR beam across the entire width of the door. Electrical contractor to provide low voltage wiring from the transmitter and receiver to the door operator.

2. Sensing/Weather Edge: Automatic reversing control by an automatic sensing switch within neoprene or rubber astragal extending full width of door bottom bar

    a. Electric sensing edge device. Provide a wireless sensing edge connection to motor operator eliminating the need for a physical traveling electric cord connection between bottom bar sensing edge device and motor operator.

2.6 ACCESSORIES

A. Locking:

1. Masterkeyable cylinder operable from fascia side[s] of bottom bar, options for all types of operation. Provide interlock switches on Motor operated units.

a. Standard Mortise Cylinder.

PART 3 - EXECUTION

3.1 EXAMINATION

A. Examine substrates areas and conditions, with Installer present, for compliance with requirements for substrate construction and other conditions affecting performance of the Work.

B. Examine locations of electrical connections.

C. Proceed with installation only after unsatisfactory conditions have been corrected.

3.2 INSTALLATION

A. Install overhead coiling doors and operating equipment complete with necessary hardware, anchors, inserts, hangers, and equipment supports; according to manufacturer's written instructions and as specified.

B. Install overhead coiling doors, hoods, controls, and operators at the mounting locations indicated for each door.

C. Accessibility: Install overhead coiling doors, switches, and controls along accessible routes in compliance with regulatory requirements for accessibility.

D. Fire-Rated Doors: Install according to NFPA 80.

E. Smoke-Control Doors: Install according to NFPA 80 and NFPA 105.

F. Power-Operated Doors: Install according to UL 325.

3.3 STARTUP SERVICE

A. Engage a factory-authorized service representative to perform startup service.

1. Perform installation and startup checks according to manufacturer's written instructions.
2. Test and adjust controls and safety devices. Replace damaged and malfunctioning controls and equipment.

3. Test door closing when activated by detector or alarm-connected fire-release system. Reset door-closing mechanism after successful test.

3.4 ADJUSTING

A. Adjust hardware and moving parts to function smoothly so that doors operate easily, free of warp, twist, or distortion.

1. Adjust exterior doors and components to be weather-resistant.

B. Lubricate bearings and sliding parts as recommended by manufacturer.

C. Adjust seals to provide tight fit around entire perimeter.

3.5 DEMONSTRATION

A. Engage a factory-authorized service representative to train Owner's maintenance personnel to adjust, operate, and maintain overhead coiling doors.

END OF SECTION 083323

SECTION 083800 – TRAFFIC DOORS

PART 1 - GENERAL

1.1 RELATED DOCUMENTS

A. Drawings and general provisions of the Contract, including General and Supplementary Conditions and Division 01 Specification Sections, apply to this Section.

1.2 SUMMARY

A. Section Includes:

1. Stainless steel swinging kitchen doors.

1.3 ACTION SUBMITTALS

A. Product Data: For each type of door. Include factory-finishing specifications.

B. Shop Drawings: Indicate location, size, and hand of each door; elevation of each kind of door; construction details not covered in Product Data; and the following:

1. Dimensions and locations of blocking.
2. Dimensions and locations of holes for hardware.
3. Dimensions and locations of cutouts.
4. Undercuts.
5. Doors to be factory finished and finish requirements.

C. Samples: For factory-finished doors.

1.4 DELIVERY, STORAGE, AND HANDLING

A. Store products in manufacturer's unopened packaging until ready for installation.

1.5 PROJECT CONDITIONS

A. Maintain environmental conditions (temperature, humidity, and ventilation) within limits recommended by manufacturer for optimum results. Do not install products under environmental conditions outside manufacturer's absolute limits.

1.6 WARRANTY

A. Manufacturer's standard two-year warranty that products are free of defects in material and workmanship, guaranteeing to replace (exclusive of freight and labor) parts proven defective within two years after date of shipment to purchaser.

PART 2 - PRODUCTS

2.1 KITCHEN DOORS

A. Basis-of-Design: Subject to compliance with requirements, provide product indicated below or a comparable product as approved by the Architect:

1. Eliason SCP-3 Bi Directional Door.

B. Cooler Doors: 3/4 inch exterior grade solid wood core; 1 inch total thickness; medium to heavy duty.

1. Facing: Reinforcing metal plates. (Model SCG-3)

a. Full Length Panels: 18 gauge stainless steel both sides; stainless steel top hinge covers.

2. Gasket: Full perimeter seal.
3. Window Size: 9 inches (229 mm) wide by 14 inches high.
4. Window Molding: Black rubber molding.
5. Glazing: Clear acrylic.

2.2 HARDWARE AND ACCESSORIES

A. Hinges: Double Action Easy Swing(r) proprietary hinges.

1. Finish: Zinc coated.

2.3 FABRICATION

A. Factory fit doors to suit frame-opening sizes indicated. Comply with clearance requirements of referenced quality standard for fitting unless otherwise indicated.

B. Openings: Factory cut and trim openings through doors.

1. Light Openings: Trim openings with moldings of material and profile indicated.
2. Acrylic Glazing: Factory install glazing in doors indicated to be factory finished.

2.4 FACTORY FINISHING

A. General: Comply with referenced quality standard for factory finishing. Complete fabrication, including fitting doors for openings and machining for hardware that is not surface applied, before finishing.

1. Finish faces, including all exposed edges.

B. Opaque Finish:

1. Finish: Manufacturer's standard.
2. Color: As selected by the Owner's interior designer.

PART 3 - EXECUTION

3.1 EXAMINATION

A. Do not begin installation until substrates have been properly prepared.

B. Verify jambs plumb and square.

C. If substrate preparation is the responsibility of another installer, notify Architect of unsatisfactory preparation before proceeding.

3.2 PREPARATION

A. Clean surfaces thoroughly prior to installation.

B. Prepare surfaces using the methods recommended by the manufacturer for achieving the best result for the substrate under the project conditions.

3.3 INSTALLATION

A. Install in accordance with manufacturer's instructions.

B. Minimum jamb construction of double studded 2 by 4 wood construction or equivalent.

C. Reinforce hollow metal jambs at hardware locations.

D. Steel channel jambs are required for heavy duty traffic doors.

3.4 PROTECTION

A. Protect installed products until completion of project.

B. Touch-up, repair or replace damaged products before Substantial Completion.

END OF SECTION 083800

SECTION 084113 - ALUMINUM-FRAMED ENTRANCES AND STOREFRONTS

PART 1 - GENERAL

1.1 RELATED DOCUMENTS

A. Drawings and general provisions of the Contract, including General and Supplementary Conditions and Division 01 Specification Sections, apply to this Section.

1.2 SUMMARY

A. Section Includes:

1. Exterior storefront framing.
2. Storefront framing for punched openings.
3. Exterior manual-swing entrance doors and door-frame units.
4. Interior aluminum-framed doors and officefronts.
5. Sunshades.

1.3 ACTION SUBMITTALS

A. Product Data: For each type of product.

1. Include construction details, material descriptions, dimensions of individual components and profiles, and finishes.

B. Shop Drawings: For aluminum-framed entrances and storefronts. Include plans, elevations, sections, full-size details, and attachments to other work.

1. Include details of provisions for assembly expansion and contraction and for draining moisture occurring within the assembly to the exterior.
2. Include full-size isometric details of each vertical-to-horizontal intersection of aluminum-framed entrances and storefronts, showing the following:

a. Joinery, including concealed welds.
b. Anchorage.
c. Expansion provisions.
d. Glazing.
e. Flashing and drainage.

3. Show connection to and continuity with adjacent thermal, weather, air, and vapor barriers.

C. Samples for Initial Selection: For units with factory-applied color finishes.

D. Fabrication Sample: Of each vertical-to-horizontal intersection of assemblies, made from 12-inch lengths of full-size components and showing details of the following:

1. Joinery, including concealed welds.
2. Anchorage.
3. Expansion provisions.
4. Glazing.
5. Flashing and drainage.

E. Entrance Door Hardware Schedule: Prepared by or under supervision of supplier, detailing fabrication and assembly of entrance door hardware, as well as procedures and diagrams. Coordinate final entrance door hardware schedule with doors, frames, and related work to ensure proper size, thickness, hand, function, and finish of entrance door hardware.

F. Delegated-Design Submittal: For aluminum-framed entrances and storefronts indicated to comply with performance requirements and design criteria, including analysis data signed and sealed by the qualified professional engineer responsible for their preparation.

1.4 INFORMATIONAL SUBMITTALS

A. Qualification Data: For Installer and field testing agency.

B. Energy Performance Certificates: For aluminum-framed entrances and storefronts, accessories, and components, from manufacturer.

1. Basis for Certification: NFRC-certified energy performance values for each aluminum-framed entrance and storefront.

C. Product Test Reports: For aluminum-framed entrances and storefronts, for tests performed by manufacturer and witnessed by a qualified testing agency or a qualified testing agency.

D. Source quality-control reports.

E. Field quality-control reports.

F. Sample Warranties: For special warranties.

1.5 CLOSEOUT SUBMITTALS

A. Maintenance Data: For aluminum-framed entrances and storefronts to include in maintenance manuals.

1.6 QUALITY ASSURANCE

A. Installer Qualifications: An entity that employs installers and supervisors who are trained and approved by manufacturer.

B. Testing Agency Qualifications: Qualified according to ASTM E 699 for testing indicated and accredited by IAS or ILAC Mutual Recognition Arrangement as complying with ISO/IEC 17025.

C. Product Options: Information on Drawings and in Specifications establishes requirements for aesthetic effects and performance characteristics of assemblies. Aesthetic effects are indicated by dimensions, arrangements, alignment, and profiles of components and assemblies as they relate to sightlines, to one another, and to adjoining construction.

1. Do not change intended aesthetic effects, as judged solely by Architect, except with Architect's approval. If changes are proposed, submit comprehensive explanatory data to Architect for review.

1.7 MOCKUPS

A. Mockups: Build mockups to verify selections made under Sample submittals and to demonstrate aesthetic effects and set quality standards for fabrication and installation.

1. Build mockup of typical wall area as shown on Drawings.
2. Testing shall be performed on mockups according to requirements in "Field Quality Control" Article.
3. Approval of mockups does not constitute approval of deviations from the Contract Documents contained in mockups unless Architect specifically approves such deviations in writing.
4. Subject to compliance with requirements, approved mockups may become part of the completed Work if undisturbed at time of Substantial Completion.

1.8 WARRANTY

A. Special Warranty: Manufacturer agrees to repair or replace components of aluminum-framed entrances and storefronts that do not comply with requirements or that fail in materials or workmanship within specified warranty period.

1. Failures include, but are not limited to, the following:

a. Structural failures including, but not limited to, excessive deflection.
b. Noise or vibration created by wind and thermal and structural movements.
c. Deterioration of metals, metal finishes, and other materials beyond normal weathering.
d. Water penetration through fixed glazing and framing areas.
e. Failure of operating components.

2. Warranty Period: 10 years from date of Substantial Completion.

B. Special Finish Warranty: Standard form in which manufacturer agrees to repair finishes or replace aluminum that shows evidence of deterioration of factory-applied finishes within specified warranty period.

1. Deterioration includes, but is not limited to, the following:

a. Color fading more than 5 Hunter units when tested according to ASTM D 2244.
b. Chalking in excess of a No. 8 rating when tested according to ASTM D 4214.
c. Cracking, checking, peeling, or failure of paint to adhere to bare metal.

2. Warranty Period: 20 years from date of Substantial Completion.

PART 2 - PRODUCTS

2.1 PERFORMANCE REQUIREMENTS

A. Delegated Design: Engage a qualified professional engineer, as defined in Section 014000 "Quality Requirements," to design aluminum-framed entrances and storefronts.

B. General Performance: Comply with performance requirements specified, as determined by testing of aluminum-framed entrances and storefronts representing those indicated for this Project without failure due to defective manufacture, fabrication, installation, or other defects in construction.

1. Aluminum-framed entrances and storefronts shall withstand movements of supporting structure including, but not limited to, story drift, twist, column shortening, long-term creep, and deflection from uniformly distributed and concentrated live loads.
2. Failure also includes the following:

a. Thermal stresses transferring to building structure.
b. Glass breakage.
c. Noise or vibration created by wind and thermal and structural movements.
d. Loosening or weakening of fasteners, attachments, and other components.
e. Failure of operating units.

C. Structural Loads:

1. Wind Loads: As indicated on Structural Drawings.
2. Other Design Loads: As indicated on Structural Drawings.

D. Deflection of Framing Members: At design wind pressure, as follows:

1. Deflection Normal to Wall Plane: Limited to edge of glass in a direction perpendicular to glass plane not exceeding 1/175 of the glass edge length for each individual glazing lite or an amount that restricts edge deflection of individual glazing lites to 3/4 inch, whichever is less.

2. Deflection Parallel to Glazing Plane: Limited to 1/360 of clear span or 1/8 inch, whichever is smaller.

    a. Operable Units: Provide a minimum 1/16-inch clearance between framing members and operable units.

3. Cantilever Deflection: Where framing members overhang an anchor point, as follows:

    a. Perpendicular to Plane of Wall: No greater than 1/240 of clear span plus 1/4 inch for spans greater than 11 feet 8-1/4 inches or 1/175 times span, for spans less than 11 feet 8-1/4 inches.

E. Structural: Test according to ASTM E 330 as follows:

1. When tested at positive and negative wind-load design pressures, assemblies do not evidence deflection exceeding specified limits.
2. When tested at 150 percent of positive and negative wind-load design pressures, assemblies, including anchorage, do not evidence material failures, structural distress, or permanent deformation of main framing members exceeding 0.2 percent of span.
3. Test Durations: As required by design wind velocity, but not less than 10 seconds.

F. Air Infiltration: Test according to ASTM E 283 for infiltration as follows:

1. Fixed Framing and Glass Area:

    a. Maximum air leakage of 0.06 cfm/sq. ft. at a static-air-pressure differential of 6.24 lbf/sq. ft..

2. Entrance Doors:

    a. Pair of Doors: Maximum air leakage of 1.0 cfm/sq. ft. at a static-air-pressure differential of 1.57 lbf/sq. ft.
    b. Single Doors: Maximum air leakage of 0.5 cfm/sq. ft. at a static-air-pressure differential of 1.57 lbf/sq. ft.

G. Water Penetration under Static Pressure: Test according to ASTM E 331 as follows:

1. No evidence of water penetration through fixed glazing and framing areas when tested according to a minimum static-air-pressure differential of 20 percent of positive wind-load design pressure, but not less than 6.24 lbf/sq. ft..

H. Energy Performance: Certify and label energy performance according to NFRC as follows:

1. Thermal Transmittance (U-factor): Fixed glazing and framing areas shall have U-factor as selected by the Architect.
2. Solar Heat Gain Coefficient: Fixed glazing and framing areas shall have a solar heat gain coefficient as selected by the Architect.
3. Condensation Resistance: Fixed glazing and framing areas shall have an NFRC-certified condensation resistance rating of no less than 15 as determined according to NFRC 500, unless otherwise indicated.

A. Sound Transmission Class (STC): As selected by the Architect.

B. Thermal Movements: Allow for thermal movements resulting from ambient and surface temperature changes:

1. Temperature Change: 120 deg F, ambient; 180 deg F, material surfaces.

2.2 MANUFACTURERS

A. Source Limitations: Obtain all components of aluminum-framed entrance and storefront system, including framing and accessories, from single manufacturer.

2.3 EXTERIOR FRAMING

A. Basis-of-Design: Subject to compliance with requirements, provide product indicated below by Kawneer, or a comparable product as approved by the Architect:

1. Storefront: Kawneer Trifab VG 451T and 601T as indicated.

a. Glazing Location: Front glazed.
b. Finish: Clear anodic with Architectural Class I Finish.

B. Framing Members: Manufacturer's extruded- or formed-aluminum framing members of thickness required and reinforced as required to support imposed loads.

1. Construction: Thermally broken.
2. Glazing System: Retained mechanically with gaskets on four sides.
3. Glazing Plane: Front.
4. Finish: Clear anodic finish.
5. Fabrication Method: Field-fabricated stick system.

C. Backer Plates: Manufacturer's standard, continuous backer plates for framing members, if not integral, where framing abuts adjacent construction.

D. Brackets and Reinforcements: Manufacturer's standard high-strength aluminum with nonstaining, nonferrous shims for aligning system components.

E. Materials:

1. Aluminum: Alloy and temper recommended by manufacturer for type of use and finish indicated.

a. Sheet and Plate: ASTM B 209.
b. Extruded Bars, Rods, Profiles, and Tubes: ASTM B 221.
c. Extruded Structural Pipe and Tubes: ASTM B 429/B 429M.
d. Structural Profiles: ASTM B 308/B 308M.

2. Steel Reinforcement: Manufacturer's standard zinc-rich, corrosion-resistant primer complying with SSPC-PS Guide No. 12.00; applied immediately after surface preparation and pretreatment. Select surface preparation methods according to recommendations in SSPC-SP COM, and prepare surfaces according to applicable SSPC standard.

    a. Structural Shapes, Plates, and Bars: ASTM A 36/A 36M.
    b. Cold-Rolled Sheet and Strip: ASTM A 1008/A 1008M.
    c. Hot-Rolled Sheet and Strip: ASTM A 1011/A 1011M.

2.4 VENTING WINDOWS

A. Basis-of-Design: Subject to compliance with requirements, provide product indicated below by Kawneer, or a comparable product as approved by the Architect:

1. Operable Window: Kawneer Outswing Casement.
2. Finish: Clear anodic with Architectural Class I Finish.

B. Aluminum Windows: Manufacturer's standard units, complying with AAMA/WDMA/CSA 101/I.S.2/A440, with self-flashing mounting fins, and as follows:

1. Window Type: As indicated on Drawings.
2. Minimum Performance Class: CW.
3. Minimum Performance Grade: 30.
4. Aluminum Extrusions: ASTM B 221, alloy and temper recommended by manufacturer for strength, corrosion resistance, and application of required finish, but not less than 0.064-inch thickness at any location for main frame and sash members.

    a. Thermally Improved Construction: Fabricate window units with an integral, concealed, low-conductance thermal barrier; located between exterior materials and window members exposed on interior side; in a manner that eliminates direct metal-to-metal contact.

5. Mullions: Between adjacent windows, fabricated of extruded aluminum matching finish of window units.
6. Fasteners, Anchors, and Clips: Nonmagnetic stainless steel, aluminum, or other noncorrosive material, compatible with aluminum window members, trim, hardware, anchors, and other components of window units. Fasteners shall not be exposed, except for attaching hardware.

    a. Reinforcement: Where fasteners screw-anchor into aluminum less than 0.128 inch thick, reinforce interior with aluminum or nonmagnetic stainless steel to receive screw threads, or provide standard, noncorrosive, pressed-in, spline grommet nuts.

7. Hardware: Manufacturer's standard; of aluminum, stainless steel, die-cast steel, malleable iron, or bronze; including the following:

    a. Cam-action sweep sash lock and keeper at meeting rails.
    b. Spring-loaded, snap-type lock at jambs.

c. Pole-operated, cam-action locking device on meeting rail where rail is more than 72 inches above floor.
d. Lift handles for single-hung units.
e. Nylon sash rollers for horizontal-sliding units.
f. Steel or bronze operating arms.

8. Sliding-Type Weather Stripping: Woven-pile weather stripping of wool, polypropylene, or nylon pile and resin-impregnated backing fabric; complying with AAMA 701/702.
9. Insect Screens: Provide removable insect screen on each operable exterior sash, with screen frame finished to match window unit, complying with SMA 1004 or SMA 1201, and as follows:

a. Aluminum Wire Fabric: 18-by-18, 18-by-16, or 18-by-14 mesh of 0.013-inch-diameter, coated aluminum wire.
b. Glass-Fiber Mesh Fabric: 18-by-16 or 18-by-14 mesh of PVC-coated, glass-fiber threads, woven and fused to form a fabric mesh; complying with ASTM D 3656.
c. Fabric: Manufacturer's standard aluminum wire fabric or glass-fiber mesh fabric.

C. Glazing: Same as adjacent aluminum-framed entrances and storefront glazing.

D. Finish: Match adjacent aluminum-framed entrances and storefront finish.

2.5 ENTRANCE DOOR SYSTEMS

A. Basis-of-Design: Subject to compliance with requirements, provide product indicated below by Kawneer, or a comparable product as approved by the Architect:

1. Entrance: Kawneer 350 Medium Stile Entrance

a. Hardware: One inch round, bent push/pull hardware except where panic hardware is indicated.
b. Finish: Clear anodic with Architectural Class I Finish.

B. Entrance Doors: Manufacturer's standard glazed entrance doors for manual-swing operation.

1. Door Construction: 2-inch overall thickness, with minimum 0.188-inch- thick, extruded-aluminum tubular rail and stile members. Mechanically fasten corners with reinforcing brackets that are deeply penetrated and fillet welded or that incorporate concealed tie rods.

a. Thermal Construction: High-performance plastic connectors separate aluminum members exposed to the exterior from members exposed to the interior.

2. Door Design: Medium stile; as indicated.
3. Glazing Stops and Gaskets: Beveled, snap-on, extruded-aluminum stops and preformed gaskets.

a. Provide nonremovable glazing stops on outside of door.

2.6 ENTRANCE DOOR HARDWARE

A. Entrance Door Hardware: Hardware not specified in this Section is specified in Section 087100 "Door Hardware."

B. Thresholds: BHMA A156.21, raised thresholds beveled with a slope of not more than 1:2, with maximum height of 1/2 inch.

2.7 INTERIOR ALUMINUM-FRAMED DOORS AND OFFICEFRONTS

A. Basis-of-Design: Subject to compliance with requirements, provide product indicated below by Kawneer, or a comparable product as approved by the Architect:

1. RACO Liberty 487 & 725 2-inch Solutions II.

    a. Finish: Clear anodic with Architectural Class I Finish.

2. Interior Door Frames: RACO Solutions II fixed or adjustable throat frames to accommodate wall thicknesses indicated on Drawings; ceiling height as indicated on the Drawings; with applied full face trim of 2 inch width.
3. Interior OfficeFront Framing: RACO Solutions II OfficeFronts, fixed throat frames to accommodate wall thicknesses indicated on Drawings; as indicated on the Drawings, with applied full face trim of 2 inch width.
4. Swinging Aluminum and Glass Doors: RACO Series, 400 medium stile, having square or beveled glazing stops, and black or grey EPDM glazing gaskets, as selected by the Architect, and having ADA compliant bottom rail.
5. STC: Manufacturer’s standard.
6. Provide non fire rated with adjustable bottom rails for field adjustment.
7. Provide complete with the following hardware in finish as selected by the Architect from the manufacturer's full range:

    a. 2 pair of 4-1/2 x 4-1/2 inch standard butts.
    b. Exposed overhead closer, slim line profile.
    c. Latch or lock set to match other devices in project.
    d. Flush bolts for inactive leaf of pairs of doors.
    e. Balance of hardware as specified in Section 087100.

8. Materials:

    a. Aluminum: Meeting requirements of ASTM B221, 6063T5 alloy, and as otherwise required to assure compliance with dimensional tolerances and maintain color uniformity. Billets shall be composed of at least 33% recycled aluminum, 48% post industrial scrap, 30% post consumer scrap, 22% primary aluminum.
    b. Anchorage Devices, Clips and Fasteners: Manufacturer's standard type, compatible with materials being secured.
    c. Accessories: As necessary for complete system.
    d. Top Load glazing gasket grey or black, as selected by the Architect.
    e. Glazing Thickness: Manufacturer’s standard for each specific application.

9. Extruded Aluminum Frame and Door Fabrication

    a. Utilize reduced profile corner section for 90-degree corners.
    b. Assemble all door frames, sidelights, and window units with screws utilizing internal screw spline system, insert into the drywall rough opening.
    c. Assemble all sidelights and windows without the use of clips or exposed fasteners.
    d. Do not exceed maximum size of window or door to meet applicable code requirements.
    e. Factory pre-machine door frame jambs [and doors] and prepare for hardware, with concealed reinforcement plates, drilled and tapped as required, and fastened within frame with concealed screws.
    f. Manufacturer shall precut and predrill for screwspline joinery. Miter cut snap on trim casing shall be furnished in exact cut lengths.
    g. Manufacturer shall box and mark door frames and sidelites by opening number.

2.8 SUNSHADES

A. Sunshades: Assemblies consisting of manufacturer's standard outrigger brackets, louvers, and fascia, designed for attachment to curtain wall with mechanical fasteners.

1. Basis-of-Design: Subject to compliance with requirements, provide product indicated below by Ametco, or a comparable product as approved by the Architect:

    a. Product: 104-90 Aluminum Bar Grille Sunshade.

2. Orientation: Horizontal.
3. Projection from Wall: As indicated on Drawings.
4. Outriggers: Straight with square edges.
5. Louvers: As indicated on Drawings.
6. Fasciae: Rectangular.
7. Finish: Match adjacent aluminum storefront.

B. Materials:

1. Aluminum: Alloy and temper recommended by manufacturer for type of use and finish indicated.

    a. Sheet and Plate: ASTM B 209.
    b. Extruded Bars, Rods, Profiles, and Tubes: ASTM B 221.
    c. Extruded Structural Pipe and Tubes: ASTM B 429/B 429M.
    d. Structural Profiles: ASTM B 308/B 308M.

2.9 GLAZING

A. Glazing: Comply with Section 088000 "Glazing."

B. Glazing Gaskets: Manufacturer's standard sealed-corner pressure-glazing system of black, resilient elastomeric glazing gaskets, setting blocks, and shims or spacers.

C. Glazing Sealants: As recommended by manufacturer.

2.10 ACCESSORIES

A. Fasteners and Accessories: Manufacturer's standard corrosion-resistant, nonstaining, nonbleeding fasteners and accessories compatible with adjacent materials.

1. Use self-locking devices where fasteners are subject to loosening or turning out from thermal and structural movements, wind loads, or vibration.
2. Reinforce members as required to receive fastener threads.
3. Use exposed fasteners with countersunk Phillips screw heads, finished to match framing system, fabricated from 300 series stainless steel.

B. Anchors: Three-way adjustable anchors with minimum adjustment of 1 inch that accommodate fabrication and installation tolerances in material and finish compatible with adjoining materials and recommended by manufacturer.

1. Concrete and Masonry Inserts: Hot-dip galvanized cast-iron, malleable-iron, or steel inserts complying with ASTM A 123/A 123M or ASTM A 153/A 153M requirements.

C. Concealed Flashing: Manufacturer's standard corrosion-resistant, nonstaining, nonbleeding flashing compatible with adjacent materials.

D. Bituminous Paint: Cold-applied asphalt-mastic paint complying with SSPC-Paint 12 requirements except containing no asbestos, formulated for 30-mil thickness per coat.

2.11 FABRICATION

A. Form or extrude aluminum shapes before finishing.

B. Weld in concealed locations to greatest extent possible to minimize distortion or discoloration of finish. Remove weld spatter and welding oxides from exposed surfaces by descaling or grinding.

C. Fabricate components that, when assembled, have the following characteristics:

1. Profiles that are sharp, straight, and free of defects or deformations.
2. Accurately fitted joints with ends coped or mitered.
3. Physical and thermal isolation of glazing from framing members.
4. Accommodations for thermal and mechanical movements of glazing and framing to maintain required glazing edge clearances.
5. Provisions for field replacement of glazing from interior for vision glass and exterior for spandrel glazing or metal panels.
6. Fasteners, anchors, and connection devices that are concealed from view to greatest extent possible.

D. Mechanically Glazed Framing Members: Fabricate for flush glazing without projecting stops.

E. Structural-Sealant-Glazed Framing Members: Include accommodations for using temporary support device to retain glazing in place while structural sealant cures.

F. Storefront Framing: Fabricate components for assembly using head-and-sill-receptor system with shear blocks at intermediate horizontal members.

G. Entrance Door Frames: Reinforce as required to support loads imposed by door operation and for installing entrance door hardware.

1. At exterior doors, provide compression weather stripping at fixed stops.
2. At interior doors, provide silencers at stops to prevent metal-to-metal contact. Install three silencers on strike jamb of single-door frames and two silencers on head of frames for pairs of doors.

H. Entrance Doors: Reinforce doors as required for installing entrance door hardware.

1. At pairs of exterior doors, provide sliding-type weather stripping retained in adjustable strip and mortised into door edge.
2. At exterior doors, provide weather sweeps applied to door bottoms.

I. Entrance Door Hardware Installation: Factory install entrance door hardware to the greatest extent possible. Cut, drill, and tap for factory-installed entrance door hardware before applying finishes.

J. After fabrication, clearly mark components to identify their locations in Project according to Shop Drawings.

2.12 ALUMINUM FINISHES

A. Clear Anodic Finish: AAMA 611, AA-M12C22A41, Class I, 0.018 mm or thicker.

PART 3 - EXECUTION

3.1 EXAMINATION

A. Examine areas, with Installer present, for compliance with requirements for installation tolerances and other conditions affecting performance of the Work.

B. Proceed with installation only after unsatisfactory conditions have been corrected.

3.2 INSTALLATION

A. General:

1. Comply with manufacturer's written instructions.
2. Do not install damaged components.

3. Fit joints to produce hairline joints free of burrs and distortion.
4. Rigidly secure nonmovement joints.
5. Install anchors with separators and isolators to prevent metal corrosion and electrolytic deterioration and to prevent impeding movement of moving joints.
6. Seal perimeter and other joints watertight unless otherwise indicated.

B. Metal Protection:

1. Where aluminum is in contact with dissimilar metals, protect against galvanic action by painting contact surfaces with materials recommended by manufacturer for this purpose or by installing nonconductive spacers.
2. Where aluminum is in contact with concrete or masonry, protect against corrosion by painting contact surfaces with bituminous paint.

C. Set continuous sill members and flashing in full sealant bed as specified in Section 079200 "Joint Sealants" to produce weathertight installation.

D. Install components plumb and true in alignment with established lines and grades.

E. Install operable units level and plumb, securely anchored, and without distortion. Adjust weather-stripping contact and hardware movement to produce proper operation.

F. Install glazing as specified in Section 088000 "Glazing."

G. Entrance Doors: Install doors to produce smooth operation and tight fit at contact points.

1. Exterior Doors: Install to produce weathertight enclosure and tight fit at weather stripping.
2. Field-Installed Entrance Door Hardware: Install surface-mounted entrance door hardware according to entrance door hardware manufacturers' written instructions using concealed fasteners to greatest extent possible.

3.3 ERECTION TOLERANCES

A. Erection Tolerances: Install aluminum-framed entrances and storefronts to comply with the following maximum tolerances:

1. Plumb: 1/8 inch in 10 feet; 1/4 inch in 40 feet.
2. Level: 1/8 inch in 20 feet; 1/4 inch in 40 feet.
3. Alignment:

    a. Where surfaces abut in line or are separated by reveal or protruding element up to 1/2 inch wide, limit offset from true alignment to 1/16 inch.
    b. Where surfaces are separated by reveal or protruding element from 1/2 to 1 inch wide, limit offset from true alignment to 1/8 inch.
    c. Where surfaces are separated by reveal or protruding element of 1 inch wide or more, limit offset from true alignment to 1/4 inch.

4. Location: Limit variation from plane to 1/8 inch in 12 feet; 1/2 inch over total length.

3.4 FIELD QUALITY CONTROL

A. Testing Agency: Owner will engage a qualified testing agency to perform tests and inspections.

B. Field Quality-Control Testing: Perform the following test on representative areas of aluminum-framed entrances and storefronts.

1. Water-Spray Test: Before installation of interior finishes has begun, areas designated by Architect shall be tested according to AAMA 501.2 and shall not evidence water penetration.

a. Perform a minimum of three tests in areas as directed by Architect.

C. Aluminum-framed entrances and storefronts will be considered defective if they do not pass tests and inspections.

D. Prepare test and inspection reports.

3.5 MAINTENANCE SERVICE

A. Entrance Door Hardware:

1. Maintenance Tools and Instructions: Furnish a complete set of specialized tools and maintenance instructions as needed for Owner's continued adjustment, maintenance, and removal and replacement of entrance door hardware.
2. Initial Maintenance Service: Beginning at Substantial Completion, provide six months' full maintenance by skilled employees of entrance door hardware Installer. Include quarterly preventive maintenance, repair or replacement of worn or defective components, lubrication, cleaning, and adjusting as required for proper entrance door hardware operation at rated speed and capacity. Use parts and supplies that are the same as those used in the manufacture and installation of original equipment.

END OF SECTION 084113

SECTION 087100 - DOOR HARDWARE

PART 1 - GENERAL

1.1 RELATED DOCUMENTS

A. Drawings and general provisions of the Contract, including General and Supplementary Conditions and Division 01 Specification Sections, apply to this Section.

1.2 SUMMARY

A. Section Includes:

1. Mechanical door hardware for the following:

    a. Swinging doors.
    b. Sliding doors.
    c. Folding doors.

2. Cylinders for door hardware specified in other Sections.
3. Electrified door hardware.

1.3 COORDINATION

A. Installation Templates: Distribute for doors, frames, and other work specified to be factory prepared. Check Shop Drawings of other work to confirm that adequate provisions are made for locating and installing door hardware to comply with indicated requirements.

B. Security: Coordinate installation of door hardware, keying, and access control with Owner's security consultant.

C. Electrical System Roughing-In: Coordinate layout and installation of electrified door hardware with connections to power supplies and building safety and security systems.

D. Existing Openings: Where hardware components are scheduled for application to existing construction or where modifications to existing door hardware are required, field verify existing conditions and coordinate installation of door hardware to suit opening conditions and to provide proper door operation.

1.4 PREINSTALLATION MEETINGS

A. Preinstallation Conference: Conduct conference at Project site.

1. Conference participants shall include Installer's Architectural Hardware Consultant and Owner's security consultant.

B. Keying Conference: Conduct conference at Project site.

1. Conference participants shall include Installer's Architectural Hardware Consultant and Owner's security consultant.
2. Incorporate conference decisions into keying schedule after reviewing door hardware keying system including, but not limited to, the following:

a. Flow of traffic and degree of security required.
b. Preliminary key system schematic diagram.
c. Requirements for key control system.
d. Requirements for access control.
e. Address for delivery of keys.

1.5 ACTION SUBMITTALS

A. Product Data: For each type of product.

1. Include construction details, material descriptions, dimensions of individual components and profiles, and finishes.

B. Shop Drawings: For electrified door hardware.

1. Include diagrams for power, signal, and control wiring.
2. Include details of interface of electrified door hardware and building safety and security systems.

C. Samples: For each exposed product in each finish specified, in manufacturer's standard size.

1. Tag Samples with full product description to coordinate Samples with door hardware schedule.

D. Samples for Initial Selection: For each type of exposed finish.

E. Door Hardware Schedule: Prepared by or under the supervision of Installer's Architectural Hardware Consultant. Coordinate door hardware schedule with doors, frames, and related work to ensure proper size, thickness, hand, function, and finish of door hardware.

1. Submittal Sequence: Submit door hardware schedule after or concurrent with submissions of Product Data, Samples, and Shop Drawings. Coordinate submission of door hardware schedule with scheduling requirements of other work to facilitate the fabrication of other work that is critical in Project construction schedule.

2. Format: Use same scheduling sequence and format and use same door numbers as in door hardware schedule in the Contract Documents.
3. Content: Include the following information:

    a. Identification number, location, hand, fire rating, size, and material of each door and frame.
    b. Locations of each door hardware set, cross-referenced to Drawings on floor plans and to door and frame schedule.
    c. Complete designations, including name and manufacturer, type, style, function, size, quantity, function, and finish of each door hardware product.
    d. Description of electrified door hardware sequences of operation and interfaces with other building control systems.
    e. Fastenings and other installation information.
    f. Explanation of abbreviations, symbols, and designations contained in door hardware schedule.
    g. Mounting locations for door hardware.
    h. List of related door devices specified in other Sections for each door and frame.

F. Keying Schedule: Prepared by or under the supervision of Installer's Architectural Hardware Consultant, detailing Owner's final keying instructions for locks. Include schematic keying diagram and index each key set to unique door designations that are coordinated with the Contract Documents.

1.6 INFORMATIONAL SUBMITTALS

A. Qualification Data: For Installer and Architectural Hardware Consultant.

B. Product Certificates: For each type of electrified door hardware.

1. Certify that door hardware for use on each type and size of labeled fire-rated doors complies with listed fire-rated door assemblies.

C. Product Test Reports: For compliance with accessibility requirements, for tests performed by manufacturer and witnessed by a qualified testing agency, for door hardware on doors located in accessible routes.

D. Field quality-control reports.

E. Sample Warranty: For special warranty.

1.7 CLOSEOUT SUBMITTALS

A. Maintenance Data: For each type of door hardware to include in maintenance manuals.

B. Schedules: Final door hardware and keying schedule.

1.8 MAINTENANCE MATERIAL SUBMITTALS

A. Furnish extra materials that match products installed and that are packaged with protective covering for storage and identified with labels describing contents.

1. Door Hardware: Types and quantities as approved by the Owner.
2. Electrical Parts: Types and quantities as approved by the Owner.

1.9 QUALITY ASSURANCE

A. Installer Qualifications: Supplier of products and an employer of workers trained and approved by product manufacturers and of an Architectural Hardware Consultant who is available during the course of the Work to consult Contractor, Architect, and Owner about door hardware and keying.

1. Warehousing Facilities: In Project's vicinity.
2. Scheduling Responsibility: Preparation of door hardware and keying schedule.
3. Engineering Responsibility: Preparation of data for electrified door hardware, including Shop Drawings, based on testing and engineering analysis of manufacturer's standard units in assemblies similar to those indicated for this Project.

B. Architectural Hardware Consultant Qualifications: A person who is experienced in providing consulting services for door hardware installations that are comparable in material, design, and extent to that indicated for this Project and who is currently certified by DHI as an Architectural Hardware Consultant (AHC) and an Electrified Hardware Consultant (EHC).

1.10 DELIVERY, STORAGE, AND HANDLING

A. Inventory door hardware on receipt and provide secure lock-up for door hardware delivered to Project site.

B. Tag each item or package separately with identification coordinated with the final door hardware schedule, and include installation instructions, templates, and necessary fasteners with each item or package.

C. Deliver keys to manufacturer of key control system for subsequent delivery to Owner.

D. Deliver keys and permanent cores to Owner by registered mail or overnight package service.

1.11 WARRANTY

A. Special Warranty: Manufacturer agrees to repair or replace components of door hardware that fail in materials or workmanship within specified warranty period.

1. Failures include, but are not limited to, the following:

a. Structural failures including excessive deflection, cracking, or breakage.

b. Faulty operation of doors and door hardware.
c. Deterioration of metals, metal finishes, and other materials beyond normal weathering and use.

2. Warranty Period: Three years from date of Substantial Completion unless otherwise indicated below:

a. Electromagnetic and Delayed-Egress Locks: Five years from date of Substantial Completion.
b. Exit Devices: Two years from date of Substantial Completion.
c. Manual Closers: 10 years from date of Substantial Completion.
d. Concealed Floor Closers: Five years from date of Substantial Completion.

PART 2 - PRODUCTS

2.1 MANUFACTURERS

A. Source Limitations: Obtain each type of door hardware from single manufacturer.

1. Provide electrified door hardware from same manufacturer as mechanical door hardware unless otherwise indicated. Manufacturers that perform electrical modifications and that are listed by a testing and inspecting agency acceptable to authorities having jurisdiction are acceptable.

2.2 PERFORMANCE REQUIREMENTS

A. Fire-Rated Door Assemblies: Where fire-rated doors are indicated, provide door hardware complying with NFPA 80 that is listed and labeled by a qualified testing agency, for fire-protection ratings indicated, based on testing at positive pressure according to NFPA 252 or UL 10C.

B. Smoke- and Draft-Control Door Assemblies: Where smoke- and draft-control door assemblies are required, provide door hardware that complies with requirements of assemblies tested according to UL 1784 and installed in compliance with NFPA 105.

1. Air Leakage Rate: Maximum air leakage of 0.3 cfm/sq. ft. at the tested pressure differential of 0.3-inch wg of water.

C. Electrified Door Hardware: Listed and labeled as defined in NFPA 70, by a qualified testing agency, and marked for intended location and application.

D. Means of Egress Doors: Latches do not require more than 15 lbf to release the latch. Locks do not require use of a key, tool, or special knowledge for operation.

E. Accessibility Requirements: For door hardware on doors in an accessible route, comply with the U.S. Architectural & Transportation Barriers Compliance Board's ADA-ABA Accessibility Guidelines and ICC/ANSI A117.1.

1. Provide operating devices that do not require tight grasping, pinching, or twisting of the wrist and that operate with a force of not more than 5 lbf.
2. Comply with the following maximum opening-force requirements:

    a. Interior, Non-Fire-Rated Hinged Doors: 5 lbf applied perpendicular to door.
    b. Fire Doors: Minimum opening force allowable by authorities having jurisdiction.

3. Bevel raised thresholds with a slope of not more than 1:2. Provide thresholds not more than 1/2 inch high.
4. Adjust door closer sweep periods so that, from an open position of 90 degrees, the door will take at least 5 seconds to move to a position of 12 degrees from the latch.
5. Adjust spring hinges so that, from an open position of 70 degrees, the door will take at least 1.5 seconds to move to the closed position.

2.3 HINGES

A. Hinges: BHMA A156.1. Provide template-produced hinges for hinges installed on hollow-metal doors and hollow-metal frames.

2.4 SELF-CLOSING HINGES AND PIVOTS

A. Self-Closing Hinges and Pivots: BHMA A156.17.

2.5 CONTINUOUS HINGES

A. Continuous Hinges: BHMA A156.26; minimum 0.120-inch-thick, hinge leaves with minimum overall width of 4 inches; fabricated to full height of door and frame and to template screw locations; with components finished after milling and drilling are complete.

B. Pin-and-barrel-type hinges.

C. Continuous, Gear-Type Hinges: Extruded-aluminum, pinless, geared hinge leaves joined by a continuous extruded-aluminum channel cap; with concealed, self-lubricating thrust bearings.

2.6 MECHANICAL LOCKS AND LATCHES

A. Basis-of-Design: Subject to compliance with requirements, provide product indicated below or a comparable product as approved by the Architect:

1. Product: 9K Series by Best with a #14K Lever Style and Trim.

B. Lock Functions: As indicated in door hardware schedule.

C. Lock Throw: Comply with testing requirements for length of bolts required for labeled fire doors, and as follows:

1. Mortise Locks: Minimum 3/4-inch latchbolt throw.
2. Deadbolts: Minimum 1-inch bolt throw.

D. Lock Backset: 2-3/4 inches unless otherwise indicated.

E. Lock Trim:

1. Description: As indicated on Drawings.
2. Levers: Cast.
3. Knobs: Wrought.
4. Dummy Trim: Match knob or lever lock trim and escutcheons.

F. Strikes: Provide manufacturer's standard strike for each lock bolt or latchbolt complying with requirements indicated for applicable lock or latch and with strike box and curved lip extended to protect frame; finished to match lock or latch.

1. Flat-Lip Strikes: For locks with three-piece antifriction latchbolts, as recommended by manufacturer.
2. Extra-Long-Lip Strikes: For locks used on frames with applied wood casing trim.
3. Aluminum-Frame Strike Box: Manufacturer's special strike box fabricated for aluminum framing.
4. Rabbet Front and Strike: Provide on locksets for rabbeted meeting stiles.

2.7 ELECTRIC STRIKES

A. Electric Strikes: BHMA A156.31; Grade 1; with faceplate to suit lock and frame.

2.8 MANUAL FLUSH BOLTS

A. Manual Flush Bolts: BHMA A156.16; minimum 3/4-inch throw; designed for mortising into door edge.

2.9 AUTOMATIC AND SELF-LATCHING FLUSH BOLTS

A. Automatic and Self-Latching Flush Bolts: BHMA A156.16; minimum 3/4-inch throw; designed for mortising into door edge.

2.10 EXIT DEVICES AND AUXILIARY ITEMS

A. Exit Devices and Auxiliary Items: BHMA A156.3.

2.11 LOCK CYLINDERS

A. Lock Cylinders: Tumbler type, constructed from brass or bronze, stainless steel, or nickel silver. Provide cylinder from same manufacturer of locking devices.

B. Standard Lock Cylinders: BHMA A156.5; Grade 1 permanent cores; face finished to match lockset.

C. High-Security Lock Cylinders: BHMA A156.30; Grade 1 permanent cores that are removable; face finished to match lockset.

1. Type: M, mechanical or E, electrical.

D. Construction Master Keys: Provide cylinders with feature that permits voiding of construction keys without cylinder removal. Provide 10 construction master keys.

E. Construction Cores: Provide construction cores that are replaceable by permanent cores. Provide 10 construction master keys.

2.12 KEYING

A. Keying System: Factory registered, complying with guidelines in BHMA A156.28, appendix. Provide one extra key blank for each lock. Incorporate decisions made in keying conference.

1. Master Key System: Change keys and a master key operate cylinders.

a. Provide three cylinder change keys and five master keys.

2. Grand Master Key System: Change keys, a master key, and a grand master key operate cylinders.

a. Provide three cylinder change keys and five each of master and grand master keys.

3. Keyed Alike: Key all cylinders to same change key.

B. Keys: Nickel silver.

1. Stamping: Permanently inscribe each key with a visual key control number and include the following notation:

a. Notation: "DO NOT DUPLICATE."

2.13 OPERATING TRIM

A. Operating Trim: BHMA A156.6; aluminum unless otherwise indicated.

2.14 ACCESSORIES FOR PAIRS OF DOORS

A. Coordinators: BHMA A156.3; consisting of active-leaf, hold-open lever and inactive-leaf release trigger; fabricated from steel with nylon-coated strike plates; with built-in, adjustable safety release; and with internal override.

B. Carry-Open Bars: BHMA A156.3; prevent the inactive leaf from opening before the active leaf; provide polished brass or bronze carry-open bars with strike plate for inactive leaves of pairs of doors unless automatic or self-latching bolts are used.

C. Astragals: BHMA A156.22.

2.15 SURFACE CLOSERS

A. Surface Closers: BHMA A156.4; rack-and-pinion hydraulic type with adjustable sweep and latch speeds controlled by key-operated valves and forged-steel main arm. Comply with manufacturer's written instructions for size of door closers depending on size of door, exposure to weather, and anticipated frequency of use. Provide factory-sized closers, adjustable to meet field conditions and requirements for opening force.

2.16 MECHANICAL STOPS AND HOLDERS

A. Wall- and Floor-Mounted Stops: BHMA A156.16.

2.17 ELECTROMAGNETIC STOPS AND HOLDERS

A. Electromagnetic Door Holders: BHMA A156.15, Grade 1; wall-mounted electromagnetic single unit with strike plate attached to swinging door; coordinated with fire detectors and interface with fire-alarm system for labeled fire-rated door assemblies.

2.18 OVERHEAD STOPS AND HOLDERS

A. Overhead Stops and Holders: BHMA A156.8.

2.19 DOOR GASKETING

A. Door Gasketing: BHMA A156.22; with resilient or flexible seal strips that are easily replaceable and readily available from stocks maintained by manufacturer.

B. Maximum Air Leakage: When tested according to ASTM E 283 with tested pressure differential of 0.3-inch wg, as follows:

1. Smoke-Rated Gasketing: 0.3 cfm/sq. ft. of door opening.
2. Gasketing on Single Doors: 0.3 cfm/sq. ft. of door opening.
3. Gasketing on Double Doors: 0.50 cfm per foot of door opening.

2.20 THRESHOLDS

A. Thresholds: BHMA A156.21; fabricated to full width of opening indicated.

2.21 SLIDING DOOR HARDWARE

A. Sliding Door Hardware: BHMA A156.14; consisting of complete sets including rails, hangers, supports, bumpers, floor guides, and accessories indicated.

2.22 FOLDING DOOR HARDWARE

A. General: BHMA A156.14; complete sets including overhead rails, hangers, supports, bumpers, floor guides, and accessories indicated.

2.23 METAL PROTECTIVE TRIM UNITS

A. Metal Protective Trim Units: BHMA A156.6; fabricated from 0.050-inch-thick aluminum; with manufacturer's standard machine or self-tapping screw fasteners.

2.24 AUXILIARY DOOR HARDWARE

A. Auxiliary Hardware: BHMA A156.16.

2.25 AUXILIARY ELECTRIFIED DOOR HARDWARE

A. Auxiliary electrified door hardware.

2.26 FABRICATION

A. Manufacturer's Nameplate: Do not provide products that have manufacturer's name or trade name displayed in a visible location except in conjunction with required fire-rating labels and as otherwise approved by Architect.

1. Manufacturer's identification is permitted on rim of lock cylinders only.

B. Base Metals: Produce door hardware units of base metal indicated, fabricated by forming method indicated, using manufacturer's standard metal alloy, composition, temper, and hardness. Furnish metals of a quality equal to or greater than that of specified door hardware units and BHMA A156.18.

C. Fasteners: Provide door hardware manufactured to comply with published templates prepared for machine, wood, and sheet metal screws. Provide screws that comply with commercially recognized industry standards for application intended, except aluminum fasteners are not permitted. Provide Phillips flat-head screws with finished heads to match surface of door hardware unless otherwise indicated.

1. Concealed Fasteners: For door hardware units that are exposed when door is closed, except for units already specified with concealed fasteners. Do not use through bolts for installation where bolt head or nut on opposite face is exposed unless it is the only means of securely attaching the door hardware. Where through bolts are used on hollow door and frame construction, provide sleeves for each through bolt.
2. Fire-Rated Applications:

    a. Wood or Machine Screws: For the following:

        1) Hinges mortised to doors or frames; use threaded-to-the-head wood screws for wood doors and frames.
        2) Strike plates to frames.
        3) Closers to doors and frames.

    b. Steel Through Bolts: For the following unless door blocking is provided:

        1) Surface hinges to doors.
        2) Closers to doors and frames.
        3) Surface-mounted exit devices.

3. Spacers or Sex Bolts: For through bolting of hollow-metal doors.
4. Fasteners for Wood Doors: Comply with requirements in DHI WDHS.2, "Recommended Fasteners for Wood Doors."
5. Gasketing Fasteners: Provide noncorrosive fasteners for exterior applications and elsewhere as indicated.

2.27 FINISHES

A. Provide finishes complying with BHMA A156.18 as indicated in door hardware schedule.

B. Protect mechanical finishes on exposed surfaces from damage by applying a strippable, temporary protective covering before shipping.

C. Appearance of Finished Work: Variations in appearance of abutting or adjacent pieces are acceptable if they are within one-half of the range of approved Samples. Noticeable variations in the same piece are not acceptable. Variations in appearance of other components are acceptable if they are within the range of approved Samples and are assembled or installed to minimize contrast.

PART 3 - EXECUTION

3.1 EXAMINATION

A. Examine doors and frames, with Installer present, for compliance with requirements for installation tolerances, labeled fire-rated door assembly construction, wall and floor construction, and other conditions affecting performance of the Work.

B. Examine roughing-in for electrical power systems to verify actual locations of wiring connections before electrified door hardware installation.

C. Proceed with installation only after unsatisfactory conditions have been corrected.

3.2 PREPARATION

A. Steel Doors and Frames: For surface-applied door hardware, drill and tap doors and frames according to ANSI/SDI A250.6.

B. Wood Doors: Comply with door and hardware manufacturers' written instructions.

3.3 INSTALLATION

A. Mounting Heights: Mount door hardware units at heights indicated on Drawings and to comply with the following unless otherwise indicated or required to comply with governing regulations.

1. Standard Steel Doors and Frames: ANSI/SDI A250.8.
2. Custom Steel Doors and Frames: HMMA 831.
3. Wood Doors: DHI's "Recommended Locations for Architectural Hardware for Wood Flush Doors."

B. Install each door hardware item to comply with manufacturer's written instructions. Where cutting and fitting are required to install door hardware onto or into surfaces that are later to be painted or finished in another way, coordinate removal, storage, and reinstallation of surface protective trim units with finishing work. Do not install surface-mounted items until finishes have been completed on substrates involved.

1. Set units level, plumb, and true to line and location. Adjust and reinforce attachment substrates as necessary for proper installation and operation.
2. Drill and countersink units that are not factory prepared for anchorage fasteners. Space fasteners and anchors according to industry standards.

C. Hinges: Install types and in quantities indicated in door hardware schedule, but not fewer than the number recommended by manufacturer for application indicated or one hinge for every 30 inches of door height, whichever is more stringent, unless other equivalent means of support for door, such as spring hinges or pivots, are provided.

D. Intermediate Offset Pivots: Where offset pivots are indicated, provide intermediate offset pivots in quantities indicated in door hardware schedule, but not fewer than one intermediate offset pivot per door and one additional intermediate offset pivot for every 30 inches of door height greater than 90 inches.

E. Lock Cylinders: Install construction cores to secure building and areas during construction period.

1. Replace construction cores with permanent cores as directed by Owner.
2. Furnish permanent cores to Owner for installation.

F. Boxed Power Supplies: Locate power supplies as indicated or, if not indicated, in equipment room. Verify location with Architect.

1. Configuration: Provide one power supply for each door opening with electrified door hardware.

G. Thresholds: Set thresholds for exterior doors and other doors indicated in full bed of sealant complying with requirements specified in Section 079200 "Joint Sealants."

H. Stops: Provide floor stops for doors unless wall or other type stops are indicated in door hardware schedule. Do not mount floor stops where they will impede traffic.

I. Perimeter Gasketing: Apply to head and jamb, forming seal between door and frame.

1. Do not notch perimeter gasketing to install other surface-applied hardware.

J. Meeting Stile Gasketing: Fasten to meeting stiles, forming seal when doors are closed.

K. Door Bottoms: Apply to bottom of door, forming seal with threshold when door is closed.

3.4 FIELD QUALITY CONTROL

A. Independent Architectural Hardware Consultant: Owner will engage a qualified independent Architectural Hardware Consultant to perform inspections and to prepare inspection reports.

1. Independent Architectural Hardware Consultant will inspect door hardware and state in each report whether installed work complies with or deviates from requirements, including whether door hardware is properly installed and adjusted.

3.5 ADJUSTING

A. Initial Adjustment: Adjust and check each operating item of door hardware and each door to ensure proper operation or function of every unit. Replace units that cannot be adjusted to operate as intended. Adjust door control devices to compensate for final operation of heating and ventilating equipment and to comply with referenced accessibility requirements.

1. Door Closers: Adjust sweep period to comply with accessibility requirements and requirements of authorities having jurisdiction.
2. Spring Hinges: Adjust to achieve positive latching when door is allowed to close freely from an open position of 70 degrees and so that closing time complies with accessibility requirements of authorities having jurisdiction.
3. Electric Strikes: Adjust horizontal and vertical alignment of keeper to properly engage lock bolt.

B. Occupancy Adjustment: Approximately six months after date of Substantial Completion, Installer's Architectural Hardware Consultant shall examine and readjust each item of door hardware, including adjusting operating forces, as necessary to ensure function of doors, door hardware, and electrified door hardware.

3.6 CLEANING AND PROTECTION

A. Clean adjacent surfaces soiled by door hardware installation.

B. Clean operating items as necessary to restore proper function and finish.

C. Provide final protection and maintain conditions that ensure that door hardware is without damage or deterioration at time of Substantial Completion.

3.7 MAINTENANCE SERVICE

A. Maintenance Tools and Instructions: Furnish a complete set of specialized tools and maintenance instructions for Owner's continued adjustment, maintenance, and removal and replacement of door hardware.

3.8 DEMONSTRATION

A. Engage Installer to train Owner's maintenance personnel to adjust, operate, and maintain door hardware.

3.9 DOOR HARDWARE SCHEDULE

A. Door Hardware Schedule: Engage a qualified Architectural Hardware Consultant to provide door hardware schedule.

END OF SECTION 087100

SECTION 088000 - GLAZING

PART 1 - GENERAL

1.1 RELATED DOCUMENTS

A. Drawings and general provisions of the Contract, including General and Supplementary Conditions and Division 01 Specification Sections, apply to this Section.

1.2 SUMMARY

A. Section includes:

1. Glass for storefront, windows and doors.
2. Glazing sealants and accessories.

1.3 DEFINITIONS

A. Glass Manufacturers: Firms that produce primary glass, fabricated glass, or both, as defined in referenced glazing publications.

B. Glass Thicknesses: Indicated by thickness designations in millimeters according to ASTM C 1036.

C. IBC: International Building Code.

D. Interspace: Space between lites of an insulating-glass unit.

1.4 COORDINATION

A. Coordinate glazing channel dimensions to provide necessary bite on glass, minimum edge and face clearances, and adequate sealant thicknesses, with reasonable tolerances.

1.5 ACTION SUBMITTALS

A. Product Data: For each type of product.

B. Glass Samples: For each type of glass product other than clear monolithic vision glass; 12 inches square.

C. Glazing Accessory Samples: For sealants and colored spacers, in 12-inch lengths. Install sealant Samples between two strips of material representative in color of the adjoining framing system.

D. Glazing Schedule: List glass types and thicknesses for each size opening and location. Use same designations indicated on Drawings.

E. Delegated-Design Submittal: For glass indicated to comply with performance requirements and design criteria, including analysis data signed and sealed by the qualified professional engineer responsible for their preparation.

1.6 INFORMATIONAL SUBMITTALS

A. Qualification Data: For Installer, manufacturers of insulating-glass units with sputter-coated, low-E coatings, glass testing agency, and sealant testing agency.

B. Product Certificates: For glass.

C. Product Test Reports: For tinted glass, insulating glass, and glazing sealants, for tests performed by a qualified testing agency.

1. For glazing sealants, provide test reports based on testing current sealant formulations within previous 36-month period.

D. Preconstruction adhesion and compatibility test report.

E. Sample Warranties: For special warranties.

1.7 QUALITY ASSURANCE

A. Manufacturer Qualifications for Insulating-Glass Units with Sputter-Coated, Low-E Coatings: A qualified insulating-glass manufacturer who is approved and certified by coated-glass manufacturer.

B. Installer Qualifications: A qualified installer who employs glass installers for this Project who are certified under the National Glass Association's Certified Glass Installer Program.

C. Glass Testing Agency Qualifications: A qualified independent testing agency accredited according to the NFRC CAP 1 Certification Agency Program.

D. Sealant Testing Agency Qualifications: An independent testing agency qualified according to ASTM C 1021 to conduct the testing indicated.

1.8 PRECONSTRUCTION TESTING

A. Preconstruction Adhesion and Compatibility Testing: Test each glass product, tape sealant, gasket, glazing accessory, and glass-framing member for adhesion to and compatibility with elastomeric glazing sealants.

1. Testing is not required if data are submitted based on previous testing of current sealant products and glazing materials matching those submitted.

2. Use ASTM C 1087 to determine whether priming and other specific joint-preparation techniques are required to obtain rapid, optimum adhesion of glazing sealants to glass, tape sealants, gaskets, and glazing channel substrates.
3. Test no fewer than eight Samples of each type of material, including joint substrates, shims, sealant backings, secondary seals, and miscellaneous materials.
4. Schedule enough time for testing and analyzing results to prevent delaying the Work.
5. For materials failing tests, submit sealant manufacturer's written instructions for corrective measures including the use of specially formulated primers.

1.9 DELIVERY, STORAGE, AND HANDLING

A. Protect glazing materials according to manufacturer's written instructions. Prevent damage to glass and glazing materials from condensation, temperature changes, direct exposure to sun, or other causes.

B. Comply with insulating-glass manufacturer's written instructions for venting and sealing units to avoid hermetic seal ruptures due to altitude change.

1.10 FIELD CONDITIONS

A. Environmental Limitations: Do not proceed with glazing when ambient and substrate temperature conditions are outside limits permitted by glazing material manufacturers and when glazing channel substrates are wet from rain, frost, condensation, or other causes.

1. Do not install glazing sealants when ambient and substrate temperature conditions are outside limits permitted by sealant manufacturer or are below 40 deg F.

1.11 WARRANTY

A. Manufacturer's Special Warranty for Insulating Glass: Manufacturer agrees to replace insulating-glass units that deteriorate within specified warranty period. Deterioration of insulating glass is defined as failure of hermetic seal under normal use that is not attributed to glass breakage or to maintaining and cleaning insulating glass contrary to manufacturer's written instructions. Evidence of failure is the obstruction of vision by dust, moisture, or film on interior surfaces of glass.

1. Warranty Period: 10 years from date of Substantial Completion.

PART 2 - PRODUCTS

2.1 MANUFACTURERS

A. Manufacturers: Subject to compliance with requirements, provide products by one of the following:

1. AGC Glass Company North America, Inc.
2. Cardinal Glass Industries.
3. Cristacurva.
4. Dlubak Corporation.
5. Gardner Glass, Inc.
6. GGI; General Glass International.
7. Glasswerks LA, Inc.
8. GTI; Glaz-Tech Industries.
9. Guardian Industries Corp.; SunGuard.
10. Hartung Glass Industries.
11. JE Berkowitz, LP.
12. Northwestern Industries, Inc.
13. Oldcastle BuildingEnvelope™.
14. Pilkington North America.
15. PPG Flat Glass; PPG Industries, Inc.
16. Schott North America, Inc.
17. Tecnoglass.
18. Trulite Glass & Aluminum Solutions, LLC.
19. Vetrotech Saint-Gobain.
20. Viracon, Inc.

B. Source Limitations for Glass: Obtain from single source from single manufacturer for each glass type.

1. Obtain tinted glass from single source from single manufacturer.
2. Obtain reflective-coated glass from single source from single manufacturer.

C. Source Limitations for Glazing Accessories: Obtain from single source from single manufacturer for each product and installation method.

2.2 PERFORMANCE REQUIREMENTS

A. General: Installed glazing systems shall withstand normal thermal movement and wind and impact loads (where applicable) without failure, including loss or glass breakage attributable to the following: defective manufacture, fabrication, or installation; failure of sealants or gaskets to remain watertight and airtight; deterioration of glazing materials; or other defects in construction.

B. Delegated Design: Engage a qualified professional engineer, as defined in Section 014000 "Quality Requirements," to design glazing.

C. Structural Performance: Glazing shall withstand the following design loads within limits and under conditions indicated determined according to the IBC and ASTM E 1300.

1. Design Wind Pressures: As indicated on Structural Drawings.
2. Maximum Lateral Deflection: For glass supported on all four edges, limit center-of-glass deflection at design wind pressure to not more than 1/50 times the short-side length or 1 inch, whichever is less.
3. Differential Shading: Design glass to resist thermal stresses induced by differential shading within individual glass lites.

D. Safety Glazing: Where safety glazing is indicated, provide glazing that complies with 16 CFR 1201, Category II.

E. Thermal and Optical Performance Properties: Provide glass with performance properties specified, as indicated in manufacturer's published test data, based on procedures indicated below:

1. For monolithic-glass lites, properties are based on units with lites 6 mm thick.
2. For insulating-glass units, properties are based on units of thickness indicated for overall unit and for each lite.
3. U-Factors: Center-of-glazing values, according to NFRC 100 and based on LBL's WINDOW 5.2 computer program, expressed as Btu/sq. ft. x h x deg F.
4. Solar Heat-Gain Coefficient and Visible Transmittance: Center-of-glazing values, according to NFRC 200 and based on LBL's WINDOW 5.2 computer program.
5. Visible Reflectance: Center-of-glazing values, according to NFRC 300.

2.3 GLASS PRODUCTS, GENERAL

A. Glazing Publications: Comply with published recommendations of glass product manufacturers and organizations below unless more stringent requirements are indicated. See these publications for glazing terms not otherwise defined in this Section or in referenced standards.

1. GANA Publications: "Laminated Glazing Reference Manual" and "Glazing Manual."
2. IGMA Publication for Insulating Glass: SIGMA TM-3000, "North American Glazing Guidelines for Sealed Insulating Glass Units for Commercial and Residential Use."

B. Safety Glazing Labeling: Where safety glazing is indicated, permanently mark glazing with certification label of the SGCC or another certification agency acceptable to authorities having jurisdiction or manufacturer. Label shall indicate manufacturer's name, type of glass, thickness, and safety glazing standard with which glass complies.

C. Insulating-Glass Certification Program: Permanently marked either on spacers or on at least one component lite of units with appropriate certification label of IGCC.

D. Thickness: Where glass thickness is indicated, it is a minimum. Provide glass that complies with performance requirements and is not less than the thickness indicated.

1. Minimum Glass Thickness for Exterior Lites: 6 mm.
2. Thickness of Tinted Glass: Provide same thickness for each tint color indicated throughout Project.

E. Strength: Where annealed float glass is indicated, provide annealed float glass, heat-strengthened float glass, or fully tempered float glass. Where heat-strengthened float glass is indicated, provide heat-strengthened float glass or fully tempered float glass. Where fully tempered float glass is indicated, provide fully tempered float glass.

2.4 GLASS PRODUCTS

A. Clear Annealed Float Glass: ASTM C 1036, Type I, Class 1 (clear), Quality-Q3.

B. Ultraclear Float Glass: ASTM C 1036, Type I, Class I (clear), Quality-Q3; and with visible light transmission of not less than 91 percent and solar heat gain coefficient of not less than 0.87.

C. Tinted Annealed Float Glass: ASTM C 1036, Type I, Class 2 (tinted), Quality-Q3.

D. Fully Tempered Float Glass: ASTM C 1048, Kind FT (fully tempered), Condition A (uncoated) unless otherwise indicated, Type I, Class 1 (clear) or Class 2 (tinted) as indicated, Quality-Q3.

1. Fabrication Process: By horizontal (roller-hearth) process with roll-wave distortion parallel to bottom edge of glass as installed unless otherwise indicated.

E. Heat-Strengthened Float Glass: ASTM C 1048, Kind HS (heat strengthened), Type I, Condition A (uncoated) unless otherwise indicated, Type I, Class 1 (clear) or Class 2 (tinted) as indicated, Quality-Q3.

1. Fabrication Process: By horizontal (roller-hearth) process with roll-wave distortion parallel to bottom edge of glass as installed unless otherwise indicated.

F. Ceramic-Coated Vision Glass: ASTM C 1048, Condition C, Type I, Class 1 (clear) or Class 2 (tinted) as indicated, Quality-Q3; and complying with Specification No. 95-1-31 in GANA's "Engineering Standards Manual."

G. Ceramic-Coated Spandrel Glass: ASTM C 1048, Type I, Condition B, Quality-Q3.

2.5 INSULATING GLASS

A. Insulating-Glass Units: Factory-assembled units consisting of sealed lites of glass separated by a dehydrated interspace, qualified according to ASTM E 2190.

1. Sealing System: Dual seal, with polyisobutylene and silicone primary and secondary sealants.

2. Perimeter Spacer: As selected by the Architect from the manufacturer's full range.
3. Desiccant: Molecular sieve or silica gel, or a blend of both.

2.6 GLAZING SEALANTS

A. General:

1. Compatibility: Compatible with one another and with other materials they contact, including glass products, seals of insulating-glass units, and glazing channel substrates, under conditions of service and application, as demonstrated by sealant manufacturer based on testing and field experience.
2. Suitability: Comply with sealant and glass manufacturers' written instructions for selecting glazing sealants suitable for applications indicated and for conditions existing at time of installation.
3. Colors of Exposed Glazing Sealants: As selected by Architect from manufacturer's full range.

B. Glazing Sealant: Neutral-curing silicone glazing sealant complying with ASTM C 920, Type S, Grade NS, Class 100/50, Use NT.

1. Products: Subject to compliance with requirements, provide one of the following:

a. Dow Corning Corporation; Dow Corning® 790 Silicone Building Sealant.
b. GE Construction Sealants; Momentive Performance Materials Inc.; SCS2700 SilPruf LM.
c. May National Associates, Inc.; a subsidiary of Sika Corporation; Bondaflex Sil 290.
d. Pecora Corporation; 890NST.
e. Sika Corporation; SikaSil WS-290.
f. Tremco Incorporated; Spectrem 1.

C. Glazing Sealant: Neutral-curing silicone glazing sealant complying with ASTM C 920, Type S, Grade NS, Class 50, Use NT.

1. Products: Subject to compliance with requirements, provide one of the following:

a. Dow Corning Corporation; DOW CORNING® 756 SMS BUILDING SEALANT, Dow Corning® 791 Silicone Weatherproofing Sealant, Dow Corning® 795 Silicone Building Sealant, or DOW CORNING® 995 SILICONE STRUCTURAL SEALANT.
b. GE Construction Sealants; Momentive Performance Materials Inc.; Contractors N SCS1800, SCS2000 SilPruf, SCS2800 SilGlaze II, SCS9000 SilPruf NB, or UltraPruf II SCS2900.
c. May National Associates, Inc.; a subsidiary of Sika Corporation; Bondaflex Sil 295.
d. Pecora Corporation; 864NST, 864NST Silicone Sealant, 895, 895NST, 896, 898, or 898NST.
e. Polymeric Systems, Inc; PSI-641.
f. Sika Corporation; Sikasil WS-295.

g. Tremco Incorporated; Spectrem 2 or Spectrem 3.

2.7 GLAZING TAPES

A. Back-Bedding Mastic Glazing Tapes: Preformed, butyl-based, 100 percent solids elastomeric tape; nonstaining and nonmigrating in contact with nonporous surfaces; with or without spacer rod as recommended in writing by tape and glass manufacturers for application indicated; and complying with ASTM C 1281 and AAMA 800 for products indicated below:

1. AAMA 804.3 tape, where indicated.
2. AAMA 806.3 tape, for glazing applications in which tape is subject to continuous pressure.
3. AAMA 807.3 tape, for glazing applications in which tape is not subject to continuous pressure.

B. Expanded Cellular Glazing Tapes: Closed-cell, PVC foam tapes; factory coated with adhesive on both surfaces; and complying with AAMA 800 for the following types:

1. AAMA 810.1, Type 1, for glazing applications in which tape acts as the primary sealant.
2. AAMA 810.1, Type 2, for glazing applications in which tape is used in combination with a full bead of liquid sealant.

2.8 MISCELLANEOUS GLAZING MATERIALS

A. General: Provide products of material, size, and shape complying with referenced glazing standard, with requirements of manufacturers of glass and other glazing materials for application indicated, and with a proven record of compatibility with surfaces contacted in installation.

B. Cleaners, Primers, and Sealers: Types recommended by sealant or gasket manufacturer.

C. Setting Blocks: Elastomeric material with a Shore, Type A durometer hardness of 85, plus or minus 5.

D. Spacers: Elastomeric blocks or continuous extrusions of hardness required by glass manufacturer to maintain glass lites in place for installation indicated.

E. Edge Blocks: Elastomeric material of hardness needed to limit glass lateral movement (side walking).

F. Cylindrical Glazing Sealant Backing: ASTM C 1330, Type O (open-cell material), of size and density to control glazing sealant depth and otherwise produce optimum glazing sealant performance.

2.9 FABRICATION OF GLAZING UNITS

A. Fabricate glazing units in sizes required to fit openings indicated for Project, with edge and face clearances, edge and surface conditions, and bite complying with written instructions of product manufacturer and referenced glazing publications, to comply with system performance requirements.

1. Allow for thermal movements from ambient and surface temperature changes acting on glass framing members and glazing components.

a. Temperature Change: 120 deg F, ambient; 180 deg F, material surfaces.

B. Clean-cut or flat-grind vertical edges of butt-glazed monolithic lites to produce square edges with slight chamfers at junctions of edges and faces.

C. Grind smooth and polish exposed glass edges and corners.

PART 3 - EXECUTION

3.1 EXAMINATION

A. Examine framing, glazing channels, and stops, with Installer present, for compliance with the following:

1. Manufacturing and installation tolerances, including those for size, squareness, and offsets at corners.
2. Presence and functioning of weep systems.
3. Minimum required face and edge clearances.
4. Effective sealing between joints of glass-framing members.

B. Proceed with installation only after unsatisfactory conditions have been corrected.

3.2 PREPARATION

A. Clean glazing channels and other framing members receiving glass immediately before glazing. Remove coatings not firmly bonded to substrates.

B. Examine glazing units to locate exterior and interior surfaces. Label or mark units as needed so that exterior and interior surfaces are readily identifiable. Do not use materials that leave visible marks in the completed Work.

3.3 GLAZING, GENERAL

A. Comply with combined written instructions of manufacturers of glass, sealants, gaskets, and other glazing materials, unless more stringent requirements are indicated, including those in referenced glazing publications.

B. Protect glass edges from damage during handling and installation. Remove damaged glass from Project site and legally dispose of off Project site. Damaged glass includes glass with edge damage or other imperfections that, when installed, could weaken glass, impair performance, or impair appearance.

C. Apply primers to joint surfaces where required for adhesion of sealants, as determined by preconstruction testing.

D. Install setting blocks in sill rabbets, sized and located to comply with referenced glazing publications, unless otherwise required by glass manufacturer. Set blocks in thin course of compatible sealant suitable for heel bead.

E. Do not exceed edge pressures stipulated by glass manufacturers for installing glass lites.

F. Provide spacers for glass lites where length plus width is larger than 50 inches.

1. Locate spacers directly opposite each other on both inside and outside faces of glass. Install correct size and spacing to preserve required face clearances, unless gaskets and glazing tapes are used that have demonstrated ability to maintain required face clearances and to comply with system performance requirements.
2. Provide 1/8-inch minimum bite of spacers on glass and use thickness equal to sealant width. With glazing tape, use thickness slightly less than final compressed thickness of tape.

G. Provide edge blocking where indicated or needed to prevent glass lites from moving sideways in glazing channel, as recommended in writing by glass manufacturer and according to requirements in referenced glazing publications.

H. Set glass lites in each series with uniform pattern, draw, bow, and similar characteristics.

I. Set glass lites with proper orientation so that coatings face exterior or interior as specified.

J. Where wedge-shaped gaskets are driven into one side of channel to pressurize sealant or gasket on opposite side, provide adequate anchorage so gasket cannot walk out when installation is subjected to movement.

K. Square cut wedge-shaped gaskets at corners and install gaskets in a manner recommended by gasket manufacturer to prevent corners from pulling away; seal corner joints and butt joints with sealant recommended by gasket manufacturer.

3.4 TAPE GLAZING

A. Position tapes on fixed stops so that, when compressed by glass, their exposed edges are flush with or protrude slightly above sightline of stops.

B. Install tapes continuously, but not necessarily in one continuous length. Do not stretch tapes to make them fit opening.

C. Cover vertical framing joints by applying tapes to heads and sills first, then to jambs. Cover horizontal framing joints by applying tapes to jambs, then to heads and sills.

D. Place joints in tapes at corners of opening with adjoining lengths butted together, not lapped. Seal joints in tapes with compatible sealant approved by tape manufacturer.

E. Do not remove release paper from tape until right before each glazing unit is installed.

F. Apply heel bead of elastomeric sealant.

G. Center glass lites in openings on setting blocks, and press firmly against tape by inserting dense compression gaskets formed and installed to lock in place against faces of removable stops. Start gasket applications at corners and work toward centers of openings.

H. Apply cap bead of elastomeric sealant over exposed edge of tape.

3.5 GASKET GLAZING (DRY)

A. Cut compression gaskets to lengths recommended by gasket manufacturer to fit openings exactly, with allowance for stretch during installation.

B. Insert soft compression gasket between glass and frame or fixed stop so it is securely in place with joints miter cut and bonded together at corners.

C. Installation with Drive-in Wedge Gaskets: Center glass lites in openings on setting blocks, and press firmly against soft compression gasket by inserting dense compression gaskets formed and installed to lock in place against faces of removable stops. Start gasket applications at corners and work toward centers of openings. Compress gaskets to produce a weathertight seal without developing bending stresses in glass. Seal gasket joints with sealant recommended by gasket manufacturer.

D. Installation with Pressure-Glazing Stops: Center glass lites in openings on setting blocks, and press firmly against soft compression gasket. Install dense compression gaskets and pressure-glazing stops, applying pressure uniformly to compression gaskets. Compress gaskets to produce a weathertight seal without developing bending stresses in glass. Seal gasket joints with sealant recommended by gasket manufacturer.

E. Install gaskets so they protrude past face of glazing stops.

3.6 SEALANT GLAZING (WET)

A. Install continuous spacers, or spacers combined with cylindrical sealant backing, between glass lites and glazing stops to maintain glass face clearances and to prevent sealant from extruding into glass channel and blocking weep systems until sealants cure. Secure spacers or spacers and backings in place and in position to control depth of installed sealant relative to edge clearance for optimum sealant performance.

B. Force sealants into glazing channels to eliminate voids and to ensure complete wetting or bond of sealant to glass and channel surfaces.

C. Tool exposed surfaces of sealants to provide a substantial wash away from glass.

3.7 CLEANING AND PROTECTION

A. Immediately after installation remove nonpermanent labels and clean surfaces.

B. Protect glass from contact with contaminating substances resulting from construction operations. Examine glass surfaces adjacent to or below exterior concrete and other masonry surfaces at frequent intervals during construction, but not less than once a month, for buildup of dirt, scum, alkaline deposits, or stains.

1. If, despite such protection, contaminating substances do come into contact with glass, remove substances immediately as recommended in writing by glass manufacturer. Remove and replace glass that cannot be cleaned without damage to coatings.

C. Remove and replace glass that is damaged during construction period.

D. Wash glass on both exposed surfaces not more than four days before date scheduled for inspections that establish date of Substantial Completion. Wash glass as recommended in writing by glass manufacturer.

3.8 MONOLITHIC GLASS SCHEDULE

A. Glass Type: Clear annealed float glass.

1. Minimum Thickness: 6 mm.
1. Fully tempered where required with safety glazing labeling.

3.9 INSULATING GLASS SCHEDULE

A. Glass Type: Low-E-coated, clear insulating glass.

1. Overall Unit Thickness: 1 inch.
2. Minimum Thickness of Each Glass Lite: 6 mm.
3. Outdoor Lite: Annealed float glass, unless fully tempered is required.
4. Interspace Content: Air or argon.
5. Indoor Lite: Annealed float glass, unless fully tempered is required.
6. Low-E Coating: Pyrolytic on second surface.
7. U-Factor: As selected by the Architect.
8. SHGC: As selected by the Architect.
9. Fully tempered where required with safety glazing labeling.

END OF SECTION 088000

SECTION 088300 - MIRRORS

PART 1 - GENERAL

1.1 RELATED DOCUMENTS

A. Drawings and general provisions of the Contract, including General and Supplementary Conditions and Division 01 Specification Sections, apply to this Section.

1.2 SUMMARY

A. Section includes the following types of silvered flat glass mirrors:

1. Tempered glass mirrors qualifying as safety glazing.

B. Related Requirements:

1. Section 102800 "Toilet and Bath Accessories" for framed mirrors in restrooms and bathrooms.

1.3 ACTION SUBMITTALS

A. Product Data: For each type of product.

1. Mirrors. Include description of materials and process used to produce each type of silvered flat glass mirror specified that indicates sources of glass, glass coating components, edge sealer, and quality-control provisions.

B. Shop Drawings: Include mirror elevations, edge details, mirror hardware, and attachment details.

C. Samples: For each type of the following:

1. Mirrors: 12 inches square, including edge treatment on two adjoining edges.
2. Mirror Clips: Full size.
3. Mirror Trim: 12 inches long.

1.4 INFORMATIONAL SUBMITTALS

A. Qualification Data: For Installer.

B. Product Certificates: For each type of mirror and mirror mastic.

C. Preconstruction Test Reports: From mirror manufacturer indicating that mirror mastic was tested for compatibility and adhesion with mirror backing and substrates on which mirrors are installed.

D. Sample Warranty: For special warranty.

1.5 CLOSEOUT SUBMITTALS

A. Maintenance Data: For mirrors to include in maintenance manuals.

1.6 QUALITY ASSURANCE

A. Installer Qualifications: A qualified installer who employs glass installers for this Project who are certified under the National Glass Association's Certified Glass Installer Program.

1.7 PRECONSTRUCTION TESTING

A. Preconstruction Mirror Mastic Compatibility Test: Submit mirror mastic products to mirror manufacturer for testing to determine compatibility of mastic with mirror backing.

1. Testing is not required if data are submitted based on previous testing of mirror mastic products and mirror backing matching those submitted.

1.8 DELIVERY, STORAGE, AND HANDLING

A. Protect mirrors according to mirror manufacturer's written instructions and as needed to prevent damage to mirrors from moisture, condensation, temperature changes, direct exposure to sun, or other causes.

B. Comply with mirror manufacturer's written instructions for shipping, storing, and handling mirrors as needed to prevent deterioration of silvering, damage to edges, and abrasion of glass surfaces and applied coatings. Store indoors.

1.9 FIELD CONDITIONS

A. Environmental Limitations: Do not install mirrors until ambient temperature and humidity conditions are maintained at levels indicated for final occupancy.

1.10 WARRANTY

A. Special Warranty: Manufacturer agrees to replace mirrors that deteriorate within specified warranty period. Deterioration of mirrors is defined as defects developed from normal use that are not attributed to mirror breakage or to maintaining and cleaning mirrors contrary to manufacturer's written instructions. Defects include discoloration, black spots, and clouding of the silver film.

1. Warranty Period: Five years from date of Substantial Completion.

PART 2 - PRODUCTS

2.1 MANUFACTURERS

A. Manufacturers: Subject to compliance with requirements, provide products by one of the following:

1. Avalon Glass and Mirror Company.
2. Binswanger Mirror; a division of Vitro America, Inc.
3. D & W Incorporated.
4. Donisi Mirror Company.
5. Gardner Glass, Inc.
6. Gilded Mirrors, Inc.
7. Glasswerks LA, Inc.
8. Guardian Industries Corp.; SunGuard.
9. Head West.
10. Independent Mirror Industries, Inc.
11. Lenoir Mirror Company.
12. National Glass Industries.
13. Stroupe Mirror Co., Inc.
14. Sunshine Mirror.
15. Trulite Glass & Aluminum Solutions, LLC.
16. Virginia Mirror Company, Inc.
17. Walker Glass Co., Ltd.

B. Source Limitations for Mirrors: Obtain mirrors from single source from single manufacturer.

C. Source Limitations for Mirror Accessories: Obtain mirror glazing accessories from single source.

2.2 SILVERED FLAT GLASS MIRRORS

A. Mirrors, General: ASTM C 1503.

B. Tempered Glass Mirrors: Mirror Glazing Quality for blemish requirements and complying with ASTM C 1048 for Kind FT, Condition A, tempered float glass before silver coating is applied; clear.

1. Nominal Thickness: 6.0 mm.

C. Safety Glazing Products: For tempered mirrors, provide products that comply with 16 CFR 1201, Category II.

2.3 MISCELLANEOUS MATERIALS

A. Setting Blocks: Elastomeric material with a Shore, Type A durometer hardness of 85, plus or minus 5.

B. Edge Sealer: Coating compatible with glass coating and approved by mirror manufacturer for use in protecting against silver deterioration at mirrored glass edges.

C. Mirror Mastic: An adhesive setting compound, asbestos-free, produced specifically for setting mirrors and certified by both mirror and mastic manufacturer as compatible with glass coating and substrates on which mirrors will be installed.

D. Film Backing for Safety Mirrors: Film backing and pressure-sensitive adhesive; both compatible with mirror backing paint as certified by mirror manufacturer.

2.4 MIRROR HARDWARE

A. Mirror Bottom Clips: As approved by the Architect.

B. Mirror Top Clips: As approved by the Architect.

C. Fasteners: Fabricated of same basic metal and alloy as fastened metal and matching it in finished color and texture where fasteners are exposed.

D. Anchors and Inserts: Provide devices as required for mirror hardware installation. Provide toothed or lead-shield, expansion-bolt devices for drilled-in-place anchors. Provide galvanized anchors and inserts for applications on inside face of exterior walls and where indicated.

2.5 FABRICATION

A. Fabricate mirrors in the shop to greatest extent possible.

B. Fabricate cutouts for notches and holes in mirrors without marring visible surfaces. Locate and size cutouts so they fit closely around penetrations in mirrors.

C. Mirror Edge Treatment: Rounded polished.

1. Seal edges of mirrors with edge sealer after edge treatment to prevent chemical or atmospheric penetration of glass coating.
2. Require mirror manufacturer to perform edge treatment and sealing in factory immediately after cutting to final sizes.

D. Film-Backed Safety Mirrors: Apply film backing with adhesive coating over mirror backing paint, as recommended in writing by film-backing manufacturer, to produce a surface free of bubbles, blisters, and other imperfections.

PART 3 - EXECUTION

3.1 EXAMINATION

A. Examine substrates, over which mirrors are to be mounted, with Installer present, for compliance with installation tolerances, substrate preparation, and other conditions affecting performance of the Work.

B. Verify compatibility with and suitability of substrates, including compatibility of existing finishes or primers with mirror mastic.

C. Proceed with installation only after unsatisfactory conditions have been corrected and surfaces are dry.

3.2 PREPARATION

A. Comply with mastic manufacturer's written installation instructions for preparation of substrates, including coating substrates with mastic manufacturer's special bond coating where applicable.

3.3 INSTALLATION

A. General: Install mirrors to comply with mirror manufacturer's written instructions and with referenced GANA publications. Mount mirrors accurately in place in a manner that avoids distorting reflected images.

1. GANA Publications: "Glazing Manual" and "Mirrors, Handle with Extreme Care: Tips for the Professional on the Care and Handling of Mirrors."

B. Provide a minimum airspace of 1/8 inch between back of mirrors and mounting surface for air circulation between back of mirrors and face of mounting surface.

C. Install mirrors with mastic and mirror hardware. Attach mirror hardware securely to mounting surfaces with mechanical fasteners installed with anchors or inserts as applicable. Install fasteners so heads do not impose point loads on backs of mirrors.

1. Mirror Clips: Place a felt or plastic pad between mirror and each clip to prevent spalling of mirror edges. Locate clips so they are symmetrically placed and evenly spaced.
2. Install mastic as follows:

a. Apply barrier coat to mirror backing where approved in writing by manufacturers of mirrors and backing material.

b. Apply mastic to comply with mastic manufacturer's written instructions for coverage and to allow air circulation between back of mirrors and face of mounting surface.
c. After mastic is applied, align mirrors and press into place while maintaining a minimum airspace of 1/8 inch between back of mirrors and mounting surface.

3.4 CLEANING AND PROTECTION

A. Protect mirrors from breakage and contaminating substances resulting from construction operations.

B. Do not permit edges of mirrors to be exposed to standing water.

C. Maintain environmental conditions that prevent mirrors from being exposed to moisture from condensation or other sources for continuous periods of time.

D. Clean exposed surface of mirrors not more than four days before date scheduled for inspections that establish date of Substantial Completion. Clean mirrors as recommended in writing by mirror manufacturer.

END OF SECTION 088300

SECTION 092216 - NON-STRUCTURAL METAL FRAMING

PART 1 - GENERAL

1.1 RELATED DOCUMENTS

A. Drawings and general provisions of the Contract, including General and Supplementary Conditions and Division 01 Specification Sections, apply to this Section.

1.2 SUMMARY

A. Section Includes:

1. Non-load-bearing steel framing systems for interior partitions.
2. Suspension systems for interior ceilings and soffits.
3. Grid suspension systems for gypsum board ceilings.

B. Related Requirements:

1. Section 054000 "Cold-Formed Metal Framing" for exterior and interior load-bearing and exterior non-load-bearing wall studs; floor joists; roof rafters and ceiling joists; and roof trusses.

1.3 ACTION SUBMITTALS

A. Product Data: For each type of product.

1.4 INFORMATIONAL SUBMITTALS

A. Product Certificates: For each type of code-compliance certification for studs and tracks.

B. Evaluation Reports: For embossed steel studs and tracks, firestop tracks, post-installed anchors, and power-actuated fasteners, from ICC-ES or other qualified testing agency acceptable to authorities having jurisdiction.

PART 2 - PRODUCTS

2.1 PERFORMANCE REQUIREMENTS

A. Fire-Test-Response Characteristics: For fire-resistance-rated assemblies that incorporate non-load-bearing steel framing, provide materials and construction identical to those tested in assembly indicated, according to ASTM E 119 by an independent testing agency.

B. STC-Rated Assemblies: For STC-rated assemblies, provide materials and construction identical to those tested in assembly indicated on Drawings, according to ASTM E 90 and classified according to ASTM E 413 by an independent testing agency.

C. Horizontal Deflection: For wall assemblies, limited to 1/240 of the wall height based on horizontal loading of 5 lbf/sq. ft., unless otherwise indicated.

2.2 FRAMING SYSTEMS

A. Framing Members, General: Comply with ASTM C 754 for conditions indicated.

1. Steel Sheet Components: Comply with ASTM C 645 requirements for metal unless otherwise indicated.
2. Protective Coating: ASTM A 653/A 653M, G40, hot-dip galvanized unless otherwise indicated.

B. Studs and Tracks: ASTM C 645. Use either steel studs and tracks or embossed steel studs and tracks.

1. Steel Studs and Tracks:

   a. Minimum Base-Metal Thickness: .
   b. Depth: As indicated on Drawings.

2. Embossed Steel Studs and Tracks: Roll-formed and embossed with surface deformations to stiffen the framing members so that they are structurally equivalent to conventional ASTM C 645 steel studs and tracks.

   a. Minimum Base-Metal Thickness: As required by horizontal deflection performance requirements.
   b. Depth: As indicated on Drawings.

C. Slip-Type Head Joints: Where indicated, provide one of the following:

1. Clip System: Clips designed for use in head-of-wall deflection conditions that provide a positive attachment of studs to tracks while allowing 1-1/2-inch minimum vertical movement, unless otherwise indicated.
2. Single Long-Leg Track System: ASTM C 645 top track with 2-inch-deep flanges in thickness not less than indicated for studs, installed with studs friction fit into top track and with continuous bridging located within 12 inches of the top of studs to provide lateral bracing.
3. Double-Track System: ASTM C 645 top outer tracks, inside track with 2-inch-deep flanges in thickness not less than indicated for studs and fastened to studs, and outer track sized to friction-fit over inner track.
4. Deflection Track: Steel sheet top track manufactured to prevent cracking of finishes applied to interior partition framing resulting from deflection of structure above; in thickness not less than indicated for studs and in width to accommodate depth of studs.

D. Firestop Tracks: Top track manufactured to allow partition heads to expand and contract with movement of structure while maintaining continuity of fire-resistance-rated assembly indicated; in thickness not less than indicated for studs and in width to accommodate depth of studs.

E. Flat Strap and Backing Plate: Steel sheet for blocking and bracing in length and width indicated.

1. Minimum Base-Metal Thickness: 0.0179 inch, unless otherwise required for structural performance.

F. Cold-Rolled Channel Bridging: Steel, 0.0538-inch minimum base-metal thickness, with minimum 1/2-inch-wide flanges.

1.

2. Depth: 1-1/2 inches, unless otherwise required for structural performance.
3. Clip Angle: Not less than 1-1/2 by 1-1/2 inches, 0.068-inch-thick, galvanized steel.

G. Hat-Shaped, Rigid Furring Channels: ASTM C 645.

1. Minimum Base-Metal Thickness: 0.0179 inch, unless otherwise required for structural performance.
2. Depth: As indicated on Drawings.

H. Resilient Furring Channels: 1/2-inch-deep, steel sheet members designed to reduce sound transmission.

1. Configuration: Asymmetrical or hat shaped.

I. Cold-Rolled Furring Channels: 0.053-inch uncoated-steel thickness, with minimum 1/2-inch-wide flanges.

1. Depth: As indicated on Drawings.
2. Furring Brackets: Adjustable, corrugated-edge-type steel sheet with minimum uncoated-steel thickness of 0.0329 inch.
3. Tie Wire: ASTM A 641/A 641M, Class 1 zinc coating, soft temper, 0.062-inch-diameter wire, or double strand of 0.048-inch-diameter wire.

J. Z-Shaped Furring: With slotted or nonslotted web, face flange of 1-1/4 inches, wall attachment flange of 7/8 inch, minimum uncoated-metal thickness of 0.0179 inch, and depth required to fit insulation thickness indicated.

2.3 SUSPENSION SYSTEMS

A. Tie Wire: ASTM A 641/A 641M, Class 1 zinc coating, soft temper, 0.062-inch-diameter wire, or double strand of 0.048-inch-diameter wire.

B. Hanger Attachments to Concrete:

1. Post-Installed Anchors: Fastener systems with an evaluation report acceptable to authorities having jurisdiction, based on ICC-ES AC01, AC193, AC58, or AC308 as appropriate for the substrate.

    a. Uses: Securing hangers to structure.
    b. Type: Torque-controlled, expansion anchor, torque-controlled, adhesive anchor, or adhesive anchor.
    c. Material for Interior Locations: Carbon-steel components zinc-plated to comply with ASTM B 633 or ASTM F 1941, Class Fe/Zn 5, unless otherwise indicated.
    d. Material for Exterior or Interior Locations and Where Stainless Steel Is Indicated: Alloy Group 1 stainless-steel bolts, ASTM F 593, and nuts, ASTM F 594.

2. Power-Actuated Anchors: Fastener systems with an evaluation report acceptable to authorities having jurisdiction, based on ICC-ES AC70.

C. Wire Hangers: ASTM A 641/A 641M, Class 1 zinc coating, soft temper, 0.16 inch in diameter.

D. Flat Hangers: Steel sheet, 1 by 3/16 inch by length indicated.

E. Carrying Channels (Main Runners): Cold-rolled, commercial-steel sheet with a base-metal thickness of 0.0538 inch and minimum 1/2-inch-wide flanges.

1. Depth: As indicated on Drawings.

F. Furring Channels (Furring Members):

1. Cold-Rolled Channels: 0.0538-inch uncoated-steel thickness, with minimum 1/2-inch-wide flanges, 3/4 inch deep.
2. Steel Studs and Tracks: ASTM C 645.

    a. Minimum Base-Metal Thickness: 0.0179 inch , unless otherwise required for structural performance.
    b. Depth: As indicated on Drawings.

3. Embossed Steel Studs and Tracks: ASTM C 645.

    a. Minimum Base-Metal Thickness: 0.0147 inch, unless otherwise required for structural performance.
    b. Depth: As indicated on Drawings.

4. Hat-Shaped, Rigid Furring Channels: ASTM C 645, 7/8 inch deep.

    a. Minimum Base-Metal Thickness: 0.0179 inch, unless otherwise required for structural performance.

5. Resilient Furring Channels: 1/2-inch-deep members designed to reduce sound transmission.

    a. Configuration: Asymmetrical or hat shaped.

G. Grid Suspension System for Gypsum Board Ceilings: ASTM C 645, direct-hung system composed of main beams and cross-furring members that interlock.

2.4 AUXILIARY MATERIALS

A. General: Provide auxiliary materials that comply with referenced installation standards.

1. Fasteners for Steel Framing: Of type, material, size, corrosion resistance, holding power, and other properties required to fasten steel members to substrates.

B. Isolation Strip at Exterior Walls: Provide one of the following:

1. Asphalt-Saturated Organic Felt: ASTM D 226/D 226M, Type I (No. 15 asphalt felt), nonperforated.
2. Foam Gasket: Adhesive-backed, closed-cell vinyl foam strips that allow fastener penetration without foam displacement, 1/8 inch thick, in width to suit steel stud size.

PART 3 - EXECUTION

3.1 EXAMINATION

A. Examine areas and substrates, with Installer present, and including welded hollow-metal frames, cast-in anchors, and structural framing, for compliance with requirements and other conditions affecting performance of the Work.

B. Proceed with installation only after unsatisfactory conditions have been corrected.

3.2 PREPARATION

A. Suspended Assemblies: Coordinate installation of suspension systems with installation of overhead structure to ensure that inserts and other provisions for anchorages to building structure have been installed to receive hangers at spacing required to support the Work and that hangers will develop their full strength.

1. Furnish concrete inserts and other devices indicated to other trades for installation in advance of time needed for coordination and construction.

B. Coordination with Sprayed Fire-Resistive Materials:

1. Before sprayed fire-resistive materials are applied, attach offset anchor plates or ceiling tracks to surfaces indicated to receive sprayed fire-resistive materials. Where offset anchor plates are required, provide continuous plates fastened to building structure not more than 24 inches o.c.
2. After sprayed fire-resistive materials are applied, remove them only to extent necessary for installation of non-load-bearing steel framing. Do not reduce thickness of fire-

resistive materials below that are required for fire-resistance ratings indicated. Protect adjacent fire-resistive materials from damage.

3.3 INSTALLATION, GENERAL

A. Installation Standard: ASTM C 754.

1. Gypsum Plaster Assemblies: Also comply with requirements in ASTM C 841 that apply to framing installation.
2. Gypsum Board Assemblies: Also comply with requirements in ASTM C 840 that apply to framing installation.

B. Install framing and accessories plumb, square, and true to line, with connections securely fastened.

C. Install supplementary framing, and blocking to support fixtures, equipment services, heavy trim, grab bars, toilet accessories, furnishings, or similar construction.

D. Install bracing at terminations in assemblies.

E. Do not bridge building control and expansion joints with non-load-bearing steel framing members. Frame both sides of joints independently.

3.4 INSTALLING FRAMED ASSEMBLIES

A. Install framing system components according to spacings indicated, but not greater than spacings required by referenced installation standards for assembly types.

1. Single-Layer Application: As required by horizontal deflection performance requirements.
2. Multilayer Application: As required by horizontal deflection performance requirements.

B. Where studs are installed directly against exterior masonry walls or dissimilar metals at exterior walls, install isolation strip between studs and exterior wall.

C. Install studs so flanges within framing system point in same direction.

D. Install tracks at floors and overhead supports. Extend framing full height to structural supports or substrates above suspended ceilings except where partitions are indicated to terminate at suspended ceilings. Continue framing around ducts that penetrate partitions above ceiling.

1. Slip-Type Head Joints: Where framing extends to overhead structural supports, install to produce joints at tops of framing systems that prevent axial loading of finished assemblies.
2. Door Openings: Screw vertical studs at jambs to jamb anchor clips on door frames; install track section (for cripple studs) at head and secure to jamb studs.

    a. Install two studs at each jamb unless otherwise indicated.

b. Install cripple studs at head adjacent to each jamb stud, with a minimum 1/2-inch clearance from jamb stud to allow for installation of control joint in finished assembly.
c. Extend jamb studs through suspended ceilings and attach to underside of overhead structure.

3. Other Framed Openings: Frame openings other than door openings the same as required for door openings unless otherwise indicated. Install framing below sills of openings to match framing required above door heads.
4. Fire-Resistance-Rated Partitions: Install framing to comply with fire-resistance-rated assembly indicated and support closures and to make partitions continuous from floor to underside of solid structure.

a. Firestop Track: Where indicated, install to maintain continuity of fire-resistance-rated assembly indicated.

5. Sound-Rated Partitions: Install framing to comply with sound-rated assembly indicated.

E. Direct Furring:

1. Screw to wood framing.
2. Attach to concrete or masonry with stub nails, screws designed for masonry attachment, or powder-driven fasteners spaced 24 inches o.c.

F. Z-Shaped Furring Members:

1. Erect insulation, specified in Section 072100 "Thermal Insulation," vertically and hold in place with Z-shaped furring members spaced 24 inches o.c.
2. Except at exterior corners, securely attach narrow flanges of furring members to wall with concrete stub nails, screws designed for masonry attachment, or powder-driven fasteners spaced 24 inches o.c.
3. At exterior corners, attach wide flange of furring members to wall with short flange extending beyond corner; on adjacent wall surface, screw-attach short flange of furring channel to web of attached channel. At interior corners, space second member no more than 12 inches from corner and cut insulation to fit.

G. Installation Tolerance: Install each framing member so fastening surfaces vary not more than 1/8 inch from the plane formed by faces of adjacent framing.

3.5 INSTALLING CEILING SUSPENSION SYSTEMS

A. Install suspension system components according to spacings indicated, but not greater than spacings required by referenced installation standards for assembly types.
1. Hangers: As indicated on the Drawings and as required for structural performance.
1. Carrying Channels (Main Runners): As indicated on the Drawings and as required for structural performance.
2. Furring Channels (Furring Members): As indicated on the Drawings and as required for structural performance.

B. Isolate suspension systems from building structure where they abut or are penetrated by building structure to prevent transfer of loading imposed by structural movement.

C. Suspend hangers from building structure as follows:

1. Install hangers plumb and free from contact with insulation or other objects within ceiling plenum that are not part of supporting structural or suspension system.

    a. Splay hangers only where required to miss obstructions and offset resulting horizontal forces by bracing, countersplaying, or other equally effective means.

2. Where width of ducts and other construction within ceiling plenum produces hanger spacings that interfere with locations of hangers required to support standard suspension system members, install supplemental suspension members and hangers in the form of trapezes or equivalent devices.

    a. Size supplemental suspension members and hangers to support ceiling loads within performance limits established by referenced installation standards.

3. Wire Hangers: Secure by looping and wire tying, either directly to structures or to inserts, eye screws, or other devices and fasteners that are secure and appropriate for substrate, and in a manner that will not cause hangers to deteriorate or otherwise fail.
4. Flat Hangers: Secure to structure, including intermediate framing members, by attaching to inserts, eye screws, or other devices and fasteners that are secure and appropriate for structure and hanger, and in a manner that will not cause hangers to deteriorate or otherwise fail.
5. Do not attach hangers to steel roof deck.
6. Do not attach hangers to permanent metal forms. Furnish cast-in-place hanger inserts that extend through forms.
7. Do not attach hangers to rolled-in hanger tabs of composite steel floor deck.
8. Do not connect or suspend steel framing from ducts, pipes, or conduit.

D. Fire-Resistance-Rated Assemblies: Wire tie furring channels to supports.

E. Seismic Bracing: Sway-brace suspension systems with hangers used for support.

F. Grid Suspension Systems: Attach perimeter wall track or angle where grid suspension systems meet vertical surfaces. Mechanically join main beam and cross-furring members to each other and butt-cut to fit into wall track.

G. Installation Tolerances: Install suspension systems that are level to within 1/8 inch in 12 feet measured lengthwise on each member that will receive finishes and transversely between parallel members that will receive finishes.

END OF SECTION 092216

SECTION 092713 - GLASS-FIBER-REINFORCED PLASTER FABRICATIONS

PART 1 - GENERAL

1.1 RELATED DOCUMENTS

A. Drawings and general provisions of the Contract, including General and Supplementary Conditions and Division 01 Specification Sections, apply to this Section.

1.2 SUMMARY

A. Section includes:

1. Factory-molded, glass-fiber-reinforced plaster fabrications for interior column covers.

B. Related Requirements:

1. Section 061053 "Miscellaneous Rough Carpentry" for blocking, nailers, shims, and carpentry supporting glass-fiber-reinforced plaster fabrications.
2. Section 092216 "Non-Structural Metal Framing" for steel framing, blocking, and bracing supporting glass-fiber-reinforced plaster fabrications.

1.3 ACTION SUBMITTALS

A. Product Data: For each type of product. Include construction details, material descriptions, weights, dimensions of individual components and profiles, and finishes.

B. Shop Drawings:

1. Include plans, elevations, sections, and attachment details.
2. Detail fabrication and assembly of glass-fiber-reinforced plaster fabrications.
3. Indicate requirements for joint treatment.

C. Samples: For each exposed product and for each color and texture specified.

1. Linear Moldings: 24-inch-long section with finished joint. Show complete pattern.
2. Nonlinear Shapes: Full-size unit.

1.4 INFORMATIONAL SUBMITTALS

A. Coordination Drawings: Reflected ceiling plans, drawn to scale, on which the following items are shown and coordinated with each other, using input from installers of the items involved:

1. Ceiling suspension assembly members.

2. Method of attaching hangers to glass-fiber-reinforced plaster fabrications and to building structure.
3. Ceiling-mounted items including lighting fixtures, diffusers, grilles, speakers, sprinklers, access panels, moldings, and other fixtures.

1.5 QUALITY ASSURANCE

A. Mockups: Build mockups to set quality standards for fabrication and installation.

1. Build mockup of each type of glass-fiber-reinforced plaster fabrication.
2. Paint mockups to match final decoration scheduled or indicated and to comply with requirements specified in Section 099123 "Interior Painting."
3. Approval of mockups does not constitute approval of deviations from the Contract Documents contained in mockups unless Architect specifically approves such deviations in writing.
4. Subject to compliance with requirements, approved mockups may become part of the completed Work if undisturbed at time of Substantial Completion.

1.6 DELIVERY, STORAGE, AND HANDLING

A. Comply with ASTM C 1467/C 1467M.

1.7 FIELD CONDITIONS

A. Environmental Conditions:

1. Comply with ASTM C 1467/C 1467M.
2. Do not deliver or install glass-fiber-reinforced plaster fabrications until building is enclosed, wet work is complete, and HVAC system is operating and continuously maintaining temperature and relative humidity at levels intended for building occupants.

B. Conditioning: Acclimatize glass-fiber-reinforced plaster fabrications to ambient temperature and humidity of spaces in which they will be installed. Remove packaging and move units into installation spaces not less than 48 hours before installing them.

C. Field Measurements: Where glass-fiber-reinforced plaster fabrications are indicated to fit to other construction, verify dimensions of other construction by field measurements before fabrication and indicate measurements on Shop Drawings. Coordinate fabrication schedule with construction progress to avoid delaying the Work.

PART 2 - PRODUCTS

2.1 GLASS-FIBER-REINFORCED PLASTER FABRICATIONS

A. Ceiling Panel Type GFRG1: Molded, glass-fiber-reinforced plaster units complying with ASTM C 1381/C 1381M.

1. Manufacturers: Subject to compliance with requirements, provide products by one of the following manufacturers as selected by the Architect:

a. Architectural Reproductions Inc.
b. Casting Designs, Inc.
c. Formglas Inc.
d. Melton Classics, Inc.
e. Plaster Concepts.
f. Plastrglas, Incorporated.
g. Stromberg Architectural Products, Inc.

B. Embedments: As standard with glass-fiber-reinforced plaster fabrication manufacturer and as required for reinforcement and for anchorage to substrates and framing.

C. Finish: As selected by the Architect.

2.2 AUXILIARY MATERIALS

A. Adhesives: As recommended in glass-fiber-reinforced plaster fabrication manufacturer's written instructions and as follows:

1. Adhesive shall have VOC content of 50 g/L or less when calculated according to 40 CFR 59, Subpart D (EPA Method 24).

B. Steel Drill Screws: Of sufficient length and size to securely fasten glass-fiber-reinforced plaster fabrications to framing members, and as follows:

1. Screws complying with ASTM C 1002 for fastening glass-fiber-reinforced plaster fabrications to wood members.
2. Screws complying with ASTM C 954 for fastening glass-fiber-reinforced plaster fabrications to steel members from 0.033 to 0.112 inch thick.

C. Joint-Treatment Materials: ASTM C 475/C 475M.

2.3 FABRICATION

A. Fabricate glass-fiber-reinforced plaster units to comply with ASTM C 1381/C 1381M, with smooth-finished surfaces; repair hollows, voids, scratches, and other surface imperfections. Fabricate units in lengths and sizes that will minimize number of joints between abutting units.

B. Embedments: Incorporate embedments into units to develop the full strength of glass-fiber-reinforced plaster fabrications. Cover embedments with not less than 3/16-inch (5-mm) thickness of glass-fiber-reinforced plaster composite.

C. Connection Hardware: Designed and fabricated to support and connect glass-fiber-reinforced plaster fabrications to hangers, support framing, and substrates.

PART 3 - EXECUTION

3.1 GLASS-FIBER-REINFORCED PLASTER INSTALLATION

A. Examine substrates, areas, and conditions, with installer present, for compliance with requirements for installation tolerances and other conditions affecting performance of the work.

B. Proceed with installation only after unsatisfactory conditions have been corrected.

C. Comply with ASTM C 1467/C 1467M.

D. Install glass-fiber-reinforced plaster fabrications level, plumb, true, and aligned with adjacent materials. Use concealed shims where required for alignment.

E. Attach glass-fiber-reinforced plaster fabrications to framing and substrates with steel drill screws unless otherwise indicated. Do not use pneumatic staple guns. Countersink screw heads below adjoining finished surface.

1. Predrill fastener holes in units. Clean fastener holes to remove dirt and oil.
2. Locate fasteners not less than 5/16 inch from edges or ends of units.

F. Where glass-fiber-reinforced plaster fabrications are joined to form composite units, join fabrications with adhesive. Band or brace units together until adhesive cures.

G. Install control joints between glass-fiber-reinforced plaster fabrications where indicated.

H. Use joint-treatment materials to finish glass-fiber-reinforced plaster fabrications to produce surfaces ready to receive primers and paint finishes specified in Section 099123 “Interior Painting.”

1. Finish joints between units, other than control joints, and countersunk fastener heads to comply with ASTM C 840 for Level 5 and to match surface texture of units.
2. Repair hollows, voids, scratches, and other surface imperfections on units.

END OF SECTION 092713

SECTION 092900 - GYPSUM BOARD

PART 1 - GENERAL

1.1 RELATED DOCUMENTS

A. Drawings and general provisions of the Contract, including General and Supplementary Conditions and Division 01 Specification Sections, apply to this Section.

1.2 SUMMARY

A. Section Includes:

1. Interior gypsum board.
2. Exterior gypsum board for ceilings and soffits.
3. Tile backing panels.

B. Related Requirements:

1. Section 061600 "Sheathing" for gypsum sheathing for exterior walls.
2. Section 092216 "Non-Structural Metal Framing" for non-structural steel framing and suspension systems that support gypsum board panels.

1.3 ACTION SUBMITTALS

A. Product Data: For each type of product.

B. Samples: For the following products:

1. Trim Accessories: Full-size Sample in 12-inch-long length for each trim accessory indicated.

C. Samples for Initial Selection: For each type of trim accessory indicated.

1.4 QUALITY ASSURANCE

A. Mockups: Build mockups of at least 100 sq. ft. in surface area to demonstrate aesthetic effects and to set quality standards for materials and execution.

1. Build mockups for the following:

a. Each level of gypsum board finish indicated for use in exposed locations.

2. Apply or install final decoration indicated, including painting and wallcoverings, on exposed surfaces for review of mockups.
3. Simulate finished lighting conditions for review of mockups.
4. Subject to compliance with requirements, approved mockups may become part of the completed Work if undisturbed at time of Substantial Completion.

1.5 DELIVERY, STORAGE AND HANDLING

A. Store materials inside under cover and keep them dry and protected against weather, condensation, direct sunlight, construction traffic, and other potential causes of damage. Stack panels flat and supported on risers on a flat platform to prevent sagging.

1.6 FIELD CONDITIONS

A. Environmental Limitations: Comply with ASTM C 840 requirements or gypsum board manufacturer's written instructions, whichever are more stringent.

B. Do not install paper-faced gypsum panels until installation areas are enclosed and conditioned.

C. Do not install panels that are wet, moisture damaged, and mold damaged.

1. Indications that panels are wet or moisture damaged include, but are not limited to, discoloration, sagging, or irregular shape.
2. Indications that panels are mold damaged include, but are not limited to, fuzzy or splotchy surface contamination and discoloration.

PART 2 - PRODUCTS

2.1 PERFORMANCE REQUIREMENTS

A. Fire-Resistance-Rated Assemblies: For fire-resistance-rated assemblies, provide materials and construction identical to those tested in assembly indicated according to ASTM E 119 by an independent testing agency.

B. STC-Rated Assemblies: For STC-rated assemblies, provide materials and construction identical to those tested in assembly indicated according to ASTM E 90 and classified according to ASTM E 413 by an independent testing agency.

2.2 GYPSUM BOARD, GENERAL

A. Size: Provide maximum lengths and widths available that will minimize joints in each area and that correspond with support system indicated.

2.3 INTERIOR GYPSUM BOARD

A. Manufacturers: Subject to compliance with requirements, provide products by one of the following:

1. American Gypsum.
2. CertainTeed Corporation.
3. Continental Building Products, LLC.
4. Georgia-Pacific Building Products.
5. National Gypsum Company.
6. PABCO Gypsum.
7. Temple-Inland Building Products by Georgia-Pacific.
8. United States Gypsum Company.

B. Gypsum Wallboard: ASTM C 1396/C 1396M.

1. Thickness: 5/8 inch, unless otherwise indicated.
2. Long Edges: Tapered.

C. Gypsum Board, Type X: ASTM C 1396/C 1396M.

1. Thickness: 5/8 inch, unless otherwise indicated.
2. Long Edges: Tapered.

D. Gypsum Ceiling Board: ASTM C 1396/C 1396M.

1. Thickness: 5/8 inch, unless otherwise indicated.
2. Long Edges: Tapered.

E. Abuse-Resistant Gypsum Board: ASTM C 1396/C 1396M gypsum board, tested according to ASTM C 1629/C 1629M.

1. Core: 5/8 inch, regular type, unless Type X is indicated.
2. Surface Abrasion: ASTM C 1629/C 1629M, meets or exceeds Level 2 requirements.
3. Indentation: ASTM C 1629/C 1629M, meets or exceeds Level 1 requirements.
4. Soft-Body Impact: ASTM C 1629/C 1629M, meets or exceeds Level 2 requirements.
5. Long Edges: Tapered.
6. Mold Resistance: ASTM D 3273, score of 10 as rated according to ASTM D 3274.

F. Mold-Resistant Gypsum Board: ASTM C 1396/C 1396M. With moisture- and mold-resistant core and paper surfaces.

1. Core: 5/8 inch, regular type, unless Type X is indicated.
2. Long Edges: Tapered.
3. Mold Resistance: ASTM D 3273, score of 10 as rated according to ASTM D 3274.

2.4 SPECIALTY GYPSUM BOARD

A. Gypsum Board, Type C: ASTM C 1396/C 1396M. Manufactured to have increased fire-resistive capability.

1. Manufacturers: Subject to compliance with requirements, provide products by one of the following:

    a. American Gypsum.
    b. CertainTeed Corporation.
    c. Continental Building Products, LLC.
    d. Georgia-Pacific Building Products.
    e. National Gypsum Company.
    f. PABCO Gypsum.
    g. Temple-Inland Building Products by Georgia-Pacific.
    h. United States Gypsum Company.

2. Thickness: As required by fire-resistance-rated assembly indicated on Drawings.
3. Long Edges: Tapered.

2.5 TILE BACKING PANELS

A. Glass-Mat, Water-Resistant Backing Board: ASTM C 1178/C 1178M, with manufacturer's standard edges.

1. Manufacturers: Subject to compliance with requirements, provide products by one of the following:

    a. American Gypsum.
    b. CertainTeed Corporation.
    c. Georgia-Pacific Building Products.
    d. National Gypsum Company.
    e. Temple-Inland Building Products by Georgia-Pacific.
    f. United States Gypsum Company.

2. Core: 5/8 inch, regular type, unless Type X is indicated.
3. Mold Resistance: ASTM D 3273, score of 10 as rated according to ASTM D 3274.

B. Cementitious Backer Units: ANSI A118.9 and ASTM C 1288 or ASTM C 1325, with manufacturer's standard edges.

1. Manufacturers: Subject to compliance with requirements, provide products by one of the following:

a. C-Cure.
b. CertainTeed Corporation.
c. Custom Building Products.
d. FinPan, Inc.
e. James Hardie Building Products, Inc.
f. National Gypsum Company.
g. United States Gypsum Company.

2. Thickness: 1/2 inch, unless otherwise indicated.
3. Mold Resistance: ASTM D 3273, score of 10 as rated according to ASTM D 3274.

2.6 TRIM ACCESSORIES

A. Interior Trim: ASTM C 1047.

1. Material: Galvanized or aluminum-coated steel sheet, rolled zinc, plastic, or paper-faced galvanized-steel sheet.
2. Shapes:

a. Cornerbead.
b. Bullnose bead.
c. LC-Bead: J-shaped; exposed long flange receives joint compound.
d. L-Bead: L-shaped; exposed long flange receives joint compound.
e. U-Bead: J-shaped; exposed short flange does not receive joint compound.
f. Expansion (control) joint.
g. Curved-Edge Cornerbead: With notched or flexible flanges.

2.7 JOINT TREATMENT MATERIALS

A. General: Comply with ASTM C 475/C 475M.

B. Joint Tape:

1. Interior Gypsum Board: Paper.
2. Tile Backing Panels: As recommended by panel manufacturer.

C. Joint Compound for Interior Gypsum Board: For each coat, use formulation that is compatible with other compounds applied on previous or for successive coats.

1. Prefilling: At open joints, rounded or beveled panel edges, and damaged surface areas, use setting-type taping compound.

2. Embedding and First Coat: For embedding tape and first coat on joints, fasteners, and trim flanges, use drying-type, all-purpose compound.

    a. Use setting-type compound for installing paper-faced metal trim accessories.

3. Fill Coat: For second coat, use drying-type, all-purpose compound.
4. Finish Coat: For third coat, use drying-type, all-purpose compound.
5. Skim Coat: For final coat of Level 5 finish, use drying-type, all-purpose compound or high-build interior coating product designed for application by airless sprayer and to be used instead of skim coat to produce Level 5 finish.

D. Joint Compound for Tile Backing Panels:

1. Glass-Mat, Water-Resistant Backing Panel: As recommended by backing panel manufacturer.
2. Cementitious Backer Units: As recommended by backer unit manufacturer.
3. Water-Resistant Gypsum Backing Board: Use setting-type taping compound and setting-type, sandable topping compound.

2.8 AUXILIARY MATERIALS

A. General: Provide auxiliary materials that comply with referenced installation standards and manufacturer's written instructions.

B. Laminating Adhesive: Adhesive or joint compound recommended for directly adhering gypsum panels to continuous substrate.

C. Steel Drill Screws: ASTM C 1002 unless otherwise indicated.

1. Use screws complying with ASTM C 954 for fastening panels to steel members from 0.033 to 0.112 inch thick.
2. For fastening cementitious backer units, use screws of type and size recommended by panel manufacturer.

D. Sound-Attenuation Blankets: ASTM C 665, Type I (blankets without membrane facing) produced by combining thermosetting resins with mineral fibers manufactured from glass, slag wool, or rock wool.

1. Fire-Resistance-Rated Assemblies: Comply with mineral-fiber requirements of assembly.

E. Acoustical Sealant: As specified in Section 079219 "Acoustical Joint Sealants."

F. Thermal Insulation: As specified in Section 072100 "Thermal Insulation."

PART 3 - EXECUTION

3.1 EXAMINATION

A. Examine areas and substrates including welded hollow-metal frames and support framing, with Installer present, for compliance with requirements and other conditions affecting performance of the Work.

B. Examine panels before installation. Reject panels that are wet, moisture damaged, and mold damaged.

C. Proceed with installation only after unsatisfactory conditions have been corrected.

3.2 APPLYING AND FINISHING PANELS, GENERAL

A. Comply with ASTM C 840.

B. Install ceiling panels across framing to minimize the number of abutting end joints and to avoid abutting end joints in central area of each ceiling. Stagger abutting end joints of adjacent panels not less than one framing member.

C. Install panels with face side out. Butt panels together for a light contact at edges and ends with not more than 1/16 inch of open space between panels. Do not force into place.

D. Locate edge and end joints over supports, except in ceiling applications where intermediate supports or gypsum board back-blocking is provided behind end joints. Do not place tapered edges against cut edges or ends. Stagger vertical joints on opposite sides of partitions. Do not make joints other than control joints at corners of framed openings.

E. Form control and expansion joints with space between edges of adjoining gypsum panels.

F. Cover both faces of support framing with gypsum panels in concealed spaces (above ceilings, etc.), except in chases braced internally.

1. Unless concealed application is indicated or required for sound, fire, air, or smoke ratings, coverage may be accomplished with scraps of not less than 8 sq. ft. in area.
2. Fit gypsum panels around ducts, pipes, and conduits.
3. Where partitions intersect structural members projecting below underside of floor/roof slabs and decks, cut gypsum panels to fit profile formed by structural members; allow 1/4- to 3/8-inch-wide joints to install sealant.

G. Isolate perimeter of gypsum board applied to non-load-bearing partitions at structural abutments. Provide 1/4- to 1/2-inch-wide spaces at these locations and trim edges with edge trim where edges of panels are exposed. Seal joints between edges and abutting structural surfaces with acoustical sealant.

H. STC-Rated Assemblies: Seal construction at perimeters, behind control joints, and at openings and penetrations with a continuous bead of acoustical sealant. Install acoustical sealant at both

faces of partitions at perimeters and through penetrations. Comply with ASTM C 919 and with manufacturer's written instructions for locating edge trim and closing off sound-flanking paths around or through assemblies, including sealing partitions above acoustical ceilings.

I. Install sound attenuation blankets before installing gypsum panels unless blankets are readily installed after panels have been installed on one side.

3.3 APPLYING INTERIOR GYPSUM BOARD

A. Install interior gypsum board in the following locations:

1. Wallboard Type: Vertical surfaces unless otherwise indicated.
2. Type X: Where required for fire-resistance-rated assembly and as indicated on Drawings.
3. Ceiling Type: Ceiling surfaces.
4. Abuse-Resistant Type: As indicated on Drawings.
5. Mold-Resistant Type: At wet wall locations and as indicated on Drawings.
6. Type C: Where required for specific fire-resistance-rated assembly indicated and as indicated on Drawings.
7. Glass-Mat Interior Type: As indicated on Drawings.

B. Single-Layer Application:

1. On ceilings, apply gypsum panels before wall/partition board application to greatest extent possible and at right angles to framing unless otherwise indicated.
2. On partitions/walls, apply gypsum panels vertically (parallel to framing) unless otherwise indicated or required by fire-resistance-rated assembly, and minimize end joints.

    a. Stagger abutting end joints not less than one framing member in alternate courses of panels.
    b. At stairwells and other high walls, install panels horizontally unless otherwise indicated or required by fire-resistance-rated assembly.

3. On Z-shaped furring members, apply gypsum panels vertically (parallel to framing) with no end joints. Locate edge joints over furring members.
4. Fastening Methods: Apply gypsum panels to supports with steel drill screws.

C. Multilayer Application:

1. On ceilings, apply gypsum board indicated for base layers before applying base layers on walls/partitions; apply face layers in same sequence. Apply base layers at right angles to framing members and offset face-layer joints one framing member, 16 inches minimum, from parallel base-layer joints, unless otherwise indicated or required by fire-resistance-rated assembly.
2. On partitions/walls, apply gypsum board indicated for base layers and face layers vertically (parallel to framing) with joints of base layers located over stud or furring member and face-layer joints offset at least one stud or furring member with base-layer joints unless otherwise indicated or required by fire-resistance-rated assembly. Stagger joints on opposite sides of partitions.

3. On Z-shaped furring members, apply base layer vertically (parallel to framing) and face layer either vertically (parallel to framing) or horizontally (perpendicular to framing) with vertical joints offset at least one furring member. Locate edge joints of base layer over furring members.
4. Fastening Methods: Fasten base layers and face layers separately to supports with screws where required for fire-resistance-rated assemblies.

D. Laminating to Substrate: Where gypsum panels are indicated as directly adhered to a substrate (other than studs, joists, furring members, or base layer of gypsum board), comply with gypsum board manufacturer's written instructions and temporarily brace or fasten gypsum panels until fastening adhesive has set.

3.4 APPLYING TILE BACKING PANELS

A. Glass-Mat, Water-Resistant Backing Panels: Comply with manufacturer's written installation instructions and install where indicated. Install with 1/4-inch gap where panels abut other construction or penetrations.

B. Cementitious Backer Units: ANSI A108.11, where indicated.

C. Where tile backing panels abut other types of panels in same plane, shim surfaces to produce a uniform plane across panel surfaces.

3.5 INSTALLING TRIM ACCESSORIES

A. General: For trim with back flanges intended for fasteners, attach to framing with same fasteners used for panels. Otherwise, attach trim according to manufacturer's written instructions.

B. Control Joints: Install control joints according to ASTM C 840 and in specific locations approved by Architect for visual effect.

C. Interior Trim: Install in the following locations:

1. Cornerbead: Use at outside corners unless otherwise indicated.
2. Bullnose Bead: Use where indicated.
3. LC-Bead: Use at exposed panel edges.
4. L-Bead: Use where indicated.
5. U-Bead: Use where indicated.

3.6 FINISHING GYPSUM BOARD

A. General: Treat gypsum board joints, interior angles, edge trim, control joints, penetrations, fastener heads, surface defects, and elsewhere as required to prepare gypsum board surfaces for decoration. Promptly remove residual joint compound from adjacent surfaces.

B. Prefill open joints, rounded or beveled edges, and damaged surface areas.

C. Apply joint tape over gypsum board joints, except for trim products specifically indicated as not intended to receive tape.

D. Gypsum Board Finish Levels: Finish panels to levels indicated below and according to ASTM C 840:

1. Level 1: Ceiling plenum areas, concealed areas, and where indicated.
2. Level 2: Panels that are substrate for tile, panels that are substrate for acoustical tile, and where indicated on Drawings.
3. Level 3: Where indicated on Drawings.
4. Level 4: At panel surfaces that will be exposed to view unless otherwise indicated.

    a. Primer and its application to surfaces are specified in Section 099123 "Interior Painting."

5. Level 5: Where indicated on Drawings.

    a. Primer and its application to surfaces are specified in Section 099123 "Interior Painting."

E. Cementitious Backer Units: Finish according to manufacturer's written instructions.

3.7 PROTECTION

A. Protect adjacent surfaces from drywall compound and promptly remove from floors and other non-drywall surfaces. Repair surfaces stained, marred, or otherwise damaged during drywall application.

B. Protect installed products from damage from weather, condensation, direct sunlight, construction, and other causes during remainder of the construction period.

C. Remove and replace panels that are wet, moisture damaged, and mold damaged.

1. Indications that panels are wet or moisture damaged include, but are not limited to, discoloration, sagging, or irregular shape.
2. Indications that panels are mold damaged include, but are not limited to, fuzzy or splotchy surface contamination and discoloration.

END OF SECTION 092900

SECTION 093013 - TILING

PART 1 - GENERAL

1.1 RELATED DOCUMENTS

A. Drawings and general provisions of the Contract, including General and Supplementary Conditions and Division 01 Specification Sections, apply to this Section.

1.2 SUMMARY

A. Section Includes:

1. Floor tile.
2. Wall tile.
3. Waterproof membrane for thinset applications.
4. Crack isolation membrane.
5. Metal edge strips.

B. Related Requirements:

1.

2. Section 079200 "Joint Sealants" for sealing of expansion, contraction, control, and isolation joints in tile surfaces.
3. Section 092900 "Gypsum Board" for cementitious backer units and glass-mat, water-resistant backer board.

1.3 DEFINITIONS

A. General: Definitions in the ANSI A108 series of tile installation standards and in ANSI A137.1 apply to Work of this Section unless otherwise specified.

B. ANSI A108 Series: ANSI A108.01, ANSI A108.02, ANSI A108.1A, ANSI A108.1B, ANSI A108.1C, ANSI A108.4, ANSI A108.5, ANSI A108.6, ANSI A108.8, ANSI A108.9, ANSI A108.10, ANSI A108.11, ANSI A108.12, ANSI A108.13, ANSI A108.14, ANSI A108.15, ANSI A108.16, and ANSI A108.17, which are contained in its "Specifications for Installation of Ceramic Tile."

C. Module Size: Actual tile size plus joint width indicated.

D. Face Size: Actual tile size, excluding spacer lugs.

1.4 ACTION SUBMITTALS

A. Product Data: For each type of product.

B. Shop Drawings: Show locations of each type of tile and tile pattern. Show widths, details, and locations of expansion, contraction, control, and isolation joints in tile substrates and finished tile surfaces.

C. Samples for Initial Selection: For tile, grout, and accessories involving color selection.

D. Samples for Verification:

1. Full-size units of each type and composition of tile and for each color and finish required.
2. Assembled samples mounted on a rigid panel, with grouted joints, for each type and composition of tile and for each color and finish required. Make samples at least 12 inches square, but not fewer than four tiles. Use grout of type and in color or colors approved for completed Work.
3. Full-size units of each type of trim and accessory for each color and finish required.
4. Stone thresholds in 6-inch lengths.
5. Metal edge strips in 6-inch lengths.

1.5 INFORMATIONAL SUBMITTALS

A. Qualification Data: For Installer.

B. Master Grade Certificates: For each shipment, type, and composition of tile, signed by tile manufacturer and Installer.

C. Product Certificates: For each type of product.

D. Product Test Reports: For tile-setting and -grouting products.

1.6 MAINTENANCE MATERIAL SUBMITTALS

A. Furnish extra materials that match and are from same production runs as products installed and that are packaged with protective covering for storage and identified with labels describing contents.

1. Tile and Trim Units: Furnish quantity of full-size units equal to 3 percent of amount installed for each type, composition, color, pattern, and size indicated.

2. Grout: Furnish quantity of grout equal to 3 percent of amount installed for each type, composition, and color indicated.

1.7 QUALITY ASSURANCE

A. Installer Qualifications: Comply with one of the following:

1. Installer is a five-star member of the National Tile Contractors Association or a Trowel of Excellence member of the Tile Contractors' Association of America.
2. Installer's supervisor for Project holds the International Masonry Institute's Foreman Certification.
3. Installer employs Ceramic Tile Education Foundation Certified Installers or installers recognized by the U.S. Department of Labor as Journeyman Tile Layers.

B. Mockups: Build mockups to verify selections made under Sample submittals and to demonstrate aesthetic effects and set quality standards for materials and execution.

1. Build mockup of each type of floor tile installation.
2. Build mockup of each type of wall tile installation.
3. Subject to compliance with requirements, approved mockups may become part of the completed Work if undisturbed at time of Substantial Completion.

1.8 DELIVERY, STORAGE, AND HANDLING

A. Deliver and store packaged materials in original containers with seals unbroken and labels intact until time of use. Comply with requirements in ANSI A137.1 for labeling tile packages.

B. Store tile and cementitious materials on elevated platforms, under cover, and in a dry location.

C. Store aggregates where grading and other required characteristics can be maintained and contamination can be avoided.

D. Store liquid materials in unopened containers and protected from freezing.

1.9 FIELD CONDITIONS

A. Environmental Limitations: Do not install tile until construction in spaces is complete and ambient temperature and humidity conditions are maintained at the levels indicated in referenced standards and manufacturer's written instructions.

PART 2 - PRODUCTS

2.1 MANUFACTURERS

A. Source Limitations for Tile: Obtain tile of each type and color or finish from single source or producer.

1. Obtain tile of each type and color or finish from same production run and of consistent quality in appearance and physical properties for each contiguous area.

B. Source Limitations for Setting and Grouting Materials: Obtain ingredients of a uniform quality for each mortar, adhesive, and grout component from single manufacturer and each aggregate from single source or producer.

1. Obtain setting and grouting materials, except for unmodified Portland cement and aggregate, from single manufacturer.
2. Obtain waterproof membrane and crack isolation membrane, except for sheet products, from manufacturer of setting and grouting materials.

C. Source Limitations for Other Products: Obtain each of the following products specified in this Section from a single manufacturer:

1. Waterproof membrane.
2. Crack isolation membrane.
3. Cementitious backer units.
4. Metal edge strips.

2.2 PRODUCTS, GENERAL

A. ANSI Ceramic Tile Standard: Provide tile that complies with ANSI A137.1 for types, compositions, and other characteristics indicated.

1. Provide tile complying with Standard grade requirements unless otherwise indicated.

B. ANSI Standards for Tile Installation Materials: Provide materials complying with ANSI A108.02, ANSI standards referenced in other Part 2 articles, ANSI standards referenced by TCNA installation methods specified in tile installation schedules, and other requirements specified.

C. Factory Blending: For tile exhibiting color variations within ranges, blend tile in factory and package so tile units taken from one package show same range in colors as those taken from other packages and match approved Samples.

D. Mounting: For factory-mounted tile, provide back- or edge-mounted tile assemblies as standard with manufacturer unless otherwise indicated.

1. Where tile is indicated for installation in wet areas, do not use back- or edge-mounted tile assemblies unless tile manufacturer specifies in writing that this type of mounting is suitable for installation indicated and has a record of successful in-service performance.

2.3 TILE PRODUCTS

A. Floor Tile Type:

1. Basis-of-Design: Subject to compliance with requirements, provide products indicated on the Finish Schedule, or comparable products as approved by the Architect.
2. Composition: As indicated on the Finish Schedule.
3. Module Size: As indicated on the Finish Schedule.

4. Dynamic Coefficient of Friction: Not less than 0.42.
5. Tile Color and Pattern: As indicated on the Finish Schedule.
6. Grout Color: As selected by Architect from manufacturer's full range.
7. Trim Units: Coordinated with sizes and coursing of adjoining flat tile where applicable and matching characteristics of adjoining flat tile.

B. Wall Tile Type:

1. Basis-of-Design: Subject to compliance with requirements, provide products indicated on the Finish Schedule, or comparable products as approved by the Architect.
2. Composition: As indicated on the Finish Schedule.
3. Module Size: As indicated on the Finish Schedule.
4. Tile Color and Pattern: As indicated on the Finish Schedule.
5. Grout Color: As selected by Architect from manufacturer's full range.
6. Trim Units: Coordinated with sizes and coursing of adjoining flat tile where applicable and matching characteristics of adjoining flat tile.

2.4 WATERPROOF MEMBRANE

A. General: Manufacturer's standard product, selected from the following, that complies with ANSI A118.10 and is recommended by the manufacturer for the application indicated. Include reinforcement and accessories recommended by manufacturer.

B. Chlorinated Polyethylene Sheet: Nonplasticized, chlorinated polyethylene faced on both sides with nonwoven polyester fabric.

1. Nominal Thickness: 0.030 inch minimum.

C. PVC Sheet: PVC heat-fused on both sides to facings of nonwoven polyester.

1. Nominal Thickness: 0.025 inch, minimum.

D. Polyethylene Sheet: Polyethylene faced on both sides with fleece webbing; 0.008-inch nominal thickness.

E. Waterproof and Vaporproof Fabric Membrane:

1. Basis-of-Design: Subject to compliance with requirements, provide Redgard Fabric Membrane by Custom Building Products or a comparable product by one of the following:

a. Custom Building Products.
b. Laticrete International, Inc.
c. MAPEI Corporation.

2.5 CRACK ISOLATION MEMBRANE

A. General: Manufacturer's standard product, selected from the following, that complies with ANSI A118.12 for high performance and is recommended by the manufacturer for the application indicated. Include reinforcement and accessories recommended by manufacturer.

B. Chlorinated Polyethylene Sheet: Nonplasticized, chlorinated polyethylene faced on both sides with nonwoven polyester fabric; 0.030-inch nominal thickness.

C. PVC Sheet: PVC heat-fused on both sides to facings of nonwoven polyester; 0.040-inch nominal thickness.

D. Polyethylene Sheet: Polyethylene faced on both sides with fleece webbing; 0.008-inch nominal thickness.

E. Corrugated Polyethylene: Corrugated polyethylene with dovetail-shaped corrugations and with anchoring webbing on the underside; 3/16-inch nominal thickness.

F. Fluid-Applied Membrane: Liquid-latex rubber or elastomeric polymer.

G. Latex-Portland Cement Crack-Resistant Mortar: Flexible mortar consisting of cement-based mix and latex additive.

H. Crack Isolation Membrane and Tile-Setting Adhesive: One-part, fluid-applied product intended for use as both a crack isolation membrane and tile-setting adhesive in a two-step process.

2.6 SETTING MATERIALS

A. Standard Dry-Set Mortar (Thinset): ANSI A118.1.

1. For wall applications, provide mortar that complies with requirements for nonsagging mortar in addition to the other requirements in ANSI A118.1.

B. Modified Dry-Set Mortar (Thinset): ANSI A118.4.

1. Provide prepackaged, dry-mortar mix containing dry, redispersible, vinyl acetate or acrylic additive to which only water must be added at Project site.
2. For wall applications, provide mortar that complies with requirements for nonsagging mortar in addition to the other requirements in ANSI A118.4.

C. Water-Cleanable, Tile-Setting Epoxy: ANSI A118.3.

1. Provide product capable of withstanding continuous and intermittent exposure to temperatures of up to 140 and 212 deg F, respectively, and certified by manufacturer for intended use.

2.7 GROUT MATERIALS

A. Standard Cement Grout: ANSI A118.6.

B. Water-Cleanable Epoxy Grout: ANSI A118.3.

1. Provide product capable of withstanding continuous and intermittent exposure to temperatures of up to 140 and 212 deg F, respectively, and certified by manufacturer for intended use.

C. Grout for Pregrouted Tile Sheets: Same product used in factory to pregrout tile sheets.

2.8 MISCELLANEOUS MATERIALS

A. Trowelable Underlayments and Patching Compounds: Latex-modified, portland cement-based formulation provided or approved by manufacturer of tile-setting materials for installations indicated.

B. Vapor-Retarder Membrane: Polyethylene sheeting, ASTM D 4397, 4.0 mils thick.

C. Metal Edge Strips: Angle or L-shaped, height to match tile and setting-bed thickness, metallic or combination of metal and PVC or neoprene base, designed specifically for flooring applications; stainless-steel, ASTM A 666, 300 Series exposed-edge material.

1. Basis-of-Design Product: Subject to compliance with requirements, provide products indicated on the Finish Schedule by Schluter Systems L.P., or comparable products as approved by the Architect.

D. Tile Cleaner: A neutral cleaner capable of removing soil and residue without harming tile and grout surfaces, specifically approved for materials and installations indicated by tile and grout manufacturers.

E. Floor Sealer: Manufacturer's standard product for sealing grout joints and that does not change color or appearance of grout.

2.9 MIXING MORTARS AND GROUT

A. Mix mortars and grouts to comply with referenced standards and mortar and grout manufacturers' written instructions.

B. Add materials, water, and additives in accurate proportions.

C. Obtain and use type of mixing equipment, mixer speeds, mixing containers, mixing time, and other procedures to produce mortars and grouts of uniform quality with optimum performance characteristics for installations indicated.

PART 3 - EXECUTION

3.1 EXAMINATION

A. Examine substrates, areas, and conditions where tile will be installed, with Installer present, for compliance with requirements for installation tolerances and other conditions affecting performance of the Work.

1. Verify that substrates for setting tile are firm; dry; clean; free of coatings that are incompatible with tile-setting materials, including curing compounds and other substances that contain soap, wax, oil, or silicone; and comply with flatness tolerances required by ANSI A108.01 for installations indicated.
2. Verify that concrete substrates for tile floors installed with adhesives, bonded mortar bed, or thinset mortar comply with surface finish requirements in ANSI A108.01 for installations indicated.

    a. Verify that surfaces that received a steel trowel finish have been mechanically scarified.
    b. Verify that protrusions, bumps, and ridges have been removed by sanding or grinding.

3. Verify that installation of grounds, anchors, recessed frames, electrical and mechanical units of work, and similar items located in or behind tile has been completed.
4. Verify that joints and cracks in tile substrates are coordinated with tile joint locations; if not coordinated, adjust joint locations in consultation with Architect.

B. Proceed with installation only after unsatisfactory conditions have been corrected.

3.2 PREPARATION

A. Fill cracks, holes, and depressions in concrete substrates for tile floors installed with adhesives or thinset mortar with trowelable leveling and patching compound specifically recommended by tile-setting material manufacturer.

B. Where indicated, prepare substrates to receive waterproofing by applying a reinforced mortar bed that complies with ANSI A108.1A and is sloped 1/4 inch per foot toward drains.

C. Blending: For tile exhibiting color variations, verify that tile has been factory blended and packaged so tile units taken from one package show same range of colors as those taken from other packages and match approved Samples. If not factory blended, either return to manufacturer or blend tiles at Project site before installing.

3.3 TILE INSTALLATION

A. Comply with TCNA's "Handbook for Ceramic, Glass, and Stone Tile Installation" for TCNA installation methods specified in tile installation schedules. Comply with parts of the ANSI A108 series "Specifications for Installation of Ceramic Tile" that are referenced in TCNA

installation methods, specified in tile installation schedules, and apply to types of setting and grouting materials used.

1. For the following installations, follow procedures in the ANSI A108 series of tile installation standards for providing 95 percent mortar coverage:

    a. Tile floors in wet areas.
    b. Tile floors in laundries.
    c. Tile floors consisting of tiles 8 by 8 inches or larger.
    d. Tile floors consisting of rib-backed tiles.

B. Extend tile work into recesses and under or behind equipment and fixtures to form complete covering without interruptions unless otherwise indicated. Terminate work neatly at obstructions, edges, and corners without disrupting pattern or joint alignments.

C. Accurately form intersections and returns. Perform cutting and drilling of tile without marring visible surfaces. Carefully grind cut edges of tile abutting trim, finish, or built-in items for straight aligned joints. Fit tile closely to electrical outlets, piping, fixtures, and other penetrations so plates, collars, or covers overlap tile.

D. Provide manufacturer's standard trim shapes where necessary to eliminate exposed tile edges.

E. Where accent tile differs in thickness from field tile, vary setting-bed thickness so that tiles are flush.

F. Jointing Pattern: Lay tile in grid pattern unless otherwise indicated. Lay out tile work and center tile fields in both directions in each space or on each wall area. Lay out tile work to minimize the use of pieces that are less than half of a tile. Provide uniform joint widths unless otherwise indicated.

1. For tile mounted in sheets, make joints between tile sheets same width as joints within tile sheets so joints between sheets are not apparent in finished work.
2. Where adjoining tiles on floor, base, walls, or trim are specified or indicated to be same size, align joints.
3. Where tiles are specified or indicated to be whole integer multiples of adjoining tiles on floor, base, walls, or trim, align joints unless otherwise indicated.

G. Joint Widths: Install tile with the joint widths as directed by the Architect.

H. Lay out tile wainscots to dimensions indicated or to next full tile beyond dimensions indicated.

I. Expansion Joints: Provide expansion joints and other sealant-filled joints, including control, contraction, and isolation joints, where indicated. Form joints during installation of setting materials, mortar beds, and tile. Do not saw-cut joints after installing tiles.

1. Where joints occur in concrete substrates, locate joints in tile surfaces directly above them.

J. Metal Edge Strips: Install at locations indicated and where exposed edge of tile flooring meets carpet, wood, or other flooring that finishes flush with top of tile.

K. Floor Sealer: Apply floor sealer to grout joints in tile floors according to floor-sealer manufacturer's written instructions. As soon as floor sealer has penetrated grout joints, remove excess sealer and sealer from tile faces by wiping with soft cloth.

3.4 TILE BACKING PANEL INSTALLATION

A. Install panels and treat joints according to ANSI A108.11 and manufacturer's written instructions for type of application indicated. Use modified dry-set mortar for bonding material unless otherwise directed in manufacturer's written instructions.

3.5 WATERPROOFING INSTALLATION

A. Install waterproofing to comply with ANSI A108.13 and manufacturer's written instructions to produce waterproof membrane of uniform thickness that is bonded securely to substrate.

B. Allow waterproofing to cure and verify by testing that it is watertight before installing tile or setting materials over it.

3.6 CRACK ISOLATION MEMBRANE INSTALLATION

A. Install crack isolation membrane to comply with ANSI A108.17 and manufacturer's written instructions to produce membrane of uniform thickness that is bonded securely to substrate.

B. Allow crack isolation membrane to cure before installing tile or setting materials over it.

3.7 ADJUSTING AND CLEANING

A. Remove and replace tile that is damaged or that does not match adjoining tile. Provide new matching units, installed as specified and in a manner to eliminate evidence of replacement.

B. Cleaning: On completion of placement and grouting, clean all tile surfaces so they are free of foreign matter.

1. Remove grout residue from tile as soon as possible.
2. Clean grout smears and haze from tile according to tile and grout manufacturer's written instructions but no sooner than 10 days after installation. Use only cleaners recommended by tile and grout manufacturers and only after determining that cleaners are safe to use by testing on samples of tile and other surfaces to be cleaned. Protect metal surfaces and plumbing fixtures from effects of cleaning. Flush surfaces with clean water before and after cleaning.

3.8 PROTECTION

A. Protect installed tile work with kraft paper or other heavy covering during construction period to prevent staining, damage, and wear. If recommended by tile manufacturer, apply coat of neutral protective cleaner to completed tile walls and floors.

B. Prohibit foot and wheel traffic from tiled floors for at least seven days after grouting is completed.

C. Before final inspection, remove protective coverings and rinse neutral protective cleaner from tile surfaces.

3.9 INTERIOR TILE INSTALLATION SCHEDULE

A. Interior Floor Installations, Concrete Subfloor:

1. Tile Installation: TCNA F114 and ANSI A108.1A; cement mortar bed (thickset) with cleavage membrane; epoxy grout.

    a. Tile Type: As indicated on the Finish Schedule.
    a. Grout: Water-cleanable epoxy grout complying with ANSI A118.3 or better.
    b. Cementitious Bond Coat: Portland cement paste on a mortar bed that is still workable; or on a cured mortar bed, use portland cement mortar; ANSI A118.1 or better
    c. Mortar bed, reinforcing, and cleavage membrane: ANSI A108.1A.

2. Tile Installation: TCNA F115; thinset mortar; epoxy grout with on crack isolation membrane per TCNA F125-Full.

    a. Tile Type: As indicated on the Finish Schedule.
    b. Thinset Mortar: Latex portland cement mortar complying with ANSI A118.4 or better.
    c. Grout: Water-cleanable epoxy grout complying with ANSI A118.3 or better.

3. Tile Installation: TCNA F122; thinset mortar on waterproof membrane at wet areas.

    a. Tile Type: As indicated on the Finish Schedule.
    b. Grout: Water-cleanable epoxy grout complying with ANSI A118.3 or better.
    c. Cementitious Bond Coat: ANSI A-118.4 or better unless A-118.1 is recommended by membrane manufacturer.
    d. Waterproof Membrane: ANSI A-118.10.

4. Tile Installation: TCNA F125-Full; thinset mortar on crack isolation membrane for all tile greater than 12 inches in any direction.

    a. Tile Type: As indicated on the Finish Schedule.
    b. Thinset Mortar: Latex portland cement mortar complying with ANSI A118.4 or better.
    c. Grout: Standard unsanded cement grout.

B. Interior Wall Installations, Masonry or Concrete:

1. Tile Installation: TCNA W221 and ANSI A108.1A, cement mortar bed (thickset) over metal lath on solid CMU or metal stud and cementitious backer units.

a. Tile Type: As indicated on the Finish Schedule.
b. Grout: Water-cleanable epoxy grout complying with ANSI A118.3 or better.
c. Epoxy Bond Coat: ANSI - A118.3
d. Latex Portland Cement Mortar: ANSI 118.4
e. Waterproof Membrane: ANSI A118.10
f. Mortar Bed, Metal Lath and Cleavage Membrane: ANSI A108.1A

C. Interior Wall Installations, Metal Studs or Furring:

1. Tile Installation: TCNA W244C or TCNA W244F; thinset mortar on cementitious backer units or fiber-cement backer board over vapor-retarder membrane.

a. Tile Type: As indicated on the Finish Schedule.
b. Grout: Water-cleanable epoxy grout complying with ANSI A118.3 or better.
c. Latex Portland Cement Mortar: ANSI A-118.4 or better
d. Waterproof Membrane: ANSI A118.10.

END OF SECTION 093013

SECTION 095113 - ACOUSTICAL PANEL CEILINGS

PART 1 - GENERAL

1.1 RELATED DOCUMENTS

A. Drawings and general provisions of the Contract, including General and Supplementary Conditions and Division 01 Specification Sections, apply to this Section.

1.2 SUMMARY

A. Section includes acoustical panels and exposed suspension systems for interior ceilings.

B. Products furnished, but not installed under this Section, include anchors, clips, and other ceiling attachment devices to be cast in concrete.

1.3 ACTION SUBMITTALS

A. Product Data: For each type of product.

B. Samples: For each exposed product and for each color and texture specified, 6 inches in size.

C. Samples for Initial Selection: For components with factory-applied finishes.

D. Samples for Verification: For each component indicated and for each exposed finish required, prepared on Samples of sizes indicated below:

1. Acoustical Panels: Set of 6-inch-square Samples of each type, color, pattern, and texture.
2. Exposed Suspension-System Members, Moldings, and Trim: Set of 6-inch- long Samples of each type, finish, and color.

E. Delegated-Design Submittal: For seismic restraints for ceiling systems.

1. Include design calculations for seismic restraints including analysis data signed and sealed by the qualified professional engineer responsible for their preparation.

1.4 INFORMATIONAL SUBMITTALS

A. Qualification Data: For testing agency.

B. Product Test Reports: For each acoustical panel ceiling, for tests performed by manufacturer and witnessed by a qualified testing agency or a qualified testing agency.

C. Evaluation Reports: For each acoustical panel ceiling suspension system and anchor and fastener type, from ICC-ES.

D. Field quality-control reports.

1.5 CLOSEOUT SUBMITTALS

A. Maintenance Data: For finishes to include in maintenance manuals.

1.6 MAINTENANCE MATERIAL SUBMITTALS

A. Furnish extra materials, from the same product run, that match products installed and that are packaged with protective covering for storage and identified with labels describing contents.

1. Acoustical Ceiling Units: Full-size panels equal to 2 percent of quantity installed.
2. Suspension-System Components: Quantity of each exposed component equal to 2 percent of quantity installed.

1.7 QUALITY ASSURANCE

A. Mockups: Build mockups to verify selections made under Sample submittals, to demonstrate aesthetic effects, and to set quality standards for materials and execution.

1. Build mockup of typical ceiling area as shown on Drawings.
2. Approval of mockups does not constitute approval of deviations from the Contract Documents contained in mockups unless Architect specifically approves such deviations in writing.
3. Subject to compliance with requirements, approved mockups may become part of the completed Work if undisturbed at time of Substantial Completion.

1.8 DELIVERY, STORAGE, AND HANDLING

A. Deliver acoustical panels, suspension-system components, and accessories to Project site and store them in a fully enclosed, conditioned space where they will be protected against damage from moisture, humidity, temperature extremes, direct sunlight, surface contamination, and other causes.

B. Before installing acoustical panels, permit them to reach room temperature and a stabilized moisture content.

1.9 FIELD CONDITIONS

A. Environmental Limitations: Do not install acoustical panel ceilings until spaces are enclosed and weathertight, wet-work in spaces is complete and dry, work above ceilings is complete, and ambient temperature and humidity conditions are maintained at the levels indicated for Project when occupied for its intended use.

PART 2 - PRODUCTS

2.1 MANUFACTURERS

A. Source Limitations: Obtain each type of acoustical ceiling panel and its supporting suspension system from single source from single manufacturer.

2.2 PERFORMANCE REQUIREMENTS

A. Delegated Design: Engage a qualified professional engineer, as defined in Section 014000 "Quality Requirements," to design seismic restraints for ceiling systems.

B. Surface-Burning Characteristics: Comply with ASTM E 84; testing by a qualified testing agency. Identify products with appropriate markings of applicable testing agency.

1. Flame-Spread Index: Class A according to ASTM E 1264.
2. Smoke-Developed Index: 50 or less.

C. Fire-Resistance Ratings: Comply with ASTM E 119; testing by a qualified testing agency. Identify products with appropriate markings of applicable testing agency.

1. Indicate design designations from UL or from the listings of another qualified testing agency.

2.3 ACOUSTICAL PANELS

A. Acoustical Panel Standard: Provide manufacturer's standard panels according to ASTM E 1264 and designated by type, form, pattern, acoustical rating, and light reflectance unless otherwise indicated.

B. Basis-of-Design Product: Subject to compliance with requirements, provide products indicated below by Armstrong World Industries, Inc, or comparable products as approved by the Architect:

1. Standard ACT:

a. Product: Cirrus.
b. Type and Form: Type III, mineral base with painted finish; Form 1, nodular.

c. Type and Form: Type XX, high-density, ceramic- and mineral-base panels with scrubbable finish, resistant to heat, moisture, and corrosive fumes.
d. Color: White.
e. Edge/Joint Detail: Tegular.
f. Thickness: 7/8 inch.
g. Modular Size: 24 by 24 inches.

2. Kitchen ACT:

a. Product: As selected by the Architect.
b. Type and Form: Type XX, high-density, ceramic- and mineral-base panels with scrubbable finish, resistant to heat, moisture, and corrosive fumes.
c. Color: White.
d. Edge/Joint Detail: As selected by the Architect.
e. Thickness: 7/8 inch.
f. Modular Size: 24 by 24 inches.

C. Antimicrobial Treatment: Manufacturer's standard broad spectrum, antimicrobial formulation that inhibits fungus, mold, mildew, and gram-positive and gram-negative bacteria and showing no mold, mildew, or bacterial growth when tested according to ASTM D 3273, ASTM D 3274, or ASTM G 21 and evaluated according to ASTM D 3274 or ASTM G 21.

2.4 METAL SUSPENSION SYSTEM

A. Manufacturers: Subject to compliance with requirements, provide products by one of the following:

1. Armstrong World Industries, Inc.
2. CertainTeed Corporation.
3. United States Gypsum Company.

B. Metal Suspension-System Standard: Provide manufacturer's standard, direct-hung, metal suspension system and accessories according to ASTM C 635/C 635M and designated by type, structural classification, and finish indicated.

C. Wide-Face, Capped, Double-Web, Steel Suspension System: Main and cross runners roll formed from cold-rolled steel sheet; prepainted, electrolytically zinc coated, or hot-dip galvanized, G30 coating designation; with prefinished 15/16-inch-wide metal caps on flanges.

1. Structural Classification: Heavy-duty system.
2. End Condition of Cross Runners: Override (stepped) or butt-edge type.
3. Face Design: Flat, flush.
4. Cap Material: Cold-rolled steel or aluminum.
5. Cap Finish: Painted to match color of acoustical unit, unless otherwise selected by the Architect.

2.5 ACCESSORIES

A. Attachment Devices: Size for five times the design load indicated in ASTM C 635/C 635M, Table 1, "Direct Hung," unless otherwise indicated. Comply with seismic design requirements.

1. Anchors in Concrete: Anchors of type and material indicated below, with holes or loops for attaching hangers of type indicated and with capability to sustain, without failure, a load equal to five times that imposed by ceiling construction, as determined by testing according to ASTM E 488/E 488M or ASTM E 1512 as applicable, conducted by a qualified testing and inspecting agency.

    a. Type: Cast-in-place, postinstalled expansion, or postinstalled bonded anchors as acceptable to the Structural Engineer.
    b. Corrosion Protection: Carbon-steel components zinc plated according to ASTM B 633, Class SC 1 (mild) service condition.
    c. Corrosion Protection: Stainless-steel components complying with ASTM F 593 and ASTM F 594, Group 1 Alloy 304 or 316.
    d. Corrosion Protection: Components fabricated from nickel-copper-alloy rods complying with ASTM B 164 for UNS No. N04400 alloy.

2. Power-Actuated Fasteners in Concrete: Fastener system of type suitable for application indicated, fabricated from corrosion-resistant materials, with clips or other accessory devices for attaching hangers of type indicated and with capability to sustain, without failure, a load equal to 10 times that imposed by ceiling construction, as determined by testing according to ASTM E 1190, conducted by a qualified testing and inspecting agency.

B. Wire Hangers, Braces, and Ties: Provide wires as follows:

1. Zinc-Coated, Carbon-Steel Wire: ASTM A 641/A 641M, Class 1 zinc coating, soft temper.
2. Stainless-Steel Wire: ASTM A 580/A 580M, Type 304, nonmagnetic.
3. Nickel-Copper-Alloy Wire: ASTM B 164, nickel-copper-alloy UNS No. N04400.
4. Size: Wire diameter sufficient for its stress at three times hanger design load (ASTM C 635/C 635M, Table 1, "Direct Hung") will be less than yield stress of wire, but not less than 0.106-inch- diameter wire.

C. Hanger Rods: Mild steel, zinc coated or protected with rust-inhibitive paint.

D. Flat Hangers: Mild steel, zinc coated or protected with rust-inhibitive paint.

E. Angle Hangers: Angles with legs not less than 7/8 inch wide; formed with 0.04-inch-thick, galvanized-steel sheet complying with ASTM A 653/A 653M, G90 coating designation; with bolted connections and 5/16-inch-diameter bolts.

2.6 METAL EDGE MOLDINGS AND TRIM

A. Basis-of-Design Product: Subject to compliance with requirements, provide product indicated on Drawings or comparable product by one of the following:

1. Armstrong World Industries, Inc.
2. CertainTeed Corporation.
3. United States Gypsum Company.

B. Roll-Formed, Sheet-Metal Edge Moldings and Trim: Type and profile indicated or, if not indicated, manufacturer's standard moldings for edges and penetrations that comply with seismic design requirements; formed from sheet metal of same material, finish, and color as that used for exposed flanges of suspension-system runners.

1. Edge moldings shall fit acoustical panel edge details and suspension systems indicated and match width and configuration of exposed runners unless otherwise indicated.
2. For lay-in panels with reveal edge details, provide stepped edge molding that forms reveal of same depth and width as that formed between edge of panel and flange at exposed suspension member.
3. For circular penetrations of ceiling, provide edge moldings fabricated to diameter required to fit penetration exactly.

C. Extruded-Aluminum Edge Moldings and Trim: Where indicated, provide manufacturer's extruded-aluminum edge moldings and trim of profile indicated or referenced by manufacturer's designations, including splice plates, corner pieces, and attachment and other clips, complying with seismic design requirements.

1. Clear Anodic Finish: AAMA 611, AA-M12C22A31, Class II, 0.010 mm or thicker.
2. Baked-Enamel or Powder-Coat Finish: Minimum dry film thickness of 1.5 mils. Comply with ASTM C 635/C 635M and coating manufacturer's written instructions for cleaning, conversion coating, and applying and baking finish.

2.7 ACOUSTICAL SEALANT

A. Acoustical Sealant: As specified in Section 079219 "Acoustical Joint Sealants."

PART 3 - EXECUTION

3.1 EXAMINATION

A. Examine substrates, areas, and conditions, including structural framing to which acoustical panel ceilings attach or abut, with Installer present, for compliance with requirements specified in this and other Sections that affect ceiling installation and anchorage and with requirements for installation tolerances and other conditions affecting performance of acoustical panel ceilings.

B. Examine acoustical panels before installation. Reject acoustical panels that are wet, moisture damaged, or mold damaged.

C. Proceed with installation only after unsatisfactory conditions have been corrected.

3.2 PREPARATION

A. Measure each ceiling area and establish layout of acoustical panels to balance border widths at opposite edges of each ceiling. Avoid using less-than-half-width panels at borders unless otherwise indicated, and comply with layout shown on reflected ceiling plans.

B. Layout openings for penetrations centered on the penetrating items.

3.3 INSTALLATION

A. Install acoustical panel ceilings according to ASTM C 636/C 636M and manufacturer's written instructions.

B. Suspend ceiling hangers from building's structural members and as follows:

1. Install hangers plumb and free from contact with insulation or other objects within ceiling plenum that are not part of supporting structure or of ceiling suspension system.
2. Splay hangers only where required to miss obstructions; offset resulting horizontal forces by bracing, countersplaying, or other equally effective means.
3. Where width of ducts and other construction within ceiling plenum produces hanger spacings that interfere with location of hangers at spacings required to support standard suspension-system members, install supplemental suspension members and hangers in form of trapezes or equivalent devices.
4. Secure wire hangers to ceiling-suspension members and to supports above with a minimum of three tight turns. Connect hangers directly to structure or to inserts, eye screws, or other devices that are secure and appropriate for substrate and that will not deteriorate or otherwise fail due to age, corrosion, or elevated temperatures.
5. Secure flat, angle, channel, and rod hangers to structure, including intermediate framing members, by attaching to inserts, eye screws, or other devices that are secure and appropriate for both the structure to which hangers are attached and the type of hanger involved. Install hangers in a manner that will not cause them to deteriorate or fail due to age, corrosion, or elevated temperatures.
6. Do not support ceilings directly from permanent metal forms or floor deck. Fasten hangers to cast-in-place hanger inserts, postinstalled mechanical or adhesive anchors, or power-actuated fasteners that extend through forms into concrete.
7. When steel framing does not permit installation of hanger wires at spacing required, install carrying channels or other supplemental support for attachment of hanger wires.
8. Do not attach hangers to steel deck tabs.
9. Do not attach hangers to steel roof deck unless permitted by the Structural Engineer and authorities having jurisdiction. Attach hangers to structural members unless otherwise required for structural performance.
10. Space hangers not more than 48 inches o.c. along each member supported directly from hangers unless otherwise indicated; provide hangers not more than 8 inches from ends of each member.
11. Size supplemental suspension members and hangers to support ceiling loads within performance limits established by referenced standards.

C. Install edge moldings and trim of type indicated at perimeter of acoustical ceiling area and where necessary to conceal edges of acoustical panels.

1. Do not use exposed fasteners, including pop rivets, on moldings and trim.

D. Install suspension-system runners so they are square and securely interlocked with one another. Remove and replace dented, bent, or kinked members.

E. Install acoustical panels with undamaged edges and fit accurately into suspension-system runners and edge moldings. Scribe and cut panels at borders and penetrations to provide precise fit.

1. Arrange directionally patterned acoustical panels as follows:

a. As indicated on reflected ceiling plans.

2. For square-edged panels, install panels with edges fully hidden from view by flanges of suspension-system runners and moldings.
3. For reveal-edged panels on suspension-system runners, install panels with bottom of reveal in firm contact with top surface of runner flanges.
4. For reveal-edged panels on suspension-system members with box-shaped flanges, install panels with reveal surfaces in firm contact with suspension-system surfaces and panel faces flush with bottom face of runners.
5. Paint cut edges of panel remaining exposed after installation; match color of exposed panel surfaces using coating recommended in writing for this purpose by acoustical panel manufacturer.

3.4 ERECTION TOLERANCES

A. Suspended Ceilings: Install main and cross runners level to a tolerance of 1/8 inch in 12 feet, non-cumulative.

B. Moldings and Trim: Install moldings and trim to substrate and level with ceiling suspension system to a tolerance of 1/8 inch in 12 feet, non-cumulative.

3.5 CLEANING

A. Clean exposed surfaces of acoustical panel ceilings, including trim, edge moldings, and suspension-system members. Comply with manufacturer's written instructions for cleaning and touchup of minor finish damage.

B. Remove and replace ceiling components that cannot be successfully cleaned and repaired to permanently eliminate evidence of damage.

END OF SECTION 095113

SECTION 096513 - RESILIENT BASE AND ACCESSORIES

PART 1 - GENERAL

1.1 RELATED DOCUMENTS

A. Drawings and general provisions of the Contract, including General and Supplementary Conditions and Division 01 Specification Sections, apply to this Section.

1.2 SUMMARY

A. Section Includes:

1. Resilient base.
2. Resilient molding accessories.

1.3 ACTION SUBMITTALS

A. Product Data: For each type of product.

B. Samples: For each exposed product and for each color and texture specified, not less than 12 inches long.

C. Samples for Initial Selection: For each type of product indicated.

D. Product Schedule: For resilient base and accessory products. Use same designations indicated on Drawings.

1.4 MAINTENANCE MATERIAL SUBMITTALS

A. Furnish extra materials that match products installed and that are packaged with protective covering for storage and identified with labels describing contents.

1. Furnish not less than 10 linear feet for every 500 linear feet or fraction thereof, of each type, color, pattern, and size of resilient product installed.

1.5 QUALITY ASSURANCE

A. Mockups: Build mockups to verify selections made under Sample submittals and to demonstrate aesthetic effects and set quality standards for materials and execution.

1. Coordinate mockups in this Section with mockups specified in other Sections.

1.6 DELIVERY, STORAGE, AND HANDLING

A. Store resilient products and installation materials in dry spaces protected from the weather, with ambient temperatures maintained within range recommended by manufacturer, but not less than 50 deg F or more than 90 deg F.

1.7 FIELD CONDITIONS

A. Maintain ambient temperatures within range recommended by manufacturer, but not less than 70 deg F or more than 95 deg F, in spaces to receive resilient products during the following time periods:

1. 48 hours before installation.
2. During installation.
3. 48 hours after installation.

B. After installation and until Substantial Completion, maintain ambient temperatures within range recommended by manufacturer, but not less than 55 deg F or more than 95 deg F.

C. Install resilient products after other finishing operations, including painting, have been completed.

PART 2 - PRODUCTS

2.1 THERMOPLASTIC-RUBBER BASE

A. Basis-of-Design: Subject to compliance with requirements, provide products indicated on the Finish Schedule, or comparable products as approved by the Architect.

1. Styles: As indicated on the Finish Schedule.
2. Heights: 4 inches and 6 inches as indicated on the Finish Schedule.

a. Provide 6-inch architectural wall base where indicated.

3. Colors: As indicated on the Finish Schedule.

B. Product Standard: ASTM F 1861, Type TP (rubber, thermoplastic).

1. Group: I (solid, homogeneous).

C. Thickness: 0.125 inch.

D. Lengths: Cut lengths 48 inches long or coils in manufacturer's standard length.

E. Outside Corners: Preformed.

F. Inside Corners: Job formed or preformed.

2.2 RUBBER MOLDING ACCESSORY

A. Basis-of-Design: Subject to compliance with requirements, provide products indicated on the Finish Schedule, or comparable products as approved by the Architect.

B. Description: Rubber cap for cove carpet, cap for cove resilient flooring, carpet bar for tackless installations, carpet edge for glue-down applications, nosing for carpet, nosing for resilient flooring, reducer strip for resilient flooring, joiner for tile and carpet, and transition strips.

C. Profile and Dimensions: As indicated.

D. Locations: Provide rubber molding accessories in areas indicated.

E. Colors and Patterns: As indicated on the Finish Schedule.

2.3 INSTALLATION MATERIALS

A. Trowelable Leveling and Patching Compounds: Latex-modified, portland cement based or blended hydraulic-cement-based formulation provided or approved by resilient-product manufacturer for applications indicated.

B. Adhesives: Water-resistant type recommended by resilient-product manufacturer for resilient products and substrate conditions indicated.

C. Metal Edge Strips:

1. Basis-of-Design: Subject to compliance with requirements, provide products indicated on the Finish Schedule, or comparable products as approved by the Architect.

PART 3 - EXECUTION

3.1 EXAMINATION

A. Examine substrates, with Installer present, for compliance with requirements for maximum moisture content and other conditions affecting performance of the Work.

1. Verify that finishes of substrates comply with tolerances and other requirements specified in other Sections and that substrates are free of cracks, ridges, depressions, scale, and foreign deposits that might interfere with adhesion of resilient products.

B. Proceed with installation only after unsatisfactory conditions have been corrected.

1. Installation of resilient products indicates acceptance of surfaces and conditions.

3.2 PREPARATION

A. Prepare substrates according to manufacturer's written instructions to ensure adhesion of resilient products.

B. Fill cracks, holes, and depressions in substrates with trowelable leveling and patching compound; remove bumps and ridges to produce a uniform and smooth substrate.

C. Do not install resilient products until they are the same temperature as the space where they are to be installed.

1. At least 48 hours in advance of installation, move resilient products and installation materials into spaces where they will be installed.

D. Immediately before installation, sweep and vacuum clean substrates to be covered by resilient products.

3.3 RESILIENT BASE INSTALLATION

A. Comply with manufacturer's written instructions for installing resilient base.

B. Apply resilient base to walls, columns, pilasters, casework and cabinets in toe spaces, and other permanent fixtures in rooms and areas where base is required.

C. Install resilient base in lengths as long as practical without gaps at seams and with tops of adjacent pieces aligned.

D. Tightly adhere resilient base to substrate throughout length of each piece, with base in continuous contact with horizontal and vertical substrates.

E. Do not stretch resilient base during installation.

F. On masonry surfaces or other similar irregular substrates, fill voids along top edge of resilient base with manufacturer's recommended adhesive filler material.

G. Preformed Corners: Install preformed corners before installing straight pieces.

H. Job-Formed Corners:

1. Inside Corners: Use straight pieces of maximum lengths possible and form with returns not less than 3 inches in length.

a. Miter or cope corners to minimize open joints.

3.4 RESILIENT ACCESSORY INSTALLATION

A. Comply with manufacturer's written instructions for installing resilient accessories.

B. Resilient Molding Accessories: Butt to adjacent materials and tightly adhere to substrates throughout length of each piece. Install reducer strips at edges of floor covering that would otherwise be exposed.

3.5 CLEANING AND PROTECTION

A. Comply with manufacturer's written instructions for cleaning and protecting resilient products.

B. Perform the following operations immediately after completing resilient-product installation:

1. Remove adhesive and other blemishes from exposed surfaces.
2. Sweep and vacuum horizontal surfaces thoroughly.
3. Damp-mop horizontal surfaces to remove marks and soil.

C. Protect resilient products from mars, marks, indentations, and other damage from construction operations and placement of equipment and fixtures during remainder of construction period.

D. Cover resilient products subject to wear and foot traffic until Substantial Completion.

END OF SECTION 096513

SECTION 096516 - RESILIENT SHEET FLOORING

PART 1 - GENERAL

1.1 RELATED DOCUMENTS

A. Drawings and general provisions of the Contract, including General and Supplementary Conditions and Division 01 Specification Sections, apply to this Section.

1.2 SUMMARY

A. Section includes:

1. Vinyl sheet flooring

1.3 ACTION SUBMITTALS

A. Product Data: For each type of product.

B. Shop Drawings: For each type of flooring. Include flooring layouts, locations of seams, edges, columns, doorways, enclosing partitions, built-in furniture, cabinets, and cutouts.

1. Show details of special patterns.

C. Samples: For each exposed product and for each color and texture specified in manufacturer's standard size, but not less than 6-by-9-inch sections.

1. For heat-welding bead, manufacturer's standard-size Samples, but not less than 9 inches long, of each color required.

D. Welded-Seam Samples: For seamless-installation technique indicated and for each resilient sheet flooring product, color, and pattern required; with seam running lengthwise and in center of 6-by-9-inch Sample applied to a rigid backing and prepared by Installer for this Project.

E. Product Schedule: For resilient sheet flooring. Use same designations indicated on Drawings.

1.4 INFORMATIONAL SUBMITTALS

A. Qualification Data: For Installer.

1.5 CLOSEOUT SUBMITTALS

A. Maintenance Data: For each type of resilient sheet flooring to include in maintenance manuals.

1.6 MAINTENANCE MATERIAL SUBMITTALS

A. Furnish extra materials that match products installed and that are packaged with protective covering for storage and identified with labels describing contents.

1. Resilient Sheet Flooring: Furnish not less than 10 linear feet for every 500 linear feet or fraction thereof, in roll form and in full roll width for each type, color, and pattern of flooring installed.

1.7 QUALITY ASSURANCE

A. Installer Qualifications: A qualified installer who employs workers for this Project who are competent in techniques required by manufacturer for resilient sheet flooring installation and seaming method indicated.

1. Engage an installer who employs workers for this Project who are trained or certified by resilient sheet flooring manufacturer for installation techniques required.

B. Mockups: Build mockups to verify selections made under Sample submittals and to demonstrate aesthetic effects and set quality standards for materials and execution.

1. Build mockups for resilient sheet flooring including resilient base and accessories.

a. Size: Minimum 100 sq. ft. for each type, color and pattern in locations directed by Architect.

2. Approval of mockups does not constitute approval of deviations from the Contract Documents contained in mockups unless Architect specifically approves such deviations in writing.
3. Subject to compliance with requirements, approved mockups may become part of the completed Work if undisturbed at time of Substantial Completion.

1.8 DELIVERY, STORAGE, AND HANDLING

A. Store resilient sheet flooring and installation materials in dry spaces protected from the weather, with ambient temperatures maintained within range recommended by manufacturer, but not less than 50 deg F or more than 90 deg F. Store rolls upright.

1.9 FIELD CONDITIONS

A. Maintain ambient temperatures within range recommended by manufacturer, but not less than 70 deg F or more than 85 deg F, in spaces to receive resilient sheet flooring during the following time periods:

1. 48 hours before installation.
2. During installation.
3. 48 hours after installation.

B. After installation and until Substantial Completion, maintain ambient temperatures within range recommended by manufacturer, but not less than 55 deg F or more than 95 deg F.

C. Close spaces to traffic during resilient sheet flooring installation.

D. Close spaces to traffic for 48 hours after resilient sheet flooring installation.

E. Install resilient sheet flooring after other finishing operations, including painting, have been completed.

PART 2 - PRODUCTS

2.1 PERFORMANCE REQUIREMENTS

A. Fire-Test-Response Characteristics: For resilient sheet flooring, as determined by testing identical products according to ASTM E 648 or NFPA 253 by a qualified testing agency.

1. Critical Radiant Flux Classification: Class I, not less than 0.45 W/sq. cm.

2.2 VINYL SHEET FLOORING

A. Basis-of-Design: Subject to compliance with requirements, provide product indicated on the Finish Schedule, or a comparable product as approved by the Architect.

1. Thickness: Manufacturer’s standard.
2. Sheet Width: Manufacturer’s standard.
3. Installation Method: Manufacturer’s standard.
4. Colors and Patterns: As indicated on the Finish Schedule.
5. Integral Base: 4 inches high with vinyl cap.

2.3 INSTALLATION MATERIALS

A. Trowelable Leveling and Patching Compounds: Latex-modified, portland cement based or blended hydraulic-cement-based formulation provided or approved by resilient sheet flooring manufacturer for applications indicated.

B. Adhesives: Water-resistant type recommended by flooring and adhesive manufacturers to suit resilient sheet flooring and substrate conditions indicated.

C. Seamless-Installation Accessories:

1. Heat-Welding Bead: Manufacturer's solid-strand product for heat welding seams.

a. Color: Match flooring.

2. Chemical-Bonding Compound: Manufacturer's product for chemically bonding seams.

D. Integral-Flash-Cove-Base Accessories:

1. Cove Strip: 1-inch radius provided or approved by resilient sheet flooring manufacturer.
2. Cap Strip: Square or tapered vinyl cap provided or approved by resilient sheet flooring manufacturer.
3. Corners: Metal inside and outside corners and end stops provided or approved by resilient sheet flooring manufacturer.

E. Floor Polish: Provide protective, liquid floor-polish products recommended by resilient sheet flooring manufacturer.

PART 3 - EXECUTION

3.1 EXAMINATION

A. Examine substrates, with Installer present, for compliance with requirements for maximum moisture content and other conditions affecting performance of the Work.

1. Verify that finishes of substrates comply with tolerances and other requirements specified in other Sections and that substrates are free of cracks, ridges, depressions, scale, and foreign deposits that might interfere with adhesion of resilient sheet flooring.

B. Proceed with installation only after unsatisfactory conditions have been corrected.

3.2 PREPARATION

A. Prepare substrates according to resilient sheet flooring manufacturer's written instructions to ensure adhesion of resilient sheet flooring.

B. Concrete Substrates: Prepare according to ASTM F 710.

1. Verify that substrates are dry and free of curing compounds, sealers, and hardeners.
2. Remove substrate coatings and other substances that are incompatible with adhesives and that contain soap, wax, oil, or silicone, using mechanical methods recommended by resilient sheet flooring manufacturer. Do not use solvents.
3. Alkalinity and Adhesion Testing: Perform tests recommended by resilient sheet flooring manufacturer. Proceed with installation only after substrate alkalinity falls within range on pH scale recommended by manufacturer in writing, but not less than 5 or more than 9 pH.
4. Moisture Testing: Proceed with installation only after substrates pass testing according to resilient sheet flooring manufacturer's written recommendations, but not less stringent than the following:

a. Perform anhydrous calcium chloride test according to ASTM F 1869. Proceed with installation only after substrates have maximum moisture-vapor-emission rate of 3 lb of water/1000 sq. ft. in 24 hours.

b. Perform relative humidity test using in situ probes according to ASTM F 2170. Proceed with installation only after substrates have a maximum 75 percent relative humidity level.

C. Fill cracks, holes, and depressions in substrates with trowelable leveling and patching compound; remove bumps and ridges to produce a uniform and smooth substrate.

D. Do not install resilient sheet flooring until it is the same temperature as the space where it is to be installed.

1. At least 48 hours in advance of installation, move flooring and installation materials into spaces where they will be installed.

E. Immediately before installation, sweep and vacuum clean substrates to be covered by resilient sheet flooring.

3.3 RESILIENT SHEET FLOORING INSTALLATION

A. Comply with manufacturer's written instructions for installing resilient sheet flooring.

B. Unroll resilient sheet flooring and allow it to stabilize before cutting and fitting.

C. Lay out resilient sheet flooring as follows:

1. Maintain uniformity of flooring direction.
2. Minimize number of seams; place seams in inconspicuous and low-traffic areas, at least 6 inches away from parallel joints in flooring substrates.
3. Match edges of flooring for color shading at seams.
4. Avoid cross seams.

D. Scribe and cut resilient sheet flooring to butt neatly and tightly to vertical surfaces, permanent fixtures, and built-in furniture including cabinets, pipes, outlets, and door frames.

E. Extend resilient sheet flooring into toe spaces, door reveals, closets, and similar openings.

F. Maintain reference markers, holes, and openings that are in place or marked for future cutting by repeating on resilient sheet flooring as marked on substrates. Use chalk or other nonpermanent marking device.

G. Adhere resilient sheet flooring to substrates using a full spread of adhesive applied to substrate to produce a completed installation without open cracks, voids, raising and puckering at joints, telegraphing of adhesive spreader marks, and other surface imperfections.

H. Seamless Installation:

1. Heat-Welded Seams: Comply with ASTM F 1516. Rout joints and heat weld with welding bead to permanently fuse sections into a seamless flooring. Prepare, weld, and finish seams to produce surfaces flush with adjoining flooring surfaces.

2. Chemically Bonded Seams: Bond seams with chemical-bonding compound to permanently fuse sections into a seamless flooring. Prepare seams and apply compound to produce tightly fitted seams without gaps, overlays, or excess bonding compound on flooring surfaces.

3.4 CLEANING AND PROTECTION

A. Comply with manufacturer's written instructions for cleaning and protecting resilient sheet flooring.

B. Perform the following operations immediately after completing resilient sheet flooring installation:

1. Remove adhesive and other blemishes from surfaces.
2. Sweep and vacuum surfaces thoroughly.
3. Damp-mop surfaces to remove marks and soil.

C. Protect resilient sheet flooring from mars, marks, indentations, and other damage from construction operations and placement of equipment and fixtures during remainder of construction period.

D. Floor Polish: Remove soil, adhesive, and blemishes from flooring surfaces before applying liquid floor polish.

1. Apply two coat(s).

E. Cover resilient sheet flooring until Substantial Completion.

END OF SECTION 096516

SECTION 096519 - RESILIENT TILE FLOORING

PART 1 - GENERAL

1.1 RELATED DOCUMENTS

A. Drawings and general provisions of the Contract, including General and Supplementary Conditions and Division 01 Specification Sections, apply to this Section.

1.2 SUMMARY

A. Section Includes:

1. Luxury vinyl plank floor tile.
2. Vinyl composition floor tile.

1.3 ACTION SUBMITTALS

A. Product Data: For each type of product.

B. Shop Drawings: For each type of floor tile. Include floor tile layouts, edges, columns, doorways, enclosing partitions, built-in furniture, cabinets, and cutouts.

1. Show details of special patterns.

C. Samples: Full-size units of each color and pattern of floor tile required.

D. Product Schedule: For floor tile. Use same designations indicated on Drawings.

1.4 INFORMATIONAL SUBMITTALS

A. Qualification Data: For Installer.

1.5 CLOSEOUT SUBMITTALS

A. Maintenance Data: For each type of floor tile to include in maintenance manuals.

1.6 MAINTENANCE MATERIAL SUBMITTALS

A. Furnish extra materials that match products installed and that are packaged with protective covering for storage and identified with labels describing contents.

1. Floor Tile: Furnish one box for every 50 boxes or fraction thereof, of each type, color, and pattern of floor tile installed.

1.7 QUALITY ASSURANCE

A. Installer Qualifications: A qualified installer who employs workers for this Project who are competent in techniques required by manufacturer for floor tile installation and seaming method indicated.

1. Engage an installer who employs workers for this Project who are trained or certified by floor tile manufacturer for installation techniques required.

B. Mockups: Build mockups to verify selections made under Sample submittals and to demonstrate aesthetic effects and set quality standards for materials and execution.

1. Build mockups for floor tile including resilient base and accessories.

a. Size: Minimum 100 sq. ft. for each type, color, and pattern in locations directed by Architect.

2. Approval of mockups does not constitute approval of deviations from the Contract Documents contained in mockups unless Architect specifically approves such deviations in writing.
3. Subject to compliance with requirements, approved mockups may become part of the completed Work if undisturbed at time of Substantial Completion.

1.8 DELIVERY, STORAGE, AND HANDLING

A. Store floor tile and installation materials in dry spaces protected from the weather, with ambient temperatures maintained within range recommended by manufacturer, but not less than 50 deg F or more than 90 deg F. Store floor tiles on flat surfaces.

1.9 FIELD CONDITIONS

A. Maintain ambient temperatures within range recommended by manufacturer, but not less than 70 deg F or more than 95 deg F, in spaces to receive floor tile during the following time periods:

1. 48 hours before installation.
2. During installation.
3. 48 hours after installation.

B. After installation and until Substantial Completion, maintain ambient temperatures within range recommended by manufacturer, but not less than 55 deg F or more than 95 deg F.

C. Close spaces to traffic during floor tile installation.

D. Close spaces to traffic for 48 hours after floor tile installation.

E. Install floor tile after other finishing operations, including painting, have been completed.

PART 2 - PRODUCTS

2.1 PERFORMANCE REQUIREMENTS

A. Fire-Test-Response Characteristics: For resilient tile flooring, as determined by testing identical products according to ASTM E 648 or NFPA 253 by a qualified testing agency.

1. Critical Radiant Flux Classification: Class I, not less than 0.45 W/sq. cm.

2.2 SOLID VINYL PLANK FLOOR TILE

A. Luxury Vinyl Plank Tile:

1. Basis-of-Design: Subject to compliance with requirements, provide products indicated on the Finish Schedule, or comparable products as approved by the Architect:

a. Style: As indicated on the Finish Schedule.
b. Color: As indicated on the Finish Schedule.
c. Size: As indicated on the Finish Schedule.
d. Thickness: As indicated on the Finish Schedule.
e. Finish: As indicated on the Finish Schedule.

B. Tile Standard: ASTM F 1700.

1. Class: Class III, printed film vinyl tile.
2. Type: B, embossed surface.

2.3 VINYL COMPOSITION FLOOR TILE

A. Basis-of-Design: Subject to compliance with requirements, provide products indicated on the Finish Schedule, or comparable products as approved by the Architect:

1. Sizes: As indicated on the Finish Schedule.
2. Colors and Patterns: As indicated on the Finish Schedule.

B. Tile Standard: ASTM F 1066, Class 1, solid-color or Class 2, through-pattern tile as selected by the Architect.

C. Wearing Surface: Smooth.

D. Thickness: 0.125 inch.

2.4 INSTALLATION MATERIALS

A. Trowelable Leveling and Patching Compounds: Latex-modified, portland cement based or blended hydraulic-cement-based formulation provided or approved by floor tile manufacturer for applications indicated.

B. Adhesives: Water-resistant type recommended by floor tile and adhesive manufacturers to suit floor tile and substrate conditions indicated.

C. Floor Polish: Provide protective, liquid floor-polish products recommended by floor tile manufacturer.

PART 3 - EXECUTION

3.1 EXAMINATION

A. Examine substrates, with Installer present, for compliance with requirements for maximum moisture content and other conditions affecting performance of the Work.

1. Verify that finishes of substrates comply with tolerances and other requirements specified in other Sections and that substrates are free of cracks, ridges, depressions, scale, and foreign deposits that might interfere with adhesion of floor tile.

B. Proceed with installation only after unsatisfactory conditions have been corrected.

3.2 PREPARATION

A. Prepare substrates according to floor tile manufacturer's written instructions to ensure adhesion of resilient products.

B. Concrete Substrates: Prepare according to ASTM F 710.

1. Verify that substrates are dry and free of curing compounds, sealers, and hardeners.
2. Remove substrate coatings and other substances that are incompatible with adhesives and that contain soap, wax, oil, or silicone, using mechanical methods recommended by floor tile manufacturer. Do not use solvents.
3. Alkalinity and Adhesion Testing: Perform tests recommended by floor tile manufacturer. Proceed with installation only after substrate alkalinity falls within range on pH scale recommended by manufacturer in writing, but not less than 5 or more than 9 pH.
4. Moisture Testing: Proceed with installation only after substrates pass testing according to floor tile manufacturer's written recommendations, but not less stringent than the following:

a. Perform anhydrous calcium chloride test according to ASTM F 1869. Proceed with installation only after substrates have maximum moisture-vapor-emission rate of 3 lb of water/1000 sq. ft. in 24 hours.
b. Perform relative humidity test using in situ probes according to ASTM F 2170. Proceed with installation only after substrates have a maximum 75 percent relative humidity level.

C. Fill cracks, holes, and depressions in substrates with trowelable leveling and patching compound; remove bumps and ridges to produce a uniform and smooth substrate.

D. Do not install floor tiles until they are the same temperature as the space where they are to be installed.

1. At least 48 hours in advance of installation, move resilient floor tile and installation materials into spaces where they will be installed.

E. Immediately before installation, sweep and vacuum clean substrates to be covered by resilient floor tile.

3.3 FLOOR TILE INSTALLATION

A. Comply with manufacturer's written instructions for installing floor tile.

B. Lay out floor tiles from center marks established with principal walls, discounting minor offsets, so tiles at opposite edges of room are of equal width. Adjust as necessary to avoid using cut widths that equal less than one-half tile at perimeter.

1. Lay tiles in pattern indicated.

C. Match floor tiles for color and pattern by selecting tiles from cartons in the same sequence as manufactured and packaged, if so numbered. Discard broken, cracked, chipped, or deformed tiles.

1. Lay tiles with grain running in one direction, unless otherwise indicated.

D. Scribe, cut, and fit floor tiles to butt neatly and tightly to vertical surfaces and permanent fixtures including built-in furniture, cabinets, pipes, outlets, and door frames.

E. Extend floor tiles into toe spaces, door reveals, closets, and similar openings. Extend floor tiles to center of door openings.

F. Maintain reference markers, holes, and openings that are in place or marked for future cutting by repeating on floor tiles as marked on substrates. Use chalk or other nonpermanent marking device.

G. Adhere floor tiles to flooring substrates using a full spread of adhesive applied to substrate to produce a completed installation without open cracks, voids, raising and puckering at joints, telegraphing of adhesive spreader marks, and other surface imperfections.

3.4 CLEANING AND PROTECTION

A. Comply with manufacturer's written instructions for cleaning and protecting floor tile.

B. Perform the following operations immediately after completing floor tile installation:

1. Remove adhesive and other blemishes from exposed surfaces.
2. Sweep and vacuum surfaces thoroughly.
3. Damp-mop surfaces to remove marks and soil.

C. Protect floor tile from mars, marks, indentations, and other damage from construction operations and placement of equipment and fixtures during remainder of construction period.

D. Floor Polish: Remove soil, adhesive, and blemishes from floor tile surfaces before applying liquid floor polish.

1. Apply two coat(s).

E. Cover floor tile until Substantial Completion.

END OF SECTION 096519

SECTION 096723 - RESINOUS FLOORING

PART 1 - GENERAL

1.1 RELATED DOCUMENTS

A. Drawings and general provisions of the Contract, including General and Supplementary Conditions and Division 01 Specification Sections, apply to this Section.

1.2 SUMMARY

A. Section includes resinous flooring systems.

1.3 PREINSTALLATION MEETINGS

A. Preinstallation Conference: Conduct conference at Project site.

1.4 ACTION SUBMITTALS

A. Product Data: For each type of product. Include manufacturer's technical data, application instructions, and recommendations for each resinous flooring component required.

B. Samples for Initial Selection: For each type of exposed finish required.

C. Samples for Verification: For each resinous flooring system required, 6 inches square, applied to a rigid backing by Installer for this Project.

1.5 INFORMATIONAL SUBMITTALS

A. Installer Certificates: Signed by manufacturer certifying that installers comply with specified requirements.

B. Material Certificates: For each resinous flooring component, from manufacturer.

C. Material Test Reports: For each resinous flooring system, by a qualified testing agency.

1.6 CLOSEOUT SUBMITTALS

A. Maintenance Data: For resinous flooring to include in maintenance manuals.

1.7 QUALITY ASSURANCE

A. Installer Qualifications: An authorized representative who is trained and approved by manufacturer.

B. Engage an installer who is certified in writing by resinous flooring manufacturer as qualified to apply resinous flooring systems indicated.

C. Mockups: Build mockups to verify selections made under Sample submittals and to demonstrate aesthetic effects and set quality standards for materials and execution.

1. Apply full-thickness mockups on 96-inch-square floor area selected by Architect.

a. Include 96-inch length of integral cove base with inside and outside corner.

2. Simulate finished lighting conditions for Architect's review of mockups.
3. Approval of mockups does not constitute approval of deviations from the Contract Documents contained in mockups unless Architect specifically approves such deviations in writing.
4. Subject to compliance with requirements, approved mockups may become part of the completed Work if undisturbed at time of Substantial Completion.

1.8 DELIVERY, STORAGE, AND HANDLING

A. Deliver materials in original packages and containers, with seals unbroken, bearing manufacturer's labels indicating brand name and directions for storage and mixing with other components.

1.9 FIELD CONDITIONS

A. Environmental Limitations: Comply with resinous flooring manufacturer's written instructions for substrate temperature, ambient temperature, moisture, ventilation, and other conditions affecting resinous flooring application.

B. Lighting: Provide permanent lighting or, if permanent lighting is not in place, simulate permanent lighting conditions during resinous flooring application.

C. Close spaces to traffic during resinous flooring application and for 24 hours after application unless manufacturer recommends a longer period.

PART 2 - PRODUCTS

2.1 PERORMANCE REQUIREMENTS

A. Flammability: Self-extinguishing according to ASTM D 635.

2.2 MANUFACTURERS

A. Source Limitations: Obtain primary resinous flooring materials, including primers, resins, hardening agents, grouting coats, and topcoats, from single source from single manufacturer. Obtain secondary materials, including patching and fill material, joint sealant, and repair materials, of type and from manufacturer recommended in writing by manufacturer of primary materials.

2.3 RESINOUS FLOORING

A. Abrasion-, impact-, and chemical-resistant, aggregate-filled, and resin-based monolithic floor surfacing designed to produce a seamless floor and 4-inch integral cove base.

B. Resinous Flooring System Type POLY-1

1. Basis-of-Design: Subject to compliance with requirements, provide Dur-A-Flex, Inc, Poly-Crete MDB as indicated on the Finish Schedule, or a comparable system as approved by the Architect.
2. System Characteristics:

a. Color and Pattern: As indicated on the Finish Schedule.
b. Finish: As indicated on the Finish Schedule.
c. Wearing Surface: Manufacturer's standard.
d. Overall Finished System Thickness: 1/4 inch nominal.
e. System Materials: Urethane topcoat seamless flooring system with self-leveling broadcast quartz.

1) Topping: Dur-A-Flex, Inc, Poly-Crete MD resin, hardener and aggregate.
2) The aggregate shall be Dur-A-Flex, Inc. Flintshot quartz aggregate.
3) Topcoat: Dur-A-Flex, Inc. Poly-Crete Color-Fast resin, hardener and powder aggregate.

f. Patch Materials:

1) Shallow Fill and Patching: Use Dur-A-Flex, Inc. Poly-Crete MD (up to ¼ inch).
2) Deep Fill and Sloping Material (over ¼ inch): Use Dur-A-Flex, Inc. Dur-A-Tex UM.

C. Resinous Flooring System Type HYBRI-1:

1. Basis-of-Design: Subject to compliance with requirements, provide HYBRI-FLEX EC as indicated on the Finish Schedule, or a comparable system as approved by the Architect.

a. Color and Pattern: As indicated on the Finish Schedule.
b. Finish: As indicated on the Finish Schedule.
c. Wearing Surface: Manufacturer's standard.
d. Overall Finished System Thickness: 3/16 inch nominal.

e. System Materials: Decorative chip system composed of an 1/8" POLY-CRETE SL body coat with a decorative chip broadcast.

1) DUR-A-GLAZE #4 broadcast coat.
2) DUR-A-GLAZE #4 grout coat.
3) ARMOR TOP topcoat.

D. Primer: Type recommended by resinous flooring manufacturer for substrate and resinous flooring system indicated.

1. Formulation Description: 100 percent solids.

E. Patching and Fill Material: Resinous product of or approved by resinous flooring manufacturer and recommended by manufacturer for application indicated.

PART 3 - EXECUTION

3.1 PREPARATION

A. Prepare and clean substrates according to resinous flooring manufacturer's written instructions for substrate indicated. Provide clean, dry substrate for resinous flooring application.

B. Concrete Substrates: Provide sound concrete surfaces free of laitance, glaze, efflorescence, curing compounds, form-release agents, dust, dirt, grease, oil, and other contaminants incompatible with resinous flooring.

1. Roughen concrete substrates as follows:

a. Shot-blast surfaces with an apparatus that abrades the concrete surface, contains the dispensed shot within the apparatus, and recirculates the shot by vacuum pickup.
b. Comply with ASTM C 811 requirements unless manufacturer's written instructions are more stringent.

2. Repair damaged and deteriorated concrete according to resinous flooring manufacturer's written instructions.
3. Verify that concrete substrates are dry and moisture-vapor emissions are within acceptable levels according to manufacturer's written instructions.

a. Anhydrous Calcium Chloride Test: ASTM F 1869. Proceed with application of resinous flooring only after substrates have maximum moisture-vapor-emission rate of 3 lb of water/1000 sq. ft. of slab area in 24 hours.
b. Plastic Sheet Test: ASTM D 4263. Proceed with application only after testing indicates absence of moisture in substrates.
c. Relative Humidity Test: Use in situ probes, ASTM F 2170. Proceed with installation only after substrates have a maximum 75 percent relative humidity level measurement.

4. Alkalinity and Adhesion Testing: Verify that concrete substrates have pH within acceptable range. Perform tests recommended by manufacturer. Proceed with application only after substrates pass testing.

C. Patching and Filling: Use patching and fill material to fill holes and depressions in substrates according to manufacturer's written instructions.

1. Control Joint Treatment: Treat control joints and other nonmoving substrate cracks to prevent cracks from reflecting through resinous flooring according to manufacturer's written instructions.

D. Resinous Materials: Mix components and prepare materials according to resinous flooring manufacturer's written instructions.

3.2 APPLICATION

A. Apply components of resinous flooring system according to manufacturer's written instructions to produce a uniform, monolithic wearing surface of thickness indicated.

1. Coordinate application of components to provide optimum adhesion of resinous flooring system to substrate, and optimum intercoat adhesion.
2. Cure resinous flooring components according to manufacturer's written instructions. Prevent contamination during application and curing processes.
3. Expansion and Isolation Joint Treatment: At substrate expansion and isolation joints, comply with resinous flooring manufacturer's written instructions.

B. Primer: Apply primer over prepared substrate at manufacturer's recommended spreading rate.

C. Reinforcing Membrane: Apply reinforcing membrane to substrate cracks.

D. Integral Cove Base: Apply cove base mix to wall surfaces before applying flooring. Apply according to manufacturer's written instructions and details, including those for taping, mixing, priming, troweling, sanding, and topcoating of cove base. Round internal and external corners.

1. Integral Cove Base: 4 inches high.

E. Self-Leveling Body Coats: Apply self-leveling slurry body coats in thickness indicated for flooring system.

1. Aggregates: Broadcast aggregates at rate recommended by manufacturer and, after resin is cured, remove excess aggregates to provide surface texture indicated.

F. Troweled or Screeded Body Coats: Apply troweled or screeded body coats in thickness indicated for flooring system. Hand or power trowel and grout to fill voids. When body coats are cured, remove trowel marks and roughness using method recommended by manufacturer.

G. Grout Coat: Apply grout coat, of type recommended by resinous flooring manufacturer, to fill voids in surface of final body coat.

H. Topcoats: Apply topcoats in number indicated for flooring system and at spreading rates recommended in writing by manufacturer and to produce wearing surface indicated.

3.3 FIELD QUALITY CONTROL

A. Material Sampling: Owner may, at any time and any number of times during resinous flooring application, require material samples for testing for compliance with requirements.

1. Owner will engage an independent testing agency to take samples of materials being used. Material samples will be taken, identified, sealed, and certified in presence of Contractor.
2. Testing agency will test samples for compliance with requirements, using applicable referenced testing procedures or, if not referenced, using testing procedures listed in manufacturer's product data.
3. If test results show applied materials do not comply with specified requirements, pay for testing, remove noncomplying materials, prepare surfaces coated with unacceptable materials, and reapply flooring materials to comply with requirements.

B. Core Sampling: At the direction of Owner and at locations designated by Owner, take one core sample per 1000 sq. ft. of resinous flooring, or portion of, to verify thickness. For each sample that fails to comply with requirements, take two additional samples. Repair damage caused by coring. Correct deficiencies in installed flooring as indicated by testing.

3.4 PROTECTION

A. Protect resinous flooring from damage and wear during the remainder of construction period. Use protective methods and materials, including temporary covering, recommended in writing by resinous flooring manufacturer.

END OF SECTION 096723

SECTION 096813 - TILE CARPETING

PART 1 - GENERAL

1.1 RELATED DOCUMENTS

A. Drawings and general provisions of the Contract, including General and Supplementary Conditions and Division 01 Specification Sections, apply to this Section.

1.2 SUMMARY

A. Section Includes:

1. Modular carpet tile, including textile composite and walk-off mat carpet tiles.
2. Metal edge strips.
3. Welded rod transitions.

B. Related Requirements:

1. Section 096513 "Resilient Base and Accessories" for resilient wall base and accessories installed with carpet tile.

1.3 ACTION SUBMITTALS

A. Product Data: For each type of product.

1. Include manufacturer's written data on physical characteristics, durability, and fade resistance.
2. Include manufacturer's written installation recommendations for each type of substrate.

B. Shop Drawings: For carpet tile installation, plans showing the following:

1. Columns, doorways, enclosing walls or partitions, built-in cabinets, and locations where cutouts are required in carpet tiles.
2. Carpet tile type, color, and dye lot.
3. Type of subfloor.
4. Type of installation.
5. Pattern of installation.
6. Pattern type, location, and direction.
7. Pile direction.
8. Type, color, and location of insets and borders.
9. Type, color, and location of edge, transition, and other accessory strips.
10. Transition details to other flooring materials.

C. Samples: For each of the following products and for each color and texture required. Label each Sample with manufacturer's name, material description, color, pattern, and designation indicated on Drawings and in schedules.

1. Carpet Tile: Full-size Sample.
2. Exposed Edge, Transition, and Other Accessory Stripping: 12-inch-long Samples.

D. Product Schedule: For carpet tile. Use same designations indicated on Drawings.

1.4 INFORMATIONAL SUBMITTALS

A. Qualification Data: For Installer.

B. Product Test Reports: For carpet tile, for tests performed by a qualified testing agency.

C. Sample Warranty: For special warranty.

1.5 CLOSEOUT SUBMITTALS

A. Maintenance Data: For carpet tiles to include in maintenance manuals. Include the following:

1. Methods for maintaining carpet tile, including cleaning and stain-removal products and procedures and manufacturer's recommended maintenance schedule.
2. Precautions for cleaning materials and methods that could be detrimental to carpet tile.

1.6 MAINTENANCE MATERIAL SUBMITTALS

A. Furnish extra materials, from the same product run, that match products installed and that are packaged with protective covering for storage and identified with labels describing contents.

1. Carpet Tile: Full-size units equal to 5 percent of amount installed for each type indicated, but not less than 10 sq. yd.

1.7 QUALITY ASSURANCE

A. Installer Qualifications: An experienced installer who is certified by the International Certified Floorcovering Installers Association at the Commercial II certification level.

B. Mockups: Build mockups to verify selections made under Sample submittals, to demonstrate aesthetic effects, and to set quality standards for fabrication and installation.

1. Build mockups at locations and in sizes shown on Drawings.
2. Subject to compliance with requirements, approved mockups may become part of the completed Work if undisturbed at time of Substantial Completion.

1.8 DELIVERY, STORAGE, AND HANDLING

A. Comply with CRI's "CRI Carpet Installation Standard."

1.9 FIELD CONDITIONS

A. Comply with CRI's "CRI Carpet Installation Standard" for temperature, humidity, and ventilation limitations.

B. Environmental Limitations: Do not deliver or install carpet tiles until spaces are enclosed and weathertight, wet-work in spaces is complete and dry, and ambient temperature and humidity conditions are maintained at levels planned for building occupants during the remainder of the construction period.

C. Do not install carpet tiles over concrete slabs until slabs have cured and are sufficiently dry to bond with adhesive and concrete slabs have pH range recommended by carpet tile manufacturer.

D. Where demountable partitions or other items are indicated for installation on top of carpet tiles, install carpet tiles before installing these items.

1.10 WARRANTY

A. Special Warranty for Carpet Tiles: Manufacturer agrees to repair or replace components of carpet tile installation that fail in materials or workmanship within specified warranty period.

1. Warranty does not include deterioration or failure of carpet tile due to unusual traffic, failure of substrate, vandalism, or abuse.
2. Failures include, but are not limited to, the following:

    a. More than 10 percent edge raveling, snags, and runs.
    b. Dimensional instability.
    c. Excess static discharge.
    d. Loss of tuft-bind strength.
    e. Loss of face fiber.
    f. Delamination.

3. Warranty Period: 10 years from date of Substantial Completion.

PART 2 - PRODUCTS

2.1 CARPET TILE

A. Carpet Tile Type: Standard field and accent tiles.

1. Basis-of-Design Product: Subject to compliance with requirements, provide product indicated below:

a. Manufacturer: As indicated on the Finish Schedule.
b. Pattern: As indicated on the Finish Schedule.
c. Color: As indicated on the Finish Schedule.
d. Size: As indicated on the Finish Schedule.
e. Installation: As selected by the Architect.

B. Carpet Tile Type: Textile composite hybrid carpet tile.

1. Basis-of-Design Product: Subject to compliance with requirements, provide product indicated below:

a. Manufacturer: As indicated on the Finish Schedule.
b. Pattern: As indicated on the Finish Schedule.
c. Color: As indicated on the Finish Schedule.
d. Size: As indicated on the Finish Schedule.
e. Installation: As selected by the Architect.

C. Carpet Tile Type: Walk-off carpet tiles.

1. Basis-of-Design Product: Subject to compliance with requirements, provide product indicated below:

a. Manufacturer: As indicated on the Finish Schedule.
b. Pattern: As indicated on the Finish Schedule.
c. Color: As indicated on the Finish Schedule.
d. Size: As indicated on the Finish Schedule.
e. Installation: As selected by the Architect.

D. Primary Backing/Backcoating: Manufacturer's standard composite materials.

E. Secondary Backing: Manufacturer's standard material.

F. Applied Treatments:

1. Soil-Resistance Treatment: Manufacturer's standard treatment.
2. Antimicrobial Treatment: Manufacturer's standard treatment that protects carpet tiles as follows:

a. Antimicrobial Activity: Not less than 2-mm halo of inhibition for gram-positive bacteria, not less than 1-mm halo of inhibition for gram-negative bacteria, and no fungal growth, according to AATCC 174.

2.2 INSTALLATION ACCESSORIES

A. Trowelable Leveling and Patching Compounds: Latex-modified, hydraulic-cement-based formulation provided or recommended by carpet tile manufacturer.

B. Adhesives: Water-resistant, mildew-resistant, nonstaining, pressure-sensitive type to suit products and subfloor conditions indicated, that comply with flammability requirements for installed carpet tile, and are recommended by carpet tile manufacturer for releasable installation.

C. Metal Edge/Transition Strips:

1. Basis-of-Design: Subject to compliance with requirements, provide products indicated on the Finish Schedule, or comparable products as approved by the Architect.

D. Welded Rod Transitions:

1. Basis-of-Design: Subject to compliance with requirements, provide products indicated on the Finish Schedule, or comparable products as approved by the Architect.

PART 3 - EXECUTION

3.1 EXAMINATION

A. Examine substrates, areas, and conditions, with Installer present, for compliance with requirements for maximum moisture content, alkalinity range, installation tolerances, and other conditions affecting carpet tile performance.

B. Examine carpet tile for type, color, pattern, and potential defects.

C. Concrete Slabs: Verify that finishes comply with requirements specified in Section 033000 "Cast-in-Place Concrete" and that surfaces are free of cracks, ridges, depressions, scale, and foreign deposits.

1. Moisture Testing for Adhesively Applied Carpet Tile: Perform tests so that each test area does not exceed 200 sq. ft., and perform no fewer than three tests in each installation area and with test areas evenly spaced in installation areas.

a. Anhydrous Calcium Chloride Test: ASTM F 1869. Proceed with installation only after substrates have maximum moisture-vapor-emission rate of 3 lb of water/1000 sq. ft. in 24 hours.
b. Relative Humidity Test: Using in situ probes, ASTM F 2170. Proceed with installation only after substrates have a maximum 75 percent relative humidity level measurement.

c. Perform additional moisture tests recommended in writing by adhesive and carpet tile manufacturers. Proceed with installation only after substrates pass testing.

D. Proceed with installation only after unsatisfactory conditions have been corrected.

3.2 PREPARATION

A. General: Comply with CRI's "Carpet Installation Standards" and with carpet tile manufacturer's written installation instructions for preparing substrates indicated to receive carpet tile.

B. Use trowelable leveling and patching compounds, according to manufacturer's written instructions, to fill cracks, holes, depressions, and protrusions in substrates. Fill or level cracks, holes and depressions 1/8 inch wide or wider, and protrusions more than 1/32 inch unless more stringent requirements are required by manufacturer's written instructions.

C. Concrete Substrates: Remove coatings, including curing compounds, and other substances that are incompatible with adhesives and that contain soap, wax, oil, or silicone, without using solvents. Use mechanical methods recommended in writing by adhesive and carpet tile manufacturers.

D. Broom and vacuum clean substrates to be covered immediately before installing carpet tile.

3.3 INSTALLATION

A. General: Comply with CRI's "CRI Carpet Installation Standard," Section 18, "Modular Carpet" and with carpet tile manufacturer's written installation instructions.

B. Installation Method: As recommended in writing by carpet tile manufacturer.

C. Maintain dye-lot integrity. Do not mix dye lots in same area.

D. Maintain pile-direction patterns recommended in writing by carpet tile manufacturer, unless otherwise indicated.

E. Cut and fit carpet tile to butt tightly to vertical surfaces, permanent fixtures, and built-in furniture including cabinets, pipes, outlets, edgings, thresholds, and nosings. Bind or seal cut edges as recommended by carpet tile manufacturer.

F. Extend carpet tile into toe spaces, door reveals, closets, open-bottomed obstructions, removable flanges, alcoves, and similar openings.

G. Maintain reference markers, holes, and openings that are in place or marked for future cutting by repeating on carpet tile as marked on subfloor. Use nonpermanent, nonstaining marking device.

H. Install pattern parallel to walls and borders.

3.4 CLEANING AND PROTECTION

A. Perform the following operations immediately after installing carpet tile:

1. Remove excess adhesive and other surface blemishes using cleaner recommended by carpet tile manufacturer.
2. Remove yarns that protrude from carpet tile surface.
3. Vacuum carpet tile using commercial machine with face-beater element.

B. Protect installed carpet tile to comply with CRI's "Carpet Installation Standard," Section 20, "Protecting Indoor Installations."

C. Protect carpet tile against damage from construction operations and placement of equipment and fixtures during the remainder of construction period. Use protection methods indicated or recommended in writing by carpet tile manufacturer.

END OF SECTION 096813

SECTION 096816 - SHEET CARPETING

PART 1 - GENERAL

1.1 RELATED DOCUMENTS

A. Drawings and general provisions of the Contract, including General and Supplementary Conditions and Division 01 Specification Sections, apply to this Section.

1.2 SUMMARY

A. Section Includes:

1. Broadloom carpet.
2. Carpet cushion.
3. Metal edge strips.

B. Related Requirements:

1. Section 096513 "Resilient Base and Accessories" for resilient wall base and accessories installed with carpet.

1.3 PREINSTALLATION MEETINGS

A. Preinstallation Conference: Conduct conference at Project site.

1. Review methods and procedures related to carpet installation including, but not limited to, the following:

a. Review delivery, storage, and handling procedures.
b. Review ambient conditions and ventilation procedures.
c. Review subfloor preparation procedures.

1.4 ACTION SUBMITTALS

A. Product Data: For each type of product.

1. Include manufacturer's written data on physical characteristics and durability.
2. Include manufacturer's written installation recommendations for each type of substrate.

B. Shop Drawings: For carpet installation, showing the following:

1. Columns, doorways, enclosing walls or partitions, built-in cabinets, and locations where cutouts are required in carpet.

2. Carpet type, color, and dye lot.
3. Seam locations, types, and methods.
4. Type of subfloor.
5. Type of installation.
6. Pattern type, repeat size, location, direction, and starting point.
7. Pile direction.
8. Types, colors, and locations of edge, transition, and other accessory strips.
9. Transition details to other flooring materials.
10. Type of carpet cushion.

C. Samples: For each of the following products and for each color and texture required. Label each Sample with manufacturer's name, material description, color, pattern, and designation indicated on Drawings and in schedules.

1. Carpet: 12-inch-square Sample.
2. Exposed Edge, Transition, and Other Accessory Stripping: 12-inch-long Samples.
3. Carpet Cushion: 6-inch-square Sample.
4. Carpet Seam: 6-inch Sample.

D. Product Schedule: For carpet and carpet cushion. Use same designations indicated on Drawings.

1.5 INFORMATIONAL SUBMITTALS

A. Qualification Data: For Installer.

B. Product Test Reports: For carpet and carpet cushion, for tests performed by a qualified testing agency.

C. Sample Warranties: For special warranties.

1.6 CLOSEOUT SUBMITTALS

A. Maintenance Data: For carpet to include in maintenance manuals. Include the following:

1. Methods for maintaining carpet, including cleaning and stain-removal products and procedures and manufacturer's recommended maintenance schedule.
2. Precautions for cleaning materials and methods that could be detrimental to carpet and carpet cushion.

1.7 MAINTENANCE MATERIAL SUBMITTALS

A. Furnish extra materials, from the same product run, that match products installed and that are packaged with protective covering for storage and identified with labels describing contents.

1. Carpet: Full-width rolls equal to 5 percent of amount installed for each type indicated, but not less than 10 sq. yd.

1.8 QUALITY ASSURANCE

A. Installer Qualifications: An experienced installer who is certified by the International Certified Floorcovering Installers Association at the Commercial II certification level.

B. Mockups: Build mockups to verify selections made under Sample submittals, to demonstrate aesthetic effects, and to set quality standards for fabrication and installation.

1. Build mockups at locations and in sizes as approved by the Architect.
2. Subject to compliance with requirements, approved mockups may become part of the completed Work if undisturbed at time of Substantial Completion.

1.9 DELIVERY, STORAGE, AND HANDLING

A. Comply with CRI's "CRI Carpet Installation Standard."

B. Deliver carpet in original mill protective covering with mill register numbers and tags attached.

1.10 FIELD CONDITIONS

A. Comply with CRI's "CRI Carpet Installation Standard" for temperature, humidity, and ventilation limitations.

B. Environmental Limitations: Do not deliver or install carpet and carpet cushion until spaces are enclosed and weathertight, wet-work in spaces is complete and dry, and ambient temperature and humidity conditions are maintained at levels planned for building occupants during the remainder of the construction period.

C. Do not install carpet and carpet cushion over concrete slabs until slabs have cured, are sufficiently dry to bond with adhesive, and have pH range recommended by carpet manufacturer.

1.11 WARRANTY

A. Special Warranty for Carpet: Manufacturer agrees to repair or replace components of carpet installation that fail in materials or workmanship within specified warranty period.

1. Warranty does not include deterioration or failure of carpet due to unusual traffic, failure of substrate, vandalism, or abuse.
2. Failures include, but are not limited to, the following:

a. More than 10 percent loss of face fiber, edge raveling, snags, and runs.
b. Loss of tuft bind strength.
c. Excess static discharge**.**
d. Delamination.

3. Warranty Period: 10 years from date of Substantial Completion.

B. Special Warranty for Carpet Cushion: Manufacturer agrees to repair or replace components of carpet cushion installation that fail in materials or workmanship within specified warranty period.

1. Warranty includes removal and replacement of carpet and accessories required by replacement of carpet cushion.
2. Warranty does not include deterioration or failure of carpet cushion due to unusual traffic, failure of substrate, vandalism, or abuse.
3. Failure includes, but is not limited to, permanent indentation or compression.
4. Warranty Period: 10 years from date of Substantial Completion.

PART 2 - PRODUCTS

2.1 BROADLOOM CARPET

A. Carpet Type:

1. Basis-of-Design Product: Subject to compliance with requirements, provide product indicated below:

a. Manufacturer: As indicated on the Finish Schedule.
b. Pattern: As indicated on the Finish Schedule.
c. Color: As indicated on the Finish Schedule.
d. Size: As indicated on the Finish Schedule.
e. Installation: As selected by the Architect.

B. Primary Backing: Manufacturer's standard material.

C. Secondary Backing: Manufacturer's standard material.

D. Backcoating: Manufacturer's standard material.

E. Applied Treatments:

1. Applied Soil-Resistance Treatment: Manufacturer's standard material.
2. Antimicrobial Treatment: Manufacturer's standard material.

a. Antimicrobial Activity: Not less than 2-mm halo of inhibition for gram-positive bacteria, not less than 1-mm halo of inhibition for gram-negative bacteria, and no fungal growth, according to AATCC 174.

F. Performance Characteristics:

1. Appearance Retention Rating: Heavy traffic, 3.0 minimum according to ASTM D 7330.

2.2 CARPET CUSHION

A. Manufacturers: Subject to compliance with requirements, provide products by carpet manufacturer or by one of the following:

1. Carpenter Co.
2. Dalton Foam; a division of NCFI Polyurethanes; a division of Barnhardt Manufacturing Company.
3. Dura Undercushions Ltd.
4. Foam Products Corporation.
5. Hickory Springs Manufacturing Company, Inc.
6. Leggett & Platt, Inc.
7. Los Angeles Fiber.
8. Scottdel Cushion LLC.
9. Sponge Cushion, Inc.; A Leggett & Platt company.

B. Traffic Classification: CCC Class II, heavy traffic.

C. Rubber Cushion: Flat, rippled waffle, or textured flat as approved by the Architect.

1. Density: 5 lb./cu. ft. minimum, unless otherwise indicated.
2. Thickness: 7/16-inch minimum, unless otherwise indicated.

D. Performance Characteristics:

1. Critical Radiant Flux Classification: Not less than 0.45 W/sq. cm according to NFPA 253.

2.3 INSTALLATION ACCESSORIES

A. Trowelable Leveling and Patching Compounds: Latex-modified, hydraulic-cement-based formulation provided or recommended by carpet cushion manufacturer.

B. Adhesives: Water-resistant, mildew-resistant, nonstaining type to suit products and subfloor conditions indicated, that complies with flammability requirements for installed carpet and is recommended or provided by carpet and carpet cushion manufacturers.

C. Tackless Carpet Stripping: Water-resistant plywood, in strips as required to match cushion thickness and that comply with CRI's "CRI Carpet Installation Standard."

D. Seam Adhesive: Hot-melt adhesive tape or similar product recommended by carpet manufacturer for sealing and taping seams and butting cut edges at backing to form secure seams and to prevent pile loss at seams.

E. Metal Edge/Transition Strips:

1. Basis-of-Design: Subject to compliance with requirements, provide products indicated on the Finish Schedule, or comparable products as approved by the Architect.

PART 3 - EXECUTION

3.1 EXAMINATION

A. Examine substrates, areas, and conditions, with Installer present, for compliance with requirements for maximum moisture content, alkalinity range, installation tolerances, and other conditions affecting carpet performance.

B. Examine carpet for type, color, pattern, and potential defects.

C. Concrete Slabs: Verify that finishes comply with requirements specified in Section 033000 "Cast-in-Place Concrete" and that surfaces are free of cracks, ridges, depressions, scale, and foreign deposits.

1. Moisture Testing: Perform tests so that each test area does not exceed 200 sq. ft., and perform no fewer than three tests in each installation area and with test areas evenly spaced in installation areas.

a. Anhydrous Calcium Chloride Test: ASTM F 1869. Proceed with installation only after substrates have maximum moisture-vapor-emission rate of 3 lb of water/1000 sq. ft. in 24 hours.
b. Relative Humidity Test: Using in situ probes, ASTM F 2170. Proceed with installation only after substrates have a maximum 75 percent relative humidity level measurement.
c. Perform additional moisture tests recommended in writing by adhesive, carpet cushion, and carpet manufacturers. Proceed with installation only after substrates pass testing.

D. Proceed with installation only after unsatisfactory conditions have been corrected.

3.2 PREPARATION

A. General: Comply with CRI's "CRI Carpet Installation Standard" and with carpet manufacturer's written installation instructions for preparing substrates.

B. Use trowelable leveling and patching compounds, according to manufacturer's written instructions, to fill cracks, holes, depressions, and protrusions in substrates. Fill or level cracks, holes and depressions 1/8 inch wide or wider, and protrusions more than 1/32 inch, unless more stringent requirements are required by manufacturer's written instructions.

C. Concrete Substrates: Remove coatings, including curing compounds, and other substances that are incompatible with adhesives and that contain soap, wax, oil, or silicone, without using solvents. Use mechanical methods recommended in writing by adhesive, carpet, and carpet cushion manufacturers.

D. Broom and vacuum clean substrates to be covered immediately before installing carpet.

3.3 CARPET INSTALLATION

A. Comply with CRI's "CRI Carpet Installation Standard" and carpet and carpet cushion manufacturers' written installation instructions for the following:

1. Direct-glue-down installation.
2. Carpet with attached-cushion installation.
3. Preapplied adhesive installation.
4. Stretch-in installation.

B. Comply with carpet manufacturer's written instructions and Shop Drawings for seam locations and direction of carpet; maintain uniformity of carpet direction and lay of pile. At doorways, center seams under the door in closed position.

1. Stretch-in Carpet Installation: Install carpet cushion seams at 90-degree angle with carpet seams.

C. Do not bridge building expansion joints with carpet.

D. Cut and fit carpet to butt tightly to vertical surfaces, permanent fixtures, and built-in furniture including cabinets, pipes, outlets, edgings, thresholds, and nosings. Bind or seal cut edges as recommended by carpet manufacturer.

E. Extend carpet into toe spaces, door reveals, closets, open-bottomed obstructions, removable flanges, alcoves, and similar openings.

F. Maintain reference markers, holes, and openings that are in place or marked for future cutting by repeating on carpet as marked on subfloor. Use nonpermanent, nonstaining marking device.

3.4 CLEANING AND PROTECTION

A. Perform the following operations immediately after installing carpet:

1. Remove excess adhesive, seam sealer, and other surface blemishes using cleaner recommended by carpet manufacturer.
2. Remove yarns that protrude from carpet surface.
3. Vacuum carpet using commercial machine with face-beater element.

B. Protect installed carpet to comply with CRI's "CRI Carpet Installation Standard."

C. Protect carpet against damage from construction operations and placement of equipment and fixtures during the remainder of construction period. Use protection methods recommended in writing by carpet manufacturer and carpet cushion and adhesive manufacturers.

END OF SECTION 096816

SECTION 097200 - WALL COVERINGS

PART 1 - GENERAL

1.1 RELATED DOCUMENTS

A. Drawings and general provisions of the Contract, including General and Supplementary Conditions and Division 01 Specification Sections, apply to this Section.

1.2 SUMMARY

A. Section Includes:

1. Vinyl wall covering.

1.3 ACTION SUBMITTALS

A. Product Data: For each type of product.

1. Include data on physical characteristics, durability, fade resistance, and fire-test-response characteristics.

B. Shop Drawings: Show location and extent of each wall-covering type. Indicate pattern placement, seams and termination points.

C. Samples: For each type of wall covering and for each color, pattern, texture, and finish specified, full width by 36-inch- long in size.

1. Wall-Covering Sample: From same production run to be used for the Work, with specified treatments applied. Show complete pattern repeat. Mark top and face of fabric.

D. Product Schedule: For wall coverings. Use same designations indicated on Drawings.

1.4 INFORMATIONAL SUBMITTALS

A. Qualification Data: For testing agency.

B. Product Test Reports: For each wall covering, for tests performed by a qualified testing agency.

1.5 CLOSEOUT SUBMITTALS

A. Maintenance Data: For wall coverings to include in maintenance manuals.

1.6 MAINTENANCE MATERIAL SUBMITTALS

A. Furnish extra materials, from the same product run, that match products installed and that are packaged with protective covering for storage and identified with labels describing contents.

1. Wall-Covering Materials: For each type, color, texture, and finish, full width by length to equal to 5 percent of amount installed.

1.7 QUALITY ASSURANCE

A. Mockups: Build mockups to verify selections made under Sample submittals and to demonstrate aesthetic effects and to set quality standards for installation.

1. Build mockups for each type of wall covering on each substrate required. Comply with requirements in ASTM F 1141 for appearance shading characteristics.
2. Approval of mockups does not constitute approval of deviations from the Contract Documents contained in mockups unless Architect specifically approves such deviations in writing.
3. Subject to compliance with requirements, approved mockups may become part of the completed Work if undisturbed at time of Substantial Completion.

1.8 FIELD CONDITIONS

A. Environmental Limitations: Do not deliver or install wall coverings until spaces are enclosed and weathertight, wet work in spaces is complete and dry, work above ceilings is complete, and temporary HVAC system is operating and maintaining ambient temperature and humidity conditions at levels intended for occupants after Project completion during the remainder of the construction period.

B. Lighting: Do not install wall covering until lighting that matches conditions intended for occupants after Project completion is provided on the surfaces to receive wall covering.

C. Ventilation: Provide continuous ventilation during installation and for not less than the time recommended by wall-covering manufacturer for full drying or curing.

PART 2 - PRODUCTS

2.1 PERFORMANCE REQUIREMENTS

A. Fire-Test-Response Characteristics: As determined by testing identical wall coverings applied with identical adhesives to substrates according to test method indicated below by a qualified testing agency. Identify products with appropriate markings of applicable testing agency.

1. Surface-Burning Characteristics: Comply with ASTM E 84; testing by a qualified testing agency. Identify products with appropriate markings of applicable testing agency.

a. Flame-Spread Index: 25 or less.
b. Smoke-Developed Index: 50 or less.

2. Fire-Growth Contribution: No flashover and heat and smoke release according to NFPA 265.

2.2 VINYL WALL COVERING

A. Advanced Wall Protection Vinyl Wall Covering Type: Impact-, chemical-, and abrasion-resistant.

1. Basis-of-Design Products: Subject to compliance with requirements, provide product indicated below, or a comparable product as approved by the Architect:

a. Manufacturer: As indicated on the Finish Schedule.
b. Pattern: As indicated on the Finish Schedule.
c. Color: As indicated on the Finish Schedule.
d. Width: As indicated on the Finish Schedule.

2.3 ACCESSORIES

A. Adhesive: Mildew-resistant, nonstaining, strippable adhesive, for use with specific wall covering and substrate application indicated and as recommended in writing by wall-covering manufacturer.

B. Primer/Sealer: Mildew resistant, complying with requirements in Section 099123 "Interior Painting" and recommended in writing by primer/sealer and wall-covering manufacturers for intended substrate.

C. Seam Tape: As recommended in writing by wall-covering manufacturer.

PART 3 - EXECUTION

3.1 EXAMINATION

A. Examine substrates and conditions, with Installer present, for compliance with requirements for levelness, wall plumbness, maximum moisture content, and other conditions affecting performance of the Work.

B. Proceed with installation only after unsatisfactory conditions have been corrected.

3.2 PREPARATION

A. Comply with manufacturer's written instructions for surface preparation.

B. Clean substrates of substances that could impair bond of wall covering, including dirt, oil, grease, mold, mildew, and incompatible primers.

C. Prepare substrates to achieve a smooth, dry, clean, structurally sound surface free of flaking, unsound coatings, cracks, and defects.

1. Moisture Content: Maximum of 5 percent on new plaster, concrete, and concrete masonry units when tested with an electronic moisture meter.
2. Gypsum Board: Prime with primer as recommended in writing by primer/sealer manufacturer and wall-covering manufacturer.
3. Painted Surfaces: Treat areas susceptible to pigment bleeding.

D. Check painted surfaces for pigment bleeding. Sand gloss, semigloss, and eggshell finish with fine sandpaper.

E. Remove hardware and hardware accessories, electrical plates and covers, light fixture trims, and similar items.

F. Acclimatize wall-covering materials by removing them from packaging in the installation areas not less than 24 hours before installation.

3.3 WALL-COVERING INSTALLATION

A. Comply with wall-covering manufacturers' written installation instructions applicable to products and applications indicated.

B. Cut wall-covering strips in roll number sequence. Change the roll numbers at partition breaks and corners.

C. Install strips in same order as cut from roll.

1. For solid-color, even-texture, or random-match wall coverings, reverse every other strip.

D. Install wall covering without lifted or curling edges and without visible shrinkage.

E. Match pattern 72 inches above the finish floor.

F. Install seams vertical and plumb at least 6 inches from outside corners and 6 inches from inside corners unless a change of pattern or color exists at corner. Horizontal seams are not permitted.

G. Trim edges and seams for color uniformity, pattern match, and tight closure. Butt seams without overlaps or gaps between strips.

H. Fully bond wall covering to substrate. Remove air bubbles, wrinkles, blisters, and other defects.

3.4 CLEANING

A. Remove excess adhesive at seams, perimeter edges, and adjacent surfaces.

B. Use cleaning methods recommended in writing by wall-covering manufacturer.

C. Replace strips that cannot be cleaned.

D. Reinstall hardware and hardware accessories, electrical plates and covers, light fixture trims, and similar items.

END OF SECTION 097200

SECTION 099113 - EXTERIOR PAINTING

PART 1 - GENERAL

1.1 RELATED DOCUMENTS

A. Drawings and general provisions of the Contract, including General and Supplementary Conditions and Division 01 Specification Sections, apply to this Section.

1.2 SUMMARY

A. Section includes surface preparation and the application of paint systems on the following exterior substrates:

1. Concrete.
2. Fiber-cement board.
3. Clay masonry.
4. Steel.
5. Galvanized metal.
6. Aluminum (not anodized or otherwise coated).
7. Gypsum board.

1.3 DEFINITIONS

A. MPI Gloss Level 1: Not more than five units at 60 degrees and 10 units at 85 degrees, according to ASTM D 523.

B. MPI Gloss Level 3: 10 to 25 units at 60 degrees and 10 to 35 units at 85 degrees, according to ASTM D 523.

C. MPI Gloss Level 4: 20 to 35 units at 60 degrees and not less than 35 units at 85 degrees, according to ASTM D 523.

D. MPI Gloss Level 5: 35 to 70 units at 60 degrees, according to ASTM D 523.

E. MPI Gloss Level 6: 70 to 85 units at 60 degrees, according to ASTM D 523.

F. MPI Gloss Level 7: More than 85 units at 60 degrees, according to ASTM D 523.

1.4 ACTION SUBMITTALS

A. Product Data: For each type of product. Include preparation requirements and application instructions.

1. Include printout of current "MPI Approved Products List" for each product category specified, with the proposed product highlighted.
2. Indicate VOC content.

B. Samples for Initial Selection: For each type of topcoat product.

C. Product List: Cross-reference to paint system and locations of application areas. Use same designations indicated on Drawings and in schedules. Include color designations.

1.5 MAINTENANCE MATERIAL SUBMITTALS

A. Furnish extra materials, from the same product run, that match products installed and that are packaged with protective covering for storage and identified with labels describing contents.

1. Paint: 5 percent, but not less than 1 gal. of each material and color applied.

1.6 QUALITY ASSURANCE

A. Mockups: Apply mockups of each paint system indicated and each color and finish selected to verify preliminary selections made under Sample submittals and to demonstrate aesthetic effects and set quality standards for materials and execution.

1. Architect will select one surface to represent surfaces and conditions for application of each paint system.

a. Vertical and Horizontal Surfaces: Provide samples of at least 100 sq. ft.
b. Other Items: Architect will designate items or areas required.

2. Final approval of color selections will be based on mockups.

a. If preliminary color selections are not approved, apply additional mockups of additional colors selected by Architect at no added cost to Owner.

3. Approval of mockups does not constitute approval of deviations from the Contract Documents contained in mockups unless Architect specifically approves such deviations in writing.
4. Subject to compliance with requirements, approved mockups may become part of the completed Work if undisturbed at time of Substantial Completion.

1.7 DELIVERY, STORAGE, AND HANDLING

A. Store materials not in use in tightly covered containers in well-ventilated areas with ambient temperatures continuously maintained at not less than 45 deg F.

1. Maintain containers in clean condition, free of foreign materials and residue.
2. Remove rags and waste from storage areas daily.

1.8 FIELD CONDITIONS

A. Apply paints only when temperature of surfaces to be painted and ambient air temperatures are between 50 and 95 deg F.

B. Do not apply paints in snow, rain, fog, or mist; when relative humidity exceeds 85 percent; at temperatures less than 5 deg F above the dew point; or to damp or wet surfaces.

PART 2 - PRODUCTS

2.1 MANUFACTURERS

A. Manufacturers: Subject to compliance with requirements, provide products by one of the following:

1. Benjamin Moore & Co.
2. Dulux (formerly ICI Paints); a brand of AkzoNobel.
3. Duron, Inc.
4. PPG Architectural Coatings.
5. Sherwin-Williams Company (The).

B. Products: Subject to compliance with requirements, provide product listed in the Exterior Painting Schedule for the paint category indicated.

2.2 PAINT, GENERAL

A. MPI Standards: Products shall comply with MPI standards indicated and shall be listed in its "MPI Approved Products Lists."

B. Material Compatibility:

1. Materials for use within each paint system shall be compatible with one another and substrates indicated, under conditions of service and application as demonstrated by manufacturer, based on testing and field experience.
2. For each coat in a paint system, products shall be recommended in writing by topcoat manufacturers for use in paint system and on substrate indicated.

C. Colors: As selected by Architect from manufacturer's full range.

2.3 SOURCE QUALITY CONTROL

A. Testing of Paint Materials: Owner reserves the right to invoke the following procedure:

1. Owner will engage the services of a qualified testing agency to sample paint materials. Contractor will be notified in advance and may be present when samples are taken. If paint materials have already been delivered to Project site, samples may be taken at Project site. Samples will be identified, sealed, and certified by testing agency.
2. Testing agency will perform tests for compliance with product requirements.
3. Owner may direct Contractor to stop applying paints if test results show materials being used do not comply with product requirements. Contractor shall remove noncomplying paint materials from Project site, pay for testing, and repaint surfaces painted with rejected materials. Contractor will be required to remove rejected materials from previously painted surfaces if, on repainting with complying materials, the two paints are incompatible.

PART 3 - EXECUTION

3.1 EXAMINATION

A. Examine substrates and conditions, with Applicator present, for compliance with requirements for maximum moisture content and other conditions affecting performance of the Work.

B. Maximum Moisture Content of Substrates: When measured with an electronic moisture meter as follows:

1. Concrete: 12 percent.
2. Fiber-Cement Board: 12 percent.
3. Masonry (Clay and CMUs): 12 percent.
4. Gypsum Board: 12 percent.

C. Exterior Gypsum Board Substrates: Verify that finishing compound is sanded smooth.

D. Verify suitability of substrates, including surface conditions and compatibility, with existing finishes and primers.

E. Proceed with coating application only after unsatisfactory conditions have been corrected.

1. Application of coating indicates acceptance of surfaces and conditions.

3.2 PREPARATION

A. Comply with manufacturer's written instructions and recommendations in "MPI Architectural Painting Specification Manual" applicable to substrates and paint systems indicated.

B. Remove hardware, covers, plates, and similar items already in place that are removable and are not to be painted. If removal is impractical or impossible because of size or weight of item, provide surface-applied protection before surface preparation and painting.

1. After completing painting operations, use workers skilled in the trades involved to reinstall items that were removed. Remove surface-applied protection.

C. Clean substrates of substances that could impair bond of paints, including dust, dirt, oil, grease, and incompatible paints and encapsulants.

1. Remove incompatible primers and reprime substrate with compatible primers or apply tie coat as required to produce paint systems indicated.

D. Masonry Substrates: Remove efflorescence and chalk. Do not paint surfaces if moisture content or alkalinity of surfaces or mortar joints exceeds that permitted in manufacturer's written instructions.

E. Steel Substrates: Remove rust, loose mill scale, and shop primer if any. Clean using methods recommended in writing by paint manufacturer.

F. Shop-Primed Steel Substrates: Clean field welds, bolted connections, and areas where shop paint is abraded. Paint exposed areas with the same material as used for shop priming to comply with SSPC-PA 1 for touching up shop-primed surfaces.

G. Galvanized-Metal Substrates: Remove grease and oil residue from galvanized sheet metal by mechanical methods to produce clean, lightly etched surfaces that promote adhesion of subsequently applied paints.

H. Aluminum Substrates: Remove loose surface oxidation.

3.3 APPLICATION

A. Apply paints according to manufacturer's written instructions and recommendations in "MPI Architectural Painting Specification Manual."

1. Use applicators and techniques suited for paint and substrate indicated.
2. Paint surfaces behind movable items same as similar exposed surfaces. Before final installation, paint surfaces behind permanently fixed items with prime coat only.
3. Paint both sides and edges of exterior doors and entire exposed surface of exterior door frames.
4. Paint entire exposed surface of window frames and sashes.
5. Do not paint over labels of independent testing agencies or equipment name, identification, performance rating, or nomenclature plates.
6. Primers specified in painting schedules may be omitted on items that are factory primed or factory finished if acceptable to topcoat manufacturers.

B. Tint undercoats same color as topcoat, but tint each undercoat a lighter shade to facilitate identification of each coat if multiple coats of same material are to be applied. Provide sufficient difference in shade of undercoats to distinguish each separate coat.

C. If undercoats or other conditions show through topcoat, apply additional coats until cured film has a uniform paint finish, color, and appearance.

D. Apply paints to produce surface films without cloudiness, spotting, holidays, laps, brush marks, roller tracking, runs, sags, ropiness, or other surface imperfections. Cut in sharp lines and color breaks.

E. Painting Fire Suppression, Plumbing, HVAC, Electrical, Communication, and Electronic Safety and Security Work:

1. Paint the following work where exposed to view:

a. Equipment, including panelboards.
b. Uninsulated metal piping.
c. Uninsulated plastic piping.
d. Pipe hangers and supports.
e. Metal conduit.
f. Plastic conduit.
g. Tanks that do not have factory-applied final finishes.

3.4 FIELD QUALITY CONTROL

A. Dry Film Thickness Testing: Owner may engage the services of a qualified testing and inspecting agency to inspect and test paint for dry film thickness.

1. Contractor shall touch up and restore painted surfaces damaged by testing.
2. If test results show that dry film thickness of applied paint does not comply with paint manufacturer's written recommendations, Contractor shall pay for testing and apply additional coats as needed to provide dry film thickness that complies with paint manufacturer's written recommendations.

3.5 CLEANING AND PROTECTION

A. At end of each workday, remove rubbish, empty cans, rags, and other discarded materials from Project site.

B. After completing paint application, clean spattered surfaces. Remove spattered paints by washing, scraping, or other methods. Do not scratch or damage adjacent finished surfaces.

C. Protect work of other trades against damage from paint application. Correct damage to work of other trades by cleaning, repairing, replacing, and refinishing, as approved by Architect, and leave in an undamaged condition.

D. At completion of construction activities of other trades, touch up and restore damaged or defaced painted surfaces.

3.6 EXTERIOR PAINTING SCHEDULE

A. Cement Board Substrates:

1. Latex System MPI EXT 3.3A:

a. Prime Coat: Latex, exterior, matching topcoat.
b. Intermediate Coat: Latex, exterior, matching topcoat.
c. Topcoat: Latex, exterior.

1) Sheen: As selected by the Architect.

B. Steel Substrates:

1. Alkyd System MPI EXT 5.1D:

a. Prime Coat: Primer, alkyd, anticorrosive, for metal, MPI #79.
b. Intermediate Coat: Exterior, alkyd enamel, matching topcoat.
c. Topcoat: Alkyd, exterior.

1) Sheen: As selected by the Architect.

C. Galvanized-Metal Substrates:

1. Alkyd System MPI EXT 5.3B:

a. Prime Coat: Primer, galvanized, cementitious, MPI #26.
b. Intermediate Coat: Exterior, alkyd enamel, matching topcoat.
c. Topcoat: Alkyd, exterior.

1) Sheen: As selected by the Architect.

D. Aluminum Substrates:

1. Alkyd System MPI EXT 5.4F:

a. Prime Coat: Primer, quick dry, for aluminum, MPI #95.
b. Intermediate Coat: Exterior, alkyd enamel, matching topcoat.
c. Topcoat: Alkyd, exterior.

1) Sheen: As selected by the Architect.

E. Exterior Gypsum Board Substrates:

1. Latex System MPI EXT 9.2A:

a. Prime Coat: Primer, latex for exterior wood (reduced), MPI #6.
b. Intermediate Coat: Latex, exterior, matching topcoat.
c. Topcoat: Latex, exterior.

1) Sheen: As selected by the Architect.

END OF SECTION 099113

SECTION 099123 - INTERIOR PAINTING

PART 1 - GENERAL

1.1 RELATED DOCUMENTS

A. Drawings and general provisions of the Contract, including General and Supplementary Conditions and Division 01 Specification Sections, apply to this Section.

1.2 SUMMARY

A. Section includes surface preparation and the application of paint systems on the following interior substrates:

1. Concrete.
2. Concrete masonry units (CMUs).
3. Steel and iron.
4. Galvanized metal.
5. Aluminum (not anodized or otherwise coated).
6. Wood.
7. Plastic.
8. Gypsum board.
9. Cotton or canvas insulation covering.
10. ASJ insulation covering.

B. Related Requirements:

1. Section 099300 "Staining and Transparent Finishing" for surface preparation and the application of wood stains and transparent finishes on interior wood substrates.

1.3 DEFINITIONS

A. MPI Gloss Level 1: Not more than five units at 60 degrees and 10 units at 85 degrees, according to ASTM D 523.

B. MPI Gloss Level 2: Not more than 10 units at 60 degrees and 10 to 35 units at 85 degrees, according to ASTM D 523.

C. MPI Gloss Level 3: 10 to 25 units at 60 degrees and 10 to 35 units at 85 degrees, according to ASTM D 523.

D. MPI Gloss Level 4: 20 to 35 units at 60 degrees and not less than 35 units at 85 degrees, according to ASTM D 523.

E. MPI Gloss Level 5: 35 to 70 units at 60 degrees, according to ASTM D 523.

F. MPI Gloss Level 6: 70 to 85 units at 60 degrees, according to ASTM D 523.

G. MPI Gloss Level 7: More than 85 units at 60 degrees, according to ASTM D 523.

1.4 ACTION SUBMITTALS

A. Product Data: For each type of product. Include preparation requirements and application instructions.

1. Include Printout of current "MPI Approved Products List" for each product category specified, with the proposed product highlighted.
2. Indicate VOC content.

B. Samples for Initial Selection: For each type of topcoat product.

C. Product List: Cross-reference to paint system and locations of application areas. Use same designations indicated on Drawings and in schedules. Include color designations.

1.5 MAINTENANCE MATERIAL SUBMITTALS

A. Furnish extra materials, from the same product run, that match products installed and that are packaged with protective covering for storage and identified with labels describing contents.

1. Paint: 5 percent, but not less than 1 gal. of each material and color applied.

1.6 QUALITY ASSURANCE

A. Mockups: Apply mockups of each paint system indicated and each color and finish selected to verify preliminary selections made under Sample submittals and to demonstrate aesthetic effects and set quality standards for materials and execution.

1. Architect will select one surface to represent surfaces and conditions for application of each paint system.

a. Vertical and Horizontal Surfaces: Provide samples of at least 100 sq. ft.
b. Other Items: Architect will designate items or areas required.

2. Final approval of color selections will be based on mockups.

a. If preliminary color selections are not approved, apply additional mockups of additional colors selected by Architect at no added cost to Owner.

3. Approval of mockups does not constitute approval of deviations from the Contract Documents contained in mockups unless Architect specifically approves such deviations in writing.
4. Subject to compliance with requirements, approved mockups may become part of the completed Work if undisturbed at time of Substantial Completion.

1.7 DELIVERY, STORAGE, AND HANDLING

A. Store materials not in use in tightly covered containers in well-ventilated areas with ambient temperatures continuously maintained at not less than 45 deg F.

1. Maintain containers in clean condition, free of foreign materials and residue.
2. Remove rags and waste from storage areas daily.

1.8 FIELD CONDITIONS

A. Apply paints only when temperature of surfaces to be painted and ambient air temperatures are between 50 and 95 deg F.

B. Do not apply paints when relative humidity exceeds 85 percent; at temperatures less than 5 deg F above the dew point; or to damp or wet surfaces.

PART 2 - PRODUCTS

2.1 MANUFACTURERS

A. Basis-of-Design: Subject to compliance with requirements, provide product indicated on the Finish Schedule, or a comparable product as approved by the Architect.

B. Products: Subject to compliance with requirements, provide product listed in the Interior Painting Schedule for the paint category indicated.

2.2 PAINT, GENERAL

A. MPI Standards: Products shall comply with MPI standards indicated and shall be listed in its "MPI Approved Products Lists."

B. Material Compatibility:

1. Materials for use within each paint system shall be compatible with one another and substrates indicated, under conditions of service and application as demonstrated by manufacturer, based on testing and field experience.
2. For each coat in a paint system, products shall be recommended in writing by topcoat manufacturers for use in paint system and on substrate indicated.

C. Colors: As indicated on the Finish Schedule.

2.3 SOURCE QUALITY CONTROL

A. Testing of Paint Materials: Owner reserves the right to invoke the following procedure:

1. Owner will engage the services of a qualified testing agency to sample paint materials. Contractor will be notified in advance and may be present when samples are taken. If paint materials have already been delivered to Project site, samples may be taken at Project site. Samples will be identified, sealed, and certified by testing agency.
2. Testing agency will perform tests for compliance with product requirements.
3. Owner may direct Contractor to stop applying paints if test results show materials being used do not comply with product requirements. Contractor shall remove noncomplying paint materials from Project site, pay for testing, and repaint surfaces painted with rejected materials. Contractor will be required to remove rejected materials from previously painted surfaces if, on repainting with complying materials, the two paints are incompatible.

PART 3 - EXECUTION

3.1 EXAMINATION

A. Examine substrates and conditions, with Applicator present, for compliance with requirements for maximum moisture content and other conditions affecting performance of the Work.

B. Maximum Moisture Content of Substrates: When measured with an electronic moisture meter as follows:

1. Concrete: 12 percent.
2. Masonry (Clay and CMUs): 12 percent.
3. Wood: 15 percent.
4. Gypsum Board: 12 percent.

C. Gypsum Board Substrates: Verify that finishing compound is sanded smooth.

D. Verify suitability of substrates, including surface conditions and compatibility, with existing finishes and primers.

E. Proceed with coating application only after unsatisfactory conditions have been corrected.

1. Application of coating indicates acceptance of surfaces and conditions.

3.2 PREPARATION

A. Comply with manufacturer's written instructions and recommendations in "MPI Architectural Painting Specification Manual" applicable to substrates and paint systems indicated.

B. Remove hardware, covers, plates, and similar items already in place that are removable and are not to be painted. If removal is impractical or impossible because of size or weight of item, provide surface-applied protection before surface preparation and painting.

1. After completing painting operations, use workers skilled in the trades involved to reinstall items that were removed. Remove surface-applied protection if any.

C. Clean substrates of substances that could impair bond of paints, including dust, dirt, oil, grease, and incompatible paints and encapsulants.

1. Remove incompatible primers and reprime substrate with compatible primers or apply tie coat as required to produce paint systems indicated.

D. Concrete Substrates: Remove release agents, curing compounds, efflorescence, and chalk. Do not paint surfaces if moisture content or alkalinity of surfaces to be painted exceeds that permitted in manufacturer's written instructions.

E. Masonry Substrates: Remove efflorescence and chalk. Do not paint surfaces if moisture content or alkalinity of surfaces or mortar joints exceeds that permitted in manufacturer's written instructions.

F. Steel Substrates: Remove rust, loose mill scale, and shop primer, if any. Clean using methods recommended in writing by paint manufacturer.

G. Shop-Primed Steel Substrates: Clean field welds, bolted connections, and areas where shop paint is abraded. Paint exposed areas with the same material as used for shop priming to comply with SSPC-PA 1 for touching up shop-primed surfaces.

H. Galvanized-Metal Substrates: Remove grease and oil residue from galvanized sheet metal by mechanical methods to produce clean, lightly etched surfaces that promote adhesion of subsequently applied paints.

I. Aluminum Substrates: Remove loose surface oxidation.

J. Wood Substrates:

1. Scrape and clean knots, and apply coat of knot sealer before applying primer.
2. Sand surfaces that will be exposed to view, and dust off.
3. Prime edges, ends, faces, undersides, and backsides of wood.
4. After priming, fill holes and imperfections in the finish surfaces with putty or plastic wood filler. Sand smooth when dried.

K. Cotton or Canvas Insulation Covering Substrates: Remove dust, dirt, and other foreign material that might impair bond of paints to substrates.

3.3 APPLICATION

A. Apply paints according to manufacturer's written instructions and to recommendations in "MPI Manual."

1. Use applicators and techniques suited for paint and substrate indicated.
2. Paint surfaces behind movable equipment and furniture same as similar exposed surfaces. Before final installation, paint surfaces behind permanently fixed equipment or furniture with prime coat only.
3. Paint front and backsides of access panels, removable or hinged covers, and similar hinged items to match exposed surfaces.
4. Do not paint over labels of independent testing agencies or equipment name, identification, performance rating, or nomenclature plates.
5. Primers specified in painting schedules may be omitted on items that are factory primed or factory finished if acceptable to topcoat manufacturers.

B. Tint each undercoat a lighter shade to facilitate identification of each coat if multiple coats of same material are to be applied. Tint undercoats to match color of topcoat, but provide sufficient difference in shade of undercoats to distinguish each separate coat.

C. If undercoats or other conditions show through topcoat, apply additional coats until cured film has a uniform paint finish, color, and appearance.

D. Apply paints to produce surface films without cloudiness, spotting, holidays, laps, brush marks, roller tracking, runs, sags, ropiness, or other surface imperfections. Cut in sharp lines and color breaks.

E. Painting Fire Suppression, Plumbing, HVAC, Electrical, Communication, and Electronic Safety and Security Work:

1. Paint the following work where exposed in equipment rooms:

    a. Equipment, including panelboards.
    b. Uninsulated metal piping.
    c. Uninsulated plastic piping.
    d. Pipe hangers and supports.
    e. Metal conduit.
    f. Plastic conduit.
    g. Tanks that do not have factory-applied final finishes.
    h. Duct, equipment, and pipe insulation having cotton or canvas insulation covering or other paintable jacket material.

2. Paint the following work where exposed in occupied spaces:

    a. Equipment, including panelboards.
    b. Uninsulated metal piping.
    c. Uninsulated plastic piping.
    d. Pipe hangers and supports.
    e. Metal conduit.
    f. Plastic conduit.
    g. Duct, equipment, and pipe insulation having cotton or canvas insulation covering or other paintable jacket material.
    h. Other items as directed by Architect.

3. Paint portions of internal surfaces of metal ducts, without liner, behind air inlets and outlets that are visible from occupied spaces.

3.4 FIELD QUALITY CONTROL

A. Dry Film Thickness Testing: Owner may engage the services of a qualified testing and inspecting agency to inspect and test paint for dry film thickness.

1. Contractor shall touch up and restore painted surfaces damaged by testing.
2. If test results show that dry film thickness of applied paint does not comply with paint manufacturer's written recommendations, Contractor shall pay for testing and apply additional coats as needed to provide dry film thickness that complies with paint manufacturer's written recommendations.

3.5 CLEANING AND PROTECTION

A. At end of each workday, remove rubbish, empty cans, rags, and other discarded materials from Project site.

B. After completing paint application, clean spattered surfaces. Remove spattered paints by washing, scraping, or other methods. Do not scratch or damage adjacent finished surfaces.

C. Protect work of other trades against damage from paint application. Correct damage to work of other trades by cleaning, repairing, replacing, and refinishing, as approved by Architect, and leave in an undamaged condition.

D. At completion of construction activities of other trades, touch up and restore damaged or defaced painted surfaces.

3.6 INTERIOR PAINTING SCHEDULE

A. Concrete Substrates, Nontraffic Surfaces:

1. Latex System :

a. Prime Coat: Primer, alkali resistant, water based.
b. Intermediate Coat: Latex, interior, matching topcoat.
c. Topcoat: Latex, interior.

1) Sheen: As selected by the Architect.

B. Concrete Substrates, Traffic Surfaces:

1. Water-Based Concrete Floor Sealer System:

a. First Coat: Sealer, water based, for concrete floors, matching topcoat.
b. Topcoat: Sealer, water based, for concrete floors.

C. CMU Substrates:

1. Pre-Catalyzed Waterbased Epoxy System:

a. Block Filler: Block filler, latex, interior/exterior.
b. Intermediate Coat: Pre-catalyzed waterbased epoxy, interior, matching topcoat.
c. Topcoat: Pre-catalyzed waterbased epoxy, interior.

1) Sheen: Semi-gloss.

D. Steel Substrates: Hollow metal doors and frames.

1. Latex System, Alkyd Primer:

a. Prime Coat: Primer, alkyd, quick dry, for metal.
b. Intermediate Coat: Latex, interior, matching topcoat.
c. Topcoat: Latex, interior.

1) Sheen: Semi-gloss.

E. Galvanized-Metal Substrates: Hollow metal doors and frames.

1. Latex System:

a. Prime Coat: Primer, galvanized, cementitious.
b. Intermediate Coat: Latex, interior, matching topcoat.
c. Topcoat: Latex, interior.

1) Sheen: Semi-gloss, unless otherwise indicated.

F. Aluminum (Not Anodized or Otherwise Coated) Substrates:

1. Latex System:

a. Prime Coat: Primer, quick dry, for aluminum.
b. Intermediate Coat: Latex, interior, matching topcoat.
c. Topcoat: Latex, interior.

1) Sheen: As selected by the Architect.

G. Wood Substrates:

1. Latex over Latex Primer System:

a. Prime Coat: Primer, latex, for interior wood.
b. Intermediate Coat: Latex, interior, matching topcoat.
c. Topcoat: Latex, interior.

1) Sheen: As selected by the Architect.

H. Plastic Substrates:

1. Latex System:

a. Prime Coat: Primer, bonding, solvent based.
b. Intermediate Coat: Latex, interior, matching topcoat.
c. Topcoat: Latex, interior.

1) Sheen: As selected by the Architect.

I. Gypsum Board Substrates:

1. Pre-Catalyzed Waterbased Epoxy System: Walls and soffits were indicated.

a. Prime Coat: Primer sealer, latex, interior.
a. Intermediate Coat: Pre-catalyzed waterbased epoxy, interior, matching topcoat.
b. Topcoat: Pre-catalyzed waterbased epoxy, interior.

1) Sheen: Eggshell.

2. Latex System: Ceilings.

a. Prime Coat: Primer sealer, latex, interior.
b. Intermediate Coat: Latex, interior, matching topcoat.
c. Topcoat: Latex, interior.

1) Sheen: Flat.

J. Cotton or Canvas and ASJ Insulation-Covering Substrates: Including pipe and duct coverings.

1. Latex System:

a. Prime Coat: Primer sealer, latex, interior.
b. Intermediate Coat: Latex, interior, matching topcoat.
c. Topcoat: Latex, interior.

1) Sheen: As selected by the Architect.

END OF SECTION 099123

SECTION 101419 - DIMENSIONAL LETTER SIGNAGE

PART 1 - GENERAL

1.1 RELATED DOCUMENTS

A. Drawings and general provisions of the Contract, including General and Supplementary Conditions and Division 01 Specification Sections, apply to this Section.

1.2 SUMMARY

A. Section Includes:

1. Cutout dimensional characters.

1.3 ALLOWANCES

A. Allowances for signage are specified in Section 012100 "Allowances."

1.4 ACTION SUBMITTALS

A. Product Data: For each type of product.

B. Shop Drawings: For signs.

1. Include fabrication and installation details and attachments to other work.
2. Show sign mounting heights, locations of supplementary supports to be provided by other installers, and accessories.
3. Show message list, typestyles, graphic elements, and layout for each sign at least half size.

C. Samples for Initial Selection: For each type of sign assembly, exposed component, and exposed finish.

1. Include representative Samples of available typestyles and graphic symbols.

D. Samples for Verification: For each type of sign assembly showing all components and with the required finish(es), in manufacturer's standard size unless otherwise indicated and as follows:

1. Dimensional Characters: Full-size Sample of each type of dimensional character.
2. Exposed Accessories: Full-size Sample of each accessory type.
3. Full-size Samples, if approved, will be returned to Contractor for use in the Project.

E. Product Schedule: For dimensional letter signs. Use same designations indicated on Drawings or specified.

1.5 INFORMATIONAL SUBMITTALS

A. Qualification Data: For Installer.

B. Sample Warranty: For special warranty.

1.6 CLOSEOUT SUBMITTALS

A. Maintenance Data: For signs to include in maintenance manuals.

1.7 QUALITY ASSURANCE

A. Installer Qualifications: Manufacturer of products or an entity that employs installers and supervisors who are trained and approved by manufacturer.

1.8 FIELD CONDITIONS

A. Field Measurements: Verify locations of electrical service embedded in permanent construction by other installers by field measurements before fabrication, and indicate measurements on Shop Drawings.

1.9 WARRANTY

A. Special Warranty: Manufacturer agrees to repair or replace components of signs that fail in materials or workmanship within specified warranty period.

1. Failures include, but are not limited to, the following:

a. Deterioration of finishes beyond normal weathering.
b. Separation or delamination of sheet materials and components.

2. Warranty Period: Five years from date of Substantial Completion.

PART 2 - PRODUCTS

2.1 PERFORMANCE REQUIREMENTS

A. Structural Performance: Signs and supporting elements shall withstand the effects of gravity and other loads within limits and under conditions indicated.

B. Thermal Movements: For exterior fabricated channel dimensional characters, allow for thermal movements from ambient and surface temperature changes.

1. Temperature Change: 120 deg F, ambient; 180 deg F, material surfaces.

2.2 DIMENSIONAL CHARACTERS

A. Cutout Characters: Characters with uniform faces; square-cut, smooth edges; precisely formed lines and profiles; and as follows:

1. Basis-of-Design: Subject to compliance with requirements, provide products indicated in the Architect's signage quote from ASI, or comparable products as approved by the Architect.
2. Character Material: Sheet or plate aluminum.
3. Character Height: As indicated on Drawings.
4. Thickness: Manufacturer's standard for size of character.
5. Finishes:

    a. Integral Aluminum Finish: Anodized color as selected by Architect from full range of industry colors and color densities.

6. Mounting: Concealed, stainless-steel back bar or bracket assembly.
7. Typeface: As selected by the Architect from the manufacturer's full range.

2.3 DIMENSIONAL CHARACTER MATERIALS

A. Aluminum Castings: ASTM B 26/B 26M, alloy and temper recommended by sign manufacturer for casting process used and for type of use and finish indicated.

B. Aluminum Sheet and Plate: ASTM B 209, alloy and temper recommended by aluminum producer and finisher for type of use and finish indicated.

C. Aluminum Extrusions: ASTM B 221, alloy and temper recommended by aluminum producer and finisher for type of use and finish indicated.

2.4 ACCESSORIES

A. Fasteners and Anchors: Manufacturer's standard as required for secure anchorage of signs, noncorrosive and compatible with each material joined, and complying with the following:

1. Use concealed fasteners and anchors unless indicated to be exposed.
2. For exterior exposure, furnish stainless-steel devices unless otherwise indicated.
3. Exposed Metal-Fastener Components, General:

    a. Fabricated from same basic metal and finish of fastened metal unless otherwise indicated.

4. Sign Mounting Fasteners:

    a. Concealed Studs: Concealed (blind), threaded studs welded or brazed to back of sign material, screwed into back of sign assembly, or screwed into tapped lugs cast integrally into back of cast sign material, unless otherwise indicated.

B. Adhesive: As recommended by sign manufacturer.

C. Bituminous Paint: Cold-applied asphalt emulsion complying with ASTM D 1187/D 1187M.

2.5 FABRICATION

A. General: Provide manufacturer's standard sign assemblies according to requirements indicated.

1. Preassemble signs and assemblies in the shop to greatest extent possible. Disassemble signs and assemblies only as necessary for shipping and handling limitations. Clearly mark units for reassembly and installation; apply markings in locations concealed from view after final assembly.
2. Mill joints to a tight, hairline fit. Form assemblies and joints exposed to weather to resist water penetration and retention.
3. Comply with AWS for recommended practices in welding and brazing. Provide welds and brazes behind finished surfaces without distorting or discoloring exposed side. Clean exposed welded and brazed connections of flux, and dress exposed and contact surfaces.
4. Conceal connections if possible; otherwise, locate connections where they are inconspicuous.
5. Internally brace dimensional characters for stability, to meet structural performance loading without oil-canning or other surface deformation, and for securing fasteners.
6. Provide rabbets, lugs, and tabs necessary to assemble components and to attach to existing work. Drill and tap for required fasteners. Use concealed fasteners where possible; use exposed fasteners that match sign finish.

B. Brackets: Fabricate brackets, fittings, and hardware for bracket-mounted signs to suit sign construction and mounting conditions indicated. Modify manufacturer's standard brackets as required.

1. Stainless-Steel Brackets: Factory finish brackets to match sign background finish unless otherwise indicated.

2.6 GENERAL FINISH REQUIREMENTS

A. Protect mechanical finishes on exposed surfaces from damage by applying a strippable, temporary protective covering before shipping.

B. Appearance of Finished Work: Noticeable variations in same piece are not acceptable. Variations in appearance of adjoining components are acceptable if they are within the range of approved Samples and are assembled or installed to minimize contrast.

C. Organic, Anodic, and Chemically Produced Finishes: Apply to formed metal after fabrication but before applying contrasting polished finishes on raised features unless otherwise indicated.

2.7 ALUMINUM FINISHES

A. Clear Anodic Finish: AAMA 611, Class I, 0.018 mm or thicker.

B. Color Anodic Finish: AAMA 611, Class I, 0.018 mm or thicker.

PART 3 - EXECUTION

3.1 EXAMINATION

A. Examine substrates, areas, and conditions, with Installer present, for compliance with requirements for installation tolerances and other conditions affecting performance.

B. Verify that sign-support surfaces are within tolerances to accommodate signs without gaps or irregularities between backs of signs and support surfaces unless otherwise indicated.

C. Proceed with installation only after unsatisfactory conditions have been corrected.

3.2 INSTALLATION

A. General: Install signs using mounting methods indicated and according to manufacturer's written instructions.

1. Install signs level, plumb, true to line, and at locations and heights indicated, with sign surfaces free of distortion and other defects in appearance.
2. Before installation, verify that sign surfaces are clean and free of materials or debris that would impair installation.
3. Corrosion Protection: Coat concealed surfaces of exterior aluminum in contact with grout, concrete, masonry, wood, or dissimilar metals, with a heavy coat of bituminous paint.

B. Mounting Methods:

1. Concealed Studs: Using a template, drill holes in substrate aligning with studs on back of sign. Remove loose debris from hole and substrate surface.

a. Masonry Substrates: Fill holes with adhesive. Leave recess space in hole for displaced adhesive. Place sign in position and push until flush to surface, embedding studs in holes. Temporarily support sign in position until adhesive fully sets.
b. Thin or Hollow Surfaces: Place sign in position and flush to surface, install washers and nuts on studs projecting through opposite side of surface, and tighten.

2. Back Bar and Brackets: Remove loose debris from substrate surface and install backbar or bracket supports in position, so that signage is correctly located and aligned.
3. Adhesive: Clean bond-breaking materials from substrate surface and remove loose debris. Apply linear beads or spots of adhesive symmetrically to back of sign and of suitable quantity to support weight of sign after cure without slippage. Keep adhesive away from edges to prevent adhesive extrusion as sign is applied and to prevent visibility of cured adhesive at sign edges. Place sign in position, and push to engage adhesive. Temporarily support sign in position until adhesive fully sets.

3.3 ADJUSTING AND CLEANING

A. Remove and replace damaged or deformed characters and signs that do not comply with specified requirements. Replace characters with damaged or deteriorated finishes or components that cannot be successfully repaired by finish touchup or similar minor repair procedures.

B. Remove temporary protective coverings and strippable films as signs are installed.

C. On completion of installation, clean exposed surfaces of signs according to manufacturer's written instructions, and touch up minor nicks and abrasions in finish. Maintain signs in a clean condition during construction and protect from damage until acceptance by Owner.

END OF SECTION 101419

SECTION 101423 - PANEL SIGNAGE

PART 1 - GENERAL

1.1 RELATED DOCUMENTS

A. Drawings and general provisions of the Contract, including General and Supplementary Conditions and Division 01 Specification Sections, apply to this Section.

1.2 SUMMARY

A. Section Includes:

1. Panel signs.

B. Related Requirements:

1. Section 015000 "Temporary Facilities and Controls" for temporary Project identification signs and for temporary informational and directional signs.

1.3 ALLOWANCES

A. Allowances for signage are specified in Section 012100 "Allowances."

1.4 DEFINITIONS

A. Accessible: In accordance with the accessibility standard.

1.5 COORDINATION

A. Furnish templates for placement of sign-anchorage devices embedded in permanent construction by other installers.

1.6 ACTION SUBMITTALS

A. Product Data: For each type of product.

B. Shop Drawings: For panel signs.

1. Include fabrication and installation details and attachments to other work.
2. Show sign mounting heights, locations of supplementary supports to be provided by other installers, and accessories.

3. Show message list, typestyles, graphic elements, including raised characters and Braille, and layout for each sign at least half size.

C. Samples for Initial Selection: For each type of sign assembly, exposed component, and exposed finish.

1. Include representative Samples of available typestyles and graphic symbols.

D. Samples for Verification: For each type of sign assembly showing all components and with the required finish(es), in manufacturer's standard size unless otherwise indicated and as follows:

1. Panel Signs: Full-size Sample.
2. Full-size Samples, if approved, will be returned to Contractor for use in Project.

E. Product Schedule: For panel signs. Use same designations indicated on Drawings or specified.

1.7 INFORMATIONAL SUBMITTALS

A. Sample Warranty: For special warranty.

1.8 CLOSEOUT SUBMITTALS

A. Maintenance Data: For signs to include in maintenance manuals.

1.9 MAINTENANCE MATERIAL SUBMITTALS

A. Furnish extra materials, from the same product run, that match products installed and that are packaged with protective covering for storage and identified with labels describing contents.

1. Variable Component Materials: 12 replaceable text inserts and interchangeable characters (letters, numbers, and graphic elements) of each type.
2. Tools: One set(s) of specialty tools for assembling signs and replacing variable sign components.

1.10 WARRANTY

A. Special Warranty: Manufacturer agrees to repair or replace components of signs that fail in materials or workmanship within specified warranty period.

1. Failures include, but are not limited to, the following:

a. Deterioration of finishes beyond normal weathering.
b. Deterioration of embedded graphic image.
c. Separation or delamination of sheet materials and components.

2. Warranty Period: Five years from date of Substantial Completion.

PART 2 - PRODUCTS

2.1 PERFORMANCE REQUIREMENTS

A. Thermal Movements: For exterior signs, allow for thermal movements from ambient and surface temperature changes.

1. Temperature Change: 120 deg F, ambient; 180 deg F, material surfaces.

B. Accessibility Standard: Comply with applicable provisions in the USDOJ's "2010 ADA Standards for Accessible Design", the ABA standards of the Federal agency having jurisdiction, and ICC A117.1.

2.2 PANEL SIGNS

A. Panel Sign: Sign with smooth, uniform surfaces; with message and characters having uniform faces, sharp corners, and precisely formed lines and profiles; and as follows:

1. Basis-of-Design: Subject to compliance with requirements, provide products indicated in the Architect’s signage quote from ASI, or comparable products as approved by the Architect.
2. Solid-Sheet Sign: Aluminum sheet with finish specified in "Surface Finish and Applied Graphics" Subparagraph and as follows:

a. Thickness: Manufacturer's standard for size of sign.
b. Surface-Applied, Flat Graphics: Applied vinyl film.
c. Surface-Applied, Raised Graphics: Applied Braille.

3. Laminated-Sheet Sign: Photopolymer face sheet with raised graphics laminated to acrylic backing sheet to produce composite sheet.

a. Composite-Sheet Thickness: Manufacturer's standard for size of sign.
b. Surface-Applied, Flat Graphics: Applied vinyl film.
c. Surface-Applied, Raised Graphics: Applied Braille.
d. Subsurface Graphics: Slide-in changeable insert.

4. Sign-Panel Perimeter: Finish edges smooth.

a. Edge Condition: Square cut.
b. Corner Condition in Elevation: Square.

5. Mounting: Manufacturer's standard method for substrates indicated with.
6. Surface Finish and Applied Graphics:

a. Aluminum Finish: As selected by Architect from full range of industry colors.
b. Integral Acrylic Sheet Color: As selected by Architect from full range of industry colors.

7. Text and Typeface: Accessible raised characters and Braille typeface as selected by Architect from manufacturer's full range. Finish raised characters to contrast with background color, and finish Braille to match background color.

2.3 PANEL-SIGN MATERIALS

A. Aluminum Sheet and Plate: ASTM B 209, alloy and temper recommended by aluminum producer and finisher for type of use and finish indicated.

B. Acrylic Sheet: ASTM D 4802, category as standard with manufacturer for each sign, Type UVF (UV filtering).

C. Vinyl Film: UV-resistant vinyl film of nominal thickness indicated, with pressure-sensitive, permanent adhesive on back; die cut to form characters or images as indicated on Drawings and suitable for exterior applications.

D. Paints and Coatings for Sheet Materials: Inks, dyes, and paints that are recommended by manufacturer for optimum adherence to surface and are UV and water resistant for colors and exposure indicated.

2.4 ACCESSORIES

A. Fasteners and Anchors: Manufacturer's standard as required for secure anchorage of signs, noncorrosive and compatible with each material joined, and complying with the following unless otherwise indicated:

1. Use concealed fasteners and anchors unless indicated to be exposed.
2. For exterior exposure, furnish stainless-steel devices unless otherwise indicated.
3. Sign Mounting Fasteners:
    a. Concealed Studs: Concealed (blind), threaded studs welded or brazed to back of sign material or screwed into back of sign assembly unless otherwise indicated.
4. Inserts: Furnish inserts to be set by other installers into concrete or masonry work.

B. Post-Installed Anchors: Fastener systems with bolts of same basic metal as fastened metal, if visible, unless otherwise indicated; with working capacity greater than or equal to the design load, according to an evaluation report acceptable to authorities having jurisdiction, based on ICC-ES AC01, ICC-ES AC193, ICC-ES AC58, or ICC-ES AC308 as appropriate for the substrate.

1. Uses: Securing signs with imposed loads to structure.
2. Type: Torque-controlled, expansion anchor, torque-controlled, adhesive anchor, or adhesive anchor.
3. Material for Interior Locations: Carbon-steel components zinc-plated to comply with ASTM B 633 or ASTM F 1941, Class Fe/Zn 5, unless otherwise indicated.

4. Material for Exterior or Interior Locations and Where Stainless Steel Is Indicated: Alloy Group 1 stainless-steel bolts, ASTM F 593, and nuts, ASTM F 594.

C. Power-Actuated Anchors: Fastener systems with working capacity greater than or equal to the design load, according to an evaluation report acceptable to authorities having jurisdiction, based on ICC-ES AC70.

D. Adhesive: As recommended by sign manufacturer.

E. Two-Face Tape: Manufacturer's standard high-bond, foam-core tape, 0.045 inch thick, with adhesive on both sides.

F. Hook-and-Loop Tape: Manufacturer's standard two-part tape consisting of hooked part on sign back and looped side on mounting surface.

G. Magnetic Tape: Manufacturer's standard magnetic tape with adhesive on one side.

H. Bituminous Paint: Cold-applied asphalt emulsion complying with ASTM D 1187/D 1187M.

2.5 FABRICATION

A. General: Provide manufacturer's standard sign assemblies according to requirements indicated.

1. Preassemble signs in the shop to greatest extent possible. Disassemble signs and assemblies only as necessary for shipping and handling limitations. Clearly mark units for reassembly and installation; apply markings in locations concealed from view after final assembly.
2. Mill joints to a tight, hairline fit. Form assemblies and joints exposed to weather to resist water penetration and retention.
3. Comply with AWS for recommended practices in welding and brazing. Provide welds and brazes behind finished surfaces without distorting or discoloring exposed side. Clean exposed welded and brazed connections of flux, and dress exposed and contact surfaces.
4. Conceal connections if possible; otherwise, locate connections where they are inconspicuous.
5. Internally brace signs for stability, to meet structural performance loading without oil-canning or other surface deformation, and for securing fasteners.
6. Provide rabbets, lugs, and tabs necessary to assemble components and to attach to existing work. Drill and tap for required fasteners. Use concealed fasteners where possible; use exposed fasteners that match sign finish.

B. Shop- and Subsurface-Applied Vinyl: Align vinyl film in final position and apply to surface. Firmly press film from the middle outward to obtain good bond without blisters or fishmouths.

C. Signs with Changeable Message Capability: Fabricate signs to allow insertion of changeable messages as follows:

1. For slide-in changeable inserts, fabricate slot without burrs or constrictions that inhibit function. Furnish initial changeable insert. Furnish two blank inserts for each sign for Owner's use. Subsequent changeable inserts are by Owner.

2. For frame to hold changeable sign panel, fabricate frame without burrs or constrictions that inhibit function. Furnish initial sign panel. Subsequent changeable sign panels are by Owner.

2.6 GENERAL FINISH REQUIREMENTS

A. Protect mechanical finishes on exposed surfaces from damage by applying a strippable, temporary protective covering before shipping.

B. Appearance of Finished Work: Noticeable variations in same piece are not acceptable. Variations in appearance of adjoining components are acceptable if they are within the range of approved Samples and are assembled or installed to minimize contrast.

2.7 ALUMINUM FINISHES

A. Clear Anodic Finish: AAMA 611, Class I, 0.018 mm or thicker.

B. Color Anodic Finish: AAMA 611, Class I, 0.018 mm or thicker.

C. Baked-Enamel or Powder-Coat Finish: AAMA 2603 except with a minimum dry film thickness of 1.5 mils. Comply with coating manufacturer's written instructions for cleaning, conversion coating, and applying and baking finish.

PART 3 - EXECUTION

3.1 EXAMINATION

A. Examine substrates, areas, and conditions, with Installer present, for compliance with requirements for installation tolerances and other conditions affecting performance of the Work.

B. Verify that sign-support surfaces are within tolerances to accommodate signs without gaps or irregularities between backs of signs and support surfaces unless otherwise indicated.

C. Verify that anchorage devices embedded in permanent construction are correctly sized and located to accommodate signs.

D. Proceed with installation only after unsatisfactory conditions have been corrected.

3.2 INSTALLATION

A. General: Install signs using mounting methods indicated and according to manufacturer's written instructions.

1. Install signs level, plumb, true to line, and at locations and heights indicated, with sign surfaces free of distortion and other defects in appearance.

2. Install signs so they do not protrude or obstruct according to the accessibility standard.
3. Before installation, verify that sign surfaces are clean and free of materials or debris that would impair installation.
4. Corrosion Protection: Coat concealed surfaces of exterior aluminum in contact with grout, concrete, masonry, wood, or dissimilar metals, with a heavy coat of bituminous paint.

B. Accessible Signage: Install in locations on walls as indicated on Drawings and according to the accessibility standard.

C. Mounting Methods:

1. Concealed Studs: Using a template, drill holes in substrate aligning with studs on back of sign. Remove loose debris from hole and substrate surface.

    a. Masonry Substrates: Fill holes with adhesive. Leave recess space in hole for displaced adhesive. Place sign in position and push until flush to surface, embedding studs in holes. Temporarily support sign in position until adhesive fully sets.
    b. Thin or Hollow Surfaces: Place sign in position and flush to surface, install washers and nuts on studs projecting through opposite side of surface, and tighten.

2. Adhesive: Clean bond-breaking materials from substrate surface and remove loose debris. Apply linear beads or spots of adhesive symmetrically to back of sign and of suitable quantity to support weight of sign after cure without slippage. Keep adhesive away from edges to prevent adhesive extrusion as sign is applied and to prevent visibility of cured adhesive at sign edges. Place sign in position, and push to engage adhesive. Temporarily support sign in position until adhesive fully sets.
3. Two-Face Tape: Clean bond-breaking materials from substrate surface and remove loose debris. Apply tape strips symmetrically to back of sign and of suitable quantity to support weight of sign without slippage. Keep strips away from edges to prevent visibility at sign edges. Place sign in position, and push to engage tape adhesive.
4. Hook-and-Loop Tape: Clean bond-breaking materials from substrate surface and remove loose debris. Apply sign component of two-part tape strips symmetrically to back of sign and of suitable quantity to support weight of sign without slippage; push to engage tape adhesive. Keep tape strips 0.250 inch away from edges to prevent visibility at sign edges when sign is initially installed or reinstalled. Apply substrate component of tape to substrate in locations aligning with tape on back of sign; push and rub well to fully engage tape adhesive to substrate.
5. Magnetic Tape: Clean bond-breaking materials from substrate surface and remove loose debris. Apply tape strips symmetrically to back of sign and of suitable quantity to support weight of sign without slippage. Keep strips away from edges to prevent visibility at sign edges. Place sign in position.

3.3 ADJUSTING AND CLEANING

A. Remove and replace damaged or deformed signs and signs that do not comply with specified requirements. Replace signs with damaged or deteriorated finishes or components that cannot be successfully repaired by finish touchup or similar minor repair procedures.

B. Remove temporary protective coverings and strippable films as signs are installed.

C. On completion of installation, clean exposed surfaces of signs according to manufacturer's written instructions, and touch up minor nicks and abrasions in finish. Maintain signs in a clean condition during construction and protect from damage until acceptance by Owner.

END OF SECTION 101423

SECTION 101426 - POST AND PANEL SIGNAGE

PART 1 - GENERAL

1.1 RELATED DOCUMENTS

A. Drawings and general provisions of the Contract, including General and Supplementary Conditions and Division 01 Specification Sections, apply to this Section.

1.2 SUMMARY

A. Section Includes:

1. Nonilluminated post-and-panel signs.

B. Related Requirements:

1. Section 015000 "Temporary Facilities and Controls" for temporary Project identification signs and for temporary informational and directional signs.
2. Section 101423 "Panel Signage" for wall-mounted sign panels.

1.3 ALLOWANCES

A. Allowances for signage are specified in Section 012100 "Allowances."

1.4 ACTION SUBMITTALS

A. Product Data: For each type of product.

B. Shop Drawings: For signage.

1. Include fabrication and installation details and attachments to other work.
2. Show sign mounting heights, locations of supplementary supports to be provided by other installers, and accessories.
3. Show message list, typestyles, graphic elements, and layout for each sign at least half size.

C. Samples for Initial Selection: For each type of sign assembly, exposed component, and exposed finish.

1. Include representative Samples of available typestyles and graphic symbols.

D. Samples for Verification: For each type of sign assembly, showing all components and with the required finish(es), in manufacturer's standard size unless otherwise indicated and as follows:

1. Post-and-Panel Signs: Full-size Sample.
2. Exposed Accessories: Full-size Sample of each accessory type.
3. Full-size Samples, if approved, will be returned to Contractor for use in Project.

E. Product Schedule: For post-and-panel signs. Use same designations indicated on Drawings or specified.

F. Delegated-Design Submittal: For signs indicated in "Performance Requirements" Article.

1. Include structural analysis calculations for signs indicated to comply with design loads; signed and sealed by the qualified professional engineer responsible for their preparation.

1.5 INFORMATIONAL SUBMITTALS

A. Qualification Data: For Installer and manufacturer.

B. Evaluation Reports: For post-installed anchors and power-actuated fasteners, from ICC-ES or other qualified testing agency acceptable to authorities having jurisdiction.

C. Sample Warranty: For special warranty.

1.6 CLOSEOUT SUBMITTALS

A. Maintenance Data: For signs to include in maintenance manuals.

1.7 QUALITY ASSURANCE

A. Installer Qualifications: Manufacturer of products or an entity that employs installers and supervisors who are trained and approved by manufacturer.

1.8 WARRANTY

A. Special Warranty: Manufacturer agrees to repair or replace components of signs that fail in materials or workmanship within specified warranty period.

1. Failures include, but are not limited to, the following:

a. Deterioration of finishes beyond normal weathering.
b. Deterioration of embedded graphic image.
c. Separation or delamination of sheet materials and components.

2. Warranty Period: Five years from date of Substantial Completion.

PART 2 - PRODUCTS

2.1 PERFORMANCE REQUIREMENTS

A. Delegated Design: Engage a qualified professional engineer, as defined in Section 014000 "Quality Requirements," to design sign structure and anchorage of post-and-panel sign type(s) according to structural performance requirements.

B. Structural Performance: Signs and supporting elements shall withstand the effects of gravity and other loads within limits and under conditions indicated.

1. Uniform Wind Load: As indicated on Structural Drawings.
2. Concentrated Horizontal Load: As indicated on Structural Drawings.
3. Other Design Load: As indicated on Structural Drawings.
4. Uniform and concentrated loads need not be assumed to act concurrently.

C. Thermal Movements: For exterior signs, allow for thermal movements from ambient and surface temperature changes.

1. Temperature Change: 120 deg F, ambient; 180 deg F, material surfaces.

D. Accessibility Standard: Comply with applicable provisions in the USDOJ's "2010 ADA Standards for Accessible Design," the ABA standards of the Federal agency having jurisdiction, and ICC A117.1.

2.2 POST-AND-PANEL SIGNS

A. Post-and-Panel Sign: Sign of single-panel or hollow-box configuration; with smooth, uniform surfaces and support assembly; with message and characters having uniform faces, sharp corners, and precisely formed lines and profiles; and as follows:

1. Basis-of-Design: Subject to compliance with requirements, provide products indicated in the Architect’s signage quote from ASI, or comparable products as approved by the Architect.
2. Solid-Sheet Sign Panels, Returns, and Back: Aluminum sheet with finish specified in "Sign-Panel-Face Finish and Applied Graphics" Subparagraph and as follows:

a. Thickness: Manufacturer's standard for size of sign.
b. Surface-Applied Graphics: Manufacturer’s standard applied vinyl film or baked enamel or powder coat.

3. Single-Panel Sign Frame: Entire perimeter.

a. Material: Aluminum.
b. Material Thickness: Manufacturer’s standard for selected sign type and size.
c. Frame Depth: As selected by the Architect from the manufacturer's full range.
d. Profile: Square.
e. Corner Condition in Elevation: Mitered.

f. Finish and Color: Match sign-panel face.

4. Hollow-Box Sign Frame: Entire perimeter framed with formed-aluminum sheet or extruded-aluminum, hollow-box-type frame with vertical edges attached to supports with aluminum fittings. Close top and bottom edges of panels with manufacturer's standard welded seams or extrusions.

   a. Hollow-Box Depth: Manufacturer's standard for selected sign type and size.
   b. Profile: Square.
   c. Corner Condition in Elevation: Mitered.
   d. Finish and Color: Match sign-panel face.

5. Sign-Frame Mounting: Between posts or over posts as selected by the Architect.
6. Posts: Aluminum.

   a. Shape: Round or square as selected by the Architect for each sign.
   b. Size: Manufacturer's standard for selected sign type and size.
   c. Installation Method: Direct burial, unless otherwise selected by the Architect.
   d. Finish and Color: Match sign-panel frame.

7. Sign-Panel-Face Finish and Applied Graphics:

   a. Baked-Enamel or Powder-Coat Finish and Graphics: Manufacturer's standard, in color as selected by Architect from manufacturer's full range.
   b. Overcoat: Manufacturer's standard baked-on clear coating.

8. Text and Typeface: Typeface as selected by Architect from manufacturer's full range.

2.3 MATERIALS

A. Aluminum Sheet and Plate: ASTM B209, alloy and temper recommended by aluminum producer and finisher for type of use and finish indicated.

B. Aluminum Extrusions: ASTM B221, alloy and temper recommended by aluminum producer and finisher for type of use and finish indicated.

C. Vinyl Film: UV-resistant vinyl film of nominal thickness indicated, with pressure-sensitive, permanent adhesive on back; die cut to form characters or images as indicated on Drawings and suitable for exterior applications.

D. Paints and Coatings for Sheet Materials: Inks, dyes, and paints that are recommended by manufacturer for optimum adherence to surface and are UV and water resistant for colors and exposure indicated.

2.4 ACCESSORIES

A. Fasteners and Anchors: Manufacturer's standard as required for secure anchorage of signs, noncorrosive and compatible with each material joined, and complying with the following unless otherwise indicated:

1. Use concealed fasteners and anchors unless indicated to be exposed.
2. For exterior exposure, furnish nonferrous-metal or stainless-steel devices unless otherwise indicated.
3. Exposed Metal-Fastener Components, General:

    a. Fabricated from same basic metal and finish of fastened metal unless otherwise indicated.
    b. Fastener Heads: For nonstructural connections, use flathead or oval countersunk screws and bolts with tamper-resistant, Allen-head, spanner-head, or one-way-head slots unless otherwise indicated.

B. Post-Installed Anchors: Fastener systems with bolts of same basic metal as fastened metal, if visible, unless otherwise indicated; with working capacity greater than or equal to the design load, according to an evaluation report acceptable to authorities having jurisdiction, based on ICC-ES AC01, ICC-ES AC193, ICC-ES AC58, or ICC-ES AC308 as appropriate for the substrate.

1. Uses: Securing signs with imposed loads to structure.
2. Type: Torque-controlled, expansion anchor, torque-controlled, adhesive anchor, or adhesive anchor.
3. Material for Exterior or Interior Locations and Where Stainless Steel Is Indicated: Alloy Group 1 stainless-steel bolts, ASTM F593, and nuts, ASTM F594.

C. Power-Actuated Anchors: Fastener systems with working capacity greater than or equal to the design load, according to an evaluation report acceptable to authorities having jurisdiction, based on ICC-ES AC70.

D. Bituminous Paint: Cold-applied asphalt emulsion complying with ASTM D1187/D1187M.

E. Anchoring Materials:

1. Nonshrink, Nonmetallic Grout: Factory-packaged, nonstaining, noncorrosive, nongaseous grout complying with ASTM C1107/C1107M. Provide grout specifically recommended by manufacturer for interior and exterior applications.
2. Anchoring Cement: Factory-packaged, nonshrink, nonstaining, hydraulic-controlled expansion cement formulation for mixing with water at Project site to create pourable anchoring, patching, and grouting compound.

    a. Water-Resistant Product: At exterior locations, provide formulation that is resistant to erosion from water exposure without needing protection by a sealer or waterproof coating and that is recommended by manufacturer for exterior use.

2.5 FABRICATION

A. General: Provide manufacturer's standard sign assemblies according to requirements indicated.

1. Preassemble signs in the shop to greatest extent possible. Disassemble signs only as necessary for shipping and handling limitations. Clearly mark units for reassembly and installation, in locations concealed from view after final assembly.
2. Mill joints to tight, hairline fit. Form assemblies and joints exposed to weather to resist water penetration and retention.
3. Comply with AWS for recommended practices in welding and brazing. Provide welds and brazes behind finished surfaces without distorting or discoloring exposed side. Clean exposed welded and brazed joints of flux, and dress exposed and contact surfaces.
4. Conceal fasteners and anchors unless indicated to be exposed; locate exposed fasteners where they will be inconspicuous.
5. Internally brace signs for stability, to meet structural performance loading without oil-canning or other surface deformation, and for securing fasteners.

B. Sign Message Panels: Construct sign-panel surfaces to be smooth and to remain flat under installed conditions within a tolerance of plus or minus 1/16 inch measured diagonally from corner to corner.

1. Coordinate dimensions and attachment methods to produce message panels with closely fitting joints. Align edges and surfaces with one another in the relationship indicated.
2. Increase panel thickness or reinforce with concealed stiffeners or backing materials as needed to produce surfaces without distortion, buckles, warp, or other surface deformations.
3. Continuously weld joints and seams unless other methods are indicated; grind, fill, and dress welds to produce smooth, flush, exposed surfaces with welds invisible after final finishing.

C. Post Fabrication: Fabricate posts designed for structural performance indicated and of lengths required for installation method indicated for each sign.

1. Aluminum Posts: Manufacturer's standard 0.125-inch-thick, extruded-aluminum tubing unless otherwise indicated, with brackets or slots to engage sign panels. Include post caps, fillers, spacers, junction boxes, access panels, reinforcement where required for loading conditions, and related accessories required for complete installation.

2. Direct Burial: Fabricate posts 36 inches longer than height of sign to permit direct burial or embedment in concrete foundations or concrete-filled postholes.

2.6 GENERAL FINISH REQUIREMENTS

A. Protect mechanical finishes on exposed surfaces from damage by applying a strippable, temporary protective covering before shipping.

B. Appearance of Finished Work: Noticeable variations in same piece are not acceptable. Variations in appearance of adjoining components are acceptable if they are within the range of approved Samples and are assembled or installed to minimize contrast.

C. Directional Finishes: Run grain with long dimension of each piece and perpendicular to long dimension of finished trim or border surface unless otherwise indicated.

D. Organic, Anodic, and Chemically Produced Finishes: Apply to formed metal after fabrication but before applying contrasting polished finishes on raised features unless otherwise indicated.

2.7 ALUMINUM FINISHES

A. Baked-Enamel or Powder-Coat Finish: AAMA 2603 except with a minimum dry film thickness of 1.5 mils. Comply with coating manufacturer's written instructions for cleaning, conversion coating, and applying and baking finish.

PART 3 - EXECUTION

3.1 EXAMINATION

A. Examine substrates, areas, and conditions, with Installer present, for compliance with requirements for installation tolerances and other conditions affecting performance of the Work.

B. Verify that sign-support surfaces are within tolerances to accommodate signs.

C. Verify that anchorage devices embedded in permanent construction are correctly sized and located to accommodate signs.

D. Proceed with installation only after unsatisfactory conditions have been corrected.

3.2 INSTALLATION

A. General: Install signs using installation methods indicated and according to manufacturer's written instructions.

1. Install signs level, plumb, and at locations and heights indicated, with sign surfaces free of distortion and other defects in appearance.
2. Install signs so they do not protrude or obstruct according to the accessibility standard.
3. Before installation, verify that sign components are clean and free of materials or debris that would impair installation.
4. Corrosion Protection: Coat concealed surfaces of exterior aluminum in contact with grout, concrete, masonry, wood, or dissimilar metals, with a heavy coat of bituminous paint.

3.3 INSTALLING POSTS

A. Vertical Tolerance: Set posts plumb within a tolerance of 1/16 inch in 3 feet.

B. Direct-Burial Method:

1. Excavation: Excavate posthole to dimensions indicated. Reconstruct subgrade that is not firm, undisturbed, or compacted soil, or that is damaged by freezing temperatures, frost, rain, accumulated water, or construction activities by excavating an additional 12 inches, backfilling with satisfactory soil or well-graded aggregate, and compacting to original subgrade elevation.
2. Setting in Earth: Set post in position, support to prevent movement, and backfill with satisfactory soil or well-graded aggregate as recommended in writing by manufacturer. Place and compact backfill in 6-inch lifts, compacting each lift.
3. Setting in Cast-in-Place Concrete: Set post in position, support to prevent movement, and place concrete in posthole or for concrete foundation as indicated on Drawings.
4. Setting in Preformed Hole in Concrete Foundation: Form or core drill holes in concrete foundation not less than 3/4 inch larger than outside dimension of post for installing posts in concrete. Set post in position, shim to prevent movement, and fill annular space between post and hole with nonshrink, nonmetallic grout or anchoring cement, mixed and placed to comply with manufacturer's written instructions.

    a. Cover anchorage joint in concrete foundations with flange of same metal and finish as post, welded to post after placing anchoring material or attached to post with set screws.
    b. Leave anchorage joint exposed with 1/8-inch anchoring material sloped away from post.

3.4 ADJUSTING AND CLEANING

A. Remove and replace damaged or deformed signs and signs that do not comply with specified requirements. Replace signs with damaged or deteriorated finishes or components that cannot be successfully repaired by finish touchup or similar minor repair procedures.

B. Remove temporary protective coverings and strippable films as signs are installed.

C. On completion of installation, clean exposed surfaces of signs according to manufacturer's written instructions, and touch up minor nicks and abrasions in finish. Maintain signs in a clean condition during construction and protect from damage until acceptance by Owner.

END OF SECTION 101426

SECTION 102113.19 - PLASTIC TOILET COMPARTMENTS

PART 1 - GENERAL

1.1 RELATED DOCUMENTS

A. Drawings and general provisions of the Contract, including General and Supplementary Conditions and Division 01 Specification Sections, apply to this Section.

1.2 SUMMARY

A. Section Includes:

1. Solid-plastic toilet compartments configured as toilet enclosures and urinal screens.

1.3 ACTION SUBMITTALS

A. Product Data: For each type of product.

1. Include construction details, material descriptions, dimensions of individual components and profiles, and finishes for toilet compartments.

B. Shop Drawings: For toilet compartments.

1. Include plans, elevations, sections, details, and attachment details.
2. Show locations of cutouts for compartment-mounted toilet accessories.
3. Show locations of centerlines of toilet fixtures.
4. Show locations of floor drains.

C. Samples for Initial Selection: For each type of toilet compartment material indicated.

1. Include Samples of hardware and accessories involving material and color selection.

D. Product Schedule: For toilet compartments, prepared by or under the supervision of supplier, detailing location and selected colors for toilet compartment material.

1.4 INFORMATIONAL SUBMITTALS

A. Product Certificates: For each type of toilet compartment.

1.5 CLOSEOUT SUBMITTALS

A. Maintenance Data: For toilet compartments to include in maintenance manuals.

1.6 MAINTENANCE MATERIAL SUBMITTALS

A. Furnish extra materials that match products installed and that are packaged with protective covering for storage and identified with labels describing contents and source.

1. Door Hinges: One hinge(s) with associated fasteners.
2. Latch and Keeper: One latch(es) and keeper(s) with associated fasteners.
3. Door Bumper: One bumper(s) with associated fasteners.
4. Door Pull: One door pull(s) with associated fasteners.
5. Fasteners: Ten fasteners of each size and type.

1.7 PROJECT CONDITIONS

A. Field Measurements: Verify actual locations of toilet fixtures, walls, columns, ceilings, and other construction contiguous with toilet compartments by field measurements before fabrication.

PART 2 - PRODUCTS

2.1 PERFORMANCE REQUIREMENTS

A. Surface-Burning Characteristics: Comply with ASTM E 84; testing by a qualified testing agency. Identify products with appropriate markings of applicable testing agency.

1. Flame-Spread Index: 25 or less.
2. Smoke-Developed Index: 450 or less.

B. Regulatory Requirements: Comply with applicable provisions in the U.S. Architectural & Transportation Barriers Compliance Board's ADA-ABA Accessibility Guidelines for Buildings and Facilities and ICC A117.1 for toilet compartments designated as accessible.

2.2 SOLID-PLASTIC TOILET COMPARTMENTS

A. Basis-of-Design: Subject to compliance with requirements, provide product indicated on the Finish Schedule, or a comparable product as approved by the Architect.

1. Color and Pattern: As indicated on the Finish Schedule.
2. Finish Texture: As indicated on the Finish Schedule.

B. Toilet-Enclosure Style: Overhead braced.

C. Urinal-Screen Style: Wall hung.

D. Door, Panel, and Pilaster Construction: Solid, high-density polyethylene (HDPE) panel material, not less than 1 inch thick, seamless, with eased edges, and with homogenous color and pattern throughout thickness of material.

1. Heat-Sink Strip: Manufacturer's standard continuous, stainless-steel strip fastened to exposed bottom edges of solid-plastic components to hinder malicious combustion.

E. Pilaster Shoes: Manufacturer's standard design; stainless steel.

F. Brackets (Fittings):

1. Full-Height (Continuous) Type: Manufacturer's standard design; stainless steel.

2.3 HARDWARE AND ACCESSORIES

A. Hardware and Accessories: Manufacturer's standard operating hardware and accessories.

1. Material: Stainless steel.
2. Hinges: Manufacturer's standard paired, self-closing type that can be adjusted to hold doors open at any angle up to 90 degrees, allowing emergency access by lifting door.
3. Latch and Keeper: Manufacturer's standard recessed or surface-mounted latch unit designed for emergency access and with combination rubber-faced door strike and keeper. Provide units that comply with regulatory requirements for accessibility at compartments designated as accessible.
4. Coat Hook: Manufacturer's standard combination hook and rubber-tipped bumper, sized to prevent in-swinging door from hitting compartment-mounted accessories.
5. Door Bumper: Manufacturer's standard rubber-tipped bumper at out-swinging doors.
6. Door Pull: Manufacturer's standard unit at out-swinging doors that complies with regulatory requirements for accessibility. Provide units on both sides of doors at compartments designated as accessible.

B. Overhead Bracing: Manufacturer's standard continuous, extruded-aluminum head rail with antigrip profile and in manufacturer's standard finish.

C. Anchorages and Fasteners: Manufacturer's standard exposed fasteners of stainless steel, finished to match the items they are securing, with theft-resistant-type heads. Provide sex-type bolts for through-bolt applications. For concealed anchors, use stainless-steel, hot-dip galvanized-steel, or other rust-resistant, protective-coated steel compatible with related materials.

2.4 MATERIALS

A. Stainless-Steel Sheet: ASTM A 666, Type 304, stretcher-leveled standard of flatness.

B. Stainless-Steel Castings: ASTM A 743/A 743M.

2.5 FABRICATION

A. Fabrication, General: Fabricate toilet compartment components to sizes indicated. Coordinate requirements and provide cutouts for through-partition toilet accessories where required for attachment of toilet accessories.

B. Overhead-Braced Units: Provide manufacturer's standard corrosion-resistant supports, leveling mechanism, and anchors at pilasters to suit floor conditions. Provide shoes at pilasters to conceal supports and leveling mechanism.

C. Door Size and Swings: Unless otherwise indicated, provide 24-inch-wide, in-swinging doors for standard toilet compartments and 36-inch-wide, out-swinging doors with a minimum 32-inch-wide, clear opening for compartments designated as accessible.

PART 3 - EXECUTION

3.1 EXAMINATION

A. Examine areas and conditions, with Installer present, for compliance with requirements for fastening, support, alignment, operating clearances, and other conditions affecting performance of the Work.

1. Confirm location and adequacy of blocking and supports required for installation.

B. Proceed with installation only after unsatisfactory conditions have been corrected.

3.2 INSTALLATION

A. General: Comply with manufacturer's written installation instructions. Install units rigid, straight, level, and plumb. Secure units in position with manufacturer's recommended anchoring devices.

1. Maximum Clearances:

a. Pilasters and Panels: 1/2 inch.
b. Panels and Walls: 1 inch.

2. Full-Height (Continuous) Brackets: Secure panels to walls and to pilasters with full-height brackets.

a. Locate bracket fasteners so holes for wall anchors occur in masonry or tile joints.
b. Align brackets at pilasters with brackets at walls.

B. Overhead-Braced Units: Secure pilasters to floor and level, plumb, and tighten. Set pilasters with anchors penetrating not less than 1-3/4 inches into structural floor unless otherwise indicated in manufacturer's written instructions. Secure continuous head rail to each pilaster with no fewer than two fasteners. Hang doors to align tops of doors with tops of panels, and adjust so tops of doors are parallel with overhead brace when doors are in closed position.

C. Urinal Screens: Attach with anchoring devices to suit supporting structure. Set units level and plumb, rigid, and secured to resist lateral impact.

3.3 ADJUSTING

A. Hardware Adjustment: Adjust and lubricate hardware according to hardware manufacturer's written instructions for proper operation. Set hinges on in-swinging doors to hold doors open approximately 30 degrees from closed position when unlatched. Set hinges on out-swinging doors to return doors to fully closed position.

END OF SECTION 102113.19

SECTION 102116.19 - PLASTIC SHOWER AND DRESSING COMPARTMENTS

PART 1 - GENERAL

1.1 RELATED DOCUMENTS

A. Drawings and general provisions of the Contract, including General and Supplementary Conditions and Division 01 Specification Sections, apply to this Section.

1.2 SUMMARY

A. Section Includes:

1. Solid-plastic compartments.
2. Shower receptors.

B. Related Requirements:

1. Section 055000 "Metal Fabrications" for supports that attach floor-and-ceiling-anchored compartments to the overhead structural system.

1.3 ACTION SUBMITTALS

A. Product Data: For each type of product.

1. Include construction details, material descriptions, dimensions of individual components and profiles, and finishes.

B. Shop Drawings: For shower and dressing compartments.

1. Include plans, elevations, sections, and attachment details.
2. Show locations of cutouts for compartment-mounted accessories.
3. Show locations of centerlines of drains.

C. Samples for Initial Selection: For each type of compartment material indicated.

1. Include Samples of hardware and accessories for material and color selection.

1.4 INFORMATIONAL SUBMITTALS

A. Product Certificates: For each type of shower and dressing compartment.

1.5 CLOSEOUT SUBMITTALS

A. Maintenance Data: For shower and dressing compartments to include in maintenance manuals.

1.6 MAINTENANCE MATERIAL SUBMITTALS

A. Furnish extra materials, from the same product run, that match products installed and that are packaged with protective covering for storage and identified with labels describing contents.

1. Door Hinges: One door hinge(s) with associated fasteners.
2. Latch and Keeper: One latch(es) and keeper(s) with associated fasteners.
3. Clothing Hook: One clothing hook(s) with associated fasteners.
4. Door Bumper: One door bumper(s) with associated fasteners.
5. Door Pull: One door pull(s) with associated fasteners.
6. Fasteners: 10 fasteners of each size and type.
7. Curtain Rod: One curtain rod(s) with associated fasteners.
8. Curtain Hooks: Five curtain hooks.

1.7 FIELD CONDITIONS

A. Field Measurements: Verify actual locations of fixtures, drains, walls, columns, ceilings, and other construction contiguous with shower and dressing compartments by field measurements before fabrication.

PART 2 - PRODUCTS

2.1 PERFORMANCE REQUIREMENTS

A. Surface-Burning Characteristics: Comply with ASTM E 84 or UL 723; testing by a qualified testing agency. Identify products with appropriate markings of applicable testing agency.

1. Flame-Spread Index: 25 or less.
2. Smoke-Developed Index: 450 or less.

B. Accessibility Standard: Comply with applicable provisions in the U.S. Architectural & Transportation Barriers Compliance Board's ADA-ABA Accessibility Guidelines for Buildings and Facilities and ICC A117.1 for shower and dressing compartments designated as accessible.

2.2 SOLID-PLASTIC COMPARTMENTS

A. Basis-of-Design: Subject to compliance with requirements, provide product indicated on the Finish Schedule, or a comparable product as approved by the Architect.

1. Color and Pattern: As indicated on the Finish Schedule.
2. Finish Texture: As indicated on the Finish Schedule.

B. Configuration: As indicated on Drawings.

C. Enclosure Style: Overhead braced.

D. Panel and Pilaster Construction: Solid, high-density polyethylene (HDPE) panel material, not less than 1 inch thick, seamless, with eased edges and with homogenous color and pattern throughout thickness of material.

1. Heat-Sink Strip: Manufacturer's standard, continuous, stainless-steel strip fastened to exposed bottom edges of solid-plastic components to hinder malicious combustion.
2. Color and Pattern: One color and pattern in each room; as selected by Architect from manufacturer's full range.

E. Door Construction: Match panels.

F. Pilaster Shoes: Manufacturer's standard design; stainless steel.

G. Brackets (Fittings):

1. Full-Height (Continuous) Type: Manufacturer's standard design; stainless steel.

2.3 SHOWER RECEPTORS

A. General: Manufacturer's standard, prefabricated, terrazzo receptor complete with integral drain.

1. Curb: Not less than 2 inches and not more than 9 inches deep when measured from the top of the curb to the top of the drain; with curb threshold not less than 1 inch below the sides and back of the receptor; and with a ramped entrance surface for accessible compartments.
2. Floor: Finished, sloping uniformly toward the drain and not less than 1/4 unit vertical in 12 units horizontal and not more than 1/2 inch.
3. Drain Strainer: Manufacturer's standard, removable stainless-steel strainer.
4. Drain Gasket: Manufacturer's standard gasket sized to fit waste pipe.
5. Waterstop: Manufacturer's standard, continuous galvanized-steel flange or rabbeted groove to receive panels and create a waterstop when panels are in place.

B. Finish: Manufacturer's standard finish on exposed surfaces, as selected by Architect from manufacturer's full range and with slip-resistant floor surface texture.

2.4 MATERIALS

A. Aluminum Castings: ASTM B 26/B 26M.

B. Aluminum Extrusions: ASTM B 221.

C. Stainless-Steel Sheet: ASTM A 666, Type 304, stretcher-leveled standard of flatness.

D. Stainless-Steel Castings: ASTM A 743/A 743M.

2.5 ACCESSORIES

A. Door Hardware and Accessories: Manufacturer's standard design, heavy-duty, operating hardware and accessories.

1. Material: Stainless steel.
2. Hinges: Manufacturer's standard, paired, self-closing type that can be adjusted to hold doors open at any angle up to 90 degrees, allowing emergency access by lifting door.
3. Latch and Keeper: Manufacturer's standard, recessed or surface-mounted latch unit designed for emergency access and with combination rubber-faced door strike and keeper. Provide units that comply with regulatory requirements for accessibility at compartments designated as accessible.
4. Clothing Hooks: Manufacturer's standard clothing hooks in each dressing compartment; include one combination hook and rubber-tipped bumper at inswinging doors, sized to prevent door from hitting wall panel or compartment-mounted accessories.
5. Door Bumper: Manufacturer's standard, rubber-tipped bumper at outswinging doors.
6. Door Pull: Manufacturer's standard unit at outswinging doors that complies with regulatory requirements for accessibility. Provide units on both sides of doors at compartments designated as accessible.

B. Overhead Bracing: Manufacturer's standard, continuous, extruded-aluminum headrail or cap with antigrip profile; in manufacturer's standard finish.

C. Headrail with Hooks: Manufacturer's standard, continuous, extruded-aluminum headrail or cap with curtain hooks running in concealed track; with antigrip profile; in manufacturer's standard finish.

D. Curtain Rod with Hooks: Manufacturer's standard, 1-inch-diameter, stainless-steel curtain rod with matching hooks.

E. Curtain: Flame-resistant, manufacturer's standard fabric that is stain resistant, self-sanitizing, antistatic, antimicrobial, and launderable to a temperature of not less than 90 deg F.

1. Flame Resistance: Passes NFPA 701 tests when tested by a testing and inspecting agency acceptable to authorities having jurisdiction.
2. Labeling: Identify fabrics with appropriate markings of applicable testing and inspecting agency.
3. Curtain Grommets: Two-piece, rolled-edge, rustproof, nickel-plated brass; spaced not more than 6 inches o.c.; machined into top hem.
4. Width: Minimum 12 inches wider than opening.
5. Length: Where curtain extends to a floor surface, size so that bottom hem clears finished floor by not more than 1 inch and not less than 1/2 inch above floor surface. Where curtains extend to a shower-receptor curb, size so that bottom hem hangs above curb line and clears curb line by not more than 1/2 inch.
6. Color and Pattern: As selected by Architect from manufacturer's full range.

F. Anchorages and Fasteners: Manufacturer's standard, exposed fasteners of stainless steel, chrome-plated steel, or solid brass, finished to match the items they are securing; with theft-resistant-type heads. Provide sex-type bolts for through-bolt applications. Use countersunk,

flush-type bolt heads or otherwise make fasteners inconspicuous if exposed on opposite side of panel from hardware or accessory item. For concealed anchors, use stainless steel, hot-dip galvanized steel, or other rust-resistant, protective-coated steel.

2.6 FABRICATION

A. Overhead-Braced Compartments: Manufacturer's standard, corrosion-resistant supports, leveling method, and anchors at pilasters and walls to suit floor and wall conditions. Provide shoes at pilasters to conceal supports and leveling method.

B. Door Sizes and Swings: Unless otherwise indicated, provide 24-inch-wide, inswinging doors for standard shower and dressing compartments, and 36-inch-wide, outswinging doors with a minimum 32-inch-wide, clear opening for compartments designated as accessible.

PART 3 - EXECUTION

3.1 INSTALLATION

A. General: Comply with manufacturer's written installation instructions. Install compartments rigid, straight, level, and plumb. Secure compartments in position with manufacturer's recommended anchoring devices.

1. Clearances for Dressing Compartments: Maximum 1/2 inch between pilasters and panels; 1 inch between panels and walls.

2. Full-Height (Continuous) Brackets for Dressing Compartments: Secure panels to walls and to pilasters with full-height brackets.

a. Locate bracket fasteners so holes for wall anchors occur in masonry or tile joints.
b. Align brackets at pilasters with brackets at walls.

B. Overhead-Braced Compartments: Secure pilasters to floor, and level, plumb, and tighten. Set pilasters with anchors penetrating not less than 1-3/4 inches into structural floor unless otherwise indicated in manufacturer's written instructions. Secure continuous headrail to each pilaster with no fewer than two fasteners. Hang doors to align tops of doors with tops of panels, and adjust so tops of doors are parallel with overhead brace when doors are in closed position.

C. Curtains: Install curtains to specified length, and verify that they hang vertically without stress points or diagonal folds.

D. Shower Receptors: Install prefabricated shower receptors with drain gasket compression fit to OD of waste pipe.

3.2 ADJUSTING

A. Curtain Adjustment: After hanging curtains, test and adjust each track or rod to produce unencumbered, smooth operation. Steam and dress down curtains as required to produce crease- and wrinkle-free installation. Remove and replace curtains that are stained or soiled or that have stress points or diagonal folds.

B. Hardware Adjustment: Adjust and lubricate hardware according to hardware manufacturer's written instructions for proper operation. Set hinges on inswinging doors to hold doors open approximately 30 degrees from closed position when unlatched. Set hinges on outswinging doors to return doors to fully closed position.

END OF SECTION 102116.19

SECTION 102239 - FOLDING PANEL PARTITIONS

PART 1 - GENERAL

1.1 RELATED DOCUMENTS

A. Drawings and general provisions of the Contract, including General and Supplementary Conditions and Division 01 Specification Sections, apply to this Section.

1.2 SUMMARY

A. Section Includes:

1. Manually operated, acoustical panel partitions.

B. Related Requirements:

1. Section 055000 "Metal Fabrications" for supports that attach supporting tracks to overhead structural system.

1.3 DEFINITIONS

A. NIC: Noise Isolation Class.

B. NRC: Noise Reduction Coefficient.

C. STC: Sound Transmission Class.

1.4 ACTION SUBMITTALS

A. Product Data: For each type of product.

B. Shop Drawings: For operable panel partitions.

1. Include plans, elevations, sections, attachment details, and numbered panel installation sequence.
2. Indicate stacking and operating clearances. Indicate location and installation requirements for hardware and track, blocking, and direction of travel.

C. Samples for Initial Selection: For each type of exposed material, finish, covering, or facing.

1. Include Samples of accessories involving color selection.

D. Samples for Verification: For each type of exposed material, finish, covering, or facing, prepared on Samples of size indicated below:

1. Panel Facing Material: Manufacturer's standard-size unit, not less than 3 inches square.
2. Panel Edge Material: Not less than 3 inches long.
3. Chair Rail: Manufacturer's standard-size unit, 6 inches long.
4. Hardware: One of each exposed door-operating device.

E. Delegated-Design Submittal: For operable panel partitions.

1.5 INFORMATIONAL SUBMITTALS

A. Setting Drawings: For embedded items and cutouts required in other work, including support-beam, mounting-hole template.

B. Qualification Data: For Installer.

C. Product Certificates: For each type of operable panel partition.

D. Product Test Reports: For each operable panel partition, for tests performed by a qualified testing agency.

E. Field quality-control reports.

F. Sample Warranty: For manufacturer's special warranty.

1.6 CLOSEOUT SUBMITTALS

A. Operation and Maintenance Data: For operable panel partitions to include in maintenance manuals.

1. In addition to items specified in Section 017823 "Operation and Maintenance Data," include the following:

a. Panel finish facings and finishes for exposed trim and accessories. Include precautions for cleaning materials and methods that could be detrimental to finishes and performance.
b. Seals, hardware, track, track switches, carriers, and other operating components.

1.7 MAINTENANCE MATERIAL SUBMITTALS

A. Furnish extra materials, from the same production run, that match products installed and that are packaged with protective covering for storage and identified with labels describing contents.

1. Panel Finish-Facing Material: Furnish full width in quantity to cover both sides of two panels when installed.

1.8 QUALITY ASSURANCE

A. Installer Qualifications: An entity that employs installers and supervisors who are trained and approved by manufacturer.

1.9 DELIVERY, STORAGE, AND HANDLING

A. Protectively package and sequence panels in order for installation. Clearly mark packages and panels with numbering system used on Shop Drawings. Do not use permanent markings on panels.

1.10 WARRANTY

A. Special Warranty: Manufacturer agrees to repair or replace components of operable panel partitions that fail in materials or workmanship within specified warranty period.

1. Failures include, but are not limited to, the following:

a. Faulty operation of operable panel partitions.
b. Deterioration of metals, metal finishes, and other materials beyond normal use.

2. Warranty Period: Two years from date of Substantial Completion.

PART 2 - PRODUCTS

2.1 PERFORMANCE REQUIREMENTS

A. Delegated Design: Engage a qualified professional engineer, as defined in Section 014000 "Quality Requirements," to design seismic bracing of tracks to structure above.

B. Acoustical Performance: Provide operable panel partitions tested by a qualified testing agency for the following acoustical properties according to test methods indicated:

1. Sound-Transmission Requirements: Operable panel partition assembly tested for laboratory sound-transmission loss performance according to ASTM E 90, determined by ASTM E 413, and rated for not less than the STC indicated.
2. Noise-Reduction Requirements: Operable panel partition assembly, identical to partition tested for STC, tested for sound-absorption performance according to ASTM C 423, and rated for not less than the NRC indicated.
3. Noise-Isolation Requirements: Installed operable panel partition assembly, identical to partition tested for STC, tested for NIC according to ASTM E 336, determined by ASTM E 413, and rated for 10 dB less than STC value indicated.

C. Fire-Test-Response Characteristics: Provide panels with finishes complying with one of the following as determined by testing identical products by a testing and inspecting agency acceptable to authorities having jurisdiction:

1. Surface-Burning Characteristics: Comply with ASTM E 84; testing by a qualified testing agency. Identify products with appropriate markings of applicable testing agency.

a. Flame-Spread Index: 25 or less.
b. Smoke-Developed Index: 450 or less.

2. Fire Growth Contribution: Complying with acceptance criteria of local code and authorities having jurisdiction when tested according to NFPA 286.

D. Fire Resistance: Provide fire-rated operable panel partition assemblies complying with NFPA 80, based on testing according to UL 10B for fire-rated door assemblies.

1. Oversize Fire-Rated Door Assemblies: For units exceeding sizes of tested assemblies, provide certification by a qualified testing agency that doors comply with standard construction requirements for tested and labeled fire-rated door assemblies except for size.

2.2 OPERABLE ACOUSTICAL PANELS

A. Operable Acoustical Panels: Partition system, including panels, seals, finish facing, suspension system, operators, and accessories.

1. Basis-of-Design Product: Subject to compliance with requirements, provide Series 633M by Hufcor, Inc, or a comparable product as approved by the Architect.

B. Panel Operation: Manually operated, paired panels.

C. Panel Construction: As required to support panel from suspension components and with reinforcement for hardware attachment. Fabricate panels with tight hairline joints and concealed fasteners. Fabricate panels so finished in-place partition is rigid; level; plumb; aligned, with tight joints and uniform appearance; and free of bow, warp, twist, deformation, and surface and finish irregularities.

D. Dimensions: Fabricate operable acoustical panel partitions to form an assembled system of dimensions indicated and verified by field measurements.

1. Panel Width: As indicated.

E. STC: Not less than 49.

F. NRC: Not less than 0.50.

G. Panel Thickness: As selected by the Architect from the manufacturer's full range.

H. Panel Materials:

1. Steel Frame: Steel sheet, manufacturer's standard nominal minimum thickness for uncoated steel.
2. Steel Face/Liner Sheets: Tension-leveled steel sheet, manufacturer's standard minimum nominal thickness for uncoated steel.
3. Gypsum Board: ASTM C 1396/C 1396M.
4. Cement Board: ASTM C 1288.
5. Particleboard: ANSI A208.1.
6. Medium-Density Fiberboard: ANSI A208.2.
7. Plywood: DOC PS 1.

I. Panel Closure: Manufacturer's standard unless otherwise indicated.

J. Hardware: Manufacturer's standard as required to operate operable panel partition and accessories; with decorative, protective finish.

1. Hinges: Manufacturer's standard.

K. Finish Facing: Vinyl-coated fabric wall covering.

2.3 SEALS

A. Description: Seals that produce operable panel partitions complying with performance requirements and the following:

1. Manufacturer's standard seals unless otherwise indicated.
2. Seals made from materials and in profiles that minimize sound leakage.
3. Seals fitting tight at contact surfaces and sealing continuously between adjacent panels and between operable panel partition perimeter and adjacent surfaces, when operable panel partition is extended and closed.

B. Vertical Seals: Deep-nesting, interlocking astragals mounted on each edge of panel, with continuous, resilient acoustical seal.

C. Horizontal Top Seals: Continuous-contact, resilient seal exerting uniform constant pressure on track or resilient, mechanical, retractable, constant-force-contact seal exerting uniform constant pressure on track when extended.

D. Horizontal Bottom Seals: Manufacturer's standard continuous-contact seal exerting uniform constant pressure on floor.

2.4 PANEL FINISH FACINGS

A. Description: Finish facings for panels that comply with indicated fire-test-response characteristics and that are factory applied to operable panel partitions with appropriate backing, using mildew-resistant nonstaining adhesive as recommended by facing manufacturer's written instructions.

1. Apply one-piece, seamless facings free of air bubbles, wrinkles, blisters, and other defects, with edges tightly butted, and with invisible seams complying with Shop Drawings for location, and with no gaps or overlaps. Horizontal butted edges or seams are not permitted. Tightly secure and conceal raw and selvage edges of facing for finished appearance.
2. Where facings with directional, repeating, or matching grain are indicated, mark facing top and attach facing in same direction.
3. Match facing pattern 72 inches above finished floor.

B. Vinyl-Coated Fabric Wall Covering: Manufacturer's standard, mildew-resistant, washable, vinyl-coated fabric wall covering; complying with WA-101, Type III-Heavy Duty; Class A.

1. Antimicrobial Treatment: Additives capable of inhibiting growth of bacteria, fungi, and yeasts.
2. Color/Pattern: As selected by Architect from manufacturer's full range.

C. Trimless Edges: Fabricate exposed panel edges so finish facing wraps uninterrupted around panel, covering edge and resulting in an installed partition with facing visible on vertical panel edges, without trim, for minimal sightlines at panel-to-panel joints.

2.5 SUSPENSION SYSTEMS

A. Tracks: Steel or aluminum mounted directly to overhead structural support, or with adjustable steel hanger rods for overhead support, designed for operation, size, and weight of operable panel partition indicated. Size track to support partition operation and storage without damage to suspension system, operable panel partitions, or adjacent construction. Limit track deflection to no more than 0.10 inch between bracket supports. Provide a continuous system of track sections and accessories to accommodate configuration and layout indicated for partition operation and storage.

1. Panel Guide: Aluminum guide on both sides of the track to facilitate straightening of the panels; finished with factory-applied, decorative, protective finish.
2. Head Closure Trim: As required for acoustical performance; with factory-applied, decorative, protective finish.

B. Carriers: Trolley system as required for configuration type, size, and weight of partition and for easy operation; with ball-bearing wheels.

C. Track Intersections, Switches, and Accessories: As required for operation, storage, track configuration, and layout indicated for operable panel partitions, and compatible with partition assembly specified. Fabricate track intersections and switches from steel or aluminum.

D. Aluminum Finish: Mill finish or manufacturer's standard, factory-applied, decorative finish unless otherwise indicated.

E. Steel Finish: Manufacturer's standard, factory-applied, corrosion-resistant, protective coating unless otherwise indicated.

2.6 ACCESSORIES

A. Storage Pocket Door: Full height at end of partition runs to conceal stacked partition; of same materials, finish, construction, thickness, and acoustical qualities as panels; complete with operating hardware and acoustical seals at soffit, floor, and jambs. Hinges in finish to match other exposed hardware.

1. Manufacturer's standard method to secure storage pocket door in closed position.
2. Rim Lock: Key-operated lock cylinder to secure storage pocket door in closed position. Include two keys per lock.
3. Rim Lock: Deadlock to receive cylinder, to secure storage pocket door in closed position. See Section 087100 "Door Hardware" for lock cylinder and keying requirements.

PART 3 - EXECUTION

3.1 EXAMINATION

A. Examine flooring, floor levelness, structural support, and opening, with Installer present, for compliance with requirements for installation tolerances and other conditions affecting performance of operable panel partitions.

B. Proceed with installation only after unsatisfactory conditions have been corrected.

3.2 INSTALLATION

A. Install operable panel partitions and accessories after other finishing operations, including painting, have been completed in area of partition installation.

B. Install panels in numbered sequence indicated on Shop Drawings.

C. Broken, cracked, chipped, deformed, or unmatched panels are not acceptable.

D. Broken, cracked, deformed, or unmatched gasketing or gasketing with gaps at butted ends is not acceptable.

E. Light-Leakage Test: Illuminate one side of partition installation and observe vertical joints and top and bottom seals for voids. Adjust partitions for alignment and full closure of vertical joints and full closure along top and bottom seals. Perform test and make adjustments before NIC testing.

3.3 FIELD QUALITY CONTROL

A. NIC Testing: Owner will engage a qualified testing agency to perform tests and inspections.

1. Testing Extent: Testing agency shall randomly select one operable panel partition installation(s) for testing.
2. Testing Methodology: Perform testing of installed operable panel partition for noise isolation according to ASTM E 336, determined by ASTM E 413, and rated for not less than NIC indicated. Adjust and fit partitions to comply with NIC test method requirements.

B. An operable panel partition installation will be considered defective if it does not pass tests and inspections.

C. Prepare test and inspection reports.

3.4 ADJUSTING

A. Adjust operable panel partitions, hardware, and other moving parts to function smoothly, and lubricate as recommended by manufacturer.

B. Adjust storage pocket doors to operate smoothly and easily, without binding or warping.

C. Verify that safety devices are properly functioning.

3.5 MAINTENANCE SERVICE

A. Maintenance Service: Beginning at Substantial Completion, maintenance service shall include 12 months' full maintenance by manufacturer's authorized service representative. Include quarterly preventive maintenance, repair or replacement of worn or defective components, lubrication, cleaning, and adjusting as required for proper operable-partition operation. Parts and supplies shall be manufacturer's authorized replacement parts and supplies.

3.6 DEMONSTRATION

A. Engage a factory-authorized service representative to train Owner's maintenance personnel to adjust, operate, and maintain operable panel partitions.

END OF SECTION 102239

SECTION 102600 - WALL PROTECTION

PART 1 - GENERAL

1.1 RELATED DOCUMENTS

A. Drawings and general provisions of the Contract, including General and Supplementary Conditions and Division 01 Specification Sections, apply to this Section.

1.2 SUMMARY

A. Section Includes:

1. Corner guards.

1.3 ACTION SUBMITTALS

A. Product Data: For each type of product.

1. Include construction details, material descriptions, impact strength, dimensions of individual components and profiles, and finishes.
2. Include fire ratings of units recessed in fire-rated walls.

B. Shop Drawings: For each type of wall protection showing locations and extent.

1. Include plans, elevations, sections, and attachment details.

C. Samples for Initial Selection: For each type of impact-resistant wall-protection unit indicated, in each color and texture specified.

1. Include Samples of accent strips and accessories to verify color selection.
2. Corner Guards: 12 inches long. Include example top caps.

1.4 INFORMATIONAL SUBMITTALS

A. Product Certificates: For each type of handrail.

B. Material Certificates: For each type of exposed plastic material.

C. Sample Warranty: For special warranty.

1.5 CLOSEOUT SUBMITTALS

A. Maintenance Data: For each type of wall protection product to include in maintenance manuals.

1. Include recommended methods and frequency of maintenance for maintaining best condition of plastic covers under anticipated traffic and use conditions. Include precautions against using cleaning materials and methods that may be detrimental to finishes and performance.

1.6 MAINTENANCE MATERIAL SUBMITTALS

A. Furnish extra materials that match products installed and that are packaged with protective covering for storage and identified with labels describing contents.

1. Corner-Guard Covers: Full-size plastic covers of maximum length equal to 2 percent of each type, color, and texture of cover installed, but no fewer than two, 48-inch- long units.
2. Mounting and Accessory Components: Amounts proportional to the quantities of extra materials. Package mounting and accessory components with each extra material.

1.7 DELIVERY, STORAGE, AND HANDLING

A. Store wall protection in original undamaged packages and containers inside well-ventilated area protected from weather, moisture, soiling, extreme temperatures, and humidity.

1. Maintain room temperature within storage area at not less than 70 deg F during the period plastic materials are stored.
2. Keep plastic materials out of direct sunlight.
3. Store plastic wall-protection components for a minimum of 72 hours, or until plastic material attains a minimum room temperature of 70 deg F.

a. Store corner-guard covers in a vertical position.

1.8 WARRANTY

A. Special Warranty: Manufacturer agrees to repair or replace components of wall-protection units that fail in materials or workmanship within specified warranty period.

1. Failures include, but are not limited to, the following:

a. Structural failures including detachment of components from each other or from the substrates, delamination, and permanent deformation beyond normal use.
b. Deterioration of metals, metal finishes, plastics, and other materials beyond normal use.

2. Warranty Period: Five years from date of Substantial Completion.

PART 2 - PRODUCTS

2.1 MANUFACTURERS

A. Source Limitations: Obtain wall-protection products from single source from single manufacturer.

2.2 PERFORMANCE REQUIREMENTS

A. Surface Burning Characteristics: Comply with ASTM E 84 or UL 723; testing by a qualified testing agency. Identify products with appropriate markings of applicable testing agency.

1. Flame-Spread Index: 25 or less.
2. Smoke-Developed Index: 450 or less.

B. Regulatory Requirements: Comply with applicable provisions in the U.S. Architectural & Transportation Barriers Compliance Board's ADA-ABA Accessibility Guidelines for Buildings and Facilities and ICC A117.1.

2.3 CORNER GUARDS

A. Surface-Mounted, Opaque-Plastic Corner Guards: Fabricated as one piece from PVC plastic, PVC-free plastic, acrylic-modified vinyl sheet, oropaque polycarbonate sheet; with formed edges; fabricated with 90- or 135-degree turn to match wall condition.

1. Basis-of-Design: Subject to compliance with requirements, provide the following products by Construction Specialties, Inc., or a comparable product as approved by the Architect:

    a. Acrovyn Corner Guards FS-20N: Provide where indicated.
    b. Acrovyn Corner Guards FS-20RN: Provide where fire rating is required.

2. Wing Size: 3 inches by 3 inches.
3. Corner Radius: 1/4 inch.
4. Mounting: Countersunk screws through factory-drilled mounting holes.
5. Color and Texture: As selected by Architect from manufacturer's full range.

B. Surface-Mounted, Metal Corner Guards Insert drawing designation: Fabricated as one piece from formed or extruded metal with formed edges; with 90- or 135-degree turn to match wall condition.

1. Basis-of-Design: Subject to compliance with requirements, provide the following products by Construction Specialties, Inc., or a comparable product as approved by the Architect:

    a. Acrovyn Corner Guards CO-8: Provide where indicated.
    b. Acrovyn Corner Guards SCO-8: Provide where indicated.

2. Material: Stainless-steel sheet, Type 304.

    a. Thickness: As selected by the Architect from the manufacturer's full range.
    b. Finish: Directional satin, No. 4.

3. Wing Size: Nominal 3-1/2 by 3-1/2 inches.
4. Corner Radius: 3/16 inch.
5. Mounting: Adhesive.

2.4 MATERIALS

A. Plastic Materials: Chemical- and stain-resistant, high-impact-resistant plastic with integral color throughout; extruded and sheet material as required, thickness as indicated.

B. Polycarbonate Plastic Sheet: ASTM D 6098, S-PC01, Class 1 or Class 2, abrasion resistant; with a minimum impact-resistance rating of 15 ft.-lbf/in. of notch when tested according to ASTM D 256, Test Method A.

C. Fasteners: Aluminum, nonmagnetic stainless-steel, or other noncorrosive metal screws, bolts, and other fasteners compatible with items being fastened. Use security-type fasteners where exposed to view.

D. Adhesive: As recommended by protection product manufacturer.

2.5 FABRICATION

A. Fabricate wall protection according to requirements indicated for design, performance, dimensions, and member sizes, including thicknesses of components.

B. Factory Assembly: Assemble components in factory to greatest extent possible to minimize field assembly. Disassemble only as necessary for shipping and handling.

C. Quality: Fabricate components with uniformly tight seams and joints and with exposed edges rolled. Provide surfaces free of wrinkles, chips, dents, uneven coloration, and other imperfections. Fabricate members and fittings to produce flush, smooth, and rigid hairline joints.

2.6 FINISHES

A. Protect finishes on exposed surfaces from damage by applying a strippable, temporary protective covering before shipping.

B. Appearance of Finished Work: Noticeable variations in same piece are not acceptable. Variations in appearance of adjoining components are acceptable if they are within the range of approved Samples and are assembled or installed to minimize contrast.

PART 3 - EXECUTION

3.1 EXAMINATION

A. Examine substrates and wall areas, with Installer present, for compliance with requirements for installation tolerances and other conditions affecting performance of the Work.

B. Examine walls to which wall protection will be attached for blocking, grounds, and other solid backing that have been installed in the locations required for secure attachment of support fasteners.

1. For wall protection attached with adhesive, verify compatibility with and suitability of substrates, including compatibility with existing finishes or primers.

C. Proceed with installation only after unsatisfactory conditions have been corrected.

3.2 PREPARATION

A. Complete finishing operations, including painting, before installing wall protection.

B. Before installation, clean substrate to remove dust, debris, and loose particles.

3.3 INSTALLATION

A. Installation Quality: Install wall protection according to manufacturer's written instructions, level, plumb, and true to line without distortions. Do not use materials with chips, cracks, voids, stains, or other defects that might be visible in the finished Work.

B. Mounting Heights: Install wall protection in locations and at mounting heights indicated on Drawings.

C. Accessories: Provide splices, mounting hardware, anchors, trim, joint moldings, and other accessories required for a complete installation.

1. Provide anchoring devices and suitable locations to withstand imposed loads.
2. Where splices occur in horizontal runs of more than 20 feet, splice aluminum retainers and plastic covers at different locations along the run, but no closer than 12 inches apart.
3. Adjust caps as required to ensure tight seams.

3.4 CLEANING

A. Immediately after completion of installation, clean plastic covers and accessories using a standard ammonia-based household cleaning agent.

B. Remove excess adhesive using methods and materials recommended in writing by manufacturer.

END OF SECTION 102600

SECTION 102800 - TOILET AND BATH,ACCESSORIES

PART 1 - GENERAL

1.1 RELATED DOCUMENTS

A. Drawings and general provisions of the Contract, including General and Supplementary Conditions and Division 01 Specification Sections, apply to this Section.

1.2 SUMMARY

A. Section Includes:

1. Public-use washroom accessories.
2. Private-use bathroom accessories.
3. Warm-air dryers.
4. Custodial accessories.

B. Related Requirements:

1. Section 088300 "Mirrors" for frameless mirrors.

1.3 COORDINATION

A. Coordinate accessory locations with other work to prevent interference with clearances required for access by people with disabilities, and for proper installation, adjustment, operation, cleaning, and servicing of accessories.

B. Deliver inserts and anchoring devices set into concrete or masonry as required to prevent delaying the Work.

1.4 ACTION SUBMITTALS

A. Product Data: For each type of product.

1. Include construction details, material descriptions, dimensions of individual components and profiles, and finishes.
2. Include anchoring and mounting requirements, including requirements for cutouts in other work and substrate preparation.
3. Include electrical characteristics.

B. Samples: Full size, for each exposed product and for each finish specified.

1. Approved full-size Samples will be returned and may be used in the Work.

C. Product Schedule: Indicating types, quantities, sizes, and installation locations by room of each accessory required.

1. Identify locations using room designations indicated.
2. Identify accessories using designations indicated.

1.5 INFORMATIONAL SUBMITTALS

A. Sample Warranty: For manufacturer's special warranty.

1.6 CLOSEOUT SUBMITTALS

A. Maintenance Data: For accessories to include in maintenance manuals.

1.7 WARRANTY

A. Manufacturer's Special Warranty for Mirrors: Manufacturer agrees to repair or replace mirrors that fail in materials or workmanship within specified warranty period.

1. Failures include, but are not limited to, visible silver spoilage defects.
2. Warranty Period: 15 years from date of Substantial Completion.

PART 2 - PRODUCTS

2.1 PERFORMANCE REQUIREMENTS

A. Electrical Components, Devices, and Accessories: Listed and labeled as defined in NFPA 70, by a qualified testing agency, and marked for intended location and application.

2.2 PUBLIC-USE WASHROOM ACCESSORIES

A. Basis-of-Design: Subject to compliance with requirements, provide products indicated or comparable products by one of the following as approved by the Architect:

1. A & J Washroom Accessories, Inc.
2. American Specialties, Inc.
3. Bobrick Washroom Equipment, Inc.
4. Bradley Corporation.
5. GAMCO Specialty Accessories; a division of Bobrick Washroom Equipment, Inc.
6. Tubular Specialties Manufacturing, Inc.

B. Toilet Tissue (Roll) Dispenser:

1. Basis-of-Design Product: Subject to compliance with requirements, provide product selected by the Architect.
2. Description: Double-roll dispenser.
3. Mounting: Surface mounted.
4. Operation: Noncontrol delivery with theft-resistant spindle.
5. Capacity: Designed for 4-1/2- or 5-inch- diameter tissue rolls.
6. Material and Finish: Stainless steel, No. 4 finish (satin).

C. Combination Towel (Folded) Dispenser/Waste Receptacle:

1. Basis-of-Design Product: Bobrick B-369 ClassicSeries® Recessed Paper Towel Dispenser/Waste Receptacle.
2. Description: Combination unit for dispensing C-fold or multifold towels, with removable waste receptacle.
3. Mounting: Recessed.
4. Minimum Towel-Dispenser Capacity: 350 C-fold or 475 multifold paper towels.
5. Minimum Waste-Receptacle Capacity: 2 gal.
6. Material and Finish: Stainless steel, No. 4 finish (satin).
7. Liner: Reusable, vinyl waste-receptacle liner.
8. Lockset: Tumbler type for towel-dispenser compartment.

D. Automatic Liquid-Soap Dispenser:

1. Basis-of-Design Product: Sloan ESD-200 Optima® Deck-Mounted Liquid Soap Dispenser.

E. Grab Bar:

1. Basis-of-Design Product: Subject to compliance with requirements, provide product selected by the Architect.
2. Mounting: Flanges with concealed fasteners.
3. Material: Stainless steel, 0.05 inch thick.

    a. Finish: Smooth, No. 4 finish (satin).

4. Outside Diameter: 1-1/4 inches.
5. Configuration and Length: As indicated on Drawings.

F. Sanitary-Napkin Disposal Unit: Surface-Mounted.

1. Basis-of-Design Product: Bradley Corp. Model 4722-15 Standard Series Napkin Disposal, Surface-Mounted.
2. Mounting: Surface.
3. Door or Cover: Self-closing, disposal-opening cover and hinged face panel with tumbler lockset.
4. Receptacle: Removable.
5. Material and Finish: Stainless steel, No. 4 finish (satin).

G. Sanitary-Napkin Disposal Unit: Partition-Mounted.

1. Basis-of-Design Product: Bradley Corp. Model 4721-15 Standard Series Napkin Disposal, Partition-Mounted.
2. Mounting: Partition.
3. Door or Cover: Self-closing, disposal-opening cover and hinged face panel with tumbler lockset.
4. Receptacle: Removable.
5. Material and Finish: Stainless steel, No. 4 finish (satin).

H. Mirror Unit:

1. Basis-of-Design Product: Bobrick B-290 Glass Mirror with Stainless Steel Angle Frame.
2. Size: As indicated on Drawings.

I. Coat Hook:

1. Basis-of-Design Product: Bradley Corp. Model 915 Chrome-Plated Hook and Bumper.
2. Description: Single-prong unit.
3. Material and Finish: Chrome-plated brass.

2.3 PRIVATE-USE BATHROOM ACCESSORIES

A. Manufacturers: Subject to compliance with requirements, provide products by one of the following:

1. Basco, Inc.
2. Bobrick Washroom Equipment, Inc.
3. Franklin Brass by Liberty Hardware Manufacturing Corporation; a Masco company.
4. GAMCO Specialty Accessories; a division of Bobrick Washroom Equipment, Inc.
5. Ginger; a Masco company.
6. Seachrome Corporation.
7. Tubular Specialties Manufacturing, Inc.

B. Toilet Tissue Dispenser:

1. Basis-of-Design Product: Subject to compliance with requirements, provide product selected by the Architect.
2. Description: Single-roll dispenser.
3. Mounting: Surface mounted.
4. Capacity: Designed for 4-1/2- or 5-inch-diameter tissue rolls.
5. Material and Finish: Stainless steel, No. 4 finish (satin).

C. Shower Curtain Rod: Provide curved shower rod unless otherwise indicated.

1. Basis-of-Design Product: Subject to compliance with requirements, provide product selected by the Architect.
2. Outside Diameter: 1-1/4 inches.
3. Mounting: Flanges with concealed fasteners.

4. Rod Material and Finish: Stainless steel, No. 4 finish (satin).
5. Flange Material and Finish: Stainless steel, No. 4 finish (satin).
6. Accessories: Integral chrome-plated brass glide hooks.

D. Robe Hook:

1. Basis-of-Design Product: Subject to compliance with requirements, provide product selected by the Architect.
2. Description: Double-prong unit.
3. Material and Finish: Stainless steel, No. 4 finish (satin).

E. Towel Bar:

1. Basis-of-Design Product: Subject to compliance with requirements, provide product selected by the Architect.
2. Description: 3/4-inch-round tube with circular end brackets.
3. Mounting: Flanges with concealed fasteners.
4. Length: 24 inches .
5. Material and Finish: Stainless steel, No. 4 finish (satin).

F. Towel Ring:

1. Basis-of-Design Product: Subject to compliance with requirements, provide product selected by the Architect.
2. Description: Pin projecting approximately 2-1/2 inches from wall with circular ring.
3. Pin Material and Finish: Stainless steel, No. 4 finish (satin).
4. Ring Material and Finish: Matching pin.

2.4 WARM-AIR DRYERS

A. Source Limitations: Obtain warm-air dryers from single source from single manufacturer.

B. High-Speed Warm-Air Dryer:

1. Manufacturers: Subject to compliance with requirements, provide products by one of the following:

   a. AJW Architectural Products.
   b. American Dryer, Inc.
   c. American Specialties, Inc.
   d. Bradley Corporation.
   e. Excel Dryer Inc.
   f. GAMCO Specialty Accessories; a division of Bobrick.
   g. Saniflow Hand Dryer Corporation.
   h. Sloan Valve Company.
   i. World Dryer Corporation.

2. Description: High-speed, warm-air hand dryer for rapid hand drying.
3. Mounting: Surface mounted.

4. Operation: Electronic-sensor activated with operation time of 10 to 20 seconds.
5. Cover Material and Finish: As selected by the Architect from the manufacturer's full range.
6. Electrical Requirements: As selected by the Architect from the manufacturer's full range.

2.5 CUSTODIAL ACCESSORIES

A. Manufacturers: Subject to compliance with requirements, provide products by one of the following:

1. A & J Washroom Accessories, Inc.
2. American Specialties, Inc.
3. Bobrick Washroom Equipment, Inc.
4. Bradley Corporation.
5. GAMCO Specialty Accessories; a division of Bobrick Washroom Equipment, Inc.
6. Tubular Specialties Manufacturing, Inc.

B. Mop and Broom Holder:

1. Basis-of-Design Product: Subject to compliance with requirements, provide product selected by the Architect.
2. Description: Unit with shelf, hooks, holders, and rod suspended beneath shelf.
3. Length: 36 inches.
4. Hooks: Three or four.
5. Mop/Broom Holders: Three or four, spring-loaded, rubber hat, cam type.
6. Material and Finish: Stainless steel, No. 4 finish (satin).

    a. Shelf: Not less than nominal 0.05-inch-thick stainless steel.
    b. Rod: Approximately 1/4-inch-diameter stainless steel.

C. Paper Towel (Roll) Dispenser:

1. Basis-of-Design Product: Subject to compliance with requirements, provide product selected by the Architect.
2. Description: Lever-actuated mechanism permits controlled delivery of paper rolls in preset lengths per stroke.
3. Mounting: Surface mounted.
4. Minimum Capacity: 8-inch-wide, 800-foot-long roll.
5. Material and Finish: Stainless steel, No. 4 finish (satin).
6. Lockset: Tumbler type.

D. Liquid-Soap Dispenser:

1. Basis-of-Design Product: Subject to compliance with requirements, provide product selected by the Architect.
2. Description: Designed for dispensing soap in liquid or lotion form.
3. Mounting: Vertically oriented, surface mounted, unless otherwise indicated.
4. Capacity: 40 oz.
5. Materials: Stainless steel, No. 4 finish (satin).

6. Lockset: Tumbler type.
7. Refill Indicator: Window type.

2.6 MATERIALS

A. Stainless Steel: ASTM A 666, Type 304, 0.031-inch minimum nominal thickness unless otherwise indicated.

B. Brass: ASTM B 19, flat products; ASTM B 16/B 16M, rods, shapes, forgings, and flat products with finished edges; or ASTM B 30, castings.

C. Steel Sheet: ASTM A 1008/A 1008M, Designation CS (cold rolled, commercial steel), 0.036-inch minimum nominal thickness.

D. Galvanized-Steel Sheet: ASTM A 653/A 653M, with G60 hot-dip zinc coating.

E. Galvanized-Steel Mounting Devices: ASTM A 153/A 153M, hot-dip galvanized after fabrication.

F. Fasteners: Screws, bolts, and other devices of same material as accessory unit and tamper-and-theft resistant where exposed, and of galvanized steel where concealed.

G. Chrome Plating: ASTM B 456, Service Condition Number SC 2 (moderate service).

H. Mirrors: ASTM C 1503, Mirror Glazing Quality, clear-glass mirrors, nominal 6.0 mm thick.

2.7 FABRICATION

A. General: Fabricate units with tight seams and joints, and exposed edges rolled. Hang doors and access panels with full-length, continuous hinges. Equip units for concealed anchorage and with corrosion-resistant backing plates.

B. Keys: Provide universal keys for internal access to accessories for servicing and resupplying. Provide minimum of six keys to Owner's representative.

PART 3 - EXECUTION

3.1 INSTALLATION

A. Install accessories according to manufacturers' written instructions, using fasteners appropriate to substrate indicated and recommended by unit manufacturer. Install units level, plumb, and firmly anchored in locations and at heights indicated.

B. Grab Bars: Install to withstand a downward load of at least 250 lbf, when tested according to ASTM F 446.

3.2 ADJUSTING AND CLEANING

A. Adjust accessories for unencumbered, smooth operation. Replace damaged or defective items.

B. Remove temporary labels and protective coatings.

C. Clean and polish exposed surfaces according to manufacturer's written instructions.

END OF SECTION 102800

SECTION 104413 - FIRE PROTECTION CABINETS

PART 1 - GENERAL

1.1 RELATED DOCUMENTS

A. Drawings and general provisions of the Contract, including General and Supplementary Conditions and Division 01 Specification Sections, apply to this Section.

1.2 SUMMARY

A. Section Includes:

1. Fire-protection cabinets for the following:

a. Portable fire extinguishers.

B. Related Requirements:

1. Section 104416 "Fire Extinguishers."

1.3 ACTION SUBMITTALS

A. Product Data: For each type of product. Show door hardware, cabinet type, trim style, and panel style. Include roughing-in dimensions and details showing recessed-, semirecessed-, or surface-mounting method and relationships of box and trim to surrounding construction.

B. Shop Drawings: For fire-protection cabinets. Include plans, elevations, sections, details, and attachments to other work.

C. Samples: For each type of exposed finish required.

D. Product Schedule: For fire-protection cabinets. Indicate whether recessed, semirecessed, or surface mounted. Coordinate final fire-protection cabinet schedule with fire-extinguisher schedule to ensure proper fit and function.

1.4 CLOSEOUT SUBMITTALS

A. Maintenance Data: For fire-protection cabinets to include in maintenance manuals.

1.5 COORDINATION

A. Coordinate size of fire-protection cabinets to ensure that type and capacity of fire extinguishers indicated are accommodated.

B. Coordinate sizes and locations of fire-protection cabinets with wall depths.

PART 2 - PRODUCTS

2.1 PERFORMANCE REQUIREMENTS

A. Fire-Rated Fire-Protection Cabinets: Listed and labeled to comply with requirements in ASTM E 814 for fire-resistance rating of walls where they are installed.

B. Electrical Components, Devices, and Accessories: Listed and labeled as defined in NFPA 70, by a qualified testing agency, and marked for intended location and application.

2.2 FIRE-PROTECTION CABINET

A. Cabinet Type: Suitable for fire extinguisher.

1. Basis-of-Design: Subject to compliance with requirements, provide product indicated below or a comparable product as approved by the Architect:

a. Manufacturer: JL Industries, Inc. a division of Activar Construction Products Group.
b. Product: Academy Series Aluminum Fire Extinguisher Cabinet.
c. Style: 1027V10 with a rolled edge.

A. Cabinet Construction: Nonrated and fire rated, matching rating of substrate wall.

1. Fire-Rated Cabinets: Construct fire-rated cabinets with double walls fabricated from 0.043-inch-thick cold-rolled steel sheet lined with minimum 5/8-inch-thick fire-barrier material. Provide factory-drilled mounting holes.

B. Cabinet Material: Aluminum sheet.

1. Shelf: Same metal and finish as cabinet.

C. Semirecessed Cabinet: One-piece combination trim and perimeter door frame overlapping surrounding wall surface with exposed trim face and wall return at outer edge (backbend).

1. Rolled-Edge Trim: 3-inch backbend depth.

D. Cabinet Trim Material: Same material and finish as door.

E. Door Material: Aluminum sheet.

F. Door Style: Vertical duo panel with frame.

G. Door Glazing: Acrylic sheet.

1. Acrylic Sheet Color: Clear transparent acrylic sheet.

H. Door Hardware: Manufacturer's standard door-operating hardware of proper type for cabinet type, trim style, and door material and style indicated.

1. Provide manufacturer's standard.

I. Accessories:

1. Mounting Bracket: Manufacturer's standard steel, designed to secure fire extinguisher to fire-protection cabinet, of sizes required for types and capacities of fire extinguishers indicated, with plated or baked-enamel finish.
2. Door Lock: Cam lock that allows door to be opened during emergency by pulling sharply on door handle.
3. Identification: Lettering complying with authorities having jurisdiction for letter style, size, spacing, and location. Locate as indicated.

a. Identify fire extinguisher in fire-protection cabinet with the words "FIRE EXTINGUISHER."

1) Location: Applied to cabinet glazing.
2) Application Process: Silk-screened.
3) Lettering Color: White.
4) Orientation: Vertical.

4. Alarm: Manufacturer's standard alarm that actuates when fire-protection cabinet door is opened and that is powered by batteries or low voltage, complete with transformer.

J. Materials:

1. Aluminum: ASTM B 221, with strength and durability characteristics of not less than Alloy 6063-T5 for aluminum sheet. ASTM B 221 for extruded shapes.

a. Finish: Baked enamel or powder coat.
b. Color: As selected by the Architect from the manufacturer's full range.

2. Transparent Acrylic Sheet: ASTM D 4802, Category A-1 (cell-cast sheet), manufacturer’s standard thickness, with Finish 1 (smooth or polished).

2.3 FABRICATION

A. Fire-Protection Cabinets: Provide manufacturer's standard box (tub) with trim, frame, door, and hardware to suit cabinet type, trim style, and door style indicated.

1. Weld joints and grind smooth.

2. Provide factory-drilled mounting holes.
3. Prepare doors and frames to receive locks.
4. Install door locks at factory.

B. Cabinet Doors: Fabricate doors according to manufacturer's standards, from materials indicated and coordinated with cabinet types and trim styles.

1. Fabricate door frames with tubular stiles and rails and hollow-metal design, minimum 1/2 inch thick.
2. Miter and weld perimeter door frames.

C. Cabinet Trim: Fabricate cabinet trim in one piece with corners mitered, welded, and ground smooth.

2.4 GENERAL FINISH REQUIREMENTS

A. Comply with NAAMM's AMP 500, "Metal Finishes Manual for Architectural and Metal Products," for recommendations for applying and designating finishes.

B. Protect mechanical finishes on exposed surfaces of fire-protection cabinets from damage by applying a strippable, temporary protective covering before shipping.

C. Finish fire-protection cabinets after assembly.

D. Appearance of Finished Work: Noticeable variations in same piece are not acceptable. Variations in appearance of adjoining components are acceptable if they are within the range of approved Samples and are assembled or installed to minimize contrast.

PART 3 - EXECUTION

3.1 EXAMINATION

A. Examine walls and partitions for suitable framing depth and blocking where semirecessed cabinets will be installed.

B. Proceed with installation only after unsatisfactory conditions have been corrected.

3.2 PREPARATION

A. Prepare recesses for semirecessed fire-protection cabinets as required by type and size of cabinet and trim style.

3.3 INSTALLATION

A. General: Install fire-protection cabinets in locations and at mounting heights indicated or, if not indicated, at heights acceptable to authorities having jurisdiction.

B. Fire-Protection Cabinets: Fasten cabinets to structure, square and plumb.

1. Unless otherwise indicated, provide recessed fire-protection cabinets. If wall thickness is inadequate for recessed cabinets, provide semirecessed fire-protection cabinets.
2. Provide inside latch and lock for break-glass panels.
3. Fasten mounting brackets to inside surface of fire-protection cabinets, square and plumb.

3.4 ADJUSTING AND CLEANING

A. Remove temporary protective coverings and strippable films, if any, as fire-protection cabinets are installed unless otherwise indicated in manufacturer's written installation instructions.

B. Adjust fire-protection cabinet doors to operate easily without binding. Verify that integral locking devices operate properly.

C. On completion of fire-protection cabinet installation, clean interior and exterior surfaces as recommended by manufacturer.

D. Touch up marred finishes, or replace fire-protection cabinets that cannot be restored to factory-finished appearance. Use only materials and procedures recommended or furnished by fire-protection cabinet and mounting bracket manufacturers.

E. Replace fire-protection cabinets that have been damaged or have deteriorated beyond successful repair by finish touchup or similar minor repair procedures.

END OF SECTION 104413

SECTION 104416 - FIRE EXTINGUISHERS

PART 1 - GENERAL

1.1 RELATED DOCUMENTS

A. Drawings and general provisions of the Contract, including General and Supplementary Conditions and Division 01 Specification Sections, apply to this Section.

1.2 SUMMARY

A. Section includes portable, hand-carried fire extinguishers and mounting brackets for fire extinguishers.

B. Related Requirements:

1. Section 104413 "Fire Protection Cabinets."

1.3 ACTION SUBMITTALS

A. Product Data: For each type of product. Include rating and classification, material descriptions, dimensions of individual components and profiles, and finishes for fire extinguisher and mounting brackets.

B. Product Schedule: For fire extinguishers. Coordinate final fire-extinguisher schedule with fire-protection cabinet schedule to ensure proper fit and function.

1.4 INFORMATIONAL SUBMITTALS

A. Warranty: Sample of special warranty.

1.5 CLOSEOUT SUBMITTALS

A. Operation and Maintenance Data: For fire extinguishers to include in maintenance manuals.

1.6 COORDINATION

A. Coordinate type and capacity of fire extinguishers with fire-protection cabinets to ensure fit and function.

1.7 WARRANTY

A. Special Warranty: Manufacturer's standard form in which manufacturer agrees to repair or replace fire extinguishers that fail in materials or workmanship within specified warranty period.

1. Failures include, but are not limited to, the following:

a. Failure of hydrostatic test according to NFPA 10.
b. Faulty operation of valves or release levers.

2. Warranty Period: Six years from date of Substantial Completion.

PART 2 - PRODUCTS

2.1 PERFORMANCE REQUIREMENTS

A. NFPA Compliance: Fabricate and label fire extinguishers to comply with NFPA 10, "Portable Fire Extinguishers."

B. Fire Extinguishers: Listed and labeled for type, rating, and classification by an independent testing agency acceptable to authorities having jurisdiction.

1. Provide fire extinguishers approved, listed, and labeled by FM Global.

2.2 PORTABLE, HAND-CARRIED FIRE EXTINGUISHERS

A. Fire Extinguishers: Type, size, and capacity for each fire-protection cabinet and mounting bracket indicated.

1. Basis-of-Design: Subject to compliance with requirements, provide product indicated below or a comparable product as approved by the Architect:

a. Manufacturer: JL Industries, Inc. a division of Activar Construction Products Group.
b. Extinguisher: Cosmic 10E.

2. Valves: Manufacturer's standard.
3. Handles and Levers: Manufacturer's standard.
4. Instruction Labels: Include pictorial marking system complying with NFPA 10, Appendix B, and bar coding for documenting fire-extinguisher location, inspections, maintenance, and recharging.

B. Multipurpose Dry-Chemical Type in Steel Container: UL-rated 4-A:60-B:C, 10-lb nominal capacity, with monoammonium phosphate-based dry chemical in enameled-steel container.

2.3 MOUNTING BRACKETS

A. Mounting Brackets: Manufacturer's standard galvanized steel, designed to secure fire extinguisher to wall or structure, of sizes required for types and capacities of fire extinguishers indicated, with plated or red or black baked-enamel finish.

1. Manufacturers: Subject to compliance with requirements, provide products by one of the following:

a. Amerex Corporation.
b. Ansul Incorporated; Tyco International.
c. Badger Fire Protection.
d. Buckeye Fire Equipment Company.
e. Fire End & Croker Corporation.
f. Guardian Fire Equipment, Inc.
g. JL Industries, Inc.; a division of the Activar Construction Products Group.
h. Larsens Manufacturing Company.
i. Nystrom, Inc.
j. Potter Roemer LLC.
k. Strike First Corporation of America.

B. Identification: Lettering complying with authorities having jurisdiction for letter style, size, spacing, and location. Locate as indicated by Architect.

1. Identify bracket-mounted fire extinguishers with the words "FIRE EXTINGUISHER" in red letter decals applied to mounting surface.

a. Orientation: Vertical.

PART 3 - EXECUTION

3.1 EXAMINATION

A. Examine fire extinguishers for proper charging and tagging.

1. Remove and replace damaged, defective, or undercharged fire extinguishers.

B. Proceed with installation only after unsatisfactory conditions have been corrected.

3.2 INSTALLATION

A. General: Install fire extinguishers and mounting brackets in locations indicated and in compliance with requirements of authorities having jurisdiction.

1. Mounting Brackets: 54 inches above finished floor to top of fire extinguisher.

B. Mounting Brackets: Fasten mounting brackets to surfaces, square and plumb, at locations indicated.

END OF SECTION 104416

SECTION 105126 - PLASTIC LOCKERS

PART 1 - GENERAL

1.1 RELATED DOCUMENTS

A. Drawings and general provisions of the Contract, including General and Supplementary Conditions and Division 01 Specification Sections, apply to this Section.

1.2 SUMMARY

A. Section includes plastic lockers and benches.

1.3 ACTION SUBMITTALS

A. Product Data: For each type of plastic locker.

1. Include construction details, material descriptions, dimensions of individual components and profiles, and finishes for each type of locker and bench.

B. Shop Drawings: For plastic lockers.

1. Include plans, elevations, sections, details, and attachments to other work.
2. Show locations and sizes of furring, blocking, and hanging strips, including concealed blocking and reinforcement specified in other Sections.
3. Show locations and sizes of cutouts and holes for items installed in lockers.
4. Show locker fillers, trim, base, sloping tops, and accessories.
5. Show locker numbering sequence.

C. Samples: For the following:

1. Each type of locker material indicated.
2. Exposed cabinet hardware and accessories, one unit for each type and finish.

1.4 INFORMATIONAL SUBMITTALS

A. Qualification Data: For qualified Installer.

B. Sample Warranty: For special warranty.

1.5 CLOSEOUT SUBMITTALS

A. Maintenance Data: For adjusting, repairing, and replacing locker doors and latching mechanisms to include in maintenance manuals.

1.6 MAINTENANCE MATERIAL SUBMITTALS

A. Furnish extra materials that match products installed and that are packaged with protective covering for storage and identified with labels describing contents.

1. Full-size locker doors, complete with specified door hardware. Furnish no fewer than five doors of each type and color installed.
2. Full-size units of the following locker hardware items equal to 10 percent of amount installed for each type and finish installed, but no fewer than five units:

a. Hinges.
b. Pulls.
c. Shelf rests.
d. Cylinder locks.

1.7 DELIVERY, STORAGE, AND HANDLING

A. Do not deliver lockers until painting and similar operations that could damage lockers have been completed in installation areas. If lockers must be stored in other-than-installation areas, store only in areas where environmental conditions are the same as those in final installation location, and comply with requirements specified in "Field Conditions" Article.

B. Deliver combination control charts to Owner by registered mail or overnight package service.

1.8 FIELD CONDITIONS

A. Environmental Limitations: Do not deliver or install lockers until building is enclosed, wet work is complete, and HVAC system is operating and maintaining temperature between 60 and 90 deg F and relative humidity between 43 and 70 percent during the remainder of the construction period.

B. Field Measurements: Where lockers are indicated to fit to other construction, verify dimensions of other construction by field measurements before fabrication, and indicate measurements on Shop Drawings. Coordinate fabrication schedule with construction progress to avoid delaying the Work.

1. Locate concealed framing, blocking, and reinforcements that support lockers by field measurements before being enclosed, and indicate measurements on Shop Drawings.

C. Established Dimensions: Where lockers are indicated to fit to other construction, establish dimensions for areas where lockers are to fit. Provide allowance for trimming at site, and coordinate construction to ensure that actual dimensions correspond to established dimensions.

1.9 COORDINATION

A. Coordinate sizes and locations of concealed wood support bases.

1. Requirements are specified in Section 061053 " Miscellaneous Rough Carpentry."

B. Coordinate sizes and locations of framing, blocking, furring, reinforcements, and other related units of work specified in other Sections to ensure that lockers can be supported and installed as indicated.

C. Hardware Coordination: Distribute copies of approved hardware schedule specified in Section 087100 "Door Hardware" to fabricator of lockers; coordinate Shop Drawings and fabrication with hardware requirements.

1.10 WARRANTY

A. Special Warranty: Manufacturer agrees to repair or replace components of lockers that fail in materials or workmanship within specified warranty period.

1. Failures include, but are not limited to, the following:

a. Structural failures.
b. Faulty operation of locks or hardware.
c. Deterioration of materials beyond normal use.

2. Warranty Period: One year from date of Substantial Completion.

B. Manufacturer’s Limited Warranty: Manufacturer agrees to repair or replace any of the plastic components of lockers that delaminate or break under normal use.

1. Warranty Period: 20 years from date of Substantial Completion.

PART 2 - PRODUCTS

2.1 PERFORMANCE REQUIREMENTS

A. Accessibility Requirements: For lockers indicated to be accessible, comply with applicable provisions in the U.S. Architectural & Transportation Barriers Compliance Board's ADA-ABA Accessibility Guidelines and ICC A117.1.

2.2 PLASTIC LOCKERS

A. Basis-of-Design: Subject to compliance with requirements, provide product indicated below or a comparable product as approved by the Architect:

1. General Partitions; Solid Plastic HGPE Lockers.

B. Locker Body: Solid, high-density polyethylene (HDPE) panel material, not less than 1 inch thick, seamless, with eased edges, and with homogenous color and pattern throughout thickness of material.

1. Side Panels: 3/8 inch.
2. Back Panel: 3/8 inch.
3. Top Panel: 3/8 inch.
4. Bottom Panel: 3/8 inch.

C. Plastic Doors: Solid, high-density polyethylene (HDPE) panel material, not less than 1 inch thick, seamless, with eased edges, and with homogenous color and pattern throughout thickness of material.

1. Thickness: 1/2 inch.

D. End Panels: Match style, material, construction, and finish of plastic doors.

E. Shelves: Solid, high-density polyethylene (HDPE) panel material, not less than 1 inch thick, seamless, with eased edges, and with homogenous color and pattern throughout thickness of material.

1. Thickness: 3/8 inch.

F. Corners and Filler Panels: Match style, material, construction, and finish of plastic doors.

G. Continuous Finish Base: Plastic panel that matches door faces; fabricated in lengths as long as practical to enclose base and base ends of lockers.

H. Continuously Sloping Tops: Plastic panel that matches door faces for installation over lockers with separate flat tops. Fabricate tops in lengths as long as practical, without visible fasteners at splice locations. Provide fasteners, supports, and closures, as follows:

1. Closures: Vertical-end type.
2. Sloping-top corner fillers, mitered.

I. Plastic Colors and Finishes:

1. As selected by Architect from plastic manufacturer's full range of colors.

2.3 MATERIALS

A. Furring, Blocking, Shims, and Hanging Strips: Softwood or hardwood lumber, kiln dried to less than 15 percent moisture content.

B. Anchors: Select material, type, size, and finish required for each substrate for secure anchorage. Provide metal expansion sleeves or expansion bolts for post-installed anchors. Use nonferrous-metal or hot-dip galvanized anchors and inserts at inside face of exterior walls and at floors.

C. Wood Support Base: 2-by-4-inch nominal-size lumber treated with manufacturer's standard preservative-treatment, nonpressure process.

2.4 HARDWARE

A. General: Provide manufacturer's standard locker hardware complying with the requirements in this Section.

B. Cam Padlock Hasp: Surface mounted, steel; finished to match other locker hardware.

C. Digital Keypad Locks: Battery-powered electronic keypad with reprogrammable manager and owner codes that override access. Three consecutive incorrect code entries shall disable lock for three minutes.

1. Designed for shared or temporary access by multiple users, with user-defined code to lock and unlock. Provide LED indicator to show when lock is in use.

D. Hinges: Manufacturer's standard paired, self-closing type that can be adjusted to hold doors open at any angle up to 90 degrees, allowing emergency access by lifting door.

E. Door Pull: Manufacturer's standard unit at out-swinging doors that complies with regulatory requirements for accessibility. Provide units on both sides of doors at compartments designated as accessible.

F. Accessible Handle: Metal, fixed, graspable lever handle and rose trim; surface mounted.

G. Shelf Rests: BHMA A156.9, B04013.

H. Hooks: Manufacturer's standard, ball-pointed aluminum or steel; chrome finished. Attach hooks with at least two fasteners.

1. Provide hooks as indicated on Drawings.
2. Provide two single-prong wall hooks for each compartment of single-tier or double-tier lockers.

I. Exposed Hardware Finishes: Satin chrome unless otherwise indicated.

J. Exposed Hardware Finishes: Unless otherwise indicated, provide finish that complies with BHMA A156.18 for BHMA finish number indicated.

2.5 BENCHES

A. Pedestal-Leg Locker Benches: Bench supported by pedestal legs, minimum of two pedestals for each bench, with overall height of 17-1/2 inches measured from top of bench to floor, as follows:

1. Basis-of-Design: Subject to compliance with requirements, provide product indicated below or a comparable product as approved by the Architect:

a. Scranton Products; Tufftec Benches.
b. Color: As selected by the Architect from the manufacturer's full range.

2. Metal Pedestal Legs: 2-3/8-inch-diameter, aluminum round tube or pipe.
3. Bench Tops:

a. Plastic Top: Solid, high-density polyethylene (HDPE) panel material, not less than 1-1/2 inches thick, seamless, with eased edges, and with homogenous color and pattern throughout thickness of material.
b. Width: As selected by the Architect from the manufacturer's full range. Provide minimum 20-inch width where accessible benches are indicated.
c. Length: As selected by the Architect from the manufacturer's full range.

2.6 FABRICATION

A. Fabricate each locker with shelves, an individual door and frame, an individual top, a bottom, and a back, and with common intermediate uprights separating compartments.

1. Fabricate lockers to dimensions, profiles, and details indicated.

B. Fabricate components square, rigid, without warp, and with finished faces flat and free of scratches and chips. Accurately factory machine components for attachments. Make joints tight and true.

1. Fabricate lockers using manufacturer's standard construction.

C. Accessible Lockers: Fabricate as follows:

1. Locate bottom shelf no lower than 15 inches above the floor.
2. Where hooks, coat rods, or additional shelves are provided, locate no higher than 48 inches above the floor.

D. Venting: Fabricate lockers with space between doors and locker assembly of not less than 1/4 inch.

E. Complete fabrication, including assembly, finishing, and hardware application, to maximum extent possible, before shipment to Project site. Disassemble components only as necessary for shipment and installation. Where necessary for fitting at site, provide ample allowance for scribing, trimming, and fitting.

F. Shop cut openings, to maximum extent possible, to receive hardware, electrical work, and similar items. Locate openings accurately and use templates or roughing-in diagrams to produce accurately sized and shaped openings.

PART 3 - EXECUTION

3.1 EXAMINATION

A. Examine walls, floors, and support bases, with Installer present, for compliance with requirements for installation tolerances and other conditions affecting performance of the Work.

B. Verify that furring is attached to concrete and masonry walls that are to receive lockers.

C. Proceed with installation only after unsatisfactory conditions have been corrected.

3.2 PREPARATION

A. Condition lockers to average prevailing humidity conditions in installation areas before installation.

B. Before installing lockers, examine factory-fabricated work for completeness and complete work as required, including removal of packing.

3.3 INSTALLATION

A. Install wood support base with 1/2-inch-thick plywood top.

B. Install lockers level, plumb, and true; use concealed shims.

C. Connect groups of lockers together with manufacturer's standard fasteners, through predrilled holes, with no exposed fasteners on face frames. Fit lockers accurately together to form flush, tight, hairline joints.

D. Install lockers without distortion so doors and drawers fit openings properly and are accurately aligned. Adjust hardware to center doors and drawers in openings, providing unencumbered operation. Complete installation of hardware and accessory items as indicated.

1. Installation Tolerance: No more than 1/8 inch in 96-inch sag, bow, or other variation from a straight line. Shim as required with concealed shims.

E. Locker Anchorage to Wall: Fasten lockers through wood locker base, at ends, and not more than 36 inches o.c. with No. 8 flush-head wood screws sized for 1-inch penetration into wood base.

F. Locker Anchorage to Base: Fasten lockers through back, near top and bottom, and at ends with manufacturer’s recommended screws sized for 1-inch penetration into wood framing, blocking, or furring and spaced not more than 16 inches o.c.

G. Scribe and cut corner and filler panels to fit adjoining work using fasteners concealed where practical. Repair damaged finish at cuts.

H. Attach sloping-top units to lockers, with end panels covering exposed ends.

I. Anchor locker benches to floors.

1. Uniformly space pedestals not more than 72 inches apart; securely fasten pedestals to bench top and anchor to floor.

3.4 ADJUSTING, CLEANING, AND PROTECTION

A. Clean, lubricate, and adjust hardware. Adjust doors to operate easily without binding. Verify that integral locking devices operate properly.

B. Protect lockers from damage, abuse, dust, dirt, stain, or paint. Do not permit use during construction.

C. Touch up marred finishes, or replace lockers that cannot be restored to factory-finished appearance. Use only materials and procedures recommended or furnished by locker manufacturer.

END OF SECTION 105126

SECTION 107300 - ALUMINUM CANOPY

PART 1 - GENERAL

1.1 RELATED DOCUMENTS

A. Drawings and general provisions of the Contract, including General and Supplementary Conditions and Division 01 Specification Sections, apply to this Section.

1.2 SUMMARY

A. Section Includes: Design, fabrication, and installation of welded extruded aluminum walkway covers.

1.3 SYSTEM DESCRIPTION

A. Design Requirements:

1. This is a performance specification and canopy manufacturer shall be responsible for complete design and engineering required to meet specified performance requirements within physical and aesthetic requirements established.
2. Contract Documents establish aesthetic criteria and performance requirements for the canopy. Requirements specified or indicated by details are intended to establish basic dimensions of module and sight lines and profiles of members. Include modifications or additions required to meet specified requirements and maintain the visual design concept.
3. Contract Documents do not necessarily indicate or describe total work required for completion of Work. Furnish and install all items required for complete installation.
4. Dimension and profile adjustments may be made in proposed design in interest of fabrication or erection methods or techniques, weatherability factor, or ability of design to satisfy aesthetic and performance requirements, provided that design intent and intent of Contract Documents are maintained.

1.4 SUBMITTALS

A. Product Data: Manufacturer’s product information, specifications, and installation instructions for canopy components, accessories & finishes.

B. Shop Drawings: Show details of fabrication and installation, including plans, elevations, sections, details of components and attachments to other work. Distinguish between shop and field assembled work.

1. Prepared by manufacturer, not installer.
2. Include typical unit elevations at 1/2 inch scale and details at full scale.

3. Include details of provisions for assembly expansion and contraction and for draining water from the canopy.
4. Indicate where and how the system deviates from Contract Documents.
5. Shop drawings shall contain seal of a professional engineer currently registered in licensing jurisdiction of the project and a written statement that the canopy conforms to project requirements, applicable codes, and specified conditions.
6. Provide for information only, material properties and other information needed for structural analysis including computations, prepared, signed, or, and sealed by a professional engineer licensed to practice in the jurisdiction where the project is located.
7. Design Modifications: If design modifications are proposed to meet performance requirements and field conditions, submit design calculations and Shop Drawings. Do not adversely affect the appearance, durability, or strength of units when modifying details or materials and maintain the general design concept.

C. Samples:

1. Selection: Manufacturer's full range of colors for the finishes selected.
2. Verification: Provide pairs of samples of each aluminum type and color on 2-inch-square of each finish selected on the substrate specified.

D. Design Data: Design calculations bearing the seal of a Registered Professional Engineer, licensed in the state where the project is located. Design calculations shall state that the canopy system design complies with the wind requirements of ASCE 7, the stability criteria of applicable building code, and all other governing criteria.

E. Warranty: Sample of warranty.

1. Provide manufacturer's written warranty covering materials and installation (labor) stating obligations, remedies, limitations and exclusions.

F. Maintenance Data: To include in maintenance manuals.

1.5 QUALITY ASSURANCE

A. Installer Qualifications: Engage an experienced installer to perform canopy work who has a minimum of 5 years specialized experience in installing canopy similar to that required for this Project and who is acceptable to manufacturer of canopy system.

B. Delegated Engineering Professional Qualifications: Professional engineer legally authorized to practice in jurisdiction where Project is located and experienced in providing engineering services of kind indicated that have resulted in installation of products and systems similar to this Project and has a record of successful in-service performance.

C. Welding Qualifications: Qualify procedures and personnel according to the following:

1. AWS D1.2/D1.2M, "Structural Welding Code - Aluminum".

D. Preinstallation Conference: Before beginning canopy installation, conduct a preinstallation conference at the Project site with the canopy manufacturer, installer, and other interested

parties to review procedures, schedules, and coordination of the canopy installation with other elements of the Work.

1.6 PROJECT CONDITIONS

A. Field Measurements: Where products and systems are indicated to fit adjacent construction, verify dimensions by field measurements before fabrication and indicate measurements on Shop Drawings. Coordinate fabrication schedule with construction progress to avoid delaying the Work.

1.7 WARRANTY

A. General: Submit written warranty signed by authorized representatives of the canopy manufacturer and installer warranting that canopy system is free from defects in material and workmanship, and in conformance with the requirements of the Contract Documents and agreeing to repair or replace defective Work during a 3-year period following date of Substantial Completion.

1. Defects are defined to include but not limited to the following:

a. Deterioration of metals beyond normal weathering.
b. Failure of the system to meet performance requirements.
c. Failure of system to manage water.

B. Factory Applied Finish Warranty for High-Performance Fluoropolymer Finishes: Furnish manufacturer's written warranty signed by an authorized representative using manufacturer's standard form agreeing to repair finish or replace work which exhibits finish defects. "Defects" is defined to include but not limited to deterioration or failure of finish to perform as required.

1. Coverage includes, but is not limited to, the following:

a. Color fading more than 5 Hunter units when tested according to ASTM D 2244.
b. Chalking in excess of a No. 8 rating when tested according to ASTM D 4214.
c. Cracking, checking, peeling, or failure of paint to adhere to bare metal.

C. Warranty Period: Manufacturer shall warrant the installation to be free from finish defects for a period of 5 years from date of Substantial Completion.

PART 2 - PRODUCT

2.1 MANUFACTURERS

A. Basis-of-Design: Subject to compliance with requirements, provide product by Peachtree Protective Covers, Inc., or a comparable product as approved by the Architect.

2.2 MATERIALS - GENERAL

A. Single Source Responsibility: Furnish each type of product from single manufacturer. Provide secondary materials only as recommended by manufacturer of primary materials.

2.3 PERFORMANCE REQUIREMENTS

A. General Performance: Engineer products and systems to withstand loads within limits of allowable working stresses of the materials involved under conditions indicated and without permanent deformation or failure of materials.

B. Design Loads: Engineer to withstand design loads including but not limited to gravity, wind, and seismic design loads and thermal movements established by authorities having jurisdiction, applicable local building codes, and as indicated.

C. Structural-Test Performance: Test according to ASTM E 330 as follows:

1. When tested at positive and negative wind-load design pressures, assemblies do not evidence deflection exceeding specified limits.
2. When tested at 150 percent of positive and negative wind-load design pressures, assemblies, including anchorage, do not evidence material failures, structural distress, and permanent deformation of main framing members exceeding 0.2 percent of span.
3. Test Durations: As required by design wind velocity, but not less than 10 seconds.

D. Seismic Performance: Withstand the effects of earthquake motions.

E. Thermal Movements: Engineer products and systems to accommodate thermal movements of supporting elements resulting from the following maximum change (range) in ambient and surface temperatures without buckling, damaging stresses, damaging loads on fasteners, failure of operating units to function properly, and other detrimental effects.

1. Temperature Change (Range): 120 deg F (49 deg C), ambient; 180 deg F (82 deg C), material surfaces.

F. Dimensional Tolerances: Engineer products and systems to accommodate dimensional tolerances of framing members and adjacent construction.

2.4 MATERIALS

A. Aluminum Members: Extruded aluminum, ASTM B 221, 6063 alloy, T6 temper.

B. Fasteners & Accessories: Aluminum, 18-8 stainless steel, or 300 series stainless steel. Manufacturer's standard corrosion-resistant, nonstaining, nonbleeding fasteners and accessories compatible with adjacent materials.

1. Where fasteners are subject to loosening or turn out from thermal and structural movements, wind loads, or vibration, use self-locking devices.
2. Reinforce members as required to receive fastener threads.
3. Use exposed fasteners with countersunk Phillips screw heads.
4. Finish exposed portions to match framing system.
5. At movement joints, use slip-joint linings, spacers,and sleeves of material and type recommended by manufacturer.

C. Protective Coating for Aluminum Columns Embedded in Concrete: Clear acrylic.

D. Grout:

1. Portland Cement: ASTM C 150, Type I.
2. Sand: ASTM C 404.
3. Water: Potable.

E. Gaskets: Dry seal santoprene pressure type.

F. Aluminum Flashing: ASTM B 209, Type 3003 H14, 0.040 inch, minimum.

G. Components:

1. Bituminous Paint: ASTM D 1187, cold-applied asphalt emulsion.
2. Columns: Tubular extrusions, with cutouts and internal diverters for drainage.
3. Beams: Open-top tubular extrusions.
4. Deck: Extruded self-flashing sections interlocking into a composite unit.
5. Fascia: Manufacturer's standard shape with concealed splices.
6. Exposed Flashing and Closures: Manufacturer's standard aluminum components not less than 0.040 in (1.02 mm) thick.

2.5 MIXES

A. Grout: 1 part portland cement to 3 parts sand, add water to produce a pouring consistency.

2.6 FABRICATION

A. Form or extrude aluminum shapes before finishing.

B. Weld in concealed locations to greatest extent possible to minimize distortion or discoloration of finish. Welds shall be of adequate strength and durability, with jointing tight, flush, smooth and clean. Weld behind finished surfaces so as to cause no distortion and/or discoloration on the finished side. Remove weld spatter and welding oxides from exposed surfaces by descaling or grinding.

C. Fabricate components that, when assembled, have the following characteristics:

1. Profiles that are sharp, straight, and free of defects or deformations.
2. Accurately fitted joints with ends coped or mitered.
3. Fasteners, anchors, and connection devices that are concealed from view.

D. Columns: Provide radius-cornered tubular extrusions with cutout and internal diverter for drainage where indicated. Circular downspout opening in column not acceptable.

E. Beams: Provide open-top tubular extrusion, top edges thickened for strength and designed to receive deck members in self-flashing manner.

F. Deck: Extruded self-flashing sections interlocking into a composite unit. Provide welded plate closures at deck ends.

G. Fascia: Manufacturer’s standard shape. Provide fascia splices where continuous runs of fascia are jointed. Locate splices to be in line with bents and fasten in place on hidden or non-vertical surfaces.

2.7 GENERAL FINISH REQUIREMENTS

A. Comply with NAAMM's "Metal Finishes Manual for Architectural and Metal Products" for recommendations for applying and designating finishes.

B. Protect mechanical finishes on exposed surfaces from damage by applying a strippable, temporary protective covering before shipping.

C. Appearance of Finished Work: Variations in appearance of abutting or adjacent pieces are acceptable if they are within one-half of the range of accepted Samples. Noticeable variations in the same piece are not acceptable. Variations in appearance of other components are acceptable if they are within the range of accepted Samples and are assembled or installed to minimize contrast.

2.8 ALUMINUM FINISHES:

A. Factory Finishing: Finish designations prefixed by AA comply with system established by the AAMA for designating aluminum finishes.

1. Class I, Clear Anodic Finish: AA-M12C22A41 (Mechanical Finish: nonspecular as fabricated; Chemical Finish: Class I, clear coating 0.7 mils or thicker), complying with AAMA 611.

PART 3 - EXECUTION

3.1 EXAMINATION

A. Verification of Conditions: Verify that all concrete, masonry, and roofing work in the vicinity is complete and cleaned.

B. Furnish inserts for setting in concrete formwork, and similar work required to support canopy.

C. Field measure and verify governing dimensions, including floor elevations, floor-to-floor heights, minimum clearance between canopy and structural frames and other permissible dimensional tolerances in building frame.

D. Metal Protection: Where aluminum will contact dissimilar metals, protect against galvanic action by painting contact surfaces with primer or by applying sealant or tape recommended by manufacturer for this purpose. Where aluminum will contact concrete or masonry, protect against corrosion by painting contact surfaces with bituminous paint.

3.2 ERECTION

A. Erect protective cover true to line, level, and plumb. Protect aluminum columns embedded in concrete with clear acrylic. Fill downspout columns with grout to the discharge level to prevent standing water. Install weep holes at top of concrete in non-draining columns to remove condensation.

B. Fit joints to produce hairline joints free of burrs and distortion. Rigidly secure nonmovement joints. Seal joints watertight, unless otherwise indicated. Provide means to drain water to the exterior to produce a permanently weatherproof system.

C. Comply with manufacturer's instructions for installing canopy components, with particular care and attention to preservation of applied finishes. Discard or remove and replace damaged members.

D. Do not cut, trim, weld or braze component parts during erection, in any manner which would damage finish, decrease strength or result in visual imperfection or failure in performance of construction.

E. Secure to structure with non-staining and non-corrosive shims, anchors, fasteners, spacers and fillers.

F. Anchor components securely in place. Shim and allow for movement resulting from changes in thermal conditions. Provide separators and isolators to prevent corrosion, electrolytic deterioration, and impede movement of moving joints.

G. Erection Tolerances: Install components plumb, level, accurately aligned, and located in reference to column lines and floor levels. Adjust work to conform to the tolerances indicated below. Tolerances indicated below are maximum and are not cumulative.

1. Plumb: 1/8 inch in 10 feet; 1/4 inch in 40 feet.
2. Level: 1/8 inch in 20 feet; 1/4 inch in 40 feet.
3. Alignment:

    a. Where surfaces abut in line or are separated by reveal or protruding element up to 1/2 in wide, limit offset from true alignment to 1/16 in.
    b. Where surfaces are separated by reveal or protruding element from 1/2-to-1 in wide, limit offset from true alignment to 1/8 in.
    c. Where surfaces are separated by reveal or protruding element of 1 in wide or greater, limit offset from true alignment to 1/4 in.
    d. Location: Limit variation from plane or location shown to 1/8 in in 12 ft or 1/2 in in any total length.

H. Manufacturer’s Field Service: Manufacturer's representative shall periodically inspect material and installation to insure installation is proceeding in accordance with manufacturer’s recommendations and warranty requirements. Representative shall submit a written report of each visit indicating observations, findings and conclusions of inspection.

3.3 CLEANING

A. Clean all protective cover components promptly after installation.

3.4 PROTECTION

A. Protect materials during and after installation.

END OF SECTION 107300

SECTION 113100 - RESIDENTIAL APPLIANCES

PART 1 - GENERAL

1.1 RELATED DOCUMENTS

A. Drawings and general provisions of the Contract, including General and Supplementary Conditions and Division 01 Specification Sections, apply to this Section.

1.2 SUMMARY

A. Section Includes:

1. Cleaning appliances.

1.3 ACTION SUBMITTALS

A. Product Data: For each type of product.

1. Include installation details, material descriptions, dimensions of individual components, and finishes for each appliance.
2. Include rated capacities, operating characteristics, electrical characteristics, and furnished accessories.

B. Samples: For each exposed product and for each color and texture specified, in manufacturer's standard size.

C. Product Schedule: For appliances. Use same designations indicated on Drawings.

1.4 INFORMATIONAL SUBMITTALS

A. Qualification Data: For manufacturer.

B. Product Certificates: For each type of appliance.

C. Field quality-control reports.

D. Sample Warranties: For manufacturers' special warranties.

1.5 CLOSEOUT SUBMITTALS

A. Operation and Maintenance Data: For each residential appliance to include in operation and maintenance manuals.

1.6 QUALITY ASSURANCE

A. Manufacturer Qualifications: Maintains, within 30 miles of Project site, a service center capable of providing training, parts, and emergency maintenance repairs.

1.7 WARRANTY

A. Special Warranties: Manufacturer agrees to repair or replace residential appliances or components that fail in materials or workmanship within specified warranty period.

1. Warranty Period: Two years from date of Substantial Completion.

PART 2 - PRODUCTS

2.1 MANUFACTURERS

A. Source Limitations: Obtain each type of residential appliance from single manufacturer.

2.2 PERFORMANCE REQUIREMENTS

A. Electrical Appliances: Listed and labeled as defined in NFPA 70, by a qualified testing agency, and marked for intended location and application.

B. Accessibility: Where residential appliances are indicated to comply with accessibility requirements, comply with applicable provisions in the DOJ's 2010 ADA Standards for Accessible Design, the ABA standards of the Federal agency having jurisdiction, and ICC A117.1.

2.3 CLOTHES WASHERS AND DRYERS

A. Clothes Washer: ADA-compliant.

1. Basis-of-Design Product: Subject to compliance with requirements, provide product selected by the Architect.
2. Type: Freestanding, front-loading unit.
3. Drum: Manufacturer's standard.

a. Capacity: 2.0 cu. ft. minimum.

4. Controls: Front-mounted touch-pad or rotary-dial controls for water-fill levels, wash/rinse water temperatures, and variable-speed and fabric selectors.

a. Wash Cycles: At least four wash cycles including regular, delicate, and permanent press.
b. Wash Temperatures: Three settings.

c. Speed Combinations: Two minimum.

5. Electrical Power: As indicated on Drawings.
6. Motor: Manufacturer's standard with built-in overload protector.
7. Features:

   a. Agitator: Impeller (without spindle).
   b. Unbalanced-load compensator.
   c. Inlet Hoses: Minimum length 60 inches.
   d. Drain Hoses: Minimum length 48 inches.
   e. End-of-cycle signal.
   f. Electronic temperature control.

8. Energy Performance, ENERGY STAR: Provide appliances that qualify for the EPA/DOE ENERGY STAR product labeling program.
9. Water-Efficient Clothes Washer: Provide clothes washer with modified energy factor greater than or equal to 2.0 and water factor less than 5.5.
10. Appliance Finish: Porcelain enamel on top; baked enamel on sides.

    a. Color: White.

11. Front-Panel: Manufacturer’s standard finish with vision panel.

B. Clothes Dryer: ADA-compliant.

1. Basis-of-Design Product: Subject to compliance with requirements, provide product selected by the Architect.
2. Type: Freestanding, frontloading, electric unit.
3. Drum: Manufacturer's standard.
4. Controls: Front-mounted touch-pad or rotary-dial controls for drying cycle, temperatures, and fabric selectors.
5. Electric-Dryer Power: As indicated on Drawings.
6. Features:

   a. Removable lint filter.
   b. Electronic temperature and moisture level sensor control.
   c. End-of-cycle signal.

7. Appliance Finish: Porcelain enamel on top; baked enamel on sides.

   a. Color: White.

8. Front-Panel: Manufacturer’s standard finish with vision panel.

2.4 CLOTHES WASHER/DRYER COMBINATIONS

A. Clothes Washer/Dryer Combination: Complying with ASSE 1007.

1. Basis-of-Design Product: Subject to compliance with requirements, provide product selected by the Architect.
2. Type: Freestanding washer/dryer unit with dual-drum design and electric dryer; washer is front loading.
3. Dimensions:

    a. Width: As selected by the Architect.
    b. Depth: As selected by the Architect.
    c. Height: As selected by the Architect.

4. Pedestal: Provide ADA-compliant pedestal for clothes washer/dryer combinations.
5. Washer and Dryer Drums: Manufacturer's standard.

    a. Washer-Drum Capacity: 1.5 cu. ft. minimum.
    b. Dryer-Drum Capacity: 2.0 cu. ft. minimum.

6. Washer Controls: Touch-pad or rotary-dial controls for water-fill levels, wash/rinse water temperatures, and variable-speed and fabric selectors.
7. Dryer Controls: Touch-pad or rotary-dial controls for drying cycle, temperatures, and fabric selectors.

    a. Wash Cycles: Nine wash cycles including regular, delicate, and permanent press.
    b. Wash Temperatures: Five settings.
    c. Speed Combinations: Two.

8. Electric Washer/Dryer Power: As indicated on Drawings.
9. Motor: Manufacturer's standard with built-in overload protector.
10. Washing Features:

    a. Unbalanced-load compensator.
    b. Inlet Hoses: Minimum length 60 inches.
    c. Drain Hoses: Minimum length 48 inches.

11. Drying Features:

    a. Removable lint filter.
    b. Electronic temperature and moisture level sensor control.
    c. End-of-cycle signal.

12. Energy Performance, ENERGY STAR: Provide appliances that qualify for the EPA/DOE ENERGY STAR product labeling program.
13. Water-Efficient Clothes Washer: Provide clothes washer with modified energy factor greater than or equal to 2.0 and water factor less than 5.5.

14. Appliance Finish: Porcelain enamel on top and lid; baked enamel on front and sides.

    a. Color: White.

2.5 GENERAL FINISH REQUIREMENTS

A. Protect mechanical finishes on exposed surfaces from damage by applying a strippable, temporary protective covering before shipping.

B. Appearance of Finished Work: Noticeable variations in same piece are not acceptable. Variations in appearance of adjoining components are acceptable if they are within the range of approved Samples and are assembled or installed to minimize contrast.

PART 3 - EXECUTION

3.1 EXAMINATION

A. Examine substrates, areas, and conditions, with Installer present, for compliance with requirements for installation tolerances, power connections, and other conditions affecting installation and performance of residential appliances.

B. Examine roughing-in for piping systems to verify actual locations of piping connections before appliance installation.

C. Examine walls, ceilings, and roofs for suitable conditions where overhead exhaust hoods and microwave ovens with vented exhaust fans will be installed.

D. Prepare written report, endorsed by Installer, listing conditions detrimental to performance of the Work.

E. Proceed with installation only after unsatisfactory conditions have been corrected.

3.2 INSTALLATION

A. Install appliances according to manufacturer's written instructions.

B. Built-in Equipment: Securely anchor units to supporting cabinets or countertops with concealed fasteners. Verify that clearances are adequate for proper functioning and that rough openings are completely concealed.

C. Freestanding Equipment: Place units in final locations after finishes have been completed in each area. Verify that clearances are adequate to properly operate equipment.

3.3 FIELD QUALITY CONTROL

A. Perform the following tests and inspections with the assistance of a factory-authorized service representative:

1. Perform visual, mechanical, and electrical inspection and testing for each appliance according to manufacturers' written recommendations. Certify compliance with each manufacturer's appliance-performance parameters.
2. Leak Test: After installation, test for leaks. Repair leaks and retest until no leaks exist.
3. Operational Test: After installation, start units to confirm proper operation.
4. Test and adjust controls and safeties. Replace damaged and malfunctioning controls and components.

B. An appliance will be considered defective if it does not pass tests and inspections.

C. Prepare test and inspection reports.

3.4 DEMONSTRATION

A. Engage a factory-authorized service representative to train Owner's maintenance personnel to adjust, operate, and maintain residential appliances.

END OF SECTION 113100

SECTION 114000 – FOODSERVICE EQUIPMENT

1.1 Tray & Silver

A. Provide a Tray Holder with Silverware Holder with the following features:

1. UL listed, NSF Certified.
2. ¾" Millwork Panels
3. 34" overall height (ADA Requires Optional Tray Rest)
4. Stainless Steel Adjustable Bullet Feet
5. Adjustable, Removable, or Fixed Shelves.
6. Casters Optional

B. Tray Holder with Silverware Holder to be provided by BSI, Model CUSTOM, or Delfield or Randell

2.1 Cafeteria, Buffet Shield

A. Provide a Cafeteria Buffet Shield with the following features:

1. UL Listed, NSF Certified
2. Electrical characteristics as scheduled.
3. Light consists of an aluminum housing and an inner aluminum holder/reflector.
4. Light shall include a remote on/off switch and a remote ballast in an enclosure.
5. Finish options of Brushed Aluminum Stainless Steel, Gloss Black, Smoked Copper, Chrome SS, Wrinkle Black, or Polished Brass Finish.
6. Optional Light, or Light & Warmer.

B. Cafeteria, Buffet Shield to be provided by BSI, Model DECO-259-N, or Hel-Mar or Versa Gard

3.2 Drop-In, Hot/Cold Wells QUANTITY AS SCHEDULED

A. Provide a Drop-In, Hot/Cold Wells with the following features:

1. UL Listed, NSF Certified.
2. Electrical characteristics as scheduled.
3. Fully insulated, self-contained.
4. Solid state digital controls.
5. 4,000 Watts

B. Drop-In, Hot/Cold Wells to be provided by Hatco, Model HCWBI-4DA

4.1 Cafeteria, Buffet Shield

A. Provide a Cafeteria Buffet Shield with the following features:

1. UL Listed, NSF Certified
2. Electrical characteristics as scheduled.
3. Light consists of an aluminum housing and an inner aluminum holder/reflector.
4. Light shall include a remote on/off switch and a remote ballast in an enclosure.
5. Finish options of Brushed Aluminum Stainless Steel, Gloss Black, Smoked Copper, Chrome SS, Wrinkle Black, or Polished Brass Finish.
6. Optional Light, or Light & Warmer.

B. Cafeteria, Buffet Shield to be provided by BSI, Model ZG9930-5, or Hel-Mar or Versa Gard

5.1 Tray & Silver

A. Provide a Tray Holder with Silverware Holder with the following features:

1. UL listed, NSF Certified.
2. ¾" Millwork Panels
3. 34" overall height (ADA Requires Optional Tray Rest)
4. Stainless Steel Adjustable Bullet Feet
5. Adjustable, Removable, or Fixed Shelves.
6. Casters Optional

B. Tray Holder with Silverware Holder to be provided by BSI, Model CUSTOM, or Delfield or Randell

6.3 Drop-In, Dish Dispensers, Unheated QUANTITY AS SCHEDULED

A. Provide a Drop-In Dish Dispenser having the following features:

1. NSF Certified
2. Constructed of series 300 stainless steel.
3. Drop-in is self-leveling. Spring mechanism is adjustable.

B. Drop-In Dispenser to be provided by Atlas Metal, Model PD-8 1/8, or Delfield or Randell

7.8 Cafeteria, Buffet Shield

A. Provide a Cafeteria Buffet Shield with the following features:

1. UL Listed, NSF Certified
2. Electrical characteristics as scheduled.
3. Light consists of an aluminum housing and an inner aluminum holder/reflector.
4. Light shall include a remote on/off switch and a remote ballast in an enclosure.
5. Finish options of Brushed Aluminum Stainless Steel, Gloss Black, Smoked Copper, Chrome SS, Wrinkle Black, or Polished Brass Finish.
6. Optional Light, or Light & Warmer.

B. Cafeteria, Buffet Shield to be provided by BSI, Model ZG9930-5, or Hel-Mar or Versa Gard

8.1 Drop-In, Hot/Cold Wells QUANTITY AS SCHEDULED

A. Provide a Drop-In, Hot/Cold Wells with the following features:

1. UL Listed, NSF Certified.
2. Electrical characteristics as scheduled.
3. Fully insulated, self-contained.
4. Solid state digital controls.
5. 4,000 watts

B. Drop-In, Hot/Cold Wells to be provided by Hatco, Model HCWBI-4DA

9.1 Indoor Combination Refrigerator/Freezer Walk-In Unit QUANTITY AS SCHEDULED

A. Provide pre-fabricated cold storage assembly of size and shape as shown on the plan and detail drawings. Exact overall size to be field verified prior to fabrication.

1. Insulation: Panels shall be insulated with 4" thick urethane foamed in place using eco-friendly 100% CFC and HCFC free foam. Foam shall be 2.25 lb. density, 95% closed cell. Panels shall meet ASTM-E-84 (UL-723) and be listed by UL. Panels shall have a maximum flame spread of 25 or less.
2. Finishes: Exterior and interior finishes as shown in the drawings.
3. Floors: Recessed floor by Food Service Equipment Contractor with quarry tile by general contractor. Reinforced panels to support 1000 pound per square foot in the freezer that will have a ¾" marine grade plywood underlay that includes the non-skid strips every 6".
4. Doors with viewports: Door size and finishes shall be as shown on the drawings.
5. Coved corners: Assembly shall be constructed so that all interior wall, floor and ceiling intersections shall comply with NSF standards.

6. Cam lock fasteners: All panel intersections and wall, floor and ceiling intersections shall be secured by cam lock fasteners.
7. Ceiling panels: All ceiling panels to be one piece, self -supporting, and span the full width of the assembly.
8. Lights: Each compartment to have (2) 48" Universal LED light assembly with bulbs.
9. Warranty: One-year parts and labor from date of installation. Panels will have a 10-year warranty period.
10. Miscellaneous: Provide 5-bar wainscot as shown on the drawings. ADT will be unacceptable.
11. Provide heated pressure relief port in the freezer. Provide trim strips, closure panels, etc. as necessary to adjacent building surfaces. Provide plastic strip curtains for door entrances. Provide sleeves properly located for utility entrance, drain lines, and refrigeration lines. After lines are installed, fill sleeves with spray foam compound. Trim excess foam away and cover with stainless steel escutcheon.

B. Cold storage assembly to be manufactured by TAFCO. Approved equals that meet the specifications are ThermoKool and Bally.

10.0 Deleted

11.1 Ice Maker/ Dispenser QUANTITY AS SCHEDULED

A. Provide an Ice Maker with the following features:

1. UL Listed, NSF Certified
2. 3-year parts and labor warranty on Ice Maker, 5-year parts and labor on Evaporator, 5 year part warranty on Compressor.
3. Electrical characteristics as scheduled.
4. R-404A Refrigerant.
5. 618 lbs per day ice production capacity.
6. Advanced CleanCycle24 design.
7. Protected by H-Guard Plus Antimicrobial Agent.
8. Corrosion resistant, Stainless steel exterior.

B. Ice Maker to be provided by HOSHIZAKI, Model DCM-500BAH-OS OPTI-SERVE SERIES, or Scotsman, Manitowoc

12.12 Floor Drain QUANTITY AS SCHEDULED

A. Provide a Floor Drain, having the following features:

1. All TIG welded, all external corners welded and polished to a satin finish.
2. Perimeter flange mounts directly to sub floor.
3. ¾" vertical step design to accommodate floor tile installation.
4. 14-gauge type 304 stainless steel polished stainless-steel grating.

5. Accommodates up to 4" waste pipe.

B. Floor Drain to be provided by Advance Tabco, Model FDR-1212, or Aero Manufacturing or IC Teddy.

13.1 Dispenser, Milk QUANTITY AS SCHEDULED

A. Provide a Milk Dispenser with the following features:

1. UL Listed, NSF Certified.
2. 1-year parts and labor warranty. Five-year warranty on compressor.
3. Electrical characteristics as scheduled.
4. Double valve, accommodates 3, 5, and 6-gallon bag-n-box
5. Hands free operation, with temperature indicator on door front, and adjustable temperature control.

B. Milk Dispenser to be provided by Silver King, Model SKMAJ2, or Bon Chef or Vollrath

14.1 Iced Tea Brewer

A. Provide an iced tea brewer with the following features:

1. UL Listed, NSF Certified.
2. Electrical characteristics as scheduled.
3. Brew side sensor.
4. Expandable dispenser base.
5. Slim profile dispenser.
6. 1.5 gpm minimum flow rate, with a 1/4" male flare fitting.

B. Iced Tea Brewer to be provided by Fetco, Model TBS-2121XTS, or Bunn or Bloomfield

15.1 Coffee Maker, Insulated Server, Automatic QUANTITY AS SCHEDULED

A. Provide an insulated coffee maker with the following features:

1. UL Listed, NSF Certified.
2. Electrical characteristics as scheduled.
3. Includes a manual hot water faucet.
4. Programmable brewer.
5. 1.25 gpm minimum flow rate, with a 3/8" male flare fitting.

B. Coffee maker to be provided by Fetco, Model CBS-52H-20, or Bunn or Bloomfield

16.0 Deleted

17.1 Warmer, Food, Electric QUANTITY AS SCHEDULED

A. Provide an electric food warmer with the following features:

1. UL Listed
2. 1-year parts and labor limited warranty.
3. (2) 4 qt. capacity.
4. Heavy gauge stainless steel constructions.
5. Electrical characteristics as scheduled.

B. Food Warmer to be provided by APW Wyott, Model W4-2, or Wells or Nemco

18.1 Toaster, Conveyor QUANTITY AS SCHEDULED

A. Provide a Conveyor Toaster with the following features:

1. UL listed, NSF 4 Certified.
2. 1-year parts and labor warranty.
3. Electrical characteristics as scheduled.
4. Constructed of corrosion resistant stainless steel, with heavy-duty motor.
5. One-piece cover.

B. Conveyor Toaster to be provided by Star Manufacturing, Model QCSE2-600H, or Belle Co or APW

19.1 Shelf, Microwave QUANTITY AS SCHEDULED

A. Provide a Microwave Shelf with the following features:

1. NSF Certified.
2. All TIG welded, exposed surfaces polished to a satin finish.
3. 18-gauge stainless steel.

B. Microwave shelf to be provided by Advance Tabco, Model MS-18-24, or Aero Manufacturing or Select Stainless.

20.2 Oven, Microwave QUANTITY AS SCHEDULED

A. Provide a Microwave Oven with the following features:

1. UL Listed, NSF Certified.
2. Electrical characteristics as scheduled.
3. 3-year limited warranty.
4. Microwave oven must meet or exceed all safety performance and sanitation standards set for commercial food service microwave ovens.

B. Microwave Oven to be provided by Panasonic, Model NE-1054, or Sharp or Amana

21.1 Beverage Counter QUANTITY AS SCHEDULED

A. Provide a Beverage Counter with the following features:

1. UL listed, NSF Certified.
2. ¾" Millwork Panels
3. 34" overall height (ADA Requires Optional Tray Rest)
4. Stainless Steel Adjustable Bullet Feet
5. Adjustable, Removable, or Fixed Shelves.
6. Casters Optional

B. Beverage Counter to be provided by BSI, Model 96-BT-EB, Delfield or Randell

22.1 Water Filtration System, Steamers & Combi Ovens QUANTITY AS SCHEDULED

A. Provide a Water Filtration System with the following features:

1. NSF Certified
2. 1-year limited warranty against defects in material or workmanship.
3. Cold water inlet
4. 10,000-gal, chlorine removal capacity
5. ½" Male thread

B. Water Filtration System to be provided by Dormont, Model BRWMax-S2S, S2L, Cuno or Everpure

23.1 Deleted

24.1 Faucet, Service Sink QUANTITY AS SCHEDULED

A. Provide a Service Sink Faucet, having the following features:

1. ANSI/A11@.18.1M
2. Service sink faucet with long spout and vacuum breaker, with 36" supply lines.
3. Stainless Steel seats, seat screws, and handle screws, with atmospheric vacuum breaker.

B. Service Sink Faucet to be provided by Fisher, Model 8253, or Chicago Faucet or T&S Brass

25.2 Mop Holder QUANTITY AS SCHEDULED

A. Provide a Mop Holder with the following features:

1. NSF Certified
2. 4-Pole mop holder.

3. 24" by 4"

B. Mop Holder to be provided by Eagle Group, Model 321561, or Uline or Rubbermaid

26.1 Floor Drain QUANTITY AS SCHEDULED

A. Provide a Floor Drain, having the following features:

1. All TIG welded, all external corners welded and polished to a satin finish.
2. Perimeter flange mounts directly to sub floor.
3. ¾" vertical step design to accommodate floor tile installation.
4. 14-gauge type 304 stainless steel polished stainless-steel grating.
5. Accommodates up to 4" waste pipe.

B. Floor Drain to be provided by Advance Tabco, Model FDR-1212, or Aero Manufacturing or IC Teddy.

27.1 Pot Rack, Wall Mount QUANTITY AS SCHEDULED

A. Provide a Wall Mount Pot Rack, having the following features:

1. Secured to wall by means of bolts through welded brackets.
2. Flat steel bar is 2" by ¼" Stainless Steel.
3. All welded stainless-steel units are blended to a satin finish.
4. 18" by 132", with 9 hooks included.

B. Wall Mount Pot Rack to be by Advance -Tabco, Model PS-18-120, or Aero Manufacturing or Select Stainless.

28.1 Air Curtain, Unheated QUANTITY AS SCHEDULED

A. Provide an Air Curtain with the following features:

1. Meets NEC and ETL standards.
2. Warranty shall be 5 years on all parts.
3. Self-contained, one-piece cabinet, fire retardant and corrosion proof paint.
4. Electrical characteristics as scheduled.
5. Optional door limit switch is field installed as is to be wired to the control panel.
6. Switch to be mounted such that air curtain turns on as door begins to open.

B. Air Curtain to be provided by Mars Air Doors, Model EP296-2U, or Curton or Berner

29.1 Custom Dish-table, 'L' Shape (per MSH Consultant Group) QUANTITY AS SCHEDULED

A. Provide a Custom Dish-table, having the following features:

1. All TIG welded, with welded areas blended to match adjacent surfaces, to a satin finish, and with stainless steel gussets welded to a stainless-steel support channel, seamless, 14-gauge type 304 stainless steel.
2. 10-1/2" backsplash with 2" return and tile edge.
3. 8" deep sink bowl.
4. Faucet holes in SPLASH punched on 8" centers.
5. Waste drain is 1-1/2" IPS basket type and included.
6. NSF Certified.

B. Custom Dish-table to be Advance Tabco, Model DTS-D30-108R, or Aero Manufacturing or Select Stainless

30.1 Dish table, Sorting Shelf QUANTITY AS SCHEDULED

A. Provide a Dish-table, Sorting Shelf, having the following features:

1. NSF Certified.
2. Double Sided Design die formed wall mounted rack shelf with solid end brackets.
3. TIG welded with exposed areas blended to a satin finish.
4. Brackets are 16-gauge type 300 series stainless steel.
5. Shelf is 16-gauge type 300 stainless steel.

B. Dish-table, Sorting Shelf to be provided by Advance Tabco, Model DTA-79, or Aero Manufacturing or Select Stainless.

31.1 Warewasher, Door Type, High Temp QUANTITY AS SCHEDULED.

A. Provide a Warewasher, having the following features:

1. UL Listed, and NSF Certified.
2. 1-year parts and labor warranty.
3. Electrical characteristics as scheduled.
4. Energy Star Qualified
5. Dual-Rinse technology
6. One-piece cast stainless steel upper & lower spray arm assemblies.
7. Vertical opening, accommodating 18" by 26" sheet pans.
8. Top mount controls.
9. Never leak, ball valve drain closure.
10. Electric heat tank.
11. Wash pump 2 HP motor.
12. Ventless option. No hood in place.

B. Warewasher to be Champion, Model 44 PRO VHR or Hobart or Jackson

32.1 Dish-table, Straight QUANTITY AS SCHEDULED

A. Provide a Dish-table, having the following features:

1. All TIG welded, with welded areas blended to match adjacent surfaces, to a satin finish, and with stainless steel gussets welded to a stainless-steel support channel, seamless, 14-gauge type 304 stainless steel.
2. 10-1/2" backsplash with 2" return and tile edge.
3. 8" deep sink bowl.
4. Faucet holes in SPLASH punched on 8" centers.
5. Waste drain is 1-1/2" IPS basket type and included.
6. NSF Certified.

B. Dish-table to be Advance Tabco, Model DTS-S30-84L, or
Aero Manufacturing or Select Stainless

33.1 Sink, 3 Compartment QUANTITY AS SCHEDULED

A. Provide a 3 Compartment Sink, having the following features:

1. All TIG welded, with welded areas blended to match adjacent surfaces, to a satin finish, and with gussets welded die-embossed reinforced channel, seamless, 14-gauge type 304 stainless steel with 11" high splash.
2. Sink bowl must be 18" by 44" by 14"
3. Once piece Deep Drawn sink bowls with integral drain-boards with splash.
4. Adjustable front and rear cross brace featuring leg casting to secure left to right cross bracing.
5. Conforms to NSF 61 Standard 9 and are AB1953 Lead Free Compliant.
6. Waste drains are 1-1/2" IPS Stainless Steel basket type, located in center of sink bowl.

B. 3 Compartment Sink to be Advance Tabco, Model FC-3-2424-24RL, or
Aero Manufacturing or Select Stainless

34.1 Faucet, Deck Mount QUANTITY AS SCHEDULED

A. Provide a Deck Mount Faucet, having the following features:

1. ANSI/A112.18.1-2005, NSF 61-9
2. Stainless Steel 4" Deck Mount Faucet with 12" Swing Spout with Wrist Handles
3. Stainless Steel construction.

B. Deck Mount Faucet to be provided by Fisher, Model 53880, or Chicago Faucet or T&S Brass

34.1 Faucet, Deck Mount QUANTITY AS SCHEDULED

A. Provide a Deck Mount Faucet, having the following features:

1. ANSI/A112.18.1-2005, NSF 61-9
2. Stainless Steel 4" Deck Mount Faucet with 12" Swing Spout with Wrist Handles
3. Stainless Steel construction.

B. Deck Mount Faucet to be provided by Fisher, Model 53880, or Chicago Faucet or T&S Brass

35.2 Pre-Rinse Faucet, Back Splash Mount QUANTITY AS SCHEDULED

A. Provide a Pre-Rinse Faucet, Back Splash Mount, having the following features:

1. ANSI/A112.18.1M, ANSI/NSF 61.9
2. Standard Spray Valve with Wall Bracket.
3. Stainless Steel seats, seat screws, and handle screws, end fittings, and external jacket.
4. In-line Dual Check Valve
5. ½" NPT Female Elbows
6. Wall Hook
7. 8" C/C Back Splash Mounting
8. 36" Length
9. In-line Vacuum breaker.

B. Pre-Rinse Faucet, Back Splash Mounting to be provided by Fisher, Model 99643, or Chicago Faucet or T&S Brass

36.3 Floor Trough QUANTITY AS SCHEDULED

A. Provide a Floor Trough, having the following features:

1. All TIG welded, all external corners welded and polished to a satin finish.
2. Perimeter flange mounts directly to sub floor.
3. ¾" vertical step design to accommodate floor tile installation.
4. 14-gauge type 304 stainless steel polished stainless-steel grating.
5. Accommodates up to 4" waste pipe.

B. Floor trough to be provided by Advance Tabco, Model FFTG-1272, or Aero Manufacturing or IC Teddy.

37.1 Pre-Rinse Faucet, Back Splash Mount QUANTITY AS SCHEDULED

A. Provide a Pre-Rinse Faucet, Back Splash mount, having the following features:

1. ANSI/A112.18.1M
2. Standard Spray Valve with Wall Bracket.
3. Stainless Steel seats, seat screws, and handle screws, end fittings, and external jacket.
4. In-line Dual Check Valve
5. Elbows
6. Wall Hook
7. 8" C/C Back Splash Mounting
8. 36" Length
9. In-line Vacuum breaker.

B. Pre-Rinse Faucet, Back Splash Mounting to be provided by Fisher, Model 99708, or

Chicago Faucet or T&S Brass

38.6 Hand Sink, Wall Mount QUANTITY AS SCHEDULED

A. Provide wall mounted hand sinks, having the following features:

1. All TIG welded, with welded areas blended to match adjacent surfaces, to a satin finish, and with die formed countertop edge, with a no-drip offset, using one sheet of gauge type 304 series stainless steel – no seams.
2. Sink bowl must be 10" by 14" by 5"
3. Stainless Steel basket
4. Faucet supply is ½" IPS male thread hot and cold.
5. Conforms to NSF 61 Standard 9 and are AB1953 Lead Free Compliant.

B. Wall Mount Hand Sink to be Advance Tabco, Model 7-PS-80, or Aero Manufacturing, or Select Stainless

39.22 Shelving, Max iQ Starter System QUANTITY AS SCHEDULED

A. Provide a Max Q Shelving Starter System with the following features:

1. NSF Certified.
2. Microban Antimicrobial Protection.
3. 800 lbs. per shelf capacity.
4. Open grid, removable shelf mat.
5. (4) tier model.

B. Shelving to be provided by Metro, Model MQ2460, MQ2472G, MQ21154G, MQ2172G, MQ2448G, MQ2436G, or Nexel or Global Industrial

40.2 32-Gal Container QUANTITY AS SCHEDULED

A. Provide a 32-gallon container with the following features:

1. NSF Certified.
2. Commercial grade construction.
3. Rounded handles
4. Reinforced base
5. 27.77" by 21.92"

B. Brute Container to be provided by Rubbermaid, Model FG263200GRAY or Uline

40A.1 32-Gal Container QUANTITY AS SCHEDULED

A. Provide a 32-gallon container with the following features:

1. NSF Certified.
2. Commercial grade construction.
3. Rounded handles
4. Reinforced base
5. 27.77” by 21.92”

B. Brute Container to be provided by Rubbermaid, Model FG263200GRAY or Uline

40B.1 23-Gal Container QUANTITY AS SCHEDULED

A. Provide a 32-gallon container with the following features:

1. NSF Certified
2. Commercial grade construction.
3. Rounded handles.
4. Reinforced Base.
5. 11” by 22”

41.5 Shelving, Modular Wall System QUANTITY AS SCHEDULED

A. Provide a modular shelving wall system with the following features:

1. NSF Certified
2. Zinc finish, sealed with MasterSeal
3. Single or Double Shelf Kits options.
4. Included components are Wall Mats (3” by 3” grids), Vertical Wall Uprights (pair), and Wire Shelf Brackets (pair).

B. Modular Wall Shelving System to be provided by Eagle Group, Model WAL-2-1848, or Advance Tabco or Select Stainless

42.4 Table, Prep with Sink QUANTITY AS SCHEDULED

A. Provide a Prep Table with Sink, having the following features:

1. NSF Certified.
2. All TIG welded, with welded areas blended to match adjacent surfaces, to a satin finish, and with stainless steel gussets welded to a stainless-steel support hat channel, seamless, 16-gauge type 304 stainless steel top, 18-gauge type 430 series shelf.
3. Deck Mounted Faucet Included.
4. 1-5/8” sanitary rolled rim edge on front and square sides, and a 5” splash with a 1” return on the rear side.

B. Prep Table with Sink to be by Advance Tabco, Model KMS-11B-305R, or Aero Manufacturing or Select Stainless.

43.2 Bin, Ingredient QUANTITY AS SCHEDULED

A. Provide an Ingredient Bin with the following features:

1. NSF Certified
2. One-piece, seamless single-wall polyethylene bin construction, FDA accepted material.
3. Injection molded polycarbonate, transparent lid.

B. Ingredient Bin to be provided by Cambro, Model IB44148, or Vollrath or Rubbermaid

44.1 Table, Work, Back Splash without Undershelf QUANTITY AS SCHEDULED

A. Provide a Work Table with Back Splash, w/o Undershelf, having the following features:

1. NSF Certified.
2. All TIG welded, with welded areas blended to match adjacent surfaces, to a satin finish, and with stainless steel gussets welded to a stainless-steel support hat channel, seamless, 14-gauge type 304 stainless steel top.
3. Top is sound deadened.
4. 1-5/8" sanitary rolled rim edge on front and square sides, 5" splash, 1" return on rear side.

B. Work Table with Back Splash to be by Advance Tabco, Model TKSS-304, or Aero Manufacturing or Select Stainless.

45.1 Slicer, Food QUANTITY AS SCHEDULED

A. Provide a Food Slicer with the following features:

1. UL Listed, NSF Certified.
2. 1-year parts and service, including knife. Lifetime guarantee on Borazon stones.
3. Stainless steel carriage, gauge plate and knife cover. Anodized aluminum base.
4. 12-gauge stainless steel knife cover.
5. Electrical characteristics as scheduled.
6. Top mounted Borazon Stone sharpener.

B. Food Slicer to be provided by Hobart US Foodservice, Model 2812, or Globe or Berkel

46.1 Hose Reel with Gun QUANTITY AS SCHEDULED

A. Provide a Hose Reel with Gun having the following features:

1. Stainless Steel Reel Rinse Exposed with Spray Gun.
2. 50' Length Hose
3. Stainless steel construction.
4. 5/8" High Temperature Hose
5. ½"F NPT or ¾"F Garden hose inlet.

6. Spray gun with stainless steel construction with a locking trigger mechanism.

B. Hose Reel with Gun to be provided by T & S Brass, Model B-7142-05, or Chicago Faucet or Fisher

47.1-50.1 Hoods and Components QUANTITY AS SCHEDULED

Must be provided by same manufacturer.

A. Provide wall type canopy exhaust hood of size, shape and content as shown on detail drawings, having the following features:

1. Left Side Hood, 8' – 6" long exhaust-only wall canopy hood with front perforated supply plenum with built-in 3" back standoff.
2. All exposed surfaces of 18-gauge type 430 Stainless Steel construction.
3. Filter is 20" tall by 16" wide Stainless Steel Capstrate Solo filter with hook, ETL Listed.
4. Canopy Light Fixture – High Temp Assembly. Including clear Thermal and Shock Resistant Globe.
5. Factory installed 14" diameter x 4" height Exhaust Riser.
6. 12" x 28" Supply Riser with Volume Dampers.
7. ½ Pint Grease Cup, flanged slotted.
8. Field Wrapper 17" High Front.
9. Backsplash 80" High x 291" Long, 430 Stainless Steel Vertical, including end caps & divider bars.
10. R end Standoff 1" wide by 54" long, insulated.
11. Left side-splash 80" high by 54" long, 430 Stainless Steel vertical, including end caps & divider bars.
12. Backsplash, inside corner, 80" high by 2" length. 430 Stainless Steel Vertical, including end caps & divider bars.

1. **Right Side Hood, 8' – 6"** long exhaust-only wall canopy hood with front perforated supply plenum with built-in 3" back standoff.
2. All exposed surfaces of 18-gauge type 430 Stainless Steel construction.
3. Filter is 20" tall by 16" wide Stainless Steel Capstrate Solo filter with hook, ETL Listed.
4. Canopy Light Fixture – High Temp Assembly. Including clear Thermal and Shock Resistant Globe.
5. Factory installed 14" diameter x 4" height Exhaust Riser.
6. 12" x 28" Supply Riser with Volume Dampers.
7. ½ Pint Grease Cup, flanged slotted.
8. Field Wrapper 17" High Front.
9. Backsplash 80" High x 291" Long, 430 Stainless Steel Vertical, including end caps & divider bars.
10. Right end Standoff 1" wide by 54" long, insulated.
11. Right side-splash 80" high by 54" long, 430 Stainless Steel vertical, including end caps & divider bars.
12. Backsplash, inside corner, 80" high by 2" length. 430 Stainless Steel Vertical, including end caps & divider bars.

1. **Right Side Hood, 7' – 0"** long exhaust-only wall canopy hood with front perforated supply plenum with built-in 3" back standoff.
2. All exposed surfaces of 18-gauge type 430 Stainless Steel construction.
3. Filter is 20" tall by 16" wide Stainless Steel Capstrate Solo filter with hook, ETL Listed.
4. Canopy Light Fixture – High Temp Assembly. Including clear Thermal and Shock Resistant Globe.
5. Factory installed 14" diameter x 4" height Exhaust Riser.
6. 8" x 36" Supply Riser with Volume Dampers.
7. ½ Pint Grease Cup, flanged slotted.
8. Field Wrapper 17" High Front.
9. Backsplash 80" High x 104" Long, 430 Stainless Steel Vertical, including end caps & divider bars.
10. Right side-splash 80" high by 54" long, 430 Stainless Steel vertical, including end caps & divider bars.
11. Backsplash, inside corner, 80" high by 2" length. 430 Stainless Steel Vertical, including end caps & divider bars.
12. Fire Cabinet on left side, to be Ansul – 3.0/3.0/1.5 Ansul 7.5-gallon Fire System, piped for Hoods 1, 2, and 3, with a 1-1/2" Mechanical Shutoff Valve, including Upstream Strain assembly, supplied by distributor.
13. Electrical package installation in Utility Cabinet by Plant.

1. **Fan #1 - Belt Drive Centrifugal Up Blast Exhaust Fan with 15.75"** wheel Exhaust Fan handles 1700 CFM @ -0.800" wc ESP, with Fans running at 1080 RPM, and Exhaust Motor with 0.75 HP, 3 Phs, 208 V, 60Hz, 2.5 FLA, and ODP (Open Drip Proof)
2. Grease cup for kitchen-duty centrifugal exhaust fans, with a box dimension of 17-1/8 L by 5-1/6 W by 3-3/4 H, 18 gauge, including down spout.
3. Curb on Fan # 1 3.000: 12.000 Pitch
4. Hinged Base for Curb, with Standard Hinge attached to curb. Used on fans with wheels 20" or smaller, 12 gauge galvanized.
5. Vent base for curb.

1. **Fan #2 - Belt Drive Centrifugal Up Blast Exhaust Fan with 15.75"** wheel Exhaust Fan handles 1700 CFM @ -0.800" wc ESP, with Fans running at 1080 RPM, and Exhaust Motor with 0.75 HP, 3 Phs, 208 V, 60Hz, 2.5 FLA, and ODP (Open Drip Proof)
2. Grease cup for kitchen-duty centrifugal exhaust fans, with a box dimension of 17-1/8 L by 5-1/6 W by 3-3/4 H, 18 gauge, including down spout.
3. Curb on Fan # 2 3.000: 12.000 Pitch
4. Hinged Base for Curb, with Standard Hinge attached to curb. Used on fans with wheels 20" or smaller, 12 gauge galvanized.
5. Vent base for curb.

1. **Direct Fired Heated Make Up Air Unit with 15" Blower Supply Fan** handling 3952 CFM @ 0.600" wc ESP, Fans running at 966 RPM for Hood #1 & Hood #2.

2. Heater to supply 234749 BTUs. 55*F Temperature Rise. [Fuel: Natural Gas] Supply Motor 3.000 HP, 3 Phase, 208 V, 60Hz, 8.7 FLA, ODP (Open Drip Proof). Down Discharge – Air Flow Right -> Left
3. Sloped Filter Intake for Size #2 Standard Untampered Make-Up Air Unit with 12" blower wheel. 26.75" Wide by 29.25" Long by 31.5" High, Including 2" MV EZ Kleen Metal Mesh Filters.
4. RTC Solutions – 40*-90*F Discharge Temp Control.
5. Gas Manifold
6. Motorized Back Draft Damper 22.75" by 24" for Size 2 Standard & Modular Direct Fired Heaters with Extended Shaft, Standard Galvanized Construction, ¾" Rear Flange, including actuator.
7. Cooling Interlock Relay that locks out burner circuit when AC is energized.
8. Low Fire Start.
9. Hood #1 and Hood #2 Curb insulated on Fan #3 3.000:12.000 Pitch
10. Curb Corner Fully Welded with base flange corners fully welded by factory.

1. **Fan #5 - Belt Drive Centrifugal Up Blast Exhaust Fan with 15.75"** wheel Exhaust Fan handles 1400 CFM @ -0.750" wc ESP, with Fans running at 1000 RPM, and Exhaust Motor with 0.50 HP, 3 Phs, 208 V, 60Hz, 1.9 FLA, and ODP (Open Drip Proof)
2. Grease cup for kitchen-duty centrifugal exhaust fans, with a box dimension of 17-1/8 L by 5-1/6 W by 3-3/4 H, 18 gauge, including down spout.
3. Hood #2 Curb on Fan # 5 3.000: 12.000 Pitch
4. Hinged Base for Curb, with Standard Hinge attached to curb. Used on fans with wheels 20" or smaller, 12 gauge galvanized.
5. Vent base for curb.

1. **Fan #6 – (Pant Leg fan) High Speed Direct Drive Centrifugal** Up Blast Exhaust Fan with speed control, disconnect switch and 11-3/4" wheel. Exhaust Fan handles 1000 CFM @ -0.500" wc ESP, with Fans running at 1558 RPM, and Exhaust Motor with 0.333 HP, 1 Phs, 208 V, 60Hz, 1.9 FLA, and ODP (Open Drip Proof)
2. Bird Screen – ½" by ½" (5" by 56") Wire Screen for Up blast & Down blast Fans.
3. Pant leg fan Curb on Fan #6 Flat Curb.

B. Exhaust Hoods, Components, and Ducts to be manufactured by Captive Aire, Models 5424ND-2-PSPF, 5424ND-2-PSP-F, 5424ND-2-PSP-F, Ansul-3.0/3.0/1.5, NCA14FA, NCA14FA, A2-D.250-G15, NCA14FA, DU33HFA, SC-331110FP, Ventilation Direct, or Larkin.

51.1 Deleted

52.1 Deleted

53.1 Kettle, Steam Jacketed, Gas, Tilt QUANTITY AS SCHEDULED

A. Provide a Steam Jacketed Tilt Kettle with the following features:

1. NSF Certified
2. One-year limited parts and labor warranty, with the second year extended limited parts and labor warranty option.
3. Gas self-contained, stainless steel, 2/3 jacketed floor mounted tilting steam kettle.
4. Embossed gallon/liter markings.
5. Stainless steel enclosure for “water resistant” controls, self-locking tilt mechanism and faucet bracket.
6. Tubular stainless-steel legs with flanged feet.
7. 40 Gallon true working capacity.
8. 100,000 BTU/hr.
9. Spring assist hinged stainless steel cover with condensate ring and drop-down lift handle accessory.

B. Steam Jacketed Tilt Kettle to be manufactured by Vulcan, Model K40GLT,

Cleveland or Groen.

54.1 Range, Restaurant, Gas QUANTITY AS SCHEDULED

A. Provide a gas Restaurant Range, having the following features:

1. NSF Certified.
2. 6 Burner configurations, combining (3) standard 33K burners in the rear with (3) standard 33K burners in the front.
3. Natural Gas
4. One-year parts and labor warranty.
5. 45,000 BTU Nat oven with standing pilot and thermostat range of 175 degrees to 550 degrees F.
6. Standing pilot for open top burners.
7. Electrical characteristics as scheduled.
8. Factory installed Regulator.
9. Stainless steel front, sides and shelf.

B. Restaurant Range to be provided by Southbend, Model 4361D, or Wolf or Vulcan

55.1 Filler, Kettle with Pot QUANTITY AS SCHEDULED

A. Provide a Pot Filler, Hose Style, Deck Mount with the following features:

1. ANSI/A112.18.1M
2. 36” Supply line, with in-line dual check valve.
3. Stainless Steel seats, seat screws, and handle screws, with atmospheric vacuum breaker.

B. Pot Filler to be provided by Fisher, Model 2040, or Chicago Faucet or T&S Brass

56.1 Convection Oven, Double QUANTITY AS SCHEDULED

A. Provide a Double Deck Convection Oven, having the following features:

1. NSF and ETL listed.
2. Three year parts and two year labor warranty, and a five year limited oven door warranty.
3. Full-Size Standard Depth
4. Stainless steel front, top, and sides.
5. Dual pane thermal glass windows encased in stainless-steel door frames.
6. Triple-mounted pressure lock door design with turnbuckle assembly.
7. Solid mineral fiber insulation at top, back, sides and bottom.
8. Dual Flow gas system for direct and indirect heat.
9. Pressure regulator.
10. Solid state thermostat with temperature control range of 200 degrees to 500 degrees F.
11. 110,000 BTU/hr

B. Double Convection Oven to be provided by Blodgett Oven Company, Model DFG100 Double, or Southbend or Vulcan

57A.1 Fryer, Deep fat, Gas with Filter QUANTITY AS SCHEDULED

A. Provide a Deep Fat Gas Fryer, having the following features:

1. NSF Listed.
2. 105,000 BTU Natural Gas
3. 75lb oil capacity.
4. Stainless steel construction. Heavy-duty stainless-steel fry pot with 10yr tank warranty.
5. Energy Star rated.
6. Electrical characteristics as scheduled.
7. Built in filtration with over-the-top return.
8. (4) heavy-duty casters, 2 locking.
9. 12” Splash guard option for left side (*noted as L on Model Number*)
10. 1 Full Basket
11. 2 Half baskets
12. Direct connect shortening disposal.
13. Shortening shuttle.

B. Deep Fat Fryer, Gas to be provided by Pitco, Model 7-SF-SSH75L, or Dean or Henny Penny

57B.1 Fryer, Deep fat, Gas with Filter QUANTITY AS SCHEDULED

A. Provide a Deep Fat Gas Fryer, having the following features:

14. NSF Listed.
15. 105,000 BTU Natural Gas
16. 75lb oil capacity.
17. Stainless steel construction. Heavy-duty stainless-steel fry pot with 10yr tank warranty.
18. Energy Star rated.
19. Electrical characteristics as scheduled.
20. Built in filtration with over-the-top return.
21. (4) heavy-duty casters, 2 locking.
22. 12" Splash guard option for left side (*noted as R on Model Number*)
23. 1 Full Basket
24. 2 Half baskets
25. Direct connect shortening disposal.
26. Shortening shuttle.

B. Deep Fat Fryer, Gas to be provided by Pitco, Model 7-SF-SSH75R, or
Dean or Henny Penny

Note: R on Model number notates the side for the splash guard, not the high BTU model.

58.2 Tilt Skillet QUANTITY AS SCHEDULED

A. Provide a Tilt Skillet, having the following features:

1. NSF Certified
2. Natural Gas, 100,000 BTU, ¾" Supply pipe.
3. 10-gauge stainless steel with a #4 finish exterior and polished interior.
4. 5/8" thick stainless-steel clad cooking plate.
5. Enclosed with #4 finish type 304 stainless steel with removable side panels and two stainless steel front cabinet doors.
6. Etched gallon markings.
7. Electrical characteristics as scheduled.

B. Tilt Skillet to be provided by Southbend, Model BGMTS-40, or
Cleveland or Blodgett

59.3 Floor Trough QUANTITY AS SCHEDULED

A. Provide a Floor Trough, having the following features:

1. All TIG welded, all external corners welded and polished to a satin finish.
2. Perimeter flange mounts directly to sub floor.
3. ¾" vertical step design to accommodate floor tile installation.
4. 14-gauge type 304 stainless steel polished stainless-steel grating.
5. Accommodates up to 4" waste pipe.

B. Floor trough to be provided by Advance Tabco, Model FFTG-1224, or Aero Manufacturing or Select Stainless.

60.1 Supply Fan, Roof Top - Refer to 47.1-50.1 Hoods and Components
61.2 Exhaust Fan, Roof Top – Refer to 47.1-50.1 Hoods and Components

62.2 Refrigerator, Undercounter QUANTITY AS SCHEDULED

A. Provide a roll in/undercounter refrigerator having the following features:

1. Three-year warranty on all parts and an additional 2-year warranty on compressor.
2. 134A refrigerant, NSF-7 compliant.
3. Stainless steel door, front & sides exterior with stainless steel side walls, back, floor, door liner & ceiling interior.
4. Electrical characteristics as scheduled.
5. Exterior digital temperature with either *F or *C.
6. Top mounted refrigeration system with evaporator positioned out of food zone.
7. Positive seal self-closing door with 120* stay open feature.
8. Magnetic door gasket of one-piece construction.

B. Refrigerator, Roll-Thru to be manufactured by True Refrigeration, Model TUC-72 or STR2RRT-2S-2S, Traulsen, or Victory.

63.2 Table, Enclosed Base, Open Front QUANTITY AS SCHEDULED

A. Provide an Open Front, Enclosed Base Table, having the following features:

1. NSF Certified
2. Top is 14-gauge stainless steel type 304 series with galvanized understructure. Body is 18-gauge stainless steel type 430 series. Legs are stainless steel, including 1-1/2” adjustable foot, with 5” Heavy Duty Polyurethane Casters, with brakes.
3. All TIG welded, with Entire top polished to a satin finish, and sound deadened.

B. Enclosed base, open front table to be Advanced Tabco, Model EB-SS-366M, or Aero Manufacturing or Select Stainless.

64.2 Over shelf, Table mount QUANTITY AS SCHEDULED

A. Provide a Table Mounted Over shelf having the following features:

1. NSF Certified.
2. Double deck over shelf 12” x 72”
3. All TIG welded, 16-gauge 304 stainless upgrade option, polished to a satin finish.

B. Table Mount Over shelf to be by Advance Tabco, Model OTS-12-72 (TA-99), or Aero Manufacturing or Select Stainless.

65.1 Can Opener QUANTITY AS SCHEDULED

A. Provide a can opener with the following features:

1. NSF Certified
2. Stainless Steel under clamp model or permanent model options.
3. Stainless steel and aluminum nickel-plated components.

B. Can Opener to be provided by Nemco Food Equipment, Model 56050-1, or Edlund or Browne

66.3 Rack, Pan QUANTITY AS SCHEDULED

A. Provide a Pan Rack, having the following features:

1. NSF Certified.
2. 18-gauge type 304 stainless steel.
3. Mobile multi-purpose rack, able to hold 18" by 26", 18" by 13", and 17" by 25" pans and fry screens.
4. Tray slide are 1" by 1-1/2" extruded aluminum angle heli-arc welded to frame. Bottom load ledge design.
5. 5" standard swivel non-marking casters.

B. Pan Rack to be provided by Channel Manufacturing, Model 401S, or Aero or Select Stainless

67.1 Deleted

68.1 Deleted

69A/B.1 Ice Maker and Bin QUANTITY AS SCHEDULED

A. Provide an Ice Maker with the following features:

1. UL Listed, NSF Certified
2. 3-year parts and labor warranty on Ice Maker, 5-year parts and labor on Evaporator, 5-year part warranty on Compressor.
3. Electrical characteristics as scheduled.
4. R-404A CFC-free Refrigerant.
5. 1,196 lbs per day ice production capacity.
6. 710lb hold capacity.
7. Easy read display.
8. Hinged front door swings out for easy access. Removable water-trough, distribution tube, curtain, and sensing probes for fast and efficient cleaning. Select components made with AlphaSan® antimicrobial.
9. DuraTech Exterior. Stainless finish with clear coat.

B. Ice Maker with Bin to be provided by Manitowoc, Model IDT1200A / D-970, or Hoshizaki or Scottsman

70.1 Deleted

71.1 Table, Work, Back Splash without Undershelf QUANTITY AS SCHEDULED

A. Provide a Work Table with Back Splash, w/o Undershelf, having the following features:

1. NSF Certified.
2. All TIG welded, with welded areas blended to match adjacent surfaces, to a satin finish, and with stainless steel gussets welded to a stainless-steel support hat channel, seamless, 14-gauge type 304 stainless steel top.
3. Top is sound deadened.
4. 1-5/8" sanitary rolled rim edge on front and square sides, 5" splash, 1" return on rear side.

B. Work Table with Back Splash to be by Advance Tabco, Model TKSS-304, or Aero Manufacturing or Select Stainless.

72.1 Shelving, Modular Wall System QUANTITY AS SCHEDULED

A. Provide a modular shelving wall system with the following features:

5. NSF Certified
6. Zinc finish, sealed with MasterSeal
7. Single or Double Shelf Kits options.
8. Included components are Wall Mats (3" by 3" grids), Vertical Wall Uprights (pair), and Wire Shelf Brackets (pair).

B. Modular Wall Shelving System to be provided by Eagle Group, Model WAL-2-1848, or Advance Tabco or Select Stainless

73.1 Freezer, Reach-In QUANTITY AS SCHEDULED

A. Provide a Reach-In Freezer, having the following features:

1. Three-year warranty on all parts and an additional 2-year warranty on compressor.
2. Lifetime guaranteed heavy duty all metal working spec door handle and bolt style door locks.
3. R404A refrigerant, NSF compliant.
4. Electrical characteristics as scheduled.
5. Stainless steel front, countertop, & sides. Interior stainless-steel liner and floor with covered corners.
6. Exterior digital temperature display.
7. Foamed in door and panels using Ecomate (zero ODP and zero GWP).
8. Incandescent interior lighting – safety shielded.

B. Reach-In Freezer to be by True, Model T-23F, or Traulsen, or Victory.

74.1 Refrigerator, Reach-In QUANTITY AS SCHEDULED

A. Provide a Reach-In Refrigerator, having the following features:

1. Three-year warranty on all parts and an additional 2-year warranty on compressor.
2. Lifetime guaranteed heavy duty all metal working spec door handle and bolt style door locks.
3. 134A refrigerant, NSF compliant.
4. Electrical characteristics as scheduled.

5. Stainless steel front, countertop, & sides. Interior stainless-steel liner and floor with covered corners.
6. Exterior digital temperature display.
7. Foamed in door and panels using Ecomate (zero ODP and zero GWP).
8. Incandescent interior lighting, safety shielded.

B. Reach-In Refrigerator to be by True, Model T-49, Traulsen, or Victory.

75A.1 Pass-Thru Heated Cabinet QUANTITY AS SCHEDULED

A. Provide a Pass-Thru Heated Cabinet, having the following features:

1. Three-year warranty on all parts and an additional 2-year warranty on compressor.
2. Foamed in door and panels using Ecomate (zero ODP and zero GWP).
3. NSF-4 compliant.
4. Stainless steel door, front & sides exterior with stainless steel side walls, back, floor, door liner & ceiling interior.
5. Electrical characteristics as scheduled.
6. Interior holding temperature of 140*F to 180*F, with heating system controlled by exterior on/off switch, and electronic temperature control.
7. Manually controlled cent located on top of the cabinet.
8. Positive seal self-closing door with 120* stay open feature.
9. Magnetic door gasket of one-piece construction.

B. Pass-Thru Heated Cabinet to be by True, Model STR2HPT-2S-2S, Traulsen, or Victory.

75B.1 Pass-Thru Heated Cabinet QUANTITY AS SCHEDULED

A. Provide a Pass-Thru Heated Cabinet, having the following features:

1. Three-year warranty on all parts and an additional 2-year warranty on compressor.
2. Foamed in door and panels using Ecomate (zero ODP and zero GWP).
3. NSF-4 compliant.
4. Stainless steel door, front & sides exterior with stainless steel side walls, back, floor, door liner & ceiling interior.
5. Electrical characteristics as scheduled.
6. Interior holding temperature of 140*F to 180*F, with heating system controlled by exterior on/off switch, and electronic temperature control.
7. Manually controlled cent located on top of the cabinet.
8. Positive seal self-closing door with 120* stay open feature.
9. Magnetic door gasket of one-piece construction.

B. Pass-Thru Heated Cabinet to be by True, Model STR1HPT-1S-1S, Traulsen, or Victory.

76.1 Pass-Thru Refrigerator QUANTITY AS SCHEDULED

A. Provide a Pass-Thru Refrigerator, having the following features:

9. Three-year warranty on all parts and an additional 2-year warranty on compressor.
10. Lifetime guaranteed heavy duty all metal working spec door handle and bolt style door locks.
11. 134A refrigerant, NSF compliant.
12. Electrical characteristics as scheduled.
13. Stainless steel front, countertop, & sides. Interior stainless-steel liner and floor with covered corners.
14. Exterior digital temperature display.
15. LED interior lighting, safety shielded.
16. Foamed in door and panels using Ecomate (zero ODP and zero GWP).

B. Pass-Thru Refrigerator to be by True, Model STR1RPT-1S-1S, Traulsen, or Victory.

77.1 Staff Lockers QUANTITY AS SCHEDULED

A. Provide Staff Lockers, having the following features:

1. Steel hasp assembly
2. Louvers for ventilation
3. Name/Number plate

B. Staff lockers to be provided by Salsbury Industries

78.1 Deleted

79.5 Shelving, Max iQ Starter System QUANTITY AS SCHEDULED

A. Provide a Max Q Shelving Starter System with the following features:

1. NSF Certified.
2. Microban Antimicrobial Protection.
3. 800 lbs. per shelf capacity.
4. Open grid, removable shelf mat.
5. (4) tier model.

B. Shelving to be provided by Metro, Model MQ2460, MQ2472G, MQ21154G, MQ2172G, MQ2448G, MQ2436G, or
Nexel or Global Industrial

80.1 Deleted

81.1 Water Filtration System QUANTITY AS SCHEDULED

A. Provide a Water Filtration System with the following features:

1. NSF Certified
2. 1-year carbon lifespan
3. Cold water inlet
4. 13 gal per min peak capacity.
5. 3/4" MNPT Inlet

B. Water Filtration System to be provided by Antunes, Model VZN-441HC-T5 (9700773), or Cuno or Evepure

82.10 Shelving, Max iQ Starter System QUANTITY AS SCHEDULED

A. Provide a Max Q Shelving Starter System with the following features:

6. NSF Certified.
7. Microban Antimicrobial Protection.
8. 800 lbs. per shelf capacity.
9. Open grid, removable shelf mat.
10. (4) tier model.

B. Shelving to be provided by Metro, Model MQ2460, or Nexel or Global Industrial

83.5 Shelving, Max iQ Starter System QUANTITY AS SCHEDULED

A. Provide a Max Q Shelving Starter System with the following features:

11. NSF Certified.
12. Microban Antimicrobial Protection.
13. 800 lbs. per shelf capacity.
14. Open grid, removable shelf mat.
15. (4) tier model.

B. Shelving to be provided by Metro, Model MQ2472, or Nexel or Global Industrial

84.1 Shelving, Max iQ Starter System QUANTITY AS SCHEDULED

A. Provide a Max Q Shelving Starter System with the following features:

16. NSF Certified.
17. Microban Antimicrobial Protection.
18. 800 lbs. per shelf capacity.
19. Open grid, removable shelf mat.
20. (4) tier model.

B. Shelving to be provided by Metro, Model MQ2448, or Nexel or Global Industrial

85.1 Cart, Utility QUANTITY AS SCHEDULED

C. Provide Polymer Utility Cart with the following features:

21. NSF Certified.
22. Microban Antimicrobial Protection.
23. 150 lbs. per shelf capacity.
24. Deep ledge to contain spills
25. (3) tier model.

D. Utility Cart to be provided by Metro, Model BC2336-24G, or Rubbermaid or Luxor

END OF SECTION 000000

Item	MfrName	Model	Category	Page
1	BSI	1 xCUSTOM	TRAY & SILVER	4
2	BSI	1 xDECO-259-N	CAFETERIA, BUFFET SHIELD	6
3	Hatco	3 xHCWBI-4DA	Drop-In, Hot/Cold Wells	10
4	BSI	1 xDECO-302-N	CAFETERIA, BUFFET SHIELD	12
5	BSI	1 x25'-8" CUSTOM MODULAR	TRAY w. SILVER	16
6	ATLAS METAL INDUSTRIES	3 xPDS-8 1/8	DROP-IN, DISH DISPENSERS,	18
7	BSI	1 xDECO- 106-N	CAFETERIA, BUFFET SHIELD	20
7	BSI	1 xDECO- 106-N	CAFETERIA, BUFFET SHIELD	24
8	Hatco	1 xHCWBI-4DA	Drop-In, Hot/Cold Wells	25
9	TAFCO	1 x35'-8" X 14'-10"	INDOOR COMB REFR/FREEZER,	27
10	SERVEND	1 xSV-150	DISPENSER, ICE/BEVERAGE	30
11	Hoshizaki America	1 xDCM-500BAH-OS	Ice Maker/Dispenser	32
12	ADVANCE TABCO	10 xFDR-1212	FLOOR DRAIN	34
13	SILVER KING	1 xSKMAJ2	DISPENSER, MILK	36
14	FETCO	1 xTBS-2121XTS	ICED TEA BREWER	40
15	FETCO	1 xCBS-52H-20	COFFEE MAKER, INSULATED SERVER,	44
16	FETCO	1 xGR 1.2	COFFEE GRINDER	46
17	APW WYOTT	1 xW4-2	WARMER, FOOD, ELECTRIC	48
18	STAR MANUFACTURING	1 xQCSE2-600H	TOASTER, CONVEYOR	50
19	ADVANCE TABCO	1 xMS-18-24	SHELF, MICROWAVE	52
20	PANASONIC	2 xNE-1054	OVEN, MICROWAVE	53
21	BSI	1 x96-BT-EB	BEVERAGE COUNTER	54
22	DORMONT MANUFACTURING	1 xBRWMAX-S2S BREWER FILTRATION	WATER FILTRATION SYSTEM, COFFEE	56
23	BSI	1 x74-ST-EB	FLAT TOP	58
24	FISHER	1 x8253	FAUCET, SERVICE SINK	60
25	EAGLE GROUP/METAL	1 x321561	MOP HOLDER	61
26	ADVANCE TABCO	1 xFDR-1212	FLOOR DRAIN	63
27	Advance Tabco	1 xPS-18-120	Pot Rack, Wall Mount	65
28	MARS AIR DOORS	1 xEP296-2U*	AIR CURTAIN, UNHEATED	67
29	Advance Tabco	1 xDTS-D60-96R	Dishtable, 'L' Shape, 16 gauge	69
30	ADVANCE TABCO	1 xDTA-79	DISHTABLE, SORTING SHELF	71
31	Champion Industries	1 xDH2000	Warewasher, Door Type, High Temp	73
32	Advance Tabco	1 xDTC-G60-72L	Dishtable, 'L' Shape, 16 gauge	75
33	Advance Tabco	1 xFC-3-2424-24RL	Sink, NSF, 3 comp, 16 gauge	77
34	FISHER	1 x53880	FAUCET, DECK MOUNT	79
34	FISHER	1 x53880	FAUCET, DECK MOUNT	80

MSHCG

Item	MfrName	Model	Category	Page
35	FISHER	2 x99643	PRE-RINSE FAUCET, BACKSPLASH	81
36	ADVANCE TABCO	3 xFFTG-1272	FLOOR TROUGH	82
37	FISHER	1 x99708	PRE-RINSE FAUCET, BACKSPLASH	84
38	ADVANCE TABCO	5 x7-PS-80	HAND SINK, WALL MOUNT	85
39	METRO	5 xMQ2472G	SHELVING, MAX iQ STARTER SYSTEM	87
40	RUBBERMAID	2 xE2632	32 GAL CONTAINER	89
41	EAGLE GROUP/METAL	4 xWAL-2-1848	SHELVING, MODULAR WALL SYSTEM	101
42	ADVANCE TABCO	3 xKMS-11B-305R	TABLE, PREP W/ SINK	103
43	CAMBRO	2 xIB44148	BIN, INGREDIENT	105
44	ADVANCE TABCO	1 xTKSS-304	TABLE, WORK, 14 GAUGE, BACK	107
45	HOBART US FOODSERVICE	1 x2812	SLICER, FOOD	109
46	Fisher	1 x29262	Hose Reel with Gun	113
47	CAPTIVE AIRE	1 xTBD	HOOD, EXHAUST #1	114
48	CAPTIVE AIRE	1 xTBD	HOOD, EXHAUST #2	116
49	CAPTIVE AIRE	1 xTBD	MCC STARTERS	118
50	CAPTIVE AIRE	1 xTBD	ANSOL FIRE SYSTEM	119
51	Angelo Po America	1 xTBFXA610	Stand, Equipment	120
52	Angelo Po America	1 xFX101G3	Oven-Steamer, Combination, Boilerless,	122
53	CARTER-HOFFMAN	1 xCH1600U	OVEN, SLOW COOK/HOLD	125
54	SOUTHBEND	1 x4725AA-3C (R)	RANGE, RESTAURANT, GAS	127
55	FISHER	2 x2040	FILLER, KETTLE & POT	129
56	ACCUTEMP PRODUCTS	1 xPGF1201A4800-S2	GRIDDLE, GAS W/ STAND	130
57	HENNY PENNY	1 xOFG341.0	FRYER, DEEP FAT, GAS W/FILTER	132
58	SOUTHBEND	1 xBGMTS-40	TILT SKILLET	134
59	ADVANCE TABCO	1 xFFTG-1248	FLOOR TROUGH	136
60	CAPTIVE AIRE	1 xTBD	SUPPLY FAN, ROOF TOP	138
61	CAPTIVE AIRE	1 xTBD	EXHAUST FAN, ROOF TOP	139
61	CAPTIVE AIRE	1 xTBD	EXHAUST FAN, ROOF TOP	140
62	True Manufacturing Co., Inc.	2 xTUC-72	Refrigerator, Undercounter	148
63	Advance Tabco	2 xEB-SS-306M	Table, Enclosed Base, Open Front	150
64	ADVANCE TABCO	2 xOTS-12-72	OVERSHELF, TABLE MOUNT	152
65	NEMCO FOOD EQUIPMENT	1 x56050-1	CAN OPENER	154
66	CHANNEL MANUFACTURING	3 x401S	RACK, PAN	156
67	JOHN BOOS & CO.	1 xBT3S02	TABLE, BAKER'S W/SPLASH	157
68	HOBART US FOODSERVICE	1 xHL600-2STDDEL	MIXER, FLOOR	159
69	Manitowoc Ice	1 xIRT0500A-161	Ice Maker w/ Bin	163

MSHCG

Item	MfrName	Model	Category	Page
70	WATERSPEC FILTER SYSTEMS	1 xIS-10 TWIN	WATER FILTRATION SYSTEM, ICE	165
71	ADVANCE TABCO	1 xTKSS-304	TABLE, WORK, 14 GAUGE, BACK	166
72	EAGLE GROUP/METAL	1 xWAL-2-1848	SHELVING, MODULAR WALL SYSTEM	168
73	ANGELO PRO AMERICA	1 xBC51MU	CHILLER, BLAST	170
74	True Manufacturing Co., Inc.	1 xT-49F	Freezer, Reach-In	172
75	True Manufacturing Co., Inc.	1 xT-49	Refrigerator, Reach-In	174
76	Hatco	1 xPMG-100	Warewasher, Final Rinse Booster, Gas	176
77	AO SMITH	1 xBTR-400 A	WATER HEATER,, GAS	178
78	Metro	1 xC589-FC	Cabinet, Holding/Proofing	182
79	METRO	5 xMQ2472G	SHELVING, MAX iQ STARTER SYSTEM	184
80	METRO	1 xTTS10NA	SHELVING, HIGH DENSITY TRACK KIT	186
81	Metro	3 xEZ1860NK3-4	Shelving Unit, Starter, Metal, Wire	190
82	Metro	1 xEZ1848NC-4	Shelving Unit, Starter, Metal, Wire	192
83	Salsbury	1 xTBD	STAFF LOCKERS	194

MSHCG

GENERAL INFORMATION

Project Name: _____

Item: _____

Quantity: _____

Model: _____

Length: _____

DESCRIPTION

Economical and adaptive, Millwork Construction has all the flexibility of Unibody and Contoura for situations where no stainless steel is required.

GENERAL SPECIFICATION

- 3/4" Millwork Panels
- 34" Overall Height (ADA Requires Optional Tray Rest)
- Stainless Steel Adjustable Bullet Feet
- Adjustable, Removable or Fixed Shelves

ADDITIONAL OPTIONS

☐ Casters

CUSTOM CONSTRUCTION

Millwork Construction

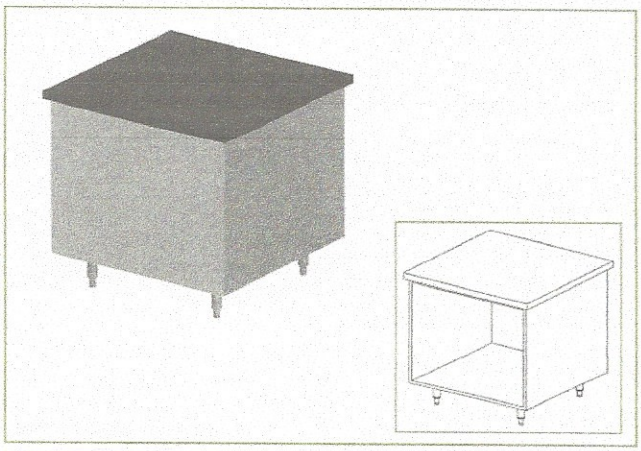

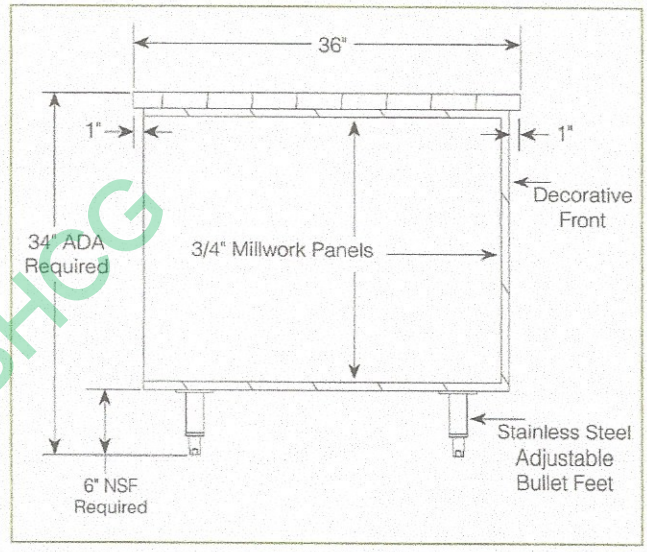

MSHCG

For Custom Decorative Details see the following detail pages:

Tray Slide Options
Millwork Counter Tops
Exterior Panel Options

*** Approval Drawings Required**

Printed in the U.S.A. (January 2013) BSI, LLC
Specifications subject to change without notice.

MIX Paper from responsible sources FSC® C023568

Basic frame construction is NSF Certified and UL Listed. The use of different construction materials may affect these certifications.

Rv. 5

TRAY SLIDE OPTIONS

All BSI counter constructions can adapt all available tray slide options. Below are the five standard tray slides.



Stainless Steel Inverted V

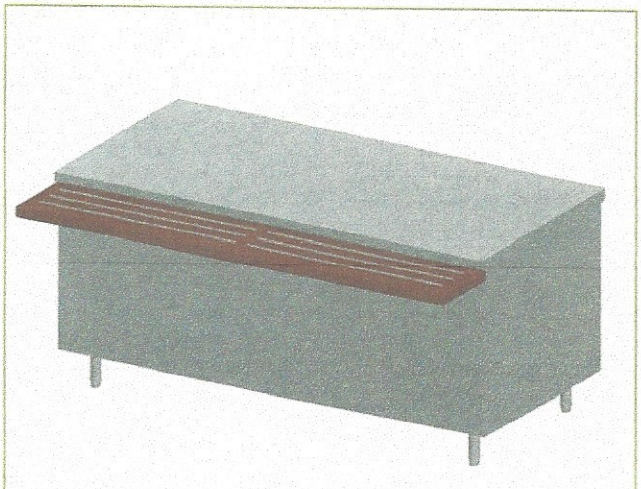

Solid Surface Inset Rails

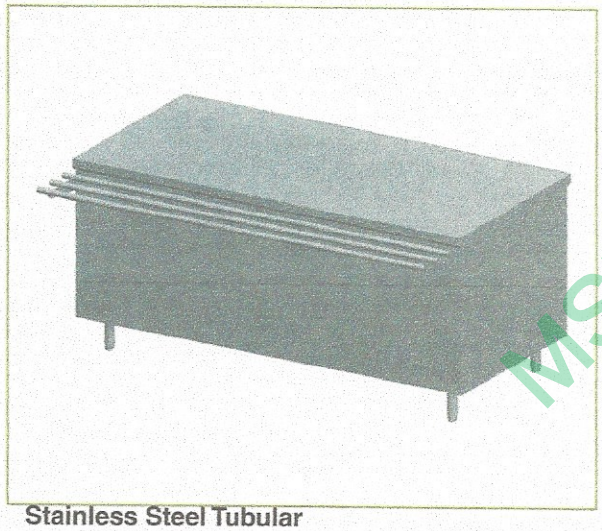

Stainless Steel Tubular

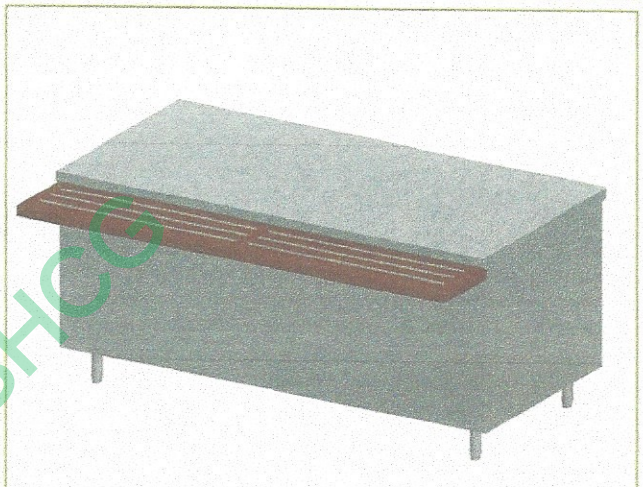

Solid Surface Studded Rails



Stainless Steel Curved Tubular

OPTIONS

- ☐ Stainless Steel Inverted V
- ☐ Stainless Steel Tubular
- ☐ Solid Surface Inset Rails
- ☐ Solid Surface Studded Rails
- ☐ Stainless Steel Curved Tubular
- ☐ Other _____

MSHCG

Printed in the U.S.A. (January 2013) BSI, LLC
Specifications subject to change without notice.

MIX
Paper from responsible sources
FSC® C023568

Rv. 5

ZGUARD® FOOD SHIELDS

GENERAL INFORMATION

Project Name: _____

Item: _____

Quantity: _____

Model: ZG9930

Length: _____

ZG9930

Single-Sided w/Top Shelf



Shown without end panels.

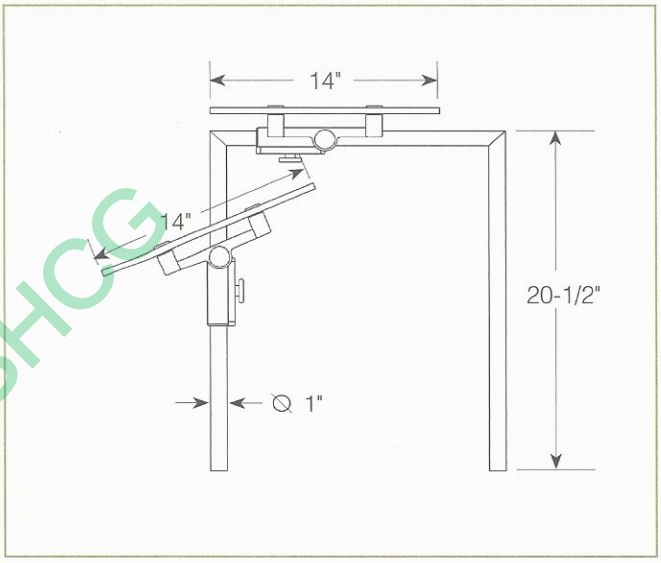

MSHOG

To meet NSF guidelines, end panels are included on all BSI quotations unless specifically excluded. (See End Panel Page for More Details.)

STANDARD NSF LISTED FINISH OPTIONS

- ☐ Brushed Aluminum/SS
- ☐ Chrome/SS
- ☐ Gloss Black
- ☐ Wrinkle Black
- ☐ Smoked Copper
- ☐ Polished Brass Finish
- ☐ Other _____

LIGHT AND WARMER OPTIONS

- ☐ Linear T-5 Fluorescent Unit
- ☐ BSI Stealth™ Linear Heat Only Unit
- ☐ BSI Stealth™ Linear Heat and Light Combo Unit
- ☐ BSI Stealth™ Linear Double Heat and Light Combo Unit
- ☐ Hatco® Brand Heat Only Unit
- ☐ Hatco® Brand Heat and Light Combo Unit
- ☐ Other _____

GLASS OPTIONS

- ☐ 1" Radius Corner (standard)
- ☐ Square Corners
- ☐ 1/4" Tempered Glass (not for shelves) Centerline Max 54"
- ☐ 3/8" Tempered Glass (for shelf or span more than 54") Centerline Max 66"

INSTALLATION OPTIONS

Above-Counter: Stainless Steel Counter

Under-Counter: Stainless Steel Counter

(Requires Under-Counter Reinforcement & Access)

- ☐ SS1: EZ Mount 2" x 8" Flange
- ☐ SSU3-H: Heavy-Duty Flange
- ☐ SSU3-N: Narrow Flange
- ☐ SSU5-H: Heavy-Duty Flange
- ☐ SSU5-N: Narrow Flange

Above-Counter: Millwork Counter

- ☐ MW1: Heavy-Duty Flange
- ☐ MW2: Narrow Flange

Under-Counter: Millwork Counter

- ☐ MWU3: Narrow Flange
- ☐ MWU4: Compression Installation (not recommended for solid surfaces)
- ☐ MWU5: Heavy-Duty Flange

See Installation Page for More Details.

*** Approval Drawings Required**

ZGuards can be provided with a UL Listed light or warmer.

Printed in the U.S.A. (January 2013) BSI, LLC
Specifications subject to change without notice.

MIX Paper from responsible sources FSC® C023568

Patent Number 6,588,863 Rv. 5

BSI, LLC ◆ 5125 Race Court ◆ Denver, CO 80216 ◆ Phone: 1.800.662.9595 ◆ Fax: 303.331.8444 ◆ Web: www.BSIdesigns.com

LIGHTS AND WARMERS

GENERAL INFORMATION

Project Name: _____

Item: _____

Quantity: _____

Model: 2580

Length: _____

2580

Fluorescent Slimline™ Light

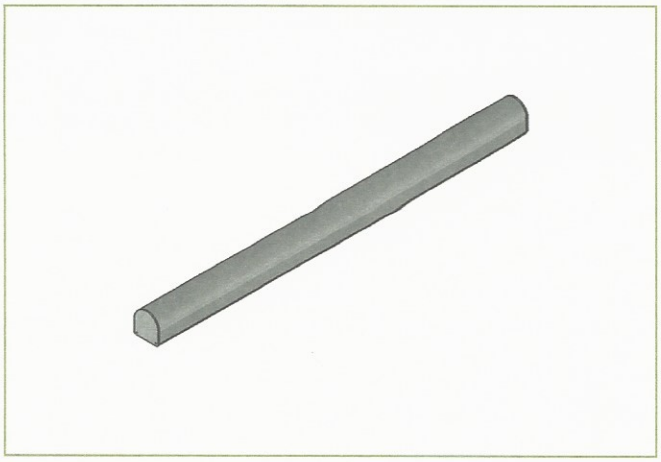

DESCRIPTION

The Slimline™ light is manufactured by BSI, LLC. The light shall consist of an aluminum housing and an inner aluminum holder/reflector.

The light shall include a remote on/off switch and a remote ballast in an enclosure. The light shall be factory-assembled ready for electrical installation.

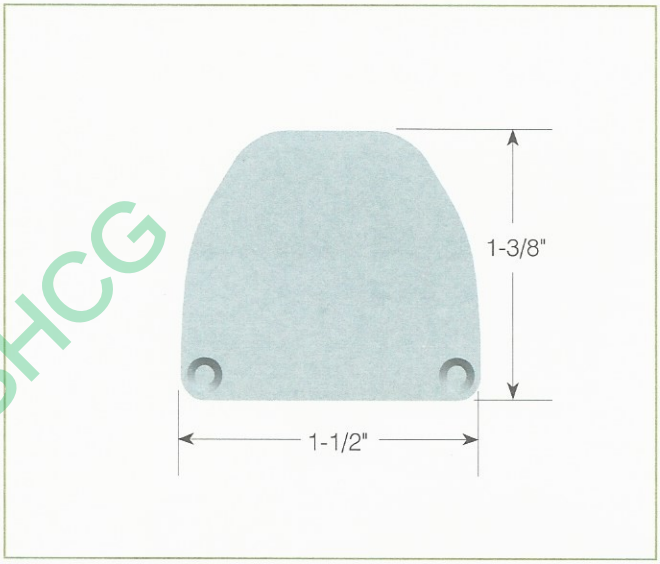

GENERAL SPECIFICATION

Ballast Information	
Operating Voltage:	120 VAC
Frequency:	50/60 HZ
ATHD:	Meets ANSI C82.11-1993
Protection/Output:	Open Lamp Shortened Lamp
Protection/Overcurrent:	Fuse
Protection/Voltage Transients:	MOV (PER ANSI C82.11-1993)
Open Circuit Voltage:	600 V RMS Max
Lamp Starting Mode:	Instant Start

MSHCG

Lamp Amps	
HOUSING LENGTH	**MAX. AMPS**
All Lengths	0.55
Minimum Housing is 24"	
Maximum Housing is 144"	

Information for 4100K Fluorescent Lamps	
Average Rated Life (hr):	20,000
Base:	Miniature Bi-Pin
Bulb:	T5
Color Rendering Index (CRI)	82
Diameter (in):	0.67
Lamp Starting Mode:	Program Start
Bulb Manufacturer:	Shat-R-Shield

*** Approval Drawings Required**

Printed in the U.S.A. (January 2013) BSI, LLC
Specifications subject to change without notice.

MIX Paper from responsible sources FSC® C023568

Rv. 5

UL NO. E305112

ZGUARD® FOOD SHIELDS

END PANELS

To meet NSF guidelines, end panels are included on all BSI quotations unless specifically excluded. The following section shows size and location of glass end panels for select ZGuard models. For end panel information relating to additional models please contact the BSI factory at 1.800.622.9595.

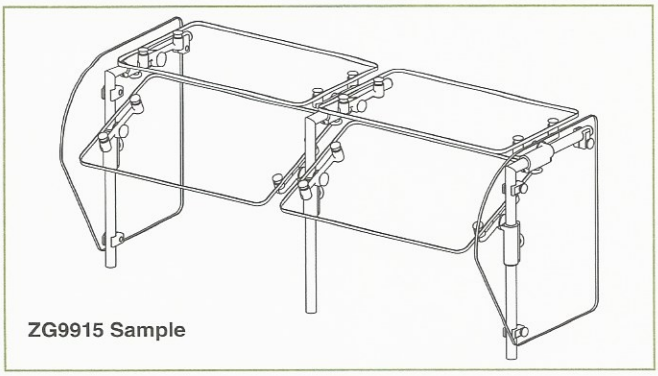

ZG9915 Sample

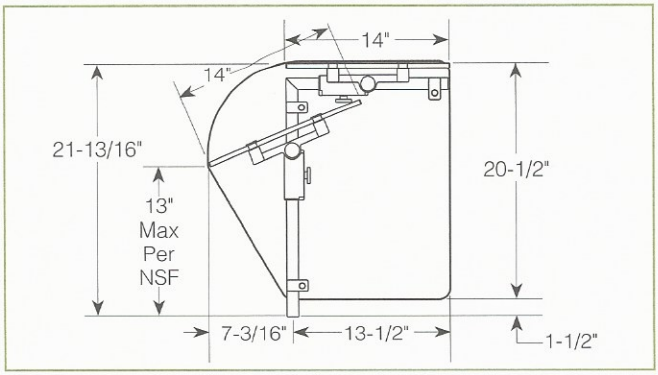

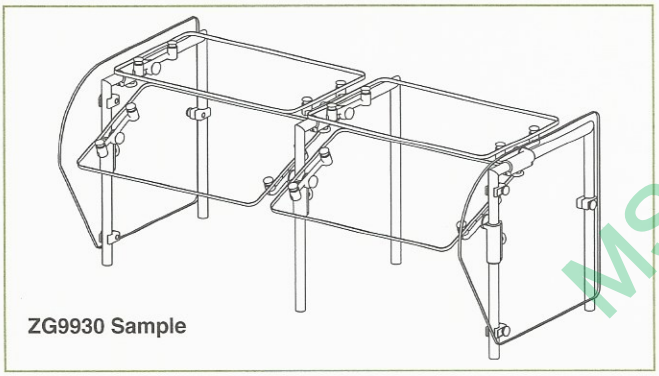

ZG9930 Sample

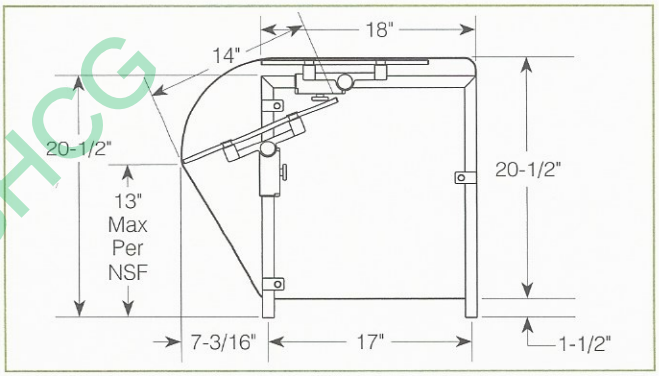

MSHCG

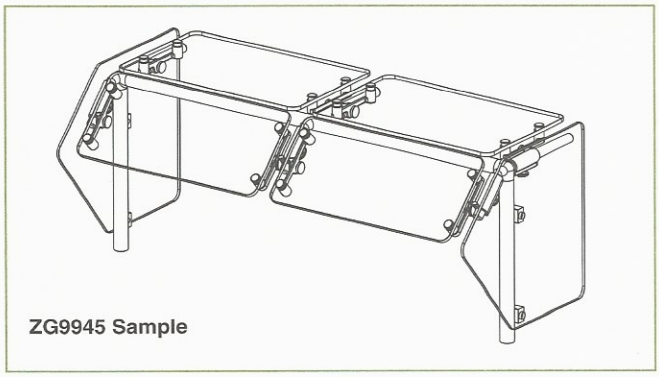

ZG9945 Sample

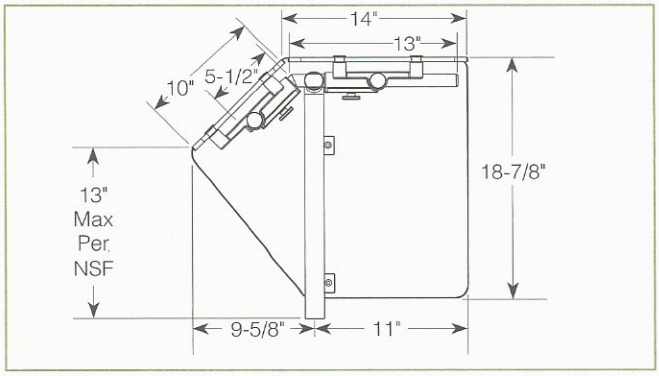

Printed in the U.S.A. (January 2013) BSI, LLC
Specifications subject to change without notice.

MIX
Paper from responsible sources
FSC® C023568

Patent Number 6,588,863 Rv. 5

BSI, LLC • 5125 Race Court • Denver, CO 80216 • Phone: 1.800.662.9595 • Fax: 303.331.8444 • Web: www.BSIdesigns.com

ZGUARD® FOOD SHIELDS

UNDER-COUNTER INSTALLATION FOR 1" ZGUARD POSTS

For Stainless Steel Counter
(requires under-counter reinforcement and access)
SSU3: Heavy-Duty Flange (-H) or Narrow Flange (-N)

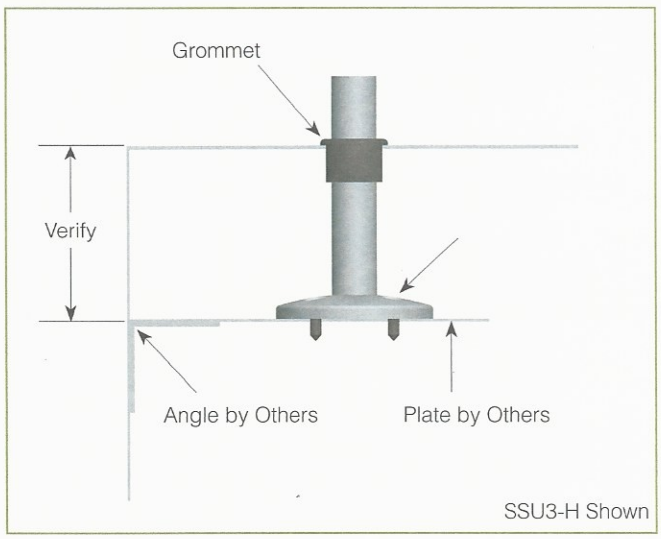

For Stainless Steel Counter
(requires under-counter reinforcement and access)
SSU5: Heavy-Duty Flange (-H) or Narrow Flange (-N)

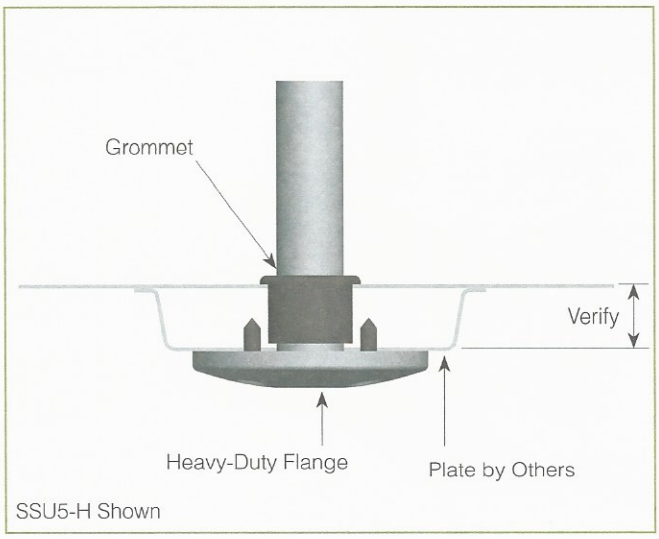

Verify Counter Thickness or Under-Counter Installation Depth in Inches

MSHCG

For Millwork Counter
MWU3: Narrow Flange

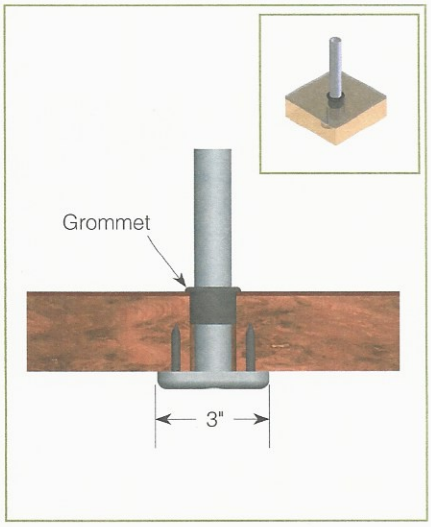

For Millwork Counter
MWU4: Compression Installation
(not recommended for solid surfaces)

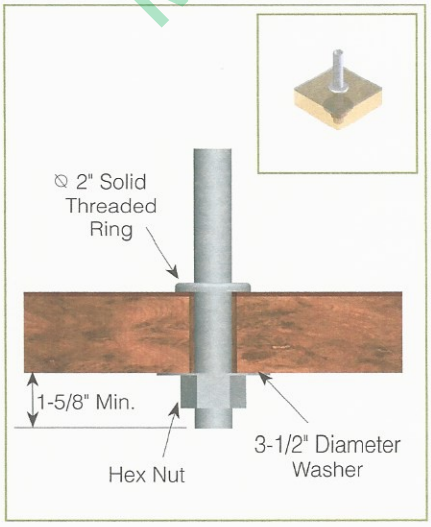

For Millwork Counter
MWU5: Heavy-Duty Flange

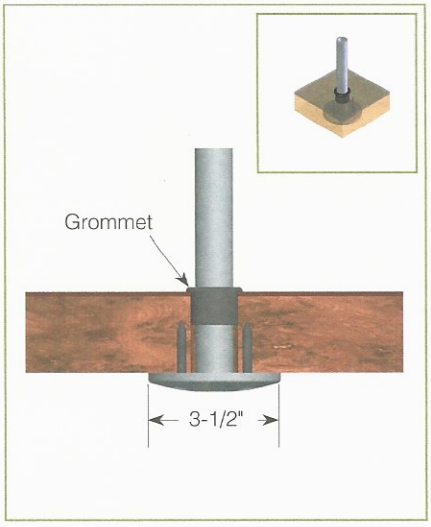

Verify Counter Thickness or Under-Counter Installation Depth in Inches

Printed in the U.S.A. (January 2013) BSI, LLC
Specifications subject to change without notice.

MIX
Paper from responsible sources
FSC® C023568

Patent Number 6,588,863 Rv. 5

BSI, LLC ◆ 5125 Race Court ◆ Denver, CO 80216 ◆ Phone: 1.800.662.9595 ◆ Fax: 303.331.8444 ◆ Web: www.BSIdesigns.com

Project _____

Item # _____

Quantity _____

Drop-In Hot/Cold Wells

Models: HCWBI-2DA, -3DA, -4DA, -5DA, -6DA

Hatco Drop-In Hot/Cold Wells combine the legendary technology of both the Hatco Heated and Refrigerated Wells into one unit to create the ultimate flexibility in your buffet line or catering needs. You can keep hot foods at safe serving temperatures during the morning hours and then switch to pre-chilled food products at the lunch hour peaks.



Hot Mode: HCWBI-2DA shown with accessory food pans and hot mode pan supports (included), which are designed specifically for easier and safer handling of foods.

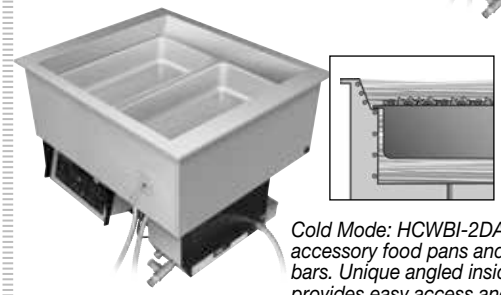

Cold Mode: HCWBI-2DA shown with accessory food pans and cold pan support bars. Unique angled inside wall design provides easy access and clear views, while allowing cold air to effectively blanket your food product.



"COLD – OFF – HOT" three position rocker switch, with digital read-outs for either the hot or cold mode.

Standard features

- Hot/Cold Combination Drop-In Well can house a variety of pans, full-size, half-size or third-size and available in a two through six pan configuration
- Easy to read and use electronic control assembly and pan support bars
- Cold Mode: Similar to Hatco's CWB Cold Well, including auto-defrost, easy serviceability, optimal insulation and efficient condenser. Includes cold mode pan supports
- Hot Mode: Utilizes the same time-tested FR2 Hydro-Heater (Bain Marie) with "free flow" technology for an efficient and safe operation with a longer life, and includes drain, auto-fill and hot mode frame for pan support
- Adjustable set points to keep your particular food items at optimum temperatures
- Remote control box can be mounted to front counter for easy access (any vertical surface within approximately 5' (1524 mm)
- Matches the Hatco line of Refrigerated and Heated Wells for a fully integrated look
- Allow approximately 60 minutes or more for transition between operating modes of the Drop-In Hot/Cold Well

MSHCG

Options (available at time of purchase only)

☐ Additional Four Year Parts Only Warranty on the Compressor

☐ Three-Phase Wiring

Accessories

☐ FR2: Flush Hose, Cleaning Brush, Stopper and Adapter

☐ 12" (305 mm) Pan Support for Drop-In Refrigerated Wells

☐ 20" (508 mm) Pan Support for Drop-In Refrigerated Wells

Rectangular Full-Size Stainless Steel Food Pans:

☐ Third-Size (2.5" [64 mm] H)
☐ Full-Size (2.5" [64 mm] H)
☐ Full-Size (6" [152 mm] H)
☐ Half-Size (2.5" [64 mm] H)
☐ Full-Size (4" [101 mm] H)

c UL us NSF COMPONENT

MADE IN THE USA

HATCO CORPORATION | P.O. Box 340500 Milwaukee, WI 53234-0500 U.S.A.

(800) 558-0607 | (414) 671-6350 | www.hatcocorp.com | equipsales@hatcocorp.com | intlsales@hatcocorp.com

Drop-In Hot/Cold Wells

Models: HCWBI-2DA, -3DA, -4DA, -5DA, -6DA

All HCWBI-2DA, -3DA, -4DA, -5DA, -6DA Series

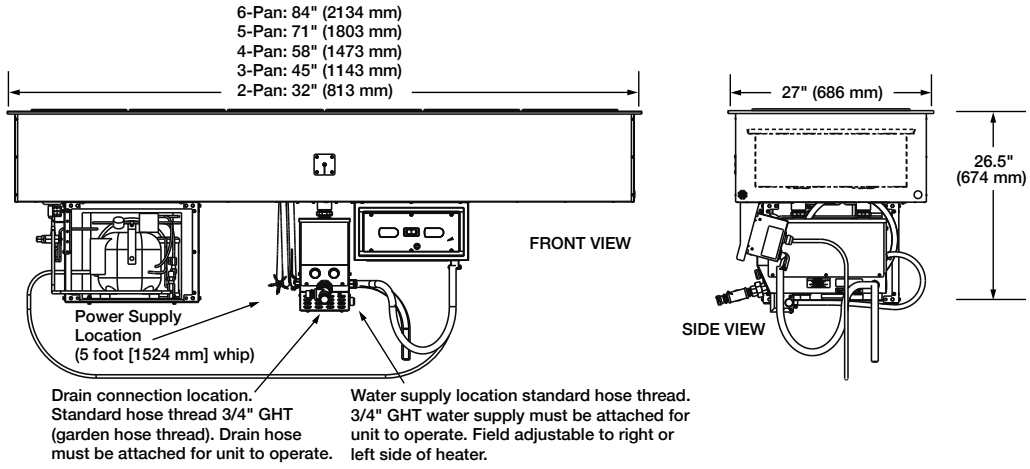

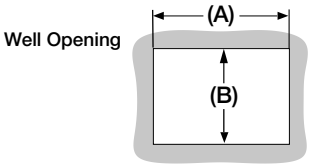

Cutout Dimensions for Drop-In Hot/Cold Wells

Model	Minimum Width (A)	Maximum Width (A)	Minimum Depth (B)	Maximum Depth (B)
HCWBI-2DA	30.125" (765 mm)	31" (787 mm)	25.19" (640 mm)	26" (660 mm)
HCWBI-3DA	43.125" (1095 mm)	44" (1118 mm)		
HCWBI-4DA	56.125" (1426 mm)	57" (1448 mm)		
HCWBI-5DA	69.125" (1756 mm)	70" (1778 mm)		
HCWBI-6DA	82.125" (2086 mm)	83" (2108 mm)		

MSRG

SPECIFICATIONS
Drop-In Full-Size Insulated Rectangular Models

Model	Dimensions (Width x Depth x Height)	Well Height	Compressor Size	Watts	Volts	Amps		Volts	Amps		Plug	Ship Weight*
						Single Phase	Three Phase		Single Phase	Three Phase		
HCWBI-2DA	32"x 27" x 26.5" (813 x 686 x 674 mm)	12" (305 mm)	1/4 hp	3000	120/208	14.5	8.4	120/240	—	7.3	Hardwired	242 lbs. (110 kg)
HCWBI-3DA	45" x 27" x 26.5" (1143 x 686 x 674 mm)					14.5	8.4		—	7.3		268 lbs. (122 kg)
HCWBI-4DA	58" x 27" x 26.5" (1473 x 686 x 674 mm)		1/3 hp	4000		19.2	11.2		16.7	9.6		309 lbs. (140 kg)
HCWBI-5DA	71" x 27" x 26.5" (1803 x 686 x 674 mm)		1/2 hp	6000		28.8	16.7		—	14.5		351 lbs. (137 kg)
HCWBI-6DA	84" x 27" x 26.5" (2134 x 686 x 674 mm)					28.8	16.7		—	14.5		358 lbs. (162 kg)

* Shipping weight includes packaging and is approximate.

PRODUCT SPECS
Drop-In Hot/Cold Wells

The Drop-In Hot/Cold Well shall be a Model ….as manufactured by the Hatco Corporation, Milwaukee, WI 53234 U.S.A., the Drop-In Hot/Cold Heated Well shall be rated at ….watts, ….volts, and be ….inches (millimeters) in overall width and be ….inches (millimeters) in overall depth. It shall consist of stainless and aluminized steel housing, electronic control panel (digital temperature display, drain, auto-fill, power light, and 3-position rocker switch (Hot, Off, and Cold), and pan support bars for full-size pans in cold and hot modes.

COLD MODE: A condensing unit, sight glass, service valves, receiver, and a dryer/filter. The digital temperature display for the Cold mode will have a set point of 32°F (0°C) and can be adjusted from 10° to 50°F (-12° to 10°C).

HOT MODE: The patented Hatco FR2 (Bain-Marie) shall consist of 1 to 3 stainless steel tubes wrapped with external heating elements. Each tube may be accessed for cleaning purposes. The unit may be emptied easily by a convenient drain and have a low-water cut-off. The digital temperature display for the Hot mode will have a set point of 192°F (89°C) and can be adjusted from 65° to 192°F (18° to 89°C).

Accessories may include pan support bars, and stainless steel food pans.

Warranty consists of 24/7 parts and service assistance (U.S. and Canada only)

HATCO CORPORATION | P.O. Box 340500 Milwaukee, WI 53234-0500 U.S.A.

(800) 558-0607 | (414) 671-6350 | www.hatcocorp.com | equipsales@hatcocorp.com | intlsales@hatcocorp.com

ZGUARD® FOOD SHIELDS

GENERAL INFORMATION

Project Name: _____

Item: _____

Quantity: _____

Model: ZG9930-5

Length: _____

ZG9930-5

Two-Tier Display Case



Shown without end panels.

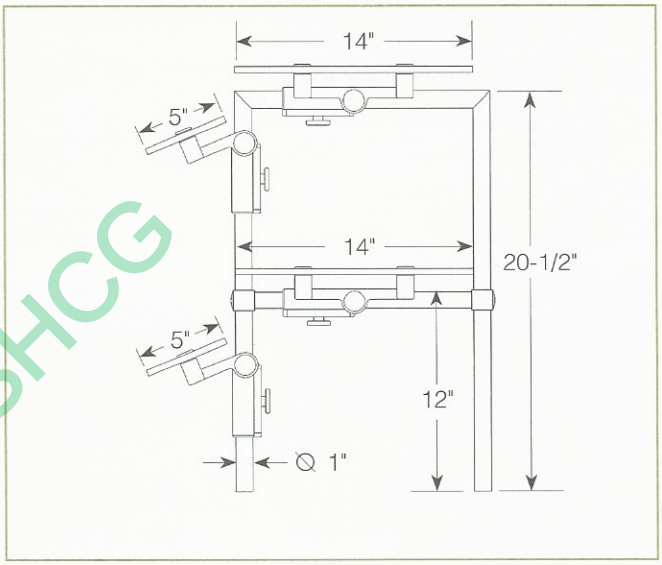

MSHCG

STANDARD NSF LISTED FINISH OPTIONS

- ☐ Brushed Aluminum/SS
- ☐ Chrome/SS
- ☐ Gloss Black
- ☐ Wrinkle Black
- ☐ Smoked Copper
- ☐ Polished Brass Finish
- ☐ Other _____

LIGHT AND WARMER OPTIONS

- ☐ Linear T-5 Fluorescent Unit
- ☐ BSI Stealth™ Linear Heat Only Unit
- ☐ BSI Stealth™ Linear Heat and Light Combo Unit
- ☐ BSI Stealth™ Linear Double Heat and Light Combo Unit
- ☐ Hatco® Brand Heat Only Unit
- ☐ Hatco® Brand Heat and Light Combo Unit
- ☐ Other _____

GLASS OPTIONS

- ☐ 1" Radius Corner (standard)
- ☐ Square Corners
- ☐ 1/4" Tempered Glass (not for shelves) Centerline Max 54"
- ☐ 3/8" Tempered Glass (for shelf or span more than 54") Centerline Max 66"

To meet NSF guidelines, end panels are included on all BSI quotations unless specifically excluded. (See End Panel Page for More Details.)

INSTALLATION OPTIONS

Above-Counter: Stainless Steel Counter	☐ SS1: EZ Mount 2" x 8" Flange
Under-Counter: Stainless Steel Counter	☐ SSU3-H: Heavy-Duty Flange
(Requires Under-Counter Reinforcement & Access)	☐ SSU3-N: Narrow Flange
	☐ SSU5-H: Heavy-Duty Flange
	☐ SSU5-N: Narrow Flange
Above-Counter: Millwork Counter	☐ MW1: Heavy-Duty Flange
	☐ MW2: Narrow Flange
Under-Counter: Millwork Counter	☐ MWU3: Narrow Flange
	☐ MWU4: Compression Installation (not recommended for solid surfaces)
	☐ MWU5: Heavy-Duty Flange

See Installation Page for More Details.

*** Approval Drawings Required**

ZGuards can be provided with a UL Listed light or warmer.

Printed in the U.S.A. (January 2013) BSI, LLC
Specifications subject to change without notice.

MIX Paper from responsible sources FSC® C023568

Patent Number 6,588,863 Rv. 5

BSI, LLC • 5125 Race Court • Denver, CO 80216 • Phone: 1.800.662.9595 • Fax: 303.331.8444 • Web: www.BSIdesigns.com

GENERAL INFORMATION

Project Name: _____

Item: _____

Quantity: _____

Model: 2580

Length: _____

2580

Fluorescent Slimline™ Light

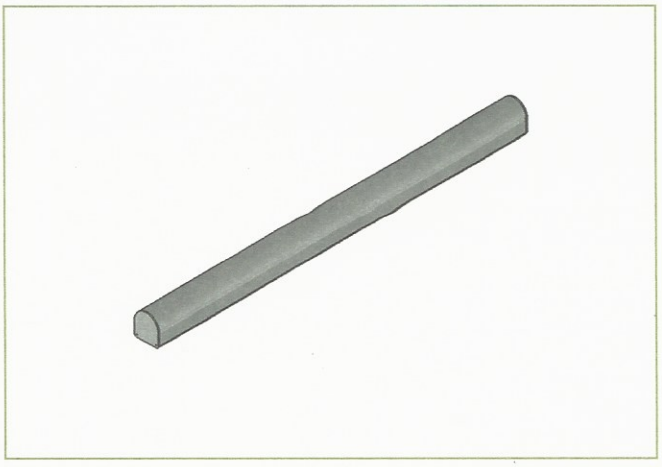

DESCRIPTION

The Slimline™ light is manufactured by BSI, LLC. The light shall consist of an aluminum housing and an inner aluminum holder/reflector.

The light shall include a remote on/off switch and a remote ballast in an enclosure. The light shall be factory-assembled ready for electrical installation.

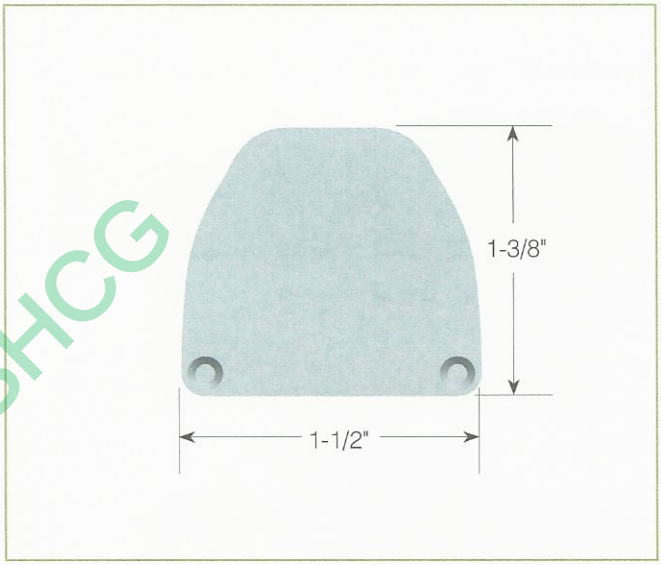

GENERAL SPECIFICATION

Ballast Information	
Operating Voltage:	120 VAC
Frequency:	50/60 HZ
ATHD:	Meets ANSI C82.11-1993
Protection/Output:	Open Lamp Shortened Lamp
Protection/Overcurrent:	Fuse
Protection/Voltage Transients:	MOV (PER ANSI C82.11-1993)
Open Circuit Voltage:	600 V RMS Max
Lamp Starting Mode:	Instant Start

MSHCG

Lamp Amps	
HOUSING LENGTH	**MAX. AMPS**
All Lengths	0.55
Minimum Housing is 24"	
Maximum Housing is 144"	

Information for 4100K Fluorescent Lamps	
Average Rated Life (hr):	20,000
Base:	Miniature Bi-Pin
Bulb:	T5
Color Rendering Index (CRI)	82
Diameter (in):	0.67
Lamp Starting Mode:	Program Start
Bulb Manufacturer:	Shat-R-Shield

*** Approval Drawings Required**

Printed in the U.S.A. (January 2013) BSI, LLC
Specifications subject to change without notice.

MIX
Paper from responsible sources
FSC® C023568

Rv. 5

UL NO. E305112

BSI, LLC ♦ 5125 Race Court ♦ Denver, CO 80216 ♦ Phone: 1.800.662.9595 ♦ Fax: 303.331.8444 ♦ Web: www.BSIdesigns.com

END PANELS

To meet NSF guidelines, end panels are included on all BSI quotations unless specifically excluded. The following section shows size and location of glass end panels for select ZGuard models. For end panel information relating to additional models please contact the BSI factory at 1.800.622.9595.

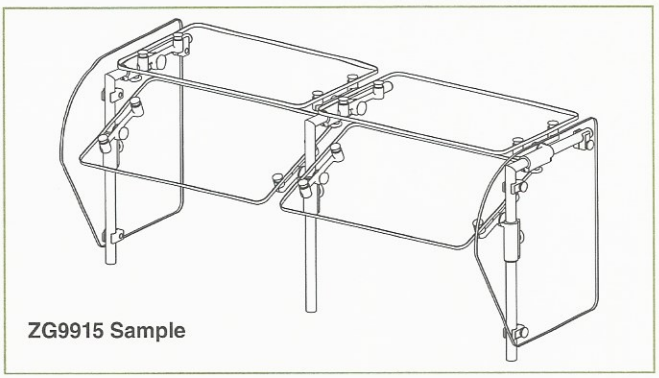

ZG9915 Sample

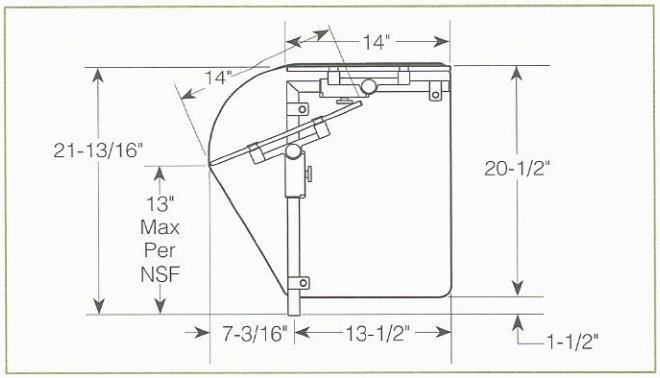

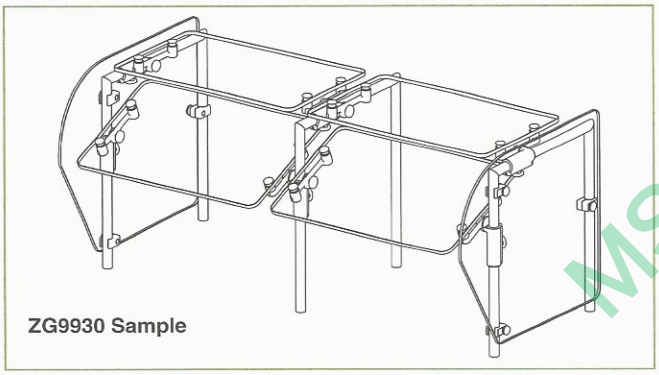

ZG9930 Sample

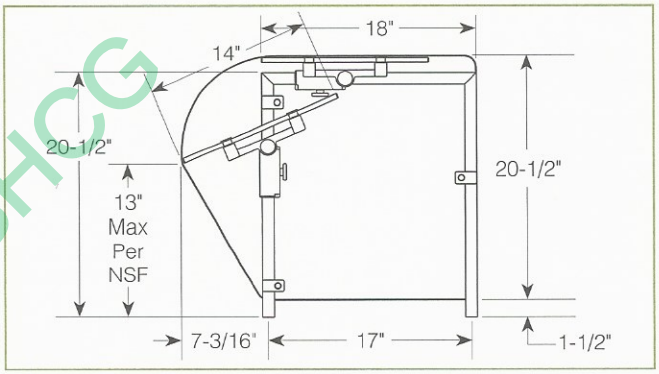

MSHCG

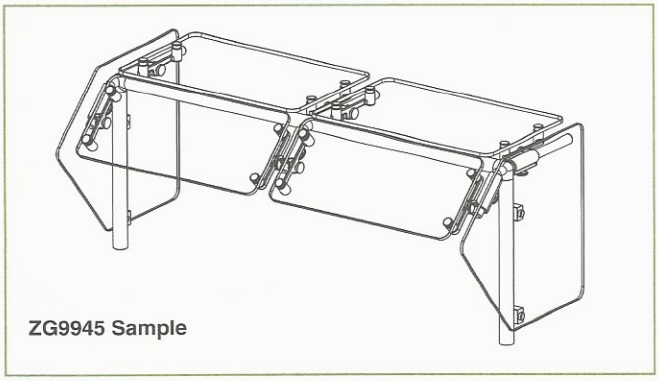

ZG9945 Sample

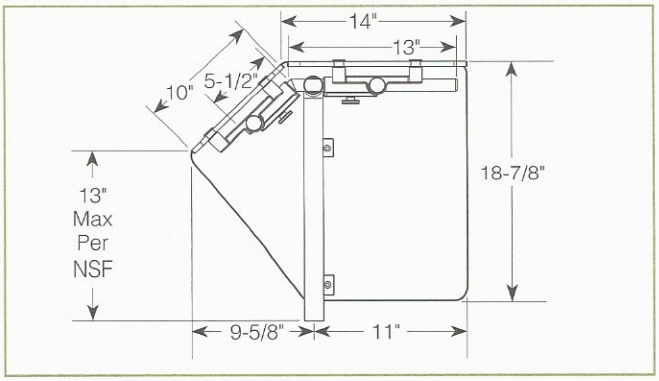

Printed in the U.S.A. (January 2013) BSI, LLC
Specifications subject to change without notice.

MIX
Paper from responsible sources
FSC® C023568

Patent Number 6,588,863 Rv. 5

ZGUARD® FOOD SHIELDS

UNDER-COUNTER INSTALLATION FOR 1" ZGUARD POSTS

For Stainless Steel Counter
(requires under-counter reinforcement and access)
SSU3: Heavy-Duty Flange (-H) or Narrow Flange (-N)

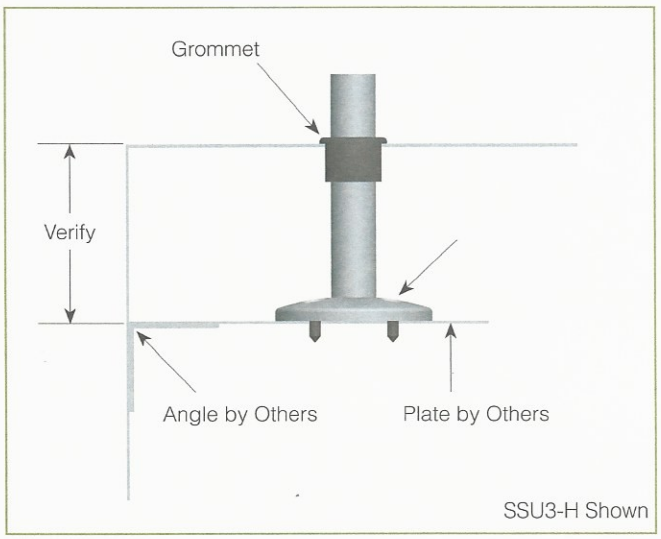

For Stainless Steel Counter
(requires under-counter reinforcement and access)
SSU5: Heavy-Duty Flange (-H) or Narrow Flange (-N)

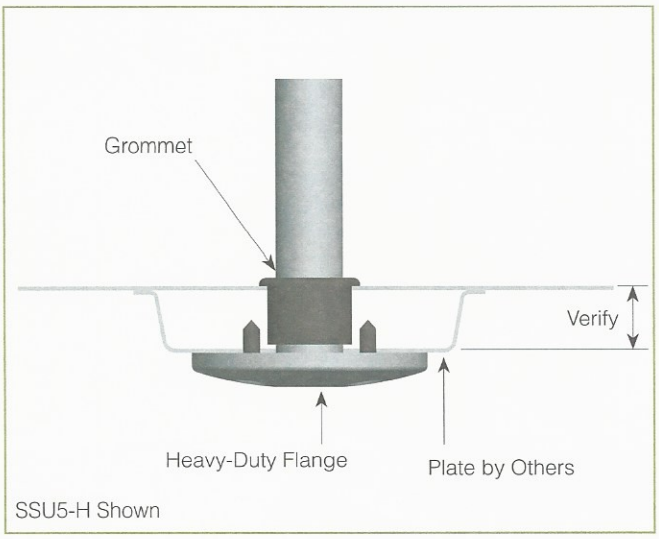

Verify Counter Thickness or Under-Counter Installation Depth in Inches

MSHCG

For Millwork Counter
MWU3: Narrow Flange

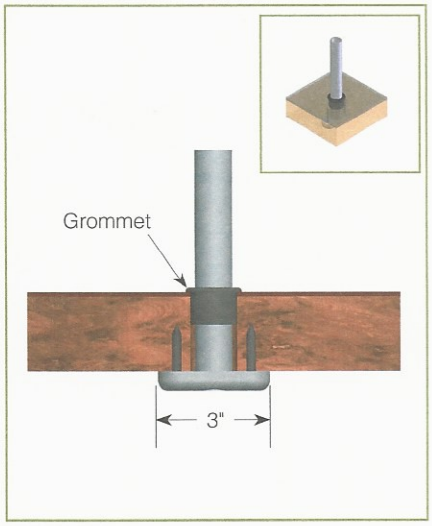

For Millwork Counter
MWU4: Compression Installation
(not recommended for solid surfaces)

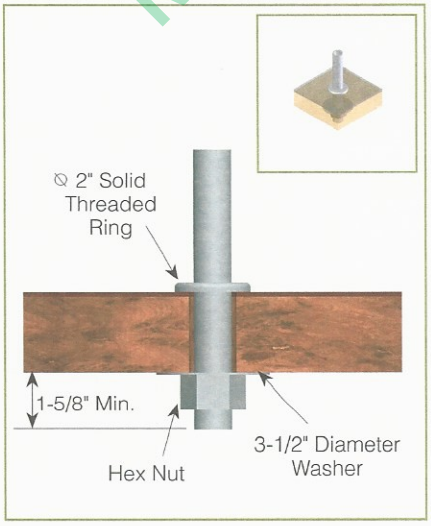

For Millwork Counter
MWU5: Heavy-Duty Flange

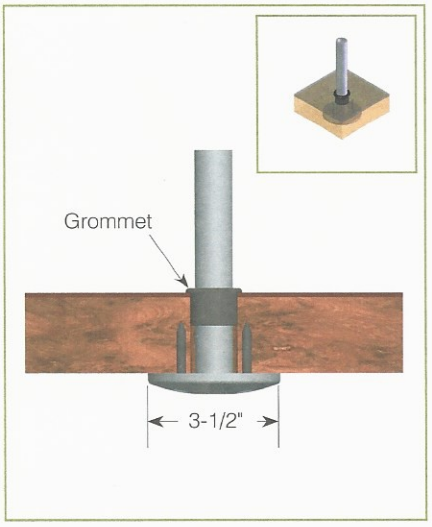

Verify Counter Thickness or Under-Counter Installation Depth in Inches

Printed in the U.S.A. (January 2013) BSI, LLC
Specifications subject to change without notice.

MIX
Paper from responsible sources
FSC® C023568

Patent Number 6,588,863 Rv. 5

BSI, LLC ◆ 5125 Race Court ◆ Denver, CO 80216 ◆ Phone: 1.800.662.9595 ◆ Fax: 303.331.8444 ◆ Web: www.BSIdesigns.com

GENERAL INFORMATION

Project Name: _____

Item: _____

Quantity: _____

Model: _____

Length: _____

DESCRIPTION

Economical and adaptive, Millwork Construction has all the flexibility of Unibody and Contoura for situations where no stainless steel is required.

GENERAL SPECIFICATION

- 3/4" Millwork Panels
- 34" Overall Height (ADA Requires Optional Tray Rest)
- Stainless Steel Adjustable Bullet Feet
- Adjustable, Removable or Fixed Shelves

ADDITIONAL OPTIONS

☐ Casters

CUSTOM CONSTRUCTION

Millwork Construction

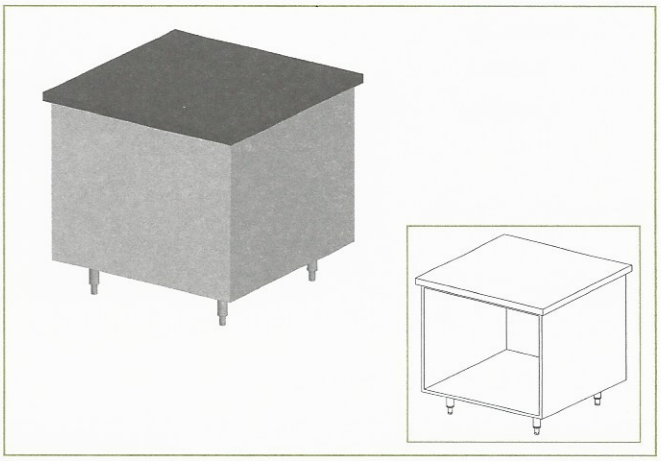

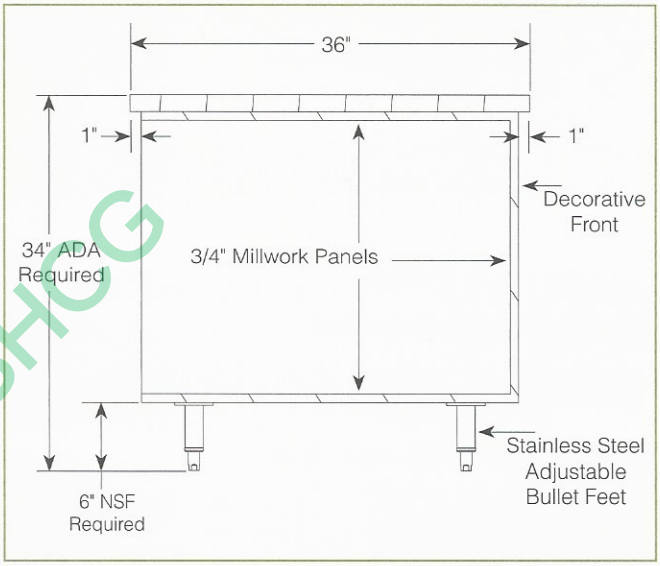

MSHCG

For Custom Decorative Details see the following detail pages:

Tray Slide Options
Millwork Counter Tops
Exterior Panel Options

*** Approval Drawings Required**

Basic frame construction is NSF Certified and UL Listed. The use of different construction materials may affect these certifications.

Printed in the U.S.A. (January 2013) BSI, LLC
Specifications subject to change without notice.

MIX Paper from responsible sources FSC® C023568

Rv. 5

TRAY SLIDE OPTIONS

All BSI counter constructions can adapt all available tray slide options. Below are the five standard tray slides.



Stainless Steel Inverted V



Stainless Steel Tubular



Solid Surface Inset Rails



Solid Surface Studded Rails



Stainless Steel Curved Tubular

OPTIONS

- ☐ Stainless Steel Inverted V
- ☐ Stainless Steel Tubular
- ☐ Solid Surface Inset Rails
- ☐ Solid Surface Studded Rails
- ☐ Stainless Steel Curved Tubular
- ☐ Other _____

MSHCG

Printed in the U.S.A. (January 2013) BSI, LLC
Specifications subject to change without notice.

FSC www.fsc.org MIX Paper from responsible sources FSC® C023568

Rv. 5

PLATE DISPENSERS DROP-IN

PD - UNHEATED • PDS - SHIELDED • PDH - HEATED DROP-IN

Project Name _____

N°# _____ Item N°# _____ Quantity _____

SPECIFICATIONS

CONSTRUCTION:

The model PD, PDS & PDH shall be drop-in self leveling design, the basic unit shall be constructed of series 300 stainless steel.

The counter top flange has three high impact plastic guide posts to align plates, the unit is self supporting using a formed stainless steel top flange welded to vertical channels and bottom disc, a stainless steel platform will be suspended with extension springs to support the stack of plates to be dispensed.

PDS: Same construction with an additional outer stainless steel shield, which cover spring mechanism and vertical channel guides.

PDH: Same construction with the addition of a base mounted heating element a side mounted thermostat, pilot light and on-off switch located in the top flange, a six foot 120V NEMA 5-15P cordset.

SELF LEVELING: The spring mechanism is easy to adjust a combination of extension springs will be provided for field adjusting to the required dispensing height.

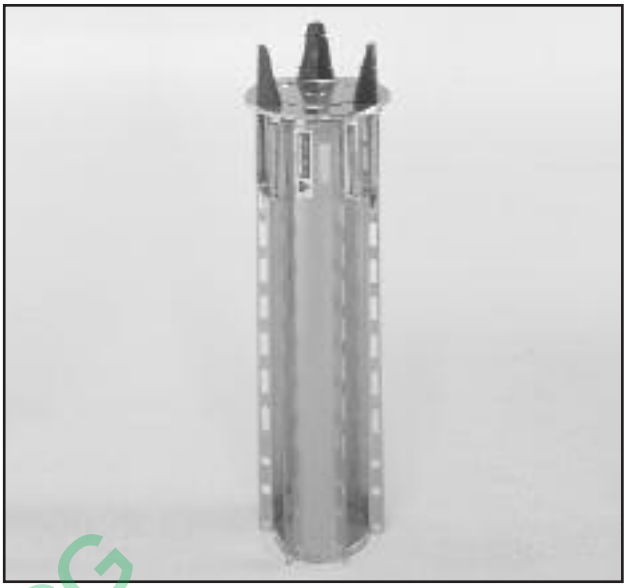

MODEL PD - 8 1/8

☐ **PD**
☐ **PDS**
☐ **PDH**

FOR HIGH VOLUME PLATE DISPENSING
FOR CAFETERIA AND TRAY MAKE-UP AREA

OPTIONS AND ACCESORIES

CONSULT THE FACTORY FOR SPECIAL REQUIREMENTS

☐ Special voltage _____

☐ Special height _____

☐ Stainless steel trays to convert PD-12 to cup dispenser

"ALL PRICES AND SPECIFICATIONS SUBJECT TO CHANGE WITHOUT NOTICE"

MSHOG

Atlas Metal INDUSTRIES, INC.

a subsidiary of Mercury Aircraft
1135 NW 159 Dr., Miami, Florida 33169
Tel: (305) 625-2451 or (800) 762-7565 • Fax: (305) 623-0475

PLATE DISPENSERS DROP-IN

PD - UNHEATED • PDS - SHIELDED • PDH - HEATED DROP-IN

STANDARD FEATURES:

- FIELD ADJUSTABLE
- CAPACITY UP TO (72) PLATES OR (36) BOWLS
  **Capacity may vary depending on plate or bowl manufacturer*
- UNDER COUNTER CLEARANCE, REQUIRES 27-1/2" TO 29"

SELF-LEVELING PLATE DISPENSER

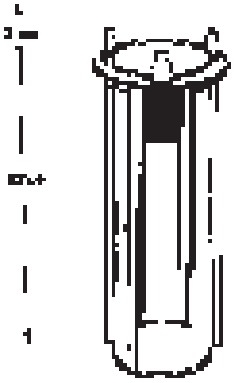

UNHEATED DROP-IN OPEN TUBE

MODEL	MAXIMUM PLATE SIZE	OUTSIDE FLANGE DIAMETER	CUT-OUT DIAMETER	SHIPPING WT. (lbs.)	✔
PD-5	5"	8-3/8"	7-3/4"	12 lbs.	
PD-5-3/4	5-3/4"	9-1/8"	8-1/2"	13 lbs.	
PD-6-1/2	6-1/2"	9-7/8"	9-1/4"	14 lbs.	
PD-7-1/4	7-1/4"	10-5/8"	10"	16 lbs.	
PD-8-1/8	8-1/8"	11-1/2"	10-7/8"	18 lbs.	
PD-9-1/8	9-1/8"	12-1/2"	11-7/8"	20 lbs.	
PD-10-1/8	10-1/8"	13-1/2"	12-7/8"	23 lbs.	
PD-12	12"	15-3/8"	14-3/4"	25 lbs.	
PD-14-1/2	14-1/2"	17-7/8"	17-1/4"	37 lbs.	

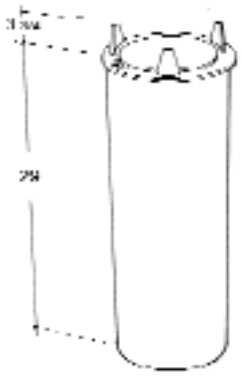

UNHEATED DROP-IN SHIELDED TUBE

MODEL	MAXIMUM PLATE SIZE	OUTSIDE FLANGE DIAMETER	CUT-OUT DIAMETER	SHIPPING WT. (lbs.)	✔
PDS-5	5"	8-3/8"	7-3/4"	17 lbs.	
PDS-5-3/4	5-3/4"	9-1/8"	8-1/2"	19 lbs.	
PDS-6-1/2	6-1/2"	9-7/8"	9-1/4"	21 lbs.	
PDS-7-1/4	7-1/4"	10-5/8"	10"	23 lbs.	
PDS-8-1/8	8-1/8"	11-1/2"	10-7/8"	25 lbs.	
PDS-9-1/8	9-1/8"	12-1/2"	11-7/8"	27 lbs.	
PDS-10-1/8	10-1/8"	13-1/2"	12-7/8"	31 lbs.	
PDS-12	12"	15-3/8"	14-3/4"	36 lbs.	
PDS-14-1/2	14-1/2"	17-7/8"	17-1/4"	45 lbs.	

MSHCC

HEATED DROP-IN SHIELDED TUBE

MODEL	ELEC @ 120V IPH		MAXIMUM PLATE SIZE	OUTSIDE FLANGE DIAMETER	CUT-OUT DIAMETER	SHIPPING WT. (lbs.)	✔
	WATTS	AMPS					
PDH-5	210	1.8	5"	8-3/8"	7-3/4"	17 lbs.	
PDH-5-3/4	240	2.0	5-3/4"	9-1/8"	8-1/2"	19 lbs.	
PDH-6-1/2	270	2.3	6-1/2"	9-7/8"	9-1/4"	21 lbs.	
PDH-7-1/4	300	2.5	7-1/4"	10-5/8"	10"	23 lbs.	
PDH-8-1/8	330	2.8	8-1/8"	11-1/2"	10-7/8"	25 lbs.	
PDH-9-1/8	380	3.2	9-1/8"	12-1/2"	11-7/8"	27 lbs.	
PDH-10-1/8	420	3.5	10-1/8"	13-1/2"	12-7/8"	31 lbs.	
PDH-12	500	4.2	12"	15-3/8"	14-3/4"	36 lbs.	
PDH-14-1/2	550	4.6	14-1/2"	17-7/8"	17-1/4"	45 lbs.	

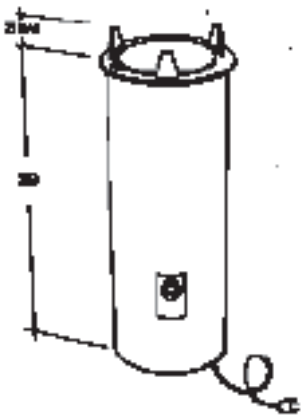

Atlas Metal INDUSTRIES, INC.

a subsidiary of Mercury Aircraft
1135 NW 159 Dr., Miami, Florida 33169
Tel: (305) 625-2451 or (800) 762-7565 • Fax: (305) 623-0475

10/07-SC

ZGUARD® FOOD SHIELDS

GENERAL INFORMATION

Project Name: _____

Item: _____

Quantity: _____

Model: ZG9930-5

Length: _____

ZG9930-5

Two-Tier Display Case



Shown without end panels.

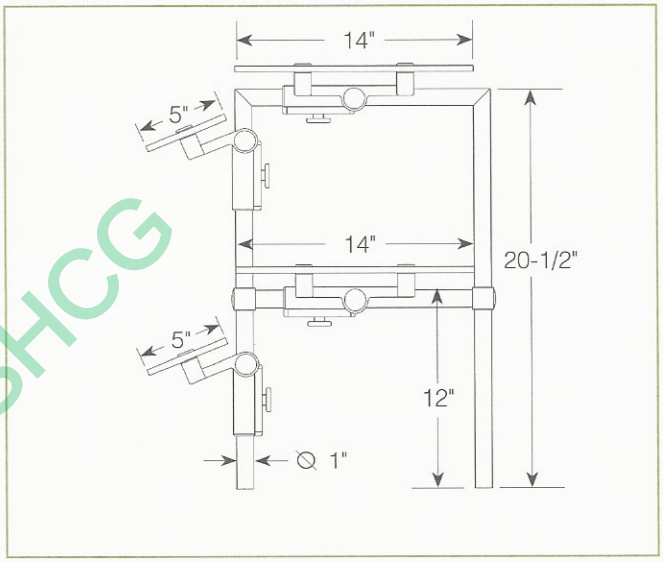

MSHCG

STANDARD NSF LISTED FINISH OPTIONS

- ☐ Brushed Aluminum/SS
- ☐ Chrome/SS
- ☐ Gloss Black
- ☐ Wrinkle Black
- ☐ Smoked Copper
- ☐ Polished Brass Finish
- ☐ Other _____

LIGHT AND WARMER OPTIONS

- ☐ Linear T-5 Fluorescent Unit
- ☐ BSI Stealth™ Linear Heat Only Unit
- ☐ BSI Stealth™ Linear Heat and Light Combo Unit
- ☐ BSI Stealth™ Linear Double Heat and Light Combo Unit
- ☐ Hatco® Brand Heat Only Unit
- ☐ Hatco® Brand Heat and Light Combo Unit
- ☐ Other _____

GLASS OPTIONS

- ☐ 1" Radius Corner (standard)
- ☐ Square Corners
- ☐ 1/4" Tempered Glass (not for shelves) Centerline Max 54"
- ☐ 3/8" Tempered Glass (for shelf or span more than 54") Centerline Max 66"

To meet NSF guidelines, end panels are included on all BSI quotations unless specifically excluded. (See End Panel Page for More Details.)

INSTALLATION OPTIONS

Above-Counter: Stainless Steel Counter	☐ SS1: EZ Mount 2" x 8" Flange
Under-Counter: Stainless Steel Counter	☐ SSU3-H: Heavy-Duty Flange
(Requires Under-Counter Reinforcement & Access)	☐ SSU3-N: Narrow Flange
	☐ SSU5-H: Heavy-Duty Flange
	☐ SSU5-N: Narrow Flange
Above-Counter: Millwork Counter	☐ MW1: Heavy-Duty Flange
	☐ MW2: Narrow Flange
Under-Counter: Millwork Counter	☐ MWU3: Narrow Flange
	☐ MWU4: Compression Installation (not recommended for solid surfaces)
	☐ MWU5: Heavy-Duty Flange

See Installation Page for More Details.

*** Approval Drawings Required**

ZGuards can be provided with a UL Listed light or warmer.

Printed in the U.S.A. (January 2013) BSI, LLC
Specifications subject to change without notice.

MIX Paper from responsible sources FSC® C023568

Patent Number 6,588,863 Rv. 5

BSI, LLC • 5125 Race Court • Denver, CO 80216 • Phone: 1.800.662.9595 • Fax: 303.331.8444 • Web: www.BSIdesigns.com

GENERAL INFORMATION

Project Name: _____

Item: _____

Quantity: _____

Model: 2580

Length: _____

2580

Fluorescent Slimline™ Light

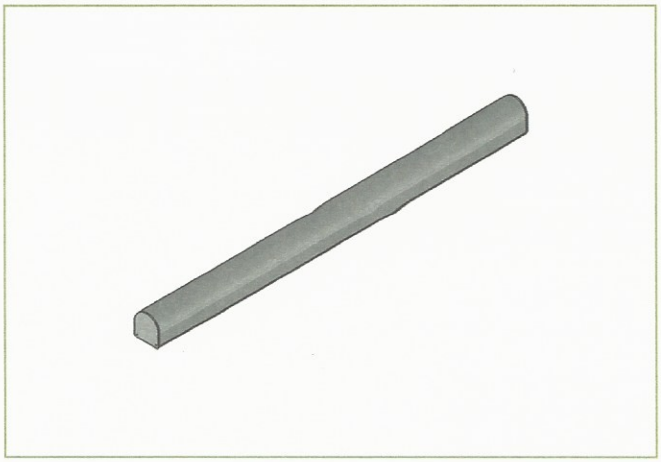

DESCRIPTION

The Slimline™ light is manufactured by BSI, LLC. The light shall consist of an aluminum housing and an inner aluminum holder/reflector.

The light shall include a remote on/off switch and a remote ballast in an enclosure. The light shall be factory-assembled ready for electrical installation.

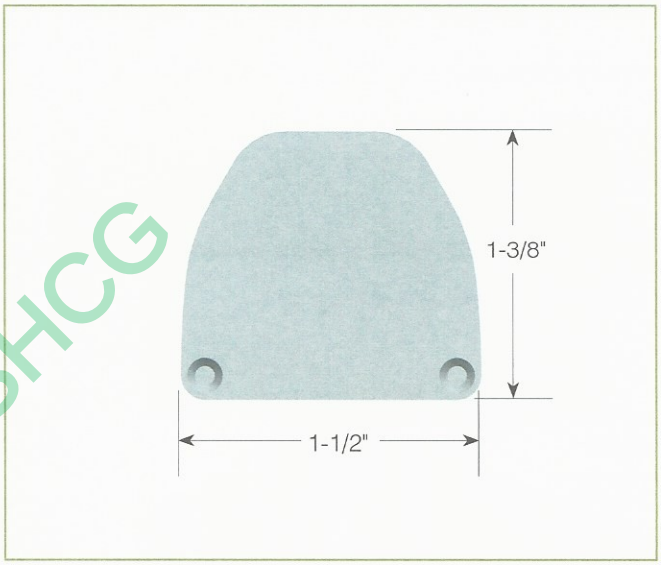

GENERAL SPECIFICATION

Ballast Information	
Operating Voltage:	120 VAC
Frequency:	50/60 HZ
ATHD:	Meets ANSI C82.11-1993
Protection/Output:	Open Lamp Shortened Lamp
Protection/Overcurrent:	Fuse
Protection/Voltage Transients:	MOV (PER ANSI C82.11-1993)
Open Circuit Voltage:	600 V RMS Max
Lamp Starting Mode:	Instant Start

MSHCG

Lamp Amps	
HOUSING LENGTH	**MAX. AMPS**
All Lengths	0.55
Minimum Housing is 24"	
Maximum Housing is 144"	

Information for 4100K Fluorescent Lamps	
Average Rated Life (hr):	20,000
Base:	Miniature Bi-Pin
Bulb:	T5
Color Rendering Index (CRI)	82
Diameter (in):	0.67
Lamp Starting Mode:	Program Start
Bulb Manufacturer:	Shat-R-Shield

*** Approval Drawings Required**

Printed in the U.S.A. (January 2013) BSI, LLC
Specifications subject to change without notice.

MIX
Paper from responsible sources
FSC® C023568

Rv. 5

UL NO. E305112

BSI, LLC ♦ 5125 Race Court ♦ Denver, CO 80216 ♦ Phone: 1.800.662.9595 ♦ Fax: 303.331.8444 ♦ Web: www.BSIdesigns.com

ZGUARD® FOOD SHIELDS

END PANELS

To meet NSF guidelines, end panels are included on all BSI quotations unless specifically excluded. The following section shows size and location of glass end panels for select ZGuard models. For end panel information relating to additional models please contact the BSI factory at 1.800.622.9595.

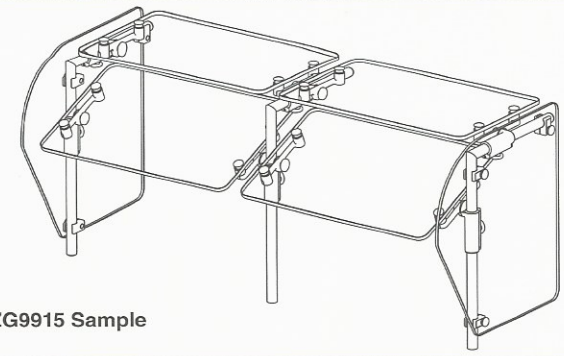

ZG9915 Sample

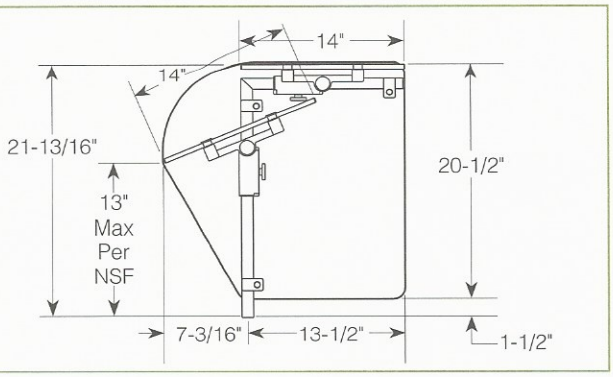

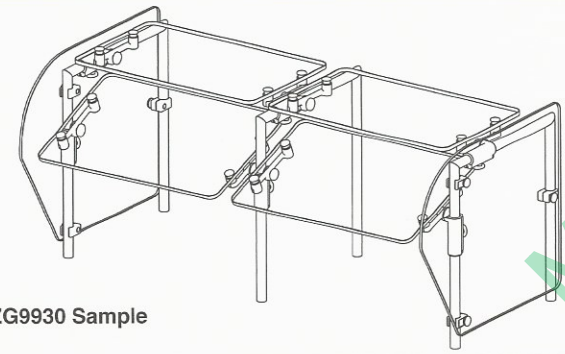

ZG9930 Sample

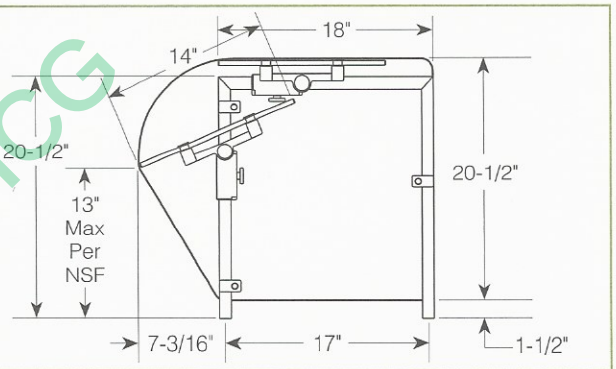

MSHCG

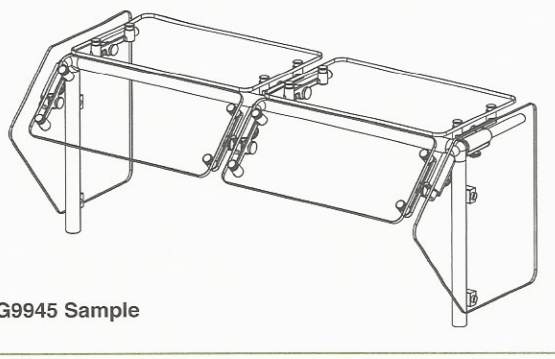

ZG9945 Sample

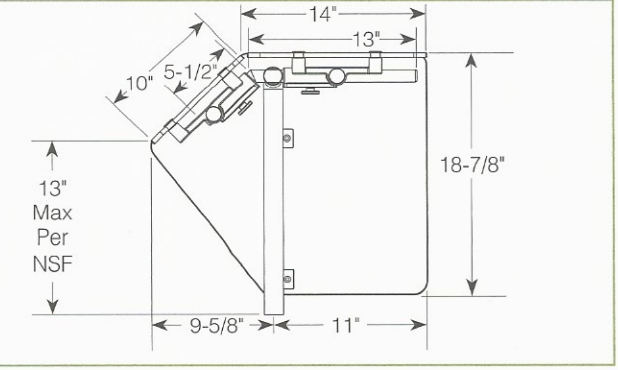

Printed in the U.S.A. (January 2013) BSI, LLC
Specifications subject to change without notice.

MIX
Paper from responsible sources
FSC® C023568

Patent Number 6,588,863 Rv. 5

BSI, LLC • 5125 Race Court • Denver, CO 80216 • Phone: 1.800.662.9595 • Fax: 303.331.8444 • Web: www.BSIdesigns.com

ZGUARD® FOOD SHIELDS

UNDER-COUNTER INSTALLATION FOR 1" ZGUARD POSTS

For Stainless Steel Counter
(requires under-counter reinforcement and access)
SSU3: Heavy-Duty Flange (-H) or Narrow Flange (-N)

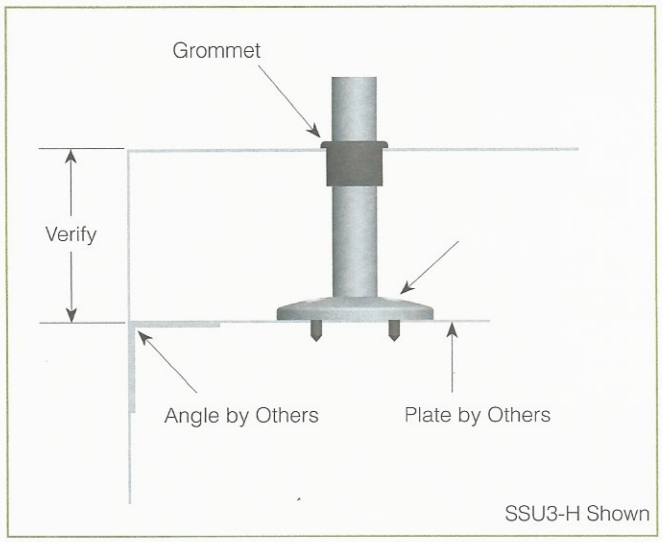

For Stainless Steel Counter
(requires under-counter reinforcement and access)
SSU5: Heavy-Duty Flange (-H) or Narrow Flange (-N)

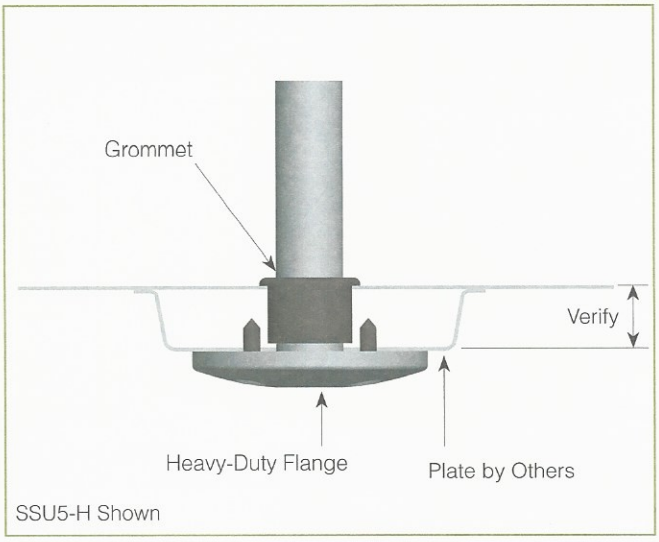

Verify Counter Thickness or Under-Counter Installation Depth in Inches

MSHCG

For Millwork Counter
MWU3: Narrow Flange

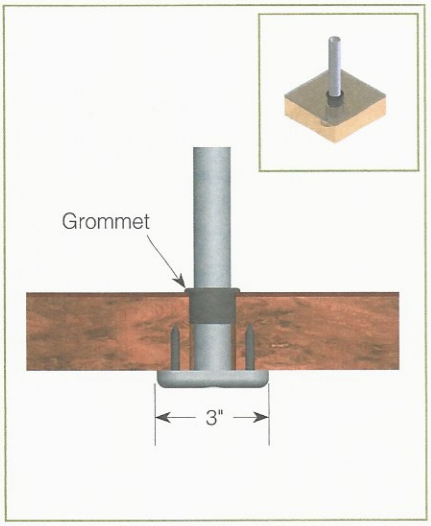

For Millwork Counter
MWU4: Compression Installation
(not recommended for solid surfaces)

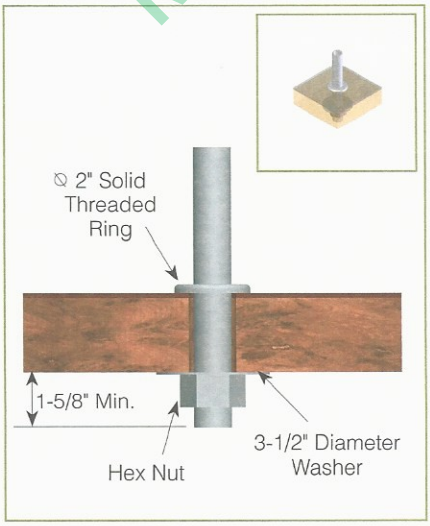

For Millwork Counter
MWU5: Heavy-Duty Flange

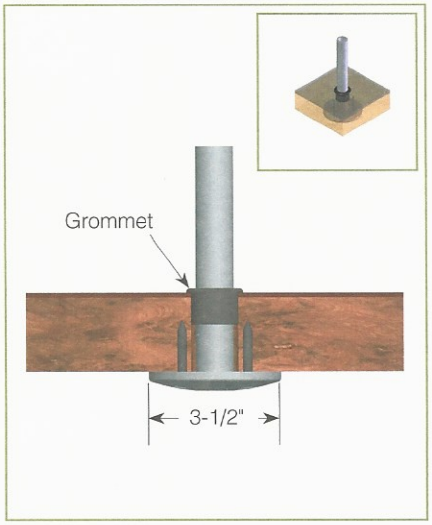

Verify Counter Thickness or Under-Counter Installation Depth in Inches

Printed in the U.S.A. (January 2013) BSI, LLC
Specifications subject to change without notice.

MIX
Paper from responsible sources
FSC® C023568

Patent Number 6,588,863 Rv. 5

BSI, LLC ◆ 5125 Race Court ◆ Denver, CO 80216 ◆ Phone: 1.800.662.9595 ◆ Fax: 303.331.8444 ◆ Web: www.BSIdesigns.com

No PDF Spec Sheet available for LTI DECO- 106-N.

MSHCG

Project _____

Item # _____

Quantity _____

Drop-In Hot/Cold Wells

Models: HCWBI-2DA, -3DA, -4DA, -5DA, -6DA

Hatco Drop-In Hot/Cold Wells combine the legendary technology of both the Hatco Heated and Refrigerated Wells into one unit to create the ultimate flexibility in your buffet line or catering needs. You can keep hot foods at safe serving temperatures during the morning hours and then switch to pre-chilled food products at the lunch hour peaks.



Hot Mode: HCWBI-2DA shown with accessory food pans and hot mode pan supports (included), which are designed specifically for easier and safer handling of foods.

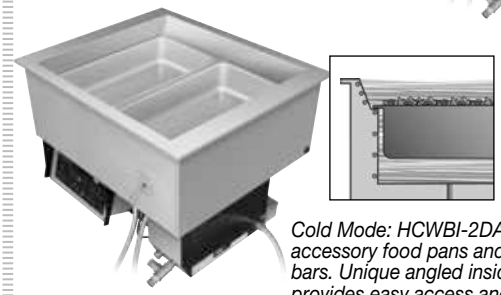

Cold Mode: HCWBI-2DA shown with accessory food pans and cold pan support bars. Unique angled inside wall design provides easy access and clear views, while allowing cold air to effectively blanket your food product.



"COLD – OFF – HOT" three position rocker switch, with digital read-outs for either the hot or cold mode.

Standard features

- Hot/Cold Combination Drop-In Well can house a variety of pans, full-size, half-size or third-size and available in a two through six pan configuration
- Easy to read and use electronic control assembly and pan support bars
- Cold Mode: Similar to Hatco's CWB Cold Well, including auto-defrost, easy serviceability, optimal insulation and efficient condenser. Includes cold mode pan supports
- Hot Mode: Utilizes the same time-tested FR2 Hydro-Heater (Bain Marie) with "free flow" technology for an efficient and safe operation with a longer life, and includes drain, auto-fill and hot mode frame for pan support
- Adjustable set points to keep your particular food items at optimum temperatures
- Remote control box can be mounted to front counter for easy access (any vertical surface within approximately 5' (1524 mm)
- Matches the Hatco line of Refrigerated and Heated Wells for a fully integrated look
- Allow approximately 60 minutes or more for transition between operating modes of the Drop-In Hot/Cold Well

MSHCG

Options (available at time of purchase only)

☐ Additional Four Year Parts Only Warranty on the Compressor

☐ Three-Phase Wiring

Accessories

☐ FR2: Flush Hose, Cleaning Brush, Stopper and Adapter

☐ 12" (305 mm) Pan Support for Drop-In Refrigerated Wells

☐ 20" (508 mm) Pan Support for Drop-In Refrigerated Wells

Rectangular Full-Size Stainless Steel Food Pans:

☐ Third-Size (2.5" [64 mm] H)
☐ Full-Size (2.5" [64 mm] H)
☐ Full-Size (6" [152 mm] H)
☐ Half-Size (2.5" [64 mm] H)
☐ Full-Size (4" [101 mm] H)

c UL us NSF COMPONENT

MADE IN THE USA

HATCO CORPORATION | P.O. Box 340500 Milwaukee, WI 53234-0500 U.S.A.

(800) 558-0607 | (414) 671-6350 | www.hatcocorp.com | equipsales@hatcocorp.com | intlsales@hatcocorp.com

Drop-In Hot/Cold Wells

Models: HCWBI-2DA, -3DA, -4DA, -5DA, -6DA

All HCWBI-2DA, -3DA, -4DA, -5DA, -6DA Series

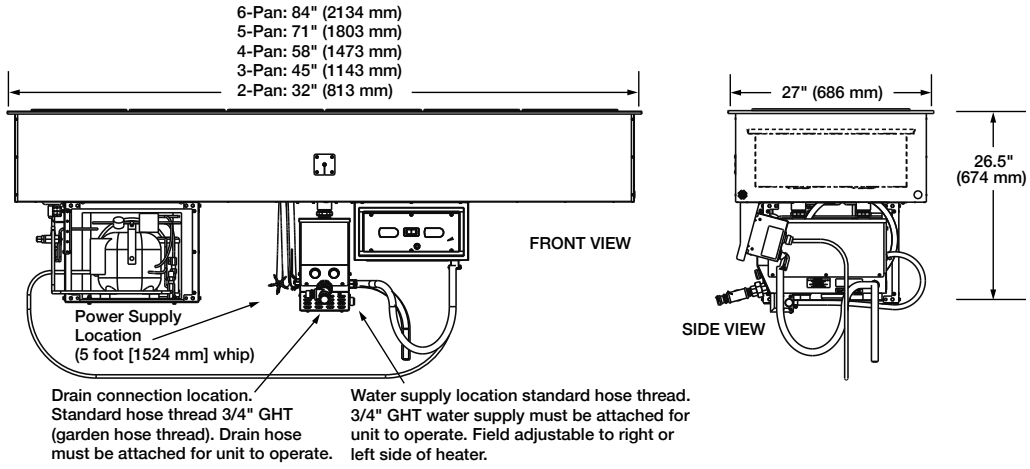

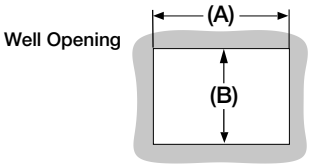

Cutout Dimensions for Drop-In Hot/Cold Wells

Model	Minimum Width (A)	Maximum Width (A)	Minimum Depth (B)	Maximum Depth (B)
HCWBI-2DA	30.125" (765 mm)	31" (787 mm)	25.19" (640 mm)	26" (660 mm)
HCWBI-3DA	43.125" (1095 mm)	44" (1118 mm)		
HCWBI-4DA	56.125" (1426 mm)	57" (1448 mm)		
HCWBI-5DA	69.125" (1756 mm)	70" (1778 mm)		
HCWBI-6DA	82.125" (2086 mm)	83" (2108 mm)		

SPECIFICATIONS
Drop-In Full-Size Insulated Rectangular Models

Model	Dimensions (Width x Depth x Height)	Well Height	Compressor Size	Watts	Volts	Amps		Volts	Amps		Plug	Ship Weight*
						Single Phase	Three Phase		Single Phase	Three Phase		
HCWBI-2DA	32"x 27" x 26.5" (813 x 686 x 674 mm)	12" (305 mm)	1/4 hp	3000	120/208	14.5	8.4	120/240	—	7.3	Hardwired	242 lbs. (110 kg)
HCWBI-3DA	45" x 27" x 26.5" (1143 x 686 x 674 mm)					14.5	8.4		—	7.3		268 lbs. (122 kg)
HCWBI-4DA	58" x 27" x 26.5" (1473 x 686 x 674 mm)		1/3 hp	4000		19.2	11.2		16.7	9.6		309 lbs. (140 kg)
HCWBI-5DA	71" x 27" x 26.5" (1803 x 686 x 674 mm)		1/2 hp	6000		28.8	16.7		—	14.5		351 lbs. (137 kg)
HCWBI-6DA	84" x 27" x 26.5" (2134 x 686 x 674 mm)					28.8	16.7		—	14.5		358 lbs. (162 kg)

* Shipping weight includes packaging and is approximate.

PRODUCT SPECS
Drop-In Hot/Cold Wells

The Drop-In Hot/Cold Well shall be a Model ….as manufactured by the Hatco Corporation, Milwaukee, WI 53234 U.S.A., the Drop-In Hot/Cold Heated Well shall be rated at ….watts, ….volts, and be ….inches (millimeters) in overall width and be ….inches (millimeters) in overall depth. It shall consist of stainless and aluminized steel housing, electronic control panel (digital temperature display, drain, auto-fill, power light, and 3-position rocker switch (Hot, Off, and Cold), and pan support bars for full-size pans in cold and hot modes.

COLD MODE: A condensing unit, sight glass, service valves, receiver, and a dryer/filter. The digital temperature display for the Cold mode will have a set point of 32°F (0°C) and can be adjusted from 10° to 50°F (-12° to 10°C).

HOT MODE: The patented Hatco FR2 (Bain-Marie) shall consist of 1 to 3 stainless steel tubes wrapped with external heating elements. Each tube may be accessed for cleaning purposes. The unit may be emptied easily by a convenient drain and have a low-water cut-off. The digital temperature display for the Hot mode will have a set point of 192°F (89°C) and can be adjusted from 65° to 192°F (18° to 89°C).

Accessories may include pan support bars, and stainless steel food pans.

Warranty consists of 24/7 parts and service assistance (U.S. and Canada only)

HATCO CORPORATION | P.O. Box 340500 Milwaukee, WI 53234-0500 U.S.A.

(800) 558-0607 | (414) 671-6350 | www.hatcocorp.com | equipsales@hatcocorp.com | intlsales@hatcocorp.com

1101 Graham Street · PO Box 269 · Hyde, PA 16843
Phone: (814) 765-9615 · Fax: (814) 765-5410
Toll Free: (800) 233-1954
www.walkins.com

QUOTATION

To:	Holland Associates PO Box 2675 Matthews, NC 28106	Date:	29-October-2018 Last Revision: 29-October-2018
Attn:	Mike Holland	Quote #	092914
Phone:	704-841-4446	Quoted By:	Angelina Doloroso
Fax:	704-841-4447	F.O.B.	Hyde, PA
Email:	hollandassoc@hotmail.com		
Job Name:	The Healing Place of New Hanover County		

Indoor Freezer/Cooler (Item #9)

Freezer with Floor, Cooler (35°F) w/out Floor w/ PVC Screed
Insulation: 4 inches foamed-in-place urethane (X) Class 1
Approximate overall size: 35' 6 1/2" x 14' 11 1/4" x 8' 6 1/2"(H) as per attached approval drawing
O.D. Freezer : 17' 3 1/2" x 14' 11 1/4" x 8' 6 1/2"(H)
Cooler (35°F) : 18' 3" x 14' 11 1/4" x 8' 6 1/2"(H)

Finishes
Interior & Exterior - 26ga Embossed Galvalume
Interior Floor - 18ga. SS Floor w/ 3/4" plywood underlay to withhold approx. 1000lbs per sq.ft. uniformly distributed w/ no given point load on a seam

Entrance Doors:
Compt 1 - door 1 (Interior & Exterior of Door & Frame: 26ga Embossed Galvalume)
34" x 77" RHH freezer door - includes W-94 hydraulic door closer, (3) W-59 polished hinges, Norfab 14" x 24" heated viewport, W-29NC latch, 3' 0"(H) 5-Bar Tread kickplates int & ext door & frame, Weiss 24DT-SP-LT digital therm/switch, Kason K1825 PRP & VXS100 (LED)
Compt 2 - door 2 (Interior & Exterior of Door & Frame: 26ga Embossed Galvalume)
34" x 77" LHH cooler door - includes W-94 hydraulic door closer, (3) W-59 polished hinges, Norfab 14" x 24" viewport, W-29NC latch, Locking Hasp, 3' 0"(H) 5-Bar Tread kickplates int & ext door & frame, Weiss 24DT-SP-LT digital therm/switch, Kason K1825 PRP & VXS100 (LED)

Accessories:
(1) Interior 34" x 27" 12ga Smooth SS Type 304 2B Ramp
(1) Ceiling Hanger Clip kit for 35' 6 1/2" span . Estimated ceiling weight per clip = 39.9 lbs
(x) Closure Panels- 26ga Embossed Galvalume on Exposed Section of (1) 35' 6-1/2"H Wall (2'H) ***Please Verify***
(x) Non-skid Strips 2"x36" (every 6")
(2) 3" x 3" x 8'6-1/2H Angle Trim Strips- 26ga Embossed Galvalume ***Please Verify***
(4) 48" LED Lights (shipped loose) (field installed) *~(2) in each compt.*

Refrigeration Equipment:
(1) QTY RFO500L4S-EA 208-230/3/60 Scroll Air Cooled Condensing Unit (17,690 BTUH @ -20 SST, +95 Amb, R404A) with PSC Condensing Motors, Standard Tafco Options and Features
(1) QTY RL6E182DDAA 208-230/1/60 Net Gen All-Temp Electric Defrost Cooler Unit with Dual

NOTE: This quotation is based on our understanding of the information you furnished us. Please check your quotation carefully. Anything not listed will not be furnished.

MADE WITH PRIDE IN THE USA
NSF
UL LISTED DOOR PANEL ASSEMBLY 953M
Energy Independence and Security Act of 2007 COMPLIANT

P.O. Box 269, Graham Street, Hyde, Pennsylvania 16843
Tel: (814) 765-9615 · Fax: (814) 765-5410

Speed EC Motors, Balanced Port Expansion Valve, Liquid Line Solenoid (Mounted), and Mechanical Room Thermostat (Mounted)

(1) QTY RFH250E44-EA 208-230/3/60 Full Hermetic Air Cooled Condensing Unit (19,070 BTUH @ +25 SST, +95 Amb, R404A) with PSC Condensing Motors, Standard Tafco Options and Features
(1) QTY RL6A195ADAA 115/1/60 Next Gen All-Temp Air Defrost Cooler Unit with Dual Speed EC Motors, Balanced Port Expansion Valve, Liquid Line Solenoid (Mounted), and Mechanical Room Thermostat (Mounted)

Subtotal F.O.B. Hyde, PA

OPTIONS:
* Five Year Compressor Warranties
* Door raised/undercut for tile

Lead Time: Consult factory

QUOTATION VALID FOR 60 DAYS

Notes & Exceptions
Please verify quotation, information provided unclear and incomplete-pricing subject to change. Tafco's standard construction, sizes, and refrigeration, for exact custom size, please contact factory for additional charge.
Tafco 4" thick cooler wall and ceiling panels have an R-value of 29 and are EISA 2007 compliant.
Tafco 4" thick freezer wall and ceiling panels have an R-value of 32.48 and are EISA 2007 compliant.
Tafco panel insulation is CFC/HCFC free, Class one, fire rated, foamed-in-place rigid polyurethane insulation.

Mean Temperature for Freezer 20°	
K-Factor = .1232	R-Factor = 8.12 per in.
R-Factor 2" panel = 16.2	U-Factor 2" = 0.061
R-Factor 4" panel = 32.5	U-Factor 4" = 0.031
R-Factor 5" panel = 40.6	U-Factor 5" = 0.025
R-Factor 6" panel = 48.7	U-Factor 6" = 0.021

Mean Temperature for Cooler 55°	
K-Factor = .1375	R-Factor = 7.26 per in.
R-Factor 2" panel = 14.52	U-Factor 2" = 0.069
R-Factor 4" panel = 29.04	U-Factor 4" = 0.035
R-Factor 5" panel = 36.3	U-Factor 5" = 0.027
R-Factor 6" panel = 43.6	U-Factor 6" = 0.023

MSHCG

WARNING: CALIFORNIA PROP 65 - This product may expose you to chemicals including Lead, Chromium (hexavalent compounds) and Phthalates (DEHP) which are known to the State of California to cause cancer and birth defects or other reproductive harm. **For more information, go to www.P65Warnings.ca.gov**

Revision	Date	Name	Comments
0	10/29/2018	Angelina Doloroso	Project created

P.O. Box 269, Graham Street, Hyde, Pennsylvania 16843
Tel: (814) 765-9615 · Fax: (814) 765-5410

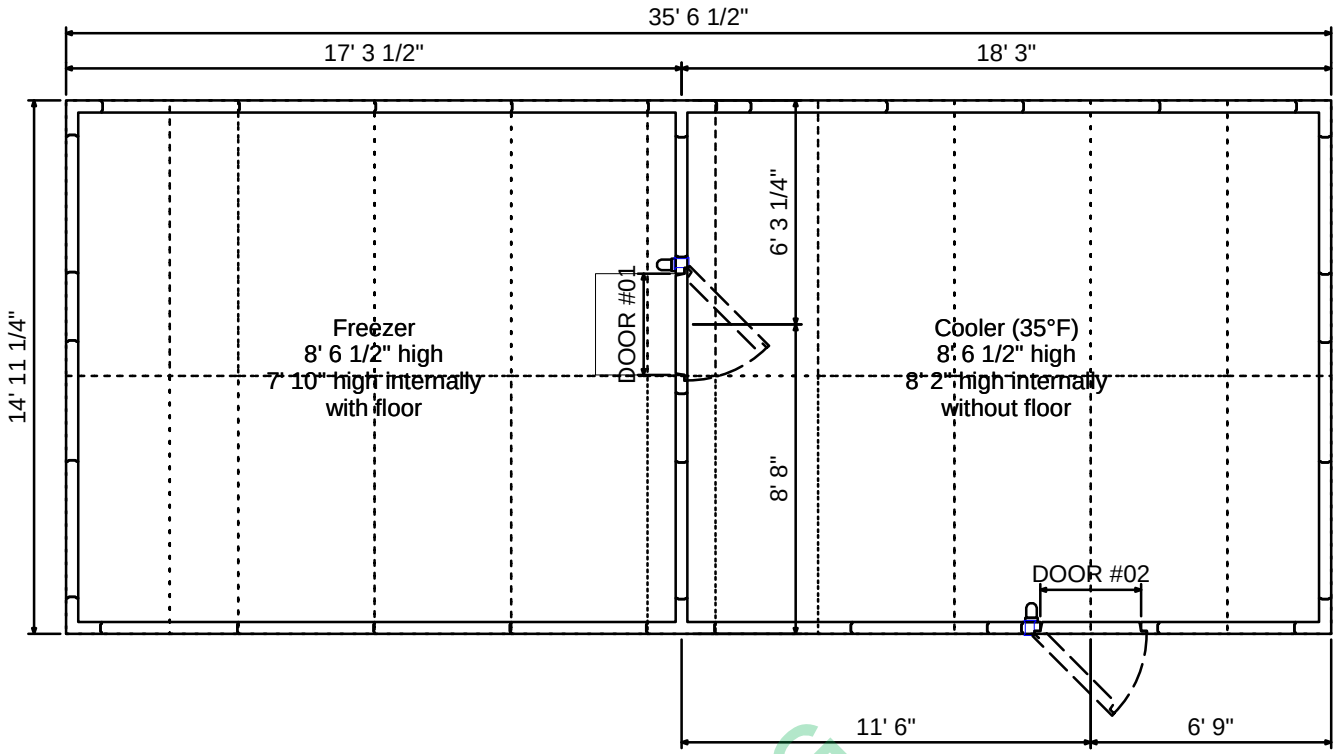

Plan View

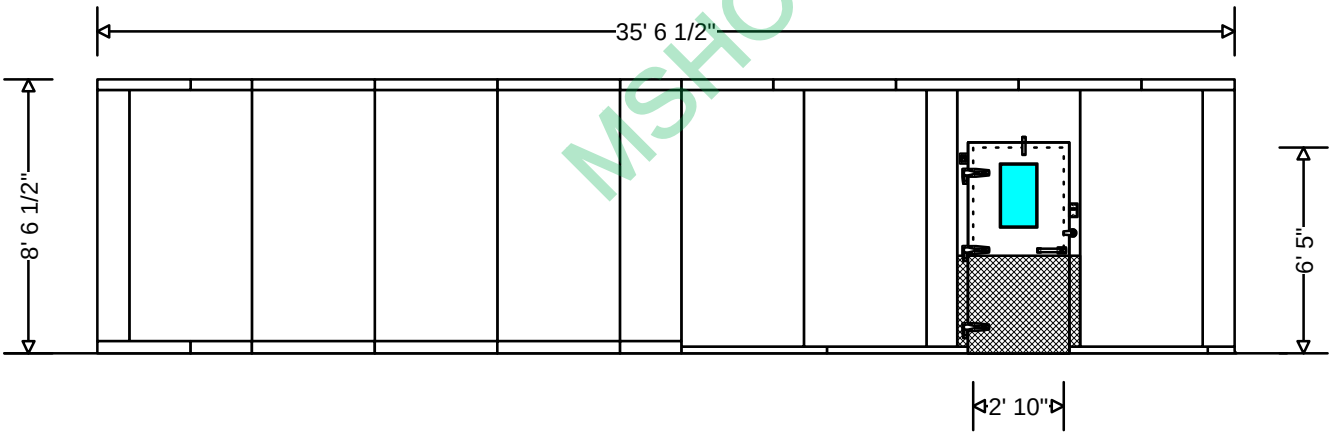

Elevation View

MSHCG

Checked by:	

Customer Approval _____

Servend

SV-150 • SV-175 • SV-200 • SV-250 Ice/Beverage Dispenser



SV-250 with IB1090C Ice Machine



SV-150



SV-175



SV-200

MSHCG

Servend's new SV Series features a no hassle one-piece structural base, recessed coldplate inlets for more line space behind the splash panel, and a modular design; all resulting in a more durable machine dispensing consistent, quality drinks.

Standard Features

- One-piece ABS base provides a solid foundation as well as adding structural rigidity to the dispenser.
- Enhanced agitation and drive system provides consistent ice dispense and ease of serviceability.
- Patented Rocking Chute™ simplifies ice dispensing and storage.
- Multi-port flex manifold adds carb/noncarb flexibility. Fast flavor change-overs reduce service complexity.

ISO 9001:2000 Quality System Certified

2100 Future Drive
Sellersburg, IN 47172 USA

Tel: 812.246.7000
Fax: 812.246.7024

www.manitowocbeverage.com/us

Manitowoc

Servend

SV-150 • SV-175 • SV-200 • SV-250 Ice/Beverage Dispenser

Specifications

	SV-150	SV-175	SV-200	SV-250
Standard Features	Lighted merchandiser, Quench graphics, key switch, leg kit, and drain kit.			
Approx. Shipping Weights	250 lbs. / 113 kgs.	277 lbs. / 126 kgs.	304 lbs. / 138 kgs.	335 lbs. / 152 kgs.
Approximate Countertop Weight (w/o ice)	198 lbs. / 90 kgs.	223 lbs. / 101 kgs.	235 lbs. / 107 kgs.	260 lbs. / 118 kgs.
Ice Storage Capacity	Up to 150 lbs. / 68 kgs.	Up to 175 lbs. / 80 kgs.	Up to 200 lbs. / 91 kgs.	Up to 250 lbs. / 114 kgs.
Electrical Requirements	Dispenser: 120V/60Hz/2.8FLA. 220V/50Hz/1 also available.			
Drain	Single 0.75" (1.91 cm) PVC (N.P.T.) drain fitting extends from drain pan. Units can be drained from the bottom or back of unit.			
Number of Valves	6	8	8 or 10	
Ice Machine Compatibility	Manual fill or top-mount with compatible ice machines. Contact MBE for adapter kit requirements for top-mounted ice machine applications.			
Manifold	6 valve 2-1-1-2	8 valve 3-1-1-1-2	8 valve 3-1-1-1-2 / 10 valve 3-1-2-1-3	
Options	Flomatic 464 beverage valves. Both 424 and 464 available in sanitary lever, push button, portion control, and autofill valve. Other valves available. Contact MBE for details. Other options: regulators, installation kits, and side splash panels, Americans with Disabilities Act (ADA) compliant selection touchpads.			

MSHCG

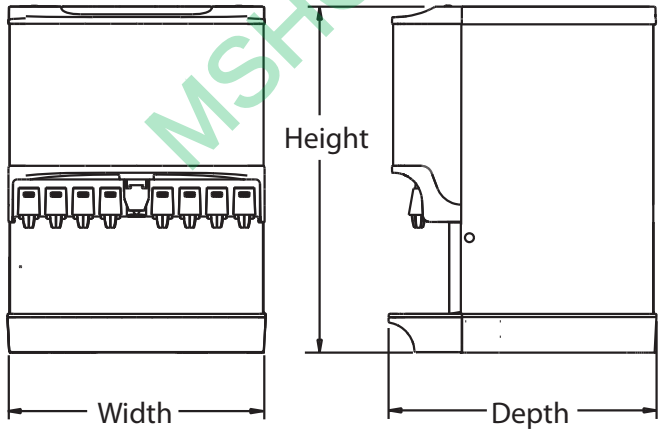

	SV-150	SV-175	SV-200	SV-250
Width	23.00"	25.00"	30.00"	30.00"
	58.42 cm	63.50 cm	76.20 cm	76.20 cm
Depth	31.13"	31.13"	31.13"	31.13"
	79.07 cm	79.07 cm	79.07 cm	79.07 cm
Height*	34.88"	34.88"	34.88"	40.88"
	88.60 cm	88.60 cm	88.60 cm	103.80 cm

**Height dimension without full lid.*
Add 0.50" (1.27 cm) for full lid.

3730D ©2012 Servend 7/12 Continuing product improvement may necessitate change of specifications without notice.

2100 Future Drive
Sellersburg, IN 47172 USA

Tel: 812.246.7000
Fax: 812.246.7024
www.manitowocbeverage.com/us

Manitowoc

DCM-500B_H-OS

OPTI-SERVE SERIES
SANITARY CUBELET ICE MACHINE/DISPENSER

DCM-500B_H-OS
11/03/17
Item # 13147

Item #: _____

Project: _____

Qty: _____

AIA#: _____

W x D x H
26" x 22 1/2" x 40"

SD-450
26 1/4" x 22" x 32 1/2"

SD-500
25 9/10" x 22" x 32 3/4"

DCM-500BAH-OS
Air-Cooled
Shown with optional
SD-450 Stand

DCM-500BWH-OS
Water-Cooled

**Hands-free sensor designed for use with opaque containers.*
Not intended for outdoor use - avoid placement in direct sunlight.



MSHCG

Features

- **Durable stainless steel exterior**
- **Advanced CleanCycle24™ design** (ADVANCED 24 CleanCycle)
- **Stainless steel auger with greaseless bearing**

- Up to 618 lbs. of ice production per 24 hours
- Built-in storage capacity of 1.3ft³/40 lbs.*
- Every 12 hours,unit performs 20 minute purge to rid itself of impurities
- Corrosion resistant stainless steel exterior
- Easy to chew, cubelet ice
- Self-contained design reduces oppportunities for cross contamination
- Protected by H-GUARD Plus Antimicrobial Agent
- Dispenses ice and water
- R-404A Refrigerant

Warranty:
3 Year Parts & Labor on entire machine.
5 Year Parts on Compressor; air-cooled condenser coil.
Valid in United States, Canada, Puerto Rico and U.S. Territories. Contact factory for warranty in other countries.
*Rated in accordance with AHRI Standard 820(I-P). Capacity based on 100% of total volume x 30 lb/ft³ average density of ice.

		ICE PRODUCTION			WATER USAGE		ELECTRICAL						
Condenser	Model	Air / Water Temp Lbs. per 24 hours 70°/ 50°F	90°/ 70°F	Type of Ice (Hardness Rating)	Potable Gal. per 100 lbs. 90°/ 70°F	Condenser Gal. per 100 lbs. 90°/ 70°F	kWh Used per 100 lbs. 90°/ 70°F	Max. Fuse Size or HACR Circuit Breaker	Amperage	Voltage	Heat Rejection BTU/hr.	Shipping Weight	ENERGY STAR®
Air-Cooled	DCM-500BAH-OS	618	450	Cubelet (88)	12.0	N/A	5.62	20A	12.9A	115V/60/1	7,000	253 lbs.	
Water-Cooled	DCM-500BWH-OS	590	512	Cubelet (88)	12.0	112	4.48	20A	12.6A	115V/60/1	6,000	253 lbs.	

Cubelet Dimensions*

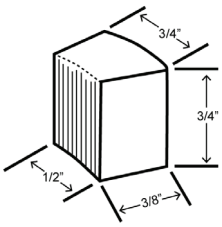

* approximate size in inches, image not to scale

Operating Limits

- Ambient Temp Range 45 - 100°F
- Water Temp Range 45 - 90°F
- Water Pressure 10 - 113 PSIG
- Voltage Range 104 - 127V

Service

- Allow 6" (15 cm) clearance at rear and sides for proper air circulation and ease of maintenance/ service should they be required. Allow 24" (61 cm) clearance at top to allow for removal of the auger.

Not intended for outdoor use - avoid placement in direct sunlight.

Plumbing

- Icemaker Water Supply Line: Minimum 1/4" Nominal ID Copper Water Tubing or Equivalent
- Icemaker Drain Line: Minimum 3/4" Nominal ID Hard Pipe or Equivalent

Water-Cooled Model (Lines Must Be Independent of Icemaker)

- Condenser Water Supply Line: Minimum 1/4" Nominal ID Copper Water Tubing or Equivalent
- Condenser Drain/Return Line: Minimum 1/4" Nominal ID Hard Pipe (open drain system) or Copper Water Tubing (closed loop system) or Equivalent

Printed in the U.S.A.

Hoshizaki reserves the right to change specifications without notice.

DCM-500B_H-OS

OPTI-SERVE SERIES
SANITARY CUBELET ICE MACHINE/DISPENSER

DCM-500B_H-OS
11/03/17
Item # 13147

inch
[mm]

FRONT VIEW

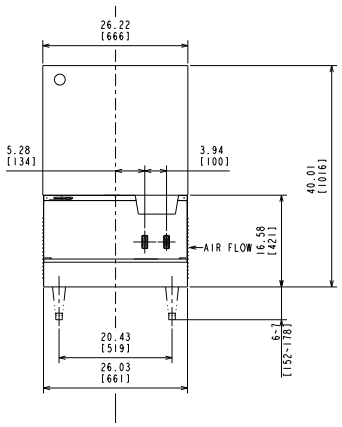

AIR-COOLED

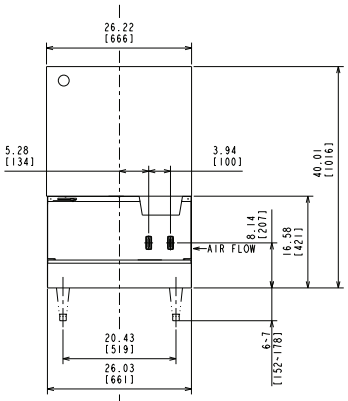

WATER-COOLED

SIDE VIEW

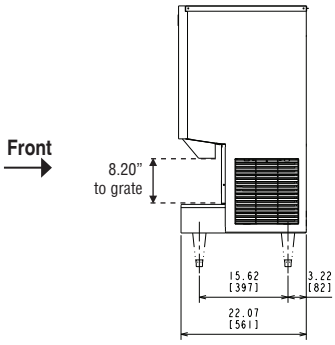

AIR-COOLED

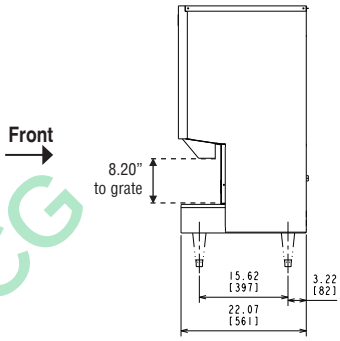

WATER-COOLED

MSHCG

REAR VIEW

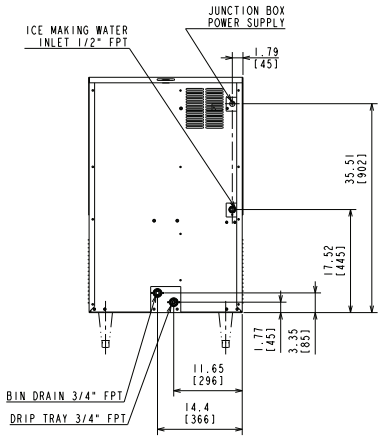

AIR-COOLED

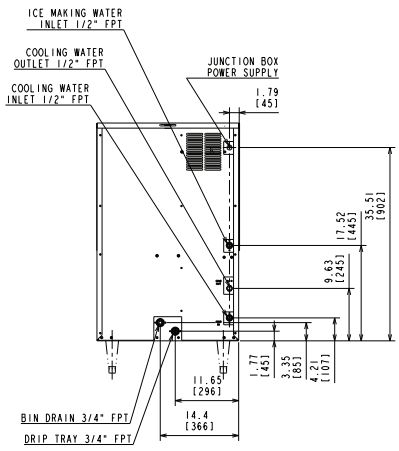

WATER-COOLED

TOP VIEW

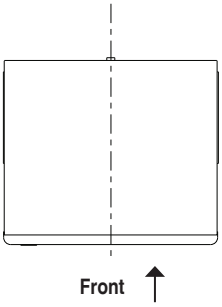

AIR-COOLED

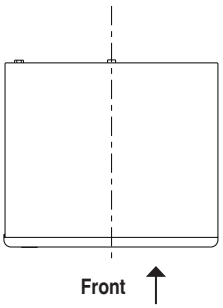

WATER-COOLED

© HOSHIZAKI AMERICA, INC. 618 Hwy. 74 S. Peachtree City, GA 30269 | TEL 800.438.6087 | FAX 800.345.1225 | www.hoshizakiamerica.com Printed in the U.S.A.

STAINLESS STEEL

FLOOR TROUGHS & FLOOR DRAINS

ADVANCE TABCO
SMART FABRICATION™

Floor Troughs

4" Depth

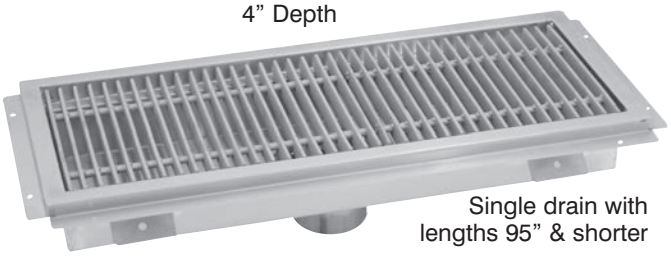

Single drain with lengths 95" & shorter

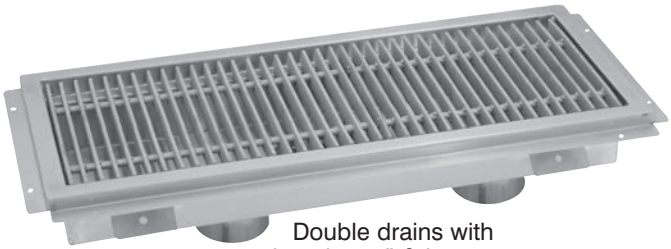

Double drains with lengths 96" & longer

NSF

Item #: _____ Qty #: _____

Model #: _____

Project #: _____



Cut-Out View of Anti-Splash

FT-1
Optional Anti-Splash Guard
(Per ft. Factory installed)

Floor Drain

4" Depth



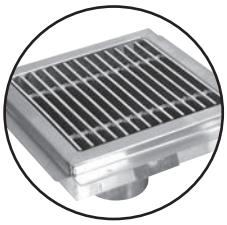

FD-1
Optional Stainless Steel Grate for Floor Drains



FT-2
Stainless Steel Strainer Basket with Handle (Included with all Floor Troughs, Water Receptacles & Floor Drains)

MSHCG

Floor Water Receptacles

2" Depth

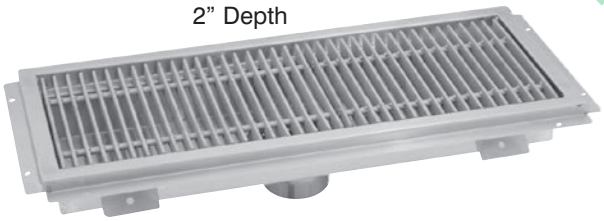

OPTIONAL ACCESSORIES

Model #	Qty
FT-1 Anti-Splash Guard per ft.	
FT-2 Replacement Strainer Basket	
FD-1 Floor Drain Stainless Steel Grate	

FEATURES:

Waste receptacle will accommodate up to a 4" waste pipe.

Includes 4" O.D. - 3" Long Plumbing Sleeve.

Removable perforated stainless steel strainer basket with handle provided.

Pitched towards waste.

Includes "Subway Style" grating from 3/16" x 1" solid "304" stainless steel bar or fiberglass. (Not included with Floor Drains. Use Model FD-1)

Grating is spaced 9/16" (Inside clearance) between bars to prevent casters from getting trapped.

Troughs 96" or larger in length made with two (2) drains.

Custom sizes available. Consult factory.

CONSTRUCTION:

All TIG welded.

All external corners welded and polished to a satin finish.

MECHANICAL:

Creased design to ensure proper drainage.

Perimeter flange mounts directly to sub floor.

3/4" vertical step designed to accommodate floor tile installation.

MATERIAL:

14 gauge "304" type stainless steel polished stainless steel grating.

Fiberglass grating: Gray fiberglass composite. Light weight, skid and corrosion resistant.

ADVANCE TABCO
SMART FABRICATION™
www.advancetabco.com

Customer Service Available To Assist You 1-800-645-3166 8:30 am - 8:00 pm E.S.T.

For Orders & Customer Service:
Email: customer@advancetabco.com or **Fax:** 631-242-6900

For Smart Fabrication™ Quotes:
Email: smartfab@advancetabco.com or **Fax:** 631-586-2933

REF-E

DIMENSIONS and SPECIFICATIONS

ALL DIMENSIONS ARE TYPICAL

TOL ± .500”

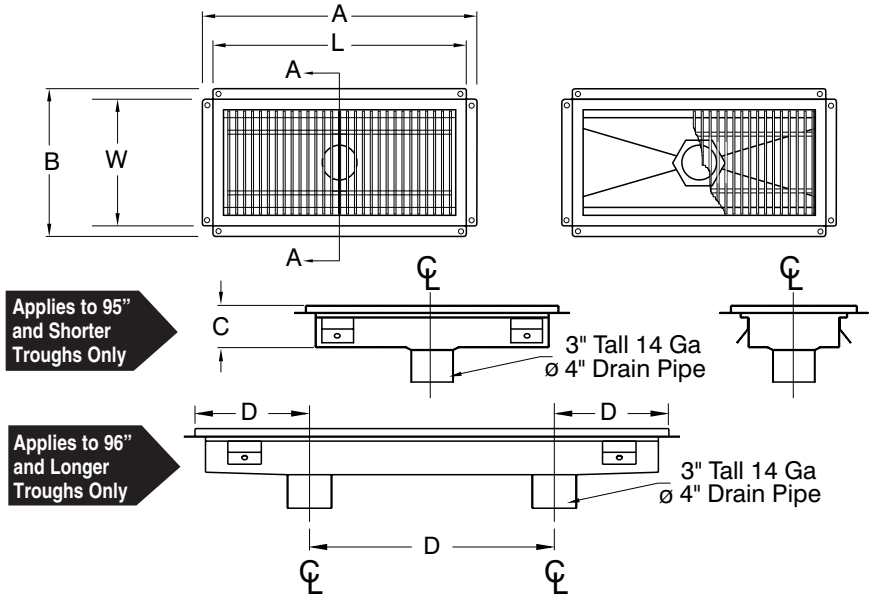

PLUMBING ROUGH-IN

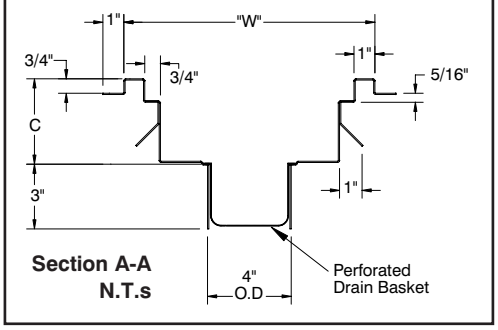

FLOOR TROUGHS

Stainless Steel Grating	Wt.	Fiberglass Grating	Wt.	L	W	A	B	C	D
FTG-1224	46 lbs.	FFTG-1224	34 lbs.	24”	12”	26”	14”	4”	-
FTG-1230	56 lbs.	FFTG-1230	37 lbs.	30”	12”	32”	14”	4”	-
FTG-1236	66 lbs.	FFTG-1236	40 lbs.	36”	12”	38”	14”	4”	-
FTG-1242	76 lbs.	FFTG-1242	43 lbs.	42”	12”	44”	14”	4”	-
FTG-1248	86 lbs.	FFTG-1248	46 lbs.	48”	12”	50”	14”	4”	-
FTG-1254	96 lbs.	FFTG-1254	49 lbs.	54”	12”	56”	14”	4”	-
FTG-1260	106 lbs.	FFTG-1260	52 lbs.	60”	12”	62”	14”	4”	-
FTG-1272	116 lbs.	FFTG-1272	55 lbs.	72”	12”	74”	14”	4”	-
FTG-1284	126 lbs.	FFTG-1284	81 lbs.	84”	12”	86”	14”	4”	-
FTG-1296*	146 lbs.	FFTG-1296	90 lbs.	96”	12”	98”	14”	4”	32”
FTG-12108*	166 lbs.	FFTG-12108	99 lbs.	108”	12”	110”	14”	4”	36”
FTG-12120*	180 lbs.	FFTG-12120	108 lbs.	120”	12”	122”	14”	4”	40”
FTG-1824	62 lbs.	FFTG-1824	43 lbs.	24”	18”	26”	20”	4”	-
FTG-1830	74 lbs.	FFTG-1830	47 lbs.	30”	18”	32”	20”	4”	-
FTG-1836	86 lbs.	FFTG-1836	54 lbs.	36”	18”	38”	20”	4”	-
FTG-1842	98 lbs.	FFTG-1842	61 lbs.	42”	18”	44”	20”	4”	-
FTG-1848	110 lbs.	FFTG-1848	69 lbs.	48”	18”	50”	20”	4”	-
FTG-1854	122 lbs.	FFTG-1854	76 lbs.	54”	18”	56”	20”	4”	-
FTG-1860	134 lbs.	FFTG-1860	83 lbs.	60”	18”	62”	20”	4”	-
FTG-1872	146 lbs.	FFTG-1872	90 lbs.	72”	18”	74”	20”	4”	-
FTG-1884	165 lbs.	FFTG-1884	111 lbs.	84”	18”	86”	20”	4”	-
FTG-1896*	187 lbs.	FFTG-1896	125 lbs.	96”	18”	98”	20”	4”	32”
FTG-18108*	208 lbs.	FFTG-18108	138 lbs.	108”	18”	110”	20”	4”	36”
FTG-18120*	229 lbs.	FFTG-18120	150 lbs.	120”	18”	122”	20”	4”	40”
FTG-2424	69 lbs.	FFTG-2424	52 lbs.	24”	24”	26”	26”	4”	-
FTG-2430	81 lbs.	FFTG-2430	59 lbs.	30”	24”	32”	26”	4”	-
FTG-2436	104 lbs.	FFTG-2436	68 lbs.	36”	24”	38”	26”	4”	-
FTG-2442	118 lbs.	FFTG-2442	75 lbs.	42”	24”	44”	26”	4”	-
FTG-2448	131 lbs.	FFTG-2448	83 lbs.	48”	24”	50”	26”	4”	-
FTG-2454	145 lbs.	FFTG-2454	95 lbs.	54”	24”	56”	26”	4”	-
FTG-2460	162 lbs.	FFTG-2460	102 lbs.	60”	24”	62”	26”	4”	-
FTG-2472	195 lbs.	FFTG-2472	119 lbs.	72”	24”	74”	26”	4”	-
FTG-2484	218 lbs.	FFTG-2484	137 lbs.	84”	24”	86”	26”	4”	-
FTG-2496*	243 lbs.	FFTG-2496	153 lbs.	96”	24”	98”	26”	4”	32”
FTG-24108*	274 lbs.	FFTG-24108	168 lbs.	108”	24”	110”	26”	4”	36”
FTG-24120*	310 lbs.	FFTG-24120	188 lbs.	120”	24”	122”	26”	4”	40”

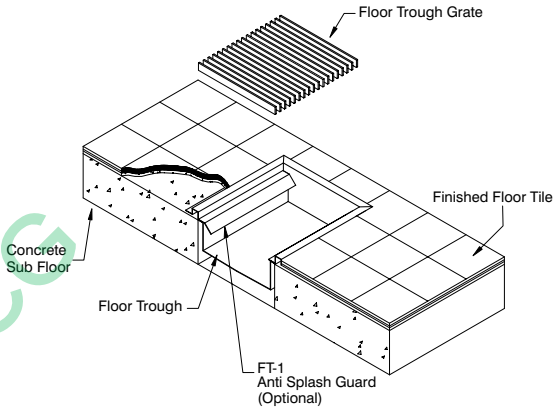

MSHCG

FLOOR DRAINS

Model #	Length	Width	A	B	C	Wt.
FDR-1212	12”	12”	14”	14”	4”	26 lbs.

FLOOR WATER RECEPTACLES

(2” Depth)

Model #	Length	Width	A	B	C	Wt.
FRG-24	24”	12”	26”	14”	2”	44 lbs.
FRG-36	36”	12”	38”	14”	2”	63 lbs.
FRG-48	48”	12”	50”	14”	2”	82 lbs.

CUSTOM SIZES AVAILABLE!

***Troughs 96” or larger in length made with two (2) drains.**

ADVANCE TABCO
SMART FABRICATION™

REF-E 200 Heartland Boulevard, Edgewood, NY 11717-8380

ADVANCE TABCO is constantly engaged in a program of improving our products. Therefore, we reserve the right to change specifications without prior notice.

© ADVANCE TABCO, JUNE 2016

SUPERIOR COOLING QUALITY DISPENSE

- Accommodates three, five and six gallon bags
- Accommodates up to six gallon bag-n-box
- Easy to use dripless operation for optimum sanitation
- Constant cooling at the pinch point
- Hands-free operation



Majestic 3



Majestic 2



Majestic 1

MSHCG

SILVER KING®
WE'VE GOT REFRIGERATION DOWN COLD™

MAJESTIC SERIES MILK DISPENSERS

MODELS
SKMAJ1
SKMAJ2
SKMAJ3

- Stainless steel exterior and interior
- Temperature indicator on door front. Adjustable temperature control.
- Door: Heavy duty hinges. Easily removable door gasket for ease in cleaning.
- Dispenser valve: Spring loaded lift type valve for dripless operation and optimum sanitation.
- Electrical: Standard 115 volt, 60 Hz, single phase. Also available in 230 volt, 50Hz, single phase.
- Listings: UL (US and Canada), NSF International
- Warranty: One year parts and labor. Five year warranty on compressor.

Specifications subject to change without notice.

MODEL	DESCRIPTION	EXTERIOR DIMENSIONS LENGTH	DEPTH	HEIGHT	COMPRESSOR	AMPS	WEIGHT
C4 SERIES: Includes 6 gallon crate(s) and platform(s)							
SKMAJI/C4	Single valve, accommodates 3, 5 and 6 gallon	15 1/2"	17 1/8"	39 1/2"	1/10 hp	1.2	80 lbs
SKMAJ2/C4	Double valve, accommodates 3, 5 and 6 gallon	26 1/2"	17 1/8"	39 1/2"	1/10 hp	1.3	110 lbs
SKMAJ3/C4	Triple valve, accommodates 3, 5 and 6 gallon	37 1/2"	17 1/8"	39 1/2"	1/6 hp	1.6	140 lbs
C3 SERIES: With shipboard legs; includes 6 gallon crate(s) and platform(s)							
SKMAJ1/C3	Single valve, accommodates 3, 5 or 6 gallon	15 1/2"	17 1/8"	39 1/2"	1/10 hp	1.2	80 lbs
SKMAJ2/C3	Double valve, accommodates 3, 5 or 6 gallon	26 1/2"	17 1/8"	39 1/2"	1/10 hp	1.3	110 lbs
SKMAJ3/C3	Triple valve, accommodates 3, 5 or 6 gallon	37 1/2"	17 1/8"	39 1/2"	1/6 hp	1.6	140 lbs

MSHCG

ACCESSORIES



Milk crate for
3, 5 or 6 gallon bags
Item # 35904



Platform for
bag-n-box
Item # 63959



3 gallon
dispenser can
Item # 62642



5 gallon
dispenser can
Item # 60224

Not Pictured:
Tubes 10 1/4"
Item # 20323



Application: Milk in bag (3, 5 or 6 gallon)



Application: Bag-n-box milk



Application: Bag-n-box milk

MSHCG



Application: 5 gallon dispenser can (sold as accessory)

MAJESTIC SERIES MILK DISPENSERS

Dimensions in inches and centimeters
All drawings shown with standard legs

SKMAJ1

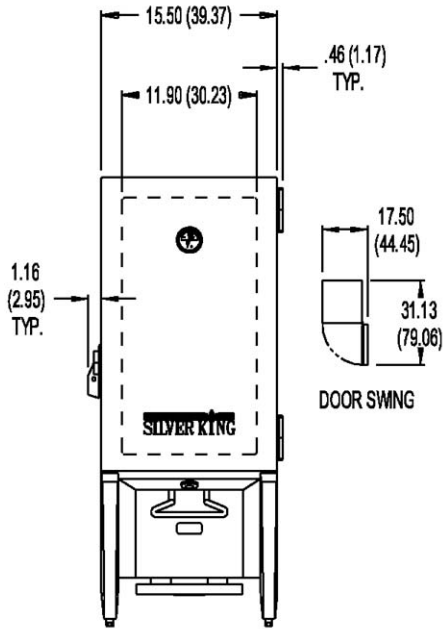

SKMAJ2

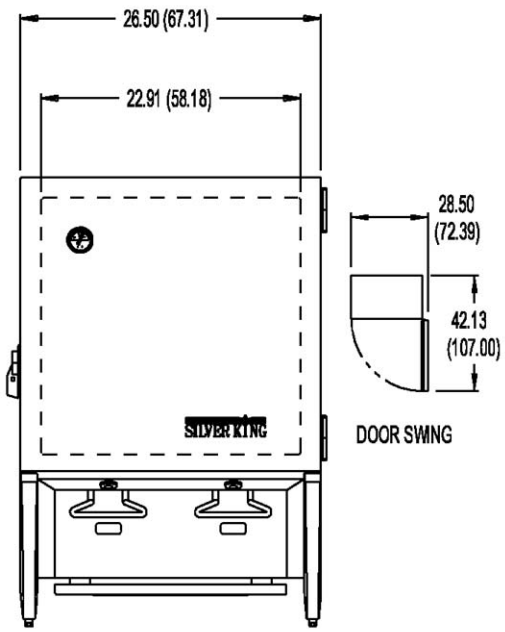

SKMAJ3

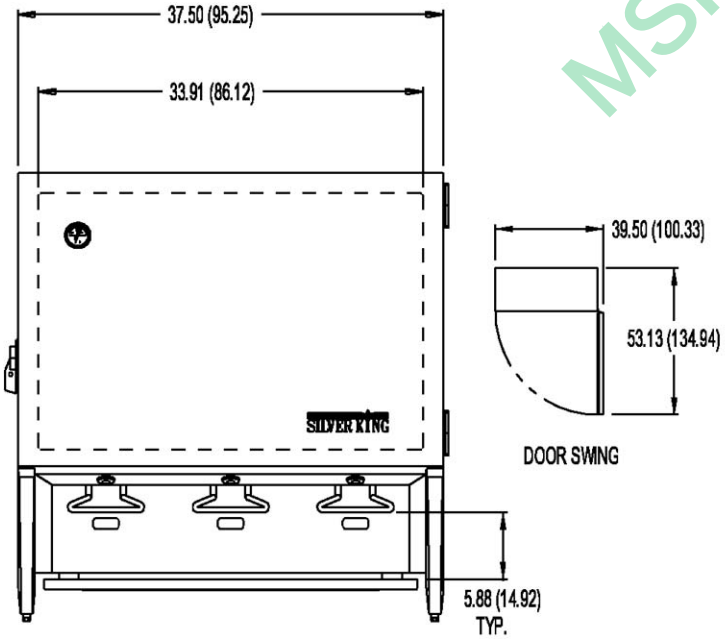

COMMON SIDE VIEW

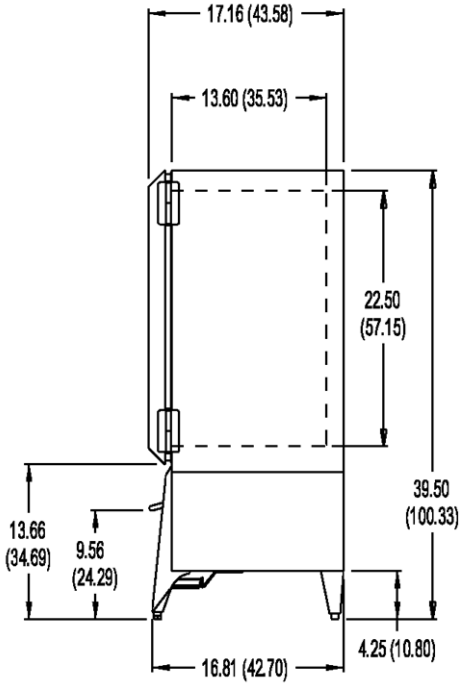

MSHCG

SILVER KING®
WE'VE GOT REFRIGERATION DOWN COLD™
1600 Xenium Lane North
Minneapolis, MN 55441-3787
Phone (763) 923-2441
Fax (763) 553-1209
www.silverking.com

#FNSKMAJ09
© Silver King 2009
Printed in U.S.A.

EXTRACTOR ICED TEA BREWER

TBS-2121 Touchscreen Series

3.5 Gallon Twin Brewer



Brew the most flavorful and refreshing iced teas with the TBS-2121 Twin 3.5 Gallon Iced Tea Brewer from FETCO. Precision brew controls, modern style and expert craftsmanship come together to provide a complete iced beverage solution for the operator and an extraordinary taste experience for their customers.

Brewer shown with 2ea. 3.5 Gallon Iced Tea Dispenser (ITD-2135) sold separately.



Touchscreen Simplicity
A simple touch is all it takes to experience full control over the brew cycle.



Functional Design
New features and exclusive designs provide an extraordinary tea service experience for both operators and consumers.



Style
Modern European style elevates your iced tea service with an attractive, inviting self-serve atmosphere.

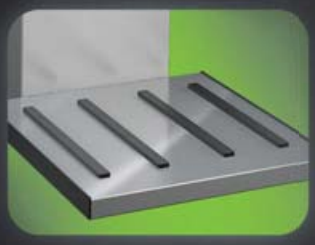

Solid Construction
FETCO's reputation is second to none for precision craftsmanship and everlasting durability.

MSHCG

FETCO
DRIVEN TO INNOVATION

EXTRACTOR® TBS-2121 Twin 3.5 Gallon Iced Tea Brewer

The EXTRACTOR TBS-2121 Twin 3.5 Gallon Touchscreen Iced Tea Brewer is the latest high-quality product offering from FETCO. It combines the simplicity of a touchscreen with new features like the innovative "intelligent" brew basket for quick, efficient operation and for producing the most flavorful taste profiles from your teas.

User Friendly Operation

- Access all controls via an inviting touchscreen interface display that blends intuitive icons with dynamic time and volume data.
- Efficiently navigate set-up, programming, diagnostics and daily brewing modes.
- Customize the start screen to tie your equipment and product offerings into a consistent brand message.
- Create and display up to nine recipe names for easy access and reference.



Extract, Brew and Steep

- FETCO's patented Cascading Spray Dome water delivery system provides excellent coverage for loose leaf or prepackaged tea and will never clog!
- Dual dilution spouts positioned above the container dispense water directly from the inlet. The right-side spout can also deliver liquid sweetener (if so equipped).
- Program the exact steep time for precise control over flavor extraction.



MSHCG



Product Views

Front



Side



Back



Isometric







Intelligent Design

- Brew Side Sensors automatically detect which side brewing will occur and displays the matching recipes on the touchscreen.
- Adjustable Orifice and Filter Screen System features a drain cap that removes for easy changing of up to 7 different orifice sizes and filter screen mesh patterns.
- Expandable Dispenser Base with front-to-back guide rails keep dispensers properly aligned with brew basket.



Space Savings

- Slim profile brewer takes up minimal counter space.
- Slim profile dispensers can be filled and placed in any area to make an instant serving station.
- Optional dispenser station add-on platforms are available in single and dual sizes for the right amount of dispenser space you need.

MSHCG

Accessories & Options

Dispenser Platforms



13"W for ITD Dispensers
1102.00197.00



7.5"W for ITD Dispensers
1102.00202.00



13"W Universal Dispenser Platform
1102.00205.00

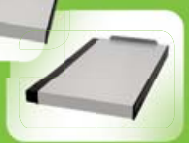

7.5"W Universal Dispenser Platform
1102.00206.00

Brew Basket and Inserts



Brew Basket for TBS-2121
15" Dia. x 5½"D
#B013000B2



Handle I.D. Insert
Blue: 1023.00180.00



Handle I.D. Insert
Red: 1023.00190.00



Handle I.D. Insert
Green: 1023.00191.00



Handle I.D. Insert
Orange: 1023.00192.00

Optional Graphics



#D064W112

TBS-2121 | Technical Specifications

Water Specification

Water Inlet	Minimum Flow Rate	Water Pressure
1/4" Male Flare Fitting	1.5 gpm [5.7 lpm]	35-50 psig [241-345 kPa]

Electrical Configuration

Configuration Code	Heater Configuration	Voltage	Phase	Wires	KW	Electrical Connection	Max Amp Draw	Gallon [Liter]/Hour
US / CANADA								
T212101	1 x 1680 W	120	1	2+G	1.7	NEMA 5-15P/5-20P-C	14.0	12.0 [46](1)
WITH LIQUID SWEETENER INFUSION PUMP (AVAILABLE IN US MARKET ONLY)								
T212211	1 x 1680 W	120	1	2+G	1.8	NEMA 5-20P	14.5	12.0 [46](1)

(1) Based on standard factory settings: 5.5 minute brew time; 0% prewet; 200°F water.

Measurements

Model	Height	Width	Depth	Empty Weight	Filled Weight	Shipping Weight
TBS-2121	34" [87 cm]	13½" [25.4 cm]	26¼" [67 cm]	35 lbs [15.9 kg]	44 lbs [20 kg]	46 lbs [21 kg]
TBS-2121-S(2)	34" [87 cm]	13½" [25.4 cm]	26¼" [67 cm]	40 lbs [18.1 kg]	60 lbs [28 kg]	51 lbs [24 kg]

(2) With Liquid Sweetener Infusion Pump.

Dimensional Views

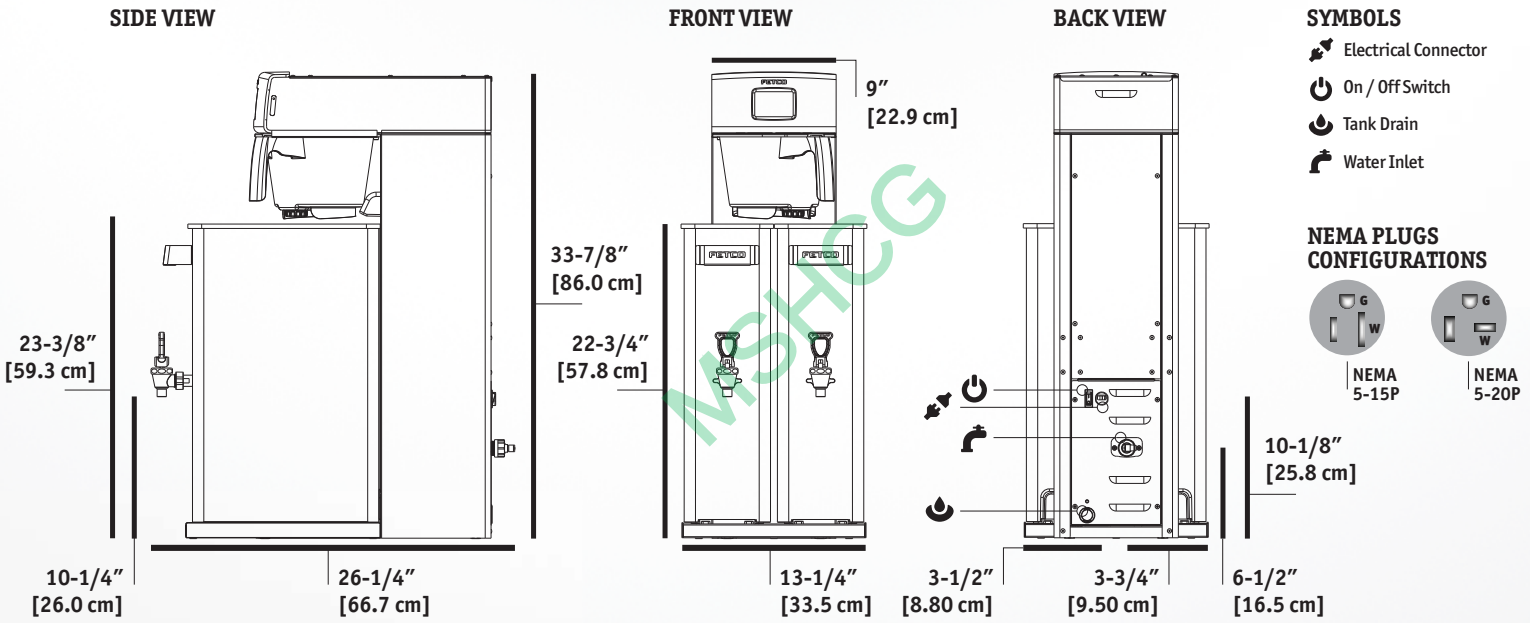

Cups per Hour*

8oz.	288
12oz.	192
16oz.	144
20oz.	115

* Approximate based on maximum power setting.

Compatible Dispensers

ITD-2135
3.5G Iced Tea Dispenser
(#D064)

ITD-2135
3.5G Iced Tea Dispenser
with Iced Tea Color Graphic
(#D064W112)



Product DIMS:
Height: 21½"[55 cm]
Width: 6¾" [18 cm]
Depth: 16¾" [43 cm]
Weight:
Empty: 9 lbs [4.1 kg]
Filled: 34 lbs [16 kg]

Paper Filters

#F001
15" x 5½" Paper Filter



Patents: 6,148,717 & 6,565,906 & 6,576,282. Other Patents pending.

FETCO® is an active member of

MSHCG

FETCO
fetco.com
847.719.3000
1.800.338.2699 USA
847.719.3001
Food Equipment Technologies Co.
600 Rose Road
Lake Zurich, IL 60047
USA

© Copyright 2013 FETCO®, Driven to Innovation™
is a mark of Food Equipment Technologies Company SS14026

HANDLE OPERATED COFFEE BREWER

CBS-5000 Series

CBS-52H-20

Twin 2.0 Gallon Brewer



Shown with 2.0 Gallon LUXUS® Thermal Dispensers (L3D-20)

The CBS-5000 Series was designed for simplicity. The Handle Operated Series brewers save the operator time and effort by delivering quick and consistent results from your pre-programmed coffee recipe. It is the reliable choice for serving high-volumes of single batch coffee all day long.



Handle operation — a quick start!

Simply twist the handle to begin the brew cycle and in minutes your perfectly brewed coffee is ready to serve.



Manual water faucet.

Safely dispense hot water away from steam and brew basket.



Set it and forget it.

Program your recipe once and this brewer delivers consistent and repeatable results.

MSHCG

FETCO®
TRUSTED | RELIABLE | QUALITY

CBS-52H-20

Technical Specifications / Accessories

Water Specification

Water Inlet	Minimum Flow Rate	Water Pressure
⅜" male flare fitting	1¼ gpm [4.71 lpm]	20-75 psig [138-517 kPa]

Electrical Configuration

Configuration Code	Heater Configuration	Voltage	Phase	Wires	KW	Electrical Connection	Max Amp Draw	Gallon [Liter] /Hour
US & CANADA								
C53016	2 x 3.0 kW	120/208-240	1	3+G	4.6-6.1	Terminal Block	22.0-25.4	14.0-20.0 [53.0-75.7](1)
C53026	2 x 4.0 kW	120/208-240	1	3+G	6.1-8.1	Terminal Block	29.3-33.8	20.0-26.0 [75.7-98.4](1)
C53036(2)	3 x 3.0 kW	120/208-240	3	4+G	7.0-9.1	Terminal Block	19.4-22.4	22.0-30.0 [83.3-113.6](1)
C53046(2)	3 x 4.0 kW	120/208-240	3	4+G	9.1-12.1	Terminal Block	25.6-29.6	33.0-40.0 [113.6-151.4](1)
C53186(2)	3 x 4.0 kW	440-480	3	3+G	10.3-12.1	Terminal Block	13.6-14.8	34.0-40.0 [128.7-151.4](1)
INTERNATIONAL								
C53076(2)	3 x 3.0 kW	220-240/380-415	3	4+G	7.8-9.1	Terminal Block	11.8-12.9	26.0-30.0 [98.4-113.6](1)
C53086(2)	3 x 4.0 kW	220-240/380-415	3	4+G	10.3-12.1	Terminal Block	15.7-17.1	34.0-40.0 [128.7-151.4](1)
C53096	2 x 3.0 kW	220-240	1	2+G	5.1-6.1	Terminal Block	23.3-24.4	18.0-20.0 [68.1-75.7](1)
C53106	2 x 4.0 kW	220-240	1	2+G	6.8-8.1	Terminal Block	30.9-33.8	24.0-26.0 [90.8-98.4](1)

(1) Based on standard factory settings: 4.0 minute brew time; 0% prewet; 200°F water.
(2) Requires 3 phase Electrical Power System (Z056).

Measurements

Height	Width	Depth	Empty Weight	Filled Weight	Shipping Weight	Shipping Dimensions:
39½" [100.3 cm]	21" [53.3 cm]	16" [40.6 cm]	87 lbs [39.5 kg]	150 lbs [68.0 kg]	100 lbs [45.4 kg]	38" x 23" x 24" [96.5 x 58.4 x 61.0 cm]

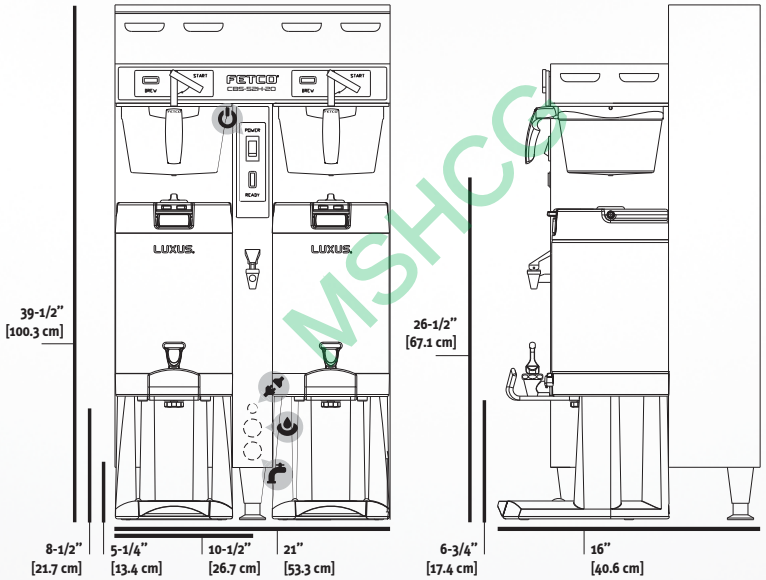

MSHCC

Compatibile Dispensers

2.0 Gallon LUXUS® Thermal Server (L3S-20)	D053
2.0 Gallon LUXUS® Thermal Dispenser (L3D-20)	D050

Customize Your Brewer

Single Serving Station for L3S-15/20 Server	A097
Twin Serving Station for L3S-15/20 Server	A098
Triple Serving Station for L3S-15/20 Server	A099
Identifier Plates, Acrylic	A069

Cups per Hour*

8oz. 475 12oz. 317 16oz. 238 20oz. 190

* Approximate based on maximum power setting.

Paper Coffee Filters

15" x 5.5" (500/Case)	F001

Information

fetco.com

847.719.3000
1.800.338.2699 USA
847.719.3001

Food Equipment Technologies Co.
600 Rose Road
Lake Zurich, IL 60047
USA

© Copyright 2015 FETCO® is a mark of Food Equipment Technologies Company #SS14014

GRINDER SERIES

GR Series

GR 1.2 | GR 1.3

Single Hopper



The GR 1 single hopper coffee grinder is portion controlled so you grind only the amount you need. Grind a small, medium or large batch with the touch of a button. The GR 1's powerful .74 Hp motor and precision slice grinding discs help deliver uniform grind profiles. Grind directly into the brew basket to make grinding and brewing coffee quick and easy.

Grinder shown is GR 1.3. Model GR 1.2 also available.



Control Panel is programmable and serviceable from the front.



Hopper has a generous 15-pound capacity, which means less time filling it.



Grinder Platform holds all FETCO® EXTRACTOR® and 5000 series brew baskets. Grind directly into filter paper for larger models.

MSHCG

FETCO
DRIVEN TO INNOVATION

GR 1 Single Hopper | Technical Specifications

Electrical Configuration

Configuration Code	Voltage	Motor Power	Phase	Wires	KW	Max Amp Draw	Hopper Capacity Pounds [Kilos]	Grind Medium Ounces[Grams]/Minute
DOMESTIC & CANADA								
G01012	120	0.74Hp	1	2+G	0.5	5.7	1x15 [6.8]	18 [510]
G01013	120	0.74Hp	1	2+G	0.5	5.7	1x15 [6.8]	18 [510]
EXPORT								
G01022	200-240	0.74Hp	1	2+G	0.7-0.8	5.7-6.3	1x15 [6.8]	18 [510]
G01023	200-240	0.74Hp	1	2+G	0.7-0.8	5.7-6.3	1x15 [6.8]	18 [510]

Important

Brew basket sold separately.

Measurements

Height	Width	Depth	Empty Weight	Shipping Weight
28½ in [72.4 cm]	9 in [22.8 cm]	11½ in [29.2 cm]	50 lbs [22.6 kg]	72 lbs [32.6 kg]

SIDE VIEW

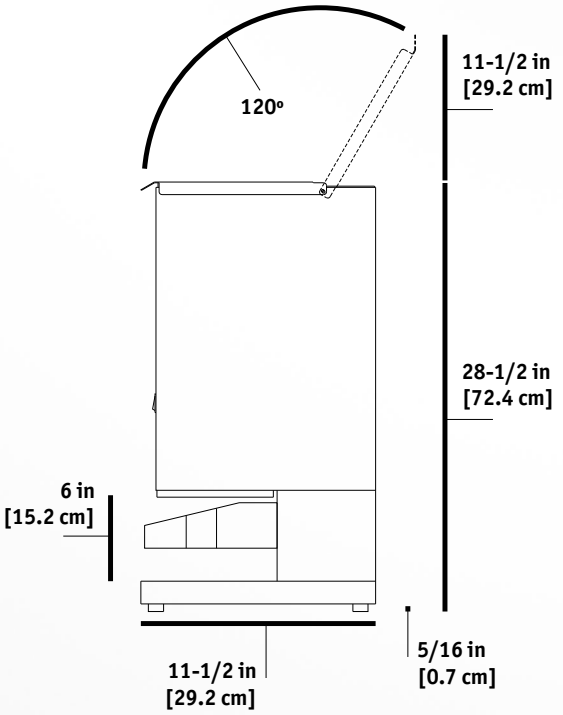

BACK VIEW

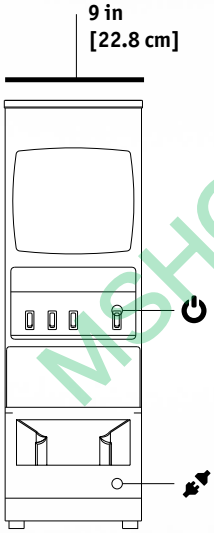

SYMBOLS

Electrical Connector

On / Off Switch

MSHCG

FETCO® is an active member of

Information

fetco.com

847.719.3000
180.338.2699 USA
847.719.3001

Food Equipment Technologies Co.
600 Rose Road
Lake Zurich, IL 60047
USA

© Copyright 2011 FETCO®, Driven to Innovation™, Driven to Pioneer Innovation™
are marks of Food Equipment Technologies Company.
Temperature on Demand and HWD-2100 Series Equipment Utility and Design Patents pending

Dual 4 Quart Warmer

Model: ☐ W4-2

PRODUCT: QUANTITY: ITEM #:

Designed Smart

- The W4-2 dual 4 qt. warmer is compact, protable, easy to maintain and inexpensive.
- Great for kitchens, buffets, counters, and dining rooms.
- With dual capabilities in one package, the W4-2 can be used wet or dry to keep moist foods (stews, soups, vegetables, etc.) at ideal serving temperature.



MODEL W4-2 DUAL 4 QUART WARMER

Built Solid

- Constructed with heavy-duty stainless steel for excellent durability.
- Inside liner made with stainless steel.
- Steel “element support” stabilizes heating elements and reflects heat toward food.

Reliability backed by APW Wyott’s Warranty

- APW Wyott warming equipment is backed by a 1-year parts and labor warranty, including our “Enhanced Warranty” service that replaces new units with certain product issues through the convenience of direct factory shipments.
- Certified by the following agencies:

APW Wyott Design Features

- 8 qt. capacity; (2) 4 qt.
- Compact, portable
- Easy to maintain
- Heavy gauge stainless steel construction
- Individual infinite controls

MSHCG

See reverse side for product specifications.

APW Wyott Foodservice Equipment Company *· 729 Third Ave., Dallas, TX 75226*
(800) 527-2100 · (214) 421-7366 · Fax (214) 565-0976 · www.apwwyott.com· info@apwwyott.com

Rev. 4/1/2006

Dual 4 Quart Warmer

Model: ☐ W4-2

PRODUCT: QUANTITY: ITEM #:

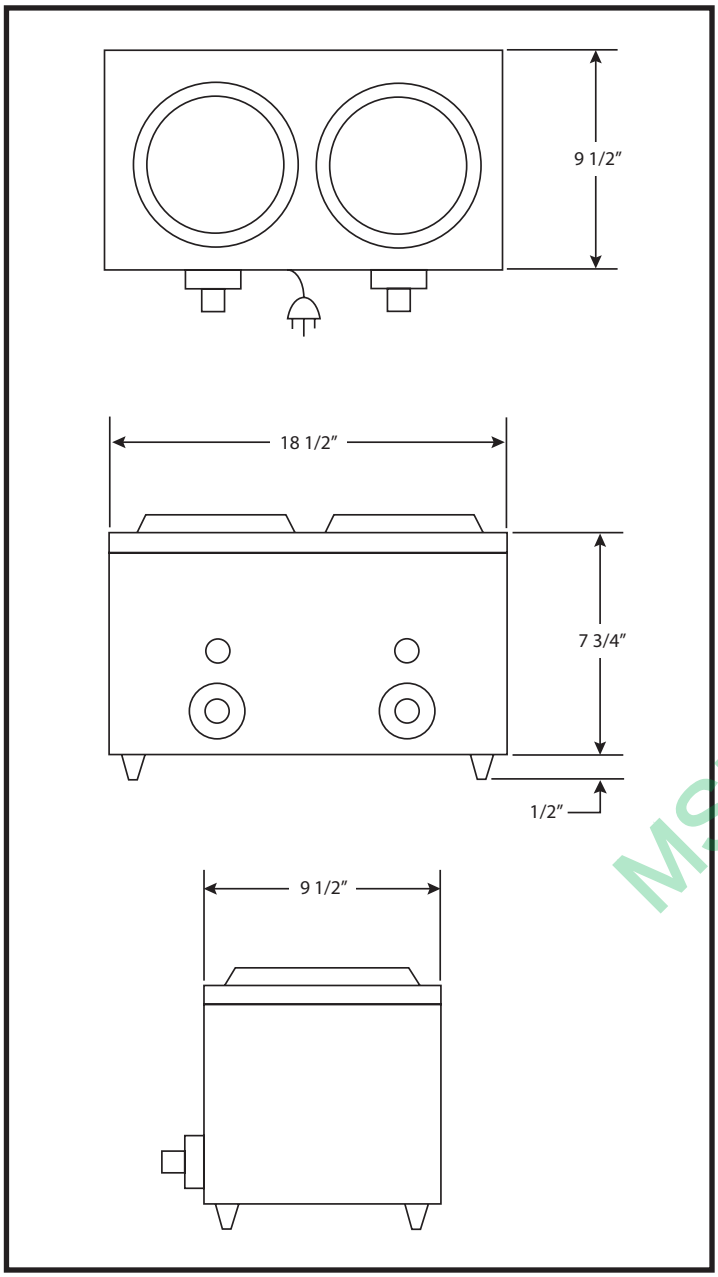

PRODUCT SPECIFICATIONS

Construction:
Heavy-duty stainless steel construction.

Dimensions:
8 1/4”H x 18 1/2”W x 9 1/2” D
(21 cm x 47 cm x 24.1 cm)

Electrical Information:
Each unit is equipped with a 60”, three wire grounded power cord which terminates with a standard three pronged male plug. The W4-2 uses a NEMA 5-15P plug.

Electrical Specifications:
120V, 800W, 6.7 Amps

Capacity:
8 qts. (7.6 L)

Shipping Information:
10 lbs. (4.5 kg)

F.O.B./ Dallas, TX 75226

MSHCC

**APW Wyott reserves the right to modify specifications or discontinue models without incurring obligation.*

APW Wyott Foodservice Equipment Company · 729 Third Ave., Dallas, TX 75226
(800) 527-2100 · (214) 421-7366 · Fax (214) 565-0976 · www.apwwyott.com· info@apwwyott.com

Rev. 4/1/2006
1508

QCSe2 SERIES CONVEYOR TOASTERS WITH ELECTRONIC CONTROLS

QCSe Features/Benefits:

- Holman's easy to use electronic control panel takes the guesswork out of temperature and speed control settings for your bread products. The electronic control is pre-programmed from the factory with 4 channel settings for toast, bagels, English muffins and other. Change products on the go with the touch of a button any time during the operation.
- Single order feature allows darker or lighter for one time product orders without the need to change program settings.
- Super energy efficiencies with programmable feature allowing the operator to set stand by feature automatically from 1/2 hour to 8 hours: This feature will automatically reduce power by as much as 100% (power reduction can be reduced in 10% increments) if ` toaster is not in use after a preprogrammed set time.
- Customize your settings for your specific product needs with our easy programmable electronic control. Once the control is programmed the setting will automatically default to the last saved setting.
- Large LED display provides for easier reading of settings.
- Patented forced convection keeps the toaster cool to the touch and extends the life of critical components. The forced convection increases productivity by re-circulating pre-heated air into the toasting chamber.
- Quartz infrared heaters provide faster, more consistent heating than traditional heating elements and responds quickly to the electronic control.
- Productivity -
  QCSe2-300H with a 3" high opening produces 300 slices per hour
  QCSe2-500 produces 500 slices per hour.
  QCSe2-600H with a 3" high opening produces 600 slices per hour.
  QCSe2-800 produces 800 slices per hour
- Compact - requires only 14-5/8" of counter space and our patented forced convection system allows the unit to be placed against a wall. Other toasters have louvers requiring additional counter space.
- Extended conveyor belt for easy loading and large warming area for higher production.
- Heated holding area to keep toast at the perfect temperature.
- 24 hours 7 days a week technical support by Holman technicians.



Model QCSe2-500

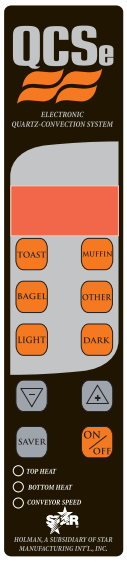

Applications:

Holman's new QCSe2 is the ultimate in conveyor toasters with touch pad electronic controls for consistent toasting and easy operation. This state of the art toaster is designed for a variety of bread products such as bagels, English muffins, toast, buns and more. Electronic controls are perfect for foodservice operations and restaurants with inexperienced staff. Mistakes are minimal with preset channels for consistent toasting. The innovative cost reduction features can provide significant energy savings and longer component life with a simple touch of a button.

Quality Construction:

Holman designs every toaster to stand up to the most rigorous foodservice demands. Stainless steel construction for long lasting durability. Heavy-duty motor, drive chain and conveyor speed control for superior reliability. Conveyor belt tension system for smooth and quiet operation. High performance Quartz Infrared Heaters for superior toasting performance and reliability. Units are easy to disassemble with one-piece cover for cleaning and service. Toasters are furnished with 1" adjustable legs and 4' cord.

Warranty:

Holman's conveyor toasters are covered by a one-year parts and labor warranty.

MSHCG

Star Manufacturing International Inc. - 10 Sunnen Drive - P.O. Box 430129 - St. Louis, MO 63143-3800
Phone: (800) 264-7827 - FAX: (800) 264-6666 - www.star-mfg.com

H213/0054

QCSe2 SERIES CONVEYOR TOASTERS WITH ELECTRONIC CONTROLS

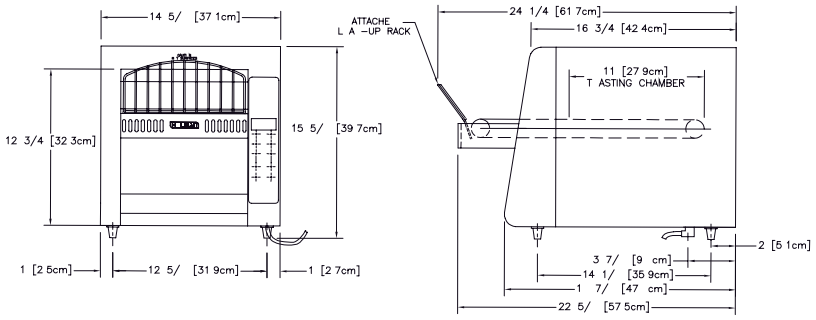

Performance Data

Model No.	Production Capacities	Product Openings
QCSe2-300H	300 slices per hour	3”
QCSe2-500	500 slices per hour	1-1/2”
QCSe2-600H	600 slices per hour	3”
QCSe2-800	800 slices per hour	1-1/2”

Specifications

	Dimensions			Shipping	Shipping Carton		
	Width Inches	Depth Inches	Height Inches	Weight lbs.	Width Inches	Depth Inches	Height Inches
Model No.	(cm)	(cm)	(cm)	(kg)	(cm)	(cm)	(cm)
QCSe2-300H	14-5/8	22-3/8	15-5/8	64	20-1/2	19-1/2	26
	(37.1)	(56.8)	(39.7)	(140.8)	(52.0)	(49.5)	(66.0)
QCSe2-500	14-5/8	22-3/8	15-5/8	64	20-1/2	19-1/2	26
	(37.1)	(56.8)	(39.7)	(140.8)	(52.0)	(49.5)	(66.0)
QCSe2-600H	14-5/8	22-3/8	15-5/8	64	20-1/2	19-1/2	26
	(37.1)	(56.8)	(39.7)	(140.8)	(52.0)	(49.5)	(66.0)
QCSe2-800	14-5/8	22-3/8	15-5/8	64	20-1/2	19-1/2	26
	(37.1)	(56.8)	(39.7)	(140.8)	(52.0)	(49.5)	(66.0)

MSHCG

Electrical Data

					Heating Elements[1]		
Model No.	Volts	HZ 1 Phase	Amps	Watts	Above Belt	Below Belt	NEMA
QCSe2-300H	120	60	14.1	1700	3	3	5-15P
QCSe2-500	120	60	14.1	1700	3	3	5-15P
QCSe2-600H	208	60	13.4	2800	2	2	6-20P
	240	60	11.6	2800	2	2	6-20P
	220	50	12.7	2800	2	2	Not supplied with plug
QCSe2-800	208	60	13.4	2800	2	2	6-20P
	240	60	11.6	2800	2	2	6-20P
	220	50	12.7	2800	2	2	Not supplied with plug

[1]Can be supplied with metal sheathed heaters (no additional charge), however production will be reduced.

Typical Specifications

Conveyor toasters are constructed of corrosion resistant stainless steel. Supplied with heavy-duty motor, drive chain and fast heat up quartz infrared heaters. A conveyor belt tension system is supplied for a smooth, quiet operation. Units are supplied with digital programming for variable speed control, top and bottom heat control, power saver and high limit switch. Extended conveyor belt, crumb tray, heated holding area and full width burn guard are standard. Unit has a one-piece cover for easy access with 1" adjustable legs and a 4' cord. Units are listed with UL, CUL and are UL certified to NSF4. Printed in the U.S.A.

Star Manufacturing International Inc. - 10 Sunnen Drive - P.O. Box 430129 - St. Louis, MO 63143-3800

Phone: (800) 264-7827 - FAX: (800) 264-6666 - www.star-mfg.com

ADVANCE TABCO
SMART FABRICATION™

STAINLESS STEEL

MICROWAVE SHELVES

NSF



Wall Mounted

Item #: _____ Qty #: _____
Model #: _____
Project #: _____

Model #	Size W x L	Approx. Wt.	Approx. Cu. Ft.
MS-18-24	18" x 24"	27 lbs.	5
MS-20-30	20" x 30"	36 lbs.	5
MS-24-24	24" x 24"	32 lbs.	5
MS-24-36	24" x 36"	38 lbs.	7

CONSTRUCTION:

All TIG welded.

Exposed surfaces polished to a satin finish.

MATERIAL:

18 gauge stainless steel.

OPTIONAL TABLE MOUNTED UNITS:

Mounted on tubular supports and fastened to the top with expanding tubular connectors.

Please use OTS Series Shelving and add TA-102 for 24" x 24" extension for table mounted version.

FOR TABLE MOUNTED MICROWAVE SHELF:

Model #	
MST-24-24	
MST-24-36	

MST Series





TA-102

TABLE MOUNTED SHELF WITH MICROWAVE EXTENTION

Use **OTS Shelving** and add **TA-102** for Microwave 24" x 24" extension. Specify Right or Left.

OPTIONAL:
2" Hole with Grommet
For Appliance Cord
TA-108



MSHCG

DETAILS and SPECIFICATIONS

TOL ± .500"

ALL DIMENSIONS ARE TYPICAL

WALL MOUNTED

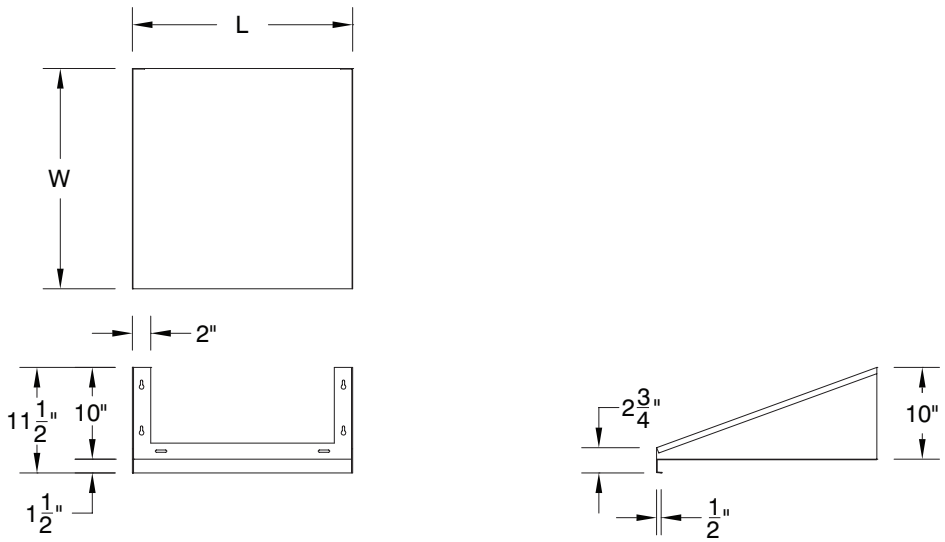

ADVANCE TABCO
SMART FABRICATION™
www.advancetabco.com

Customer Service Available To Assist You 1-800-645-3166 8:30 am - 8:00 pm E.S.T.

For Orders & Customer Service:
Email: customer@advancetabco.com or **Fax:** 631-242-6900

For Smart Fabrication™ Quotes:
Email: smartfab@advancetabco.com or **Fax:** 631-586-2933

ADVANCE TABCO is constantly engaged in a program of improving our products. Therefore, we reserve the right to change specifications without prior notice. © ADVANCE TABCO, DEC. 2016 REF-L

Project: _____ **Item No:** _____

NE-1054
1000 Watt* Commercial Microwave Oven



Technical Specifications

Power source: 120V, 60Hz, Single phase

Receptacle required: NEMA 5-15 R or NEMA 5-20 R



Frequency: 2,450MHz

Required power: 13.4A

Output: 1000 watts*

Outer dimensions: 20⅛" w x 16⁹⁄₁₆" d x 12" h

Cavity dimensions: 13" w x 13" d x 8⁵⁄₁₆" h

Net weight: 34 lbs.

Shipping weight: 39 lbs.

Shipping box size: 24" w x 18¾" d x 14¾" h, 3.8 cu. ft.

Timer: 99 Minutes, 99 Seconds

Memory Capability: 20 Programs

To specify a Panasonic Commercial Microwave Oven

The NE-1054 Commercial Microwave Oven meets or exceeds all safety performance and sanitation standards set for commercial food service microwave ovens by UL, DHHS, FCC and NSF.

Plus, oven shall have output power 1000 Watts*, stainless steel front, bottom energy feed, 10 programmable memory pads, Braille keypad, 20-memory capability, double quantity key, 6 power levels, 2- and 3-stage cooking, programmable lock, unqiue "quick pick" preset times and self-diagnostics, Chef/Test Kitchen technical support and 3 year limited warranty.

**I.E.C. 60705 Test Procedure. Specifications subject to change without notice.*

MSHCG

Security/Anti-Theft Option

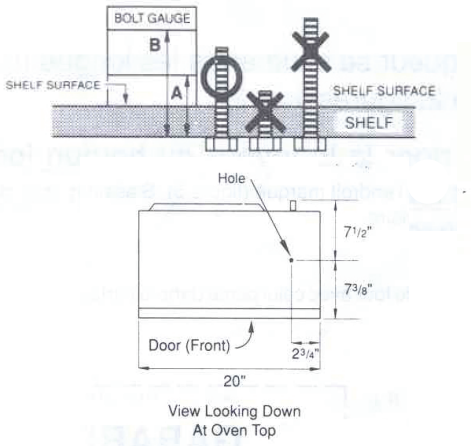

Receptacle Required

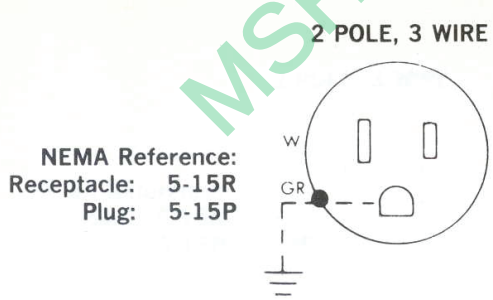

ADA Compliance

§4.28.2 ((CFR) – 28CFR Part 36) "For Alarms".

§4.27 "For controls and operating mechanisms".

Braille controls.



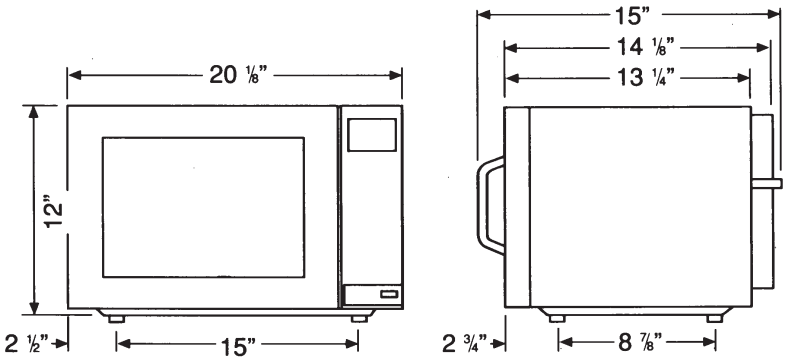

Panasonic
ideas for life

Panasonic Appliance & Commercial Group
Division of Matsushita Electric Corporation of America
Executive Offices:
One Panasonic Way, Panazip 4A-1, Secaucus, NJ 07094
Toll Free: 1-888-350-9590
www.panasonic.com/cmo

COLORPOINT

Beverage Table

Item: _____

Quantity: _____

Project: _____

Date: _____



36-BT Beverage Table shown.

MODELS

	length
❑ 28-BT	28 3/8"
❑ 36-BT	36 3/8"
❑ 50-BT	50 3/8"
❑ 60-BT	60 3/8"
❑ 66-BT	66 3/8"
❑ 74-BT	74 3/8"
❑ 84-BT	84 3/8"
❑ 96-BT	96 3/8"
❑ 144-BT	144 3/8"

- ► Versatile counters, add the options you need!
- ► Durable, colorful, molded fiberglass
- ► East to clean, low maintenance

Top:
- ❑ 36" Counter Top Height
- ❑ Other Height (specify_____)
- ❑ Top Extensions (width _____)
- ❑ Top Extensions (length _____)
- ❑ Drop-Ins (specify_____)
- ❑ Drain Trough length (specify_____)

Above the Top:
- ❑ Overshelf
- ❑ Sloped Front Protector
- ❑ Curved Front Protector
- ❑ Other Style Protector (specify _____)
- ❑ Buffet Shield Single Service
- ❑ Buffet Shield Double Service
- ❑ Lift-up Hinge for shield
- ❑ 2 tier Display Shelf, single service
- ❑ 2 tier Display Shelf, double service
- ❑ 3 tier Display Shelf, single service
- ❑ 3 tier Display Shelf, double service
- ❑ Curved Glass for Display Shelf
- ❑ Powder Coated finish (specify RAL #)
- ❑ Fluorescent Lights

Tray Slide:

Stainless Steel
- ❑ Solid "V" ridge
- ❑ Flat Surface

Solid Surface
- ❑ Corian® (specify _____)
- ❑ Powder Coated brackets (specify RAL #)
- ❑ 34" Tray Slide Height
- ❑ Other Slide Height _____

Base Options:
- ❑ Enclosed Base (specify EB after model #)
- ❑ Cam Operated Line-up Locks
- ❑ Hinged Doors
- ❑ Fiberglass Door Panels
- ❑ End Drop Shelf
- ❑ Custom Color (specify RAL #)
- ❑ 5" Diameter Casters
- ❑ Stainless Steel Legs
- ❑ Cashier Station
- ❑ Other _____

Cutting Board:
- ❑ 8" wide Stainless Steel
- ❑ 8" wide Richlite® composite
- ❑ Other width _____

Electrical Options:
- ❑ Convenience outlet, flush
- ❑ Convenience outlet, pedestal
- ❑ Daisy chain
- ❑ Load center

Other Options:
- ❑ Canopy (specify style & color)
- ❑ Over-structure with signage & lights (specify_____)
- ❑ Theme Package
  - ❑ School Bus
  - ❑ Train
  - ❑ Space Shuttle
  - ❑ Covered Wagon
  - ❑ Circus Train
  - ❑ Other (specify)

VISHCG

LOW TEMP INDUSTRIES, INC.

P.O. Box 795 • Jonesboro, GA 30237
Tel: 770.478.8803 • Fax: 770.471.3715
www.lowtempind.com • colorpoint@lowtempind.com

COLORPOINT

Beverage Table

Item: _____

Quantity: _____

Project: _____

Date: _____

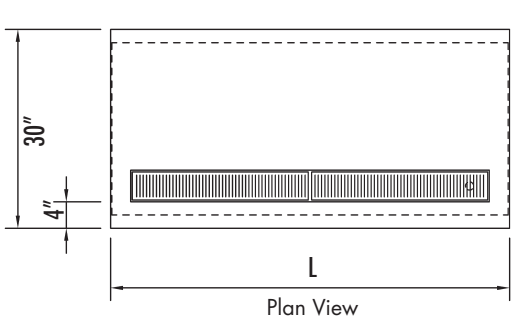

Plan View

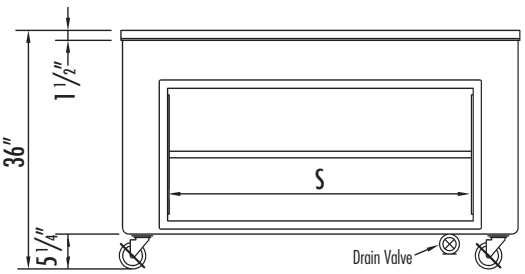

Rear View

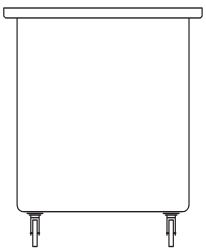
End View

MODEL	L	S	APPROX. SHIP WEIGHT
28-BT	28 3/8″	N/A	205 lbs.
36-BT	36 3/8″	15″	220 lbs.
50-BT	50 3/8″	36″	260 lbs.
60-BT	60 3/8″	46″	300 lbs.
66-BT	66 3/8″	46″	320 lbs.
74-BT	74 3/8″	(2) 28″	340 lbs.
84-BT	84 3/8″	28″ & 36″	360 lbs.
96-BT	96 3/8″	28″ & 46″	380 lbs.
144-BT	144 3/8″	(2) 46″	750 lbs.

TOP: Top to be 30″ wide and fabricated from a minimum of 14 ga. stainless steel with square turndown on all sides and corners fully welded, ground and polished. Top to have #4 satin finish and with all edges having a #7 hi-lite finish.

BODY: Body to be seamless molded fiberglass (F.R.P.) with smooth exterior surfaces and rounded corners. To be constructed by a hand lay-up process with four layers of 1.5 oz continuous strand fiberglass mat, plus a 24 oz layer of woven roving on the bottom for added strength. Fiberglass to be flame retardant per specification ASTM E-162 having a flame spread of 25 or less. Body interior to be reinforced at each end with 4″ wide, 12 gauge galvanized channels welded to form integral "U" frame for maximum stress relief.
Rear of body to have an open storage base made from 18-gauge stainless steel. Liner to have removable top panels to allow for service access.

CASTERS: 4″ diameter, ball bearing, swivel type casters to be non-marking and with brakes on all wheels. Casters to be mounted thru two 12 gauge channels for extra rigidity.

DRAIN TROUGH: 14 ga. stainless steel drain trough welded into top and fitted with a removable stainless steel anti-splash grid. Trough to slope to 1″ open brass drain and extend to shut off valve located below base.

We reserve the right to change specifications and product design without notice. Such revisions do not entitle the buyer to corresponding changes, improvements, additions or replacement for previously purchased equipment.

All equipment to be built in accordance with the Underwriters Laboratories. Inc. and the National Sanitation Foundation, Inc. standards and shall bear the Underwriters Laboratories, Inc. listing label for safety and the Underwriters Laboratories classification label for sanitation.

05/2006

LOW TEMP INDUSTRIES, INC.

P.O. Box 795 • Jonesboro, GA 30237
Tel: 770.478.8803 • Fax: 770.471.3715
www.lowtempind.com • colorpoint@lowtempind.com

U.L. SanitationClassified to NSF Standards

ANSI/NSF2

For Foodservice Applications

Job Name _____ Contractor _____

Job Location _____ Approval _____

Engineer _____ Contractor's P.O. No. _____

Approval _____ Representative _____

LEAD FREE*

Hydro-Safe®

Series Brew Max

Brew Station Filtration Systems

Flow Rate:

Brew Max-S2: Maximum 0.5 GPM (1.9 LPM)

Brew Max-S2L: Maximum 1 GPM (3.8 LPM)

Hydro-Safe Brew Max systems have been specifically engineered to address and correct multiple water related problems for brew stations. Incorporating both high end coconut shell carbon filtration with OneFlow® media for scale control, these systems deliver superior filtration while providing advanced scale protection. Advanced carbon filtration for the reduction of lead, cyst and VOC in addition to chlorine taste and odor providing a superior consistent quality beverage.



Brew Max-S2



Brew Max-S2L

Applications

- Coffee Brewers
- Tea Machines
- Soda Machines

Features

- Increases brew machine life, performance and quality
- Reduces scale build-up
- Reduces lead, cyst, VOC's, sediment, chlorine taste and odor
- Reduces maintenance and system downtime
- Consistent quality and better tasting drinks
- In/Out valves allow for easy filter service
- Pressure gauges and flush kit included
- Easy to install
- Simple filter replacement

System Specifications

Maximum Pressure: 125psi/8.6 bar

Maximum Temperature: 100°F/38°C

pH 6.5 to 8.5

Hardness (maximum for systems containing OneFlow) 75 grains (1282 ppm CaCO3)

Chlorine < 2ppm

Iron (maximum) 0.3 mg/l

Manganese (maximum) 0.05 mg/l

Copper (for systems containing OneFlow) < 0.1 mg/l

Oil & H2S- None allowed

Polyphosphate (for systems containing OneFlow)- None allowed

Silica (maximum for systems containing OneFlow) 10ppm

For all other feed water quality requirements abide by the current USEPA Safe Drinking Water Act standards.

Brew Max Systems are Tested and Certified by WQA to NSF/ANSI Standard 42 and 53 for the reduction of claims specified on the Performance Data Sheet & NSF/ANSI 372 for "lead free" compliance.

Please note: Cartridge capacities are estimates and may be less depending on incoming water quality.

Note: Do not use with water that is microbiologically unsafe or of unknown quality without adequate disinfection before or after the system.

***The wetted surface of this product contacted by consumable water contains less than 0.25% of lead by weight.**

MSHCG

Watts product specifications in U.S. customary units and metric are approximate and are provided for reference only. For precise measurements, please contact Watts Technical Service. Watts reserves the right to change or modify product design, construction, specifications, or materials without prior notice and without incurring any obligation to make such changes and modifications on Watts products previously or subsequently sold.

WATTS®

System Specifications cont.

Inlet/Outlet Connections: 3/8" NPT

OneFlow® Application Practices

Note: Systems using OneFlow technology prevent hardness related scale formation inside the plumbing system at influent hardness levels of 75 grains per gallon of calcium carbonate and less. Due to variances in water chemistry certain aesthetic conditions external of the plumbing system may not be attained. New copper lines need to be passivized before placing unit into service. Copper usually originates from new copper plumbing upstream of the OneFlow system. All new copper plumbing before the system should be allowed to passivate by operating under normal conditions for a period of 4 weeks prior to starting the system up. This will allow the copper surfaces to be fully flushed and develop a natural protective surface. To further minimize any problem with excess copper, avoid applying excess flux on the inner surfaces of the pipe and use a low-corrosivity water soluble flux listed under the ASTM B813 standard. OneFlow is not for use on closed loop systems.

System Model	Ordering Code	Max Flow Rate	Connection Size
Brew Max-S2	BRWMAX-S2S	0.5 GPM (1.9 LPM)	3/8" NPT
Brew Max-S2L	BRWMAX-S2L	1 GPM (3.8 LPM)	3/8" NPT

Filter Cartridge Life Span

Filter cartridges should be changed at end of filter life, due to lack of filtering performance, or whenever a 15 psi pressure drop or greater is experienced during normal operation, whichever comes first.

System Replacement Filters			
System Model	**Filter Ordering Code**	**Frequency**	**Description**
Brew Max-S2	BRWMAX-S2S-PM		All Filters for System Maintenance
	BRWMAXR-S-CB	6 Months	10" Coconut Shell Carbon Block
	DOR-OF110RM	12 Months	10" OneFlow Anti-Scale Cartridge
	STMAXR-S-ACSC	6 Months	10" Phosphate Scale Control (Option)
Brew Max-S2L	BRWMAX-S2L-PM		All Filters for System Maintenance
	BRWMAXR-L-CB	6 Months	20" Coconut Shell Carbon Block
	DOR-OF120RM	12 Months	20" OneFlow Anti-Scale Cartridge
	STMAXR-L-ACSC	6 Months	20" Phosphate Scale Control (Option)

System Diagrams

Brew Max-S2

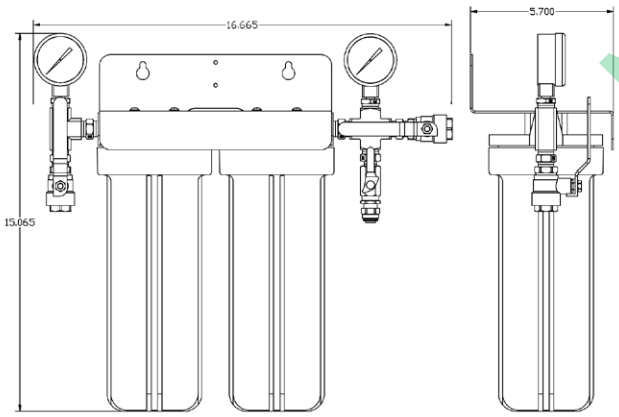

Brew Max-S2L

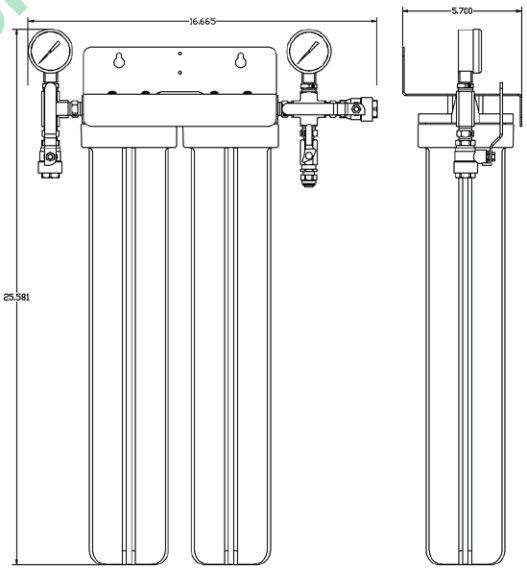

Note: Allow 3" of clearance at bottom of system for removal of filter bowls for filter cartridge replacement

MSHCG

WATTS®
A Watts Water Technologies Company

Tel: (800) 264-1183 • Fax: (724) 733-4808 • foodservice.watts.com

© 2012 Watts

COLORPOINT

Solid Top Food Table

Item: _____

Quantity: _____

Project: _____

Date: _____



ST-66 shown with 8" stainless cutting board, double display shelves and 12" stainless tray slide (32" O.F.)

MODELS

❑ 28-ST	28 3/8"
❑ 36-ST	36 3/8"
❑ 50-ST	50 3/8"
❑ 60-ST	60 3/8"
❑ 66-ST	66 3/8"
❑ 74-ST	74 3/8"
❑ 84-ST	84 3/8"
❑ 96-ST	96 3/8"
❑ 144-ST	144 3/8"

- ► Most versatile counters, add the options you need!
- ► Durable, colorful, molded fiberglass
- ► East to clean, low maintenance
- ► 12' (144-ST) unit can be made into a complete reimbursable line.

Top:
- ❑ 36" Counter Top Height
- ❑ Other Height (specify_____)
- ❑ Top Extensions (width _____)
- ❑ Top Extensions (length _____)
- ❑ 7 qt. Soup Well
- ❑ 11 qt. Soup Well
- ❑ Bread Loaf Divider Pan
- ❑ Drop-Ins (specify_____)

Above the Top:
- ❑ Overshelf
- ❑ Sloped Front Protector
- ❑ Curved Front Protector
- ❑ Other Style Protector (specify _____)
- ❑ Buffet Shield Single Service
- ❑ Buffet Shield Double Service
- ❑ Lift-up Hinge for shield
- ❑ 2 tier Display Shelf, single service
- ❑ 2 tier Display Shelf, double service
- ❑ 3 tier Display Shelf, single service
- ❑ 3 tier Display Shelf, double service
- ❑ Curved Glass for Display Shelf
- ❑ Powder Coated finish (specify RAL #)
- ❑ Fluorescent Lights

Tray Slide:

Stainless Steel
- ❑ Solid "V" ridge
- ❑ Flat Surface
- ❑ Tubular

Solid Surface
- ❑ Corian® (specify _____)
- ❑ Powder Coated brackets (specify RAL #)
- ❑ 34" Tray Slide Height
- ❑ Other Slide Height _____

Base Options:
- ❑ Enclosed Base (specify EB after model #)
- ❑ Cam Operated Line-up Locks
- ❑ Hinged Doors
- ❑ Fiberglass Door Panels
- ❑ End Drop Shelf
- ❑ Custom Color (specify RAL #)
- ❑ 5" Diameter Casters
- ❑ Stainless Steel Legs
- ❑ Cashier Station
- ❑ Other _____

Cutting Board:
- ❑ 8" wide Stainless Steel
- ❑ 8" wide Richlite® composite
- ❑ Other width _____

Electrical Options:
- ❑ Convenience outlet, flush
- ❑ Convenience outlet, pedestal
- ❑ Daisy chain
- ❑ Load center

Other Options:
- ❑ Canopy (specify style & color)
- ❑ Over-structure with signage & lights (specify_____)
- ❑ Theme Package
  - ❑ School Bus
  - ❑ Train
  - ❑ Space Shuttle
  - ❑ Covered Wagon
  - ❑ Circus Train
  - ❑ Other (specify)

MSHCG

LOW TEMP INDUSTRIES, INC.

P.O. Box 795 • Jonesboro, GA 30237
Tel: 770.478.8803 • Fax: 770.471.3715
www.lowtempind.com • colorpoint@lowtempind.com

U.L. SanitationClassified to NSF Standards

ANSI/NSF2

COLORPOINT

Solid Top Food Table

Item: _____

Quantity: _____

Project: _____

Date: _____

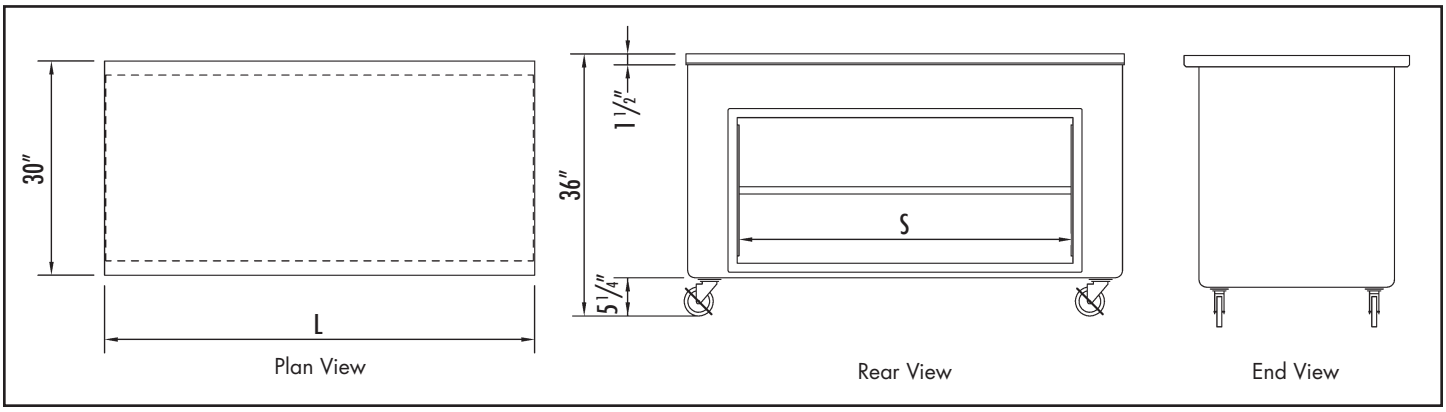

MODEL	L	S	APPROX. SHIP WEIGHT
28-ST	28 3/8"	N/A	205 lbs.
36-ST	36 3/8"	15"	220 lbs.
50-ST	50 3/8"	36"	260 lbs.
60-ST	60 3/8"	46"	300 lbs.
66-ST	66 3/8"	46"	320 lbs.
74-ST	74 3/8"	(2) 28"	340 lbs.
84-ST	84 3/8"	28" & 36"	360 lbs.
96-ST	96 3/8"	28" & 46"	380 lbs.
144-ST	144 3/8"	(2) 46"	750 lbs.

MSHCG

Solid Top Food Table

TOP: Top to be 30" wide and fabricated from a minimum of 14 ga. stainless steel with square turndown on all sides and corners fully welded, ground and polished. Top to have #4 satin finish and with all edges having a #7 hi-lite finish.

BODY: Body to be seamless molded fiberglass (F.R.P.) with smooth exterior surfaces and rounded corners. To be constructed by a hand lay-up process with four layers of 1.5 oz continuous strand fiberglass mat, plus a 24 oz layer of woven roving on the bottom for added strength. Fiberglass to be flame retardant per specification ASTM E-162 having a flame spread of 25 or less. Body interior to be reinforced at each end with 4" wide, 12 gauge galvanized channels welded to form integral "U" frame for maximum stress relief.
Rear of body to have an open storage base made from 18-gauge stainless steel. Liner to have removable top panels to allow for service access.

CASTERS: 4" diameter, ball bearing, swivel type casters to be non-marking and with brakes on all wheels. Casters to be mounted thru two 12 gauge channels for extra rigidity.

We reserve the right to change specifications and product design without notice. Such revisions do not entitle the buyer to corresponding changes, improvements, additions or replacement for previously purchased equipment.

All equipment to be built in accordance with the Underwriters Laboratories. Inc. and the National Sanitation Foundation, Inc. standards and shall bear the Underwriters Laboratories, Inc. listing label for safety and the Underwriters Laboratories classification label for sanitation.

08/2006

LOW TEMP INDUSTRIES, INC.

P.O. Box 795 • Jonesboro, GA 30237
Tel: 770.478.8803 • Fax: 770.471.3715
www.lowtempind.com • colorpoint@lowtempind.com

U.L. SanitationClassified to NSF Standards

ANSI/NSF2

APPLICATION:

JOB NAME:

QUANTITY: | ITEM NO.

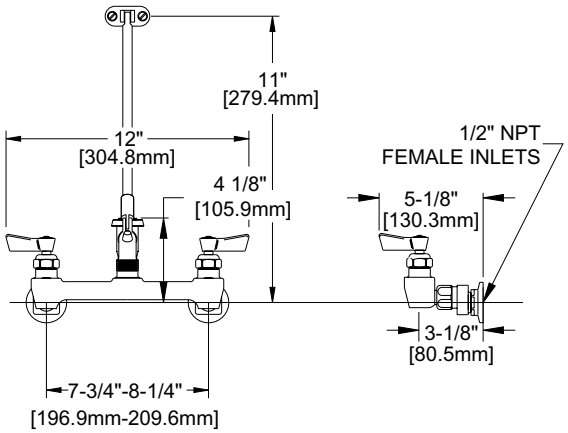

ROUGH-IN:

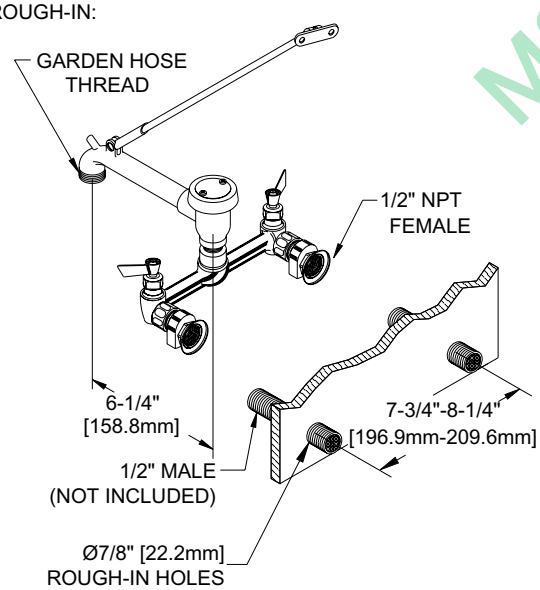

ANSI/A112.18.1M

PRODUCT NAME:
SERVICE SINK FAUCET WITH LONG SPOUT AND VACUUM BREAKER

☐ _____ SPECIAL CONFIGURATION (CHECK BASE MODEL AND OPTIONS)

MODEL:
■ 8253

OPTIONS OR MODIFICATIONS
- ☐ SUPPLY LINES (24” OR 36”) CIRCLE LENGTH
- ☐ NIPPLES
- ☐ ELBOWS
- ☐ VANDAL RESISTANT KIT
- ☐ HANDLES (CROSS OR WRIST) CIRCLE STYLE
- ☐ OTHER _____

FEATURES:

CONTROL VALVE
* ECCENTRICS ADJUST FROM 7-1/2” TO 8-1/2”
* INTERNAL SPRING LOADED CHECK VALVES
* SWIVELLING SEAT DISKS
* HOT SIDE STEM - RIGHT HAND
* COLD SIDE STEM - LEFT HAND
* STAINLESS STEEL SEATS
* STAINLESS STEEL SEAT SCREWS
* STAINLESS STEEL HANDLE SCREWS
* ATMOSPHERIC VACUUM BREAKER
* 3/4” GARDEN HOSE THREAD OUTLET

SYSTEM LIMITS
* TEMP: 40°F MIN. TO 140°F MAX.
* PRESSURE 200 PSI MAX. STATIC
* 13.6 GPM AT 80 PSI

SHIPPING WEIGHT
* 6.25 LBS

MSHCG

FISHER
FISHER MANUFACTURING COMPANY
TOLL FREE: 800-421-6162 - FAX: 800-832-8238
information@fisher-mfg.com - www.fisher-mfg.com

SPEC. 8253 REV. C

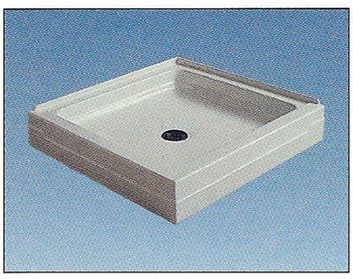



Durable, High-Gloss Shower Receptors

One-piece, cast acrylic shower receptors with slip-resistant surface.

Notes

- Illustrated installation instructions included
- Available in an array of Crane Plumbing®/Fiat Products®/ Universal-Rundle decorator colors
- Drain assembly included
- Five-year warranty

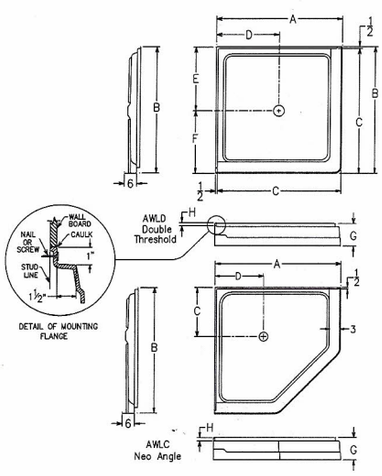

DIMENSIONS (IN INCHES)

MODEL	A	B	C	D	E	F	G	H	I
AWLD-3636	36	36	35.5	18	18	18	7.25	1	2
AWLC-3636	36	36	15	15	n/a	n/a	7.25	1	2
AWLC-3838	38	38	14.5	14.5	n/a	n/a	7.25	1	1.5
AWLC-4242	42	42	16.25	16.25	n/a	n/a	7.25	1	1.5

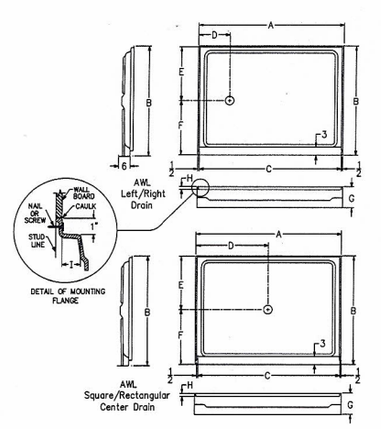

DIMENSIONS (IN INCHES)

MODEL	A	B	C	D	E	F	G	H	I
AWL-3232	32	32	31	16	16	16	7.25	1	2
AWL-3434	34	34	33	17	17	17	7.25	1	2
AWL-3636	36	36	35	18	18	18	7.25	1	1.5
AWL-3838	38	38	37	19	19	19	7.25	1	2
AWL-4234	42	34	41	21	17	17	7.25	1	2
AWL-4236	42	36	41	21	18	18	7.25	1	1.5
AWL-4242	42	42	41	21	21	21	7.25	1	1.5
AWL-4832	48	32	47	24	16	16	7.25	1	2
AWL-4834	48	34	47	24	17	17	7.25	1	1.5
AWL-6030RL*	60	30	59	8	15	15	7.25	1	2
AWL-6032C	60	32	59	30	16	16	7.25	1	2
AWL-6032RL*	60	32	59	8	16	16	7.25	1	2
AWL-6034	60	34	59	30	16.75	17.25	7.25	1	1.5

* Left Hand Shown (Reverse D, E and F for Right Hand)

MSHCG

CRANE® PLUMBING

CR/PL, LLC • 1235 Hartrey Avenue, Evanston, Illinois 60202 • 847.864.7600 Fax 847.864.7652 • www.craneplumbing.com

FIAT PRODUCTS® A CRANE PLUMBING COMPANY

10/03 10M

Acrylic Shower Floors

CRANE PLUMBING

Crane Plumbing/Fiat Products acrylic shower floors are made from a single sheet of thermoformed acrylic and backed with a composite matrix. Acrylic shower floors are durable, easy-to-clean and have a high-gloss finish. The acrylic finish is mold, mildew and stain resistant. The floors have a raised dam to prevent water leakage. All floors have a slip-resistant surface. Drains are included with all floors.

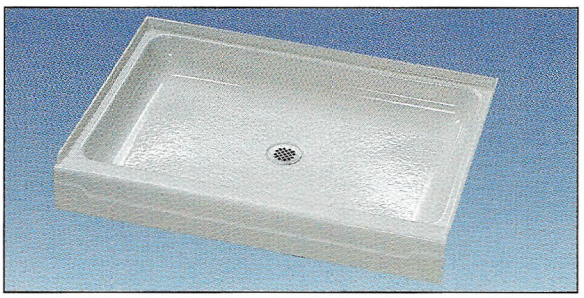

Single Threshold — Square

AWL 3232
AWL 3434
AWL 3636
AWL 3838
AWL 4242

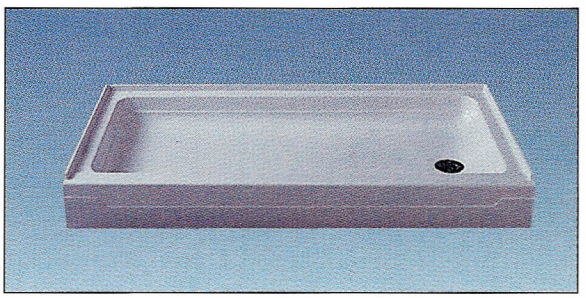

Single Threshold — Rectangular

AWL 4234	AWL 6030R
AWL 4236	AWL 6032C
AWL 4832	AWL 6032L
AWL 4834	AWL 6032R
AWL 6030L	AWL 6034

Right and left drain on 6030 L/R and 6036 L/R only
All other models only have center drains

MSHCG



Neo-Corner

AWLC 3636
AWLC 3838
AWLC 4242

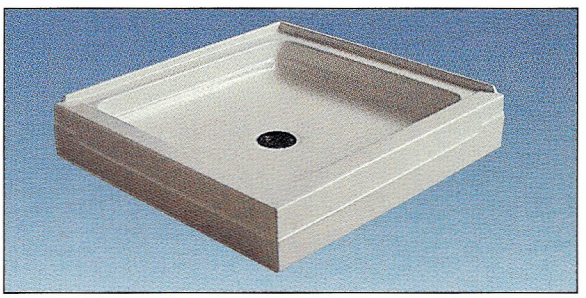

Double Threshold

AWLD 3636

FIAT PRODUCTS®
A CRANE PLUMBING COMPANY

STAINLESS STEEL

FLOOR TROUGHS & FLOOR DRAINS

ADVANCE TABCO
SMART FABRICATION™

Floor Troughs

4" Depth

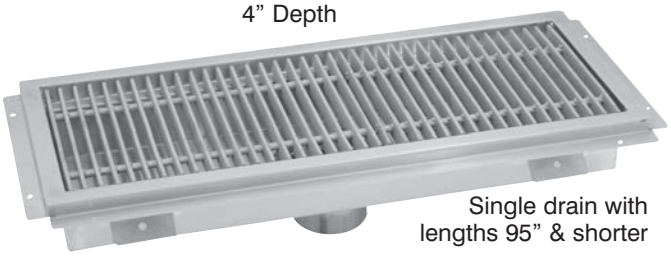

Single drain with lengths 95" & shorter

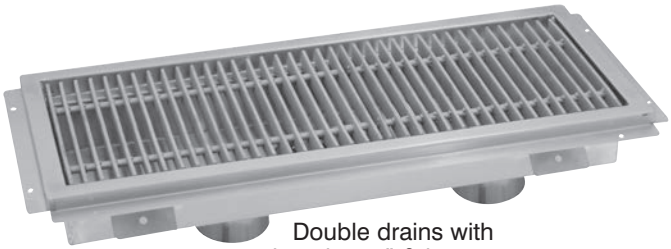

Double drains with lengths 96" & longer

NSF

Item #: _____ Qty #: _____

Model #: _____

Project #: _____



Cut-Out View of Anti-Splash

FT-1
Optional Anti-Splash Guard
(Per ft. Factory installed)

Floor Drain

4" Depth



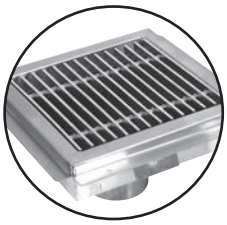

FD-1
Optional Stainless Steel Grate for Floor Drains



FT-2
Stainless Steel Strainer Basket with Handle (Included with all Floor Troughs, Water Receptacles & Floor Drains)

MSHCG

Floor Water Receptacles

2" Depth

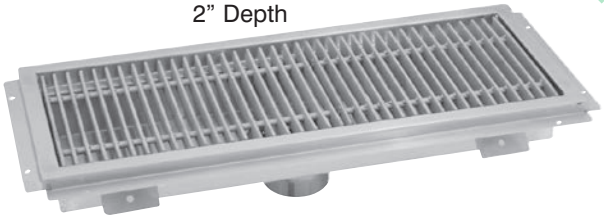

OPTIONAL ACCESSORIES

Model #	Qty
FT-1 Anti-Splash Guard per ft.	
FT-2 Replacement Strainer Basket	
FD-1 Floor Drain Stainless Steel Grate	

FEATURES:

Waste receptacle will accommodate up to a 4" waste pipe.

Includes 4" O.D. - 3" Long Plumbing Sleeve.

Removable perforated stainless steel strainer basket with handle provided.

Pitched towards waste.

Includes "Subway Style" grating from 3/16" x 1" solid "304" stainless steel bar or fiberglass. (Not included with Floor Drains. Use Model FD-1)

Grating is spaced 9/16" (Inside clearance) between bars to prevent casters from getting trapped.

Troughs 96" or larger in length made with two (2) drains.

Custom sizes available. Consult factory.

CONSTRUCTION:

All TIG welded.

All external corners welded and polished to a satin finish.

MECHANICAL:

Creased design to ensure proper drainage.

Perimeter flange mounts directly to sub floor.

3/4" vertical step designed to accommodate floor tile installation.

MATERIAL:

14 gauge "304" type stainless steel polished stainless steel grating.

Fiberglass grating: Gray fiberglass composite. Light weight, skid and corrosion resistant.

ADVANCE TABCO
SMART FABRICATION™
www.advancetabco.com

Customer Service Available To Assist You 1-800-645-3166 8:30 am - 8:00 pm E.S.T.

For Orders & Customer Service:
Email: customer@advancetabco.com or **Fax:** 631-242-6900

For Smart Fabrication™ Quotes:
Email: smartfab@advancetabco.com or **Fax:** 631-586-2933

REF-E

DIMENSIONS and SPECIFICATIONS

ALL DIMENSIONS ARE TYPICAL

TOL ± .500”

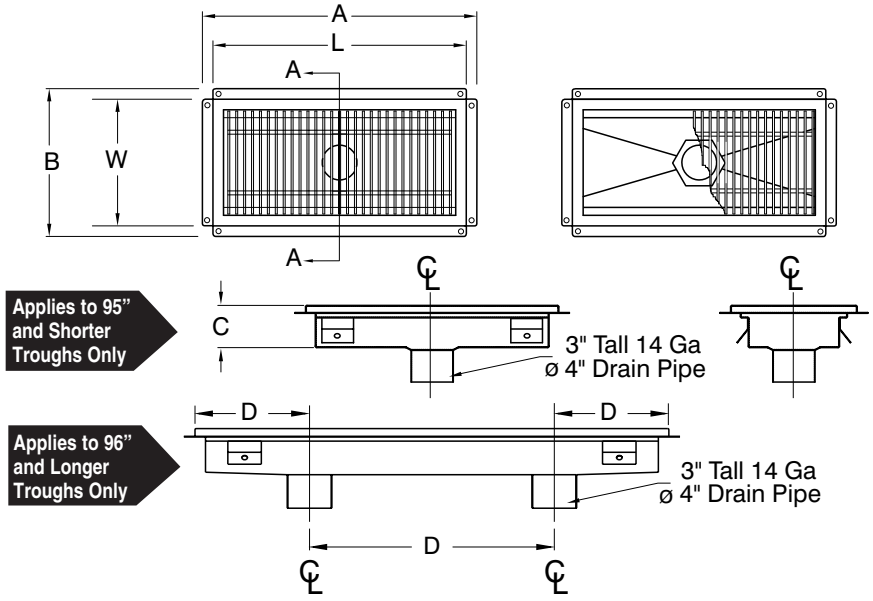

PLUMBING ROUGH-IN

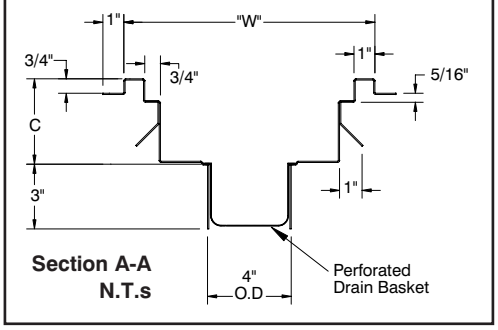

FLOOR TROUGHS

Stainless Steel Grating	Wt.	Fiberglass Grating	Wt.	L	W	A	B	C	D
FTG-1224	46 lbs.	FFTG-1224	34 lbs.	24”	12”	26”	14”	4”	-
FTG-1230	56 lbs.	FFTG-1230	37 lbs.	30”	12”	32”	14”	4”	-
FTG-1236	66 lbs.	FFTG-1236	40 lbs.	36”	12”	38”	14”	4”	-
FTG-1242	76 lbs.	FFTG-1242	43 lbs.	42”	12”	44”	14”	4”	-
FTG-1248	86 lbs.	FFTG-1248	46 lbs.	48”	12”	50”	14”	4”	-
FTG-1254	96 lbs.	FFTG-1254	49 lbs.	54”	12”	56”	14”	4”	-
FTG-1260	106 lbs.	FFTG-1260	52 lbs.	60”	12”	62”	14”	4”	-
FTG-1272	116 lbs.	FFTG-1272	55 lbs.	72”	12”	74”	14”	4”	-
FTG-1284	126 lbs.	FFTG-1284	81 lbs.	84”	12”	86”	14”	4”	-
FTG-1296*	146 lbs.	FFTG-1296	90 lbs.	96”	12”	98”	14”	4”	32”
FTG-12108*	166 lbs.	FFTG-12108	99 lbs.	108”	12”	110”	14”	4”	36”
FTG-12120*	180 lbs.	FFTG-12120	108 lbs.	120”	12”	122”	14”	4”	40”
FTG-1824	62 lbs.	FFTG-1824	43 lbs.	24”	18”	26”	20”	4”	-
FTG-1830	74 lbs.	FFTG-1830	47 lbs.	30”	18”	32”	20”	4”	-
FTG-1836	86 lbs.	FFTG-1836	54 lbs.	36”	18”	38”	20”	4”	-
FTG-1842	98 lbs.	FFTG-1842	61 lbs.	42”	18”	44”	20”	4”	-
FTG-1848	110 lbs.	FFTG-1848	69 lbs.	48”	18”	50”	20”	4”	-
FTG-1854	122 lbs.	FFTG-1854	76 lbs.	54”	18”	56”	20”	4”	-
FTG-1860	134 lbs.	FFTG-1860	83 lbs.	60”	18”	62”	20”	4”	-
FTG-1872	146 lbs.	FFTG-1872	90 lbs.	72”	18”	74”	20”	4”	-
FTG-1884	165 lbs.	FFTG-1884	111 lbs.	84”	18”	86”	20”	4”	-
FTG-1896*	187 lbs.	FFTG-1896	125 lbs.	96”	18”	98”	20”	4”	32”
FTG-18108*	208 lbs.	FFTG-18108	138 lbs.	108”	18”	110”	20”	4”	36”
FTG-18120*	229 lbs.	FFTG-18120	150 lbs.	120”	18”	122”	20”	4”	40”
FTG-2424	69 lbs.	FFTG-2424	52 lbs.	24”	24”	26”	26”	4”	-
FTG-2430	81 lbs.	FFTG-2430	59 lbs.	30”	24”	32”	26”	4”	-
FTG-2436	104 lbs.	FFTG-2436	68 lbs.	36”	24”	38”	26”	4”	-
FTG-2442	118 lbs.	FFTG-2442	75 lbs.	42”	24”	44”	26”	4”	-
FTG-2448	131 lbs.	FFTG-2448	83 lbs.	48”	24”	50”	26”	4”	-
FTG-2454	145 lbs.	FFTG-2454	95 lbs.	54”	24”	56”	26”	4”	-
FTG-2460	162 lbs.	FFTG-2460	102 lbs.	60”	24”	62”	26”	4”	-
FTG-2472	195 lbs.	FFTG-2472	119 lbs.	72”	24”	74”	26”	4”	-
FTG-2484	218 lbs.	FFTG-2484	137 lbs.	84”	24”	86”	26”	4”	-
FTG-2496*	243 lbs.	FFTG-2496	153 lbs.	96”	24”	98”	26”	4”	32”
FTG-24108*	274 lbs.	FFTG-24108	168 lbs.	108”	24”	110”	26”	4”	36”
FTG-24120*	310 lbs.	FFTG-24120	188 lbs.	120”	24”	122”	26”	4”	40”

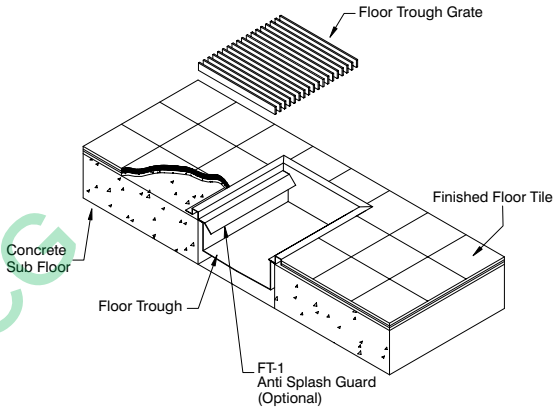

FLOOR DRAINS

Model #	Length	Width	A	B	C	Wt.
FDR-1212	12”	12”	14”	14”	4”	26 lbs.

FLOOR WATER RECEPTACLES

(2” Depth)

Model #	Length	Width	A	B	C	Wt.
FRG-24	24”	12”	26”	14”	2”	44 lbs.
FRG-36	36”	12”	38”	14”	2”	63 lbs.
FRG-48	48”	12”	50”	14”	2”	82 lbs.

CUSTOM SIZES AVAILABLE!

***Troughs 96” or larger in length made with two (2) drains.**

MSHCG

ADVANCE TABCO
SMART FABRICATION™

200 Heartland Boulevard, Edgewood, NY 11717-8380

REF-E

ADVANCE TABCO is constantly engaged in a program of improving our products. Therefore, we reserve the right to change specifications without prior notice.

© ADVANCE TABCO, JUNE 2016

ADVANCE TABCO®
SMART FABRICATION™

STAINLESS STEEL

POT RACKS

Item #: _____ Qty #: _____
Model #: _____
Project #: _____

CEILING MOUNTED

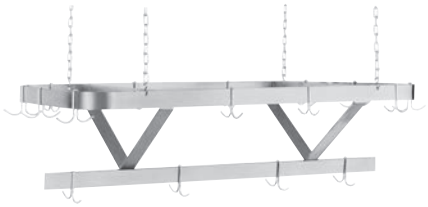

WALL MOUNTED

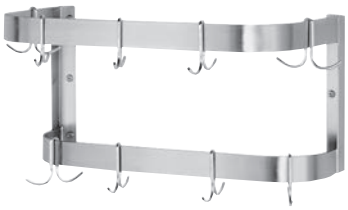

SHELF w/ POT RACK



Ceiling Mounted

L	S/S	POWDER COATED	# of Hooks	Wt
36”	SC-36	GC-36	12	42 lbs.
48”	SC-48	GC-48	12	48 lbs.
60”	SC-60	GC-60	18	54 lbs.
72”	SC-72	GC-72	18	60 lbs.
84”	SC-84	GC-84	18	66 lbs.
96”	SC-96	GC-96	18	80 lbs.
108”	SC-108	GC-108	18	86 lbs.
120”	SC-120	GC-120	18	92 lbs.
132”	SC-132	GC-132	18	98 lbs.
144”	SC-144	GC-144	18	104 lbs.

Wall Mounted

L	S/S	POWDER COATED	# of Hooks	Wt
24”	SW-24	GW-24	12	18 lbs.
36”	SW-36	GW-36	12	22 lbs.
48”	SW-48	GW-48	12	26 lbs.
60”	SW-60	GW-60	18	30 lbs.
72”	SW-72	GW-72	18	34 lbs.
84”	SW-84	GW-84	18	44 lbs.
96”	SW-96	GW-96	18	48 lbs.
108”	SW-108	GW-108	18	52 lbs.
120”	SW-120	GW-120	18	56 lbs.
132”	SW-132	GW-132	18	60 lbs.
144”	SW-144	GW-144	18	64 lbs.

Shelf with Pot Rack

L	12” Wide	Wt	15” Wide	Wt	18” Wide	Wt	# of Hooks
36”	PS-12-36	20 lbs.	PS-15-36	25 lbs.	PS-18-36	30 lbs.	6
48”	PS-12-48	30 lbs.	PS-15-48	35 lbs.	PS-18-48	40 lbs.	6
60”	PS-12-60	40 lbs.	PS-15-60	45 lbs.	PS-18-60	50 lbs.	9
72”	PS-12-72	50 lbs.	PS-15-72	55 lbs.	PS-18-72	60 lbs.	9
84”	PS-12-84	60 lbs.	PS-15-84	65 lbs.	PS-18-84	70 lbs.	9
96”	PS-12-96	70 lbs.	PS-15-96	75 lbs.	PS-18-96	80 lbs.	9
108”	PS-12-108	80 lbs.	PS-15-108	85 lbs.	PS-18-108	90 lbs.	9
120”	PS-12-120	90 lbs.	PS-15-120	95 lbs.	PS-18-120	100 lbs.	9
132”	PS-12-132	100 lbs.	PS-15-132	105 lbs.	PS-18-132	110 lbs.	9
144”	PS-12-144	110 lbs.	PS-15-144	115 lbs.	PS-18-144	120 lbs.	9

Units 8 ft. and larger are furnished with three (3) sets of supports brackets.

FEATURES: (Ceiling Mounted)

Ceiling suspension with chain hangers. Optional stainless steel Flat Bar in lieu of Chain available. Use **TA-98**.

MATERIAL:

Flat steel bar is 2” x 1/4”, either stainless steel or powder coated (as specified).

Pot hooks are plated.

24” long chain hangers are plated.

CONSTRUCTION:

All welded stainless steel units are blended to a satin finish.

All powder coated units are coated with FDA approved material.

FEATURES: (Wall Mounted)

Secured to wall by means of bolts through welded brackets. (Hardware not provided)

MATERIAL:

Flat steel bar is 2” x 1/4”, either stainless steel or powder coated (as specified).

Pot hooks are plated.

CONSTRUCTION:

All welded stainless steel units are blended to a satin finish.

All powder coated units are coated with FDA approved material.

FEATURES: (Shelf/Pot Rack)

A dual purpose unit for shelf and utensil storage.

Secured to wall by means of bolts through welded brackets. (Hardware not provided)

MATERIAL:

Flat stainless steel bar is 2” x 1/4”.
Pot hooks are plated.
Type “430” stainless steel shelf.

CONSTRUCTION:

All welded stainless steel units are blended to a satin finish.

NSHG

DETAILS and SPECIFICATIONS

TOL ± .500”

ALL DIMENSIONS ARE TYPICAL

Ceiling Mounted

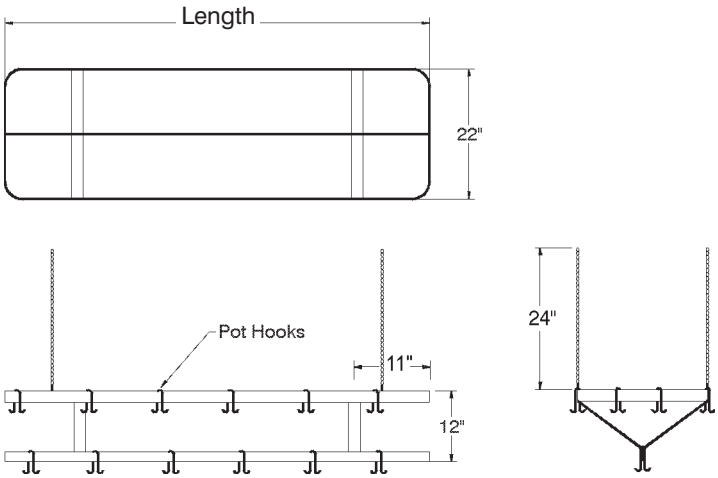

Wall Mounted

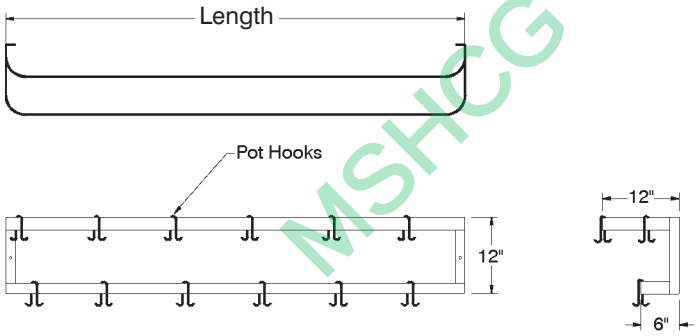

MSHCG

Shelf with Pot Rack

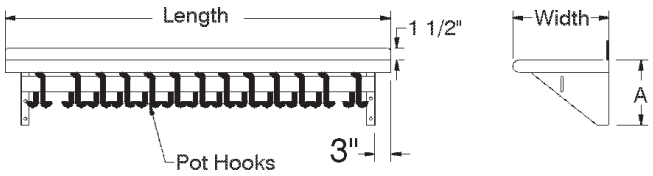

Width	A
12”	10 1/2”
15”	13 1/2”
18”	16 1/2”

ADVANCE TABCO

SMART FABRICATION™

ADVANCE TABCO is constantly engaged in a program of improving our products. Therefore, we reserve the right to change specifications without prior notice.

REF-L 200 Heartland Boulevard, Edgewood, NY 11717-8380

© ADVANCE TABCO, MAY 2016

atmosphere is everything
14716 S. Broadway • Gardena, CA 90248 • USA
TEL:(310) 532-1555 • (800) 421-1266 • FAX:(310) 324-3030
Web Site: www.marsair.com • E-mail:info@marsair.com

PROJECT		OPTIONS/ITEMS
TITLE		
COMMENTS	DATE 9/17/15	PAGE
	REV. NO	
MODEL NO. EP2 Series	DRAWING NO EP2U-F	DRAWN BY TVN / CHECKED BY / FILE NAME

Unheated Drawing

EP2
(Extra Power 2) Series

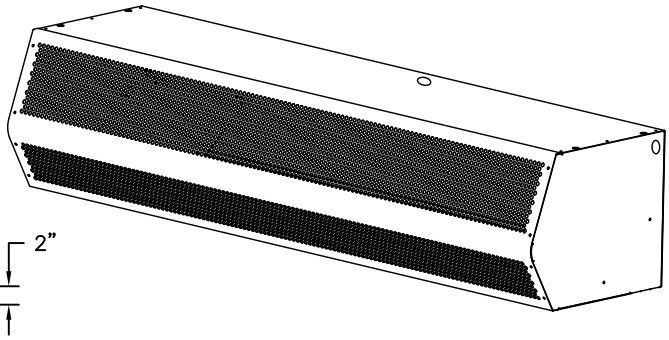

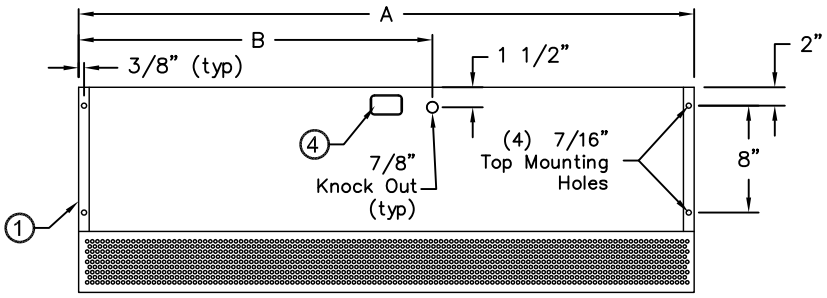

TOP VIEW



FRONT VIEW

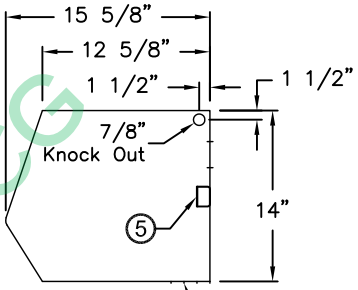

SIDE VIEW

3" Nozzle Depth (6)

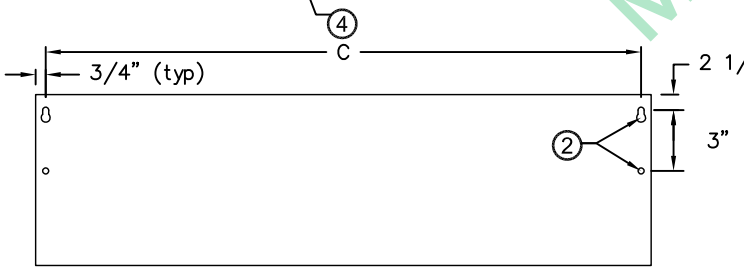

REAR VIEW

(8) Recommended Accessories



Control Panels (7)



Door Limit Switches



Brackets

*- Use corresponding letters in "Electrical Data" columns to complete the model numbers.

MODEL NUMBER	OVERALL LENGTH A (in)	KNOCKOUT LOCATION B (in)	REAR MOUNTING CENTER C (in)
EP296-2U*-TS	96	52	94 1/2
EP2108-2U*-TS	108	58	106 1/2
EP2120-2U*-TS	120	64	118 1/2
EP2120-3U*-TS	120	64	118 1/2
EP2144-3U*-TS	144	76	142 1/2

Notes:

1. This product is designed to meet the National Electric Code (NEC), ETL Safety Listed for the US and Canada.
2. (2) 1/2" key hole slots and (2) 7/16" mounting holes provided on for wall mounting and (4) 7/16" mounting holes for overhead mounting provided, (2) on each end.
3. All units have a self contained one piece cabinet, fire retardant and corrosion proof paint lock metal double protected with baked on Titanium Silver color, rust preventative electrostatic polyurethane powder coating.
4. Cabinet has sufficient strength for fastening to wall on both ends without intermediate support.
5. Internal J-Box(es) for electrical wiring: one motor-(1) 2"x 4"; two motors-(1) 4"x 4"; three motors-(2) 4"x 4".
6. Unit is to be installed such that air flow is unobstructed. Air discharge nozzle containing adjustable air directional vanes with 40° sweep front to back.
7. Circuit protection as per NEC by others.
8. Optional motor control panel, door limit switch and mounting brackets are field installed and/or wired by others. The door limit switch is to be mounted such that the air curtain turns on as door begins to open. To prevent unit damage, the mounting brackets must be installed such that the bottom of the air curtain is not below the door header.

MSHCG

EP2 (Extra Power 2) Series

Unheated

Model Lengths 96” – 144”

atmosphere is everything

14716 S. BROADWAY, GARDENA, CA 90248 ● Ph: (310)532-1555 Fax: (310)-532-3030 ● www.marsair.com
© Copyright Mars Air Systems, LLC 2014

Unheated Data Sheet

Applications: Environmental Separation (up to 16’) and Insect Control (up to 14’)

EP2 (Extra Power) Series 2	Mechanical Data						Lab Data	
Model Number	Nozzle Length (in)	Length (in)	Depth (in)	Height (in)	Motor (hp)	Weight (lbs)	Max Velocity (fpm)	Max Volume (cfm)
EP296-2U*-TS	96	96	16.0	14	Two 3	280	4800	9600
EP2108-2U*-TS	108	108	16.0	14	Two 3	295	4200	9600
EP2120-2U*-TS	120	120	16.0	14	Two 3	305	3840	9600
EP2120-3U*-TS	120	120	16.0	14	Three 3	390	5760	14400
EP2144-3U*-TS	144	144	16.0	14	Three 3	420	4800	14400

* - Use corresponding letters in "Electrical Data" columns to complete the model numbers

Note: Data above for 3450 RPM at 60 Hz, 50 Hz is 2850 RPM with a 17% reduction in the performance data.

Features:

- 3 HP Continuous Duty TEAO Motors
- Sleek self-contained one piece heavy gauge corrosion proof paint lock metal design
- ETL Certified to conform to UL 507 (US) and CSA 22.2 (Canada) Standards
- (4) 7/16” top and wall mounting holes provided, (2) on each end
- Cabinet has sufficient strength for fastening to wall on both ends without intermediate support
- Adjustable air directional vanes with 40° sweep front to back
- Standard color is Titanium Silver
- Rust preventative electrostatic polyurethane powder coating
- 5 year parts warranty
- Freight Included (FOB Continental USA)
- Proudly Made in the USA

Electrical Data (FLA)	Unit Voltage (Voltage Code)		
	208/230v (G)	460v (H)	575v (I)
EP296-2U*-TS	16.6/15.2	7.6	6.0
EP2108-2U*-TS	16.6/15.2	7.6	6.0
EP2120-2U*-TS	16.6/15.2	7.6	6.0
EP2120-3U*-TS	24.9/22.8	11.4	9.0
EP2144-3U*-TS	24.9/22.8	11.4	9.0

* - Use corresponding letters in "Electrical Data" columns to complete the model numbers.

Note: For Ampacity Multiply FLA X 1.25

MSHCG

Options and Accessories: (see Accessories Brochure)

- Motor Control Panels
- Wall and Overhead Bracket
- Washdown units and accessories (NEMA 4 & 4x)
- Explosion Resistant units and accessories (Class I, Div. I, Group D)
- Custom colors and finishes (304SS, 316SS)

EXAMPLE

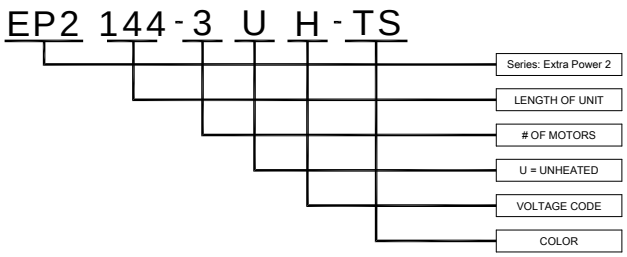

Sound Levels: (measured at 10’ in an open field)

1 Motor Unit = 76 dBA, 2 Motor Unit = 79 dBA, 3 Motor Unit = 81 dBA

Intertek

NOTE: MARS AIR SYSTEMS, LLC reserves the right to change specifications and product design without notice. Such revisions do not entitle the buyer to corresponding changes, improvements, additions or replacements for previously purchased equipment.

MARS AIR SYSTEMS, LLC ● GARDENA, CA ● USA

ADVANCE TABCO®
SMART FABRICATION™

STAINLESS STEEL

DISHTABLES
DISHLANDING SOIL

NEW *Tile Edge Design* NSF

Item #: _____ Qty #: _____
Model #: _____
Project #: _____



SPEC-LINE
DTS-D60-72L Shown

10-1/2" EXTRA LARGE Bold Looking Backsplash with 2" return and tile edge



Spec-Line: 14 ga. 304 Series Stainless Steel Top.
16 ga. 304 Stainless Steel Legs Stainless Steel Legs with Welded Cross Bracing & Stainless Steel Bullet Feet.

UPGRADED!
Standard: 16 ga. 304 Series Stainless Steel Top.
16 ga. 304 Stainless Steel Legs Stainless Steel Legs with Welded Cross Bracing & Stainless Steel Bullet Feet.

Super Saver: 16 ga. 304 Series Stainless Steel Top.
Galvanized Legs with Plastic Bullet Feet.

FEATURES:

Tile edge for ease of installation.
STANDARD & SUPERSAVER SOIL section features 5" deep sink bowl.
SPEC-LINE SOIL section features 8" deep sink bowl.
Dishtable system consists of SOIL and CLEAN sections.
Table is furnished with 10-1/2" splash with a 2" return.

CONSTRUCTION:

All TIG welded.
Welded areas blended to match adjacent surfaces and to a satin finish.
Stainless Steel Gussets welded to a stainless steel support channel.

MECHANICAL:

Faucet holes in SPLASH punched on 8" centers, faucet not included.
Waste drain is 1 1/2" IPS basket type and is included.

ACCESSORIES	Model #	Qty
Faucet		
Wall Shelf		
Undershelf		

MSHCO

Nominal sizing on all dishtables for ease of installation.

		14 Gauge 304 16 Ga. Stainless Steel Legs	16 Gauge 304 Stainless Steel Legs	16 Gauge 304 Galvanized Legs	
Nominal Size	**"L"**	**SPEC-LINE**	**STANDARD**	**SUPER SAVER**	**Approx. Wt.**
4 Ft.	47"	**DTS-D30-48L or R**	**DTS-D70-48L or R**	**DTS-D60-48L or R**	180 lbs.
5 Ft.	59"	**DTS-D30-60L or R**	**DTS-D70-60L or R**	**DTS-D60-60L or R**	205 lbs.
6 Ft.	71"	**DTS-D30-72L or R**	**DTS-D70-72L or R**	**DTS-D60-72L or R**	230 lbs.
7 Ft.	83"	**DTS-D30-84L or R**	**DTS-D70-84L or R**	**DTS-D60-84L or R**	240 lbs.
8 Ft.	95"	**DTS-D30-96L or R**	**DTS-D70-96L or R**	**DTS-D60-96L or R**	255 lbs.
9 Ft.	107"	**DTS-D30-108L or R**	**DTS-D70-108L or R**	**DTS-D60-108L or R**	320 lbs.
10 Ft.	119"	**DTS-D30-120L or R**	**DTS-D70-120L or R**	**DTS-D60-120L or R**	380 lbs.
12 Ft.	143"	**DTS-D30-144L or R**	**DTS-D70-144L or R**	**DTS-D60-144L or R**	390 lbs.

ADVANCE TABCO®
SMART FABRICATION™
www.advancetabco.com

Customer Service Available To Assist You 1-800-645-3166 8:30 am - 8:00 pm E.S.T.

For Orders & Customer Service:
Email: customer@advancetabco.com or **Fax:** 631-242-6900

For Smart Fabrication™ Quotes:
Email: smartfab@advancetabco.com or **Fax:** 631-586-2933

REF-P

DIMENSIONS and SPECIFICATIONS

TOL ± .500”

ALL DIMENSIONS ARE TYPICAL

SEE DISH MACHINE COMPATIBILITY CHART TO ENSURE PROPER FIT

Dish Machine Compatibility Chart can be found on our website at www.advancetabco.com under “Product Support”

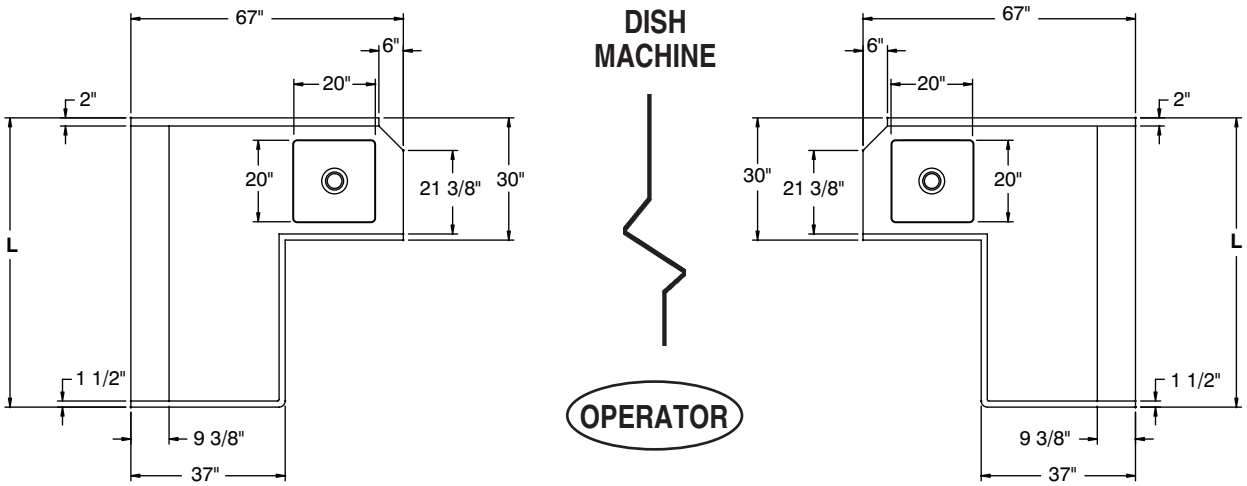

DISHLANDING SOIL LEFT

DISHLANDING SOIL RIGHT

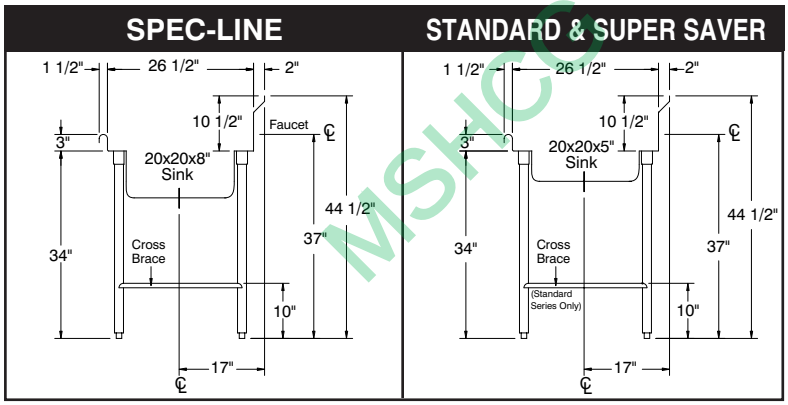

MSHCS

CUSTOMIZE YOUR OWN SYSTEM
by Ordering Optional Accessories from our
PRODUCT & PRICE GUIDE

Splash Detail

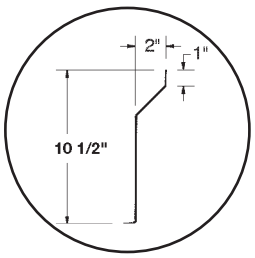

Description	SPEC-LINE	STANDARD	SUPER SAVER
Material	**14 Ga. 304 Series**	**16 Ga. 304 Series**	**16 Ga. 304 Series**
1 5/8” Dia. Legs	Stainless Steel	Stainless Steel	galvanized
Gussets	Stainless Steel	Stainless Steel	Stainless steel
Bullet Feet (1” adj.)	Stainless Steel	Stainless Steel	Plastic
Cross Bracing	Welded	Welded	Optional
Prerinse Bowl Depth	8”	5”	5”
Prerinse Basket	Included	Optional	Optional

ADVANCE TABCO
SMART FABRICATION™

ADVANCE TABCO is constantly engaged in a program of improving our products. Therefore, we reserve the right to change specifications without prior notice.

REF-P 200 Heartland Boulevard, Edgewood, NY 11717-8380

© ADVANCE TABCO, OCTOBER 2018

ADVANCE TABCO
SMART FABRICATION™

DISHTABLE RACK SHELVES

NSF

Mounts to backsplash and end roll of dishtable

Item #: _____ Qty #: _____
Model #: _____
Project #: _____

DTA-79

TABLE MOUNTED TUBULAR, DOUBLE SIDED DESIGN



Recommended for **D, G and U-Shaped** Series Dishtables Only.



OPTION 1: Lower Angle
(Racks cannot be back to back)

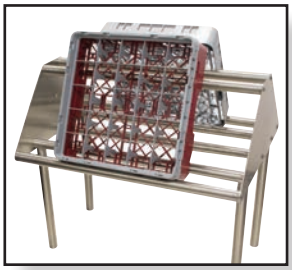

OPTION 2: Higher Angle
For back to back storage
(For maximum rack storage)

FEATURES:
A dual purpose double sided open tubular design table mounted rack shelf with solid end plates

CONSTRUCTION:
Stainless steel posts, cross-tubes & end plates
Mounts to dishtable with stainless steel bolts. Ships Knocked Down*
Easily assembles with simple tool

MATERIAL:
End Plates are 14 gauge type 304 series stainless steel
Tubing is 1 5/8" diameter 18 gauge type 300 stainless steel tubing

CENTER SUPPORT PROVIDED FOR 9' AND LONGER SHELVES
Center support can be positioned to accommodate rack size

*Shelf ships separately from table to reduce freight costs and chance of shipping damage. Entire unit may ship pre-assembled from factory where special applications exist. Consult factory.

Per Linear Foot. Minimum Length 48"

When using DTA-79 as a pass-thru for a glass rack, use **OPTION 2** (see above).
This will allow the rack to pass through the middle (10" Clearance).



MODEL #	Qty.
DTA-79	

MSHCG

DTA-79S

TABLE MOUNTED, DOUBLE SIDED DESIGN WITH SOLID BASE

FEATURES:
Table mounted rack shelf with solid base & end plates.
Drip tubes for water drainage

CONSTRUCTION:
Stainless steel posts, cross-tube (at top along length) & end plates
Mounts to dishtable with stainless steel bolts. Ships Knocked Down*
Easily assembles with simple tool

MATERIAL:
End Plates and shelf base are 14 gauge type 304 series stainless steel
Tubing is 1 5/8" diameter 18 gauge type 300 stainless steel tubing

CENTER SUPPORT PROVIDED FOR 9' AND LONGER SHELVES
Center support bolts to shelf surface at midpoint

*Shelf ships separately from table to reduce freight costs and chance of shipping damage. Entire unit may ship pre-assembled from factory where special applications exist. Consult factory.

Per Linear Foot. Minimum Length 48"



MODEL #	Qty.
DTA-79S	

ADVANCE TABCO
SMART FABRICATION™
www.advancetabco.com

Customer Service Available To Assist You 1-800-645-3166 8:30 am - 8:00 pm E.S.T.
Email Orders To: customer@advancetabco.com. For Smart Fabrication™ Quotes, Email To: smartfab@advancetabco.com or Fax To: 631-586-2933

NEW YORK Fax: (631) 242-6900
GEORGIA Fax: (770) 775-5625
TEXAS Fax: (972) 932-4795
NEVADA Fax: (775) 972-1578

REF-Q 200 Heartland Boulevard, Edgewood, NY 11717-8380 REF-Q

DIMENSIONS and SPECIFICATIONS

TOL ± .125”

ALL DIMENSIONS ARE TYPICAL

DTA-79

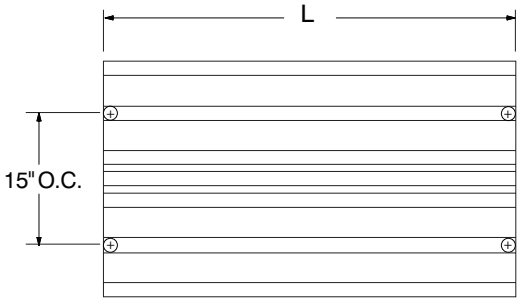

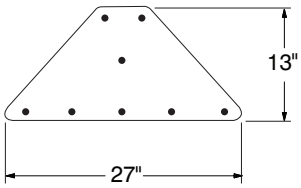

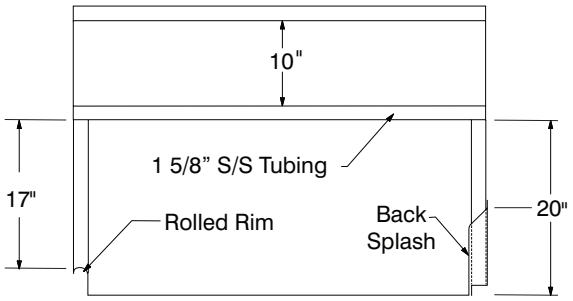

DTA-79S

MSHCG

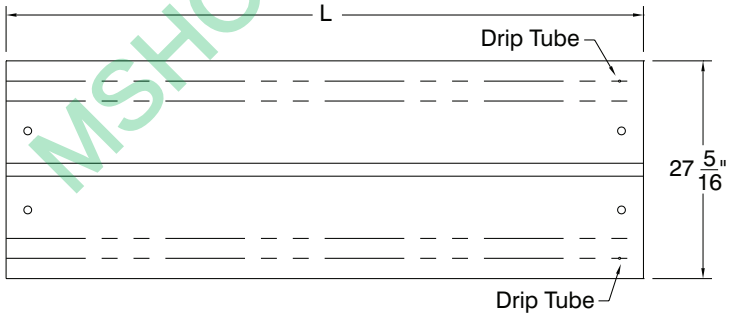

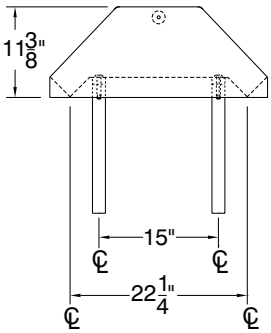

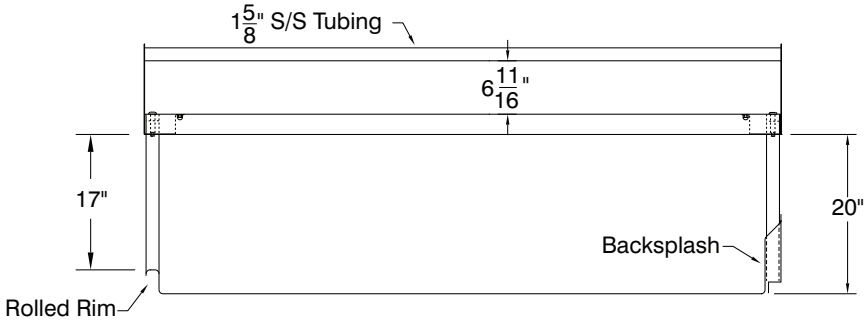

ADVANCE TABCO
SMART FABRICATION

ADVANCE TABCO is constantly engaged in a program of improving our products. Therefore, we reserve the right to change specifications without prior notice.

© ADVANCE TABCO, OCTOBER 2018

Champion®
The Dishwashing Machine Specialists

Project _____
Item No. _____
Quantity _____

VERSA-CLEAN DOOR-TYPE

STANDARD FEATURES

- **ENERGY STAR® Qualified**
- **NEW Exclusive** Built-in booster configured for both 40° and 70° Rise
- **NEW Exclusive** Field convertible to single or three phase, 208 or 240 volt, corner or straight through operation
- Rinse Sentry – ensures 180°F final rinse
- Auto start – starts unit when doors are closed
- High temperature
- Single point connection
- High efficiency 1 HP pump
- 55 racks per hour
- Self draining pump
- Automatic tank fill
- Detergent/chemical connections
- Interchangeable upper and lower arm
- Top mounted splash proof controls
- Automatic drain valve

VERSA-CLEAN

DH2000 High Temperature
Door-type
Dishwashing Machine



VERSA-CLEAN

MSHCG

OPTIONS & ACCESSORIES

- ☐ Drain Tempering Kit
- ☐ Side Panels

SPECIFIER STATEMENT

Specified unit will be Champion model Versa-Clean, DH2000 high temperature door-type dishwashing machine.

Features top mounted splash proof controls, Rinse Sentry, Auto start, interchangeable stainless steel wash and rinse arms, 55 racks/hr., .90 US gals/rack.

1 year parts and labor warranty.

Champion Industries, Inc.
P. O. Box 4149, Winston-Salem, NC 27115
Tel: 336/661-1556 Fax: 336/661-1979
www.championindustries.com

(1M) 8/09 Printed in U.S.A.

VERSA-CLEAN DOOR-TYPE

VERSA-CLEAN

DH2000 High Temperature
Door-type
Dishwashing Machine

Champion®
The Dishwashing Machine Specialists

Shipping weight crated: 300 lbs.

Dimensions shown in inches

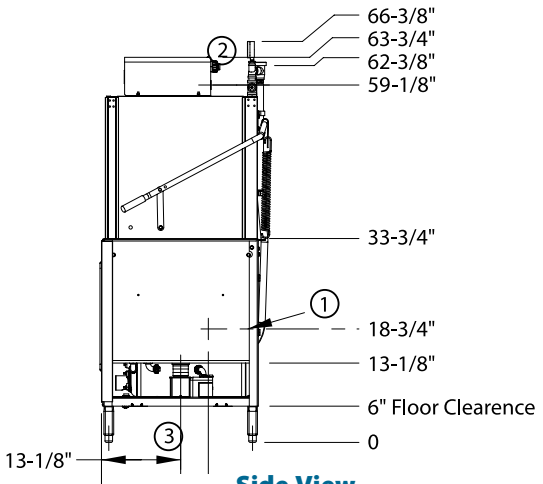

Side View

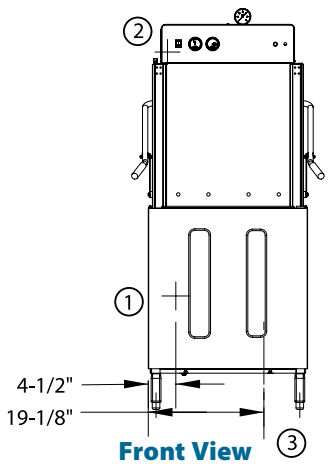

Front View

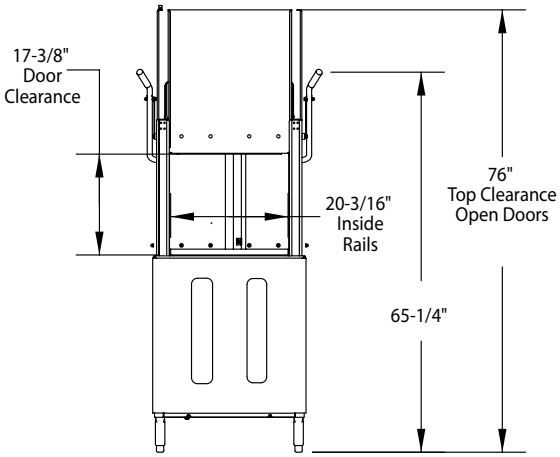

Door Clearance

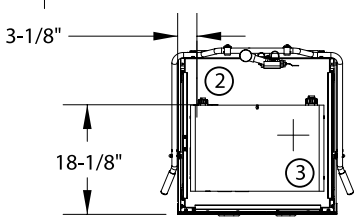

Straight Through Operation

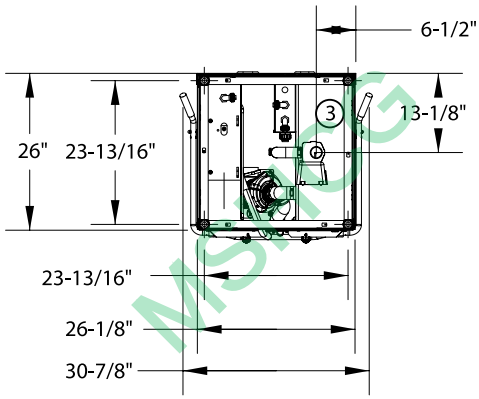

Plan View

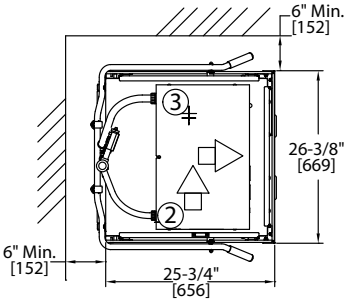

Corner Configuration

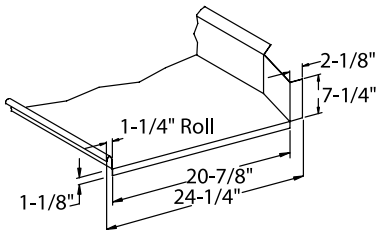

Typical Table Construction

Plumbing Note: Because of variation in house-supplied water pressure, pressure regulating valves (PRV's) for incoming water may be needed. The PRV's can be purchased from Champion or obtained locally.

Utilities

1	**Water** 3/4" NPT
2	**Electrical** **A.** 208-240/60/1 **B.** 208-240/60/3
3	**Drain** **A.** 2" fit hose

Electric 40°/70° Rise Booster

Voltage	Rated Amps	Minimum Supply Ckt. Conductor Ampacity	Maximum Overcurrent Protective Device
208/60/1	65	80	80
240/60/1	75	80	80
208/60/3	40	50	50
240/60/3	45	50	50

Warning: Plumbing, electrical connections should be made by qualified personnel who will observe all the applicable plumbing, sanitary and safety codes and the National Electrical Code.

SPECIFICATIONS

Capacities	
Racks per hr. (NSF rated)	55
Wash tank (gal.)	9.5
Motor horsepower	1 HP
Water consumption	
Gal. per hr. (max. use)	49.5
Gal. per rack	.90
Temperature °F	
Wash	150
Rinse	180
Heating	
Tank heat, electric	5.2 kW
Electric Booster	7.5 kW
Time cycle in seconds	
Wash	40
Dwell	1
Rinse	12
Sanitary Dwell	7
Total cycle	60

'USGBC' and related logo is a trademark owned by the U.S. Green Building Council and is used by permission.

Due to an ongoing value analysis program at Champion, specifications contained in this catalog are subject to change without notice.

Champion Industries, Inc., P. O. Box 4149, Winston-Salem, NC 27115 • 336/661-1556 • Fax: 336/661-1979 • www.championindustries.com

ADVANCE TABCO®
SMART FABRICATION™

STAINLESS STEEL

DISHTABLES
ISLAND CLEAN

NEW *Tile Edge Design* NSF

Item #: _____ *Qty #:* _____
Model #: _____
Project #: _____



SPEC-LINE
DTC-G70-60R Shown

Spec-Line: 14 ga. 304 Series Stainless Steel Top.
16 ga. 304 Stainless Steel Legs Stainless Steel Legs with Welded Cross Bracing & Stainless Steel Bullet Feet.

UPGRADED!
Standard: 16 ga. 304 Series Stainless Steel Top.
16 ga. 304 Stainless Steel Legs Stainless Steel Legs with Welded Cross Bracing & Stainless Steel Bullet Feet.

Super Saver: 16 ga. 304 Series Stainless Steel Top.
Galvanized Legs with Plastic Bullet Feet.

Optional Stainless Steel UNDERSHELF
Die Cast LEG CLAMP
secured to shelf eliminates unsightly nuts & bolts



10-1/2" EXTRA LARGE Bold Looking Backsplash with 2" return and tile edge

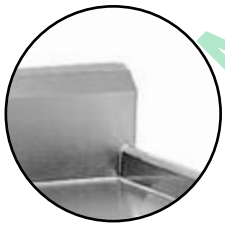

FEATURES:

Tile edge for ease of installation.

Dishtable system consists of SOIL and CLEAN sections.

Table is furnished with 10-1/2" splash with a 2" return.

CONSTRUCTION:

All TIG welded.

Welded areas blended to match adjacent surfaces and to a satin finish.

Stainless Steel Gussets welded to a stainless steel support channel.

MSRP

ACCESSORIES	Model #	Qty
Undershelf		
Wall Shelf		

		14 Gauge 304 16 Ga. Stainless Steel Legs	16 Gauge 304 Stainless Steel Legs	16 Gauge 304 Galvanized Legs	
Nominal Size	"L"	SPEC-LINE	STANDARD	SUPER SAVER	Approx. Wt.
4 Ft.	47"	DTC-G30-48L or R	DTC-G70-48L or R	DTC-G60-48L or R	145 lbs.
5 Ft.	59"	DTC-G30-60L or R	DTC-G70-60L or R	DTC-G60-60L or R	165 lbs.
6 Ft.	71"	DTC-G30-72L or R	DTC-G70-72L or R	DTC-G60-72L or R	190 lbs.
7 Ft.	83"	DTC-G30-84L or R	DTC-G70-84L or R	DTC-G60-84L or R	205 lbs.
8 Ft.	95"	DTC-G30-96L or R	DTC-G70-96L or R	DTC-G60-96L or R	215 lbs.
9 Ft.	107"	DTC-G30-108L or R	DTC-G70-108L or R	DTC-G60-108L or R	310 lbs.
10 Ft.	119"	DTC-G30-120L or R	DTC-G70-120L or R	DTC-G60-120L or R	340 lbs.
12 Ft.	143"	DTC-G30-144L or R	DTC-G70-144L or R	DTC-G60-144L or R	360 lbs.

Nominal sizing on all dishtables for ease of installation.

ADVANCE TABCO®
SMART FABRICATION™
www.advancetabco.com

Customer Service Available To Assist You 1-800-645-3166 8:30 am - 8:00 pm E.S.T.
Email Orders To: customer@advancetabco.com. For Smart Fabrication™ Quotes, Email To: smartfab@advancetabco.com or Fax To: 631-586-2933

NEW YORK Fax: (631) 242-6900
GEORGIA Fax: (770) 775-5625
TEXAS Fax: (972) 932-4795
NEVADA Fax: (775) 972-1578

DIMENSIONS and SPECIFICATIONS

TOL ± .500”

ALL DIMENSIONS ARE TYPICAL

SEE DISH MACHINE COMPATIBILITY CHART TO ENSURE PROPER FIT

Dish Machine Compatibility Chart can be found on our website at www.advancetabco.com under “Product Support”

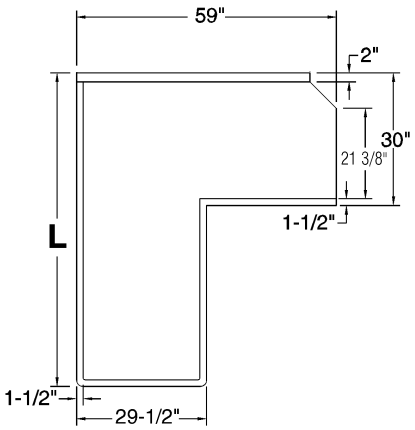

ISLAND CLEAN LEFT

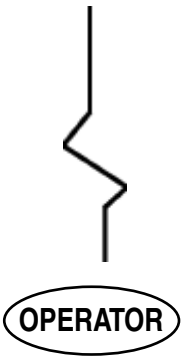

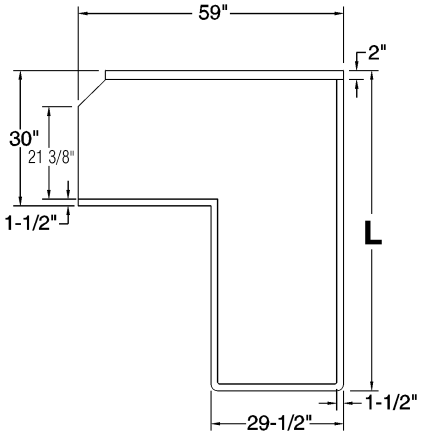

ISLAND CLEAN RIGHT

SPEC-LINE & STANDARD	SUPER SAVER
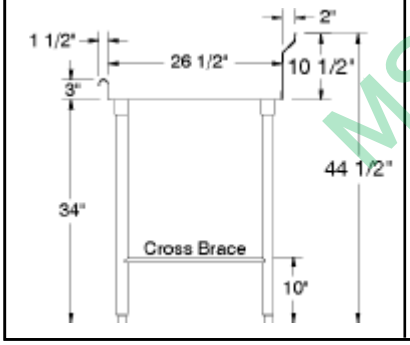	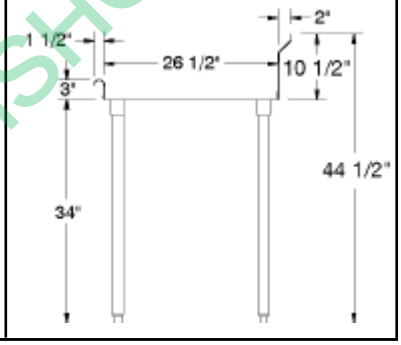

MSHCG

CUSTOMIZE YOUR OWN SYSTEM
by Ordering Optional Accessories from our
PRODUCT & PRICE GUIDE

Splash Detail

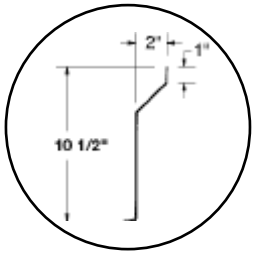

Description	SPEC-LINE	STANDARD	SUPER SAVER
Material	**14 Ga. 304 Series**	**16 Ga. 304 Series**	**16 Ga. 304 Series**
1 5/8” Dia. Legs	Stainless Steel	Stainless Steel	Galvanized
Gussets	Stainless Steel	Stainless Steel	Stainless Steel
Bullet Feet (1” adj.)	Stainless Steel	Stainless Steel	Plastic
Cross Bracing	Welded	Welded	Optional

ADVANCE TABCO
SMART FABRICATION™

ADVANCE TABCO is constantly engaged in a program of improving our products. Therefore, we reserve the right to change specifications without prior notice.

200 Heartland Boulevard, Edgewood, NY 11717-8380

© ADVANCE TABCO, DECEMBER 2009

ADVANCE TABCO
SMART FABRICATION™

STAINLESS STEEL

FABRICATED ECONOMY SINKS

Three & Four Compartments

NSF



Rolled Rim Edge For Additional Strength

Item #: _____ Qty #: _____

Model #: _____

Project #: _____

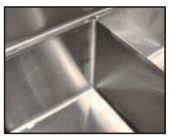

Fabricated Bowls are Welded Together at the Seams

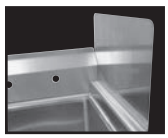

K-700
Removable
Side Splashes
Fits Left OR Right Side

FEATURES:

Backsplash has tile edge for ease of installation.

Sink bowls are 3/4" coved corner and meet NSF requirements.

Rolled Rim Edge for additional strength.

Sink Bowls are 14" deep for greater capacity.

CONSTRUCTION:

All TIG welded.

Welded areas blended to match adjacent surfaces and to a satin finish.

Gussets welded to a die-formed reinforced plate.

MATERIAL:

1 5/8" diameter stainless steel legs with 1" adjustable stainless steel bullet feet.

Entire unit is 16 gauge 304 stainless steel.

Gussets - stainless steel.

MECHANICAL:

- Supply is 1/2" IPS hot & cold.
- Faucet holes on 8" centers.
- Faucets are not included **(see accessories)**.
- Waste drains are 1 1/2" IPS S/S basket type, located in center of sink bowl, and are included.

	MODEL #	Length L	Width W	Bowl Size A & B	Drbd. Length C	# of Drbds.	Drbd. Location	Wt.
3 COMPARTMENT	FC-3-1515	50"	20 1/2"	15" x 15"	N/A	0	None	110 lbs.
	FC-3-1515-15RorL	62 1/2"	20 1/2"		15"	1	Specify	120 lbs.
	FC-3-1515-15RL	75"	20 1/2"		15"	2	R & L	120 lbs.
	FC-3-1620	53"	26"	16" x 20"	N/A	0	None	120 lbs.
	FC-3-1620-18RorL	68 1/2"	26"		18"	1	Specify	135 lbs.
	FC-3-1620-18RL	84"	26"		18"	2	R & L	150 lbs.
	FC-3-1620-24RL	96"	26"		24"	2	R & L	205 lbs.
	FC-3-1620-36RL	120"	26"		36"	2	R & L	240 lbs.
	FC-3-1818	59"	24"	18" x 18"	N/A	0	None	120 lbs.
	FC-3-1818-18RorL	74 1/2"	24"		18"	1	Specify	128 lbs.
	FC-3-1818-24RorL	80 1/2"	24"		24"	1	Specify	136 lbs.
	FC-3-1818-18RL	90"	24"		18"	2	R & L	140 lbs.
	FC-3-1818-24RL	102"	24"		24"	2	R & L	150 lbs.
	FC-3-1824	59"	30"	18" x 24"	N/A	0	None	135 lbs.
	FC-3-1824-18RorL	74 1/2"	30"		18"	1	Specify	142 lbs.
	FC-3-1824-24RorL	80 1/2"	30"		24"	1	Specify	150 lbs.
	FC-3-1824-18RL	90"	30"		18"	2	R & L	265 lbs.
	FC-3-1824-24RL	102"	30"		24"	2	R & L	300 lbs.
	FC-3-2028-24RL	108"	34"	20" x 28"	24"	2	R & L	315 lbs.
	FC-3-2030-20RL	100"	36"	20" x 30"	20"	2	R & L	315 lbs.
	FC-3-2030-30RL	120"	36"		30"	2	R & L	370 lbs.
	† FC-3-2424	77"	30"	24" x 24"	N/A	0	None	175.lbs.
	† FC-3-2424-18RorL	92.5	30"		18"	1	Specify	310 lbs.
	† FC-3-2424-18RL	108"	30"		18"	2	R&L	330 lbs.
	† FC-3-2424-24RorL	98 1/2"	30"		24"	1	Specify	330 lbs.
	† FC-3-2424-24RL	120"	30"		24"	2	R & L	350 lbs.
	† FC-3-2430	77"	36"	24" x 30"	N/A	0	None	200 lbs.
	† FC-3-2430-24RorL	99"	36"		24"	1	Specify	375 lbs.
	† FC-3-2430-24RL	120"	36"		24"	2	R & L	400 lbs.
	† FC-3-2430-30RorL	105"	36"		30"	1	Specify	425 lbs.
	† FC-3-2430-30RL	132"	36"		30"	2	R & L	445 lbs.
	† FC-3-2430-36RorL	111"	36"		36"	1	Specify	450 lbs.
	† FC-3-2430-36RL	144"	36"		36"	2	R & L	490 lbs.
	† FC-3-3024	95"	30"	30" x 24"	N/A	0	None	200 lbs.
	† FC-3-3024-24RorL	117"	30"		24"	1	Specify	375 lbs.
	† FC-3-3024-24RL	138"	30"		24"	2	R & L	400 lbs.
	† FC-3-3024-30RorL	123"	30"		30"	1	Specify	425 lbs.
	† FC-3-3024-30RL	150"	30"		30"	2	R & L	445 lbs.
	† FC-3-3024-36RorL	129"	30"		36"	1	Specify	450 lbs.
	† FC-3-3024-36RL	162"	30"		36"	2	R & L	490 lbs.
	† FC-3-3030	95"	36"	30" x 30"	N/A	0	None	240 lbs.
	† FC-3-3030-24RL	138"	36"		24"	2	R & L	470 lbs.
	† FC-3-3030-30RL	150"	36"		30"	2	R & L	515 lbs.
	† FC-3-3030-36RL	162"	36"		36"	2	R & L	560 lbs.
4 COMP.	† FC-4-1818-18RL	108"	24"	18" x 18"	18"	2	R & L	270 lbs.
	† FC-4-1824-18RL	108"	30"	18" x 24"	18"	2	R & L	325 lbs.
	† FC-4-2424-24RL	144"	30"	24" x 24"	24"	2	R & L	355 lbs.

† Requires Two Sets of Faucets

YSHCG

ADVANCE TABCO
SMART FABRICATION™
www.advancetabco.com

Customer Service Available To Assist You 1-800-645-3166 8:30 am - 8:00 pm E.S.T.

For Orders & Customer Service:
Email: customer@advancetabco.com or **Fax:** 631-242-6900

For Smart Fabrication™ Quotes:
Email: smartfab@advancetabco.com or **Fax:** 631-586-2933

REF-E

DIMENSIONS and SPECIFICATIONS

TOL Overall: ± .500”
Interior: ± .250”

ALL DIMENSIONS ARE TYPICAL

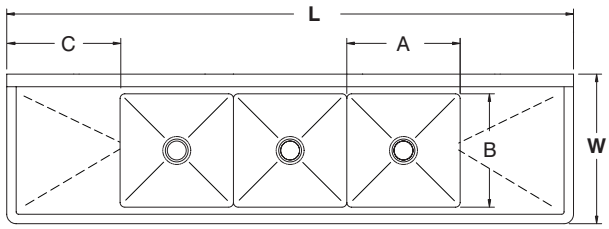

3 COMP - 2 DRBD

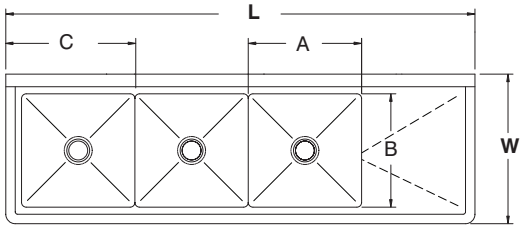

3 COMP - 1 DRBD

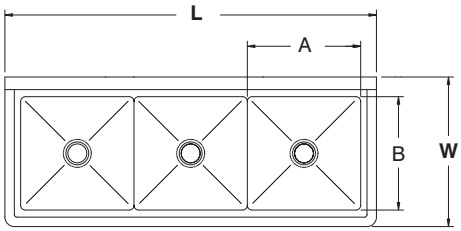

3 COMP

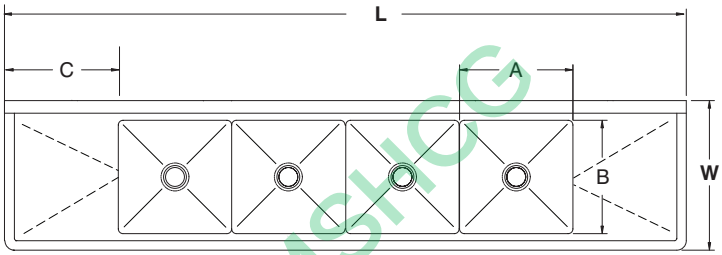

4 COMP - 2 DRBD

MSHCG

ACCESSORIES	Model #	Qty
DRAINS		
FAUCETS		

PLUMBING ROUGH-IN

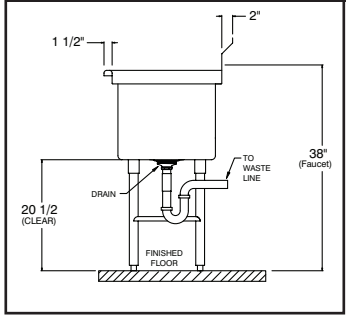

SECTION

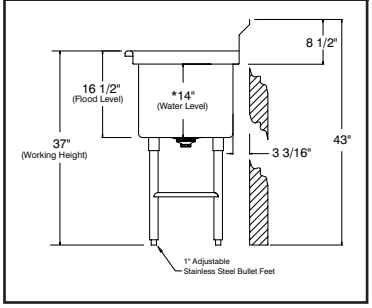

ADVANCE TABCO
SMART FABRICATION™

ADVANCE TABCO is constantly engaged in a program of improving our products. Therefore, we reserve the right to change specifications without prior notice.

200 Heartland Boulevard, Edgewood, NY 11717-8380
© ADVANCE TABCO, OCTOBER 2018

4" DECK MOUNT FAUCET W/ LEVER HANDLES

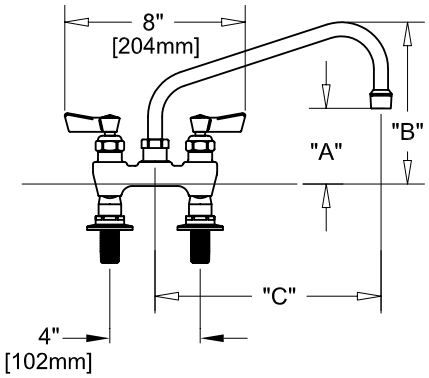

4" DECK MOUNT FAUCET W/ WRIST HANDLES

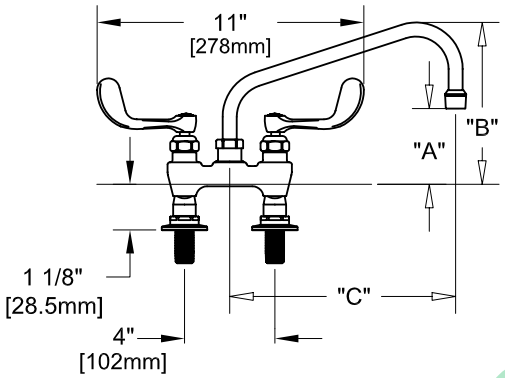

SIDE VIEW:

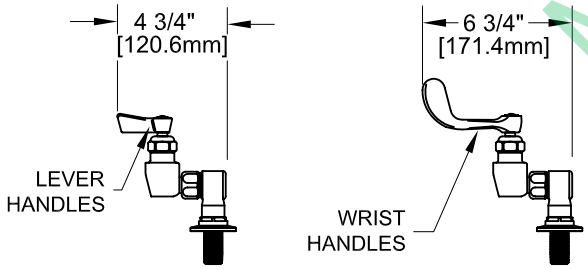

ROUGH-IN:

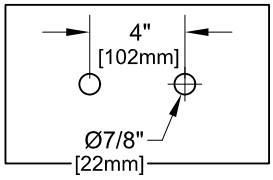

ANSI/A112.18.1-2005

PRODUCT NAME:
STAINLESS STEEL
4" DECK MOUNT FAUCETS

MODEL:

- ☐ 53740 W/ 6" SWING SPOUT W/ LEVER HANDLES
- ☐ 53759 W/ 8" SWING SPOUT W/ LEVER HANDLES
- ☐ 53767 W/ 10" SWING SPOUT W/ LEVER HANDLES
- ☐ 53775 W/ 12" SWING SPOUT W/ LEVER HANDLES
- ☐ 53783 W/ 14" SWING SPOUT W/ LEVER HANDLES
- ☐ 53791 W/ 16" SWING SPOUT W/ LEVER HANDLES
- ☐ 58564 W/ 6" SWING SPOUT W/ WRIST HANDLES
- ☐ 58572 W/ 8" SWING SPOUT W/ WRIST HANDLES
- ☐ 58580 W/ 10" SWING SPOUT W/ WRIST HANDLES
- ☑ 58599 W/ 12" SWING SPOUT W/ WRIST HANDLES
- ☐ 58602 W/ 14" SWING SPOUT W/ WRIST HANDLES
- ☐ 58610 W/ 16" SWING SPOUT W/ WRIST HANDLES

FEATURES

CONTROL VALVE
* 4" DECK MOUNT
* STAINLESS STEEL CONSTRUCTION
* SWIVELLING SEAT DISKS
* HOT SIDE STEM - RIGHT HAND
* COLD SIDE STEM - LEFT HAND
* LEVER HANDLES OR WRIST HANDLES
* SWING SPOUT

SYSTEM LIMITS
* TEMP: 40°F MIN. TO 140°F MAX.

SHIPPING WEIGHT
* 5.0 LBS

* NSF 61-9 APPROVED & LISTED
www.truesdail.com

MODELS	DIM "A"	DIM "B"	DIM "C"
53740 58564	2-1/4" [57mm]	5-7/8" [149mm]	6" [152mm]
53759 58572	2-1/2" [64mm]	6-3/8" [162mm]	8" [204mm]
53767 58580	3-1/8" [79mm]	6-7/8" [175mm]	10" [254mm]
58599	3-3/4" [95mm]	7-3/8" [187mm]	12" [305mm]
53783 58602	4-3/8" [111mm]	8-1/4" [210mm]	14" [356mm]
53791 58610	5" [127mm]	8-7/8" [225mm]	16" [406mm]

FISHER MANUFACTURING COMPANY
TOLL FREE: 800-421-6162 - FAX: 800-832-8238
information@fisher-mfg.com - www.fisher-mfg.com

MSHCC

4" DECK MOUNT W/ LEVER HANDLES

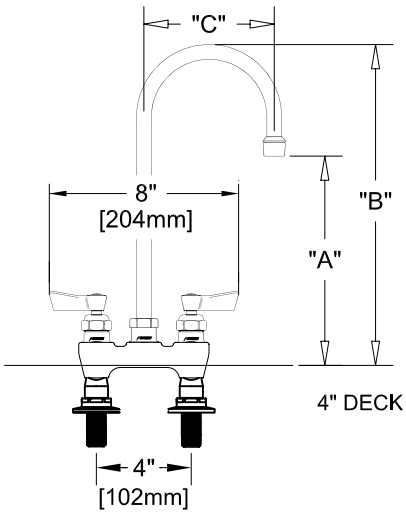

4" DECK MOUNT W/ WRIST HANDLES

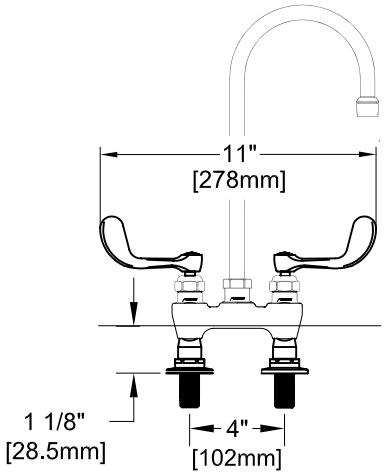

SIDE VIEW:

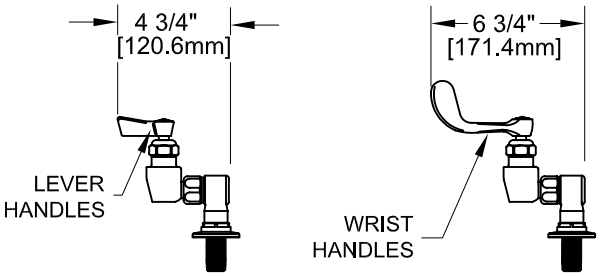

ROUGH-IN:

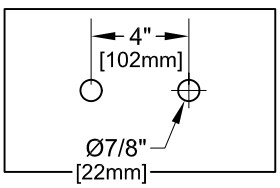

ANSI/A112.18.1-2005

PRODUCT NAME:
STAINLESS STEEL
4" DECK MOUNT FAUCETS

SPEC. 53872

MODEL:

- ☐ 53872 W/ 6" SWIVEL/RIGID GOOSENECK SPOUT W/ LEVER HANDLES
- ☐ 53880 W/ 12" SWIVEL/RIGID GOOSENECK SPOUT W/ LEVER HANDLES
- ☐ 58696 W/ 6" SWIVEL/RIGID GOOSENECK SPOUT W/ WRIST HANDLES
- ☐ 58718 W/ 12" SWIVEL/RIGID GOOSENECK SPOUT W/ WRIST HANDLES

FEATURES

CONTROL VALVE
* 4" DECK MOUNT
* STAINLESS STEEL CONSTRUCTION
* SWIVELLING SEAT DISKS
* HOT SIDE STEM - RIGHT HAND
* COLD SIDE STEM - LEFT HAND
* LEVER HANDLES OR WRIST HANDLES
* SWIVEL GOOSENECK SPOUT

SYSTEM LIMITS
* TEMP: 40°F MIN. TO 140°F MAX.

SHIPPING WEIGHT
* 6.0 LBS

* NSF 61-9 APPROVED & LISTED
www.truesdail.com

MSHCG

MODELS	DIM "A"	DIM "B"	DIM "C"
53872 58696	4-1/2" [114.3mm]	8-1/16" [204.8mm]	3-1/2" [88.90mm]
53880 58718	8-1/4" [209.6mm]	12-1/4" [311.2mm]	5-1/2" [139.7mm]

FISHER MANUFACTURING COMPANY
TOLL FREE: 800-421-6162 - FAX: 800-832-8238
information@fisher-mfg.com - www.fisher-mfg.com

APPLICATION:

PRODUCT NAME:
PRE-RINSE SPRING 8" C/C BACKSPLASH WITH WALL BRACKET & ADD-ON FAUCET

SPEC. 99643

JOB NAME:

QUANTITY: | ITEM NO.:

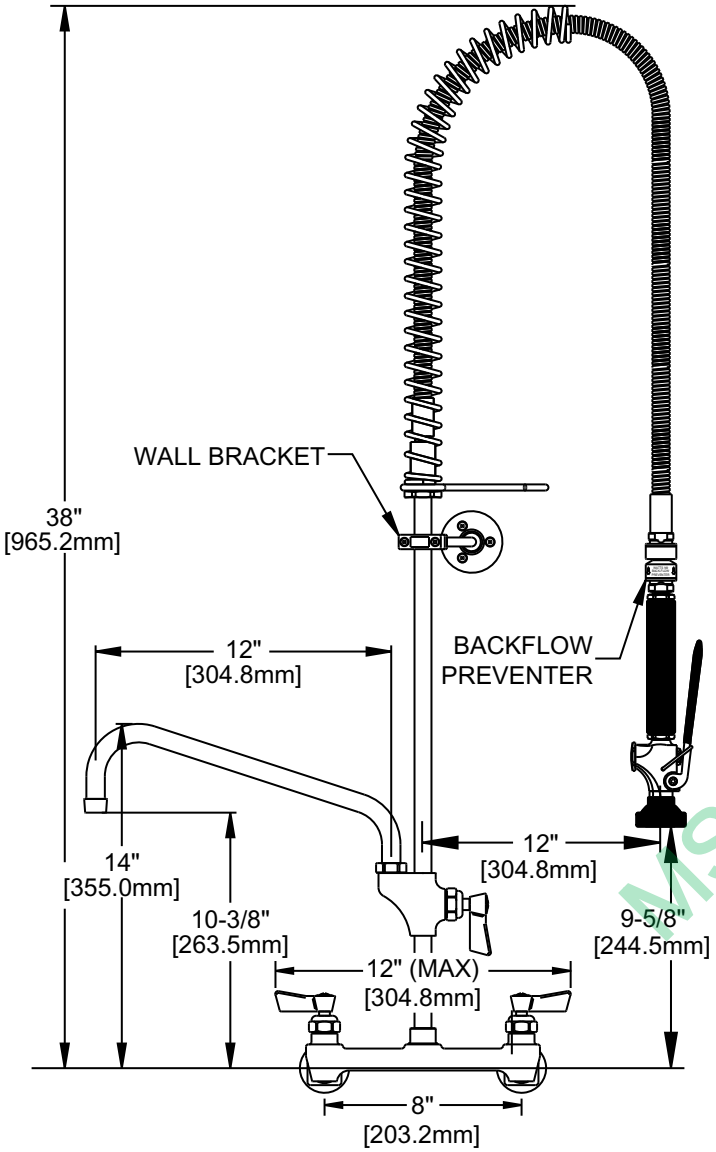

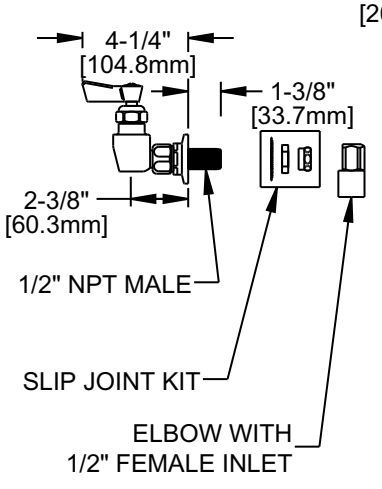

ROUGH-IN:

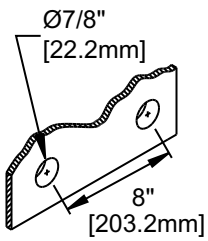

■ 99643 SPECIAL CONFIGURATION

MODEL:

- □ 34436 WITH 6" SWING SPOUT
- □ 34444 WITH 8" SWING SPOUT
- □ 34452 WITH 10" SWING SPOUT
- ■ 34460 WITH 12" SWING SPOUT
- □ 34479 WITH 14" SWING SPOUT
- □ 34487 WITH 16" SWING SPOUT

OPTIONS OR MODIFICATIONS:

- □ SUPPLY LINES (24" OR 36") CIRCLE LENGTH
- ■ IN-LINE DUAL CHECK VALVE
- □ BRUSH
- □ VANDAL RESISTANT KIT
- □ HANDLES (CROSS OR WRIST) CIRCLE STYLE
- ■ OTHER 1/2" NPT FEMALE ELBOWS

FEATURES:

MAIN CONTROL VALVE
* 8" C/C BACKSPLASH
* INTERNAL SPRING LOADED CHECK VALVES
* SWIVELING SEAT DISKS
* HOT SIDE STEM - RIGHT HAND CHECK
* COLD SIDE STEM - LEFT HAND CHECK
* STAINLESS STEEL SEATS, SEAT SCREWS AND HANDLE SCREWS

ADD-ON CONTROL VALVE
* STEM - RIGHT HAND SWIVEL
* HOT INDEX BUTTON
* SWIVELLING SEAT DISKS
* STAINLESS STEEL SEATS, SEAT SCREWS AND HANDLE SCREWS

HOSE
* 36" LENGTH
* STAINLESS STEEL END FITTINGS
* STAINLESS STEEL EXTERNAL JACKET
* 3-PLY FIBER REINFORCED INTERNAL RUBBER HOSE
* REPAIRABLE IN FIELD WITH SIMPLE TOOLS

SPRAY VALVE
* SOLID BRASS SHOWER HEAD - NO "O" RINGS TO LEAK
* BRONZE HANDLE - NOT PLASTIC - MEANS FULL "ON"
* FITS ALL BRANDS
* 2.65 GPM AT 80 PSI
* SHOWER SPRAY PATTERN

WALL BRACKET
* ADJUSTS FROM 2" TO 12"

SYSTEM LIMITS
* TEMP: 40°F MIN. TO 140°F MAX. STATIC
* PRESSURE 200 PSI MAX. STATIC
* SHIPPING WEIGHT: 15.0 LBS

MSHCP

NSF ANSI/A112.18.1M, ANSI/NSF 61.9

FISHER
FISHER MANUFACTURING COMPANY
TOLL FREE: 800-421-6162 - FAX: 800-832-8238
information@fisher-mfg.com - www.fisher-mfg.com

STAINLESS STEEL

FLOOR TROUGHS & FLOOR DRAINS

Floor Troughs

4" Depth

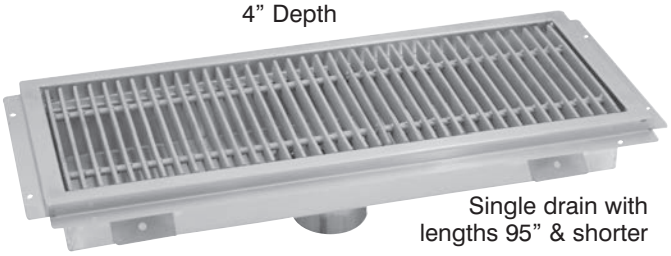

Single drain with lengths 95" & shorter

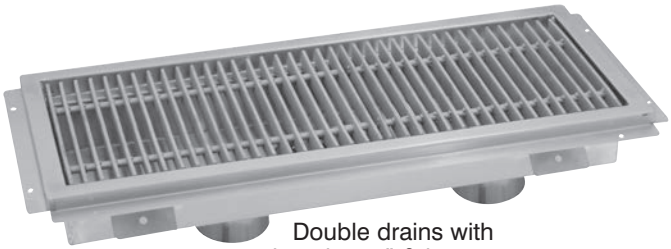

Double drains with lengths 96" & longer

Item #: _____ Qty #: _____

Model #: _____

Project #: _____

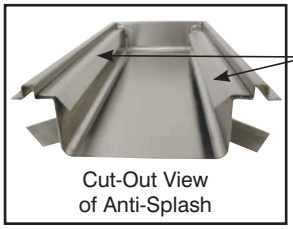

Cut-Out View of Anti-Splash

FT-1
Optional Anti-Splash Guard
(Per ft. Factory installed)

Floor Drain

4" Depth



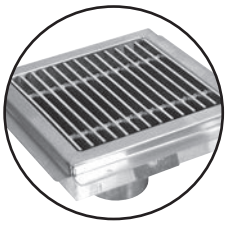

FD-1
Optional Stainless Steel Grate for Floor Drains



FT-2
Stainless Steel Strainer Basket with Handle (Included with all Floor Troughs, Water Receptacles & Floor Drains)

Floor Water Receptacles

2" Depth

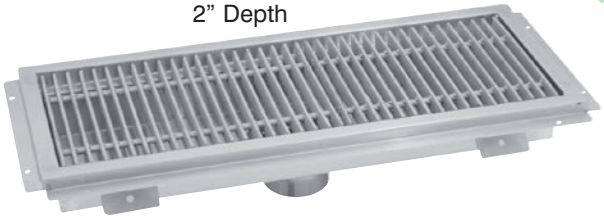

OPTIONAL ACCESSORIES

Model #	Qty
FT-1 Anti-Splash Guard per ft.	
FT-2 Replacement Strainer Basket	
FD-1 Floor Drain Stainless Steel Grate	

MSHCG

FEATURES:

Waste receptacle will accommodate up to a 4" waste pipe.

Includes 4" O.D. - 3" Long Plumbing Sleeve.

Removable perforated stainless steel strainer basket with handle provided.

Pitched towards waste.

Includes "Subway Style" grating from 3/16" x 1" solid "304" stainless steel bar or fiberglass. (Not included with Floor Drains. Use Model FD-1)

Grating is spaced 9/16" (Inside clearance) between bars to prevent casters from getting trapped.

Troughs 96" or larger in length made with two (2) drains.

Custom sizes available. Consult factory.

CONSTRUCTION:

All TIG welded.

All external corners welded and polished to a satin finish.

MECHANICAL:

Creased design to ensure proper drainage.

Perimeter flange mounts directly to sub floor.

3/4" vertical step designed to accommodate floor tile installation.

MATERIAL:

14 gauge "304" type stainless steel polished stainless steel grating.

Fiberglass grating: Gray fiberglass composite. Light weight, skid and corrosion resistant.

ADVANCE TABCO SMART FABRICATION™
www.advancetabco.com

Customer Service Available To Assist You 1-800-645-3166 8:30 am - 8:00 pm E.S.T.

For Orders & Customer Service:
Email: customer@advancetabco.com or **Fax:** 631-242-6900

For Smart Fabrication™ Quotes:
Email: smartfab@advancetabco.com or **Fax:** 631-586-2933

REF-E

DIMENSIONS and SPECIFICATIONS

ALL DIMENSIONS ARE TYPICAL

TOL ± .500”

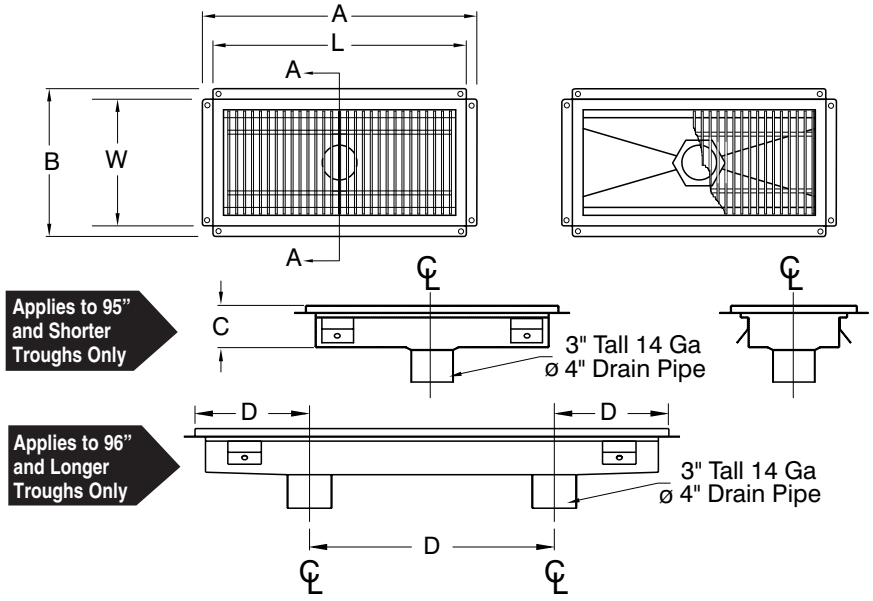

PLUMBING ROUGH-IN

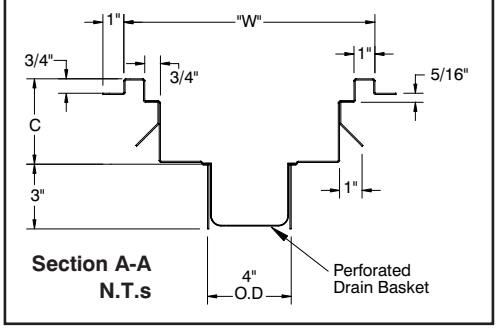

FLOOR TROUGHS

Stainless Steel Grating	Wt.	Fiberglass Grating	Wt.	L	W	A	B	C	D
FTG-1224	46 lbs.	FFTG-1224	34 lbs.	24”	12”	26”	14”	4”	-
FTG-1230	56 lbs.	FFTG-1230	37 lbs.	30”	12”	32”	14”	4”	-
FTG-1236	66 lbs.	FFTG-1236	40 lbs.	36”	12”	38”	14”	4”	-
FTG-1242	76 lbs.	FFTG-1242	43 lbs.	42”	12”	44”	14”	4”	-
FTG-1248	86 lbs.	FFTG-1248	46 lbs.	48”	12”	50”	14”	4”	-
FTG-1254	96 lbs.	FFTG-1254	49 lbs.	54”	12”	56”	14”	4”	-
FTG-1260	106 lbs.	FFTG-1260	52 lbs.	60”	12”	62”	14”	4”	-
FTG-1272	116 lbs.	FFTG-1272	55 lbs.	72”	12”	74”	14”	4”	-
FTG-1284	126 lbs.	FFTG-1284	81 lbs.	84”	12”	86”	14”	4”	-
FTG-1296*	146 lbs.	FFTG-1296	90 lbs.	96”	12”	98”	14”	4”	32”
FTG-12108*	166 lbs.	FFTG-12108	99 lbs.	108”	12”	110”	14”	4”	36”
FTG-12120*	180 lbs.	FFTG-12120	108 lbs.	120”	12”	122”	14”	4”	40”
FTG-1824	62 lbs.	FFTG-1824	43 lbs.	24”	18”	26”	20”	4”	-
FTG-1830	74 lbs.	FFTG-1830	47 lbs.	30”	18”	32”	20”	4”	-
FTG-1836	86 lbs.	FFTG-1836	54 lbs.	36”	18”	38”	20”	4”	-
FTG-1842	98 lbs.	FFTG-1842	61 lbs.	42”	18”	44”	20”	4”	-
FTG-1848	110 lbs.	FFTG-1848	69 lbs.	48”	18”	50”	20”	4”	-
FTG-1854	122 lbs.	FFTG-1854	76 lbs.	54”	18”	56”	20”	4”	-
FTG-1860	134 lbs.	FFTG-1860	83 lbs.	60”	18”	62”	20”	4”	-
FTG-1872	146 lbs.	FFTG-1872	90 lbs.	72”	18”	74”	20”	4”	-
FTG-1884	165 lbs.	FFTG-1884	111 lbs.	84”	18”	86”	20”	4”	-
FTG-1896*	187 lbs.	FFTG-1896	125 lbs.	96”	18”	98”	20”	4”	32”
FTG-18108*	208 lbs.	FFTG-18108	138 lbs.	108”	18”	110”	20”	4”	36”
FTG-18120*	229 lbs.	FFTG-18120	150 lbs.	120”	18”	122”	20”	4”	40”
FTG-2424	69 lbs.	FFTG-2424	52 lbs.	24”	24”	26”	26”	4”	-
FTG-2430	81 lbs.	FFTG-2430	59 lbs.	30”	24”	32”	26”	4”	-
FTG-2436	104 lbs.	FFTG-2436	68 lbs.	36”	24”	38”	26”	4”	-
FTG-2442	118 lbs.	FFTG-2442	75 lbs.	42”	24”	44”	26”	4”	-
FTG-2448	131 lbs.	FFTG-2448	83 lbs.	48”	24”	50”	26”	4”	-
FTG-2454	145 lbs.	FFTG-2454	95 lbs.	54”	24”	56”	26”	4”	-
FTG-2460	162 lbs.	FFTG-2460	102 lbs.	60”	24”	62”	26”	4”	-
FTG-2472	195 lbs.	FFTG-2472	119 lbs.	72”	24”	74”	26”	4”	-
FTG-2484	218 lbs.	FFTG-2484	137 lbs.	84”	24”	86”	26”	4”	-
FTG-2496*	243 lbs.	FFTG-2496	153 lbs.	96”	24”	98”	26”	4”	32”
FTG-24108*	274 lbs.	FFTG-24108	168 lbs.	108”	24”	110”	26”	4”	36”
FTG-24120*	310 lbs.	FFTG-24120	188 lbs.	120”	24”	122”	26”	4”	40”

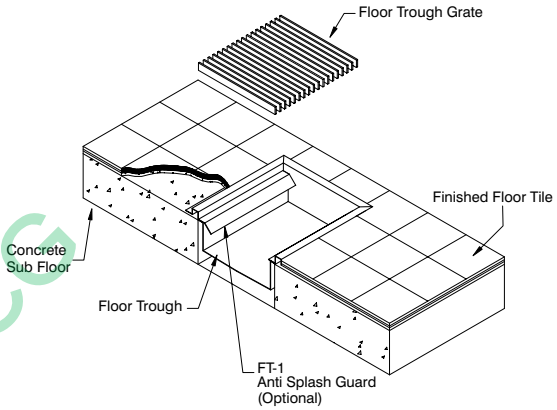

FLOOR DRAINS

Model #	Length	Width	A	B	C	Wt.
FDR-1212	12”	12”	14”	14”	4”	26 lbs.

FLOOR WATER RECEPTACLES

(2” Depth)

Model #	Length	Width	A	B	C	Wt.
FRG-24	24”	12”	26”	14”	2”	44 lbs.
FRG-36	36”	12”	38”	14”	2”	63 lbs.
FRG-48	48”	12”	50”	14”	2”	82 lbs.

CUSTOM SIZES AVAILABLE!

***Troughs 96” or larger in length made with two (2) drains.**

MSHCG

ADVANCE TABCO
SMART FABRICATION™

REF-E 200 Heartland Boulevard, Edgewood, NY 11717-8380

ADVANCE TABCO is constantly engaged in a program of improving our products. Therefore, we reserve the right to change specifications without prior notice.

© ADVANCE TABCO, JUNE 2016

APPLICATION:

JOB NAME:

QUANTITY: | ITEM NO.:

PRODUCT NAME:

PRE-RINSE SPRING STYLE
8" C/C BACKSPLASH MOUNT

SPEC. 99708

■ 99708 SPECIAL CONFIGURATION

MODEL: (CHECK BASE MODEL AND OPTIONS)

- ■ 13390 STD SPRAY VALVE w/WALL BRACKET
- □ 13366 STD SPRAY VALVE, NO WALL BRACKET
- □ 13382 ULT SPRAY VALVE w/WALL BRACKET
- □ 13374 ULT SPRAY VALVE, NO WALL BRACKET

OPTIONS OR MODIFICATIONS:

- □ SUPPLY LINES (24" OR 36") CIRCLE LENGTH
- □ ADD-ON FAUCET (6",8",10",12",14",16") CIRCLE LGTH
- ■ IN-LINE DUAL CHECK VALVE
- □ BRUSH
- ■ ELBOWS
- □ VANDAL RESISTANT KIT
- □ HANDLES (CROSS OR WRIST) CIRCLE STYLE
- ■ OTHER WALL HOOK

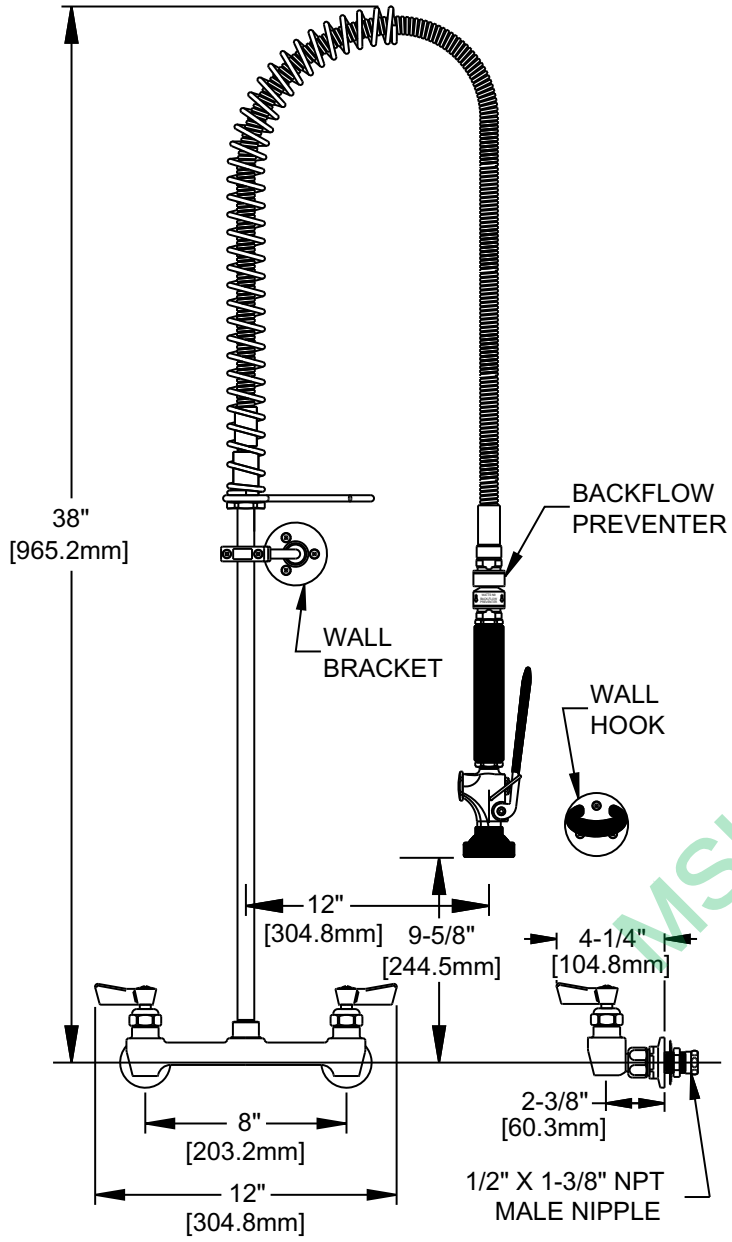

ROUGH-IN:

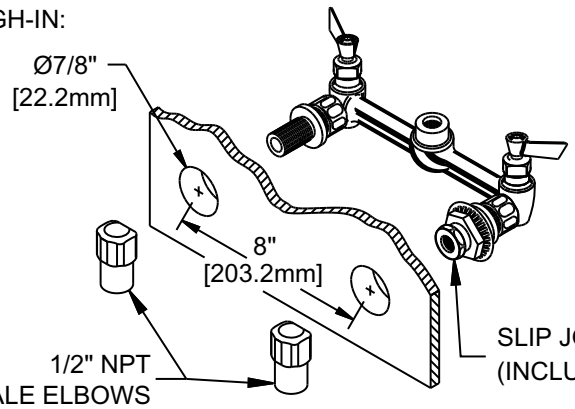

FEATURES:

CONTROL VALVE
- * 8" C/C BACKSPLASH MOUNT
- * INTERNAL SPRING LOADED CHECK VALVES
- * SWIVELING SEAT DISKS
- * HOT SIDE STEM - RIGHT HAND
- * COLD SIDE STEM - LEFT HAND
- * STAINLESS STEEL SEATS
- * STAINLESS STEEL SEAT SCREWS
- * STAINLESS STEEL HANDLE SCREWS
- * 1/2" SLIP JOINT KIT

HOSE
- * 36" LENGTH
- * STAINLESS STEEL END FITTINGS
- * STAINLESS STEEL EXTERNAL JACKET
- * 3-PLY FIBER REINFORCED INTERNL RUBBER HOSE

IN-LINE VACUUM BREAKER
- * ATMOSPHERIC VENT
- * DOUBLE CHECK DESIGN

STANDARD SPRAY VALVE
- * SOLID BRASS SHOWER HEAD - NO O- RINGS TO LEAK
- * BRONZE HANDLE - NOT PLASTIC - MEANS FULL "ON"
- * SHOWER SPRAY PATTERN

WALL BRACKET
- * ADJUSTS FROM 2" TO 12"

SYSTEM LIMITS
- * 2.65 GPM AT 80 PSI
- * TEMP: 40°F MIN. TO 140°F MAX.
- * PRESSURE: 200 PSI MAX. STATIC
- * SHIPPING WEIGHT: 15 LBS

ANSI/A112.18.1M

FISHER
FISHER MANUFACTURING COMPANY
TOLL FREE: 800-421-6162 - FAX: 800-832-8238
information@fisher-mfg.com - www.fisher-mfg.com

MSHOP

ADVANCE TABCO
SMART FABRICATION™

STAINLESS STEEL

HAND SINKS

with SOAP and PAPER TOWEL DISPENSER

Conforms To NSF 61/9 Lead Free Requirements

Item #:_____ **Qty #:**_____

Model #:_____

Project #:_____



7-PS-80



7-PS-79

Includes Skirt



7-PS-85

Includes Side supports



7-PS-69

TAPERED BOWL DESIGN

Electronic Faucet



7-PS-41



Front Loading



7-PS-46

FEATURES:

One piece **Deep Drawn** sink bowl design.

"Z" bracket wall mounting plate

Keyhole wall mount bracket.

Stainless steel 1-1/2" IPS basket drain.

C-fold style towel dispenser with hinged towel box.

Specific Unit Features:

7-PS-41:

14" x 16" x 5" sink bowl.

K-175 Hands Free AC/DC operated gooseneck faucet.

Deck mount liquid soap dispenser.

Front loading paper towel dispenser.

Stainless Steel Skirt with Removable Access Panel and enclosed bottom for storage.

7-PS-46:

14" x 16" x 5" sink bowl.

K-206 6" Extended splash mount gooseneck faucet with wrist handles

Front loading paper towel dispenser.

Deck mount liquid soap dispenser.

Stainless Steel Skirt with Removable Access Panel and enclosed bottom for storage.

7-PS-69:

10" x 14" x 5" sink bowl.

Splash mount liquid Soap Dispenser.

K-69 Heavy Duty Splash Mount Faucet (with Wrist Handles)

Side Support Brackets.

Lever operated drain, built-in overflow with plastic overflow tube and spring clamps.

1 1/2" P-Trap.

7-PS-79:

10" x 14" x 5" sink bowl.

K-59 gooseneck faucet.

Splash mount liquid Soap Dispenser.

7-PS-80:

10" x 14" x 5" sink bowl.

K-59 gooseneck faucet.

Splash mount liquid Soap Dispenser

Includes lever operated drain, built-in overflow with plastic overflow tube and spring clamps.

1 1/2" P-Trap.

7-PS-85

10" x 14" x 5" sink bowl.

K-59 gooseneck faucet.

Splash mount liquid Soap Dispenser.

Chrome plated 1 1/2" P-Trap & apron.

CONSTRUCTION:

All TIG welded.

All sink bowls have a large liberal radii with a minimum dimension of 2" and are rectangular in design for increased capacity.

Welded areas blended to match adjacent surfaces and to a satin finish.

Die formed Countertop Edge with a No-Drip offset.

MATERIAL:

Heavy gauge type 304 series stainless steel.

Wall mounting bracket is Galvanized and of offset design.

All fittings are brass / chrome plated unless otherwise indicated.

MECHANICAL:

Faucet supply is 1/2" IPS male thread hot and cold.

MSHCO

⚠ **WARNING:** Equipment that includes a faucet may expose you to chemicals, including lead, that are known to the State of California to cause cancer or birth defects or other reproductive harm. For more Info., visit www.p65warnings.ca.gov.

ADVANCE TABCO
SMART FABRICATION™
www.advancetabco.com

Customer Service Available To Assist You 1-800-645-3166 8:30 am - 8:00 pm E.S.T.

For Orders & Customer Service:
Email: customer@advancetabco.com or Fax: 631-242-6900

For Smart Fabrication™ Quotes:
Email: smartfab@advancetabco.com or Fax: 631-586-2933

REF-B

DIMENSIONS and SPECIFICATIONS

TOL Overall: ± .500" Interior: ± .250" **FITTINGS SUPPLIED AS SHOWN** **ALL DIMENSIONS ARE TYPICAL**

7-PS-69

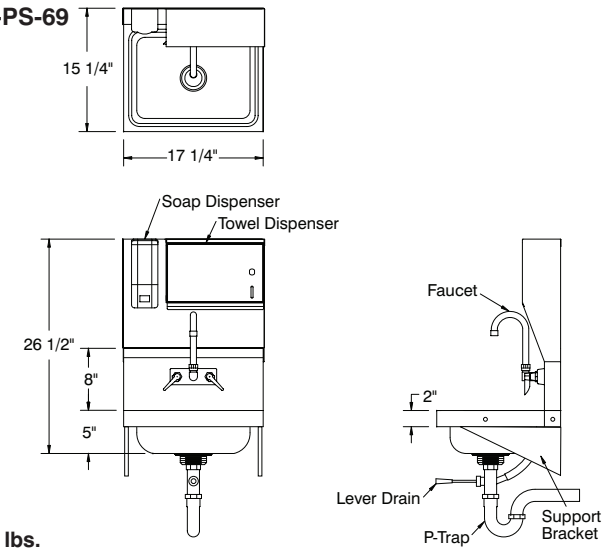

35 lbs.

7-PS-79

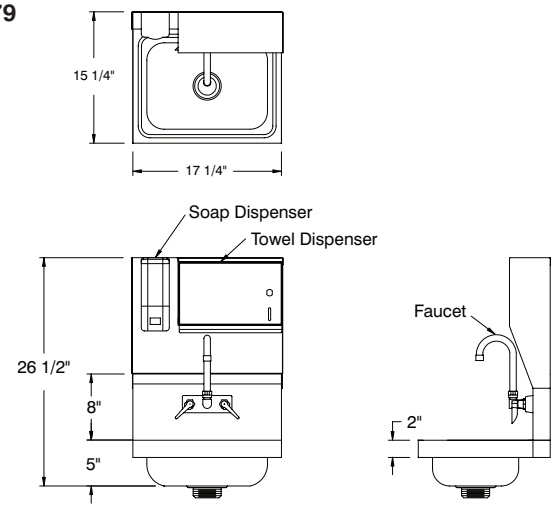

32 lbs.

7-PS-80

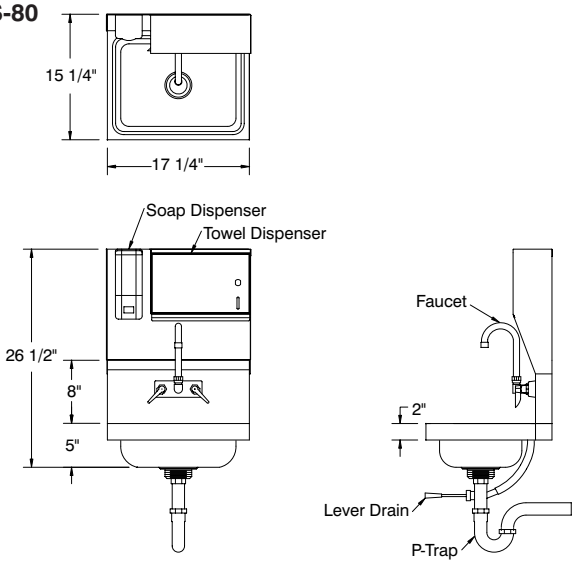

32 lbs.

7-PS-85

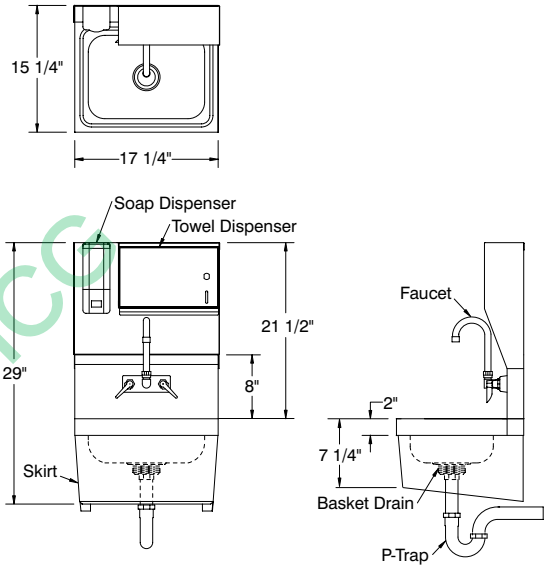

35 lbs.

7-PS-41

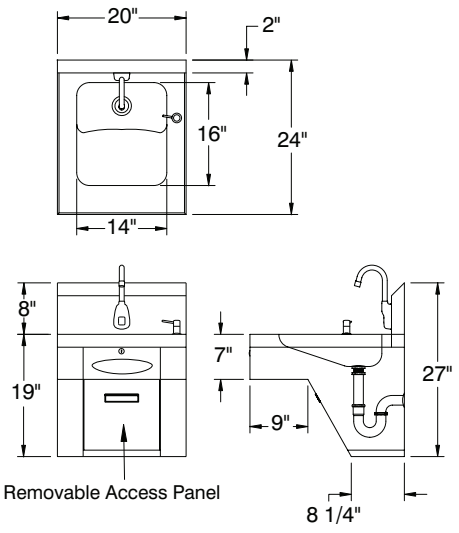

43 lbs.

7-PS-46

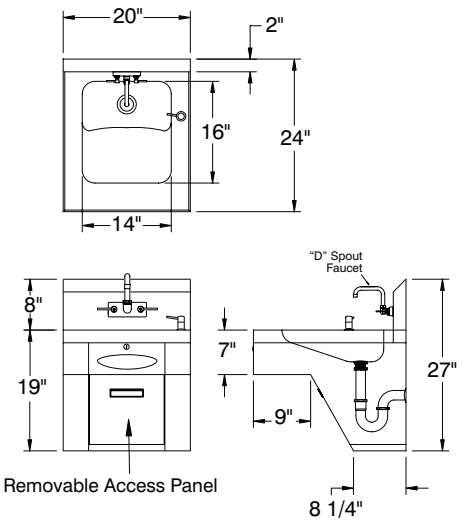

43 lbs.

MSHCC

ADVANCE TABCO
SMART FABRICATION™

ADVANCE TABCO is constantly engaged in a program of improving our products. Therefore, we reserve the right to change specifications without prior notice.

REF-B 200 Heartland Boulevard, Edgewood, NY 11717-8380

© ADVANCE TABCO, SEPTEMBER 2018

METRO®

We put space to work.®

Item # _____

Job _____

MetroMax Q® Polymer / Wire Shelving

Quick-to-adjust, corrosion resistant shelving constructed of removable polymer open grid shelf mats, wire shelf frames, and corner releases. Shelf frames and steel posts have an epoxy coating over an electroplated substrate. Shelves and epoxy coated posts offer a 15 year warranty against rust and corrosion. Optional corrosion proof polymer posts are available. Microban® antimicrobial product protection is built into the shelf mats and posts. Shelf has a rigid four-sided frame with center truss(es). Robust corner provides complete 360° capture of the wedge and post for added stability. Stationary units have maximum capacity of 2,000 lbs. (907kg) evenly distributed. Mobile units (with stem casters) offer a maximum total unit load of 900 lbs. (408kg). Units assemble easily — shelves mount on four one-piece wedges along grooved, numbered posts and adjust on 1" (25mm) increments.





- **Forever Strong:** Proven corner connection and four-sided shelf frame with center truss(es) assures stability and strength in stationary, mobile, and high-density track shelving configurations.
  800 lbs. (363kg) per shelf for lengths of 24" to 48" (610 to 1219mm)
  600 lbs. (272kg) per shelf for lengths of 54" (1372mm) or longer
  Stationary unit: 2000lbs (907kg) evenly distributed.
  Mobile unit (with stem casters): Up to 900lbs. (408kg).
  Multiply the caster load rating by 3 to determine actual rating.
- **Rust & Corrosion Resistant:** Corrosion resistant shelves and posts offer a 15 year warranty against rust and corrosion.
- **Easy to Clean and Maintain:** Polymer mats can be easily removed and cleaned in a sink or commercial washer / dish machine.
- **Microban® Antimicrobial Product Protection** is built into the shelf mats and posts to inhibit the growth of bacteria, mold, mildew, and fungus that cause odors and product degradation. Microban product protection keeps the product "cleaner between cleanings".
- **Quick-to-Adjust:** Patented corner release allows shelves to be adjusted without tools. Simply flip each corner release, relocate the wedge connectors on the posts, and reposition the shelf. Quickly adjust shelves to reclaim wasted vertical space.
- **Efficient Use of Space:** Shelves adjust on 1" (25mm) increments along the post to maximize the use of available vertical space.
- **Fast, Easy Assembly:** Shelves are ready to use right out of the box. One-piece wedges securely attach to the posts — Raised beads on the back of each wedge snap into the grooves on the post. Window on wedge aligns with numbers on the post to locate the desired shelf position. Shelf mounts on four wedges, A unit can be assembled without tools in minutes.
- **Interchangeable:** Part of the MetroMax platform, MetroMax Q shelves are compatible on the same shelving units with MetroMax i and MetroMax 4 shelves.
- **Open Grid and Solid Mat Options:** MetroMax Q is available with open grid mats. Open grid shelves promote air circulation and light penetration. For 21" (530mm) deep MetroMax Q, solid mat overlays are available. For 18" and 24" (457 and 610mm) depths, MetroMax i or MetroMax 4 solid shelves may be added when solid shelves are required.
- **NSF Listed** for all environments.
- **Optional Accessories** are on spec sheet 9.25.

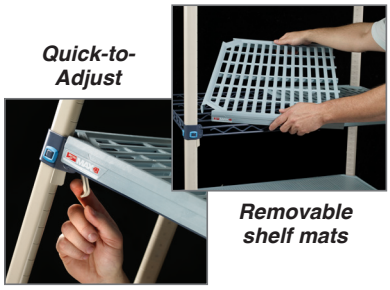

Quick-to-Adjust

Removable shelf mats

MSHCG

*MICROBAN® and the MICROBAN® symbol are registered trademarks of the Microban® Products Company, Huntersville, NC. Microban® product protection does not by itself protect a user from food borne illness. Product must be routinely cleaned.

PROTECTION THAT LIVES ON MICROBAN® NSF® CLEAN DESIGN Supports good HACCP processes

All Metro Catalog Sheets are available on our website: **www.metro.com**

METRO®

InterMetro Industries Corporation
North Washington Street, Wilkes-Barre, PA 18705

Product Information. U.S. and Canada: 1.800.992.1776
Outside U.S. and Canada: www.metro.com/contactus

L02-178
Printed in U.S.A. 3/18

Information and specifications are subject to change without notice. Please confirm at time of order.

Copyright © 2018 InterMetro Industries Corp.

Job _____

MetroMax Q®
POLYMER / WIRE SHELVING

METRO®
We put space to work.

Material Specifications:

- **Shelf Mats:** Injection-molded polypropylene with exclusive built-in Microban® antimicrobial product protection.
- **Shelf frames:** Steel with electroplated substrate and highly durable, abrasion-resistant epoxy finish.
- **Epoxy-coated posts:** Steel with electroplated substrate and highly durable, abrasion-resistant epoxy finish. Epoxy finish has built-in Microban antimicrobial product protection. The adjustable foot is reinforced nylon.
- **Shelf Wedge Connector:** Reinforced nylon.
- **Temperature range:** -20°F (-29°C) to 125°F (52°C) continuous use, with intermittent exposure to 200°F (93°C) for cleaning. Visit metro.com/service-support for cleaning guidelines.



Replacement MetroMax Q Wedges
Cat. No. MQ9985
Bag of 4
(included with each shelf)

Standard Interchangeable Shelves

- Part number includes shelf with removable mats and one bag of wedges

Shelf with Grid Mat Model No.	Nominal Size Width (in.)	Nominal Size Width (mm)	Nominal Size Length (in.)	Nominal Size Length (mm)	Actual Size Width (in.)	Actual Size Width (mm)	Actual Size Length (in.)	Actual Size Length (mm)	Approx. Pkd. Wt. (lbs.)	Approx. Pkd. Wt. (kg)
MQ1824G	18	457	24	610	18 3/8	467	23 13/16	605	6.2	2.8
MQ1830G	18	457	30	762	18 3/8	467	29 13/16	757	8.0	3.6
MQ1836G	18	457	36	914	18 3/8	467	35 13/16	910	9.7	4.4
MQ1842G	18	457	42	1067	18 3/8	467	41 13/16	1062	11.4	5.2
MQ1848G	18	457	48	1219	18 3/8	467	47 13/16	1215	13.2	6.0
MQ1854G	18	457	54	1372	18 3/8	467	53 13/16	1367	15.0	6.8
MQ1860G	18	457	60	1524	18 3/8	467	59 13/16	1519	16.7	7.6
MQ1872G	18	457	72	1829	18 3/8	467	71 13/16	1824	20.0	9.1
MQ2124G	21	530	24	610	21 3/8	543	23 13/16	605	8.0	3.6
MQ2130G	21	530	30	762	21 3/8	543	29 13/16	757	9.7	4.4
MQ2136G	21	530	36	914	21 3/8	543	35 13/16	910	11.4	5.2
MQ2142G	21	530	42	1067	21 3/8	543	41 13/16	1062	12.8	5.8
MQ2148G	21	530	48	1219	21 3/8	543	47 13/16	1215	14.5	6.6
MQ2154G	21	530	54	1372	21 3/8	543	53 13/16	1367	16.7	7.6
MQ2160G	21	530	60	1524	21 3/8	543	59 13/16	1519	18.5	8.4
MQ2172G	21	530	72	1829	21 3/8	543	71 13/16	1824	21.7	9.9
MQ2424G	24	610	24	610	24 3/8	619	23 13/16	605	9.7	4.4
MQ2430G	24	610	30	762	24 3/8	619	29 13/16	757	11.4	5.2
MQ2436G	24	610	36	914	24 3/8	619	35 13/16	910	13.1	6.0
MQ2442G	24	610	42	1067	24 3/8	619	41 13/16	1062	14.1	6.4
MQ2448G	24	610	48	1219	24 3/8	619	47 13/16	1215	15.8	7.1
MQ2454G	24	610	54	1372	24 3/8	619	53 13/16	1367	18.5	8.4
MQ2460G	24	610	60	1524	24 3/8	619	59 13/16	1519	20.3	9.2
MQ2472G	24	610	72	1829	24 3/8	619	71 13/16	1824	23.5	10.7

Heavy-Duty Dunnage Shelves

- Weight capacity per shelf evenly distributed: 1,200 lbs. (544kg) on shelves up to and including 48" (1219mm) long; 900 lbs. (408kg) for shelves 60" (1524mm) long.
- Dunnage shelves are recommended for use on units with four posts, not on an add-on unit with two posts.

Grid Mat Model No.	Nominal Width (in.)	Nominal Width (mm)	Nominal Length (in.)	Nominal Length (mm)	Approx. Pkd. Wt. (lbs.)	Approx. Pkd. Wt. (kg)
MHP2436G	24	610	36	914	21	9.5
MHP2448G	24	610	48	1220	27	12.2
MHP2460G	24	610	60	1524	33	15.0

Solid Shelf Options:

MetroMax i and MetroMax 4 solid shelves may be used with MetroMax Q shelves on the same unit. See spec sheets 9.20 & 9.22 for model numbers.

Posts

- Corrosion resistant epoxy-coated steel option.
- Corrosion proof polymer option.

STATIONARY POST WITH LEVELING FOOT

Epoxy-Coated Steel Model No.	Approx. Pkd. Wt. (lbs.)	Approx. Pkd. Wt. (kg)	Polymer Model No.	Approx. Pkd. Wt. (lbs.)	Approx. Pkd. Wt. (kg)	Nominal Height (in.)	Nominal Height (mm)	Actual Height (in.)	Actual Height (mm)
MQ13PE	1.0	0.5	MX13P	0.5	0.2	13	370	14 3/16	360
MQ27PE	2.0	0.9	MX27P	0.9	0.4	27	685	28 3/16	716
MQ33PE	2.5	1.1	MX33P	1.0	0.5	33	875	34 3/16	868
MQ54PE	4.0	1.8	MX54P	1.6	0.7	54	1370	54 3/16	1376
MQ63PE	4.5	2.0	MX63P	1.8	0.8	63	1585	62 3/16	1580
MQ74PE	5.5	2.5	MX74P	2.3	1.0	74	1690	74 3/16	1884
MQ86PE	6.5	2.9	MX86P	2.5	1.4	86	2195	86 3/16	2189

MOBILE POST FOR STEM CASTER

Epoxy-Coated Steel Model No.	Approx. Pkd. Wt. (lbs.)	Approx. Pkd. Wt. (kg)	Polymer Model No.	Approx. Pkd. Wt. (lbs.)	Approx. Pkd. Wt. (kg)	Nominal Height (in.)	Nominal Height (mm)	Actual Height (in.)	Actual Height (mm)
MQ13UPE	1.0	0.5	MX13UP	0.5	0.2	13	370	13 3/16	335
MQ27UPE	2.0	0.9	MX27UP	0.9	0.4	27	685	27 3/16	691
MQ33UPE	2.5	1.1	MX33UP	1.0	0.5	33	875	33 3/16	843
MQ54UPE	4.0	1.8	MX54UP	1.6	0.7	54	1370	53 3/16	1351
MQ63UPE	4.5	2.0	MX63UP	1.8	0.8	63	1585	61 3/16	1554
MQ74UPE	5.5	2.5	MX74UP	2.3	1.0	74	1690	73 3/16	1859
MQ86UPE	6.5	2.9	MX86UP	3.0	1.4	86	2195	85 3/16	2164

*Stationary posts include an adjustable leveling foot to compensate for uneven floors. Leveling foot can be adjusted 1" (25mm).
Special height cut posts are available. Consult your Metro representative.



Epoxy-coated steel post



Polymer post

MSHOP

Rubbermaid

BRUTE



THE TOUGHEST JUST GOT MORE PRODUCTIVE

MSHCG

SINCE 1968, BRUTE CONTAINERS have been trusted by professionals for their iconic durability and reliability. With every lift, drag and drop, they've outlasted – and outperformed every competitor in their industry thanks to their proprietary design and the highest quality materials. That's why our containers are chosen first to get the job done.

But we're raising the bar even higher with the new BRUTE. Innovative venting channels make removing liners up to 50% easier. Integrated cinches secure can liners, meaning knot-free liner changes. Contoured base handles improve grip, reduce strain and improve efficiency when emptying containers.

With these brand new innovations, we're proud to stamp BRUTE on every container guaranteeing its legendary performance. When you see our stamp, it means that your toughest job just got a whole lot easier.



MSHCG



50% EASIER TO LIFT LINERS

THE BRUTE IS DESIGNED WITH FOUR BUILT-IN VENTING CHANNELS that create airflow throughout the container. This air circulation eliminates the vacuum effect that occurs when lifting out liners in traditional containers. By reducing the pull force required to lift out liners by up to 50%, the BRUTE improves productivity and reduces the risk of injury.

MSHCG

IMPROVED PRODUCTIVITY



VENTING CHANNELS

Make removing liners up to 50% easier, improving productivity and reducing the risk of injury.



BAG CINCHES

Secure liners allowing for knot-free liner changes. Tested to 20,000 cycles.

MSHCC



CONTOURED BASE HANDLES

Improve grip and ergonomics, reducing strain and improving efficiency when emptying containers.



SEAMLESS CONSTRUCTION

Helps make cleaning easier.

NSF
2 & 21 Compliant



MSHCG

REDUCE TIME AND EFFORT NEEDED TO MANAGE REFUSE STREAMS

Overexertion is among the leading causes of workplace injuries according to the U.S. Department of Labor. The BRUTE delivers on improved productivity by managing and collecting refuse more efficiently and safely. BRUTE Containers reduce exertion through greater ergonomics when lifting, transporting and emptying refuse.

ICONIC DURABILITY



COMMERCIAL-GRADE CONSTRUCTION

Proprietary design constructed with the highest quality material plus a UV inhibitor ensures long life in even the most extreme commercial environments. Guaranteed to never fade, warp, crack, or crush.



RIM WITH RIB STRENGTHENED DESIGN

Increases strength and resists crushing.

MSHCC



ROUNDED HANDLES

Make lifting and moving easier, and are reinforced to resist tearing or damage from even the heaviest loads.



REINFORCED BASE

Specifically engineered to be dragged over rough surfaces, extending life and durability in even the toughest environments.



GUARANTEED TO NEVER FADE, WARP, CRACK OR CRUSH
For almost 50 years, professionals have trusted BRUTE to get the job done. Manufactured in Winchester, VA, BRUTE Containers feature a proprietary design constructed with the highest quality material plus a UV inhibitor to ensure long life in even the most extreme commercial environments. Every BRUTE must pass extreme durability performance standards ensuring our commitment to manufacture the toughest.

MSHCG



SELF-DRAINING LIDS

SELF-DRAINING CHANNELS prevent water from pooling, reducing still water buildup.

SNAP-LOCK ensures a secure fit.

RIDGES ENABLE STACKING of BRUTE containers to provide a space-efficient storage solution.



DOME TOP LIDS

SPRING ACTION DOOR allows easy trash disposal while keeping odors in and insects out.

SNAP-LOCK ensures a secure fit.

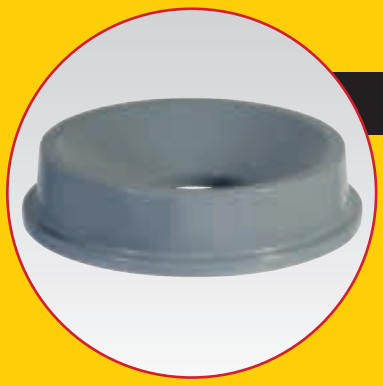

FUNNEL TOP LIDS

CUT-OUT TOP enables hands-free refuse disposal.

FUNNEL DESIGN conceals waste from public view.

MSHCG

MULTIPLE COLOR OFFERING

Recycling, sorting and organizational needs.



NSF
2 & 21 Compliant



DOLLY

FIVE RUGGED CASTERS - Help keep fully loaded BRUTEs stable, even on rough and uneven floors, and swivel smoothly for easy maneuvering.

STRUCTURAL FOAM CONSTRUCTION - Provides superior strength and durability, with a 250-pound load capacity.

NON-MARKING CASTERS - Help protect floors, keeping public areas looking their best.



TANDEM DOLLY

TWO TWIST LOCKS - Hold containers securely and unlock easily for unloading, allowing easy transport of two loaded 44-gallon BRUTEs for increased productivity.

HEAVY-DUTY 8" WHEELS AND 3" SWIVEL CASTERS - Maneuver easily across rough floors and around corners.

STRUCTURAL FOAM CONSTRUCTION - Provides superior strength and durability, with a 400-pound load capacity.



CADDY BAG

ELASTIC POCKETS - Knock out quick cleanups on-the-go with onboard storage for spray bottles, cleaning cloths, brushes, extra can liners, latex gloves, and other cleaning supplies.

HEAVY-DUTY VINYL - For long life and easy cleaning.

ADJUSTABLE STRAPS - Allow easy installation and removal on both 32 and 44-gallon BRUTEs.



RIM CADDY

MULTIPLE STORAGE COMPARTMENTS AND HOOKS - Provide storage for everything from wet floor signs to spray bottles to extra can liners and all the other cleaning supplies needed for on-the-go cleaning.

LINER RETENTION BANDS - Keep can liners securely in place and allow for quick liner changes for improved productivity.

SNAP-ON TABS - Hold caddy securely on a 44-gallon BRUTE, even when changing out full can liners.

WCCG

BRUTE Containers

	DESCRIPTION	ITEM #	COLOR	HEIGHT	DIAMETER
10 GALLON	BRUTE 10 GALLON CONTAINER GRAY	FG261000GRAY	GRAY	17.13"	15.63"
	BRUTE 10 GALLON CONTAINER WHITE	FG261000WHT	WHITE	17.13"	15.63"
	BRUTE 10 GALLON CONTAINER RED	FG261000RED	RED	17.13"	15.63"
	BRUTE 10 GALLON CONTAINER YELLOW	FG261000YEL	YELLOW	17.13"	15.63"
	BRUTE 10 GALLON CONTAINER BLUE	1779699	BLUE	17.13"	15.63"
	BRUTE 10 GALLON CONTAINER DARK GREEN	FG261000DGRN	DARK GREEN	17.13"	15.63"
	BRUTE 10 GALLON CONTAINER BLACK	1926827	BLACK	17.13"	15.63"
20 GALLON	BRUTE 20 GALLON CONTAINER GRAY	FG262000GRAY	GRAY	22.91"	19.38"
	BRUTE 20 GALLON CONTAINER WHITE	FG262000WHT	WHITE	22.91"	19.38"
	BRUTE 20 GALLON CONTAINER RED	FG262000RED	RED	22.91"	19.38"
	BRUTE 20 GALLON CONTAINER YELLOW	FG262000YEL	YELLOW	22.91"	19.38"
	BRUTE 20 GALLON CONTAINER BLUE	FG262000BLUE	BLUE	22.91"	19.38"
	BRUTE 20 GALLON CONTAINER DARK GREEN	FG262000DGRN	DARK GREEN	22.91"	19.38"
	BRUTE 20 GALLON CONTAINER BLACK	1779734	BLACK	22.91"	19.38"
	BRUTE 20 GALLON RECYCLING CONTAINER BLUE	FG262073BLUE	BLUE	22.91"	19.38"
	BRUTE 20 GALLON RECYCLING CONTAINER DARK GREEN	1926828	DARK GREEN	22.91"	19.38"
32 GALLON	BRUTE 32 GALLON CONTAINER GRAY	FG263200GRAY	GRAY	27.77"	21.92"
	BRUTE 32 GALLON CONTAINER WHITE	FG263200WHT	WHITE	27.77"	21.92"
	BRUTE 32 GALLON CONTAINER RED	FG263200RED	RED	27.77"	21.92"
	BRUTE 32 GALLON CONTAINER YELLOW	FG263200YEL	YELLOW	27.77"	21.92"
	BRUTE 32 GALLON CONTAINER BLUE	FG263200BLUE	BLUE	27.77"	21.92"
	BRUTE 32 GALLON CONTAINER DARK GREEN	FG263200DGRN	DARK GREEN	27.77"	21.92"
	BRUTE 32 GALLON CONTAINER BLACK	1867531	BLACK	27.77"	21.92"
	BRUTE 32 GALLON RECYCLING CONTAINER BLUE	FG263273BLUE	BLUE	27.77"	21.92"
	BRUTE 32 GALLON RECYCLING CONTAINER DARK GREEN	1788472	DARK GREEN	27.77"	21.92"
44 GALLON	BRUTE 44 GALLON CONTAINER GRAY	FG264360GRAY	GRAY	31.50"	24.00"
	BRUTE 44 GALLON CONTAINER WHITE	1779740	WHITE	31.50"	24.00"
	BRUTE 44 GALLON CONTAINER RED	FG264360RED	RED	31.50"	24.00"
	BRUTE 44 GALLON CONTAINER YELLOW	FG264360YEL	YELLOW	31.50"	24.00"
	BRUTE 44 GALLON CONTAINER BLUE	FG264360BLUE	BLUE	31.50"	24.00"
	BRUTE 44 GALLON CONTAINER DARK GREEN	1779741	DARK GREEN	31.50"	24.00"
	BRUTE 44 GALLON CONTAINER BLACK	FG264360BLA	BLACK	31.50"	24.00"
	BRUTE 44 GALLON RECYCLING CONTAINER BLUE	FG264307BLUE	BLUE	31.50"	24.00"
	BRUTE 44 GALLON RECYCLING CONTAINER DARK GREEN	1926829	DARK GREEN	31.50"	24.00"
55 GALLON	BRUTE 55 GALLON CONTAINER GRAY	FG265500GRAY	GRAY	33.19"	26.38"
	BRUTE 55 GALLON CONTAINER WHITE	FG265500WHT	WHITE	33.19"	26.38"
	BRUTE 55 GALLON CONTAINER RED	FG265500RED	RED	33.19"	26.38"
	BRUTE 55 GALLON CONTAINER YELLOW	FG265500YEL	YELLOW	33.19"	26.38"
	BRUTE 55 GALLON CONTAINER BLUE	1779732	BLUE	33.19"	26.38"
	BRUTE 55 GALLON CONTAINER DARK GREEN	FG265500DGRN	DARK GREEN	33.19"	26.38"
	BRUTE 55 GALLON CONTAINER BLACK	1779739	BLACK	33.19"	26.38"

10 & 55 GALLON CONTAINERS FEATURE STRAIGHT WALL DESIGN

MSHCS



BRUTE Lids and Accessories

	DESCRIPTION	ITEM #	COLOR	LENGTH	WIDTH	HEIGHT	DIAMETER
10 GALLON	BRUTE 10 GALLON LID GRAY	FG260900GRAY	GRAY	–	–	1.25"	17.13"
	BRUTE 10 GALLON LID WHITE	FG260900WHT	WHITE	–	–	1.25"	17.13"
	BRUTE 10 GALLON LID RED	FG260900RED	RED	–	–	1.25"	17.13"
	BRUTE 10 GALLON LID YELLOW	FG260900YEL	YELLOW	–	–	1.25"	17.13"
	BRUTE 10 GALLON LID BLUE	1779700	BLUE	–	–	1.25"	17.13"
	BRUTE 10 GALLON LID DARK GREEN	FG260900DGRN	DARK GREEN	–	–	1.25"	17.13"
	BRUTE 10 GALLON LID BLACK	1926826	BLACK	–	–	1.25"	17.13"
20 GALLON	BRUTE 20 GALLON LID GRAY	FG261960GRAY	GRAY	–	–	1.80"	19.88"
	BRUTE 20 GALLON LID WHITE	FG261960WHT	WHITE	–	–	1.80"	19.88"
	BRUTE 20 GALLON LID RED	FG261960RED	RED	–	–	1.80"	19.88"
	BRUTE 20 GALLON LID YELLOW	FG261960YEL	YELLOW	–	–	1.80"	19.88"
	BRUTE 20 GALLON LID BLUE	1779731	BLUE	–	–	1.80"	19.88"
	BRUTE 20 GALLON LID DARK GREEN	FG261960DGRN	DARK GREEN	–	–	1.80"	19.88"
	BRUTE 20 GALLON LID BLACK	FG261960BLA	BLACK	–	–	1.80"	19.88"
32 GALLON	BRUTE 32 GALLON LID GRAY	FG263100GRAY	GRAY	–	–	1.85"	22.41"
	BRUTE 32 GALLON LID WHITE	FG263100WHT	WHITE	–	–	1.85"	22.41"
	BRUTE 32 GALLON LID RED	FG263100RED	RED	–	–	1.85"	22.41"
	BRUTE 32 GALLON LID YELLOW	FG263100YEL	YELLOW	–	–	1.85"	22.41"
	BRUTE 32 GALLON LID BLUE	FG263100BLUE	BLUE	–	–	1.85"	22.41"
	BRUTE 32 GALLON LID DARK GREEN	FG263100DGRN	DARK GREEN	–	–	1.85"	22.41"
	BRUTE 32 GALLON LID BLACK	1867532	BLACK	–	–	1.85"	22.41"
	BRUTE 32 GALLON FUNNEL TOP GRAY	FG354300GRAY	GRAY	–	–	5.00"	22.38"
	BRUTE 32 GALLON DOME TOP GRAY	FG263788GRAY	GRAY	–	–	12.25"	22.69"
	BRUTE 32 GALLON DOME TOP RED	FG263788RED	RED	–	–	12.25"	22.69"
	BRUTE 32 GALLON DOME TOP DARK GREEN	1829397	DARK GREEN	–	–	12.25"	22.69"
	BRUTE 32 GALLON DOME TOP BLUE	1829398	BLUE	–	–	12.25	22.69
	BRUTE 32 GALLON DOME TOP YELLOW	1829399	YELLOW	–	–	12.25	22.69
44 GALLON	BRUTE 44 GALLON LID GRAY	FG264560GRAY	GRAY	–	–	2.00"	24.50"
	BRUTE 44 GALLON LID WHITE	FG264560WHT	WHITE	–	–	2.00"	24.50"
	BRUTE 44 GALLON LID RED	FG264560RED	RED	–	–	2.00"	24.50"
	BRUTE 44 GALLON LID YELLOW	FG264560YEL	YELLOW	–	–	2.00"	24.50"
	BRUTE 44 GALLON LID BLUE	1779636	BLUE	–	–	2.00"	24.50"
	BRUTE 44 GALLON LID DARK GREEN	FG264560DGRN	DARK GREEN	–	–	2.00"	24.50"
	BRUTE 44 GALLON LID BLACK	FG264560BLA	BLACK	–	–	2.00"	24.50"
	BRUTE 44 GALLON DOME TOP GRAY	FG264788GRAY	GRAY	–	–	12.63"	24.81"
	BRUTE 44 GALLON DOME TOP RED	FG264788RED	RED	–	–	12.63"	24.81"
	BRUTE 44 GALLON DOME TOP DARK GREEN	1834838	DARK GREEN	–	–	12.63"	24.81"
	BRUTE 44 GALLON DOME TOP YELLOW	1834839	YELLOW	–	–	12.63"	24.81"
	BRUTE 44 GALLON DOME TOP BLUE	1834840	BLUE	–	–	12.63"	24.81"
55 GALLON	BRUTE 55 GALLON LID GRAY	FG265400GRAY	GRAY	–	–	2.09"	29.06"
	BRUTE 55 GALLON LID WHITE	FG265400WHT	WHITE	–	–	2.09"	29.06"
	BRUTE 55 GALLON LID RED	FG265400RED	RED	–	–	2.09"	29.06"
	BRUTE 55 GALLON LID YELLOW	FG265400YEL	YELLOW	–	–	2.09"	29.06"
	BRUTE 55 GALLON LID BLUE	1779733	BLUE	–	–	2.09"	29.06"
	BRUTE 55 GALLON LID DARK GREEN	FG265400DGRN	DARK GREEN	–	–	2.09"	29.06"
	BRUTE 55 GALLON LID BLACK	1779738	BLACK	–	–	2.09"	29.06"
	BRUTE 55 GALLON DOME TOP GRAY	FG265788GRAY	GRAY	–	–	14.50"	27.25"
	BRUTE 55 GALLON DOME TOP RED	FG265788RED	RED	–	–	14.50"	27.25"
ACCESSORIES	BRUTE DOLLY	FG264000BLA	BLACK	–	–	6.63"	18.25
	BRUTE QUIET DOLLY	FG264043BLA	BLACK	–	–	6.63"	18.25"
	BRUTE TANDEM DOLLY	FG264600BLA	BLACK	45.00	20.25	8.00"	–
	BRUTE CADDY BAG	FG264200YEL	YELLOW	–	–	20.50"	20.00"
	BRUTE RIM CADDY	FG9W8700YEL	YELLOW	32.5	26.5	6.75"	–

10 & 55 GALLON LIDS FEATURE TRADITIONAL DESIGN

MSRC.G



MSHCG

RCP-327
©2014 Rubbermaid Commercial Products LLC
8900 Northpointe Executive Drive, Huntersville, NC 28078

To see our complete range of refuse solutions visit our online catalog at **rubbermaidcommercial.com**

Rubbermaid® Commercial Products

EAGLE GROUP®
Profit from the Eagle Advantage®

Item No.: _____
Project No.: _____
S.I.S. No.: _____

Specification Sheet

Walstor® Modular Wall System

Short Form Specifications

Eagle Walstor® Single Shelf Kit, model _____. Consists of one EAGLEbrite® zinc-coated patented Quad-Truss® design open-grid wire shelf, one pair of 30˝ vertical uprights one wire mat, and one pair of 18˝ wire shelf brackets.

Eagle Walstor® Double Shelf Kit, model _____. Consists of two EAGLEbrite® zinc-coated patented Quad-Truss® design open-grid wire shelves, one pair of 45˝ vertical uprights, two wall mats, and two pairs of wire shelf brackets.

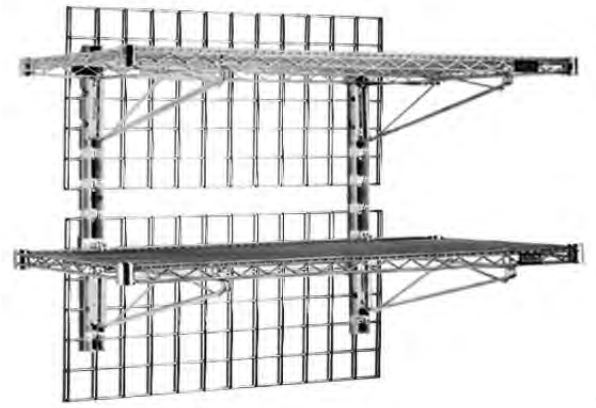

double shelf kit

MODELS:

❑ ***WAL-1-1836***	❑ ***WM1848***	❑ ***WM2496***	❑ ***PR45VU***
❑ ***WAL-1-1848***	❑ ***WM1860***	❑ ***WM3354***	❑ ***PR14B***
❑ ***WAL-2-1836***	❑ ***WM2448***	❑ ***WM4848***	❑ ***PR18B***
❑ ***WAL-2-1848***	❑ ***WM2472***	❑ ***PR12VU***	❑ ***PR21B***
❑ ***WM1836***	❑ ***WM2484***	❑ ***PR30VU***	❑ ***PR24B***

Design and Construction Features

- Walstor® design provides for placement of wire shelves where you want them.
- Unique design positions vertical uprights at stud locations, while shelf brackets lock shelves once shelf is in place.
- Provides the ability to add, remove, or adjust shelves quickly and easily.
- Features EAGLEbrite® zinc finish, sealed with MasterSeal®.
- WalStor® accessories* can be mounted anywhere on wall mat without fasteners.
- Eagle wire shelves feature patented QuadTruss® design (patent #5,390,803), making shelves up to 25% stronger and providing a retaining ledge for increased stability and product retention.

Shelf Kits

- Single Shelf Kits:
  - One wire shelf with patented Quad-Truss® design (patent # 5,390,803) and EAGLEbrite® zinc finish
  - One wall mat
  - One pair of 30˝ (762mm) vertical wall uprights
  - One pair of 18˝ (457mm) wire shelf brackets
- Double Shelf Kits:
  - Two wire shelves with patented Quad-Truss® design (patent # 5,390,803) and EAGLEbrite® zinc finish
  - Two wall mats
  - One pair of 45˝ (1143mm) vertical wall uprights
  - Two pairs of 18˝ (457mm) wire shelf brackets

Components (all of which are zinc-plated)

- Wall Mats:
  - Required only for hanging accessories*
  - 3˝ x 3˝ (76 x 76mm) grids
- Vertical Wall Uprights (pair)
- Wire Shelf Brackets (pair)

Options / Accessories*

❑ Pan holders
❑ Hooks
❑ Bins
❑ Racks
❑ Baskets

* See spec sheet #**EG02.00B** for Walstor® accessories.
See spec sheet #**EG02.00C** for Wall Grid Shelving.

MSHCC

EAGLE GROUP
100 Industrial Boulevard, Clayton, DE 19938-8903 USA
Phone: 302-653-3000 • Fax: 302-653-2065
www.eaglegrp.com

Foodservice Division: Phone 800-441-8440
MHC/Retail Display Divisions: Phone 800-637-5100

Certifications / Approvals

NSF

AUTOQUOTES

KCL

For custom configuration or fabrication needs, contact our **SpecFAB® Division.**
Phone: 302-653-3000 • Fax: 302-653-3091 • e-mail: specfab@eaglegrp.com

EG02.00A Rev. 07/11

Spec sheets available for viewing, printing or downloading from our online literature library at *www.eaglegrp.com*

Eagle Foodservice Equipment, Eagle MHC, SpecFAB®, and Retail Display are divisions of Eagle Group. ©2011 by the Eagle Group

EAGLE GROUP®
Profit from the Eagle Advantage®

Item No.: _____
Project No.: _____
S.I.S. No.: _____

Walstor® Modular Wall System

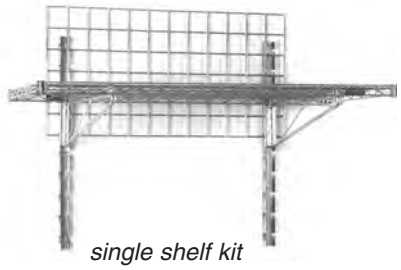

single shelf kit

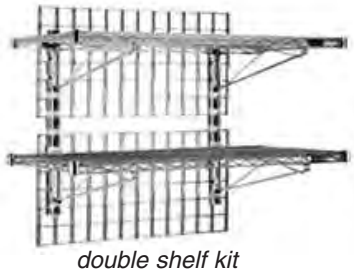

double shelf kit

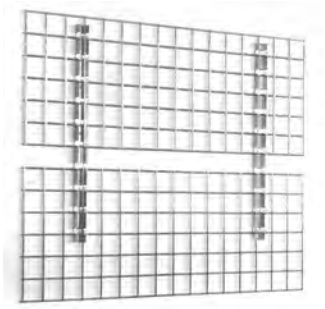

wall mats and vertical wall uprights

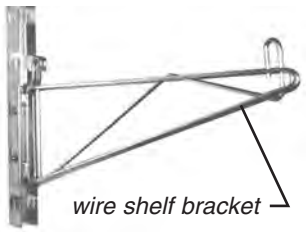

wire shelf bracket

SINGLE SHELF KITS

	weight		shelf & wall matt size: width		length	
model #	lbs.	kg	in.	mm	in.	mm
WAL-1-1836	35	15.9	18″	457	36″	915
WAL-1-1848	36	16.3	18″	457	48″	1219

DOUBLE SHELF KITS

	weight		shelf dimensions: width		length	
model #	lbs.	kg	in.	mm	in.	mm
WAL-2-1836	41	18.6	18″	457	36″	915
WAL-2-1848	49	22.2	18″	457	48″	1219

WALL MATS

	weight		height		length	
model #	lbs.	kg	in.	mm	in.	mm
WM1836	9	4.1	18″	457	36″	915
WM1848	11	5.0	18″	457	48″	1219
WM1860	14	6.4	18″	457	60″	1524
WM2448	13	5.8	24″	610	48″	1219
WM2472	19	8.6	24″	610	72″	1828
WM2484	22	9.9	24″	610	84″	2133
WM2496	25	11.3	24″	610	96″	2438
WM3354	22	9.9	33″	838	54″	1372
WM4848	19	8.6	48″	1219	48″	1219

VERTICAL WALL UPRIGHTS

	weight		height	
model #	lbs.	kg	in.	mm
PR12VU	2	0.9	12″	305
PR30VU	4	1.8	30″	762
PR45VU	5	2.3	45″	1143

WIRE SHELF BRACKETS

	weight		depth	
model #	lbs.	kg	in.	mm
PR14B	3	1.5	14″	356
PR18B	4	1.8	18″	457
PR21B	4	1.8	21″	533
PR24B	5	2.3	24″	610

MSHCG

Please note: Walstor® must be mounted to a solid surface or studs in a wall. User needs to determine installation materials and methods suitable to hold and support the Walstor® system.

EAGLE GROUP
100 Industrial Boulevard, Clayton, DE 19938-8903 USA
Phone: 302-653-3000 • Fax: 302-653-2065
www.eaglegrp.com

Foodservice Division: Phone 800-441-8440
MHC/Retail Display Divisions: Phone 800-637-5100

Printed in U.S.A.
©2011 by Eagle Group
Rev. 07/11

Spec sheets available for viewing, printing or downloading from our online literature library at *www.eaglegrp.com*

Although every attempt has been made to ensure the accuracy of the information provided, we cannot be held responsible for typographical or printing errors. Information and specifications are subject to change without notice. Please confirm at time of order.

ADVANCE TABCO
SMART FABRICATION™

STAINLESS STEEL

TABLE WITH SINK

Conforms To NSF 61/9 Lead Free Requirements

Item #: _____ Qty #: _____
Model #: _____
Project #: _____



Rolled Rim Edge on Front & Square Edges on Side & Back



Bullet Feet

KMS-11B-305R Shown



Featuring as Standard:
"THE PROVEN"
ORIGINAL ADVANCE TABCO
Adjustable Undershelf with Die Cast Leg Clamp

FEATURES:

Top is furnished with 1 5/8" sanitary rolled rim edge on front and square sides, and a 5" splash with a 1" return on the rear side.

THREE hat channels stud welded to reinforce and maintain a level working surface.

Pre-engineered welded angle adapters insure ease of future drawer installation.

Aluminum die cast "leg-to-shelf" clamp secures shelf to leg eliminating unsightly nuts and bolts. Undershelf is adjustable.

Stainless steel 16" x 20" x 12" sink bowl integrally welded to top.

K-50 deck mounted lead free compliant faucet included.

CONSTRUCTION:

All TIG welded. Exposed weld areas polished to match adjacent surfaces.

Entire top mechanically polished to a satin finish.

Top is sound deadened.

Roll formed embossed galvanized hat channels are secured to top by means of structural adhesive and weld studs.

Gussets welded to support hat channels.

MATERIAL:

TOP is 16 gauge stainless steel type "304" series.

SHELF is 18 gauge stainless steel type "430" series.

LEGS are 1 5/8" diameter, tubular stainless steel with stainless steel gussets and 1" adjustable stainless steel bullet feet.

MSHCG

30" WIDE Model #	Length (L)	Sink Location	Approx. Weight	Approx. Cu. Ft.
KMS-11B-305L	60"	Left	150 lbs.	18
KMS-11B-305R	60"	Right	150 lbs.	18
KMS-11B-306L	72"	Left	180 lbs.	22
KMS-11B-306R	72"	Right	180 lbs.	22

Choose Left or Right Sink Position

⚠ **WARNING:** Equipment that include faucets on this page may contain a chemical known to the State of California to cause cancer, birth defects or other reproductive harm.

ADVANCE TABCO
SMART FABRICATION™
www.advancetabco.com

Customer Service Available To Assist You 1-800-645-3166 8:30 am - 8:00 pm E.S.T.

For Orders & Customer Service:
Email: customer@advancetabco.com or **Fax:** 631-242-6900

For Smart Fabrication™ Quotes:
Email: smartfab@advancetabco.com or **Fax:** 631-586-2933

REF-O

DETAILS and SPECIFICATIONS

TOL ± .500”

ALL DIMENSIONS ARE TYPICAL

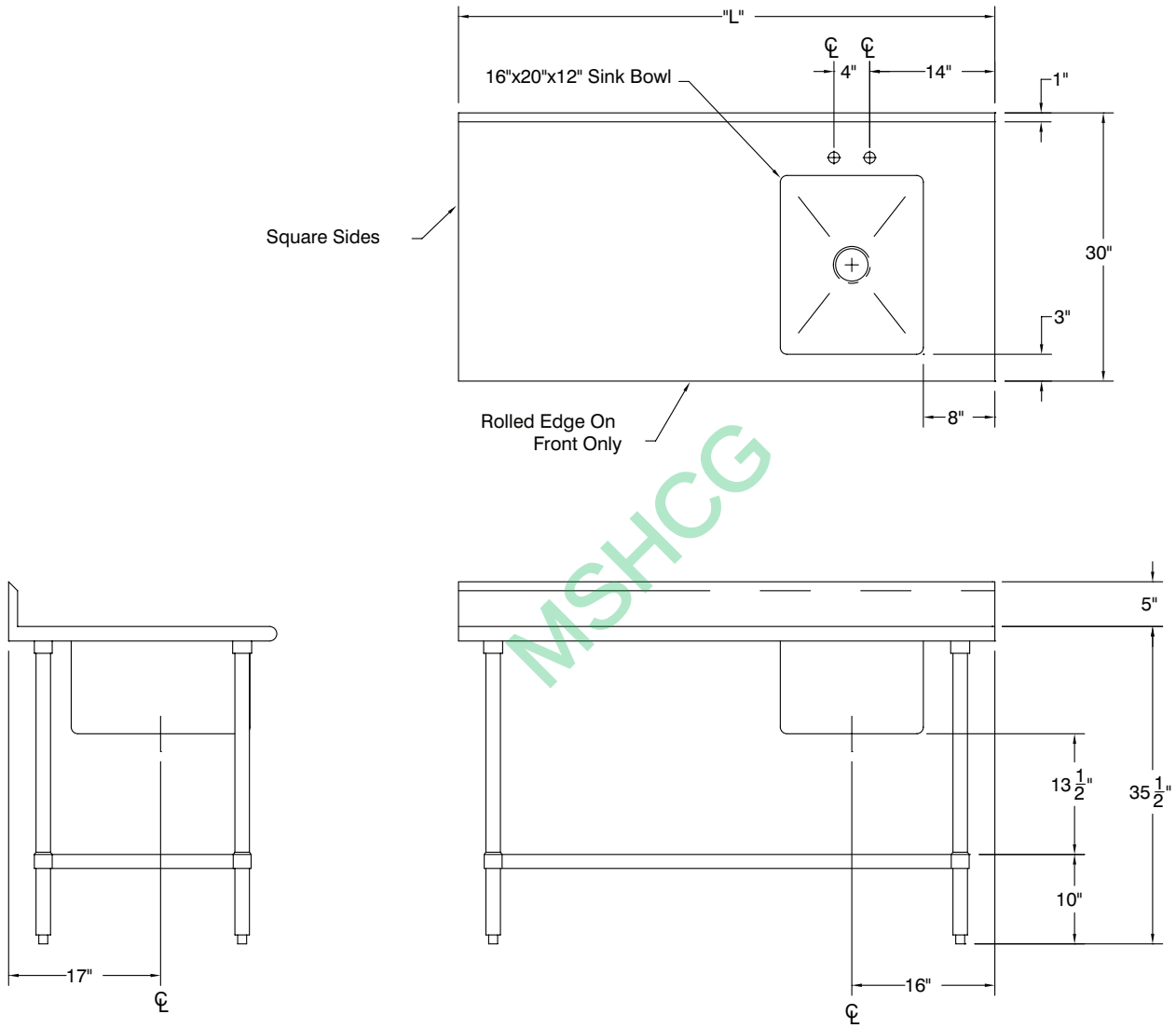

MSHCG

ADVANCE TABCO is constantly engaged in a program of improving our products. Therefore, we reserve the right to change specifications without prior notice.

© ADVANCE TABCO, AUGUST 2018

CAMBRO

Item No. _____

Specifier Identification No. _____

Model No. _____

Quantity _____

Ingredient Bins

Standard

Models IBSF27 – 27 gallon (102 L)
IB32 – 32 gallon (121 L)
IB36 – 34 gallon (129 L)
IB44 – 43 gallon (161 L)

StoreSafe

Features & Benefits

- Stores and transports a wide variety of dry ingredients such as flour, sugar, rice or grains. Perfect for restaurants, food manufacturers or commissaries.
- Available in 27, 32, 34, and 43 gallon (102, 121, 129, 161 L) capacity to meet standard industry requirements for storage and transportation of bulk foods.
- One-piece, seamless single-wall polyethylene bin construction is extremely durable. Won't rust or corrode. Liquids and dry foods will not stick or seep between seams.
- FDA accepted material. Meets all food contact requirements and eliminates need for liners.
- Smooth interior and exterior are easy to clean.
- Injection molded Camwear® polycarbonate lids are transparent, break resistant and offer quick and easy identification of contents. Slide-back feature for easy access.
- Working height permits storage under standard work tables.
- Heavy-duty 3" (7,6 cm) casters, 2 front swivel, 2 fixed, are bolted into molded-in steel plates and will not pull out or fall off.
- No assembly required.
- Available in White (148) only with Clear (135) cover.



IBSF27



IB32



IB36



IB44

MSHCG

Approvals

NSF

Ingredient Bins

Standard

Models IBSF27 – 27 gallon (102 L)
IB32 – 32 gallon (121 L)
IB36 – 34 gallon (129 L)
IB44 – 43 gallon (161 L)

Item No. _____

Specifier Identification No. _____

Model No. _____

Quantity _____

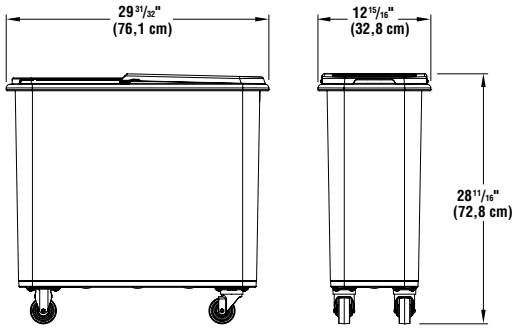

IBSF27

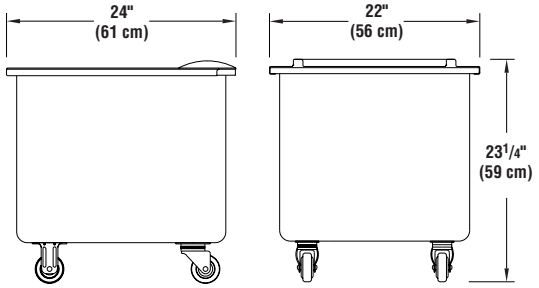

IB32

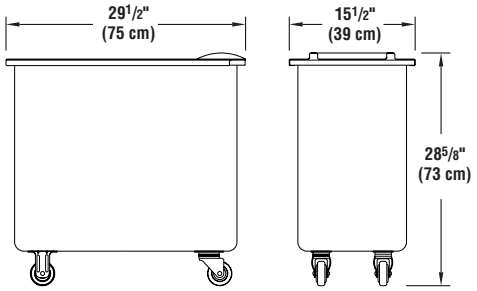

IB36

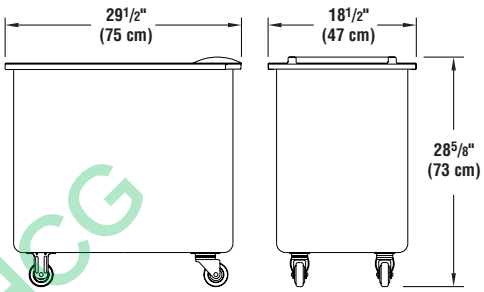

IB44

MSHCG

Specifications

Dimension Tolerance: +/- 1/4" (0,64 cm)

Code	Description	Volume Capacity	Load Capacity Sugar	Load Capacity Flour	Exterior Dimensions W x D x H	Case lbs./cube Kg/m³
Standard Ingredient Bin						
IBSF27	27 gal. Ingredient Bin (102 L)	3.56 Cubic feet (0,100) Cubic meters	216 lbs. (98 kg.)	150 lbs. (68 kg.)	12 15/16" x 29 31/32" x 28 11/16" (32,8 x 76,1 x 72,8 cm)	28.5 (6.91) 11,2 (0,196)
IB32	32 gal. Ingredient Bin (121 L)	4.28 Cubic feet (0,121) Cubic meters	215 lbs. (97,5 kg.)	160 lbs. (73 kg.)	22" x 24" x 23 1/4" (56 x 61 x 59 cm)	27.75 (7.50) 13 (0,21)
IB36	34 gal. Ingredient Bin (129 L)	4.54 Cubic feet (0,128) Cubic meters	252 lbs. (114 kg.)	180 lbs. (82 kg.)	15 1/2" x 29 1/2" x 28 5/8" (39 x 75 x 73 cm)	30 (8.51) 14 (0,24)
IB44	43 gal. Ingredient Bin (161 L)	5.69 Cubic feet (0,161) Cubic meters	320 lbs. (145 kg.)	230 lbs. (104 kg.)	18 1/2" x 29 1/2" x 28 5/8" (47 x 75 x 73 cm)	30.75 (9.14) 14 (0,26)

Architect Specs

The Ingredient Bins shall be Cambro Model..., manufactured by Cambro Mfg. Co., Huntington Beach, CA 92648 U.S.A. Each unit shall be one piece, seamless, single-wall molded construction made of FDA Approved white polyethylene. Unit capacity shall range from 27 - 43 gallons (102 - 161 L) and/or 3.56 - 5.69 cu. ft. (0,100 - 0,161 cubic meters).

It shall have four each 3" (7,6 cm) casters with 1 1/4" (3,2 cm) wide tread, 2 front swivel and 2 fixed, mounted on molded-in steel plates. It shall have an injection molded, transparent, slide-back polycarbonate lid. It shall not exceed 29" (73,6 cm) in height so that it can store under standard work tables. It shall be available in white only with a clear cover.

Approvals

NSF

CAMBRO

© Cambro Manufacturing Company 5801 Skylab Road, Huntington Beach, CA 92647-2056, U.S.A.
Telephone 714 848 1555 **Toll Free** 800 854 7631 **Customer Service Department** 800 833 3003

D041115 Ingredient Bin CS

ADVANCE TABCO
SMART FABRICATION™

STAINLESS STEEL

WORK TABLES

PREMIUM Series - 5" Backsplash - Open Base Style



Item #: _____ Qty #: _____

Model #: _____

Project #: _____



Rolled Rim Edges on Front & Splash on Back and Square Side Edges



1-5/8" LEG STRETCHERS Ensure Stability

FEATURES:

Top is furnished with 1 5/8" sanitary rolled rim edge on front and square sides, and a 5" splash with a 1" return on the rear side.

24" wide tables supplied with TWO hat channels stud welded to reinforce and maintain a level working surface. 30" and 36" wide tables supplied with THREE hat channels.

Pre-engineered welded angle adapters insure ease of future drawer installation.

Front to back Stretchers are welded to legs. Left to right Stretcher bolted to legs and requires assembly.

CONSTRUCTION:

All TIG welded. Exposed weld areas polished to match adjacent surfaces.

Entire top mechanically polished to a satin finish.

Top is sound deadened.

Roll formed embossed galvanized hat channels are secured to top by means of structural adhesive and weld studs.

Gussets welded to support hat sections.

MATERIAL:

TKSS-SERIES: Stainless Steel Legs - Open Base

TOP: 14 gauge stainless steel type "304" series.
STRETCHERS: 1 5/8" dia. tubular stainless steel.
LEGS: 1 5/8" diameter tubular stainless steel.
1" adjustable stainless steel bullet feet.
Stainless steel gussets.

TKLG-SERIES: Galvanized Legs - Open Base

TOP: 14 gauge stainless steel type "304" series.
STRETCHERS: 1 5/8" dia. tubular galvanized steel.
LEGS: 1 5/8" diameter tubular galvanized steel.
1" adjustable plastic bullet feet.
Galvanized steel gussets.

MSHCG

TKSS-Series:
Stainless Steel Legs & Stretchers

L	24" Wide	30" Wide	36" Wide
30"	TKSS-240	TKSS-300	
24"	TKSS-242	TKSS-302	
36"	TKSS-243	TKSS-303	TKSS-363
48"	TKSS-244	TKSS-304	TKSS-364
60"	TKSS-245	TKSS-305	TKSS-365
72"	TKSS-246	TKSS-306	TKSS-366
84"	TKSS-247	TKSS-307	TKSS-367
*96"	TKSS-248	TKSS-308	TKSS-368
*108"	TKSS-249	TKSS-309	TKSS-369
*120"	TKSS-2410	TKSS-3010	TKSS-3610
*132"	TKSS-2411	TKSS-3011	TKSS-3611
*144"	TKSS-2412	TKSS-3012	TKSS-3612

TKLG-Series:
Galvanized Steel Legs & Stretchers

L	24" Wide	30" Wide	36" Wide
30"	TKLG-240	TKLG-300	
24"	TKLG-242	TKLG-302	
36"	TKLG-243	TKLG-303	TKLG-363
48"	TKLG-244	TKLG-304	TKLG-364
60"	TKLG-245	TKLG-305	TKLG-365
72"	TKLG-246	TKLG-306	TKLG-366
84"	TKLG-247	TKLG-307	TKLG-367
*96"	TKLG-248	TKLG-308	TKLG-368
*108"	TKLG-249	TKLG-309	TKLG-369
*120"	TKLG-2410	TKLG-3010	TKLG-3610
*132"	TKLG-2411	TKLG-3011	TKLG-3611
*144"	TKLG-2412	TKLG-3012	TKLG-3612

NSF

*Units 8 ft. and larger are furnished with six (6) legs

Create Your Own Efficient Workstation with the Available Standard Accessories (Visit Section

ADVANCE TABCO
SMART FABRICATION™
www.advancetabco.com

Customer Service Available To Assist You 1-800-645-3166 8:30 am - 8:00 pm E.S.T.

For Orders & Customer Service:
Email: customer@advancetabco.com or **Fax:** 631-242-6900

For Smart Fabrication™ Quotes:
Email: smartfab@advancetabco.com or **Fax:** 631-586-2933

DETAILS and SPECIFICATIONS

ALL DIMENSIONS ARE TYPICAL TOL ± .500”

All Units Shipped Unassembled (KD) for Reduced Shipping Costs.

TKSS & TKLG Series
Open Base Style
5” Backsplash

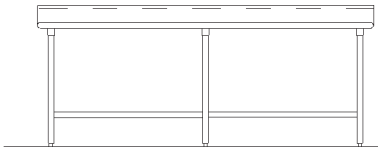

Units 8ft. and larger are furnished with six (6) legs

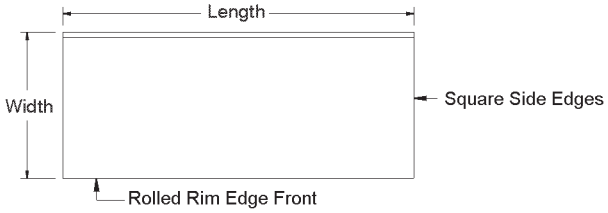

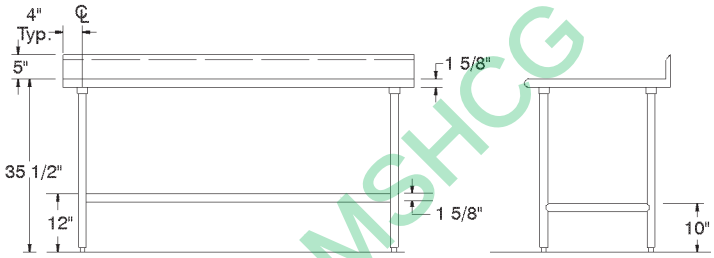

MsHCG

TKSS-Series: Stainless Steel Legs & Stretchers

L	24” Wide	Wt.	30” Wide	Wt.	36” Wide	Wt.
30”	TKSS-240	49 lbs.	TKSS-300	55 lbs.		
24”	TKSS-242	43 lbs.	TKSS-302	48 lbs.		
36”	TKSS-243	55 lbs.	TKSS-303	62 lbs.	TKSS-363	80 lbs.
48”	TKSS-244	67 lbs.	TKSS-304	75 lbs.	TKSS-364	85 lbs.
60”	TKSS-245	77 lbs.	TKSS-305	89 lbs.	TKSS-365	99 lbs.
72”	TKSS-246	89 lbs.	TKSS-306	97 lbs.	TKSS-366	112 lbs.
84”	TKSS-247	107 lbs.	TKSS-307	118 lbs.	TKSS-367	131 lbs.
96”	TKSS-248	119 lbs.	TKSS-308	131 lbs.	TKSS-368	145 lbs.
108”	TKSS-249	135 lbs.	TKSS-309	150 lbs.	TKSS-369	165 lbs.
120”	TKSS-2410	234 lbs.	TKSS-3010	249 lbs.	TKSS-3610	268 lbs.
132”	TKSS-2411	258 lbs.	TKSS-3011	276 lbs.	TKSS-3611	298 lbs.
144”	TKSS-2412	273 lbs.	TKSS-3012	291 lbs.	TKSS-3612	313 lbs.

TKLG-Series: Galvanized Steel Legs & Stretchers

L	24” Wide	Wt.	30” Wide	Wt.	36” Wide	Wt.
30”	TKLG-240	49 lbs.	TKLG-300	55 lbs.		
24”	TKLG-242	43 lbs.	TKLG-302	48 lbs.		
36”	TKLG-243	55 lbs.	TKLG-303	62 lbs.	TKLG-363	80 lbs.
48”	TKLG-244	67 lbs.	TKLG-304	75 lbs.	TKLG-364	85 lbs.
60”	TKLG-245	77 lbs.	TKLG-305	89 lbs.	TKLG-365	99 lbs.
72”	TKLG-246	89 lbs.	TKLG-306	97 lbs.	TKLG-366	112 lbs.
84”	TKLG-247	107 lbs.	TKLG-307	118 lbs.	TKLG-367	131 lbs.
96”	TKLG-248	119 lbs.	TKLG-308	131 lbs.	TKLG-368	145 lbs.
108”	TKLG-249	135 lbs.	TKLG-309	150 lbs.	TKLG-369	165 lbs.
120”	TKLG-2410	234 lbs.	TKLG-3010	249 lbs.	TKLG-3610	268 lbs.
132”	TKLG-2411	258 lbs.	TKLG-3011	276 lbs.	TKLG-3611	298 lbs.
144”	TKLG-2412	273 lbs.	TKLG-3012	291 lbs.	TKLG-3612	313 lbs.

ADVANCE TABCO
SMART FABRICATION™

ADVANCE TABCO is constantly engaged in a program of improving our products. Therefore, we reserve the right to change specifications without prior notice.

200 Heartland Boulevard, Edgewood, NY 11717-8380
© ADVANCE TABCO, SEPTEMBER 2018

Item # _____

Quantity _____

C.S.I. Section 11400

HOBART
701 S Ridge Avenue, Troy, OH 45374
1-888-4HOBART • www.hobartcorp.com

HS9/HS9N SLICER

STANDARD FEATURES

KNIFE

- 13" CleanCut™ Knife
- Removable Ring Guard Cover
- Zero Knife Exposure
- Heavy-Gauge Stainless Steel Knife Cover
- Top-Mounted Borazon Stone Sharpener

OPERATION

- ½ H.P. Knife Drive Motor
- Timing Belt for Automatic Drive System
- Variable Four-Speed Automatic Carriage with Front Mounted Controls
- Three Stroke Lengths

INTERLOCKS

- Home-Start Position
- Close-to-Stop
- Gauge-Plate Interlock
- Carriage-System Interlock
- No-Volt Release
- 30-Second Shut Off

HOUSING AND BASE

- Sanitary Anodized Aluminum Base
- Machined Grooves on Gauge Plate and Knife Cover
- Exclusive Tilting, Removable Carriage System
- Electroless Nickel Plated Single Slide Rod with Reservoir Wick in Transport
- Double-Action Indexing Cam
- Lift Assist Cleaning Leg
- Ergonomic-Style Handle
- Rear-Mounted, Removable Meat/Vegetable Grip Arm

MODELS

- ❑ HS9 – Automatic Slicer/Anodized Finish with Removable Knife Feature
- ❑ HS9N – Automatic Slicer/Anodized Finish with Non-Removable Knife Feature

ACCESSORIES

- ❑ Full Fence
- ❑ Food Chute
- ❑ Debris Deflector

Specifications, Details and Dimensions on Inside and Back.

MSHCG



HS9/HS9N SLICER

HS9/HS9N SLICER

HOBART
701 S Ridge Avenue, Troy, OH 45374
1-888-4HOBART • www.hobartcorp.com

SOLUTIONS / BENEFITS

PRECISION SLICING

13" CleanCut™ Knife
- Super alloy edge stays sharp longer
- Lasts two to three times longer than carbon coated or stainless steel knives

Top Mounted Borazon Stone Sharpener
- Single-action sharpens and hones in just 15 seconds
- Removable and warewasher safe for easy cleaning and sanitation – can be used wet or dry
- Lifetime guaranteed Borazon sharpening stones provide maximum performance with reduced maintenance costs

Machined Grooves on Gauge Plate and Knife Cover
- Reduces drag for smoother slicing motion

Double-Action Indexing Cam
- The first full revolution of the indexing knob provides precise control of shaving, chipping and thin slicing
- The second revolution opens the gauge plate quickly for thicker slicing
- Gauge plate holds position for consistent, precision slicing

EASY TO USE

½ H.P. Knife Drive Motor
- Reserve power runs at 430 rpm for optimum results

Timing Belt Automatic Drive System
- Extends belt life while producing optimum slicing results
- Quieter operating slicer
- Four carriage speeds including 28, 38, 48 and 58 strokes per minute

Three Stroke Lengths
- Three stroke lengths ideal for a variety of products

Electroless Nickel Plated Single Slide Rod with Reservoir Wick in Transport
- Smooth operation with continuous lubrication of carriage rod

Zero Knife Exposure*
- Knife edge is covered when sharpener is both mounted and removed, making cleaning easier
- Gauge plate remains closed during operation of sharpener

Home Start Position
- Carriage must be in 'home position' before the slicer will start

Close to Stop
- Closing of the gauge plate turns off the slicer

Gauge Plate Interlock
- Gauge plate must be closed to remove carriage for cleaning and cannot be opened when removed

Carriage System Interlock
- Will not tilt away or remove if gauge plate is not closed

No Volt Release
- Slicer must be restarted if power fails or slicer is unplugged

Automatic Shutoff
- Knife shuts off after 30 seconds of inactivity

EASY TO CLEAN

Removable Knife Option* – HS9
- Knife easily removes with patented removal tool
- Area within ring guard is open for faster cleaning
- Knife and tool are warewasher safe for easy cleaning and sanitation

Removable Ring Guard Cover*
- Catches product debris around the knife for easy removal during cleaning
- Reduces time to 'floss' during cleaning

Exclusive Tilting, Removable Carriage System*
- Tilt design allows for ease of mid-day cleaning
- Removable for complete cleaning and sanitation

Rear-Mounted, Removable Meat Grip
- Opens up front of product tray for unobstructed loading
- Removable meat grip allows for easy cleaning

Lift Assist Cleaning Leg
- Gas assisted leg helps operator easily lift machine for cleaning underneath

Sanitary Anodized Aluminum Base
- Limited cracks/crevices or bolt holes where product can lodge and bacteria may grow
- Easy clean up and durable finish

*Feature unique to Hobart

MSHCG

HOBART
701 S Ridge Avenue, Troy, OH 45374
1-888-4HOBART • www.hobartcorp.com

HS9/HS9N SLICER

SPECIFICATIONS

KNIFE

13" CleanCut Knife: The knife is approximately 13 inches, constructed of 304L stainless steel and high performance Stellite alloy. Knife cover is retained magnetically, and is quickly removed by pulling straight back on the top cover knob.

Removable Knife Option HS9: The patented knife removal tool covers the knife edge and safely removes knife from gauge plate to allow for thorough cleaning.

Removable Ring Guard Cover: Fits on top of ring guard to catch food debris. When removed, reveals a 0.12" space between knife and guard for easier flossing. Ring guard is made with Zytel™ plastic and can be washed in warewasher or three compartment sink.

Zero Knife Exposure: Knife edge is not exposed during cleaning or sharpening procedures.

Top Mounted Borazon Stone Sharpener: Single action operation utilizing two Borazon stones to sharpen and hone in five seconds. Removable, top mounted and warewasher safe. When sharpener is removed for cleaning, knife edge is completely shielded. Borazon stones have a lifetime guarantee.

MOTOR

Poly V-Belt Knife Drive System: Knife is driven by a Hobart Poly V belt and runs at 430 rpm for optimal performance.

Four Stroke Speeds: Stroke speed can be set to 28, 38, 48 and 58 strokes per minute.

½ H.P. Knife Drive Motor: ½ H.P. permanently lubricated ball bearings. Single phase capacitor-start, induction run.

INTERLOCKS

Home Start Position: Home-start ensures carriage is in a convenient position before starting the slicer.

Close to Stop: After slicing, a quick turn of the index knob to the closed position turns off the slicer.

Gauge Plate Interlock: Gauge plate interlock protects knife edge when indicator is at zero.

Carriage System Interlock: Carriage will not tilt away or remove if gauge plate indicator is not closed.

No Volt Release: In the event of a power loss, slicer must be restarted before operation can continue.

Automatic Shut Off: Knife shuts off after 30 seconds of inactivity to extend motor life and save energy.

HOUSING AND BASE

Sanitary Anodized Aluminum Base: One-piece base has fewer places to harbor soil and is easier to clean. Limits holes or crevices in which food can lodge.

Finish: Stainless steel top cover, anodized aluminum product tray and gauge plate.

Exclusive Tilting, Removable Carriage System: Aluminum product tray tilts easily for mid-day cleaning and is removable for thorough cleaning and sanitation procedures. The carriage has 12.5" manual travel.

Electroless Nickel Plated Single Slide Rod with Reservoir Wick in Transport: Transport slide rod is E-Nickel electroless plated. Slide rod bearings feature an oil reservoir/oil wick.

Double-Action Indexing Cam: A solid construction index knob moves the gauge plate via a barrel cam ensuring consistent slice thickness across machine and over time. First revolution of index cam for precision slicing; second revolution for thicker slicing selection.

Lift Assist Cleaning Leg: Gas assisted leg helps operator easily lift machine for cleaning underneath.

Ergonomic Style Handle: Specially shaped and positioned for ease of use during manual operation.

Rear Mounted, Removable Meat Grip Arm: Rear mounted grip is high strength thermoplastic. Swings out of way when not in use.

Electrical Specification: 120/60/1; 5.6 Amps.

Switch: Moisture protected push button switch.

Cord & Plug: 6-foot, three-wire power supply cord and plug. Plug not furnished on export models.

Capacity: The carriage will take food up to 5¾" x 10¾" rectangle or 7.5" in diameter.

Gauge Plate: Gauge plate is a heavy aluminum extrusion with machined grooves for smooth feeding. Adjustable to cut any thickness of slice up to 1".

Warranty: All parts and service coverage for one year including knife. Lifetime guarantee on Borazon stones in the sharpening system.

Shipping Weight: 142 lbs.

MSHCG

HS9/HS9N SLICER

HOBART
701 S Ridge Avenue, Troy, OH 45374
1-888-4HOBART • www.hobartcorp.com

DETAILS AND DIMENSIONS

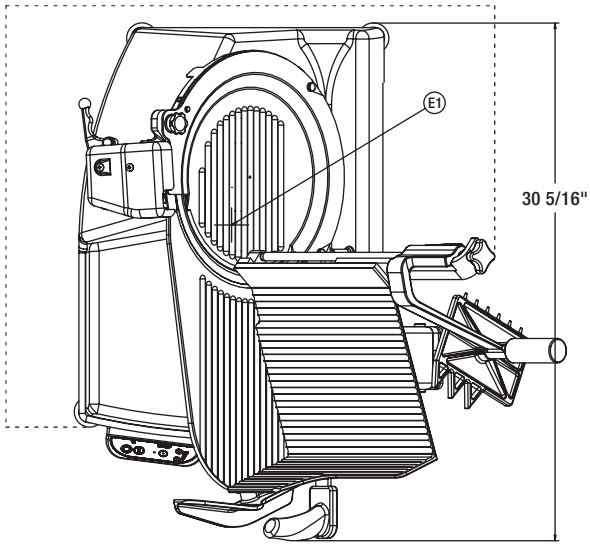

⚠ WARNING

ELECTRICAL AND GROUNDING CONNECTIONS MUST COMPLY WITH THE APPLICABLE PORTIONS OF THE NATIONAL ELECTRICAL CODE AND/OR OTHER LOCAL ELECTRICAL CODES.

E1 - ELECTRICAL CONNECTIONS

MSHCG

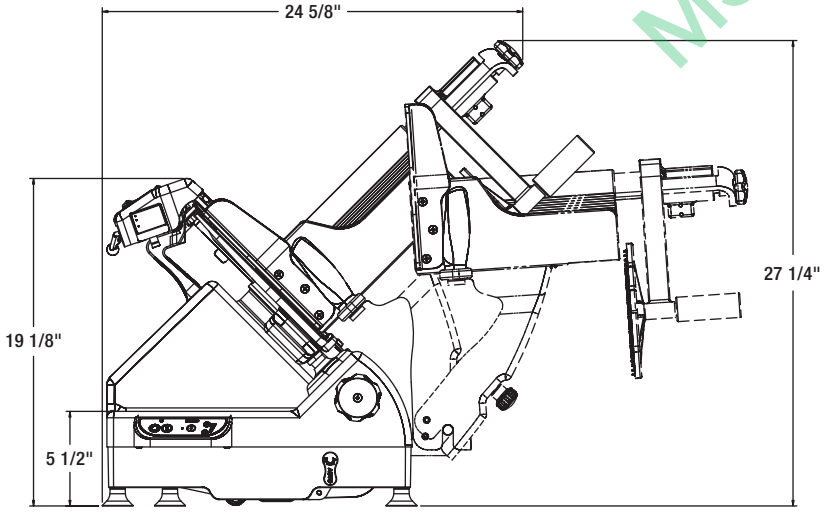

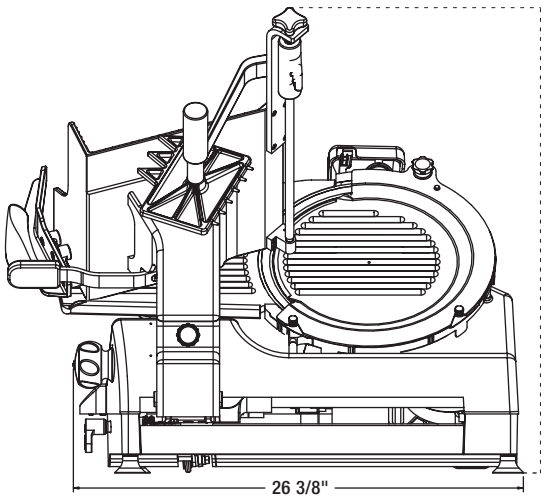

As continued product improvement is a policy of Hobart, specifications are subject to change without notice.

JOB NAME: | QUANTITY: | ITEM NO.:

SPEC. 29599

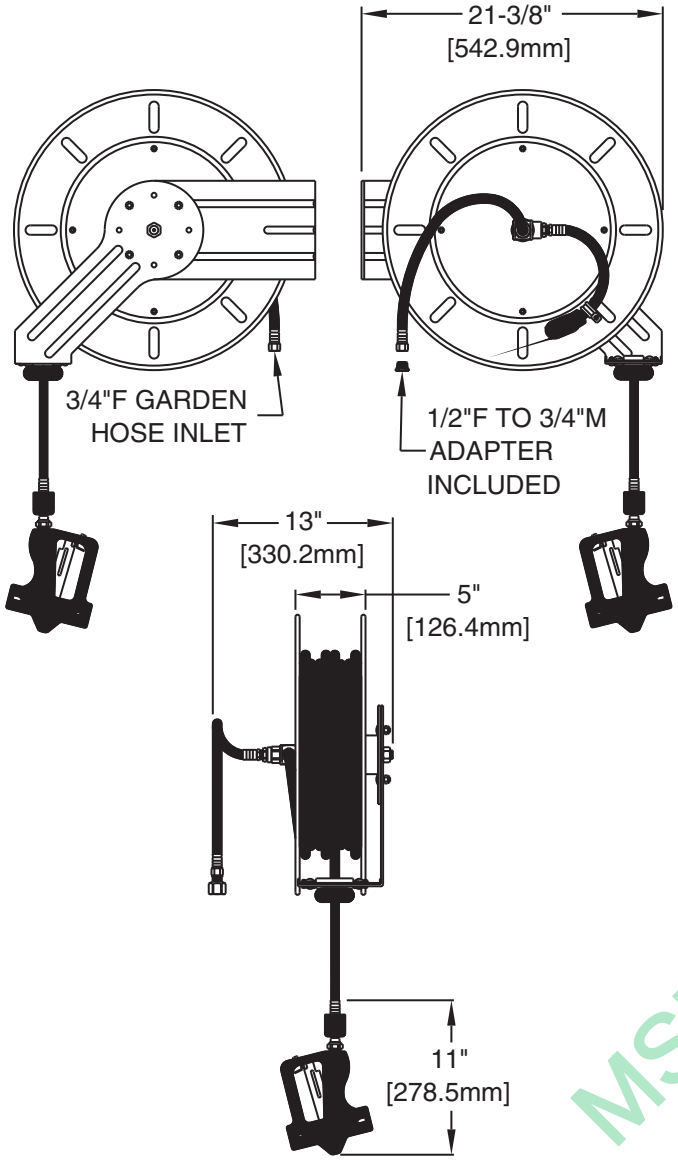

ROUGH-IN: SEE MOUNTING PLATE BELOW

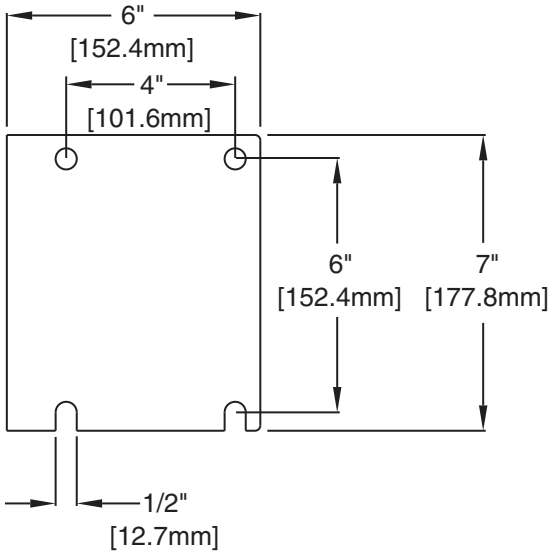

ANSI/A112.18.1M

PRODUCT NAME:

STAINLESS STEEL REEL RINSE EXPOSED WITH SPRAY GUN

☐ _____ SPECIAL CONFIGURATION
(CHECK BASE MODEL AND OPTIONS)

MODEL:

- ☐ 29599 W/ 35' LENGTH HOSE
- ☐ 29262 W/ 50' LENGTH HOSE

OPTIONS OR MODIFICATIONS:

☐ OTHER _____

FEATURES:

REEL RINSE
* EXPOSED DESIGN
* STAINLESS STEEL CONSTRUCTION
* GUIDE ARM ADJUSTABLE TO 9 POSITIONS
* RATCHET LOCK AND EASY TENSION ADJUST
* STAINLESS STEEL OR BRASS FLUID PATH

HOSE
* 35' OR 50' LENGTH REEL HOSE
* 5/8" ID HIGH TEMPERATURE HOSE
* 3-PLY FIBER REINFORCED
* 1/2"F NPT OR 3/4"F GARDEN HOSE INLET
* 18" LENGTH INLET HOSE
* ADJUSTABLE BALL STOP

SPRAY GUN
* STAINLESS STEEL CONSTRUCTION
* WATERPROOF NYLON COVER
* ERGONOMIC DESIGN
* LOCKING TRIGGER MECHANISM
* 7.0 GPM AT 80 PSI

SYSTEM LIMITS
* TEMP: 40°F MIN. TO 140°F MAX.
* PRESSURE 150 PSI MAX. STATIC

SHIPPING WEIGHT
* 29599 - 55.0 LBS
* 29262 - 60.0 LBS

MSHOG

FISHER MANUFACTURING COMPANY
1900 SOUTH "O" STREET, TULARE, CALIFORNIA 93274
MAILING ADDRESS: P.O. BOX 60, TULARE, CALIFORNIA 93275
PHONE: (800) 421-6162 FAX: (800) 832-8238
M A D E I N U S A

100

SND-2 With AC-PSP & PSP Accessory

Low Ceiling Exhaust Hood With Make-Up Air



The SND-2 Series is a Type I, Sloped Wall Canopy Hood for use over 400°F and 600°F cooking surface temperatures. The Sloped Canopy is the ideal hood choice for low ceiling heights.

Features & Benefits

- Superior exhaust flow rates.
- Insulated, double-wall rigid front has aerodynamic design that reduces radiant heat into kitchen, prevents condensation and provides exceptional capture and containment of cooking vapors. The signature "mechanical baffle" on the front of the hood's capture area is available on 18" Front Model only.
- The mechanical baffle provides a built-in wiring chase for optimal positioning of electrical controls and outlets on the front face of the hood without penetrating capture area or requiring external chase way.
- U.L. incandescent light fixtures and globes shall be installed and pre-wired to a junction box. The light fixtures shall be installed with a maximum of 4'0" spacing on center and allow up to a 100 watt standard light bulb.
- Pre-punched hanging angles on each end of hood and additional set provided for hoods 12' and longer.
- Polished stainless steel on the interior and exterior of the front enhance aesthetics. Fully welded and polished front corners. Fabricated from stainless steel. Sloped front for low ceiling applications.
- All hoods come standard with stainless steel baffle filters and a deep grease trough which allows for easy cleaning. Grease drain system with removable 1/2 pint cup for easy cleaning. Standard filter stops eliminate gaps between filters.
- Hoods can be equipped with modular utility cabinets and end standoffs. Optional listed light and fan control switches flush mounted and pre-wired through electrical chase way.
- Rigid single wall end panels reduce weight.
- Front Make-Up Air (PSP Accessory) Featuring
  - Provides up to 80% Make-up Air
  - Low Discharge Velocities
  - Directs Make-up Air Into Hood's Capture Area
  - Evenly distributes make-up air along the length of the hood
  - Stainless steel construction to match the ventilation hood
- Front Make-Up Air (AC-PSP Accessory) Featuring
  - Provides up to 80% Make-up Air
  - Delivers AC where it is needed most
  - AC air does not interfere with hood's capture and containment
  - Make-up plenum is located nearest the hood; the air conditioned plenum is away from the hood
  - Make-up air stream and the air conditioned air stream are not permitted to mix until leaving the dual plenum
  - Perforated, stainless steel diffuser plates provide even air distribution
  - Stainless steel construction to match the ventilation hood
  - Optional LED Lights

MSHCG

Options

- Utility Cabinet
- Electrical Controls
- Front Perforated Supply Plenum
- Fully Integrated Self Cleaning System
- CORE Fire Suppression
- Integral Clearance to Combustibles System
- ETL Listed Exhaust Fire Damper
- Enclosure Panels to Ceiling
- Type 304 Stainless Steel Construction
  - Exposed Surfaces Only
  - 100% Construction
- High Velocity Cartridge Filters
  - Stainless Steel Baffle Type
  - Captrate Combo & Solo Filters
  - High Efficiency Stainless Steel Baffle
- Lighting
  - Recessed Incandescent
  - Recessed Fluorescent
  - Compact Fluorescent
  - Recessed LED
  - Halogen
- Roof Top Package

Performance Data

Max Avg Cooking Surface Temp (°F) - Cooking Surface	Configuration	Min. Exhaust CFM/Ft.	Recommended Duct Sizing
400°F - Ovens, Steamers, Kettles, Open-Burner Ranges, Griddles, Fryers	Single Wall Hood	228	Exhaust - Based on 1500 FPM
	2 Wall Hoods Back-to-Back in an Island Configuration	456	
600°F - Gas Charbroilers, Electric Charbroilers	Single Wall Hood	294	
	2 Wall Hoods Back-to-Back in an Island Configuration	588	

- Separate Exhaust and/or Make-Up Air Fans
- Heated Make-Up Air Units
  - Direct Gas Fired Heated Make-Up Air Fans
  - Indirect Gas Fired Heated Make-Up Air Units
  - Electric Heated Make-Up Air Units
- Face Mounted Controls

Specifications

Description The model SND-2 is a Type I wall mounted or double island, exhaust canopy used for collection and removal of grease-laden vapors and smoke over all types of restaurant equipment. The hood shall provide flexibility in designing kitchen ventilation equipment and shall be tested and listed for use over 400ºF light/medium duty cooking surfaces and 600ºF heavy duty cooking surfaces.

Construction The hood shall be constructed of type 430 stainless steel with #3 or #4 polish where exposed. All seams shall be welded or in conformance with UL 710 Standards. Unexposed surfaces shall be constructed of aluminized steel. Individual component construction shall be determined by manufacturer and ETL. Construction shall be dependent on the structural application to minimize distortion and other defects. All seams, joints and penetrations of the hood where grease-laden vapors and exhaust gases are present must be liquid-tight, continuous weld in accordance with NFPA 96.

The hood shall be constructed to include:

- A double wall insulated front to eliminate condensation and increase rigidity.
- An integral front baffle to direct grease-laden vapors toward the exhaust filter bank.
- Removable grease cup to facilitate cleaning
- A built-in wiring chase for electrical controls on the front face of the hood designed to avoid penetration of the capture area and eliminate the need for an external chaseway.
- ETL incandescent light fixtures and globes, allowing up to a 100 watt standard light bulb, installed and pre-wired to a junction box and installed with a maximum of 3'-6" spacing on center.
- Exhaust duct collar 4" high with 1" flange.
- A minimum of 4 connections for hanger rods. Corner hanging angles have a 5/8" x 1-1/2" slot pre-punched at the factory, allowing hanging rods to be used for quick and safe installation.
- UL Classified stainless steel baffle filters, with size and quantity determined by the hood's dimensional parameters, but extending the full length of the hood with filler panels not to exceed 6".

Certifications

The SND-2 Model has been certified by ITS. This certification mark indicates that the product has been tested to and has met the minimum requirements of a widely recognized (consensus) U.S. and Canadian products safety standard, that the manufacturing site has been audited, and that the applicant has agreed to a program of periodic factory follow-up inspections to verify continued performance.

Models SND-2 are ETL Listed under file number 3054804-001 and complies with UL710, ULC710 and ULC-S646 Standards.

Sectional View SND-2 With PSP

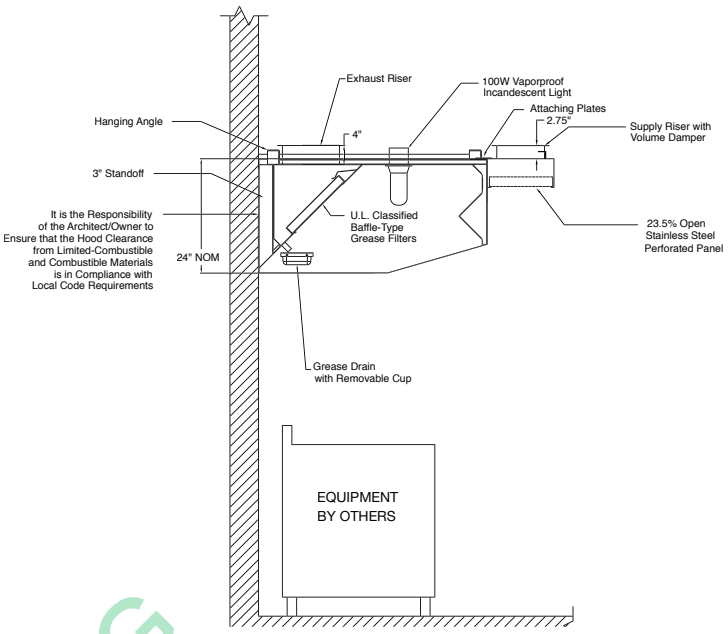

MSHCG

100

SND-2 With AC-PSP & PSP Accessory

Low Ceiling Exhaust Hood With Make-Up Air



The SND-2 Series is a Type I, Sloped Wall Canopy Hood for use over 400°F and 600°F cooking surface temperatures. The Sloped Canopy is the ideal hood choice for low ceiling heights.

Features & Benefits

- Superior exhaust flow rates.
- Insulated, double-wall rigid front has aerodynamic design that reduces radiant heat into kitchen, prevents condensation and provides exceptional capture and containment of cooking vapors. The signature “mechanical baffle” on the front of the hood’s capture area is available on 18” Front Model only.
- The mechanical baffle provides a built-in wiring chase for optimal positioning of electrical controls and outlets on the front face of the hood without penetrating capture area or requiring external chase way.
- U.L. incandescent light fixtures and globes shall be installed and pre-wired to a junction box. The light fixtures shall be installed with a maximum of 4’0” spacing on center and allow up to a 100 watt standard light bulb.
- Pre-punched hanging angles on each end of hood and additional set provided for hoods 12’ and longer.
- Polished stainless steel on the interior and exterior of the front enhance aesthetics. Fully welded and polished front corners. Fabricated from stainless steel. Sloped front for low ceiling applications.
- All hoods come standard with stainless steel baffle filters and a deep grease trough which allows for easy cleaning. Grease drain system with removable 1/2 pint cup for easy cleaning. Standard filter stops eliminate gaps between filters.
- Hoods can be equipped with modular utility cabinets and end standoffs. Optional listed light and fan control switches flush mounted and pre-wired through electrical chase way.
- Rigid single wall end panels reduce weight.
- Front Make-Up Air (PSP Accessory) Featuring
  - Provides up to 80% Make-up Air
  - Low Discharge Velocities
  - Directs Make-up Air Into Hood’s Capture Area
  - Evenly distributes make-up air along the length of the hood
  - Stainless steel construction to match the ventilation hood
- Front Make-Up Air (AC-PSP Accessory) Featuring
  - Provides up to 80% Make-up Air
  - Delivers AC where it is needed most
  - AC air does not interfere with hood’s capture and containment
  - Make-up plenum is located nearest the hood; the air conditioned plenum is away from the hood
  - Make-up air stream and the air conditioned air stream are not permitted to mix until leaving the dual plenum
  - Perforated, stainless steel diffuser plates provide even air distribution
  - Stainless steel construction to match the ventilation hood
  - Optional LED Lights

Options

- Utility Cabinet
- Electrical Controls
- Front Perforated Supply Plenum
- Fully Integrated Self Cleaning System
- CORE Fire Suppression
- Integral Clearance to Combustibles System
- ETL Listed Exhaust Fire Damper
- Enclosure Panels to Ceiling
- Type 304 Stainless Steel Construction
  - Exposed Surfaces Only
  - 100% Construction
- High Velocity Cartridge Filters
  - Stainless Steel Baffle Type
  - Captrate Combo & Solo Filters
  - High Efficiency Stainless Steel Baffle
- Lighting
  - Recessed Incandescent
  - Recessed Fluorescent
  - Compact Fluorescent
  - Recessed LED
  - Halogen
- Roof Top Package

Performance Data

Max Avg Cooking Surface Temp (°F) - Cooking Surface	Configuration	Min. Exhaust CFM/Ft.	Recommended Duct Sizing
400° F - Ovens, Steamers, Kettles, Open-Burner Ranges, Griddles, Fryers	Single Wall Hood	228	Exhaust - Based on 1500 FPM
	2 Wall Hoods Back-to-Back in an Island Configuration	456	
600° F - Gas Charbroilers, Electric Charbroilers	Single Wall Hood	294	
	2 Wall Hoods Back-to-Back in an Island Configuration	588	

Mcilroy

- Separate Exhaust and/or Make-Up Air Fans
- Heated Make-Up Air Units
  - Direct Gas Fired Heated Make-Up Air Fans
  - Indirect Gas Fired Heated Make-Up Air Units
  - Electric Heated Make-Up Air Units
- Face Mounted Controls

Specifications

Description The model SND-2 is a Type I wall mounted or double island, exhaust canopy used for collection and removal of grease-laden vapors and smoke over all types of restaurant equipment. The hood shall provide flexibility in designing kitchen ventilation equipment and shall be tested and listed for use over 400ºF light/medium duty cooking surfaces and 600ºF heavy duty cooking surfaces.

Construction The hood shall be constructed of type 430 stainless steel with #3 or #4 polish where exposed. All seams shall be welded or in conformance with UL 710 Standards. Unexposed surfaces shall be constructed of aluminized steel. Individual component construction shall be determined by manufacturer and ETL. Construction shall be dependent on the structural application to minimize distortion and other defects. All seams, joints and penetrations of the hood where grease-laden vapors and exhaust gases are present must be liquid-tight, continuous weld in accordance with NFPA 96.

The hood shall be constructed to include:

- A double wall insulated front to eliminate condensation and increase rigidity.
- An integral front baffle to direct grease-laden vapors toward the exhaust filter bank.
- Removable grease cup to facilitate cleaning
- A built-in wiring chase for electrical controls on the front face of the hood designed to avoid penetration of the capture area and eliminate the need for an external chaseway.
- ETL incandescent light fixtures and globes, allowing up to a 100 watt standard light bulb, installed and pre-wired to a junction box and installed with a maximum of 3'-6" spacing on center.
- Exhaust duct collar 4" high with 1" flange.
- A minimum of 4 connections for hanger rods. Corner hanging angles have a 5/8" x 1-1/2" slot pre-punched at the factory, allowing hanging rods to be used for quick and safe installation.
- UL Classified stainless steel baffle filters, with size and quantity determined by the hood's dimensional parameters, but extending the full length of the hood with filler panels not to exceed 6".

Certifications

The SND-2 Model has been certified by ITS. This certification mark indicates that the product has been tested to and has met the minimum requirements of a widely recognized (consensus) U.S. and Canadian products safety standard, that the manufacturing site has been audited, and that the applicant has agreed to a program of periodic factory follow-up inspections to verify continued performance.

Models SND-2 are ETL Listed under file number 3054804-001 and complies with UL710, ULC710 and ULC-S646 Standards.

Sectional View SND-2 With PSP

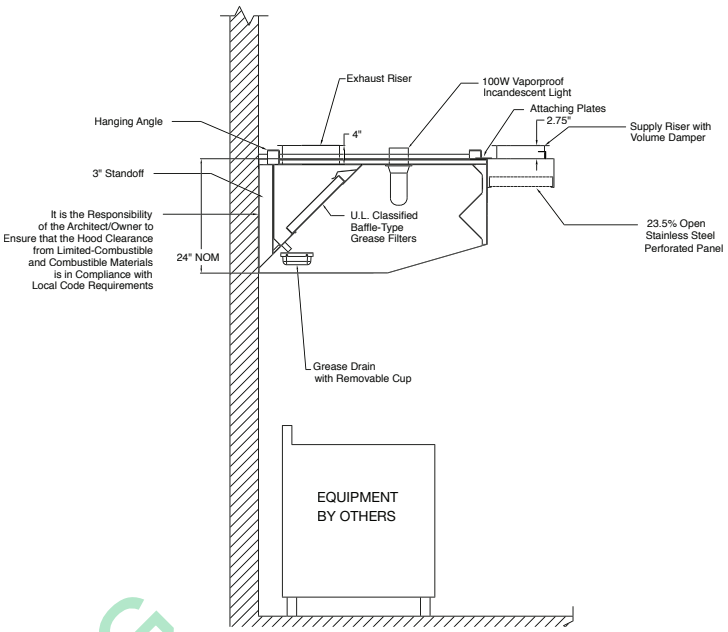

MSHCG

www.captiveaire.com

Blue Ridge

601 S Peters Rd #12, Knoxville, TN, 37922 PHONE: (865) 278-8089 FAX: (919) 227-5993 EMAIL: reg16@captiveaire.com

#47---Refer to CaptiveAire Plans
#48---Refer to CaptiveAire Plans
#49---Refer to CaptiveAire Plans
#50---Refer to CaptiveAire Plans
#60---Refer to CaptiveAire Plans
#61---Refer to CaptiveAire Plans

MSRCC

www.captiveaire.com

Blue Ridge

601 S Peters Rd #12, Knoxville, TN, 37922 PHONE: (865) 278-8089 FAX: (919) 227-5993 EMAIL: reg16@captiveaire.com

#47---Refer to CaptiveAire Plans
#48---Refer to CaptiveAire Plans
#49---Refer to CaptiveAire Plans
#50---Refer to CaptiveAire Plans
#60---Refer to CaptiveAire Plans
#61---Refer to CaptiveAire Plans

MSRCC

ANGELO PO AMERICA INC.
2920 TURNPIKE DRIVE - SUITES 3-4
HATBORO, PENNSYLVANIA 19040
www.angelopoamerica.com

ANGELO PO – TBFXA610



OPEN STAND FOR OVENS FX61 - FX101

NSHCC

AISI 304 stainless steel structure with undershelf and height-adjustable feet. For a (18) 12"X20" Hotel Pan Capacity please add accessory TBFXA61V. Optional: KRTB610 wheels; KSTBFX space-saving tanks kit for detergent and brightener; KASX seismic feet kit, CPTX3 drawer for two tanks.

Net Dimensions WxDxH	34.96"x27.24"x26.9" (88.8x69.2x68.3 cm)
Shipping Dimensions WxDxH	35.5"x31.5'x33.5" (90x80x85 cm)

Call Angelo Po America customer care or technical service if there is any further clarification required.

ANGELO PO AMERICA - 2920 TURNPIKE DRIVE HATBORO, PA 19040 - 1-888-OVENS4

ANGELO PO

TBFXA610

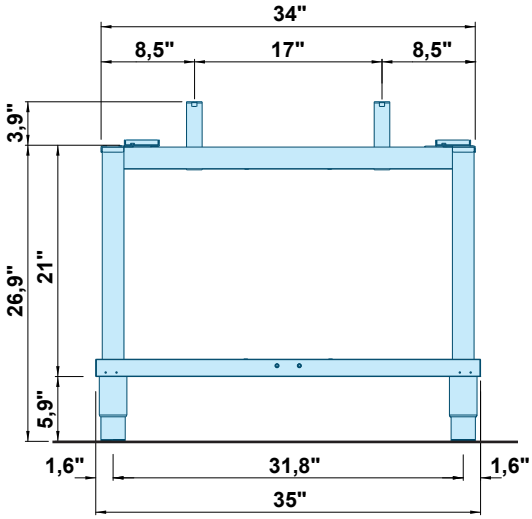

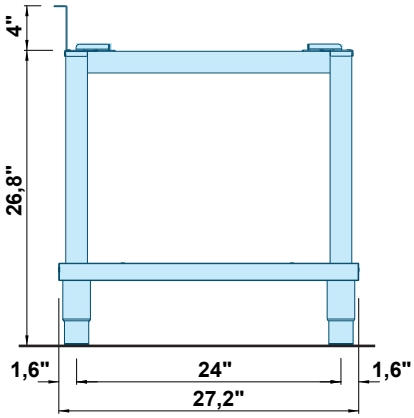

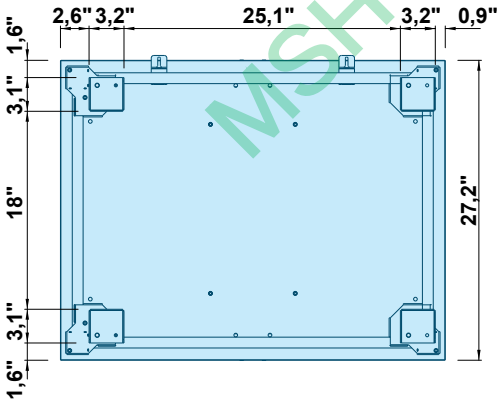

MSHCG

Progetto - Lay Out - Projet - Entwurf - Proyecto	Area - Area - Area - Zone - Area	Posizione - Item - Position - Position - Posiccion
Offerta - Offer - Offre - Angebot - Oferta	Area - Area - Area - Zone - Area	Posizione - Item - Position - Position - Posiccion

ANGELO PO AMERICA INC.
2920 TURNPIKE DRIVE - SUITES 3-4
HATBORO, PENNSYLVANIA 19040
www.angelopoamerica.com

COMBICARE All-In-One™ - COMBINATION OVEN/STEAMER



ANGELO PO – FX101G3 Combistar™ / COMBICARE All-In-One™ Combi oven, Natural Gas, 71,000 Btu's, 120v/1phase/60 Hz, Boilerless (10) 12"X20" Hotel Pan Capacity.

Programmable controls with touch display, 150 cooking programs with 18 steps each, 76 program automatic clever cooking icon files, Favorites menu, USB interface, AISI 316L marine grade stainless steel cavity, EHO ergonomic hands-free door handle, DCR humidity control and management sensor, auto-reverse 5-speed fan and 1 static mode, PDP progressive density 5 point multi-sensor probe, TAS fully automatic self-cleaning washing system, ADC patented drain cleaning system, WDC descale warning indicator, APM automatic power management, MCF steam cloud escape reduction, user manual onboard icon, RDC & EVOS boilerless and efficient steam generation system, EVC color graphic shatterproof control display panel, EASYSTAR film & video capability, Eco Function to reduce energy and water consumption, special cooking techniques programs: Holding, Delta T, Low Temperature Cooking, Rethermalization, HACCP Control Management, Hot and Cold Smoking, Vacuum Cooking, Drying and Advanced Cook & Chill Interface Technology.

MSHCG

- Convection Heat: 50°F↔572°F (10°C ↔ 300°C) - 0% ↔ 100% Humidity
- Steam: 86°F↔257°F (30°C ↔ 125°C)
- Combination: 86°F↔482°F (30°C ↔ 250°C) - 0% ↔ 90% Humidity

COMBICARE All-In-One™ Package includes: certified installation (refer to installation criteria), water quality analysis test kit, reverse osmosis water treatment system, preventive maintenance program (one authorized service agent technical diagnostic review for each year of warranty), cleaning chemicals (one 10-liter container of detergent, and one 10-liter container of brightener), chef training, free freight within the U.S. contiguous states.

COMBICARE All-In-One ™ PACKAGE WARRANTY: 3-year parts and labor

Optional "FMSX" Smoker. An external independent accessory, positioned on the top of the oven, powered by a 120v standard outlet plug. The FMSX smoker, working in concert with the FX Combistar combi oven, allows for smoking of any product, in hot or cold condition, without taking up space within the combi oven cooking cavity.

Optional "FMP" Pasteurization Kit. Easy, safe and consistent quality in food pasteurization, thanks to the management of the thermal cycle realized by direct use of the cooking core probe.

Model	FX101G3 Combistar™
Description	COMBICARE All-In-One™ Combi oven, Natural Gas, 71,000 Btu's, 120v/1phase/60 Hz, Boilerless (10) 12"X20" Hotel Pan Capacity
Maximum Exterior Dimensions WxDxH	36-7/32" x 35-15/32" x 40-35/64" (920 x 901 x 1030 mm)
Minimum Exterior Dimensions WxDxH	36-7/32" x 30-9/16" x 34-1/2"+{4" feet} (920 x 776 x 875+{101,6 feet} mm)
Interior Dimensions WxDxH	25-25/64" x 25-19/32" x 29-23/32" (645 x 650 x 755 mm)
Net Weight	374 lb (170 Kg)
Shipping Weight	401 lb (182Kg)
Crate Dimensions WxDxH	39-49⁄64" x 37-63⁄64" x 49-29⁄64" (1010 x 965 x 1256 mm)
Full size (20"x12"x2-1/2") pan Capacity	ten (10)
1/1 GN (530x325x65mm) pan Capacity	ten (10)
Half size sheet (18"x13"x1") pan Capacity	ten (10) on wire shelves only (additional wire shelves required for maximum capacity)
2/1 GN (650x530x65mm) pan Capacity	-
Pan Module Distance	2-19⁄32" (66 mm)
Product Capacity	107 Quarts (101 l) - 127 lb (58 Kg) Max
Gas Power	71,000 BTU (20,8kW) Nat and LPG
Max Connected Pressure NG	10.5" WC
Min Connected Pressure NG	3.5" WC
Max Connected Pressure LPG	13" WC
Min Connected Pressure LPG	8" WC
Hook Up	3/4" NPT
Notes	All ovens can be converted between NG and LPG in the field
Electric Power	0,828 Kw
Voltage	120V
Phase	1ph N
Amperes	6,9 A
Cycle/Hz	60 Hz
AWG	AWG12
Notes	Oven cannot work on any GFI outlet or breaker
WATER INLET (Drinking, Cold Water) for steam production	Inlet: 3/4" - Line Pressure: 30 to 60 psi (2 to 4 bar)
Required Clorine	< 0,1 ppm (mg/l)
Required Clorides	< 30 ppm (mg/l)
Required Sulphates	< 30 ppm (mg/l)
Recommended Iron	< 0,1 ppm (mg/l)
Recommended Copper	< 0,05ppm (mg/l)
Recommended Manganese	< 0,05ppm(mg/l)
Hardness	3 to 9°f (1,5 to 5 °d; 2,1 to 6,3 °e; 30 to 90 ppm)
Langelier Index	> 0,5
TDS	40 to 150 ppm
Flow Rate	: 4,6 Gallons/h
PH	7 to 8,5
WATER OUTLET	1-1/4" Drain with Air Gap
INSTALLATION REQUIREMENTS	Hood Installation is Required for Cooking Smoke
	The Oven Must Be Installed Level
	Install Water Supply Shut-Off Valve and Back-Flow Preventer
CLEARANCE REQUIREMENTS	Left side of equipment: 20" from heat source and 19" recommended for service access. Minimum clearance 6-1/2" - When left side clearance is less than 20" from a heat source, please inquire about a Angelo Po heat shield accessory.
	Right: Min. clearance 3-57⁄64"
	Top: Min. clearance 12"
	Bottom: Min. clearance 4" (also in the Counter Top installations)
	Back: 20" from heat cooking equipment (oven in the middle of the room) - Min. clearance 4"



Staking Solutions	FX101+FX61
(Max. Ext. Dimensions WxDxH)	36-7/32" x 37-1⁄64" x 72-1⁄4" (920 x 940 x 1835 mm)

It is highly recommended that the Angelo Po reverse osmosis water treatment systems (APWT100-CL), as well as Angelo Po brand cleaning chemicals (CL55XL detergent and BR55XL brightener) be used and incorporated into all Angelo Po Combistar combi oven installations.
It is the sole responsibility of the owner / operator / purchaser of the Angelo Po equipment, to verify that the incoming water supply is comprehensively tested to meet the Angelo Po water compliance standards, published in this document.
Non-compliance with the Angelo Po water standards noted herein could potentially damage the equipment and/or VOID the original manufacturer's standard warranty.

Call Angelo Po America customer care or technical service if there is any further clarification required.

ANGELO PO AMERICA - 2920 TURNPIKE DRIVE HATBORO, PA 19040 - 1-888-OVENS4U

MSHCC

FX101G3

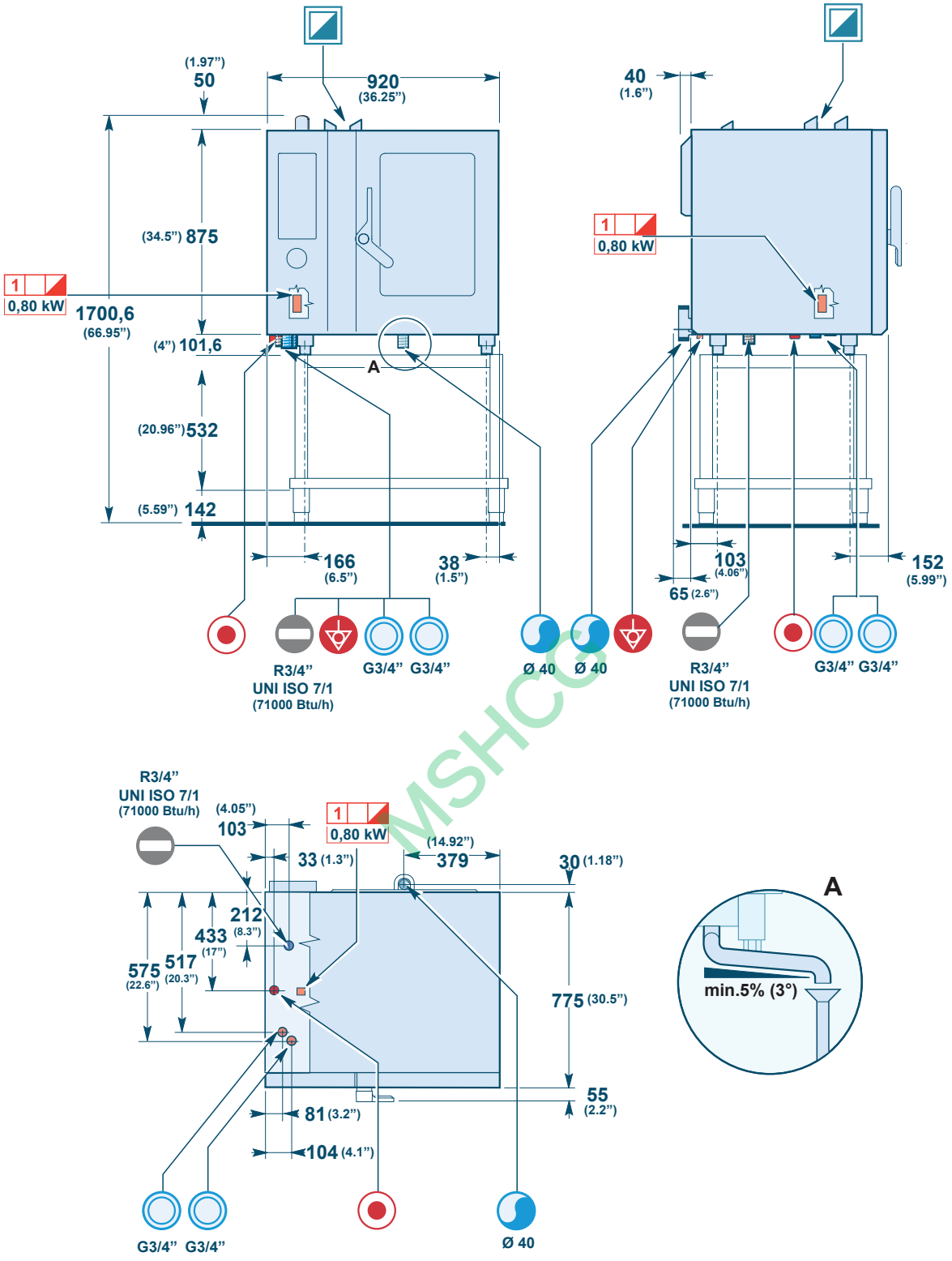

MSHCG

CARTER-HOFFMANN

COOK & HOLD CABINET
Model CH1600U
Cook to Time or Product Temperature



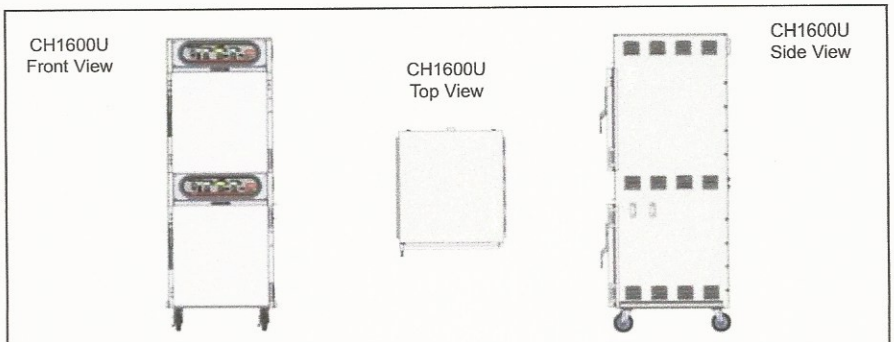

Carter-Hoffmann CAD Drawing Scale: 1/4" = 1'

Model Number	Capacity* 12"x20"x5" GN 1/1 Pans	Approximate Meat Capacity	Spacing in	Spacing mm	Inside Working Height in	Inside Working Height mm	Overall Dimensions Height in	Overall Dimensions Height mm	Overall Dimensions Depth in	Overall Dimensions Depth mm	Overall Dimensions Width in	Overall Dimensions Width mm	Caster Diameter in	Caster Diameter mm	Shipping Weight lbs	Shipping Weight kg
☐ CH1600U	16	240 lbs	$2^{3}/_{4}$	70	$22^{5}/_{8}$**	575	$76^{3}/_{8}$	1940	$32^{5}/_{8}$	829	$29^{3}/_{8}$	746	5	127	420	190

*CH1600U accommodates (16) 12"x20"x2.5" and GN1/1 pans, side-loaded (2 per shelf), or (8) GN2/1 pans per cavity; will accommodate (8) 18"x26", end-loaded, on optional wire shelves, per cavity.

CONSTRUCTION... Completely welded cabinet construction with outer cabinet welded to base. All seams turned in to eliminate raw edges. Gray vinyl bumper set in channel on each side of cabinet.

CABINET MATERIAL... All stainless steel double-wall, insulated construction.

BASE FRAME...stainless steel full depth caster bolsters with stainless steel perimeter supports welded to bolsters.

CASTERS/FEET... 5" casters with rubber tread. Double ball bearing swivel. Zerk grease fittings. Plate mounted and bolted to base. Front casters fitted with brakes.

INSULATION...2" thick high density wrap-around fiberglass insulation.

DOORS... Welded double panel stainless steel door; turned-in seam pocket construction. Filled with 2" thick high density fiberglass insulation. Field reversible. One door for each cavity.

HINGES... Adjustable self-closing, edgemount hinges with chrome plate finish.

GASKET... High temperature silicone gasket mounted to cabinet.

LATCH... Heavy-duty edgemount latch with magnetic catch.

TRAY RACK ASSEMBLIES... Removable stainless steel tray racks with solid stainless steel angle slides. Slides welded to assemblies and spaced on 2.75" centers. Can accommodate up to (8) 18"x26" sheet pans per cavity on optional wire shelves.

THERMOMETER... Digital thermometer with remote sensing bulb for cabinet operating temperature. Digital temperature displays in temperature window of current mode (cook or hold) by pushing "view actual temp" key.

CONTROLS... User-friendly digital controls with digital readout displays for settings. Dual cavity with dual controls. Includes meat probe. Cook to time or product temperature. Master on/off switch with "start/cancel" button for cook cycles. Touchpad to view actual temperature. Separate controls & displays for cook temperature and hold temperature. Eighteen hour digital timer display shows cook temperature in count down mode during cook cycle. During hold cycle, automatically switches to count up.

HEATING SYSTEM... Top mounted blower heater for even heat distribution. High impedence protected, internally cooled fan motor. Full range thermostat and on/off switch with power indicating light and "start/cancel" button.

HEAT DUCT SYSTEM... Side-mounted precision engineered interior heat duct system to provide gentle heat circulation throughout cabinet to caramelize roasts for less food shrinkage and more attractive appearance.

ELECTRICAL CHARACTERISTICS...
Operates on 240 volts, 6200 watts, 25.8 amps, 60 Hz, single phase.NEMA 6-30P plug.

PERFORMANCE... Capable of slow cooking to a maximum temperature of 325°F (161° C). Capable of holding at a range of 100°F (38°C) to 200°F (93°C). Preheat to 160°F (71° C) in approximately 25 minutes. Temperature variance less than 5°F(3°C), top to bottom.

ACCESSORIES/OPTIONS...
- ☐ Menu card holder
- ☐ Tamper resistant fasteners
- ☐ Locking door latch
- ☐ 208 volt operation
- ☐ 230 volt CE operation
- ☐ Wire shelves to accommodate 18"x26"pans

MSHCG

Specifications subject to change through product improvement & innovation.

CARTER-HOFFMANN
1551 McCormick Ave., Mundelein, IL 60060
(847) 362-5500 • (800) 323-9793 • Fax (847) 367-8981
www.carter-hoffmann.com

Printed in U.S.A. CookHolds 0216
Carter-Hoffmann is a trademark of Carter-Hoffmann LLC.

COOK & HOLD CABINET
Model CH1600U

Since 1947, Foodservice Equipment That Delivers!

FEATURES & BENEFITS

CARAMELIZATION IS KEY... Precision engineered heating system with gentle, consistent blower heat carmelizes roasts and seals in juices for minimal shrinkage and more portions. And it produces a more natural, attractive product with superior taste.

CONVECTION HEATING SYSTEM... Fully contained heater with forced air cooking. Side air ducts for optimal air flow and even circulation throughout cabinet.

VENTILATION HOOD NOT REQUIRED... Because these cabinets cook at a lower temperature than standard convection ovens, a hood is not needed (check local codes).

ALL STAINLESS STEEL CONSTRUCTION... Welded, turned-in seam construction for long durable life and ease of cleaning and safety.

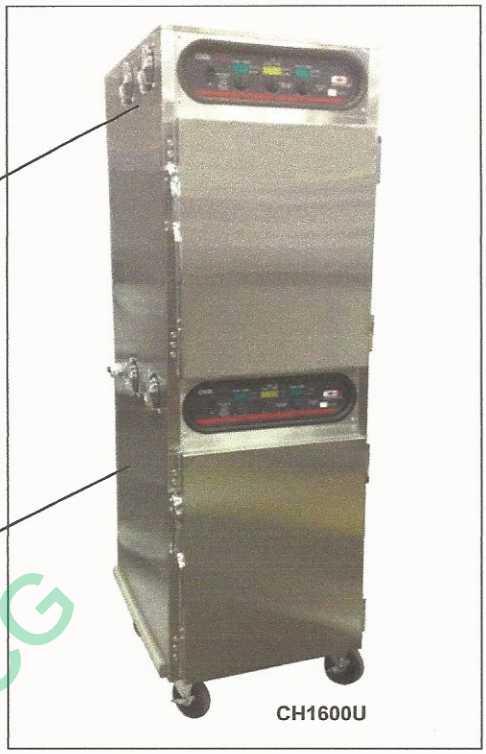

CH1600U



EASY-TO-USE DIGITAL CONTROLS... Control cooking and holding with separate dial controls and digital display. Cook according to time or according to product temperature with meat probe. Temperature range of 100°F to 200°F for hold cycle and 100°F to 325°F for cook cycle. Eighteen hour timer counts down in cook cycle. When cook cycle is over, cabinet automatically switches to hold cycle and timer counts up. Displays in Farenheit or Celcius scale.



UNIVERSAL PAN SLIDES... Accommodates 12"x20"x2.5", GN 1/1 and GN 2/1 pans. Will accommodate 18"x26" sheet pans on optional wire shelves.

MEAT PROBE INCLUDED

CARTER-HOFFMANN
1551 McCormick Avenue, Mundelein, Illinois 60060
Tel. (847)362-5500 • (800)323-9793 • Fax (847)367-8981
www.carter-hoffmann.com

MSHCG

Ultimate Restaurant Range 72" Series

Job _____ Item# _____

Standard Features

- Commercial gas range 73" wide with a 37" high cooking top
- 4"Stainless steel front rail, stainless steel front and sides
- (2) Front located, manual, gas shut-off valves for each side of the range
- One year No Quibble, 24/7 parts and labor warranty
- Factory installed Regulator
- Four (4) removable, cast iron grate tops (rear holds up to 14" stock pot)
- Standing pilot for open top burners
- Battery spark ignition for oven bases

Optional 33K Non-clog Burners (Burner Option 1)

- (10) patented, one piece, lifetime clog free, cast iron burners
- 33,000 BTU NAT

✓ **Optional 5 Burner configuration (Burner Option 5)**

- Combine (2) Pyromax burners in the rear with (3) standard 33K burners in the front

Optional Griddle Top (L or R)

- 36" Available
- 1/2" thick cold rolled steel griddle plate
- Manual or thermostatically controlled

✓ **Optional Charbroiler (L ~~or~~ R)**

- 36" Available
- Removable, cast iron grates

Refer to AutoQuotes for list pricing.



(4721DD shown with optional casters)

MSHCG

CONSTRUCTION SPECIFICATIONS

Exterior Finish: Stainless steel front, sides and shelf standard.

RangeTop: 27" deep cooking surface. Center-to-center measurements between burners not less than 12", side-to-side or front-to-back. Two (2) removable one piece drip trays are provided under burners to catch grease drippings.

Flue Riser: 22.5" flue riser standard with heavy duty shelf. Optional 10" and 5" flue riser available without shelf.

Oven Door: Spring assisted door.

Oven Interior: Double sided, full porcelain enamel oven cavity for superior cleanability and corrosion protection. Coved corners for easy cleaning and enhanced airflow eliminating hot/cold spots.

Legs: (6) total 6" stainless steel adjustable legs standard (casters optional)

Pressure Regulator: Factory installed.

Standard Oven Models (D)

45,000 BTU NAT oven with standing pilot and thermostat range of 175^{0}F to 550^{0}F (79^{0}C to 288^{0}C). Porcelain enamel interior measuring 14" high x 26" wide x 26.5" deep. Full sized pans fit both ways. One rack with two position side rails.

Convection Oven Models (A):

32,000 BTU NAT convection oven with standing pilot and thermostat range of 175^{0}F to 550^{0}F (79^{0}C to 288^{0}C). Porcelain enamel interior measuring 14" high x 26" wide x 24" deep. Three racks with five position side rails. 1/2 hp, 1710 rpm, 60 cycle, 115V AC, high efficiency, permanent split phase motor with permanent lubricated ball bearings, overload protection and Class "B" insulation. On/Off switch to allow CO base to operate as a standard oven.

Available Base Combinations

AA, DD

Dimensions -in (mm)

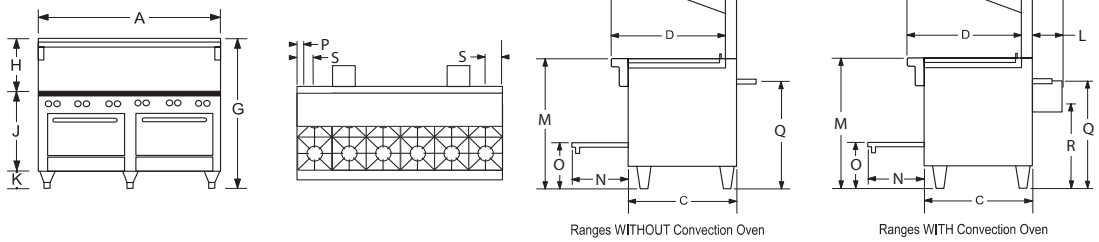

Models	Exterior											Cook Top	Door Opening	Oven Bottom	3/4" Gas Conn.		Electric	
	Width A	Depth B	C	D	E	F	G	H	J	K	L	M	N	O	P	Q	R	S
472_DD	73" (1854)	34.00" (864)	29.75" (756)	31.00" (787)	10.00" (254)	2.75" (70)	59.50" (1511)	22.50" (572)	31.00" (787)	6.00" (152)	-	37.00" (940)	15.50" (394)	13.00" (330)	3.25" (83)	30.25" (768)	-	-
472_AA	73" (1854)	42.13" (1070)	29.75" (756)	31.00" (787)	10.00" (254)	2.75" (70)	59.50" (1511)	22.50" (572)	31.00" (787)	6.00" (152)	8.25" (210)	37.00" (940)	15.50" (394)	13.00" (330)	3.25" (83)	30.25" (768)	24.00" (610)	6.00" (152)

Models	Oven Interior			Crate Size			Cubic Volume	Crated Weight
	Width	Depth	Height	Width	Depth	Height		
472_DD	26.00" (660)	26.50" (673)	14.00" (356)	78" (1981)	48.00" (1219)	74.00" (1880)	160.3 cu. ft 4.54 cu.m.	1320 lbs. 600 kg.
472_AA	26.00" (660)	24.00" (610)	14.00" (356)					

UTILITY INFORMATION

BTUs Each Burner	Std Non-Clog	Pyromax	(A) Cnv Oven per cavity	(D) Std Oven per cavity	Griddle 36"	Charbroiler 36"	Hot Top 12"	Hot Top 24"
NAT	33K	40K	32K	45K	64K	96K	24K	48K
LP	24K	31K	30K	40K	64K	96K	24K	48K

GAS:
- One 3/4" female connection.
- Required minimum inlet pressure
  - Natural gas 7" W.C.
  - Propane gas 11" W.C.

ELECTRICAL: (for models with convection ovens)
- Standard -115/60/1 furnished with 6' cord with 3-prong plug. Total max amps 5.9 per convection oven base.
- Optional -208/60/1, 50/60/1 phase. Supply must be wired to junction box with terminal block located at rear. Total max amps 2.7

MSICG

MISCELLANEOUS

- If using Flex-Hose, the I.D. should not be smaller than 3/4" and must comply with ANSI Z 21.69
- If casters are used with flex hose, a restraining device should be used to eliminate undue strain on the flex hose
- For installation on combustible floors 6" high legs or casters are required. Minimum clearance from combustible construction is 10" on sides and rear for all units except charbroilers. Charbroiler units are for use in noncombustible locations ONLY.
- Rear clearance to noncombustible construction is 10" for charbroilers and 0" for all other tops and bases. Side clearance to noncombustible constructions is 0" on all units.
- Recommended - Install under vented hood
- Check local codes for fire, installation and sanitary regulations.
- If the unit is connected directly to the outside flue, an A.G.A approved down draft diverter must be installed at the flue outlet of the oven.
- Two speed motors are not available on Restaurant Range Convection Ovens.

NOTICE: Southbend has a policy of continuous product research and improvement. We reserve the right to change specifications and product design without notice. Such revisions do not entitle the buyer to corresponding changes, improvements, additions or replacements for previously purchased equipment.

OPTIONS AND ACCESSORIES

- ☐ 5" flue riser
- ☐ 10" Flue Riser
- ☐ 3/4" quick disconnect with flexible hose complies with ANSI Z 21.69 (specify 3ft, 4ft, 5ft)
- ☐ Hot Top plate - plate replaces 2 Open burners 1, 2 or 3
- ☐ Various salamander & cheesemelter mounts available. (salamanders and cheesemelters mounts cannot be interpiped to a 72" range)
- ☐ Rear step up burners (4721AA & 4721DD ONLY)
- ☐ Flame Failure available (4721AA, 4721DD, 4721AA-3GL, 4721DD-3GL, 4721AA-3GR & 4721DD-3GR)
- ☐ Battery spark ignition for open tops, charbroilers, griddles and hot tops.
- ☐ Extra Oven Racks
- ☐ Casters-all swivel-front with locks

INTENDED FOR COMMERCIAL USE ONLY.
NOT FOR HOUSEHOLD USE.

1100 Old Honeycutt Road, Fuquay-Varina, NC 27526
(919) 762-1000 www.southbendnc.com

Form 472 Rev 4 (September/2014)

JOB NAME:

QUANTITY:

ITEM NO.:

SPEC. 2040 REV."B"

PRODUCT NAME:

POT FILLER, HOSE STYLE, DECK MOUNT

☐ _____ SPECIAL CONFIGURATION
(CHECK BASE MODEL AND OPTIONS)

MODEL:

☐ 2040

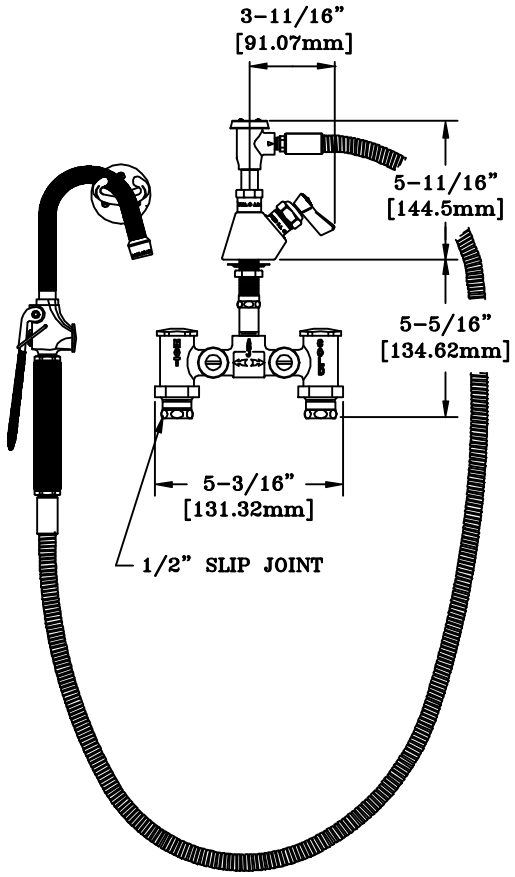

OPTIONS OR MODIFICATIONS:

- ☐ SUPPLY LINES (24" OR 36") CIRCLE LENGTH
- ☐ ADD-ON FAUCET (6",8",10",12",14",16") CIRCLE LENGTH
- ☐ IN-LINE DUAL CHECK VALVE
- ☐ VANDAL RESISTANT KIT
- ☐ HANDLES (CROSS OR WRIST) CIRCLE STYLE
- ☐ PIPE HOOK
- ☐ OTHER _____

FEATURES:

CONTROL VALVE

* SINGLE DECK
* TEMPERATURE CONTROL VALVE WITH INTERNAL SPRING LOADED CHECK VALVES
* STEM - LEFT HAND
* HOT & COLD INDEX BUTTONS
* SWIVELLING SEAT DISKS
* STAINLESS STEEL SEATS
* STAINLESS STEEL SEAT SCREWS
* STAINLESS STEEL HANDLE SCREWS

HOSE

* 60" LENGTH
* STAINLESS STEEL END FITTINGS
* STAINLESS STEEL EXTERNAL JACKET
* BRAIDED USDA APPROVED FOODGRADE INTERNAL HOSE
* REPAIRABLE IN FIELD WITH SIMPLE TOOLS

POT FILLER VALVE

* NON SCRATCHING/ MARRING TUBE
* 5.00 GPM AT 80 PSI
* AERATED STREAM

SWIVEL ELBOW

* 360° TURNING RADIUS
* ATMOSPHERIC VACUUM BREAKER

SYSTEM LIMITS

* TEMP: 40°F MIN. TO 140°F MAX.
* PRESSURE 200 PSI MAX. STATIC

SHIPPING WEIGHT

* 8.0 LBS

ROUGH-IN:

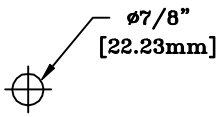

ANSI/A112.18.1M

MSHCP

FISHER MANUFACTURING COMPANY
1900 SOUTH "O" STREET, TULARE, CALIFORNIA 93274
MAILING ADDRESS: P.O. BOX 60, TULARE, CALIFORNIA 93275
PHONE: (800) 421-6162 FAX: (800) 832-8238
M A D E I N U. S. A.

Accu-Steam™ Griddle GG Series

Gas/Steam-Heated,
Stand-Mounted Griddle

Project: _____ Location: _____ Item #: _____ Quantity:_____

Short Specification

Griddle shall be an Energy Star compliant gas-heated unit, with a hermetically-sealed vacuum chamber that produces steam that heats the 8-gauge stainless steel griddle plate. Efficient steam heat transfer provides 200–400°F (93–204°C) operating temperature range and uniform griddle surface temperatures of ±5°F (±3°C). Griddle fabricated from cold-rolled stainless steel with 4.5" high back splash, sides that taper from 4.5" to 1.7", a 4" wide by 1" deep full front grease trough and 1½–2 gallon grease drawer. Griddle to be mounted on heavy duty stainless steel stand with one undershelf and casters. Unit to be NSF and UL listed and manufactured in the USA.

Construction Features

- Cold-rolled and annealed stainless steel griddle plate with polished stainless steel body and stand
- 8 gauge griddle plate
- 4" wide by 1" deep full front grease trough
- 2" x 4" drop chute to 1½–2 gallon capacity grease pan inside enclosed compartment
- Heavy duty stainless steel stand with bottom shelf

Performance Features

- Hermetically-sealed steam chamber heats high efficiency griddle plate
- Infrared burners
- Steam transfers heat evenly to entire cooking surface with only ±5°F (±3°C) in temperature variation
- Rapid surface temperature recovery [10 seconds or less] allows turning product to same spot
- Smooth cold-rolled stainless steel griddle surface speeds and simplifies cleaning

Standard Control Features

- Power-On switch & indicator light
- Heating indicator light
- 200–400°F (93–204°C) solid state thermostat
- Easy front service access to controls

Cooking Capacity & Applications

Effective Cooking Area

Depth	24" Wide	36" Wide	48" Wide
29"	677 sq. in	1017 sq. in.	1358 sq. in.
24"	558 sq. in.	838 sq. in.	1119 sq. in.

Griddle Applications include:

- Pancakes, Eggs, Sausage, French Toast
- Burgers, Grilled Onions, Toasted Buns
- Grilled Cheese, Sandwiches
- Fried Potatoes, Fish, Chicken Breasts, Philly Steaks, Liver and MORE

Environmental Approvals & Programs

ENERGY STAR ECOLOGIX

Other Approvals

NSF c UL us LISTED

Options & Accessories

- "U" Channel for connecting 2 griddles
- Front mounted prep shelf—8" wide stainless steel
- Condiment Board
- Control Guards
- Maritime Package (call for details)
- Correction Package (call for details)
- Chain Package (call for details)
- Quick disconnect with AGA approved restraint cable
- Propane available (call for details)



GGF-A36 Accu-Steam™
Stand-Mounted Griddle
(also available with bullet or flanged feet)

MSHCG

MM5209-0912

AccuTemp Products, Inc.
8415 North Clinton Park • Fort Wayne, IN 46825 • 800-210-5907 • 260-493-0415 • Fax 260-493-0318 • accutemp.net

Accu-Steam™ Griddle GG Series

Gas/Steam-Heated,
Stand-Mounted Griddle

Accu-Steam Gas Griddle Specifications						
Model #	GGF1201A2400-S2	GGF1201B2400-S2	GGF1201A3600-S2	GGF1201B3600-S2	GGF1201A4800-S2	GGF1201B4800-S2
BTU Firing Rate per Hour	50,000	50,000	70,000	70,000	96,000	96,000
Unit Width (A)	24.25 [616]	24.25 [616]	36.25 [921]	36.25 [921]	48.25 [1226]	48.25 [1226]
Unit Depth (D)	33.125 [841]	28.125 [714]	33.125 [841]	28.125 [714]	33.125 [841]	28.125 [714]
Cooking Surface Width (B)	23.875 [606]	23.875 [606]	35.875 [911]	35.875 [911]	47.875 [1216]	47.875 [1216]
Cooking Surface Depth (C)	28.375 [721]	23.375 [594]	28.375 [721]	23.375 [594]	28.375 [721]	23.375 [594]
Installation Depth (E)	38.0 [965]	33.5 [851]	38.0 [965]	33.5 [851]	38.0 [965]	33.5 [851]
Depth to Back Leg (F)	3.188 [81]	5.688 [144]	3.188 [81]	5.688 [144]	3.188 [81]	5.688 [144]
Effective Cooking Area	677 sq. in.	558 sq. in.	1017 sq. in.	838 sq. in.	1358 sq. in.	1119 sq. in.
Grease Pan Capacity	2 gal.	2 gal.	2 gal.	2 gal.	2 gal.	2 gal.
NEMA Plug	5-15	5-15	5-15	5-15	5-15	5-15

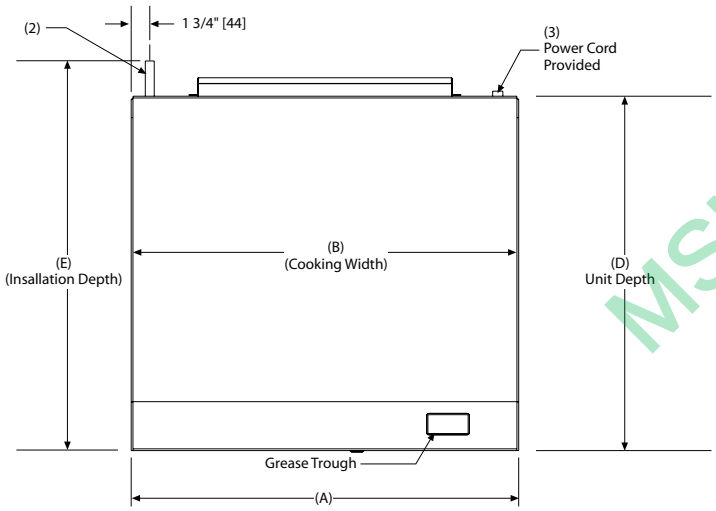

Notes:

1.) Dimensions in brackets [] are metric.
2.) 3/4" NPT gas connection, 90° elbow provided.
3.) 4' 120 volt power cord.

MSHCG

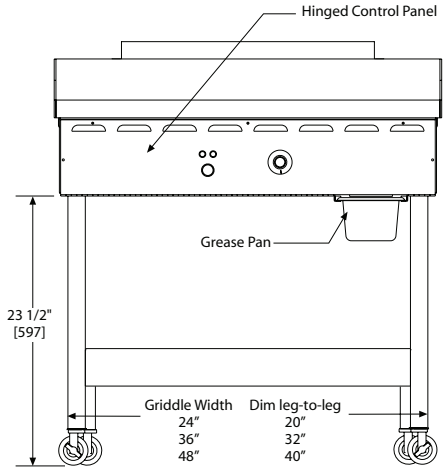

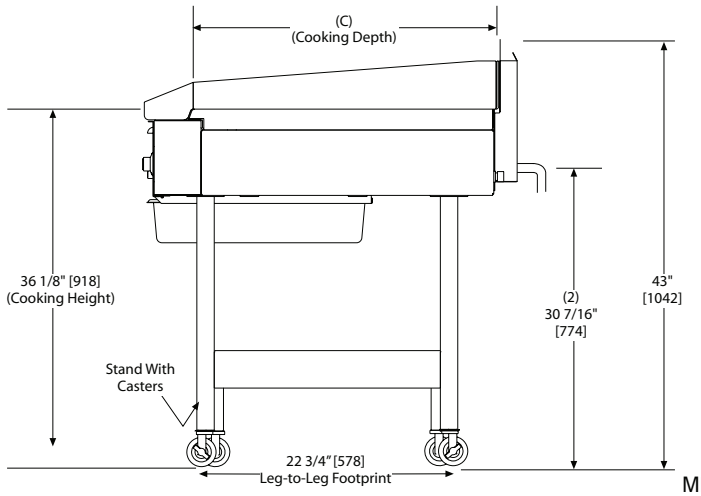

MM5209-0912

AccuTemp Products, Inc.
8415 North Clinton Park • Fort Wayne, IN 46825 • 800-210-5907 • 260-493-0415 • Fax 260-493-0318 • accutemp.net

PROJECT	QUANTITY	ITEM NO

Large capacity open fryers

MODEL **OFE-341** electric
OFG-341 gas



Large capacity open fryer, model OFE-341.

General Information

The 340 series large capacity open fryers from Henny Penny are designed to offer maximum frying surface area within a reasonable footprint. These high volume open fryers feature a larger, shallower fry well that produces more consistent frying results with items that float when cooking.

Henny Penny's unique high-efficiency heat-exchange design produces extremely fast temperature recovery—typically in seconds—without requiring excess oil to retain heat. Fast recovery speeds up production, saves energy, and preserves frying oil quality by reducing temperature fluctuations.

Built-in filtration system filters hot frying oil in under 4 minutes, with no separate pumps or pans required. Hot filtered oil returns directly to the fry well. Quick, easy and frequent filtering extends shortening life and can result in significant savings in time and direct shortening costs.

The OFE/OFG-341 open fryer features Henny Penny's heavy-duty stainless steel rectangular fry pot promotes fast, even cooking and comes with a 7-year warranty—the best in the business.

The **COMPUTRON™ 8000** control provides fully automatic, programmable operation, as well as energy-saving, filtration and cook management features.

The **COMPUTRON™ 1000** control offers programmability in a simple, easy to use digital control panel with LED display.

VSHCa

Standard Features

- Stainless steel construction for easy-cleaning and long life.
- Heavy-duty stainless steel rectangular fry pot with 7-year warranty.
- Large fry well offers greater surface area and promotes more even cooking.
- Specially designed "beach" accommodates oil displacement when lowering basket.
- Fry pot protection system (gas.)
- Built-in filtration (additional charge) with over-the-top return to wash away remnants.
- Easy basket set and release.
- Specially designed cold zone prevents scorching.
- 4 heavy-duty casters, 2 locking.
- **COMPUTRON™ 8000** control (additional charge.)
  - 12 programmable cook cycles
  - Melt mode
  - Idle mode
  - Load compensation
  - Proportional control
  - Optional filter prompt and customizable filter tracking
  - Clean-out mode.
  - 16-character digital display with multiple language settings.
- **COMPUTRON™ 1000** simple digital control.
  - Programmable
  - LED Time/Temp display
  - Simple UP/DOWN arrows

Accessories shipped with unit

- Fry baskets—please select one
  - ☐ 1 full basket
  - ☐ 2 half baskets
- Basket support
- Lift tool for basket support
- Lift tool for electric elements

Accessories and options available separately

☐ 3 third-size fry baskets per well
☐ Direct Connect shortening disposal (filtration equipped units, only)
☐ Shortening shuttle
☐ Filter rinse hose

☐ APPROVED	☐ APPROVED AS NOTED	☐ RESUBMIT
AUTHORIZED SIGNATURE		DATE

Henny Penny Corporation
PO Box 60 Eaton OH 45320 USA
+1 937 456.8400 800 417.8417
+1 937 456.8434 Fax 800 417.8434 Fax
www.hennypenny.com

© 2006 Henny Penny Corporation, Eaton, OH 45320 USA Revised 09/10/08

PROJECT	ITEM NO

Large capacity open fryers

MODEL **OFE-341** electric
OFG-341 gas

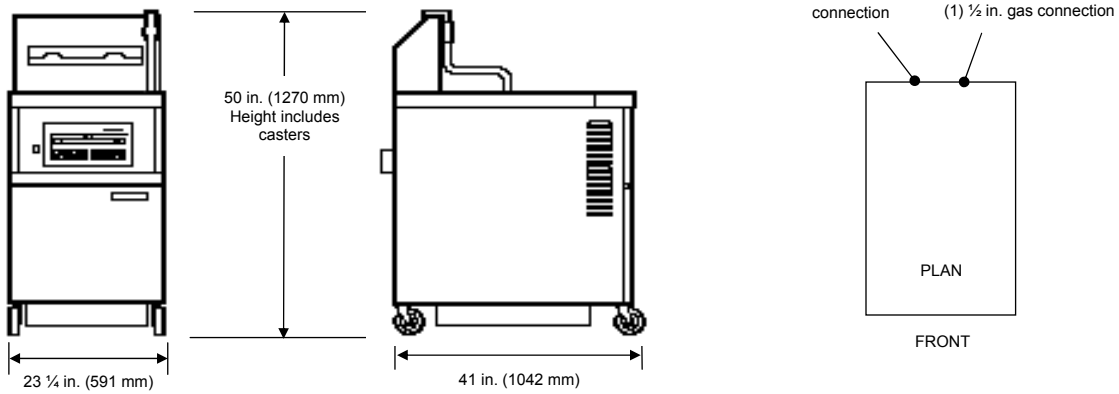

Dimensions
Width 23 ¼ in. (591 mm)
Depth 41 in. (1042 mm)
Height 50 in. (1270 mm)

Required clearances
Sides: 6 in. (152 mm) air flow
Back: 6 in. (152 mm) air flow, connections
Front: 30 in. (762 mm) filter pan removal

Crated dimensions
Length 46 in. (1169 mm)
Depth 30 in. (762 mm)
Height 65 ½ in. (1664 mm)
Volume 52.3 cu. ft. (1.48 m³)

Net weight N/A
Crated weight
Electric 348 lbs. (158 kg)
Gas 391 lbs. (177 kg)

Heating
Electric Immersed elements, 22.0 kW
Gas Natural or liquid petroleum
(3) burners, 120,000 BTU/hr (35 kW)
(1) ½ in. connection

Capacity
Product 18 lbs. (8.2 kg) bone-in chicken pcs
Oil 80 lbs. (36.0 kg) electric units
90 lbs. (41.0 kg) gas units

Electrical

Volts	Phase	Cycle/Hz	Watts	Amps	Wire
208	3	60	22000	61.0	3+G
240	3	60	22000	52.9	3+G
480	3	60	22000	26.5	3+G
Power cord and plug must be installed on site by a qualified electrician.					
Gas models					
120	1	60	N/A	12.0	2+G
230	1	50	N/A	6.2	1NG

Laboratory certifications

MSHCG

Bidding Specifications

- Provide Henny Penny large capacity open fryer, model OFE-341 electric or model OFG-341 gas, 18 lbs. (8.2 kg) capacity per load and available built-in filtration system (additional charge.)
- Units shall incorporate either **COMPUTRON™ 1000** simple digital controls or **COMPUTRON™ 8000** control system with (additional charge.)
- Materials—cabinet, deck, exhaust stack, filter drain pan and various fittings are stainless steel. Fry pot is heavy duty stainless steel.
- Units shall incorporate high-efficiency heat-exchange design for extremely fast recovery.
- Frying well is designed for large surface frying area and incorporates a flat rim to accommodate oil displacement from load.
- Heating elements encircle the fry pot part-way up the side, and are not located at the bottom or below the pot. This design produces a “cold zone” that extends oil life.
- Unit’s controller provides for programmable or manual operation with press-key controls and LED digital display. **COMPUTRON™ 8000** control offers idle and melt modes, load compensation, filtration tracking and 7-day history.
- Units will include four heavy-duty casters, two locking.
- Units with filtration system ship with stainless steel ***Max*** filtration screen and 2 PHT filter envelopes. All units ship with lifting tools for basket support and electric elements, and choice of 1 full fry basket or 2 half baskets.

Continuing product improvement may subject specifications to change without notice.

HENNY PENNY
Global Foodservice Solutions

www.hennypenny.com

© 2006 Henny Penny Corporation, Eaton, OH 45320 USA Revised 09/10/08

Gas Cabinet Base Hydraulic Tilting Skillet

Job

Item#



Model	Capacity		
	BTU	Gallon	Liter
BGMTS-30	80,000	30	114
BGMTS-40	100,000	40	152

OPERATION SHALL BE BY:

- ❑ Natural Gas
- ❑ Propane Gas

Gas fired skillet operating on 115 VAC, 1 Phase, 60Hz

OPTIONAL ITEMS AT EXTRA COST:

- ❑ 220 VAC, 1 phase, 50 Hz
- ❑ Etched gallon markings (GMS-30, GMS-40)
- ❑ Etched liter markings (LMS-114, LMS-152)
- ❑ 2" draw off valve with strainer, front or side mounted (TVT-2BP)
- ❑ 3" draw off valve with strainer, side mounted (TVT-3BP)
- ❑ Correctional Package

ACCESSORIES:

- ❑ Pan carrier (PC-1)
- ❑ Pan carrier (PC-3)
- ❑ Steam pan insert (SPI-30, SPI-40)
- ❑ 12" Single pantry faucet with swing spout (SF-12)
- ❑ 12" Double pantry faucet with swing spout (DF-12)
- ❑ 3" Stainless steel faucet plumbing enclosure (3139-1)
- ❑ Single pantry faucet & bracket with 60" pot filler (SP-KF)
- ❑ Double pantry faucet & bracket with 60" pot filler (DP-KF)

SPECIFICATIONS:

Shall be a Southbend model _____, gas fired hydraulic tilting skillet, AGA/CGA and NSF certified. The unit shall have a spring assisted hinged stainless steel cover, complete with handle and a no drip condensate guide. The pan body shall have a sloped front, be front hinged for tilting and easy pour control and comes complete with removable pour lip strainer. The pan is formed from 10 gauge stainless steel with a #4 finish exterior and polished interior with coved corners for easy cleaning. The cooking surface shall be 5/8" thick stainless steel clad cooking plate for even heat distribution over entire cooking surface. The pan shall be mounted on a heavy duty welded angle constructed frame fitted with 6" (152 mm) stainless steel legs with adjustable bullet feet on the front and flanged, adjustable feet on the rear for securing to the floor. Enclosed with #4 finish type 304 stainless steel with removable side panels and two stainless steel front cabinet doors.

All controls are mounted in the cabinet base which include a solid state thermostat, temperature light, tilt switch, electronic ignition, tilt safety switch and hydraulic lift system powered by a 1/2 HP electric motor for smooth and precise tilting action. The high limit thermostat is located on the pan bottom. Cooking temperatures are between 100°F and 450°F (38°C and 232°C). Gas supply to the burners automatically shuts off when the pan is tilted.

NSHCG

Models: ☐ **BGMTS-30** ☐ **BGMTS-40**

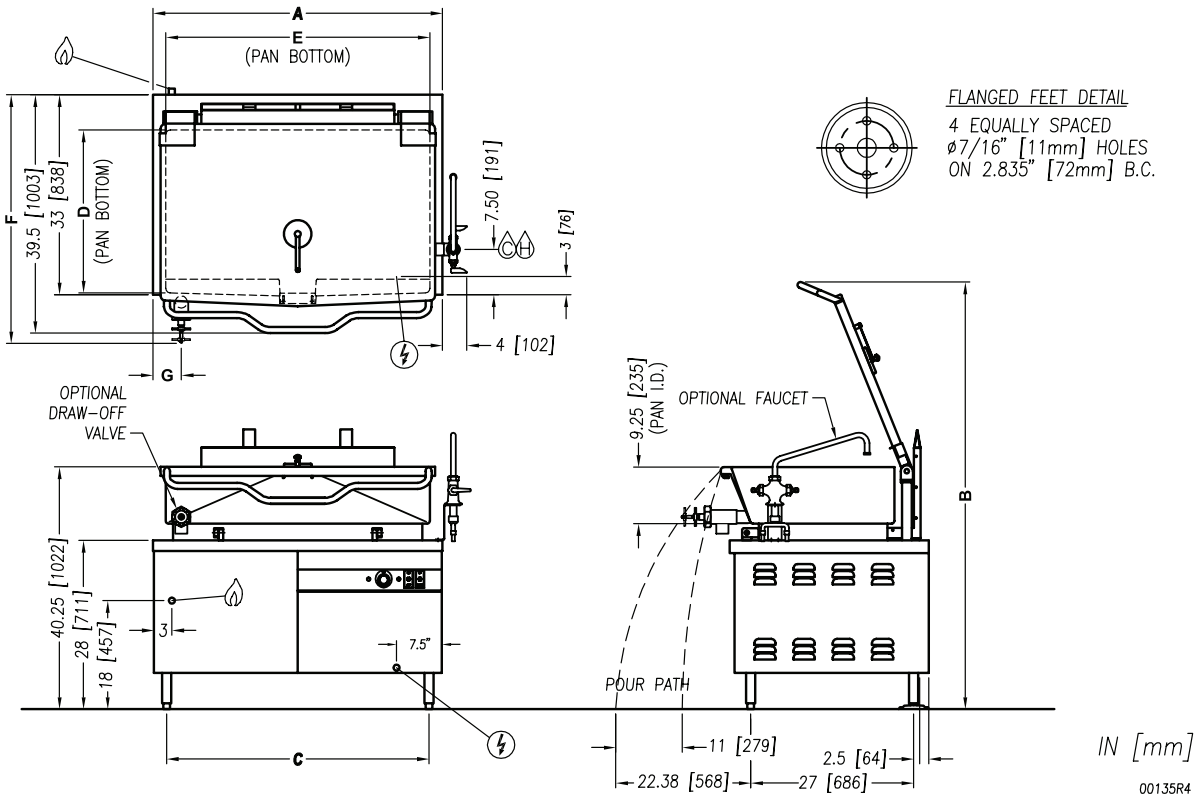

DIMENSIONS

Model	Capacity	Units	A	B	C	D	E	F		G
								Ø2	Ø3	
BGMTS-30	30 Gallons (114 liters)	inches (millimeters)	36" (914 mm)	70.88" (1800 mm)	30" (762 mm)	23.5" (597 mm)	33.75" (857 mm)	41.13" (1045 mm)	46.75" (1187 mm)	3.75" (95 mm)
BGMTS-40	40 Gallons (152 liters)	inches (millimeters)	48" (1219 mm)	70.88" (1800 mm)	42" (1067 mm)	23" (584 mm)	43.75" (1111 mm)	41.63" (1057 mm)	46.13" (1172 mm)	4.75" (121 mm)

Model	Shipping Weight	Gas Supply				Minimum Clearance *	
		BTU/HR	kW/HR	Supply Pipe Pressure (W.C)			
BGMTS-30	650 lbs. [295 kg]	80,000	23.4	Natural 6" - 14" (152 mm - 356 mm)	Propane 11" - 14" (279 mm - 356 mm)	Sides	3" (76 mm)
BGMTS-40	825 lbs. [374 kg]	100,000	29.3			Back	6" (152 mm)

* For use on noncombustible floors only.

SERVICE CONNECTIONS

- ELECTRICAL CONNECTION: Unless otherwise specified, Field Wire Electrical Connection to be 120 Volts, 60 Hz, single phase with grounding wire. 10 Amp minimum supply.
- GAS CONNECTION: Supply gas through 3/4" pipe.
- COLD WATER: 3/8" O.D. tubing to optional faucet
- HOT WATER: 3/8" O.D. tubing to optional faucet

INTENDED FOR COMMERCIAL USE ONLY.
NOT FOR HOUSEHOLD USE.

1100 Old Honeycutt Road, Fuquay-Varina, NC 27526
(919) 762-1000 www.southbendnc.com

STAINLESS STEEL

FLOOR TROUGHS & FLOOR DRAINS

ADVANCE TABCO
SMART FABRICATION™

Floor Troughs

4" Depth

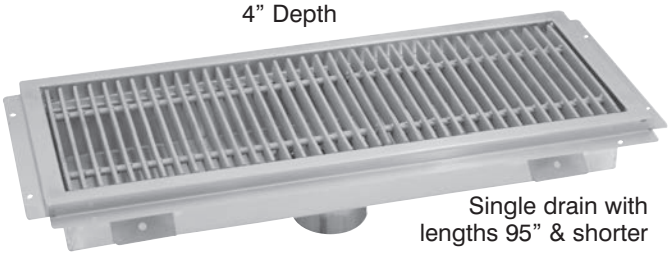

Single drain with lengths 95" & shorter

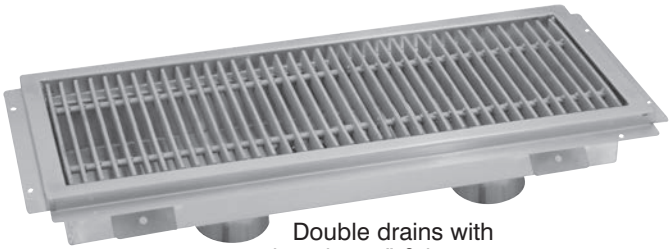

Double drains with lengths 96" & longer

NSF

Item #: _____ Qty #: _____

Model #: _____

Project #: _____



Cut-Out View of Anti-Splash

FT-1
Optional Anti-Splash Guard
(Per ft. Factory installed)

Floor Drain

4" Depth



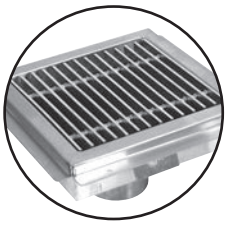

FD-1
Optional Stainless Steel Grate for Floor Drains



FT-2
Stainless Steel Strainer Basket with Handle (Included with all Floor Troughs, Water Receptacles & Floor Drains)

Floor Water Receptacles

2" Depth

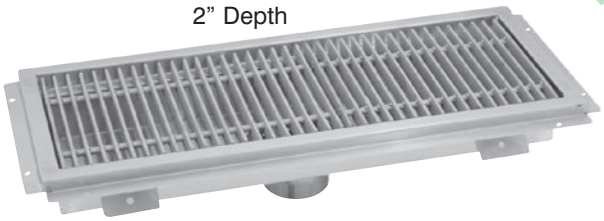

OPTIONAL ACCESSORIES

Model #	Qty
FT-1 Anti-Splash Guard per ft.	
FT-2 Replacement Strainer Basket	
FD-1 Floor Drain Stainless Steel Grate	

MSHCG

FEATURES:

Waste receptacle will accommodate up to a 4" waste pipe.

Includes 4" O.D. - 3" Long Plumbing Sleeve.

Removable perforated stainless steel strainer basket with handle provided.

Pitched towards waste.

Includes "Subway Style" grating from 3/16" x 1" solid "304" stainless steel bar or fiberglass. (Not included with Floor Drains. Use Model FD-1)

Grating is spaced 9/16" (Inside clearance) between bars to prevent casters from getting trapped.

Troughs 96" or larger in length made with two (2) drains.

Custom sizes available. Consult factory.

CONSTRUCTION:

All TIG welded.

All external corners welded and polished to a satin finish.

MECHANICAL:

Creased design to ensure proper drainage.

Perimeter flange mounts directly to sub floor.

3/4" vertical step designed to accommodate floor tile installation.

MATERIAL:

14 gauge "304" type stainless steel polished stainless steel grating.

Fiberglass grating: Gray fiberglass composite. Light weight, skid and corrosion resistant.

ADVANCE TABCO
SMART FABRICATION™
www.advancetabco.com

Customer Service Available To Assist You 1-800-645-3166 8:30 am - 8:00 pm E.S.T.

For Orders & Customer Service:
Email: customer@advancetabco.com or **Fax:** 631-242-6900

For Smart Fabrication™ Quotes:
Email: smartfab@advancetabco.com or **Fax:** 631-586-2933

REF-E

DIMENSIONS and SPECIFICATIONS

ALL DIMENSIONS ARE TYPICAL

TOL ± .500”

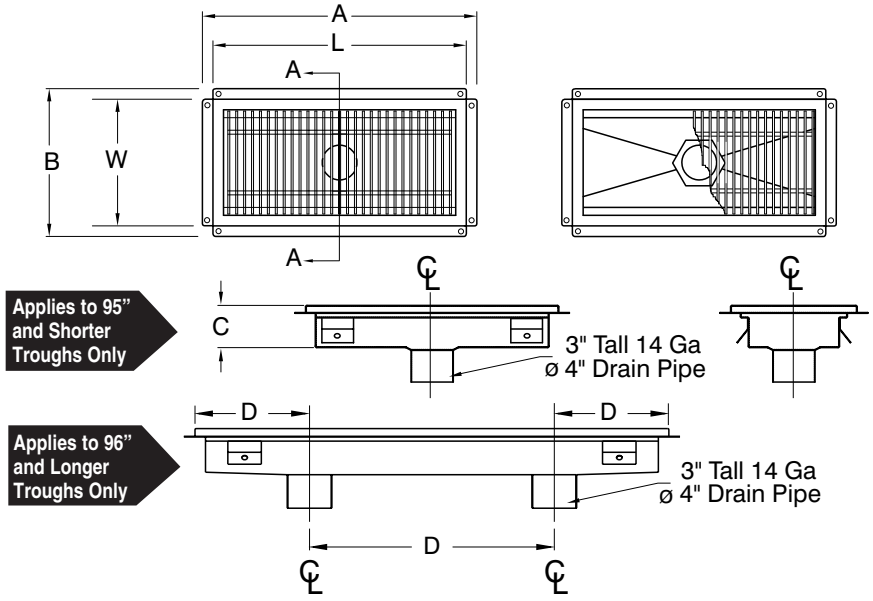

PLUMBING ROUGH-IN

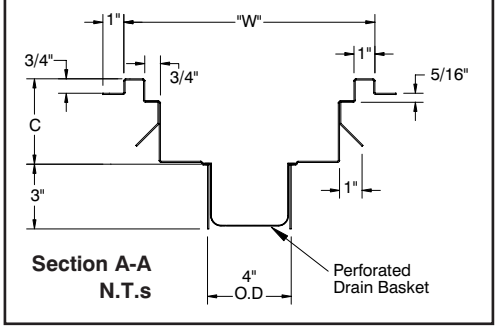

FLOOR TROUGHS

Stainless Steel Grating	Wt.	Fiberglass Grating	Wt.	L	W	A	B	C	D
FTG-1224	46 lbs.	FFTG-1224	34 lbs.	24”	12”	26”	14”	4”	-
FTG-1230	56 lbs.	FFTG-1230	37 lbs.	30”	12”	32”	14”	4”	-
FTG-1236	66 lbs.	FFTG-1236	40 lbs.	36”	12”	38”	14”	4”	-
FTG-1242	76 lbs.	FFTG-1242	43 lbs.	42”	12”	44”	14”	4”	-
FTG-1248	86 lbs.	FFTG-1248	46 lbs.	48”	12”	50”	14”	4”	-
FTG-1254	96 lbs.	FFTG-1254	49 lbs.	54”	12”	56”	14”	4”	-
FTG-1260	106 lbs.	FFTG-1260	52 lbs.	60”	12”	62”	14”	4”	-
FTG-1272	116 lbs.	FFTG-1272	55 lbs.	72”	12”	74”	14”	4”	-
FTG-1284	126 lbs.	FFTG-1284	81 lbs.	84”	12”	86”	14”	4”	-
FTG-1296*	146 lbs.	FFTG-1296	90 lbs.	96”	12”	98”	14”	4”	32”
FTG-12108*	166 lbs.	FFTG-12108	99 lbs.	108”	12”	110”	14”	4”	36”
FTG-12120*	180 lbs.	FFTG-12120	108 lbs.	120”	12”	122”	14”	4”	40”
FTG-1824	62 lbs.	FFTG-1824	43 lbs.	24”	18”	26”	20”	4”	-
FTG-1830	74 lbs.	FFTG-1830	47 lbs.	30”	18”	32”	20”	4”	-
FTG-1836	86 lbs.	FFTG-1836	54 lbs.	36”	18”	38”	20”	4”	-
FTG-1842	98 lbs.	FFTG-1842	61 lbs.	42”	18”	44”	20”	4”	-
FTG-1848	110 lbs.	FFTG-1848	69 lbs.	48”	18”	50”	20”	4”	-
FTG-1854	122 lbs.	FFTG-1854	76 lbs.	54”	18”	56”	20”	4”	-
FTG-1860	134 lbs.	FFTG-1860	83 lbs.	60”	18”	62”	20”	4”	-
FTG-1872	146 lbs.	FFTG-1872	90 lbs.	72”	18”	74”	20”	4”	-
FTG-1884	165 lbs.	FFTG-1884	111 lbs.	84”	18”	86”	20”	4”	-
FTG-1896*	187 lbs.	FFTG-1896	125 lbs.	96”	18”	98”	20”	4”	32”
FTG-18108*	208 lbs.	FFTG-18108	138 lbs.	108”	18”	110”	20”	4”	36”
FTG-18120*	229 lbs.	FFTG-18120	150 lbs.	120”	18”	122”	20”	4”	40”
FTG-2424	69 lbs.	FFTG-2424	52 lbs.	24”	24”	26”	26”	4”	-
FTG-2430	81 lbs.	FFTG-2430	59 lbs.	30”	24”	32”	26”	4”	-
FTG-2436	104 lbs.	FFTG-2436	68 lbs.	36”	24”	38”	26”	4”	-
FTG-2442	118 lbs.	FFTG-2442	75 lbs.	42”	24”	44”	26”	4”	-
FTG-2448	131 lbs.	FFTG-2448	83 lbs.	48”	24”	50”	26”	4”	-
FTG-2454	145 lbs.	FFTG-2454	95 lbs.	54”	24”	56”	26”	4”	-
FTG-2460	162 lbs.	FFTG-2460	102 lbs.	60”	24”	62”	26”	4”	-
FTG-2472	195 lbs.	FFTG-2472	119 lbs.	72”	24”	74”	26”	4”	-
FTG-2484	218 lbs.	FFTG-2484	137 lbs.	84”	24”	86”	26”	4”	-
FTG-2496*	243 lbs.	FFTG-2496	153 lbs.	96”	24”	98”	26”	4”	32”
FTG-24108*	274 lbs.	FFTG-24108	168 lbs.	108”	24”	110”	26”	4”	36”
FTG-24120*	310 lbs.	FFTG-24120	188 lbs.	120”	24”	122”	26”	4”	40”

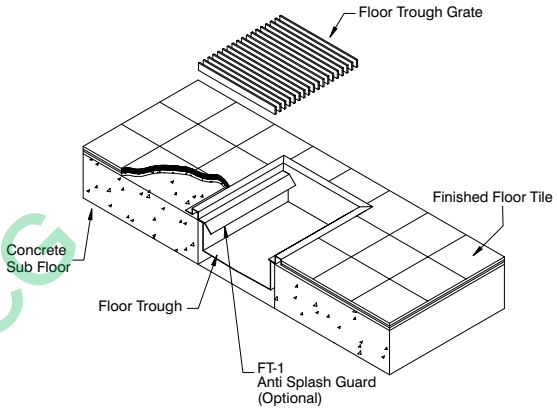

MSHCG

FLOOR DRAINS

Model #	Length	Width	A	B	C	Wt.
FDR-1212	12”	12”	14”	14”	4”	26 lbs.

FLOOR WATER RECEPTACLES

(2” Depth)

Model #	Length	Width	A	B	C	Wt.
FRG-24	24”	12”	26”	14”	2”	44 lbs.
FRG-36	36”	12”	38”	14”	2”	63 lbs.
FRG-48	48”	12”	50”	14”	2”	82 lbs.

CUSTOM SIZES AVAILABLE!

***Troughs 96” or larger in length made with two (2) drains.**

ADVANCE TABCO

SMART FABRICATION™

REF-E 200 Heartland Boulevard, Edgewood, NY 11717-8380

ADVANCE TABCO is constantly engaged in a program of improving our products. Therefore, we reserve the right to change specifications without prior notice.

© ADVANCE TABCO, JUNE 2016

www.captiveaire.com

Blue Ridge

601 S Peters Rd #12, Knoxville, TN, 37922 PHONE: (865) 278-8089 FAX: (919) 227-5993 EMAIL: reg16@captiveaire.com

#47---Refer to CaptiveAire Plans
#48---Refer to CaptiveAire Plans
#49---Refer to CaptiveAire Plans
#50---Refer to CaptiveAire Plans
#60---Refer to CaptiveAire Plans
#61---Refer to CaptiveAire Plans

MSRCC

www.captiveaire.com

Blue Ridge

601 S Peters Rd #12, Knoxville, TN, 37922 PHONE: (865) 278-8089 FAX: (919) 227-5993 EMAIL: reg16@captiveaire.com

#47---Refer to CaptiveAire Plans
#48---Refer to CaptiveAire Plans
#49---Refer to CaptiveAire Plans
#50---Refer to CaptiveAire Plans
#60---Refer to CaptiveAire Plans
#61---Refer to CaptiveAire Plans

MSRCC



Quote #: 2704781

From:
Dennis Jaynes
CaptiveAire Systems
825-1 SOUTH POST RD.
SHELBY, NC 28152
Local: (704) 482-2795
Toll Free: (800) 445-1869
Fax: (704) 482-2797
reg70@captiveaire.com

HEALING TRANSITIONS GREENVILLE
Ship-To:
GREENVILLE, NC 27834

CaptiveAire Systems proposes to furnish the following equipment. Production of listed items will commence upon receipt of an approved proposal, a purchase order, an approved submittal, and approved credit.

MSHCG

EQUIPMENT

Hood #1 - LEFT SIDE H-1

5424ND-2-PSP-F - 8ft 6" Long Exhaust-Only Wall Canopy Hood with Front Perforated Supply Plenum with Built-in 3" Back Standoff	x1
- 430 SS Where Exposed	x1
- FILTER - 20" tall x 16" wide Stainless Steel Captrate Solo filter with hook, ETL Listed. Particulate capture efficiency: 93% efficient at 9 microns, 72% efficient at 5 microns	x6
- L55 Series E26 Canopy Light Fixture - High Temp Assembly, Includes Clear Thermal and Shock Resistant Globe (L55 Fixture), Bulbs By Others	x3
- Extra Fixtures- L55 Series E26 Canopy Light Fixture - High Temp Assembly, Includes Clear Thermal and Shock Resistant Globe (L55 Fixture)	x3
- EXHAUST RISER - Factory installed 14" Diameter X 4" Height	x1
- SUPPLY RISER - 12"x 28" Supply Riser with Volume Dampers	x2
- 1/2 Pint Grease Cup New Style, Flanged Slotted	x2
- FIELD WRAPPER 17.00" High Front	x1
- BACKSPLASH 80.00" High X 291.00" Long 430 SS Vertical (Includes End Caps & Divider Bars)	x1
- LEFT END STANDOFF 1" Wide 54" Long Insulated	x1
- LEFT SIDESPLASH 80.00" High X 54.00" Long 430 SS Vertical (Includes End Caps & Divider Bars)	x1

- BACKSPLASH - INSIDE CORNER 80.00" High X 2.00" Leg Length 430 SS Vertical (Includes End Caps & Divider Bars)	x1

Hood #2 - RIGHT SIDE H-1

5424ND-2-PSP-F - 8ft 6" Long Exhaust-Only Wall Canopy Hood with Front Perforated Supply Plenum with Built-in 3" Back Standoff	x1
- 430 SS Where Exposed	x1
- FILTER - 20" tall x 16" wide Stainless Steel Captrate Solo filter with hook, ETL Listed. Particulate capture efficiency: 93% efficient at 9 microns, 72% efficient at 5 microns	x6
- L55 Series E26 Canopy Light Fixture - High Temp Assembly, Includes Clear Thermal and Shock Resistant Globe (L55 Fixture), Bulbs By Others	x3
- Extra Fixtures- L55 Series E26 Canopy Light Fixture - High Temp Assembly, Includes Clear Thermal and Shock Resistant Globe (L55 Fixture)	x3
- EXHAUST RISER - Factory installed 14" Diameter X 4" Height	x1
- SUPPLY RISER - 12"x 28" Supply Riser with Volume Dampers	x2
- 1/2 Pint Grease Cup New Style, Flanged Slotted	x2
- FIELD WRAPPER 17.00" High Front	x1
- RIGHT END STANDOFF 1" Wide 54" Long Insulated	x1
- RIGHT SIDESPLASH 80.00" High X 54.00" Long 430 SS Vertical (Includes End Caps & Divider Bars)	x1
- BACKSPLASH - INSIDE CORNER 80.00" High X 2.00" Leg Length 430 SS Vertical (Includes End Caps & Divider Bars)	x1

MSHCG

Hood #3 - HOOD 2

5424ND-2-PSP-F - 7ft 0" Long Exhaust-Only Wall Canopy Hood with Front Perforated Supply Plenum with Built-in 3" Back Standoff	x1
- 430 SS Where Exposed	x1
- Fire Cabinet on the Left Side (Additional charges may apply for cabinet if not sold with fire system)	x1
- FILTER - 20" tall x 16" wide Stainless Steel Captrate Solo filter with hook, ETL Listed. Particulate capture efficiency: 93% efficient at 9 microns, 72% efficient at 5 microns	x5
- L55 Series E26 Canopy Light Fixture - High Temp Assembly, Includes Clear Thermal and Shock Resistant Globe (L55 Fixture), Bulbs By Others	x2
- Extra Fixtures- L55 Series E26 Canopy Light Fixture - High Temp Assembly, Includes Clear Thermal and Shock Resistant Globe (L55 Fixture)	x2
- EXHAUST RISER - Factory installed 14" Diameter X 4" Height	x1
- SUPPLY RISER - 8"x 36" Supply Riser with Volume Dampers	x2
- 1/2 Pint Grease Cup New Style, Flanged Slotted	x2
- FIELD WRAPPER 17.00" High Front, Left	x1
- BACKSPLASH 80.00" High X 104.00" Long 430 SS Vertical (Includes End Caps & Divider Bars)	x1

- RIGHT SIDESPLASH 80.00" High X 54.00" Long 430 SS Vertical (Includes End Caps & Divider Bars)	x1
- BACKSPLASH - INSIDE CORNER 80.00" High X 2.00" Leg Length 430 SS Vertical (Includes End Caps & Divider Bars)	x1
- Electrical Package Installation in Utility Cabinet by Plant.	x1

Fire System #1

ANSUL-3.0/3.0/1.5 Ansul 7.5 gallon Fire System in Utility Cabinet (includes pre-piped hood(s) with detection, tank(s), release mechanism, microswitches and pull station). Includes piping for hoods: 1, 2, 3.	x1
- GAS VALVE - 1-1/2" Mechanical Shutoff Valve (Ansul) (27-55607) - Includes Upstream Strainer assembly; SUPPLIED BY DISTRIBUTOR	x1

Fan #1 NCA14FA - Exhaust Fan

NCA14FA Belt Drive Centrifugal Upblast Exhaust Fan with 15.75" wheel Exhaust Fan handles 1700 CFM @ -0.800" wc ESP, Fan runs at 1080 RPM. Exhaust Motor: 0.750 HP, 3 Phs, 208 V, 60Hz, 2.5 FLA, ODP (Open Drip Proof)	x1
- Grease Cup for kitchen-duty centrifugal exhaust fans, Box Dimensions 17-1/8 L X 5-1/16 W X 3-3/4 H (18 GA.) (Includes Down Spout)	x1
- Curb CRB23X20E On Fan # 1 3.000:12.000 Pitch	x1
- Hinged Base for Curb. Standard Hinge attached to curb. Used on Fans with wheels 20 inches or smaller. 12 GA Galvanized.	x1
- Vented Base for Curb	x1

MSHCG

Fan #2 NCA14FA - Exhaust Fan

NCA14FA Belt Drive Centrifugal Upblast Exhaust Fan with 15.75" wheel Exhaust Fan handles 1700 CFM @ -0.800" wc ESP, Fan runs at 1080 RPM. Exhaust Motor: 0.750 HP, 3 Phs, 208 V, 60Hz, 2.5 FLA, ODP (Open Drip Proof)	x1
- Grease Cup for kitchen-duty centrifugal exhaust fans, Box Dimensions 17-1/8 L X 5-1/16 W X 3-3/4 H (18 GA.) (Includes Down Spout)	x1
- Curb CRB23X20E On Fan # 2 3.000:12.000 Pitch	x1
- Hinged Base for Curb. Standard Hinge attached to curb. Used on Fans with wheels 20 inches or smaller. 12 GA Galvanized.	x1
- Vented Base for Curb	x1

Fan #3 A2-D.250-G15 - Heater (H1 & H2)

A2-D.250-G15 Direct Gas Fired Heated Make Up Air Unit with 15" Blower Supply Fan handles 3952 CFM @ 0.600" wc ESP, Fan runs at 966 RPM.	x1

Heater supplies 234749 BTUs. 55°F Temperature Rise. [Fuel: Natural Gas]
Supply Motor: 3.000 HP, 3 Phase, 208 V, 60Hz, 8.7 FLA, ODP (Open Drip Proof)
Down Discharge - Air Flow Right -> Left

- Sloped Filtered Intake for Size #2 Standard Untempered Make-Up Air Unit with 12" blower wheel. x1
26.75" Wide x 29.25" Long x 31.5" High.
Includes 2" MV EZ Kleen Metal Mesh Filters.

- RTC Solutions • 40-90°F Discharge Temp Control x1

- Gas Manifold for DF2 GM - BTU 0 - 825001 - 7 in. w.c. - 14 in. w.c., No Insurance Requirement (ANSI), BV250-88 x1

- Motorized Back Draft Damper 22.75" X 24" for Size 2 Standard & Modular Direct Fired Heaters w/Extended Shaft, Standard Galvanized Construction, 3/4" Rear Flange, LF120S Actuator Included x1

- Cooling Interlock Relay. 24VAC Coil. 120V Contacts. Locks out burner circuit when AC is energized. x1

- Low Fire Start. Allows the burner circuit to energize when the modulation control is in a low fire position. x1

- Gas Pressure Gauge, 0-35", 2.5" Diameter, 1/4" Thread Size x1

- Gas Pressure Gauge, -5 to +15 Inches Wc., 2.5" Diameter, 1/4" Thread Size x1

- H1 & H2 Curb CRB31X79X15INS Insulated On Fan # 3 3.000:12.000 Pitch x1

- Curb Corner Fully Welded. Base flange corners fully welded by factory. x1

MSHCG

Fan #5 NCA14FA - Exhaust Fan (HOOD 2)

NCA14FA Belt Drive Centrifugal Upblast Exhaust Fan with 15.75" wheel x1
Exhaust Fan handles 1400 CFM @ -0.750" wc ESP, Fan runs at 1000 RPM.
Exhaust Motor: 0.500 HP, 3 Phs, 208 V, 60Hz, 1.9 FLA, ODP (Open Drip Proof)

- Grease Cup for kitchen-duty centrifugal exhaust fans, x1
Box Dimensions 17-1/8 L X 5-1/16 W X 3-3/4 H (18 GA.) (Includes Down Spout)

- hood 2 Curb CRB23X20E On Fan # 5 3.000:12.000 Pitch x1

- Hinged Base for Curb. Standard Hinge attached to curb. Used on Fans with wheels 20 inches or smaller. 12 GA Galvanized. x1

- Vented Base for Curb x1

Fan #6 DU33HFA - Exhaust Fan (Pant Leg fan)

DU33HFA High Speed Direct Drive Centrifugal Upblast Exhaust Fan with speed control (speed control included for single phase only), disconnect switch and 11-3/4" wheel. x1
Exhaust Fan handles 1000 CFM @ -0.500" wc ESP, Fan runs at 1558 RPM.
Exhaust Motor: 0.333 HP, 1 Phs, 115 V, 60Hz, 5.6 FLA, ODP (Open Drip Proof)

- Bird Screen - 1/2" X 1/2" (5" X 56") Wire Screen for Upblast & Downblast Fans x1
DU/DR-25H/30H/33H, BDU/BDCR11, Galv after welded wire cloth.

- Pant Leg fan Curb CRB19.5X14E On Fan # 6 Flat Curb	x1

Electrical System #1

SC-331110FP 3 Phase w/ control for 3 Exhaust Fans, 1 Supply Fan, Exhaust on in Fire, Lights out in Fire, Fan(s) On/Off Thermostatically Controlled. Room temperature sensor shipped loose for field installation. Includes 3 Duct Thermostat kits.	x1
- Digital Prewire Lighting Relay Kit. Includes hood lighting relay & terminal blocks. Allows for up to 1400W of lighting each.	x2
- Thermistor CABLE - 18/2 AWG GREEN WHITE, plenum rated. USED for thermistor duct stat. Per Foot Price.	x75

Duct Run #1

(P1) DW1423LT Single Wall Duct 14" diameter, 23" long, flange at both ends. Stainless Steel.	x1
(P2) DW1430AJDKIT Single Wall Duct Adjustable, 14" diameter, 29.5" long, flange at one end With a 14" Adjustable Collar - Stainless Steel.	x1
(P3) DW14TEASY Single Wall Duct Tee, 14" Duct, Assembly.	x1
(P4) DW1415ADIASY Duct Access Door - Insulated - Used With 14" Duct - Grease Dam Included - Assembly.	x1
(P5) DW141350LT Single Wall Duct 14" diameter, 13.50" long, flange at both ends. Stainless Steel.	x1
(P6) DW1424AJDKIT Single Wall Duct Adjustable, 14" diameter, 23.5" long, flange at one end With a 14" Adjustable Collar - Stainless Steel.	x1
(P7) DW23514TP Duct to Curb Transition, 23.5" Curb to 14" Duct, 16 GA Aluminized. Misc. non-standard transition plate.	x1
3M-2000PLUS Duct - 3M Fire Barrier 2000 Plus Silicone - Used as sealant to Seal Duct Joints.	x2
DW14CLASY Duct "V" Clamp With new design 14 Ga Brackets, 14" Duct, Assembly.	x6

Duct Run #2

(P1) DW1423LT Single Wall Duct 14" diameter, 23" long, flange at both ends. Stainless Steel.	x1
(P2) DW1430AJDKIT Single Wall Duct Adjustable, 14" diameter, 29.5" long, flange at one end With a 14" Adjustable Collar - Stainless Steel.	x1
(P3) DW14TEASY Single Wall Duct Tee, 14" Duct, Assembly.	x1
(P4) DW1415ADIASY Duct Access Door - Insulated - Used With 14" Duct - Grease Dam Included - Assembly.	x1
(P5) DW141350LT Single Wall Duct 14" diameter, 13.50" long, flange at both ends. Stainless Steel.	x1
(P6) DW1424AJDKIT Single Wall Duct Adjustable, 14" diameter, 23.5" long, flange at one end With a 14" Adjustable Collar - Stainless Steel.	x1
(P7) DW23514TP Duct to Curb Transition, 23.5" Curb to 14" Duct, 16 GA	x1

MSHCG

Aluminized. Misc. non-standard transition plate.	
3M-2000PLUS Duct - 3M Fire Barrier 2000 Plus Silicone - Used as sealant to Seal Duct Joints.	x2
DW14CLASY Duct "V" Clamp With new design 14 Ga Brackets, 14" Duct, Assembly.	x6

Duct Run #3

(P1) DW1421LT Single Wall Duct 14" diameter, 21" long, flange at both ends. Stainless Steel.	x1
(P2) DW1430AJDKIT Single Wall Duct Adjustable, 14" diameter, 29.5" long, flange at one end With a 14" Adjustable Collar - Stainless Steel.	x1
(P3) DW14TEASY Single Wall Duct Tee, 14" Duct, Assembly.	x1
(P4) DW1415ADIASY Duct Access Door - Insulated - Used With 14" Duct - Grease Dam Included - Assembly.	x1
(P5) DW143325LT Single Wall Duct 14" diameter, 33 1/4" long, flange at both ends. Stainless Steel.	x1
(P6) DW1430AJDKIT Single Wall Duct Adjustable, 14" diameter, 29.5" long, flange at one end With a 14" Adjustable Collar - Stainless Steel.	x1
(P7) DW23514TP Duct to Curb Transition, 23.5" Curb to 14" Duct, 16 GA Aluminized. Misc. non-standard transition plate.	x1
3M-2000PLUS Duct - 3M Fire Barrier 2000 Plus Silicone - Used as sealant to Seal Duct Joints.	x2
DW14CLASY Duct "V" Clamp With new design 14 Ga Brackets, 14" Duct, Assembly.	x6

MSHCC

Factory Services

Service Design Verification for Direct Fired Heater	x1
Service Design Verification for Exhaust Fan	x4
Service Design Verification for Hood	x3
Service Design Verification for Standard Electrical Control Package	x1
Service Design Verification for Untempered Supply Fan	x1
Service Design Verification Mileage Charge: (65) x 2 = 130 total miles	x1

Optional Items

Hood #1 - LEFT SIDE H-1 Optional Items - (NOT INCLUDED IN Hood #1 - LEFT SIDE H-1 PRICE, PLEASE ADD IF DESIRED)

- INSULATION FOR TOP OF HOOD (LEFT SIDE H-1)

Hood Options Total Price (OPTIONAL - NOT INCLUDED IN QUOTE TOTAL):

Hood #2 - RIGHT SIDE H-1 Optional Items - (NOT INCLUDED IN Hood #2 - RIGHT SIDE H-1 PRICE, PLEASE ADD IF DESIRED)

- INSULATION FOR TOP OF HOOD (RIGHT SIDE H-1)

Hood Options Total Price (OPTIONAL - NOT INCLUDED IN QUOTE TOTAL):

Hood #3 - HOOD 2 Optional Items - (NOT INCLUDED IN Hood #3 - HOOD 2 PRICE, PLEASE ADD IF DESIRED)

- INSULATION FOR TOP OF HOOD (HOOD 2)

Hood Options Total Price (OPTIONAL - NOT INCLUDED IN QUOTE TOTAL):

Fan #4 A2-G12 - Supply Fan (OPTIONAL UNTEMPERED) (OPTIONAL - NOT INCLUDED IN QUOTE TOTAL, PLEASE ADD IF DESIRED)

A2-G12 Untempered Supply Unit with 12" Blower in Size #2 Housing Supply Fan handles 2720 CFM @ 0.500" wc ESP, Fan runs at 689 RPM. Supply Motor: 1.500 HP, 3 Phase, 208 V, 60Hz, 4.6 FLA, ODP (Open Drip Proof) Down Discharge - Air Flow Right -> Left (OPTIONAL UNTEMPERED)	x1
- Sloped Filtered Intake for Size #2 Standard Untempered Make-Up Air Unit with 12" blower wheel. 26.75" Wide x 29.25" Long x 31.5" High. Includes 2" MV EZ Kleen Metal Mesh Filters. (OPTIONAL UNTEMPERED)	x1
- Curb CRB31X37X15INS Insulated On Fan # 4 3.000:12.000 Pitch	x1
- Curb Corner Fully Welded. Base flange corners fully welded by factory.	x1

Fan #4 A2-G12 - Supply Fan (OPTIONAL UNTEMPERED) Total Price (OPTIONAL - NOT INCLUDED IN QUOTE TOTAL):

Duct Run #1 Optional Items - (NOT INCLUDED IN Duct Run #1 PRICE, PLEASE ADD IF DESIRED)

834680600587XL Duct - Duct insulation for zero clearance to combustibles - 300" x 24" x 1-1/2" Roll. Pyroscat Wrap.	$232.64	x3
BANDING.5 Duct - Fire Barrier Wrap Stainless Steel Banding .5" Width - 200 FT Per Roll.	$88.38	x1
SEAL.50-50 Duct - Fire Barrier Wrap Stainless Steel Banding Seal .5" Width. Quantity of 50.	$5.65	x1
TAPEALUM Duct - Fire Barrier Wrap Aluminum Foil Tape - 3" x 150' Roll.	$19.90	x1

Ductwork Options Total Price (OPTIONAL - NOT INCLUDED IN QUOTE TOTAL):

Duct Run #2 Optional Items - (NOT INCLUDED IN Duct Run #2 PRICE, PLEASE ADD IF DESIRED)

834680600587XL Duct - Duct insulation for zero clearance to combustibles - 300" x 24" x 1-1/2" Roll. Pyroscat Wrap.	$232.64	x3
BANDING.5 Duct - Fire Barrier Wrap Stainless Steel Banding .5" Width - 200 FT Per Roll.	$88.38	x1

MSHCG

SEAL.50-50 Duct - Fire Barrier Wrap Stainless Steel Banding Seal .5" Width. Quantity of 50.

TAPEALUM Duct - Fire Barrier Wrap Aluminum Foil Tape - 3" x 150' Roll.

Ductwork Options Total Price (OPTIONAL - NOT INCLUDED IN QUOTE TOTAL):

Duct Run #3 Optional Items - (NOT INCLUDED IN Duct Run #3 PRICE, PLEASE ADD IF DESIRED)

834680600587XL Duct - Duct insulation for zero clearance to combustibles - 300" x 24" x 1-1/2" Roll. Pyroscat Wrap.

BANDING.5 Duct - Fire Barrier Wrap Stainless Steel Banding .5" Width - 200 FT Per Roll.

SEAL.50-50 Duct - Fire Barrier Wrap Stainless Steel Banding Seal .5" Width. Quantity of 50.

TAPEALUM Duct - Fire Barrier Wrap Aluminum Foil Tape - 3" x 150' Roll.

Ductwork Options Total Price (OPTIONAL - NOT INCLUDED IN QUOTE TOTAL):

SERVICE DESIGN VERIFICATION DISCLAIMER

Field Service Technician is responsible for one trip to site to ensure the above equipment is operating within design specifications. All equipment must be operational. Fire suppression system should be hooked-up and armed. Additional trips will result in charges to be covered by others.

MSHCG

INSTALLATION BY OTHERS

By Others: Installation, ductwork, patching, all electrical field wiring, start-up & balance, gas or electric shutdown for fire system hook-up.

Note: Customer is responsible for additional labor charges as a result of cooking equipment layout changes after the release of the order, union labor or prevailing wage charges, or additional trips by fire system distributor caused by jobsite delays, permits, fees or test required by local authority. Submittal will specify applicable testing and approval agencies.

CaptiveAire Systems requirement for all field hook ups: All fire system detection conduit must be half inch EMT. All conduit fittings must be compression type and fully tightened. All conduit ends must be reamed and deburred and blown clear of debris prior to assembly. All conduit must be fully and robustly supported to avoid accidental fire system discharge.

CaptiveAire Systems product must be installed in accordance with installation instructions provided with equipment or available on our web site at www.captiveaire.com.

Ductwork must be designed and installed in accordance with AMCA and ASHRAE standards as presented in CaptiveAire Systems "Guide to Designing Air Flow Systems", available at: http://www.captiveaire.com/MANUALS/AIRSYSTEMDESIGN/DESIGNAIRSYSTEMS.HTM

SHIPPING

Freight includes one shipment only, delivered to the job site address listed on this proposal. Customer is responsible for freight charges on any items shipped early. This is an estimated freight charge and is subject to change based on current freight costs when the job is released for production.

TRUE FOOD SERVICE EQUIPMENT, INC.
2001 East Terra Lane • O'Fallon, Missouri 63366-4434 • (636)240-2400
Fax (636)272-2408 • Toll Free (800)325-6152 • Intl Fax# (001)636-272-7546
Parts Dept. (800)424-TRUE • Parts Dept. Fax# (636)272-9471 • www.truemfg.com

Project Name: _____
Location: _____
Item #: _____ *Qty:* _____
Model #: _____

AIA #
SIS #

Model:
TUC-72

Undercounter:
Solid Door Refrigerator



MSHCG

Scan code for video

TUC-72

- True's undercounter units are designed with enduring quality that protects your long term investment.
- Designed using the highest quality materials and components to provide the user with colder product temperatures, lower utility costs, exceptional food safety and the best value in today's food service marketplace.
- Oversized, environmentally friendly (134A) forced-air refrigeration system holds 33°F to 38°F (.5°C to 3.3°C).
- All stainless steel front, top and ends. Matching aluminum finished back.
- Interior - attractive, NSF approved, clear coated aluminum liner with stainless steel floor.
- Front breathing.
- Heavy duty PVC coated wire shelves.
- Foamed-in-place using Ecomate. A high density, polyurethane insulation that has zero ozone depletion potential (ODP) and zero global warming potential (GWP).

ROUGH-IN DATA

Specifications subject to change without notice.
Chart dimensions rounded up to the nearest ⅛" (millimeters rounded up to next whole number).

Model	Doors	Shelves	Cabinet Dimensions (inches) (mm) L	D†	H*	HP	Voltage	Amps	NEMA Config.	Cord Length (total ft.) (total m)	Crated Weight (lbs.) (kg)
TUC-72	3	6	72⅜ 1839	30⅛ 766	29¾ 756	⅓ ½	115/60/1 230-240/50/1	8.5 6.7	5-15P ▲	7 2.13	405 184

† Depth does not include 1" (26 mm) for rear and ¼" (7 mm) for front bumpers.
* Height does not include 6¼" (159 mm) for castors or 6" (153 mm) for optional legs.

▲Plug type varies by country.

2/15 Printed in U.S.A.

APPROVALS:

AVAILABLE AT:

Model:
TUC-72

Undercounter:
Solid Door Refrigerator

STANDARD FEATURES

DESIGN
- True's commitment to using the highest quality materials and oversized refrigeration systems provides the user with colder product temperatures, lower utility costs, exceptional food safety and the best value in today's food service marketplace.

REFRIGERATION SYSTEM
- Factory engineered, self-contained, capillary tube system using environmentally friendly (CFC free) 134A refrigerant.
- Oversized, factory balanced refrigeration system with guided airflow to provide uniform product temperatures.
- Extra large evaporator coil balanced with higher horsepower compressor and large condenser; maintains cabinet temperatures of 33°F to 38°F (.5°C to 3.3°C) for the best in food preservation.
- Sealed, cast iron, self-lubricating evaporator fan motor(s) and larger fan blades give True undercounter units a more efficient, low velocity, high volume airflow design. This unique design ensures faster temperature recovery and shorter run times in the busiest of food service environments.
- Condensing unit access in back of cabinet, slides out for easy maintenance.

CABINET CONSTRUCTION
- Exterior - stainless steel front, top and ends. Matching aluminum finished back.
- Interior - attractive, NSF approved, clear coated aluminum liner. Stainless steel floor with coved corners.
- Insulation - entire cabinet structure and solid doors are foamed-in-place using Ecomate. A high density, polyurethane insulation that has zero ozone depletion potential (ODP) and zero global warming potential (GWP).
- 5" (127 mm) diameter stem castors - locks provided on front set. 36" (915 mm) work surface height.

DOORS
- Stainless steel exterior with white aluminum liner to match cabinet interior.
- Each door fitted with 12" (305 mm) long recessed handle that is foamed-in-place with a sheet metal interlock to ensure permanent attachment.
- Positive seal self-closing door(s) with 90°stay open feature. Door(s) swing within cabinet dimensions.
- Magnetic door gasket(s) of one piece construction, removable without tools for ease of cleaning.

SHELVING
- Six (6) adjustable, heavy duty PVC coated wire shelves 21 9/16"L x 16"D (548 mm x 591 mm). Four (4) chrome plated shelf clips included per shelf.
- Shelf support pilasters made of same material as cabinet interior; shelves are adjustable on ½" (13 mm) increments.

MODEL FEATURES
- Evaporator is epoxy coated to eliminate the potential of corrosion.
- NSF-7 compliant for open food product.

ELECTRICAL
- Unit completely pre-wired at factory and ready for final connection to a 115/60/1 phase, 15 amp dedicated outlet. Cord and plug set included.



115/60/1
NEMA-5-15R

OPTIONAL FEATURES/ACCESSORIES
Upcharge and lead times may apply.
- ❑ 230 - 240V / 50 Hz.
- ❑ 6" (153 mm) standard legs.
- ❑ 6" (153 mm) seismic/flanged legs.
- ❑ 2½" (64 mm) diameter castors.
- ❑ Barrel locks (factory installed). Requires one per door.
- ❑ Single overshelf.
- ❑ Double overshelf.
- ❑ TUC-27 Stacking collar.
- ❑ 30" (762 mm) deep, ½" (13 mm) thick, white polyethylene cutting board. Requires "L" brackets.
- ❑ 30" (762 mm) deep, ½" (13 mm) thick, composite cutting board. Requires "L" brackets.
- ❑ Heavy duty, 16 gauge tops.
- ❑ Exterior rectangular digital temperature display (factory installed).
- ❑ ADA compliant models with 34" (864 mm) work surface height.
- ❑ Low profile models with 31 7/8" (810 mm) work surface height.

***CABINET INTERIOR**
Beginning in October of 2014, True Manufacturing began the process of changing the standard interior finishes on select products. The interior liners of these units have changed from the traditional NSF-approved white aluminum to an NSF-approved clear coated aluminum that is silver in color. In addition, the traditional white PVC coated shelves have been switched to a gray PVC coating. There are no functional differences created by any of these changes, the difference is only in the appearance. The following product lines are affected by this change: T-Series, TUC, TWT, TSSU, TFP, TPP, TMC, TRCB. A sticker will be placed on the outside packaging so that units with this change can be identified in inventory.

MSHCG

PLAN VIEW

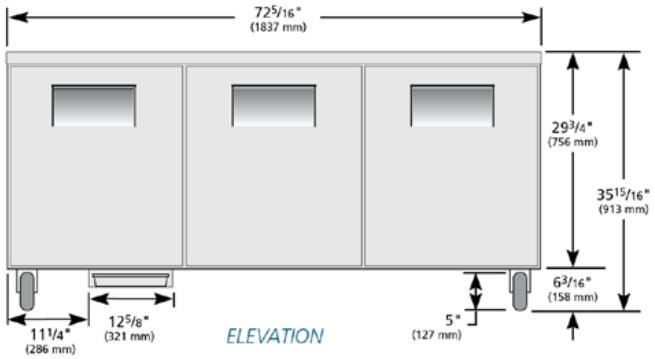

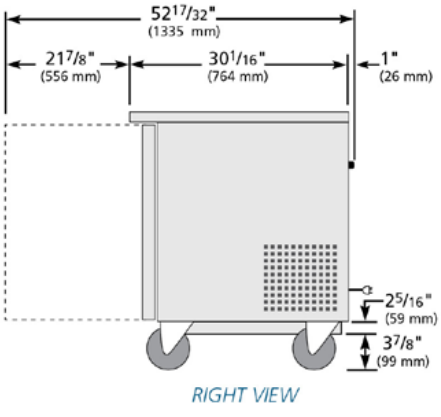

WARRANTY*
Three year warranty on all parts and labor and an additional 2 year warranty on compressor. (U.S.A. only)

*RESIDENTIAL APPLICATIONS: TRUE assumes no liability for parts or labor coverage for component failure or other damages resulting from installation in non-commercial or residential applications.

METRIC DIMENSIONS ROUNDED UP TO THE NEAREST WHOLE MILLIMETER

SPECIFICATIONS SUBJECT TO CHANGE WITHOUT NOTICE

Model	Elevation	Right	Plan	3D	Back
TUC-72	TFQZ45E	TFQY02S	TFQZ45P	TFQZ453	

TRUE FOOD SERVICE EQUIPMENT
2001 East Terra Lane • O'Fallon, Missouri 63366-4434 • (636)240-2400 • Fax (636)272-2408 • Toll Free (800)325-6152 • Intl. Fax# (001)636-272-7546 • www.truemfg.com

ADVANCE TABCO®
SMART FABRICATION™

STAINLESS STEEL

OPEN BASE STYLE ENCLOSED BASE WORK TABLES

NSF®

Item #: _____ Qty #: _____
Model #: _____
Project #: _____



Flat Top



1 1/2" Backsplash



5" Backsplash



FEATURING BOLT-ON STAINLESS STEEL LEG

	L	FLAT TOP	1 1/2" SPLASH	5" SPLASH	Approx. Wt.	Approx. Cu. Ft.
24" WIDE	36"	EB-SS-243	EF-SS-243	EK-SS-243	135 lbs.	30
	48"	EB-SS-244	EF-SS-244	EK-SS-244	170 lbs.	38
	60"	EB-SS-245	EF-SS-245	EK-SS-245	205 lbs.	47
	72"	EB-SS-246	EF-SS-246	EK-SS-246	242 lbs.	56
	84"	EB-SS-247	EF-SS-247	EK-SS-247	282 lbs.	66
	96"	EB-SS-248	EF-SS-248	EK-SS-248	317 lbs.	74
	108"	EB-SS-249	EF-SS-249	EK-SS-249	360 lbs.	83
	120"	EB-SS-2410	EF-SS-2410	EK-SS-2410	400 lbs.	92
	144"	EB-SS-2412	EF-SS-2412	EK-SS-2412	470 lbs.	109
30" WIDE	36"	EB-SS-303	EF-SS-303	EK-SS-303	145 lbs.	35
	48"	EB-SS-304	EF-SS-304	EK-SS-304	182 lbs.	45
	60"	EB-SS-305	EF-SS-305	EK-SS-305	220 lbs.	55
	72"	EB-SS-306	EF-SS-306	EK-SS-306	260 lbs.	66
	84"	EB-SS-307	EF-SS-307	EK-SS-307	315 lbs.	76
	96"	EB-SS-308	EF-SS-308	EK-SS-308	358 lbs.	87
	108"	EB-SS-309	EF-SS-309	EK-SS-309	400 lbs.	97
	120"	EB-SS-3010	EF-SS-3010	EK-SS-3010	440 lbs.	107
	144"	EB-SS-3012	EF-SS-3012	EK-SS-3012	518 lbs.	128
36" WIDE	36"	EB-SS-363	EF-SS-363	EK-SS-363	160 lbs.	41
	48"	EB-SS-364	EF-SS-364	EK-SS-364	206 lbs.	53
	60"	EB-SS-365	EF-SS-365	EK-SS-365	252 lbs.	65
	72"	EB-SS-366	EF-SS-366	EK-SS-366	297 lbs.	77
	84"	EB-SS-367	EF-SS-367	EK-SS-367	342 lbs.	90
	96"	EB-SS-368	EF-SS-368	EK-SS-368	440 lbs.	102
	108"	EB-SS-369	EF-SS-369	EK-SS-369	490 lbs.	114
	120"	EB-SS-3610	EF-SS-3610	EK-SS-3610	540 lbs.	126
	144"	EB-SS-3612	EF-SS-3612	EK-SS-3612	640 lbs.	151

FEATURES:

FLAT TOP is furnished with a 1 5/8" sanitary rolled rim on the front and
1 5/8" square bend edges on the 2 sides and rear.

1 1/2" SPLASH is furnished with a 1 5/8" sanitary rolled rim on the front side and 1 5/8" square bend edges on the 2 sides and a 1 1/2" splash of single metal thickness on the rear side.

5" SPLASH is furnished with a 1 5/8" sanitary rolled rim on the front side and 1 5/8" square bend edges on the 2 sides and a 5" splash with a 1" return on the rear side.

Rear flush panel along the rear of the base unit.

CONSTRUCTION:

All TIG welded. Exposed areas finished to match adjacent surfaces.

Entire Top is mechanically polished to a satin finish and is sound deadened.

Hat section secured to Top reinforces and maintains level working surface.

UNI-BODY DESIGN sides, back and fixed mid shelf (sold separately) are welded to form a single rigid structure.

Legs bolt on to table base.

MATERIAL:

TOP is 14 gauge stainless steel type "304" series with galvanized understructure.

BODY is 18 gauge stainless steel type "430" series.

LEGS are stainless steel and include 1 1/2" adjustable hex foot.

Mid Shelves Are Available.
To Add a Fixed Mid Shelf, Add "M" After each Model Number.
Upgrade to Adjustable Mid Shelf. Add TA-116.

MSHCG

ADVANCE TABCO®
SMART FABRICATION™
www.advancetabco.com

Customer Service Available To Assist You 1-800-645-3166 8:30 am - 8:00 pm E.S.T.

For Orders & Customer Service:
Email: customer@advancetabco.com or **Fax:** 631-242-6900

For Smart Fabrication™ Quotes:
Email: smartfab@advancetabco.com or **Fax:** 631-586-2933

REF-N

DETAILS and SPECIFICATIONS

TOL ± .500”

Units 7’ and larger are furnished with 6 legs.

ALL DIMENSIONS ARE TYPICAL

EB-Series **Flat Top**

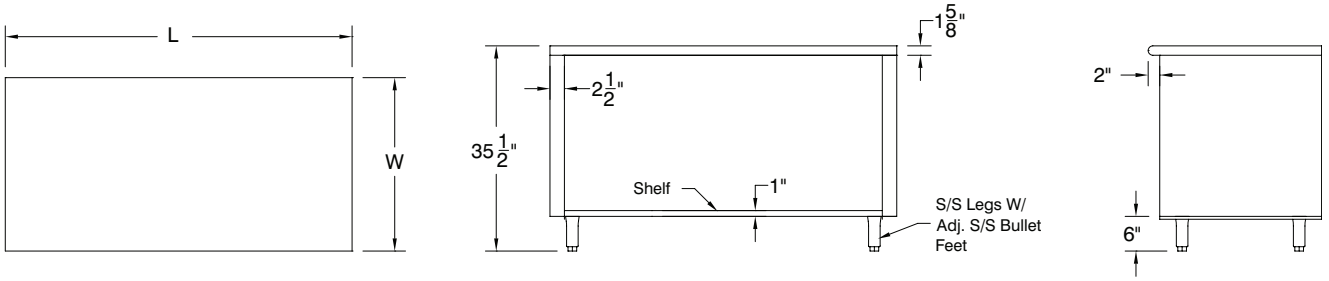

EF-Series **1 1/2” Rear Splash**

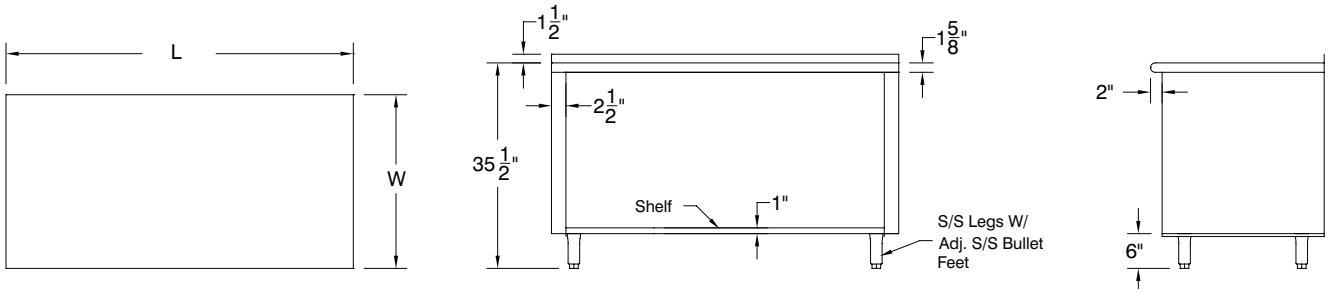

EK-Series **5” Rear Splash**

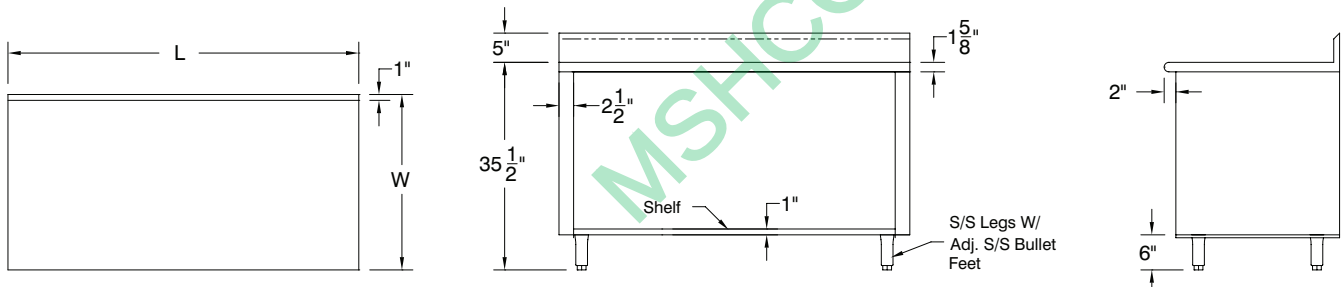

MSHCG

OPTIONAL MID SHELF DETAILS

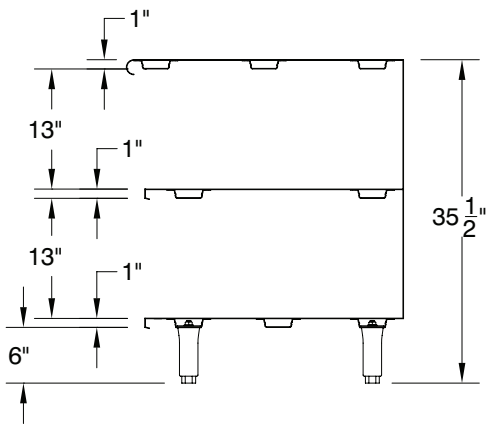

OPTIONAL ENCLOSED BASE ACCESSORIES

___ **TA-20L** ..... Replacement Bolt-on Leg
___ **TA-19L** ..... Replacement Bolt-on Leg
With Flanged Bullet Foot
___ **TA-255P** ..... 5” Heavy Duty Polyurethane Casters
(set of 4 - 2 w/ Brakes)
___ **TA-255AP**.... 5” Heavy Duty Polyurethane Casters
(set of 6 - 2 w/ Brakes)
___ **TA-46** ..... Door Locks
___ **TA-54** ..... Removable Kick Plate

TA-116 ADJUSTABLE ENCLOSED BASE CABINET MID SHELF (Sold Separately)



Shelves Over 36” In Length Require Multiple Sections With Center Partition.

ADVANCE TABCO®
SMART FABRICATION™

ADVANCE TABCO is constantly engaged in a program of improving our products. Therefore, we reserve the right to change specifications without prior notice.

REF-N 200 Heartland Boulevard, Edgewood, NY 11717-8380

© ADVANCE TABCO, MARCH 2018

ADVANCE TABCO
SMART FABRICATION™

TABLE MOUNTED

ALL WELDED STAINLESS STEEL SHELVING

NSF

Item #: _____ ***Qty #:*** _____

Model #: _____

Project #: _____



(Table Not Included)



Single Deck Table Mounted Shelf

Specify location. Front, Center or Rear.

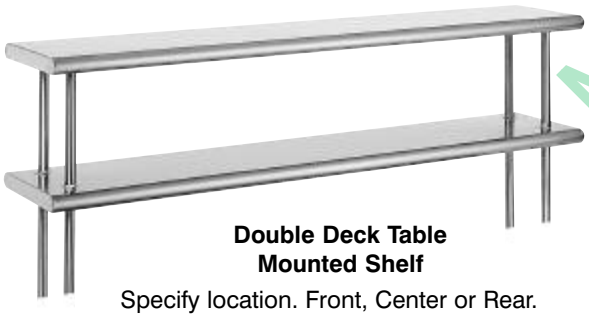

Double Deck Table Mounted Shelf

Specify location. Front, Center or Rear.

For 18" Wide Shelves, See PT Shelving

SINGLE DECK

L	10" Wide	Wt	12" Wide	Wt	15" Wide	Wt
36"	OTS-10-36	17 lbs	OTS-12-36	20 lbs.	OTS-15-36	24 lbs.
48"	OTS-10-48	20 lbs	OTS-12-48	25 lbs.	OTS-15-48	25 lbs.
60"	OTS-10-60	24 lbs	OTS-12-60	31 lbs.	OTS-15-60	31 lbs.
72"	OTS-10-72	29 lbs	OTS-12-72	37 lbs.	OTS-15-72	37 lbs.
84"	OTS-10-84	35 lbs	OTS-12-84	43 lbs.	OTS-15-84	43 lbs.
96"	OTS-10-96	41 lbs	OTS-12-96	50 lbs.	OTS-15-96	50 lbs.
108"	OTS-10-108	49 lbs	OTS-12-108	59 lbs.	OTS-15-108	59 lbs.
120"	OTS-10-120	57 lbs	OTS-12-120	68 lbs.	OTS-15-120	68 lbs.
132"	OTS-10-132	68 lbs	OTS-12-132	82 lbs.	OTS-15-132	82 lbs.
144"	OTS-10-144	79 lbs	OTS-12-144	98 lbs.	OTS-15-144	98 lbs.

Units 8 ft. and larger are furnished with three (3) sets of tubing supports.

For 1" Rear Turn Up, add "R" after model # (Example: OTS-12-60R)

DOUBLE DECK

L	10" Wide	Wt	12" Wide	Wt	15" Wide	Wt
36"	ODS-10-36	28 lbs.	ODS-12-36	32 lbs.	ODS-15-36	37 lbs.
48"	ODS-10-48	36 lbs.	ODS-12-48	40 lbs.	ODS-15-48	44 lbs.
60"	ODS-10-60	45 lbs.	ODS-12-60	50 lbs.	ODS-15-60	55 lbs.
72"	ODS-10-72	54 lbs.	ODS-12-72	60 lbs.	ODS-15-72	66 lbs.
84"	ODS-10-84	63 lbs.	ODS-12-84	70 lbs.	ODS-15-84	77 lbs.
96"	ODS-10-96	72 lbs.	ODS-12-96	80 lbs.	ODS-15-96	88 lbs.
108"	ODS-10-108	81 lbs.	ODS-12-108	90 lbs.	ODS-15-108	99 lbs.
120"	ODS-10-120	90 lbs.	ODS-12-120	101 lbs.	ODS-15-120	110 lbs.
132"	ODS-10-132	102 lbs.	ODS-12-132	112 lbs.	ODS-15-132	121 lbs.
144"	ODS-10-144	114 lbs.	ODS-12-144	121 lbs.	ODS-15-144	132 lbs.

Units 8 ft. and larger are furnished with three (3) sets of tubing supports.

For 1" Rear Turn Up, add "R" after model # (Example: ODS-12-60R)

MSHCG

FEATURES:

All welded stainless steel shelving.

Stainless steel legs: 10" & 12" wide - 1" tubing.
15" wide - 1-5/8" tubing.

Shelves have front & rear rolled edges and sides have square edges.

CONSTRUCTION:

All TIG welded.

Exposed surfaces polished to a satin finish.

MATERIAL:

All Shelves are 18 gauge type "430" stainless steel.

Holes are required in Table Top.

MODIFICATIONS:

Use **TA-47** for special mounting hardware to easily add to existing tables. (for special modifications, consult factory)

Use **TA-99** for 16 Gauge, 304 Stainless Steel Upgrade.

ADVANCE TABCO
SMART FABRICATION™
www.advancetabco.com

Customer Service Available To Assist You 1-800-645-3166 8:30 am - 8:00 pm E.S.T.

Email Orders To: customer@advancetabco.com. For Smart Fabrication™ Quotes, Email To: smartfab@advancetabco.com or Fax To: 631-586-2933

NEW YORK	GEORGIA	TEXAS	NEVADA
Fax: (631) 242-6900	Fax: (770) 775-5625	Fax: (972) 932-4795	Fax: (775) 972-1578

DETAILS and SPECIFICATIONS

TOL ± .500”

ALL DIMENSIONS ARE TYPICAL

SINGLE DECK
TABLE MOUNTED

Specify location. Front, Center or Rear.



For 18” Wide Shelves,
See PT Shelving

DOUBLE DECK
TABLE MOUNTED

Specify location. Front, Center or Rear.

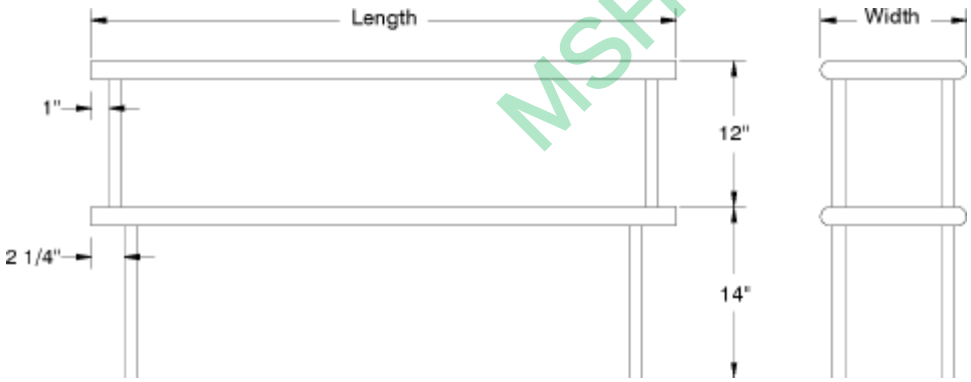

MSHCG

For 18” Wide Shelves,
See PT Shelving

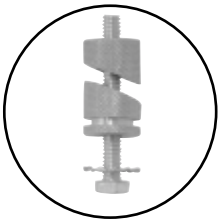

Brass Expander Table
Mounting Hardware Included
with OTS & ODS Shelving

ADVANCE TABCO is constantly engaged in a program of improving our products. Therefore, we reserve the right to change specifications without prior notice.

© ADVANCE TABCO, DECEMBER 2007

Only from NEMCO!

The NEW CanPRO® Compact

Turns the old chore of opening cans completely around!



CanPRO *leaves the circumference and lip of the lid intact, so the lid doesn't fall into the can.*

NEW!
Gearless drive means no gear breakdown.

NEW!
Cutter design alleviates metal slivers.

NEW!
Cutter module makes a quick change in a busy kitchen.

MSHCG

Under Clamp Mount
Model # 56050-2

Smooth Operator

Say goodbye for good to the "lift, slam, puncture and rip" can-opening techniques that have been overstressing elbows for 100 years. The NEW redesigned CanPRO® Compact runs smarter and easier and longer than ever.

Think Outside the Can

Unlike conventional can openers that puncture and cut down into the lid from the top, NEMCO's new CanPRO cuts from the side, along the lid's outer seam.

- The cutter never makes contact with the inside of the can.
- No metal shavings fall into the food.
- The lid comes off clean with no jagged edges.

Seams So Smooth

As a result of NEW engineering, the compression of the CanPRO's cutter has been carefully fine-tuned to improve performance.

- The cutter's new design won't penetrate past the first layer of metal on the lid's seam, alleviating the potential for producing metal slivers if the user overrotates the can.
- When the cutter runs its life cycle, it won't cut at all, clearly indicating it should be replaced.

Cut and Run...and Keep Running

The NEW CanPRO is specially designed to minimize downtime and costly repairs. Plus, the entire unit is dishwasher-safe.

- No more gear breakage or wear, thanks to a completely gearless handle.
- The cutter housing is a quick-change module—switch out a used for a new with just a pull of a pin. Keep an extra new modular cutter on hand, and you're never down.
- Stainless steel and aluminum nickel-plated components translate into a long, virtually maintenance-free life.

Model	Description
56050-1	CanPRO Compact, Permanent
56050-2	CanPRO Compact, Under Clamp
56050-3	CanPRO Compact, Security Model
56022	Cutter Housing Assembly
56029	Cutter

Dimensions	
Max. height	9½" (holds up to #10 can)
Handle radius	6"

Recommended handle turns per can size:

Can size	Diameter	Handle turns
#2	3"	3 revolutions
#5	5"	5 revolutions
#10	6"	6 revolutions

Note: Too many rotations—going beyond the point of initial cut—may produce metal slivers.

Replacement parts are available through NEMCO's 24-hour Zip Program.

NSF



Tough, lasting, precision-ground stainless steel cutter—*cuts up to 5,000 lids, and is easy to replace.*

Can-locking feature *(holds up to #10 cans)—easily orients and holds the cutter to the lid.*

Separate cutter housing assembly—*When you purchase your* CanPRO, *be sure to order an extra, easy-to-replace cutter housing assembly to minimize downtime.*

Stainless steel permanent mount model—*screws into the countertop. The security model option (shown) includes a locking capability. (Lock not included.)*

Stainless steel under clamp model—*easily and securely affixes to any counter up to 2¾" thick.*

MSHCG

NEMCO FOOD EQUIPMENT

"Exceeding your expectations"

NEMCO™ Food Equipment, Ltd.
301 Meuse Argonne
Hicksville, Ohio 43526
1.800.782.6761
419.542.7751
419.542.6690, fax
www.nemcofoodequip.com

CHANNEL MANUFACTURING, INC.

Item No. _____

Quantity _____

Job Name _____

Spec No. _____

BUN PAN RACKS

FULL SIZE ALL WELDED

ALUMINUM OR STAINLESS CONSTRUCTION

Custom Sizes Available



401A Front Load



411A Side Load



401S Front Load

ALUMINUM		STAINLESS					
Model	Wt.	Model	Wt.	Spacing/Capacity	H	W	D
400A	45	400S	75	FL 2"/ 30 Pans	70¼"	20½"	26"
401A	36	401S	57	FL 3"/ 20 Pans	70¼"	20½"	26"
402A	32	402S	47	FL 4"/ 15 Pans	70¼"	20½"	26"
403A	30	403S	41	FL 5"/ 12 Pans	70¼"	20½"	26"
404A	28	404S	35	FL 6"/ 10 Pans	70¼"	20½"	26"
405A	43	405S	70	FL 2"/ 27 Pans	64"	20½"	26"
406A	35	406S	53	FL 3"/ 18 Pans	64"	20½"	26"
410A	43	410S	70	SL 2"/ 30 Pans	70¼"	28½"	18"
411A	33	411S	55	SL 3"/ 20 Pans	70¼"	28½"	18"
412A	30	412S	44	SL 4"/ 15 Pans	70¼"	28½"	18"
413A	28	413S	38	SL 5"/ 12 Pans	70¼"	28½"	18"
414A	26	414S	33	SL 6"/ 10 Pans	70¼"	28½"	18"
415A	40	415S	65	SL 2"/ 27 Pans	64"	28½"	18"
416A	35	416S	50	SL 3"/ 18 Pans	64"	28½"	18"

Options:

- ❑ /011 Caster Brakes
- ❑ /052 5" X 2" Caster Upgrade
- ❑ /5B HD Caster Brakes
- ❑ /CC Card Clip Aluminum
- ❑ /022 Corner Bumpers (2)
- ❑ /024 Corner Bumpers (4)
- ❑ /PB Perimeter Bumper
- ❑ /VB VerticalBumper
- ❑ /009 Pan Stop Aluminum
- ❑ /010 Pan Stop Stainless
- ❑ /PG Pan Stop Gravity
- ❑ /015 Pan Stop Web-Strap
- ❑ /BA Solid Bottom Aluminum
- ❑ /A Solid Top Aluminum

APPLICATIONS: Mobile multi-purpose racks for holding, storing and transporting both plastic and aluminum. 18" X 26" Bun Pans, 18" X 13" Pans, and 17" X 25" Fryer Screens.

CONSTRUCTION: **Aluminum**: Heavy duty, high tensile extruded aluminum. Type 6063-T5 alloy. Lifetime guarantee against rust and corrosion. **Stainless**: 18 Guage, 304 Series stainless steel.

TRAY SLIDES: Slides are 1" X 1-1/2" extruded aluminum angle heli-arc welded to frame. Bottom load ledge design.

FRAME AND CROSS SUPPORTS: Vertical and horizontal frame sections are 1" extruded aluminum tubing and 1" solid flat bar extruded aluminum or stainless.

CASTERS: Standard 5" full swivel non-marking casters. Casters are securely bolted to frame to facilitate replacements.

MSRCG

MADE IN THE USA NSF

Notes

55 Channel Drive • Port Washington, NY11050-2216
8891 NW 102nd Street • Medley, FL 33178
Tel: 516-944-6271 • Fax: 516-944-0625
Toll Free: 866-712-7283
www.channelmfg.com • Email: sales@channelmfg.com

Rev 2-1-15

"BT3S" Maple Top Work Tables

w/ 1 3/4" thick Hard Rock Maple Top
w/ 3- Drawer Tier Unit
w/ Stainless Steel Base



BT3S w/ 1-3/4" Flat Top w/ 4" Coved Riser Back & Both Ends	
30" WIDE	Qty
BT3S01	
BT3S02	
BT3S03	
BT3S04	

FEATURES:

* 1 3/4" Thick Hard Rock Maple Top
  top style "SC" flat top w/ 4" Coved Riser Back and Both Ends
* Maple top is finished with penetrating oil
  with optional natural clear Varnique Finish
* Stainless Steel Base and Bracing
  Type 300 stainless steel with # 3 polish, satin finish
* Adjustable bullet feet
* Shipped Standard Welded Set-Up
* Optional drawers, casters, pot racks, etc. available
* All models are approved by the National Sanitation Foundation

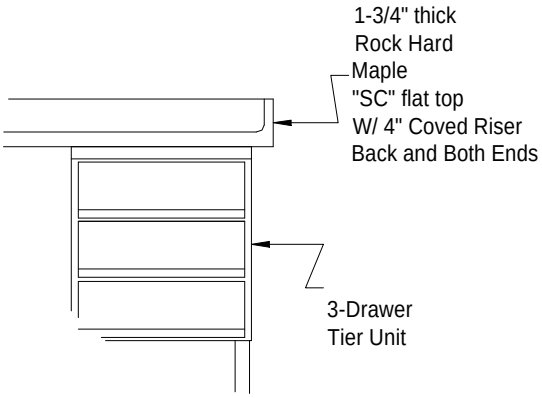

MSHCG

CONSTRUCTION:

Base: Stainless Steel Bases are TIG welded, Exposed welds are polished to match adjacent surface.

MATERIAL:

Top: Laminated Hard Rock Maple
Drawer Unit: Panels - 22 gauge
Front Drawer Pulls - 14 gauge
Reinforced with 1-1/2" Square O.D. tubing
*All type 300 stainless steel. # 3 polish, satin finish
Bracing: 1 1/4" Round O.D. 18 gauge type 300 tubular stainless steel # 3 polish, satin finish
Legs: 1 5/8" Round O.D., 16 gauge type 300 tubular stainless steel # 3 polish, satin finish
Gussets: Stainless Steel
Feet: 1" adjustable galvanized bullet feet

OPTIONAL ACCESSORIES

	MODEL #	Qty
STAINLESS STEEL FEET		
DRAWER LOCK		
CASTERS		
OVERSHELVES		
POT RACK		

John Boos & Co
315 South First Street - Effingham, IL 62401
Phone: 217-347-7701 - Fax: 217-347-7705
Email: sales@johnboos.com - Web-site: www. johnboos.com

DETAILED SPECIFICATIONS

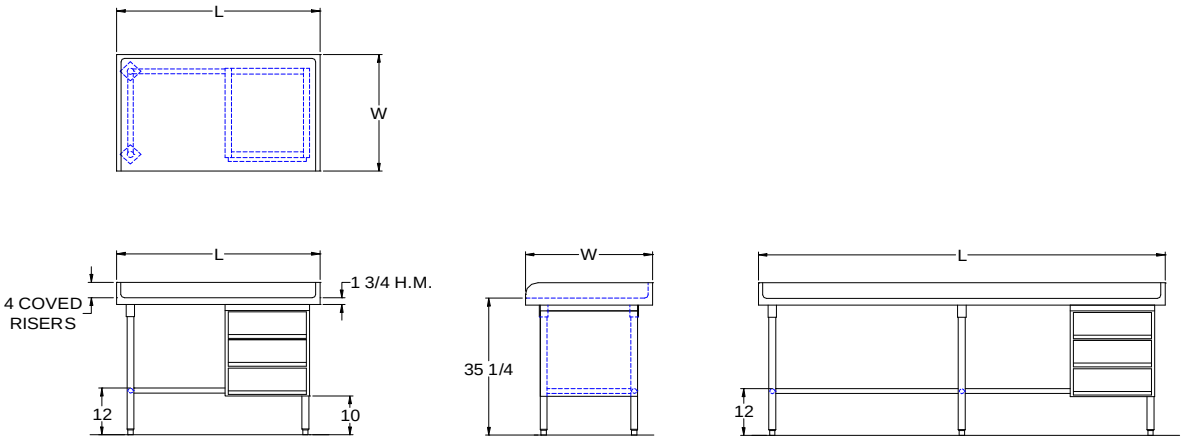

Shipped Welded Set-Up
Units 7 ft. and larger are furnished with six legs.
All dimensions are typical.
Tolerance +/- .500".

MSHCG

	BT3S w/ 1-3/4" Flat Top w/ 4" Coved Riser Back & Both Ends	
48	BT3S01	165
60	BT3S02	190
72	BT3S03	215
96	BT3S04	267

John Boos & Co
315 South First - Effingham, IL 62401 Phone: 217-347-7701 - Fax: 217-347-7705
Email: sales@johnboos.com - Web-site: www.johnboos.com

May 2002

John Boos is constantly engaged in a program of improving products and therefore reserves the right to change specification without prior notice

Item # _____

Quantity _____

C.S.I. Section 11400

HOBART
701 S Ridge Avenue, Troy, OH 45374
1-888-4HOBART • www.hobartcorp.com

LEGACY® HL600 MIXER

STANDARD FEATURES

- Heavy-Duty 2.7 H.P. Motor
- Gear Transmission
- Four Fixed Speeds Plus Stir Speed
- Shift-on-the-Fly™ Controls
- Patented soft start Agitation Technology
- 20-Minute SmartTimer™
- Automatic Time Recall
- Large, Easy-To-Reach Controls
- Single Point Bowl Installation
- Ergonomic Swing-Out Bowl
- Power Bowl Lift
- #12 Taper Attachment Hub
- Open Base
- Stainless Steel Bowl Guard
- Metallic Gray Hybrid Powder Coat Finish

ACCESSORY PACKAGE - featuring Hobart Quick Release™ Agitators

❑ ***Standard Accessory Package Includes:***

- 60 Quart Stainless Steel Bowl
- 60 Quart “B” Beater
- 60 Quart “D” Wire Whip
- 60 Quart “ED” Dough Hook

MODELS

❑ HL600 – 60-Quart All Purpose Mixer
❑ HL600C – 60-Quart All Purpose Mixer with Maximum Security Correctional Package

Specifications, Details and Dimensions on Inside and Back.

MSHCG



HOBART

LEGACY® HL600 MIXER

LEGACY®
HL600 MIXER

HOBART
701 S Ridge Avenue, Troy, OH 45374
1-888-4HOBART • www.hobartcorp.com

SOLUTIONS/BENEFITS

2.7 H.P. Motor
Durability
- Heavy-duty to meet the most demanding operations

Gear Transmission
Durability, Reliability
- Ensures consistent performance and minimum downtime under heavy loads

Four Fixed Speeds plus Stir Speed
Flexibility, Reliability, Consistency
- For incorporating, blending, mixing ingredients
- Supports consistent results and thorough mixing

Shift-on-the-Fly™ Controls
Flexibility
- Allows operator to change speeds while mixer is running

Patented soft start Agitation Technology
Sanitation
- Each speed has a soft transition into a higher speed to reduce the chances of product splash-out

20-Minute SmartTimer™
Convenience, Ease of Use, Consistency
- Supports recipe mixing times
- Provides accurate results and eliminates overmixing

Automatic Time Recall
Productivity, Consistency
- Remembers the last time set for each speed
- Great for multiple batches

Ergonomic Swing-Out Bowl
Ease of Use, Convenience
- Easy loading and unloading of products
- Single Point Bowl Installation allows for simple mounting and removal of bowl
- Bowl Lock ensures mixer bowl is properly in place for mixer to operate

Stainless Steel Bowl Guard
Protection
- Safety interlock prevents operation when front portion of guard is out of position

Hobart Accessories
Durability, Flexibility, Simplicity
- Hobart Quick Release™ agitators allow for simple installation and removal from agitator shaft
- Hobart accessories are designed for long-term usage under heavy-duty conditions
- Large array of accessories provide multiple uses for recipe and product processing

HL600 MIXER CAPACITY CHART

Recommended Maximum Capacities - dough capacities based on 70°F. water and 12% flour moisture.

PRODUCT	AGITATORS SUITABLE FOR OPERATION	HL600
CAPACITY OF BOWL (QTS. LIQUID)		60
Egg Whites	D	2 qts.
Mashed Potatoes	B & C	40 lbs.
Mayonnaise (Qts. of Oil)	B or C or D	18 qts.
Meringue (Qts. of Water)	D	1½ qts.
Waffle or Hot Cake Batter	B	24 qts.
Whipped Cream	D or C	12 qts.
Cake, Angel Food (8-10 oz. cake)	C or I	45
Cake, Box or Slab	B or C	50 lbs.
Cake, Cup	B or C	60 lbs.
Cake, Layer	B or C	60 lbs.
Cake, Pound	B	55 lbs.
Cake, Short (Sponge)	C or I	45 lbs.
Cake, Sponge	C or I	36 lbs.
Cookies, Sugar	B	40 lbs.
Dough, Bread or Roll (Lt.-Med.) 60% AR §	ED	80 lbs.*
Dough, Heavy Bread 55% AR §	ED	60 lbs.*
Dough Pie	B & P	50 lbs.
Dough, Thin Pizza 40% AR (max. mix time 5 min.) §‡	ED	40 lbs.□
Dough, Med. Pizza 50% AR §‡	ED	70 lbs.□
Dough, Thick Pizza 60% AR §‡	ED	70 lbs.*
Dough, Raised Donut 65% AR	ED	30 lbs.†
Dough, Whole Wheat 70% AR	ED	70 lbs.
Eggs & Sugar for Sponge Cake	B & C or I	24 lbs.
Icing, Fondant	B	36 lbs.
Icing, Marshmallow	C or I	5 lbs.
Shortening & Sugar, Creamed	B	48 lbs.
Pasta, Basic Egg Noodle (max. mix time 5 min.)	ED	30 lbs.

NOTE: % AR (% Absorption Ratio) - Water weight divided by flour weight. Capacity depends on moisture content of dough. Above capacities based on 12% flour moisture at 70°F water temperature.

□ 1st Speed

* 2nd Speed

† 3rd Speed

§ If high gluten flour is used, reduce above dough batch size by 10%.

‡ 2nd Speed should never be used on 50% AR or lower products.

USE OF ICE REQUIRES A 10% REDUCTION IN BATCH SIZE.

1 gallon of water weighs 8.33 lbs.

NOTE: Attachment hub should not be used while mixing.

MSHCG

HOBART
701 S Ridge Avenue, Troy, OH 45374
1-888-4HOBART • www.hobartcorp.com

LEGACY® HL600 MIXER

SPECIFICATIONS

MOTOR:
2.7 H.P. high torque motor.

200-240/50/60/3/1	18.0 (1 Phase) Amps
	10.0 (3 Phase) Amps
380-460/50/60/3	6.5 Amps

ELECTRICAL:
200-240/50/60/3/1, 380-460/50/60/3 – UL Listed.

CONTROLS:
Magnetic contactor with thermal overload protection. Internally sealed “Start-Stop” and Power Bowl Lift push buttons. Reduced voltage pilot circuit transformer is supplied for 380-460/50/60/3 machines. A 20-minute SmartTimer™ is standard. SmartTimer™ includes **Automatic Time Recall**, which remembers the last time set for each speed.

TRANSMISSION:
A rated 5.4 H.P. poly-V belt transfers power from motor to the input shaft then geared down to desired reduction with a constant gear mesh. Gears and shafts are heat-treated hardened alloy steel along with anti-friction ball bearings. Circulating oil and grease lubricants furnished to all gears and shafts.

SPEEDS:

	Agitator (RPM)	Attachment (RPM)
Stir	36	71
First	71	138
Second	123	241
Third	206	401
Fourth	362	707

BOWL GUARD:
Heavy-duty stainless steel wire front and solid stainless steel rear portion. Front portion of guard rotates easily to add ingredients and install or remove agitator. It detaches in seconds for cleaning in dishwasher or sink. Rear portion of guard can be quickly cleaned in position. Guard must be in closed position before mixer will operate. Bowl support interlock provides further protection.

POWER BOWL LIFT:
Powered by an electric motor, the bowl may be raised or lowered by fingertip control through the conveniently located switch. Bowl will remain in position until switch is activated. **Stir-on-Lift Feature:** Allows the agitator to run in Stir Speed while the mixer bowl is being raised. Once the bowl is in the raised position, the mixer automatically shifts into the preselected speed.

FINISH:
Metallic Gray Hybrid Powder Coat finish.

FOOTPADS:
Neoprene footpads are standard.

ATTACHMENT HUB:
Comes with front-mounted Hobart standard #12 taper attachment hub for use with #12 size attachments.

ATTACHMENTS AND ACCESSORIES:
The following are available at extra cost:

- Stainless Steel Bowl
- “B” Flat Beater
- “C” Wing Whip
- “D” Wire Whip
- “ED” Dough Hook
- “P” Pastry Knife
- “I” Heavy Duty Wire Whip
- Bowl Extension Ring
- Bowl Splash Cover
- Bowl Scraper
- Bowl Truck
- 40 Quart Accessories
- Ingredient Chute
- 9" Vegetable Slicer
- Meat Chopper Attachment



Hobart Bowl Scraper



Hobart Ingredient Chute

Listed by Underwriters Laboratories Inc. and certified by NSF International.

MSHCG

LEGACY®
HL600 MIXER

HOBART
701 S Ridge Avenue, Troy, OH 45374
1-888-4HOBART • www.hobartcorp.com

SPECIFICATIONS

ELECTRICAL SPECIFICATIONS: 200-240/50/60/3/1, 380-460/50/60/3 – UL Listed.

WEIGHT: 866 lbs. net; 916 lbs. domestic shipping.

WARRANTY: Unit has full one-year warranty on parts, labor and mileage against manufacturer's defects. Service contracts are available.

DETAILS AND DIMENSIONS

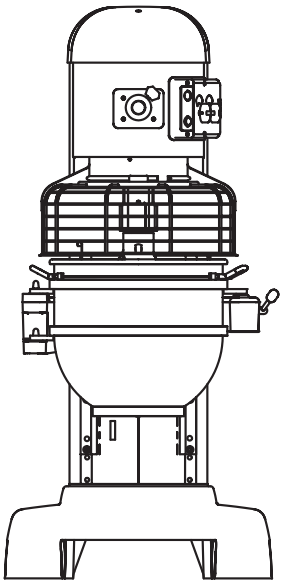

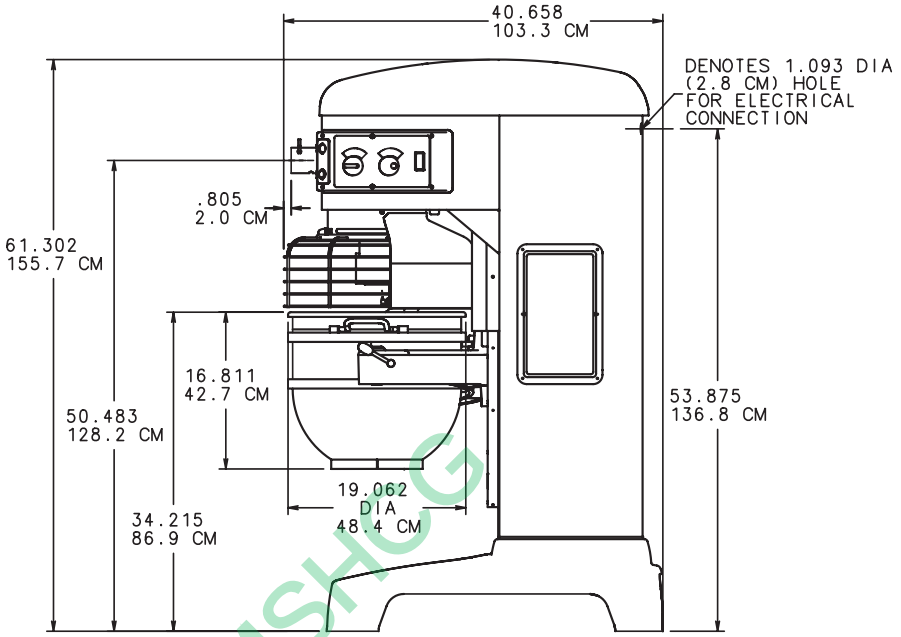

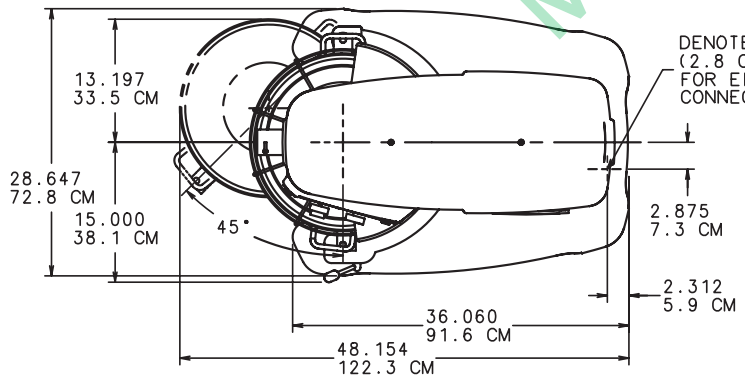

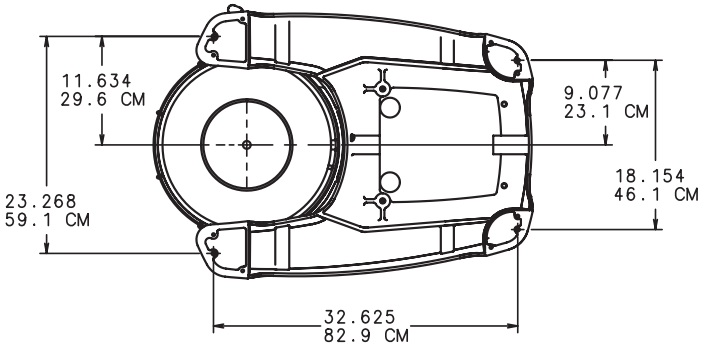

WARNING

ELECTRICAL AND GROUNDING CONNECTIONS MUST COMPLY WITH THE APPLICABLE PORTIONS OF THE NATIONAL ELECTRICAL CODE AND/OR OTHER LOCAL ELECTRICAL CODES.

STANDARD MODEL:

NET WT (BOWL INCLUDED) 905 LBS (411.4 KG).
DOMESTIC SHIPPING WT (BOWL INCLUDED) 955 LBS (434.1 KG).
BOWL WT 39 LBS (17.7 KG)-REF

MSHOG

As continued product improvement is a policy of Hobart, specifications are subject to change without notice.

MANITOWOC

INDIGO NXT

iT0500 Ice Cube Machine

iT0500 Ice Cube Machine

Models

☐ IRT0500A ☐ IDT0500A ☐ IYT0500A ☐ IRT0500W ☐ IDT0500W
☐ IYT0500W ☐ IDT0500N ☐ IYT0500N

ENERGY STAR



Indigo NXT Series iT0500
Ice Machine on D570 Bin

Designed for operators who know that ice is critical to their business, the Indigo NXT Series ice machine's preventative diagnostics continually monitor itself for reliable ice production. Improvements in cleanability and programmability make your ice machine easy to own and less expensive to operate.

- **New levels of Performance** – Showcasing an average of 12% lower energy consumption and a 23% reduction in condenser water usage. This translates into lower cost of ownership over the life of your machine.
- **easyTouch® Display** - New icon based touch screen takes the guess work out of owning and operating an ice machine.
- **Programmable Ice Production** – Now its super easy to program your ice machine to be off at certain times of the day to save money with fluctuating electrical rates. Also programmable by daily ice production volume.
- **Easy to Clean Foodzone** – Hinge front door swing out for easy access. Removable water-trough, distribution tube, curtain, water probe and water pump for fast and efficient cleaning. Selected components are made with AlphaSan® antimicrobial.
- **Intelligent Diagnostics** – Provides 24 hour preventative maintenance and diagnostic feedback for trouble free operation.
- **Acoustical Ice Sensing Probe** – Unique patented technology allows for reliable operation in challenging water conditions and environments
- **DuraTech® Exterior** – Provides superior corrosion resistant above stainless steel. Innovative clear-coat resists fingerprints and dirt making it easier to keep clean.
- Available **LuminIce® II Growth Inhibitor** – Controls the growth of bacteria and yeast within the Food zone keeping the machine cleaner longer. A new indicator in the display keeps you abreast of the operational status.

MSRC

Ice Machine Electric

115/60/1 standard
(208-230/60/1also available)

Minimum circuit ampacity:

Air-cooled:	115v : 11.5, 208-230v : 5.1
Water-cooled:	115v : 10.8
Remote	115v : 13.7

Maximum fuse size:

Air Cooled:	15 amps
Water cooled:	15 amps
Remote:	20 amps

COMMERCIAL WARRANTY
ICE MAKER 3 YEAR PARTS AND LABOR
EVAPORATOR 5 YEAR PARTS AND LABOR
COMPRESSOR 5 YEAR PARTS 3 YEAR LABOR

Specifications

BTU Per Hour:
3,800 (average),
and 6,000 (peak)

Refrigerant:
R410A CFS - Free
Lowers global warming by 48%

Operating Limits:

- Ambient Temperature Range: 40˚ to 110˚F (4.4˚ to 43.3˚C)
  Water Temperature Range: 40˚ to 90˚F (4.4˚ to 32.2˚C)
- Water Pressure Ice Maker
  Water In:
  Min. 20 psi (137.9 kPA)
  Max. 80 psi (551.1 kPA)

Ice Shape



Dice
⅞" x ⅞" x ⅞"
(2.22 x 2.22 x 2.22 cm)



Half Dice
⅜" x 1⅛" x ⅞"
(.95 x 2.86 x 2.22 cm)



Regular
1⅛" x 1⅛" x ⅞"
(2.86 x 2.86 x 2.22 cm)

CALIFORNIA LOW LEAD QUALIFIED
AHRI CERTIFIED
NSF c UL US LISTED CE
AutoQuotes
COMPANY WITH QUALITY SYSTEM

2110 South 26th Street
Manitowoc, WI 54220

Tel: 1.920.682.0161
Fax: 1.920.683.7589

www.manitowocice.com

WELBILT

MANITOWOC®

Indigo® NXT™ iT0500 Ice Cube Machine

iT0500 on D-570 Storage Bin

Ⓐ Electrical Entrance (2) Options
Ⓑ 3/8" (0.95 cm) F.P.T. Water Condenser Inlet (water-cooled units)
Ⓒ 1/2" (1.27 cm) F.P.T. Water Condenser Outlet (water-cooled units)
Ⓓ 1/2" (1.27 cm) Auxillary Base Drain Socket
Ⓔ 3/8" (0.95 cm) F.P.T. Ice Making Water Inlet
Ⓕ 1/2" (1.27 cm) F.P.T. Ice Making Water Drain
Ⓖ 3/4" (1.91 cm) Bin Drain

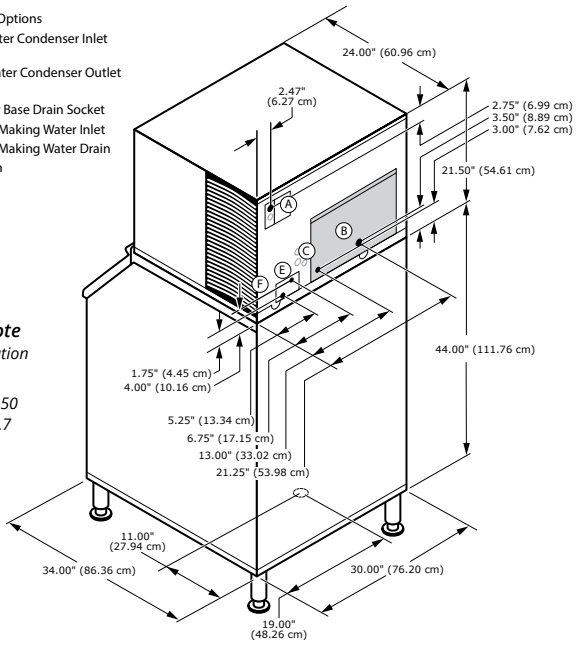

Installation Note
Minimum installation clearance:

Top/side: 12" (30.50 cm)Back is 5" (12.7 cm)

Space-Saving Design



	iT0500 D-400	iT0500 D-570
Height	59.50" 151.13 cm	71.50" 181.61 cm
Width	30.00" 76.2 cm	30.00" 76.2 cm
Depth	34.00" 86.30 cm	34.00" 86.30 cm
Bin Storage	365 lbs. 165.7 kgs.	543 lbs. 241.1 kgs.

Height includes adjustable bin legs 6.00" to 8.00", (15.24 to 20.32 cm) set at 6.00" (15.24 cm).
Bin capacity is based on 90% of the volume x 33 lbs/ft3 average density of ice.

Specifications

	Model	Ice Shape	Ice Production 24 Hours 70°Air/ 50°F Water	Ice Production 24 Hours 90°Air/ 70°F Water	Power Usage kWh/100 lbs. @90°Air/70°F 1 Ph	Potable Water Usage/100 lbs. 45.4 kgs. of Ice
AIR COOLED	IRT0500A	Regular	500 lbs.	386 lbs.	5.04 ★	19 Gal.
			227 kgs	175 kgs		71.9 L
	IDT0500A	dice	520 lbs.	400 lbs.	5.25 ★	19 Gal.
			236 kgs	181 kgs		71.9 L
	IYT0500A	half-dice	550 lbs.	440 lbs.	4.58 ★	19 Gal.
			249 kgs	200 kgs		71.9 L
WATER COOLED	IRT0500W	Regular	500 lbs.	406 lbs.	4.30	19 Gal.
			227 kgs	184 kgs		71.9 L
	IDT0500W	dice	500 lbs.	400 lbs.	4.41	19 Gal.
			227 kgs	181 kgs		71.9 L
	IYT0500W	half-dice	535 lbs.	460 lbs.	3.90	19 Gal.
			243 kgs.	209 kgs		71.9 L
	* Water-cooled Condenser Water Usage / 100 lbs. /45.4 kgs. Of Ice: 130 gal/ 492 L. *Water-cooled models are excluded from ENERGY STAR qualification.					
REMOTE COOLED	IDT0500N	half-dice	510 lbs.	450 lbs.	6.11	19 Gal.
			231 kgs	204 kgs		71.9 L
	IYT0500N	dice	585 lbs.	500 lbs.	5.59 ★	19 Gal.
			265 kgs.	227 kgs		71.9 L
	Ice storage bin and JCT0500 remote condenser for remote units must be ordered separtely					

Order separately, ice storage bin units for "N" models remote condenser JCT0500
★*ENERGY STAR® 3.0*

MSHCG

Accessories

LuminIce® II Growth Inhibitor
reduces yeast and bacteria growth for a cleaner ice machine.



External Scoop holder
Protect the ice scoop with the NSF approved versatile scoop holder.



Arctic Pure® Water Filters
Reduces sediment and chlorine odors for better tasting ice.



iAuCS®
schedules and performs routine ice machine cleaning automatically.



Welbilt reserves the right to make changes to the design or specifications without prior notice.

2110 South 26th Street
Manitowoc, WI 54220

Tel: 1.920.682.0161
Fax: 1.920.683.7589

www.manitowocice.com
6479 01/18

WELBILT®

Model - IS-10 TWIN
Part # - 310012

Job Name:_____

Item#:_____ **Qty:**_____

System Summary

The IceSpec™ IS-10 Twin System provides excellent sediment filtration, chlorine removal and mineral scale control for ice machines.

The IS-10 Twin System incorporates the patented HydroBlend™/ScaleStick™ scale control insert providing unparalleled mineral scale prevention and corrosion control for predictable treatment periods.



Benefits and Features

* Removes chlorine improving taste and reducing potential corrosion issues.
* Mineral scale build up responsible for increased maintenance is reduced.
* Removes sediment that causes cloudy ice and plugs distribution tubes and float valves.
* Energy efficiency and machine life are increased while reducing costly service calls.
* Bayonet Style Quick Disconnect cartridge makes filter replacement quick & easy.
* Compact design facilitates system placement and installation.
* Patented HydroBlend™/ScaleStick™ insert provides optimum scale prevention.
* NSF Certified Under Standard 42.

System Specifications	
Rated Service Flow	3.3 gpm / (12.5 lpm)
Rated Capacity	20,000 Gal. / Chlorine Removal Only
Connection Size	1/2" Male Thread
Operating Pressure	30-125 psi / (2-8.6 bar)
Operating Inlet Temperature	35°-100°F / (2°-38°C)
Dimensions	9.25"x15.75"x5.5" (WxHxD)
Shipping Weight	7 lbs
Replacement Cartridge	(2) IS-10 Cartridge #310035

MSHCG

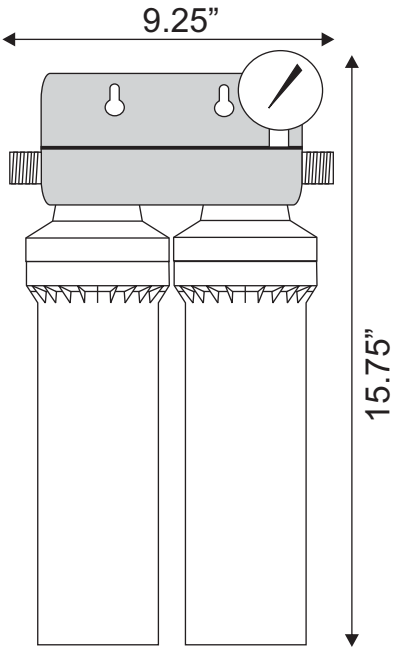

Installation Summary

* Cold water inlet feed only.
* Do not over tighten fittings onto the connections.
* Ensure the unit is mounted vertically as pictured.
* Allow 3" clearance under the unit for filter replacement.
* Place where the unit is accessible for filter replacement.

For commercial use only. Do not use where water is microbiologically unsafe or of unknown quality without disinfection before or after the system.

Warranty

Systems have a limited 1 year warranty against defects in material or workmanship.

NSF

System Tested and Certified by NSF International against NSF/ANSI Standard 42 for the reduction of Chlorine, Taste and Odor.

WaterSpec Filter Systems
158 Railroad Street
Canton, GA 30114
800-935-8500
www.waterspec.com

ADVANCE TABCO
SMART FABRICATION™

STAINLESS STEEL

WORK TABLES

PREMIUM Series - 5" Backsplash - Open Base Style



Item #: _____ Qty #: _____

Model #: _____

Project #: _____



Rolled Rim Edges on Front & Splash on Back and Square Side Edges



1-5/8" LEG STRETCHERS Ensure Stability

FEATURES:

Top is furnished with 1 5/8" sanitary rolled rim edge on front and square sides, and a 5" splash with a 1" return on the rear side.

24" wide tables supplied with TWO hat channels stud welded to reinforce and maintain a level working surface. 30" and 36" wide tables supplied with THREE hat channels.

Pre-engineered welded angle adapters insure ease of future drawer installation.

Front to back Stretchers are welded to legs. Left to right Stretcher bolted to legs and requires assembly.

CONSTRUCTION:

All TIG welded. Exposed weld areas polished to match adjacent surfaces.

Entire top mechanically polished to a satin finish.

Top is sound deadened.

Roll formed embossed galvanized hat channels are secured to top by means of structural adhesive and weld studs.

Gussets welded to support hat sections.

MATERIAL:

TKSS-SERIES: Stainless Steel Legs - Open Base

TOP: 14 gauge stainless steel type "304" series.
STRETCHERS: 1 5/8" dia. tubular stainless steel.
LEGS: 1 5/8" diameter tubular stainless steel.
1" adjustable stainless steel bullet feet.
Stainless steel gussets.

TKLG-SERIES: Galvanized Legs - Open Base

TOP: 14 gauge stainless steel type "304" series.
STRETCHERS: 1 5/8" dia. tubular galvanized steel.
LEGS: 1 5/8" diameter tubular galvanized steel.
1" adjustable plastic bullet feet.
Galvanized steel gussets.

MSHCG

TKSS-Series:
Stainless Steel Legs & Stretchers

L	24" Wide	30" Wide	36" Wide
30"	TKSS-240	TKSS-300	
24"	TKSS-242	TKSS-302	
36"	TKSS-243	TKSS-303	TKSS-363
48"	TKSS-244	TKSS-304	TKSS-364
60"	TKSS-245	TKSS-305	TKSS-365
72"	TKSS-246	TKSS-306	TKSS-366
84"	TKSS-247	TKSS-307	TKSS-367
*96"	TKSS-248	TKSS-308	TKSS-368
*108"	TKSS-249	TKSS-309	TKSS-369
*120"	TKSS-2410	TKSS-3010	TKSS-3610
*132"	TKSS-2411	TKSS-3011	TKSS-3611
*144"	TKSS-2412	TKSS-3012	TKSS-3612

TKLG-Series:
Galvanized Steel Legs & Stretchers

L	24" Wide	30" Wide	36" Wide
30"	TKLG-240	TKLG-300	
24"	TKLG-242	TKLG-302	
36"	TKLG-243	TKLG-303	TKLG-363
48"	TKLG-244	TKLG-304	TKLG-364
60"	TKLG-245	TKLG-305	TKLG-365
72"	TKLG-246	TKLG-306	TKLG-366
84"	TKLG-247	TKLG-307	TKLG-367
*96"	TKLG-248	TKLG-308	TKLG-368
*108"	TKLG-249	TKLG-309	TKLG-369
*120"	TKLG-2410	TKLG-3010	TKLG-3610
*132"	TKLG-2411	TKLG-3011	TKLG-3611
*144"	TKLG-2412	TKLG-3012	TKLG-3612

NSF

*Units 8 ft. and larger are furnished with six (6) legs

Create Your Own Efficient Workstation with the Available Standard Accessories (Visit Section

ADVANCE TABCO
SMART FABRICATION™
www.advancetabco.com

Customer Service Available To Assist You 1-800-645-3166 8:30 am - 8:00 pm E.S.T.

For Orders & Customer Service:
Email: customer@advancetabco.com or **Fax:** 631-242-6900

For Smart Fabrication™ Quotes:
Email: smartfab@advancetabco.com or **Fax:** 631-586-2933

DETAILS and SPECIFICATIONS

ALL DIMENSIONS ARE TYPICAL TOL ± .500”

All Units Shipped Unassembled (KD) for Reduced Shipping Costs.

TKSS & TKLG Series
Open Base Style
5” Backsplash

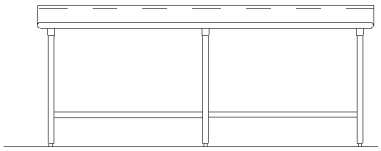

Units 8ft. and larger are furnished with six (6) legs

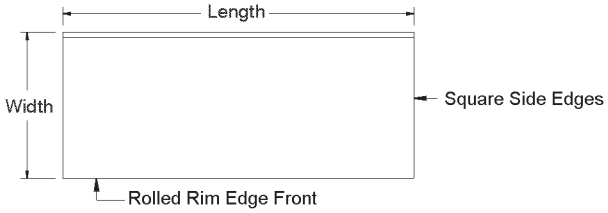

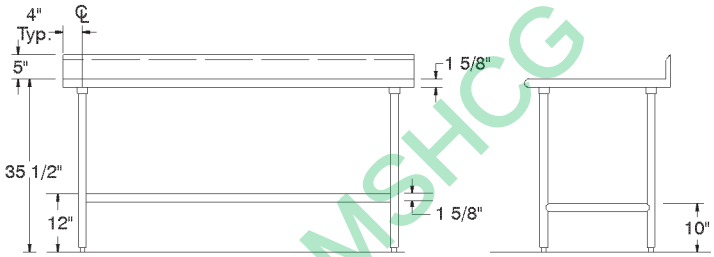

MSHCG

TKSS-Series: Stainless Steel Legs & Stretchers

L	24” Wide	Wt.	30” Wide	Wt.	36” Wide	Wt.
30”	TKSS-240	49 lbs.	TKSS-300	55 lbs.		
24”	TKSS-242	43 lbs.	TKSS-302	48 lbs.		
36”	TKSS-243	55 lbs.	TKSS-303	62 lbs.	TKSS-363	80 lbs.
48”	TKSS-244	67 lbs.	TKSS-304	75 lbs.	TKSS-364	85 lbs.
60”	TKSS-245	77 lbs.	TKSS-305	89 lbs.	TKSS-365	99 lbs.
72”	TKSS-246	89 lbs.	TKSS-306	97 lbs.	TKSS-366	112 lbs.
84”	TKSS-247	107 lbs.	TKSS-307	118 lbs.	TKSS-367	131 lbs.
96”	TKSS-248	119 lbs.	TKSS-308	131 lbs.	TKSS-368	145 lbs.
108”	TKSS-249	135 lbs.	TKSS-309	150 lbs.	TKSS-369	165 lbs.
120”	TKSS-2410	234 lbs.	TKSS-3010	249 lbs.	TKSS-3610	268 lbs.
132”	TKSS-2411	258 lbs.	TKSS-3011	276 lbs.	TKSS-3611	298 lbs.
144”	TKSS-2412	273 lbs.	TKSS-3012	291 lbs.	TKSS-3612	313 lbs.

TKLG-Series: Galvanized Steel Legs & Stretchers

L	24” Wide	Wt.	30” Wide	Wt.	36” Wide	Wt.
30”	TKLG-240	49 lbs.	TKLG-300	55 lbs.		
24”	TKLG-242	43 lbs.	TKLG-302	48 lbs.		
36”	TKLG-243	55 lbs.	TKLG-303	62 lbs.	TKLG-363	80 lbs.
48”	TKLG-244	67 lbs.	TKLG-304	75 lbs.	TKLG-364	85 lbs.
60”	TKLG-245	77 lbs.	TKLG-305	89 lbs.	TKLG-365	99 lbs.
72”	TKLG-246	89 lbs.	TKLG-306	97 lbs.	TKLG-366	112 lbs.
84”	TKLG-247	107 lbs.	TKLG-307	118 lbs.	TKLG-367	131 lbs.
96”	TKLG-248	119 lbs.	TKLG-308	131 lbs.	TKLG-368	145 lbs.
108”	TKLG-249	135 lbs.	TKLG-309	150 lbs.	TKLG-369	165 lbs.
120”	TKLG-2410	234 lbs.	TKLG-3010	249 lbs.	TKLG-3610	268 lbs.
132”	TKLG-2411	258 lbs.	TKLG-3011	276 lbs.	TKLG-3611	298 lbs.
144”	TKLG-2412	273 lbs.	TKLG-3012	291 lbs.	TKLG-3612	313 lbs.

ADVANCE TABCO
SMART FABRICATION™

ADVANCE TABCO is constantly engaged in a program of improving our products. Therefore, we reserve the right to change specifications without prior notice.

200 Heartland Boulevard, Edgewood, NY 11717-8380
© ADVANCE TABCO, SEPTEMBER 2018

EAGLE GROUP®
Profit from the Eagle Advantage®

Item No.: _____
Project No.: _____
S.I.S. No.: _____

Specification Sheet

Walstor® Modular Wall System

Short Form Specifications

Eagle Walstor® Single Shelf Kit, model _____. Consists of one EAGLEbrite® zinc-coated patented Quad-Truss® design open-grid wire shelf, one pair of 30˝ vertical uprights one wire mat, and one pair of 18˝ wire shelf brackets.

Eagle Walstor® Double Shelf Kit, model _____. Consists of two EAGLEbrite® zinc-coated patented Quad-Truss® design open-grid wire shelves, one pair of 45˝ vertical uprights, two wall mats, and two pairs of wire shelf brackets.

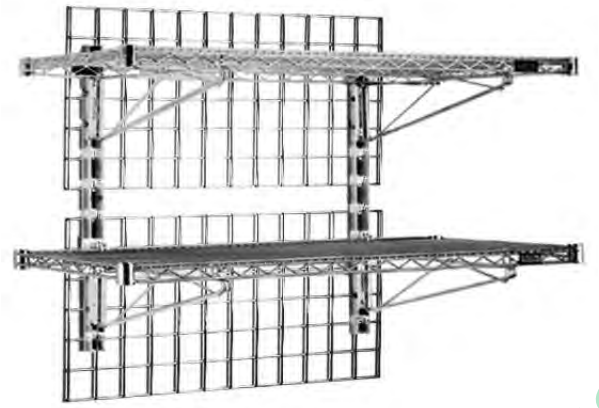

double shelf kit

MODELS:

❑ ***WAL-1-1836***	❑ ***WM1848***	❑ ***WM2496***	❑ ***PR45VU***
❑ ***WAL-1-1848***	❑ ***WM1860***	❑ ***WM3354***	❑ ***PR14B***
❑ ***WAL-2-1836***	❑ ***WM2448***	❑ ***WM4848***	❑ ***PR18B***
❑ ***WAL-2-1848***	❑ ***WM2472***	❑ ***PR12VU***	❑ ***PR21B***
❑ ***WM1836***	❑ ***WM2484***	❑ ***PR30VU***	❑ ***PR24B***

Design and Construction Features

- Walstor® design provides for placement of wire shelves where you want them.
- Unique design positions vertical uprights at stud locations, while shelf brackets lock shelves once shelf is in place.
- Provides the ability to add, remove, or adjust shelves quickly and easily.
- Features EAGLEbrite® zinc finish, sealed with MasterSeal®.
- WalStor® accessories* can be mounted anywhere on wall mat without fasteners.
- Eagle wire shelves feature patented QuadTruss® design (patent #5,390,803), making shelves up to 25% stronger and providing a retaining ledge for increased stability and product retention.

Shelf Kits

- Single Shelf Kits:
  - One wire shelf with patented Quad-Truss® design (patent # 5,390,803) and EAGLEbrite® zinc finish
  - One wall mat
  - One pair of 30˝ (762mm) vertical wall uprights
  - One pair of 18˝ (457mm) wire shelf brackets
- Double Shelf Kits:
  - Two wire shelves with patented Quad-Truss® design (patent # 5,390,803) and EAGLEbrite® zinc finish
  - Two wall mats
  - One pair of 45˝ (1143mm) vertical wall uprights
  - Two pairs of 18˝ (457mm) wire shelf brackets

Components (all of which are zinc-plated)

- Wall Mats:
  - Required only for hanging accessories*
  - 3˝ x 3˝ (76 x 76mm) grids
- Vertical Wall Uprights (pair)
- Wire Shelf Brackets (pair)

Options / Accessories*

- ❑ Pan holders
- ❑ Hooks
- ❑ Bins
- ❑ Racks
- ❑ Baskets

* See spec sheet #**EG02.00B** for Walstor® accessories.
See spec sheet #**EG02.00C** for Wall Grid Shelving.

EAGLE GROUP
100 Industrial Boulevard, Clayton, DE 19938-8903 USA
Phone: 302-653-3000 • Fax: 302-653-2065
www.eaglegrp.com

Foodservice Division: Phone 800-441-8440
MHC/Retail Display Divisions: Phone 800-637-5100

For custom configuration or fabrication needs, contact our **SpecFAB® Division.**
Phone: 302-653-3000 • Fax: 302-653-3091 • e-mail: specfab@eaglegrp.com

Certifications / Approvals

NSF

AUTOQUOTES

KCL

EG02.00A Rev. 07/11

Spec sheets available for viewing, printing or downloading from our online literature library at *www.eaglegrp.com*

Eagle Foodservice Equipment, Eagle MHC, SpecFAB®, and Retail Display are divisions of Eagle Group. ©2011 by the Eagle Group

MSHCC

EAGLE GROUP®
Profit from the Eagle Advantage®

Item No.: _____
Project No.: _____
S.I.S. No.: _____

Walstor® Modular Wall System

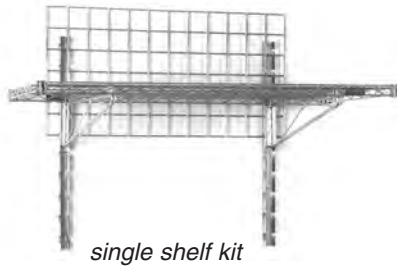

single shelf kit

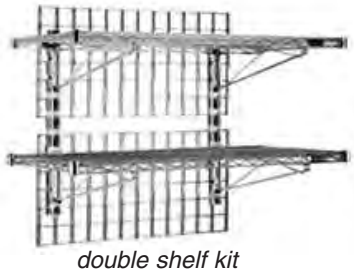

double shelf kit

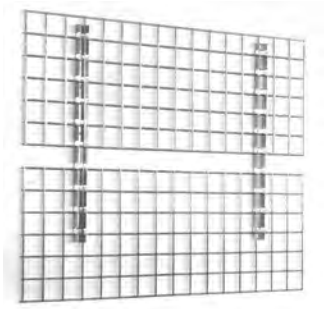

wall mats and vertical wall uprights

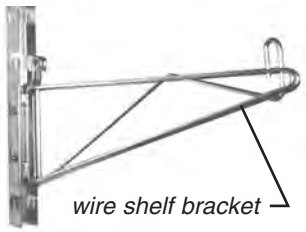

wire shelf bracket

SINGLE SHELF KITS

	weight		shelf & wall matt size: width		shelf & wall matt size: length	
model #	lbs.	kg	in.	mm	in.	mm
WAL-1-1836	35	15.9	18″	457	36″	915
WAL-1-1848	36	16.3	18″	457	48″	1219

DOUBLE SHELF KITS

	weight		shelf dimensions: width		shelf dimensions: length	
model #	lbs.	kg	in.	mm	in.	mm
WAL-2-1836	41	18.6	18″	457	36″	915
WAL-2-1848	49	22.2	18″	457	48″	1219

WALL MATS

	weight		height		length	
model #	lbs.	kg	in.	mm	in.	mm
WM1836	9	4.1	18″	457	36″	915
WM1848	11	5.0	18″	457	48″	1219
WM1860	14	6.4	18″	457	60″	1524
WM2448	13	5.8	24″	610	48″	1219
WM2472	19	8.6	24″	610	72″	1828
WM2484	22	9.9	24″	610	84″	2133
WM2496	25	11.3	24″	610	96″	2438
WM3354	22	9.9	33″	838	54″	1372
WM4848	19	8.6	48″	1219	48″	1219

VERTICAL WALL UPRIGHTS

	weight		height	
model #	lbs.	kg	in.	mm
PR12VU	2	0.9	12″	305
PR30VU	4	1.8	30″	762
PR45VU	5	2.3	45″	1143

WIRE SHELF BRACKETS

	weight		depth	
model #	lbs.	kg	in.	mm
PR14B	3	1.5	14″	356
PR18B	4	1.8	18″	457
PR21B	4	1.8	21″	533
PR24B	5	2.3	24″	610

MSHCG

Please note: Walstor® must be mounted to a solid surface or studs in a wall. User needs to determine installation materials and methods suitable to hold and support the Walstor® system.

EAGLE GROUP
100 Industrial Boulevard, Clayton, DE 19938-8903 USA
Phone: 302-653-3000 • Fax: 302-653-2065
www.eaglegrp.com

Foodservice Division: Phone 800-441-8440
MHC/Retail Display Divisions: Phone 800-637-5100

Printed in U.S.A.
©2011 by Eagle Group
Rev. 07/11

Spec sheets available for viewing, printing or downloading from our online literature library at *www.eaglegrp.com*

Although every attempt has been made to ensure the accuracy of the information provided, we cannot be held responsible for typographical or printing errors. Information and specifications are subject to change without notice. Please confirm at time of order.

ANGELO PO AMERICA INC.
2920 TURNPIKE DRIVE - SUITES 3-4
HATBORO, PENNSYLVANIA 19040
www.angelopoamerica.com

BLITZ Blast Chiller



ANGELO PO – BC51MU Multifunction Blast Chiller/Freezer, Electric 1.08 kW 208-240v/60/1-ph, 7.0 amps, (6) 12"X20" Full Size Sheet Pans Capacity.

Blitz Blast Chiller, reach-in, self-contained, (5) 12" x 20" x 2-1/2" pan capacity, programmable controls, 48 lbs. from 194°F to 37°F in 90 minutes chilling cycle, electric defrost, IFR system with multipoint temperature probe, USB, multicolor LED bar, HACCP software, removable drip tray, stainless steel wire rack, legs, stainless steel front, sides & top, R-404A, 1/2 HP, 1.08 kW, 208-240v/60/1-ph, 7.0 amps, cETLus

- Lowest reachable temperature on chamber by blast chilling cycle: -35°F (-37°C)
- Highest reachable temperature on chamber by heating element / thawing mode use:104°F (+40°C)

MSHCG

Model	BLITZ Blast Chiller
Description	Electric 1.08 kW 208-240v/60/1-ph, 7.0 amps, (6) 12"X20" Full Size Sheet Pans Capacity
Net Dimensions WxDxH	29.4"x29.2"x38.2" (74.65x74.15x97 cm)
Shipping Dimensions WxDxH	31.9"x30.3"x43.3" (81x77x110 cm)
Net Weight	254 lb (115 kg)
Shipping Weight	302 lb (137 kg)
12"X20" Hotel Pan Capacity	5
1/1 GN (530x325 mm) pan Capacity	6
18"X26" Full Size Sheet Pans Capacity	-
2/1 GN (650x530 mm) pan Capacity	-
Chill Capacity (194°F → 37°F)	48 lb
Freeze Capacity (194°F → 0°F)	-
Electric Power	1.051 kW
Voltage	208-240V
Phase	1 ph
Amperes	6.5 amps
Cycle/Hz	60Hz
Unit H.P.	0.5

Staking Solutions	-

COOK&CHILL SYSTEM: Combi Oven Compatibility	FX61; FX101

Call Angelo Po America customer care or technical service if there is any further clarification required.

ANGELO PO AMERICA - 2920 TURNPIKE DRIVE HATBORO, PA 19040 - 1-888-OVENS4U

ANGELO PO

BC51MU

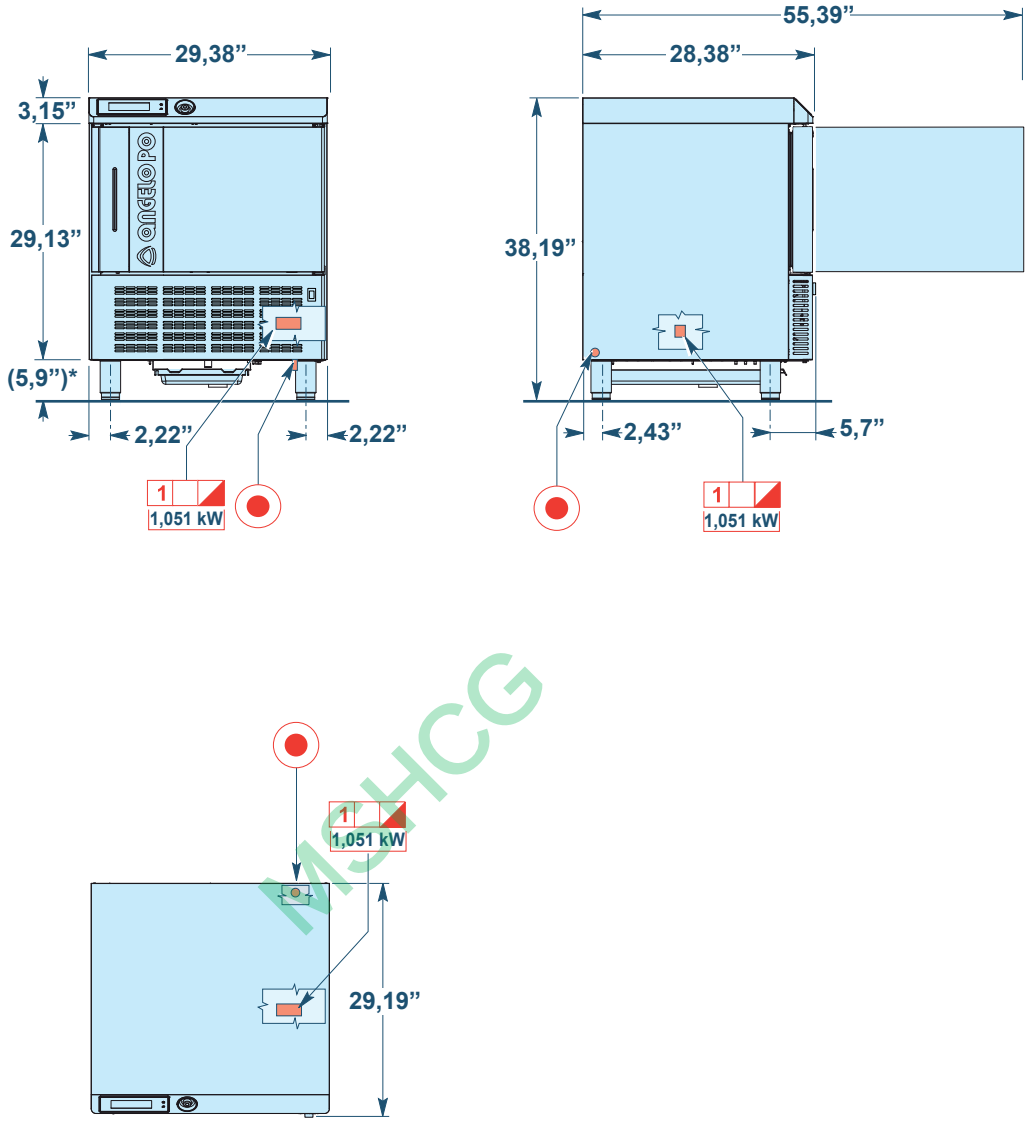

M3HCG

* Feet height-adjustable from 5,9” to 7,9”

Allacciamento elettrico
Electric connection
Branchement electrique
Elektroanschluss
Conexiòn elètrica

1
1~ N
220 V
Morsettiera
Terminal board
Plaque à bornes
Klembrett
Tablero de bornes

Progetto - Lay Out - Projet - Entwurf - Proyecto	Area - Area - Area - Zone - Area	Posizione - Item - Position - Position - Posiccion
Offerta - Offer - Offre - Angebot - Oferta	Area - Area - Area - Zone - Area	Posizione - Item - Position - Position - Posiccion

TRUE FOOD SERVICE EQUIPMENT, INC.
2001 East Terra Lane • O'Fallon, Missouri 63366-4434 • (636)240-2400
Fax (636)272-2408 • Toll Free (800)325-6152 • Intl Fax# (001)636-272-7546
Parts Dept. (800)424-TRUE • Parts Dept. Fax# (636)272-9471 • www.truemfg.com

Project Name: _____ *AIA #*
Location: _____
Item #: _____ *Qty:* _____ *SIS #*
Model #: _____

Model:
T-49F

T-Series:
Reach-In Solid Swing Door -10°F Freezer



Scan code for video

T-49F

- True's solid door reach-in's are designed with enduring quality that protects your long term investment.
- Designed using the highest quality materials and components to provide the user with colder product temperatures, lower utility costs, exceptional food safety and the best value in today's food service marketplace.
- Extra large evaporator coil balanced with higher horsepower compressor and large condenser maintains -10°F (-23.3°C) cabinet temperatures. Ideally suited for both frozen foods and ice cream.
- Stainless steel solid doors and front. The very finest stainless with higher tensile strength for fewer dents and scratches.
- Adjustable, heavy duty PVC coated shelves.
- Positive seal self-closing doors. Lifetime guaranteed door hinges and torsion type closure system.
- Automatic defrost system time-initiated, temperature-terminated. Saves energy consumption and provides shortest possible defrost cycle.

Bottom mounted units feature:

- "No stoop" lower shelf.
- Storage on top of cabinet.
- Compressor performs in coolest, most grease free area of kitchen.
- Easily accessible condenser coil for cleaning.

ROUGH-IN DATA

Specifications subject to change without notice.
Chart dimensions rounded up to the nearest ⅛" (millimeters rounded up to next whole number).

Model	Doors	Shelves	Cabinet Dimensions (inches) (mm) L	D	H*	HP	Voltage	Amps	NEMA Config.	Cord Length (total ft.) (total m)	Crated Weight (lbs.) (kg)
T-49F	2	6	54⅛ 1375	29½ 750	78⅜ 1991	¾ ⅜	115/60/1 230-240/50/1	11.0 3.7	5-15P ▲	9 2.74	480 218

* Height does not include 5" (127 mm) for castors or 6" (153 mm) for optional legs.

▲Plug type varies by country.

2/15 Printed in U.S.A.

APPROVALS:

AVAILABLE AT:

Model:
T-49F

T-Series:
Reach-In Solid Swing Door -10°F Freezer

STANDARD FEATURES

DESIGN
- True's commitment to using the highest quality materials and oversized refrigeration systems provides the user with colder product temperatures, lower utility costs, exceptional food safety and the best value in today's food service marketplace.

REFRIGERATION SYSTEM
- Factory engineered, self-contained, capillary tube system using environmentally friendly (CFC free) R404A refrigerant.
- Extra large evaporator coil balanced with higher horsepower compressor and large condenser; maintains -10°F (-23.3°C). Ideally suited for both frozen foods and ice cream.
- Sealed, cast iron, self-lubricating evaporator fan motor(s) and larger fan blades give True reach-in's a more efficient low velocity, high volume airflow design. This unique design ensures faster temperature recovery and shorter run times in the busiest of food service environments.
- Bottom mounted condensing unit positioned for easy cleaning. Compressor runs in coolest and most grease free area of the kitchen. Allows for storage area on top of unit.
- Automatic defrost system time-initiated, temperature-terminated. Saves energy consumption and provides shortest possible defrost cycle.

CABINET CONSTRUCTION
- Exterior - Stainless steel front. Anodized quality aluminum ends, back and top.
- Interior - attractive, NSF approved, clear coated aluminum liner. Stainless steel floor with coved corners.
- Insulation - entire cabinet structure and solid doors are foamed-in-place using Ecomate. A high density, polyurethane insulation that has zero ozone depletion potential (ODP) and zero global warming potential (GWP).
- Welded, heavy duty steel frame rail, black powder coated for corrosion protection.
- Frame rail fitted with 4" (102 mm) diameter stem castors - locks provided on front set.

DOORS
- Stainless steel exterior with white aluminum liner to match cabinet interior. Doors extend full width of cabinet shell. Door locks standard.
- Lifetime guaranteed recessed door handles. Each door fitted with 12" (305 mm) long recessed handle that is foamed-in-place with a sheet metal interlock to ensure permanent attachment.
- Positive seal self-closing doors. Lifetime guaranteed door hinges and torsion type closure system.
- Magnetic door gaskets of one piece construction, removable without tools for ease of cleaning.

SHELVING
- Six (6) adjustable, heavy duty PVC coated wire shelves 24 9/16"L x 22 3/8"D (624 mm x 569 mm). Four (4) chrome plated shelf clips included per shelf.
- Shelf support pilasters made of same material as cabinet interior; shelves are adjustable on ½" (13 mm) increments.

LIGHTING
- Incandescent interior lighting - safety shielded. Lights activated by rocker switch mounted above doors.

MODEL FEATURES
- Exterior temperature display.
- Evaporator is epoxy coated to eliminate the potential of corrosion.
- Rear airflow guards prevent product from blocking optimal airflow.
- NSF-7 compliant for open food product.

ELECTRICAL
- Unit completely pre-wired at factory and ready for final connection to a 115/60/1 phase, 15 amp dedicated outlet. Cord and plug set included.



115/60/1
NEMA-5-15R

OPTIONAL FEATURES/ACCESSORIES
Upcharge and lead times may apply.
- ❑ 230 - 240V / 50 Hz.
- ❑ 6" (153 mm) standard legs.
- ❑ 6" (153 mm) seismic/flanged legs.
- ❑ Alternate door hinging (factory installed).
- ❑ Novelty baskets.
- ❑ Additional shelves.
- ❑ Half door bun tray racks. Each holds up to eleven 18"L x 26"D (458 mm x 661 mm) sheet pans (sold separately) (airflow guards need to be removed).
- ❑ Full door bun tray racks. Each holds up to twenty-two 18"L x 26"D (458 mm x 661 mm) sheet pans (sold separately) (airflow guards need to be removed).

***CABINET INTERIOR**
Beginning in October of 2014, True Manufacturing began the process of changing the standard interior finishes on select products. The interior liners of these units have changed from the traditional NSF-approved white aluminum to an NSF-approved clear coated aluminum that is silver in color. In addition, the traditional white PVC coated shelves have been switched to a gray PVC coating. There are no functional differences created by any of these changes, the difference is only in the appearance. The following product lines are affected by this change: T-Series, TUC, TWT, TSSU, TFP, TPP, TMC, TRCB. A sticker will be placed on the outside packaging so that units with this change can be identified in inventory.

MSHOG

PLAN VIEW

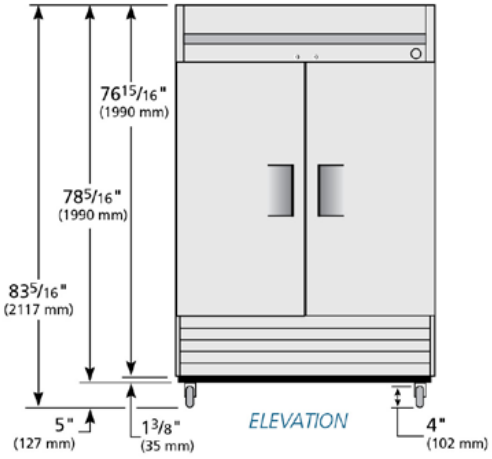

ELEVATION

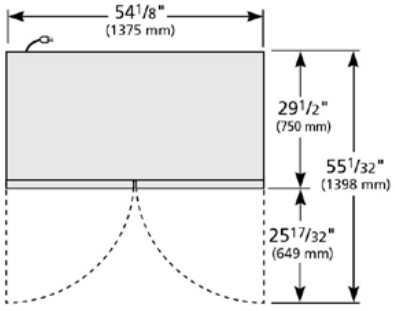

RIGHT VIEW

WARRANTY*
Three year warranty on all parts and labor and an additional 2 year warranty on compressor. (U.S.A. only)

*RESIDENTIAL APPLICATIONS: TRUE assumes no liability for parts or labor coverage for component failure or other damages resulting from installation in non-commercial or residential applications.

METRIC DIMENSIONS ROUNDED UP TO THE NEAREST WHOLE MILLIMETER

SPECIFICATIONS SUBJECT TO CHANGE WITHOUT NOTICE

Model	Elevation	Right	Plan	3D	Back
T-49F	TFGY36E	TFEY03S	TFEY02P	TFGY363	

TRUE FOOD SERVICE EQUIPMENT
2001 East Terra Lane • O'Fallon, Missouri 63366-4434 • (636)240-2400 • Fax (636)272-2408 • Toll Free (800)325-6152 • Intl. Fax# (001)636-272-7546 • www.truemfg.com

TRUE FOOD SERVICE EQUIPMENT, INC.
2001 East Terra Lane • O'Fallon, Missouri 63366-4434 • (636)240-2400
Fax (636)272-2408 • Toll Free (800)325-6152 • Intl Fax# (001)636-272-7546
Parts Dept. (800)424-TRUE • Parts Dept. Fax# (636)272-9471 • www.truemfg.com

Project Name: _____ *AIA #*
Location: _____
Item #: _____ *Qty:* _____ *SIS #*
Model #: _____

Model:
T-49

T-Series:
Reach-In Solid Swing Door Refrigerator



Scan code for video

T-49

- True's solid door reach-in's are designed with enduring quality that protects your long term investment.
- Designed using the highest quality materials and components to provide the user with colder product temperatures, lower utility costs, exceptional food safety and the best value in today's food service marketplace.
- Oversized, factory balanced, refrigeration system holds 33°F to 38°F (.5°C to 3.3°C) for the best in food preservation.
- Stainless steel solid doors and front. The finest stainless available with higher tensile strength for fewer dents and scratches.
- Adjustable, heavy duty PVC coated shelves.
- Positive seal self-closing doors. Lifetime guaranteed door hinges and torsion type closure system.

Bottom mounted units feature:

- "No stoop" lower shelf.
- Storage on top of cabinet.
- Compressor performs in coolest, most grease free area of kitchen.
- Easily accessible condenser coil for cleaning.

ROUGH-IN DATA

Specifications subject to change without notice.
Chart dimensions rounded up to the nearest ⅛" (millimeters rounded up to next whole number).

Model	Doors	Shelves	Cabinet Dimensions (inches) (mm) L	D	H*	HP	Voltage	Amps	NEMA Config.	Cord Length (total ft.) (total m)	Crated Weight (lbs.) (kg)
T-49	2	6	54⅛ 1375	29½ 750	78⅜ 1991	⅓ ½	115/60/1 230-240/50/1	5.8 5.4	5-15P ▲	9 2.74	425 193

* Height does not include 5" (127 mm) for castors or 6" (153 mm) for optional legs.

▲Plug type varies by country.

2/15 Printed in U.S.A.

APPROVALS:

AVAILABLE AT:

Model:
T-49

T-Series:
Reach-In Solid Swing Door Refrigerator

STANDARD FEATURES

DESIGN
- True's commitment to using the highest quality materials and over sized refrigeration systems provides the user with colder product temperatures, lower utility costs, exceptional food safety and the best value in today's food service marketplace.

REFRIGERATION SYSTEM
- Factory engineered, self-contained, capillary tube system using environmentally friendly (CFC free) 134A refrigerant.
- Extra large evaporator coil balanced with higher horsepower compressor and large condenser; maintains 33°F to 38°F (.5°C to 3.3°C) for the best in food preservation.
- Sealed, cast iron, self-lubricating evaporator fan motor(s) and larger fan blades give True reach-in's a more efficient low velocity, high volume airflow design. This unique design ensures faster temperature recovery and shorter run times in the busiest of food service environments.
- Bottom mounted condensing unit positioned for easy maintenance. Compressor runs in coolest and most grease free area of the kitchen. Allows for storage area on top of unit.

CABINET CONSTRUCTION
- Exterior - Stainless steel front. Anodized quality aluminum ends, back and top.
- Interior - attractive, NSF approved, clear coated aluminum liner. Stainless steel floor with coved corners.
- Insulation - entire cabinet structure and solid doors are foamed-in-place using Ecomate. A high density, polyurethane insulation that has zero ozone depletion potential (ODP) and zero global warming potential (GWP).
- Welded, heavy duty steel frame rail, black powder coated for corrosion protection.
- Frame rail fitted with 4" (102 mm) diameter stem castors - locks provided on front set.

DOORS
- Stainless steel exterior with white aluminum liners to match cabinet interior. Doors extend full width of cabinet shell. Door locks standard.
- Lifetime guaranteed recessed door handles. Each door fitted with 12" (305 mm) long recessed handle that is foamed-in-place with a sheet metal interlock to ensure permanent attachment.
- Positive seal self-closing doors. Lifetime guaranteed door hinges and torsion type closure system.
- Magnetic door gaskets of one piece construction, removable without tools for ease of cleaning.

SHELVING
- Six (6) adjustable, heavy duty PVC coated wire shelves 24 9/16"L x 22 3/8"D (624 mm x 569 mm). Four (4) chrome plated shelf clips included per shelf.
- Shelf support pilasters made of same material as cabinet interior; shelves are adjustable on ½" (13 mm) increments.

LIGHTING
- Incandescent interior lighting - safety shielded. Lights activated by rocker switch mounted above doors.

MODEL FEATURES
- Exterior temperature display.
- Evaporator is epoxy coated to eliminate the potential of corrosion.
- NSF-7 compliant for open food product.

ELECTRICAL
- Unit completely pre-wired at factory and ready for final connection to a 115/60/1 phase, 15 amp dedicated outlet. Cord and plug set included.



115/60/1
NEMA-5-15R

OPTIONAL FEATURES/ACCESSORIES
Upcharge and lead times may apply.
- ❑ 230 - 240V / 50 Hz.
- ❑ 6" (153 mm) standard legs.
- ❑ 6" (153 mm) seismic/flanged legs.
- ❑ Alternate door hinging (factory installed).
- ❑ Additional shelves.
- ❑ Half door bun tray racks. Each holds up to eleven 18"L x 26"D (458 mm x 661 mm) sheet pans (sold separately).
- ❑ Full door bun tray racks. Each holds up to twenty-two 18"L x 26"D (458 mm x 661 mm) sheet pans (sold separately).

***CABINET INTERIOR**
Beginning in October of 2014, True Manufacturing began the process of changing the standard interior finishes on select products. The interior liners of these units have changed from the traditional NSF-approved white aluminum to an NSF-approved clear coated aluminum that is silver in color. In addition, the traditional white PVC coated shelves have been switched to a gray PVC coating. There are no functional differences created by any of these changes, the difference is only in the appearance. The following product lines are affected by this change: T-Series, TUC, TWT, TSSU, TFP, TPP, TMC, TRCB. A sticker will be placed on the outside packaging so that units with this change can be identified in inventory.

NSF-CC

PLAN VIEW

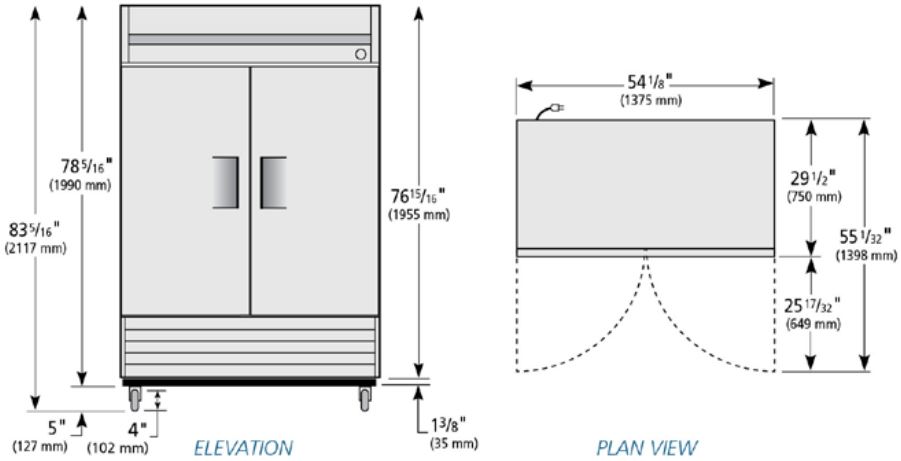

WARRANTY*
Three year warranty on all parts and labor and an additional 2 year warranty on compressor. (U.S.A. only)

*RESIDENTIAL APPLICATIONS: TRUE assumes no liability for parts or labor coverage for component failure or other damages resulting from installation in non-commercial or residential applications.

METRIC DIMENSIONS ROUNDED UP TO THE NEAREST WHOLE MILLIMETER

SPECIFICATIONS SUBJECT TO CHANGE WITHOUT NOTICE

Model	Elevation	Right	Plan	3D	Back
T-49	TFGY36E	TFEY03S	TFEY02P	TFGY363	

TRUE FOOD SERVICE EQUIPMENT
2001 East Terra Lane • O'Fallon, Missouri 63366-4434 • (636)240-2400 • Fax (636)272-2408 • Toll Free (800)325-6152 • Intl. Fax# (001)636-272-7546 • www.truemfg.com

Project _____

Item # _____

Quantity _____

Powermite® Gas Booster Water Heaters

Model: PMG-100, -200

The Hatco Powermite® Gas Booster Water Heater provides 180°F (82°C) sanitizing hot water and long life dependability. Designed to fit under the dishtable, near the dishwasher, to minimize the heat loss that can occur when heaters are installed in a remote location. They can operate on either natural or propane gas and feature a burner system that utilizes both primary and secondary air for consistent ignition.



Standard features

- Stainless steel tanks
- Stainless steel front and top, with powdercoat sides and back (stainless steel body available)
- Finned tube copper heat exchanger
- Spark to light with standing pilot
- Three tube type burners in the PMG-100, six tube type burners in the PMG-200
- Temperature/pressure relief valve
- Pressure reducing valve
- Two temperature/pressure gauges
- Low-water cut-off
- Blended phosphate water treatment system
- Shock absorber

Options (available at time of purchase only)

☐ Stainless steel body and base

☐ Security package (Torx® screws and control cover)

Accessories

☐ Brass Pressure Reducing Valve

☐ Stainless steel floor mounting leg assembly

☐ 6"-7" (152-178 mm) Adjustable Stainless Steel Legs (4)

☐ Air Interlock Switch

☐ Back Pressure Relief Valve

☐ High Altitude Orifice Kit (PMG-200 only)

MSHCC

BOOSTER SIZING

Water Temperature Recovery Table in GPH (LPH) and °F (°C)

Model	Input MBH (1,000 BTU/HR)	Temperature Rise				
		30° (16°)	40° (22°)	50° (28°)	60° (33°)	70° (39°)
PMG-100	105	321 (1215)	241 (912)	193 (731)	161 (610)	138 (522)
PMG-200	195	602 (2279)	452 (1711)	361 (1367)	301 (1139)	258 (977)

Note: Installations above 2,000 ft. (610 m) will reduce the above capacities and may require orifice changes to meet IAS safety compliance. Consult "Installation and Operating Manual" for sizing adjustments and orifice changes.

WATER QUALITY REQUIREMENTS

Incoming water in excess of 3.0 grains of hardness per gallon (GPG) (.75 grains of hardness per liter) must be treated and softened before being supplied to booster heater(s).Water containing over 3.0 GPG (.75 GPL) will decrease the efficiency and reduce the operating life of the unit.

Note: Product failure caused by liming or sediment buildup is not covered under warranty.

ANSI/NSF 5

MADE IN THE USA

HATCO CORPORATION | P.O. Box 340500 Milwaukee, WI 53234-0500 U.S.A.

(800) 558-0607 | (414) 671-6350 | www.hatcocorp.com | equipsales@hatcocorp.com | intlsales@hatcocorp.com

Powermite® Gas Booster Water Heaters

Model: PMG-100, -200

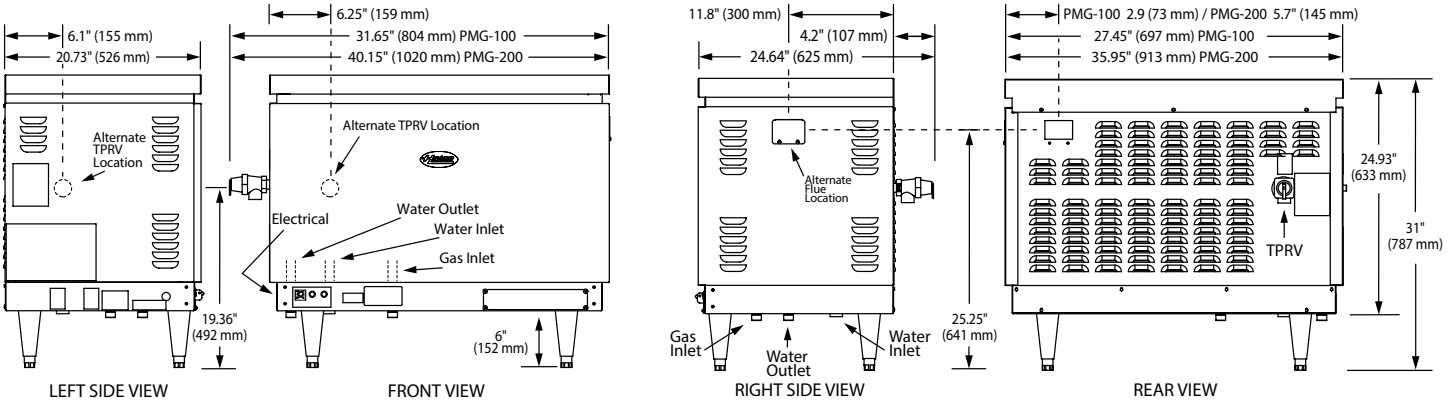

Models PMG-100 & PMG-200

SPECIFICATIONS
Atmospheric Hot Water Dispenser

Model	Dimensions (Width x Depth x Height•)	Capacity	Fuel	Vent^	Ship Weight*
PMG-100	27.45" x 20.73" x 31" (720 x 625 x 787 mm)	Input 105,000 BTUs/Hour Output – 84,800 = 24.8kW	Natural at 3.5" (89 mm) high burn or Propane/LP at 10" (254 mm) high burn	Forced draft system with 4" (102 mm) diameter vent pipe adapter	180 lbs. (82 kg) dry
PMG-200	35.95" x 24.64" x 31" (913 x 625 x 787 mm)	Input 195,000 BTUs/Hour Output – 156,000 = 45.7kW			215 lbs. (98 kg) dry

* Shipping weight includes packaging.
• Height includes 6" (152 mm) legs.
If using supplied right angle duct adaptor, add 6" (152 mm) to width or depth of unit.
^ Before installing any method of venting you should contact the local code authority or your gas supplier to make sure that the final installation will be acceptable to the authorities who have jurisdiction. The proper method of venting a power vented gas appliance is too complicated to cover in this specification sheet and is explained in detail in the National Fuel Gas Code. Before installing the venting system, the person or agency making the installation must be familiar and experienced with the guidelines of the National Fuel Gas Code.
ALL INSTALLATIONS MUST BE MADE BY A QUALIFIED INSTALLER IN ACCORDANCE WITH THE NATIONAL FUEL GAS CODE OR LOCAL CODES.

Electrical
120 VAC, 360 watt, 3.00 amps

Connections
Gas – ¾" NPT,Water – ¾" NPT
Electric – 120 VAC, 15 amp

Fluing
Direct – combustion air enters bottom, flue gasses exit right side or back at top of unit. 4" (102mm) flue round

Operating Water Pressure
150 PSI (1034 kPa) max. Relief valve set at 150 PSI (1034 kPa), 210° F (99° C)

Operating Pressue Specifications at Manifold

Gas Type	Water Column at Pressure Tap
	High Burn
Natural	3.5" (89 mm)
Propane/LP	10" (254 mm)

Gas Inlet Pressure

Gas Type	Water Column	
	Minimum	Maximum
Natural	5" (127 mm)	10.5" (267 mm)
Propane/LP	11" (254 mm)	13" (330 mm)

PRODUCT SPECS
Gas Booster Water Heater

The Gas Booster Water Heater to supply the final 180°F (82°C) rinse for the dishwasher shall be a Hatco Powermite® Model ... as manufactured for commercial use by the Hatco Corporation, Milwaukee, WI 53234 U.S.A.

The booster shall have the capacity to heat ... gph (lph) from 110°F to 180°F (43°C to 82°C) and it shall berated at ... btu, 120 volts, single phase. The stainless steel tank shall be designed for a working pressure of 150 psi (1034 kPa) and hydrostatically tested at 300 psi (2069 kPa).

The heater shall be complete with all internal plumbing, including 3⁄4" NPT pipe and fittings from inlet and outlet. All controls shall be built-in, and carry safety approval in accordance with ANSI 21.10.3. Sanitary approval shall be in accordance with NSF Standard 5. Proper surface mounting circuit breaker or fused disconnect switch shall be provided by electrical contractor.

The gas fired heating system shall be controlled by close tolerance immersion thermostats. The booster shall be protected with high temperature limit switch (ECO) and low water cut-off.

The heater shall consist of stainless steel front, top and stainless steel adjustable legs or stainless steel front and silver-gray hammertone sides and back with standard 6" (152 mm) legs.

The heater shall include a temperature/pressure relief valve, high-temperature limit, pressure reducing valve with bypass, indicating temperature/pressure gauge, shock absorber, and blended phosphate water treatment system.

Warranty consists of 24/7 parts and service assistance (US and Canada only).

HATCO CORPORATION | P.O. Box 340500 Milwaukee, WI 53234-0500 U.S.A.
(800) 558-0607 | (414) 671-6350 | www.hatcocorp.com | equipsales@hatcocorp.com | intlsales@hatcocorp.com

Commercial Gas Water Heaters

MASTER-FIT® BTR

The Master-Fit® BTR series provides outstanding performance and maximum installation flexibility for both new construction and replacement applications. Multiple options for placement of water connections and low installation clearances are additional installer-friendly features.

FACTORY-INSTALLED DRAFT DIVERTER AND AUTOMATIC FLUE DAMPER (BTR-120-400 MODELS)

- Low-profile draft diverter helps for installation in tight spaces
- Automatic motorized flue damper helps minimize standby heat loss
- BTR-500 Model features induced draft design and no damper

THREE WATER CONNECTION OPTIONS FOR ADDED FLEXIBILITY

- Hot and cold water connections can be made through front, top or back of unit
- Eliminator™ system operates when cold water is connected through front

PERMAGLAS® ULTRA COAT™ GLASS LINING

- Exclusive process provides superior protection against corrosion
- CoreGard™ anode rods with stainless steel core provide additional corrosion protection

INTERMITTENT ELECTRONIC IGNITION

- Eliminates standing pilot, saves energy
- Includes power ON/OFF switch
- Provides flame failure response in less than one second

FACTORY- INSTALLED, CSA CERTIFIED AND ASME RATED T&P RELIEF VALVE

MAXIMUM HYDROSTATIC WORKING PRESSURE: 160 PSI

CODES AND STANDARDS

- Design-certified by UL (Underwriters Laboratories), according to ANSI Z.21.10.3 - CSA 4.3 standards governing storage-type water heaters
- Meets the thermal efficiency and standby loss requirements of the U. S. Department of Energy and current edition of ASHRAE/IESNA 90.1
- Design-certified by Underwriters Laboratories Sanitation to NSF Standard 5 for 180°F (82°C) water
- Optional ASME tank construction available on select models

THE ELIMINATOR™ SELF-CLEANING SYSTEM

- Designed to significantly reduce or eliminate sediment build-up inside the tank
- Reduced sediment build-up maintains rated thermal efficiency and reduces water heating costs
- Self-cleaning system maximizes tank life

3-YEAR LIMITED TANK / 1-YEAR LIMITED PARTS WARRANTY

- For complete warranty information, consult written warranty or go to hotwater.com.



BTR-120 THROUGH BTR-500(A)

Low Lead Content

HLW

ON SELECT MODELS

GAS-FIRED

LISTED

CLASSIFIED

WATER QUALITY

AHRI CERTIFIED®
www.ahridirectory.org

THE ELIMINATOR™ SELF-CLEANING SYSTEM



NSFCG

© November 2015 A. O. Smith Corporation. All rights reserved.

Commercial Gas Water Heaters

OTHER MASTER-FIT® FEATURES

FULLY AUTOMATIC CONTROL SYSTEM

- Manual-reset gas shut-off device prevents excessive water temperature
- Adjustable thermostat with 120ºF — 180ºF range
- Gas pressure regulator and pilot filter

HANDHOLE CLEANOUT

- Allows easy access to tank interior for cleaning

PLUG KITS

- Pipe nipples and caps included to plug unused water connections MASTER-FIT® OPTIONS:

MANIFOLD KITS FOR MULTIPLE HEATER INSTALLATIONS

- 2-unit kit, Part Number 9003426205
- 3-unit kit, Part Number 9003427205
- 4-unit kit, Part Number 9003428205

OPTIONAL LEG KIT TO MEET NSF STANDARD 5

- For all BTR models, Part Number 9003425205

MECHANICAL VENTING KITS

- For BTR-120 through BTR-200, Part Number 9005381205
- For BTR-250 through BTR-400, Part Number 9003434205
- For installation of approved power venter to operate in conjunction with water heater thermostat
- Field wiring should conform to latest version of the National Electric Code ANSI/NFPA No.70
- For more information, consult manual shipped with water heater or contact the A. O. Smith Technical Support Center at1-800-527-1953

MSHCG

Water Connections in Inches						
Model Number	Inlet			Outlet		
	Top	Front	Back	Top	Front	Back
BTR-120	1-1/2	1-1/2	1-1/2	1-1/2	1-1/2	1-1/2
BTR-154	1-1/2	1-1/2	1-1/2	1-1/2	1-1/2	1-1/2
BTR-180	1-1/2	1-1/2	1-1/2	1-1/2	1-1/2	1-1/2
BTR-197	1-1/2	1-1/2	1-1/2	1-1/2	1-1/2	1-1/2
BTR-198	1-1/2	1-1/2	2	1-1/2	1-1/2	2
BTR-199	1-1/2	1-1/2	1-1/2	1-1/2	1-1/2	1-1/2
BTR-200(A)	1-1/2	2	2	1-1/2	2	2
BTR-250(A)	1-1/2	2	2	1-1/2	2	2
BTR-251(A)	N/A	1-1/2	1-1/2	N/A	1-1/2	1-1/2
BTR-275(A)	1-1/2	2	2	1-1/2	2	2
BTR-305(A)	N/A	1-1/2	1-1/2	N/A	1-1/2	1-1/2
BTR-365(A)	1-1/2	1-1/2	1-1/2	1-1/2	1-1/2	1-1/2
BTR-400(A)	1-1/2	2	2	1-1/2	2	2
BTR-500(A)	1-1/2	1-1/2	1-1/2	1-1/2	1-1/2	1-1/2

© November 2015 A. O. Smith Corporation. All rights reserved.

Commercial Gas Water Heaters

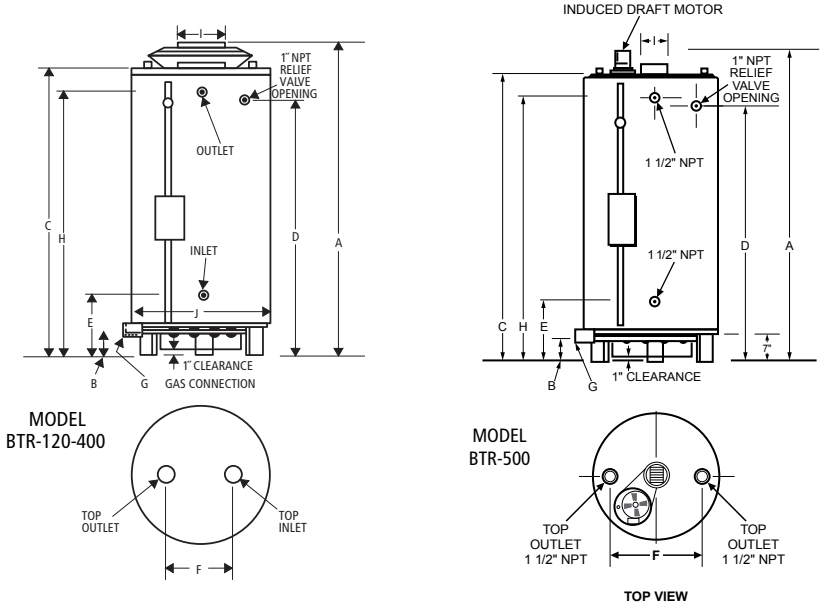

Dimensions

Model Number	Inches or CM	Dimensions										Approx. Shipping Weight	
		A	B	C	D	E	F	G	H	I	J	Standard	ASME
BTR-120*	Inches	69-3/4"	4-1/4"	59-1/2"	50-7/8"	19-11/16"	19"	1/2"	51-7/8"	6"	27-3/4"	400 lbs.	-
	CM	177	11	151	129	50	48	-	132	15	71	182 Kg	-
BTR-154	Inches	73"	4-1/4"	66-1/2"	57-7/8"	19-11/16"	19"	1/2"	59"	6"	27-3/4"	470 lbs.	-
	CM	185	11	169	147	50	48	-	150	15	71	213 Kg	-
BTR-180	Inches	67-1/2"	4-1/2"	62"	53-1/2"	20-1/2"	21"	1/2"	54-5/8"	6"	27-3/4"	470 lbs.	-
	CM	171	12	157	136	52	53	-	139	15	71	213 Kg	-
BTR-197	Inches	75"	4-1/2"	70	61-1/2"	20-1/2"	21"	1/2"	62-5/8"	6"	27-3/4"	603 lbs.	-
	CM	192	12	178	157	52	53	-	159	15	71	273 Kg	-
BTR-198	Inches	75"	4-1/2"	70	61-1/2"	20-1/2"	21"	1/2"	61-1/2"	6"	27-3/4"	603 lbs.	-
	CM	192	12	178	157	52	53	-	150	15	71	273 Kg	-
BTR-199	Inches	67-1/2"	4-1/2"	62	53-1/2"	20-1/2"	21"	1/2"	54-1/8"	6"	27-3/4"	470 lbs.	-
	CM	171	12	157	136	52	53	-	139	15	71	213 Kg	-
BTR-200(A)	Inches	72"	4-1/2"	65-1/8"	55-7/8"	19-3/4"	23"	1/2"	56-3/8"	8"	30-1/4"	630 lbs.	725 lbs.
	CM	183	12	165	142	50	58	-	143	20	77	286 Kg	329 Kg
BTR-250(A)**	Inches	72"	4-1/2"	65-1/8"	55-7/8"	19-3/4"	23"	1/2"	56-3/8"	8"	30-1/4"	630 lbs.	725 lbs.
	CM	183	12	165	142	50	58	-	143	20	77	286 Kg	329 Kg
BTR-251(A)**	Inches	75"	4-1/2"	65-3/4"	57-1/4"	20"	N/A	1/2"	58-3/4"	8"	27-3/4"	750 lbs.	862 lbs.
	CM	191	12	167	145	51	N/A	-	149	20	70	341 Kg	391 Kg
BTR-275(A)**	Inches	72"	4-1/2"	65-1/8"	55-7/8"	19-3/4"	23"	1/2"	56-3/8"	8"	30-1/4"	630 lbs.	725 lbs.
	CM	183	12	165	142	50	58	-	143	20	77	286 Kg	329 Kg
BTR-305(A)	Inches	75"	4-1/2"	6- 3/4"	57-1/4"	20"	N/A	1/2"	58-3/4"	8"	27.75	750 lbs.	862 lbs.
	CM	191	12	167	145	51	N/A	-	149	20	70	341 Kg	391 Kg
BTR-365(A)	Inches	79-1/2"	4-1/2"	70-1/4"	62-1/2"	22-1/2'	23"	3/4"	63"	8"	27-3/4"	725 lbs.	833 lbs.
	CM	202	12	178	159	57	58	-	160	20	71	329 Kg	379 Kg
BTR-400(A)	Inches	75-1/2"	4-1/2"	67-1/2"	58-1/4"	26-3/4"	23"	3/4"	59"	8"	30-1/4"	760 lbs.	874 lbs.
	CM	192	12	171	148	68	58	-	150	20	77	345 Kg	396 Kg
BTR-500(A)†**	Inches	81-1/2"	17.5"	77-1/4"	67-1/2"	27-1/8"	21"	1"	67-1/2"	8"	27-3/4"	812 lbs.	857 lbs.
	CM	209	44	196	171	69	53	3	171	20	70	368 Kg	389 Kg

MSHCG

Specify when ordering propane (LP) gas.
*Model BTR 120 is shipped with a 6" x 5" flue outlet adapter.
**Models BTR 250, 251 , 275 and 500 are shipped with a 8" x 6" flue outlet adapter.
Standard models certified for sea level to 2,000 ft. elevation. Order SMR S54 for elevations up to 8,000 ft.
† BTR-500 model features induced draft design and no damper.
Back side water connections, Inlet and outlet, are represented by "E" and "H" respectively for height dimensions.

© November 2015 A. O. Smith Corporation. All rights reserved.

www.hotwater.com | 800-527-1953 Toll-Free USA | A.O.Smith Corporation | 500 Tennessee Waltz Parkway | Ashland City, TN 37015

Commercial Gas Water Heaters

CAPACITY, INPUT AND OUTPUT

Model Number	Input BTU/HR	Gallons or Litres	Tank Size	Litres	Recovery - Gallons or Litres Per Hour at Degree Rise		
					40°F	100°F	140°F
					22°C	56°C	78°C
BTR-120*	120,000	U.S. Gallons	71	GPH	291	116	83
		Litres	268	LPH	1102	439	314
BTR-154	154,000	U.S. Gallons	81	GPH	373	149	107
		Litres	307	LPH	1412	564	405
BTR-180	180,000	U.S. Gallons	81	GPH	434	174	124
		Litres	307	LPH	1643	659	469
BTR-197	199,000	U.S. Gallons	100	GPH	482	193	132
		Litres	379	LPH	1825	731	500
BTR-198	199,000	U.S. Gallons	100	GPH	482	193	132
		Litres	379	LPH	1825	731	500
BTR-199	199,000	U.S. Gallons	81	GPH	482	193	132
		Litres	307	LPH	1825	731	500
BTR-200(A)	199,000	U.S. Gallons	100	GPH	482	193	132
		Litres	379	LPH	1825	731	500
BTR-250(A)**	250,000	U.S. Gallons	100	GPH	606	242	173
		Litres	379	LPH	2294	918	655
BTR-251(A)**	251,000	U.S. Gallons	65	GPH	608	243	174
		Litres	246	LPH	2303	921	658
BTR-275(A)**	275,000	U.S. Gallons	100	GPH	667	267	190
		Litres	379	LPH	2524	1009	721
BTR-305(A)	305,000	U.S. Gallons	65	GPH	739	296	211
		Litres	246	LPH	2799	1120	800
BTR-365(A)	365,000	U.S. Gallons	85	GPH	885	354	253
		Litres	322	LPH	3349	1340	957
BTR-400(A)	390,000	U.S. Gallons	100	GPH	970	388	277
		Litres	379	LPH	3671	1468	1049
BTR-500(A)†**	500,000	U.S. Gallons	85	GPH	1212	485	346
		Litres	322	LPH	4588	1835	1311

Specify when ordering propane (LP) gas.
*Model BTR 120 is shipped with a 6" x 5" flue outlet adapter.
**Models BTR 250, 251, 275 and 500 are shipped with a 8" x 6" flue outlet adapter.
Standard models certified for sea level to 2,000 ft. elevation. Order SMR S54 for elevations up to 8,000 ft.
† BTR-500 model features induced draft design and no damper.
Recovery based on 80% efficiency.

MSHCG

SPECIFICATION

(Natural or Propane) gas water heater(s) shall be A. O. Smith Master-Fit® model # _____ or equal, with a storage capacity of _____ gallons, an input rating of _____ BTUs per hour, a recovery rating of_____ gallons per hour (gph) at 100ºF rise and a maximum hydrostatic working pressure of 160 psi. Water heater(s) shall be protected against overheating caused by the buildup of scale, film and other sediment by a self-cleaning device, positioned inside the tank so that it directs the flow of inlet water to keep precipitated solids in suspension so that they are removed from the water heater on that or successive draws. Glasslined water heater(s) shall also be protected against electrolytic corrosion by multiple factory-installed anode rods. In addition, water heater(s) shall: 1) Be equipped with an integrated control system consisting of a 180ºF adjustable thermostat with upper and lower sensing bulbs. 2) Be equipped with intermittent electronic ignition, a manual reset gas shutoff device, a gas pressure regulator, factory-installed, CSA Certified and ASME Rated T&P relief valve and 2-3/4" x 3-3/4" tank inspection port. 3) Be design-certified by UL (Underwriters Laboratories) to current edition of ANSI Z.21.10.3 - CSA 4.3 standards governing storage-type water heaters. 4) Meets the thermal efficiency and standby loss requirements of the U. S. Department of Energy and Current Edition of ASHRAE/ IESNA 90.1. 5) Have a 3-year limited warranty against corrosion as outlined in the written warranty.

For technical information, call 800-527-1953. A. O. Smith Corporation reserves the right to make product changes or improvements without prior notice.

© November 2015 A. O. Smith Corporation. All rights reserved.
www.hotwater.com | 800-527-1953 Toll-Free USA

Item # _____

Job _____

Metro C5 8 Series Controlled Temperature Holding Cabinet

- **Control:** The intuitive 8 Series solid state controller provides continuous closed loop monitoring of temperature providing accurate control over the internal environment of the cabinet, resulting in safe and hot food. Actual temperature is measured, displayed, and controlled.
- **Performance:** Rapid heat-up and recovery times are achieved with a digitally controlled ducted heating system. The intelligent controller assures food is held at the desired temperature. Low temperature alarm assures cabinet is performing within desired temperature range.
- **Passive Humidity:** An integral water pan system can be used to add humidity to the cabinet environment, improving food quality.
- **Configurations:**
  - Sizes: Full Height, 3/4 Height, 1/2 Height, and Under Counter.
  - Doors: Full Length Solid, Full Length Clear, Dutch Solid, Dutch Clear. All are lift off and field reversible.
  - Reach-In or Pass-Thru (not available on under counter and 3/4 height).
  - Materials: Stainless Steel and Aluminum.
- **Capacity:** Universal slides hold 18"x26" sheet pans or 12"x20" steam table pans on adjustable 1 1/2" increments. Lip load slides hold 18"x26" sheet pans on 1 1/2" increments. Optional Wire Shelf interfaces with universal slide system to accommodate small items and pans.
- **Reliability:** Reliability and durability are designed into C5 from the ground up. High-quality components and robust construction provide a long life of service and worry-free use.
- **Top-Mounted Controls:** Ergonomic user-friendly controls are mounted at the top of the cabinet for easier access, better readability, to prevent damage, and to simplify cleaning.
- **NAFEM Data Protocol:** The C5 controller is NDP capable.
- **ENERGY STAR:** Full Height, 3/4 Height, and 1/2 Height Stainless Steel reach-in models with solid doors are ENERGY STAR rated.



Full Height Dutch Solid Doors



Under Counter Full Clear Door | 1/2 Height Full Solid Door | 3/4 Height Full Clear Door | Full Height Dutch Clear Doors

MSHCG

8 Series Controller:

- **Temperature:** Measures & displays actual cabinet temperature
- **Intuitive:** Easy-to-use controls that anyone can understand
- **Low-Temp Alarm:** Assures cabinet is operating at desired temperature
- **Recall & Memory:** View settings at the touch of a button. Settings are saved when turned off.



InterMetro Industries Corporation
North Washington Street
Wilkes-Barre, PA 18705
www.metro.com

13.98

Metro C5 8 Series Controlled Temperature Holding Cabinet

Metro C5 8 Series Controlled Temperature Holding Cabinet

Specifications

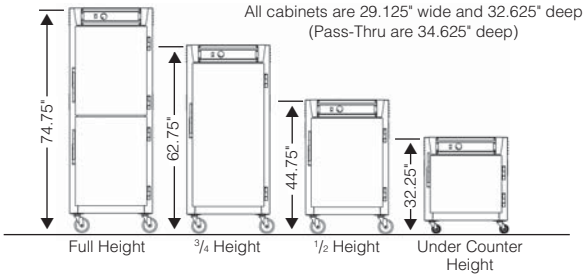

- **Cabinet Material:** Type 304 stainless steel; 20-gauge polished exterior; 22-gauge interior, or .063" aluminum, brushed exterior, natural interior.
- **Insulation:** Full perimeter, 2.5" thick, high-density fiberglass. R Value=9.9.
- **Casters:** Four casters with 5" donut neoprene wheel, double ball bearing swivel, ball bearing axle, nickel plated, two with brake. 3" rubber casters on Under Counter models.
- **Doors:**
  - Solid doors are fully insulated, double-panel construction.
  - Clear doors are double-pane, tempered glass. Argon filled with Low-E coating.
- **Hinges:** Self-closing, lift-off, double hinged, with long-life nylon bearings.
- **Gaskets:** High temperature, cabinet mounted, Santoprene gaskets.
- **Latches:** Chrome plated, high-strength magnetic pull latch with lever-action release.
- **Handles:** Four built-in polymer handles.
- **Universal Slides:** Universal wire slides; 1/4" diameter nickel-chrome wire adjustable on 1 1/2" increments. Type 304, stainless steel vertical standards.
- **Lip Load Slides:** 1 1/2"x1 1/2"x.063" extruded aluminum channel slides on .063" Aluminum vertical standards.
- **Display and Controls:** Intelligent cabinet temperature control with digital display.
- **Heat Generation System:** Thermostatically controlled closed loop feedback with 1950 Watt heating element, ball bearing blower motor, and ducted air system. Low temperature alarm enable/disable.
- **Cord:** 7 1/2' cord with NEMA 5-20P plug. Cord mounted on top (Full, 3/4, Pass Thru) or back (1/2, Under Counter) can be field reversed.
- **Thermal Performance:** 200° F maximum temperature.
- **Recommended Clearances from Enclosures:** 1 1/2" clearance from cabinet walls on sides and back, 6" clearance on top. Minimum 1/2" clearance above under counter units is required.
- **Slide Capacities:**

Cabinet Size	Universal Wire Pan Capacity** Slide Pairs Provided	Max.*	18"x26"	12"x20"x2.5" GN 1/1	Lip Load Pan Capacity 18"x26"
Full Height	18	37	18	34	35
Full Height Dutch	18	35	17	32	34
3/4 Height	14	29	13	26	27
1/2 Height	8	17	8	16	17
Under Counter	5	10	5	10	10

*Maximum number of slide pairs @ 1 1/2" spacing. Additional slide pairs ordered separately.
**Capacity based on standard number of slides provided.

Reach-In Model Number Description

Cabinet Height
9 = Full Height
7 = 3/4 Height
5 = 1/2 Height
3 = Under Counter **

Door Style
FS = Full Length Solid
FC = Full Length Clear
DS = Dutch Solid *
DC = Dutch Clear *

Slide Type
U = Universal Wire
L = Lip Load Aluminum

C589-SDS-U

Cabinet Material
S = Stainless
N = Aluminum

NEMA 5-20P
For Standard Wattage Cabinets (120V, 16A, 60Hz, 2000W)

*Please note: Dutch doors only available on full-size models.
**Please note: Under counter not available in 120V, 2000W.

Pass-Thru Model Number Description

Pass Thru* Door Style

C589-SDS-UPDS

*Please note: Pass-Thru is only available on Full and 1/2 Height Models.

Low Watt Model Number Description

C589L-SDS-U

NEMA 5-15P
Add "L" for Lower Wattage Cabinets (120V, 12A, 60Hz, 1440W)

Export Model Number Description

C589X-SDS-U

NEMA 6-15P
Add "X" for Export Cabinets (220-240V, 7.6-8.3A, 50/60Hz, 1681-2000W)

Models with Accessories or Options

C589-SDS-UA
C589-SDS-UPDSA

An "A" suffix indicates that accessories need to be factory assembled to the cabinet. Order accessories separately.

Options/Accessories:

- Small Item Shelf (C5-SHELF-S)
- Universal Slide Pair, chrome (C5-USLIDEPR-C)
- Universal Slide Pair, stainless (C5-USLIDEPR-S)
- Flush Door Latch (C5-LATCHFLUSH)*
- Key Locking Door Latch (C5-LATCHLOCK)*
- Twist Locking Door Latch (C5-LATCHTWST)*
- Full Perimeter Bumper (C5-PERMBUMP)
- Control Panel Cover (C5-COVER)
- Bumper & Drip Trough (C5-BUMPDRIP)
- Rear Push Handle (C5-HANDLE)
- 6" Stainless Steel Legs (C5-SSLEGS)
- 6" Casters (C5-6CASTER)
- 5" Rear Rigid Casters (C5-5RDGCSTR)
- Straight Plug, 20 Amp, 120V (C5-STRPLG-20)
- Straight Plug, 15 Amp, 120V (C5-STRPLG-15)
- Twist Lock Plug, 20 Amp, 120V (C5-RTWSTPLG)
- Twist Lock Plug, 15 Amp, 120V (C5-RTWSTPLG-15)
- Factory Left Hand Hinging (DD3768)
- Factory Same-Side Pass-thru Door Hinging (C5-SAMESIDE)
- Stainless Steel Universal Slide Upgrades
  - Full Height (C5-USLIDE-9S)
  - 3/4 Height (C5-USLIDE-7S)
  - 1/2 Height (C5-USLIDE-5S)
  - Under Counter (C5-USLIDE-3S)

Please note: (1) door latch must be ordered for each door (i.e.- dutch doors require (2) door latches; pass-thru dutch doors require (4) door latches)

Metro Heated cabinets are for hot food holding applications only.

MSHCG

All Metro Catalog Sheets are available on our website: **www.metro.com**

InterMetro Industries Corporation
North Washington Street • Wilkes-Barre, PA 18705 • 570.825.2741
Fax: 800.638.9263 (East Coast/Canada) • Fax: 800.638.3292 (West Coast)
FOR PRODUCT INFORMATION/CUSTOMER SERVICE:
U.S./Canada/Latin America: 1.800.992.1776 • Europe: +31.76.587.7550
Asia/Pacific: +65.6567.8003 • Middle East/Africa: +971.4.811.8286

L03-265
Rev. 02/12
Printed in U.S.A.

Information and specifications are subject to change without notice. Please confirm at time of order
Copyright © 2012 InterMetro Industries Corp.

METRO®

We put space to work.®

Item # _____

Job _____

MetroMax Q® Polymer / Wire Shelving

Quick-to-adjust, corrosion resistant shelving constructed of removable polymer open grid shelf mats, wire shelf frames, and corner releases. Shelf frames and steel posts have an epoxy coating over an electroplated substrate. Shelves and epoxy coated posts offer a 15 year warranty against rust and corrosion. Optional corrosion proof polymer posts are available. Microban® antimicrobial product protection is built into the shelf mats and posts. Shelf has a rigid four-sided frame with center truss(es). Robust corner provides complete 360° capture of the wedge and post for added stability. Stationary units have maximum capacity of 2,000 lbs. (907kg) evenly distributed. Mobile units (with stem casters) offer a maximum total unit load of 900 lbs. (408kg). Units assemble easily — shelves mount on four one-piece wedges along grooved, numbered posts and adjust on 1" (25mm) increments.





- **Forever Strong:** Proven corner connection and four-sided shelf frame with center truss(es) assures stability and strength in stationary, mobile, and high-density track shelving configurations.
  800 lbs. (363kg) per shelf for lengths of 24" to 48" (610 to 1219mm)
  600 lbs. (272kg) per shelf for lengths of 54" (1372mm) or longer
  Stationary unit: 2000lbs (907kg) evenly distributed.
  Mobile unit (with stem casters): Up to 900lbs. (408kg).
  Multiply the caster load rating by 3 to determine actual rating.
- **Rust & Corrosion Resistant:** Corrosion resistant shelves and posts offer a 15 year warranty against rust and corrosion.
- **Easy to Clean and Maintain:** Polymer mats can be easily removed and cleaned in a sink or commercial washer / dish machine.
- **Microban® Antimicrobial Product Protection** is built into the shelf mats and posts to inhibit the growth of bacteria, mold, mildew, and fungus that cause odors and product degradation. Microban product protection keeps the product "cleaner between cleanings".
- **Quick-to-Adjust:** Patented corner release allows shelves to be adjusted without tools. Simply flip each corner release, relocate the wedge connectors on the posts, and reposition the shelf. Quickly adjust shelves to reclaim wasted vertical space.
- **Efficient Use of Space:** Shelves adjust on 1" (25mm) increments along the post to maximize the use of available vertical space.
- **Fast, Easy Assembly:** Shelves are ready to use right out of the box. One-piece wedges securely attach to the posts — Raised beads on the back of each wedge snap into the grooves on the post. Window on wedge aligns with numbers on the post to locate the desired shelf position. Shelf mounts on four wedges, A unit can be assembled without tools in minutes.
- **Interchangeable:** Part of the MetroMax platform, MetroMax Q shelves are compatible on the same shelving units with MetroMax i and MetroMax 4 shelves.
- **Open Grid and Solid Mat Options:** MetroMax Q is available with open grid mats. Open grid shelves promote air circulation and light penetration. For 21" (530mm) deep MetroMax Q, solid mat overlays are available. For 18" and 24" (457 and 610mm) depths, MetroMax i or MetroMax 4 solid shelves may be added when solid shelves are required.
- **NSF Listed** for all environments.
- **Optional Accessories** are on spec sheet 9.25.

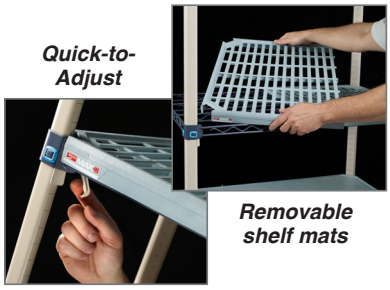

Quick-to-Adjust

Removable shelf mats

MSHCG

*MICROBAN® and the MICROBAN® symbol are registered trademarks of the Microban® Products Company, Huntersville, NC. Microban® product protection does not by itself protect a user from food borne illness. Product must be routinely cleaned.

PROTECTION THAT LIVES ON MICROBAN® NSF® CLEAN DESIGN Supports good HACCP processes

All Metro Catalog Sheets are available on our website: **www.metro.com**

METRO®

InterMetro Industries Corporation
North Washington Street, Wilkes-Barre, PA 18705

Product Information. U.S. and Canada: 1.800.992.1776
Outside U.S. and Canada: www.metro.com/contactus

L02-178
Printed in U.S.A. 3/18

Information and specifications are subject to change without notice. Please confirm at time of order.

Copyright © 2018 InterMetro Industries Corp.

Job _____

MetroMax Q®
POLYMER / WIRE SHELVING

METRO®
We put space to work.

Material Specifications:

- **Shelf Mats:** Injection-molded polypropylene with exclusive built-in Microban® antimicrobial product protection.
- **Shelf frames:** Steel with electroplated substrate and highly durable, abrasion-resistant epoxy finish.
- **Epoxy-coated posts:** Steel with electroplated substrate and highly durable, abrasion-resistant epoxy finish. Epoxy finish has built-in Microban antimicrobial product protection. The adjustable foot is reinforced nylon.
- **Shelf Wedge Connector:** Reinforced nylon.
- **Temperature range:** -20°F (-29°C) to 125°F (52°C) continuous use, with intermittent exposure to 200°F (93°C) for cleaning. Visit metro.com/service-support for cleaning guidelines.



Replacement MetroMax Q Wedges
Cat. No. MQ9985
Bag of 4
(included with each shelf)

Standard Interchangeable Shelves

- Part number includes shelf with removable mats and one bag of wedges

Shelf with Grid Mat Model No.	Nominal Size Width (in.)	Nominal Size Width (mm)	Nominal Size Length (in.)	Nominal Size Length (mm)	Actual Size Width (in.)	Actual Size Width (mm)	Actual Size Length (in.)	Actual Size Length (mm)	Approx. Pkd. Wt. (lbs.)	Approx. Pkd. Wt. (kg)
MQ1824G	18	457	24	610	18 3/8	467	23 13/16	605	6.2	2.8
MQ1830G	18	457	30	762	18 3/8	467	29 13/16	757	8.0	3.6
MQ1836G	18	457	36	914	18 3/8	467	35 13/16	910	9.7	4.4
MQ1842G	18	457	42	1067	18 3/8	467	41 13/16	1062	11.4	5.2
MQ1848G	18	457	48	1219	18 3/8	467	47 13/16	1215	13.2	6.0
MQ1854G	18	457	54	1372	18 3/8	467	53 13/16	1367	15.0	6.8
MQ1860G	18	457	60	1524	18 3/8	467	59 13/16	1519	16.7	7.6
MQ1872G	18	457	72	1829	18 3/8	467	71 13/16	1824	20.0	9.1
MQ2124G	21	530	24	610	21 3/8	543	23 13/16	605	8.0	3.6
MQ2130G	21	530	30	762	21 3/8	543	29 13/16	757	9.7	4.4
MQ2136G	21	530	36	914	21 3/8	543	35 13/16	910	11.4	5.2
MQ2142G	21	530	42	1067	21 3/8	543	41 13/16	1062	12.8	5.8
MQ2148G	21	530	48	1219	21 3/8	543	47 13/16	1215	14.5	6.6
MQ2154G	21	530	54	1372	21 3/8	543	53 13/16	1367	16.7	7.6
MQ2160G	21	530	60	1524	21 3/8	543	59 13/16	1519	18.5	8.4
MQ2172G	21	530	72	1829	21 3/8	543	71 13/16	1824	21.7	9.9
MQ2424G	24	610	24	610	24 3/8	619	23 13/16	605	9.7	4.4
MQ2430G	24	610	30	762	24 3/8	619	29 13/16	757	11.4	5.2
MQ2436G	24	610	36	914	24 3/8	619	35 13/16	910	13.1	6.0
MQ2442G	24	610	42	1067	24 3/8	619	41 13/16	1062	14.1	6.4
MQ2448G	24	610	48	1219	24 3/8	619	47 13/16	1215	15.8	7.1
MQ2454G	24	610	54	1372	24 3/8	619	53 13/16	1367	18.5	8.4
MQ2460G	24	610	60	1524	24 3/8	619	59 13/16	1519	20.3	9.2
MQ2472G	24	610	72	1829	24 3/8	619	71 13/16	1824	23.5	10.7

Heavy-Duty Dunnage Shelves

- Weight capacity per shelf evenly distributed: 1,200 lbs. (544kg) on shelves up to and including 48" (1219mm) long; 900 lbs. (408kg) for shelves 60" (1524mm) long.
- Dunnage shelves are recommended for use on units with four posts, not on an add-on unit with two posts.

Grid Mat Model No.	Nominal Width (in.)	Nominal Width (mm)	Nominal Length (in.)	Nominal Length (mm)	Approx. Pkd. Wt. (lbs.)	Approx. Pkd. Wt. (kg)
MHP2436G	24	610	36	914	21	9.5
MHP2448G	24	610	48	1220	27	12.2
MHP2460G	24	610	60	1524	33	15.0

Solid Shelf Options:

MetroMax i and MetroMax 4 solid shelves may be used with MetroMax Q shelves on the same unit. See spec sheets 9.20 & 9.22 for model numbers.

Posts

- Corrosion resistant epoxy-coated steel option.
- Corrosion proof polymer option.

STATIONARY POST WITH LEVELING FOOT

Epoxy-Coated Steel Model No.	Approx. Pkd. Wt. (lbs.)	Approx. Pkd. Wt. (kg)	Polymer Model No.	Approx. Pkd. Wt. (lbs.)	Approx. Pkd. Wt. (kg)	Nominal Height (in.)	Nominal Height (mm)	Actual Height (in.)	Actual Height (mm)
MQ13PE	1.0	0.5	MX13P	0.5	0.2	13	370	14 3/16	360
MQ27PE	2.0	0.9	MX27P	0.9	0.4	27	685	28 3/16	716
MQ33PE	2.5	1.1	MX33P	1.0	0.5	33	875	34 3/16	868
MQ54PE	4.0	1.8	MX54P	1.6	0.7	54	1370	54 3/16	1376
MQ63PE	4.5	2.0	MX63P	1.8	0.8	63	1585	62 3/16	1580
MQ74PE	5.5	2.5	MX74P	2.3	1.0	74	1690	74 3/16	1884
MQ86PE	6.5	2.9	MX86P	2.5	1.4	86	2195	86 3/16	2189

MOBILE POST FOR STEM CASTER

Epoxy-Coated Steel Model No.	Approx. Pkd. Wt. (lbs.)	Approx. Pkd. Wt. (kg)	Polymer Model No.	Approx. Pkd. Wt. (lbs.)	Approx. Pkd. Wt. (kg)	Nominal Height (in.)	Nominal Height (mm)	Actual Height (in.)	Actual Height (mm)
MQ13UPE	1.0	0.5	MX13UP	0.5	0.2	13	370	13 3/16	335
MQ27UPE	2.0	0.9	MX27UP	0.9	0.4	27	685	27 3/16	691
MQ33UPE	2.5	1.1	MX33UP	1.0	0.5	33	875	33 3/16	843
MQ54UPE	4.0	1.8	MX54UP	1.6	0.7	54	1370	53 3/16	1351
MQ63UPE	4.5	2.0	MX63UP	1.8	0.8	63	1585	61 3/16	1554
MQ74UPE	5.5	2.5	MX74UP	2.3	1.0	74	1690	73 3/16	1859
MQ86UPE	6.5	2.9	MX86UP	3.0	1.4	86	2195	85 3/16	2164

*Stationary posts include an adjustable leveling foot to compensate for uneven floors. Leveling foot can be adjusted 1" (25mm).
Special height cut posts are available. Consult your Metro representative.



Epoxy-coated steel post



Polymer post

MSHG

Item # _____

Job _____

TOP-TRACK™ HIGH-DENSITY STORAGE SYSTEMS

for Super Erecta® and Super Adjustable Super Erecta® Systems

- ***Reduce Inventory Costs***
- ***Increase Revenues***
- ***Maximize Storage Capacity***
- ***Increase Productivity***
- ***Simplify Operations***
- ***Cleaner Between Cleanings***



MSHCG

- **Maximizes Storage Capacity:** Top-Track can increase the storage capacity of a given area by 30% to 40%. Mobile units are used between stationary units. Only one aisle, which can be opened between any two units as needed, is required. The Top-Track Storage system utilizes far less aisle space and maximizes the usable storage area.
- **Cost-Saving Performance:** This efficient utilization of space addresses the storage needs of new or growing operations. In a new facility, less square footage would have to be dedicated to storage. In growing operations, Top-Track can eliminate the need to expand the facility to handle increasing storage requirements, greatly reducing the costs associated with a growing business's needs.
- **Improved Organization and Inventory Control:** Top-Track allows better organization of stored goods and permits improved inventory control with one-stop delivery and pick-up.
- **Increased Productivity:** With reduced square footage dedicated to storage, Top-Track maximizes the amount of productive "front of the house" space available, increasing daily revenues.
- **Accessible:** The overhead track system guides the mobile units and opens an access aisle between any two units, whenever it is needed. The open access promotes cleanliness and easy access for walking or for utility carts, simplifying the material handling task.
- **Super Erecta/Super Erecta Super Adjustable:** Super Erecta and Super Adjustable shelves are available in a variety of widths and lengths. Each system features ease of assembly, promotes air circulation, promotes light penetration and shelf level adjustability. Super Adjustable features shelf corners with a quick release lever. Shelves can be rapidly adjusted, without the use of tools, to meet changing storage needs. Shelves are available in Brite,™ chrome, Metroseal 3 with *Microban® built-in product protection and stainless steel.

*MICROBAN® and the MICROBAN® symbol are registered trademarks of the Microban Products Company, Huntersville, NC.

InterMetro Industries Corporation
North Washington Street
Wilkes-Barre, PA 18705
www.metro.com

EMERSON Storage Solutions

TOP-TRACK™ HIGH-DENSITY STORAGE SYSTEMS

FRONT VIEW

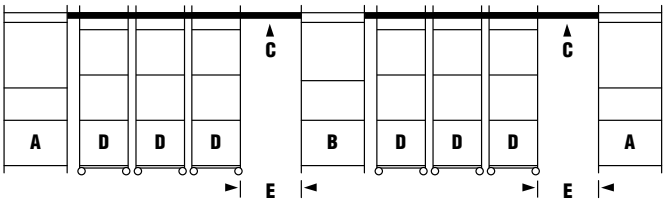

OVERHEAD VIEW

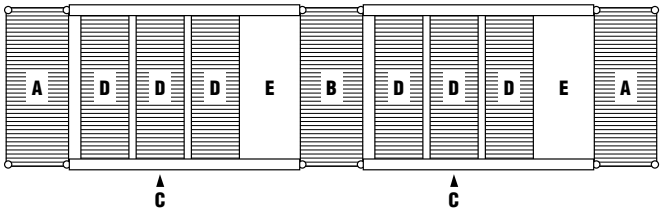

System Components

A = Stationary End Units
B = Stationary Intermediate Unit (Optional)
C = Track Set
D = Mobile Units
E = Open Aisle

Dimensions

Stationary End Unit Kits	Cat. No. Chrome-Plated	Cat. No. Metroseal 3	Cat. No. Stainless Steel	Shelf Width (in.)	Shelf Width (mm)
Includes hardware necessary for connecting stationary end units to track. **ONE KIT IS REQUIRED PER SINGLE SYSTEM. SHELVES SOLD SEPARATELY.** 86" (2185mm) posts included. Just add shelves.	TTE18C	TTE18K3	TTE18S	18	457
	TTE21C	TTE21K3	TTE21S	21	530
	TTE24C	TTE24K3	TTE24S	24	610

Stationary Intermediate Unit Kits	Cat. No. Chrome-Plated	Cat. No. Metroseal 3	Cat. No. Stainless Steel	Shelf Width (in.)	Shelf Width (mm)
Includes hardware necessary for connecting intermediate unit to track on both sides. **ONE KIT IS REQUIRED PER SINGLE SYSTEM. SHELVES SOLD SEPARATELY.** 86" (2185mm) posts included. Just add shelves.	TTA18C	TTA18K3	TTA18S	18	457
	TTA21C	TTA21K3	TTA21S	21	530
	TTA24C	TTA24K3	TTA24S	24	610

NSHCO

Track Sets	6' (1830mm)	7' (2135mm)	8' (2440mm)	9' (2745mm)	10' (3050mm)	11' (3355mm)	12' (3660mm)	13' (3965mm)
Includes necessary sections of track for assembling track runs of 6'–21' (1830mm–6405mm).	TTS6NA	TTS7NA	TTS8NA	TTS9NA	TTS10NA	TTS11NA	TTS12NA	TTS13NA
	14' (4270mm)	15' (4575mm)	16' (4880mm)	17' (5185mm)	18' (5490mm)	19' (5795mm)	20' (6100mm)	21' (6405mm)
	TTS14NA	TTS15NA	TTS16NA	TTS17NA	TTS18NA	TTS19NA	TTS20NA	TTS21NA

Mobile Unit Kits	Cat. No. Chrome-Plated	Cat. No. Metroseal 3	Cat. No. Stainless Steel	Shelf Width (in.)	Shelf Width (mm)
One kit required per mobile unit. Kit includes posts, casters/caster channels, donut bumpers, roller bearing assemblies, hardware, and split sleeves. **SHELVES SOLD SEPARATELY.** Just add shelves.	TTM18C	TTM18K3	TTM18S	18	457
	TTM21C	TTM21K3	TTM21S	21	530
	TTM24C	TTM24K3	TTM24S	24	610

NOTES:
1. The stationary end and intermediate units **must** have a minimum of four shelves.
2. The standard Top-Track™ system requires the use of 86" (2185mm) posts (i.e., 86PK3 or 86PS) on the stationary end and intermediate units. **Shelves for the stationary end and intermediate units are sold separately.**
3. The mobile unit kits includes special 74" (1880mm) posts with casters. **Shelves for mobile units are sold separately.**
4. Recommended maximum load rating for a mobile unit is 900 lbs. (400kg). Floor should be level, smooth, and free from large cracks and raised obstacles.
5. Under normal conditions, an aisle width of 30"-36" (762-914mm) is recommended. The storage of very large objects within the system, however, may require an aisle width larger than 36" (914mm).
6. A stationary intermediate unit is required when track length exceeds 21 feet (6401mm). A stationary intermediate unit may be used at the discretion of the user when track lengths are less than 21 feet (6401mm).

TOP-TRACK™ HIGH-DENSITY STORAGE SYSTEMS

FRONT VIEW

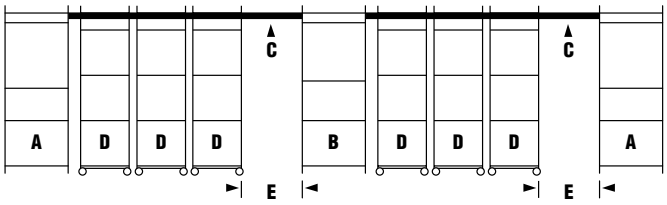

OVERHEAD VIEW

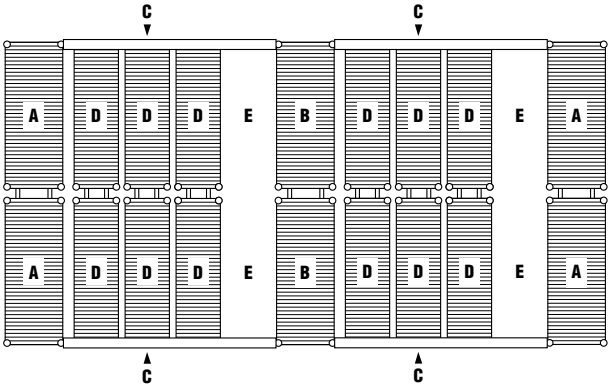

System Components

A = Stationary End Units
B = Stationary Intermediate Unit (Optional)
C = Track Set
D = Mobile Units
E = Open Aisle

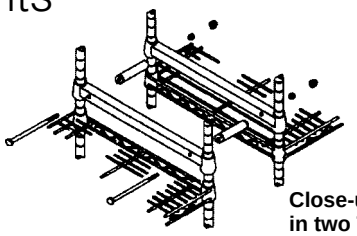

Close-up showing shelving units connected end-to-end in two Top-Track™ systems

Dimensions

MSHCG

Stationary End Unit Kits	Cat. No. Chrome-Plated	Shelf Width (in.)	(mm)
Includes hardware necessary for connecting stationary end units in Double Deep systems and connecting to an overhead track set. **ONE KIT IS REQUIRED FOR ENTIRE DOUBLE DEEP CONFIGURATION. SHELVES SOLD SEPARATELY.** 86" (2185mm) posts included. Just add shelves.	LTTE18C	18	457
	LTTE21C	21	530
	LTTE24C	24	610

Stationary Intermediate Unit Kits	Cat. No. Chrome-Plated	Shelf Width (in.)	(mm)
Includes hardware necessary for connecting intermediate stationary end units in Double Deep systems and connecting to an overhead track set on each side. **ONE KIT IS REQUIRED FOR ENTIRE DOUBLE DEEP CONFIGURATION. SHELVES SOLD SEPARATELY.** 86" (2185mm) posts included. Just add shelves.	LTTA18C	18	457
	LTTA21C	21	530
	LTTA24C	24	610

Track Sets	6' (1830mm)	7' (2135mm)	8' (2440mm)	9' (2745mm)	10' (3050mm)	11' (3355mm)	12' (3660mm)	13' (3965mm)
Includes necessary sections of track for assembling track runs of 6' to 21' (763-6405mm). **ONLY ONE TRACK SET IS REQUIRED BETWEEN STATIONARY UNITS.**	TTS6NA	TTS7NA	TTS8NA	TTS9NA	TTS10NA	TTS11NA	TTS12NA	TTS13NA
	14' (4270mm)	15' (4575mm)	16' (4880mm)	17' (5185mm)	18' (5490mm)	19' (5795mm)	20' (6100mm)	21' (6405mm)
	TTS14NA	TTS15NA	TTS16NA	TTS17NA	TTS18NA	TTS19NA	TTS20NA	TTS21NA

Mobile Unit Kits	Cat. No. Chrome-Plated	Shelf Width (in.)	(mm)
Includes the necessary posts, casters, caster channels, donut bumpers, roller bearing assemblies, and tie-together hardware to connect two mobile units together (i.e., one in each system). **SHELVES SOLD SEPARATELY.** Just add shelves.	LTTM18C	18	457
	LTTM21C	21	530
	LTTM24C	24	610

NOTES:

1. The stationary end and intermediate units **must** have a minimum of four shelves. **For all Super Adjustable applications, the top and bottom shelves are to be non "quick adjust" Super Erecta shelves.**
2. The standard Double Deep Top-Track™ system requires the use of 86" (2185mm) posts (i.e., 86P) on the stationary end and intermediate units. **Shelves for the stationary end and intermediate units are sold separately.**
3. The mobile unit kit includes special 74" (1880mm) posts with casters. **Shelves for mobile units are sold separately.** For all Super Adjustable applications, the top and bottom shelves are to be non "quick adjust" Super Erecta shelves.
4. Under normal conditions, an aisle width of 30"-36" (762mm-914mm) is recommended. The storage of very large objects within the system, however, may require an aisle width larger than 36" (914mm).
5. Two intermediate shelving units connected end-to-end are required when the track length exceeds 21 feet (6401mm). Stationary intermediate shelving units may be used at the discretion of the user when track lengths are less than 21 feet (6401mm).
6. The maximum Double Deep system configuration is 10'7" (3202mm) (e.g., two systems, each having 60" (1525mm) for long shelves plus 6" (152mm) for Top-Track components.)
7. Ease of rollability for the mobile unit is an important consideration in evaluating Top-Track as a possible storage alternative. The floor should be level, smooth, and free from large cracks and raised obstacles. Two mobile shelving units connected end-to-end and loaded with between 800 to 1,200 lbs. (365-550kg) will require a human effort range (in lbs. of human force) of between 18-24 lbs. (8-11kg) to move the unit from a complete stop. An average person will perceive this as acceptable effort levels.
8. Mobile units should have the top shelf positioned as close as possible to the track.

Job _____

TOP-TRACK™ HIGH-DENSITY STORAGE SYSTEMS

Specifications

- **Track:** Aluminum extrusion 6063-T6.
- **Joining Channel:** 16 gauge galvanized steel.
- **Roller Assembly:** Zinc-plated steel hardware with nylon roller.
- **Casters:**
  For applications where Brite™ or chrome finishes are acceptable: 5" (127mm) wheel with offset rigid horn, ball bearings in axle, nickel-plated, pre-lubricated.
- **For applications where Metroseal 3 and stainless steel are acceptable:** 5" (127mm) wheel with offset stainless steel rigid horn, stainless steel ball bearings in axle, pre-lubricated.

Workable Configurations of Mobile Units Base on Various Track Lengths and Desired Aisle Sizes

	Nominal Aisle Size = 30" (760mm)					Nominal Aisle Size = 33" (838mm)					Nominal Aisle Size = 36" (914mm)				
	No. Mobile Units (Note 1)			Actual Aisle Size		No. Mobile Units (Note 1)			Actual Aisle Size		No. Mobile Units (Note 1)			Actual Aisle Size	
Length of Track	18" (457mm)	21" (530mm)	24" (610mm)	(in.)	(mm)	18" (457mm)	21" (530mm)	24" (610mm)	(in.)	(mm)	18" (457mm)	21" (530mm)	24" (610mm)	(in.)	(mm)
6	2			31 1/2	800	2			31 1/2	800					
7			2	31 1/2	800			2	31 1/2	800			2	37 1/2	952
8	1	2		29 1/4	749	2	1		32 1/4	819	3			35 1/4	895
9			3	29 1/4	749		1	2	32 1/4	819	1		2	35 1/4	895
10	2	1	1	30	762	3		1	33	838	3	1		36	914
11		1	3	30	762		2	2	33	838		3	1	36	914
12	1	4		30 3/4	781	2	3		34 3/4	857	3	2		36 1/4	933
13		2	3	30 3/4	781		3	2	34 3/4	857		4	1	36 1/4	933
14	4	3		31 1/2	800	2	4		32 1/4	819	6	1		35 1/4	895
15	4	3		29 1/4	749	5	2		32 1/4	819	6	1		35 1/4	895
16	8			30	762	1	6		32 1/4	819	2	5		35 1/4	895
17	4	4		30	762	5	3		33	838	7		1	36	914
18		8		30	762	1	7		33	838	2	6		36	914
19	2		6	30	762	2	1	5	33	838	3		5	36	914
20			8	30	762		1	7	33	838		2	6	36	914
21						5	5		34 1/2	876	6	4		37 1/2	952

NOTE 1: Actual overall width of nominal 18" (457mm), 21" (530mm), and 24" (610mm) wide mobile units is 20 1/4" (667mm). The number of mobile units here applies to individual units in a single system, and sets of units (two mobile units tied back-to-back) in a double deep system.
NOTE 2: In confined spaces, usable space for the Top-Track installation should be determined by deducting 4" (102mm) from the overall measured space. This allows for variables such as building tolerances.

MSHCG

Example

Selection Criteria: Actual track length required: 17'3" (5228mm). Aisle width must be in 30"-36" (762-914mm) range.

	Nominal 30" (762mm) Aisle			Nominal 33" (838mm) Aisle		
Selection of Mobile Units	18" (457mm)	21" (530mm)	24" (610mm)	18" (457mm)	21" (530mm)	24" (610mm)
17' (5185mm)	4	4		5	3	

Other selections would produce a movable aisle outside the 30"-36" (762-914mm) range.

Beyond the standard configurations mentioned above, custom Top-Track capabilities include:

- Attaching one end of the track to a wall in a single or double deep installation.
- Tying together a cluster of two mobile units (i.e., side-to-side) in a single system, or four mobile units in a double deep system.
- A taller installation up to a maximum height of 8' (2438mm) (i.e., 86" (2185mm) high posts in the stationary end units).
- Metroseal 3 and stainless steel Top-Track components for the double deep application.
- Track assemblies 6.5', 7.5' (1956, 2261mm) in length.

Contact factory for details.

All Metro Catalog Sheets are available on our Web Site: **www.metro.com**

InterMetro Industries Corporation
North Washington Street, Wilkes-Barre, PA 18705
Phone: 570-825-2741 • Fax: 570-825-2852
For Product Information Call: 1-800-433-2232

L02-039
Printed in U.S.A. 8/03

Information and specifications are subject to change without notice. Please confirm at time of order.

Copyright © 2003 InterMetro Industries Corp.

Item # _____

Job _____

SUPER ERECTA SHELF®

CONVENIENCE PAK SHELVING

Shelving Sales Made Easy

Metro's Convenience Pak Super Erecta Shelf® Shelving provides a complete shelving unit in a single box. Convenience Pak shelving is easier to promote, select, and order as compared to separate shelving components. Convenience Pak will increase your overall sales volume, improve operating efficiencies and reduce your handling and inventory costs.

- **Single Package Design:** Convenience Pak Super Erecta Shelving is packaged in one box. Each post comes in 2 modules with a heavy-duty connector provided to connect post halves. Post modules, connectors, shelves, and split sleeve connector are all included in 1 box.
- **Simplified Sales and Ordering:** Each given size Convenience Pak unit has its own catalog number and list price, making Convenience Pak the easiest shelving product to select, price, and order. With ease and efficiency your sales people can respond to your customers' basic shelving needs, increasing their sales volume per sales call.
- **Easy to Inventory:** The single package Convenience Pak makes it easy for you to inventory much of your shelving requirements, reducing the inventory space for posts and shelves.
- **Simplified Shipping and Handling:** Basic shelving orders can be handled with one trip to the warehouse, requiring only one box be handled rather than separate shelves, posts, and split sleeves. Common mistakes made in consolidating components for a given job will be dramatically reduced resulting in an overall improvement in your operating efficiencies. Simplified ordering and invoicing will reduce the work load on your in-house personnel, reducing your overall costs.
- **As Strong and Durable as Standard Super Erecta Shelf Shelving:** Post modules and heavy-duty connector provide a shelving unit equal to the superior load bearing and durability recognized in our traditional Super Erecta Shelving design. Whether the application is stationary or mobile, the Convenience Pak unit meets the tough performance guidelines established by Super Erecta Shelving.
- **Three Finishes:** Convenience Pak units are available in Super Erecta Brite,™ Chrome, and Metroseal 3™ finishes, to handle any shelving applications your customers may have.

U.S. and Foreign Patents Pending

- **Increase sales productivity**
- **Improve operating efficiency**
- **Reduce costs**

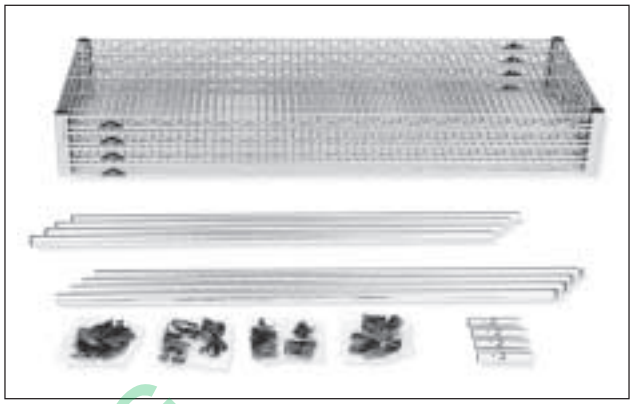



NSF

MSHCG

InterMetro Industries Corporation
North Washington Street
Wilkes-Barre, PA 18705
www.metro.com

EMERSON
Storage Solutions

10.03

Job _____

SUPER ERECTA SHELF®
CONVENIENCE PAK SHELVING

Three Finishes Available:

- **Super Erecta Brite™:** Applicable to dry storage applications, where moisture and humidity are not a concern.
- **Chrome:** Designed for dry storage applications where added durability, cleanability, or a more aesthetic appearance might be required.
- **Metroseal 3** is manufactured using the latest state-of-the-art plating and coating processes. It incorporates a durable electro-plated metal base layer. This substrate, when coated with Metro's new proprietary epoxy coating will provide years of corrosion free service. For more information on Metroseal 3, refer to sheet #10.10a.



Cat. No.	Width (in.)	Width (mm)	Length (in.)	Length (mm)	Height (in.)	Height (mm)	Approx. Pkd. Wt. (lbs.)	Approx. Pkd. Wt. (kg)
Four (4) Super Erecta Brite™ Shelves per Unit								
EZ1836BR-4	18	455	36	910	74.5	1890	51	23
EZ1848BR-4	18	455	48	1220	74.5	1890	63	28
EZ1860BR-4	18	455	60	1525	74.5	1890	82	37
EZ2436BR-4	24	610	36	910	74.5	1890	66	30
EZ2448BR-4	24	610	48	1220	74.5	1890	76	34
EZ2460BR-4	24	610	60	1525	74.5	1890	102	46
Four (4) Chrome Shelves per Unit								
EZ1836NC-4	18	455	36	910	74.5	1890	51	23
EZ1848NC-4	18	455	48	1220	74.5	1890	63	28
EZ1860NC-4	18	455	60	1525	74.5	1890	82	37
EZ2436NC-4	24	610	36	910	74.5	1890	66	30
EZ2448NC-4	24	610	48	1220	74.5	1890	76	34
EZ2460NC-4	24	610	60	1525	74.5	1890	102	46
Four (4) Metroseal 3™ Shelves per Unit								
EZ1836NK3-4	18	455	36	910	74.5	1890	51	23
EZ1848NK3-4	18	455	48	1220	74.5	1890	63	28
EZ1860NK3-4	18	455	60	1525	74.5	1890	82	37
EZ2436NK3-4	24	610	36	910	74.5	1890	66	30
EZ2448NK3-4	24	610	48	1220	74.5	1890	76	34
EZ2460NK3-4	24	610	60	1525	74.5	1890	102	46

MSHCG

SUPER ERECTA SHELF® **Convenience Pak Shelving**

All Metro Catalog Sheets are available on our Web Site: **www.metro.com**

InterMetro Industries Corporation
North Washington Street, Wilkes-Barre, PA 18705
Phone: 570-825-2741 • Fax: 570-825-2852
For Product Information Call: 1-800-433-2232

L02-007B
Printed in U.S.A. Rev. 2/03

Information and specifications are subject to change without notice. Please confirm at time of order.

Copyright © 2003 InterMetro Industries Corp.

Item # _____

Job _____

SUPER ERECTA SHELF®

CONVENIENCE PAK SHELVING

Shelving Sales Made Easy

Metro's Convenience Pak Super Erecta Shelf® Shelving provides a complete shelving unit in a single box. Convenience Pak shelving is easier to promote, select, and order as compared to separate shelving components. Convenience Pak will increase your overall sales volume, improve operating efficiencies and reduce your handling and inventory costs.

- **Single Package Design:** Convenience Pak Super Erecta Shelving is packaged in one box. Each post comes in 2 modules with a heavy-duty connector provided to connect post halves. Post modules, connectors, shelves, and split sleeve connector are all included in 1 box.
- **Simplified Sales and Ordering:** Each given size Convenience Pak unit has its own catalog number and list price, making Convenience Pak the easiest shelving product to select, price, and order. With ease and efficiency your sales people can respond to your customers' basic shelving needs, increasing their sales volume per sales call.
- **Easy to Inventory:** The single package Convenience Pak makes it easy for you to inventory much of your shelving requirements, reducing the inventory space for posts and shelves.
- **Simplified Shipping and Handling:** Basic shelving orders can be handled with one trip to the warehouse, requiring only one box be handled rather than separate shelves, posts, and split sleeves. Common mistakes made in consolidating components for a given job will be dramatically reduced resulting in an overall improvement in your operating efficiencies. Simplified ordering and invoicing will reduce the work load on your in-house personnel, reducing your overall costs.
- **As Strong and Durable as Standard Super Erecta Shelf Shelving:** Post modules and heavy-duty connector provide a shelving unit equal to the superior load bearing and durability recognized in our traditional Super Erecta Shelving design. Whether the application is stationary or mobile, the Convenience Pak unit meets the tough performance guidelines established by Super Erecta Shelving.
- **Three Finishes:** Convenience Pak units are available in Super Erecta Brite,™ Chrome, and Metroseal 3™ finishes, to handle any shelving applications your customers may have.

• Increase sales productivity
• Improve operating efficiency
• Reduce costs

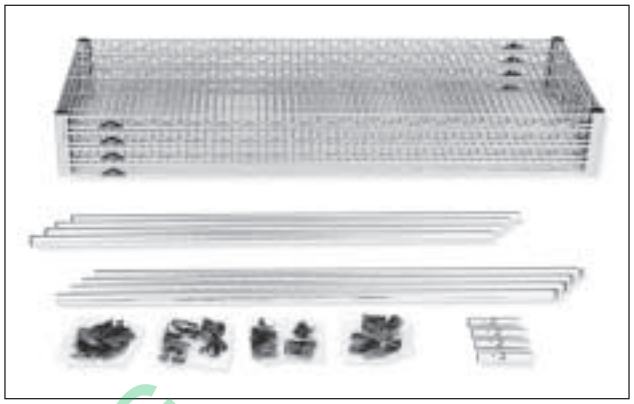



MSHCG

NSF

U.S. and Foreign Patents Pending

InterMetro Industries Corporation
North Washington Street
Wilkes-Barre, PA 18705
www.metro.com

EMERSON™
Storage Solutions

10.03

Job _____

SUPER ERECTA SHELF®
CONVENIENCE PAK SHELVING

Three Finishes Available:

- **Super Erecta Brite™:** Applicable to dry storage applications, where moisture and humidity are not a concern.
- **Chrome:** Designed for dry storage applications where added durability, cleanability, or a more aesthetic appearance might be required.
- **Metroseal 3** is manufactured using the latest state-of-the-art plating and coating processes. It incorporates a durable electro-plated metal base layer. This substrate, when coated with Metro's new proprietary epoxy coating will provide years of corrosion free service. For more information on Metroseal 3, refer to sheet #10.10a.



Cat. No.	Width (in.)	Width (mm)	Length (in.)	Length (mm)	Height (in.)	Height (mm)	Approx. Pkd. Wt. (lbs.)	Approx. Pkd. Wt. (kg)
Four (4) Super Erecta Brite™ Shelves per Unit								
EZ1836BR-4	18	455	36	910	74.5	1890	51	23
EZ1848BR-4	18	455	48	1220	74.5	1890	63	28
EZ1860BR-4	18	455	60	1525	74.5	1890	82	37
EZ2436BR-4	24	610	36	910	74.5	1890	66	30
EZ2448BR-4	24	610	48	1220	74.5	1890	76	34
EZ2460BR-4	24	610	60	1525	74.5	1890	102	46
Four (4) Chrome Shelves per Unit								
EZ1836NC-4	18	455	36	910	74.5	1890	51	23
EZ1848NC-4	18	455	48	1220	74.5	1890	63	28
EZ1860NC-4	18	455	60	1525	74.5	1890	82	37
EZ2436NC-4	24	610	36	910	74.5	1890	66	30
EZ2448NC-4	24	610	48	1220	74.5	1890	76	34
EZ2460NC-4	24	610	60	1525	74.5	1890	102	46
Four (4) Metroseal 3™ Shelves per Unit								
EZ1836NK3-4	18	455	36	910	74.5	1890	51	23
EZ1848NK3-4	18	455	48	1220	74.5	1890	63	28
EZ1860NK3-4	18	455	60	1525	74.5	1890	82	37
EZ2436NK3-4	24	610	36	910	74.5	1890	66	30
EZ2448NK3-4	24	610	48	1220	74.5	1890	76	34
EZ2460NK3-4	24	610	60	1525	74.5	1890	102	46

MSHCG

All Metro Catalog Sheets are available on our Web Site: **www.metro.com**

InterMetro Industries Corporation
North Washington Street, Wilkes-Barre, PA 18705
Phone: 570-825-2741 • Fax: 570-825-2852
For Product Information Call: 1-800-433-2232

L02-007B
Printed in U.S.A. Rev. 2/03

Information and specifications are subject to change without notice. Please confirm at time of order.

Copyright © 2003 InterMetro Industries Corp.


Steel hasp assembly (accepts built-in lock or padlock)
Louvers for ventilation
LOCKERS.COM
Name/number plate (optional engraving available upon request)
SALSBURY INDUSTRIES

MSHCG

SECTION 115213 - PROJECTION SCREENS

PART 1 - GENERAL

1.1 RELATED DOCUMENTS

A. Drawings and general provisions of the Contract, including General and Supplementary Conditions and Division 01 Specification Sections, apply to this Section.

1.2 SUMMARY

A. Section Includes:

1. Manually operated, front-projection screens.

B. Related Requirements:

1. Section 055000 "Metal Fabrications" for metal support framing for front-projection screens.

1.3 DEFINITIONS

A. Gain: Ratio of light reflected from screen material to that reflected perpendicularly from a magnesium carbonate surface as determined per SMPTE RP 94.

1.4 ACTION SUBMITTALS

A. Product Data: For each type of product.

B. Shop Drawings: Show layouts and types of front-projection screens. Include the following:

1. Drop lengths.
2. Location of seams in viewing surfaces.
3. Anchorage details, including connection to supporting structure for suspended units.
4. Details of juncture of exposed surfaces with adjacent finishes.
5. Accessories.

C. Samples for Initial Selection: For finishes of surface-mounted screen cases.

1.5 CLOSEOUT SUBMITTALS

A. Maintenance Data: For front-projection screens to include in maintenance manuals.

1.6 DELIVERY, STORAGE, AND HANDLING

A. Environmental Limitations: Do not deliver or install front-projection screens until spaces are enclosed and weathertight, wet work in spaces is complete and dry, and temporary HVAC system is operating and maintaining ambient temperature and humidity conditions at occupancy levels during the remainder of the construction period.

1.7 COORDINATION

A. Coordinate layout and installation of front-projection screens with adjacent construction, including ceiling suspension systems, light fixtures, HVAC equipment, fire-suppression system, and partitions.

PART 2 - PRODUCTS

2.1 MANUFACTURERS

A. Source Limitations for Projection Screens: Obtain front-projection screens from single manufacturer. Obtain accessories, including necessary mounting hardware, from screen manufacturer.

2.2 MANUALLY OPERATED, FRONT-PROJECTION SCREENS

A. General: Manufacturer's standard spring-roller-operated units, consisting of case, screen, mounting accessories, and other components necessary for a complete installation.

1. Screen Mounting: Top edge securely anchored to a 3-inch-diameter, rigid steel roller; bottom edge formed into a pocket holding a tubular metal slat, with ends of slat protected by plastic caps, and with a saddle and pull attached to slat by screws.
2. Tab Tensioning: Provide units that have a durable low-stretch cord, such as braided polyester, on each side of screen that is connected to edge of screen by tabs to pull screen flat horizontally. In lieu of tab tensioning, screens may be constructed from vinyl-coated screen cloth that contains horizontal stiffening monofilaments to resist edge curling.

B. Surface-Mounted, Metal-Encased, Manually Operated Screens with Tab Tensioning: Units designed and fabricated for surface mounting on wall or ceiling, fabricated from formed-steel sheet not less than 0.027 inch thick or from aluminum extrusions; with flat back design and vinyl covering or baked-enamel finish. Provide units with matching end caps and concealed mounting.

1. Products: Subject to compliance with requirements, provide one of the following:

a. Draper Inc; Premier/Series C or Silhouette/Series C.
b. Stewart Filmscreen Corporation; Luxus Communicator.

2.3 FRONT-PROJECTION SCREEN MATERIAL

A. Matte-White Viewing Surface: Peak gain of not less than 0.9, and gain of not less than 0.8 at an angle of 50 degrees from the axis of the screen surface.

1. Products: Subject to compliance with requirements, provide one of the following:

a. BEI Audio-Visual Products; Matte White.
b. Bretford, Inc.; Matte White.
c. Da-Lite Screen Company; Audio Vision, Da-Mat, HD Progressive 0.9, HD Progressive 1.1, High Contrast Matte White, or Matte White.
d. Draper Inc; ClearSound Perf XT950E, ClearSound White Weave XT900E, Matt White XT1000E, Matt White XT1000V, TecVision XT1000X White, TecVision XT1300X White.
e. Stewart Filmscreen Corporation; Snomatte 100.

B. Material: Vinyl-coated, glass-fiber fabric or vinyl sheet.

C. Mildew-Resistance Rating: Zero or 1 when tested according to ASTM G 21.

D. Flame Resistance: Passes NFPA 701.

E. Seamless Construction: Provide screens, in sizes indicated, without seams.

F. Edge Treatment: Without black masking borders.

G. Size of Viewing Surface: As selected by the Architect.

PART 3 - EXECUTION

3.1 INSTALLATION

A. Install front-projection screens at locations indicated to comply with screen manufacturer's written instructions.

B. Install front-projection screens with screen cases in position and in relation to adjoining construction indicated. Securely anchor to supporting substrate in a manner that produces a smoothly operating screen with vertical edges plumb and viewing surface flat when screen is lowered.

1. Test manually operated units to verify that screen-operating components are in optimum functioning condition.

END OF SECTION 115213

SECTION 122113 – HORIZONTAL LOUVER BLINDS

PART 1 - GENERAL

1.1 RELATED DOCUMENTS

A. Drawings and general provisions of the Contract, including General and Supplementary Conditions and Division 01 Specification Sections, apply to this Section.

1.2 SUMMARY

A. Section Includes:

1. Horizontal louver blinds with aluminum slats.

1.3 ACTION SUBMITTALS

A. Product Data: For each type of product.

B. Shop Drawings: For horizontal louver blinds, include fabrication and installation details.

C. Samples: For each exposed product and for each color and texture specified, 12 inches long.

D. Product Schedule: For horizontal louver blinds. Use same designations indicated on Drawings.

1.4 INFORMATIONAL SUBMITTALS

A. Product Test Reports: For horizontal louver blinds with polymer slats that have been tested for compliance with NFPA 701, for tests performed by manufacturer and witnessed by a qualified testing agency or a qualified testing agency.

1.5 CLOSEOUT SUBMITTALS

A. Maintenance Data: For horizontal louver blinds to include in maintenance manuals.

1.6 MAINTENANCE MATERIAL SUBMITTALS

A. Furnish extra materials, from the same product run, that match products installed and that are packaged with protective covering for storage and identified with labels describing contents.

1. Horizontal Louver Blinds: Full-size units equal to 5 percent of quantity installed for each size, color, texture, pattern, and gloss indicated, but no fewer than two units.

1.7 QUALITY ASSURANCE

A. Mockups: Build mockups to verify selections made under Sample submittals, to demonstrate aesthetic effects, and to set quality standards for fabrication and installation.

1. Approval of mockups does not constitute approval of deviations from the Contract Documents contained in mockups unless Architect specifically approves such deviations in writing.
2. Subject to compliance with requirements, approved mockups may become part of the completed Work if undisturbed at time of Substantial Completion.

1.8 DELIVERY, STORAGE, AND HANDLING

A. Deliver horizontal louver blinds in factory packages, marked with manufacturer, product name, and location of installation using same designations indicated on Drawings.

1.9 FIELD CONDITIONS

A. Environmental Limitations: Do not install horizontal louver blinds until construction and wet-work and finish work in spaces, including painting, is complete and dry and ambient temperature and humidity conditions are maintained at the levels indicated for Project when occupied for its intended use.

B. Field Measurements: Where horizontal louver blinds are indicated to fit to other construction, verify dimensions of other construction by field measurements before fabrication and indicate measurements on Shop Drawings. Allow clearances for operating hardware of operable glazed units through entire operating range. Notify Architect of installation conditions that vary from Drawings. Coordinate fabrication schedule with construction progress to avoid delaying the Work.

PART 2 - PRODUCTS

2.1 MANUFACTURERS

A. Source Limitations: Obtain horizontal louver blinds from single source from single manufacturer.

2.2 HORIZONTAL LOUVER BLINDS, ALUMINUM SLATS

A. Manufacturers: Subject to compliance with requirements, provide products by one of the following:

1. CACO, Inc., Window Fashions.
2. Hunter Douglas Contract.

3. Levolor Contract; a Newell Rubbermaid company.
4. Springs Window Fashions; SWFcontract.

B. Slats: Aluminum; alloy and temper recommended by producer for type of use and finish indicated; with crowned profile and radius corners.

1. Width: 1 inch.
2. Thickness: Manufacturer's standard.
3. Spacing: Manufacturer's standard.
4. Finish: Ionized antistatic, dust-repellent, baked polyester finish.
5. Features:

    a. Lift-Cord Rout Holes: Minimum size required for lift cord and located near back (outside) edge of slat to maximize slat overlap and minimize light gaps between slats.

C. Headrail: Formed steel or extruded aluminum; long edges returned or rolled. Headrails fully enclose operating mechanisms on three sides.

1. Capacity: One blind(s) per headrail unless otherwise indicated.
2. Ends: Manufacturer's standard.
3. Manual Lift Mechanism:

    a. Lift-Cord Lock: Variable; stops lift cord at user-selected position within blind full operating range.
    b. Operator: Extension of lift cord(s) through lift-cord lock mechanism to form cord pull.

4. Manual Tilt Mechanism: Enclosed worm-gear mechanism and linkage rod that adjusts ladders.

    a. Tilt: Full.
    b. Operator: Clear-plastic wand.
    c. Over-Rotation Protection: Manufacturer's detachable operator or slip clutch to prevent over rotation of gear.

5. Manual Lift-Operator and Tilt-Operator Lengths: Length required to extend to 48 inches above floor level when blind is fully closed.
6. Manual Lift-Operator and Tilt-Operator Locations: Manufacturer's standard unless otherwise indicated.

D. Bottom Rail: Formed-steel or extruded-aluminum tube that secures and protects ends of ladders and lift cords and has plastic- or metal-capped ends.

1. Type: Manufacturer's standard.

E. Lift Cords: Manufacturer's standard braided cord.

F. Ladders: Evenly spaced across headrail at spacing that prevents long-term slat sag.

1. Type: Braided cord.

G. Valance: Manufacturer's standard.

H. Mounting Brackets: With spacers and shims required for blind placement and alignment indicated.

1. Type: End.
2. Intermediate Support: Provide intermediate support brackets to produce support spacing recommended by blind manufacturer for weight and size of blind.

I. Hold-Down Brackets and Hooks or Pins: Manufacturer's standard.

J. Side Channels and Perimeter Light Gap Seals: Manufacturer's standard.

K. Colors, Textures, Patterns, and Gloss:

1. Slats: As selected by Architect from manufacturer's full range.
2. Components: Provide rails, cords, ladders, and materials exposed to view matching or coordinating with slat color unless otherwise indicated.

2.3 HORIZONTAL LOUVER BLIND FABRICATION

A. Product Safety Standard: Fabricate horizontal louver blinds to comply with WCMA A 100.1 including requirements for corded, flexible, looped devices; lead content of components; and warning labels.

B. Unit Sizes: Fabricate units in sizes to fill window and other openings as follows, measured at 74 deg F:

1. Between (Inside) Jamb Installation: Width equal to jamb-to-jamb dimension of opening in which blind is installed less 1/4 inch per side or 1/2 inch total, plus or minus 1/8 inch. Length equal to head-to-sill dimension of opening in which blind is installed less 1/4 inch, plus or minus 1/8 inch.

C. Concealed Components: Noncorrodible or corrosion-resistant-coated materials.

1. Lift-and-Tilt Mechanisms: With permanently lubricated moving parts.

D. Mounting and Intermediate Brackets: Designed for removal and reinstallation of blind without damaging blind and adjacent surfaces, for supporting blind components, and for bracket positions and blind placement indicated.

E. Installation Fasteners: No fewer than two fasteners per bracket, fabricated from metal noncorrosive to brackets and adjoining construction; type designed for securing to supporting substrate; and supporting blinds and accessories under conditions of normal use.

F. Color-Coated Finish:

1. Metal: For components exposed to view, apply manufacturer's standard baked finish complying with manufacturer's written instructions for surface preparation including pretreatment, application, baking, and minimum dry film thickness.

PART 3 - EXECUTION

3.1 EXAMINATION

A. Examine substrates, areas, and conditions, with Installer present, for compliance with requirements for installation tolerances, operational clearances, and other conditions affecting performance of the Work.

B. Proceed with installation only after unsatisfactory conditions have been corrected.

3.2 INSTALLATION

A. Install horizontal louver blinds level and plumb, aligned and centered on openings, and aligned with adjacent units according to manufacturer's written instructions.

1. Locate so exterior slat edges are not closer than 1 inch from interior faces of glass and not closer than 1/2 inch from interior faces of glazing frames through full operating ranges of blinds.
2. Install mounting and intermediate brackets to prevent deflection of headrails.
3. Install with clearances that prevent interference with adjacent blinds, adjacent construction, and operating hardware of glazed openings, other window treatments, and similar building components and furnishings.

3.3 ADJUSTING

A. Adjust horizontal louver blinds to operate free of binding or malfunction through full operating ranges.

3.4 CLEANING AND PROTECTION

A. Clean horizontal louver blind surfaces after installation according to manufacturer's written instructions.

B. Provide final protection and maintain conditions in a manner acceptable to manufacturer and Installer that ensures that horizontal louver blinds are without damage or deterioration at time of Substantial Completion.

C. Replace damaged horizontal louver blinds that cannot be repaired in a manner approved by Architect before time of Substantial Completion.

END OF SECTION 122113

SECTION 122413 - ROLLER WINDOW SHADES

PART 1 - GENERAL

1.1 RELATED DOCUMENTS

A. Drawings and general provisions of the Contract, including General and Supplementary Conditions and Division 01 Specification Sections, apply to this Section.

1.2 SUMMARY

A. Section Includes:

1. Manually operated roller shades with single rollers.

B. Related Requirements:

1. Section 061053 "Miscellaneous Rough Carpentry" for wood blocking and grounds for mounting roller shades and accessories.

1.3 ACTION SUBMITTALS

A. Product Data: For each type of product.

1. Include construction details, material descriptions, dimensions of individual components and profiles, features, finishes, and operating instructions for roller shades.

B. Shop Drawings: Show fabrication and installation details for roller shades, including shadeband materials, their orientation to rollers, and their seam and batten locations.

1. Motor-Operated Shades: Include details of installation and diagrams for power, signal, and control wiring.

C. Samples: For each exposed product and for each color and texture specified, 10 inches long.

D. Product Schedule: For roller shades.

1.4 INFORMATIONAL SUBMITTALS

A. Qualification Data: For Installer.

B. Product Certificates: For each type of shadeband material.

C. Product Test Reports: For each type of shadeband material, for tests performed by manufacturer and witnessed by a qualified testing agency or a qualified testing agency.

1.5 CLOSEOUT SUBMITTALS

A. Operation and Maintenance Data: For roller shades to include in maintenance manuals.

1.6 MAINTENANCE MATERIAL SUBMITTALS

A. Furnish extra materials that match products installed and that are packaged with protective covering for storage and identified with labels describing contents.

1. Roller Shades: Full-size units equal to 5 percent of quantity installed for each size, color, and shadeband material indicated, but no fewer than two units.

1.7 QUALITY ASSURANCE

A. Installer Qualifications: Fabricator of products.

B. Mockups: Build mockups to verify selections made under Sample submittals, to demonstrate aesthetic effects, and to set quality standards for fabrication and installation.

1. Approval of mockups does not constitute approval of deviations from the Contract Documents contained in mockups unless Architect specifically approves such deviations in writing.
2. Subject to compliance with requirements, approved mockups may become part of the completed Work if undisturbed at time of Substantial Completion.

1.8 DELIVERY, STORAGE, AND HANDLING

A. Deliver roller shades in factory packages, marked with manufacturer, product name, and location of installation using same designations indicated on Drawings.

1.9 FIELD CONDITIONS

A. Environmental Limitations: Do not install roller shades until construction and finish work in spaces, including painting, is complete and dry and ambient temperature and humidity conditions are maintained at the levels indicated for Project when occupied for its intended use.

B. Field Measurements: Where roller shades are indicated to fit to other construction, verify dimensions of other construction by field measurements before fabrication and indicate measurements on Shop Drawings. Allow clearances for operating hardware of operable glazed units through entire operating range. Notify Architect of installation conditions that vary from Drawings. Coordinate fabrication schedule with construction progress to avoid delaying the Work.

PART 2 - PRODUCTS

2.1 MANUFACTURERS

A. Source Limitations: Obtain roller shades from single source from single manufacturer.

2.2 MANUALLY OPERATED SHADES WITH SINGLE ROLLERS

A. Basis-of-Design Product: Subject to compliance with requirements, provide products by MechoShade Systems, Inc., or a comparable product by one of the following:

1. Draper Inc.
2. Hunter Douglas Contract.
3. Lutron Electronics Co., Inc.

B. Chain-and-Clutch Operating Mechanisms: With continuous-loop bead chain and clutch that stops shade movement when bead chain is released; permanently adjusted and lubricated.

1. Bead Chains: Stainless steel.

a. Loop Length: Full length of roller shade.
b. Limit Stops: Provide upper and lower ball stops.
c. Chain-Retainer Type: Chain tensioner, jamb mounted.

2. Spring Lift-Assist Mechanisms: Manufacturer's standard for balancing roller shade weight and for lifting heavy roller shades.

a. Provide for shadebands that weigh more than 10 lb or for shades as recommended by manufacturer, whichever criterion is more stringent.

C. Rollers: Corrosion-resistant steel or extruded-aluminum tubes of diameters and wall thicknesses required to accommodate operating mechanisms and weights and widths of shadebands indicated without deflection. Provide with permanently lubricated drive-end assemblies and idle-end assemblies designed to facilitate removal of shadebands for service.

1. Roller Drive-End Location: As selected by the Architect.
2. Direction of Shadeband Roll: Regular, from back (exterior face) of roller.
3. Shadeband-to-Roller Attachment: Manufacturer's standard method.

D. Mounting Hardware: Brackets or endcaps, corrosion resistant and compatible with roller assembly, operating mechanism, installation accessories, and mounting location and conditions indicated.

E. Roller-Coupling Assemblies: Coordinated with operating mechanism and designed to join up to three inline rollers into a multiband shade that is operated by one roller drive-end assembly.

F. Shadebands:

1. Shadeband Material: Light-filtering fabric.
2. Shadeband Bottom (Hem) Bar: Steel or extruded aluminum.

    a. Type: Enclosed in sealed pocket of shadeband material.

G. Installation Accessories:

1. Front Fascia: Aluminum extrusion that conceals front and underside of roller and operating mechanism and attaches to roller endcaps without exposed fasteners.

    a. Shape: As selected by the Architect.
    b. Height: Manufacturer's standard height required to conceal roller and shadeband assembly when shade is fully open, but not less than 4 inches.

2. Exposed Headbox: Rectangular, extruded-aluminum enclosure including front fascia, top and back covers, endcaps, and removable bottom closure.

    a. Height: Manufacturer's standard height required to enclose roller and shadeband assembly when shade is fully open, but not less than 4 inches.

3. Endcap Covers: To cover exposed endcaps.
4. Installation Accessories Color and Finish: As selected from manufacturer's full range.

2.3 SHADEBAND MATERIALS

A. Shadeband Material Flame-Resistance Rating: Comply with NFPA 701. Testing by a qualified testing agency. Identify products with appropriate markings of applicable testing agency.

B. Light-Filtering Fabric: Woven fabric, stain and fade resistant.

1. Source: Roller shade manufacturer.
2. Type: As selected by the Architect.
3. Weave: Mesh.
4. Thickness: As selected by the Architect.
5. Weight: As selected by the Architect.
6. Roll Width: As selected by the Architect.
7. Orientation on Shadeband: Up the bolt.
8. Openness Factor: As selected by the Architect.
9. Color: As selected by Architect from manufacturer's full range.

2.4 ROLLER SHADE FABRICATION

A. Product Safety Standard: Fabricate roller shades to comply with WCMA A 100.1, including requirements for flexible, chain-loop devices; lead content of components; and warning labels.

B. Unit Sizes: Fabricate units in sizes to fill window and other openings as follows, measured at 74 deg F:

1. Between (Inside) Jamb Installation: Width equal to jamb-to-jamb dimension of opening in which shade is installed less 1/4 inch per side or 1/2-inch total, plus or minus 1/8 inch. Length equal to head-to-sill or -floor dimension of opening in which shade is installed less 1/4 inch, plus or minus 1/8 inch.

C. Shadeband Fabrication: Fabricate shadebands without battens or seams to extent possible, except as follows:

1. Vertical Shades: Where width-to-length ratio of shadeband is equal to or greater than 1:4, provide battens and seams at uniform spacings along shadeband length to ensure shadeband tracking and alignment through its full range of movement without distortion of the material.

PART 3 - EXECUTION

3.1 EXAMINATION

A. Examine substrates, areas, and conditions, with Installer present, for compliance with requirements for installation tolerances, operational clearances, and other conditions affecting performance of the Work.

B. Proceed with installation only after unsatisfactory conditions have been corrected.

3.2 ROLLER SHADE INSTALLATION

A. Install roller shades level, plumb, and aligned with adjacent units according to manufacturer's written instructions.

1. Opaque Shadebands: Located so shadeband is not closer than 2 inches to interior face of glass. Allow clearances for window operation hardware.

B. Electrical Connections: Connect motor-operated roller shades to building electrical system.

C. Roller Shade Locations: At exterior windows as directed by the Architect.

3.3 ADJUSTING

A. Adjust and balance roller shades to operate smoothly, easily, safely, and free from binding or malfunction throughout entire operational range.

3.4 CLEANING AND PROTECTION

A. Clean roller shade surfaces, after installation, according to manufacturer's written instructions.

B. Provide final protection and maintain conditions, in a manner acceptable to manufacturer and Installer, that ensure that roller shades are without damage or deterioration at time of Substantial Completion.

C. Replace damaged roller shades that cannot be repaired, in a manner approved by Architect, before time of Substantial Completion.

END OF SECTION 122413

SECTION 123623.13 - PLASTIC-LAMINATE-CLAD COUNTERTOPS

PART 1 - GENERAL

1.1 RELATED DOCUMENTS

A. Drawings and general provisions of the Contract, including General and Supplementary Conditions and Division 01 Specification Sections, apply to this Section.

1.2 SUMMARY

A. Section includes plastic-laminate countertops.

1.3 ACTION SUBMITTALS

A. Product Data: For each type of product, including panel products, high-pressure decorative laminate, and adhesive for bonding plastic laminate.

1. Include data for fire-retardant treatment from chemical-treatment manufacturer and certification by treating plant that treated materials comply with requirements.

B. Shop Drawings: Show location of each item, dimensioned plans and elevations, large-scale details, attachment devices, and other components.

1. Show locations and sizes of cutouts and holes for plumbing fixtures, faucets, soap dispensers, electrical switches and outlets, and other items installed in plastic-laminate countertops.

C. Samples for Initial Selection:

1. Plastic laminates.

1.4 INFORMATIONAL SUBMITTALS

A. Qualification Data: For Installer and fabricator.

B. Product Certificates: For the following:

1. Composite wood and agrifiber products.
2. High-pressure decorative laminate.
3. Adhesives.

C. Evaluation Reports: For fire-retardant-treated materials, from ICC-ES.

1.5 QUALITY ASSURANCE

A. Fabricator Qualifications: Shop that employs skilled workers who custom fabricate products similar to those required for this Project and whose products have a record of successful in-service performance. Shop is a certified participant in AWI's Quality Certification Program.

B. Installer Qualifications: Fabricator of products or certified participant in AWI's Quality Certification Program.

C. Testing Agency Qualifications: For testing agency providing classification marking for fire-retardant-treated material, an inspection agency acceptable to authorities having jurisdiction that periodically performs inspections to verify that the material bearing the classification marking is representative of the material tested.

1.6 DELIVERY, STORAGE, AND HANDLING

A. Do not deliver countertops until painting and similar operations that could damage countertops have been completed in installation areas. If countertops must be stored in other than installation areas, store only in areas where environmental conditions comply with requirements specified in "Field Conditions" Article.

1.7 FIELD CONDITIONS

A. Environmental Limitations: Do not deliver or install countertops until building is enclosed, wet work is complete, and HVAC system is operating and maintaining temperature and relative humidity at occupancy levels during the remainder of the construction period.

B. Field Measurements: Where countertops are indicated to fit to other construction, verify dimensions of other construction by field measurements before fabrication, and indicate measurements on Shop Drawings. Coordinate fabrication schedule with construction progress to avoid delaying the Work.

C. Established Dimensions: Where countertops are indicated to fit to other construction, establish dimensions for areas where countertops are to fit. Provide allowance for trimming at site, and coordinate construction to ensure that actual dimensions correspond to established dimensions.

PART 2 - PRODUCTS

2.1 PLASTIC-LAMINATE COUNTERTOPS

A. Quality Standard: Unless otherwise indicated, comply with the "Architectural Woodwork Standards" for grades indicated for construction, installation, and other requirements.

B. Grade: Premium.

C. High-Pressure Decorative Laminate: NEMA LD 3, Grade HGS.

1. Basis-of-Design: Subject to compliance with requirements, provide product indicated on the Finish Schedule, or a comparable product as approved by the Architect.

a. Colors, Patterns, and Finishes: As indicated on the Finish Schedule.

D. Edge Treatment: Same as laminate cladding on horizontal surfaces.

E. Core Material at Sinks: Exterior-grade plywood.

F. Core Thickness: 3/4 inch.

1. Build up countertop thickness to 1-1/2 inches at front, back, and ends with additional layers of core material laminated to top.

2.2 WOOD MATERIALS

A. Wood Products: Provide materials that comply with requirements of referenced quality standard unless otherwise indicated.

1. Wood Moisture Content: 8 to 13 percent.

B. Composite Wood and Agrifiber Products: Provide materials that comply with requirements of referenced quality standard for each type of woodwork and quality grade specified unless otherwise indicated.

1. Medium-Density Fiberboard: ANSI A208.2, Grade 130 .
2. Particleboard: ANSI A208.1, Grade M-2-Exterior Glue.
3. Softwood Plywood: DOC PS 1.

2.3 MISCELLANEOUS MATERIALS

A. Adhesive for Bonding Plastic Laminate: Contact cement, unless otherwise recommended by fabricator.

1. Adhesive for Bonding Edges: Hot-melt adhesive or adhesive specified above for faces.

2.4 FABRICATION

A. Sand fire-retardant-treated wood lightly to remove raised grain on exposed surfaces before fabrication.

B. Fabricate countertops to dimensions, profiles, and details indicated. Provide front and end overhang of 1 inch over base cabinets. Ease edges to radius indicated for the following:

C. Complete fabrication, including assembly, to maximum extent possible before shipment to Project site. Disassemble components only as necessary for shipment and installation. Where necessary for fitting at site, provide ample allowance for scribing, trimming, and fitting.

PART 3 - EXECUTION

3.1 PREPARATION

A. Before installation, condition countertops to average prevailing humidity conditions in installation areas.

B. Before installing countertops, examine shop-fabricated work for completion and complete work as required, including removal of packing and backpriming.

3.2 INSTALLATION

A. Grade: Install countertops to comply with same grade as item to be installed.

B. Assemble countertops and complete fabrication at Project site to the extent that it was not completed in the shop.

1. Provide cutouts for appliances, plumbing fixtures, electrical work, and similar items.
2. Seal edges of cutouts by saturating with varnish.

C. Field Jointing: Where possible, make in the same manner as shop jointing, using dowels, splines, adhesives, and fasteners recommended by manufacturer. Prepare edges to be joined in shop so Project-site processing of top and edge surfaces is not required. Locate field joints where shown on Shop Drawings.

1. Secure field joints in plastic-laminate countertops with concealed clamping devices located within 6 inches of front and back edges and at intervals not exceeding 24 inches. Tighten according to manufacturer's written instructions to exert a constant, heavy-clamping pressure at joints.

D. Install countertops level, plumb, true, and straight. Shim as required with concealed shims. Install level and plumb to a tolerance of 1/8 inch in 96 inches.

E. Scribe and cut countertops to fit adjoining work, refinish cut surfaces, and repair damaged finish at cuts.

F. Countertops: Anchor securely by screwing through corner blocks of base cabinets or other supports into underside of countertop.

1. Install countertops with no more than 1/8 inch in 96-inch sag, bow, or other variation from a straight line.
2. Secure backsplashes to walls with adhesive.

3. Seal junctures of tops, splashes, and walls with mildew-resistant silicone sealant or another permanently elastic sealing compound recommended by countertop material manufacturer.

3.3 ADJUSTING AND CLEANING

A. Repair damaged and defective countertops, where possible, to eliminate functional and visual defects; where not possible to repair, replace woodwork. Adjust joinery for uniform appearance.

B. Clean countertops on exposed and semiexposed surfaces. Touch up shop-applied finishes to restore damaged or soiled areas.

END OF SECTION 123623.13

SECTION 123661.19 - QUARTZ AGGLOMERATE COUNTERTOPS

PART 1 - GENERAL

1.1 RELATED DOCUMENTS

A. Drawings and general provisions of the Contract, including General and Supplementary Conditions and Division 01 Specification Sections, apply to this Section.

1.2 SUMMARY

A. Section Includes:

1. Quartz agglomerate countertops.
2. Quartz agglomerate backsplashes.
3. Quartz agglomerate end splashes.

1.3 ACTION SUBMITTALS

A. Product Data: For countertop materials.

B. Shop Drawings: For countertops. Show materials, finishes, edge and backsplash profiles, methods of joining, and cutouts for plumbing fixtures.

1. Show locations and details of joints.
2. Show direction of directional pattern, if any.

C. Samples for Initial Selection: For each type of material exposed to view.

1.4 INFORMATIONAL SUBMITTALS

A. Qualification Data: For fabricator.

1.5 CLOSEOUT SUBMITTALS

A. Maintenance Data: For quartz agglomerate countertops to include in maintenance manuals. Include Product Data for care products used or recommended by Installer and names, addresses, and telephone numbers of local sources for products.

1.6 QUALITY ASSURANCE

A. Fabricator Qualifications: Shop that employs skilled workers who custom-fabricate countertops similar to that required for this Project, and whose products have a record of successful in-service performance.

B. Installer Qualifications: Fabricator of countertops.

C. Mockups: Build mockups to demonstrate aesthetic effects and to set quality standards for fabrication and execution.

1. Build mockup of typical countertop.
2. Subject to compliance with requirements, approved mockups may become part of the completed Work if undisturbed at time of Substantial Completion.

1.7 FIELD CONDITIONS

A. Field Measurements: Verify dimensions of countertops by field measurements after base cabinets are installed but before countertop fabrication is complete.

1.8 COORDINATION

A. Coordinate locations of utilities that will penetrate countertops or backsplashes.

PART 2 - PRODUCTS

2.1 QUARTZ AGGLOMERATE COUNTERTOP MATERIALS

A. Quartz Agglomerate: Solid sheets consisting of quartz aggregates bound together with a matrix of filled plastic resin and complying with ICPA SS-1, except for composition.

1. Basis-of-Design: Subject to compliance with requirements, provide product indicated on the Finish Schedule, or a comparable product as approved by the Architect:

a. Colors and Patterns: As indicated on the Finish Schedule.

B. Plywood: Exterior softwood plywood complying with DOC PS 1, Grade C-C Plugged, touch sanded.

2.2 COUNTERTOP FABRICATION

A. Fabricate countertops according to quartz agglomerate manufacturer's written instructions and the AWI/AWMAC/WI's "Architectural Woodwork Standards."

1. Grade: Premium.

B. Configuration:

1. Front: Straight, slightly eased at top.
2. Backsplash: Straight, slightly eased at corner.
3. End Splash: Matching backsplash.

C. Countertops:

1. Unless otherwise indicated, provide 1/2-inch- thick, quartz agglomerate with front edge built up with same material.
2. Where indicated, provide 3/4-inch-thick, quartz agglomerate with front edge built up with same material.

D. Backsplashes: 1/2-inch- thick, quartz agglomerate.

E. Fabricate tops with shop-applied edges and backsplashes unless otherwise indicated. Comply with quartz agglomerate manufacturer's written instructions for adhesives, sealers, fabrication, and finishing.

1. Fabricate with loose backsplashes for field assembly.

F. Joints: Fabricate countertops without joints.

G. Cutouts and Holes:

1. Undercounter Plumbing Fixtures: Make cutouts for fixtures in shop using template or pattern furnished by fixture manufacturer. Form cutouts to smooth, even curves.

    a. Provide vertical edges, slightly eased at juncture of cutout edges with top and bottom surfaces of countertop and projecting 3/16 inch into fixture opening.

2. Counter-Mounted Plumbing Fixtures: Prepare countertops in shop for field cutting openings for counter-mounted fixtures. Mark tops for cutouts and drill holes at corners of cutout locations. Make corner holes of largest radius practical.
3. Fittings: Drill countertops in shop for plumbing fittings, undercounter soap dispensers, and similar items.

2.3 INSTALLATION MATERIALS

A. Adhesive: Product recommended by quartz agglomerate manufacturer.

B. Sealant for Countertops: Comply with applicable requirements in Section 079200 "Joint Sealants."

PART 3 - EXECUTION

3.1 EXAMINATION

A. Examine substrates to receive quartz agglomerate countertops and conditions under which countertops will be installed, with Installer present, for compliance with requirements for installation tolerances and other conditions affecting performance of countertops.

B. Proceed with installation only after unsatisfactory conditions have been corrected.

3.2 INSTALLATION

A. Install countertops level to a tolerance of 1/8 inch in 8 feet, 1/4 inch maximum. Do not exceed 1/64-inch difference between planes of adjacent units.

B. Fasten subtops to cabinets by screwing through subtops into cornerblocks of base cabinets. Shim as needed to align subtops in a level plane.

C. Secure countertops to subtops with adhesive according to quartz agglomerate manufacturer's written instructions. Align adjacent surfaces and, using adhesive in color to match countertop, form seams to comply with quartz agglomerate manufacturer's written instructions. Carefully dress joints smooth, remove surface scratches, and clean entire surface.

D. Install backsplashes and end splashes by adhering to wall and countertops with adhesive. Mask areas of countertops and splashes adjacent to joints to prevent adhesive smears.

E. Complete cutouts not finished in shop. Mask areas of countertops adjacent to cutouts to prevent damage while cutting. Make cutouts to accurately fit items to be installed, and at right angles to finished surfaces unless beveling is required for clearance. Ease edges slightly to prevent snipping.

1. Seal edges of cutouts in particleboard subtops by saturating with varnish.

F. Apply sealant to gaps at walls; comply with Section 079200 "Joint Sealants."

END OF SECTION 123661.19

SECTION 124813 - ENTRANCE FLOOR MATS AND FRAMES

PART 1 - GENERAL

1.1 RELATED DOCUMENTS

A. Drawings and general provisions of the Contract, including General and Supplementary Conditions and Division 01 Specification Sections, apply to this Section.

1.2 SUMMARY

A. Section Includes:

1. Roll-up rail mats.
2. Recessed frames.

1.3 COORDINATION

A. Coordinate size and location of recesses in concrete to receive floor mats and frames.

1.4 ACTION SUBMITTALS

A. Product Data: For each type of product.

1. Include construction details, material descriptions, dimensions of individual components and profiles, and finishes for floor mats and frames.

B. Shop Drawings:

1. Items penetrating floor mats and frames, including door control devices.
2. Divisions between mat sections.
3. Perimeter floor frames.

C. Samples: For the following products, in manufacturer's standard sizes:

1. Tread Rail: Sample of each type and color.
2. Frame Members: Sample of each type and color.

1.5 CLOSEOUT SUBMITTALS

A. Maintenance Data: For floor mats to include in maintenance manuals.

1.6 MAINTENANCE MATERIAL SUBMITTALS

A. Furnish extra materials that match products installed and that are packaged with protective covering for storage and identified with labels describing contents.

1. Resilient-Tile Entrance Mats: Full-size tile units equal to 2 percent of amount installed, but no fewer than 10 units.

PART 2 - PRODUCTS

2.1 ENTRANCE FLOOR MATS AND FRAMES, GENERAL

A. Structural Performance: Provide roll-up rail mats and frames capable of withstanding the following loads and stresses within limits and under conditions indicated:

1. Uniform floor load of 300 lbf/sq. ft.
2. Wheel load of 350 lb per wheel.

B. Accessibility Standard: Comply with applicable provisions in the DOJ's "2010 ADA Standards for Accessible Design" and ICC A117.1.

2.2 ROLL-UP RAIL MATS

A. Basis-of-Design: Subject to compliance with requirements, provide product indicated on the Finish Schedule, or a comparable product as approved by the Architect.

B. Roll-up, Aluminum-Rail Hinged Mats: Extruded-aluminum tread rails 2 inches wide by 3/8 inch thick, sitting on continuous vinyl cushions.

1. Tread Inserts: As indicated on the Finish Schedule.
2. Colors, Textures, and Patterns of Inserts: As indicated on the Finish Schedule.
3. Rail Color: Clear anodic, unless otherwise selected by the Architect.
4. Hinges: Aluminum.
5. Mat Size: As indicated.

2.3 FRAMES

A. Recessed Frames: Manufacturer's standard extrusion.

1. Extruded Aluminum: ASTM B 221, Alloy 6061-T6 or Alloy 6063-T5, T6, or T52.

a. Color: Clear anodic, unless otherwise selected by the Architect.

2.4 CONCRETE FILL AND GROUT MATERIALS

A. Provide concrete fill and grout equivalent in strength to cast-in-place concrete slabs for recessed mats and frames. Use aggregate no larger than one-third fill thickness.

2.5 FABRICATION

A. Floor Mats: Shop fabricate units to greatest extent possible in sizes indicated. Unless otherwise indicated, provide single unit for each mat installation; do not exceed manufacturer's recommended maximum sizes for units that are removed for maintenance and cleaning. Where joints in mats are necessary, space symmetrically and away from normal traffic lanes. Miter corner joints in framing elements with hairline joints or provide prefabricated corner units without joints.

B. Recessed Frames: As indicated, for permanent recessed installation, complete with corner pins or reinforcement and anchorage devices.

1. Fabricate edge-frame members in single lengths or, where frame dimensions exceed maximum available lengths, provide minimum number of pieces possible, with hairline joints equally spaced and pieces spliced together by straight connecting pins.

C. Coat concealed surfaces of aluminum frames that contact cementitious material with manufacturer's standard protective coating.

2.6 ALUMINUM FINISHES

A. Clear Anodic Finish: AAMA 611, AA-M12C22A41, Class I, 0.018 mm or thicker.

PART 3 - EXECUTION

3.1 EXAMINATION

A. Examine substrates and floor conditions for compliance with requirements for location, sizes, minimum recess depth, and other conditions affecting installation of floor mats and frames.

B. Proceed with installation only after unsatisfactory conditions have been corrected.

3.2 INSTALLATION

A. Install recessed mat frames and mats to comply with manufacturer's written instructions so that tops of mats will be flush with adjoining finished flooring. Set mats with tops at height recommended by manufacturer for most effective cleaning action; coordinate tops of mat surfaces with bottoms of doors that swing across mats to provide clearance between door and mat.

1. For installation in terrazzo flooring areas, allow for grinding and polishing of terrazzo without grinding surface of recessed frames. Coordinate with other trades as required.
2. Install necessary shims, spacers, and anchorages for proper location, and secure attachment of frames.
3. Install grout and fill around frames and, if required to set mat tops at proper elevations, in recesses under mats. Finish grout and fill smooth and level.
4. Delay setting mats until construction traffic has ended.

3.3 PROTECTION

A. After completing frame installation and concrete work, provide temporary filler of plywood or fiberboard in recesses and cover frames with plywood protective flooring. Maintain protection until construction traffic has ended and Project is near Substantial Completion.

END OF SECTION 124813

SECTION 131200 - FOUNTAINS

PART 1 - GENERAL

1.1 SUMMARY

1. Work included - Provide and install fountain equipment mechanical and electrical package in accordance with the Contract Documents. Furnish all labor, materials, apparatus, tools, equipment, transportation, temporary construction, and special or occasional services as required to make a complete working fountain installation, as shown on the drawings or described in these specifications. The work of this Section shall include, but not be limited to the following:

    a) Fountain Display System including pumps, valves, and specialties (nozzles, pool fittings, etc.) as hereinafter described, listed and shown on the drawings.

    b) Fountain Electrical Control System including control panel, water level and PLC controller, time switches, relays, motor starters, grounding system, PLC if required, and other circuits and accessories as required, U.L. 508 Listed.

    c) Fountain Submersible Lighting System accessories and controls.

    d) Filtration and Water Treatment System, media, accessories, and controls.

    e) Drain, water makeup and overflow equipment, and controls.

    f) All special tools for proper operation and maintenance of equipment provided under this section.

1.2 REFERENCE STANDARDS

1. This installation shall comply with all applicable and the most stringent provisions of the latest edition of the following codes.

    a) BOCA - National Building Code

    b) UPC - Uniform Plumbing Code

    c) NE C- National Electrical Code

2. Materials furnished hereunder shall, where applicable, comply with the latest edition of applicable standard specifications published by the following organizations:

    a) ASTM - American Society for Testing and Material

    b) ANSI - American National Standards Institute

    c) IEEE - Institute of Electrical & Electrical Eng.

    d) IPCEA - Insulated Power Cable Engineers Assoc.

    e) NEMA - National Electrical Manufacturers Assoc.

    f) ASME - American Society of Mechanical Engineer

    g) UL - Underwriters Laboratories, Inc.

    h) ETL – Intertek Listed (Certified To World Recognized UL Standards)

i) NSF - National Sanitation Foundation

j) ASSE - American Society of Sanitary Engineers

k) AWWA - American Water Works Association

l) CS - Commercial Standards

1.3 QUALITY ASSURANCE

1. All workmanship and materials shall conform and comply with the requirements of building ordinances, codes, rules and regulations of all departments of Federal, State, county, and city having lawful jurisdiction over the work in this section.
2. When these specifications and/or drawings call for or describe materials, workmanship, or construction of a better quality, higher standard, or larger size than is required by the above mentioned rules and regulations, the provisions of these specifications and/or drawings shall take precedence over the requirements of said rules and regulations.
3. The Contractor shall furnish, without extra charge, any additional material and/or labor required for compliance with these rules and regulations although not mentioned in these specifications or indicated on the drawings.
4. All materials shall be new and shall conform with applicable standards in every case where such standards have been established for the particular material in question.
5. All work shall be executed by workmen skilled in the craft to which they are assigned.
6. Adequate supervision shall be provided to maintain high quality workmanship.
7. The Roman Fountains name and catalog numbers are used to establish a high standard of quality and utility for the specified items and to provide a dimensional reference for installation plans that are drawn to scale.
    a) Roman Fountains Corporation
    b) 9875 Medlock Bridge Pkwy, Suite 250
    c) Johns Creek, Georgia 30022 U.S.A.
    d) Phone: (770) 300-0041 FAX: (770) 300-0074
    e) Contact: Tom Hanson
    f) E-mail: tomh@romanfountains.com
    g) www.romanfountains.com
8. Any proposal for substitution of materials or equipment shall be submitted 10 calendar days prior to the final bid date; otherwise, no substitutions will be permitted. Submittal for equivalent items shall, where applicable, include the following data which are not necessarily required for specified items:
9. Performance Characteristics and hydraulic and electrical load data.
10. Materials of construction, fabrication, and manufacture.
11. Certification of Conformance with specific codes, standards, and specifications.
12. Submittal of substituted equipment may be rejected if the component alters the design in a manner that affects other trades or if it impairs accessibility or critical clearances.

13. No substitutions shall be made unless authorized in writing by the Architect/Engineer. Should a substitution be accepted, and should the substitute material prove defective or otherwise unsatisfactory for the service intended within the guarantee period, the Contractor shall replace this material or equipment with material or equipment specified, at its own expense, and to the satisfaction of the Architect/Engineer/Owner.
14. Contractors submitting bids on substitute materials and equipment must also submit a bid on the "as specified" materials and equipment.
15. Contractors submitting bids on substitute materials and equipment must also provide a written performance guarantee certifying that the substitute materials and equipment will produce the specified water effects.

1.4 MATERIAL SUPPLIER'S RESPONSIBILITY

1. Design Responsibility: The Equipment Supplier shall accept complete design responsibility for the hydraulic and electrical system, provided that all equipment required for the fountain installation is procured from the specified equipment Manufacturer as itemized in its proposals and materials list on the final, approved installation drawings.
2. The Contractor shall be responsible for installation of all equipment required for the fountain installation in accordance with fountain supplier's drawings and instructions.
3. Performance Guarantee: The Equipment Supplier shall guarantee the fountain to perform to the designed water heights and spray patterns, provided that installation of the equipment is in strict accordance with the supplier's recommendations, instructions, details, and approved drawings.
4. Warranty: All materials and component parts, excluding lamps, supplied by the Manufacturer, shall be guaranteed to be free from defects of materials and/or workmanship for a period of one year from date of substantial completion or 18 months from shipment, whichever comes first. (Complete warranty form available from material supplier on request.)

1.5 SUBMITTALS AND DRAWINGS

1. The Contractor shall submit complete shop drawings to the Architect for approval, in quantities required for proper distribution and in accordance with the requirements of the General Conditions.
2. Shop drawings shall include or incorporate those final drawings furnished by the Equipment Supplier, as specified herein, together with all additional information and drawings required to show the proper installation of fountain equipment. "Preliminary" or "schematic" drawings provided by the Equipment Supplier shall not be used for installation purposes.
3. The Contractor shall deliver drawings for approval, after the signing of the contract, so as not to delay the construction required under other sections.
4. Submittals shall include the following:
5. Materials list for all materials and equipment furnished.
6. Shop drawings and product data for all materials and equipment furnished.
7. Shop drawing of the equipment space layout showing all mechanical and electrical equipment in addition to all piping and conduit. Include pipe elevations and dimensions between pipe centerlines where relevant. Provide layout drawings of all pipe runs and pool fitting locations.

8. Shop drawings shall include outline dimensions, operating and maintenance clearances required, and sufficient technical data to indicate compliance with the Specification.
9. Shop drawings may not include details reproduced from the Contract Documents except when submitting "as specified" materials and equipment.
10. Submittals may be rejected if they are difficult to read due to insufficient scale, poor image quality, or poor drafting quality; or if the required information is not included.
11. Work shall not proceed until submittals have been approved by the Architect.
12. The Contractor shall provide labeled equipment certifying approval, as hereinafter specified, by Underwriters Laboratories (UL) whenever available.

1.6 COORDINATION

1. The Contractor shall coordinate the work with all trades and appropriate sections of the construction specifications as necessary to ensure proper provisions for the work of this section.
2. The Contractor shall be responsible for the protection of the Owner's property from injury or loss due to its work. All damage to existing property (building, utilities, pavement, etc.) or planting (trees, shrubs, lawn or ground cover) caused by the Contractor during its operation or as a result of malfunction of installed work during the guarantee period shall be repaired at the Contractors expense.
3. The Contractor shall fully inform itself regarding any available space limitations and unusual requirements, for the installation of all materials and work furnished under this section. Although the location of equipment may be shown on the drawings in certain positions, the Contractor shall also be guided by the Architectural details and conditions at the job, correlating its work with that of the other sections and other trades, with discrepancies and interferences being brought to the attention of the Architect for resolution prior to proceeding with the work.

1.7 PERMITS AND FEES

1. Permits: The Contractor shall secure and pay for all permits, inspections, and certificates of inspection of any governmental and inspection body having jurisdiction over all or any part of the work included under this section and/or such inspections etc., required by these specifications.
2. Fees: The Contractor shall secure and pay for all fees and assessments in connection with the work under this contract and shall include this cost in its bid and contract price.

1.8 CONTRACTOR GUARANTEE AND EQUIPMENT WARRANTY

1. In entering into a contract covering this work, the Contractor accepts the specifications and drawings and guarantees that the work will be performed in accordance with the requirements of the specifications and drawings, as may be made in the contract documents.
2. The Contractor further guarantees that the workmanship and material will be of the best quality procurable and that only experienced workers, familiar with each particular class of work, will be employed.
3. The Contractor further agrees to hold itself responsible for any defects which may develop in any part of the entire system, including equipment as provided for under this specification, due to faulty workmanship, design or material and to replace and make good, without cost to the Owner, any such faulty parts or construction which may develop at any time within one (1) year from the

date of the final acceptance. Any repairs or replacements required because of defects, as outlined in this clause, are to be made promptly and approved in writing by the Architect.

4. Contractor shall warrant all material found defective within one (1) year of final acceptance and shall be replaced at no cost to the Owner including labor to remove and re-install any defective materials.
5. The warranty shall not extend to damage incurred through incorrect or improper operation and maintenance by the Owner. The Owner shall assume full responsibility for proper operation and maintenance upon final acceptance of installation from Contractor.
6. In the case of Manufacturer's guarantees being limited, or expiring within the specified guarantee period, the Contractor shall be responsible for purchasing and providing service contracts and additional warranty coverages to extend through the warranty period as may be required by Owner.

1.9 MAINTENANCE MANUAL

1. The Equipment Supplier shall deliver to the Owner three (3) copies of the Operations and Maintenance Manual, together with any additional information or manuals which would assist in the proper operation and maintenance of equipment.
2. The Contractor shall, at its expense, arrange and provide for the technical instruction of the Owner's maintenance personnel, by the Equipment Supplier's personnel, for such time as is reasonably required to acquaint them with the operation and maintenance of all equipment furnished and installed under this section.

PART 2 – PRODUCTS

2.1 GENERAL

1. Prime Contractor shall be responsible for purchasing all specialized fountain mechanical and electrical materials and tools for the fountain and shall then furnish electrical fountain components to the electrical contractor for installation and connection.
2. Materials not listed within these specifications or on drawings as furnished by the Equipment Supplier, but required for the complete installation of the fountain mechanical and/or electrical systems, shall be furnished by the Contractor.
3. Materials shown on the drawings, but not specified herein, shall be provided in accordance with information shown on the drawings and the general provisions of this part of the specification.
4. Substitutions in the list of equipment included in this section may be made by the Equipment Supplier only if the equipment is of better quality and more effective than that listed, improves system design and performance or delivery times, and only if the changes are thoroughly documented and approved in writing by the Architect.

2.2 SPECIALIZED FOUNTAIN MATERIAL MANUFACTURER/SUPPLIER

1. Approved Manufacturer - Subject to compliance with requirements, the following is the approved Manufacturer/Supplier for specialized fountain system equipment listed in this specification.

Roman Fountains Corporation, Johns Creek, GA, USA
Ph. (770) 300-0041 Fax # (770) 300-0074
www.romanfountains.com

2. All fountain equipment specified and supplied to the Contractor shall be supplied by a single fountain Equipment Supplier/Manufacturer.
3. The Equipment Supplier must currently be in the business of supplying fountain equipment for a minimum of twenty (20) years and shall have previously supplied fountain system design, drawing and equipment, similar in size and complexity to the specified project.
4. The specified supplier shall have minimum assets of $750,000. and be able to furnish "CPA" verification of asset strength at the request of the Project Architect.

2.3 MATERIAL MANUFACTURER/SUPPLIER'S RESPONSIBILITY

1. Warranty: All materials and component parts, excluding lamps supplied by the Equipment Supplier, shall be guaranteed to be free from defects of materials and/or workmanship for a period of one (1) year from date of official start-up or 18 months, whichever is sooner.
2. Design Responsibility: The Equipment Supplier shall accept complete design responsibility for the hydraulic and electrical system, provided that all equipment is supplied by it as indicated. This does not include responsibility for the actual installation of the equipment except where the equipment is installed by the Equipment Supplier.
3. Performance Guarantee: The Equipment Supplier shall provide a written performance guarantee certifying that the fountain system will perform to the designed water heights and patterns and will create the designed water heights and patterns, and will create the designed lighting effects, providing the equipment is supplied by a single Equipment Supplier and the installation is in accordance with the Supplier's recommendations and drawings.

2.4 FOUNTAIN COMPONENTS

Item #	Qty.	Component #	Description
1	11	RCN-125	Cascade Nozzle; cast bronze construction with 1-1/4” (F) N.P.T. connection.
2	11	RWS-150-S	Slab Penetration, cast bronze with integral waterstop flange, brass bonding lug and 1-1/2” (F) N.P.T. connections.
3	11	RBB-125-T	Threaded Brass Ball Valve; Cast bronze machined body, brass full port ball, silicone bronze stem, Teflon seat, stainless steel handle nut, vinyl covered stainless steel handle, 400 PSI maximum operating pressure at 150 degrees Fahrenheit, and 1-1/4" (F) N.P.T. threaded end connections.
4	2	RAVS-1600	16” Square Anti-Vortex Plate & Sump Assembly; Heavy duty FRP sump with integral waterstop flange, 4” side, and 3” bottom, and 2” ‘vacuum break’ (socket) connections (the 3” interior connection shall be provided with a 3” threaded male plug). Solid brass 3/16” thick anti-vortex plate with brass spacers and “TORX” type stainless steel vandal resistant safety fasteners and wrench.

5	1	RFD-300	Floor Drain Fitting, cast bronze with integral waterstop flange, bonding screw, threaded closure plug with recessed head and 3" (F) N.P.T. outlet connection.
6	1	ROVS-200-W	Sidewall Overflow Drain, bronze drain body, integral waterstop flange with bonding screw, removable bronze grate, S.S. fasteners, and 2” (F) N.P.T. connection.
7	1	RCOM-WND	Wall-Mounted Combination Overflow/Water Make-up/Low Water Cutoff Sensor, molded thermoplastic sensor/overflow housing with brass cover plate, stainless steel fasteners, sensor compression fitting, 3/4” (F) N.P.T. conduit entry, 2” adjustable socket overflow, 1-3/4” adjustability range, and 100 ft. of pre-attached 4-conductor, color-coded sensor cable.
8	4	RPS-150-FA	Front Access Surface Skimmer; body of injection molded black cycolac body with removable floating weir/basket assembly; diverter adjustment plate; natural finish brass faceplate; stainless steel fasteners and 1-1/2” SLIP connection.
9	4	REF-150-WS	Adjustable ‘Eyeball’ Inlet Fitting; consisting of a machined brass body with integral water-stop flange, bonding lug, machined brass ‘eyeball’ with 3/4” orifice, retaining ring and 1-1/2” (F) N.P.T. connection, standard natural brass finish.
10	11	RFL-DH-LED-White	‘Donut Hole’ LED Submersible Light Fixture, ETL Listed, 12VDC, low profile with stainless steel adapter for 1-1/2” nozzle riser mounting, high output white LED diodes, stainless steel housing and fasteners, tempered glass lens, silicone lens gasket, chromed brass cord entrance fitting and 19 feet of 18 AWG SJOW cable. Fixture also available in RGB.
11	11	RDHN-ADAP	Threaded Adapter for RFL-DH-LED ‘Donut Hole’ LED Submersible Light Fixture, threaded adapter fitting machined from type 303 stainless steel with 1-1/2" (F) N.P.T. bottom connection and 1-1/4" (F) N.P.T. top connection.
12	2	RJB-5-100-C	Conduit-Mounted Submersible Junction Box; cast bronze construction with neoprene gasket, stainless steel fasteners, one 1” (F) N.P.T. bottom power conduit connection, and five (5) 3/4” N.P.T. side connections with brass cord seal fittings (shipped loose, installed in field). Junction box shall have a minimum volume of 60.0 cubic inches and shall include an internal grounding lug.
13	1	RJB-6-100-C	Conduit-Mounted Submersible Junction Box; cast bronze construction with neoprene gasket, stainless steel fasteners, one 1” (F) N.P.T. bottom power conduit connection, and six (6) 3/4” N.P.T. side connections with brass cord seal fittings (shipped loose, installed in field). Junction box shall have a minimum volume of 60.0 cubic inches and shall include an internal grounding lug.
14	2	RWS-100-L	Slab Penetration, Schedule 40 red brass pipe body to square brass waterstop flange, brass bonding lug and 1” (M) N.P.T. connections.

15	2	RPC-2114-D	Potting Compound, re-enterable, electrical insulating compound, designed for use in RJB-Series junction boxes (required by NEC 680). 21.2 oz. size.
16	1	RDP-2-500-RBU RSX	Series 2 Direct Burial Pump Vault, consisting of a 4'-4" x 4'-10" x 3'-2" deep heavy duty FRP vault with white gel-coat interior and brown gel-coat exterior, furnished with fiberglass reinforced plastic lid with stainless steel piano hinge attachment, lock hardware (*lock by installer*). The vault contains a RSPP-500, 5 HP self-priming display pump with integral suction strainer; RCCF-075, 75 sq. ft. cartridge filter unit; RBU-Series chemical feeder; 4" vent connections with 250 CFM vent fan; RMS-075-NS 3/4" fill manifold assembly; 1/3HP RSX-033 Sump pump assembly with check valve; 2" floor drain; RPCP/RLCP U.L. 508 listed control panel in a NEMA 4 enclosure, containing; main disconnect; pump starter with circuit breaker, contactor & adjustable, solid-state overload, single channel programmable time switch for pump and lights, H.O.A. switches, LED Power Supply, plus lighting contactor, G.F.C.I. breakers, and water level/low level cutoff control circuit (when applicable). Unit is pre-wired, pre-plumbed (Schedule 80 PVC) and factory tested, prior to shipment. Power requirement: 120/208 VAC, 3-phase, 4-wire feeder + GND
17	2	RPVC-400	PVC Vent Cap for 4" vent pipe, Schedule 40 PVC construction with 1/4" stainless steel fasteners. Low profile, corrosion resistant, brown color.

PART 3 - EXECUTION

3.1 GENERAL

1. Install and connect all equipment in accordance with Manufacturers' instructions and recommendations. Provide all piping, valves, and connections recommended by the Manufacturer for proper operation.
2. Protect all pipes, equipment, and other parts of the work against injury by exposure to the weather during construction while stored or installed in place.
3. Make all adjustments required for the proper operation of the mechanical system. Use Manufacturer's factory technicians where adjustments cannot be accomplished by the Contractor's personnel at Contractors' expense.

3.2 ALIGNMENT AND LUBRICATION OF ROTATING EQUIPMENT

1. After installation, align all pumps connected to motors by means of flexible couplings, if necessary, to within the tolerance limits recommended by the equipment and coupling manufacturers.
2. Before any rotating equipment is put in operation for testing purposes, properly lubricate with lubricants recommended by the Manufacturer. Further lubricate before final acceptance. Provide

a complete schedule of lubrication of all rotating equipment within the equipment literature binder.

3.3 VALVE INSTALLATION

1. Supply all piping systems with valves arranged to provide necessary isolation and give regulating control throughout the system.
2. Butterfly valves used to isolate equipment or accessories shall be lug-type installed in a manner to allow servicing without draining the system.
3. Check valves shall close against pressure.
4. Do not install valve stems below horizontal line.

3.4 PIPE INSTALLATION

1. General:
    a) Provide flanges or unions as indicated and as necessary, to allow removal and reinstallation of any item, or equipment, or accessory without cutting, welding, or soldering.
    b) Provide discharge piping of proper size for all air vent, solenoid and relief valves. Extend to nearest drain.
    c) Provide a readily accessible 1-1/2" hose angle valve with hose connection and hose, at all low points in the system and immediately downstream of check valves as necessary to allow the system to be completely drained.
    d) Cut pipe to measurements established at the site. Work into place without springing or forcing.
    e) Protect all openings in piping during construction to prevent entrance of foreign matter.
    f) Cut pipe and tubing ends square. Remove rough edges and burrs so that a smooth and unobstructed flow will be obtained.
    g) Close or short nipples should be used only where shown on the Drawings, or absolutely necessary to satisfy dimensional constraints.
    h) Make changes in pipe size using reduced fittings. Use bushings only if shown on the drawings.
    i) Unless otherwise noted, connections to equipment or accessories shall be threaded for sizes 3" and smaller, flanged for sizes 4" and larger.
    j) Arrange exposed piping straight, parallel and perpendicular to the walls of the structure unless otherwise shown on the drawings.
    k) Wherever two or more pipes are installed in parallel, allow sufficient space for required gluing, welding, soldering, painting, and/or the application of insulation.
2. Pipe Joints:
    a) Grooved Pipe:

1) Grooves for mechanical coupling shall be cut using tools, methods, and dimensional criteria specified by the manufacturer of the coupling.

3. Welded Pipe:
    b) Perform all welding in accordance with the requirements of ASME Boiler Pressure Piping Code or ANSI B31.1.
4. Threaded Pipe:
    a) Cut all threads accurately, axis of thread coinciding with axis of pipe.
    b) No more than two threads shall show beyond fitting.
    c) Make up joints with Teflon tape.
    d) Remake leaky joints with new materials.
    e) Copper Tubing
5. Soldered Joints:
    a) Use drawn temper tubing.
    b) Surfaces to be joined must be cleaned of all oil, grease, rust, and oxides. After cleaning, and before assembly or heating, apply an appropriate flux to each joint surface and spread evenly. Apply heat with an oxyacetylene torch.
    c) Apply an appropriate flux to each joint surface and spread evenly. Apply heat with an oxyacetylene torch.
    d) Make up all joints using non-corrosive flux and 95-5 solder, ATSM B32 Grade A.
    e) Provide each valve with unions for removal of valve without cutting or torching.
    f) Provide dielectric unions at points of connection to ferrous piping.
    g) Where threaded connections are used in copper systems, all nipples shall be standard weight red brass.
6. Flared Joints:
    a) Use annealed tubing.
    b) Cut end using tubing cutter. Ream and clean.
    c) Slide fitting over end. Flare tubing using standard flaring tool.
7. PVC Pipe:
    a) Bevel all pipe ends with a coarse file or beveling tool.
    b) Clean surfaces to be joined of all loose dirt and moisture from the I.D. and O.D. of the pipe end and the I.D. of the fitting socket.
    c) Apply a coating of purple primer to the entire I.D. surface of the fitting socket and to an equivalent area on the O.D. of the pipe end.
    d) Apply heavy body gray solvent cement using an appropriate natural bristle brush as follows: Apply a liberal coating of cement around the entire perimeter of the pipe end to a width slightly more than the equivalent socket depth of the fitting. Apply a light but

complete coating once around the entire depth of the socket surface, avoiding excessive cement application. Apply a second liberal coating onto the pipe end.

e) Immediately after cementing, insert the pipe into the fitting to the full socket depth while rotating the pipe or fitting one-quarter turn. Hold joint for at least 15 seconds after joining to make sure pipe does not back out of the socket.

f) Do not disturb or move the joint for at least one hour after joining.

g) Do not solvent weld pipe if ambient air temperature is below 40 degrees F. or above 90 degrees F., or if it is raining.

h) Discard cement when an appreciable change in viscosity takes place or if cement is lumpy or stringy. Do not thin. Cement must be used before expiration date shown on the container.

8. Pipe Protection:

a) Copper or brass piping, encased in concrete: Exterior shall be wrapped with one layer of pipe wrap at half lap.

b) Copper or brass piping, underground: Exterior shall be coated with two coats of coal tar mastic to a total thickness of 8 to 10 mils. Allow 12 hours drying time between applications. Clean and prepare pipe exterior in accordance with manufacturer's recommendations.

c) Welded steel piping assemblies: Galvanize after fabrication.

d) Galvanized steel piping, underground, submerged, or encased in concrete: Exterior shall be coated with two coats of coal tar mastic to a total thickness of 8 to 10 mil. Allow 12 hours drying time between applications. Clean and prepare pipe exterior in accordance with manufacturer's recommendations.

9. Penetrations:

a) Core drilling for pipe penetrations shall be accomplished only at locations and in a manner approved by the Architect.

b) Provide a metal or approved plastic sleeve or core-drilled hole for every pipe passing through a concrete wall or floor.

c) Provide a water stop or membrane clamp for every pipe or sleeve penetrating an exterior concrete wall or floor or the fountain wall or floor, whichever is appropriate to the waterproofing method and/or as shown on the Drawings.

d) Seal sleeves passing through interior walls with foam sealant, unless otherwise indicated on the Drawings.

e) Seal sleeves passing through exterior walls with resilient seal and foam sealant, unless otherwise indicated on the Drawings.

10. Piping Tests:

a) Provide all temporary piping, pumps, and gauges necessary to conduct the specified tests.

b) Conduct all tests before concealment of work and before any coating, wrap, or insulation is applied.

c) Replace or repair any part that leaks. Repeat test until criteria are met.

d) Do not subject any item to a test pressure greater than the pressure rating of the item.

e) Vent air from all piping being tested.

f) Underground piping shall be tested as follows:

g) In accordance with pipe manufacturers' recommendations and procedures, pressurize all underground piping (except for drain system) to 75 psi prior to backfilling (spot backfilling to anchor piping may be done prior to pressurizing). Piping shall remain pressurized until all backfilling, grading, planting, and concrete work in the area of the piping is completed.

h) In accordance with pipe manufacturers' recommendations and procedures, pressurize all underground drain piping beneath the equipment space to 15 psi until all backfilling and concrete work in the area is completed.

i) The completed piping system shall be tested as follows:

j) Conduct each test for a minimum continuous duration of eight hours.

k) Hydrostatically pressure test all storm and sanitary drain piping at 15 psi.

l) Hydrostatically pressure test all other piping and equipment at 75 psi.

m) Strike all solder joints with a soft-face hammer while under pressure.

n) Log pressure readings for all tests required above at the beginning and end of each test and on every working day between. Note the location and cause of any failures and method of repair on the daily log. Submit copy of the log to the Architect weekly.

o) Testing of the completed system, as specified above, shall be witnessed by the Architect.

11. Flushing:

a) Before the fountain system is placed in operation, flush all fountain system piping with water to remove foreign matter and debris in piping.

b) Completely drain all piping and equipment. Re-flush as necessary until water runs clean.

c) Fill the system to the required capacity with clean water.

d) Circulate the water throughout the system for one hour, using the display pump. Install start-up screens as necessary to prevent equipment clogging and damage.

e) Drain, fill, and circulate (repeat previous three steps above) until the water remains clear.

3.5 HOUSEKEEPING PADS

1. All floor-mounted equipment shall be erected on reinforced concrete housekeeping pads. Pads shall be 4" high with chamfered edges except where otherwise indicated or required on Architects' drawings.

3.6 SUPPORTING DEVICES

1. Furnish and install all required fasteners, rods, hangers, supports, bolts, nuts, washers, and steel plates and shapes.

2. Furnish and arrange for the installation of all required inserts and anchor bolts. Provide templates where appropriate.

3. Provide additional hangers or supports at all valves, strainers, and elsewhere where required to properly support any additional pipe loadings.
4. Where several pipes occur at the same elevation, trapeze type hangers
5. Provide copper plated hangers where hangers are in direct contact with copper piping.
6. Strap hangers are not permitted in any piping work.
7. Equipment may not support any of the pipe loading, nor may equipment, except valves and strainers, be supported by any of the piping.
8. Basket strainers larger than 3" shall be independently supported.
9. Piping shall not be supported by another pipe or duct.

3.7 EQUIPMENT IDENTIFICATION

1. Provide a securely attached permanently engraved metal nameplate for each piece of equipment containing all data required to properly identify the equipment (i.e. manufacturer, type, size, capacity, horsepower, etc.).
2. Provide a valve tag for each valve to provide information to correlate the valve with the outlet or fitting served.
3. Provide a half-size copy of the "As-built" Schematic Diagram, permanently encased in plastic, to provide the Owner's operating personnel ready correlation of each valve identified with each outlet or fitting served.
4. Install nameplates for gauge/control device panels as shown on the Drawings. Attach using stainless steel machine screws.
5. Provide flow direction arrow pipe bands on all system piping. (Seton or equal)

3.8 ADJUSTMENTS

1. Make temporary and final adjustments for each system and equipment apparatus installed, using factory-trained technicians when appropriate. Refer to the Drawings and operation and maintenance manuals for system start-up and adjustment details. Contact Manufacturer/Supplier for additional assistance as necessary.

3.9 PAINTING AND CLEANING

1. Clean all exposed equipment and piping to remove rust, scale, concrete, etc. before painting.
2. Mask off all bright metal parts and nameplates.
3. Paint all exposed equipment and piping (including galvanized) within the equipment space as follows:
    i. Pretreatment, bare ferrous parts: Sand blast or treat with oil penetrant.
    ii. Primer: Previously painted or retreated equipment and piping shall receive one coat of rust inhibiting primer.
    iii. Finish: Apply two coats of white epoxy enamel.

4. Thoroughly clean and wipe down all equipment and piping, sweep floor and remove all debris and remaining tools and equipment from pump room, and any other loose or abandoned items which may create an operation or maintenance hazard.

3.10 OPERATING INSTRUCTIONS

1. At the time of completion, a period of not less than eight hours shall be allotted by the Contractor for instruction of operating and maintenance personnel in the use of all systems. All personnel shall be instructed at one time, the Contractor making at its expense, all necessary arrangements with Manufacturer's technicians to provide instruction, product literature, and application guides for the user's reference.

3.11 THIRTY-DAY OPERATION PERIOD

f) Prior to acceptance of the installation by the Owner, demonstrate a thirty day, fully automated, uninterrupted daily operation of not less than eight hours, nor more than sixteen hours, for all systems provided under this Section.

g) Supervise the operation of the equipment and be responsible for the proper operation thereof and make no claim against the Owner for any damage to the equipment during such operation. Make such changes, adjustments, or replacement of equipment as may be required to ensure installation complies with the Specifications, and replace any defective or non-conforming parts or materials.

h) The costs of labor, electricity, water, and operational tools, equipment and supplies during the thirty day operation period shall be paid by the Contractor.

i) Coordinate the thirty-day operation period with all trades related to the fountain work.

END OF SECTION 131200

ROMAN FOUNTAINS

(877) 794-1802

RCN-SERIES, CASCADE NOZZLE



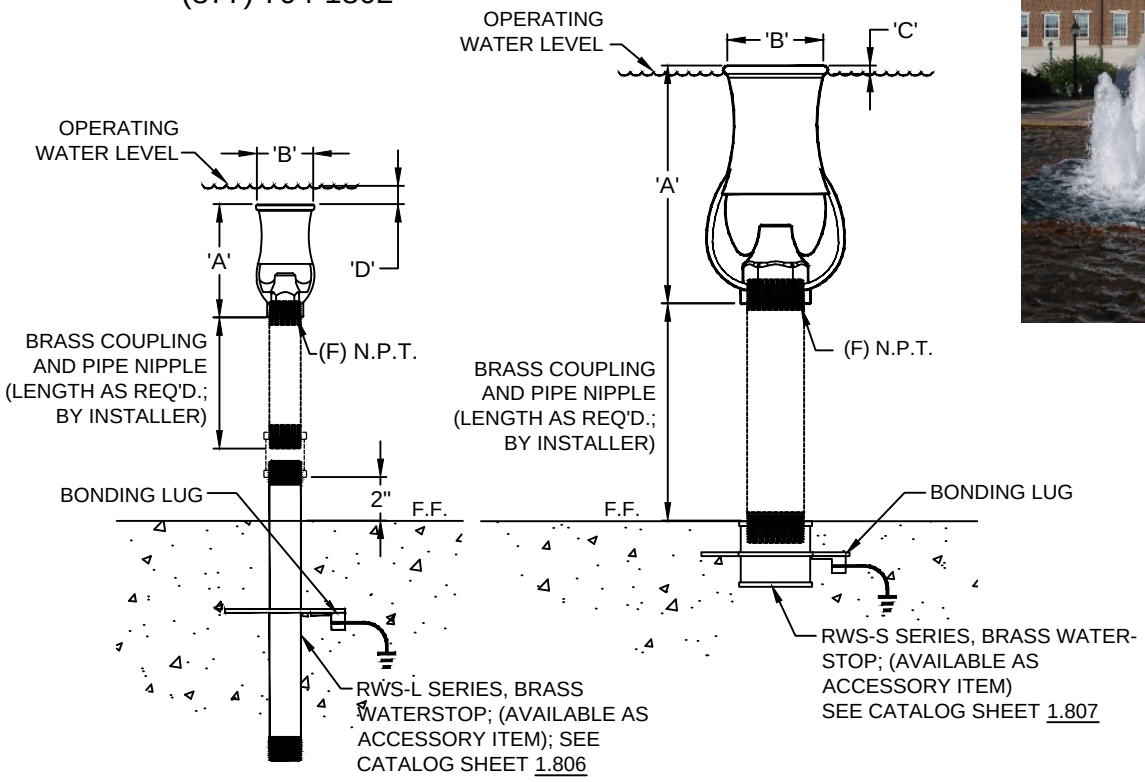

ELEVATION



3D IMAGE

SPECIFICATION DATA: Cascade Nozzle; one-piece cast bronze construction, female threaded connection. (Optional alignment swivel available as accessory item; see catalog sheet 1.802.

DESIGN/APPLICATION DATA: RCN-Series cascade nozzle produces a highly aerated, conical water column.

NOTES: 1. This is a water level dependent nozzle.
2. Boxed area indicates optimum performance.
3. Cascade nozzles may generate wave turbulence in small, confined pools, requiring a dampening device available as accessory item); see catalog sheet 1.810; consult factory.
4. Due to continuing product improvement program, Roman Fountains reserves the right to change the specifications without notice.

TECHNICAL AND HYDRAULIC DATA

DIMENSIONS						SPRAY HEIGHT												
MODEL NO.	(F)N.P.T.	A	B	C	D		2'	3'	4'	5'	6'	8'	10'	12'	15'	20'	25'	30'
RCN-050	1/2"	4"	2"	-	1-1/4"	GPM	7	9	10	11								
						HEAD	16'	25'	35'	39'								
RCN-075	3/4"	5-1/2"	2-1/2"	-	1"	GPM	12	15	16	18	20	23						
						HEAD	21'	23'	32'	44'	51'	69'						
RCN-125	1-1/4"	8"	3-1/2"	1/2"	-	GPM	16	21	23	26	29	34	38	40				
						HEAD	12'	18'	23'	28'	37'	50'	58'	65'				
RCN-150	1-1/2"	9"	3-3/4"	1/2"	-	GPM	23	29	32	36	42	45	49	53	58			
						HEAD	11'	14'	18'	23'	32'	37'	46'	50'	62'			
RCN-200	2"	10-3/4"	4-1/2"	1/2"	-	GPM			42	47	50	61	67	71	75	92		
						HEAD			14'	19'	24'	33'	40'	43'	49'	71'		
RCN-300	3"	14-1/4"	6-1/2"	3/4"	-	GPM				88	90	93	112	116	144	166	187	205
						HEAD				24'	26'	35'	42'	49'	63'	79'	104'	116'

DRAWING NO. 1.101

R1_02-25-19

© COPYRIGHT 2019 ROMAN FOUNTAINS
ALL RIGHTS RESERVED

www.romanfountains.com ITEM#_____ QTY._____

ROMAN FOUNTAINS

(877) 794-1802

RWS-L SERIES, SLAB PENETRATION FITTING (LONG STYLE)

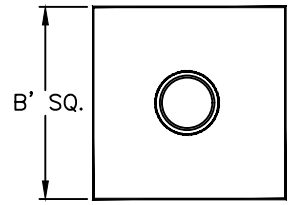

PLAN VIEW

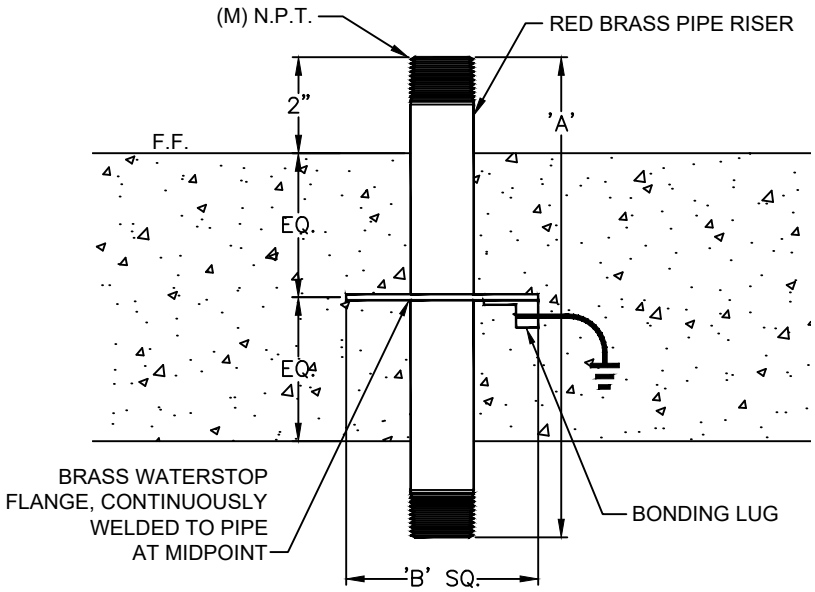

ELEVATION



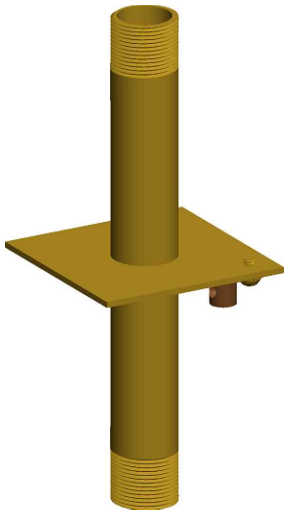

3D IMAGE

SPECIFICATION DATA: Slab Penetration Fitting (Long Style); Sch. 40 Red Brass pipe body to square brass waterstop flange/concrete key, continuous welded to pipe at the midpoint, brass bonding lug, (M) N.P.T. (male) threads at each end.

DESIGN/APPLICATION DATA: Roman Fountains RWS-L Series, slab penetration fittings are designed and fabricated for casting into concrete pool slabs as a waterstop device and a concrete key fitting. The fitting provides a rigid, threaded stub-out connection for display nozzles and other pool fittings.

NOTES: 1. Custom lengths with custom waterstop flange positions available; consult factory.
2. Due to continuing product improvement program, Roman Fountains reserves the right to change the specifications without notice.

TECHNICAL DATA			
MODEL NO.	N.P.T.	LENGTH 'A'	FLANGE SIZE 'B'
RWS-050-L	1/2"	10"	4" Sq.
RWS-075-L	3/4"	10"	4" Sq.
RWS-100-L	1"	10"	4" Sq.
RWS-125-L	1 1/4"	12"	4" Sq.
RWS-150-L	1 1/2"	12"	4" Sq.
RWS-200-L	2"	18"	6" Sq.
RWS-300-L	3"	24"	6" Sq.

© COPYRIGHT 2020 ROMAN FOUNTAINS
ALL RIGHTS RESERVED

ITEM#_____ QTY._____

DRAWING NO. 1.806

R1_06-25-20

ROMAN FOUNTAINS

(877) 794-1802

RWS-S SERIES, SLAB PENETRATION FITTING (SHORT STYLE)



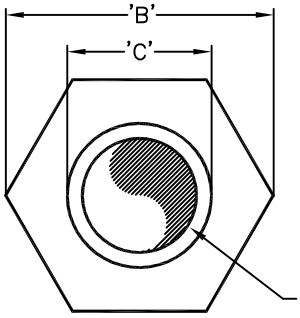

PLAN VIEW

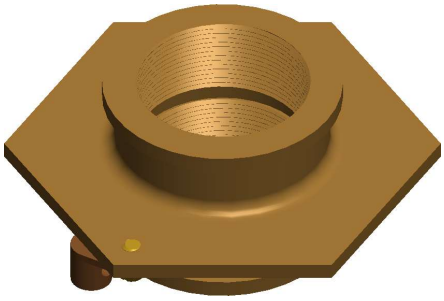

3D IMAGE

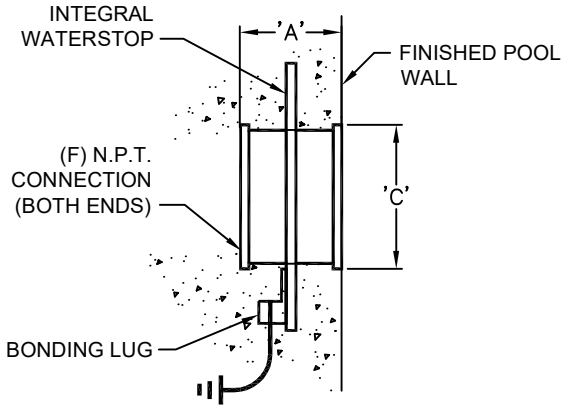

WALL APPLICATION ELEVATION

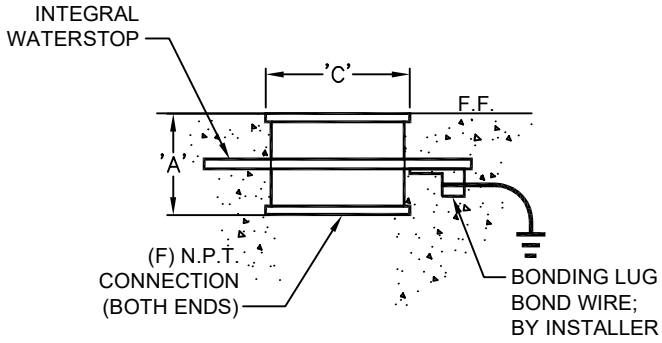

FLOOR APPLICATION ELEVATION

SPECIFICATION DATA: Slab Penetration Fitting (Short Style); machined cast brass, one-piece construction, with integral waterstop flange, bonding lug, and (F) N.P.T. connection; both ends.

DESIGN/APPLICATION DATA: Roman Fountains RWS-S Series slab penetration fittings are designed and fabricated for casting into concrete pool walls and slabs as a waterstop device and a concrete key fitting. The fitting provides a rigid, threaded connection for display nozzles and other pool fittings.

NOTE: Due to continuing product improvement program, Roman Fountains reserves the right to change the specifications without notice.

TECHNICAL DATA				
MODEL	N.P.T.	LENGTH 'A'	FLANGE SIZE 'B'	EXPOSED 'C'
RWS-150-S	1 1/2"	2 1/4"	5"	2 7/16"
RWS-200-S	2"	2 3/8"	5 1/2"	3"
RWS-300-S	3"	3"	6 1/2"	4 5/16"

DRAWING NO. 1.807

R0_09-10-19

© COPYRIGHT 2019 ROMAN FOUNTAINS
ALL RIGHTS RESERVED

ITEM#_____ QTY._____

ROMAN FOUNTAINS

(877) 794-1802

RAVS-1600, 16" SQ. ANTI-VORTEX PLATE AND SUMP ASSEMBLY



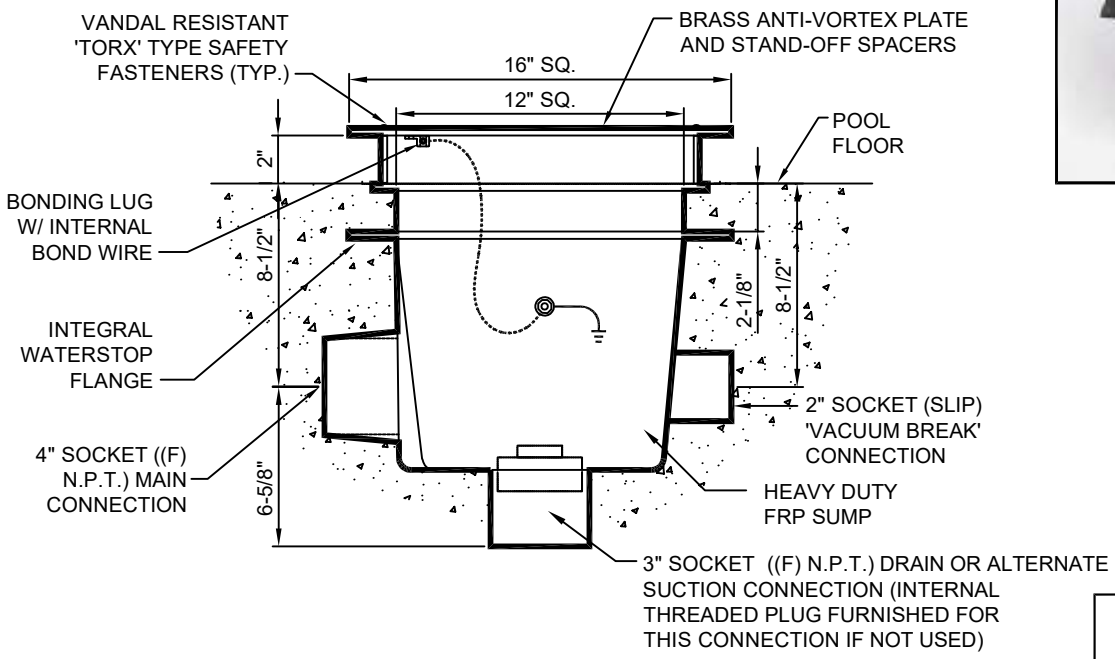

SAFETY NOTICE

THE ANTI-VORTEX PLATE MUST BE FIRMLY IN PLACE AND SECURELY FASTENED TO SUMP BODY AT ALL TIMES TO GUARD AGAINST THE POSSIBILITY OF SUCTION ENTRAPMMENT. NEVER REMOVE PLATE UNLESS FOUNTAIN IS SHUT OFF AND COMPLETELY DRAINED.

SPECIFICATION DATA: 16" Square Anti-Vortex Plate & Sump Assembly; Heavy Duty FRP sump with integral waterstop flange, 4" side, 3" bottom and 2" 'vacuum break' (socket) connections. (The 3" interior connection shall be provided with a 3" threaded male plug.) Solid brass 3/16" thick anti-vortex plate with brass spacers "TORX" type S.S. vandal resistant safety fasteners and wrench.

DESIGN/APPLICATION DATA: Roman Fountains RAVS-1600, anti-vortex plates and sumps are designed for use in fountain and reflecting pools using remote pumping systems. Available in a range of capacities and sizes, they provide a pre-fabricated mechanism for returning water from pool to pump, eliminating vortexing (drawing air into the pump) and promoting efficient re-circulation.

NOTES:
1. If this is the primary suction source for the recirculation system, use two (2) units minimum, to lessen the risk of suction entrapment.
2. 128 SQ. inch open area = .638 FPS suction velocity @ 200 GPM.
3. Recommended maximum flow rate: 200 GPM @ 16" water depth.
4. Due to continuing product improvement program, Roman Fountains reserves the right to change the specifications without notice.

DRAWING NO. 3.314

R1_03-15-19

© COPYRIGHT 2019 ROMAN FOUNTAINS
ALL RIGHTS RESERVED

www.romanfountains.com ITEM#_____ QTY._____

ROMAN FOUNTAINS

(877) 794-1802

RBB-T SERIES, THREADED BRASS BALL VALVE



Appearance may vary according to size and supply available.

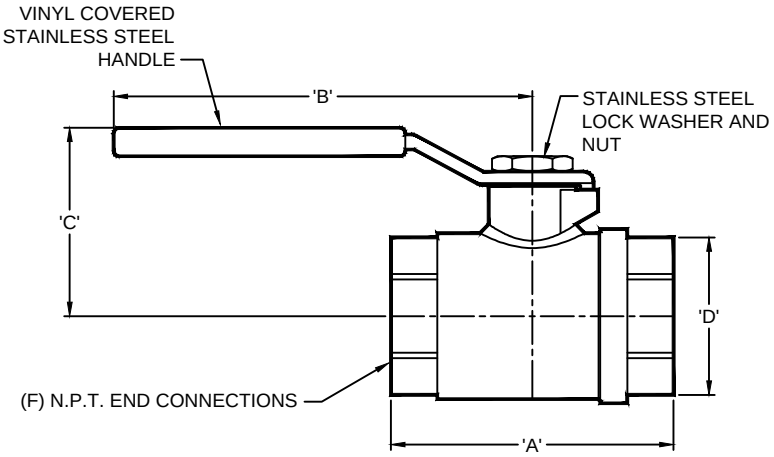

For submersible applications, remove handle and store in safe place after adjustment.

TECHNICAL DATA					
MODEL NO.	SIZE	A	B	C	D
RBB-050-T	1/2"	2 5/16"	3 15/16"	1 11/16"	1"
RBB-075-T	3/4"	2 1/2"	4 23/32"	2"	1 7/32"
RBB-100-T	1"	3 3/16"	4 23/32"	2 5/32"	1 19/32"
RBB-125-T	1 1/4"	3 11/16"	6 7/32"	3"	1 15/16"
RBB-150-T	1 1/2"	4"	6 7/32"	3 1/4"	2 1/8"
RBB-200-T	2"	4 3/4"	6 7/32"	3 1/2"	2 23/32"
RBB-250-T	2 1/2"	6 1/8"	10 1/32"	5 7/32"	3 11/32"
RBB-300-T	3"	6 31/32"	10 1/32"	5 1/2"	3 29/32"

SPECIFICATION DATA: Threaded Brass Ball Valve; Cast bronze machined body, brass full port ball, silicone bronze stem, Teflon seat, stainless steel handle nut, vinyl covered stainless steel handle, 400 PSI maximum operating pressure at 150°, and (F) N.P.T. threaded end connections.

DESIGN/APPLICATION DATA: RBB-T Series, ball valves are designed for use in fountain systems where flow regulation of nozzles and smaller diameter piping systems is required. The compact, streamlined design allows for ease of handing, installation and operation.

NOTES: 1. For submersible applications remove valve handle once adjusted.
2. Due to continuing product improvement program, Roman Fountains reserves the right to change the specifications without notice.

© COPYRIGHT 2019 ROMAN FOUNTAINS
ALL RIGHTS RESERVED

ROMAN FOUNTAINS

(877) 794-1802

RFD SERIES, CAST BRONZE FLOOR DRAIN



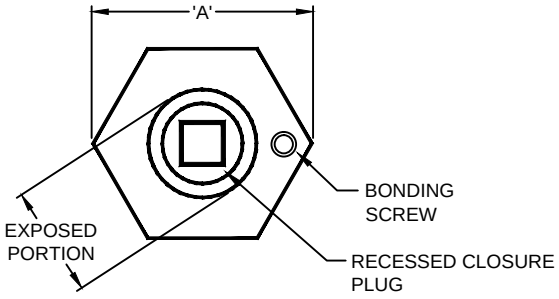

TOP VIEW

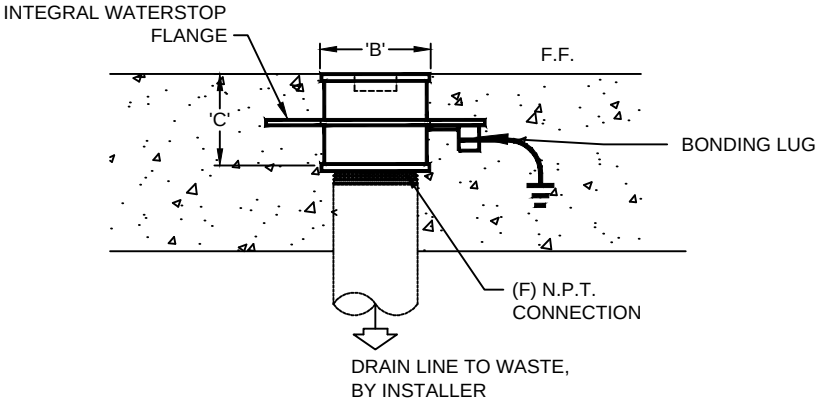

ELEVATION

TECHNICAL DATA					
Model No.	Connection Size	Dimension 'A'	Dimension 'B'	Dimension 'C'	Slab Thickness
RFD-150	1-1/2"	4-7/8"	2-1/2"	2-3/16"	4" Min.
RFD-200	2"	5-5/8"	3"	2-5/16"	6" Min.
RFD-300	3"	6-1/2"	4-3/8"	3-1/8"	6" Min.
RFD-400	4"	8-1/8"	5-1/2"	3-3/4"	6" Min.

SPECIFICATION DATA: Cast Bronze Floor Drain Fitting; with integral waterstop flange; bonding screw, threaded closure plug with recessed head and (F) N.P.T. outlet connection.

DESIGN/APPLICATION DATA: Roman Fountains RFD Series pool drains are designed for use in fountains and reflecting pools to drain water from the pool. They are also designed for use in multi-level pools as pool-to-pool drains.

NOTES: 1. Installer must consult local codes for termination of drain lines.
2. A 'P'-TRAP may be required per code; by installer.
3. Due to continuing product improvement program, Roman Fountains reserves the right to change the specifications without notice.

DRAWING NO. 4.101

R1_10-02-18

© COPYRIGHT 2019 ROMAN FOUNTAINS
ALL RIGHTS RESERVED

ROMAN FOUNTAINS

(877) 794-1802

ROVS-200-W, SIDEWALL OVERFLOW DRAIN

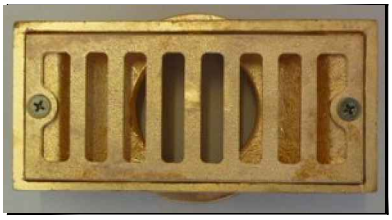

FRONT ELEVATION

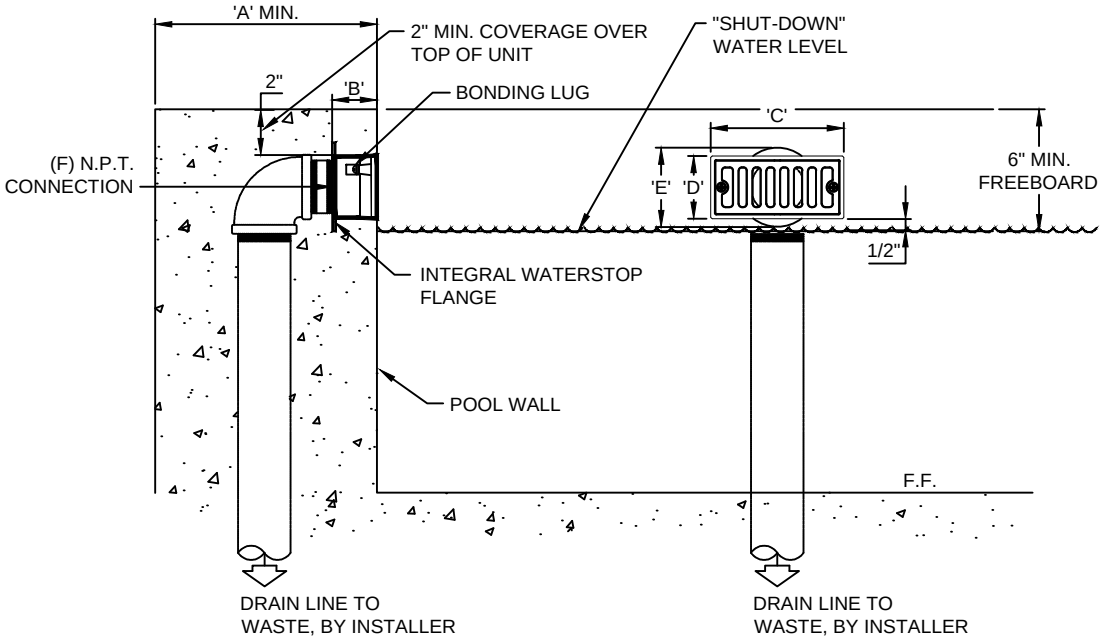

SIDE ELEVATION

FRONT ELEVATION

TECHNICAL DATA								
Model No.	Connection Size	Dimension 'A'	Dimension 'B'	Dimension 'C'	Dimension 'D'	Dimension 'E'	Open Area	Max. Drain Rate
ROVS-200-W	2"	10"	1-1/2"	6"	2-7/8	3.5" dia..	6.5 Sq. In.	20 GPM

SPECIFICATION DATA: Sidewall Overflow Drain; bronze drain body, integral waterstop flange with bonding screw; removable bronze grate; stainless steel fasteners and (F) N.P.T. connection.

DESIGN/APPLICATION DATA: ROVS-W Series, sidewall overflow drains are designed for use in fountain and reflection pool walls to maintain a specified water level and siphon off excess water. They may be used in conjunction with RFD Series floor drains.

NOTES: 1. Installer must consult local codes for termination of drain lines.
2. In multi-level fountains, the lowest pool may experience a rise in water level on system shut-down. Install overflow unit at 'static' (shut-down) water level.
3. Due to continuing product improvement program, Roman Fountains reserves the right to change the specifications without notice.

DRAWING NO. 4.103

R3_10-02-18

© COPYRIGHT 2019 ROMAN FOUNTAINS
ALL RIGHTS RESERVED

ROMAN FOUNTAINS

(877) 794-1802

RCOM-WND, WALL-MOUNTED COMBO OVERFLOW/MAKE-UP/CUTOFF HOUSING



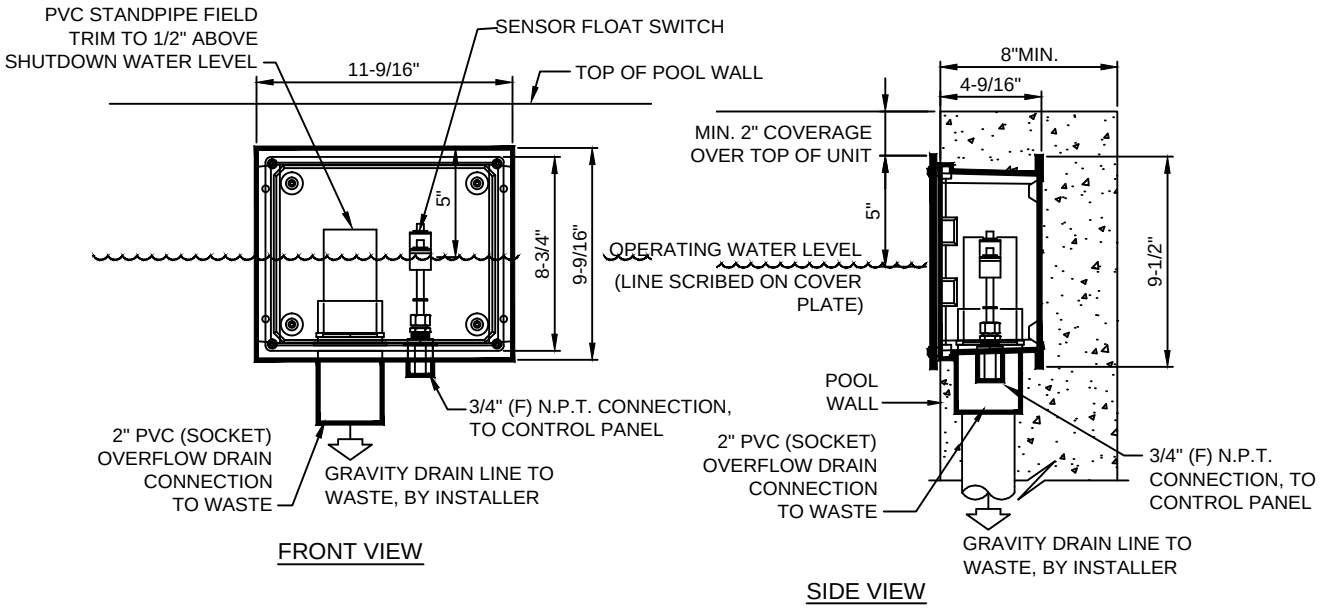

SPECIFICATION DATA: Wall-Mounted Combination Overflow/Water Make-up/Low Level Cutoff. Consists of a thermoplastic housing sensor/overflow with brass coverplate; stainless steel fasteners; sensor compression fitting; 3/4" (F) N.P.T. conduit entry and 2" adjustable overflow. Unit features a multi-level float-type sensor of brass and Buna-N construction with a 1-3/4" adjustability range and includes 100 ft. of pre-attached, 4-conductor, color-coded sensor cable. When purchasing as a component system, package must include a RCOM-PNL Series, dual function solid-state water level control panel; see catalog cut sheet 4.210 RCOM-PNL3 for panel rated for 120 VAC with internally transformed 24 volt sensor output circuit.

NOTES:
1. A normally closed, electrically actuated, 120VAC solenoid valve is required to operate water makeup function; specify RSV Series valve. (Ref. Cat. sheet 4.403)
2. A lighting and/or motor contactor is required to operate the low level cutoff function; consult factory.
3. The PVC overflow standpipe is removable and is furnished full height, to provide a 1/2" margin above the sensor 'high limits' position; trim as required, and reinsert.
4. This unit is to be used in applications where shut-down gain is 2-1/2" or less.
5. Do not run sensor wire in conduit with any other conductors.
6. Do not over tighten brass cover plate screws into niche!
7. NEMA rated enclosure available for outdoor use on special order; consult factory.
8. Installer must consult local codes for termination of drain lines
9. Due to continuing product improvement program, Roman Fountains reserves the right to change the specifications without notice.

© COPYRIGHT 2019 ROMAN FOUNTAINS
ALL RIGHTS RESERVED

RFL-DH-LED-AS-SERIES
'DONUT HOLE' SUBMERSIBLE LED LIGHT FIXTURE

ROMAN FOUNTAINS

(877) 794-1802

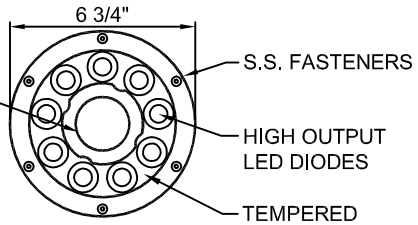

PLAN VIEW



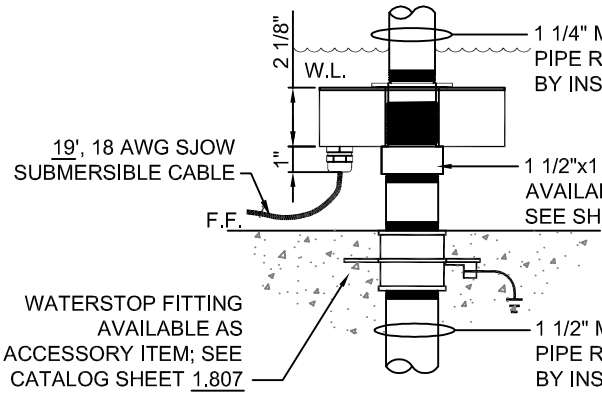

ELEVATION

* IMPORTANT: THROUGH- FIXTURE PIPING *ONLY* ACCOMPLISHED WITH THIS **ADAPTER**!

LED

12VDC

NOTE: THIS PRODUCT HAS BEEN CERTIFIED BY ETL TO MEET THE U.L. 676 STANDARD FOR UNDERWATER LIGHTING FIXTURES.

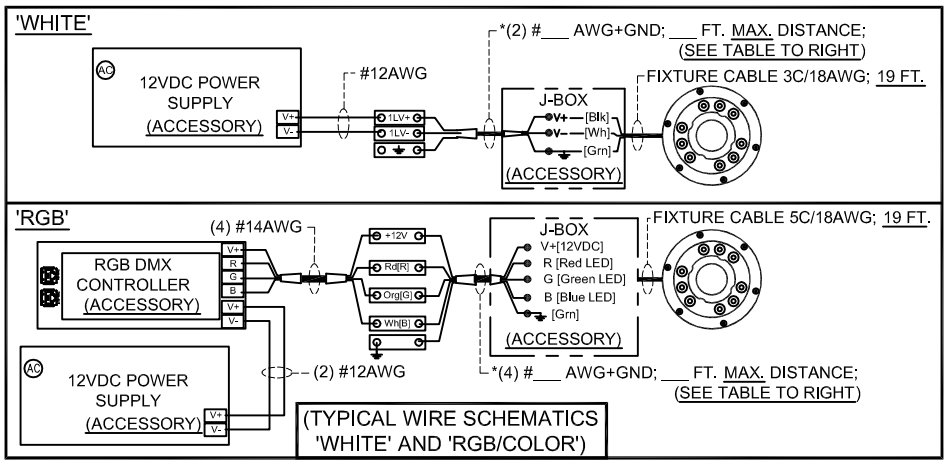

(TYPICAL WIRE SCHEMATICS 'WHITE' AND 'RGB/COLOR')

*MAXIMUM CABLE LENGTH FOR A SINGLE RUN						
LOAD AT 12VDC		MAXIMUM CABLE LENGTH TO THE LAST FIXTURE IN A CABLE RUN BY WIRE SIZE				
WATTS	AMPS	#14	#12	#10	#8	#6
25-30	2.0-2.5	35FT.	60FT.	100FT.	150FT.	
31-36	2.5-3.0	30FT.	50FT.	80FT.	125FT.	175FT.
37-42	3.0-3.5		45FT.	70FT.	100FT.	175FT.
43-55	3.5-4.6		35FT.	55FT.	80FT.	135FT.
56-75	4.7-6.3		25FT.	40FT.	60FT.	100FT.
76-100	6.4-8.3		20FT.	30FT.	50FT.	75FT.
101-112	8.4-9.3		15FT.	25FT.	40FT.	65FT.

TECHNICAL DATA							
MODEL NO.	LIGHT SOURCE	LIGHT COLOR	BEAM ANGLE	INPUT VOLTAGE	WATTS	CABLE TYPE	IP RATING
RFL-CG-DH-LED-W-AS	9X3W WHITE DIODES	COOL 'WHITE'	30 DEG.	12VDC	*27.0	18-3 AWG SJOW	68
RFL-CG-DH-LED-WW-AS	9X3W WHITE DIODES	WARM 'WHITE'	30 DEG.	12VDC	*27.0	18-3 AWG SJOW	68
RFL-CG-DH-LED-RGB-AS	9X3W RGB DIODES	'RGB'	30 DEG.	12VDC	*27.0	18-5 AWG SJOW	68

*NOTE: THIS FIGURE REPRESENTS THE MAXIMUM POSSIBLE LOAD FOR THIS FIXTURE.

SPECIFICATION DATA: Small diameter, low profile LED submersible light fixture with center sleeve feature for nozzle riser mounting (up to 1 1/2"Ø) * (See important **Adapter** Note above!); high output LED diodes, stainless steel housing and fasteners, tempered glass lens, silicone lens gasket, chromed brass cord entrance fitting; 19 ft. of 18 AWG SJOW cable (not available with additional cord length).

DESIGN/APPLICATION DATA: Any fountain application where 360° illumination of a spray nozzle is required with a high output LED submersible light fixture.

NOTES: 1. 12VDC Power supply required to operate fixtures. Contact factory for requirements.
2. 'DMX' Controller required to operate 'RGBW' fixtures in programmable mode. Contact factory for requirements.
3. Due to our continuing product improvement, Roman Fountains reserves the right to change the specifications without notice.

DRAWING NO. 5.103

R3_02-05-20

COPYRIGHT 2019 ROMAN FOUNTAINS
ALL RIGHTS RESERVED

www.romanfountains.com

ITEM#_____ QTY_____

RDHN-ADAP, THREADED ADAPTER FOR RFL-DH-LED 'DONUT HOLE' SUBMERSIBLE LED LIGHT FIXTURE

ROMAN FOUNTAINS

(877) 794-1802



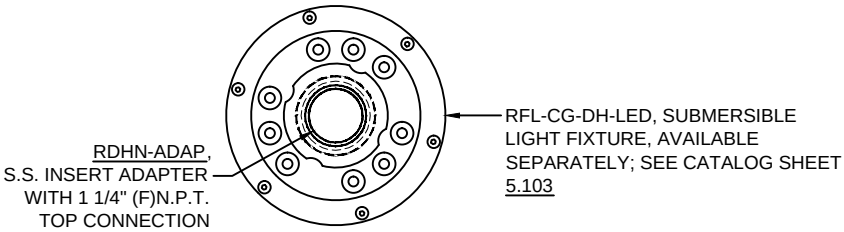

PLAN VIEW

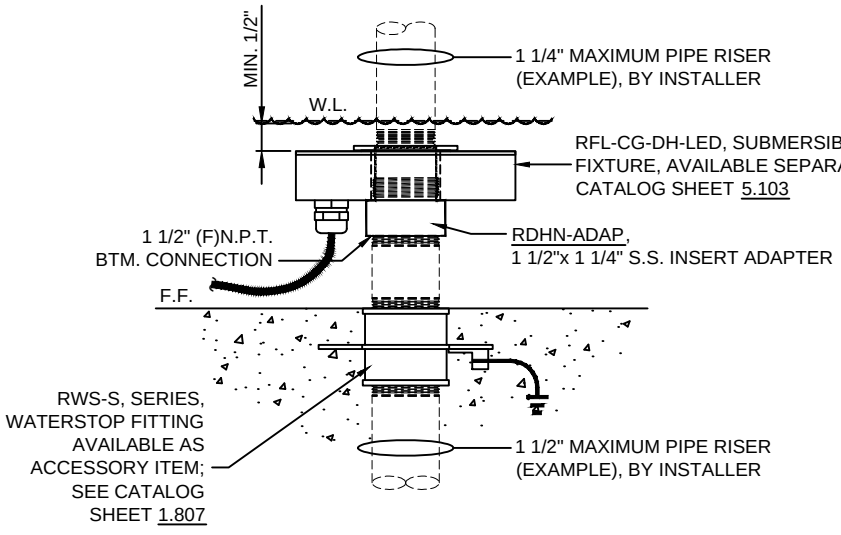

ELEVATION

APPLICATION

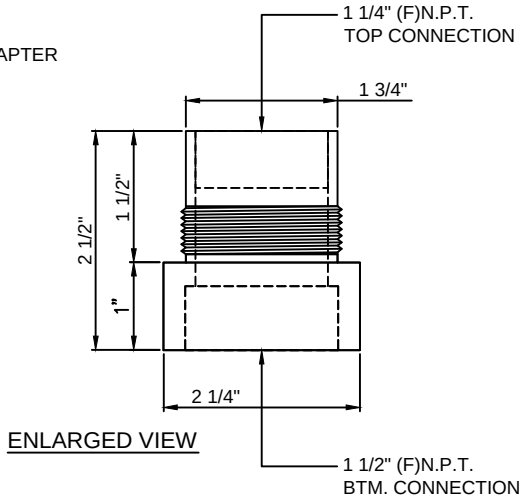

ENLARGED VIEW

SPECIFICATION DATA: Threaded adapter fitting machined from type 303 stainless steel with 1 1/2" (F)N.P.T. bottom connection and 1 1/4" (F)N.P.T. top connection.

DESIGN/APPLICATION DATA: This adapter is used for applications where riser mounting of the RFL-DH-LED, 'Donut Hole' LED light fixture is required. Adapter threads into the straight (non-tapered) threads at fixture bottom, to provide a pipe (N.P.T.) thread and basically acts as a reducer coupling for through piping to a spray nozzle; brass or stainless steel reducer bushings (provided By Installer) may be used at either end of adapter when a smaller pipe riser size is required.

NOTE: Due to our continuing product improvement, Roman Fountains reserves the right to change the specifications without notice.

COPYRIGHT 2019 ROMAN FOUNTAINS
ALL RIGHTS RESERVED

www.romanfountains.com

ITEM#_____ QTY_____

DRAWING NO. 5.105

R2_03-01-19

RJB-8-100-F, FLUSH-MOUNTED SUBMERSIBLE JUNCTION BOX

ROMAN FOUNTAINS

(877) 794-1802



NOTE:
CORD COMPRESSION SEALS FURNISHED BY ROMAN FOUNTAINS, INSTALLED INTO BOX BY ELECTRICIAN.

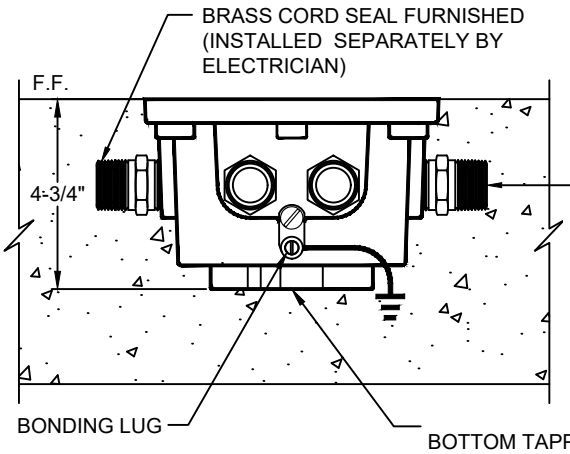

ELEVATION

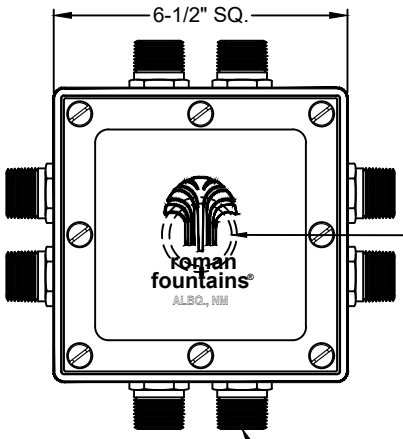

PLAN

THIS JUNCTION BOX REQUIRES ONE (2) RPC-2114-D SIZE POTTING COMPOUND; SEE SHEET 5.327

BOTTOM TAPPING (POWER ENTRY):
ONE 1" (F) N.P.T.

3/4" (F) N.P.T. CORD SEAL SIDE TAPPINGS - (5) THRU (8)
QUANTITY: (__)

NOTE: NOT TO BE USED IN SWIMMING POOL OR SPA APPLICATIONS.

NOTE: ONCE WIRING IS COMPLETED, FLASH LIGHTING CIRCUITS MOMENTARILY (10 SECONDS) TO VERIFY PROPER OPERATION. THEN WITH PUTTY PROVIDED, SEAL ALL CONDUIT ENTRIES INTO J-BOX PRIOR TO POTTING WITH (2) #RPC-2114-D, POTTING COMPOUND (AVAILABLE AS ACCESSORY ITEM).

SPECIFICATION DATA: Flush-Mounted Submersible Junction Box, cast bronze construction, with neoprene gasket, stainless steel fasteners, one 1" (F) N.P.T. bottom power conduit connection, and (_) 3/4" N.P.T. side connection with brass cord seal fittings (shipped loose and installed in field). Junction box shall have a minimum volume of 60.0 cubic inches and shall include an internal grounding lug.
NOTE: Due to our continuing product improvement, Roman Fountains reserves the right to change the specifications without notice.

INSTALLATION: Roman Fountains recommends the following procedures be followed when installing underwater junction boxes.
1. Check local electrical code before installing. Must comply with NEC article 680.
2. Use only 'Everdur' or brass pipe for conduit where exposed to pool water.
3. After making and verifying all connections, use putty provided to seal all conduit entries into j-box.
4. Once conduits are sealed, pot junction box with (2) #RPC-2114-D potting compound (available as accessory).
5. Use good quality thread sealant on junction boxes.
6. Test conduit system to eliminate all leaks.

COPYRIGHT 2019 ROMAN FOUNTAINS
ALL RIGHTS RESERVED

www.romanfountains.com

ITEM#_____ QTY_____

DRAWING NO. 5.316

R2_2-6-20

RPC-2114 SERIES, POTTING COMPOUND

(877) 794-1802

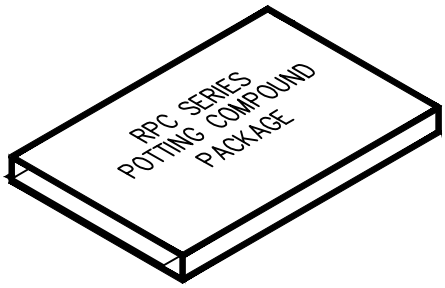





RPC-2114-C, 12.3-oz. size		ONE PACK EQUALS 22.19 CU. IN.
RPC-2114-D, 21.2-oz. size		ONE PACK EQUALS 38.24 CU. IN.

NOTE: ARTICLE 680-52(b) OF THE NATIONAL ELECTRICAL CODE (N.E.C.) REQUIRES THAT ALL UNDERWATER JUNCTION BOXES AND ALL UNDERWATER ENCLOSURES BE FILLED WITH AN APPROVED POTTING COMPOUND TO PREVENT THE ENTRY OF MOISTURE.

SPECIFICATION DATA: Potting Compound, re-enterable, electrical insulating and potting compound, designed for use in RJB-Series junction boxes (required by NEC 680).
NOTE: Due to our continuing product improvement, Roman Fountains reserves the right to change the specifications without notice.

DESIGN/APPLICATION DATA: Roman Fountains RPC-2114 Series re-enterable electrical insulating and potting compound is designed for use in RJB Series junction boxes, as required by NEC 680. Its tacky urethane formulation adheres well and pulls away cleanly for fast splice re-entry. Moisture resistant, it is non-corrosive to copper and brass.

COPYRIGHT 2018 ROMAN FOUNTAINS
ALL RIGHTS RESERVED

www.romanfountains.com

ITEM#_____ QTY_____

DRAWING NO.
5.327
R2_10-26-18

RPS-150-FA
FRONT ACCESS SKIMMER

(877) 794-1802

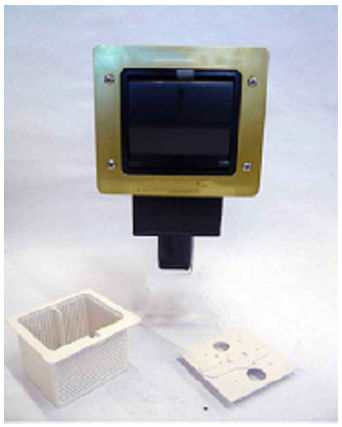

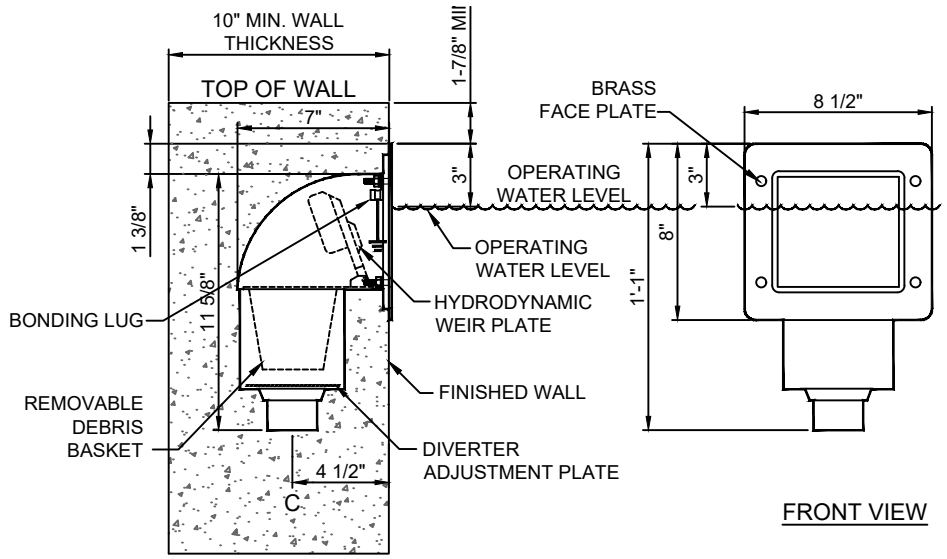

SIDE VIEW

FRONT VIEW

TECHNICAL AND HYDRAULIC DATA		
MODEL	CONNECTION SIZE	MAXIMUM FLOW RATE
RPS-150-FA	1-1/2" SLIP	30 GPM

SPECIFICATION DATA : Front Access Surface Skimmer, body of injection molded black cycolac with removable floating weir/basket assembly; diverter adjustment plate; natural finish brass faceplate; stainless steel fasteners and 1-1/2" SLIP connection.

NOTE: Due to our continuing product improvement, Roman Fountains reserves the right to change the specifications without notice.

INSTALLATION: Install front access skimmer into the pool wall in the direction and location shown on installation drawings. Run specified type and size piping (as shown on piping schematics) from filter suction system and connect to bottom of skimmer using proper pipe fittings. Place skimmer basket into skimmer body and insure that weir plate moves freely with no resistance in either direction. Do not remove weir plate, or skimmer will not function properly.

MAINTENANCE: Periodically check skimmer basket for debris buildup and remove and clean as necessary. Periodically check skimmer weir plate for obstructions to insure it is floating freely. Do not operate filter system without skimmer basket in place or pump damage may result. SHUT OFF FILTER PUMP BEFORE CLEANING SKIMMER, TO PREVENT INJURY.

DESIGN/APPLICATION DATA: Roman Fountains RPS-150-FA, front access skimmer is designed for use in fountains and reflecting pools as a secondary filter system return point and strainer device to skim debris from the pool surface before settling occurs. Its "front access" design allows for discrete installation and removal of the skimmer basket.

COPYRIGHT 2019 ROMAN FOUNTAINS
ALL RIGHTS RESERVED

ITEM#_____ QTY_____

DRAWING NO.
6.301
R2_02-21-20

REF-150-WS, ADJUSTABLE 'EYEBALL' INLET FITTING

ROMAN FOUNTAINS

(877) 794-1802



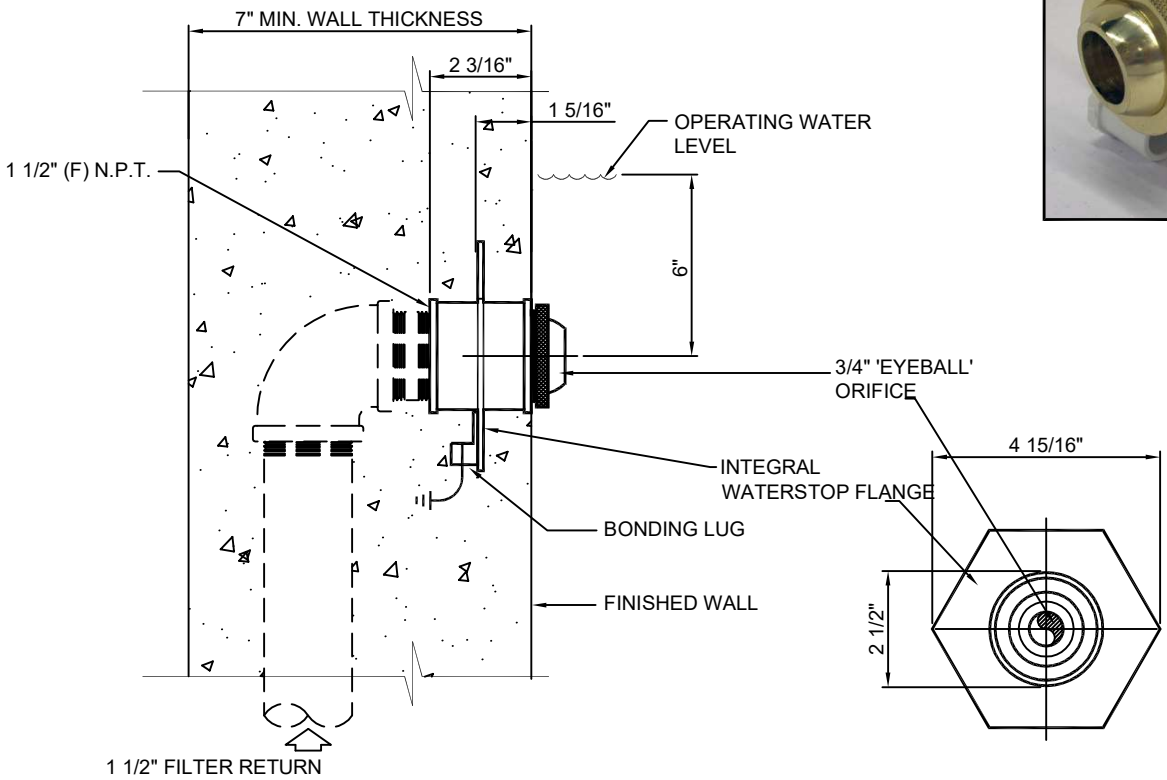

SIDE ELEVATION

FRONT ELEVATION

NOTE: INSTALL WATERSTOP FLANGE FACE FLUSH TO FINISHED WALL.

TECHNICAL AND HYDRAULIC DATA		
MODEL NO.	CONNECTION SIZE	MAXIMUM FLOW RATE
REF-150-WS	1-1/2"	30 GPM

SPECIFICATION DATA: Adjustable 'Eyeball' Inlet Fitting; consisting of a machined brass body with integral waterstop flange, bonding lug, machined brass 'eyeball' with 3/4" orifice, retaining ring and 1-1/2" (F) N.P.T. connection, standard natural brass finish.
NOTE: Due to our continuing product improvement, Roman Fountains reserves the right to change the specifications without notice.

DESIGN/APPLICATION DATA: Roman Fountains REF-150-WS, adjustable eyeball inlet fitting is designed for use in fountains and reflecting pools as a discharge point for filtered water, or an inlet point for makeup water.

COPYRIGHT 2019 ROMAN FOUNTAINS
ALL RIGHTS RESERVED

www.romanfountains.com

ITEM#_____ QTY_____

DRAWING NO.
6.504

R1_11-06-18

RDP-2 SERIES, DIRECT-BURIAL FIBERGLASS PUMP VAULT

ROMAN FOUNTAINS

(877) 794-1802



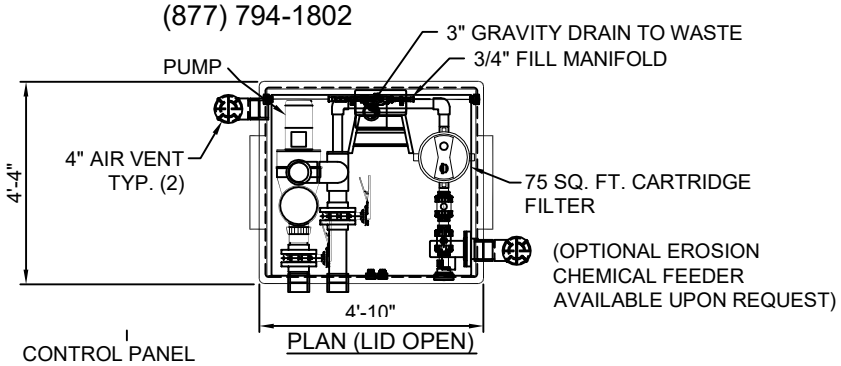

PLAN (LID OPEN)

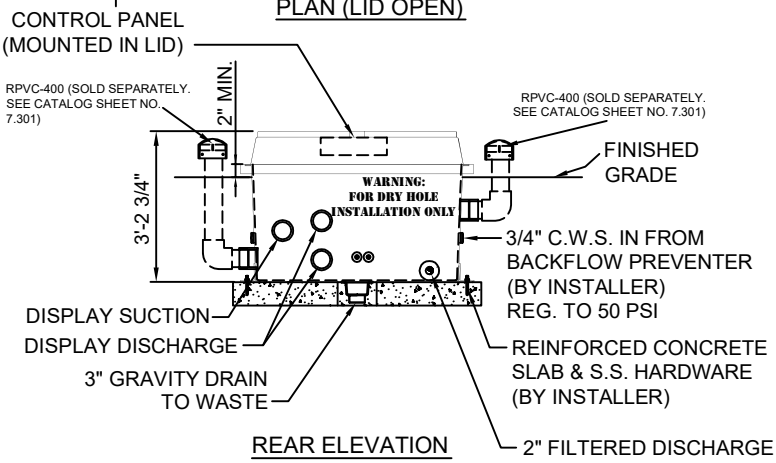

REAR ELEVATION

WARNING: FOR 'DRY HOLE' INSTALLATION ONLY!

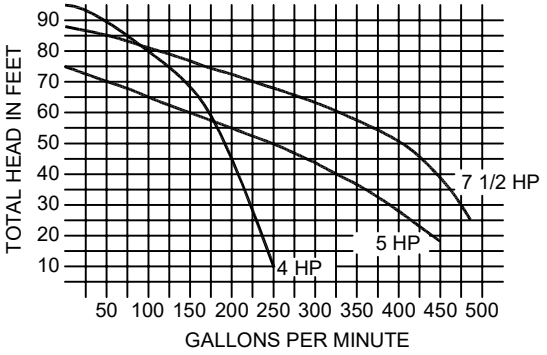

TECHNICAL DATA			
MODEL #	PUMP HP	SUCT./DISCH. (F) SOCKET	AVAILABLE SYSTEM POWER OPTIONS
RDP-2-400	4	4"x4"	115/208-230V, 1Ø or208-230/460, 3Ø
RDP-2-500	5	*4"/ 4"	115/208-230V, 1Ø or208-230/460, 3Ø
RDP-2-750	7.5	*4"/4"	115/208-230V, 1Ø or 208-230/460, 3Ø

*MUST BE INCREASED TO 6" IMMEDIATELY OUTSIDE VAULT.

SPECIFICATION DATA: Series 2 Direct Burial Pump Vault, consisting of a 4'-10" x 4'-4"" x 3'-2 3/4" deep heavy duty FRP vault with white gel-coat interior and brown gel-coat exterior, furnished with fiberglass reinforced plastic lid with stainless steel piano hinge attachment and locking device, containing a RSPP self-priming display pump with integral suction strainer, RCCF-075, 75 sq. ft. cartridge filter unit, 4" vent connections with 230 CFM vent fan, RMS-075-NS, 3/4" fill manifold assembly, 3" floor drain, U.L. 508 listed control panel in a NEMA 4 enclosure, containing; main disconnect; pump starter with circuit breaker, contactor & adjustable, solid-state overload, single-channel programmable time switch(es), for pump and lights, H.O.A. switch(es), plus lighting contactor(s), G.F.C.I. breaker(s), and water level/low level cutoff control (when applicable). Unit is pre-wired, pre-plumbed (Schedule 80 PVC) and factory tested, prior to shipment.

OPTIONS:

1. Erosion type chemical feeder is available.
2. 4'-0"x 4'-6" 'BILCO' locking aluminum Diamond Plate Hatchway with lock-open arm. Add RBH-DP to Model Number.

NOTES:

1. Hatch opening must be located in flood-safe area.
2. Slope finished grade away from pump module.
3. Protect pump module gravity drain from back flow and sewer gas.
4. Top of pump module must be at, or below lowest pool water level.
5. Due to our continuing product improvement program, Roman Fountains reserves the right to change specifications w/o notice.

DRAWING NO. 7.203

© COPYRIGHT 2019 ROMAN FOUNTAINS
ALL RIGHTS RESERVED

www.romanfountains.com

ITEM #_____ QTY._____

R4_8-11-19

ROMAN FOUNTAINS

(877) 794-1802

RPVC SERIES, PVC VENT CAPS



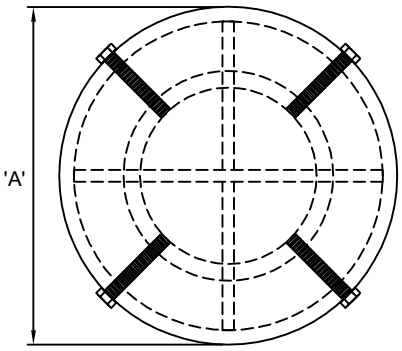

PLAN VIEW

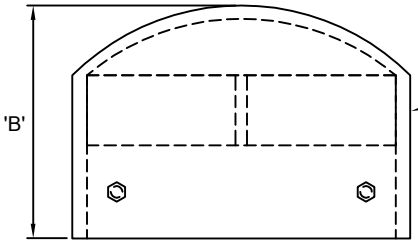

ELEVATION VIEW

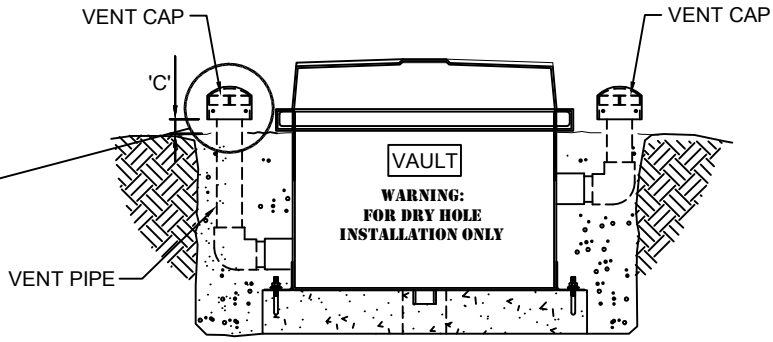

TYPICALLY ATTACHED TO THE ENDS OF THE TWO VAULT VENTILATION PIPES AS SHOWN IN THIS ELEVATION VIEW

DIMENSIONAL INFORMATION					
MODEL	VENT PIPE SIZE	OVERALL DIAMETER 'A'	CAP HEIGHT 'B'	MIN. CLEARANCE ABOVE GRADE 'C'	APPLICATION
RPVC-300	3"	7-1/4"	5"	3"	RDP-1 & STORAGE TANKS
RPVC-400	4"	7-1/4"	5"	3"	RDP-2
RPVC-600	6"	9-5/16"	6-3/8"	3"	RDP-250 & RDP-300
RPVC-800	8"	11-13/16"	5-1/4"	3"	RDP-4 & RDP-5

SPECIFICATION DATA : PVC Vent Cap, constructed of Schedule 40 PVC, and 1/4" stainless steel fasteners. Corrosion resistant design, brown.

DESIGN/APPLICATION DATA: The RPVC-Series vent cap is used for terminating ventilation piping above ground level. Low profile design allows air movement and reduces the possibility of debris being placed in the vent openings, thus causing stoppage of the ventilation system.

NOTE: Due to our continuing product improvement program, Roman Fountains reserved the right to change the specifications without notice.

© COPYRIGHT 2019 ROMAN FOUNTAINS
ALL RIGHTS RESERVED

ITEM # QTY.

DRAWING NO. 7.301

R1_8-22-19

THE HEALING PLACE
of New Hanover County

Wilmington, NC

Construction Documents

August 25, 2020

(Revised November 30, 2020)

VOLUME TWO

(Divisions 01-14)

isdesign
ARCHITECTURE + INTERIORS
219 North Boylan Avenue Suite 100
Raleigh, North Carolina 27603

919 833 5400
www.isdesignpa.com

Specification Sections or Divisions provided by the following firms as indicated in the Table of Contents:

Architectural Specifications: ---------- *Fine Print Architectural Specifications – "**fpas**"*
Structural Specifications: ----------*RED Engineering & Design – "**red**"*
Fountain Specifications: ---------- *Roman Fountains – "**rf**"*
Fire Suppression Specifications: ---------- *Crawford Sprinkler – "**cs**"*
MEP Specifications: ----------*Maple Engineering, PLLC – "**me**"*
Civil Specifications: ----------*The Site Group – "**tsg**"*
Foodservice Specifications: ----------*MSH Consultant Group – "**msh**"*

VOLUME ONE

Project Manual Table of Contents

DIVISION 00 – CONTRACT DOCUMENTS

000000 – Covers ..... 2 Pages
000103 – Design Team ..... 1 Page
000105 – Table of Contents ..... 8 Pages
000107.01 – Certification and Seal Sheet – Architectural ..... 3 Pages
000107.02 – Certification and Seal Sheet – Structural ..... 1 Page
000107.04 – Certification and Seal Sheet – Plumbing ..... 2 Pages
000107.05 – Certification and Seal Sheet – Mechanical ..... 2 Pages
000107.06 – Certification and Seal Sheet – Electrical ..... 2 Pages
000107.07 – Certification and Seal Sheet – Civil ..... 1 Page
003132 – Geotechnical Exploration Report ..... 32 Pages

DIVISION 01 – GENERAL REQUIREMENTS (**fpas**) (See Appendix for Cape Fear Public Utility Authority Specifications)

Section 011000 – Summary ..... 3 Pages
Section 012100 – Allowances ..... 4 Pages
Section 012200 – Unit Prices ..... 3 Pages
Section 012500 – Substitution Procedures ..... 4 Pages
Section 012600 – Contract Modification Procedures ..... 3 Pages
Section 012900 – Payment Procedures ..... 5 Pages
Section 013100 – Project Management and Coordination ..... 10 Pages
Section 013200 – Construction Progress Documentation ..... 10 Pages
Section 013300 – Submittal Procedures ..... 10 Pages
Section 014000 – Quality Requirements ..... 11 Pages
Document 014100 – Special Inspections ..... 1 Page
Section 014200 – References ..... 3 Pages
Section 015000 – Temporary Facilities and Controls ..... 11 Pages
Section 016000 – Product Requirements ..... 7 Pages
Section 017300 – Execution ..... 10 Pages

Section 017700 – Closeout Procedures....7 Pages
Section 017823 – Operation and Maintenance Data....9 Pages
Section 017839 – Project Record Documents....5 Pages
Section 017900 – Demonstration and Training....6 Pages

DIVISION 02 – **EXISTING CONDITIONS** (See Appendix for Cape Fear Public Utility Authority Specifications)

DIVISION 03 – **CONCRETE**

Section 033000 – Cast-in-Place Concrete (**red**)....12 Pages
Section 034900 – Glass-Fiber-Reinforced Concrete (GFRC) (**fpas**)....11 Pages

DIVISION 04 – **MASONRY** (**fpas**)

Section 042000 – Unit Masonry....27 Pages
Section 047200 – Cast Stone Masonry....9 Pages

DIVISION 05 – **METALS**

Section 051200 – Structural Steel Framing (**red**)....7 Pages
Section 052100 – Steel Joist Framing (**red**)....5 Pages
Section 053100 – Steel Decking (**red**)....8 Pages
Section 054000 – Cold-Formed Metal Framing (**red**)....8 Pages
Section 055000 – Metal Fabrications (**fpas**)....12 Pages
Section 055800 – Formed Stainless Steel Kitchen Wall Panels (**fpas**)....2 Pages
Section 057300 – Decorative Metal Railings (**fpas**)....8 Pages

DIVISION 06 – **WOOD, PLASTICS AND COMPOSITES** (**fpas**)

Section 061053 – Miscellaneous Rough Carpentry....10 Pages
Section 061600 – Sheathing....7 Pages
Section 062023 – Interior Finish Carpentry....7 Pages
Section 066116 – Plastic-Laminate-Faced Architectural Cabinets....7 Pages
Section 066400 – Plastic Paneling....3 Pages

DIVISION 07 – **THERMAL AND MOISTURE PROTECTION** (**fpas**)

Section 071113 – Bituminous Dampproofing....5 Pages
Section 071614 – Acrylic-Modified Flexible Cementitious Waterproofing....7 Pages
Section 072100 – Thermal Insulation....5 Pages
Section 072413 – Polymer-Based Exterior Insulation and Finish System (EIFS)....11 Pages
Section 072500 – Weather Barriers....4 Pages

Section 072600 – Vapor Retarders ..... 2 Pages
Section 074113.16 – Standing-Seam Metal Roof Panels ..... 11 Pages
Section 074213.13 – Formed Metal Wall Panels ..... 10 Pages
Section 075423 – Thermoplastic Polyolefin (TPO) Roofing ..... 11 Pages
Section 076200 – Sheet Metal Flashing and Trim ..... 14 Pages
Section 077100 – Roof Specialties ..... 10 Pages
Section 077200 – Roof Accessories ..... 8 Pages
Section 078413 – Penetration Firestopping ..... 8 Pages
Section 078443 – Joint Firestopping ..... 6 Pages
Section 079200 – Joint Sealants ..... 13 Pages
Section 079219 – Acoustical Joint Sealants ..... 4 Pages

DIVISION 08 – **OPENINGS** (**fpas**)

Section 081113 – Hollow Metal Doors and Frames ..... 10 Pages
Section 081416 – Flush Wood Doors ..... 7 Pages
Section 083113 – Access Doors and Frames ..... 5 Pages
Section 083323 – Overhead Coiling Doors ..... 8 Pages
Section 083800 – Traffic Doors ..... 4 Pages
Section 084113 – Aluminum-Framed Entrances and Storefronts ..... 14 Pages
Section 087100 – Door Hardware ..... 15 Pages
Section 088000 – Glazing ..... 12 Pages
Section 088300 – Mirrors ..... 6 Pages

DIVISION 09 – **FINISHES** (**fpas**)

Section 092216 – Non-Structural Metal Framing ..... 8 Pages
Section 092713 – Glass-Fiber-Reinforced Plaster Fabrications ..... 4 Pages
Section 092900 – Gypsum Board ..... 10 Pages
Section 093013 – Tiling ..... 12 Pages
Section 095113 – Acoustical Panel Ceilings ..... 8 Pages
Section 096513 – Resilient Base and Accessories ..... 5 Pages
Section 096516 – Resilient Sheet Flooring ..... 6 Pages
Section 096519 – Resilient Tile Flooring ..... 6 Pages
Section 096723 – Resinous Flooring ..... 6 Pages
Section 096813 – Tile Carpeting ..... 7 Pages
Section 096816 – Sheet Carpeting ..... 7 Pages
Section 097200 – Wall Covering ..... 5 Pages
Section 099113 – Exterior Painting ..... 8 Pages
Section 099123 – Interior Painting ..... 9 Pages

DIVISION 10 – **SPECIALTIES** (**fpas**)

Section 101419 – Dimensional Letter Signage ..... 6 Pages
Section 101423 – Panel Signage ..... 8 Pages
Section 101426 – Post and Panel Signage ..... 8 Pages
Section 102113.19 – Plastic Toilet Compartments ..... 5 Pages
Section 102116.19 – Plastic Shower and Dressing Compartments ..... 6 Pages
Section 102239 – Folding Panel Partitions ..... 8 Pages
Section 102600 – Wall Protection ..... 6 Pages
Section 102800 – Toilet and Bath Accessories ..... 8 Pages
Section 104413 – Fire Protection Cabinets ..... 5 Pages
Section 104416 – Fire Extinguishers ..... 4 Pages
Section 105126 – Plastic Lockers ..... 8 Pages
Section 107300 – Aluminum Walkway Covers ..... 8 Pages

DIVISION 11 – **EQUIPMENT**

Section 113100 – Residential Appliances (**fpas**) ..... 6 Pages
Section 114000 – Foodservice Equipment (**msh**) ..... 27 Pages
Attachment 114001 – Foodservice Equipment Cutsheets (**msh**) ..... 194 Pages
Section 115213 – Projection Screens (**fpas**) ..... 3 Pages

DIVISION 12 – **FURNISHINGS** (**fpas**)

Section 122113 – Horizontal Louver Blinds ..... 6 Pages
Section 122413 – Roller Window Shades ..... 6 Pages
Section 123623.13 – Plastic-Laminate-Clad Countertops ..... 5 Pages
Section 123661.19 – Quartz Agglomerate Countertops ..... 4 Pages
Section 128413 – Entrance Floor Mats and Frames ..... 4 Pages

DIVISION 13 – **SPECIAL CONSTRUCTION**

Section 131200 – Fountains (**rf**) ..... 14 Pages
Cutsheets 131201 – Fountain Cutsheets (**rf**) ..... 16 Pages

DIVISION 14 – **CONVEYING EQUIPMENT** (Not Used)

VOLUME TWO

DIVISION 21 – **FIRE SUPPRESSION** (**cs**)

Section 210000 – Wet-Pipe Sprinkler Systems ..... 22 Pages

DIVISION 22 – **PLUMBING** (**me**)

Section 220513 – Common Motor Requirements for Plumbing Equipment ..... 2 Pages
Section 220516 – Expansion Fittings and Loops for Plumbing Piping ..... 4 Pages
Section 220517 – Sleeves and Sleeve Seals for Plumbing Piping ..... 5 Pages
Section 220518 – Escutcheons for Plumbing Piping ..... 2 Pages
Section 220523.12 – Ball Valves for Plumbing Piping ..... 3 Pages
Section 220523.14 – Check Valves for Plumbing Piping ..... 3 Pages
Section 220529 – Hangers and Supports for Plumbing Piping and Equipment ..... 9 Pages
Section 220553 – Identification for Plumbing Piping and Equipment ..... 4 Pages
Section 220719 – Plumbing Piping Insulation ..... 20 Pages
Section 221116 – Domestic Water Piping ..... 12 Pages
Section 221119 – Domestic Water Piping Specialties ..... 7 Pages
Section 221316 – Sanitary Waste and Vent Piping ..... 9 Pages
Section 221319 – Sanitary Waste Piping Specialties ..... 3 Pages
Section 221319.13 – Sanitary Drains ..... 2 Pages
Section 221413 – Facility Strom Drainage Piping ..... 7 Pages
Section 221423 – Storm Drainage Piping Specialties ..... 4 Pages
Section 223300 – Electric, Domestic-Water Heaters ..... 6 Pages
Section 223400 – Fuel-Fired, Domestic-Water Heaters ..... 8 Pages
Section 224213.13 – Commercial Water Closets ..... 4 Pages
Section 224213.16 – Commercial Urinals ..... 4 Pages
Section 224216.13 – Commercial Lavatories ..... 4 Pages
Section 224216.16 – Commercial Sinks ..... 6 Pages
Section 224716 – Pressure Water Coolers ..... 3 Pages

DIVISION 23 – **HEATING, VENTILATION, AND AIR CONDITIONING (HVAC)** (**me**)

Section 230513 – Common Motor Requirements for HVAC Equipment ..... 3 Pages
Section 230517 – Sleeves and Sleeve Seals for HVAC Piping ..... 4 Pages
Section 230518 – Escutcheons for HVAC Piping ..... 2 Pages
Section 230529 – Hangers and Supports for HVAC Piping and Equipment ..... 9 Pages
Section 230553 – Identification for HVAC Piping and Equipment ..... 3 Pages
Section 230593 – Testing, Adjusting and Balancing for HVAC ..... 18 Pages
Section 230713 – Duct Insulation ..... 13 Pages
Section 231123 – Facility Natural-Gas Piping ..... 10 Pages
Section 232300 – Refrigerant Piping ..... 10 Pages
Section 233113 – Metal Ducts ..... 12 Pages
Section 233300 – Air Duct Accessories ..... 10 Pages

Section 233346 – Flexible Ducts ..... 3 Pages
Section 233423 – HVAC Power Ventilators ..... 5 Pages
Section 233433.13 – Commercial Air Curtains ..... 5 Pages
Section 233600 – Air Terminal Units ..... 8 Pages
Section 233713.13 – Air Diffusers ..... 3 Pages
Section 233713.23 – Registers and Grilles ..... 3 Pages
Section 233723 – HVAC Gravity Ventilators ..... 4 Pages
Section 233813 – Commercial-Kitchen Hoods ..... 6 Pages
Section 235123 – Gas Vents ..... 2 Pages
Section 235533.16 – Gas-Fired Unit Heaters ..... 5 Pages
Section 237313.13 – Indoor, Basic Air-Handling Units ..... 7 Pages
Section 237416.11– Packaged, Small-Capacity, Rooftop Air-Conditioning Units ..... 9 Pages
Section 237433 – Dedicated Outdoor-Air Units ..... 16 Pages
Section 238113.11 – Packaged Terminal Air-Conditioners, Through-Wall Units ..... 4 Pages
Section 238126 – Split-System Air-Conditioners ..... 5 Pages
Section 238239.19 – Wall and Ceiling Unit Heaters ..... 3 Pages

DIVISION 26 – **ELECTRICAL** (**me**)

Section 260519 – Low-Voltage Electrical Conductors and Cables ..... 7 Pages
Section 260526 – Grounding and Bonding for Electrical Systems ..... 6 Pages
Section 260529 – Hangers and Supports for Electrical Systems ..... 4 Pages
Section 260533 – Raceway and Boxes for Electrical Systems ..... 12 Pages
Section 260544 – Sleeves and Sleeve Seals for Electrical Raceways and Cabling ..... 4 Pages
Section 260553 – Identification for Electrical Systems ..... 12 Pages
Section 260923 – Lighting Control Devices ..... 7 Pages
Section 262413 – Switchboards ..... 6 Pages
Section 262416 – Panelboards ..... 7 Pages
Section 262713 – Electricity Metering ..... 3 Pages
Section 262719 – Multi-Outlet Assemblies ..... 4 Pages
Section 262726 – Wiring Devices ..... 11 Pages
Section 262813 – Fuses ..... 2 Pages
Section 262816 – Enclosed Switches and Circuit Breakers ..... 7 Pages
Section 263213.13 – Diesel-Engine-Driven Generator Sets ..... 5 Pages
Section 263323.11 – Central Battery Equipment for Emergency Lighting ..... 5 Pages
Section 263343 – Battery Chargers ..... 3 Pages
Section 263600 – Transfer Switches ..... 6 Pages
Section 264113 – Lightning Protection for Structures ..... 2 Pages
Section 265119 – LED Interior Lighting ..... 6 Pages
Section 265213 – Emergency and Exit Lighting ..... 6 Pages
Section 265619 – LED Exterior Lighting ..... 6 Pages

DIVISION 27 – **COMMUNICATIONS** (**me**)

Document 270000 – STS-100 Telecommunications Wiring Guidelines.....45 Pages
Section 270526 – Grounding and Bonding for Communication Systems.....7 Pages
Section 270528 – Pathways for Communication Systems .....9 Pages
Section 270529 – Hangers and Supports for Communication Systems.....4 Pages
Section 270544 – Sleeves and Sleeve Seals for Communication Pathways and Cabling .....5 Pages

DIVISION 28 – **ELECTRONIC SAFETY AND SECURITY** (**me**)

Section 281500 – Access Control Hardware Devices .....4 Pages
Section 284621.11 – Addressable Fire-Alarm Systems .....19 Pages

DIVISION 31 – **EARTHWORK** (See Appendix for Cape Fear Public Utility Authority Specifications)

Section 312000 – Excavation and Grading (**tsg**) .....8 Pages
Section 313116 – Termite Control (**fpas**).....4 Pages
Section 315000 – Excavation Support Systems (**tsg**).....3 Pages

DIVISION 32 – **EXTERIOR IMPROVEMENTS** (See Appendix for Cape Fear Public Utility Authority Specifications)

Section 321216 – Asphalt Paving (**tsg**) .....7 Pages
Section 321313 – Portland Cement Concrete Paving (**tsg**).....9 Pages
Section 323117 – Ornamental Welded Wire Fencing and Gates (**fpas**).....11 Pages
Section 323119 – Decorative Metal Gates (**fpas**).....5 Pages
Section 329300 – Landscaping (**tsg**) .....4 Pages
Section 329400 – Modular Concrete Block Wall System (**tsg**) (New Section).....11 Pages

DIVISION 33 – **UTILITIES** (See Appendix for Cape Fear Public Utility Authority Specifications)

Section 331200 – Water Piping (**tsg**).....7 Pages
Section 333000 – Sanitary Sewers (**tsg**) .....5 Pages
Section 334100 – Storm Sewers (**tsg**).....5 Pages
Section 334600 – Subdrainage (**fpas**).....6 Pages

APPENDIX

CAPE FEAR PUBLIC UTILITY AUTHORITY SPECIFICATIONS

01 00 00 – CFPUA Table of Contents .....1 Page
01 00 10 – CFPUA Pre-Con Checklist .....3 Pages

Section 01 30 00 – Administrative Requirements ..... 5 Pages
Section 01 33 00 – Submittals ..... 5 Pages
Section 01 35 00 – Special Procedures ..... 8 Pages
Section 01 40 00 – Quality Requirements ..... 3 Pages
Section 01 60 00 – Product Requirements ..... 2 Pages
Section 01 70 00 – Execution and Closeout Requirements ..... 9 Pages
Section 02 41 00 – Demolition ..... 5 Pages
Section 02 82 13 – Asbestos Abatement for Utilities ..... 3 Pages
Section 31 23 34.01 – Excavating, Trenching, Dewatering and Backfilling for Utility Work ..... 21 Pages
Section 33 01 12 – Identification for Utilities Piping ..... 5 Pages
Section 33 01 30.86 – Manhole Rim Adjustment ..... 2 Pages
Section 33 05 05.31 – Hydrostatic Testing ..... 3 Pages
Section 33 05 07.23 – Jacking and Boring ..... 9 Pages
Section 33 05 09.33 – Thrust Restraint for Utility Piping ..... 3 Pages
Section 33 05 13 – Precast Concrete Manholes and Utility Structures ..... 7 Pages
Section 33 14 13 – Water Distribution Piping, Valves, Hydrants, and Appurtenances ..... 10 Pages
Section 33 14 14 – Public Water Service Connections ..... 7 Pages
Section 33 14 20 – Disinfection of Water Pipelines, Facilities, and Appurtenances ..... 8 Pages
Section 33 14 22 – Testing of Sanitary Sewer Mains and Manholes ..... 7 Pages
Section 33 31 11 – Sanitary Sewer Gravity Mains ..... 9 Pages

CAPE FEAR PUBLIC UTILITY AUTHORITY MATERIALS

Section A – Pipe ..... 18 Pages
Section B – Fittings and Accessories ..... 18 Pages
Section C – Joint Restraints ..... 13 Pages
Section D – Valves and Accessories ..... 19 Pages
Section E – Fire Hydrants ..... 3 Pages
Section F – Service Saddles and Tapping Devices ..... 7 Pages
Section G – Brass Service Materials ..... 11 Pages
Section H – Repair Sleeves Coupling Clamps & Non-Pressure Adapters ..... 9 Pages
Section I – Castings and Access Covers ..... 5 Pages
Section J – Service Boxes ..... 11 Pages
Section K – Miscellaneous ..... 10 Pages
Section L – Electrical ..... 4 Pages
Section M – Coatings and Sealants ..... 10 Pages
Section N – Concrete ..... 6 Pages
Section O – Structures ..... 10 Pages

END OF TABLE OF CONTENTS

SECTION 210000 - WET-PIPE SPRINKLER SYSTEMS

PART 1 - GENERAL

1.1 RELATED DOCUMENTS

A. Drawings and general provisions of the Contract, including General and Supplementary Conditions and Division 01 Specification Sections, apply to this Section.

1.2 SUMMARY

A. Section Includes:

1. Pipes, fittings, and specialties.
2. Fire-protection valves.
3. Fire-department connections.
4. Sprinklers.
5. Alarm devices.
6. Pressure gages.

1.3 DEFINITIONS

A. High-Pressure Sprinkler Piping: Wet-pipe sprinkler system piping designed to operate at working pressure higher than standard 175 psig, but not higher than 250 psig.

B. Standard-Pressure Sprinkler Piping: Wet-pipe sprinkler system piping designed to operate at working pressure of 175 psig maximum.

1.4 SYSTEM DESCRIPTIONS

A. Wet-Pipe Sprinkler System: Automatic sprinklers are attached to piping containing water and that is connected to water supply through alarm valve. Water discharges immediately from sprinklers when they are opened. Sprinklers open when heat melts fusible link or destroys frangible device. Hose connections are included if indicated.

1.5 PERFORMANCE REQUIREMENTS

A. Standard-Pressure Piping System Component: Listed for 175-psig minimum working pressure.

B. High-Pressure Piping System Component: Listed for 250-psig minimum working pressure.

1. Available fire-hydrant flow test records indicate the following conditions:

a. Date: 6/24/2020
b. Time: -
c. Performed by: Troy Davidson
d. Location of Residual Fire Hydrant: -
e. Location of Flow Fire Hydrant F: -
f. Static Pressure at Residual Fire Hydrant R: 65 psi
g. Measured Flow at Flow Fire Hydrant F: 1165 pgm
h. Residual Pressure at Residual Fire Hydrant R: 60 psi

C. Sprinkler system design shall be approved by authorities having jurisdiction.

1. Margin of Safety for Available Water Flow and Pressure: 10 psi, including losses through water-service piping, valves, and backflow preventers.

2. Sprinkler Occupancy Hazard Classifications:

a. Building Service Areas: Ordinary Hazard, Group 1
b. Electrical Equipment Rooms: Ordinary Hazard, Group 1
c. General Storage Areas: Ordinary Hazard, Group 1
d. Mechanical Equipment Rooms: Ordinary Hazard, Group 1
e. Office and Public Areas: Light Hazard
f. Restaurant Service Areas: Ordinary Hazard, Group 1

3. Minimum Density for Automatic-Sprinkler Piping Design:
a. Light-Hazard Occupancy: 0.10 gpm over 1500-sq. ft.
b. Ordinary-Hazard, Group 1 Occupancy: 0.15 gpm over 1500-sq. ft..
c. Ordinary-Hazard, Group 2 Occupancy: 0.20 gpm over 1500-sq. ft.

4. Maximum Protection Area per Sprinkler: Per UL listing.
5. Maximum Protection Area per Sprinkler:

a. Office Spaces: 225 sq. ft.
b. Storage Areas: 130 sq. ft.
c. Mechanical Equipment Rooms: 130 sq. ft.
d. Electrical Equipment Rooms: 130 sq. ft.
e. Other Areas: According to NFPA 13 recommendations unless otherwise indicated.

6. Total Combined Hose-Stream Demand Requirement: According to NFPA 13 unless otherwise indicated:

a. Light-Hazard Occupancies: 100 gpm for 30 minutes requirement.
b. Ordinary-Hazard Occupancies: 250 gpm for 60 to 90 minutes

D. Seismic Performance: Sprinkler piping shall withstand the effects of earthquake motions determined according to NFPA 13.

1.6 SUBMITTALS

A. Product Data: For each type of product indicated. Include rated capacities, operating characteristics, electrical characteristics, and furnished specialties and accessories.

B. Shop Drawings: For wet-pipe sprinkler systems. Include plans, elevations, sections, details, and attachments to other work.

1. Wiring Diagrams: For power, signal, and control wiring.

C. Coordination Drawings: Sprinkler systems, drawn to scale, on which the following items are shown and coordinated with each other, using input from installers of the items involved:

1. Domestic water piping.
2. HVAC duct.
3. HVAC piping.
4. Electrical conduit.
5. Items penetrating finished ceiling include the following:
    a. Lighting fixtures.
    b. HVAC diffusers.
    c. Fire alarm devices.
    d. Electrical Specialties

D. Qualification Data: For qualified Installer and design professionals.

E. Approved Sprinkler Piping Drawings: Working plans, prepared according to NFPA 13, that have been approved by authorities having jurisdiction, including hydraulic calculations if applicable.

F. Welding certificates.

G. Fire-hydrant flow test report.

H. Field Test Reports and Certificates: Indicate and interpret test results for compliance with performance requirements and as described in NFPA 13. Include "Contractor's Material and Test Certificate for Aboveground Piping."

I. Field quality-control reports.

J. Operation and Maintenance Data: For sprinkler specialties to include in emergency, operation, and maintenance manuals.

1.7 QUALITY ASSURANCE

A. Installer Qualifications:

1. Installer's responsibilities include designing, fabricating, and installing sprinkler systems and providing professional engineering services needed to assume engineering responsibility. Base calculations on results of fire-hydrant flow test.

a. Engineering Responsibility: Preparation of working plans, calculations, and field test reports by a qualified professional engineer.

B. Welding Qualifications: Qualify procedures and operators according to ASME Boiler and Pressure Vessel Code.

C. Electrical Components, Devices, and Accessories: Listed and labeled as defined in NFPA 70, by a qualified testing agency, and marked for intended location and application.

D. NFPA Standards: Sprinkler system equipment, specialties, accessories, installation, and testing shall comply with the following:

1. NFPA 13, "Installation of Sprinkler Systems."

1.8 PROJECT CONDITIONS

A. Do not interrupt sprinkler service to facilities occupied by Owner or others unless permitted under the following conditions and then only after arranging to provide temporary sprinkler service according to requirements indicated:

1. Notify Construction Manager no fewer than two days in advance of proposed interruption of sprinkler service.
2. Do not proceed with interruption of sprinkler service without Construction Manager's written permission.

1.9 COORDINATION

A. Coordinate layout and installation of sprinklers with other construction that penetrates ceilings, including light fixtures, HVAC equipment, and partition assemblies.

1.10 EXTRA MATERIALS

A. Furnish extra materials that match products installed and that are packaged with protective covering for storage and identified with labels describing contents.

1. Sprinkler Cabinets: Finished, wall-mounted, steel cabinet with hinged cover, and with space for minimum of six spare sprinklers plus sprinkler wrench. Include number of sprinklers required by NFPA 13 and sprinkler wrench. Include separate cabinet with sprinklers and wrench for each type of sprinkler used on Project.

PART 2 - PRODUCTS

2.1 PIPING MATERIALS

A. Comply with requirements in "Piping Schedule" Article for applications of pipe, tube, and fitting materials, and for joining methods for specific services, service locations, and pipe sizes.

2.2 STEEL PIPE AND FITTINGS

A. Schedule 40, Galvanized and Black Steel Pipe: ASTM A 135; ASTM A 795/A 795M, or ASME B36.10M, wrought steel; Pipe ends may be factory or field formed to match joining method.

A. Schedule 10, Black-Steel Pipe: ASTM A 135 or ASTM A 795/A 795M. Pipe ends may be factory or field formed to match joining method. d smaller.

B. Malleable- or Ductile-Iron Unions: UL 860.

C. Cast-Iron Flanges: ASME 16.1, Class 125.

D. Steel Flanges and Flanged Fittings: ASME B16.5, Class 150.

E. Steel Welding Fittings: ASTM A 234/A 234M and ASME B16.9.

F. Grooved-Joint, Steel-Pipe Appurtenances:

1. Manufacturers: Subject to compliance with requirements, provide products by one of the following available manufacturers offering products that may be incorporated into the Work include, but are not limited to, the following:

    a. Anvil International, Inc.
    b. Corcoran Piping System Co.
    c. National Fittings, Inc.
    d. Shurjoint Piping Products.
    e. Tyco Fire & Building Products LP.
    f. Victaulic Company.
    g. Viking Corporation

2. Pressure Rating: 175 psig minimum.
3. Galvanized and Uncoated, Grooved-End Fittings for Steel Piping: ASTM A 47/A 47M, malleable-iron casting or ASTM A 536, ductile-iron casting; with dimensions matching steel pipe.
4. Grooved-End-Pipe Couplings for Steel Piping: AWWA C606 and UL 213, rigid pattern, unless otherwise indicated, for steel-pipe dimensions. Include ferrous housing sections, EPDM-rubber gasket, and bolts and nuts.

2.3 PIPING JOINING MATERIALS

A. Pipe-Flange Gasket Materials: AWWA C110, rubber, flat face, 1/8 inch thick or ASME B16.21, nonmetallic and asbestos free.

1. Class 125, Cast-Iron Flanges and Class 150, Bronze Flat-Face Flanges: Full-face gaskets.
2. Class 250, Cast-Iron Flanges and Class 300, Steel Raised-Face Flanges: Ring-type gaskets.

B. Metal, Pipe-Flange Bolts and Nuts: ASME B18.2.1, carbon steel unless otherwise indicated.

C. Welding Filler Metals: Comply with AWS D10.12M/D10.12 for welding materials appropriate for wall thickness and chemical analysis of steel pipe being welded.

2.4 LISTED FIRE-PROTECTION VALVES

A. General Requirements:

1. Valves shall be UL listed or FM approved.
2. Minimum Pressure Rating for Standard-Pressure Piping: 175 psig.
3. Minimum Pressure Rating for High-Pressure Piping: 250 psig.

B. Ball Valves:

1. Manufacturers: Subject to compliance with requirements, provide products by one of the following available manufacturers offering products that may be incorporated into the work include, but are not limited to, the following:

    a. Anvil International, Inc.
    b. Victaulic Company.
    c. Nibco

2. Standard: UL 1091 except with ball instead of disc.
3. Valves NPS 1-1/2 and Smaller: Bronze body with threaded ends.
4. Valves NPS 2 and NPS 2-1/2: Bronze body with threaded ends or ductile-iron body with grooved ends.
5. Valves NPS 3: Ductile-iron body with grooved ends.

C. Iron Butterfly Valves:

1. Manufacturers: Subject to compliance with requirements, provide products by one of the following available manufacturers offering products that may be incorporated into the work include, but are not limited to the following:

    a. Anvil International, Inc.
    b. Fivalco Inc.
    c. Global Safety Products, Inc.
    d. Kennedy Valve; a division of McWane, Inc.

e. Milwaukee Valve Company.
f. NIBCO INC.
g. Pratt, Henry Company.
h. Shurjoint Piping Products.
i. Tyco Fire & Building Products LP.
j. Victaulic Company.

2. Standard: UL 1091.
3. Pressure Rating: 175 psig.
4. Body Material: Cast or ductile iron.
5. Style: Lug or wafer.
6. End Connections: Grooved.

D. Check Valves:

1. Manufacturers: Subject to compliance with requirements, provide products by one of the following available manufacturers offering products that may be incorporated into the work include, but are not limited to, the following:

a. AFAC Inc.
b. American Cast Iron Pipe Company; Waterous Company Subsidiary.
c. Anvil International, Inc.
d. Clow Valve Company; a division of McWane, Inc.
e. Crane Co.; Crane Valve Group; Crane Valves.
f. Crane Co.; Crane Valve Group; Jenkins Valves.
g. Crane Co.; Crane Valve Group; Stockham Division.
h. Fire-End & Croker Corporation.
i. Fire Protection Products, Inc.
j. Fivalco Inc.
k. Globe Fire Sprinkler Corporation.
l. Groeniger & Company.
m. Kennedy Valve; a division of McWane, Inc.
n. Matco-Norca.
o. Metraflex, Inc.
p. Milwaukee Valve Company.
q. Mueller Co.; Water Products Division.
r. NIBCO INC.
s. Potter Roemer.
t. Reliable Automatic Sprinkler Co., Inc.
u. Shurjoint Piping Products.
v. Tyco Fire & Building Products LP.
w. United Brass Works, Inc.
x. Venus Fire Protection Ltd.
y. Victaulic Company.
z. Viking Corporation.
aa. Watts Water Technologies, Inc.

2. Standard: UL 312.

3. Pressure Rating: 250 psig minimum.
4. Type: Swing check.
5. Body Material: Cast iron.
6. End Connections: Flanged or grooved.

E. Bronze OS&Y Gate Valves:

1. Manufacturers: Subject to compliance with requirements, provide products by one of the following available manufacturers offering products that may be incorporated into the Work include, but are not limited to the following:

    a. Crane Co.; Crane Valve Group; Crane Valves.
    b. Crane Co.; Crane Valve Group; Stockham Division.
    c. Milwaukee Valve Company.
    d. NIBCO INC.
    e. United Brass Works, Inc.

2. Standard: UL 262.
3. Pressure Rating: 175 psig.
4. Body Material: Bronze.
5. End Connections: Threaded.

F. Iron OS&Y Gate Valves:

1. Manufacturers: Subject to compliance with requirements, provide products by one of the following available manufacturers offering products that may be incorporated into the Work include, but are not limited to the following:

    a. American Cast Iron Pipe Company; Waterous Company Subsidiary.
    b. American Valve, Inc.
    c. Clow Valve Company; a division of McWane, Inc.
    d. Crane Co.; Crane Valve Group; Crane Valves.
    e. Crane Co.; Crane Valve Group; Jenkins Valves.
    f. Crane Co.; Crane Valve Group; Stockham Division.
    g. Hammond Valve.
    h. Milwaukee Valve Company.
    i. Mueller Co.; Water Products Division.
    j. NIBCO INC.
    k. Shurjoint Piping Products.
    l. Tyco Fire & Building Products LP.
    m. United Brass Works, Inc.
    n. Watts Water Technologies, Inc.

2. Standard: UL 262.
3. Pressure Rating: 250 psig minimum.
4. Body Material: Cast or ductile iron.
5. End Connections: Flanged or grooved.

G. Indicating-Type Butterfly Valves:

1. Manufacturers: Subject to compliance with requirements, provide products by one of the following available manufacturers offering products that may be incorporated into the Work include, but are not limited to, the following:

    a. Anvil International, Inc.
    b. Fivalco Inc.
    c. Global Safety Products, Inc.
    d. Kennedy Valve; a division of McWane, Inc.
    e. Milwaukee Valve Company.
    f. NIBCO INC.
    g. Shurjoint Piping Products.
    h. Tyco Fire & Building Products LP.
    i. Victaulic Company.

2. Standard: UL 1091.
3. Pressure Rating: 175 psig minimum.
4. Valves NPS 2 and Smaller:

    a. Valve Type: Ball or butterfly.
    b. Body Material: Bronze.
    c. End Connections: Threaded.

5. Valves NPS 2-1/2 and Larger:

    a. Valve Type: Butterfly.
    b. Body Material: Cast or ductile iron.
    c. End Connections: Flanged, grooved, or wafer.

6. Valve Operation: Integral electrical, 115-V ac, prewired, electrical, 115-V ac, prewired, two-circuit, supervisory switch visual indicating device.

H. NRS Gate Valves:

1. Manufacturers: Subject to compliance with requirements, provide products by one of the following available manufacturers offering products that may be incorporated into the work include, but are not limited to, the following:

    a. American Cast Iron Pipe Company; Waterous Company Subsidiary.
    b. American Valve, Inc.
    c. Clow Valve Company; a division of McWane, Inc.
    d. Crane Co.; Crane Valve Group; Stockham Division.
    e. Kennedy Valve; a division of McWane, Inc.
    f. Mueller Co.; Water Products Division.
    g. NIBCO INC.
    h. Tyco Fire & Building Products LP.

2. Standard: UL 262.
3. Pressure Rating: 250 psig minimum.
4. Body Material: Cast iron with indicator post flange.
5. Stem: Non-rising.
6. End Connections: Flanged or grooved.

I. Indicator Posts:

1. Manufacturers: Subject to compliance with requirements, provide products by one of the following available manufacturers offering products that may be incorporated into the work include, but are not limited to, the following:

    a. American Cast Iron Pipe Company; Waterous Company Subsidiary.
    b. American Valve, Inc.
    c. Clow Valve Company; a division of McWane, Inc.
    d. Crane Co.; Crane Valve Group; Stockham Division.
    e. Kennedy Valve; a division of McWane, Inc.
    f. Mueller Co.; Water Products Division.
    g. NIBCO INC.
    h. Tyco Fire & Building Products LP.

2. Standard: UL 789.
3. Type: Horizontal for wall mounting.
4. Body Material: Cast iron with extension rod and locking device.
5. Operation: Wrench or Hand Wheel.

2.5 TRIM AND DRAIN VALVES

A. General Requirements:

1. Standard: UL's "Fire Protection Equipment Directory" listing or "Approval Guide," published by FM Global, listing.
2. Pressure Rating: 175 psig minimum.

B. Angle Valves:

1. Manufacturers: Subject to compliance with requirements, provide products by one of the following available manufacturers offering products that may be incorporated into the work include, but are not limited to, the following:

    a. Fire Protection Products, Inc.
    b. United Brass Works, Inc.
    c. NIBCO

C. Ball Valves:

1. Manufacturers: Subject to compliance with requirements, provide products by one of the following available manufacturers offering products that may be incorporated into the work include, but are not limited to, the following:

    a. Affiliated Distributors.
    b. Anvil International, Inc.
    c. Barnett.
    d. Conbraco Industries, Inc.; Apollo Valves.
    e. Fire-End & Croker Corporation.
    f. Fire Protection Products, Inc.
    g. Flowserve.
    h. FNW.
    i. Jomar International, Ltd.
    j. Kennedy Valve; a division of McWane, Inc.
    k. Kitz Corporation.
    l. Legend Valve.
    m. Metso Automation USA Inc.
    n. Milwaukee Valve Company.
    o. NIBCO INC.
    p. Potter Roemer.
    q. Red-White Valve Corporation.
    r. Southern Manufacturing Group.
    s. Stewart, M. A. and Sons Ltd.
    t. Tyco Fire & Building Products LP.
    u. Victaulic Company.
    v. Watts Water Technologies, Inc.

D. Globe Valves:

1. Manufacturers: Subject to compliance with requirements, provide products by one of the following available manufacturers offering products that may be incorporated into the Work include, but are not limited to, the following:

    a. Fire Protection Products, Inc.
    b. United Brass Works, Inc.
    c. NIBCO

2.6 SPECIALTY VALVES

A. General Requirements:

1. Standard: UL's "Fire Protection Equipment Directory" listing or "Approval Guide," published by FM Global, listing.
2. Pressure Rating:

    a. Standard-Pressure Piping Specialty Valves: 175 psig minimum.
    b. High-Pressure Piping Specialty Valves: 250 psig minimum.

3. Body Material: Cast or ductile iron.

4. Size: Same as connected piping.
5. End Connections: Flanged or grooved.

B. Riser Check Valves:

1. Manufacturers: Subject to compliance with requirements, provide products by one of the following available manufacturers offering products that may be incorporated into the work include, but are not limited to, the following:

   a. AFAC Inc.
   b. Globe Fire Sprinkler Corporation.
   c. Reliable Automatic Sprinkler Co., Inc.
   d. Tyco Fire & Building Products LP.
   e. Venus Fire Protection Ltd.
   f. Victaulic Company.
   g. Viking Corporation.

2. Standard: UL 193.
3. Design: For horizontal or vertical installation.
4. Include trim sets.

C. Automatic (Ball Drip) Drain Valves:

1. Manufacturers: Subject to compliance with requirements, provide products by one of the following available manufacturers offering products that may be incorporated into the work include, but are not limited to, the following:

   a. AFAC Inc.
   b. Reliable Automatic Sprinkler Co., Inc.
   c. Tyco Fire & Building Products LP.

2. Standard: UL 1726.
3. Pressure Rating: 175 psig minimum.
4. Type: Automatic draining, ball check.
5. Size: NPS 3/4.
6. End Connections: Threaded.

2.7 FIRE-DEPARTMENT CONNECTIONS

A. Exposed-Type, Fire-Department Connection:

1. Manufacturers: Subject to compliance with requirements, provide products by one of the following available manufacturers offering products that may be incorporated into the work include, but are not limited to, the following:

   a. AFAC Inc.
   b. Elkhart Brass Mfg. Company, Inc.
   c. Fire-End & Croker Corporation.

d. Fire Protection Products, Inc.
e. GMR International Equipment Corporation.
f. Guardian Fire Equipment, Inc.
g. Tyco Fire & Building Products LP.
h. Wilson & Cousins Inc.

2. Standard: UL 405.
3. Type: Exposed, projecting, for wall mounting.
4. Pressure Rating: 175 psig minimum.
5. Body Material: Corrosion-resistant metal.
6. Inlets: 2.5" Brass Siamese Connection in accordance of local AHJ requirements
7. Cap: Lugged type, with gasket and chain.
8. Escutcheon Plate: Round, brass, wall type.
9. Outlet: Back, with pipe threads.
10. Number of Inlets: One.
11. Escutcheon Plate Marking: Similar to AUTO SPKR & STANDPIPE
12. Finish: Rough aluminum.
13. Outlet Size: NPS 4.

2.8 SPRINKLER SPECIALTY PIPE FITTINGS

A. Branch Outlet Fittings:

1. Manufacturers: Subject to compliance with requirements, provide products by one of the following available manufacturers offering products that may be incorporated into the work include, but are not limited to the following:

a. Anvil International, Inc.
b. National Fittings, Inc.
c. Shurjoint Piping Products.
d. Tyco Fire & Building Products LP.
e. Victaulic Company.
f.

2. Standard: UL 213.
3. Pressure Rating: 175 psig minimum.
4. Body Material: Ductile-iron housing with EPDM seals and bolts and nuts.
5. Type: Mechanical-T and -cross fittings.
6. Size: Of dimension to fit onto sprinkler main and with outlet connections as required to match connected branch piping.
7. Branch Outlets: Grooved, or threaded.

B. Flow Detection and Test Assemblies:

1. Manufacturers: Subject to compliance with requirements, provide products by one of the following available manufacturers offering products that may be incorporated into the work include, but are not limited to, the following:

a. AGF Manufacturing Inc.

b. Reliable Automatic Sprinkler Co., Inc.
c. Tyco Fire & Building Products LP.
d. Victaulic Company.
e. Potter Signal

2. Standard: UL's "Fire Protection Equipment Directory" listing or "Approval Guide," published by FM Global, listing.
3. Pressure Rating: 175 psig minimum.
4. Body Material: Cast- or ductile-iron housing with orifice, sight glass, and integral test valve.
5. Size: Same as connected piping.
6. Inlet and Outlet: Threaded.

C. Sprinkler Inspector's Test Fittings:

1. Manufacturers: Subject to compliance with requirements, provide products by one of the following available manufacturers offering products that may be incorporated into the Work include, but are not limited to, the following:

a. AGF Manufacturing Inc.
b. Triple R Specialty.
c. Tyco Fire & Building Products LP.
d. Victaulic Company.
e. Viking Corporation.

2. Standard: UL's "Fire Protection Equipment Directory" listing or "Approval Guide," published by FM Global, listing.
3. Pressure Rating: 175 psi minimum.
4. Body Material: Cast- or ductile-iron housing with sight glass.
5. Size: Same as connected piping.
6. Inlet and Outlet: Threaded.

2.9 SPRINKLERS

A. Manufacturers: Subject to compliance with requirements, provide products by one of the following available manufacturers offering products that may be incorporated into the Work include, but are not limited to, the following:

1. AFAC Inc.
2. Globe Fire Sprinkler Corporation.
3. Reliable Automatic Sprinkler Co., Inc.
4. Tyco Fire & Building Products LP.
5. Venus Fire Protection Ltd.
6. Victaulic Company.
7. Viking Corporation.

B. General Requirements:

1. Standard: UL's "Fire Protection Equipment Directory" listing or "Approval Guide," published by FM Global, listing.
2. Pressure Rating for Automatic Sprinklers: 175 psig minimum.

C. Automatic Sprinklers with Heat-Responsive Element:

1.
2. Nonresidential Applications: UL 199
3. Characteristics: Nominal 1/2-inch orifice with Discharge Coefficient K of 5.6, and for "Ordinary" temperature classification rating unless otherwise indicated or required by application.

D. Open Sprinklers with Heat-Responsive Element Removed: UL 199.

1. Characteristics:

a. Nominal 1/2-inch Orifice: With Discharge Coefficient K 5.6

E. Sprinkler Finishes:

1. Chrome plated.
2. Bronze.
3. Painted.

F. Special Coatings:

1. Wax.
2. Lead.
3. Corrosion-resistant paint.

G. Sprinkler Escutcheons: Materials, types, and finishes for the following sprinkler mounting applications. Escutcheons for concealed, flush, and recessed-type sprinklers are specified with sprinklers.
1. Ceiling Mounting-Recessed: Chrome-plated steel, semi-recessed.
2. Ceiling Mounted-Concealed: White cover plate
3. Sidewall Mounting: Chrome-plated steel, semi-recessed.

H. Sprinkler Guards:

1. Manufacturers: Subject to compliance with requirements, [provide products by one of the following] [available manufacturers offering products that may be incorporated into the Work include, but are not limited to, the following]:

a. Reliable Automatic Sprinkler Co., Inc.
b. Tyco Fire & Building Products LP.
c. Victaulic Company.
d. Viking Corporation.

2. Standard: UL 199.

3. Type: Wire cage with fastening device for attaching to sprinkler.

2.10 ALARM DEVICES

A. Alarm-device types shall match piping and equipment connections.

B. Electrically Operated Alarm Bell:

1. Manufacturers: Subject to compliance with requirements, provide products by one of the following available manufacturers offering products that may be incorporated into the work include, but are not limited to the following:

   a. Fire-Lite Alarms, Inc.; a Honeywell company.
   b. Notifier; a Honeywell company.
   c. Potter Electric Signal Company.

2. Standard: UL 464.
3. Type: Vibrating, metal alarm bell.
4. Size: 6-inch minimum diameter.
5. Finish: Red-enamel factory finish, suitable for outdoor use.

C. Water-Flow Indicators:

1. Manufacturers: Subject to compliance with requirements, provide products by one of the following available manufacturers offering products that may be incorporated into the work include, but are not limited to the following:

   a. ADT Security Services, Inc.
   b. McDonnell & Miller; ITT Industries.
   c. Potter Electric Signal Company.
   d. System Sensor; a Honeywell company.
   e. Viking Corporation.
   f. Watts Industries (Canada) Inc.

2. Standard: UL 346.
3. Water-Flow Detector: Electrically supervised.
4. Components: Two single-pole, double-throw circuit switches for isolated alarm and auxiliary contacts, 7 A, 125-V ac and 0.25 A, 24-V dc; complete with factory-set, field-adjustable retard element to prevent false signals and tamperproof cover that sends signal if removed.
5. Type: Paddle operated.
6. Pressure Rating: 250 psig.
7. Design Installation: Horizontal or vertical.

D. Valve Supervisory Switches:

1. Manufacturers: Subject to compliance with requirements, provide products by one of the following available manufacturers offering products that may be incorporated into the work include, but are not limited to the following:

    a. Fire-Lite Alarms, Inc.; a Honeywell company.
    b. Kennedy Valve; a division of McWane, Inc.
    c. Potter Electric Signal Company.
    d. System Sensor; a Honeywell company.

2. Standard: UL 346.
3. Type: Electrically supervised.
4. Components: Single-pole, double-throw switch with normally closed contacts.
5. Design: Signals that controlled valve is in other than fully open position.

2.11 PRESSURE GAGES

A. Manufacturers: Subject to compliance with requirements, provide products by one of the following available manufacturers offering products that may be incorporated into the Work include, but are not limited to, the following:

1. AMETEK; U.S. Gauge Division.
2. Ashcroft, Inc.
3. Brecco Corporation.
4. WIKA Instrument Corporation.

B. Standard: UL 393.

C. Dial Size: 3-1/2- to 4-1/2-inch diameter.

D. Pressure Gage Range: 0 to 250 psig minimum.

E. Water System Piping Gage: Include "WATER" or "AIR/WATER" label on dial face.

PART 3 - EXECUTION

3.1 PREPARATION

A. Perform fire-hydrant flow test according to NFPA 13 and NFPA 291. Use results for system design calculations required in "Quality Assurance" Article.

B. Report test results promptly and in writing.

3.2 SERVICE-ENTRANCE PIPING

A. Connect sprinkler piping to water-service piping for service entrance to building.

B. Install reduced pressure detector backflow preventer, pressure gage, drain, and other accessories indicated at connection to water-service piping.

3.3 PIPING INSTALLATION

A. Locations and Arrangements: Drawing plans, schematics, and diagrams indicate general location and arrangement of piping. Install piping as indicated, as far as practical.

1. Deviations from approved working plans for piping require written approval from authorities having jurisdiction. File written approval with Architect before deviating from approved working plans.

B. Piping Standard: Comply with requirements for installation of sprinkler piping in NFPA 13.

C. Comply with requirements for seismic-restraint device materials and installation in NFPA 13.

D. Use listed fittings to make changes in direction, branch takeoffs from mains, and reductions in pipe sizes.

E. Install unions adjacent to each valve in pipes NPS 2 and smaller.

F. Install flanges, flange adapters, or couplings for grooved-end piping on valves, apparatus, and equipment having NPS 2-1/2 and larger end connections.

G. Install "Inspector's Test Connections" in sprinkler system piping, complete with shutoff valve, and sized and located according to NFPA 13.

H. Install sprinkler piping with drains for complete system drainage.

I. Install sprinkler control valves, test assemblies, and drain risers adjacent to standpipes when sprinkler piping is connected to standpipes.

J. Install automatic (ball drip) drain valve at each check valve for fire-department connection, to drain piping between fire-department connection and check valve. Install drain piping to and spill over floor drain or to outside building.

K. Install alarm devices in piping systems.

L. Install hangers and supports for sprinkler system piping according to NFPA 13. Comply with requirements for hanger materials in NFPA 13.

M. Install pressure gages on riser or feed main, at each sprinkler test connection, and at top of each standpipe. Include pressure gages with connection not less than NPS 1/4 and with soft metal seated globe valve, arranged for draining pipe between gage and valve. Install gages to permit removal, and install where they will not be subject to freezing.

N. Fill sprinkler system piping with water.

O. Install sleeves for piping penetrations of walls, ceilings, and floors. Comply with requirements for sleeves specified in Section 210517 "Sleeves and Sleeve Seals for Fire-Suppression Piping."

P. Install sleeve seals for piping penetrations of concrete walls and slabs. Comply with requirements for sleeve seals specified in Section 210517 "Sleeves and Sleeve Seals for Fire-Suppression Piping."

Q. Install escutcheons for piping penetrations of walls, ceilings, and floors. Comply with requirements for escutcheons specified in Section 210518 "Escutcheons for Fire-Suppression Piping."

3.4 JOINT CONSTRUCTION

A. Install couplings, flanges, flanged fittings, unions, nipples, and transition and special fittings that have finish and pressure ratings same as or higher than system's pressure rating for aboveground applications unless otherwise indicated.

B. Install unions adjacent to each valve in pipes NPS 2 and smaller.

C. Install flanges, flange adapters, or couplings for grooved-end piping on valves, apparatus, and equipment having NPS 2-1/2 and larger end connections.

D. Ream ends of pipes and tubes and remove burrs. Bevel plain ends of steel pipe.

E. Remove scale, slag, dirt, and debris from inside and outside of pipes, tubes, and fittings before assembly.

F. Flanged Joints: Select appropriate gasket material in size, type, and thickness suitable for water service. Join flanges with gasket and bolts according to ASME B31.9.

G. Threaded Joints: Thread pipe with tapered pipe threads according to ASME B1.20.1. Cut threads full and clean using sharp dies. Ream threaded pipe ends to remove burrs and restore full ID. Join pipe fittings and valves as follows:

1. Apply appropriate tape or thread compound to external pipe threads.
2. Damaged Threads: Do not use pipe or pipe fittings with threads that are corroded or damaged.

H. Welded Joints: Construct joints according to AWS D10.12M/D10.12, using qualified processes and welding operators according to "Quality Assurance" Article.

1. Shop weld pipe joints where welded piping is indicated. Do not use welded joints for galvanized-steel pipe.

I. Steel-Piping, Cut-Grooved Joints: Cut square-edge groove in end of pipe according to AWWA C606. Assemble coupling with housing, gasket, lubricant, and bolts. Join steel pipe and grooved-end fittings according to AWWA C606 for steel-pipe joints.

J. Steel-Piping, Roll-Grooved Joints: Roll rounded-edge groove in end of pipe according to AWWA C606. Assemble coupling with housing, gasket, lubricant, and bolts. Join steel pipe and grooved-end fittings according to AWWA C606 for steel-pipe grooved joints.

K. Dissimilar-Material Piping Joints: Make joints using adapters compatible with materials of both piping systems.

3.5 VALVE AND SPECIALTIES INSTALLATION

A. Install listed fire-protection valves, trim and drain valves, specialty valves and trim, controls, and specialties according to NFPA 13 and authorities having jurisdiction.

B. Install listed fire-protection shutoff valves supervised open, located to control sources of water supply except from fire-department connections. Install permanent identification signs indicating portion of system controlled by each valve.

C. Install RPDA backflow preventers instead of check valves in potable-water-supply sources.

3.6 SPRINKLER INSTALLATION

A. Install sprinklers in suspended ceilings in center of acoustical ceiling panels.

B. Install dry-type sprinklers with water supply from heated space. Do not install pendent or sidewall, wet-type sprinklers in areas subject to freezing.

3.7 FIRE-DEPARTMENT CONNECTION INSTALLATION

A. Install wall-type, fire-department connections.

B. Install automatic (ball drip) drain valve at each check valve for fire-department connection.

3.8 IDENTIFICATION

A. Install labeling and pipe markers on equipment and piping according to requirements in NFPA 13.

3.9 FIELD QUALITY CONTROL

A. Perform tests and inspections.

B. Tests and Inspections:

1. Leak Test: After installation, charge systems and test for leaks. Repair leaks and retest until no leaks exist.

2. Test and adjust controls and safeties. Replace damaged and malfunctioning controls and equipment.
3. Flush, test, and inspect sprinkler systems according to NFPA 13, "Systems Acceptance" Chapter.
4. Coordinate with fire-alarm tests. Operate as required.
5. Coordinate with fire-pump tests. Operate as required.
6. Verify that equipment hose threads are same as local fire-department equipment.

C. Sprinkler piping system will be considered defective if it does not pass tests and inspections.

D. Prepare test and inspection reports.

3.10 CLEANING

A. Clean dirt and debris from sprinklers.

B. Remove and replace sprinklers with paint other than factory finish.

3.11 DEMONSTRATION

A. Engage a factory-authorized service representative to train Owner's maintenance personnel to adjust, operate, and maintain specialty valves and pressure-maintenance pumps.

3.12 PIPING SCHEDULE

A. Piping between Fire-Department Connections and Check Valves: Galvanized, standard-weight steel pipe with threaded ends; grooved ends joints.

B. Standard-pressure, wet-pipe sprinkler system, NPS 2 and smaller shall be one of the following:

1. Schedule 40, black-steel pipe with threaded ends; uncoated, gray-iron threaded fittings; and threaded joints.
2. Schedule 10, black-steel pipe with roll-grooved ends; uncoated, grooved-end fittings for steel piping; grooved-end-pipe couplings for steel piping; and grooved joints.

C. Standard-pressure, wet-pipe sprinkler system, NPS 2-1/2 to NPS 8 shall be the following:
1. Schedule 10 black-steel pipe with roll-grooved ends; uncoated, grooved-end fittings for steel piping; grooved-end-pipe couplings for steel piping; and grooved joints.

3.13 SPRINKLER SCHEDULE

A. Use sprinkler types in subparagraphs below for the following applications:

1. Rooms without Ceilings: Upright sprinklers.
2. Rooms with Suspended Ceilings: Recessed sprinklers, Concealed sprinklers as indicated].

3. Wall Mounting: Sidewall sprinklers.
4. Spaces Subject to Freezing: Upright, pendent, dry sprinklers; and sidewall, dry sprinklers as indicated.

B. Provide sprinkler types in subparagraphs below with finishes indicated.

1. Concealed Sprinklers: Rough brass, with factory-painted white cover plate.
2. Recessed Sprinklers: Bright chrome, with bright chrome escutcheon.
3. Upright Sprinklers: Rough brass
4. Sidewall Sprinklers: Chrome plated in finished spaces exposed to view; rough bronze in unfinished spaces not exposed to view; wax coated where exposed to acids, chemicals, or other corrosive fumes.

END OF SECTION 210000

SECTION 220513 - COMMON MOTOR REQUIREMENTS FOR PLUMBING EQUIPMENT

TIPS:

To view non-printing **Editor's Notes** that provide guidance for editing, click on MasterWorks/Single-File Formatting/Toggle/Editor's Notes.

To read **detailed research, technical information about products and materials, and coordination checklists**, click on MasterWorks/Supporting Information.

Content Requests:

<Double click here to submit questions, comments, or suggested edits to this Section.>

PART 1 - GENERAL

1.1 SUMMARY

A. Section includes general requirements for single-phase and polyphase, general-purpose, horizontal, small and medium, squirrel-cage induction motors for use on alternating-current power systems up to 600 V and installed at equipment manufacturer's factory or shipped separately by equipment manufacturer for field installation.

1.2 COORDINATION

A. Coordinate features of motors, installed units, and accessory devices to be compatible with the following:

1. Motor controllers.
2. Torque, speed, and horsepower requirements of the load.
3. Ratings and characteristics of supply circuit and required control sequence.
4. Ambient and environmental conditions of installation location.

PART 2 - PRODUCTS

2.1 GENERAL MOTOR REQUIREMENTS

A. Comply with NEMA MG 1 unless otherwise indicated.

2.2 MOTOR CHARACTERISTICS

A. Duty: Continuous duty at ambient temperature of 40 deg C and at altitude of 3300 feet above sea level.

B. Capacity and Torque Characteristics: Sufficient to start, accelerate, and operate connected loads at designated speeds, at installed altitude and environment, with indicated operating sequence, and without exceeding nameplate ratings or considering service factor.

2.3 SINGLE-PHASE MOTORS

A. Motors larger than 1/20 hp shall be one of the following, to suit starting torque and requirements of specific motor application:

1. Permanent-split capacitor.
2. Split phase.
3. Capacitor start, inductor run.
4. Capacitor start, capacitor run.

B. Multispeed Motors: Variable-torque, permanent-split-capacitor type.

C. Bearings: Prelubricated, antifriction ball bearings or sleeve bearings suitable for radial and thrust loading.

D. Motors 1/20 HP and Smaller: Shaded-pole type.

E. Thermal Protection: Internal protection to automatically open power supply circuit to motor when winding temperature exceeds a safe value calibrated to temperature rating of motor insulation. Thermal-protection device shall automatically reset when motor temperature returns to normal range.

PART 3 - EXECUTION (Not Applicable)

END OF SECTION 220513

SECTION 220516 - EXPANSION FITTINGS AND LOOPS FOR PLUMBING PIPING

PART 1 - GENERAL

1.1 SUMMARY

A. Section Includes:

1. Packless expansion joints.
2. Alignment guides and anchors.

PART 2 - PRODUCTS

2.1 PERFORMANCE REQUIREMENTS

A. Compatibility: Products shall be suitable for piping service fluids, materials, working pressures, and temperatures.

B. Capability: Products to absorb 200 percent of maximum axial movement between anchors.

2.2 PACKLESS EXPANSION JOINTS

A. Rubber Union Connector Expansion Joints:
1. Material: Twin reinforced-rubber spheres
2. Minimum Pressure Rating: 150 psig at 170 deg F unless otherwise indicated.
3. End Connections for NPS 2 and Smaller: Threaded.

B. Flexible-Hose Packless Expansion Joints:
1. Description: Manufactured assembly with inlet and outlet elbow fittings and two flexible-metal-hose legs joined by long-radius, 180-degree return bend or center section of flexible hose.
2. Flexible Hose: Corrugated-metal inner hoses and braided outer sheaths.
3. Expansion Joints for Copper Tubing NPS 2 and Smaller: Copper-alloy fittings with solder-joint end connections.

    a. Bronze hoses and single-braid bronze sheaths with 450 psig at 70 deg F and 340 psig at 450 deg F ratings.

4. Expansion Joints for Copper Tubing NPS 2-1/2 to NPS 4: Copper-alloy fittings with threaded end connections.

    a. Stainless-steel hoses and single-braid, stainless-steel sheaths with 300 psig at 70 deg F and 225 psig at 450 deg F ratings.

5. Expansion Joints for Steel Piping NPS 2 and Smaller: Carbon-steel fittings with threaded end connections.

    a. Stainless-steel hoses and single-braid, stainless-steel sheaths with 450 psig at 70 deg F and 325 psig at 600 deg F ratings.

6. Expansion Joints for Steel Piping NPS 2-1/2 to NPS 6: Carbon-steel fittings with flanged end connections.

    a. Stainless-steel hoses and single-braid, stainless-steel sheaths with 200 psig at 70 deg F and 145 psig at 600 deg F ratings.

C. Externally Pressurized Metal-Bellows Packless Expansion Joints:
1. Minimum Pressure Rating: 150 psig, unless otherwise indicated.
2. Description:

    a. Totally enclosed, externally pressurized, multi-ply, stainless-steel bellows isolated from fluid flow by an internal pipe sleeve.
    b. Carbon-steel housing.
    c. Drain plugs and lifting lug for NPS 3 and larger.
    d. Bellows shall have operating clearance between the internal pipe sleeves and the external shrouds.
    e. Joints shall be supplied with a built-in scale to confirm the starting position and operating movement.
    f. Joint Axial Movement: 4 inches of compression and 0.75 inch of extension.

3. Permanent Locking Bolts: Set locking bolts to maintain joint lengths during installation. Temporary welding tabs that are removed after installation in lieu of locking bolts are not acceptable.
4. End Connection Configuration: Flanged; one raised, fixed and one floating flange.

2.3 ALIGNMENT GUIDES AND ANCHORS

A. Alignment Guides:
1. Description: Steel, factory-fabricated alignment guide, with bolted two-section outer cylinder and base for attaching to structure; with two-section guiding slider for bolting to pipe.

B. Anchor Materials:

1. Steel Shapes and Plates: ASTM A36/A36M.
2. Bolts and Nuts: ASME B18.10 or ASTM A183, steel hex head.
3. Washers: ASTM F844, steel, plain, flat washers.
4. Mechanical Fasteners: Insert-wedge-type stud with expansion plug anchor for use in hardened portland cement concrete, with tension and shear capacities appropriate for application.

    a. Stud: Threaded, zinc-coated carbon steel.
    b. Expansion Plug: Zinc-coated steel.

c. Washer and Nut: Zinc-coated steel.

5. Chemical Fasteners: Insert-type stud, bonding-system anchor for use with hardened portland cement concrete, with tension and shear capacities appropriate for application.

   a. Bonding Material: ASTM C881/C881M, Type IV, Grade 3, two-component epoxy resin suitable for surface temperature of hardened concrete where fastener is to be installed.
   b. Stud: ASTM A307, zinc-coated carbon steel with continuous thread on stud, unless otherwise indicated.
   c. Washer and Nut: Zinc-coated steel.

PART 3 - EXECUTION

3.1 INSTALLATION OF EXPANSION JOINTS

A. Install expansion joints of sizes matching sizes of piping in which they are installed.

B. Install metal-bellows expansion joints according to EJMA's "Standards of the Expansion Joint Manufacturers Association, Inc."

3.2 INSTALLATION OF PIPE LOOPS AND SWING CONNECTIONS

A. Install pipe loops cold-sprung in tension or compression as required to partly absorb tension or compression produced during anticipated change in temperature.

B. Connect risers and branch connections to mains with at least five pipe fittings, including tee in main.

C. Connect risers and branch connections to terminal units with at least four pipe fittings, including tee in riser.

D. Connect mains and branch connections to terminal units with at least four pipe fittings, including tee in main.

3.3 INSTALLATION OF ALIGNMENT-GUIDES AND ANCHORS

A. Install alignment guides to guide expansion and to avoid end-loading and torsional stress.

B. Install one guide(s) on each side of pipe expansion fittings and loops. Install guides nearest to expansion joint not more than four pipe diameters from expansion joint.

C. Attach guides to pipe, and secure guides to building structure.

D. Install anchors at locations to prevent stresses from exceeding those permitted by ASME B31.9 and to prevent transfer of loading and stresses to connected equipment.

E. Anchor Attachments:

1. Anchor Attachment to Steel Pipe: Attach by welding. Comply with ASME B31.9 and ASME Boiler and Pressure Vessel Code: Section IX, "Welding and Brazing Qualifications."
2. Anchor Attachment to Copper Tubing: Attach with pipe hangers. Use MSS SP-69, Type 24; U bolts bolted to anchor.

F. Fabricate and install steel anchors by welding steel shapes, plates, and bars. Comply with ASME B31.9 and AWS D1.1/D1.1M.

1. Anchor Attachment to Steel Structural Members: Attach by welding.
2. Anchor Attachment to Concrete Structural Members: Attach by fasteners. Follow fastener manufacturer's written instructions.

G. Use grout to form flat bearing surfaces for guides and anchors attached to concrete.

END OF SECTION 220516

SECTION 220517 - SLEEVES AND SLEEVE SEALS FOR PLUMBING PIPING

PART 1 - GENERAL

1.1 SUMMARY

A. Section Includes:

1. Sleeves.
2. Sleeve-seal systems.
3. Grout.
4. Silicone sealants.

PART 2 - PRODUCTS

2.1 SLEEVES

A. Manufacturers: Subject to compliance with requirements, available manufacturers offering products that may be incorporated into the Work include the following:

1. Advance Products & Systems, Inc.
2. CALPICO, Inc.
3. GPT; an EnPro Industries company.
4. Additional manufacturers submitted for and receiving engineer approval prior to bid.

B. Cast-Iron Pipe Sleeves: Cast or fabricated of cast or ductile iron and equivalent to ductile-iron pressure pipe, with plain ends and integral waterstop collar.

C. PVC Pipe Sleeves: ASTM D1785, Schedule 40.

2.2 SLEEVE-SEAL SYSTEMS

A. Manufacturers: Subject to compliance with requirements, available manufacturers offering products that may be incorporated into the Work include the following:

1. Advance Products & Systems, Inc.
2. CALPICO, Inc.
3. GPT; an EnPro Industries company.
4. Additional manufacturers submitted for and receiving engineer approval prior to bid.

B. Description:

1. Modular sealing-element unit, designed for field assembly, for filling annular space between piping and sleeve.

2. Designed to form a hydrostatic seal of 20 psig minimum.
3. Sealing Elements: EPDM-rubber interlocking links shaped to fit surface of pipe. Include type and number required for pipe material and size of pipe.
4. Pressure Plates: Carbon steel or Stainless steel or Stainless steel, Type 316.
5. Connecting Bolts and Nuts: Carbon steel, with corrosion-resistant coating, ASTM B633 or Stainless steel or Stainless steel, Type 316 of length required to secure pressure plates to sealing elements and compatible with pressure plate material

2.3 GROUT

A. Description: Nonshrink, for interior and exterior sealing openings in non-fire-rated walls or floors.

B. Standard: ASTM C1107/C1107M, Grade B, post-hardening and volume-adjusting, dry, hydraulic-cement grout.

C. Design Mix: 5000-psi, 28-day compressive strength.

D. Packaging: Premixed and factory packaged.

2.4 SILICONE SEALANTS

A. Silicone, S, NS, 25, NT: Single-component, nonsag, plus 25 percent and minus 25 percent movement capability, nontraffic-use, neutral-curing silicone joint sealant, ASTM C920, Type S, Grade NS, Class 25, Use NT.

1. Manufacturers: Subject to compliance with requirements, available manufacturers offering products that may be incorporated into the Work include the following:

a. GE Construction Sealants; Momentive Performance Materials Inc.
b. Sherwin-Williams Company (The).
c. The Dow Chemical Company.
d. Additional manufacturers submitted for and receiving engineer approval prior to bid.

B. Silicone, S, P, 25, T, NT: Single-component, pourable, plus 25 percent and minus 25 percent movement capability, traffic- and nontraffic-use, neutral-curing silicone joint sealant; ASTM C920, Type S, Grade P, Class 25, Uses T and NT. Grade P Pourable (self-leveling) formulation is for opening in floors and other horizontal surfaces that are not fire rated.

1. Manufacturers: Subject to compliance with requirements, available manufacturers offering products that may be incorporated into the Work include, following:

a. May National Associates, Inc.; a subsidiary of Sika Corporation.
b. Additional manufacturers submitted for and receiving engineer approval prior to bid.

PART 3 - EXECUTION

3.1 SLEEVE INSTALLATION

A. The below section is superseded by the UL penetration details related to any penetrations of rated floors, ceiling, walls or other assemblies. Refer to relevant U.L. penetration detail on plans for information.

B. Install sleeves for piping passing through penetrations in floors, partitions, roofs, and walls.

C. For sleeves that will have sleeve-seal system installed, select sleeves of size large enough to provide 1-inch-annular clear space between piping and concrete slabs and walls.

D. Install sleeves in concrete floors, concrete roof slabs, and concrete walls as new slabs and walls are constructed.

1. Cut sleeves to length for mounting flush with both surfaces.

    a. Exception: Extend sleeves installed in floors of mechanical equipment areas or other wet areas 2 inches above finished floor level.

2. Using grout or silicone sealant, seal the space outside of sleeves in slabs and walls without sleeve-seal system.

E. Install sleeves for pipes passing through interior partitions.

1. Cut sleeves to length for mounting flush with both surfaces.
2. Install sleeves that are large enough to provide 1/4-inch annular clear space between sleeve and pipe or pipe insulation.
3. Seal annular space between sleeve and piping or piping insulation; use joint sealants appropriate for size, depth, and location of joint.

F. Fire-Resistance-Rated Penetrations, Horizontal Assembly Penetrations, and Smoke Barrier Penetrations: Maintain indicated fire or smoke rating of walls, partitions, ceilings, and floors at pipe penetrations. Seal pipe penetrations with fire- and smoke-stop materials. Comply with requirements for firestopping and fill materials specified in Section 078413 "Penetration Firestopping."

3.2 SLEEVE-SEAL-SYSTEM INSTALLATION

A. Install sleeve-seal systems in sleeves in exterior concrete walls and slabs-on-grade at service piping entries into building.

B. Select type, size, and number of sealing elements required for piping material and size and for sleeve ID or hole size. Position piping in center of sleeve. Center piping in penetration, assemble sleeve-seal system components, and install in annular space between piping and sleeve. Tighten bolts against pressure plates that cause sealing elements to expand and make a watertight seal.

3.3 FIELD QUALITY CONTROL

A. Perform the following tests and inspections:

1. Leak Test: After allowing for a full cure, test sleeves and sleeve seals for leaks. Repair leaks and retest until no leaks exist.

B. Sleeves and sleeve seals will be considered defective if they do not pass tests and inspections.

C. Prepare test and inspection reports.

3.4 SLEEVE AND SLEEVE-SEAL SCHEDULE

A. Use sleeves and sleeve seals for the following piping-penetration applications:

1. Exterior Concrete Walls above Grade:

a. Piping Smaller Than NPS 6: Cast-iron pipe sleeves.
b. Piping NPS 6 and Larger: Cast-iron pipe sleeves.

2. Exterior Concrete Walls below Grade:

a. Piping Smaller Than NPS 6: Cast-iron pipe sleeves with sleeve-seal system.

1) Select sleeve size to allow for 1-inch annular clear space between piping and sleeve for installing sleeve-seal system.

b. Piping NPS 6 and Larger: Cast-iron pipe sleeves with sleeve-seal system.

1) Select sleeve size to allow for 1-inch annular clear space between piping and sleeve for installing sleeve-seal system.

3. Concrete Slabs-on-Grade:

a. Piping Smaller Than NPS 6: Cast-iron pipe sleeves with sleeve-seal system.

1) Select sleeve size to allow for 1-inch annular clear space between piping and sleeve for installing sleeve-seal system.

b. Piping NPS 6 and Larger: Cast-iron pipe sleeves with sleeve-seal system.

1) Select sleeve size to allow for 1-inch annular clear space between piping and sleeve for installing sleeve-seal system.

4. Concrete Slabs above Grade:

a. PVC pipe sleeves where <u>not</u> in a return plenum. Use Cast Iron sleeves in any return plenums.

5. PVC pipe sleeves where not in a return plenum. Use Cast Iron sleeves in any return plenums

END OF SECTION 220517

SECTION 220518 - ESCUTCHEONS FOR PLUMBING PIPING

PART 1 - GENERAL

1.1 SUMMARY

A. Section Includes:

1. Escutcheons.
2. Floor plates.

1.2 ACTION SUBMITTALS

A. Product Data: For each type of product.

PART 2 - PRODUCTS

2.1 MANUFACTURERS

A. Manufacturers: Subject to compliance with requirements, available manufacturers offering products that may be incorporated into the Work include, the following:

1. BrassCraft Manufacturing Co.; a Masco company.
2. Mid-America Fittings, Inc.
3. ProFlo; a Ferguson Enterprises, Inc. brand.
4. Additional manufacturers submitted for and receiving engineer approval prior to bid.

2.2 ESCUTCHEONS

A. One-Piece, Steel Type: With polished, chrome-plated finish and setscrew fastener.

B. One-Piece, Deep-Pattern Type: Deep-drawn, box-shaped brass with polished, chrome-plated finish and spring-clip fasteners.

C. One-Piece, Stamped-Steel Type: With polished, chrome-plated finish and spring-clip fasteners.

D. Split Floor Plates: Cast brass with concealed hinge.

PART 3 - EXECUTION

3.1 INSTALLATION

A. Install escutcheons for piping penetrations of walls, ceilings, and finished floors.

B. Install escutcheons with ID to closely fit around pipe, tube, and insulation of insulated piping and with OD that completely covers opening.

1. Escutcheons for New Piping:

a. Piping with Fitting or Sleeve Protruding from Wall: One-piece, deep pattern.
b. Chrome-Plated Piping: One-piece cast brass with polished, chrome-plated finish.
c. Insulated Piping: One-piece steel with polished, chrome-plated finish.
d. Bare Piping at Wall and Floor Penetrations in Finished Spaces: One-piece steel with polished, chrome-plated finish.
e. Bare Piping at Ceiling Penetrations in Finished Spaces: One-piece steel with polished, chrome-plated finish.

C. Install floor plates for piping penetrations of equipment-room floors.

D. Install floor plates with ID to closely fit around pipe, tube, and insulation of piping and with OD that completely covers opening.

3.2 FIELD QUALITY CONTROL

A. Using new materials, replace broken and damaged escutcheons and floor plates.

END OF SECTION 220518

SECTION 220523.12 - BALL VALVES FOR PLUMBING PIPING

PART 1 - GENERAL

1.1 SUMMARY

A. Section Includes:

1. Brass ball valves.
2. Bronze ball valves.

1.2 ACTION SUBMITTALS

A. Product Data: For each type of valve.

1. Certification that products comply with NSF 61 and NSF 372.

PART 2 - PRODUCTS

2.1 GENERAL REQUIREMENTS FOR VALVES

A. Source Limitations for Valves: Obtain each type of valve from single source from single manufacturer.

B. ASME Compliance:

1. ASME B1.20.1 for threads for threaded end valves.
2. ASME B16.10 and ASME B16.34 for ferrous valve dimensions and design criteria.
3. ASME B16.18 for solder-joint connections.
4. ASME B31.9 for building services piping valves.

C. NSF Compliance: NSF 61 and NSF 372 for valve materials for potable-water service.

D. Bronze valves shall be made with dezincification-resistant materials. Bronze valves made with copper alloy (brass) containing more than 15 percent zinc are not permitted.

E. Valve Pressure-Temperature Ratings: Not less than indicated and as required for system pressures and temperatures.

F. Valve Sizes: Same as upstream piping unless otherwise indicated.

G. Valve Actuator Types:
1. Handlever: For quarter-turn valves smaller than or equal to NPS 6.

H. Valves in Insulated Piping:

1. Include 2-inch stem extensions.
2. Extended operating handles of nonthermal-conductive material and protective sleeves that allow operation of valves without breaking vapor seals or disturbing insulation.
3. Memory stops that are fully adjustable after insulation is applied.

2.2 BRASS BALL VALVES

A. Brass Ball Valves, Two-Piece with Full Port and Brass Trim, Threaded or Soldered Ends:

1. Manufacturers: Subject to compliance with requirements, available manufacturers offering products that may be incorporated into the Work include the following:

   a. Apollo Flow Controls; Conbraco Industries, Inc.
   b. KITZ Corporation.
   c. WATTS.
   d. Additional manufacturers submitted for and receiving engineer approval prior to bid.

2. Description:

   a. Standard: MSS SP-110.
   b. CWP Rating: 600 psig.
   c. Body Design: Two piece.
   d. Body Material: Forged brass.
   e. Ends: Threaded and soldered.
   f. Seats: PTFE.
   g. Stem: 316 Stainless.
   h. Ball: 316 Stainless.
   i. Port: Full.

2.3 BRONZE BALL VALVES

A. Bronze Ball Valves, Two-Piece with Full Port, and Bronze or Brass Trim, Threaded or Soldered Ends:

1. Manufacturers: Subject to compliance with requirements, available manufacturers offering products that may be incorporated into the Work include the following:

   a. Apollo Flow Controls; Conbraco Industries, Inc.
   b. WATTS.
   c. Zurn Industries, LLC.
   d. Additional manufacturers submitted for and receiving engineer approval prior to bid.

2. Description:

a. Standard: MSS SP-110 or MSS-145.
b. CWP Rating: 600 psig.
c. Body Design: Two piece.
d. Body Material: Bronze.
e. Ends: Threaded and soldered.
f. Seats: PTFE.
g. Stem: Bronze or brass.
h. Ball: Chrome-plated brass.
i. Port: Full.

PART 3 - EXECUTION

3.1 VALVE INSTALLATION

A. Locate valves for easy access and provide separate support where necessary.

B. Install valves in position to allow full stem movement.

3.2 GENERAL REQUIREMENTS FOR VALVE APPLICATIONS

A. If valves with specified CWP ratings are unavailable, the same types of valves with higher CWP ratings may be substituted.

B. Select valves with the following end connections:

1. For NPS 2 and Smaller: Threaded ends except where solder-joint valve-end option is indicated in valve schedules below.

3.3 DOMESTIC HOT- AND COLD-WATER VALVE SCHEDULE

A. Pipe NPS 4 and Smaller:
1. Brass ball valves, two-piece with full port and brass trim. Provide with threaded or solder-joint ends.
2. Bronze ball valves, two-piece with port and bronze or brass trim. Provide with threaded or solder-joint ends.
3. Bronze and Brass Valves: May be provided with solder-joint ends instead of threaded ends.

END OF SECTION 220523.12

SECTION 220523.14 - CHECK VALVES FOR PLUMBING PIPING

PART 1 - GENERAL

1.1 SUMMARY

A. Section Includes:

1. Bronze swing check valves.

1.2 ACTION SUBMITTALS

A. Product Data: For each type of valve.

1. Certification that products comply with NSF 61 and NSF 372.

PART 2 - PRODUCTS

2.1 GENERAL REQUIREMENTS FOR VALVES

A. Source Limitations for Valves: Obtain each type of valve from single source from single manufacturer.

B. ASME Compliance:

1. ASME B1.20.1 for threads for threaded end valves.
2. ASME B16.18 for solder joint.
3. ASME B31.9 for building services piping valves.

C. Drinking Water System Components - Health Effects and Drinking Water System Components - Lead Content Compliance: NSF 61 and NSF 372.

D. Bronze valves shall be made with dezincification-resistant materials. Bronze valves made with copper alloy (brass) containing more than 15 percent zinc are not permitted.

E. Valve Pressure-Temperature Ratings: Not less than indicated and as required for system pressures and temperatures.

F. Valve Sizes: Same as upstream piping unless otherwise indicated.

G. Valve Bypass and Drain Connections: MSS SP-45.

2.2 BRONZE SWING CHECK VALVES

A. Bronze Swing Check Valves with Bronze Disc, Class 125:

1. Manufacturers: Subject to compliance with requirements, available manufacturers offering products that may be incorporated into the Work include the following:

a. Apollo Flow Controls; Conbraco Industries, Inc.
b. NIBCO INC.
c. WATTS.
d. Additional manufacturers submitted for and receiving engineer approval prior to bid

2. Description:

a. Standard: MSS SP-80, Type 3.
b. CWP Rating: 200 psig.
c. Body Design: Horizontal flow.
d. Body Material: ASTM B62, bronze.
e. Ends: Threaded or soldered. See valve schedule articles.
f. Disc: Bronze.

B. Bronze Swing Check Valves with Nonmetallic Disc, Class 125:

1. Manufacturers: Subject to compliance with requirements, available manufacturers offering products that may be incorporated into the Work include the following:

a. Apollo Flow Controls; Conbraco Industries, Inc.
b. NIBCO INC.
c. WATTS.
d. Additional manufacturers submitted for and receiving engineer approval prior to bid.

2. Description:

a. Standard: MSS SP-80, Type 4.
b. CWP Rating: 200 psig.
c. Body Design: Horizontal flow.
d. Body Material: ASTM B62, bronze.
e. Ends: Threaded or soldered. See valve schedule articles.
f. Disc: PTFE.

PART 3 - EXECUTION

3.1 VALVE INSTALLATION

A. Locate valves for easy access and provide separate support where necessary.

B. Install valves in position to allow full stem movement.

C. Install swing check valves for proper direction of flow in horizontal position with hinge pin level.

3.2 ADJUSTING

A. Adjust or replace valve packing after piping systems have been tested and put into service but before final adjusting and balancing. Replace valves if persistent leaking occurs.

3.3 GENERAL REQUIREMENTS FOR VALVE APPLICATIONS

A. If valve applications are not indicated, use the following:

1. Pump-Discharge Check Valves:

a. NPS 4 and Smaller: Bronze swing check valves with nonmetallic or bronze disc.

B. If valves with specified CWP ratings are unavailable, the same types of valves with higher CWP ratings may be substituted.

C. End Connections:

1. NPS 4 and Smaller: Threaded or soldered or press-ends.

3.4 DOMESTIC HOT- AND COLD-WATER VALVE SCHEDULE

A. Pipe NPS 4 and Smaller:

1. Bronze swing check valves bronze or nonmetallic disc, Class 125, with soldered o threaded end connections.

END OF SECTION 220523.14

SECTION 220529 - HANGERS AND SUPPORTS FOR PLUMBING PIPING AND EQUIPMENT

PART 1 - GENERAL

1.1 SUMMARY

A. Section Includes:

1. Metal pipe hangers and supports.
2. Thermal hanger-shield inserts.
3. Fastener systems.
4. Pipe-positioning systems.
5. Equipment supports.

B. Related Requirements:

1. Section 055000 "Metal Fabrications" for structural-steel shapes and plates for trapeze hangers for pipe and equipment supports.
2. Section 220516 "Expansion Fittings and Loops for Plumbing Piping" for pipe guides and anchors.

1.2 ACTION SUBMITTALS

A. Product Data: For each type of product.

PART 2 - PRODUCTS

2.1 PERFORMANCE REQUIREMENTS

A. Structural Performance: Hangers and supports for plumbing piping and equipment shall withstand the effects of gravity loads and stresses within limits and under conditions indicated according to ASCE/SEI 7.

1. Design supports for multiple pipes, including pipe stands, capable of supporting combined weight of supported systems, system contents, and test water.
2. Design equipment supports capable of supporting combined operating weight of supported equipment and connected systems and components.

2.2 METAL PIPE HANGERS AND SUPPORTS

A. Carbon-Steel Pipe Hangers and Supports:

1. Description: MSS SP-58, Types 1 through 58, factory-fabricated components.

2. Galvanized Metallic Coatings: Pregalvanized, hot-dip galvanized, or electro-galvanized.
3. Nonmetallic Coatings: Plastic coated or epoxy powder coated.
4. Padded Hangers: Hanger with fiberglass or other pipe insulation pad or cushion to support bearing surface of piping.
5. Hanger Rods: Continuous-thread rod, nuts, and washer made of stainless steel.

B. Stainless-Steel Pipe Hangers and Supports:

1. Description: MSS SP-58, Types 1 through 58, factory-fabricated components.
2. Padded Hangers: Hanger with fiberglass or other pipe insulation pad or cushion to support bearing surface of piping.
3. Hanger Rods: Continuous-thread rod, nuts, and washer made of carbon steel.

C. Copper Pipe and Tube Hangers:

1. Description: MSS SP-58, Types 1 through 58, copper-coated-steel, factory-fabricated components.
2. Hanger Rods: Continuous-thread rod, nuts, and washer made of stainless steel.

2.3 THERMAL HANGER-SHIELD INSERTS

A. Insulation-Insert Material for Cold Piping: ASTM C552, Type II cellular glass with 100-psig or ASTM C591, Type VI, Grade 1 polyisocyanurate with 125-psig minimum compressive strength and vapor barrier.

B. Insulation-Insert Material for Hot Piping: Water-repellent-treated, ASTM C533, Type I calcium silicate with 100-psig ASTM C552, Type II cellular glass with 100-psig or ASTM C591, Type VI, Grade 1 polyisocyanurate with 125-psig minimum compressive strength.

C. For Trapeze or Clamped Systems: Insert and shield shall cover entire circumference of pipe.

D. For Clevis or Band Hangers: Insert and shield shall cover lower 180 degrees of pipe.

E. Insert Length: Extend 2 inches beyond sheet metal shield for piping operating below ambient air temperature.

2.4 FASTENER SYSTEMS

A. Powder-Actuated Fasteners: Threaded-steel stud, for use in hardened portland cement concrete, with pull-out, tension, and shear capacities appropriate for supported loads and building materials where used.

1. Manufacturers: Subject to compliance with requirements, available manufacturers offering products that may be incorporated into the Work include the following:
   a. Hilti, Inc.
   b. MKT Fastening, LLC.
   c. Simpson Strong-Tie Co., Inc.

d. Additional manufacturers submitted for and receiving engineer approval prior to bid.

B. Mechanical-Expansion Anchors: Insert-wedge-type anchors, for use in hardened portland cement concrete, with pull-out, tension, and shear capacities appropriate for supported loads and building materials where used.

1. Manufacturers: Subject to compliance with requirements, available manufacturers offering products that may be incorporated into the Work include the following:

a. Hilti, Inc.
b. ITW Ramset/Red Head; Illinois Tool Works, Inc.
c. MKT Fastening, LLC.
d. Additional manufacturers submitted for and receiving engineer approval prior to bid.

2. Indoor Applications: Zinc-coated or stainless steel.
3. Outdoor Applications: Stainless steel.

2.5 PIPE-POSITIONING SYSTEMS

A. Description: IAPMO PS 42 positioning system composed of metal brackets, clips, and straps for positioning piping in pipe spaces; for plumbing fixtures in commercial applications.

2.6 MATERIALS

A. Aluminum: ASTM B221.

B. Carbon Steel: ASTM A1011/A1011M.

C. Structural Steel: ASTM A36/A36M carbon-steel plates, shapes, and bars; black and galvanized.

D. Stainless Steel: ASTM A240/A240M.

E. Grout: ASTM C1107/C1107M, factory-mixed and -packaged, dry, hydraulic-cement, nonshrink and nonmetallic grout; suitable for interior and exterior applications.

1. Properties: Nonstaining, noncorrosive, and nongaseous.
2. Design Mix: 5000-psi, 28-day compressive strength.

PART 3 - EXECUTION

3.1 APPLICATION

A. Comply with requirements in Section 078413 "Penetration Firestopping" for firestopping materials and installation, for penetrations through fire-rated walls, ceilings, and assemblies.

B. Strength of Support Assemblies: Where not indicated, select sizes of components, so strength will be adequate to carry present and future static loads within specified loading limits. Minimum static design load used for strength determination shall be weight of supported components plus 200 lb.

3.2 HANGER AND SUPPORT INSTALLATION

A. Metal Pipe-Hanger Installation: Comply with MSS SP-58. Install hangers, supports, clamps, and attachments as required to properly support piping from building structure.

B. Thermal Hanger-Shield Installation: Install in pipe hanger or shield for insulated piping.

C. Fastener System Installation:

1. Install powder-actuated fasteners for use in lightweight concrete or concrete slabs less than 4 inches thick in concrete, after concrete is placed and completely cured. Use operators that are licensed by powder-actuated tool manufacturer. Install fasteners according to powder-actuated tool manufacturer's operating manual.
2. Install mechanical-expansion anchors in concrete, after concrete is placed and completely cured. Install fasteners according to manufacturer's written instructions.

D. Pipe-Positioning-System Installation: Install support devices to make rigid supply and waste piping connections to each plumbing fixture.

E. Install hangers and supports complete with necessary attachments, inserts, bolts, rods, nuts, washers, and other accessories.

F. Equipment Support Installation: Fabricate from welded-structural-steel shapes.

G. Install hangers and supports to allow controlled thermal and seismic movement of piping systems, to permit freedom of movement between pipe anchors, and to facilitate action of expansion joints, expansion loops, expansion bends, and similar units.

H. Install lateral bracing with pipe hangers and supports to prevent swaying.

I. Install building attachments within concrete slabs or attach to structural steel. Install additional attachments at concentrated loads, including valves, flanges, and strainers, NPS 2-1/2 and larger and at changes in direction of piping. Install concrete inserts before concrete is placed; fasten inserts to forms, and install reinforcing bars through openings at top of inserts.

J. Load Distribution: Install hangers and supports, so that piping live and dead loads and stresses from movement will not be transmitted to connected equipment.

K. Pipe Slopes: Install hangers and supports to provide indicated pipe slopes and to not exceed maximum pipe deflections allowed by ASME B31.9 for building services piping.

L. Insulated Piping:

1. Attach clamps and spacers to piping.

    a. Piping Operating Above Ambient Air Temperature: Clamp may project through insulation.
    b. Piping Operating Below Ambient Air Temperature: Use thermal hanger-shield insert with clamp sized to match OD of insert.
    c. Do not exceed pipe stress limits allowed by ASME B31.9 for building services piping.

2. Install MSS SP-58, Type 39 protection saddles if insulation without vapor barrier is indicated. Fill interior voids with insulation that matches adjoining insulation.

    a. Option: Thermal hanger-shield inserts may be used. Include steel weight-distribution plate for pipe NPS 4 and larger if pipe is installed on rollers.

3. Install MSS SP-58, Type 40 protective shields on cold piping with vapor barrier. Shields shall span an arc of 180 degrees.

    a. Option: Thermal hanger-shield inserts may be used. Include steel weight-distribution plate for pipe NPS 4 and larger if pipe is installed on rollers.

4. Shield Dimensions for Pipe: Not less than the following:

    a. NPS 1/4 to NPS 3-1/2: 12 inches long and 0.048 inch thick.

5. Thermal Hanger Shields: Install with insulation of same thickness as piping insulation.

3.3 EQUIPMENT SUPPORTS

A. Fabricate structural-steel stands to suspend equipment from structure overhead or to support equipment above floor.

B. Grouting: Place grout under supports for equipment, and make bearing surface smooth.

C. Provide lateral bracing, to prevent swaying, for equipment supports.

3.4 METAL FABRICATIONS

A. Fit exposed connections together to form hairline joints. Field weld connections that cannot be shop welded because of shipping size limitations.

B. Field Welding: Comply with AWS D1.1/D1.1M procedures for shielded, metal arc welding; appearance and quality of welds; and methods used in correcting welding work.

3.5 ADJUSTING

A. Hanger Adjustments: Adjust hangers to distribute loads equally on attachments and to achieve indicated slope of pipe.

B. Trim excess length of continuous-thread hanger and support rods to 1-1/2 inches.

3.6 PAINTING

A. Touchup: Clean field welds and abraded, shop-painted areas. Paint exposed areas immediately after erecting hangers and supports. Use same materials as those used for shop painting. Comply with SSPC-PA 1 requirements for touching up field-painted surfaces.

1. Apply paint by brush or spray to provide a minimum dry film thickness of 2.0 mils.

B. Touchup: Cleaning and touchup painting of field welds, bolted connections, and abraded, shop-painted areas on miscellaneous metal are specified in Section 099113 "Exterior Painting." Section 099123 "Interior Painting."

C. Galvanized Surfaces: Clean welds, bolted connections, and abraded areas, and apply galvanizing-repair paint to comply with ASTM A780/A780M.

3.7 HANGER AND SUPPORT SCHEDULE

A. Specific hanger and support requirements are in Sections specifying piping systems and equipment.

B. Comply with MSS SP-58 for pipe-hanger selections and applications that are not specified in piping system Sections.

C. Use hangers and supports with galvanized metallic coatings for piping and equipment that will not have field-applied finishes.

D. Use nonmetallic coatings on attachments for electrolytic protection where attachments are in direct contact with copper tubing.

E. Use carbon-steel pipe hangers and supports and metal trapeze pipe hangers and attachments for general service applications.

F. Use copper-plated pipe hangers and copper or stainless-steel attachments for copper piping and tubing.

G. Use padded hangers for piping that is subject to scratching.

H. Use thermal hanger-shield inserts for insulated piping and tubing.

I. Horizontal-Piping Hangers and Supports: Unless otherwise indicated and except as specified in piping system Sections, install the following types:

1. Adjustable, Steel Clevis Hangers (MSS Type 1): For suspension of noninsulated or insulated, stationary pipes NPS 1/2 to NPS 30.
2. Carbon- or Alloy-Steel, Double-Bolt Pipe Clamps (MSS Type 3): For suspension of pipes NPS 3/4 to NPS 36, requiring clamp flexibility and up to 4 inches of insulation.
3. Steel Pipe Clamps (MSS Type 4): For suspension of cold and hot pipes NPS 1/2 to NPS 24 if little or no insulation is required.
4. Pipe Hangers (MSS Type 5): For suspension of pipes NPS 1/2 to NPS 4, to allow off-center closure for hanger installation before pipe erection.
5. Adjustable, Swivel Split- or Solid-Ring Hangers (MSS Type 6): For suspension of noninsulated, stationary pipes NPS 3/4 to NPS 8.
6. For suspension of non-insulated stationary pipes NPS ½ to NPS 8, the following are permissible:
    a. Adjustable, Steel Band Hangers (MSS Type 7): For suspension of noninsulated, stationary pipes NPS 1/2 to NPS 8.
    b. Adjustable Band Hangers (MSS Type 9): For suspension of noninsulated, stationary pipes NPS 1/2 to NPS 8.
    c. Adjustable, Swivel-Ring Band Hangers (MSS Type 10): For suspension of noninsulated, stationary pipes NPS 1/2 to NPS 8.
    d. Split Pipe Ring with or without Turnbuckle Hangers (MSS Type 11): For suspension of noninsulated, stationary pipes NPS 3/8 to NPS 8.
    e. Extension Hinged or Two-Bolt Split Pipe Clamps (MSS Type 12): For suspension of noninsulated, stationary pipes NPS 3/8 to NPS 3.
    f. U-Bolts (MSS Type 24): For support of heavy pipes NPS 1/2 to NPS 30.

J. Vertical-Piping Clamps: Unless otherwise indicated and except as specified in piping system Sections, install the following types:

1. Extension Pipe or Riser Clamps (MSS Type 8): For support of pipe risers NPS 3/4 to NPS 24.
2. Carbon- or Alloy-Steel Riser Clamps (MSS Type 42): For support of pipe risers NPS 3/4 to NPS 24 if longer ends are required for riser clamps.

K. Hanger-Rod Attachments: Unless otherwise indicated and except as specified in piping system Sections, install the following types:

1. Steel Turnbuckles (MSS Type 13): For adjustment of up to 6 inches for heavy loads.
2. Steel Clevises (MSS Type 14): For 120 to 450 deg F piping installations.
3. Swivel Turnbuckles (MSS Type 15): For use with MSS Type 11 split pipe rings.
4. Malleable-Iron Sockets (MSS Type 16): For attaching hanger rods to various types of building attachments.
5. Steel Weldless Eye Nuts (MSS Type 17): For 120 to 450 deg F piping installations.

L. Building Attachments: Unless otherwise indicated and except as specified in piping system Sections, install the following types:

1. Steel or Malleable-Concrete Inserts (MSS Type 18): For upper attachment to suspend pipe hangers from concrete ceiling.
2. Top-Beam C-Clamps (MSS Type 19): For use under roof installations with bar-joist construction, to attach to top flange of structural shape.
3. Side-Beam or Channel Clamps (MSS Type 20): For attaching to bottom flange of beams, channels, or angles.
4. Center-Beam Clamps (MSS Type 21): For attaching to center of bottom flange of beams.
5. Welded Beam Attachments (MSS Type 22): For attaching to bottom of beams if loads are considerable and rod sizes are large.
6. C-Clamps (MSS Type 23): For structural shapes.
7. Top-Beam Clamps (MSS Type 25): For top of beams if hanger rod is required tangent to flange edge.
8. Side-Beam Clamps (MSS Type 27): For bottom of steel I-beams.
9. Steel-Beam Clamps with Eye Nuts (MSS Type 28): For attaching to bottom of steel I-beams for heavy loads.
10. Linked-Steel Clamps with Eye Nuts (MSS Type 29): For attaching to bottom of steel I-beams for heavy loads, with link extensions.
11. Malleable-Beam Clamps with Extension Pieces (MSS Type 30): For attaching to structural steel.
12. Welded-Steel Brackets: For support of pipes from below or for suspending from above by using clip and rod. Use one of the following for indicated loads:

    a. Light (MSS Type 31): 750 lb.
    b. Medium (MSS Type 32): 1500 lb.
    c. Heavy (MSS Type 33): 3000 lb.

13. Side-Beam Brackets (MSS Type 34): For sides of steel or wooden beams.
14. Plate Lugs (MSS Type 57): For attaching to steel beams if flexibility at beam is required.
15. Horizontal Travelers (MSS Type 58): For supporting piping systems subject to linear horizontal movement where headroom is limited.

M. Saddles and Shields: Unless otherwise indicated and except as specified in piping system Sections, install the following types:

1. Steel-Pipe-Covering Protection Saddles (MSS Type 39): To fill interior voids with insulation that matches adjoining insulation.
2. Protection Shields (MSS Type 40): Of length recommended in writing by manufacturer to prevent crushing insulation.
3. Thermal Hanger-Shield Inserts: For supporting insulated pipe.

N. Comply with MSS SP-58 for trapeze pipe-hanger selections and applications that are not specified in piping system Sections.

O. Use powder-actuated fasteners or mechanical-expansion anchors instead of building attachments where required in concrete construction.

P. Use pipe-positioning systems in pipe spaces behind plumbing fixtures to support supply and waste piping for plumbing fixtures.

END OF SECTION 220529

SECTION 220553 - IDENTIFICATION FOR PLUMBING PIPING AND EQUIPMENT

PART 1 - GENERAL

1.1 SUMMARY

A. Section Includes:

1. Equipment labels.
2. Warning signs and labels.
3. Pipe labels.

PART 2 - PRODUCTS

2.1 EQUIPMENT LABELS

A. Metal Labels for Equipment:

1. Manufacturers: Subject to compliance with requirements, available manufacturers offering products that may be incorporated into the Work include the following:

    a. Craftmark Pipe Markers.
    b. Kolbi Pipe Marker Co.
    c. Seton Identification Products; a Brady Corporation company.
    d. Additional manufacturers submitted for and receiving engineer approval prior to bid.

2. Material and Thickness: Brass, 0.032-inch stainless steel, 0.025-inch aluminum, 0.032-inch or anodized aluminum, 0.032-inch minimum thickness, and having predrilled or stamped holes for attachment hardware.
3. Letter Color: Black.
4. Background Color: White.
5. Minimum Label Size: Length and width vary for required label content, but not less than 2-1/2 by 3/4 inch.
6. Minimum Letter Size: 1/4 inch for name of units if viewing distance is less than 24 inches, 1/2 inch for viewing distances up to 72 inches, and proportionately larger lettering for greater viewing distances. Include secondary lettering two-thirds to three-quarters the size of principal lettering.
7. Fasteners: Stainless-steel rivets or self-tapping screws.
8. Adhesive: Contact-type permanent adhesive, compatible with label and with substrate.

B. Plastic Labels for Equipment:

1. Manufacturers: Subject to compliance with requirements, available manufacturers offering products that may be incorporated into the Work include the following:

a. Craftmark Pipe Markers.
b. Kolbi Pipe Marker Co.
c. Seton Identification Products; a Brady Corporation company.
d. Additional manufacturers submitted for and receiving engineer approval prior to bid.

2. Material and Thickness: Multilayer, multicolor, plastic labels for mechanical engraving, 1/16 inch thick, and having predrilled holes for attachment hardware.
3. Letter Color: Black
4. Background Color: White
5. Maximum Temperature: Able to withstand temperatures up to 160 deg F.
6. Minimum Label Size: Length and width vary for required label content, but not less than 2-1/2 by 3/4 inch.
7. Minimum Letter Size: 1/4 inch for name of units if viewing distance is less than 24 inches, 1/2 inch for viewing distances up to 72 inches, and proportionately larger lettering for greater viewing distances. Include secondary lettering two-thirds to three-quarters the size of principal lettering.
8. Fasteners: Stainless-steel rivets or self-tapping screws.
9. Adhesive: Contact-type permanent adhesive, compatible with label and with substrate.

C. Label Content: Include equipment's Drawing designation or unique equipment number, Drawing numbers where equipment is indicated (plans, details, and schedules), and the Specification Section number and title where equipment is specified.

D. Equipment Label Schedule: For each item of equipment to be labeled, on 8-1/2-by-11-inch bond paper. Tabulate equipment identification number, and identify Drawing numbers where equipment is indicated (plans, details, and schedules) and the Specification Section number and title where equipment is specified. Equipment schedule shall be included in operation and maintenance data.

2.2 WARNING SIGNS AND LABELS

A. Manufacturers: Subject to compliance with requirements, available manufacturers offering products that may be incorporated into the Work include the following:

1. Brady Corporation.
2. Craftmark Pipe Markers.
3. Seton Identification Products; a Brady Corporation company.
4. Additional manufacturers submitted for and receiving engineer approval prior to bid.

B. Material and Thickness: Multilayer, multicolor, plastic labels for mechanical engraving, 1/16 inch thick, and having predrilled holes for attachment hardware.

C. Letter Color: Black.

D. Background Color: Yellow.

E. Maximum Temperature: Able to withstand temperatures up to 160 deg F.

F. Minimum Label Size: Length and width vary for required label content, but not less than 2-1/2 by 3/4 inch.

G. Minimum Letter Size: 1/4 inch for name of units if viewing distance is less than 24 inches, 1/2 inch for viewing distances up to 72 inches, and proportionately larger lettering for greater viewing distances. Include secondary lettering two-thirds to three-quarters the size of principal lettering.

H. Fasteners: Stainless-steel rivets or self-tapping screws.

I. Adhesive: Contact-type permanent adhesive, compatible with label and with substrate.

J. Label Content: Include caution and warning information plus emergency notification instructions.

2.3 PIPE LABELS

A. Manufacturers: Subject to compliance with requirements, available manufacturers offering products that may be incorporated into the Work include the following:

1. Brady Corporation.
2. Champion America.
3. Kolbi Pipe Marker Co.
4. Additional manufacturers submitted for and receiving engineer approval prior to bid.

B. General Requirements for Manufactured Pipe Labels: Preprinted, color-coded, with lettering indicating service, and showing flow direction.

C. Pretensioned Pipe Labels: Precoiled, semirigid plastic formed to partially cover or cover full circumference of pipe and to attach to pipe without fasteners or adhesive.

D. Self-Adhesive Pipe Labels: Printed plastic with contact-type, permanent-adhesive backing.

E. Pipe Label Contents: Include identification of piping service using same designations or abbreviations as used on Drawings; also include pipe size and an arrow indicating flow direction.

1. Flow-Direction Arrows: Integral with piping-system service lettering to accommodate both directions or as separate unit on each pipe label to indicate flow direction.
2. Lettering Size: Size letters according to ASME A13.1 for piping.

PART 3 - EXECUTION

3.1 EQUIPMENT LABEL INSTALLATION

A. Install or permanently fasten labels on each major item of mechanical equipment.

B. Locate equipment labels where accessible and visible.

3.2 PIPE LABEL INSTALLATION

A. Piping Color Coding: Painting of piping is specified in Section 099123 "Interior Painting."

B. Pipe Label Locations: Locate pipe labels where piping is exposed or above accessible ceilings in finished spaces; machine rooms; accessible maintenance spaces such as shafts, tunnels, and plenums; and exterior exposed locations as follows:

1. Near each valve and control device.
2. Near each branch connection, excluding short takeoffs for fixtures and terminal units. Where flow pattern is not obvious, mark each pipe at branch.
3. Near penetrations and on both sides of through walls, floors, ceilings, and inaccessible enclosures.
4. At access doors, manholes, and similar access points that permit view of concealed piping.
5. Near major equipment items and other points of origination and termination.
6. Spaced at maximum intervals of 50 feet along each run. Reduce intervals to 25 feet in areas of congested piping and equipment.

C. Pipe Label Color Schedule:

1. Domestic Water Piping

   a. Background: Safety green.
   b. Letter Colors: White.

2. Sanitary Waste and Storm Drainage Piping:

   a. Background Color: Safety gray.
   b. Letter Color: Black.

END OF SECTION 220553

SECTION 220719 - PLUMBING PIPING INSULATION

PART 1 - GENERAL

1.1 SUMMARY

A. Section includes insulating the following plumbing piping services:

1. Domestic cold-water piping.
2. Domestic hot-water piping.
3. Roof drains and rainwater leaders.
4. Supplies and drains for handicap-accessible lavatories and sinks.

B. Related Sections:

1. Section 220716 "Plumbing Equipment Insulation" for equipment insulation.

1.2 ACTION SUBMITTALS

A. Product Data: For each type of product.

1.3 QUALITY ASSURANCE

A. Surface-Burning Characteristics: For insulation and related materials, as determined by testing identical products in accordance with ASTM E84 by a testing agency acceptable to authorities having jurisdiction. Factory label insulation and jacket materials and adhesive, mastic, tapes, and cement material containers, with appropriate markings of applicable testing agency.

1. Insulation Installed Indoors: Flame-spread index of 25 or less and smoke-developed index of 50 or less.
2. Insulation Installed Outdoors: Flame-spread index of 75 or less and smoke-developed index of 150 or less.

B. Comply with the following applicable standards and other requirements specified for miscellaneous components:

1. Supply and Drain Protective Shielding Guards: ICC A117.1.

1.4 COORDINATION

A. Coordinate sizes and locations of supports, hangers, and insulation shields specified in Section 220529 "Hangers and Supports for Plumbing Piping and Equipment."

B. Coordinate clearance requirements with piping Installer for piping insulation application. Before preparing piping Shop Drawings, establish and maintain clearance requirements for installation of insulation and field-applied jackets and finishes and for space required for maintenance.

C. Coordinate installation and testing of heat tracing.

1.5 SCHEDULING

A. Schedule insulation application after pressure testing systems and, where required, after installing and testing heat tracing. Insulation application may begin on segments that have satisfactory test results.

PART 2 - PRODUCTS

2.1 INSULATION MATERIALS

A. Comply with requirements in “General Plumbing Notes” for where insulating materials shall be applied.

B. Products shall not contain asbestos, lead, mercury, or mercury compounds.

C. Products that come into contact with stainless steel shall have a leachable chloride content of less than 50 ppm when tested in accordance with ASTM C871.

D. Insulation materials for use on austenitic stainless steel shall be qualified as acceptable in accordance with ASTM C795.

E. Foam insulation materials shall not use CFC or HCFC blowing agents in the manufacturing process.

F. Cellular Glass: Inorganic, incombustible, foamed or cellulated glass with annealed, rigid, hermetically sealed cells. Comply with ASTM C552.

1. Manufacturers: Subject to compliance with requirements, available manufacturers offering products that may be incorporated into the Work include the following:

    a. Pittsburgh Corning Corporation.
    b. Additional manufacturers submitted for and receiving engineer approval prior to bid.

2. Preformed Pipe Insulation: Type II, Class 1, without jacket.
3. Preformed Pipe Insulation: Type II, Class 2, with factory-applied ASJ jacket.
4. Factory fabricate shapes in accordance with ASTM C450 and ASTM C585.
5. Factory-applied jacket requirements are specified in "Factory-Applied Jackets" Article.

G. Flexible Elastomeric: Closed-cell, sponge- or expanded-rubber materials. Comply with ASTM C534/C534M, Type I for tubular materials.

1. Manufacturers: Subject to compliance with requirements, available manufacturers offering products that may be incorporated into the Work include the following:

a. Aeroflex USA.
b. Armacell LLC.
c. K-Flex USA.
d. Additional manufacturers submitted for and receiving engineer approval prior to bid.

H. Mineral-Fiber, Preformed Pipe: Mineral or glass fibers bonded with a thermosetting resin. Comply with ASTM C547.

1. Manufacturers: Subject to compliance with requirements, available manufacturers offering products that may be incorporated into the Work include the following:

a. Johns Manville; a Berkshire Hathaway company.
b. Manson Insulation Inc.
c. Owens Corning.
d. Additional manufacturers submitted for and receiving engineer approval prior to bid.

2. Preformed Pipe Insulation: Type I, Grade A, without factory-applied jacket.
3. 850 deg F.
4. Factory fabricate shapes in accordance with ASTM C450 and ASTM C585.
5. Factory-applied jacket requirements are specified in "Factory-Applied Jackets" Article.

I. Polyolefin: Unicellular, polyethylene thermal plastic insulation. Comply with ASTM C534/C534M or ASTM C1427, Type I, Grade 1, for tubular materials.

1. Manufacturers: Subject to compliance with requirements, available manufacturers offering products that may be incorporated into the Work include the following:

a. Armacell LLC.
b. Additional manufacturers submitted for and receiving engineer approval prior to bid.

2.2 ADHESIVES

A. Materials shall be compatible with insulation materials, jackets, and substrates and for bonding insulation to itself and to surfaces to be insulated unless otherwise indicated.

B. Cellular-Glass Adhesive: Two-component, thermosetting urethane adhesive containing no flammable solvents, with a service temperature range of minus 100 to plus 200 deg F.

1. Manufacturers: Subject to compliance with requirements, available manufacturers offering products that may be incorporated into the Work include the following:

a. Foster Brand; H. B. Fuller Construction Products.
b. Additional manufacturers submitted for and receiving engineer approval prior to bid.

C. Flexible Elastomeric and Polyolefin Adhesive: Solvent-based adhesive.

1. Manufacturers: Subject to compliance with requirements, available manufacturers offering products that may be incorporated into the Work include the following:

a. Armacell LLC.
b. Foster Brand; H. B. Fuller Construction Products.
c. K-Flex USA.
d. Additional manufacturers submitted for and receiving engineer approval prior to bid.

2. Flame-spread index shall be 25 or less and smoke-developed index shall be 50 or less as tested in accordance with ASTM E84.
3. Wet Flash Point: Below 0 deg F.
4. Service Temperature Range: 40 to 200 deg F.
5. Color: Black.

D. Mineral-Fiber Adhesive: Comply with MIL-A-3316C, Class 2, Grade A.

1. Manufacturers: Subject to compliance with requirements, available manufacturers offering products that may be incorporated into the Work include the following:

a. Childers Brand; H. B. Fuller Construction Products.
b. Foster Brand; H. B. Fuller Construction Products.
c. Additional manufacturers submitted for and receiving engineer approval prior to bid.

E. ASJ Adhesive and FSK Jacket Adhesive: Comply with MIL-A-3316C, Class 2, Grade A, for bonding insulation jacket lap seams and joints.

1. Manufacturers: Subject to compliance with requirements, available manufacturers offering products that may be incorporated into the Work include the following:

a. Childers Brand; H. B. Fuller Construction Products.
b. Foster Brand; H. B. Fuller Construction Products.
c. Mon-Eco Industries, Inc.
d. Additional manufacturers submitted for and receiving engineer approval prior to bid.

F. PVC Jacket Adhesive: Compatible with PVC jacket.

1. Manufacturers: Subject to compliance with requirements, available manufacturers offering products that may be incorporated into the Work include the following:

a. Dow Consumer Solutions.

b. Johns Manville; a Berkshire Hathaway company.
c. P.I.C. Plastics, Inc.
d. Additional manufacturers submitted for and receiving engineer approval prior to bid.

2.3 MASTICS AND COATINGS

A. Materials shall be compatible with insulation materials, jackets, and substrates; comply with MIL-PRF-19565C, Type II

B. Vapor-Retarder Mastic, Water Based: Suitable for indoor use on below-ambient services.

1. Manufacturers: Subject to compliance with requirements, available manufacturers offering products that may be incorporated into the Work include the following:

a. Childers Brand; H. B. Fuller Construction Products.
b. Foster Brand; H. B. Fuller Construction Products.
c. Knauf Insulation.
d. Additional manufacturers submitted for and receiving engineer approval prior to bid.

2. Water-Vapor Permeance: Comply with ASTM E96/E96M or ASTM F1249.
3. Service Temperature Range: Minus 20 to plus 180 deg F.
4. Solids Content: ASTM D 1644, 58 percent by volume and 70 percent by weight. Color: White.

2.4 SEALANTS

A. Materials shall be as recommended by the insulation manufacturer and shall be compatible with insulation materials, jackets, and substrates.

B. Joint Sealants:

1. Manufacturers: Subject to compliance with requirements, available manufacturers offering products that may be incorporated into the Work include the following:

a. Childers Brand; H. B. Fuller Construction Products.
b. Foster Brand; H. B. Fuller Construction Products.
c. Mon-Eco Industries, Inc.
d. Additional manufacturers submitted for and receiving engineer approval prior to bid.

2. Permanently flexible, elastomeric sealant.
3. Service Temperature Range: Minus 100 to plus 300 deg F.
4. Color: White or gray.

C. FSK and Metal Jacket Flashing Sealants:

1. Manufacturers: Subject to compliance with requirements, available manufacturers offering products that may be incorporated into the Work include the following:

    a. Childers Brand; H. B. Fuller Construction Products.
    b. Foster Brand; H. B. Fuller Construction Products.
    c. Mon-Eco Industries, Inc.
    d. Additional manufacturers submitted for and receiving engineer approval prior to bid.

2. Fire- and water-resistant, flexible, elastomeric sealant.
3. Service Temperature Range: Minus 40 to plus 250 deg F.
4. Color: Aluminum.

D. ASJ Flashing Sealants and PVC Jacket Flashing Sealants:

1. Manufacturers: Subject to compliance with requirements, available manufacturers offering products that may be incorporated into the Work include the following:

    a. Childers Brand; H. B. Fuller Construction Products.
    b. Additional manufacturers submitted for and receiving engineer approval prior to bid.

2. Fire- and water-resistant, flexible, elastomeric sealant.
3. Service Temperature Range: Minus 40 to plus 250 deg F.
4. Color: White.

2.5 FIELD-APPLIED FABRIC-REINFORCING MESH

A. Woven Polyester Fabric: Approximately 1 oz./sq. yd. with a thread count of 10 strands by 10 strands/sq. in., in a Leno weave, for pipe.

1. Manufacturers: Subject to compliance with requirements, available manufacturers offering products that may be incorporated into the Work include the following:

    a. Foster Brand; H. B. Fuller Construction Products.
    b. Vimasco Corporation.
    c. Additional manufacturers submitted for and receiving engineer approval prior to bid.

2.6 FIELD-APPLIED JACKETS

A. Field-applied jackets shall comply with ASTM C1136, Type I, unless otherwise indicated.

B. FSK Jacket: Aluminum-foil-face, fiberglass-reinforced scrim with kraft-paper backing.

C. PVC Jacket: High-impact-resistant, UV-resistant PVC complying with ASTM D1784, Class 16354-C; thickness as scheduled; roll stock ready for shop or field cutting and forming. Thickness is indicated in field-applied jacket schedules.

1. Manufacturers: Subject to compliance with requirements, available manufacturers offering products that may be incorporated into the Work include the following:

    a. Johns Manville; a Berkshire Hathaway company.
    b. P.I.C. Plastics, Inc.
    c. Proto Corporation.
    d. Additional manufacturers submitted for and receiving engineer approval prior to bid.

2. Adhesive: As recommended by jacket material manufacturer.
3. Color: Color-code jackets based on system. Color as selected by Architect.
4. Factory-fabricated fitting covers to match jacket if available; otherwise, field fabricate.

    a. Shapes: 45- and 90-degree, short- and long-radius elbows, tees, valves, flanges, unions, reducers, end caps, soil-pipe hubs, traps, mechanical joints, and P-trap and supply covers for lavatories.

D. Aluminum Jacket: Comply with ASTM B209, Alloy 3003, 3005, 3105, or 5005, Temper H-14:

1. Manufacturers: Subject to compliance with requirements, available manufacturers offering products that may be incorporated into the Work include the following:

    a. Childers Brand; H. B. Fuller Construction Products.
    b. Additional manufacturers submitted for and receiving engineer approval prior to bid.

2. Sheet and roll stock ready for shop or field sizing.
3. Finish and thickness are indicated in field-applied jacket schedules.
4. Moisture Barrier for Indoor Applications: 1-mil-thick, heat-bonded polyethylene and kraft paper.
5. Moisture Barrier for Outdoor Applications: 3-mil-thick, heat-bonded polyethylene and kraft paper.
6. Factory-Fabricated Fitting Covers:
    a. Same material, finish, and thickness as jacket.
    b. Preformed two-piece or gore, 45- and 90-degree, short- and long-radius elbows.
    c. Tee covers
    d. Flange and union covers.
    e. End caps.
    f. Beveled collars.
    g. Valve covers.
    h. Field fabricate fitting covers only if factory-fabricated fitting covers are not available.

2.7 TAPES

A. ASJ Tape: White vapor-retarder tape matching factory-applied jacket with acrylic adhesive, complying with ASTM C1136.

1. Manufacturers: Subject to compliance with requirements, available manufacturers offering products that may be incorporated into the Work include the following:

a. Avery Dennison Corporation, Specialty Tapes Division.
b. Ideal Tape Co., Inc., an American Biltrite Company.
c. Knauf Insulation.
d. Additional manufacturers submitted for and receiving engineer approval prior to bid.

2. Width: 3 inches.
3. Thickness: 11.5 mil.
4. Adhesion: 90 ounces force/inch-in width.
5. Elongation: 2-percent.
6. Tensile Strength: 40 lbf/inch in width.
7. ASJ Tape Disks and Squares: Precut disks or squares of ASJ tape.

B. FSK Tape: Foil-face, vapor-retarder tape matching factory-applied jacket with acrylic adhesive; complying with ASTM C1136.

1. Manufacturers: Subject to compliance with requirements, available manufacturers offering products that may be incorporated into the Work include the following:

a. Avery Dennison Corporation, Specialty Tapes Division.
b. Ideal Tape Co., Inc., an American Biltrite Company.
c. Knauf Insulation.
d. Additional manufacturers submitted for and receiving engineer approval prior to bid.

2. Width: 3 inches.
3. Thickness: 6.5 mils.
4. Adhesion: 90 ounces force/inch in width.
5. Elongation: 2 percent.
6. Tensile Strength: 40 lbf/inch in width.
7. FSK Tape Disks and Squares: Precut disks or squares of FSK tape.

C. PVC Tape: White vapor-retarder tape matching field-applied PVC jacket with acrylic adhesive; suitable for indoor and outdoor applications.

1. Manufacturers: Subject to compliance with requirements, available manufacturers offering products that may be incorporated into the Work include the following:

a. 3M Industrial Adhesives and Tapes Division.
b. Ideal Tape Co., Inc., an American Biltrite Company.
c. Additional manufacturers submitted for and receiving engineer approval prior to bid.

2. Width: 2 inches.
3. Thickness: 6 mils.
4. Adhesion: 64 ounces force/inch in width.
5. Elongation: 500 percent.
6. Tensile Strength: 18 lbf/inch in width.

D. Aluminum-Foil Tape: Vapor-retarder tape with acrylic adhesive.

1. Manufacturers: Subject to compliance with requirements, available manufacturers offering products that may be incorporated into the Work include the following:

    a. Avery Dennison Corporation, Specialty Tapes Division.
    b. Ideal Tape Co., Inc., an American Biltrite Company.
    c. Additional manufacturers submitted for and receiving engineer approval prior to bid.

2. Width: 2 inches.
3. Thickness: 3.7 mils.
4. Adhesion: 100 ounces force/inch in width.
5. Elongation: 5 percent.
6. Tensile Strength: 34 lbf/inch in width.

2.8 SECUREMENTS

A. Bands:
1. Stainless Steel: ASTM A240/A240M, Type 304 or Type 316; 0.015 inch thick, 1/2 inch wide with wing seal or closed seal.
2. Aluminum: ASTM B209, Alloy 3003, 3005, 3105, or 5005; Temper H-14, 0.020 inch thick, 1/2 inch wide with wing seal or closed seal.

B. Staples: Outward-clinching insulation staples, nominal 3/4-inch-wide, stainless steel or Monel.

C. Wire: 0.080-inch nickel-copper alloy or 0.062-inch soft-annealed, stainless steel or 0.062-inch soft-annealed, galvanized steel.

1. Manufacturers: Subject to compliance with requirements, available manufacturers offering products that may be incorporated into the Work include the following:

    a. C & F Wire.
    b. Additional manufacturers submitted for and receiving engineer approval prior to bid.

2.9 PROTECTIVE SHIELDING GUARDS

A. Protective Shielding Pipe Covers

1. Manufacturers: Subject to compliance with requirements, available manufacturers offering products that may be incorporated into the Work include the following:

    a. Buckaroos, Inc.
    b. Zurn Industries, LLC.
    c. Additional manufacturers submitted for and receiving engineer approval prior to bid.

2. Description: Manufactured plastic wraps for covering plumbing fixture hot- and cold-water supplies and trap and drain piping. Comply with Americans with Disabilities Act (ADA) requirements.

B. Protective Shielding Piping Enclosures:

1. Manufacturers: Subject to compliance with requirements, available manufacturers offering products that may be incorporated into the Work include the following:

a. Truebro.
b. Zurn Industries, LLC.
c. Additional manufacturers submitted for and receiving engineer approval prior to bid.

2. Description: Manufactured plastic enclosure for covering plumbing fixture hot- and cold-water supplies and trap and drain piping. Comply with ADA requirements.

PART 3 - EXECUTION

3.1 PREPARATION

A. Clean and dry surfaces to receive insulation. Remove materials that will adversely affect insulation application.

B. Clean and prepare surfaces to be insulated.

3.2 GENERAL INSTALLATION REQUIREMENTS

A. Install insulation materials, accessories, and finishes with smooth, straight, and even surfaces; free of voids throughout the length of piping, including fittings, valves, and specialties.

B. Install insulation materials, forms, vapor barriers or retarders, jackets, and of thicknesses required for each item of pipe system, as specified in insulation system schedules.

C. Install accessories compatible with insulation materials and suitable for the service. Install accessories that do not corrode, soften, or otherwise attack insulation or jacket in either wet or dry state.

D. Install multiple layers of insulation with longitudinal and end seams staggered.

E. Do not weld brackets, clips, or other attachment devices to piping, fittings, and specialties.

F. Keep insulation materials dry during storage, application, and finishing. Replace insulation materials that get wet.

G. Install insulation with tight longitudinal seams and end joints. Bond seams and joints with adhesive recommended by insulation material manufacturer.

H. Install insulation with least number of joints practical.

I. Apply adhesives, mastics, and sealants at manufacturer's recommended coverage rate and wet and dry film thicknesses.

J. Install insulation with factory-applied jackets as follows:

1. Draw jacket tight and smooth.
2. Cover circumferential joints with 3-inch-wide strips, of same material as insulation jacket. Secure strips with adhesive and outward-clinching staples along both edges of strip, spaced 4 inches o.c.
3. Overlap jacket longitudinal seams at least 1-1/2 inches. Install insulation with longitudinal seams at bottom of pipe. Clean and dry surface to receive self-sealing lap. Staple laps with outward-clinching staples along edge at 4 inches o.c.

    a. For below-ambient services, apply vapor-barrier mastic over staples.

4. Cover joints and seams with tape, in accordance with insulation material manufacturer's written instructions, to maintain vapor seal.
5. Where vapor barriers are indicated, apply vapor-barrier mastic on seams and joints and at ends adjacent to pipe flanges and fittings.

K. Cut insulation in a manner to avoid compressing insulation more than 25 percent of its nominal thickness.

L. Finish installation with systems at operating conditions. Repair joint separations and cracking due to thermal movement.

M. Repair damaged insulation facings by applying same facing material over damaged areas. Extend patches at least 4 inches beyond damaged areas. Adhere, staple, and seal patches in similar fashion to butt joints.

N. For above-ambient services, do not install insulation to the following:

1. Vibration-control devices.
2. Testing agency labels and stamps.
3. Nameplates and data plates.
4. Cleanouts.

3.3 PENETRATIONS

A. Insulation Installation at Roof Penetrations: Install insulation continuously through roof penetrations.

1. Seal penetrations with flashing sealant.
2. For applications requiring only indoor insulation, terminate insulation above roof surface and seal with joint sealant. For applications requiring indoor and outdoor insulation, install insulation for outdoor applications tightly joined to indoor insulation ends. Seal joint with joint sealant.

3. Extend jacket of outdoor insulation outside roof flashing at least 2 inches below top of roof flashing.
4. Seal jacket to roof flashing with flashing sealant.

B. Insulation Installation at Underground Exterior Wall Penetrations: Terminate insulation flush with sleeve seal. Seal terminations with flashing sealant.

C. Insulation Installation at Aboveground Exterior Wall Penetrations: Install insulation continuously through wall penetrations.

1. Seal penetrations with flashing sealant.
2. For applications requiring only indoor insulation, terminate insulation inside wall surface and seal with joint sealant. For applications requiring indoor and outdoor insulation, install insulation for outdoor applications tightly joined to indoor insulation ends. Seal joint with joint sealant.
3. Extend jacket of outdoor insulation outside wall flashing and overlap wall flashing at least 2 inches.
4. Seal jacket to wall flashing with flashing sealant.

D. Insulation Installation at Interior Wall and Partition Penetrations (That Are Not Fire Rated): Install insulation continuously through walls and partitions.

E. Insulation Installation at Fire-Rated Wall and Partition Penetrations: Install insulation continuously through penetrations of fire-rated walls and partitions.

1. Comply with requirements in Section 078413 "Penetration Firestopping" for firestopping and fire-resistive joint sealers.

F. Insulation Installation at Floor Penetrations:

1. Pipe: Install insulation continuously through floor penetrations.
2. Seal penetrations through fire-rated assemblies. Comply with requirements in Section 078413 "Penetration Firestopping."

3.4 GENERAL PIPE INSULATION INSTALLATION

A. Requirements in this article generally apply to all insulation materials, except where more specific requirements are specified in various pipe insulation material installation articles.

B. Insulation Installation on Fittings, Valves, Strainers, Flanges, Mechanical Couplings, and Unions:

1. Install insulation over fittings, valves, strainers, flanges, mechanical couplings, unions, and other specialties with continuous thermal and vapor-retarder integrity unless otherwise indicated.
2. Insulate pipe elbows using preformed fitting insulation or mitered fittings made from same material and density as that of adjacent pipe insulation. Each piece shall be butted tightly against adjoining piece and bonded with adhesive. Fill joints, seams, voids, and

irregular surfaces with insulating cement finished to a smooth, hard, and uniform contour that is uniform with adjoining pipe insulation.

3. Insulate tee fittings with preformed fitting insulation or sectional pipe insulation of same material and thickness as that used for adjacent pipe. Cut sectional pipe insulation to fit. Butt each section closely to the next and hold in place with tie wire. Bond pieces with adhesive.
4. Insulate valves using preformed fitting insulation or sectional pipe insulation of same material, density, and thickness as that used for adjacent pipe. Overlap adjoining pipe insulation by not less than 2 times the thickness of pipe insulation, or one pipe diameter, whichever is thicker. For valves, insulate up to and including the bonnets, valve stuffing-box studs, bolts, and nuts. Fill joints, seams, and irregular surfaces with insulating cement.
5. Insulate strainers using preformed fitting insulation or sectional pipe insulation of same material, density, and thickness as used for adjacent pipe. Overlap adjoining pipe insulation by not less than 2 times the thickness of pipe insulation, or one pipe diameter, whichever is thicker. Fill joints, seams, and irregular surfaces with insulating cement. Insulate strainers, so strainer basket flange or plug can be easily removed and replaced without damaging the insulation and jacket. Provide a removable reusable insulation cover. For below-ambient services, provide a design that maintains vapor barrier.
6. Insulate flanges, mechanical couplings, and unions, using a section of oversized preformed pipe insulation. Overlap adjoining pipe insulation by not less than 2 times the thickness of pipe insulation, or one pipe diameter, whichever is thicker. Stencil or label the outside insulation jacket of each union with the word "union" matching size and color of pipe labels.
7. Cover segmented insulated surfaces with a layer of finishing cement and coat with a mastic. Install vapor-barrier mastic for below-ambient services and a breather mastic for above-ambient services. Reinforce the mastic with fabric-reinforcing mesh. Trowel the mastic to a smooth and well-shaped contour.
8. For services not specified to receive a field-applied jacket, except for flexible elastomeric and polyolefin, install fitted PVC cover over elbows, tees, strainers, valves, flanges, and unions. Terminate ends with PVC end caps. Tape PVC covers to adjoining insulation facing, using PVC tape.

C. Insulate instrument connections for thermometers, pressure gages, pressure temperature taps, test connections, flow meters, sensors, switches, and transmitters on insulated pipes. Shape insulation at these connections by tapering it to and around the connection with insulating cement and finish with finishing cement, mastic, and flashing sealant.

3.5 INSTALLATION OF CELLULAR-GLASS INSULATION

A. Insulation Installation on Straight Pipes and Tubes:

1. Secure each layer of insulation to pipe with wire or bands, and tighten bands without deforming insulation materials.
2. Where vapor barriers are indicated, seal longitudinal seams, end joints, and protrusions with vapor-barrier mastic and joint sealant.
3. For insulation with factory-applied jackets on above-ambient services, secure laps with outward-clinched staples at 6 inches o.c.

4. For insulation with factory-applied jackets on below-ambient services, do not staple longitudinal tabs. Instead, secure tabs with additional adhesive, as recommended by insulation material manufacturer, and seal with vapor-barrier mastic and flashing sealant.

B. Insulation Installation on Pipe Flanges:

1. Install preformed pipe insulation to outer diameter of pipe flange.
2. Make width of insulation section same as overall width of flange and bolts, plus twice the thickness of pipe insulation.
3. Fill voids between inner circumference of flange insulation and outer circumference of adjacent straight pipe segments with cut sections of cellular-glass block insulation of same thickness as that of pipe insulation.
4. Install jacket material with manufacturer's recommended adhesive, overlap seams at least 1 inch, and seal joints with flashing sealant.

C. Insulation Installation on Pipe Fittings and Elbows:

1. Install preformed sections of same material as that of straight segments of pipe insulation when available. Secure according to manufacturer's written instructions.
2. When preformed sections of insulation are not available, install mitered sections of cellular-glass insulation. Secure insulation materials with wire or bands.

D. Insulation Installation on Valves and Pipe Specialties:

1. Install preformed sections of cellular-glass insulation to valve body.
2. Arrange insulation to permit access to packing and to allow valve operation without disturbing insulation.
3. Install insulation to flanges as specified for flange insulation application.

3.6 INSTALLATION OF FLEXIBLE ELASTOMERIC INSULATION

A. Seal longitudinal seams and end joints with manufacturer's recommended adhesive to eliminate openings in insulation that allow passage of air to surface being insulated.

B. Insulation Installation on Pipe Flanges:

1. Install pipe insulation to outer diameter of pipe flange.
2. Make width of insulation section same as overall width of flange and bolts, plus twice the thickness of pipe insulation.
3. Fill voids between inner circumference of flange insulation and outer circumference of adjacent straight pipe segments with cut sections of sheet insulation of same thickness as that of pipe insulation.
4. Secure insulation to flanges and seal seams with manufacturer's recommended adhesive to eliminate openings in insulation that allow passage of air to surface being insulated.

C. Insulation Installation on Pipe Fittings and Elbows:

1. Install mitered sections of pipe insulation.

2. Secure insulation materials and seal seams with manufacturer's recommended adhesive to eliminate openings in insulation that allow passage of air to surface being insulated.

D. Insulation Installation on Valves and Pipe Specialties:

1. Install preformed valve covers manufactured of same material as that of pipe insulation when available.
2. When preformed valve covers are not available, install cut sections of pipe and sheet insulation to valve body. Arrange insulation to permit access to packing and to allow valve operation without disturbing insulation.
3. Install insulation to flanges as specified for flange insulation application.
4. Secure insulation to valves and specialties, and seal seams with manufacturer's recommended adhesive to eliminate openings in insulation that allow passage of air to surface being insulated.

3.7 INSTALLATION OF MINERAL-FIBER INSULATION

A. Insulation Installation on Straight Pipes and Tubes:

1. Secure each layer of preformed pipe insulation to pipe with wire or bands, and tighten bands without deforming insulation materials.
2. Where vapor barriers are indicated, seal longitudinal seams, end joints, and protrusions with vapor-barrier mastic and joint sealant.
3. For insulation with factory-applied jackets on above-ambient surfaces, secure laps with outward-clinched staples at 6 inches o.c.
4. For insulation with factory-applied jackets on below-ambient surfaces, do not staple longitudinal tabs. Instead, secure tabs with additional adhesive, as recommended by insulation material manufacturer, and seal with vapor-barrier mastic and flashing sealant.

B. Insulation Installation on Pipe Flanges:

1. Install preformed pipe insulation to outer diameter of pipe flange.
2. Make width of insulation section same as overall width of flange and bolts, plus twice the thickness of pipe insulation.
3. Fill voids between inner circumference of flange insulation and outer circumference of adjacent straight pipe segments with mineral-fiber blanket insulation.
4. Install jacket material with manufacturer's recommended adhesive, overlap seams at least 1 inch, and seal joints with flashing sealant.

C. Insulation Installation on Pipe Fittings and Elbows:

1. Install preformed sections of same material as that of straight segments of pipe insulation when available.
2. When preformed insulation elbows and fittings are not available, install mitered sections of pipe insulation, to a thickness equal to adjoining pipe insulation. Secure insulation materials with wire or bands.

D. Insulation Installation on Valves and Pipe Specialties:

1. Install preformed sections of same material as that of straight segments of pipe insulation when available.
2. When preformed sections are not available, install mitered sections of pipe insulation to valve body.
3. Arrange insulation to permit access to packing and to allow valve operation without disturbing insulation.
4. Install insulation to flanges as specified for flange insulation application.

3.8 INSTALLATION OF POLYOLEFIN INSULATION

A. Insulation Installation on Straight Pipes and Tubes:

1. Seal split-tube longitudinal seams and end joints with manufacturer's recommended adhesive to eliminate openings in insulation that allow passage of air to surface being insulated.

B. Insulation Installation on Pipe Flanges:

1. Install pipe insulation to outer diameter of pipe flange.
2. Make width of insulation section same as overall width of flange and bolts, plus twice the thickness of pipe insulation.
3. Fill voids between inner circumference of flange insulation and outer circumference of adjacent straight pipe segments with cut sections of polyolefin sheet insulation of same thickness as that of pipe insulation.
4. Secure insulation to flanges and seal seams with manufacturer's recommended adhesive to eliminate openings in insulation that allow passage of air to surface being insulated.

C. Insulation Installation on Pipe Fittings and Elbows:

1. Install mitered sections of polyolefin pipe insulation.
2. Secure insulation materials and seal seams with manufacturer's recommended adhesive to eliminate openings in insulation that allow passage of air to surface being insulated.

D. Insulation Installation on Valves and Pipe Specialties:

1. Install cut sections of polyolefin pipe and sheet insulation to valve body.
2. Arrange insulation to permit access to packing and to allow valve operation without disturbing insulation.
3. Install insulation to flanges as specified for flange insulation application.
4. Secure insulation to valves and specialties, and seal seams with manufacturer's recommended adhesive to eliminate openings in insulation that allow passage of air to surface being insulated.

3.9 FIELD-APPLIED JACKET INSTALLATION

A. Where glass-cloth jackets are indicated, install directly over bare insulation or insulation with factory-applied jackets.

1. Draw jacket smooth and tight to surface with 2-inch overlap at seams and joints.
2. Embed glass cloth between two 0.062-inch-thick coats of lagging adhesive.
3. Completely encapsulate insulation with coating, leaving no exposed insulation.

B. Where FSK jackets are indicated, install as follows:

1. Draw jacket material smooth and tight.
2. Install lap or joint strips with same material as jacket.
3. Secure jacket to insulation with manufacturer's recommended adhesive.
4. Install jacket with 1-1/2-inch laps at longitudinal seams and 3-inch-wide joint strips at end joints.
5. Seal openings, punctures, and breaks in vapor-retarder jackets and exposed insulation with vapor-barrier mastic.

C. Where PVC jackets are indicated, install with 1-inch overlap at longitudinal seams and end joints. Seal with manufacturer's recommended adhesive.

1. Apply two continuous beads of adhesive to seams and joints, one bead under lap and the finish bead along seam and joint edge.

D. Where metal jackets are indicated, install with 2-inch overlap at longitudinal seams and end joints. Overlap longitudinal seams arranged to shed water. Seal end joints with weatherproof sealant recommended by insulation manufacturer. Secure jacket with stainless steel bands 12 inches o.c. and at end joints.

3.10 FINISHES

A. Insulation with ASJ, Glass-Cloth, or Other Paintable Jacket Material: Paint jacket with paint system identified below and as specified in Section 099113 "Exterior Painting" and Section 099123 "Interior Painting."

1. Flat Acrylic Finish: Two finish coats over a primer that is compatible with jacket material and finish coat paint. Add fungicidal agent to render fabric mildew proof.

a. Finish Coat Material: Interior, flat, latex-emulsion size.

B. Flexible Elastomeric Thermal Insulation: After adhesive has fully cured, apply two coats of insulation manufacturer's recommended protective coating.

C. Color: Final color as selected by Architect. Vary first and second coats to allow visual inspection of the completed Work.

D. Do not field paint aluminum or stainless steel jackets.

3.11 FIELD QUALITY CONTROL

A. Perform tests and inspections.

B. Tests and Inspections: Inspect pipe, fittings, strainers, and valves, randomly selected by Architect, by removing field-applied jacket and insulation in layers in reverse order of their installation. Extent of inspection shall be limited to three locations of straight pipe, three locations of threaded fittings, three locations of welded fittings, two locations of threaded strainers, two locations of welded strainers, three locations of threaded valves, and three locations of flanged valves for each pipe service defined in the "Piping Insulation Schedule, General" Article.

C. All insulation applications will be considered defective if they do not pass tests and inspections.

D. Prepare test and inspection reports.

3.12 PIPING INSULATION SCHEDULE, GENERAL

A. Acceptable preformed pipe and tubular insulation materials and thicknesses are identified for each piping system and pipe size range. If more than one material is listed for a piping system, selection from materials listed is Contractor's option.

B. Items Not Insulated: Unless otherwise indicated, do not install insulation on the following:

1. Drainage piping located in crawl spaces.
    a. Sanitary sewer and storm drainage piping located in unconditioned parking garages need only p-traps insulated unless otherwise notes.
        1) Greasy waste piping in unconditioned parking garages to be insulated and heat taped.
2. Underground piping.
3. Chrome-plated pipes and fittings unless there is a potential for personnel injury.
4. Backflow preventers.

3.13 INDOOR PIPING INSULATION SCHEDULE

A. Domestic Cold Water:

1. NPS 1 and Smaller: Insulation shall be one of the following:

    a. Flexible Elastomeric: 3/4 inch thick.
    b. Mineral-Fiber, Preformed Pipe Insulation, Type I: 1/2 inch thick.
    c. Polyolefin: 3/4 inch thick.

B. Domestic Hot and Recirculated Hot Water:

1. Insulation shall be one of the following:

    a. Flexible Elastomeric: 3/4 inch- thick.
    b. Mineral-Fiber, Preformed Pipe Insulation, Type I: 1/2 inch-thick.
    c. Polyolefin: 3/4 inch-thick.

C. Stormwater and Overflow:

1. All Pipe Sizes: Insulation shall be one of the following:

    a. Flexible Elastomeric: 1 inch thick or larger.
    b. Mineral-Fiber, Preformed Pipe Insulation, Type I: 1 inch thick or larger.
    c. Polyolefin: 1 inch thick or larger.

D. Roof Drain and Overflow Drain Bodies:

1. All Pipe Sizes: Insulation shall be one of the following:

    a. Flexible Elastomeric: 1 inch thick.
    b. Mineral-Fiber, Preformed Pipe Insulation, Type I: 1 inch thick.
    ~~c.~~ Polyolefin: 1 inch thick~~.~~

E. Exposed Sanitary Drains, Domestic Water, Domestic Hot Water, and Stops for Plumbing Fixtures for People with Disabilities:

1. All Pipe Sizes: Insulation shall be one of the following:

    a. Flexible Elastomeric: 1/2 inch thick.
    b. Mineral-Fiber, Preformed Pipe Insulation, Type I: 1/2 inch thick.
    c. Polyolefin: 3/4 inch thick.

3.14 INDOOR, FIELD-APPLIED JACKET SCHEDULE

A. Install jacket over insulation material. For insulation with factory-applied jacket, install the field-applied jacket over the factory-applied jacket.

B. If more than one material is listed, selection from materials listed is Contractor's option.

C. Piping, Concealed:

1. None.

D. Piping, Exposed:

1. None.
2. PVC: 20 mils thick.
3. Aluminum, Smooth: 0.016 inch thick.

3.15 OUTDOOR, FIELD-APPLIED JACKET SCHEDULE

A. Install jacket over insulation material. For insulation with factory-applied jacket, install the field-applied jacket over the factory-applied jacket.

B. If more than one material is listed, selection from materials listed is Contractor's option.

C. Piping, Concealed:

1. None.
2. PVC: 20 mils thick.
3. Aluminum, Smooth: 0.016 inch thick.
4. Painted Aluminum, Smooth: 0.016 inch thick.

D. Piping, Exposed:

1. PVC: 20 mils thick.
2. Painted Aluminum, Smooth: 0.016 inch thick.

3.16 UNDERGROUND, FIELD-APPLIED INSULATION JACKET

A. For underground direct-buried piping applications, install underground direct-buried jacket over insulation material.

END OF SECTION 220719

SECTION 221116 - DOMESTIC WATER PIPING

PART 1 - GENERAL

1.1 SUMMARY

A. Section Includes:

1. Copper tube and fittings.
2. CPVC piping.
3. PEX tube and fittings.
4. Piping joining materials.
5. Transition fittings.
6. Dielectric fittings.

PART 2 - PRODUCTS

2.1 PIPING MATERIALS

A. Comply with requirements in "Piping Schedule" Article for applications of pipe, tube, fitting materials, and joining methods for specific services, service locations, and pipe sizes.

B. Potable-water piping and components shall comply with NSF 14, NSF 61, and NSF 372. Include marking "NSF-pw" on piping.

2.2 COPPER TUBE AND FITTINGS

A. Hard Copper Tube: ASTM B88, Type L.

B. Soft Copper Tube: ASTM B88, Type K and ASTM B88, Type L water tube, annealed temper.

C. Cast-Copper, Solder-Joint Fittings: ASME B16.18, pressure fittings.

D. Wrought-Copper, Solder-Joint Fittings: ASME B16.22, pressure fittings.

E. Bronze Flanges: ASME B16.24, Class 150, with solder-joint ends.

F. Cast Copper Unions: MSS SP-123, cast-copper-alloy, hexagonal-stock body, with ball-and-socket, metal-to-metal seating surfaces and solder-joint or threaded ends.

G. Wrought Copper Unions: ASME B16.22.

H. Copper Tube, Pressure-Seal-Joint Fittings:

1. Fittings: Cast-brass, cast-bronze, or wrought-copper with EPDM O-ring seal in each end.
2. Minimum 200-psig working-pressure rating at 250 deg F.

I. Copper Tube, Push-on-Joint Fittings:

1. Cast-copper fitting complying with ASME B16.18 or wrought-copper fitting complying with ASME B 16.22.
2. Stainless steel teeth and EPDM-rubber, O-ring seal in each end instead of solder-joint ends.

2.3 CPVC PIPING

A. CPVC Pipe: ASTM F441/F441M, schedule 40 and schedule 80.

1. CPVC Socket Fittings: ASTM F438 for Schedule 40 and ASTM F439 for Schedule 80.
2. CPVC Threaded Fittings: ASTM F437, Schedule 80.

B. CPVC Piping System: ASTM D2846/D2846M, SDR 11, pipe and socket fittings.

C. CPVC Tubing System: ASTM D2846/D2846M, SDR 11, tube and socket fittings.

2.4 PEX TUBE AND FITTINGS

A. Manufacturers: Subject to compliance with requirements, available manufacturers offering products that may be incorporated into the Work include the following:

1. Apollo Valves; a part of Aalberts Integrated Piping Systems.
2. Watts Radiant; A WATTS Brand.
3. Zurn Industries, LLC.
4. Additional manufacturers submitted for and receiving engineer approval prior to bid.

B. Tube Material: PEX plastic according to ASTM F876 and ASTM F877.

C. Fittings: ASTM F1807, metal insert and copper crimp rings.

D. Push-Fit Fittings: ASSE 1061, push-fit fittings.

1. Manufacturers: Subject to compliance with requirements, available manufacturers offering products that may be incorporated into the Work include the following:

a. SharkBite, A Division of Reliance Worldwide Corporation.
b. Zurn Industries, LLC.
c. Additional manufacturers submitted for and receiving engineer approval prior to bid.

E. Manifold: Multiple-outlet, plastic or corrosion-resistant-metal assembly complying with ASTM F876; with plastic or corrosion-resistant-metal valve for each outlet.

2.5 PIPING JOINING MATERIALS

A. Pipe-Flange Gasket Materials:

1. AWWA C110/A21.10, rubber, flat face, 1/8 inch thick or ASME B16.21, nonmetallic and asbestos free unless otherwise indicated.
2. Full-face or ring type unless otherwise indicated.

B. Metal, Pipe-Flange Bolts and Nuts: ASME B18.2.1, carbon steel unless otherwise indicated.

C. Solder Filler Metals: ASTM B32, lead-free alloys.

D. Flux: ASTM B813, water flushable.

E. Brazing Filler Metals: AWS A5.8M/A5.8, BCuP Series, copper-phosphorus alloys for general-duty brazing unless otherwise indicated.

F. Solvent Cements for Joining CPVC Piping and Tubing: ASTM F493.

~~G.~~ Solvent Cements for Joining PVC Piping: ASTM D2564. Include primer according to ASTM F656.~~.~~

H. Plastic, Pipe-Flange Gaskets, Bolts, and Nuts: Type and material recommended by piping system manufacturer unless otherwise indicated.

2.6 TRANSITION FITTINGS

A. General Requirements:

1. Same size as pipes to be joined.
2. Pressure rating at least equal to pipes to be joined.
3. End connections compatible with pipes to be joined.

B. Fitting-Type Transition Couplings: Manufactured piping coupling or specified piping system fitting.

C. Plastic-to-Metal Transition Fittings:

1. Manufacturers: Subject to compliance with requirements, available manufacturers offering products that may be incorporated into the Work include the following:

a. Charlotte Pipe and Foundry Company.
b. Spears Manufacturing Company.
c. Additional manufacturers submitted for and receiving engineer approval prior to bid.

2. Description:

   a. CPVC one-piece fitting with manufacturer's Schedule 80 equivalent dimensions.
   b. One end with threaded brass insert and one solvent-cement-socket or threaded end.

D. Plastic-to-Metal Transition Unions:

1. Manufacturers: Subject to compliance with requirements, available manufacturers offering products that may be incorporated into the Work include the following:

   a. Colonial Engineering, Inc.
   b. NIBCO INC.
   c. Spears Manufacturing Company.
   d. Additional manufacturers submitted for and receiving engineer approval prior to bid.

2. Description:

   a. CPVC four-part union.
   b. Brass or stainless steel threaded end.
   c. Solvent-cement-joint or threaded plastic end.
   d. Rubber O-ring.
   e. Union nut.

2.7 DIELECTRIC FITTINGS

A. General Requirements: Assembly of copper alloy and ferrous materials with separating nonconductive insulating material. Include end connections compatible with pipes to be joined.

B. Dielectric Unions:

1. Manufacturers: Subject to compliance with requirements, available manufacturers offering products that may be incorporated into the Work include the following:

   a. WATTS.
   b. Wilkins.
   c. Zurn Industries, LLC.
   d. Additional manufacturers submitted for and receiving engineer approval prior to bid.

2. Standard: ASSE 1079.
3. Pressure Rating: 250 psig.
4. End Connections: Solder-joint copper alloy and threaded ferrous.

C. Dielectric Flanges:

1. Manufacturers: Subject to compliance with requirements, available manufacturers offering products that may be incorporated into the Work include the following:

a. WATTS.
b. Wilkins.
c. Zurn Industries, LLC.
d. Additional manufacturers submitted for and receiving engineer approval prior to bid.

2. Standard: ASSE 1079.
3. Factory-fabricated, bolted, companion-flange assembly.
4. Pressure Rating: 175 psig.
5. End Connections: Solder-joint copper alloy and threaded ferrous; threaded solder-joint copper alloy and threaded ferrous.

D. Dielectric-Flange Insulating Kits:

1. Manufacturers: Subject to compliance with requirements, available manufacturers offering products that may be incorporated into the Work include the following:

a. Advance Products & Systems, Inc.
b. Calpico, Inc.
c. Central Plastics Company.
d. Additional manufacturers submitted for and receiving engineer approval prior to bid.

2. Nonconducting materials for field assembly of companion flanges.
3. Pressure Rating: 150 psig.
4. Gasket: Neoprene or phenolic.
5. Bolt Sleeves: Phenolic or polyethylene.
6. Washers: Phenolic with steel backing washers.

E. Dielectric Nipples:

1. Manufacturers: Subject to compliance with requirements, available manufacturers offering products that may be incorporated into the Work include the following:

a. Grinnell G-Fire by Johnson Controls Company.
b. Matco-Norca.
c. Precision Plumbing Products.
d. Additional manufacturers submitted for and receiving engineer approval prior to bid.

2. Standard: IAPMO PS 66.
3. Electroplated steel nipple complying with ASTM F1545.
4. End Connections: Male threaded or grooved.
5. Lining: Inert and noncorrosive, propylene.

PART 3 - EXECUTION

3.1 PIPING APPLICATIONS

A. Transition and special fittings with pressure ratings at least equal to piping rating may be used in applications below unless otherwise indicated.

B. Flanges and unions may be used for aboveground piping joints unless otherwise indicated.

C. Fitting Option: Extruded-tee connections and brazed joints may be used on aboveground copper tubing.

D. Under-building-slab, domestic water, building-service piping, NPS 4 and smaller, shall be one of the following:

1. Soft copper tube, ASTM B88, Type K or ASTM B88, Type L; wrought-copper, solder-joint fittings; and brazed or copper pressure-seal fittings; and pressure-sealed joints.
2. CPVC, Schedule 40 ; socket fittings; and solvent-cemented joints.

E. Under-building-slab, domestic water piping, NPS4 and smaller, shall be one of the following:

1. Hard or soft copper tube, ASTM B88, Type L; wrought-copper, solder-joint fittings; and brazed or copper pressure-seal-joint fittings; and pressure-sealed joints.
2. CPVC, Schedule 40; socket fittings; and solvent-cemented joints.

F. Aboveground domestic water piping, NPS 4 and smaller, shall be-one of the following:
1. Hard copper tube, ASTM B88, Type L or ASTM B88, Type M; cast- or wrought-copper, solder-joint fittings; and brazed or soldered joints.
2. Hard copper tube, ASTM B88, Type L or ASTM B88, Type M; copper pressure-seal-joint fittings; and pressure-sealed joints.
3. Hard copper tube, ASTM B88, Type L or ASTM B88, Type M; copper push-on-joint fittings; and push-on joints.
4. CPVC, Schedule 40; socket fittings; and solvent-cemented joints.
5. CPVC, Schedule 80 pipe; CPVC, Schedule 80 threaded fittings; and threaded joints.
6. CPVC Tubing System: CPVC tube; CPVC socket fittings; and solvent-cemented joints. NPS 1-1/2 and NPS 2 CPVC pipe with CPVC socket fittings may be used instead of tubing.
7. PEX tube, NPS 1 and smaller.

    a. Fittings for PEX tube:

        1) ASTM F1807, metal insert and copper crimp rings.
        2) ASTM F1960, cold expansion fittings and reinforcing rings.
        3) ASSE 1061, push-fit fittings.

3.2 EARTHWORK

A. Comply with requirements in Section 312000 "Earth Moving" for excavating, trenching, and backfilling.

3.3 INSTALLATION OF PIPING

A. Drawing plans, schematics, and diagrams indicate general location and arrangement of domestic water piping.. Install piping as indicated unless deviations to layout are approved on coordination drawings.

B. Install copper tubing under building slab according to CDA's "Copper Tube Handbook."

C. Install valves according to the following:

1. Section 220523.12 "Ball Valves for Plumbing Piping."
2. Section 220523.14 "Check Valves for Plumbing Piping."

D. Install water-pressure-reducing valves downstream from shutoff valves. Comply with requirements for pressure-reducing valves in Section 221119 "Domestic Water Piping Specialties."

E. Rough-in domestic water piping for water-meter installation according to utility company's requirements.

F. Install piping concealed from view and protected from physical contact by building occupants unless otherwise indicated and except in equipment rooms and service areas.

G. Install piping above accessible ceilings to allow sufficient space for ceiling panel removal, and coordinate with other services occupying that space.

H. Install piping to permit valve servicing.

I. Install nipples, unions, special fittings, and valves with pressure ratings the same as or higher than the system pressure rating used in applications below unless otherwise indicated.

J. Install piping free of sags and bends.

K. Install fittings for changes in direction and branch connections.

L. Install PEX tubing with loop at each change of direction of more than 90 degrees.

M. Install unions in copper tubing at final connection to each piece of equipment, machine, and specialty.

N. Install thermometers on inlet and outlet piping from each water heater.

O. Install sleeves for piping penetrations of walls, ceilings, and floors. Comply with requirements for sleeves specified in Section 220517 "Sleeves and Sleeve Seals for Plumbing Piping."

P. Install sleeve seals for piping penetrations of concrete walls and slabs. Comply with requirements for sleeve seals specified in Section 220517 "Sleeves and Sleeve Seals for Plumbing Piping."

Q. Install escutcheons for piping penetrations of walls, ceilings, and floors. Comply with requirements for escutcheons specified in Section 220518 "Escutcheons for Plumbing Piping."

3.4 JOINT CONSTRUCTION

A. Ream ends of pipes and tubes and remove burrs. Bevel plain ends of steel pipe.

B. Remove scale, slag, dirt, and debris from inside and outside of pipes, tubes, and fittings before assembly.

C. Threaded Joints: Thread pipe with tapered pipe threads according to ASME B1.20.1. Cut threads full and clean using sharp dies. Ream threaded pipe ends to remove burrs and restore full ID. Join pipe fittings and valves as follows:

1. Apply appropriate tape or thread compound to external pipe threads.
2. Damaged Threads: Do not use pipe or pipe fittings with threads that are corroded or damaged.

D. Brazed Joints for Copper Tubing: Comply with CDA's "Copper Tube Handbook," "Brazed Joints" chapter.

E. Soldered Joints for Copper Tubing: Apply ASTM B813, water-flushable flux to end of tube. Join copper tube and fittings according to ASTM B828 or CDA's "Copper Tube Handbook."

F. Pressure-Sealed Joints for Copper Tubing: Join copper tube and pressure-seal fittings with tools recommended by fitting manufacturer.

G. Flanged Joints: Select appropriate asbestos-free, nonmetallic gasket material in size, type, and thickness suitable for domestic water service. Join flanges with gasket and bolts according to ASME B31.9.

H. Joint Construction for Solvent-Cemented Plastic Piping: Clean and dry joining surfaces. Join pipe and fittings according to the following:

1. Comply with ASTM F402 for safe-handling practice of cleaners, primers, and solvent cements. Apply primer.
2. CPVC Piping: Join according to ASTM D2846/D2846M Appendix.

I. Joints for PEX Tubing, ASTM: Join according to ASTM F1807 for metal insert and copper crimp ring fittings and ASTM F1960 for cold expansion fittings and reinforcing rings.

J. Joints for PEX Tubing, ASSE: Join according to ASSE 1061 for push-fit fittings.

K. Joints for Dissimilar-Material Piping: Make joints using adapters compatible with materials of both piping systems.

3.5 INSTALLATION OF TRANSITION FITTINGS

A. Install transition couplings at joints of dissimilar piping.

B. Transition Fittings in Underground Domestic Water Piping:

1. Fittings for NPS 1-1/2 and Smaller: Fitting-type coupling.
2. Fittings for NPS 2 and Larger: Sleeve-type coupling.

C. Transition Fittings in Aboveground Domestic Water Piping NPS 2 and Smaller: Plastic-to-metal transition fittings or unions.

3.6 INSTALLATION OF DIELECTRIC FITTINGS

A. Install dielectric fittings in piping at connections of dissimilar metal piping and tubing.

B. Dielectric Fittings for NPS 2 and Smaller: Use dielectric couplings or nipples unions.

3.7 INSTALLATION OF HANGERS AND SUPPORTS

A. Comply with requirements for hangers, supports, and anchor devices in Section 220529 "Hangers and Supports for Plumbing Piping and Equipment."

B. Install hangers for copper, ductile iron, and galvanized steel tubing and piping, with maximum horizontal spacing and minimum rod diameters, to comply with MSS-58, locally enforced codes, and authorities having jurisdiction requirements, whichever are most stringent.

C. Install vinyl-coated hangers for CPVC piping, with maximum horizontal spacing and minimum rod diameters, to comply with manufacturer's written instructions, locally enforced codes, and authorities having jurisdiction requirements, whichever are most stringent.

D. Install vinyl-coated hangers for PEX tubing, with maximum horizontal spacing and minimum rod diameters, to comply with manufacturer's written instructions, locally enforced codes, and authorities having jurisdiction requirements, whichever are most stringent.

E. Support horizontal piping within 12 inches of each fitting.

F. Support vertical runs of copper and stainless steel tubing and piping to comply with MSS-58, locally enforced codes, and authorities having jurisdiction requirements, whichever are most stringent.

G. Support vertical runs of CPVC piping to comply with manufacturer's written instructions, locally enforced codes, and authorities having jurisdiction requirements, whichever are most stringent.

H. Support vertical runs of PEX tubing to comply with manufacturer's written instructions, locally enforced codes, and authorities having jurisdiction requirements, whichever are most stringent.

3.8 CONNECTIONS

A. Drawings indicate general arrangement of piping, fittings, and specialties.

B. When installing piping adjacent to equipment and machines, allow space for service and maintenance.

3.9 IDENTIFICATION

A. Identify system components. Comply with requirements for identification materials and installation in Section 220553 "Identification for Plumbing Piping and Equipment."

B. Label pressure piping with system operating pressure.

3.10 ADJUSTING

A. Perform the following adjustments before operation:

1. Close drain valves, hydrants, and hose bibbs.
2. Open shutoff valves to fully open position.
3. Open throttling valves to proper setting.
4. Adjust balancing valves in hot-water-circulation return piping to provide adequate flow.

    a. Manually adjust ball-type balancing valves in hot-water-circulation return piping to provide hot-water flow in each branch.
    b. Adjust calibrated balancing valves to flows indicated.

5. Remove plugs used during testing of piping and for temporary sealing of piping during installation.
6. Remove and clean strainer screens. Close drain valves and replace drain plugs.
7. Remove filter cartridges from housings and verify that cartridges are as specified for application where used and are clean and ready for use.
8. Check plumbing specialties and verify proper settings, adjustments, and operation.

3.11 FIELD QUALITY CONTROL

A. Perform the following tests and inspections:

1. Piping Inspections:

    a. Do not enclose, cover, or put piping into operation until it has been inspected and approved by authorities having jurisdiction.
    b. During installation, notify authorities having jurisdiction at least one day before inspection must be made. Perform tests specified below in presence of authorities having jurisdiction:

1) Roughing-in Inspection: Arrange for inspection of piping before concealing or closing in after roughing in and before setting fixtures.
2) Final Inspection: Arrange for authorities having jurisdiction to observe tests specified in "Piping Tests" Subparagraph below and to ensure compliance with requirements.

c. Reinspection: If authorities having jurisdiction find that piping will not pass tests or inspections, make required corrections and arrange for reinspection.
d. Reports: Prepare inspection reports and have them signed by authorities having jurisdiction.

2. Piping Tests:

a. Fill domestic water piping. Check components to determine that they are not air bound and that piping is full of water.
b. Test for leaks and defects in new piping and parts of existing piping that have been altered, extended, or repaired. If testing is performed in segments, submit a separate report for each test, complete with diagram of portion of piping tested.
c. Leave new, altered, extended, or replaced domestic water piping uncovered and unconcealed until it has been tested and approved. Expose work that was covered or concealed before it was tested.
d. Cap and subject piping to static water pressure of 50 psig above operating pressure, without exceeding pressure rating of piping system materials. Isolate test source and allow it to stand for four hours. Leaks and loss in test pressure constitute defects that must be repaired.
e. Repair leaks and defects with new materials, and retest piping or portion thereof until satisfactory results are obtained.
f. Prepare reports for tests and for corrective action required.

B. Domestic water piping will be considered defective if it does not pass tests and inspections.

C. Prepare test and inspection reports.

3.12 CLEANING

A. Clean and disinfect potable domestic water piping as follows:

1. Purge new piping and parts of existing piping that have been altered, extended, or repaired before using.
2. Use purging and disinfecting procedures prescribed by authorities having jurisdiction; if methods are not prescribed, use procedures described in either AWWA C651 or AWWA C652 or follow procedures described below:

a. Flush piping system with clean, potable water until dirty water does not appear at outlets.
b. Fill and isolate system according to either of the following:

1) Fill system or part thereof with water/chlorine solution with at least 50 ppm of chlorine. Isolate with valves and allow to stand for 24 hours.

2) Fill system or part thereof with water/chlorine solution with at least 200 ppm of chlorine. Isolate and allow to stand for three hours.

c. Flush system with clean, potable water until no chlorine is in water coming from system after the standing time.
d. Repeat procedures if biological examination shows contamination.
e. Submit water samples in sterile bottles to authorities having jurisdiction.

B. Prepare and submit reports of purging and disinfecting activities. Include copies of water-sample approvals from authorities having jurisdiction.

C. Clean interior of domestic water piping system. Remove dirt and debris as work progresses.

END OF SECTION 221116

SECTION 221119 - DOMESTIC WATER PIPING SPECIALTIES

PART 1 - GENERAL

1.1 SUMMARY

A. Section Includes:

1. Vacuum breakers.
2. Backflow preventers.
3. Water pressure-reducing valves.
4. Balancing valves.
5. Temperature-actuated, water mixing valves.
6. Strainers for domestic water piping.
7. Hose bibbs.
8. Wall hydrants.
9. Drain valves.
10. Water-hammer arresters.
11. Trap-seal primer device.

B. Related Requirements:
1. Section 221116 "Domestic Water Piping" for water meters.
2. Section 224716 "Pressure Water Coolers" for water filters for water coolers.

1.2 ACTION SUBMITTALS

A. Product Data: For each type of product.

PART 2 - PRODUCTS

2.1 GENERAL REQUIREMENTS FOR PIPING SPECIALTIES

A. Domestic water piping specialties intended to convey or dispense water for human consumption are to comply with the SDWA, requirements of authorities having jurisdiction, and NSF 61 and NSF 372, or to be certified in compliance with NSF 61 and NSF 372 by an American National Standards Institute (ANSI)-accredited third-party certification body that the weighted average lead content at wetted surfaces is less than or equal to 0.25 percent.

2.2 PERFORMANCE REQUIREMENTS

A. Minimum Working Pressure for Domestic Water Piping Specialties: 125 psig unless otherwise indicated.

2.3 VACUUM BREAKERS

A. Pipe-Applied, Atmospheric-Type Vacuum Breakers:

1. Standard: ASSE 1001.
2. Size: NPS 1/4 to NPS 3, as required to match connected piping.
3. Body: Bronze.
4. Inlet and Outlet Connections: Threaded.
5. Finish: Rough bronze.

2.4 BACKFLOW PREVENTERS

A. Reduced-Pressure-Principle Backflow Preventers (BFP):

1. Manufacturers: Subject to compliance with requirements, available manufacturers offering products that may be incorporated into the Work include the following:

   a. Apollo Flow Controls; Conbraco Industries, Inc.
   b. WATTS.
   c. Zurn Industries, LLC.
   d. Additional manufacturers submitted for and receiving engineer approval prior to bid.

2. Standard: ASSE 1013.

3. See plumbing fixture schedule for more information.
4. Accessories:

   a. Valves NPS 2 and Smaller: Ball type with threaded ends on inlet and outlet.
   b. Air-Gap Fitting: ASME A112.1.2, matching backflow-preventer connection.

2.5 WATER PRESSURE-REDUCING VALVES

A. Water Regulators (PRV-1)

1. Subject to compliance with requirements, available manufacturers offering products that may be incorporated into the Work include the following:

   a. Apollo Flow Controls; Conbraco Industries, Inc.
   b. WATTS.
   c. Zurn Industries, LLC.
   d. Additional manufacturers submitted for and receiving engineer approval prior to bid.

2. Standard: ASSE 1003.

3. See plumbing fixture schedule for more information.

2.6 BALANCING VALVES

A. Memory-Stop Balancing Valves (PRV-1)

1. Manufacturers: Subject to compliance with requirements, available manufacturers offering products that may be incorporated into the Work include the following:

    a. Apollo Flow Controls; Conbraco Industries, Inc.
    b. Milwaukee Valve Company.
    c. Watts.
    d. Additional manufacturers submitted for and receiving engineer approval prior to bid.

2. Standard: NSF 61 Health Effects Annex G
3. Pressure Rating: 400-psig minimum CWP.
4. Size: NPS 2 or smaller.
5. Body: Lead Free Brass.
6. Port: Standard or full port.
7. Ball: Chrome-plated brass or stainless steel.
8. Seats and Seals: Replaceable.
9. End Connections: Solder joint or threaded.
10. Handle: Vinyl-covered steel with memory-setting device.

2.7 TEMPERATURE-ACTUATED, WATER MIXING VALVES

A. Primary, Thermostatic, Water Mixing Valves (TV-1, TV-2)

1. Manufacturers: Subject to compliance with requirements, available manufacturers offering products that may be incorporated into the Work include the following:

    a. Apollo Flow Controls; Conbraco Industries, Inc.
    b. WATTS.
    c. Zurn Industries, LLC.
    d. Additional manufacturers submitted for and receiving engineer approval prior to bid.

2. Standard: ASSE 1070 and ASSE 1017 .
3. Pressure Rating: 125 psig minimum unless otherwise indicated.
4. See plumbing fixture schedule for more information.

2.8 STRAINERS FOR DOMESTIC WATER PIPING

A. Y-Pattern Strainers

1. Manufacturers: Subject to compliance with requirements, available manufacturers offering products that may be incorporated into the Work include the following:

a. Titan Flow Control, Inc.
b. WATTS.
c. Zurn Industries, LLC.
d. Additional manufacturers submitted for and receiving engineer approval prior to bid.

2. Pressure Rating: 125 psig minimum unless otherwise indicated.
3. Body: Bronze for NPS 2 and smaller; cast iron with interior lining that complies with AWWA C550 or that is FDA approved, epoxy coated and for NPS 2-1/2 and larger.
4. End Connections: Threaded for NPS 2 and smaller; flanged for NPS 2-1/2 and larger.
5. Screen: Stainless steel with round perforations unless otherwise indicated.
6. Perforation Size:
   a. Strainers NPS 2 and Smaller: 0.033 inch

7. Drain: Pipe plug

2.9 HOSE BIBBS

A. Hose Bibbs: (HB-1, HB-2, FPHB)

1. Manufacturers: Subject to compliance with requirements, available manufacturers offering products that may be incorporated into the Work include the following:

   a. WATTS.
   b. Woodford Manufacturing Company.
   c. Zurn Industries, LLC.
   d. Additional manufacturers submitted for and receiving engineer approval prior to bid.

2. Standard: ASME A112.18.1 for sediment faucets.
3. Body Material: Bronze.
4. Seat: Bronze, replaceable.
5. Outlet Connection: Garden-hose thread complying with ASME B1.20.7.
6. Pressure Rating: 125 psig.
7. Vacuum Breaker: Integral nonremovable, drainable, hose-connection vacuum breaker complying with ASSE 1011.

8. See plumbing fixture schedule for more information.

2.10 DRAIN VALVES

A. Ball-Valve-Type, Hose-End Drain Valves:

1. Standard: MSS SP-110 for standard-port, two-piece ball valves.
2. Pressure Rating: 400-psig minimum CWP.
3. Size: NPS 3/4.
4. Body: Copper alloy.
5. Ball: Chrome-plated brass.

6. Seats and Seals: Replaceable.
7. Handle: Vinyl-covered steel.
8. Inlet: Threaded or solder joint.
9. Outlet: Threaded, short nipple with garden-hose thread complying with ASME B1.20.7 and cap with brass chain.

2.11 WATER-HAMMER ARRESTERS

A. Water-Hammer Arresters:

1. Manufacturers: Subject to compliance with requirements, available manufacturers offering products that may be incorporated into the Work include the following:

    a. Sioux Chief Manufacturing Company, Inc.
    b. WATTS.
    c. Zurn Industries, LLC.
    d. Additional manufacturers submitted for and receiving engineer approval prior to bid.

2. Standard: ASSE 1010 or PDI-WH 201.
3. Type: Copper tube with piston.
4. Size: ASSE 1010, Sizes AA and A through F, or PDI-WH 201, Sizes A through F.

2.12 TRAP-SEAL PRIMER DEVICE

A. Drainage-Type, Trap-Seal Primer Device:

1. Manufacturers: Subject to compliance with requirements, available manufacturers offering products that may be incorporated into the Work include the following:

    a. Jay R. Smith Mfg Co; a division of Morris Group International.
    b. Zurn Industries, LLC..
    c. Additional manufacturers submitted for and receiving engineer approval prior to bid.

2. Standard: ASSE 1044, lavatory P-trap with NPS 3/8 minimum, trap makeup connection.
3. Size: NPS 1-1/4 minimum.
4. Material: Chrome-plated, cast brass.

PART 3 - EXECUTION

3.1 INSTALLATION OF PIPING SPECIALTIES

A. Water Regulators: Install with inlet and outlet shutoff valves and bypass with memory-stop balancing valve. Install pressure gauges on inlet and outlet.

B. Temperature-Actuated, Water Mixing Valves: Install with check stops or shutoff valves on inlets and with shutoff valve on outlet.

1. Install cabinet-type units recessed in or surface mounted on wall as specified.

C. Water-Hammer Arresters: Install in water piping in accordance with drawings.

3.2 PIPING CONNECTIONS

A. Drawings indicate general arrangement of piping, fittings, and specialties.

B. When installing piping specialties adjacent to equipment and machines, allow space for service and maintenance.

3.3 ELECTRICAL CONNECTIONS

A. Comply with requirements for ground equipment in Section 260526 "Grounding and Bonding for Electrical Systems."

B. Fire-retardant-treated-wood blocking is specified in Section 260519 "Low-Voltage Electrical Power Conductors and Cables" for electrical connections.

3.4 IDENTIFICATION

A. Plastic Labels for Equipment: Install engraved plastic-laminate equipment nameplate or sign on or near each of the following:

1. Vacuum breakers.
2. Backflow preventers.
3. Water pressure-reducing valves.
4. Balancing valves.
5. Temperature-actuated, water mixing valves.
6. Wall hydrants.
7. Trap-seal primer device.

3.5 ADJUSTING

A. Set field-adjustable pressure set points of water pressure-reducing valves.

B. Set field-adjustable flow set points of balancing valves.

C. Set field-adjustable temperature set points of temperature-actuated, water mixing valves.

D. Adjust each pressure vacuum breaker, reduced-pressure-principle backflow preventer, double-check, backflow-prevention assembly and/or double-check, detector-assembly backflow

preventer in accordance with manufacturer's written instructions, authorities having jurisdiction and the device's reference standard.

3.6 FIELD QUALITY CONTROL

A. Perform the following tests and inspections.

1. Test each pressure vacuum breaker, reduced-pressure-principle backflow preventer double-check, backflow-prevention assembly and/or double-check, detector-assembly backflow preventer according to authorities having jurisdiction and the device's reference standard.
2. Test and adjust controls and safeties. Replace damaged and malfunctioning controls and equipment.

B. Domestic water piping specialties will be considered defective if they do not pass tests and inspections.

C. Prepare test and inspection reports.

END OF SECTION 221119

SECTION 221316 - SANITARY WASTE AND VENT PIPING

PART 1 - GENERAL

1.1 SUMMARY

A. Section Includes:
   1. Copper tube and fittings.
   2. PVC pipe and fittings.
   3. Specialty pipe fittings.

1.2 ACTION SUBMITTALS

A. Product Data: For each type of product.

1.3 WARRANTY

A. Listed manufacturers to provide labeling and warranty of their respective products.

PART 2 - PRODUCTS

2.1 PERFORMANCE REQUIREMENTS

A. Components and installation shall be capable of withstanding the following minimum working pressure unless otherwise indicated:

   1. Soil, Waste, and Vent Piping: 10-foot head of water.

2.2 PIPING MATERIALS

A. Piping materials shall bear label, stamp, or other markings of specified testing agency.

B. Comply with requirements in "Piping Schedule" Article for applications of pipe, tube, fitting materials, and joining methods for specific services, service locations, and pipe sizes.

2.3 COPPER TUBE AND FITTINGS

A. Copper Type DWV Tube: ASTM B 306, drainage tube, drawn temper.

B. Copper Drainage Fittings: ASME B16.23, cast copper or ASME B16.29, wrought copper, solder-joint fittings.

C. Copper Pressure Fittings:

1. Copper Fittings: ASME B16.18, cast-copper-alloy or ASME B16.22, wrought-copper, solder-joint fittings. Furnish wrought-copper fittings if indicated.
2. Copper Unions: MSS SP-123, copper-alloy, hexagonal-stock body with ball-and-socket, metal-to-metal seating surfaces, and solder-joint or threaded ends.

D. Copper Flanges: ASME B16.24, Class 150, cast copper with solder-joint end.

1. Flange Gasket Materials: ASME B16.21, full-face, flat, nonmetallic, asbestos-free, 1/8-inch maximum thickness unless thickness or specific material is indicated.
2. Flange Bolts and Nuts: ASME B18.2.1, carbon steel unless otherwise indicated.

E. Solder: ASTM B 32, lead free with ASTM B 813, water-flushable flux.

2.4 PVC PIPE AND FITTINGS

A. Comply with NSF 14, "Plastics Piping Systems Components and Related Materials," for plastic piping components. Include marking with "NSF-dwv" for plastic drain, waste, and vent piping and "NSF-sewer" for plastic sewer piping.

B. Solid-Wall PVC Pipe: ASTM D 2665, drain, waste, and vent.

C. Cellular-Core PVC Pipe: ASTM F 891, Schedule 40.

D. PVC Socket Fittings: ASTM D 2665, made to ASTM D 3311, drain, waste, and vent patterns and to fit Schedule 40 pipe.

E. Adhesive Primer: ASTM F 656.

F. Solvent Cement: ASTM D 2564.

2.5 SPECIALTY PIPE FITTINGS

A. Transition Couplings:

1. Fitting-Type Transition Couplings: Manufactured piping coupling or specified piping system fitting.
2. Unshielded, Nonpressure Transition Couplings:

a. Manufacturers: Subject to compliance with requirements, available manufacturers offering products that may be incorporated into the Work include the following:

1) Dallas Specialty & Mfg. Co.
2) Fernco Inc.
3) Froet Industries LLC.
4) Additional manufacturers submitted for and receiving engineer approval prior to bid.

b. Standard: ASTM C 1173.
c. Description: Elastomeric, sleeve-type, reducing or transition pattern. Include shear ring and corrosion-resistant-metal tension band and tightening mechanism on each end.
d. End Connections: Same size as and compatible with pipes to be joined.
e. Sleeve Materials:

1) For Cast-Iron Soil Pipes: ASTM C 564, rubber.
2) For Plastic Pipes: ASTM F 477, elastomeric seal or ASTM D 5926, PVC.
3) For Dissimilar Pipes: ASTM D 5926, PVC or other material compatible with pipe materials being joined.

3. Shielded, Nonpressure Transition Couplings:

a. Manufacturers: Subject to compliance with requirements, available manufacturers offering products that may be incorporated into the Work include the following:

1) Cascade Waterworks Mfg. Co.
2) Mission Rubber Company, LLC; a division of MCP Industries.
3) Additional manufacturers submitted for and receiving engineer approval prior to bid.

b. Standard: ASTM C 1460.
c. Description: Elastomeric or rubber sleeve with full-length, corrosion-resistant outer shield and corrosion-resistant-metal tension band and tightening mechanism on each end.
d. End Connections: Same size as and compatible with pipes to be joined.

PART 3 - EXECUTION

3.1 EARTH MOVING

A. Comply with requirements for excavating, trenching, and backfilling specified in Section 312000 "Earth Moving."

3.2 PIPING INSTALLATION

A. Drawing plans, schematics, and diagrams indicate general location and arrangement of piping systems.
1. Install piping as indicated unless deviations to layout are approved on coordination drawings.

B. Install piping in concealed locations unless otherwise indicated and except in equipment rooms and service areas.

C. Install piping indicated to be exposed and piping in equipment rooms and service areas at right angles or parallel to building walls. Diagonal runs are prohibited unless specifically indicated otherwise.

D. Install piping above accessible ceilings to allow sufficient space for ceiling panel removal.

E. Install piping to permit valve servicing.

F. Install piping at indicated slopes.

G. Install piping free of sags and bends.

H. Install fittings for changes in direction and branch connections.

I. Install piping to allow application of insulation.

J. Make changes in direction for soil and waste drainage and vent piping using appropriate branches, bends, and long-sweep bends.

1. Sanitary tees and short-sweep 1/4 bends may be used on vertical stacks if change in direction of flow is from horizontal to vertical.
2. Use long-turn, double Y-branch and 1/8-bend fittings if two fixtures are installed back to back or side by side with common drain pipe.

    a. Straight tees, elbows, and crosses may be used on vent lines.

3. Do not change direction of flow more than 90 degrees.
4. Use proper size of standard increasers and reducers if pipes of different sizes are connected.

    a. Reducing size of waste piping in direction of flow is prohibited.

K. Lay buried building waste piping beginning at low point of each system.

1. Install true to grades and alignment indicated, with unbroken continuity of invert. Place hub ends of piping upstream.
2. Install required gaskets according to manufacturer's written instructions for use of lubricants, cements, and other installation requirements.
3. Maintain swab in piping and pull past each joint as completed.

L. Install soil and waste and vent piping at the following minimum slopes unless otherwise indicated:

1. Building Sanitary Waste: 2 percent downward in direction of flow for piping NPS 2-1/2 and smaller; 1 percent downward in direction of flow for piping NPS 3 to 6 and larger. ½ percent downward in direction of flor for piping NPS 8 and larger.
2. Horizontal Sanitary Waste Piping: 1 percent downward in direction of flow.
3. Vent Piping: 1 percent down toward vertical fixture vent or toward vent stack.

M. Install aboveground copper tubing according to CDA's "Copper Tube Handbook."

N. Install aboveground PVC piping according to ASTM D 2665.

O. Install underground PVC piping according to ASTM D 2321.

P. Do not enclose, cover, or put piping into operation until it is inspected and approved by authorities having jurisdiction.

Q. Install sleeves for piping penetrations of walls, ceilings, and floors.

1. Comply with requirements for sleeves specified in Section 220517 "Sleeves and Sleeve Seals for Plumbing Piping."

R. Install sleeve seals for piping penetrations of concrete walls and slabs.

1. Comply with requirements for sleeve seals specified in Section 220517 "Sleeves and Sleeve Seals for Plumbing Piping."

S. Install escutcheons for piping penetrations of walls, ceilings, and floors.

1. Comply with requirements for escutcheons specified in Section 220518 "Escutcheons for Plumbing Piping."

3.3 JOINT CONSTRUCTION

A. Join copper tube and fittings with soldered joints according to ASTM B 828. Use ASTM B 813, water-flushable, lead-free flux and ASTM B 32, lead-free-alloy solder.

B. Grooved Joints: Cut groove ends of pipe according to AWWA C606. Lubricate and install gasket over ends of pipes or pipe and fitting. Install coupling housing sections, over gasket, with keys seated in piping grooves. Install and tighten housing bolts.

C. Plastic, Nonpressure-Piping, Solvent-Cement Joints: Clean and dry joining surfaces. Join pipe and fittings according to the following:

1. Comply with ASTM F 402 for safe-handling practice of cleaners, primers, and solvent cements.
2. PVC Piping: Join according to ASTM D 2855 and ASTM D 2665 appendixes.

3.4 SPECIALTY PIPE FITTING INSTALLATION

A. Transition Couplings:

1. Install transition couplings at joints of piping with small differences in ODs.
2. In Waste Drainage Piping: Unshielded, nonpressure transition couplings.

3.5 VALVE INSTALLATION

A. Comply with requirements in Section 220523.12 "Ball Valves for Plumbing Piping," Section 220523.14 "Check Valves for Plumbing Piping,"

3.6 INSTALLATION OF HANGERS AND SUPPORTS

A. Comply with requirements for pipe hanger and support devices and installation specified in Section 220529 "Hangers and Supports for Plumbing Piping and Equipment."

1. Install carbon-steel pipe hangers for horizontal piping in noncorrosive environments.
2. Install stainless-steel pipe hangers for horizontal piping in corrosive environments.
3. Install carbon-steel pipe support clamps for vertical piping in noncorrosive environments.
4. Install stainless-steel pipe support clamps for vertical piping in corrosive environments.
5. Vertical Piping: MSS Type 8 or Type 42, clamps.
6. Install individual, straight, horizontal piping runs:

    a. 100 Feet and Less: MSS Type 1, adjustable, steel clevis hangers.
    b. Longer Than 100 Feet: MSS Type 43, adjustable roller hangers.
    c. Longer Than 100 Feet if Indicated: MSS Type 49, spring cushion rolls.

7. Multiple, Straight, Horizontal Piping Runs 100 Feet or Longer: MSS Type 44, pipe rolls. Support pipe rolls on trapeze.
8. Base of Vertical Piping: MSS Type 52, spring hangers.

B. Install hangers for PVC piping, with maximum horizontal spacing and minimum rod diameters, to comply with manufacturer's written instructions, locally enforced codes, and authorities having jurisdiction requirements, whichever are most stringent.

C. Support horizontal piping and tubing within 12 inches of each fitting and coupling.

D. Support vertical runs of PVC piping to comply with manufacturer's written instructions, locally enforced codes, and authorities having jurisdiction requirements, whichever are most stringent.

E. Install supports for vertical PVC piping every 48 inches.

F. Support piping and tubing not listed above according to MSS SP-58 and manufacturer’s written instructions.

3.7 CONNECTIONS

A. Drawings indicate general arrangement of piping, fittings, and specialties.

B. Connect soil and waste piping to exterior sanitary sewerage piping. Use transition fitting to join dissimilar piping materials.

C. Connect waste and vent piping to the following:

1. Plumbing Fixtures: Connect waste piping in sizes indicated, but not smaller than required by plumbing code.
2. Plumbing Fixtures and Equipment: Connect atmospheric vent piping in sizes indicated, but not smaller than required by authorities having jurisdiction.
3. Plumbing Specialties: Connect waste and vent piping in sizes indicated, but not smaller than required by plumbing code.
4. Install test tees (wall cleanouts) in conductors near floor and floor cleanouts with cover flush with floor.
5. Equipment: Connect waste piping as indicated.

    a. Provide shutoff valve if indicated and union for each connection.
    b. Use flanges instead of unions for connections NPS 2-1/2 and larger.

D. Where installing piping adjacent to equipment, allow space for service and maintenance of equipment.

E. Make connections according to the following unless otherwise indicated:

1. Install unions, in piping NPS 2 and smaller, adjacent to each valve and at final connection to each piece of equipment.
2. Install flanges, in piping NPS 2-1/2 and larger, adjacent to flanged valves and at final connection to each piece of equipment.

3.8 IDENTIFICATION

A. Identify exposed sanitary waste and vent piping.

B. Comply with requirements for identification specified in Section 220553 "Identification for Plumbing Piping and Equipment."

3.9 FIELD QUALITY CONTROL

A. During installation, notify authorities having jurisdiction at least 24 hours before inspection must be made. Perform tests specified below in presence of authorities having jurisdiction.

1. Roughing-in Inspection: Arrange for inspection of piping before concealing or closing-in after roughing-in and before setting fixtures.
2. Final Inspection: Arrange for final inspection by authorities having jurisdiction to observe tests specified below and to ensure compliance with requirements.

B. Reinspection: If authorities having jurisdiction find that piping will not pass test or inspection, make required corrections and arrange for reinspection.

C. Reports: Prepare inspection reports and have them signed by authorities having jurisdiction.

D. Test sanitary waste and vent piping according to procedures of authorities having jurisdiction or, in absence of published procedures, as follows:

1. Test for leaks and defects in new piping and parts of existing piping that have been altered, extended, or repaired.

    a. If testing is performed in segments, submit separate report for each test, complete with diagram of portion of piping tested.

2. Leave uncovered and unconcealed new, altered, extended, or replaced waste and vent piping until it has been tested and approved.

    a. Expose work that was covered or concealed before it was tested.

3. Roughing-in Plumbing Test Procedure: Test waste and vent piping except outside leaders on completion of roughing-in.

    a. Close openings in piping system and fill with water to point of overflow, but not less than 10-foot head of water.
    b. From 15 minutes before inspection starts to completion of inspection, water level must not drop.
    c. Inspect joints for leaks.

4. Finished Plumbing Test Procedure: After plumbing fixtures have been set and traps filled with water, test connections and prove they are gastight and watertight.

    a. Plug vent-stack openings on roof and building drains where they leave building. Introduce air into piping system equal to pressure of 1-inch wg.
    b. Use U-tube or manometer inserted in trap of water closet to measure this pressure.
    c. Air pressure must remain constant without introducing additional air throughout period of inspection.
    d. Inspect plumbing fixture connections for gas and water leaks.

5. Repair leaks and defects with new materials and retest piping, or portion thereof, until satisfactory results are obtained.
6. Prepare reports for tests and required corrective action.

3.10 CLEANING AND PROTECTION

A. Clean interior of piping. Remove dirt and debris as work progresses.

B. Protect sanitary waste and vent piping during remainder of construction period to avoid clogging with dirt and debris and to prevent damage from traffic and construction work.

C. Place plugs in ends of uncompleted piping at end of day and when work stops.

D. Exposed PVC Piping: Protect plumbing vents exposed to sunlight with two coats of water-based latex paint.

E. Repair damage to adjacent materials caused by waste and vent piping installation.

3.11 PIPING SCHEDULE

A. Flanges and unions may be used on aboveground pressure piping unless otherwise indicated.

B. Aboveground, soil and waste piping NPS 6 and smaller shall be any of the following:
   1. Solid-wall PVC pipe, PVC socket fittings, and solvent-cemented joints.
   2. Dissimilar Pipe-Material Couplings: Unshielded, nonpressure transition couplings.

C. Aboveground, vent piping NPS 4 and smaller shall be any of the following:
   1. Solid-wall PVC pipe, PVC socket fittings, and solvent-cemented joints.
   2. Dissimilar Pipe-Material Couplings: Unshielded, nonpressure transition couplings.

D. Underground, soil, waste, and vent piping NPS 8 and smaller shall be any of the following:
   1. Solid wall PVC pipe, PVC socket fittings, and solvent-cemented joints.
   2. Dissimilar Pipe-Material Couplings: Unshielded, nonpressure transition couplings.

END OF SECTION 221316

SECTION 221319 - SANITARY WASTE PIPING SPECIALTIES

PART 1 - GENERAL

1.1 SUMMARY

A. Section Includes:
   1. Cleanouts.
   2. Miscellaneous sanitary drainage piping specialties.

1.2 ACTION SUBMITTALS

A. Product Data: For each type of product.

PART 2 - PRODUCTS

2.1 ASSEMBLY DESCRIPTIONS

A. Sanitary waste piping specialties shall bear label, stamp, or other markings of specified testing agency.

2.2 CLEANOUTS

A. Wall Cleanouts (WCO)

   1. Manufacturers: Subject to compliance with requirements, available manufacturers offering products that may be incorporated into the Work include the following:

      a. MIFAB, Inc.
      b. WATTS.
      c. Zurn Industries, LLC.
      d. Additional manufacturers submitted for and receiving engineer approval prior to bid.

   2. Standard: ASME A112.36.2M. Include wall access.

   3. See plumbing fixture schedule for more information

B. Plastic Floor Cleanouts (FCO)

   1. Manufacturers: Subject to compliance with requirements, available manufacturers offering products that may be incorporated into the Work include the following:

a. IPS Corporation.
b. Sioux Chief Manufacturing Company, Inc.
c. Zurn Industries, LLC.
d. Additional manufacturers submitted for and receiving engineer approval prior to bid.

2. Size: Same as connected branch.
3. Body: PVC.
4. Closure Plug: PVC.
5. Riser: Drainage pipe fitting and riser to cleanout of same material as drainage piping.
6. See plumbing fixture schedule for more information

2.3 MISCELLANEOUS SANITARY DRAINAGE PIPING SPECIALTIES

A. Open Drains:

1. Description: Shop or field fabricate from ASTM A74, Service Class, hub-and-spigot, cast-iron soil-pipe fittings. Include P-trap, hub-and-spigot riser section; and where required, increaser fitting joined with ASTM C564 rubber gaskets.
2. Size: Same as connected waste piping.

B. Deep-Seal Traps:

1. Description: Cast-iron or bronze casting, with inlet and outlet matching connected piping and cleanout trap-seal primer valve connection.
2. Size: Same as connected waste piping.

a. NPS 2: 4-inch-minimum water seal.
b. NPS 2-1/2 and Larger: 5-inch-minimum water seal.

C. Floor-Drain, Trap-Seal Primer Fittings:

1. Description: Cast iron, with threaded inlet and threaded or spigot outlet, and trap-seal primer valve connection.
2. Size: Same as floor drain outlet with NPS 1/2 side inlet.

PART 3 - EXECUTION

3.1 INSTALLATION

A. Install cleanouts in aboveground piping and building drain piping according to the following, unless otherwise indicated:

1. Size same as drainage piping up to NPS 4. Use NPS 4 for larger drainage piping unless larger cleanout is indicated.
2. Locate at minimum intervals of 100 feet for piping NPS 6 and smaller.
3. Locate at base of each vertical soil and waste stack.

B. For floor cleanouts for piping below floors, install cleanout deck plates with top flush with finished floor.

C. For cleanouts located in concealed piping, install cleanout wall access covers, of types indicated, with frame and cover flush with finished wall.

D. Assemble open drain fittings and install with top of hub 1 inch above floor.

E. Install deep-seal traps on floor drains and other waste outlets, if indicated.

F. Install floor-drain, trap-seal primer fittings on inlet to floor drains that require trap-seal primer connection.

1. Exception: Fitting may be omitted if trap has trap-seal primer connection.
2. Size: Same as floor drain inlet.

3.2 PIPING CONNECTIONS

A. Comply with requirements in Section 221316 "Sanitary Waste and Vent Piping" for piping installation requirements. Drawings indicate general arrangement of piping, fittings, and specialties.

B. Install piping adjacent to equipment, to allow service and maintenance.

3.3 LABELING AND IDENTIFYING

A. Distinguish among multiple units, inform operator of operational requirements, indicate safety and emergency precautions, and warn of hazards and improper operations, in addition to identifying unit.

1. Nameplates and signs are specified in Section 220553 "Identification for Plumbing Piping and Equipment."

3.4 PROTECTION

A. Protect drains during remainder of construction period to avoid clogging with dirt or debris and to prevent damage from traffic or construction work.

B. Place plugs in ends of uncompleted piping at end of each day or when work stops.

END OF SECTION 221319

SECTION 221319.13 - SANITARY DRAINS

PART 1 - GENERAL

1.1 SUMMARY

A. Section Includes:

1. Floor drains.

1.2 DEFINITIONS

A. PVC: Polyvinyl chloride.

1.3 ACTION SUBMITTALS

A. Product Data: For each type of product.

PART 2 - PRODUCTS

2.1 DRAIN ASSEMBLIES

A. Sanitary drains shall bear label, stamp, or other markings of specified testing agency.

B. Comply with NSF 14 for plastic sanitary piping specialty components.

2.2 FLOOR DRAINS

A. Plastic Floor Drains (FD-1, FD-2):

1. Manufacturers: Subject to compliance with requirements, available manufacturers offering products that may be incorporated into the Work include the following:

    a. Oatey.
    b. Sioux Chief Manufacturing Company, Inc.
    c. Zurn Industries, LLC.
    d. Additional manufacturers submitted for and receiving engineer approval prior to bid.

2. Standard: ASME A112.6.3.
3. Material: PVC.

4. Seepage Flange: Not required.
5. Clamping Device: Not required.
6. Outlet: Bottom
7. Sediment Bucket: Not required.
8. Top or Strainer Material: Bronze.
9. Top of Body and Strainer Finish: Nickel bronze.
10. Top Shape: Round.
11. Trap Material: Plastic drainage piping.
12. Trap Pattern: Standard P-trap.
13. See plumbing fixture schedule for more information.

PART 3 - EXECUTION

3.1 CONNECTIONS

A. Comply with requirements in Section 221316 "Sanitary Waste and Vent Piping" for piping installation requirements. Drawings indicate general arrangement of piping, fittings, and specialties.

B. Comply with requirements in Section 221319 "Sanitary Waste Piping Specialties" for backwater valves, air admittance devices and miscellaneous sanitary drainage piping specialties.

C. Install piping adjacent to equipment to allow service and maintenance.

3.2 PROTECTION

A. Protect drains during remainder of construction period to avoid clogging with dirt or debris and to prevent damage from traffic or construction work.

B. Place plugs in ends of uncompleted piping at end of each day or when work stops.

END OF SECTION 221319.13

SECTION 221413 - FACILITY STORM DRAINAGE PIPING

PART 1 - GENERAL

1.1 SUMMARY

A. Section Includes:

1. PVC pipe and fittings.
2. Specialty pipe and fittings.

B. Related Requirements:

1. Section 334400 "Stormwater Utility Equipment" for storm drainage piping outside the building.

1.2 ACTION SUBMITTALS

A. Product Data: For each type of product.

1.3 QUALITY ASSURANCE

A. Piping materials shall bear label, stamp, or other markings of specified testing agency.

PART 2 - PRODUCTS

2.1 PERFORMANCE REQUIREMENTS

A. Components and installation shall be capable of withstanding the following minimum working pressure unless otherwise indicated:

1. Storm Drainage Piping: 10-foot head of water.

2.2 PVC PIPE AND FITTINGS

A. Manufacturers: Subject to compliance with requirements, available manufacturers offering products that may be incorporated into the Work include the following:

1. Charlotte Pipe and Foundry Company.
2. National Pipe and Plastic, Inc.
3. Additional manufacturers submitted for and receiving engineer approval prior to bid.

B. NSF Marking: Comply with NSF 14, "Plastics Piping Systems Components and Related Materials," for plastic piping components. Include marking with "NSF-drain" for plastic storm drain and "NSF-sewer" for plastic storm sewer piping.

C. Solid-Wall PVC Pipe: ASTM D 2665; drain, waste, and vent.

D. Cellular-Core PVC Pipe: ASTM F 891, Schedule 40.

E. PVC Socket Fittings: ASTM D 2665, made to ASTM D 3311, drain, waste, and vent patterns and to fit Schedule 40 pipe.

F. Adhesive Primer: ASTM F 656.

G. Solvent Cement: ASTM D 2564.

2.3 SPECIALTY PIPE FITTINGS

A. Transition Couplings:

1. General Requirements: Fitting or device for joining piping with small differences in ODs or of different materials. Include end connections same size as and compatible with pipes to be joined.
2. Fitting-Type Transition Couplings: Manufactured piping coupling or specified-piping-system fitting.
3. Unshielded, Nonpressure Transition Couplings:

    a. Manufacturers: Subject to compliance with requirements, available manufacturers offering products that may be incorporated into the Work include the following:

        1) Dallas Specialty & Mfg. Co.
        2) Fernco Inc.
        3) Mission Rubber Company, LLC; a division of MCP Industries.
        4) Additional manufacturers submitted for and receiving engineer approval prior to bid.

    b. Standard: ASTM C 1173.
    c. Description: Elastomeric sleeve, reducing or transition pattern. Include shear ring and corrosion-resistant-metal tension band and tightening mechanism on each end.
    d. Sleeve Materials:

        1) For Cast-Iron Soil Pipes: ASTM C 564, rubber.
        2) For Plastic Pipes: ASTM F 477, elastomeric seal or ASTM D 5926, PVC.
        3) For Dissimilar Pipes: ASTM D 5926, PVC or other material compatible with pipe materials being joined.

4. Shielded, Nonpressure Transition Couplings:

a. Manufacturers: Subject to compliance with requirements, available manufacturers offering products that may be incorporated into the Work include the following:

1) Cascade Waterworks Mfg. Co.
2) Mission Rubber Company, LLC; a division of MCP Industries.
3) Additional manufacturers submitted for and receiving engineer approval prior to bid.

b. Standard: ASTM C 1460.
c. Description: Elastomeric or rubber sleeve with full-length, corrosion-resistant outer shield and corrosion-resistant-metal tension band and tightening mechanism on each end.
d. End Connections: Same size as and compatible with pipes to be joined.

PART 3 - EXECUTION

3.1 EARTH MOVING

A. Comply with requirements for excavating, trenching, and backfilling specified in Section 312000 "Earth Moving."

3.2 PIPING INSTALLATION

A. Drawing plans, schematics, and diagrams indicate general location and arrangement of piping systems. Install piping as indicated unless deviations from layout are approved on coordination drawings.

B. Install piping above accessible ceilings to allow sufficient space for ceiling panel removal.

C. Install piping to permit valve servicing.

D. Install piping free of sags and bends.

E. Install fittings for changes in direction and branch connections.

F. Install piping to allow application of insulation.

G. Make changes in direction for piping using appropriate branches, bends, and long-sweep bends.

1. Do not change direction of flow more than 90 degrees.
2. Use proper size of standard increasers and reducers if pipes of different sizes are connected.

a. Reducing size of drainage piping in direction of flow is prohibited.

H. Install piping at the following minimum slopes unless otherwise indicated:

1. Building Storm Drain: 2 percent downward in direction of flow for piping NPS 4and smaller; 1 percent downward in direction of flow for piping NPS 5 and larger.
2. Horizontal Storm Drainage Piping: 2 percent downward in direction of flow.

I. Install aboveground PVC piping according to ASTM D 2665.

J. Do not enclose, cover, or put piping into operation until it is inspected and approved by authorities having jurisdiction.

K. Install sleeves for piping penetrations of walls, ceilings, and floors.

1. Comply with requirements for sleeves specified in Section 220517 "Sleeves and Sleeve Seals for Plumbing Piping."

L. Install sleeve seals for piping penetrations of concrete walls and slabs.

1. Comply with requirements for sleeve seals specified in Section 220517 "Sleeves and Sleeve Seals for Plumbing Piping."

M. Install escutcheons for piping penetrations of walls, ceilings, and floors.

1. Comply with requirements for escutcheons specified in Section 220518 "Escutcheons for Plumbing Piping."

3.3 JOINT CONSTRUCTION

A. PVC, Nonpressure-Piping, Solvent-Cemented Joints: Clean and dry joining surfaces. Join pipe and fittings according to the following:

1. Comply with ASTM F 402 for safe-handling practice of cleaners, primers, and solvent cements.
2. ABS Piping: Join according to ASTM D 2235 and ASTM D 2661 appendices.
3. PVC Piping: Join according to ASTM D 2855 and ASTM D 2665 appendices.

B. Joint Restraints and Sway Bracing:

1. Provide joint restraints and sway bracing for storm drainage piping joints to comply with the following conditions:

    a. Provide axial restraint for pipe and fittings 5 inches and larger, upstream and downstream of all changes in direction, branches, and changes in diameter greater than two pipe sizes.
    b. Provide rigid sway bracing for pipe and fittings 4 inches and larger, upstream and downstream of all changes in direction 45 degrees and greater.
    c. Provide rigid sway bracing for pipe and fittings 5 inches and larger, upstream and downstream of all changes in direction and branch openings.

3.4 SPECIALTY PIPE FITTING INSTALLATION

A. Transition Couplings:

1. Install transition couplings at joints of piping with small differences in ODs.
2. In Drainage Piping: Unshielded, nonpressure transition couplings.

3.5 VALVE INSTALLATION

A. General valve installation requirements for general-duty valve installations are specified in the following Sections:

1. Section 220523.12 "Ball Valves for Plumbing Piping."
2. Section 220523.14 "Check Valves for Plumbing Piping."

3.6 INSTALLATION OF HANGERS AND SUPPORTS

A. Comply with requirements for hangers, supports, and anchor devices specified in Section 220529 "Hangers and Supports for Plumbing Piping and Equipment."

1. Install carbon-steel pipe hangers for horizontal piping in noncorrosive environments.
2. Install stainless-steel pipe hangers for horizontal piping in corrosive environments.
3. Install carbon-steel pipe support clamps for vertical piping in noncorrosive environments.
4. Install stainless-steel pipe support clamps for vertical piping in corrosive environments.
5. Vertical Piping: MSS Type 8 or Type 42, clamps.
6. Install individual, straight, horizontal piping runs:

    a. 100 Feet and Less: MSS Type 1, adjustable, steel clevis hangers.
    b. Longer Than 100 Feet: MSS Type 43, adjustable roller hangers.
    c. Longer Than 100 Feet if Indicated: MSS Type 49, spring cushion rolls.

7. Multiple, Straight, Horizontal Piping Runs 100 Feet or Longer: MSS Type 44, pipe rolls. Support pipe rolls on trapeze.
8. Base of Vertical Piping: MSS Type 52, spring hangers.

B. Install hangers for PVC piping, with maximum horizontal spacing and minimum rod diameters, to comply with manufacturer's written instructions, locally enforced codes, and authorities having jurisdiction requirements, whichever are most stringent.

C. Support horizontal piping and tubing within 12 inches of each fitting and coupling.

D. Support vertical PVC piping with manufacturer's written instructions, locally enforced codes, and authorities having jurisdiction requirements, whichever are most stringent.

3.7 CONNECTIONS

A. Drawings indicate general arrangement of piping, fittings, and specialties.

B. Connect interior storm drainage piping to exterior storm drainage piping. Use transition fitting to join dissimilar piping materials.

C. Connect storm drainage piping to roof drains and storm drainage specialties.

1. Install test tees (wall cleanouts) in conductors near floor, and floor cleanouts with cover flush with floor.

D. Where installing piping adjacent to equipment, allow space for service and maintenance.

E. Make connections according to the following unless otherwise indicated:

1. Install unions, in piping NPS 2 and smaller, adjacent to each valve and at final connection to each piece of equipment.
2. Install flanges, in piping NPS 2-1/2 and larger, adjacent to flanged valves and at final connection to each piece of equipment.

3.8 IDENTIFICATION

A. Identify exposed storm drainage piping.

B. Comply with requirements for identification specified in Section 220553 "Identification for Plumbing Piping and Equipment."

3.9 FIELD QUALITY CONTROL

A. During installation, notify authorities having jurisdiction at least 24 hours before inspection must be made. Perform tests specified below in presence of authorities having jurisdiction.

1. Roughing-in Inspection: Arrange for inspection of piping before concealing or closing-in after roughing-in.
2. Final Inspection: Arrange for final inspection by authorities having jurisdiction to observe tests specified below and to ensure compliance with requirements.

B. Test storm drainage piping according to procedures of authorities having jurisdiction or, in absence of published procedures, as follows:

1. Test for leaks and defects in new piping and parts of existing piping that have been altered, extended, or repaired.

a. If testing is performed in segments, submit separate report for each test, complete with diagram of portion of piping tested.

2. Leave uncovered and unconcealed new, altered, extended, or replaced storm drainage piping until it has been tested and approved.

a. Expose work that was covered or concealed before it was tested.

3. Test Procedure:

    a. Test storm drainage piping, except outside leaders, on completion of roughing-in.
    b. Close openings in piping system and fill with water to point of overflow, but not less than 10-foot head of water. From 15 minutes before inspection starts until completion of inspection, water level must not drop. Inspect joints for leaks.

4. Repair leaks and defects with new materials and retest piping, or portion thereof, until satisfactory results are obtained.
5. Prepare reports for tests and required corrective action.

C. Piping will be considered defective if it does not pass tests and inspections.

D. Prepare test and inspection reports.

3.10 CLEANING AND PROTECTION

A. Clean interior of piping. Remove dirt and debris as work progresses.

B. Protect drains during remainder of construction period to avoid clogging with dirt and debris and to prevent damage from traffic and construction work.

C. Place plugs in ends of uncompleted piping at end of day and when work stops.

3.11 PIPING SCHEDULE

A. Flanges and unions may be used on aboveground pressure piping unless otherwise indicated.

B. Aboveground storm drainage piping NPS 8 and smaller shall be any of the following:
1. Solid-wall PVC pipe, PVC socket fittings, and solvent-cemented joints.
2. Dissimilar Pipe-Material Couplings: Unshielded, nonpressure transition couplings.

C. Underground storm drainage piping NPS 8 and smaller shall be any of the following:
1. Solid-wall PVC pipe, PVC socket fittings, and solvent-cemented joints.
2. Dissimilar Pipe-Material Couplings: Unshielded, nonpressure transition couplings.

END OF SECTION 221413

SECTION 221423 - STORM DRAINAGE PIPING SPECIALTIES

TIPS:

To view non-printing **Editor's Notes** that provide guidance for editing, click on MasterWorks/Single-File Formatting/Toggle/Editor's Notes.

To read **detailed research, technical information about products and materials, and coordination checklists**, click on MasterWorks/Supporting Information.

Content Requests:

<Double click here to submit questions, comments, or suggested edits to this Section.>

PART 1 - GENERAL

1.1 SUMMARY

A. Section Includes:

1. Metal roof drains.
2. Miscellaneous storm drainage piping specialties.

B. Related Requirements:

1. Section 076200 "Sheet Metal Flashing and Trim" for penetrations of roofs.
2. Section 078413 "Penetration Firestopping" for firestopping roof penetrations.

1.2 ACTION SUBMITTALS

A. Product Data: For each type of product.

1.3 QUALITY ASSURANCE

A. Drainage piping specialties shall bear label, stamp, or other markings of specified testing agency.

PART 2 - PRODUCTS

2.1 METAL ROOF DRAINS

A. Cast-Iron, Medium-Sump, General-Purpose Roof Drains:

1. Manufacturers: Subject to compliance with requirements, available manufacturers offering products that may be incorporated into the Work include the following:

    a. MIFAB, Inc.
    b. WATTS.
    c. Zurn Industries, LLC.
    d. Additional manufacturers submitted for and receiving engineer approval prior to bid.

2. Standard: ASME A112.6.4.
3. Body Material: Cast iron.
4. Dimension of Body: 8- to 12-inch diameter.
5. Combination Flashing Ring and Gravel Stop: Not required.
6. Outlet: Bottom.
7. Outlet Type: No hub or Inside caulk or Threaded.
8. Dome Material: Aluminum or Cast iron or PE.
9. Wire Mesh: Stainless steel or brass over dome.
10. Perforated Gravel Guard: Stainless steel.
11. Vandal-Proof Dome: Not Required.
12. Water Dam: 2 inches high.
13. See plumbing fixture schedule for more information.

2.2 MISCELLANEOUS STORM DRAINAGE PIPING SPECIALTIES

A. Downspout Adapters:

1. Description: Manufactured, gray-iron casting, for attaching to horizontal-outlet, parapet roof drain and to exterior sheet metal downspout.
2. Size: Inlet size to match parapet drain outlet.

B. Downspout Boots:

1. Manufacturers: Subject to compliance with requirements, available manufacturers offering products that may be incorporated into the Work include the following:

    a. J.R. Hoe & Sons Inc.
    b. Neenah Foundry Company.
    c. WATTS.
    d. Additional manufacturers submitted for and receiving engineer approval prior to bid.

2. Description: Manufactured, ASTM A48/A48M, gray-iron casting, with strap or ears for attaching to building; NPS 4 outlet; and shop-applied bituminous coating.
3. Size: Inlet size to match downspout and NPS 4 outlet.

C. Metal Downspout Nozzles:

1. Manufacturers: Subject to compliance with requirements, available manufacturers offering products that may be incorporated into the Work include the following:

a. JAY R. SMITH MFG. CO.
b. WATTS.
c. Zurn Industries, LLC.
d. Additional manufacturers submitted for and receiving engineer approval prior to bid.

2. Description: Nozzle with wall flange and mounting holes to cover rough opening and serve as anchor.
3. Size: Same as connected downspout.
4. Material: Cast bronze or nickel bronze nozzle and flange.
5. Piping Connection Type: Threaded or Slip on.
6. Opening Protection: Birdscreen.

PART 3 - EXECUTION

3.1 INSTALLATION

A. Install roof drains at low points of roof areas in accordance with roof membrane manufacturer's written installation instructions.

1. Install flashing collar or flange of roof drain to prevent leakage between drain and adjoining roofing. Maintain integrity of waterproof membranes where penetrated.
2. Install expansion joints, if indicated, in roof drain outlets.
3. Position roof drains for easy access and maintenance.

B. Install downspout adapters on outlet of back-outlet parapet roof drains and connect to sheet metal downspouts.

C. Install downspout boots at grade with top 6 inches or 12 inches above grade. Secure to building wall.

D. Install downspout nozzles at exposed bottom of conductors where they spill onto grade.

E. Install test tees in vertical conductors and near floor.

F. Comply with requirements for piping specified in Section 221413 "Facility Storm Drainage Piping." Drawings indicate general arrangement of piping, fittings, and specialties.

3.2 INSTALLATION OF FLASHING

A. Fabricate flashing from single piece of metal unless large pans, sumps, or other drainage shapes are required.

B. Install sheet flashing on pipes, sleeves, and specialties passing through or embedded in floors and roofs with waterproof membrane.

C. Set flashing on floors and roofs in solid coating of bituminous cement.

D. Secure flashing into sleeve and specialty clamping ring or device.

3.3 PROTECTION

A. Protect drains during remainder of construction period to avoid clogging with dirt or debris and to prevent damage from traffic or construction work.

B. Place plugs in ends of uncompleted piping at end of each day or when work stops.

END OF SECTION 221423

SECTION 223300 - ELECTRIC, DOMESTIC-WATER HEATERS

PART 1 - GENERAL

1.1 SUMMARY

A. Section Includes:
1. Residential, electric, storage, domestic-water heaters.
2. Thermostat-control, electric, tankless, domestic-water heaters.
3. Domestic-water heater accessories.

1.2 ACTION SUBMITTALS

A. Product Data: For each type of product.

1.3 QUALITY ASSURANCE

A. Electrical Components, Devices, and Accessories: Listed and labeled as defined in NFPA 70, by a qualified testing agency, and marked for intended location and application.

B. NSF Compliance: Fabricate and label equipment components that will be in contact with potable water to comply with NSF 61 Annex G, "Drinking Water System Components - Health Effects."

1.4 WARRANTY

A. Special Warranty: Manufacturer agrees to repair or replace components of electric, domestic-water heaters that fail in materials or workmanship within specified warranty period.

1. Warranty Periods: From date of Substantial Completion.

a. Residential, Electric, Storage, Domestic-Water Heaters:

1) Storage Tank: Six years.
2) Controls and Other Components: Six years.

b. Electric, Tankless, Domestic-Water Heaters: Five years.
c. Expansion Tanks: Five years.

PART 2 - PRODUCTS

2.1 RESIDENTIAL, ELECTRIC, DOMESTIC-WATER HEATERS

A. Residential, Electric, Storage, Domestic-Water Heaters

1. Manufacturers: Subject to compliance with requirements, available manufacturers offering products that may be incorporated into the Work include the following:

    a. A. O. Smith Corporation.
    b. Bradford White Corporation.
    c. State Industries.
    d. Additional manufacturers submitted for and receiving engineer approval prior to bid.

2. Standard: UL 174.
3. Storage-Tank Construction: Steel.

    a. Tappings: ASME B1.20.1 pipe thread.
    b. Pressure Rating: 150 psig.
    c. Interior Finish: Comply with NSF 61 and NSF 372 barrier materials for potable-water tank linings, including extending lining material into tappings.

4. Factory-Installed, Storage-Tank Appurtenances:

    a. Anode Rod: Replaceable magnesium.
    b. Dip Tube: Required unless cold-water inlet is near bottom of tank.
    c. Drain Valve: Corrosion-resistant metal with hose-end connection.
    d. Insulation: Comply with ASHRAE 90.2.
    e. Jacket: Steel, cylindrical, with enameled finish or high-impact composite material.
    f. Heat-Trap Fittings: Inlet type in cold-water inlet and outlet type in hot-water outlet.
    g. Heating Elements: Two; electric, screw-in immersion type; wired for non-simultaneous operation unless otherwise indicated. Limited to 12 kW total.
    h. Temperature Control: Adjustable thermostat.
    i. Safety Control: High-temperature-limit cutoff device or system.
    j. Relief Valve: ASME rated and stamped for combination temperature-and-pressure relief valves. Include relieving capacity at least as great as heat input, and include pressure setting less than working-pressure rating of domestic-water heater. Select relief valve with sensing element that extends into storage tank.

B. Capacity and Characteristics: (WH-1)

1. See plumbing schedules for more information.

2.2 ELECTRIC, TANKLESS, DOMESTIC-WATER HEATERS

A. Flow-Control, Electric, Tankless, Domestic-Water Heaters:

1. Manufacturers: Subject to compliance with requirements, available manufacturers offering products that may be incorporated into the Work include the following:

    a. Bradford White Corporation.
    b. Bradley Corporation.
    c. Eemax, Inc.
    d. Additional manufacturers submitted for and receiving engineer approval prior to bid.

2. Standard: UL 499 for electric, tankless, (domestic-water-heater) heating appliance.
3. Construction: Copper piping or tubing complying with NSF 61 and NSF 372 barrier materials for potable water, without storage capacity.

    a. Connections: ASME B1.20.1 pipe thread.
    b. Pressure Rating: 150 psig.
    c. Heating Element: Resistance heating system.
    d. Temperature Control: Flow-control fitting.
    e. Safety Control: High-temperature-limit cutoff device or system.
    f. Jacket: Aluminum or steel with enameled finish or plastic.

4. Support: Bracket for wall mounting.
5. Capacity and Characteristics: (WH-2, WH-6)

    a. See plumbing schedules.

2.3 DOMESTIC-WATER HEATER ACCESSORIES

A. Domestic-Water Expansion Tanks:

1. Manufacturers: Subject to compliance with requirements, available manufacturers offering products that may be incorporated into the Work include the following:

    a. A. O. Smith Corporation.
    b. State Industries.
    c. TACO Comfort Solutions, Inc.
    d. Additional manufacturers submitted for and receiving engineer approval prior to bid.

2. Description: Steel pressure-rated tank constructed with welded joints and factory-installed, butyl-rubber diaphragm. Include air precharge to minimum system-operating pressure at tank.
3. Construction:

a. Tappings: Factory-fabricated steel, welded to tank before testing and labeling. Include ASME B1.20.1 pipe thread.
b. Interior Finish: Comply with NSF 61 and NSF 372 barrier materials for potable-water tank linings, including extending finish into and through tank fittings and outlets.
c. Air-Charging Valve: Factory installed.

4. Capacity and Characteristics:

a. Working-Pressure Rating: 150 psig.
b. Capacity Acceptable: 2 gal minimum.
c. Air Precharge Pressure: 40 psi

B. Drain Pans: Corrosion-resistant metal with raised edge. Comply with ANSI/CAS LC 3. Include dimensions not less than base of domestic-water heater, and include drain outlet not less than NPS 3/4 with ASME B1.20.1 pipe threads or with ASME B1.20.07 garden-hose threads.

C. Piping-Type Heat Traps: Field-fabricated piping arrangement in accordance with ASHRAE 90.2.

D. Heat-Trap Fittings: ASHRAE 90.2.

E. Pressure-Reducing Valves: ASSE 1003 for water. Set at 25-psig-maximum outlet pressure unless otherwise indicated.

F. Combination Temperature-and-Pressure Relief Valves: ASME rated and stamped. Include relieving capacity at least as great as heat input, and include pressure setting less than working-pressure rating of domestic-water heater. Select relief valves with sensing element that extends into storage tank.

G. Pressure Relief Valves: ASME rated and stamped. Include pressure setting less than working-pressure rating of domestic-water heater.

H. Vacuum Relief Valves: ANSI Z21.22/CSA 4.4.

I. Shock Absorbers: ASSE 1010 or PDI-WH 201, Size A water hammer arrester.

J. Domestic-Water Heater Stands: Manufacturer's factory-fabricated steel stand for floor mounting, capable of supporting domestic-water heater and water. Include dimension that will support bottom of domestic-water heater a minimum of 18 inches above the floor.

K. Domestic-Water Heater Mounting Brackets: Manufacturer's factory-fabricated steel bracket for wall mounting, capable of supporting domestic-water heater and water.

2.4 SOURCE QUALITY CONTROL

A. Factory Tests: Test and inspect domestic-water heaters specified to be ASME-code construction, in accordance with ASME Boiler and Pressure Vessel Code.

B. Hydrostatically test domestic-water heaters to minimum of one and one-half times pressure rating before shipment.

C. Electric, domestic-water heaters will be considered defective if they do not pass tests and inspections.

PART 3 - EXECUTION

3.1 DOMESTIC-WATER HEATER INSTALLATION

A. Residential, Electric, Domestic-Water Heater Mounting: Install residential, electric, domestic-water heaters on water-heater stand on floor, where specified.

1. Maintain manufacturer's recommended clearances.
2. Arrange units so controls and devices that require servicing are accessible.
3. Place and secure anchorage devices. Use setting drawings, templates, diagrams, instructions, and directions furnished with items to be embedded.
4. Install anchor bolts to elevations required for proper attachment to supported equipment.
5. Anchor domestic-water heaters to substrate.

B. Electric, Tankless, Domestic-Water Heater Mounting: Install electric, tankless, domestic-water heaters on wall bracket, where specified. Maintain all ADA clearances.

1. Maintain manufacturer's recommended clearances.
2. Arrange units so controls and devices that require servicing are accessible.
3. Place and secure anchorage devices. Use setting drawings, templates, diagrams, instructions, and directions furnished with items to be embedded.
4. Install anchor bolts to elevations required for proper attachment to supported equipment.
5. Anchor domestic-water heaters to substrate.

C. Install electric, domestic-water heaters level and plumb, in accordance with layout drawings, original design, and referenced standards. Maintain manufacturer's recommended clearances. Arrange units so controls and devices needing service are accessible.

1. Install shutoff valves on domestic-water-supply piping to domestic-water heaters and on domestic-hot-water outlet piping. Comply with requirements for shutoff valves specified in Section 220523.12 "Ball Valves for Plumbing Piping," Section 220523.13 "Butterfly Valves for Plumbing Piping,"

D. Install combination temperature-and-pressure relief valves in top portion of storage tanks. Use relief valves with sensing elements that extend into tanks. Extend domestic-water heater relief-valve outlet, with drain piping same as domestic-water piping in continuous downward pitch, and discharge by positive air gap onto closest floor drain.

E. Install combination temperature-and-pressure relief valves in water piping for electric, domestic-water heaters without storage. Extend domestic-water heater relief-valve outlet, with drain piping same as domestic-water piping in continuous downward pitch, and discharge by positive air gap onto closest floor drain.

F. Install water-heater drain piping as indirect waste to spill by positive air gap into open drains or over floor drains. Install hose-end drain valves at low points in water piping for electric, domestic-water heaters that do not have tank drains. Comply with requirements for hose-end drain valves specified in Section 221119 "Domestic Water Piping Specialties."

G. Install thermometers on inlet and outlet piping of residential, solar, electric, domestic-water heaters.

H. Install piping-type heat traps on inlet and outlet piping of electric, domestic-water heater storage tanks without integral or fitting-type heat traps.

I. Fill electric, domestic-water heaters with water.

J. Charge domestic-water expansion tanks with air to required system pressure.

K. Install dielectric fittings in all locations where piping of dissimilar metals is to be joined. The wetted surface of the dielectric fitting contacted by potable water shall contain less than 0.25 percent of lead by weight.

L. Identify system components. Comply with requirements for identification specified in Section 220553 "Identification for Plumbing Piping and Equipment."

3.2 PIPING CONNECTIONS

A. Comply with requirements for piping specified in Section 221116 "Domestic Water Piping." Drawings indicate general arrangement of piping, fittings, and specialties.

B. Where installing piping adjacent to electric, domestic-water heaters, allow space for service and maintenance of water heaters. Arrange piping for easy removal of domestic-water heaters.

3.3 FIELD QUALITY CONTROL

A. Perform tests and inspections:

1. Leak Test: After installation, charge system and test for leaks. Repair leaks and retest until no leaks exist.
2. Operational Test: After electrical circuitry has been energized, start units to confirm proper operation.
3. Test and adjust controls and safeties. Replace damaged and malfunctioning controls and equipment.

B. Electric, domestic-water heaters will be considered defective if they do not pass tests and inspections.

END OF SECTION 223300

SECTION 223400 - FUEL-FIRED, DOMESTIC-WATER HEATERS

TIPS:

To view non-printing **Editor's Notes** that provide guidance for editing, click on MasterWorks/Single-File Formatting/Toggle/Editor's Notes.

To read **detailed research, technical information about products and materials, and coordination checklists**, click on MasterWorks/Supporting Information.

Content Requests:

<Double click here to submit questions, comments, or suggested edits to this Section.>

PART 1 - GENERAL

1.1 SUMMARY

A. Section Includes:
   1. Commercial, power-burner, gas-fired, storage, domestic-water heaters.
   2. Commercial, direct-vent, gas-fired, storage, domestic-water heater.
   3. Domestic-water heater accessories.

1.2 ACTION SUBMITTALS

A. Product Data: For each type of product.

1.3 COORDINATION

A. Coordinate sizes and locations of concrete bases with actual equipment provided.

1.4 WARRANTY

A. Special Warranty: Manufacturer agrees to repair or replace components of fuel-fired, domestic-water heaters that fail in materials or workmanship within specified warranty period.

   1. Warranty Periods: From date of Substantial Completion.

      a. Commercial, Gas-Fired, Storage, Domestic-Water Heaters:

         1) Storage Tank: Three years.
         2) Controls and Other Components: Two year(s).

b. Expansion Tanks: Five years.

PART 2 - PRODUCTS

2.1 PERFORMANCE REQUIREMENTS

A. Electrical Components, Devices, and Accessories: Listed and labeled as defined in NFPA 70, by an NRTL, and marked for intended location and use.

B. Seismic Performance: Commercial domestic-water heaters shall withstand the effects of earthquake motions determined in accordance with ASCE/SEI 7.

C. ASHRAE/IES Compliance: Fabricate and label fuel-fired, domestic-water heaters to comply with ASHRAE/IES 90.1.

D. ASME Compliance:

1. Where ASME-code construction is indicated, fabricate and label commercial, domestic-water heater storage tanks to comply with ASME Boiler and Pressure Vessel Code: Section VIII, Division 1.
2. Where ASME-code construction is indicated, fabricate and label commercial, finned-tube, domestic-water heaters to comply with ASME Boiler and Pressure Vessel Code: Section IV.

E. NSF Compliance: Fabricate and label equipment components that will be in contact with potable water to comply with NSF 61 and NSF 372.

2.2 COMMERCIAL, GAS-FIRED, STORAGE, DOMESTIC-WATER HEATERS

A. Commercial, Gas-Fired, Storage, Domestic-Water Heaters (WH-3, WH-4):

1. Manufacturers: Subject to compliance with requirements, available manufacturers offering products that may be incorporated into the Work include, the following:

a. A. O. Smith Corporation.
b. Aldrich Company, Inc. (The).
c. State Industries.
d. Additional manufacturers submitted for and receiving engineer approval prior to bid

2. Standard: ANSI Z21.10.3/CSA 4.3.
3. Storage-Tank Construction: ASME-code steel with 160-psig working-pressure rating.

a. Tappings: Factory fabricated of materials compatible with tank. Attach tappings to tank before testing.

1) NPS 2 and Smaller: Threaded ends in accordance with ASME B1.20.1.
2) NPS 2-1/2 and Larger: Flanged ends in accordance with ASME B16.5 for steel and stainless steel flanges and in accordance with ASME B16.24 for copper and copper-alloy flanges.

b. Interior Finish: Comply with NSF 61 and NSF 372 barrier materials for potable-water tank linings, including extending finish into and through tank fittings and outlets.
c. Lining: Glass complying with NSF 61 and NSF 372 barrier materials for potable-water tank linings, including extending lining into and through tank fittings and outlets.

4. Factory-Installed, Storage-Tank Appurtenances:

a. Anode Rod: Replaceable magnesium.
b. Dip Tube: Required unless cold-water inlet is near bottom of tank.
c. Drain Valve: Corrosion-resistant metal with hose-end connection.
d. Insulation: Comply with ASHRAE/IES 90.1. Surround entire storage tank except connections and controls.
e. Jacket: Steel with enameled finish.
f. Burner: UL 795 for power-burner, gas-fired, domestic-water heaters and natural-gas fuel.
g. Automatic Ignition: ANSI Z21.20/CSA C22.2 No. 60730-2-5, electric, automatic, gas-ignition system.
h. Temperature Control: Adjustable thermostat.
i. Safety Controls: Automatic, high-temperature-limit and low-water cutoff devices or systems.
j. Combination Temperature-and-Pressure Relief Valves: ANSI Z21.22/CSA 4.4. Include one or more relief valves with total relieving capacity at least as great as heat input, and include pressure setting less than working-pressure rating of domestic-water heater. Select one relief valve with sensing element that extends into storage tank.

5. Special Requirements: NSF 5 construction.

6. See plumbing fixture drawings for more information.

2.3 GAS-FIRED, TANKLESS, DOMESTIC-WATER HEATERS (WH-5, WH-5A, WH-7):

1. Manufacturers: Subject to compliance with requirements, available manufacturers offering products that may be incorporated into the Work include the following:

a. A. O. Smith Corporation.
b. Rheem Manufacturing Company.
c. State Industries.
d. Additional manufacturers submitted for and receiving engineer approval prior to bid

2. Standard: ANSI Z21.10.3/CSA 4.3 for gas-fired, instantaneous, domestic-water heaters for indoor application.

3. Construction: Copper piping or tubing complying with NSF 61 and NSF 372 barrier materials for potable water, without storage capacity.

   a. Tappings: ASME B1.20.1 pipe thread.
   b. Pressure Rating: 150 psig.
   c. Heat Exchanger: Copper tubing or Stainless steel.
   d. Insulation: Comply with ASHRAE/IES 90.1.
   e. Jacket: Metal, with enameled finish, or plastic.
   f. Burner: For use with tankless, domestic-water heaters and natural-gas fuel.
   g. Automatic Ignition: Manufacturer's proprietary system for automatic, gas ignition.
   h. Temperature Control: Adjustable thermostat.
   i. Support: Bracket for wall mounting

4. See plumbing fixture drawings for more information.

2.4 DOMESTIC-WATER HEATER ACCESSORIES

A. Domestic-Water Expansion Tanks:

1. Manufacturers: Subject to compliance with requirements, available manufacturers offering products that may be incorporated into the Work include the following:

   a. A. O. Smith Corporation.
   b. State Industries.
   c. TACO Comfort Solutions, Inc.
   d. Additional manufacturers submitted for and receiving engineer approval prior to bid.

2. Description: Steel, pressure-rated tank constructed with welded joints and factory-installed, butyl-rubber diaphragm. Include air precharge to minimum system-operating pressure at tank.
3. Construction:

   a. Tappings: Factory-fabricated steel, welded to tank before testing and labeling. Include ASME B1.20.1 pipe thread.
   b. Interior Finish: Comply with NSF 61 and NSF 372 barrier materials for potable-water tank linings, including extending finish into and through tank fittings and outlets.
   c. Air-Charging Valve: Factory installed.

4. Capacity and Characteristics:

   a. Working-Pressure Rating: 150 psig.
   b. Capacity Acceptable: 4 gal. minimum.
   c. Air Precharge Pressure: 40 psi

B. Drain Pans: Corrosion-resistant metal with raised edge. Include dimensions not less than base of domestic-water heater, and include drain outlet not less than NPS 3/4 with ASME B1.20.1 pipe threads.

C. Piping-Type Heat Traps: Field-fabricated piping arrangement in accordance with ASHRAE/IES 90.1.

D. Heat-Trap Fittings: ASHRAE 90.2.

E. Comply with requirements for ball-, butterfly-, or gate-type shutoff valves specified in Section 220523.12 "Ball Valves for Plumbing Piping," Section 220523.13 "Butterfly Valves for Plumbing Piping," and Section 220523.15 "Gate Valves for Plumbing Piping."

1. Comply with requirements for balancing valves specified in Section 221119 "Domestic Water Piping Specialties."

F. Gas Shutoff Valves: ANSI Z21.15/CSA 9.1, manually operated. Furnish for installation in piping.

G. Gas Pressure Regulators: ANSI Z21.18/CSA 6.3, appliance type. Include 1/2-psig or 2-psig pressure rating as required to match gas supply.

H. Automatic Gas Valves: ANSI Z21.21/CSA 6.5, appliance, electrically operated, on-off automatic valve.

I. Combination Temperature-and-Pressure Relief Valves: Include relieving capacity at least as great as heat input, and include pressure setting less than working-pressure rating of domestic-water heater. Select relief valves with sensing element that extends into storage tank.

1. Gas-Fired, Domestic-Water Heaters: ANSI Z21.22/CSA 4.4.

J. Pressure Relief Valves: Include pressure setting less than working-pressure rating of domestic-water heater.

1. Gas-Fired, Domestic-Water Heaters: ANSI Z21.22/CSA 4.4.

K. Vacuum Relief Valves: ANSI Z21.22/CSA 4.4.

L. Domestic-Water Heater Stands: Manufacturer's factory-fabricated steel stand for floor mounting, capable of supporting domestic-water heater and water. Provide dimension that will support bottom of domestic-water heater minimum of [**18 inches**] <**Insert dimension**> above the floor.

M. Domestic-Water Heater Mounting Brackets: Manufacturer's factory-fabricated steel bracket for wall mounting, capable of supporting domestic-water heater and water.

2.5 SOURCE QUALITY CONTROL

A. Factory Tests: Test and inspect assembled domestic-water heaters and storage tanks specified to be ASME-code construction, in accordance with ASME Boiler and Pressure Vessel Code.

B. Hydrostatically test commercial domestic-water heaters and storage tanks to minimum of one and one-half times pressure rating before shipment.

C. Domestic-water heaters will be considered defective if they do not pass tests and inspections.

D. Prepare test and inspection reports.

PART 3 - EXECUTION

3.1 DOMESTIC-WATER HEATER INSTALLATION

A. Commercial, Domestic-Water Heater Mounting: Install commercial domestic-water heaters on concrete base. Comply with requirements for concrete base specified in Section 033000 "Cast-in-Place Concrete."

1. Exception: Omit concrete bases for commercial domestic-water heaters if installation on stand, bracket, suspended platform, or directly on floor is indicated.
2. Maintain manufacturer's recommended clearances.
3. Arrange units so controls and devices that require servicing are accessible.
4. Install dowel rods to connect concrete base to concrete floor. Unless otherwise indicated, install dowel rods on 18-inch centers around the full perimeter of concrete base.
5. For supported equipment, install epoxy-coated anchor bolts that extend through concrete base and anchor into structural concrete floor.
6. Place and secure anchorage devices. Use setting drawings, templates, diagrams, instructions, and directions furnished with items to be embedded.
7. Install anchor bolts to elevations required for proper attachment to supported equipment.
8. Anchor domestic-water heaters to substrate.

B. Residential, Domestic-Water Heater Mounting: Install residential domestic-water heaters on water-heater stand on floor or domestic-water heater mounting bracket.

1. Maintain manufacturer's recommended clearances.
2. Arrange units so controls and devices that require servicing are accessible.
3. Place and secure anchorage devices. Use setting drawings, templates, diagrams, instructions, and directions furnished with items to be embedded.
4. Install anchor bolts to elevations required for proper attachment to supported equipment.
5. Anchor domestic-water heaters to substrate.

C. Install domestic-water heaters level and plumb, in accordance with layout drawings, original design, and referenced standards. Maintain manufacturer's recommended clearances. Arrange units so controls and devices needing service are accessible.

1. Install shutoff valves on domestic-water-supply piping to domestic-water heaters and on domestic-hot-water outlet piping. Comply with requirements for shutoff valves specified in Section 220523.12 "Ball Valves for Plumbing Piping," Section 220523.13 "Butterfly Valves for Plumbing Piping," and Section 220523.15 "Gate Valves for Plumbing Piping."

D. Install gas-fired, domestic-water heaters in accordance with NFPA 54.

1. Install gas shutoff valves on gas supply piping to gas-fired, domestic-water heaters without shutoff valves.
2. Install gas pressure regulators on gas supplies to gas-fired, domestic-water heaters without gas pressure regulators if gas pressure regulators are required to reduce gas pressure at burner.
3. Install automatic gas valves on gas supplies to gas-fired, domestic-water heaters if required for operation of safety control.
4. Comply with requirements for gas shutoff valves, gas pressure regulators, and automatic gas valves specified in Section 231123 "Facility Natural-Gas Piping."

E. Install commercial domestic-water heaters with seismic-restraint devices. Comply with requirements for seismic-restraint devices specified in Section 220548 "Vibration and Seismic Controls for Plumbing Piping and Equipment" and Section 220548.13 "Vibration Controls for Plumbing Piping and Equipment."

F. Install combination temperature-and-pressure relief valves in top portion of storage tanks. Use relief valves with sensing elements that extend into tanks. Extend domestic-water-heater relief-valve outlet, with drain piping same as domestic-water piping in continuous downward pitch, and discharge by positive air gap onto closest floor drain.

G. Install water-heater drain piping as indirect waste to spill by positive air gap into open drains or over floor drains. Install hose-end drain valves at low points in water piping for domestic-water heaters that do not have tank drains. Comply with requirements for hose-end drain valves specified in Section 221119 "Domestic Water Piping Specialties."

H. Install thermometer on outlet piping of domestic-water heaters. Comply with requirements for thermometers specified in Section 220519 "Meters and Gages for Plumbing Piping."

I. Assemble and install inlet and outlet piping manifold kits for multiple domestic-water heaters. Fabricate, modify, or arrange manifolds for balanced water flow through each domestic-water heater. Include shutoff valve and thermometer in each domestic-water heater inlet and outlet, and throttling valve in each domestic-water heater outlet. Comply with requirements for valves specified in Section 220523.12 "Ball Valves for Plumbing Piping," Section 220523.13 "Butterfly Valves for Plumbing Piping," and Section 220523.15 "Gate Valves for Plumbing Piping," and comply with requirements for thermometers specified in Section 220519 "Meters and Gages for Plumbing Piping."

J. Install piping-type heat traps on inlet and outlet piping of domestic-water heater storage tanks without integral or fitting-type heat traps.

K. Fill domestic-water heaters with water.

L. Charge domestic-water expansion tanks with air to required system pressure.

M. Install dielectric fittings in all locations where piping of dissimilar metals is to be joined. The wetted surface of the dielectric fitting contacted by potable water shall contain less than 0.25 percent of lead by weight.

N. Identify system components. Comply with requirements for identification specified in Section 220553 "Identification for Plumbing Piping and Equipment."

3.2 PIPING CONNECTIONS

A. Comply with requirements for domestic-water piping specified in Section 221116 "Domestic Water Piping."

B. Comply with requirements for gas piping specified in Section 231123 "Facility Natural-Gas Piping."

C. Drawings indicate general arrangement of piping, fittings, and specialties.

D. Where installing piping adjacent to fuel-fired, domestic-water heaters, allow space for service and maintenance of water heaters. Arrange piping for easy removal of domestic-water heaters.

3.3 FIELD QUALITY CONTROL

A. Perform tests and inspections with the assistance of a factory-authorized service representative.

B. Tests and Inspections:

1. Leak Test: After installation, charge system and test for leaks. Repair leaks and retest until no leaks exist.
2. Operational Test: After electrical circuitry has been energized, start units to confirm proper operation.
3. Test and adjust controls and safeties. Replace damaged and malfunctioning controls and equipment.

C. Domestic-water heaters will be considered defective if they do not pass tests and inspections.

END OF SECTION 223400

SECTION 224213.13 - COMMERCIAL WATER CLOSETS

PART 1 - GENERAL

1.1 SUMMARY

A. Section Includes:

1. Floor-mounted, bottom-outlet water closets.
2. Wall-mounted water closets.
3. Flushometer valves and tanks.
4. Toilet seats.
5. Supports.

1.2 ACTION SUBMITTALS

A. Product Data: For each type of product.

PART 2 - PRODUCTS

2.1 FLOOR-MOUNTED, BOTTOM-OUTLET WATER CLOSETS

A. Water Closets, Floor Mounted, Bottom Outlet, Top Spud (P1-A, P1-B):

1. Manufacturers: Subject to compliance with requirements, available manufacturers offering products that may be incorporated into the Work include the following:

    a. American Standard.
    b. Kohler Co.
    c. Zurn Industries, LLC.
    d. Additional manufacturers submitted for and receiving engineer approval prior to bid.

2. See plumbing fixture schedule for more information:

3. Bowl-to-Drain Connecting Fitting: ASTM A1045 or ASME A112.4.3.

2.2 WALL-MOUNTED WATER CLOSETS

A. Water Closets, Wall Mounted, Top Spud, Accessible (P1-C):

1. Manufacturers: Subject to compliance with requirements, available manufacturers offering products that may be incorporated into the Work include the following:

a. American Standard.
b. Kohler Co.
c. Zurn Industries, LLC.
d. Additional manufacturers submitted for and receiving engineer approval prior to bid.

2. See plumbing fixture schedule for more information.
3. Support: Water closet carrier.
4. Water-Closet Mounting Height: Handicapped/elderly according to ICC A117.1.

2.3 FLUSHOMETER VALVES

A. Lever-Handle, Piston Flushometer Valves:

1. Manufacturers: Subject to compliance with requirements, available manufacturers offering products that may be incorporated into the Work include the following:

a. American Standard.
b. Kohler Co.
c. Zurn Industries, LLC.
d. Additional manufacturers submitted for and receiving engineer approval prior to bid.

2. Standard: ASSE 1037.
3. See plumbing fixture schedule for more information.

2.4 TOILET SEATS

A. Toilet Seats (P1-A, P1-B, P1-C):

1. Manufacturers: Subject to compliance with requirements, available manufacturers offering products that may be incorporated into the Work include the following:

a. American Standard.
b. Kohler Co.
c. Zurn Industries, LLC.
d. Additional manufacturers submitted for and receiving engineer approval prior to bid.

2. Standard: IAPMO/ANSI Z124.5.
3. Material: Plastic.
4. Type: Commercial (Standard)
5. Shape: Elongated rim, open front or Elongated rim, closed front.
6. Hinge: Check or Self-sustaining.
7. Hinge Material: Noncorroding metal.
8. See plumbing fixture schedule for more information.

2.5 SUPPORTS

A. Water Closet Carrier:

1. Manufacturers: Subject to compliance with requirements, available manufacturers offering products that may be incorporated into the Work include the following:

   a. Zurn Industries, LLC.
   b. Additional manufacturers submitted for and receiving engineer approval prior to bid.

2. Standard: ASME A112.6.1M.
3. Description: Waste-fitting assembly, as required to match drainage piping material and arrangement with faceplates, couplings gaskets, and feet; bolts and hardware matching fixture. Include additional extension coupling, faceplate, and feet for installation in wide pipe space.

PART 3 - EXECUTION

3.1 INSTALLATION, GENERAL

A. Water-Closet Installation:

1. Install level and plumb according to roughing-in drawings.
2. Install floor-mounted water closets on bowl-to-drain connecting fitting attachments to piping or building substrate.
3. Install accessible, wall-mounted water closets at mounting height for handicapped/elderly, according to ICC/ANSI A117.1.

B. Support Installation:
1. Use carrier supports with waste-fitting assembly and seal.
2. Install wall-mounted, back-outlet water-closet supports with waste-fitting assembly and waste-fitting seals; and affix to building substrate.

C. Flushometer-Valve Installation:

1. Install flushometer-valve, water-supply fitting on each supply to each water closet.
2. Attach supply piping to supports or substrate within pipe spaces behind fixtures.
3. Install lever-handle flushometer valves for accessible water closets with handle mounted on open side of water closet.
4. Install actuators in locations that are easy for people with disabilities to reach.

D. Install toilet seats on water closets.

E. Wall Flange and Escutcheon Installation:

1. Install wall flanges or escutcheons at piping wall penetrations in exposed, finished locations and within cabinets and millwork.

2. Install deep-pattern escutcheons if required to conceal protruding fittings.
3. Comply with escutcheon requirements specified in Section 220518 "Escutcheons for Plumbing Piping."

F. Joint Sealing:

1. Seal joints between water closets and walls and floors using sanitary-type, one-part, mildew-resistant silicone sealant.
2. Match sealant color to water-closet color.
3. Comply with sealant requirements specified in Section 079200 "Joint Sealants."

3.2 CONNECTIONS

A. Connect water closets with water supplies and soil, waste, and vent piping. Use size fittings required to match water closets.

B. Comply with water piping requirements specified in Section 221116 "Domestic Water Piping."

C. Comply with soil and waste piping requirements specified in Section 221316 "Sanitary Waste and Vent Piping."

D. Where installing piping adjacent to water closets, allow space for service and maintenance.

3.3 ADJUSTING

A. Operate and adjust water closets and controls. Replace damaged and malfunctioning water closets, fittings, and controls.

B. Adjust water pressure at flushometer valves to produce proper flow.

3.4 CLEANING AND PROTECTION

A. Clean water closets and fittings with manufacturers' recommended cleaning methods and materials.

B. Install protective covering for installed water closets and fittings.

C. Do not allow use of water closets for temporary facilities unless approved in writing by Owner.

END OF SECTION 224213.13

SECTION 224213.16 - COMMERCIAL URINALS

PART 1 - GENERAL

1.1 SUMMARY

A. Section Includes:
   1. Wall-hung Urinals
   2. Urinal flushometer valves.
   3. Supports.

1.2 ACTION SUBMITTALS

A. Product Data: For each type of product.

PART 2 - PRODUCTS

2.1 WALL-HUNG URINALS

A. Urinals - Wall Hung, Washout, Accessible (P-2).

   1. Manufacturers: Subject to compliance with requirements, available manufacturers offering products that may be incorporated into the Work include the following:

      a. American Standard.
      b. Kohler Co.
      c. Zurn Industries, LLC.
      d. Additional manufacturers submitted for and receiving engineer approval prior to bid.

   2. See plumbing fixture schedule for more information.

   3. Standards: ASME A112.19.2/CSA B45.1 and ASME A112.19.5/CSA B45.15.
   4. Waste Fitting:

      a. Standard: ASME A112.18.2/CSA B125.2 for coupling.
      b. Size: NPS 2.

   5. Support: Urinal carrier with fixture support plates and coupling with seal and fixture bolts and hardware matching fixture
   6. Urinal Mounting Height: Handicapped/elderly according to ICC A117.1.

   7. See plumbing fixture schedule for more information.

B. Solenoid-Actuator, Diaphragm Flushometer Valves: (P-2)

1. Manufacturers: Subject to compliance with requirements, available manufacturers offering products that may be incorporated into the Work include the following:

    a. American Standard.
    b. Sloan Valve Company.
    c. Zurn Industries, LLC.
    d. Additional manufacturers submitted for and receiving engineer approval prior to bid.

2. Standard: ASSE 1037/ASME 112.1037/CSA B125.37.
3. Minimum Pressure Rating: 125 psig
4. Features: Include integral check stop and backflow-prevention device.
5. Material: Brass body with corrosion-resistant components.
6. Flushometer-Valve Finish: Chrome plated.
7. Panel Finish: Chrome plated or stainless steel.
8. Actuator: Solenoid complying with UL 1951; listed and labeled as defined in NFPA 70, by a qualified testing agency; and marked for intended location and application.
9. Trip Mechanism: Battery-powered or Hard-wired electronic sensor complying with UL 1951; listed and labeled as defined in NFPA 70, by a qualified testing agency; and marked for intended location and application.

10. See plumbing fixture schedule for more information.

2.2 SUPPORTS

A. Urinal Carrier:

1. Manufacturers: Subject to compliance with requirements, available manufacturers offering products that may be incorporated into the Work include the following:

    a. MIFAB, Inc.
    b. WATTS.
    c. Zurn Industries, LLC.
    d. Additional manufacturers submitted for and receiving engineer approval prior to bid.

2. Standard: ASME A112.6.1M.

PART 3 - EXECUTION

3.1 INSTALLATION

A. Urinal Installation:
    1. Install wall-hung, back-outlet urinals onto waste fitting seals and attached to supports.

2. Install accessible, wall-mounted urinals at mounting height for the handicapped/elderly, according to ICC A117.1.

B. Support Installation:

1. Install supports, affixed to building substrate, for wall-hung urinals.
2. Use off-floor carriers with waste fitting and seal for back-outlet urinals.
3. Use carriers without waste fitting for urinals with tubular waste piping.
4. Use chair-type carrier supports with rectangular steel uprights for accessible urinals.

C. Flushometer-Valve Installation:

1. Install flushometer-valve water-supply fitting on each supply to each urinal.
2. Attach supply piping to supports or substrate within pipe spaces behind fixtures.
3. Install lever-handle flushometer valves for accessible urinals with handle mounted on open side of compartment.

D. Wall Flange and Escutcheon Installation:

1. Install wall flanges or escutcheons at piping wall penetrations in exposed, finished locations.
2. Install deep-pattern escutcheons if required to conceal protruding fittings.
3. Comply with escutcheon requirements specified in Section 220518 "Escutcheons for Plumbing Piping."

E. Joint Sealing:

1. Seal joints between urinals and walls and floors using sanitary-type, one-part, mildew-resistant silicone sealant.
2. Match sealant color to urinal color.
3. Comply with sealant requirements specified in Section 079200 "Joint Sealants."

3.2 PIPING CONNECTIONS

A. Connect urinals with water supplies and soil, waste, and vent piping. Use size fittings required to match urinals.

B. Comply with water piping requirements specified in Section 221116 "Domestic Water Piping."

C. Comply with soil and waste piping requirements specified in Section 221316 "Sanitary Waste and Vent Piping."

D. Where installing piping adjacent to urinals, allow space for service and maintenance.

3.3 ADJUSTING

A. Operate and adjust urinals and controls. Replace damaged and malfunctioning urinals, fittings, and controls.

B. Adjust water pressure at flushometer valves to produce proper flow.

3.4 CLEANING AND PROTECTION

A. Clean urinals and fittings with manufacturers' recommended cleaning methods and materials.

B. Install protective covering for installed urinals and fittings.

C. Do not allow use of urinals for temporary facilities unless approved in writing by Owner.

END OF SECTION 224213.16

SECTION 224216.13 - COMMERCIAL LAVATORIES

PART 1 - GENERAL

1.1 SUMMARY

A. Section Includes:
   1. Lavatories.
   2. Faucets
   3. Supply fittings.
   4. Waste fittings.

1.2 ACTION SUBMITTALS

A. Product Data: For each type of product.

PART 2 - PRODUCTS

2.1 VITREOUS-CHINA, COUNTER-MOUNTED LAVATORIES

A. Lavatory - Vitreous China, Undercounter Mounted (P-3A, P-3B)

   1. Manufacturers: Subject to compliance with requirements, available manufacturers offering products that may be incorporated into the Work include the following:

      a. American Standard.
      b. Kohler Co.
      c. Zurn Industries, LLC.
      d. Additional manufacturers submitted for and receiving engineer approval prior to bid.

   2. See plumbing fixture schedule for more information:

   3. Faucet: See plumbing fixture schedule for more information.

   4. Child or Handicapped/elderly lavatories to be installed according to ICC A117.1
      a. See architectural floor plan for locations

2.2 VITREOUS-CHINA, WALL-MOUNTED LAVATORIES

A. Lavatory - Vitreous China, Wall Mounted, with Back (P-4, P-4A)

1. Manufacturers: Subject to compliance with requirements, available manufacturers offering products that may be incorporated into the Work include the following:

    a. American Standard.
    b. Kohler Co.
    c. Zurn Industries, LLC.
    d. Additional manufacturers submitted for and receiving engineer approval prior to bid.

2. See plumbing fixture schedule for more information:

3. Faucet: See plumbing fixture schedule for more information.

4. Child or Handicapped/elderly lavatories to be installed according to ICC A117.1
    a. See architectural floor plan for locations

2.3 AUTOMATICALLY OPERATED LAVATORY FAUCETS

A. Lavatory faucets intended to convey or dispense water for human consumption are to comply with the U.S. Safe Drinking Water Act (SDWA), with requirements of the Authority Having Jurisdiction (AHJ), and with NSF 61/NSF 372, or be certified in compliance with NSF 61/NSF 372 by an American National Standards Institute (ANSI) accredited third-party certification body, that the weighted average lead content at wetted surfaces is less than or equal to 0.25 percent.

B. Lavatory Faucets - Automatic Type: Battery Powered or Hardwired Electronic Sensor Operated, Mixing (P3A, P3-B, P-4, P-4A)

1. Manufacturers: Subject to compliance with requirements, available manufacturers offering products that may be incorporated into the Work include the following:

    a. Advanced Modern Technologies Corporation - AMTC.
    b. American Standard.
    c. Kohler Co.
    d. Additional manufacturers submitted for and receiving engineer approval prior to bid.

2. Standards: ASME A112.18.1/CSA B125.1 and UL 1951.
3. Electrical Components, Devices, and Accessories: Listed and labeled as defined in NFPA 70, by a qualified testing agency, and marked for intended location and application.
4. See plumbing fixture schedule for more information.

2.4 SUPPLY FITTINGS

A. NSF Standard: Comply with NSF 61 and NSF 372 for supply-fitting materials that will be in contact with potable water.

B. Standard: ASME A112.18.1/CSA B125.1.

C. Supply Piping: Chrome-plated-brass pipe or chrome-plated copper tube matching water-supply piping size. Include chrome-plated-brass or stainless steel wall flange.

D. Supply Stops: Chrome-plated-brass, one-quarter-turn, ball-type or compression valve with inlet connection matching supply piping.

E. Operation: Wheel handle.

F. Risers:

1. NPS 3/8.

2. Chrome-plated, rigid-copper-pipe and brass straight or offset tailpieces.

2.5 WASTE FITTINGS

A. Standard: ASME A112.18.2/CSA B125.2.

B. Drain: Grid type with NPS 1-1/2 offset and straight tailpiece.

C. Trap:

1. Size: NPS 1-1/2.
2. Material:

a. Stainless steel, two-piece trap and swivel elbow with 0.012-inch-thick stainless steel tube to wall; and stainless steel wall flange.

PART 3 - EXECUTION

3.1 EXAMINATION

A. Examine roughing-in of water supply and sanitary drainage and vent piping systems to verify actual locations of piping connections before lavatory installation.

B. Examine counters and walls for suitable conditions where lavatories will be installed.

C. Proceed with installation only after unsatisfactory conditions have been corrected.

3.2 INSTALLATION

A. Install supports, affixed to building substrate, for wall-mounted lavatories.

B. Install wall flanges or escutcheons at piping wall penetrations in exposed, finished locations. Use deep-pattern escutcheons if required to conceal protruding fittings. Comply with escutcheon requirements specified in Section 220518 "Escutcheons for Plumbing Piping."

C. Seal joints between lavatories, counters, and walls using sanitary-type, one-part, mildew-resistant silicone sealant. Match sealant color to fixture color. Comply with sealant requirements specified in Section 079200 "Joint Sealants."

D. Install protective shielding pipe covers and enclosures on exposed supplies and waste piping of accessible lavatories. Comply with requirements in Section 220719 "Plumbing Piping Insulation."

3.3 PIPING CONNECTIONS

A. Connect fixtures with water supplies, stops, and risers, and with traps, soil, waste, and vent piping. Use size fittings required to match fixtures.

B. Comply with water piping requirements specified in Section 221116 "Domestic Water Piping."

C. Comply with soil and waste piping requirements specified in Section 221316 "Sanitary Waste and Vent Piping."

3.4 ADJUSTING

A. Operate and adjust lavatories and controls. Replace damaged and malfunctioning lavatories, fittings, and controls.

B. Install new batteries in battery-powered, electronic-sensor mechanisms at turnover to owner.

C. Adjust water pressures at faucets to produce proper flow.

3.5 CLEANING AND PROTECTION

A. After completing installation of lavatories, inspect and repair damaged finishes.

B. Clean lavatories, faucets, and other fittings with manufacturers' recommended cleaning methods and materials.

C. Provide protective covering for installed lavatories and fittings.

D. Do not allow use of lavatories for temporary facilities unless approved in writing by Owner.

END OF SECTION 224216.13

SECTION 224216.16 - COMMERCIAL SINKS

PART 1 - GENERAL

1.1 SUMMARY

A. Section Includes:

1. Service sinks.
2. Handwash sinks.
3. Kitchen/utility sinks.
4. Manually operated sink faucets.
5. Automatically operated sink faucets.
6. Supply fittings.
7. Waste fittings.
8. Sink Supports.

B. Related Requirements:

1. Section 114000 "Foodservice Equipment" for NSF-compliant foodservice and handwash sinks.

1.2 ACTION SUBMITTALS

A. Product Data: For each type of product.

PART 2 - PRODUCTS

2.1 SERVICE SINKS

A. Service Sinks - Molded Stone, Floor Mounted (P-5)

1. Manufacturers: Subject to compliance with requirements, available manufacturers offering products that may be incorporated into the Work include the following:

   a. Fiat Products.
   b. Florestone Products Co., Inc.
   c. Additional manufacturers submitted for and receiving engineer approval prior to bid.

2. See plumbing fixture schedule for more information.

3. Mounting: On floor and flush to wall.

2.2 KITCHEN/UTILITY SINKS

A. Kitchen/Utility Sinks - Stainless Steel, Counter Mounted: (P-7)

1. Manufacturers: Subject to compliance with requirements, available manufacturers offering products that may be incorporated into the Work include the following:

   a. Advance Tabco.
   b. Elkay.
   c. Just Manufacturing.
   d. Additional manufacturers submitted for and receiving engineer approval prior to bid.

2. See plumbing fixture schedule for more information.

3. Supply Fittings:

   a. Standard: ASME A112.18.1/CSA B125.1.
   b. Supplies: Chrome-plated brass compression stop with inlet connection matching water-supply piping type and size.

      1) Operation: Wheel handle.
      2) Risers: NPS 1/2, chrome-plated, rigid-copper pipe

4. Waste Fittings:

   a. Standard: ASME A112.18.2/CSA B125.2.
   b. Trap(s):

      1) Size: NPS 1-1/2
      2) Material:

         ~~a)~~ Chrome-plated; and chrome-plated brass or steel wall flange.

         b) Stainless-steel, two-piece trap and swivel elbow with 0.012-inch-thick stainless-steel tube to wall; and stainless-steel wall flange.

5. Mounting: On counter with sealant.

2.3 HANDWASH SINKS

A. Handwash Sinks - Stainless Steel: (P-8, P-9).

1. Manufacturers: Subject to compliance with requirements, available manufacturers offering products that may be incorporated into the Work include the following:

   a. Advance Tabco.
   b. American Standard.
   c. Eagle Group.

d. Elkay.
e. Absolute Stone
f. Additional manufacturers submitted for and receiving engineer approval prior to bid.

2. Fixture:

a. Standards:

1) ASME A112.19.3/CSA B45.4.
2) NSF 61.

3. See plumbing fixture schedule for more information.

2.4 MANUALLY OPERATED SINK FAUCETS

A. Sink faucets intended to convey or dispense water for human consumption are to comply with the U.S. Safe Drinking Water Act (SDWA), with requirements of the Authority Having Jurisdiction (AHJ), and with NSF 61 and NSF 372, or be certified in compliance with NSF 61 and NSF 372 by an ANSI-accredited third-party certification body, in that the weighted average lead content at wetted surfaces is less than or equal to 0.25 percent.

B. Commercial Sink Faucets - Manual Type: Single-control mixing and Two-handle mixing.

1. Manufacturers: Subject to compliance with requirements, available manufacturers offering products that may be incorporated into the Work include the following:

a. American Standard.
b. Elkay.
c. Kohler Co.
d. Additional manufacturers submitted for and receiving engineer approval prior to bid.

2. Standard: ASME A112.18.1/CSA B125.1.
3. See plumbing fixture schedule for more information

2.5 AUTOMATICALLY OPERATED SINK FAUCETS

A. Sink faucets intended to convey or dispense water for human consumption are to comply with the U.S. Safe Drinking Water Act (SDWA), with requirements of the Authority Having Jurisdiction (AHJ), and with NSF 61 and NSF 372, or be certified in compliance with NSF 61 and NSF 372 by an ANSI-accredited third-party certification body, in that the weighted average lead content at wetted surfaces is less than or equal to 0.25 percent.

B. Commercial Sink Faucets - Automatic Type: Battery-powered, electronic-sensor-operated, mixing.

1. Manufacturers: Subject to compliance with requirements, available manufacturers offering products that may be incorporated into the Work include the following:

    a. Kohler Co.
    b. Moen Incorporated.
    c. Zurn Industries, LLC.
    d. Additional manufacturers submitted for and receiving engineer approval prior to bid.

2. Standards: ASME A112.18.1/CSA B125.1 and UL 1951.
3. Electrical Components, Devices, and Accessories: Listed and labeled as defined in NFPA 70, by a qualified testing agency, and marked for intended location and application.
4. See plumbing fixture schedule for more information

2.6 SUPPLY FITTINGS

A. NSF Standard: Comply with NSF 61 and NSF 372 for supply-fitting materials that will be in contact with potable water.

B. Standard: ASME A112.18.1/CSA B125.1.

C. Supply Piping: Chrome-plated brass pipe or chrome-plated copper tube matching water-supply piping size. Include chrome-plated brass or stainless steel wall flange.

D. Supply Stops: Chrome-plated brass, one-quarter-turn, ball-type or compression valve with inlet connection matching supply piping.

E. Operation: Wheel handle.

F. Risers:

1. NPS 3/8.
2. Chrome-plated, rigid-copper pipe.

2.7 WASTE FITTINGS

A. Standard: ASME A112.18.2/CSA B125.2.

B. Drain: Grid type with NPS 1-1/2 offset and straight tailpiece.

C. Trap:

1. Size: NPS 1-1/2.
2. Material:

    a. Chrome-plated; and chrome-plated brass or steel wall flange.

b. Stainless-steel, two-piece trap and swivel elbow with 0.012-inch-thick stainless-steel tube to wall; and stainless-steel wall flange.

2.8 SINK SUPPORTS

A. Sink Carrier:

1. Manufacturers: Subject to compliance with requirements, available manufacturers offering products that may be incorporated into the Work include the following:

a. MIFAB, Inc.
b. WATTS.
c. Zurn Industries, LLC.
d. Additional manufacturers submitted for and receiving engineer approval prior to bid.

2. Standard: ASME A112.6.1M.

PART 3 - EXECUTION

3.1 EXAMINATION

A. Examine roughing-in of water supply and sanitary drainage and vent piping systems to verify actual locations of piping connections before lavatory installation.

B. Examine counters and walls for suitable conditions where lavatories will be installed.

C. Proceed with installation only after unsatisfactory conditions have been corrected.

3.2 INSTALLATION

A. Install supports, affixed to building substrate, for wall-hung sinks.

B. Install water-supply piping with stop on each supply to each sink faucet.

1. Exception: Use ball or gate valves if supply stops are not specified with sink. Comply with valve requirements specified in Section 220523.12 "Ball Valves for Plumbing Piping"
2. Install stops in locations where they can be easily reached for operation.

C. Install wall flanges or escutcheons at piping wall penetrations in exposed, finished locations. Use deep-pattern escutcheons if required to conceal protruding fittings. Comply with escutcheon requirements specified in Section 220518 "Escutcheons for Plumbing Piping."

D. Seal joints between sinks and counters, floors, and walls using sanitary-type, one-part, mildew-resistant silicone sealant. Match sealant color to fixture color. Comply with sealant requirements specified in Section 079200 "Joint Sealants."

E. Install protective shielding pipe covers and enclosures on exposed supplies and waste piping of accessible sinks. Comply with requirements in Section 220719 "Plumbing Piping Insulation."

3.3 CONNECTIONS

A. Connect fixtures with water supplies, stops, and risers, and with traps, soil, waste, and vent piping. Use size fittings required to match fixtures.

B. Comply with water piping requirements specified in Section 221116 "Domestic Water Piping."

C. Comply with soil and waste piping requirements specified in Section 221316 "Sanitary Waste and Vent Piping."

3.4 ADJUSTING

A. Operate and adjust lavatories and controls. Replace damaged and malfunctioning lavatories, fittings, and controls.

B. Adjust water pressures at faucets to produce proper flow.

3.5 CLEANING AND PROTECTION

A. After completing installation of sinks, inspect and repair damaged finishes.

B. Clean sinks, faucets, and other fittings with manufacturers' recommended cleaning methods and materials.

C. Provide protective covering for installed sinks and fittings.

D. Do not allow use of sinks for temporary facilities unless approved in writing by Owner.

END OF SECTION 224216.16

SECTION 224716 - PRESSURE WATER COOLERS

PART 1 - GENERAL

1.1 SUMMARY

A. Section includes pressure water coolers and related components.

1.2 ACTION SUBMITTALS

A. Product Data: For each type of pressure water cooler.

PART 2 - PRODUCTS

2.1 PRESSURE WATER COOLERS

A. Pressure Water Coolers (P-10) Wall mounted, wheelchair accessible.

1. Manufacturers: Subject to compliance with requirements, available manufacturers offering products that may be incorporated into the Work include the following:

    a. Elkay.
    b. Halsey Taylor.
    c. Haws Corporation.
    d. Additional manufacturers submitted for and receiving engineer approval prior to bid.

2. Standards:

    a. Comply with NSF 61 Annex G and NSF 372.
    b. Comply with ASHRAE 34, "Designation and Safety Classification of Refrigerants," for water coolers. Provide HFC 134a (tetrafluoroethane) refrigerant unless otherwise indicated.
    c. Comply with ICC A117.1.
3. Drain: Grid with NPS 1-1/4 tailpiece.
4. Supply: NPS 3/8 with shutoff valve.
5. Waste Fitting: ASME A112.18.2/CSA B125.2, NPS 1-1/4 brass P-trap.
6. Cooling System: Electric, with hermetically sealed compressor, cooling coil, air-cooled condensing unit, corrosion-resistant tubing, refrigerant, corrosion-resistant-metal storage tank, and adjustable thermostat.

    a. Electrical Components, Devices, and Accessories: Listed and labeled as defined in NFPA 70, by a qualified testing agency, and marked for intended location and application.

7. Support: Water cooler carrier.
8. Water Cooler Mounting Height: Handicapped/elderly according to ICC A117.1.
9. See plumbing fixture schedules for more information.

B. Water Cooler Carriers:

1. Manufacturers: Subject to compliance with requirements, available manufacturers offering products that may be incorporated into the Work include the following:

   a. MIFAB, Inc.
   b. WATTS.
   c. Zurn Industries, LLC.
   d. Additional manufacturers submitted for and receiving engineer approval prior to bid.

2. Standard: ASME A112.6.1M.

PART 3 - EXECUTION

3.1 EXAMINATION

A. Examine roughing-in for water-supply and sanitary drainage and vent piping systems to verify actual locations of piping connections before fixture installation.

B. Examine walls and floors for suitable conditions where fixtures will be installed.

C. Proceed with installation only after unsatisfactory conditions have been corrected.

3.2 INSTALLATION

A. Install fixtures level and plumb according to roughing-in drawings. For fixtures indicated for children, install at height required by authorities having jurisdiction.

B. Install off-the-floor carrier supports, affixed to building substrate, for wall-mounted fixtures.

C. Install mounting frames, affixed to building construction, and attach in-wall, bottle filling stations to mounting frames.

~~D.~~ Install water-supply piping with shutoff valve on supply to each fixture to be connected to domestic-water distribution piping. Use ball or gate valve. Install valves in locations where they can be easily reached for operation. Valves are specified in Section 220523.12 "Ball Valves for Plumbing Piping"

E. Install trap and waste piping on drain outlet of each fixture to be connected to sanitary drainage system.

F. Install wall flanges or escutcheons at piping wall penetrations in exposed, finished locations. Use deep-pattern escutcheons where required to conceal protruding fittings. Comply with escutcheon requirements specified in Section 220518 "Escutcheons for Plumbing Piping."

G. Seal joints between fixtures and walls using sanitary-type, one-part, mildew-resistant, silicone sealant. Match sealant color to fixture color. Comply with sealant requirements specified in Section 079200 "Joint Sealants."

3.3 CONNECTIONS

A. Connect fixtures with water supplies, stops, and risers, and with traps, soil, waste, and vent piping. Use size fittings required to match fixtures.

B. Comply with water piping requirements specified in Section 221116 "Domestic Water Piping."

C. Install ball or gate shutoff valve on water supply to each fixture. Install valve upstream from filter for water cooler. Comply with valve requirements specified in Section 220523.12 "Ball Valves for Plumbing Piping"

D. Comply with soil and waste piping requirements specified in Section 221316 "Sanitary Waste and Vent Piping."

3.4 ADJUSTING

A. Adjust fixture flow regulators for proper flow and stream height.

B. Adjust pressure water-cooler temperature settings.

3.5 CLEANING

A. After installing fixture, inspect unit. Remove paint splatters and other spots, dirt, and debris. Repair damaged finish to match original finish.

B. Clean fixtures, on completion of installation, according to manufacturer's written instructions.

C. Provide protective covering for installed fixtures.

D. Do not allow use of fixtures for temporary facilities unless approved in writing by Owner.

END OF SECTION 224716

SECTION 230513 - COMMON MOTOR REQUIREMENTS FOR HVAC EQUIPMENT

PART 1 - GENERAL

1.1 SUMMARY

A. Section includes general requirements for single-phase and polyphase, general-purpose, horizontal, small and medium, squirrel-cage induction motors for use on alternating-current power systems up to 600 V and installed at equipment manufacturer's factory or shipped separately by equipment manufacturer for field installation.

1.2 COORDINATION

A. Coordinate features of motors, installed units, and accessory devices to be compatible with the following:

1. Motor controllers.
2. Torque, speed, and horsepower requirements of the load.
3. Ratings and characteristics of supply circuit and required control sequence.
4. Ambient and environmental conditions of installation location.

PART 2 - PRODUCTS

2.1 GENERAL MOTOR REQUIREMENTS

A. Comply with NEMA MG 1 unless otherwise indicated.

2.2 MOTOR CHARACTERISTICS

A. Duty: Continuous duty at ambient temperature of 40 deg C and at altitude of 3300 feet above sea level.

B. Capacity and Torque Characteristics: Sufficient to start, accelerate, and operate connected loads at designated speeds, at installed altitude and environment, with indicated operating sequence, and without exceeding nameplate ratings or considering service factor.

2.3 POLYPHASE MOTORS

A. Description: NEMA MG 1, Design B, medium induction motor.

B. Efficiency: Premium efficient, as defined in NEMA MG 1.

C. Service Factor: 1.15.

D. Multispeed Motors: Variable torque.

1. For motors with 2:1 speed ratio, consequent pole, single winding.
2. For motors with other than 2:1 speed ratio, separate winding for each speed.

E. Rotor: Random-wound, squirrel cage.

F. Bearings: Regreasable, shielded, antifriction ball bearings suitable for radial and thrust loading.

G. Temperature Rise: Match insulation rating.

H. Insulation: Class F.

I. Code Letter Designation:
1. Motors Smaller Than 15 HP: Manufacturer's standard starting characteristic.

2.4 ADDITIONAL REQUIREMENTS FOR POLYPHASE MOTORS

1. Thermal Protection: Comply with NEMA MG 1 requirements for thermally protected motors.

2.5 SINGLE-PHASE MOTORS

A. Motors larger than 1/20 hp shall be one of the following, to suit starting torque and requirements of specific motor application:

1. Permanent-split capacitor.
2. Split phase.
3. Capacitor start, inductor run.
4. Capacitor start, capacitor run.

B. Multispeed Motors: Variable-torque, permanent-split-capacitor type.

C. Bearings: Prelubricated, antifriction ball bearings or sleeve bearings suitable for radial and thrust loading.

D. Motors 1/20 HP and Smaller: Shaded-pole type.

E. Thermal Protection: Internal protection to automatically open power supply circuit to motor when winding temperature exceeds a safe value calibrated to temperature rating of motor insulation. Thermal-protection device shall automatically reset when motor temperature returns to normal range.

PART 3 - EXECUTION (Not Applicable)

END OF SECTION 230513

SECTION 230517 - SLEEVES AND SLEEVE SEALS FOR HVAC PIPING

PART 1 - GENERAL

1.1 SUMMARY

A. Section Includes:

1. Sleeves.
2. Sleeve-seal systems.
3. Grout.
4. Silicone sealants.

B. Related Requirements:

1. Section 078413 "Penetration Firestopping" for penetration firestopping installed in fire-resistance-rated walls, horizontal assemblies, and smoke barriers, with and without penetrating items.

1.2 ACTION SUBMITTALS

A. Product Data: For each type of product.

PART 2 - PRODUCTS

2.1 SLEEVES

A. Manufacturers: Subject to compliance with requirements, available manufacturers offering products that may be incorporated into the Work include:

1. Advance Products & Systems, Inc.
2. CALPICO, Inc.
3. Additional manufacturers submitted for and receiving engineer approval prior to bid.

B. Cast-Iron Pipe Sleeves: Cast or fabricated of cast or ductile iron and equivalent to ductile-iron pressure pipe, with plain ends and integral waterstop collar.

C. Steel Pipe Sleeves: ASTM A53/A53M, Type E, Grade B, Schedule 40, anti-corrosion coated or zinc coated, with plain ends and integral welded waterstop collar.

D. Galvanized-Steel Sheet Pipe Sleeves: 0.0239-inch minimum thickness; round tube closed with welded longitudinal joint.

E. PVC Pipe Sleeves: ASTM D1785, Schedule 40. PVC pipe sleeves are not to be used in return plenums.

2.2 SLEEVE-SEAL SYSTEMS

A. Manufacturers: Subject to compliance with requirements, available manufacturers offering products that may be incorporated into the Work include:

1. Advance Products & Systems, Inc.
2. CALPICO, Inc.
3. Metraflex Company (The).
4. Additional manufacturers submitted for and receiving engineer approval prior to bid.

B. Description:

1. Modular sealing-element unit, designed for field assembly, for filling annular space between piping and sleeve.
2. Designed to form a hydrostatic seal of 20-psig.
3. Sealing Elements: EPDM-rubber interlocking links shaped to fit surface of pipe. Include type and number required for pipe material and size.
4. Pressure Plates: Composite plastic.
5. Connecting Bolts and Nuts: Carbon steel, with corrosion-resistant coating, ASTM B633 of length required to secure pressure plates to sealing elements.

2.3 GROUT

A. Description: Nonshrink, recommended for interior and exterior sealing openings in nonfire-rated walls or floors.

B. Standard: ASTM C1107/C1107M, Grade B, post-hardening and volume-adjusting, dry, hydraulic-cement grout.

C. Design Mix: 5000-psi, 28-day compressive strength.

D. Packaging: Premixed and factory packaged.

2.4 SILICONE SEALANTS

A. Silicone, S, NS, 25, NT: Single-component, nonsag, plus 25 percent and minus 25 percent movement capability, nontraffic-use, neutral-curing silicone joint sealant, ASTM C920, Type S, Grade NS, Class 25, use NT.

B. Silicone, S, P, 25, T, NT: Single-component, pourable, plus 25 percent and minus 25 percent movement capability, traffic- and nontraffic-use, neutral-curing silicone joint sealant; ASTM C920, Type S, Grade P, Class 25, Uses T and NT. Grade P Pourable (self-leveling) formulation is for opening in floors and other horizontal surfaces that are not fire rated.

1. Manufacturers: Subject to compliance with requirements, available manufacturers offering products that may be incorporated into the Work include:

    a. GE Construction Sealants; Momentive Performance Materials Inc.
    b. Permathane®/Acryl-R®; ITW Polymers Sealants North America.
    c. Sherwin-Williams Company (The).
    d. Additional manufacturers submitted for and receiving engineer approval prior to bid.

PART 3 - EXECUTION

3.1 SLEEVE INSTALLATION

A. Install sleeves for piping passing through penetrations in floors, partitions, roofs, and walls.

B. For sleeves that will have sleeve-seal system installed, select sleeves of size large enough to provide 1-inch annular clear space between piping and concrete slabs and walls.

C. Install sleeves in concrete floors, concrete roof slabs, and concrete walls as new slabs and walls are constructed.

1. Cut sleeves to length for mounting flush with both surfaces.

    a. Exception: Extend sleeves installed in floors of mechanical equipment areas or other wet areas 2 inches above finished floor level.

2. Using grout or silicone sealant, seal space outside of sleeves in slabs and walls without sleeve-seal system.

D. Install sleeves for pipes passing through interior partitions.

1. Cut sleeves to length for mounting flush with both surfaces.
2. Install sleeves that are large enough to provide 1/4-inch annular clear space between sleeve and pipe or pipe insulation.
3. Seal annular space between sleeve and piping or piping insulation; use sealants appropriate for size, depth, and location of joint.

E. Fire-Resistance-Rated Penetrations, Horizontal Assembly Penetrations, and Smoke-Barrier Penetrations: Maintain indicated fire or smoke rating of walls, partitions, ceilings, and floors at pipe penetrations. Seal pipe penetrations with fire- and smoke-stop materials. Comply with requirements for firestopping and fill materials specified in Section 078413 "Penetration Firestopping."

3.2 SLEEVE-SEAL-SYSTEM INSTALLATION

A. Install sleeve-seal systems in sleeves in exterior concrete walls and slabs-on-grade at service piping entries into building.

B. Select type, size, and number of sealing elements required for piping material and size and for sleeve ID or hole size. Position piping in center of sleeve. Center piping in penetration, assemble sleeve-seal-system components, and install in annular space between piping and sleeve. Tighten bolts against pressure plates that cause sealing elements to expand and make a watertight seal.

3.3 FIELD QUALITY CONTROL

A. Perform the following tests and inspections:

1. Leak Test: After allowing for a full cure, test sleeves and sleeve seals for leaks. Repair leaks and retest until no leaks exist.

B. Sleeves and sleeve seals will be considered defective if they do not pass tests and inspections.

3.4 SLEEVE AND SLEEVE-SEAL SCHEDULE

A. Use sleeves and sleeve seals for the following piping-penetration applications:

1. Exterior Concrete Walls Above Grade:

a. Piping Smaller Than NPS 6: Cast-iron pipe sleeves.

2. Exterior Concrete Walls Below Grade:

a. Piping Smaller Than NPS 6: Cast-iron pipe sleeves with sleeve-seal system.

1) Select sleeve size to allow for 1-inch annular clear space between piping and sleeve for installing sleeve-seal system.

3. Concrete Slabs-on-Grade:

a. Piping Smaller Than NPS 6: Cast-iron pipe sleeves with sleeve-seal system.

1) Select sleeve size to allow for 1-inch annular clear space between piping and sleeve for installing sleeve-seal system.

4. Concrete Slabs Above Grade:

a. Piping Smaller Than NPS 6: Steel-pipe sleeves.

5. Interior Partitions:

a. Piping Smaller Than NPS 6: Galvanized-steel pipe sleeves.

END OF SECTION 230517

SECTION 230518 - ESCUTCHEONS FOR HVAC PIPING

PART 1 - GENERAL

1.1 SUMMARY

A. Section Includes:

1. Escutcheons.
2. Floor plates.

1.2 ACTION SUBMITTALS

A. Product Data: For each type of product.

PART 2 - PRODUCTS

2.1 MANUFACTURERS

A. Manufacturers: Subject to compliance with requirements, available manufacturers offering products that may be incorporated into the Work include:

1. BrassCraft Manufacturing Co.; a Masco company.
2. Dearborn Brass.
3. Keeney Manufacturing Company (The).
4. Additional manufacturers submitted for and receiving engineer approval prior to bid.

2.2 ESCUTCHEONS

A. One-Piece, Deep-Pattern Type: Deep-drawn, box-shaped steel with polished, chrome-plated finish and spring-clip fasteners.

B. One-Piece, Stamped-Steel Type: With polished, chrome-plated finish and spring-clip fasteners.

2.3 FLOOR PLATES

A. Split Floor Plates: Steel with concealed hinge.

PART 3 - EXECUTION

3.1 INSTALLATION

A. Install escutcheons for piping penetrations of walls, ceilings, and finished floors.

B. Install escutcheons with ID to closely fit around pipe, tube, and insulation of piping and with OD that completely covers opening.

1. Escutcheons for New Piping:

a. Piping with Fitting or Sleeve Protruding from Wall: One-piece deep pattern.
b. Chrome-Plated Piping: One-piece steel with polished, chrome-plated finish.
c. Insulated Piping: One-piece stamped steel with polished, chrome-plated finish.
d. Bare Piping at Wall and Floor Penetrations in Finished Spaces: One-piece stamped steel with polished, chrome-plated finish.
e. Bare Piping at Ceiling Penetrations in Finished Spaces: One-piece stamped steel with polished, chrome-plated finish.

C. Install floor plates for piping penetrations of equipment-room floors.

D. Install floor plates with ID to closely fit around pipe, tube, and insulation of piping and with OD that completely covers opening.

1. New Piping: Split floor plate.
2. Existing Piping to Remain: Split floor plate.

3.2 FIELD QUALITY CONTROL

A. Using new materials, replace broken and damaged escutcheons and floor plates.

END OF SECTION 230518

SECTION 230529 - HANGERS AND SUPPORTS FOR HVAC PIPING AND EQUIPMENT

PART 1 - GENERAL

1.1 SUMMARY

A. Section Includes:

1. Metal pipe hangers and supports.
2. Trapeze pipe hangers.
3. Thermal-hanger shield inserts.
4. Fastener systems.
5. Equipment supports.

B. Related Requirements:
1. Section 233113 "Metal Ducts" for duct hangers and supports.

1.2 ACTION SUBMITTALS

A. Product Data: For each type of product.

PART 2 - PRODUCTS

2.1 PERFORMANCE REQUIREMENTS

A. Structural Performance: Hangers and supports for HVAC piping and equipment shall withstand the effects of gravity loads and stresses within limits and under conditions indicated according to ASCE/SEI 7.

1. Design supports for multiple pipes, including pipe stands, capable of supporting combined weight of supported systems, system contents, and test water.
2. Design equipment supports capable of supporting combined operating weight of supported equipment and connected systems and components.

2.2 METAL PIPE HANGERS AND SUPPORTS

A. Carbon-Steel Pipe Hangers and Supports:

1. Description: MSS SP-58, Types 1 through 58, factory-fabricated components.
2. Galvanized Metallic Coatings: Pregalvanized, hot-dip galvanized, or electro-galvanized.
3. Nonmetallic Coatings: Plastic coated, or epoxy powder-coated.
4. Padded Hangers: Hanger with fiberglass or other pipe insulation pad or cushion to support bearing surface of piping.

5. Hanger Rods: Continuous-thread rod, nuts, and washer made of carbon steel.

B. Stainless Steel Pipe Hangers and Supports:

1. Description: MSS SP-58, Types 1 through 58, factory-fabricated components.
2. Padded Hangers: Hanger with fiberglass or other pipe insulation pad or cushion to support bearing surface of piping.
3. Hanger Rods: Continuous-thread rod, nuts, and washer made of stainless steel.

C. Copper Pipe and Tube Hangers:

1. Description: MSS SP-58, Types 1 through 58, copper-plated steel, factory-fabricated components.
2. Hanger Rods: Continuous-thread rod, nuts, and washer made of stainless steel.

2.3 FASTENER SYSTEMS

A. Mechanical-Expansion Anchors: Insert-wedge-type, zinc-coated steel anchors, for use in hardened portland cement concrete; with pull-out, tension, and shear capacities appropriate for supported loads and building materials where used.

1. Manufacturers: Subject to compliance with requirements, available manufacturers offering products that may be incorporated into the Work include:

a. Eaton (B-line).
b. Hilti, Inc.
c. ITW Ramset/Red Head; Illinois Tool Works, Inc.
d. Additional manufacturers submitted for and receiving engineer approval prior to bid.

2.4 EQUIPMENT SUPPORTS

A. Description: Welded, shop- or field-fabricated equipment support made from structural carbon-steel shapes.

2.5 MATERIALS

A. Aluminum: ASTM B221.

B. Carbon Steel: ASTM A1011/A1011M.

C. Structural Steel: ASTM A36/A36M, carbon-steel plates, shapes, and bars; black and galvanized.

D. Stainless Steel: ASTM A240/A240M.

E. Grout: ASTM C1107/C1107M, factory-mixed and -packaged, dry, hydraulic-cement, nonshrink and nonmetallic grout; suitable for interior and exterior applications.

1. Properties: Nonstaining, noncorrosive, and nongaseous.
2. Design Mix: 5000-psi, 28-day compressive strength.

PART 3 - EXECUTION

3.1 APPLICATION

A. Comply with requirements in Section 078413 "Penetration Firestopping" for firestopping materials and installation for penetrations through fire-rated walls, ceilings, and assemblies.

B. Strength of Support Assemblies: Where not indicated, select sizes of components so strength will be adequate to carry present and future static loads within specified loading limits. Minimum static design load used for strength determination shall be weight of supported components plus 200 lb.

3.2 HANGER AND SUPPORT INSTALLATION

A. Metal Pipe-Hanger Installation: Comply with MSS SP-58. Install hangers, supports, clamps, and attachments as required to properly support piping from the building structure.

B. Metal Trapeze Pipe-Hanger Installation: Comply with MSS SP-58. Arrange for grouping of parallel runs of horizontal piping, and support together on field-fabricated trapeze pipe hangers.

1. Pipes of Various Sizes: Support together and space trapezes for smallest pipe size or install intermediate supports for smaller diameter pipes as specified for individual pipe hangers.
2. Field fabricate from ASTM A36/A36M, carbon-steel shapes selected for loads being supported. Weld steel according to AWS D1.1/D1.1M.

C. Fiberglass Pipe-Hanger Installation: Comply with applicable portions of MSS SP-58. Install hangers and attachments as required to properly support piping from building structure.

D. Metal Framing System Installation: Arrange for grouping of parallel runs of piping, and support together on field-assembled strut systems.

E. Fastener System Installation:
1. Install mechanical-expansion anchors in concrete after concrete is placed and completely cured. Install fasteners according to manufacturer's written instructions.

F. Pipe Stand Installation:

1. Pipe Stand Types except Curb-Mounted Type: Assemble components and mount on smooth roof surface. Do not penetrate roof membrane.
2. Curb-Mounted-Type Pipe Stands: Assemble components or fabricate pipe stand and mount on permanent, stationary roof curb. See Section 077200 "Roof Accessories" for curbs.

G. Install hangers and supports complete with necessary attachments, inserts, bolts, rods, nuts, washers, and other accessories.

H. Equipment Support Installation: Fabricate from welded-structural-steel shapes.

I. Install hangers and supports to allow controlled thermal and seismic movement of piping systems, to permit freedom of movement between pipe anchors, and to facilitate action of expansion joints, expansion loops, expansion bends, and similar units.

J. Install lateral bracing with pipe hangers and supports to prevent swaying.

K. Install building attachments within concrete slabs or attach to structural steel. Install additional attachments at concentrated loads, including valves, flanges, and strainers, NPS 2-1/2 and larger and at changes in direction of piping. Install concrete inserts before concrete is placed; fasten inserts to forms and install reinforcing bars through openings at top of inserts.

L. Load Distribution: Install hangers and supports so that piping live and dead loads and stresses from movement will not be transmitted to connected equipment.

M. Pipe Slopes: Install hangers and supports to provide indicated pipe slopes and to not exceed maximum pipe deflections allowed by ASME B31.9 for building services piping.

N. Insulated Piping:

1. Attach clamps and spacers to piping.

    a. Piping Operating above Ambient Air Temperature: Clamp may project through insulation.
    b. Piping Operating below Ambient Air Temperature: Use thermal-hanger shield insert with clamp sized to match OD of insert.
    c. Do not exceed pipe stress limits allowed by ASME B31.9 for building services piping.

2. Install MSS SP-58, Type 39, protection saddles if insulation without vapor barrier is indicated. Fill interior voids with insulation that matches adjoining insulation.

    a. Option: Thermal-hanger shield inserts may be used. Include steel weight-distribution plate for pipe NPS 4 and larger if pipe is installed on rollers.

3. Install MSS SP-58, Type 40, protective shields on cold piping with vapor barrier. Shields shall span an arc of 180 degrees.

    a. Option: Thermal-hanger shield inserts may be used. Include steel weight-distribution plate for pipe NPS 4 and larger if pipe is installed on rollers.

4. Shield Dimensions for Pipe: Not less than the following:

    a. NPS 1/4 to NPS 3-1/2: 12 inches long and 0.048 inch thick.
    b. NPS 4: 12 inches long and 0.06 inch thick.
    c. NPS 5 and NPS 6: 18 inches long and 0.06 inch thick.

d. NPS 8 to NPS 14: 24 inches long and 0.075 inch thick.
e. NPS 16 to NPS 24: 24 inches long and 0.105 inch thick.

5. Pipes NPS 8 and Larger: Include wood or reinforced calcium-silicate-insulation inserts of length at least as long as protective shield.
6. Thermal-Hanger Shields: Install with insulation same thickness as piping insulation.

3.3 EQUIPMENT SUPPORTS

A. Fabricate structural-steel stands to suspend equipment from structure overhead or to support equipment above floor.

B. Grouting: Place grout under supports for equipment and make bearing surface smooth.

C. Provide lateral bracing, to prevent swaying, for equipment supports.

3.4 METAL FABRICATIONS

A. Cut, drill, and fit miscellaneous metal fabrications for equipment supports.

B. Fit exposed connections together to form hairline joints. Field weld connections that cannot be shop welded because of shipping size limitations.

C. Field Welding: Comply with AWS D1.1/D1.1M procedures for shielded, metal arc welding; appearance and quality of welds; and methods used in correcting welding work; and with the following:

1. Use materials and methods that minimize distortion and develop strength and corrosion resistance of base metals.
2. Obtain fusion without undercut or overlap.
3. Remove welding flux immediately.
4. Finish welds at exposed connections so no roughness shows after finishing and so contours of welded surfaces match adjacent contours.

3.5 ADJUSTING

A. Hanger Adjustments: Adjust hangers to distribute loads equally on attachments and to achieve indicated slope of pipe.

B. Trim excess length of continuous-thread hanger and support rods to 1-1/2 inches.

3.6 PAINTING

A. Touchup: Clean field welds and abraded areas of shop paint. Paint exposed areas immediately after erecting hangers and supports. Use same materials as used for shop painting. Comply with SSPC-PA 1 requirements for touching up field-painted surfaces.

1. Apply paint by brush or spray to provide a minimum dry film thickness of 2.0 mils.

B. Touchup: Comply with requirements in Section 099113 "Exterior Painting" Section 099123 "Interior Painting" and Section 099600 "High-Performance Coatings" for cleaning and touchup painting of field welds, bolted connections, and abraded areas of shop paint on miscellaneous metal.

C. Galvanized Surfaces: Clean welds, bolted connections, and abraded areas and apply galvanizing-repair paint to comply with ASTM A780/A780M.

3.7 HANGER AND SUPPORT SCHEDULE

A. Specific hanger and support requirements are in Sections specifying piping systems and equipment.

B. Comply with MSS SP-58 for pipe-hanger selections and applications that are not specified in piping system Sections.

C. Use hangers and supports with galvanized metallic coatings for piping and equipment that will not have field-applied finish.

D. Use nonmetallic coatings on attachments for electrolytic protection where attachments are in direct contact with copper tubing.

E. Use carbon-steel pipe hangers and supports and metal framing systems and attachments for general service applications.

F. Use stainless steel pipe hangers and fiberglass strut systems and stainless steel or corrosion-resistant attachments for hostile environment applications.

G. Use copper-plated pipe hangers and copper attachments for copper piping and tubing.

H. Use padded hangers for piping that is subject to scratching.

I. Use thermal-hanger shield inserts for insulated piping and tubing.

J. Horizontal-Piping Hangers and Supports: Unless otherwise indicated and except as specified in piping system Sections, install the following types:

1. Adjustable, Steel Clevis Hangers (MSS Type 1): For suspension of noninsulated or insulated, stationary pipes NPS 1/2 to NPS 30.
2. Yoke-Type Pipe Clamps (MSS Type 2): For suspension of up to 1050 deg F, pipes NPS 4 to NPS 24, requiring up to 4 inches of insulation.
3. Carbon- or Alloy-Steel, Double-Bolt Pipe Clamps (MSS Type 3): For suspension of pipes NPS 3/4 to NPS 36, requiring clamp flexibility and up to 4 inches of insulation.
4. Steel Pipe Clamps (MSS Type 4): For suspension of cold and hot pipes NPS 1/2 to NPS 24 if little or no insulation is required.
5. Pipe Hangers (MSS Type 5): For suspension of pipes NPS 1/2 to NPS 4, to allow off-center closure for hanger installation before pipe erection.

6. Adjustable, Swivel Split- or Solid-Ring Hangers (MSS Type 6): For suspension of noninsulated, stationary pipes NPS 3/4 to NPS 8.
7. Adjustable, Steel Band Hangers (MSS Type 7): For suspension of noninsulated, stationary pipes NPS 1/2 to NPS 8.
8. Adjustable Band Hangers (MSS Type 9): For suspension of noninsulated, stationary pipes NPS 1/2 to NPS 8.
9. Adjustable, Swivel-Ring Band Hangers (MSS Type 10): For suspension of noninsulated, stationary pipes NPS 1/2 to NPS 8.
10. Split Pipe Ring with or without Turnbuckle Hangers (MSS Type 11): For suspension of noninsulated, stationary pipes NPS 3/8 to NPS 8.
11. Extension Hinged or Two-Bolt Split Pipe Clamps (MSS Type 12): For suspension of noninsulated, stationary pipes NPS 3/8 to NPS 3.
12. U-Bolts (MSS Type 24): For support of heavy pipes NPS 1/2 to NPS 30.
13. Clips (MSS Type 26): For support of insulated pipes not subject to expansion or contraction.
14. Pipe Saddle Supports (MSS Type 36): For support of pipes NPS 4 to NPS 36, with steel-pipe base stanchion support and cast-iron floor flange or carbon-steel plate.
15. Pipe Stanchion Saddles (MSS Type 37): For support of pipes NPS 4 to NPS 36, with steel-pipe base stanchion support and cast-iron floor flange or carbon-steel plate, and with U-bolt to retain pipe.
16. Adjustable Pipe Saddle Supports (MSS Type 38): For stanchion-type support for pipes NPS 2-1/2 to NPS 36 if vertical adjustment is required, with steel-pipe base stanchion support and cast-iron floor flange.
17. Single-Pipe Rolls (MSS Type 41): For suspension of pipes NPS 1 to NPS 30, from two rods if longitudinal movement caused by expansion and contraction might occur.
18. Adjustable Roller Hangers (MSS Type 43): For suspension of pipes NPS 2-1/2 to NPS 24, from single rod if horizontal movement caused by expansion and contraction might occur.
19. Complete Pipe Rolls (MSS Type 44): For support of pipes NPS 2 to NPS 42 if longitudinal movement caused by expansion and contraction might occur but vertical adjustment is unnecessary.
20. Pipe Roll and Plate Units (MSS Type 45): For support of pipes NPS 2 to NPS 24 if small horizontal movement caused by expansion and contraction might occur and vertical adjustment is unnecessary.
21. Adjustable Pipe Roll and Base Units (MSS Type 46): For support of pipes NPS 2 to NPS 30 if vertical and lateral adjustment during installation might be required in addition to expansion and contraction.

K. Vertical-Piping Clamps: Unless otherwise indicated and except as specified in piping system Sections, install the following types:

1. Extension Pipe or Riser Clamps (MSS Type 8): For support of pipe risers NPS 3/4 to NPS 24.
2. Carbon- or Alloy-Steel Riser Clamps (MSS Type 42): For support of pipe risers NPS 3/4 to NPS 24 if longer ends are required for riser clamps.

L. Hanger-Rod Attachments: Unless otherwise indicated and except as specified in piping system Sections, install the following types:

1. Steel Turnbuckles (MSS Type 13): For adjustment up to 6 inches for heavy loads.
2. Steel Clevises (MSS Type 14): For 120 to 450 deg F piping installations.
3. Swivel Turnbuckles (MSS Type 15): For use with MSS Type 11, split pipe rings.
4. Malleable-Iron Sockets (MSS Type 16): For attaching hanger rods to various types of building attachments.
5. Steel Weldless Eye Nuts (MSS Type 17): For 120 to 450 deg F piping installations.

M. Building Attachments: Unless otherwise indicated and except as specified in piping system Sections, install the following types:

1. Steel or Malleable Concrete Inserts (MSS Type 18): For upper attachment to suspend pipe hangers from concrete ceiling.
2. Top-Beam C-Clamps (MSS Type 19): For use under roof installations with bar-joist construction, to attach to top flange of structural shape.
3. Side-Beam or Channel Clamps (MSS Type 20): For attaching to bottom flange of beams, channels, or angles.
4. Center-Beam Clamps (MSS Type 21): For attaching to center of bottom flange of beams.
5. Welded Beam Attachments (MSS Type 22): For attaching to bottom of beams if loads are considerable and rod sizes are large.
6. C-Clamps (MSS Type 23): For structural shapes.
7. Top-Beam Clamps (MSS Type 25): For top of beams if hanger rod is required tangent to flange edge.
8. Side-Beam Clamps (MSS Type 27): For bottom of steel I-beams.
9. Steel-Beam Clamps with Eye Nuts (MSS Type 28): For attaching to bottom of steel I-beams for heavy loads.
10. Linked-Steel Clamps with Eye Nuts (MSS Type 29): For attaching to bottom of steel I-beams for heavy loads, with link extensions.
11. Malleable-Beam Clamps with Extension Pieces (MSS Type 30): For attaching to structural steel.
12. Welded-Steel Brackets: For support of pipes from below or for suspending from above by using clip and rod. Use one of the following for indicated loads:

    a. Light (MSS Type 31): 750 lb.
    b. Medium (MSS Type 32): 1500 lb.
    c. Heavy (MSS Type 33): 3000 lb.

13. Side-Beam Brackets (MSS Type 34): For sides of steel or wooden beams.
14. Plate Lugs (MSS Type 57): For attaching to steel beams if flexibility at beam is required.
15. Horizontal Travelers (MSS Type 58): For supporting piping systems subject to linear horizontal movement where headroom is limited.

N. Saddles and Shields: Unless otherwise indicated and except as specified in piping system Sections, install the following types:

1. Steel-Pipe-Covering Protection Saddles (MSS Type 39): To fill interior voids with insulation that matches adjoining insulation.
2. Protection Shields (MSS Type 40): Of length recommended in writing by manufacturer to prevent crushing insulation.
3. Thermal-Hanger Shield Inserts: For supporting insulated pipe.

O. Spring Hangers and Supports: Unless otherwise indicated and except as specified in piping system Sections, install the following types:

1. Restraint-Control Devices (MSS Type 47): Where indicated to control piping movement.
2. Spring Cushions (MSS Type 48): For light loads if vertical movement does not exceed 1-1/4 inches.
3. Spring-Cushion Roll Hangers (MSS Type 49): For equipping Type 41, roll hanger with springs.
4. Spring Sway Braces (MSS Type 50): To retard sway, shock, vibration, or thermal expansion in piping systems.
5. Variable-Spring Hangers (MSS Type 51): Preset to indicated load and limit variability factor to 25 percent to allow expansion and contraction of piping system from hanger.
6. Variable-Spring Base Supports (MSS Type 52): Preset to indicated load and limit variability factor to 25 percent to allow expansion and contraction of piping system from base support.
7. Variable-Spring Trapeze Hangers (MSS Type 53): Preset to indicated load and limit variability factor to 25 percent to allow expansion and contraction of piping system from trapeze support.
8. Constant Supports: For critical piping stress and if necessary to avoid transfer of stress from one support to another support, critical terminal, or connected equipment. Include auxiliary stops for erection, hydrostatic test, and load-adjustment capability. These supports include the following types:

    a. Horizontal (MSS Type 54): Mounted horizontally.
    b. Vertical (MSS Type 55): Mounted vertically.
    c. Trapeze (MSS Type 56): Two vertical-type supports and one trapeze member.

P. Comply with MSS SP-58 for trapeze pipe-hanger selections and applications that are not specified in piping system Sections.

Q. Use mechanical-expansion anchors instead of building attachments where required in concrete construction.

END OF SECTION 230529

SECTION 230553 - IDENTIFICATION FOR HVAC PIPING AND EQUIPMENT

PART 1 - GENERAL

1.1 SUMMARY

A. Section Includes:

1. Equipment labels.
2. Warning signs and labels.
3. Pipe labels.
4. Duct labels.

1.2 ACTION SUBMITTALS

A. Product Data: For each type of product.

PART 2 - PRODUCTS

2.1 EQUIPMENT LABELS

A. Metal Labels for Equipment:

1. Manufacturers: Subject to compliance with requirements, available manufacturers offering products that may be incorporated into the Work include:

    a. Brady Corporation.
    b. Carlton Industries, LP.
    c. Marking Services, Inc.
    d. Additional manufacturers submitted for and receiving engineer approval prior to bid.

2. Material and Thickness: Brass, 0.032-inch, stainless steel, 0.025-inch, aluminum, 0.032-inch, or anodized aluminum, 0.032-inch minimum thickness, and having predrilled or stamped holes for attachment hardware.
3. Letter Color: White.
4. Background Color: Blue.
5. Minimum Label Size: Length and width vary for required label content, but not less than 2-1/2 by 3/4 inch.
6. Minimum Letter Size: 1/4 inch for name of units if viewing distance is less than 24 inches, 1/2 inch for viewing distances up to 72 inches, and proportionately larger lettering for greater viewing distances. Include secondary lettering two-thirds to three-quarters the size of principal lettering.
7. Fasteners: Stainless-steel rivets or self-tapping screws.

8. Adhesive: Contact-type permanent adhesive, compatible with label and with substrate.

B. Plastic Labels for Equipment:

1. Manufacturers: Subject to compliance with requirements, available manufacturers offering products that may be incorporated into the Work include:

   a. Brady Corporation.
   b. Carlton Industries, LP.
   c. Marking Services, Inc.
   d. Additional manufacturers submitted for and receiving engineer approval prior to bid.

2. Material and Thickness: Multilayer, multicolor, plastic labels for mechanical engraving, 1/8 inch thick, and having predrilled holes for attachment hardware.
3. Letter Color: White.
4. Background Color: Blue.
5. Maximum Temperature: Able to withstand temperatures up to 160 deg F.
6. Minimum Label Size: Length and width vary for required label content, but not less than 2-1/2 by 3/4 inch.
7. Minimum Letter Size: 1/4 inch for name of units if viewing distance is less than 24 inches, 1/2 inch for viewing distances up to 72 inches, and proportionately larger lettering for greater viewing distances. Include secondary lettering two-thirds to three-quarters the size of principal lettering.
8. Fasteners: Stainless-steel rivets or self-tapping screws.
9. Adhesive: Contact-type permanent adhesive, compatible with label and with substrate.

C. Label Content: Include equipment's Drawing designation or unique equipment number, Drawing numbers where equipment is indicated (plans, details, and schedules), and the Specification Section number and title where equipment is specified.

D. Equipment Label Schedule: For each item of equipment to be labeled, on 8-1/2-by-11-inch bond paper. Tabulate equipment identification number, and identify Drawing numbers where equipment is indicated (plans, details, and schedules) and the Specification Section number and title where equipment is specified. Equipment schedule shall be included in operation and maintenance data.

2.2 WARNING SIGNS AND LABELS

A. Manufacturers: Subject to compliance with requirements, available manufacturers offering products that may be incorporated into the Work include:

1. Brady Corporation.
2. Carlton Industries, LP.
3. Marking Services Inc.
4. Additional manufacturers submitted for and receiving engineer approval prior to bid.

B. Material and Thickness: Multilayer, multicolor, plastic labels for mechanical engraving, 1/8 inch thick, and having predrilled holes for attachment hardware.

C. Letter Color: White.

~~D.~~ Background Color: Red.

E. Maximum Temperature: Able to withstand temperatures up to 160 deg F.

F. Minimum Label Size: Length and width vary for required label content, but not less than 2-1/2 by 3/4 inch.

G. Minimum Letter Size: 1/4 inch for name of units if viewing distance is less than 24 inches, 1/2 inch for viewing distances up to 72 inches, and proportionately larger lettering for greater viewing distances. Include secondary lettering two-thirds to three-quarters the size of principal lettering.

H. Fasteners: Stainless-steel rivets or self-tapping screws.

I. Adhesive: Contact-type permanent adhesive, compatible with label and with substrate.

J. Label Content: Include caution and warning information plus emergency notification instructions.

PART 3 - EXECUTION

3.1 PREPARATION

A. Clean piping and equipment surfaces of substances that could impair bond of identification devices, including dirt, oil, grease, release agents, and incompatible primers, paints, and encapsulants.

3.2 EQUIPMENT LABEL INSTALLATION

A. Install or permanently fasten labels on each major item of mechanical equipment.

B. Locate equipment labels where accessible and visible.

END OF SECTION 230553

SECTION 230593 - TESTING, ADJUSTING, AND BALANCING FOR HVAC

TIPS:

To view non-printing **Editor's Notes** that provide guidance for editing, click on MasterWorks/Single-File Formatting/Toggle/Editor's Notes.

To read **detailed research, technical information about products and materials, and coordination checklists**, click on MasterWorks/Supporting Information.

Content Requests:

<Double click here to submit questions, comments, or suggested edits to this Section.>

PART 1 - GENERAL

1.1 SUMMARY

A. Section Includes:

1. Testing, Adjusting, and Balancing of Air Systems:
    a. Constant-volume air systems.
    b. Variable-air-volume systems.
2. Testing, adjusting, and balancing of equipment.
3. Duct leakage tests verification.
4. HVAC-control system verification.

1.2 DEFINITIONS

A. AABC: Associated Air Balance Council.

B. NEBB: National Environmental Balancing Bureau.

C. TAB: Testing, adjusting, and balancing.

D. TABB: Testing, Adjusting, and Balancing Bureau.

E. TAB Specialist: An independent entity meeting qualifications to perform TAB work.

F. TDH: Total dynamic head.

G. UFAD: Underfloor air distribution.

1.3 INFORMATIONAL SUBMITTALS

A. Certified TAB reports.

B. Instrument calibration reports, to include the following:

1. Instrument type and make.
2. Serial number.
3. Application.
4. Dates of use.
5. Dates of calibration.

1.4 QUALITY ASSURANCE

A. TAB Specialists Qualifications, Certified by AABC:

1. TAB Field Supervisor: Employee of the TAB specialist and certified by AABC.
2. TAB Technician: Employee of the TAB specialist and certified by AABC.

****** [OR] ******

B. TAB Specialists Qualifications, Certified by NEBB or TABB:

1. TAB Field Supervisor: Employee of the TAB specialist and certified by NEBB or TABB.
2. TAB Technician: Employee of the TAB specialist and certified by NEBB or TABB.

C. Instrumentation Type, Quantity, Accuracy, and Calibration: Comply with requirements in ASHRAE 111, Section 4, "Instrumentation."

D. Code and AHJ Compliance: TAB is required to comply with governing codes and requirements of authorities having jurisdiction.

PART 2 - PRODUCTS (Not Applicable)

PART 3 - EXECUTION

3.1 EXAMINATION

A. Examine the Contract Documents to become familiar with Project requirements and to discover conditions in systems designs that may preclude proper TAB of systems and equipment.

B. Examine installed systems for balancing devices, such as test ports, gauge cocks, thermometer wells, flow-control devices, balancing valves and fittings, and manual volume dampers. Verify that locations of these balancing devices are applicable for intended purpose and are accessible.

C. Examine the approved submittals for HVAC systems and equipment.

D. Examine design data, including HVAC system descriptions, statements of design assumptions for environmental conditions and systems output, and statements of philosophies and assumptions about HVAC system and equipment controls.

E. Examine ceiling plenums and underfloor air plenums used for HVAC to verify that they are properly separated from adjacent areas and sealed.

F. Examine equipment performance data, including fan and pump curves.

1. Relate performance data to Project conditions and requirements, including system effects that can create undesired or unpredicted conditions that cause reduced capacities in all or part of a system.
2. Calculate system-effect factors to reduce performance ratings of HVAC equipment when installed under conditions different from the conditions used to rate equipment performance. To calculate system effects for air systems, use tables and charts found in AMCA 201, "Fans and Systems," or in SMACNA's "HVAC Systems - Duct Design." Compare results with the design data and installed conditions.

G. Examine system and equipment installations and verify that field quality-control testing, cleaning, and adjusting specified in individual Sections have been performed.

H. Examine test reports specified in individual system and equipment Sections.

I. Examine HVAC equipment and verify that bearings are greased, belts are aligned and tight, filters are clean, and equipment with functioning controls is ready for operation.

J. Examine terminal units, such as variable-air-volume boxes, and verify that they are accessible and their controls are connected and functioning.

K. Examine heat-transfer coils for correct piping connections and for clean and straight fins.

L. Examine operating safety interlocks and controls on HVAC equipment.

M. Examine control dampers for proper installation for their intended function of isolating, throttling, diverting, or mixing air flows.

N. Report deficiencies discovered before and during performance of TAB procedures. Observe and record system reactions to changes in conditions. Record default set points if different from indicated values.

3.2 PREPARATION

A. Prepare a TAB plan that includes the following:

1. Equipment and systems to be tested.
2. Strategies and step-by-step procedures for balancing the systems.
3. Instrumentation to be used.
4. Sample forms with specific identification for all equipment.

B. Perform system-readiness checks of HVAC systems and equipment to verify system readiness for TAB work. Include, at a minimum, the following:

1. Airside:

a. Verify that leakage and pressure tests on air distribution systems have been satisfactorily completed.
b. Duct systems are complete with terminals installed.
c. Volume, smoke, and fire dampers are open and functional.
d. Clean filters are installed.
e. Fans are operating, free of vibration, and rotating in correct direction.
f. Automatic temperature-control systems are operational.
g. Ceilings are installed.
h. Windows and doors are installed.
i. Suitable access to balancing devices and equipment is provided.

3.3 GENERAL PROCEDURES FOR TESTING AND BALANCING

A. Perform testing and balancing procedures on each system in accordance with the procedures contained in AABC's "National Standards for Total System Balance"-and in this Section.

B. Cut insulation, ducts, pipes, and equipment casings for installation of test probes to the minimum extent necessary for TAB procedures.

1. After testing and balancing, patch probe holes in ducts with same material and thickness as used to construct ducts.
2. Where holes for probes are required in piping or hydronic equipment, install pressure and temperature test plugs to seal systems.
3. Install and join new insulation that matches removed materials. Restore insulation, coverings, vapor barrier, and finish in accordance with Section 230713 "Duct Insulation," Section 230716 "HVAC Equipment Insulation," and Section 230719 "HVAC Piping Insulation."

C. Mark equipment and balancing devices, including damper-control positions, valve position indicators, fan-speed-control levers, and similar controls and devices, with paint or other suitable, permanent identification material to show final settings.

D. Take and report testing and balancing measurements in inch-pound (IPunits.

3.4 TESTING, ADJUSTING, AND BALANCING OF HVAC EQUIPMENT

A. Test, adjust, and balance HVAC equipment indicated on Drawings, including, but not limited to, the following:

1. Motors.
2. Fans and ventilators.
3. Air curtains.
4. Terminal units.

5. Commercial kitchen hoods.
6. Unit heaters.
7. Air-handling units.
8. Heating and ventilating units.
9. Rooftop air-conditioning units.
10. Dedicated outdoor-air units.
11. Packaged air conditioners.
12. Self-contained air conditioners.
13. Split-system air conditioners.
14. Heat pumps.
15. Unit ventilators.

3.5 GENERAL PROCEDURES FOR BALANCING AIR SYSTEMS

A. Prepare test reports for both fans and outlets. Obtain manufacturer's outlet factors and recommended testing procedures. Crosscheck the summation of required outlet volumes with required fan volumes.

B. Prepare schematic diagrams of systems' Record drawings duct layouts.

C. For variable-air-volume systems, develop a plan to simulate diversity.

D. Determine the best locations in main and branch ducts for accurate duct-airflow measurements.

E. Check airflow patterns from the outdoor-air louvers and dampers and the return- and exhaust-air dampers through the supply-fan discharge and mixing dampers.

F. Locate start-stop and disconnect switches, electrical interlocks, and motor starters.

G. Verify that motor starters are equipped with properly sized thermal protection.

H. Check dampers for proper position to achieve desired airflow path.

I. Check for airflow blockages.

J. Check condensate drains for proper connections and functioning.

K. Check for proper sealing of air-handling-unit components.

3.6 PROCEDURES FOR CONSTANT-VOLUME AIR SYSTEMS

A. Adjust fans to deliver total indicated airflows within the maximum allowable fan speed listed by fan manufacturer.

1. Measure total airflow.

a. Set outside-air, return-air, and relief-air dampers for proper position that simulates minimum outdoor-air conditions.

b. Where duct conditions allow, measure airflow by main Pitot-tube traverse. If necessary, perform multiple Pitot-tube traverses close to the fan and prior to any outlets, to obtain total airflow.
c. Where duct conditions are unsuitable for Pitot-tube traverse measurements, a coil traverse may be acceptable.

2. Measure fan static pressures as follows:

a. Measure static pressure directly at the fan outlet or through the flexible connection.
b. Measure static pressure directly at the fan inlet or through the flexible connection.
c. Measure static pressure across each component that makes up the air-handling system.
d. Report artificial loading of filters at the time static pressures are measured.

3. Obtain approval from Commissioning Authority for adjustment of fan speed higher or lower than indicated speed. Comply with requirements in HVAC Sections for air-handling units for adjustment of fans, belts, and pulley sizes to achieve indicated air-handling-unit performance.
4. Do not make fan-speed adjustments that result in motor overload. Consult equipment manufacturers about fan-speed safety factors. Modulate dampers and measure fan-motor amperage to ensure that no overload occurs. Measure amperage in full-cooling, full-heating, economizer, and any other operating mode to determine the maximum required brake horsepower.

B. Adjust volume dampers for main duct, submain ducts, and major branch ducts to indicated airflows.

1. Measure airflow of submain and branch ducts.
2. Adjust submain and branch duct volume dampers for specified airflow.
3. Re-measure each submain and branch duct after all have been adjusted.

C. Adjust air inlets and outlets for each space to indicated airflows.

1. Set airflow patterns of adjustable outlets for proper distribution without drafts.
2. Measure inlets and outlets airflow.
3. Adjust each inlet and outlet for specified airflow.
4. Re-measure each inlet and outlet after they have been adjusted.

D. Verify final system conditions.

1. Re-measure and confirm that minimum outdoor, return, and relief airflows are within design. Readjust to design if necessary.
2. Re-measure and confirm that total airflow is within design.
3. Re-measure all final fan operating data, speed, volts, amps, and static profile.
4. Mark all final settings.
5. Test system in economizer mode. Verify proper operation and adjust if necessary.
6. Measure and record all operating data.
7. Record final fan-performance data.

3.7 PROCEDURES FOR VARIABLE-AIR-VOLUME SYSTEMS

A. Adjust the variable-air-volume systems as follows:

1. Verify that the system static pressure sensor is located two-thirds of the distance down the duct from the fan discharge.
2. Verify that the system is under static pressure control.
3. Select the terminal unit that is most critical to the supply-fan airflow. Measure inlet static pressure, and adjust system static pressure control set point so the entering static pressure for the critical terminal unit is not less than the sum of the terminal-unit manufacturer's recommended minimum inlet static pressure plus the static pressure needed to overcome terminal-unit discharge system losses.
4. Calibrate and balance each terminal unit for maximum and minimum design airflow as follows:

    a. Adjust controls so that terminal is calling for maximum airflow. Some controllers require starting with minimum airflow. Verify calibration procedure for specific project.
    b. Measure airflow and adjust calibration factor as required for design maximum airflow. Record calibration factor.
    c. When maximum airflow is correct, balance the air outlets downstream from terminal units.
    d. Adjust controls so that terminal is calling for minimum airflow.
    e. Measure airflow and adjust calibration factor as required for design minimum airflow. Record calibration factor. If no minimum calibration is available, note any deviation from design airflow.
    f. On constant volume terminals, in critical areas where room pressure is to be maintained, verify that the airflow remains constant over the full range of full cooling to full heating. Note any deviation from design airflow or room pressure.

5. After terminals have been calibrated and balanced, test and adjust system for total airflow. Adjust fans to deliver total design airflows within the maximum allowable fan speed listed by fan manufacturer.

    a. Set outside-air, return-air, and relief-air dampers for proper position that simulates minimum outdoor-air conditions.
    b. Set terminals for maximum airflow. If system design includes diversity, adjust terminals for maximum and minimum airflow, so that connected total matches fan selection and simulates actual load in the building.
    c. Where duct conditions allow, measure airflow by main Pitot-tube traverse. If necessary, perform multiple Pitot-tube traverses close to the fan and prior to any outlets, to obtain total airflow.
    d. Where duct conditions are unsuitable for Pitot-tube traverse measurements, a coil traverse may be acceptable.

6. Measure fan static pressures as follows:

    a. Measure static pressure directly at the fan outlet or through the flexible connection.
    b. Measure static pressure directly at the fan inlet or through the flexible connection.

c. Measure static pressure across each component that makes up the air-handling system.
d. Report any artificial loading of filters at the time static pressures are measured.

7. Set final return and outside airflow to the fan while operating at maximum return airflow and minimum outdoor airflow.

a. Balance the return-air ducts and inlets.
b. Verify that terminal units are meeting design airflow under system maximum flow.

8. Re-measure the inlet static pressure at the most critical terminal unit, and adjust the system static pressure set point to the most energy-efficient set point to maintain the optimum system static pressure. Record set point and give to controls Contractor.
9. Verify final system conditions as follows:

a. Re-measure and confirm that minimum outdoor, return, and relief airflows are within design. Readjust to match design if necessary.
b. Re-measure and confirm that total airflow is within design.
c. Re-measure final fan operating data, speed, volts, amps, and static profile.
d. Mark final settings.
e. Test system in economizer mode. Verify proper operation and adjust if necessary. Measure and record all operating data.
f. Verify tracking between supply and return fans.

3.8 PROCEDURES FOR MOTORS

A. Motors 1/2 HP and Larger: Test at final balanced conditions and record the following data:

1. Manufacturer's name, model number, and serial number.
2. Motor horsepower rating.
3. Motor rpm.
4. Phase and hertz.
5. Nameplate and measured voltage, each phase.
6. Nameplate and measured amperage, each phase.
7. Starter size and thermal-protection-element rating.
8. Service factor and frame size.

B. Motors Driven by Variable-Frequency Controllers: Test manual bypass of controller to prove proper operation.

3.9 PROCEDURES FOR AIR-COOLED CONDENSING UNITS

A. Verify proper rotation of fan(s).

B. Measure and record entering- and leaving-air temperatures.

C. Measure and record entering and leaving refrigerant pressures.

D. Measure and record operating data of compressor(s), fan(s), and motors.

3.10 PROCEDURES FOR AIR-COOLED CONDENSERS

A. Verify proper rotation of fan(s).

B. Measure and record entering- and leaving-air temperatures.

C. Measure and record entering and leaving refrigerant pressures.

D. Measure and record operating data of fan(s) and motor(s).

E. Measure, adjust, and record the following data for each electric heating coil:

1. Nameplate data.
2. Airflow.
3. Entering- and leaving-air temperature at full load.
4. Air pressure drop.
5. Voltage and amperage input of each phase at full load.
6. Calculated kilowatt at full load.
7. Fuse or circuit-breaker rating for overload protection.

F. Measure, adjust, and record the following data for each refrigerant coil:

1. Dry-bulb temperature of entering and leaving air.
2. Wet-bulb temperature of entering and leaving air.
3. Airflow.
4. Air pressure drop.
5. Entering and leaving refrigerant pressure and temperatures.

3.11 PROCEDURES FOR EXHAUST HOODS

A. Room Pressure: Measure and record room pressure with respect to atmosphere and adjacent space with hoods in room initially not operating and then with hoods operating.

B. Makeup Air: Systems supplying source of makeup air to hoods shall be in operation during testing and balancing of exhaust hoods.

1. Measure and record temperature of makeup air entering hood. If hood makeup air is from multiple sources having different temperatures, measure and record the airflow and temperatures of each source and calculate the weighted average temperature.
2. Use simulated smoke to observe supply air-distribution air patterns in vicinity of hoods. Consult with hood manufacturer and report conditions that have a detrimental effect on intended capture, containment, and other attributes effecting proper operation.

C. Kitchen Hoods:

1. Type 1: Measure and record pressure drop and face velocity of hood filters and slots in accordance with hood manufacturer's instructions. Consult hood manufacturer to determine hood airflow using recorded information.
2. Type 2: Measure and record airflow by duct traverse.
3. Capture and Containment: Check each hood for proper capture and containment using a smoke-emitting device. Observe and report performance. Make adjustments to achieve optimum results.

D. AHJ Tests: Conduct additional tests required by authorities having jurisdiction.

3.12 DUCT LEAKAGE TESTS

A. Witness the duct leakage testing performed by Installer.

B. Verify that proper test methods are used and that leakage rates are within specified limits.

C. Report deficiencies observed.

3.13 HVAC CONTROLS VERIFICATION

A. In conjunction with system balancing, perform the following:

1. Verify HVAC control system is operating within the design limitations.
2. Confirm that the sequences of operation are in compliance with Contract Documents.
3. Verify that controllers are calibrated and function as intended.
4. Verify that controller set points are as indicated.
5. Verify the operation of lockout or interlock systems.
6. Verify the operation of valve and damper actuators.
7. Verify that controlled devices are properly installed and connected to correct controller.
8. Verify that controlled devices travel freely and are in position indicated by controller: open, closed, or modulating.
9. Verify location and installation of sensors to ensure that they sense only intended temperature, humidity, or pressure.

B. Reporting: Include a summary of verifications performed, remaining deficiencies, and variations from indicated conditions.

3.14 TOLERANCES

A. Set HVAC system's airflow rates and water flow rates within the following tolerances:

1. Supply, Return, and Exhaust Fans and Equipment with Fans: Plus or minus 10 percent. If design value is less than 100 cfm, within 10 cfm.
2. Air Outlets and Inlets: Plus or minus 10 percent. If design value is less than 100 cfm, within 10 cfm.

B. Maintaining pressure relationships as designed shall have priority over the tolerances specified above.

3.15 PROGRESS REPORTING

A. Initial Construction-Phase Report: Based on examination of the Contract Documents as specified in "Examination" Article, prepare a report on the adequacy of design for system-balancing devices. Recommend changes and additions to system-balancing devices, to facilitate proper performance measuring and balancing. Recommend changes and additions to HVAC systems and general construction to allow access for performance-measuring and -balancing devices.

3.16 FINAL REPORT

A. General: Prepare a certified written report; tabulate and divide the report into separate sections for tested systems and balanced systems.

1. Include a certification sheet at the front of the report's binder, signed and sealed by the certified testing and balancing engineer.
2. Include a list of instruments used for procedures, along with proof of calibration.
3. Certify validity and accuracy of field data.

B. Final Report Contents: In addition to certified field-report data, include the following as applicable:

1. Pump curves.
2. Fan curves.
3. Manufacturers' test data.
4. Field test reports prepared by system and equipment installers.
5. Other information relative to equipment performance; do not include Shop Drawings and Product Data.

C. General Report Data: In addition to form titles and entries, include the following data:

1. Title page.
2. Name and address of the TAB specialist.
3. Project name.
4. Project location.
5. Architect's name and address.
6. Engineer's name and address.
7. Contractor's name and address.
8. Report date.
9. Signature of TAB supervisor who certifies the report.
10. Table of Contents with the total number of pages defined for each section of the report. Number each page in the report.
11. Summary of contents, including the following:

    a. Indicated versus final performance.

b. Notable characteristics of systems.
c. Description of system operation sequence if it varies from the Contract Documents.

12. Nomenclature sheets for each item of equipment.
13. Data for terminal units, including manufacturer's name, type, size, and fittings.
14. Notes to explain why certain final data in the body of reports vary from indicated values.
15. Test conditions for fans performance forms, including the following:

    a. Settings for outdoor-, return-, and exhaust-air dampers.
    b. Conditions of filters.
    c. Cooling coil, wet- and dry-bulb conditions.
    d. Heating coil, dry-bulb conditions.
    e. Face and bypass damper settings at coils.
    f. Fan drive settings, including settings and percentage of maximum pitch diameter.
    g. Variable-frequency controller or Inlet vane settings for variable-air-volume systems.
    h. Settings for pressure controller(s).
    i. Other system operating conditions that affect performance.

16. Test conditions for pump performance forms, including the following:

    a. Variable-frequency controller settings for variable-flow hydronic systems.
    b. Settings for pressure controller(s).
    c. Other system operating conditions that affect performance.

D. System Diagrams: Include schematic layouts of air and hydronic distribution systems. Present each system with single-line diagram and include the following:

1. Quantities of outdoor, supply, return, and exhaust airflows.
2. Water and steam flow rates.
3. Duct, outlet, and inlet sizes.
4. Pipe and valve sizes and locations.
5. Terminal units.
6. Balancing stations.
7. Position of balancing devices.

E. Air-Handling-Unit Test Reports: For air-handling units, include the following:

1. Unit Data:

    a. Unit identification.
    b. Location.
    c. Make and type.
    d. Model number and unit size.
    e. Manufacturer's serial number.
    f. Unit arrangement and class.
    g. Discharge arrangement.
    h. Sheave make, size in inches, and bore.
    i. Center-to-center dimensions of sheave and amount of adjustments in inches.

j. Number, make, and size of belts.
k. Number, type, and size of filters.

2. Motor Data:

a. Motor make, and frame type and size.
b. Horsepower and speed.
c. Volts, phase, and hertz.
d. Full-load amperage and service factor.
e. Sheave make, size in inches, and bore.
f. Center-to-center dimensions of sheave and amount of adjustments in inches.

3. Test Data (Indicated and Actual Values):

a. Total airflow rate in cfm.
b. Total system static pressure in inches wg.
c. Fan speed.
d. Inlet and discharge static pressure in inches wg.
e. For each filter bank, filter static-pressure differential in inches wg.
f. Preheat-coil static-pressure differential in inches wg.
g. Cooling-coil static-pressure differential in inches wg.
h. Heating-coil static-pressure differential in inches wg.
i. List for each internal component with pressure-drop, static-pressure differential in inches wg.
j. Outdoor airflow in cfm.
k. Return airflow in cfm.
l. Outdoor-air damper position.
m. Return-air damper position.

F. Apparatus-Coil Test Reports:

1. Coil Data:

a. System identification.
b. Location.
c. Coil type.
d. Number of rows.
e. Fin spacing in fins per inch o.c.
f. Make and model number.
g. Face area in sq. ft..
h. Tube size in NPS.
i. Tube and fin materials.
j. Circuiting arrangement.

2. Test Data (Indicated and Actual Values):

a. Airflow rate in cfm.
b. Average face velocity in fpm.
c. Air pressure drop in inches wg.
d. Outdoor-air, wet- and dry-bulb temperatures in deg F.

e. Return-air, wet- and dry-bulb temperatures in deg F.
f. Entering-air, wet- and dry-bulb temperatures in deg F.
g. Leaving-air, wet- and dry-bulb temperatures in deg F.
h. Water flow rate in gpm.
i. Water pressure differential in feet of head or psig.
j. Entering-water temperature in deg F.
k. Leaving-water temperature in deg F.
l. Refrigerant expansion valve and refrigerant types.
m. Refrigerant suction pressure in psig.
n. Refrigerant suction temperature in deg F.
o. Inlet steam pressure in psig.

G. Gas- and Oil-Fired Heat Apparatus Test Reports: In addition to manufacturer's factory startup equipment reports, include the following:

1. Unit Data:

a. System identification.
b. Location.
c. Make and type.
d. Model number and unit size.
e. Manufacturer's serial number.
f. Fuel type in input data.
g. Output capacity in Btu/h.
h. Ignition type.
i. Burner-control types.
j. Motor horsepower and speed.
k. Motor volts, phase, and hertz.
l. Motor full-load amperage and service factor.
m. Sheave make, size in inches, and bore.
n. Center-to-center dimensions of sheave and amount of adjustments in inches.

2. Test Data (Indicated and Actual Values):

a. Total airflow rate in cfm.
b. Entering-air temperature in deg F.
c. Leaving-air temperature in deg F.
d. Air temperature differential in deg F.
e. Entering-air static pressure in inches wg.
f. Leaving-air static pressure in inches wg.
g. Air static-pressure differential in inches wg.
h. Low-fire fuel input in Btu/h.
i. High-fire fuel input in Btu/h.
j. Manifold pressure in psig.
k. High-temperature-limit setting in deg F.
l. Operating set point in Btu/h.
m. Motor voltage at each connection.
n. Motor amperage for each phase.
o. Heating value of fuel in Btu/h.

H. Electric-Coil Test Reports: For electric furnaces, duct coils, and electric coils installed in central-station air-handling units, include the following:

1. Unit Data:

    a. System identification.
    b. Location.
    c. Coil identification.
    d. Capacity in Btu/h.
    e. Number of stages.
    f. Connected volts, phase, and hertz.
    g. Rated amperage.
    h. Airflow rate in cfm.
    i. Face area in sq. ft..
    j. Minimum face velocity in fpm.

2. Test Data (Indicated and Actual Values):

    a. Heat output in Btu/h.
    b. Airflow rate in cfm.
    c. Air velocity in fpm.
    d. Entering-air temperature in deg F.
    e. Leaving-air temperature in deg F.
    f. Voltage at each connection.
    g. Amperage for each phase.

I. Fan Test Reports: For supply, return, and exhaust fans, include the following:

1. Fan Data:

    a. System identification.
    b. Location.
    c. Make and type.
    d. Model number and size.
    e. Manufacturer's serial number.
    f. Arrangement and class.
    g. Sheave make, size in inches, and bore.
    h. Center-to-center dimensions of sheave and amount of adjustments in inches.

2. Motor Data:

    a. Motor make, and frame type and size.
    b. Horsepower and speed.
    c. Volts, phase, and hertz.
    d. Full-load amperage and service factor.
    e. Sheave make, size in inches, and bore.
    f. Center-to-center dimensions of sheave and amount of adjustments in inches.
    g. Number, make, and size of belts.

3. Test Data (Indicated and Actual Values):

a. Total airflow rate in cfm.
b. Total system static pressure in inches wg.
c. Fan speed.
d. Discharge static pressure in inches wg.
e. Suction static pressure in inches wg.

J. Round, Flat-Oval, and Rectangular Duct Traverse Reports: Include a diagram with a grid representing the duct cross-section and record the following:

1. Report Data:

a. System fan and air-handling-unit number.
b. Location and zone.
c. Traverse air temperature in deg F.
d. Duct static pressure in inches wg.
e. Duct size in inches.
f. Duct area in sq. ft..
g. Indicated airflow rate in cfm.
h. Indicated velocity in fpm.
i. Actual airflow rate in cfm.
j. Actual average velocity in fpm.
k. Barometric pressure in psig.

K. Air-Terminal-Device Reports:

1. Unit Data:

a. System and air-handling unit identification.
b. Location and zone.
c. Apparatus used for test.
d. Area served.
e. Make.
f. Number from system diagram.
g. Type and model number.
h. Size.
i. Effective area in sq. ft..

2. Test Data (Indicated and Actual Values):

a. Airflow rate in cfm.
b. Air velocity in fpm.
c. Preliminary airflow rate as needed in cfm.
d. Preliminary velocity as needed in fpm.
e. Final airflow rate in cfm.
f. Final velocity in fpm.
g. Space temperature in deg F.

L. System-Coil Reports: For reheat coils and water coils of terminal units, include the following:

1. Unit Data:

a. System and air-handling-unit identification.
b. Location and zone.
c. Room or riser served.
d. Coil make and size.
e. Flowmeter type.

2. Test Data (Indicated and Actual Values):

a. Airflow rate in cfm.
b. Entering-water temperature in deg F.
c. Leaving-water temperature in deg F.
d. Water pressure drop in feet of head or psig.
e. Entering-air temperature in deg F.
f. Leaving-air temperature in deg F.

M. Instrument Calibration Reports:

1. Report Data:

a. Instrument type and make.
b. Serial number.
c. Application.
d. Dates of use.
e. Dates of calibration.

3.17 VERIFICATION OF TAB REPORT

A. The TAB specialist's test and balance engineer shall conduct the inspection in the presence of Commissioning Authority.

B. Commissioning Authority shall randomly select measurements, documented in the final report, to be rechecked. Rechecking shall be limited to the lesser of either 10 percent of the total measurements recorded or the extent of measurements that can be accomplished in a normal 8-hour business day.

C. If rechecks yield measurements that differ from the measurements documented in the final report by more than the tolerances allowed, the measurements shall be noted as "FAILED."

D. If the number of "FAILED" measurements is greater than 10 percent of the total measurements checked during the final inspection, the TAB shall be considered incomplete and shall be rejected.

E. If recheck measurements find the number of failed measurements noncompliant with requirements indicated, proceed as follows:

1. TAB specialists shall recheck all measurements and make adjustments. Revise the final report and balancing device settings to include all changes; resubmit the final report and request a second final inspection. All changes shall be tracked to show changes made to previous report.

2. If the second final inspection also fails, Owner may pursue others Contract options to complete TAB work.

F. Prepare test and inspection reports.

END OF SECTION 230593

SECTION 230713 - DUCT INSULATION

PART 1 - GENERAL

1.1 SUMMARY

A. Section includes insulating the following duct services:
   1. Indoor, concealed supply and return located in unconditioned space.
   2. Indoor, concealed supply and return located outside of building envelope.
   3. Indoor, concealed outside air.

B. Related Sections:

   1. Section 230716 "HVAC Equipment Insulation."
   2. Section 230719 "HVAC Piping Insulation."
   3. Section 233113 "Metal Ducts" for duct liners.

1.2 ACTION SUBMITTALS

A. Product Data: For each type of product indicated.

1.3 QUALITY ASSURANCE

A. Surface-Burning Characteristics: For insulation and related materials, as determined by testing identical products according to ASTM E84, by a testing agency acceptable to authorities having jurisdiction. Factory label insulation and jacket materials and adhesive, mastic, tapes, and cement material containers, with appropriate markings of applicable testing agency.

   1. Insulation Installed Indoors in Return Plenums: Flame-spread index of 25 or less, and smoke-developed index of 50 or less.

PART 2 - PRODUCTS

2.1 INSULATION MATERIALS

A. Comply with requirements in "Duct Insulation Schedule, General," "Indoor Duct and Plenum Insulation Schedule," and "Aboveground, Outdoor Duct and Plenum Insulation Schedule" articles for where insulating materials shall be applied.

B. Products shall not contain asbestos, lead, mercury, or mercury compounds.

C. Products that come in contact with stainless steel shall have a leachable chloride content of less than 50 ppm when tested according to ASTM C871.

D. Insulation materials for use on austenitic stainless steel shall be qualified as acceptable according to ASTM C795.

E. Foam insulation materials shall not use CFC or HCFC blowing agents in the manufacturing process.

F. Mineral-Fiber Blanket Insulation: Mineral or glass fibers bonded with a thermosetting resin. Comply with ASTM C553, Type II and ASTM C1290,–Type III with factory-applied FSK jacket. Factory-applied jacket requirements are specified in "Factory-Applied Jackets" Article.

1. Manufacturers: Subject to compliance with requirements, available manufacturers offering products that may be incorporated into the Work include:

    a. CertainTeed Insulation.
    b. Johns Manville; a Berkshire Hathaway company.
    c. Knauf Insulation.
    d. Additional manufacturers submitted for and receiving engineer approval prior to bid.

G. Mineral-Fiber Board Insulation: Mineral or glass fibers bonded with a thermosetting resin. Comply with ASTM C612, Type IA or Type IB. For duct and plenum applications, provide insulation-with factory-applied FSK jacket. Factory-applied jacket requirements are specified in "Factory-Applied Jackets" Article.

1. Manufacturers: Subject to compliance with requirements, available manufacturers offering products that may be incorporated into the Work include:

    a. CertainTeed Corporation.
    b. Johns Manville; a Berkshire Hathaway company.
    c. Knauf Insulation.
    d. Additional manufacturers submitted for and receiving engineer approval prior to bid.

2.2 ADHESIVES

A. Materials shall be compatible with insulation materials, jackets, and substrates and for bonding insulation to itself and to surfaces to be insulated unless otherwise indicated.

B. Mineral-Fiber Adhesive: Comply with MIL-A-3316C, Class 2, Grade A.

1. Manufacturers: Subject to compliance with requirements, available manufacturers offering products that may be incorporated into the Work include:

    a. Childers Brand; H. B. Fuller Construction Products.
    b. Eagle Bridges - Marathon Industries.
    c. Foster Brand; H. B. Fuller Construction Products.
    d. Additional manufacturers submitted for and receiving engineer approval prior to bid.

C. ASJ Adhesive, and FSK Jacket Adhesive: Comply with MIL-A-3316C, Class 2, Grade A for bonding insulation jacket lap seams and joints.

1. Manufacturers: Subject to compliance with requirements, available manufacturers offering products that may be incorporated into the Work include:

a. Childers Brand; H. B. Fuller Construction Products.
b. Eagle Bridges - Marathon Industries.
c. Foster Brand; H. B. Fuller Construction Products.
d. Additional manufacturers submitted for and receiving engineer approval prior to bid.

2.3 MASTICS AND COATINGS

A. Materials shall be compatible with insulation materials, jackets, and substrates.

B. Breather Mastic: Water based; suitable for indoor and outdoor use on above ambient services.

1. Manufacturers: Subject to compliance with requirements, available manufacturers offering products that may be incorporated into the Work include:

a. Eagle Bridges - Marathon Industries.
b. Knauf Insulation.
c. Mon-Eco Industries, Inc.
d. Additional manufacturers submitted for and receiving engineer approval prior to bid.

2. Water-Vapor Permeance: ASTM E96, greater than 1.0 perm at manufacturer's recommended dry film thickness.
3. Service Temperature Range: Minus 20 to plus 180 deg F.
4. Color: To match duct/insulation is visible otherwise White.

2.4 SEALANTS

A. FSK and Metal Jacket Flashing Sealants:

1. Manufacturers: Subject to compliance with requirements, available manufacturers offering products that may be incorporated into the Work include:

a. Eagle Bridges - Marathon Industries.
b. Foster Brand; H. B. Fuller Construction Products.
c. Additional manufacturers submitted for and receiving engineer approval prior to bid.

2. Materials shall be compatible with insulation materials, jackets, and substrates.
3. Fire- and water-resistant, flexible, elastomeric sealant.
4. Service Temperature Range: Minus 40 to plus 250 deg F.
5. Color: Aluminum.

2.5 FACTORY-APPLIED JACKETS

A. Insulation system schedules indicate factory-applied jackets on various applications. When factory-applied jackets are indicated, comply with the following:
   1. FSK Jacket: Aluminum-foil, fiberglass-reinforced scrim with kraft-paper backing; complying with ASTM C1136, Type II.

2.6 FIELD-APPLIED JACKETS

A. Field-applied jackets shall comply with ASTM C921, Type I, unless otherwise indicated.

B. FSK Jacket: Aluminum-foil-face, fiberglass-reinforced scrim with kraft-paper backing.

2.7 TAPES

A. FSK Tape: Foil-face, vapor-retarder tape matching factory-applied jacket with acrylic adhesive; complying with ASTM C1136.

   1. Manufacturers: Subject to compliance with requirements, available manufacturers offering products that may be incorporated into the Work include:

      a. Compac Corporation.
      b. Ideal Tape Co., Inc., an American Biltrite Company.
      c. Knauf Insulation.
      d. Additional manufacturers submitted for and receiving engineer approval prior to bid.

   2. Width: 3 inches.
   3. Thickness: 6.5 mils.
   4. Adhesion: 90 ounces force/inch in width.
   5. Elongation: 2 percent.
   6. Tensile Strength: 40 lbf/inch in width.
   7. FSK Tape Disks and Squares: Precut disks or squares of FSK tape.

2.8 SECUREMENTS

A. Aluminum Bands: ASTM B209, Alloy 3003, 3005, 3105, or 5005; Temper H-14, 0.020 inch thick, 3/4 inch wide with wing seal or closed seal.

   1. Manufacturers: Subject to compliance with requirements, available manufacturers offering products that may be incorporated into the Work include:

      a. ITW Insulation Systems; Illinois Tool Works, Inc.
      b. Additional manufacturers submitted for and receiving engineer approval prior to bid.

B. Insulation Pins and Hangers:

1. Metal, Adhesively Attached, Perforated-Base Insulation Hangers: Baseplate welded to projecting spindle that is capable of holding insulation, of thickness indicated, securely in position indicated when self-locking washer is in place. Comply with the following requirements:

    a. Manufacturers: Subject to compliance with requirements, available manufacturers offering products that may be incorporated into the Work include:

        1) AGM Industries, Inc.
        2) Gemco.
        3) Hardcast; a Carlisle Company.
        4) Additional manufacturers submitted for and receiving engineer approval prior to bid.

    b. Baseplate: Perforated, galvanized carbon-steel sheet, 0.030 inch thick by 2 inches square.
    c. Spindle: Copper- or zinc-coated, low-carbon steel, fully annealed, 0.106-inch-diameter shank, length to suit depth of insulation indicated.
    d. Adhesive: Recommended by hanger manufacturer. Product with demonstrated capability to bond insulation hanger securely to substrates indicated without damaging insulation, hangers, and substrates.

2. Nonmetal, Adhesively Attached, Perforated-Base Insulation Hangers: Baseplate fastened to projecting spindle that is capable of holding insulation, of thickness indicated, securely in position indicated when self-locking washer is in place. Comply with the following requirements:

    a. Manufacturers: Subject to compliance with requirements, available manufacturers offering products that may be incorporated into the Work include:

        1) Gemco.
        2) Additional manufacturers submitted for and receiving engineer approval prior to bid.

    b. Baseplate: Perforated, nylon sheet, 0.030 inch thick by 1-1/2 inches in diameter.
    c. Spindle: Nylon, 0.106-inch-diameter shank, length to suit depth of insulation indicated, up to 2-1/2 inches.
    d. Adhesive: Recommended by hanger manufacturer. Product with demonstrated capability to bond insulation hanger securely to substrates indicated without damaging insulation, hangers, and substrates.

3. Self-Sticking-Base Insulation Hangers: Baseplate welded to projecting spindle that is capable of holding insulation, of thickness indicated, securely in position indicated when self-locking washer is in place. Comply with the following requirements:

    a. Manufacturers: Subject to compliance with requirements, available manufacturers offering products that may be incorporated into the Work include:

        1) AGM Industries, Inc.
        2) Gemco.

3) Hardcast; a Carlisle Company.
4) Additional manufacturers submitted for and receiving engineer approval prior to bid.

b. Baseplate: Galvanized carbon-steel sheet, 0.030 inch thick by 2 inches square.
c. Spindle: Copper- or zinc-coated, low-carbon steel, fully annealed, 0.106-inch-diameter shank, length to suit depth of insulation indicated.
d. Adhesive-backed base with a peel-off protective cover.

4. Insulation-Retaining Washers: Self-locking washers formed from 0.016-inch-thick, galvanized-steel sheet, with beveled edge sized as required to hold insulation securely in place but not less than 1-1/2 inches in diameter.

a. Manufacturers: Subject to compliance with requirements, available manufacturers offering products that may be incorporated into the Work include:

1) AGM Industries, Inc.
2) Gemco.
3) Midwest Fasteners, Inc.
4) Additional manufacturers submitted for and receiving engineer approval prior to bid.

b. Protect ends with capped self-locking washers incorporating a spring steel insert to ensure permanent retention of cap in exposed locations.

5. Nonmetal Insulation-Retaining Washers: Self-locking washers formed from 0.016-inch-thick nylon sheet, with beveled edge sized as required to hold insulation securely in place but not less than 1-1/2 inches in diameter.

a. Manufacturers: Subject to compliance with requirements, available manufacturers offering products that may be incorporated into the Work include:

1) Gemco.
2) Additional manufacturers submitted for and receiving engineer approval prior to bid.

C. Staples: Outward-clinching insulation staples, nominal 3/4-inch-wide, stainless steel or Monel.

D. Wire: 0.062-inch soft-annealed, stainless steel.

1. Manufacturers: Subject to compliance with requirements, available manufacturers offering products that may be incorporated into the Work include:
a. Additional manufacturers submitted for and receiving engineer approval prior to bid.

2.9 CORNER ANGLES

A. PVC Corner Angles: 30 mils thick, minimum 1 by 1 inch, PVC according to ASTM D1784, Class 16354-C. White or color-coded to match adjacent surface.

B. Aluminum Corner Angles: 0.040 inch thick, minimum 1 by 1 inch, aluminum according to ASTM B209, Alloy 3003, 3005, 3105, or 5005; Temper H-14.

PART 3 - EXECUTION

3.1 PREPARATION

A. Surface Preparation: Clean and dry surfaces to receive insulation. Remove materials that will adversely affect insulation application.

3.2 GENERAL INSTALLATION REQUIREMENTS

A. Install insulation materials, accessories, and finishes with smooth, straight, and even surfaces; free of voids throughout the length of ducts and fittings.

B. Install insulation materials, vapor barriers or retarders, jackets, and thicknesses required for each item of duct system as specified in insulation system schedules.

C. Install accessories compatible with insulation materials and suitable for the service. Install accessories that do not corrode, soften, or otherwise attack insulation or jacket in either wet or dry state.

D. Install insulation with longitudinal seams at top and bottom of horizontal runs.

E. Install multiple layers of insulation with longitudinal and end seams staggered.

F. Keep insulation materials dry during application and finishing.

G. Install insulation with tight longitudinal seams and end joints. Bond seams and joints with adhesive recommended by insulation material manufacturer.

H. Install insulation with least number of joints practical.

I. Where vapor barrier is indicated, seal joints, seams, and penetrations in insulation at hangers, supports, anchors, and other projections with vapor-barrier mastic.

1. Install insulation continuously through hangers and around anchor attachments.
2. For insulation application where vapor barriers are indicated, extend insulation on anchor legs from point of attachment to supported item to point of attachment to structure. Taper and seal ends at attachment to structure with vapor-barrier mastic.
3. Install insert materials and install insulation to tightly join the insert. Seal insulation to insulation inserts with adhesive or sealing compound recommended by insulation material manufacturer.

J. Apply adhesives, mastics, and sealants at manufacturer's recommended coverage rate and wet and dry film thicknesses.

K. Install insulation with factory-applied jackets as follows:

1. Draw jacket tight and smooth.
2. Cover circumferential joints with 3-inch-wide strips, of same material as insulation jacket. Secure strips with adhesive and outward clinching staples along both edges of strip, spaced 4 inches o.c.
3. Overlap jacket longitudinal seams at least 1-1/2 inches. Clean and dry surface to receive self-sealing lap. Staple laps with outward clinching staples along edge at 2 inches o.c.

    a. For below ambient services, apply vapor-barrier mastic over staples.

4. Cover joints and seams with tape, according to insulation material manufacturer's written instructions, to maintain vapor seal.
5. Where vapor barriers are indicated, apply vapor-barrier mastic on seams and joints and at ends adjacent to duct flanges and fittings.

L. Cut insulation in a manner to avoid compressing insulation more than 75 percent of its nominal thickness.

M. Finish installation with systems at operating conditions. Repair joint separations and cracking due to thermal movement.

N. Repair damaged insulation facings by applying same facing material over damaged areas. Extend patches at least 4 inches beyond damaged areas. Adhere, staple, and seal patches similar to butt joints.

3.3 PENETRATIONS

A. Insulation Installation at Roof Penetrations: Install insulation continuously through roof penetrations.

1. Seal penetrations with flashing sealant.
2. For applications requiring only indoor insulation, terminate insulation above roof surface and seal with joint sealant. For applications requiring indoor and outdoor insulation, install insulation for outdoor applications tightly joined to indoor insulation ends. Seal joint with joint sealant.
3. Extend jacket of outdoor insulation outside roof flashing at least 2 inches below top of roof flashing.
4. Seal jacket to roof flashing with flashing sealant.

B. Insulation Installation at Aboveground Exterior Wall Penetrations: Install insulation continuously through wall penetrations.

1. Seal penetrations with flashing sealant.
2. For applications requiring only indoor insulation, terminate insulation inside wall surface and seal with joint sealant. For applications requiring indoor and outdoor insulation, install insulation for outdoor applications tightly joined to indoor insulation ends. Seal joint with joint sealant.

3. Extend jacket of outdoor insulation outside wall flashing and overlap wall flashing at least 2 inches.
4. Seal jacket to wall flashing with flashing sealant.

C. Insulation Installation at Interior Wall and Partition Penetrations (That Are Not Fire Rated): Install insulation continuously through walls and partitions.

D. Insulation Installation at Fire-Rated Wall and Partition Penetrations: Terminate insulation at fire damper sleeves for fire-rated wall and partition penetrations. Externally insulate damper sleeves to match adjacent insulation and overlap duct insulation at least 2 inches.

1. Comply with requirements in Section 078413 "Penetration Firestopping" for firestopping and fire-resistive joint sealers.

E. Insulation Installation at Floor Penetrations:

1. Duct: For penetrations through fire-rated assemblies, terminate insulation at fire damper sleeves and externally insulate damper sleeve beyond floor to match adjacent duct insulation. Overlap damper sleeve and duct insulation at least 2 inches.
2. Seal penetrations through fire-rated assemblies. Comply with requirements in Section 078413 "Penetration Firestopping."

3.4 INSTALLATION OF MINERAL-FIBER INSULATION

A. Blanket Insulation Installation on Ducts and Plenums: Secure with adhesive and insulation pins.

1. Apply adhesives according to manufacturer's recommended coverage rates per unit area.
2. Apply adhesive to entire circumference of ducts and to all surfaces of fittings and transitions. Adhesive may be omitted from the top surface of horizontal rectangular ducts.
3. Install either capacitor-discharge-weld pins and speed washers or cupped-head, capacitor-discharge-weld pins on sides and bottom of horizontal ducts and sides of vertical ducts as follows:

    a. On duct sides with dimensions 18 inches and smaller, place pins along longitudinal centerline of duct. Space 3 inches maximum from insulation end joints, and 16 inches o.c.
    b. On duct sides with dimensions larger than 18 inches, place pins 16 inches o.c. each way, and 3 inches maximum from insulation joints. Install additional pins to hold insulation tightly against surface at cross bracing.
    c. Pins may be omitted from top surface of horizontal, rectangular ducts and plenums.
    d. Do not overcompress insulation during installation.
    e. Impale insulation over pins and attach speed washers.
    f. Cut excess portion of pins extending beyond speed washers or bend parallel with insulation surface. Cover exposed pins and washers with tape matching insulation facing.

4. For ducts and plenums with surface temperatures below ambient, install a continuous unbroken vapor barrier. Create a facing lap for longitudinal seams and end joints with insulation by removing 2 inches from one edge and one end of insulation segment.

Secure laps to adjacent insulation section with 1/2-inch outward-clinching staples, 1 inch o.c. Install vapor barrier consisting of factory- or field-applied jacket, adhesive, vapor-barrier mastic, and sealant at joints, seams, and protrusions.

a. Repair punctures, tears, and penetrations with tape or mastic to maintain vapor-barrier seal.
b. Install vapor stops for ductwork and plenums operating below 50 deg F at 18-foot intervals. Vapor stops shall consist of vapor-barrier mastic applied in a Z-shaped pattern over insulation face, along butt end of insulation, and over the surface. Cover insulation face and surface to be insulated a width equal to two times the insulation thickness, but not less than 3 inches.

5. Overlap unfaced blankets a minimum of 2 inches on longitudinal seams and end joints. At end joints, secure with steel bands spaced a maximum of 18 inches o.c.
6. Install insulation on rectangular duct elbows and transitions with a full insulation section for each surface. Install insulation on round and flat-oval duct elbows with individually mitered gores cut to fit the elbow.
7. Insulate duct stiffeners, hangers, and flanges that protrude beyond insulation surface with 6-inch-wide strips of same material used to insulate duct. Secure on alternating sides of stiffener, hanger, and flange with pins spaced 6 inches o.c.

B. Board Insulation Installation on Ducts and Plenums: Secure with adhesive and insulation pins.

1. Apply adhesives according to manufacturer's recommended coverage rates per unit area.
2. Apply adhesive to entire circumference of ducts and to all surfaces of fittings and transitions. Adhesive may be omitted from the top surface of horizontal rectangular ducts.
3. Install either capacitor-discharge-weld pins and speed washers or cupped-head, capacitor-discharge-weld pins on sides and bottom of horizontal ducts and sides of vertical ducts as follows:

a. On duct sides with dimensions 18 inches and smaller, place pins along longitudinal centerline of duct. Space 3 inches maximum from insulation end joints, and 16 inches o.c.
b. On duct sides with dimensions larger than 18 inches, space pins 16 inches o.c. each way, and 3 inches maximum from insulation joints. Install additional pins to hold insulation tightly against surface at cross bracing.
c. Pins may be omitted from top surface of horizontal, rectangular ducts and plenums.
d. Do not overcompress insulation during installation.
e. Cut excess portion of pins extending beyond speed washers or bend parallel with insulation surface. Cover exposed pins and washers with tape matching insulation facing.

4. For ducts and plenums with surface temperatures below ambient, install a continuous unbroken vapor barrier. Create a facing lap for longitudinal seams and end joints with insulation by removing 2 inches from one edge and one end of insulation segment. Secure laps to adjacent insulation section with 1/2-inch outward-clinching staples, 1 inch o.c. Install vapor barrier consisting of factory- or field-applied jacket, adhesive, vapor-barrier mastic, and sealant at joints, seams, and protrusions.

a. Repair punctures, tears, and penetrations with tape or mastic to maintain vapor-barrier seal.
b. Install vapor stops for ductwork and plenums operating below 50 deg F at 18-foot intervals. Vapor stops shall consist of vapor-barrier mastic applied in a Z-shaped pattern over insulation face, along butt end of insulation, and over the surface. Cover insulation face and surface to be insulated a width equal to two times the insulation thickness, but not less than 3 inches.

5. Install insulation on rectangular duct elbows and transitions with a full insulation section for each surface. Groove and score insulation to fit as closely as possible to outside and inside radius of elbows. Install insulation on round and flat-oval duct elbows with individually mitered gores cut to fit the elbow.
6. Insulate duct stiffeners, hangers, and flanges that protrude beyond insulation surface with 6-inch-wide strips of same material used to insulate duct. Secure on alternating sides of stiffener, hanger, and flange with pins spaced 6 inches o.c.

3.5 FIELD-APPLIED JACKET INSTALLATION

A. Where FSK jackets are indicated, install as follows:

1. Draw jacket material smooth and tight.
2. Install lap or joint strips with same material as jacket.
3. Secure jacket to insulation with manufacturer's recommended adhesive.
4. Install jacket with 1-1/2-inch laps at longitudinal seams and 3-inch-wide joint strips at end joints.
5. Seal openings, punctures, and breaks in vapor-retarder jackets and exposed insulation with vapor-barrier mastic.

B. Where PVC jackets are indicated, install with 1-inch overlap at longitudinal seams and end joints; for horizontal applications, install with longitudinal seams along top and bottom of tanks and vessels. Seal with manufacturer's recommended adhesive.

1. Apply two continuous beads of adhesive to seams and joints, one bead under lap and the finish bead along seam and joint edge.

C. Where metal jackets are indicated, install with 2-inch overlap at longitudinal seams and end joints. Overlap longitudinal seams arranged to shed water. Seal end joints with weatherproof sealant recommended by insulation manufacturer. Secure jacket with stainless-steel bands 12 inches o.c. and at end joints.

3.6 FINISHES

A. Insulation with ASJ or Other Paintable Jacket Material: Paint jacket with paint system identified below and as specified in Section 099113 "Exterior Painting" and Section 099123 "Interior Painting."

B. Color: Final color as selected by Architect. Vary first and second coats to allow visual inspection of the completed Work.

C. Do not field paint aluminum or stainless-steel jackets.

3.7 DUCT INSULATION SCHEDULE, GENERAL

A. Plenums and Ducts Requiring Insulation:

1. Indoor, concealed supply and outdoor air.
2. Indoor, exposed supply and outdoor air.
3. Indoor, concealed return located in unconditioned space.
4. Indoor, exposed return located in unconditioned space.
5. Indoor, concealed exhaust between isolation damper and penetration of building exterior.
6. Indoor, exposed exhaust between isolation damper and penetration of building exterior.

B. Items Not Insulated:

1. Fibrous-glass ducts.
2. Metal ducts with duct liner of sufficient thickness to comply with energy code and ASHRAE/IESNA 90.1.
3. Factory-insulated flexible ducts.
4. Factory-insulated plenums and casings.
5. Flexible connectors.
6. Vibration-control devices.
7. Factory-insulated access panels and doors.

3.8 INDOOR DUCT AND PLENUM INSULATION SCHEDULE

A. Concealed, Supply-Air Duct and Plenum Insulation in Unconditioned Space: Mineral-fiber blanket, 2 inches thick and 1-lb/cu. ft. nominal density.

B. Concealed, Return-Air Duct and Plenum Insulation in Unconditioned Space: Mineral-fiber blanket, 2 inches thick and 1-lb/cu. ft. nominal density.

C. Concealed, Supply-Air Duct and Plenum Insulation Outside of Building Envelope: Mineral-fiber blanket, 3 inches thick and 0.75-lb/cu. ft. nominal density.

D. Concealed, Return-Air Duct and Plenum Insulation Outside of Building Envelope: Mineral-fiber blanket, 3 inches thick and 0.75-lb/cu. ft. nominal density.

E. Concealed, Outside-Air Duct and Plenum Insulation: Mineral-fiber blanket, 1-1/2 inches thick and 0.75-lb/cu. ft. nominal density.

3.9 INDOOR, FIELD-APPLIED JACKET SCHEDULE

A. Install jacket over insulation material. For insulation with factory-applied jacket, install the field-applied jacket over the factory-applied jacket.

B. If more than one material is listed, selection from materials listed is Contractor's option.

C. Ducts and Plenums, Concealed:
   1. Aluminum, Smooth: 0.020 inch thick.

END OF SECTION 230713

SECTION 231123 - FACILITY NATURAL-GAS PIPING

TIPS:

To view non-printing **Editor's Notes** that provide guidance for editing, click on MasterWorks/Single-File Formatting/Toggle/Editor's Notes.

To read **detailed research, technical information about products and materials, and coordination checklists**, click on MasterWorks/Supporting Information.

Content Requests:

<Double click here to submit questions, comments, or suggested edits to this Section.>

PART 1 - GENERAL

1.1 SUMMARY

A. Section Includes:

1. Pipes, tubes, and fittings.
2. Piping specialties.
3. Piping and tubing joining materials.
4. Manual gas shutoff valves.
5. Pressure regulators.
6. Dielectric unions.

1.2 ACTION SUBMITTALS

A. Product Data: For each type of product indicated.

1.3 CLOSEOUT SUBMITTALS

A. Operation and maintenance data.

1.4 QUALITY ASSURANCE

A. Electrical Components, Devices, and Accessories: Listed and labeled as defined in NFPA 70, by a qualified testing agency, and marked for intended location and application.

PART 2 - PRODUCTS

2.1 PERFORMANCE REQUIREMENTS

A. Minimum Operating-Pressure Ratings:

1. Piping and Valves: 100 psig minimum unless otherwise indicated.
2. Service Regulators: 100 psig minimum unless otherwise indicated.

B. Natural-Gas System Pressures within Buildings: Two pressure ranges. Primary pressure is more than 0.5 psig but not more than 2 psig, and is reduced to secondary pressure of 0.5 psig or less where indicated on plans.

2.2 PIPES, TUBES, AND FITTINGS

A. Steel Pipe: ASTM A53/A53M, black steel, Schedule 40, Type E or S, Grade B.

1. Malleable-Iron Threaded Fittings: ASME B16.3, Class 150, standard pattern.
2. Wrought-Steel Welding Fittings: ASTM A234/A234M for butt welding and socket welding.
3. Unions: ASME B16.39, Class 150, malleable iron with brass-to-iron seat, ground joint, and threaded ends.

2.3 PIPING SPECIALTIES

A. Appliance Flexible Connectors:

1. Indoor, Fixed-Appliance Flexible Connectors: Comply with ANSI Z21.24.
2. Indoor, Movable-Appliance Flexible Connectors: Comply with ANSI Z21.69.
3. Outdoor, Appliance Flexible Connectors: Comply with ANSI Z21.75.
4. Corrugated stainless-steel tubing with polymer coating.
5. Operating-Pressure Rating: 0.5 psig.
6. End Fittings: Zinc-coated steel.
7. Threaded Ends: Comply with ASME B1.20.1.
8. Maximum Length: 72 inches

B. Quick-Disconnect Devices: Comply with ANSI Z21.41.

1. Copper-alloy convenience outlet and matching plug connector.
2. Nitrile seals.
3. Hand operated with automatic shutoff when disconnected.
4. For indoor or outdoor applications.
5. Adjustable, retractable restraining cable.

C. Y-Pattern Strainers:

1. Body: ASTM A126, Class B, cast iron with bolted cover and bottom drain connection.

2. End Connections: Threaded ends for NPS 2 and smaller.
3. Strainer Screen: [**40**] [**60**]-mesh startup strainer, and perforated stainless-steel basket with 50 percent free area.
4. CWP Rating: 125 psig.

D. Weatherproof Vent Cap: Cast- or malleable-iron increaser fitting with corrosion-resistant wire screen, with free area at least equal to cross-sectional area of connecting pipe and threaded-end connection.

2.4 JOINING MATERIALS

A. Joint Compound and Tape: Suitable for natural gas.

B. Welding Filler Metals: Comply with AWS D10.12/D10.12M for welding materials appropriate for wall thickness and chemical analysis of steel pipe being welded.

C. Brazing Filler Metals: Alloy with melting point greater than 1000 deg F complying with AWS A5.8/A5.8M. Brazing alloys containing more than 0.05 percent phosphorus are prohibited.

2.5 MANUAL GAS SHUTOFF VALVES

A. See "Underground Manual Gas Shutoff Valve Schedule" and "Aboveground Manual Gas Shutoff Valve Schedule" Articles for where each valve type is applied in various services.

B. General Requirements for Metallic Valves, NPS 2 and Smaller: Comply with ASME B16.33.

1. CWP Rating: 125 psig.
2. Threaded Ends: Comply with ASME B1.20.1.
3. Dryseal Threads on Flare Ends: Comply with ASME B1.20.3.
4. Tamperproof Feature: Locking feature for valves indicated in "Underground Manual Gas Shutoff Valve Schedule" and "Aboveground Manual Gas Shutoff Valve Schedule" Articles.
5. Listing: Listed and labeled by an NRTL acceptable to authorities having jurisdiction for valves 1 inch and smaller.
6. Service Mark: Valves 1-1/4 inches to NPS 2 shall have initials "WOG" permanently marked on valve body.

C. Two-Piece, Full-Port, Bronze Ball Valves with Bronze Trim: MSS SP-110.

1. Manufacturers: Subject to compliance with requirements, available manufacturers offering products that may be incorporated into the Work include:

a. Apollo Valves; a part of Aalberts Integrated Piping Systems.
b. BrassCraft Manufacturing Co.; a Masco company.
c. Lyall, R. W. & Company, Inc.
d. Additional manufacturers submitted for and receiving engineer approval prior to bid.

2. Body: Bronze, complying with ASTM B584.
3. Ball: Chrome-plated bronze.
4. Stem: Bronze; blowout proof.
5. Seats: Reinforced TFE; blowout proof.
6. Packing: Threaded-body packnut design with adjustable-stem packing.
7. Ends: Threaded, flared, or socket as indicated in "Underground Manual Gas Shutoff Valve Schedule" and "Aboveground Manual Gas Shutoff Valve Schedule" Articles.
8. CWP Rating: 600 psig.
9. Listing: Valves NPS 1 and smaller shall be listed and labeled by an NRTL acceptable to authorities having jurisdiction.
10. Service: Suitable for natural-gas service with "WOG" indicated on valve body.

D. Valve Boxes:

1. Cast-iron, two-section box.
2. Top section with cover with "GAS" lettering.
3. Bottom section with base to fit over valve and barrel a minimum of 5 inches in diameter.
4. Adjustable cast-iron extensions of length required for depth of bury.
5. Include tee-handle, steel operating wrench with socket end fitting valve nut or flat head, and with stem of length required to operate valve.

2.6 PRESSURE REGULATORS

A. General Requirements:

1. Single stage and suitable for natural gas.
2. Steel jacket and corrosion-resistant components.
3. Elevation compensator.
4. End Connections: Threaded for regulators NPS 2 and smaller.

B. Line Pressure Regulators: Comply with ANSI Z21.80.

1. Manufacturers: Subject to compliance with requirements, available manufacturers offering products that may be incorporated into the Work include:

    a. Dormont; a WATTS brand.
    b. Eclipse Innovative Thermal Technologies.
    c. Invensys.
    d. Additional manufacturers submitted for and receiving engineer approval prior to bid.

2. Body and Diaphragm Case: Cast iron or die-cast aluminum.
3. Springs: Zinc-plated steel; interchangeable.
4. Diaphragm Plate: Zinc-plated steel.
5. Seat Disc: Nitrile rubber resistant to gas impurities, abrasion, and deformation at the valve port.
6. Orifice: Aluminum; interchangeable.
7. Seal Plug: Ultraviolet-stabilized, mineral-filled nylon.

8. Single-port, self-contained regulator with orifice no larger than required at maximum pressure inlet, and no pressure sensing piping external to the regulator.
9. Pressure regulator shall maintain discharge pressure setting downstream, and not exceed 150 percent of design discharge pressure at shutoff.
10. Atmospheric Vent: Factory- or field-installed, stainless-steel screen in opening if not connected to vent piping.
11. Maximum Inlet Pressure: Coordinate with Natural Gas utility.

C. Appliance Pressure Regulators: Comply with ANSI Z21.18.

1. Manufacturers: Subject to compliance with requirements, available manufacturers offering products that may be incorporated into the Work include:

    a. Dormont; a WATTS brand.
    b. Eaton.
    c. Maxitrol Company.
    d. Additional manufacturers submitted for and receiving engineer approval prior to bid.

2. Body and Diaphragm Case: Die-cast aluminum.
3. Springs: Zinc-plated steel; interchangeable.
4. Diaphragm Plate: Zinc-plated steel.
5. Seat Disc: Nitrile rubber.
6. Seal Plug: Ultraviolet-stabilized, mineral-filled nylon.
7. Factory-Applied Finish: Minimum three-layer polyester and polyurethane paint finish.
8. Regulator may include vent limiting device, instead of vent connection, if approved by authorities having jurisdiction.
9. Maximum Inlet Pressure: 5 psig.

2.7 DIELECTRIC UNIONS

A. Dielectric Unions:

1. Manufacturers: Subject to compliance with requirements, available manufacturers offering products that may be incorporated into the Work include:

    a. HART Industrial Unions, LLC.
    b. WATTS.
    c. Wilkins.
    d. Additional manufacturers submitted for and receiving engineer approval prior to bid.

2. Description:

    a. Standard: ASSE 1079.
    b. Pressure Rating: 125 psig minimum at 180 deg F.
    c. End Connections: Solder-joint copper alloy and threaded ferrous.

2.8 LABELING AND IDENTIFYING

A. Detectable Warning Tape: Acid- and alkali-resistant, PE film warning tape manufactured for marking and identifying underground utilities, a minimum of 6 inches wide and 4 mils thick, continuously inscribed with a description of utility, with metallic core encased in a protective jacket for corrosion protection, detectable by metal detector when tape is buried up to 30 inches deep; colored yellow.

PART 3 - EXECUTION

3.1 OUTDOOR PIPING INSTALLATION

A. Comply with North Carolina Fuel Gas Code for installation and purging of natural-gas piping.

B. Install fittings for changes in direction and branch connections.

3.2 INDOOR PIPING INSTALLATION

A. Comply with North Carolina Fuel Gas Code for installation and purging of natural-gas piping.

B. Drawing plans, schematics, and diagrams indicate general location and arrangement of piping systems. Indicated locations and arrangements are used to size pipe and calculate friction loss, expansion, and other design considerations. Install piping as indicated unless deviations to layout are approved on Coordination Drawings.

C. Arrange for pipe spaces, chases, slots, sleeves, and openings in building structure during progress of construction, to allow for mechanical installations.

D. Install piping in concealed locations unless otherwise indicated and except in equipment rooms and service areas.

E. Install piping indicated to be exposed and piping in equipment rooms and service areas at right angles or parallel to building walls. Diagonal runs are prohibited unless specifically indicated otherwise.

F. Install piping above accessible ceilings to allow sufficient space for ceiling panel removal.

G. Locate valves for easy access.

H. Install piping free of sags and bends.

I. Install fittings for changes in direction and branch connections.

J. Verify final equipment locations for roughing-in.

K. Comply with requirements in Sections specifying gas-fired appliances and equipment for roughing-in requirements.

L. Drips and Sediment Traps: Install drips at points where condensate may collect, including service-meter outlets. Locate where accessible to permit cleaning and emptying. Do not install where condensate is subject to freezing.

1. Construct drips and sediment traps using tee fitting with bottom outlet plugged or capped. Use nipple a minimum length of 3 pipe diameters, but not less than 3 inches long and same size as connected pipe. Install with space below bottom of drip to remove plug or cap.

M. Extend relief vent connections for service regulators, line regulators, and overpressure protection devices to outdoors and terminate with weatherproof vent cap.

N. Conceal pipe installations in walls, pipe spaces, utility spaces, above ceilings, below grade or floors, and in floor channels unless indicated to be exposed to view.

O. Connect branch piping from top or side of horizontal piping.

P. Install unions in pipes NPS 2 and smaller, adjacent to each valve, at final connection to each piece of equipment.

Q. Do not use natural-gas piping as grounding electrode.

R. Install strainer on inlet of each line-pressure regulator and automatic or electrically operated valve.

S. Install sleeves for piping penetrations of walls, ceilings, and floors. Comply with requirements for sleeves specified in Section 230517 "Sleeves and Sleeve Seals for HVAC Piping."

T. Install sleeve seals for piping penetrations of concrete walls and slabs. Comply with requirements for sleeve seals specified in Section 230517 "Sleeves and Sleeve Seals for HVAC Piping."

U. Install escutcheons for piping penetrations of walls, ceilings, and floors. Comply with requirements for escutcheons specified in Section 230518 "Escutcheons for HVAC Piping."

3.3 VALVE INSTALLATION

A. Install manual gas shutoff valve for each gas appliance ahead of corrugated stainless-steel tubing or copper connector.

B. Install underground valves with valve boxes.

C. Install regulators and overpressure protection devices with maintenance access space adequate for servicing and testing.

3.4 PIPING JOINT CONSTRUCTION

A. Ream ends of pipes and tubes and remove burrs.

B. Remove scale, slag, dirt, and debris from inside and outside of pipe and fittings before assembly.

C. Threaded Joints:

1. Thread pipe with tapered pipe threads complying with ASME B1.20.1.
2. Cut threads full and clean using sharp dies.
3. Ream threaded pipe ends to remove burrs and restore full inside diameter of pipe.
4. Apply appropriate tape or thread compound to external pipe threads unless dryseal threading is specified.
5. Damaged Threads: Do not use pipe or pipe fittings with threads that are corroded or damaged. Do not use pipe sections that have cracked or open welds.

D. Flared Joints: Cut tubing with roll cutting tool. Flare tube end with tool to result in flare dimensions complying with SAE J513. Tighten finger tight, then use wrench. Do not overtighten.

3.5 HANGER AND SUPPORT INSTALLATION

A. Comply with requirements for pipe hangers and supports specified in Section 230529 "Hangers and Supports for HVAC Piping and Equipment."

B. Install hangers for steel piping, with maximum horizontal spacing and minimum rod diameter, to comply with MSS-58, locally enforced codes, and authorities having jurisdiction requirements, whichever are most stringent.

C. Install hangers for corrugated stainless-steel tubing, with maximum horizontal spacing and minimum rod diameter, to comply with manufacturer's written instructions, locally enforced codes, and authorities having jurisdiction requirements, whichever are most stringent.

D. Support horizontal piping within 12 inches of each fitting.

E. Support vertical runs of steel piping to comply with MSS-58, locally enforced codes, and authorities having jurisdiction requirements, whichever are most stringent.

F. Support vertical runs of corrugated stainless-steel tubing to comply with manufacturer's written instructions, locally enforced codes, and authorities having jurisdiction requirements, whichever are most stringent.

3.6 CONNECTIONS

A. Install natural-gas piping electrically continuous, and bonded to gas appliance equipment grounding conductor of the circuit powering the appliance according to NFPA 70.

B. Install piping adjacent to appliances to allow service and maintenance of appliances.

C. Connect piping to appliances using manual gas shutoff valves and unions. Install valve within 72 inches of each gas-fired appliance and equipment. Install union between valve and appliances or equipment.

D. Sediment Traps: Install tee fitting with capped nipple in bottom to form drip, as close as practical to inlet of each appliance.

3.7 LABELING AND IDENTIFYING

A. Comply with requirements in Section 230553 "Identification for HVAC Piping and Equipment" for piping and valve identification.

B. Install detectable warning tape directly above gas piping.

3.8 FIELD QUALITY CONTROL

A. Test, inspect, and purge natural gas according to North Carolina Fuel Gas Code and authorities having jurisdiction.

B. Natural-gas piping will be considered defective if it does not pass tests and inspections.

3.9 OUTDOOR PIPING SCHEDULE

A. Aboveground natural-gas piping shall be the following:

1. Steel pipe with malleable-iron fittings and threaded joints.

3.10 INDOOR PIPING SCHEDULE

A. Aboveground, branch piping NPS 2 and smaller shall be the following:
1. Steel pipe with malleable-iron fittings and threaded joints.

B. Aboveground, distribution piping shall be the following:

1. Steel pipe with malleable-iron fittings and threaded joints.

3.11 ABOVEGROUND MANUAL GAS SHUTOFF VALVE SCHEDULE

A. Valves for pipe sizes NPS 2 and smaller at service meter shall be the following:
1. Two-piece, full-port, bronze ball valves with bronze trim.

B. Distribution piping valves for pipe sizes NPS 2 and smaller shall be the following:
1. Two-piece, full-port, bronze ball valves with bronze trim.

C. Valves in branch piping for single appliance shall be the following:

1. Two-piece, full-port, bronze ball valves with bronze trim.

END OF SECTION 231123

SECTION 232300 - REFRIGERANT PIPING

PART 1 - GENERAL

1.1 SUMMARY

A. Section Includes:

1. Copper tube and fittings.
2. Valves and specialties.
3. Refrigerants.

1.2 ACTION SUBMITTALS

A. Product Data: For each type of valve, refrigerant piping, and refrigerant piping specialty.

1.3 CLOSEOUT SUBMITTALS

A. Operation and Maintenance Data: For refrigerant valves and piping specialties to include in maintenance manuals.

1.4 QUALITY ASSURANCE

A. Comply with ASHRAE 15, "Safety Code for Refrigeration Systems."

B. Comply with ASME B31.5, "Refrigeration Piping and Heat Transfer Components."

PART 2 - PRODUCTS

2.1 PERFORMANCE REQUIREMENTS

A. Line Test Pressure for Refrigerant R-410A:

1. Suction Lines for Air-Conditioning Applications: 300 psig.
2. Suction Lines for Heat-Pump Applications: 535 psig.
3. Hot-Gas and Liquid Lines: 535 psig.

2.2 COPPER TUBE AND FITTINGS

A. Copper Tube: ASTM B 280, Type ACR.

B. Wrought-Copper Fittings, Solder-Joint: ASME B16.22.

C. Wrought-Copper Fittings, Brazed-Joint: ASME B16.50.

D. Solder Filler Metals: ASTM B 32. Use 95-5 tin antimony or alloy HB solder to join copper socket fittings on copper pipe.

E. Brazing Filler Metals: AWS A5.8/A5.8M.

F. Flexible Connectors:

1. Body: Tin-bronze bellows with woven, flexible, tinned-bronze-wire-reinforced protective jacket.
2. End Connections: Socket ends.
3. Offset Performance: Capable of minimum 3/4-inch misalignment in minimum 7-inch-long assembly.
4. Working Pressure Rating: Factory test at minimum 500 psig.
5. Maximum Operating Temperature: 250 deg F.

G. Copper-Tube, Pressure-Seal-Joint Fittings for Refrigerant Piping:

1. Manufacturers: Subject to compliance with requirements, available manufacturers offering products that may be incorporated into the Work include:

    a. Conex Banninger - USA.
    b. Additional manufacturers submitted for and receiving engineer approval prior to bid.

2. Standard: UL 207; certified by UL for field installation. Certification as a UL-recognized component alone is unacceptable.
3. Housing: Copper.
4. O-Rings: HNBR or compatible with specific refrigerant.
5. Tools: Manufacturer's approved special tools.
6. Minimum Rated Pressure: 700 psig

2.3 VALVES AND SPECIALTIES

A. Check Valves:

1. Manufacturers: Subject to compliance with requirements, available manufacturers offering products that may be incorporated into the Work include:

    a. Danfoss Inc.
    b. Heldon Products; Henry Technologies.
    c. Parker Hannifin Corp.
    d. Additional manufacturers submitted for and receiving engineer approval prior to bid.

2. Body: Ductile iron, forged brass, or cast bronze; globe pattern.

3. Bonnet: Bolted ductile iron, forged brass, or cast bronze; or brass hex plug.
4. Piston: Removable polytetrafluoroethylene seat.
5. Closing Spring: Stainless steel.
6. End Connections: Socket, union, threaded, or flanged.
7. Maximum Opening Pressure: 0.50 psig.
8. Working Pressure Rating: 500 psig.
9. Maximum Operating Temperature: 275 deg F.

B. Refrigerant Locking Caps:

1. Manufacturers: Subject to compliance with requirements, available manufacturers offering products that may be incorporated into the Work include:

    a. C & D Valve, LLC.
    b. JB Industries.
    c. Additional manufacturers submitted for and receiving engineer approval prior to bid.

2. Description: Locking-type, tamper-resistant, threaded caps to protect refrigerant charging ports from unauthorized refrigerant access and leakage.
3. Material: Brass, with protective shroud or sleeve.
4. Refrigerant Identification: Color-coded, refrigerant specific design.
5. Special Tool: For installing and unlocking.

C. Solenoid Valves: Comply with AHRI 760 and UL 429; listed and labeled by a National Recognized Testing Laboratory (NRTL).

1. Manufacturers: Subject to compliance with requirements, available manufacturers offering products that may be incorporated into the Work include:

    a. Danfoss Inc.
    b. Heldon Products; Henry Technologies.
    c. Parker Hannifin Corp.
    d. Additional manufacturers submitted for and receiving engineer approval prior to bid.

2. Body and Bonnet: Plated steel.
3. Solenoid Tube, Plunger, Closing Spring, and Seat Orifice: Stainless steel.
4. Seat: Polytetrafluoroethylene.
5. End Connections: Threaded.
6. Electrical: Molded, watertight coil in NEMA 250 enclosure of type required by location with 1/2-inch conduit adapter, and 24-V ac coil.
7. Working Pressure Rating: 400 psig.
8. Maximum Operating Temperature: 240 deg F.

D. Thermostatic Expansion Valves: Comply with AHRI 750.

1. Manufacturers: Subject to compliance with requirements, available manufacturers offering products that may be incorporated into the Work include:

a. Danfoss Inc.
b. Emerson Climate Technologies.
c. Heldon Products; Henry Technologies.
d. Additional manufacturers submitted for and receiving engineer approval prior to bid.

2. Body, Bonnet, and Seal Cap: Forged brass or steel.
3. Diaphragm, Piston, Closing Spring, and Seat Insert: Stainless steel.
4. Packing and Gaskets: Non-asbestos.
5. Capillary and Bulb: Copper tubing filled with refrigerant charge.
6. Suction Temperature: Confirm wit HVAC manufacturer's recommendations.
7. Reverse-flow option (for heat-pump applications).
8. End Connections: Socket, flare, or threaded union.
9. Working Pressure Rating: 450 psig.

E. Straight-Type Strainers:

1. Manufacturers: Subject to compliance with requirements, available manufacturers offering products that may be incorporated into the Work include:

a. Danfoss Inc.
b. Heldon Products; Henry Technologies.
c. Additional manufacturers submitted for and receiving engineer approval prior to bid.

2. Body: Welded steel with corrosion-resistant coating.
3. Screen: 100-mesh stainless steel.
4. End Connections: Socket or flare.
5. Working Pressure Rating: 500 psig.
6. Maximum Operating Temperature: 275 deg F.

F. Angle-Type Strainers:

1. Manufacturers: Subject to compliance with requirements, available manufacturers offering products that may be incorporated into the Work include:

a. Danfoss Inc.
b. Heldon Products; Henry Technologies.
c. Additional manufacturers submitted for and receiving engineer approval prior to bid.

2. Body: Forged brass or cast bronze.
3. Drain Plug: Brass hex plug.
4. Screen: 100-mesh monel.
5. End Connections: Socket or flare.
6. Working Pressure Rating: 500 psig.
7. Maximum Operating Temperature: 275 deg F.

G. Moisture/Liquid Indicators:

1. Manufacturers: Subject to compliance with requirements, available manufacturers offering products that may be incorporated into the Work include:

    a. Danfoss Inc.
    b. Emerson Climate Technologies.
    c. Heldon Products; Henry Technologies.
    d. Additional manufacturers submitted for and receiving engineer approval prior to bid.

2. Body: Forged brass.
3. Window: Replaceable, clear, fused glass window with indicating element protected by filter screen.
4. Indicator: Color coded to show moisture content in parts per million (ppm).
5. Minimum Moisture Indicator Sensitivity: Indicate moisture above 60 ppm.
6. End Connections: Socket or flare.
7. Working Pressure Rating: 500 psig.
8. Maximum Operating Temperature: 240 deg F.

H. Replaceable-Core Filter Dryers: Comply with AHRI 730.

1. Manufacturers: Subject to compliance with requirements, available manufacturers offering products that may be incorporated into the Work include:

    a. Danfoss Inc.
    b. Emerson Climate Technologies.
    c. Heldon Products; Henry Technologies.
    d. Additional manufacturers submitted for and receiving engineer approval prior to bid.

2. Body and Cover: Painted-steel shell with ductile-iron cover, stainless-steel screws, and neoprene gaskets.
3. Filter Media: 10 micron, pleated with integral end rings; stainless-steel support.
4. Desiccant Media: Activated alumina.
5. Designed for reverse flow (for heat-pump applications).
6. End Connections: Socket.
7. Access Ports: NPS 1/4 connections at entering and leaving sides for pressure differential measurement.
8. Maximum Pressure Loss: 2 psig.
9. Rated Flow: Coordinate with equipment ratings.
10. Working Pressure Rating: 500 psig.
11. Maximum Operating Temperature: 240 deg F.

I. Permanent Filter Dryers: Comply with AHRI 730.

1. Manufacturers: Subject to compliance with requirements, available manufacturers offering products that may be incorporated into the Work include:

    a. Danfoss Inc.
    b. Emerson Climate Technologies.
    c. Heldon Products; Henry Technologies.

d. Additional manufacturers submitted for and receiving engineer approval prior to bid.

2. Body and Cover: Painted-steel shell.
3. Filter Media: 10 micron, pleated with integral end rings; stainless-steel support.
4. Desiccant Media: Activated alumina.
5. Designed for reverse flow (for heat-pump applications).
6. End Connections: Socket.
7. Access Ports: NPS 1/4 connections at entering and leaving sides for pressure differential measurement.
8. Maximum Pressure Loss: 2 psig.
9. Rated Flow: Coordinate with equipment ratings.
10. Working Pressure Rating: 500 psig.
11. Maximum Operating Temperature: 240 deg F.

2.4 REFRIGERANTS

A. ASHRAE 34, R-410A: Pentafluoroethane/Difluoromethane.

1. Manufacturers: Subject to compliance with requirements, available manufacturers offering products that may be incorporated into the Work include:

a. Arkema Inc.
b. DuPont Fluorochemicals Div.
c. Genetron Refrigerants; Honeywell International Inc.
d. Additional manufacturers submitted for and receiving engineer approval prior to bid.

PART 3 - EXECUTION

3.1 PIPING APPLICATIONS FOR REFRIGERANT R-410A

A. Suction Lines: Copper, Type ACR, annealed-temper tubing and wrought-copper fittings with brazed or soldered joints.

B. Hot-Gas and Liquid Lines, and Suction Lines for Heat-Pump Applications:

1. Copper, Type ACR, annealed- or drawn-temper tubing and wrought-copper fittings with brazed or soldered joints.

3.2 VALVE AND SPECIALTY APPLICATIONS

A. Install service valves for gauge taps at inlet and outlet of hot-gas bypass valves and strainers if they are not an integral part of valves and strainers.

B. Install a check valve at the compressor discharge and a liquid accumulator at the compressor suction connection.

C. Except as otherwise indicated, install diaphragm packless valves on inlet and outlet side of filter dryers.

D. Install a full-size, three-valve bypass around filter dryers.

E. Install thermostatic expansion valves as close as possible to distributors on evaporators.

1. Install valve so diaphragm case is warmer than bulb.
2. Secure bulb to clean, straight, horizontal section of suction line using two bulb straps. Do not mount bulb in a trap or at bottom of the line.
3. If external equalizer lines are required, make connection where it will reflect suction-line pressure at bulb location.

F. Install moisture/liquid indicators in liquid line at the inlet of the thermostatic expansion valve or at the inlet of the evaporator coil capillary tube.

G. Install strainers upstream from and adjacent to the following unless they are furnished as an integral assembly for the device being protected:

1. Solenoid valves.
2. Thermostatic expansion valves.
3. Hot-gas bypass valves.
4. Compressor.

H. Install filter dryers in liquid line between compressor and thermostatic expansion valve.

I. Install receivers sized to accommodate pump-down charge as required by MFG.

J. Provide refrigerant locking caps on refrigerant charging ports that are located outdoors unless otherwise protected from unauthorized access by a means acceptable to the authority having jurisdiction.

3.3 INSTALLATION OF PIPING, GENERAL

A. Drawing plans, schematics, and diagrams indicate general location and arrangement of piping systems; indicated locations and arrangements were used to size pipe and calculate friction loss, expansion, pump sizing, and other design considerations. Install piping as indicated unless deviations to layout are approved on Shop Drawings.

B. Install refrigerant piping according to ASHRAE 15.

C. Install piping in concealed locations unless otherwise indicated and except in equipment rooms and service areas.

D. Install piping indicated to be exposed and piping in equipment rooms and service areas at right angles or parallel to building walls. Diagonal runs are prohibited unless specifically indicated otherwise.

E. Install piping above accessible ceilings to allow sufficient space for ceiling panel removal.

F. Install piping adjacent to machines to allow service and maintenance.

G. Install piping free of sags and bends.

H. Install fittings for changes in direction and branch connections.

I. Select system components with pressure rating equal to or greater than system operating pressure.

J. Install piping as short and direct as possible, with a minimum number of joints, elbows, and fittings.

K. Arrange piping to allow inspection and service of refrigeration equipment. Install valves and specialties in accessible locations to allow for service and inspection. Install access doors or panels as specified in Section 083113 "Access Doors and Frames" if valves or equipment requiring maintenance is concealed behind finished surfaces.

L. Install refrigerant piping in protective conduit where installed belowground.

M. Install refrigerant piping in rigid or flexible conduit in locations where exposed to mechanical injury.

N. Slope refrigerant piping as follows:

1. Install horizontal hot-gas discharge piping with a uniform slope downward away from compressor.
2. Install horizontal suction lines with a uniform slope downward to compressor.
3. Install traps and double risers to entrain oil in vertical runs.
4. Liquid lines may be installed level.

O. When brazing or soldering, remove solenoid-valve coils and sight glasses; also remove valve stems, seats, and packing, and accessible internal parts of refrigerant specialties. Do not apply heat near expansion-valve bulb.

P. Install piping with adequate clearance between pipe and adjacent walls and hangers or between pipes for insulation installation.

Q. Identify refrigerant piping and valves according to Section 230553 "Identification for HVAC Piping and Equipment."

R. Install sleeves for piping penetrations of walls, ceilings, and floors. Comply with requirements for sleeves specified in Section 230517 "Sleeves and Sleeve Seals for HVAC Piping."

S. Install sleeve seals for piping penetrations of concrete walls and slabs. Comply with requirements for sleeve seals specified in Section 230517 "Sleeves and Sleeve Seals for HVAC Piping."

T. Install escutcheons for piping penetrations of walls, ceilings, and floors. Comply with requirements for escutcheons specified in Section 230518 "Escutcheons for HVAC Piping."

3.4 PIPE JOINT CONSTRUCTION

A. Ream ends of pipes and tubes and remove burrs.

B. Remove scale, slag, dirt, and debris from inside and outside of pipe and fittings before assembly.

C. Soldered Joints: Construct joints according to ASTM B 828 or CDA's "Copper Tube Handbook."

D. Brazed Joints: Construct joints according to AWS's "Brazing Handbook," Chapter "Pipe and Tube."

1. Use Type BCuP (copper-phosphorus) alloy for joining copper socket fittings with copper pipe.
2. Use Type BAg (cadmium-free silver) alloy for joining copper with bronze or steel.

3.5 INSTALLATION OF HANGERS AND SUPPORTS

A. Comply with Section 230529 "Hangers and Supports for HVAC Piping and Equipment" for hangers, supports, and anchor devices.

B. Install the following pipe attachments:

1. Adjustable steel clevis hangers for individual horizontal runs less than 20 feet long.
2. Roller hangers and spring hangers for individual horizontal runs 20 feet or longer.
3. Pipe Roller: MSS SP-58, Type 44 for multiple horizontal piping 20 feet or longer, supported on a trapeze.
4. Spring hangers to support vertical runs.
5. Copper-clad hangers and supports for hangers and supports in direct contact with copper pipe.

C. Install hangers for copper tubing, with maximum horizontal spacing and minimum rod diameters, to comply with MSS-58, locally enforced codes, and authorities having jurisdiction requirements, whichever are most stringent.

D. Support horizontal piping within 12 inches of each fitting.

E. Support vertical runs of copper tubing to comply with MSS-58, locally enforced codes, and authorities having jurisdiction requirements, whichever are most stringent.

3.6 FIELD QUALITY CONTROL

A. Perform the following tests and inspections:

1. Comply with ASME B31.5, Chapter VI.

2. Test refrigerant piping, specialties, and receivers. Isolate compressor, condenser, evaporator, and safety devices from test pressure if they are not rated above the test pressure.
3. Test high- and low-pressure side piping of each system separately at not less than the pressures indicated in "Performance Requirements" Article.

    a. Fill system with nitrogen to the required test pressure.
    b. System shall maintain test pressure at the manifold gage throughout duration of test.
    c. Test joints and fittings with electronic leak detector or by brushing a small amount of soap and glycerin solution over joints.
    d. Remake leaking joints using new materials, and retest until satisfactory results are achieved.

3.7 SYSTEM CHARGING

A. Charge system using the following procedures:

1. Install core in filter dryers after leak test but before evacuation.
2. Evacuate entire refrigerant system with a vacuum pump to 500 micrometers. If vacuum holds for 12 hours, system is ready for charging.
3. Break vacuum with refrigerant gas, allowing pressure to build up to 2 psig.
4. Charge system with a new filter-dryer core in charging line.

3.8 ADJUSTING

A. Adjust thermostatic expansion valve to obtain proper evaporator superheat.

B. Adjust high- and low-pressure switch settings to avoid short cycling in response to fluctuating suction pressure.

C. Adjust set-point temperature of air-conditioning or chilled-water controllers to the system design temperature.

D. Perform the following adjustments before operating the refrigeration system, according to manufacturer's written instructions:

1. Open shutoff valves in condenser water circuit.
2. Verify that compressor oil level is correct.
3. Open compressor suction and discharge valves.
4. Open refrigerant valves except bypass valves that are used for other purposes.
5. Check open compressor-motor alignment and verify lubrication for motors and bearings.

E. Replace core of replaceable filter dryer after system has been adjusted and after design flow rates and pressures are established.

END OF SECTION 232300

SECTION 233113 - METAL DUCTS

PART 1 - GENERAL

1.1 RELATED DOCUMENTS

A. Drawings and general provisions of the Contract, including General and Supplementary Conditions and Division 01 Specification Sections, apply to this Section.

1.2 SUMMARY

A. Section Includes:

1. Single-wall rectangular ducts and fittings.
2. Single-wall round ducts and fittings.
3. Sheet metal materials.
4. Duct liner.
5. Sealants and gaskets.
6. Hangers and supports.

B. Related Sections:

1. Section 230593 "Testing, Adjusting, and Balancing for HVAC" for testing, adjusting, and balancing requirements for metal ducts.
2. Section 233300 "Air Duct Accessories" for dampers, sound-control devices, duct-mounting access doors and panels, turning vanes, and flexible ducts.

1.3 ACTION SUBMITTALS

A. Product Data: For each type of the following products:

1. Liners and adhesives.
2. Sealants and gaskets.

PART 2 - PRODUCTS

2.1 PERFORMANCE REQUIREMENTS

A. Delegated Duct Design: Duct construction, including sheet metal thicknesses, seam and joint construction, reinforcements, and hangers and supports, shall comply with SMACNA's "HVAC Duct Construction Standards - Metal and Flexible" and with performance requirements and design criteria indicated in "Duct Schedule" Article.

B. Structural Performance: Duct hangers and supports shall withstand the effects of gravity loads and stresses within limits and under conditions described in SMACNA's "HVAC Duct Construction Standards - Metal and Flexible" and North Carolina Mechanical Code

C. Duct Dimensions: Unless otherwise indicated, all duct dimensions indicated on Drawings are inside clear dimensions and do not include insulation or duct wall thickness.

2.2 SINGLE-WALL RECTANGULAR DUCTS AND FITTINGS

A. General Fabrication Requirements: Comply with SMACNA's "HVAC Duct Construction Standards - Metal and Flexible" based on indicated static-pressure class unless otherwise indicated.

1. Construct ducts of galvanized sheet steel unless otherwise indicated.

B. Transverse Joints: Fabricate joints in accordance with SMACNA's "HVAC Duct Construction Standards - Metal and Flexible," Figure 2-1, "Rectangular Duct/Transverse Joints," for static-pressure class, applicable sealing requirements, materials involved, duct-support intervals, and other provisions in SMACNA's "HVAC Duct Construction Standards - Metal and Flexible."

1. For ducts with longest side less than 36 inches, select joint types in accordance with Figure 2-1.
2. For ducts with longest side 36 inches or greater, use flange joint connector Type T-22, T-24, T-24A, T-25a, or T-25b. Factory-fabricated flanged duct connection system may be used if submitted and approved by engineer of record.

~~C.~~ Longitudinal Seams: Select seam types and fabricate in accordance with SMACNA's "HVAC Duct Construction Standards - Metal and Flexible," Figure 2-2, "Rectangular Duct/Longitudinal Seams," for static-pressure class, applicable sealing requirements, materials involved, duct-support intervals, and other provisions in SMACNA's "HVAC Duct Construction Standards - Metal and Flexible."

D. Elbows, Transitions, Offsets, Branch Connections, and Other Duct Construction: Select types and fabricate in accordance with SMACNA's "HVAC Duct Construction Standards - Metal and Flexible," Ch. 4, "Fittings and Other Construction," for static-pressure class, applicable sealing requirements, materials involved, duct-support intervals, and other provisions in SMACNA's "HVAC Duct Construction Standards - Metal and Flexible."

2.3 SINGLE-WALL ROUND DUCTS AND FITTINGS

A. General Fabrication Requirements: Comply with SMACNA's "HVAC Duct Construction Standards - Metal and Flexible," Ch. 3, "Round, Oval, and Flexible Duct," based on indicated static-pressure class unless otherwise indicated.

1. Construct ducts of galvanized sheet steel unless otherwise indicated.

2. For ducts installed serving chemical storage and pool equipment room, construct of Type 316 stainless steel indicated by manufacturer to be suitable for corrosive airflow.

3. Manufacturers: Subject to compliance with requirements, available manufacturers offering products that may be incorporated into the Work include:

    a. McGill AirFlow LLC.
    b. Sheet Metal Connectors, Inc.
    c. Spiral Manufacturing Co., Inc.
    d. Additional manufacturers submitted for and receiving engineer approval prior to bid.

B. Flat-Oval Ducts: Indicated dimensions are the duct width (major dimension) and diameter of the round sides connecting the flat portions of the duct (minor dimension).

C. Transverse Joints: Select joint types and fabricate in accordance with SMACNA's "HVAC Duct Construction Standards - Metal and Flexible," Figure 3-1, "Round Duct Transverse Joints," for static-pressure class, applicable sealing requirements, materials involved, duct-support intervals, and other provisions in SMACNA's "HVAC Duct Construction Standards - Metal and Flexible."

1. Transverse Joints in Ducts Larger Than 60 Inches in Diameter: Flanged.

D. Longitudinal Seams: Select seam types and fabricate in accordance with SMACNA's "HVAC Duct Construction Standards - Metal and Flexible," Figure 3-2, "Round Duct Longitudinal Seams," for static-pressure class, applicable sealing requirements, materials involved, duct-support intervals, and other provisions in SMACNA's "HVAC Duct Construction Standards - Metal and Flexible."

1. Fabricate round ducts larger than 90 inches in diameter with butt-welded longitudinal seams.

E. Tees and Laterals: Select types and fabricate in accordance with SMACNA's "HVAC Duct Construction Standards - Metal and Flexible," Figure 3-5, "90 Degree Tees and Laterals," and Figure 3-6, "Conical Tees," for static-pressure class, applicable sealing requirements, materials involved, duct-support intervals, and other provisions in SMACNA's "HVAC Duct Construction Standards - Metal and Flexible."

2.4 SHEET METAL MATERIALS

A. General Material Requirements: Comply with SMACNA's "HVAC Duct Construction Standards - Metal and Flexible" for acceptable materials, material thicknesses, and duct construction methods unless otherwise indicated. Sheet metal materials shall be free of pitting, seam marks, roller marks, stains, discolorations, and other imperfections.

B. Galvanized Sheet Steel: Comply with ASTM A653/A653M.

1. Galvanized Coating Designation: G90.
2. Finishes for Surfaces Exposed to View: Mill phosphatized.

C. Carbon-Steel Sheets: Comply with ASTM A1008/A1008M, with oiled, matte finish for exposed ducts.

D. Stainless-Steel Sheets: Comply with ASTM A480/A480M, Type 304 or 316, as indicated in "Duct Schedule" Article; cold rolled, annealed, sheet. Exposed surface finish shall be No. 2B, No. 2D, No. 3, or No. 4 as indicated in "Duct Schedule" Article.

E. Aluminum Sheets: Comply with ASTM B209 Alloy 3003, H14 temper; with mill finish for concealed ducts, and standard, one-side bright finish for duct surfaces exposed to view.

F. Reinforcement Shapes and Plates: ASTM A36/A36M, steel plates, shapes, and bars; black and galvanized.

1. Where black- and galvanized-steel shapes and plates are used to reinforce aluminum ducts, isolate the different metals with butyl rubber, neoprene, or EPDM gasket materials.

G. Tie Rods: Galvanized steel, 1/4-inch-minimum diameter for lengths 36 inches or less; 3/8-inch-minimum diameter for lengths longer than 36 inches.

2.5 DUCT LINER

A. Fibrous-Glass Duct Liner: Comply with ASTM C1071, NFPA 90A, or NFPA 90B; and with NAIMA AH124, "Fibrous Glass Duct Liner Standard."

1. Manufacturers: Subject to compliance with requirements, available manufacturers offering products that may be incorporated into the Work include:

a. CertainTeed Insulation.
b. Johns Manville; a Berkshire Hathaway company.
c. Knauf Insulation.
d. Additional manufacturers submitted for and receiving engineer approval prior to bid.

2. Antimicrobial Erosion-Resistant Coating: Apply to the surface of the liner that will form the interior surface of the duct to act as a moisture repellent and erosion-resistant coating. Antimicrobial compound shall be tested for efficacy by an NRTL and registered by the EPA for use in HVAC systems.
3. Solvent or Water-Based Liner Adhesive: Comply with NFPA 90A or NFPA 90B and with ASTM C916.

B. Flexible Elastomeric Duct Liner: Preformed, cellular, closed-cell, sheet materials complying with ASTM C534/C534M, Type II, Grade 1; and with NFPA 90A or NFPA 90B.

1. Manufacturers: Subject to compliance with requirements, available manufacturers offering products that may be incorporated into the Work include:

a. Aeroflex USA.
b. Armacell LLC.
c. Ductmate Industries, Inc.
d. Additional manufacturers submitted for and receiving engineer approval prior to bid.

2. Surface-Burning Characteristics: Maximum flame-spread index of 25 and maximum smoke-developed index of 50 when tested in accordance with UL 723; certified by an NRTL.
3. Liner Adhesive: As recommended by insulation manufacturer and complying with NFPA 90A or NFPA 90B.

C. Fiberglass-Free Duct Liner: Made from partially recycled cotton or polyester products and containing no fiberglass. Airstream surface overlaid with fire-resistant facing to prevent surface erosion by airstream, complying with NFPA 90A or NFPA 90B. Treat natural-fiber products with antimicrobial coating.

1. Manufacturers: Subject to compliance with requirements, available manufacturers offering products that may be incorporated into the Work:

    a. Acoustical Surfaces, Inc.
    b. Bonded Logic, Inc.
    c. Additional manufacturers submitted for and receiving engineer approval prior to bid.
2. Maximum Thermal Conductivity: 0.26 Btu x in./h x sq. ft. x deg F at 75 deg F mean temperature when tested in accordance with ASTM C518.
3. Surface-Burning Characteristics: Maximum flame-spread index of 25 and maximum smoke-developed index of 50 when tested in accordance with ASTM E84; certified by an NRTL.
4. Liner Adhesive: As recommended by insulation manufacturer and complying with NFPA 90A or NFPA 90B.

D. Insulation Pins and Washers:

1. Cupped-Head, Capacitor-Discharge-Weld Pins: Copper- or zinc-coated steel pin, fully annealed for capacitor-discharge welding, length to suit depth of insulation indicated with integral 1-1/2-inch galvanized carbon-steel washer.
2. Insulation-Retaining Washers: Self-locking washers formed from 0.016-inch-thick galvanized steel; with beveled edge sized as required to hold insulation securely in place, but not less than 1-1/2 inches in diameter.

E. Shop Application of Duct Liner: Comply with SMACNA's "HVAC Duct Construction Standards - Metal and Flexible," Figure 7-11, "Flexible Duct Liner Installation."

1. Adhere a single layer of indicated thickness of duct liner with at least 90 percent adhesive coverage at liner contact surface area. Attaining indicated thickness with multiple layers of duct liner is prohibited.
2. Apply adhesive to transverse edges of liner facing upstream that do not receive metal nosing.
3. Butt transverse joints without gaps, and coat joint with adhesive.
4. Fold and compress liner in corners of rectangular ducts or cut and fit to ensure butted-edge overlapping.
5. Do not apply liner in rectangular ducts with longitudinal joints, except at corners of ducts, unless duct size and dimensions of standard liner make longitudinal joints necessary.

6. Apply adhesive coating on longitudinal seams in ducts with air velocity of 2500 fpm or greater.
7. Secure liner with mechanical fasteners 4 inches from corners and at intervals not exceeding 12 inches transversely; at 3 inches from transverse joints and at intervals not exceeding 18 inches longitudinally.
8. Secure transversely oriented liner edges facing the airstream with metal nosings that have either channel or "Z" profiles or are integrally formed from duct wall. Fabricate edge facings at the following locations:

    a. Fan discharges.
    b. Intervals of lined duct preceding unlined duct.
    c. Upstream edges of transverse joints in ducts where air velocities are higher than 2500 fpm or where indicated.

9. Terminate inner ducts with buildouts attached to fire-damper sleeves, dampers, turning vane assemblies, or other devices. Fabricated buildouts (metal hat sections) or other buildout means are optional; when used, secure buildouts to duct walls with bolts, screws, rivets, or welds.

2.6 SEALANT AND GASKETS

A. General Sealant and Gasket Requirements: Surface-burning characteristics for sealants and gaskets shall be a maximum flame-spread index of 25 and a maximum smoke-developed index of 50 when tested in accordance with UL 723; certified by an NRTL.

B. Two-Part Tape Sealing System:

1. Tape: Woven cotton fiber impregnated with mineral gypsum and modified acrylic/silicone activator to react exothermically with tape to form hard, durable, airtight seal.
2. Tape Width: 4 inches.
3. Sealant: Modified styrene acrylic.
4. Water resistant.
5. Mold and mildew resistant.
6. Maximum Static-Pressure Class: 10-inch wg, positive and negative.
7. Service: Indoor and outdoor.
8. Service Temperature: Minus 40 to plus 200 deg F.
9. Substrate: Compatible with galvanized sheet steel (both PVC coated and bare), stainless steel, or aluminum.

C. Water-Based Joint and Seam Sealant:

1. Application Method: Brush on.
2. Solids Content: Minimum 65 percent.
3. Shore A Hardness: Minimum 20.
4. Water resistant.
5. Mold and mildew resistant.
6. VOC: Maximum 75 g/L (less water).
7. Maximum Static-Pressure Class: 10-inch wg, positive and negative.

8. Service: Indoor or outdoor.
9. Substrate: Compatible with galvanized sheet steel (both PVC coated and bare), stainless steel, or aluminum sheets.

10. Maximum Static-Pressure Class: 10-inch wg, positive or negative.
11. Service: Indoor or outdoor.
12. Substrate: Compatible with galvanized sheet steel (both PVC coated and bare), stainless steel, or aluminum sheets.

D. Flanged Joint Sealant: Comply with ASTM C920.

1. General: Single-component, acid-curing, silicone, elastomeric.
2. Type: S.
3. Grade: NS.
4. Class: 25.
5. Use: O.

E. Flange Gaskets: Butyl rubber, neoprene, or EPDM polymer with polyisobutylene plasticizer.

F. Round Duct Joint O-Ring Seals:

1. Seal shall provide maximum leakage class of 3 cfm/100 sq. ft. at 1-inch wg and shall be rated for10-inch wg static-pressure class, positive or negative.
2. EPDM O-ring to seal in concave bead in coupling or fitting spigot.
3. Double-lipped, EPDM O-ring seal, mechanically fastened to factory-fabricated couplings and fitting spigots.

2.7 HANGERS AND SUPPORTS

A. Hanger Rods for Noncorrosive Environments: Galvanized-steel rods and nuts.

B. Hanger Rods for Corrosive Environments: Electrogalvanized, all-thread rods or galvanized rods with threads painted with zinc-chromate primer after installation.

C. Strap and Rod Sizes: Comply with SMACNA's "HVAC Duct Construction Standards - Metal and Flexible," Table 5-1, "Rectangular Duct Hangers Minimum Size," and Table 5-2, "Minimum Hanger Sizes for Round Duct."

D. Steel Cables for Galvanized-Steel Ducts: Galvanized steel complying with ASTM A603.

E. Steel Cables for Stainless-Steel Ducts: Stainless steel complying with ASTM A492.

F. Steel Cable End Connections: Galvanized-steel assemblies with brackets, swivel, and bolts designed for duct hanger service; with an automatic-locking and clamping device.

G. Duct Attachments: Sheet metal screws, blind rivets, or self-tapping metal screws; compatible with duct materials.

H. Trapeze and Riser Supports:

1. Supports for Galvanized-Steel Ducts: Galvanized-steel shapes and plates.
2. Supports for Stainless-Steel Ducts: Stainless-steel shapes and plates.
3. Supports for Aluminum Ducts: Aluminum or galvanized steel coated with zinc chromate.

PART 3 - EXECUTION

3.1 DUCT INSTALLATION

A. Drawing plans, schematics, and diagrams indicate general location and arrangement of duct system. Indicated duct locations, configurations, and arrangements were used to size ducts and calculate friction loss for air-handling equipment sizing and for other design considerations. Install duct systems as indicated unless deviations to layout are approved on Shop Drawings and coordination drawings.

B. Install ducts in accordance with SMACNA's "HVAC Duct Construction Standards - Metal and Flexible" unless otherwise indicated.

C. Install ducts in maximum practical lengths with fewest possible joints.

D. Install factory- or shop-fabricated fittings for changes in direction, size, and shape and for branch connections.

E. Unless otherwise indicated, install ducts vertically and horizontally, and parallel and perpendicular to building lines.

F. Install ducts close to walls, overhead construction, columns, and other structural and permanent enclosure elements of building.

G. Install ducts with a clearance of 1 inch, plus allowance for insulation thickness.

H. Route ducts to avoid passing through transformer vaults and electrical equipment rooms and enclosures.

I. Where ducts pass through non-fire-rated interior partitions and exterior walls and are exposed to view, cover the opening between the partition and duct or duct insulation with sheet metal flanges of same metal thickness as the duct. Overlap openings on four sides by at least 1-1/2 inches.

J. Install radiation dampers where indicated on Drawings and as required by code, and by local authorities having jurisdiction. Comply with requirements in Section 233300 "Air Duct Accessories" for fire and smoke dampers and specific installation requirements of the damper UL listing.

K. Install heating coils, cooling coils, air filters, dampers, and all other duct-mounted accessories in air ducts where indicated on Drawings.

L. Protect duct interiors from moisture, construction debris and dust, and other foreign materials both before and after installation.

M. Elbows: Use long-radius elbows wherever they fit.

1. Fabricate 90-degree rectangular mitered elbows to include turning vanes.
2. Fabricate 90-degree round elbows with a minimum of three segments for 12 inches and smaller and a minimum of five segments for 14 inches and larger.

N. Branch Connections: Use lateral or conical branch connections.

3.2 DUCT SEALING

A. Seal ducts at a minimum to the following seal classes in accordance with SMACNA's "HVAC Duct Construction Standards - Metal and Flexible":

1. Comply with SMACNA's "HVAC Duct Construction Standards - Metal and Flexible."
2. Unconditioned Space, Supply-Air Ducts in Pressure Classes 2-Inch wg and Lower: Seal Class B.
3. Unconditioned Space, Exhaust Ducts (Negative Pressure): Seal Class C.
4. Unconditioned Space, Exhaust Ducts (Positive Pressure): Seal Class A.
5. Unconditioned Space, Return-Air Ducts: Seal Class B.
6. Conditioned Space, Supply-Air Ducts in Pressure Classes 2-Inch wg and Lower: Seal Class C.
7. Conditioned Space, Exhaust Ducts (Negative Pressure): Seal Class B.
8. Conditioned Space, Exhaust Ducts (Positive Pressure): Seal Class A.
9. Conditioned Space, Return-Air Ducts: Seal Class C.

3.3 HANGER AND SUPPORT INSTALLATION

A. Comply with SMACNA's "HVAC Duct Construction Standards - Metal and Flexible," Chapter 5, "Hangers and Supports."

B. Building Attachments: Concrete inserts, powder-actuated fasteners, or structural-steel fasteners appropriate for construction materials to which hangers are being attached.

1. Where practical, install concrete inserts before placing concrete.
2. Install powder-actuated concrete fasteners after concrete is placed and completely cured.
3. Use powder-actuated concrete fasteners for standard-weight aggregate concretes or for slabs more than 4 inches thick.
4. Do not use powder-actuated concrete fasteners for lightweight-aggregate concretes or for slabs less than 4 inches thick.

C. Hanger Spacing: Comply with SMACNA's "HVAC Duct Construction Standards - Metal and Flexible," Table 5-1, "Rectangular Duct Hangers Minimum Size," and Table 5-2, "Minimum Hanger Sizes for Round Duct," for maximum hanger spacing; install hangers and supports within 24 inches of each elbow and within 48 inches of each branch intersection.

D. Hangers Exposed to View: Threaded rod and angle or channel supports.

E. Support vertical ducts with steel angles or channel secured to the sides of the duct with welds, bolts, sheet metal screws, or blind rivets; support at each floor and at a maximum intervals of 16 feet.

F. Install upper attachments to structures. Select and size upper attachments with pull-out, tension, and shear capacities appropriate for supported loads and building materials where used.

3.4 CONNECTIONS

A. Make connections to equipment with flexible connectors complying with Section 233300 "Air Duct Accessories."

B. Comply with SMACNA's "HVAC Duct Construction Standards - Metal and Flexible" for branch, outlet and inlet, and terminal unit connections.

3.5 PAINTING

A. Paint interior of metal ducts that are visible through registers and grilles and that do not have duct liner. Apply one coat of flat, black, latex paint over a compatible galvanized-steel primer. Paint materials and application requirements are specified in Section 099113 "Exterior Painting" and Section 099123 "Interior Painting."

3.6 FIELD QUALITY CONTROL

A. Perform tests and inspections.

B. Duct System Cleanliness Tests:

1. Visually inspect duct system to ensure that no visible contaminants are present.

C. Duct system will be considered defective if it does not pass tests and inspections.

3.7 STARTUP

A. Air Balance: Comply with requirements in Section 230593 "Testing, Adjusting, and Balancing for HVAC."

3.8 DUCT SCHEDULE

A. Fabricate ducts with galvanized sheet steel except as otherwise indicated and as follows:

1. Fabricate all ducts to achieve SMACNA pressure class, seal class, and leakage class as indicated below.

B. Supply Ducts:

1. Ducts Connected to Constant-Volume Air-Handling Units:

    a. Pressure Class: Positive 2-inch wg.
    b. SMACNA Leakage Class for Rectangular: 8.
    c. SMACNA Leakage Class for Round and Flat Oval: 4.

C. Return Ducts:

1. Ducts Connected to Air-Handling Units:

    a. Pressure Class: Positive or negative 2-inch wg.
    b. SMACNA Leakage Class for Rectangular: 8.
    c. SMACNA Leakage Class for Round and Flat Oval: 4.

D. Exhaust Ducts:

1. Ducts Connected to Fans Exhausting (ASHRAE 62.1, Class 1 and 2) Air:

    a. Pressure Class: Positive or negative 2-inch wg.
    b. SMACNA Leakage Class for Rectangular: 4 for positive pressure, 8 for negative pressure.
    c. SMACNA Leakage Class for Round and Flat Oval: 2 for positive pressure, 4 for negative pressure.

2. Ducts Connected to Fans Exhausting Chemical & Pool Equipment Room Exhaust:

    a. Type 316, stainless-steel sheet.
        1) Concealed: No. 2B finish.
    b. Pressure Class: Positive or negative 2-inch wg.
    c. Minimum SMACNA Seal Class A.
    d. SMACNA Leakage Class 2.

E. Outdoor-Air (Not Filtered, Heated, or Cooled) Ducts:

1. Ducts Connected to Air-Handling Units:

    a. Pressure Class: Positive or negative 2-inch wg.
    b. Minimum SMACNA Seal Class: B.
    c. SMACNA Leakage Class for Rectangular: 8.
    d. SMACNA Leakage Class for Round and Flat Oval: 4.

F. Intermediate Reinforcement:

1. Galvanized-Steel Ducts: Galvanized steel.
2. Stainless-Steel Ducts:

    a. Exposed to Airstream: Match duct material.

3. Aluminum Ducts: Aluminum.

G. Liner:

1. Supply-Air Ducts: Fibrous glass, Type I, 2 inches thick.
2. Return-Air Ducts: Fibrous glass, Type I, 2 inches thick.
3. Supply Fan Plenums: Fibrous glass, Type II, 2 inches thick.
4. Return- and Exhaust-Fan Plenums: Fibrous glass, Type II, 2 inches thick.

H. Elbow Configuration:

1. Rectangular Duct: Comply with SMACNA's "HVAC Duct Construction Standards - Metal and Flexible," Figure 4-2, "Rectangular Elbows."

   a. Radius Type RE 1 with minimum 1.5 radius-to-diameter ratio.
   b. Radius Type RE 3 with minimum 1.0 radius-to-diameter ratio and two vanes.
   c. Mitered Type RE 2 with vanes complying with SMACNA's "HVAC Duct Construction Standards - Metal and Flexible," Figure 4-3, "Vanes and Vane Runners," and Figure 4-4, "Vane Support in Elbows."

2. Round Duct: Comply with SMACNA's "HVAC Duct Construction Standards - Metal and Flexible," Figure 3-4, "Round Duct Elbows."

   a. Minimum Radius-to-Diameter Ratio and Elbow Segments: Comply with SMACNA's "HVAC Duct Construction Standards - Metal and Flexible," Table 3-1, "Mitered Elbows." Elbows with less than 90-degree change of direction have proportionately fewer segments.
      1) Radius-to Diameter Ratio: 1.5.

   b. Round Elbows, 12 Inches and Smaller in Diameter: Stamped or pleated.
   c. Round Elbows, 14 Inches and Larger in Diameter: Standing seam.

I. Branch Configuration:

1. Rectangular Duct: Comply with SMACNA's "HVAC Duct Construction Standards - Metal and Flexible," Figure 4-6, "Branch Connection."

   a. Rectangular Main to Rectangular Branch: 45-degree entry.
   b. Rectangular Main to Round Branch: Conical spin in.

2. Round and Flat Oval: Comply with SMACNA's "HVAC Duct Construction Standards - Metal and Flexible," Figure 3-5, "90 Degree Tees and Laterals," and Figure 3-6, "Conical Tees." Saddle taps are permitted in existing duct.

   a. Velocity 1000 fpm or Lower: 90-degree tap.
   b. Velocity 1000 to 1500 fpm: Conical tap.
   c. Velocity 1500 fpm or Higher: 45-degree lateral.

END OF SECTION 233113

SECTION 233300 - AIR DUCT ACCESSORIES

PART 1 - GENERAL

1.1 SUMMARY

A. Section Includes:

1. Backdraft and pressure relief dampers.
2. Manual volume dampers.
3. Fire dampers.
4. Flange connectors.
5. Turning vanes.
6. Duct-mounted access doors.
7. Duct access panel assemblies.
8. Flexible connectors.
9. Duct accessory hardware.

B. Related Requirements:

1. Section 233346 "Flexible Ducts" for insulated and non-insulated flexible ducts.
2. Section 284621.13 "Conventional Fire-Alarm Systems" for duct-mounted fire and smoke detectors.

1.2 ACTION SUBMITTALS

A. Product Data: For each type of product.

1. For duct silencers, include pressure drop, dynamic insertion loss, and self-generated noise data. Include breakout noise calculations for high-transmission-loss casings.

PART 2 - PRODUCTS

2.1 PERFORMANCE REQUIREMENTS

A. Comply with NFPA 90A and NFPA 90B.

B. Comply with SMACNA's "HVAC Duct Construction Standards - Metal and Flexible" for acceptable materials, material thicknesses, and duct construction methods unless otherwise indicated. Sheet metal materials shall be free of pitting, seam marks, roller marks, stains, discolorations, and other imperfections.

2.2 BACKDRAFT AND PRESSURE RELIEF DAMPERS

A. Manufacturers: Subject to compliance with requirements, available manufacturers offering products that may be incorporated into the Work include:

1. Greenheck Fan Corporation.
2. Nailor Industries Inc.
3. Ruskin Company.
   a. Additional manufacturers submitted for and receiving engineer approval prior to bid.

B. Description: Gravity balanced.

C. Performance:

1. Maximum Air Velocity: 2000 fpm.
2. Maximum System Pressure: 2 inches wg.
3. Leakage:
   a. Class III: Leakage shall not exceed 40 cfm/sq. ft. against 1-inch wg differential static pressure.

D. Construction:

1. Frame:

   a. Hat shaped.
   b. 0.093-inch-thick extruded aluminum, with welded or mechanically attached corners and mounting flange.

2. Blades:

   a. Multiple single-piece blades.
   b. Off-center or End pivoted, maximum 6-inch width,–0.050-inch-thick aluminum sheet with sealed edges.

3. Blade Action: Parallel.

E. Tie Bars and Brackets: Galvanized steel.

F. Return Spring: Adjustable tension.

G. Bearings: Steel ball or synthetic pivot bushings.

H. Accessories:

1. Adjustment device to permit setting for varying differential static pressure.
2. Counterweights and spring-assist kits for vertical airflow installations.
3. Chain pulls.
4. Screen Mounting:

a. Rear mounted in sleeve.

1) Sleeve Thickness: 20 gauge minimum.
2) Sleeve Length: 6 inches minimum.

5. Screen Material: Aluminum.
6. Screen Type: Insect.
7. 90-degree stops.

2.3 MANUAL VOLUME DAMPERS

A. Standard, Steel, Manual Volume Dampers:

1. Manufacturers: Subject to compliance with requirements, available manufacturers offering products that may be incorporated into the Work include:

a. Greenheck Fan Corporation.
b. Nailor Industries Inc.
c. Ruskin Company.
d. Additional manufacturers submitted for and receiving engineer approval prior to bid.

2. Performance:

a. Leakage Rating Class III: Leakage not exceeding 40 cfm/sq. ft. against 1-inch wg differential static pressure.

3. Construction:

a. Linkage out of airstream.
b. Suitable for horizontal or vertical airflow applications.

4. Frames:

a. Hat-shaped, 16-gauge-thick, galvanized sheet steel.
b. Mitered and welded corners.
c. Flanges for attaching to walls and flangeless frames for installing in ducts.

5. Blades:

a. Multiple or single blade.
b. Parallel- or opposed-blade design.
c. Stiffen damper blades for stability.
d. Galvanized steel; 16 gauge thick.

6. Blade Axles: Galvanized steel.
7. Bearings:

a. Molded synthetic or Stainless steel sleeve.

b. Dampers mounted with vertical blades to have thrust bearing at each end of every blade.

8. Tie Bars and Brackets: Galvanized steel.
9. Locking device to hold damper blades in a fixed position without vibration.

B. Jackshaft:

1. Size: 1-inch diameter.
2. Material: Galvanized-steel pipe rotating within pipe-bearing assembly mounted on supports at each mullion and at each end of multiple-damper assemblies.
3. Length and Number of Mountings: As required to connect linkage of each damper in multiple-damper assembly.

C. Damper Hardware:

1. Zinc-plated, die-cast core with dial and handle, made of 3/32-inch-thick zinc-plated steel, and a 3/4-inch hexagon locking nut.
2. Include center hole to suit damper operating-rod size.
3. Include elevated platform for insulated duct mounting.

2.4 TURNING VANES

A. Manufacturers: Subject to compliance with requirements, available manufacturers offering products that may be incorporated into the Work include:

1. CL WARD & Family Inc.
2. Ductmate Industries, Inc.
3. DynAir; a Carlisle Company.
4. Additional manufacturers submitted for and receiving engineer approval prior to bid.

B. Manufactured Turning Vanes for Metal Ducts: Fabricate curved blades of galvanized sheet steel; support with bars perpendicular to blades set; set into vane runners suitable for duct mounting.

1. Acoustic Turning Vanes: Fabricate airfoil-shaped aluminum extrusions with perforated faces and fibrous-glass fill.

C. Manufactured Turning Vanes for Nonmetal Ducts: Fabricate curved blades of resin-bonded fiberglass with acrylic polymer coating; support with bars perpendicular to blades set; set into vane runners suitable for duct mounting.

D. General Requirements: Comply with SMACNA's "HVAC Duct Construction Standards - Metal and Flexible"; Figure 4-3, "Vanes and Vane Runners," and Figure 4-4, "Vane Support in Elbows."

E. Vane Construction:

1. Single wall.

2.5 FIRE DAMPERS

A. Manufacturers: Subject to compliance with requirements, available manufacturers offering products that may be incorporated into the Work include:

1. Greenheck Fan Corporation.
2. Pottorff.
3. Ruskin Company.
4. Additional manufacturers submitted for and receiving engineer approval prior to bid.

B. Type: Static and dynamic; rated and labeled in accordance with UL 555 by an NRTL.

C. Closing rating in ducts up to 4-inch wg static pressure class and minimum 2000 fpm velocity.

D. Fire Rating: 1-1/2 hours.

E. Frame: Varies, as indicated on engineering drawings; fabricated with roll-formed galvanized steel; with mitered and interlocking corners; gauge in accordance with UL listing.

F. Mounting Sleeve: Factory- or field-installed, galvanized sheet steel; gauge in accordance with UL listing.

G. Mounting Orientation: Vertical or horizontal as indicated.

H. Blades: Roll-formed galvanized sheet stee,. Material gauge is to be in accordance with UL listing.

I. Horizontal Dampers: Include blade lock and stainless steel closure spring.

J. Heat-Responsive Device:

1. Replaceable, 165 deg F rated, fusible links.

2.6 DUCT-MOUNTED ACCESS DOORS

A. Manufacturers: Subject to compliance with requirements, available manufacturers offering products that may be incorporated into the Work include:

1. Aire Technologies.
2. Flexmaster U.S.A., Inc.
3. Ruskin Company.
4. Additional manufacturers submitted for and receiving engineer approval prior to bid.

B. Duct-Mounted Access Doors: Fabricate access panels in accordance with SMACNA's "HVAC Duct Construction Standards - Metal and Flexible"; Figure 7-2 (7-2M), "Duct Access Doors and Panels," and Figure 7-3, "Access Doors - Round Duct."

1. Door:

a. Double wall, rectangular.
b. Galvanized sheet metal with insulation fill and thickness as indicated for duct pressure class.
c. 24-gauge-thick galvanized steel or 0.032-inch thick aluminum or 24-gauge-thick stainless steel door panel.
d. Vision panel.
e. Hinges and Latches: 1-by-1-inch butt or piano hinge and cam latches.
f. Fabricate doors airtight and suitable for duct pressure class.

2. Frame: Galvanized sheet steel, with bend-over tabs and foam gaskets.

a. 24-gauge-thick galvanized steel or 0.032-inch-thick aluminum frame.

3. Number of Hinges and Locks:

a. Access Doors Less Than 12 Inches Square: No hinges and two sash locks.
b. Access Doors up to 18 Inches Square: Two hinges and two sash locks.
c. Access Doors up to 24 by 48 Inches: Three hinges and two compression latches.
d. Access Doors Larger Than 24 by 48 Inches: Four hinges and two compression latches with outside and inside handles.

2.7 DUCT ACCESS PANEL ASSEMBLIES

A. Manufacturers: Subject to compliance with requirements, available manufacturers offering products that may be incorporated into the Work include:

1. CL WARD & Family Inc.
2. Ductmate Industries, Inc.
3. Additional manufacturers submitted for and receiving engineer approval prior to bid.

B. Access panels used in cooking applications:

1. Labeled compliant to NFPA 96 for grease duct access doors.
2. Labeled in accordance with UL 1978 by an NRTL.

C. Panel and Frame: Minimum thickness 16-gauge carbon steel.

D. Fasteners: Carbon steel. Panel fasteners shall not penetrate duct wall.

E. Gasket: Comply with NFPA 96, grease-tight, high-temperature ceramic fiber, rated for minimum 2000 deg F.

F. Minimum Pressure Rating: 10 inches wg positive or negative.

2.8 FLEXIBLE CONNECTORS

A. Manufacturers: Subject to compliance with requirements, available manufacturers offering products that may be incorporated into the Work include:

1. CL WARD & Family Inc.
2. Ductmate Industries, Inc.
3. DynAir; a Carlisle Company.
4. Additional manufacturers submitted for and receiving engineer approval prior to bid.

B. Fire-Performance Characteristics: Adhesives, sealants, fabric materials, and accessory materials shall have flame-spread index not exceeding 25 and smoke-developed index not exceeding 50 when tested in accordance with ASTM E84.

C. Airstream Surfaces: Surfaces in contact with the airstream shall comply with requirements in ASHRAE 62.1.

D. Materials: Flame-retardant or noncombustible fabrics.

E. Coatings and Adhesives: Comply with UL 181, Class 1.

F. Indoor System, Flexible Connector Fabric: Glass fabric double coated with neoprene.

1. Minimum Weight: 26 oz./sq. yd..
2. Tensile Strength: 480 lbf/inch in the warp and 360 lbf/inch in the filling.
3. Service Temperature: Minus 40 to plus 200 deg F.

G. High-Corrosive-Environment System, Flexible Connectors: Glass fabric with chemical-resistant coating.

1. Minimum Weight: 14 oz./sq. yd..
2. Tensile Strength: 450 lbf/inch in the warp and 340 lbf/inch in the filling.
3. Service Temperature: Minus 67 to plus 500 deg F.

2.9 DUCT ACCESSORY HARDWARE

A. Manufacturers: Subject to compliance with requirements, available manufacturers offering products that may be incorporated into the Work include:

1. CL WARD & Family Inc.
2. Ductmate Industries, Inc.
3. Duro Dyne Inc.
4. Additional manufacturers submitted for and receiving engineer approval prior to bid.

B. Instrument Test Holes: Cast iron or cast aluminum to suit duct material, including screw cap and gasket. Size to allow insertion of pitot tube and other testing instruments and of length to suit duct-insulation thickness.

C. Adhesives: High strength, quick setting, neoprene based, waterproof, and resistant to gasoline and grease.

2.10 MATERIALS

A. Galvanized Sheet Steel: Comply with ASTM A653/A653M.

1. Galvanized Coating Designation: G60.
2. Exposed-Surface Finish: Mill phosphatized.

B. Stainless Steel Sheets: Comply with ASTM A480/A480M, Type 304, and having a No. 2 finish for concealed ducts and finish for exposed ducts.

C. Aluminum Sheets: Comply with ASTM B209, Alloy 3003, Temper H14; with mill finish for concealed ducts and standard, one-side bright finish for exposed ducts.

D. Extruded Aluminum: Comply with ASTM B221, Alloy 6063, Temper T6.

E. Reinforcement Shapes and Plates: Galvanized-steel reinforcement where installed on galvanized sheet metal ducts; compatible materials for aluminum and stainless steel ducts.

F. Tie Rods: Galvanized steel, 1/4-inch minimum diameter for lengths 36 inches or less; 3/8-inch minimum diameter for lengths longer than 36 inches.

PART 3 - EXECUTION

3.1 INSTALLATION

A. Install duct accessories in accordance with applicable details in SMACNA's "HVAC Duct Construction Standards - Metal and Flexible" for metal ducts and in NAIMA AH116 for fibrous-glass ducts.

B. Install duct accessories of materials suited to duct materials; use galvanized-steel accessories in galvanized-steel and fibrous-glass ducts, stainless steel accessories in stainless steel ducts, and aluminum accessories in aluminum ducts.

C. Install backdraft dampers at inlet of exhaust fans or exhaust ducts as close as possible to exhaust fan unless otherwise indicated.

D. Where multiple damper sections are necessary to achieve required dimensions, provide reinforcement to fully support damper assembly when fully closed at full system design static pressure.

E. Install volume dampers at points on supply, return, and exhaust systems where branches extend from larger ducts. Where dampers are installed in ducts having duct liner, install dampers with hat channels of same depth as liner, and terminate liner with nosing at hat channel.

1. Install steel volume dampers in steel ducts.
2. Install aluminum volume dampers in aluminum ducts.

F. Set dampers to fully open position before testing, adjusting, and balancing.

G. Install test holes at fan inlets and outlets and elsewhere as indicated and as needed for testing and balancing.

H. Install radiation dampers in accordance with UL listing.

I. Install duct access doors on sides of ducts to allow for inspecting, adjusting, and maintaining accessories and equipment at the following locations:

1. On both sides of duct coils.
2. Upstream from duct filters.
3. At outdoor-air intakes and mixed-air plenums.
4. At drain pans and seals.
5. Downstream from manual volume dampers, control dampers, backdraft dampers, and equipment.
6. Adjacent to and close enough to radiation dampers, to reset or reinstall fusible links. Access doors for access to fire or smoke dampers having fusible links shall be pressure relief access doors and shall be outward operation for access doors installed upstream from dampers and inward operation for access doors installed downstream from dampers.
7. Control devices requiring inspection.
8. Elsewhere as indicated.

J. Install access doors with swing against duct static pressure.

K. Access Door Sizes:

1. One-Hand or Inspection Access: 8 by 5 inches.
2. Two-Hand Access: 12 by 6 inches.
3. Head and Hand Access: 18 by 10 inches.
4. Head and Shoulders Access: 21 by 14 inches.
5. Body Access: 25 by 14 inches.
6. Body plus Ladder Access: 25 by 17 inches.

L. Label access doors according to Section 230553 "Identification for HVAC Piping and Equipment" to indicate the purpose of access door.

M. Install flexible connectors to connect ducts to equipment.

N. For fans developing static pressures of 5 inches wg and more, cover flexible connectors with loaded vinyl sheet held in place with metal straps.

O. Install duct test holes where required for testing and balancing purposes.

P. Install thrust limits at centerline of thrust, symmetrical on both sides of equipment. Attach thrust limits at centerline of thrust and adjust to a maximum of 1/4-inch movement during start and stop of fans.

3.2 FIELD QUALITY CONTROL

A. Tests and Inspections:

1. Operate dampers to verify full range of movement.
2. Inspect locations of access doors, and verify that size and location of access doors are adequate to perform required operation.
3. Operate radiation dampers to verify full range of movement and that proper heat-response device is installed.
4. Inspect turning vanes for proper and secure installation, and verify that vanes do not move or rattle.
5. Operate remote damper operators to verify full range of movement of operator and damper.

END OF SECTION 233300

SECTION 233346 - FLEXIBLE DUCTS

PART 1 - GENERAL

1.1 SUMMARY

A. Section Includes:

1. Non-insulated flexible ducts.
2. Insulated flexible ducts.

1.2 ACTION SUBMITTALS

A. Product Data: For each type of product.

PART 2 - PRODUCTS

2.1 ASSEMBLY DESCRIPTION

A. Comply with NFPA 90A, "Installation of Air Conditioning and Ventilating Systems," and with NFPA 90B, "Installation of Warm Air Heating and Air Conditioning Systems."

B. Comply with SMACNA's "HVAC Duct Construction Standards - Metal and Flexible" for acceptable materials, material thicknesses, and duct construction methods unless otherwise indicated. Sheet metal materials shall be free of pitting, seam marks, roller marks, stains, discolorations, and other imperfections.

2.2 NON-INSULATED FLEXIBLE DUCTS

A. Manufacturers: Subject to compliance with requirements, available manufacturers offering products that may be incorporated into the Work include:

1. Flexmaster U.S.A., Inc.
2. McGill AirFlow LLC.
3. Thermaflex; a Flex-Tek Group company.
4. Additional manufacturers submitted for and receiving engineer approval prior to bid.

B. Non-Insulated, Flexible Duct: UL 181, Class 1, multiple layers of aluminum laminate supported by helically wound, spring-steel wire.

1. Pressure Rating: 10-inch wg positive and 1.0-inch wg negative.
2. Maximum Air Velocity: 4000 fpm.
3. Temperature Range: Minus 20 to plus 210 deg F.

2.3 INSULATED FLEXIBLE DUCTS

A. Manufacturers: Subject to compliance with requirements, available manufacturers offering products that may be incorporated into the Work include:

1. Flexmaster U.S.A., Inc.
2. McGill AirFlow LLC.
3. Thermaflex; a Flex-Tek Group company.
4. Additional manufacturers submitted for and receiving engineer approval prior to bid.

B. Insulated, Flexible Duct: UL 181, Class 1, multiple layers of aluminum laminate supported by helically wound, spring-steel wire; fibrous-glass insulation; aluminized vapor-barrier film.

1. Pressure Rating: 10-inch wg positive and 1.0-inch wg negative.
2. Maximum Air Velocity: 4000 fpm.
3. Temperature Range: Minus 20 to plus 210 deg F.
4. Insulation R-Value: Comply with NCECC.

2.4 FLEXIBLE DUCT CONNECTORS

A. Clamps: Stainless-steel band with cadmium-plated hex screw to tighten band with a worm-gear action in sizes 3 through 18 inches, to suit duct size.

B. Non-Clamp Connectors: Adhesive.

PART 3 - EXECUTION

3.1 INSTALLATION

A. Install flexible ducts according to applicable details in SMACNA's "HVAC Duct Construction Standards - Metal and Flexible" for metal ducts and in NAIMA AH116, "Fibrous Glass Duct Construction Standards," for fibrous-glass ducts.

B. Install in indoor applications only. Flexible ductwork should not be exposed to UV lighting.

C. Connect diffusers or light troffer boots to ducts directly with maximum lengths (as specified in General Notes on plans) of flexible duct clamped or strapped in place.

D. Connect flexible ducts to metal ducts with liquid adhesive plus tape.

E. Install duct test holes where required for testing and balancing purposes.

F. Installation:

1. Install ducts fully extended.
2. Do not bend ducts across sharp corners.
3. Bends of flexible ducting shall not exceed a minimum of one duct diameter.

4. Avoid contact with metal fixtures, water lines, pipes, or conduits.
5. Install flexible ducts in a direct line, without sags, twists, or turns.

G. Supporting Flexible Ducts:

1. Suspend flexible ducts with bands 1-1/2 inches wide or wider and spaced a maximum of 48 inches apart. Maximum centerline sag between supports shall not exceed 1/2 inch per 12 inches.
2. Install extra supports at bends placed approximately one duct diameter from center line of the bend.
3. Ducts may rest on ceiling joists or truss supports. Spacing between supports shall not exceed the maximum spacing per manufacturer's written installation instructions.
4. Vertically installed ducts shall be stabilized by support straps at a maximum of 72 inches o.c.

END OF SECTION 233346

SECTION 233423 - HVAC POWER VENTILATORS

TIPS:

To view non-printing **Editor's Notes** that provide guidance for editing, click on MasterWorks/Single-File Formatting/Toggle/Editor's Notes.

To read **detailed research, technical information about products and materials, and coordination checklists**, click on MasterWorks/Supporting Information.

Content Requests:

<Double click here to submit questions, comments, or suggested edits to this Section.>

PART 1 - GENERAL

1.1 RELATED DOCUMENTS

A. Drawings and general provisions of the Contract, including General and Supplementary Conditions and Division 01 Specification Sections, apply to this Section.

1.2 SUMMARY

A. Section Includes:

1. Ceiling-mounted ventilators.
2. Centrifugal ventilators - roof downblast.

1.3 ACTION SUBMITTALS

A. Product Data: For each type of product.

1.4 CLOSEOUT SUBMITTALS

A. Operation and maintenance data.

PART 2 - PRODUCTS

2.1 CEILING-MOUNTED VENTILATORS

A. Manufacturers: Subject to compliance with requirements, available manufacturers offering products that may be incorporated into the Work include:

1. Broan-NuTone LLC.
2. Greenheck Fan Corporation.
3. PennBarry.
4. Additional manufacturers submitted for and receiving engineer approval prior to bid.

B. Housing: Steel, lined with acoustical insulation.

C. Fan Wheel: Centrifugal wheels directly mounted on motor shaft. Fan shrouds, motor, and fan wheel removable for service.

D. Back-draft damper: Integral.

E. Grille: Louvered grille with flange on intake and thumbscrew or spring retainer attachment to fan housing.

F. Electrical Requirements: Junction box for electrical connection on housing and receptacle for motor plug-in.

G. Accessories: See Engineering Drawings Schedule

2.2 CENTRIFUGAL VENTILATORS - ROOF DOWNBLAST

A. Manufacturers: Subject to compliance with requirements, available manufacturers offering products that may be incorporated into the Work include:

1. Greenheck Fan Corporation.
2. Loren Cook Company.
3. PennBarry.
4. Additional manufacturers submitted for and receiving engineer approval prior to bid.

B. Housing: Downblast; spun aluminum; square, one-piece aluminum base with venturi inlet cone.

C. Fan Wheels: Aluminum hub and wheel with backward-inclined blades.

D. Accessories: See Engineering Drawings Schedule

E. Prefabricated Roof Curbs: Galvanized steel; mitered and welded corners; 1-1/2-inch- thick, rigid, fiberglass insulation adhered to inside walls; and 1-1/2-inch wood nailer. Size as required to suit roof opening and fan base.

2.3 MOTORS

A. Comply with NEMA designation, temperature rating, service factor, and efficiency requirements for motors specified in Section 230513 "Common Motor Requirements for HVAC Equipment."

1. Motor Sizes: Minimum size as indicated. If not indicated, large enough so driven load will not require motor to operate in service factor range above 1.0.

2.4 SOURCE QUALITY CONTROL

A. Electrical Components, Devices, and Accessories: Listed and labeled as defined in NFPA 70, by an NRTL, and marked for intended location and application.

B. AMCA Certification: Fans shall comply with AMCA 11 and bear the AMCA-Certified Ratings Seal.

C. Fan Sound Ratings: Comply with AMCA 311, and label fans with the AMCA-Certified Ratings Seal. Sound ratings shall comply with AMCA 301. The fans shall be tested according to AMCA 300.

D. Fan Performance Ratings: Comply with AMCA 211 and label fans with AMCA-Certified Rating Seal. The fans shall be tested for air performance - flow rate, fan pressure, power, fan efficiency, air density, speed of rotation, and fan efficiency - according to AMCA 210/ASHRAE 51.

E. Operating Limits: Classify according to AMCA 99.

F. UL Standards: Power ventilators shall comply with UL 705. Power ventilators for use for restaurant kitchen exhaust shall also comply with UL 762.

PART 3 - EXECUTION

3.1 INSTALLATION OF HVAC POWER VENTILATORS

A. Install power ventilators level and plumb.

B. Equipment Mounting:
1. Comply with requirements for vibration isolation devices specified in Section 230548.13 "Vibration Controls for HVAC."

C. Secure roof-mounted fans to roof curbs with zinc-plated hardware. See Section 077200 "Roof Accessories" for installation of roof curbs.

D. See engineering drawings for notes pertaining to fan installation in high wind zone.

E. Ceiling Units: Suspend units from structure; use steel wire or metal straps.

F. Support suspended units from structure using threaded steel rods and elastomeric hangers having a static deflection of 1 inch. Vibration-control devices are specified in Section 230548.13 "Vibration Controls for HVAC."

G. Install units with clearances for service and maintenance.

H. Label units according to requirements specified in Section 230553 "Identification for HVAC Piping and Equipment."

3.2 DUCTWORK CONNECTIONS

A. Drawings indicate general arrangement of ducts and duct accessories. Make final duct connections with flexible connectors. Flexible connectors are specified in Section 233300 "Air Duct Accessories."

3.3 ELECTRICAL CONNECTIONS

A. Connect wiring according to Section 260519 "Low-Voltage Electrical Power Conductors and Cables."

B. Ground equipment according to Section 260526 "Grounding and Bonding for Electrical Systems."

C. Install electrical devices furnished by manufacturer, but not factory mounted, according to NFPA 70 and NECA 1.

1. Nameplate shall be laminated acrylic or melamine plastic signs, as specified in Section 260553 "Identification for Electrical Systems."

3.4 CONTROL CONNECTIONS

A. Install control and electrical power wiring to field-mounted control devices.

B. Connect control wiring according to Section 260523 "Control-Voltage Electrical Power Cables."

3.5 FIELD QUALITY CONTROL

A. Perform tests and inspections.

B. Tests and Inspections:

1. Verify that shipping, blocking, and bracing are removed.
2. Verify that unit is secure on mountings and supporting devices and that connections to ducts and electrical components are complete. Verify that proper thermal-overload protection is installed in motors, starters, and disconnect switches.

3. Verify that there is adequate maintenance and access space.
4. Verify that cleaning and adjusting are complete.
5. Disconnect fan drive from motor, verify proper motor rotation direction, and verify fan wheel free rotation and smooth bearing operation. Reconnect fan drive system, align and adjust belts, and install belt guards.
6. Adjust belt tension.
7. Adjust damper linkages for proper damper operation.
8. Verify lubrication for bearings and other moving parts.
9. Verify that manual and automatic volume control and fire and smoke dampers in connected ductwork systems are in fully open position.
10. Disable automatic temperature-control operators, energize motor and adjust fan to indicated rpm, and measure and record motor voltage and amperage.
11. Shut unit down and reconnect automatic temperature-control operators.
12. Remove and replace malfunctioning units and retest as specified above.

C. Test and adjust controls and safeties. Controls and equipment will be considered defective if they do not pass tests and inspections.

3.6 ADJUSTING

A. Adjust damper linkages for proper damper operation.

B. Adjust belt tension.

C. Comply with requirements in Section 230593 "Testing, Adjusting, and Balancing for HVAC" for testing, adjusting, and balancing procedures.

D. Replace fan and motor pulleys as required to achieve design airflow.

E. Lubricate bearings.

3.7 DEMONSTRATION

A. Train Owner's maintenance personnel to adjust, operate, and maintain centrifugal fans.

END OF SECTION 233423

SECTION 233433.13 - COMMERCIAL AIR CURTAINS

TIPS:

To view non-printing **Editor's Notes** that provide guidance for editing, click on MasterWorks/Single-File Formatting/Toggle/Editor's Notes.

To read **detailed research, technical information about products and materials, and coordination checklists**, click on MasterWorks/Supporting Information.

Content Requests:

<Double click here to submit questions, comments, or suggested edits to this Section.>

PART 1 - GENERAL

1.1 SUMMARY

A. Section includes commercial air-curtain unit.

1.2 ACTION SUBMITTALS

A. Product Data: For each type of product.

1.3 INFORMATIONAL SUBMITTALS

A. Sample warranties.

1.4 CLOSEOUT SUBMITTALS

A. Operation and maintenance data.

1.5 WARRANTY

A. Special Warranty: Manufacturer agrees to repair or replace components of air curtains that fail in materials or workmanship within specified warranty period.

1. Warranty Period (Nonheating Units): 60 months.

PART 2 - PRODUCTS

2.1 PERFORMANCE REQUIREMENTS

A. Capacities and Characteristics:

1. Application: Fly and insect control.
2. Mounting Type: Wall brackets.
3. Discharge Direction: Vertical.
4. Door Type: Exterior.
5. Unit Length: See Engineering Drawing Schedules.
6. Airflow: See Engineering Drawing Schedules.
7. Intake: Internal.
8. Fan Motor:

a. Electrical Characteristics:

1) Horsepower: See Engineering Drawing Schedules.
2) Volts: 120 V.
3) Phase: Single.
4) Hertz: 60 Hz.

2.2 COMMERCIAL AIR-CURTAIN UNIT

A. Manufacturers: Subject to compliance with requirements, available manufacturers offering products that may be incorporated into the Work include:

1. Fantech.
2. Loren Cook Company.
3. Mars Air Doors; Mars Air Systems.
4. Additional manufacturers submitted for and receiving engineer approval prior to bid.

B. Housing:

1. Galvanized Steel: Galvanized steel with electrostatically applied, epoxy-enamel, powder-coat finish.
2. Discharge Nozzle: Integral to housing, containing adjustable air-directional vanes with 40-degree sweep front to back.

C. Mounting Brackets: Galvanized steel, for wall mounting.

D. Air-Intake Grilles:

1. Grilles: Integral to, and same material as, housing.

E. Fans:

1. Centrifugal, forward curved, double width, double inlet.

2. Galvanized steel.
3. Statically and dynamically balanced.
4. Direct drive.

F. Motors: Comply with NEMA designation, temperature rating, service factor, enclosure type, and efficiency requirements for motors specified in Section 230513 "Common Motor Requirements for HVAC Equipment."

1. Motor Sizes: Minimum size as indicated. If not indicated, large enough so driven load will not require motor to operate in service factor range above 1.0.
2. Single speed.
3. Resiliently mounted.
4. Continuous duty.
5. Totally enclosed, air over.
6. Integral thermal-overload protection.
7. Bearings: Permanently sealed, lifetime, prelubricated, ball bearings.
8. Disconnect: Lockable disconnect.

G. Filters:
1. Washable Panel Filters: Removable, aluminum, baffle-type filters with spring-loaded fastening; with minimum 0.0781-inch-thick, stainless steel filter frame.
2. Mounting Frames: Welded, galvanized steel with gaskets and fasteners and suitable for bolting together into built-up filter banks.

H. Controls:
1. Automatic Door Switch: Type as required, installed in door area to activate air curtain when door opens and to deactivate air curtain when door closes.

I. Accessories:

1. Mounting Brackets: Adjustable mounting brackets for wall mounting.
2. Discharge Extension Neck: For ceiling-recessed installation.

2.3 SOURCE QUALITY CONTROL

A. Comply with AHRI 410, "Forced-Circulation Air-Cooling and Air-Heating Coils," for components, construction, and rating.

B. Comply with NSF 37, "Air Curtains for Entranceways in Food and Food Service Establishments."

C. Electrical Components, Devices, and Accessories: Listed and labeled as defined in NFPA 70, by an NRTL, and marked for intended location and use.

PART 3 - EXECUTION

3.1 INSTALLATION, GENERAL

A. Install air curtains with clearance for equipment service and maintenance.

B. Comply with requirements for hangers and supports specified in Section 230529 "Hangers and Supports for HVAC Piping and Equipment."

3.2 ELECTRICAL CONNECTIONS

A. Connect wiring in accordance with Section 260519 "Low-Voltage Electrical Power Conductors and Cables."

B. Ground equipment in accordance with Section 260526 "Grounding and Bonding for Electrical Systems."

C. Install electrical devices furnished by manufacturer, but not factory mounted, in accordance with NFPA 70 and NECA 1.

D. Install nameplate for each electrical connection, indicating electrical equipment designation and circuit number feeding connection.

1. Nameplate shall be laminated acrylic or melamine plastic signs, as specified in Section 260553 "Identification for Electrical Systems."

3.3 CONTROL CONNECTIONS

A. Install control and electrical power wiring to field-mounted control devices.

B. Connect control wiring in accordance with Section 260523 "Control-Voltage Electrical Power Cables."

3.4 FIELD QUALITY CONTROL

A. Perform tests and inspections.

B. Tests and Inspections:

1. After installing air curtains completely, perform visual and mechanical check of individual components.
2. After electrical circuitry has been energized, start unit to confirm motor rotation and unit operation. Certify compliance with test parameters.
3. Test and adjust controls and safeties. Replace damaged and malfunctioning controls and equipment.

C. Air-curtain unit will be considered defective if it does not pass tests and inspections.

D. Prepare test and inspection reports.

3.5 ADJUSTING

A. Adjust motor speed to achieve specified airflow.

B. Adjust discharge louver and dampers to regulate airflow.

C. Adjust air-directional vanes.

3.6 DEMONSTRATION

A. Train Owner's maintenance personnel to adjust, operate, and maintain commercial air curtains.

END OF SECTION 233433.13

SECTION 233600 - AIR TERMINAL UNITS

TIPS:

To view non-printing **Editor's Notes** that provide guidance for editing, click on MasterWorks/Single-File Formatting/Toggle/Editor's Notes.

To read **detailed research, technical information about products and materials, and coordination checklists**, click on MasterWorks/Supporting Information.

Content Requests:

<Double click here to submit questions, comments, or suggested edits to this Section.>

PART 1 - GENERAL

1.1 SUMMARY

A. Section Includes:

1. Bypass, single-duct air terminal units.
2. Modulating, single-duct air terminal units.
3. Parallel, fan-powered air terminal units.
4. Series, fan-powered air terminal units.
5. Casing liner.

1.2 ACTION SUBMITTALS

A. Product Data: For each type of air terminal unit.

1.3 CLOSEOUT SUBMITTALS

A. Operation and maintenance data.

PART 2 - PRODUCTS

2.1 SYSTEM DESCRIPTION

A. Electrical Components, Devices, and Accessories: Listed and labeled as defined in NFPA 70, by a qualified testing agency, and marked for intended location and application.

2.2 BYPASS, SINGLE-DUCT AIR TERMINAL UNITS

A. Manufacturers: Subject to compliance with requirements, available manufacturers offering products that may be incorporated into the Work include:

1. Carrier Corporation.
2. Titus, a division of Air System Components; Johnson Controls, Inc.
3. Trane.
4. Additional manufacturers submitted for and receiving engineer approval prior to bid.

B. Configuration: Diverting-damper assembly inside unit casing with control components inside a protective metal shroud.

C. Casing: 0.040-inch- thick galvanized steel, single wall.

D. Electric Controls: Damper actuator and communicating bypass controller.

1. Damper Actuator: 24 V, powered closed, powered open.
2. Communicating bypass controller: Integral UCM board, static pressure sensor and discharge air temperature sensor.

2.3 MODULATING, SINGLE-DUCT AIR TERMINAL UNITS

A. Manufacturers: Subject to compliance with requirements, available manufacturers offering products that may be incorporated into the Work include:

1. Carrier Corporation.
2. Titus, a division of Air System Components; Johnson Controls, Inc.
3. Trane.
4. Additional manufacturers submitted for and receiving engineer approval prior to bid.

B. Configuration: Volume-damper assembly inside unit casing with control components inside a protective metal shroud.

C. Casing: 0.040-inch- thick galvanized steel, single wall.
1. Air Inlet: Round stub connection or S-slip and drive connections for duct attachment.
2. Air Outlet: S-slip and drive connections.
3. Access: Removable panels for access to parts requiring service, adjustment, or maintenance; with airtight gasket.

D. Volume Damper: Galvanized steel with peripheral gasket and self-lubricating bearings.

E. Control devices shall be compatible with temperature controls system specified in Section 230923 "Direct Digital Control (DDC) System for HVAC."
1. Electronic Damper Actuator: 24 V, powered open, capacitous return.
2. Electronic Thermostat: Wall-mounted electronic type with temperature set-point display in Fahrenheit and Celsius.
3. Electronic Velocity Controller: Factory calibrated and field adjustable to minimum and maximum air volumes; shall maintain constant airflow dictated by thermostat within 5

percent of set point while compensating for inlet static-pressure variations up to 4-inch wg; and shall have a multipoint velocity sensor at air inlet.

4. Terminal Unit Controller: Pressure-independent, variable-air-volume (VAV) controller with electronic airflow transducer with multipoint velocity sensor at air inlet, factory calibrated to minimum and maximum air volumes, and having the following features:

    a. Occupied and unoccupied operating mode.
    b. Remote reset of airflow or temperature set points.
    c. Adjusting and monitoring with portable terminal.
    d. Communication with temperature-control system specified in Section 230923 "Direct Digital Control (DDC) System for HVAC."

5. Room Sensor: Wall mounted with temperature set-point adjustment and access for connection of portable operator terminal.

F. Controls:

1. Suitable for operation with duct pressures between 0.25- and 3.0-inch wg inlet static pressure.
2. System-powered, wall-mounted thermostat.

G. Control Sequences:

1. Occupied:

    a. On a call for cooling (or heating, if in changeover), airflow will increase as the damper opens towards maximum setting to satisfy set point.
    b. On a call for less cooling (or heating, if in changeover), airflow will decrease as the damper closes towards minimum setting to satisfy set point.

2. Unoccupied:

    a. Damper closes to minimum setting.

2.4 PARALLEL FAN-POWERED AIR TERMINAL UNITS

A. Manufacturers: Subject to compliance with requirements, available manufacturers offering products that may be incorporated into the Work include:

1. Carrier Corporation.
2. Titus, a division of Air System Components; Johnson Controls, Inc.
3. Trane.

B. Configuration: Volume-damper assembly and fan in parallel arrangement inside unit casing with control components inside a protective metal shroud.

C. Casing: 0.031-inch- thick galvanized steel, single wall.

1. Casing Liner: Comply with requirements in "Casing Liner" Article for fibrous-glass duct liner.
2. Air Inlets: Round stub connections or S-slip and drive connections for duct attachment.
3. Air Outlet: S-slip and drive connections.
4. Access: Removable panels for access to parts requiring service, adjustment, or maintenance; with airtight gasket and quarter-turn latches.
5. Fan: Forward-curved centrifugal, located at plenum air inlet.

D. Volume Damper: Galvanized steel with flow-sensing ring and peripheral gasket and self-lubricating bearings.

E. Velocity Sensors: Multipoint array with velocity sensors.

F. Motor:

1. Comply with NEMA designation, temperature rating, service factor, and efficiency requirements for motors specified in Section 230513 "Common Motor Requirements for HVAC Equipment."
2. Type: Permanent-split capacitor with SCR for speed adjustment.
3. Fan-Motor Assembly Isolation: Rubber isolators.
4. Enclosure: Open dripproof .
5. Motor Speed: Multispeed.

    a. Speed Control: Infinitely adjustable with electronic controls.

G. Filters:

1. 1” thickness, per MFG.

H. Electric-Resistance Heating Coils: Nickel-chromium heating wire, free of expansion noise and hum, mounted in ceramic inserts in a galvanized-steel housing; with primary automatic, and secondary manual, reset thermal cutouts. Terminate elements in stainless-steel, machine-staked terminals secured with stainless-steel hardware. Provide electric-resistance heating coils for air terminal units scheduled on Drawings.

1. Location: Plenum air inlet.
2. Stage(s): As Indicated on Engineering Drawings
3. Access door interlocked disconnect switch.
4. Downstream air temperature sensor with local connection to override discharge-air temperature to not exceed a maximum temperature set point (adjustable).
5. Nickel chrome 80/20 heating elements.
6. Airflow switch for proof of airflow.
7. Fan interlock contacts.
8. Fuses in terminal box for overcurrent protection (for coils more than 30 A).
9. Magnetic contactors.

I. Factory-Mounted and -Wired Controls: Electrical components mounted in control box with removable cover. Incorporate single-point electrical connection to power source.

1. Control Transformer: Factory mounted for control voltage on electric and electronic control units with terminal strip in control box for field wiring of thermostat and power source.
2. Wiring Terminations: Fan and controls to terminal strip. Terminal lugs to match quantities, sizes, and materials of branch-circuit conductors. Enclose terminal lugs in terminal box that is sized according to NFPA 70.
3. Disconnect Switch: Factory-mounted, fuse type.

J. Control Panel Enclosure: NEMA 250, Type 1, with access panel sealed from airflow and mounted on side of unit.

K. Control devices shall be compatible with temperature controls system specified in Section 230923 "Direct Digital Control (DDC) System for HVAC."
1. Electronic Damper Actuator: 24 V, powered open, capacitous return.
2. Electronic Thermostat: Wall-mounted electronic type with temperature set-point display in Fahrenheit and Celsius.
3. Electronic Velocity Controller: Factory calibrated and field adjustable to minimum and maximum air volumes; shall maintain constant airflow dictated by thermostat within 5 percent of set point while compensating for inlet static-pressure variations up to 4-inch wg; and shall have a multipoint velocity sensor at air inlet.
4. Terminal Unit Controller: Pressure-independent, VAV controller with electronic airflow transducer with multipoint velocity sensor at air inlet, factory calibrated to minimum and maximum air volumes, and having the following features:

L. Control Sequence: See Engineering Drawings.

2.5 SERIES FAN-POWERED AIR TERMINAL UNITS

A. Manufacturers: Subject to compliance with requirements, available manufacturers offering products that may be incorporated into the Work include:

1. Carrier Corporation.
2. Titus, a division of Air System Components; Johnson Controls, Inc.
3. Trane.
4. Additional manufacturers submitted for and receiving engineer approval prior to bid.

B. Configuration: Volume-damper assembly and fan in series arrangement inside unit casing with control components inside a protective metal shroud for installation above a ceiling.

C. Casing: 0.031-inch- thick galvanized steel, single wall.

1. Casing Liner: Comply with requirements in "Casing Liner" Article for fibrous-glass duct liner.
2. Air Inlets: Round stub connections or S-slip and drive connections for duct attachment.
3. Air Outlet: S-slip and drive connections.
4. Access: Removable panels for access to parts requiring service, adjustment, or maintenance; with airtight gasket and quarter-turn latches.
5. Fan: Forward-curved centrifugal.

D. Volume Damper: Galvanized steel with flow-sensing ring and peripheral gasket and self-lubricating bearings.

E. Velocity Sensors: Multipoint array with velocity sensors in air inlets and air outlets.

F. Motor:

1. Comply with NEMA designation, temperature rating, service factor, and efficiency requirements for motors specified in Section 230513 "Common Motor Requirements for HVAC Equipment."
2. Type: Permanent-split capacitor with SCR for speed adjustment.
3. Fan-Motor Assembly Isolation: Rubber isolators.
4. Enclosure: Open dripproof.
5. Motor Speed: Multispeed.

    a. Speed Control: Infinitely adjustable with electronic controls.

G. Filters: 1” thickness, per MFG.

H. Electric-Resistance Heating Coils: Nickel-chromium heating wire, free of expansion noise and hum, mounted in ceramic inserts in a galvanized-steel housing; with primary automatic, and secondary manual, reset thermal cutouts. Terminate elements in stainless-steel, machine-staked terminals secured with stainless-steel hardware. Provide electric-resistance heating coils for air terminal units scheduled on Drawings.

1. Stage(s): See Engineering Drawings Schedule.
2. Access door interlocked disconnect switch.
3. Downstream air temperature sensor with local connection to override discharge-air temperature to not exceed a maximum temperature set point (adjustable).
4. Nickel chrome 80/20 heating elements.
5. Airflow switch for proof of airflow.
6. Fan interlock contacts.
7. Fuses in terminal box for overcurrent protection (for coils more than 30 A).
8. Magnetic contactors.

I. Factory-Mounted and -Wired Controls: Electrical components mounted in control box with removable cover. Incorporate single-point electrical connection to power source.

1. Control Transformer: Factory mounted for control voltage on electric and electronic control units with terminal strip in control box for field wiring of thermostat and power source.
2. Wiring Terminations: Fan and controls to terminal strip. Terminal lugs to match quantities, sizes, and materials of branch-circuit conductors. Enclose terminal lugs in terminal box that is sized according to NFPA 70.
3. Disconnect Switch: Factory-mounted, fuse type.

J. Control Panel Enclosure: NEMA 250, Type 1, with access panel sealed from airflow and mounted on side of unit.

K. Control devices shall be compatible with temperature controls system specified in Section 230923 "Direct Digital Control (DDC) System for HVAC."
   1. Electronic Damper Actuator: 24 V, powered open, capacitous return.
   2. Electronic Thermostat: Wall-mounted electronic type with temperature set-point display in Fahrenheit and Celsius.
   3. Electronic Velocity Controller: Factory calibrated and field adjustable to minimum and maximum air volumes; shall maintain constant airflow dictated by thermostat within 5 percent of set point while compensating for inlet static-pressure variations up to 4-inch wg; and shall have a multipoint velocity sensor at air inlet.
   4. Terminal Unit Controller: Pressure-independent, VAV controller with electronic airflow transducer with multipoint velocity sensor at air inlet, factory calibrated to minimum and maximum air volumes, and having the following features:

L. Control Sequence: See Engineering Drawings.

2.6 CASING LINER

A. Casing Liner: Fibrous-glass duct liner, complying with ASTM C1071, NFPA 90A, or NFPA 90B; and with NAIMA AH124, "Fibrous Glass Duct Liner Standard."

   1. Minimum Thickness: 1 inch.

      a. Maximum Thermal Conductivity:

         1) Type I, Flexible: 0.27 Btu x in./h x sq. ft. x deg F at 75 deg F mean temperature.
         2) Type II, Rigid: 0.23 Btu x in./h x sq. ft. x deg F at 75 deg F mean temperature.

   2. Solvent-Based Liner Adhesive: Comply with NFPA 90A or NFPA 90B and with ASTM C916.

2.7 SOURCE QUALITY CONTROL

A. Factory Tests: Test assembled air terminal units according to AHRI 880.

   1. Label each air terminal unit with plan number, nominal airflow, maximum and minimum factory-set airflows, coil type, and AHRI certification seal.

PART 3 - EXECUTION

3.1 HANGER AND SUPPORT INSTALLATION

A. Comply with SMACNA's "HVAC Duct Construction Standards - Metal and Flexible," Ch. 5, "Hangers and Supports" and with Section 230529 "Hangers and Supports for HVAC Piping and Equipment."

B. Hangers Exposed to View: Threaded rod and angle or channel supports.

C. Install upper attachments to structures. Select and size upper attachments with pull-out, tension, and shear capacities appropriate for supported loads and building materials where used.

3.2 TERMINAL UNIT INSTALLATION

A. Install air terminal units according to NFPA 90A, "Standard for the Installation of Air Conditioning and Ventilating Systems."

B. Install air terminal units level and plumb. Maintain sufficient clearance for normal service and maintenance.

C. Install wall-mounted thermostats.

D. Where installing piping adjacent to air terminal unit, allow space for service and maintenance.

E. Comply with requirements in Section 233113 "Metal Ducts" for connecting ducts to air terminal units.

F. Make connections to air terminal units with flexible connectors complying with requirements in Section 233300 "Air Duct Accessories."

G. Label each air terminal unit with plan number, nominal airflow, and maximum and minimum factory-set airflows. Comply with requirements in Section 230553 "Identification for HVAC Piping and Equipment" for equipment labels and warning signs and labels.

3.3 FIELD QUALITY CONTROL

A. Perform the following tests and inspections:

1. After installing air terminal units and after electrical circuitry has been energized, test for compliance with requirements.
2. Operational Test: After electrical circuitry has been energized, start units to confirm proper motor rotation and unit operation.
3. Test and adjust controls and safeties. Replace damaged and malfunctioning controls and equipment.

B. Air terminal unit will be considered defective if it does not pass tests and inspections.

3.4 DEMONSTRATION

A. Train Owner's maintenance personnel to adjust, operate, and maintain air terminal units.

END OF SECTION 233600

SECTION 233713.13 - AIR DIFFUSERS

TIPS:

To view non-printing **Editor's Notes** that provide guidance for editing, click on MasterWorks/Single-File Formatting/Toggle/Editor's Notes.

To read **detailed research, technical information about products and materials, and coordination checklists**, click on MasterWorks/Supporting Information.

Content Requests:

<Double click here to submit questions, comments, or suggested edits to this Section.>

PART 1 - GENERAL

1.1 SUMMARY

A. Section Includes:
   1. Rectangular and square ceiling diffusers.
   2. Perforated diffusers.
   3. Linear bar diffusers.
   4. Linear slot diffusers.

B. Related Requirements:

   1. Section 233300 "Air Duct Accessories" for fire and smoke dampers and volume-control dampers not integral to diffusers.
   2. Section 233713.23 "Air Registers and Grilles" for adjustable-bar register and grilles, fixed-face registers and grilles, and linear bar grilles.

1.2 ACTION SUBMITTALS

A. Product Data: For each type of product.

PART 2 - PRODUCTS

2.1 RECTANGULAR AND SQUARE CEILING DIFFUSERS

A. Manufacturers: Subject to compliance with requirements, available manufacturers offering products that may be incorporated into the Work include:

   1. Hart & Cooley Inc.

2. Price Industries.
3. Titus, a division of Air System Components; Johnson Controls, Inc.
4. Additional manufacturers submitted for and receiving engineer approval prior to bid.

2.2 PERFORATED DIFFUSERS

A. Manufacturers: Subject to compliance with requirements, available manufacturers offering products that may be incorporated into the Work include:

1. Hart & Cooley Inc.
2. Price Industries.
3. Titus, a division of Air System Components; Johnson Controls, Inc.
4. Additional manufacturers submitted for and receiving engineer approval prior to bid.

2.3 LINEAR BAR DIFFUSERS

A. Manufacturers: Subject to compliance with requirements, available manufacturers offering products that may be incorporated into the Work include:

1. Hart & Cooley Inc.
2. Price Industries.
3. Titus, a division of Air System Components; Johnson Controls, Inc.
4. Additional manufacturers submitted for and receiving engineer approval prior to bid.

2.4 LINEAR SLOT DIFFUSERS

A. Manufacturers: Subject to compliance with requirements, available manufacturers offering products that may be incorporated into the Work include:

1. Hart & Cooley Inc.
2. Price Industries.
3. Titus, a division of Air System Components; Johnson Controls, Inc.
4. Additional manufacturers submitted for and receiving engineer approval prior to bid.

PART 3 - EXECUTION

3.1 INSTALLATION

A. Install diffusers level and plumb.

B. Ceiling-Mounted Outlets and Inlets: Drawings indicate general arrangement of ducts, fittings, and accessories. Air outlet and inlet locations have been indicated to achieve design requirements for air volume, noise criteria, airflow pattern, throw, and pressure drop. Make final locations where indicated, as much as practical. For units installed in lay-in ceiling panels,

locate units in the center of panel. Where architectural features or other items conflict with installation, notify Architect for a determination of final location.

C. Install diffusers with airtight connections to ducts and to allow service and maintenance of dampers, air extractors, and fire dampers.

3.2 ADJUSTING

A. After installation, adjust diffusers to air patterns indicated, or as directed, before starting air balancing.

END OF SECTION 233713.13

SECTION 233713.23 - REGISTERS AND GRILLES

TIPS:

To view non-printing **Editor's Notes** that provide guidance for editing, click on MasterWorks/Single-File Formatting/Toggle/Editor's Notes.

To read **detailed research, technical information about products and materials, and coordination checklists**, click on MasterWorks/Supporting Information.

Content Requests:

<Double click here to submit questions, comments, or suggested edits to this Section.>

PART 1 - GENERAL

1.1 SUMMARY

A. Section Includes:

1. Adjustable blade face registers and grilles.
2. Fixed face registers and grilles.

B. Related Requirements:

1. Section 233300 "Air Duct Accessories" for fire and smoke dampers and volume-control dampers not integral to registers and grilles.
2. Section 233713.13 "Air Diffusers" for various types of air diffusers.

1.2 ACTION SUBMITTALS

A. Product Data: For each type of product.

PART 2 - PRODUCTS

2.1 REGISTERS

A. Adjustable Blade Face Register:

1. Manufacturers: Subject to compliance with requirements, available manufacturers offering products that may be incorporated into the Work include:

a. Hart & Cooley Inc.

b. Price Industries.
c. Titus, a division of Air System Components; Johnson Controls, Inc.
d. Additional manufacturers submitted for and receiving engineer approval prior to bid.

B. Fixed Face Register:

1. Manufacturers: Subject to compliance with requirements, available manufacturers offering products that may be incorporated into the Work include:

a. Hart & Cooley Inc.
b. Price Industries.
c. Titus, a division of Air System Components; Johnson Controls, Inc.
d. Additional manufacturers submitted for and receiving engineer approval prior to bid.

2.2 GRILLES

A. Adjustable Blade Face Grille:

1. Manufacturers: Subject to compliance with requirements, available manufacturers offering products that may be incorporated into the Work include:

a. Hart & Cooley Inc.
b. Price Industries.
c. Titus, a division of Air System Components; Johnson Controls, Inc.
d. Additional manufacturers submitted for and receiving engineer approval prior to bid.

B. Fixed Face Grille:

1. Manufacturers: Subject to compliance with requirements, available manufacturers offering products that may be incorporated into the Work include:

a. Hart & Cooley Inc.
b. Price Industries.
c. Titus, a division of Air System Components; Johnson Controls, Inc.
d. Additional manufacturers submitted for and receiving engineer approval prior to bid.

PART 3 - EXECUTION

3.1 INSTALLATION

A. Install registers and grilles level and plumb.

B. Outlets and Inlets Locations: Drawings indicate general arrangement of ducts, fittings, and accessories. Air outlet and inlet locations have been indicated to achieve design requirements for air volume, noise criteria, airflow pattern, throw, and pressure drop. Make final locations where indicated, as much as practical. For units installed in lay-in ceiling panels, locate units in the center of panel. Where architectural features or other items conflict with installation, notify Architect for a determination of final location.

C. Install registers and grilles with airtight connections to ducts and to allow service and maintenance of dampers, air extractors, and fire dampers.

3.2 ADJUSTING

A. After installation, adjust registers and grilles to air patterns indicated, or as directed, before starting air balancing.

END OF SECTION 233713.23

SECTION 233723 - HVAC GRAVITY VENTILATORS

TIPS:

To view non-printing **Editor's Notes** that provide guidance for editing, click on MasterWorks/Single-File Formatting/Toggle/Editor's Notes.

To read **detailed research, technical information about products and materials, and coordination checklists**, click on MasterWorks/Supporting Information.

Content Requests:

<Double click here to submit questions, comments, or suggested edits to this Section.>

PART 1 - GENERAL

1.1 SUMMARY

A. Section Includes:
   1. Hooded ventilators.

1.2 ACTION SUBMITTALS

A. Product Data: For each type of product.

1.3 COORDINATION

A. Coordinate sizes and locations of roof curbs, equipment supports, and roof penetrations with actual equipment provided.

PART 2 - PRODUCTS

2.1 PERFORMANCE REQUIREMENTS

A. Structural Performance: Ventilators shall withstand the effects of gravity loads and the following loads and stresses within limits and under conditions indicated without permanent deformation of ventilator components, noise or metal fatigue caused by ventilator blade rattle or flutter, or permanent damage to fasteners and anchors. Wind pressures shall be considered to act normal to the face of the building.

   1. Wind Loads: Determine loads based on pressures as indicated on Structural Drawings.

B. Capacities and Characteristics: See Engineering Drawings Schedule

2.2 FABRICATION

A. Factory or shop fabricate gravity ventilators to minimize field splicing and assembly. Disassemble units to the minimum extent as necessary for shipping and handling. Clearly mark units for reassembly and coordinated installation.

B. Fabricate frames, including integral bases, to fit in openings of sizes indicated, with allowances made for fabrication and installation tolerances, adjoining material tolerances, and perimeter sealant joints.

C. Fabricate units with closely fitted joints and exposed connections accurately located and secured.

D. Fabricate supports, anchorages, and accessories required for complete assembly.

E. Perform shop welding by AWS-certified procedures and personnel.

2.3 HOODED VENTILATORS

A. Description: Hooded round penthouse for intake air.

B. Manufacturers: Subject to compliance with requirements, available manufacturers offering products that may be incorporated into the Work include:

1. Greenheck Fan Corporation.
2. Loren Cook Company.
3. PennBarry.
4. Additional manufacturers submitted for and receiving engineer approval prior to bid.

C. Construction:
1. Material: Aluminum, of thickness required to comply with structural performance requirements, but not less than 0.063-inch-thick base and 0.050-inch-thick hood; suitably reinforced.
2. Insulation: None.
3. Bird Screening: Aluminum, 1/2-inch-square mesh or flattened, expanded aluminum, 3/4-inch diamond mesh wire.
4. Insect Screening: Aluminum, 18-by-16 mesh wire.

D. Galvanized-Steel Finish:

1. Surface Preparation: Clean surfaces of dirt, grease, and other contaminants. Clean welds, mechanical connections, and abraded areas, and repair galvanizing according to ASTM A780/A780M. Apply a conversion coating suited to the organic coating to be applied over it.
2. Factory Priming for Field-Painted Finish: Where field painting after installation is indicated, apply an air-dried primer immediately after cleaning and pretreating.

3. Baked-Enamel Finish: Immediately after cleaning and pretreating, apply manufacturer's standard finish consisting of prime coat and thermosetting topcoat, with a minimum dry film thickness of 1 mil for topcoat and an overall minimum dry film thickness of 2 mils.

    a. Color and Gloss: As selected by Architect from manufacturer's full range.

E. Roof Curbs: Galvanized-steel sheet; with mitered and welded corners; 1-1/2-inch-thick, rigid fiberglass insulation adhered to inside walls; and 1-1/2-inch wood nailer. Size as required to fit roof opening and ventilator base.
1. Overall Height: 12 inches.

2.4 MATERIALS

A. Aluminum Extrusions: ASTM B221, Alloy 6063-T5 or T-52.

B. Aluminum Sheet: ASTM B209, Alloy 3003 or 5005, with temper as required for forming or as otherwise recommended by metal producer for required finish.

C. Galvanized-Steel Sheet: ASTM A653/A653M, G90 zinc coating, mill phosphatized.

D. Fasteners: Same basic metal and alloy as fastened metal or 300 Series stainless steel unless otherwise indicated. Do not use metals that are incompatible with joined materials.

1. Use types and sizes to suit unit installation conditions.
2. Use hex-head or Phillips pan-head screws for exposed fasteners unless otherwise indicated.

E. Post-Installed Fasteners for Concrete and Masonry: Torque-controlled expansion anchors made from stainless-steel components, with capability to sustain without failure a load equal to 4 times the loads imposed for concrete, or 6 times the load imposed for masonry, as determined by testing according to ASTM E488/E488M, conducted by a qualified independent testing agency.

F. Bituminous Paint: Cold-applied asphalt emulsion complying with ASTM D1187/D1187M.

PART 3 - EXECUTION

3.1 INSTALLATION

A. Install gravity ventilators level, plumb, and at indicated alignment with adjacent work.

B. Secure gravity ventilators to roof curbs with zinc-plated hardware, that comply with the wind fastening requirements. Use concealed anchorages where possible. Refer to Section 077200 "Roof Accessories."

C. Install gravity ventilators with clearances for service and maintenance.

D. Install perimeter reveals and openings of uniform width for sealants and joint fillers, as indicated.

E. Install concealed gaskets, flashings, joint fillers, and insulation as installation progresses. Comply with Section 079200 "Joint Sealants" for sealants applied during installation.

F. Label gravity ventilators according to requirements specified in Section 230553 "Identification for HVAC Piping and Equipment."

G. Protect galvanized and nonferrous-metal surfaces from corrosion or galvanic action by applying a heavy coating of bituminous paint on surfaces that will be in contact with concrete, masonry, or dissimilar metals.

H. Repair finishes damaged by cutting, welding, soldering, and grinding. Restore finishes, so no evidence remains of corrective work. Return items that cannot be refinished in the field to the factory, make required alterations, and refinish entire unit or provide new units.

I. Refer to Section 077200 "Roof Accessories" for flashing and counterflashing of roof curbs.

3.2 CONNECTIONS

A. Duct installation and connection requirements are specified in Section 233113 "Metal Ducts" and Section 233116 "Nonmetal Ducts." Drawings indicate general arrangement of ducts and duct accessories.

END OF SECTION 233723

SECTION 233813 - COMMERCIAL-KITCHEN HOODS

TIPS:

To view non-printing **Editor's Notes** that provide guidance for editing, click on MasterWorks/Single-File Formatting/Toggle/Editor's Notes.

To read **detailed research, technical information about products and materials, and coordination checklists**, click on MasterWorks/Supporting Information.

Content Requests:

<Double click here to submit questions, comments, or suggested edits to this Section.>

PART 1 - GENERAL

1.1 SUMMARY

A. Section includes:

1. Commercial-kitchen hoods, Type I.

1.2 ACTION SUBMITTALS

A. Product Data: For the following:

1. Filters/baffles.
2. Fire-suppression systems.
3. Luminaires.

PART 2 - PRODUCTS

2.1 PERFORMANCE REQUIREMENTS

A. Electrical Components, Devices, and Accessories: Listed and labeled as defined in NFPA 70, by a qualified testing agency, and marked for intended location and application.

2.2 HOOD MATERIALS

A. Stainless-Steel Sheet: Type 430
1. Finish: Comply with SSINA's "Finishes for Stainless Steel" for recommendations for applying and designating finishes.

a. Finish shall be free from tool and die marks and stretch lines and shall have uniform, directionally textured, polished finish indicated, free of cross scratches. Grain shall run with long dimension of each piece.

2. Concealed Stainless-Steel Surfaces: ASTM A480/A480M, No. 2B finish (bright, cold-rolled, unpolished finish).
3. Exposed Surfaces: ASTM A480/A480M, No. 3 finish (intermediate polished surface) or ASTM A480/A480M, No. 4 finish (directional satin).
4. When polishing is completed, passivate and rinse surfaces. Remove embedded foreign matter and leave surfaces chemically clean.

B. Zinc-Coated Steel Shapes: ASTM A36/A36M, zinc coated according to ASTM A123/A123M requirements.

C. Sealant: ASTM C920; Type S, Grade NS, Class 25, Use NT. Elastomeric sealant shall be NSF certified for commercial-kitchen hood application. Sealants, when cured and washed, shall comply with requirements in 21 CFR 177.2600, for use in areas that come in contact with food.

1. Color: As selected by Architect from manufacturer's full range.
2. Backer Rod: Closed-cell polyethylene, in diameter larger than joint width.

D. Sound Dampening: NSF-certified, non-absorbent, hard-drying, sound-deadening compound for permanent adhesion to metal in minimum 1/8-inch thickness that does not chip, flake, or blister.

E. Gaskets: NSF certified for end-use application indicated; of resilient rubber, neoprene, or PVC that is nontoxic, stable, odorless, nonabsorbent, and unaffected by exposure to foods and cleaning compounds, and that passes testing according to UL 710.

2.3 GENERAL HOOD FABRICATION REQUIREMENTS

A. Welding: Use welding rod of same composition as metal being welded. Use methods that minimize distortion and develop strength and corrosion resistance of base metal. Make ductile welds free of mechanical imperfections such as gas holes, pits, or cracks.

1. Welded Butt Joints: Full-penetration welds for full-joint length. Make joints flat, continuous, and homogenous with sheet metal without relying on straps under seams, filling in with solder, or spot welding.
2. Grind exposed welded joints flush with adjoining material and polish to match adjoining surfaces.
3. Where fasteners are welded to underside of equipment, finish reverse side of weld smooth and flush.
4. Coat concealed stainless-steel welded joints with metallic-based paint to prevent corrosion.
5. After zinc-coated steel is welded, clean welds and abraded areas and apply SSPC-Paint 20, high-zinc-dust-content, galvanizing repair paint to comply with ASTM A780/A780M.

B. For metal butt joints, comply with SMACNA's "Kitchen Ventilation Systems & Food Service Equipment Guidelines."

C. Where stainless steel is joined to a dissimilar metal, use stainless-steel welding material or fastening devices.

D. Form metal with break bends that are not flaky, scaly, or cracked in appearance; where breaks mar uniform surface appearance of material, remove marks by grinding, polishing, and finishing.

E. Sheared Metal Edges: Finish free of burrs, fins, and irregular projections.

F. In food zones, as defined in NSF, fabricate surfaces free from exposed fasteners.

G. Cap exposed fastener threads, including those inside cabinets, with stainless-steel lock washers and stainless-steel cap (acorn) nuts.

H. Fabricate pipe slots on equipment with turned-up edges sized to accommodate service and utility lines and mechanical connections.

I. Fabricate enclosures, including panels, housings, and skirts, to conceal service lines, operating components, and mechanical and electrical devices including those inside cabinets unless otherwise indicated.

J. Fabricate equipment edges and backsplashes according to SMACNA's "Kitchen Ventilation Systems & Food Service Equipment Guidelines."

K. Fabricate enclosure panels to ceiling and wall as follows:

1. Fabricate panels on all exposed side(s) with same material as hood, and extend from ceiling to top of hood canopy and from canopy to wall.
2. Wall Offset Spacer: Minimum of 3 inches.
3. Wall Shelves and Overshelves: Fabricate according to SMACNA's "Kitchen Ventilation Systems & Food Service Equipment Guidelines," with minimum 0.0625-inch-thick, stainless-steel shelf tops.

2.4 EXHAUST HOOD FABRICATION, TYPE I HOOD

A. Manufacturers: Subject to compliance with requirements, available manufacturers offering products that may be incorporated into the Work include:

1. Captive-Aire Systems.
2. Greenheck Fan Corporation.
3. Additional manufacturers submitted for and receiving engineer approval prior to bid.

B. Weld all joints exposed to grease with continuous welds, and make filters/baffles or grease extractors and makeup air diffusers easily accessible for cleaning.

1. Fabricate hoods according to NSF 2, "Food Equipment."
2. Hoods shall be listed and labeled, according to UL 710, by a testing agency acceptable to authorities having jurisdiction.

3. Duct Collars: Minimum 0.0598-inch-thick steel at least 3 inches long, continuously welded to top of hood and at corners.

C. Hood Configuration: Exhaust and makeup air.
1. Makeup air shall be introduced through laminar-flow-type, perforated metal panels on front of hood canopy.

D. Hood Style: Wall-mounted canopy.

E. Filters/Baffles: Removable, stainless-steel, with spring-loaded fastening. Fabricate stainless steel for filter frame and removable collection cup and pitched trough. Exposed surfaces shall be pitched to drain to collection cup. Filters/baffles shall be tested according to UL 1046, "Safety for Grease Filters for Exhaust Ducts," by an NRTL acceptable to authorities having jurisdiction.

F. Luminaires: Surface-mounted, LED fixtures and lamps with lenses sealed vapor tight. Wiring shall be in conduit on hood exterior. Number and location of luminaires shall provide a minimum of 70 fc at 30 inches above finished floor.

1. Light switches shall be mounted on front panel of hood canopy.
2. Luminaires: Complying with UL 1598.

G. Hood Controls: Hood-mounting control cabinet, factory wired to control groups of adjacent hoods, and fabricated of stainless steel.

1. Exhaust Fan: On-off switches shall start and stop the exhaust fan. Interlock exhaust fan with makeup air supply fan to operate simultaneously. Interlock exhaust fan with fire-suppression system to operate fan(s) during fire-suppression-agent release and to remain in operation until manually stopped. Include red pilot light to indicate fan operation.

2. Exhaust Fan Interlock: Factory wire the exhaust fan starters in a single control cabinet for adjacent hoods to operate together.
3. High-Temperature Control: Alarm shall sound and cooking equipment shall shut down before hood discharge temperature rises to actuation temperature of fire-suppression system.

H. Capacities and Characteristics: See Hood Drawings.

2.5 FIRE-SUPPRESSION SYSTEM, WET CHEMICAL

A. Manufacturers: Subject to compliance with requirements, available manufacturers offering products that may be incorporated into the Work include:

1. Ansul by Johnson Controls Company.
2. Additional manufacturers submitted for and receiving engineer approval prior to bid.

B. Description: Engineered distribution piping designed for automatic detection and release or manual release of fire-suppression agent by hood operator. Fire-suppression system shall be

listed and labeled for complying with NFPA 17A, "Wet Chemical Extinguishing Systems," by a qualified testing agency acceptable to authorities having jurisdiction.

1. Steel Pipe, NPS 2 and Smaller: ASTM A53/A53M, Type S, Grade A, Schedule 40, plain ends.
2. Malleable-Iron Threaded Fittings: ASME B16.3, Classes 150 and 300.
3. Piping, fusible links and release mechanism, tank containing the suppression agent, and controls shall be factory installed. Controls shall be in stainless-steel control cabinet mounted on hood. Furnish manual pull station for wall mounting. Exposed piping shall be covered with chrome-plated aluminum tubing. Exposed fittings shall be chrome plated.
4. Liquid Extinguishing Agent: Noncorrosive, low-pH liquid.
5. Furnish electric-operated gas shutoff valve with clearly marked open and closed indicator for field installation.
6. Fire-suppression system controls shall be integrated with controls for fans, lights, and fuel supply and located in a single cabinet for each group of hoods immediately adjacent.
7. Wiring shall have color-coded, numbered terminal blocks and grounding bar. Spare terminals for fire alarm, optional wiring to start fan with fire alarm, red pilot light to indicate fan operation, and control switches shall all be factory wired in control cabinet with relays or starters. Include spare terminals for fire alarm, and wiring to start fan with fire alarm.

PART 3 - EXECUTION

3.1 INSTALLATION, GENERAL

A. Coordinate equipment layout and installation with adjacent Work, including luminaires, HVAC equipment, plumbing, and fire-suppression system components.

B. Complete field assembly of hoods where required.

1. Make closed butt and contact joints that do not require filler.
2. Grind field welds on stainless-steel equipment smooth, and polish to match adjacent finish. Comply with welding requirements in "General Hood Fabrication Requirements" Article.

C. Install hoods and associated services with clearances and access for maintaining, cleaning, and servicing hoods, filters/baffles, grease extractor, and fire-suppression systems according to manufacturer's written instructions and requirements of authorities having jurisdiction.

D. Make cutouts in hoods where required to run service lines and to make final connections, and seal openings according to UL 1978.

E. Securely anchor and attach items and accessories to walls, floors, or bases with stainless-steel fasteners unless otherwise indicated.

F. Install hoods to operate free from vibration.

G. Install trim strips and similar items requiring fasteners in a bed of sealant. Fasten with stainless-steel fasteners at 48 inches o.c. maximum.

H. Install sealant in joints between equipment and abutting surfaces with continuous joint backing unless otherwise indicated. Provide airtight, watertight, vermin-proof, sanitary joints.

I. Install lamps, with maximum recommended wattage, in equipment with integral lighting.

J. Set initial temperatures, and calibrate sensors.

K. Set field-adjustable switches.

L. Connect ducts according to requirements in Section 233300 "Air Duct Accessories." Install flexible connectors on makeup air supply duct. Weld exhaust-duct connections with continuous liquidtight joint.

M. Install fire-suppression piping for remote-mounted suppression systems according to NFPA 17A, "Wet Chemical Extinguishing Systems."

3.2 FIELD QUALITY CONTROL

A. Perform the following tests and inspections with the assistance of a factory-authorized service representative:

1. Test each equipment item for proper operation. Repair or replace equipment that is defective, including units that operate below required capacity or that operate with excessive noise or vibration.
2. Test and adjust controls and safeties. Replace damaged and malfunctioning controls and equipment.
3. Perform hood performance tests required by authorities having jurisdiction.
4. Perform fire-suppression system performance tests required by authorities having jurisdiction.

B. Commercial-kitchen hoods will be considered defective if they do not pass tests and inspections.

END OF SECTION 233813

SECTION 235123 - GAS VENTS

TIPS:

To view non-printing **Editor's Notes** that provide guidance for editing, click on MasterWorks/Single-File Formatting/Toggle/Editor's Notes.

To read **detailed research, technical information about products and materials, and coordination checklists**, click on MasterWorks/Supporting Information.

Content Requests:

<Double click here to submit questions, comments, or suggested edits to this Section.>

PART 1 - GENERAL

1.1 SUMMARY

A. Section Includes: Listed double-wall vents.

B. Related Requirements:

1.2 ACTION SUBMITTALS

A. Product Data: For each type of product.

PART 2 - PRODUCTS

2.1 LISTED TYPE B AND BW VENTS

A. Manufacturers: Subject to compliance with requirements, available manufacturers offering products that may be incorporated into the Work include:

1. Hart & Cooley Inc.
2. M&G DuraVent, Inc.; a member of the M&G Group.
3. Metal-Fab, Inc.
4. Additional manufacturers submitted for and receiving engineer approval prior to bid.

B. Description: Double-wall metal vents tested according to UL 441 and rated for 480 deg F continuously for Type B or 550 deg F continuously for Type BW; with neutral or negative flue pressure complying with NFPA 211.

C. Construction: Inner shell and outer jacket separated by at least a 1/4-inch airspace.

D. Inner Shell: ASTM B209, Type 3003 aluminum.

E. Outer Jacket: Galvanized steel.

F. Accessories: Tees, elbows, increasers, draft-hood connectors, terminations, adjustable roof flashings, storm collars, support assemblies, thimbles, firestop spacers, and fasteners; fabricated from similar materials and designs as vent-pipe straight sections; all listed for same assembly.

1. Termination: Coordinate w/ Unit Heater MFG.

PART 3 - EXECUTION

3.1 APPLICATION

A. Listed Type B and BW Vents: Vents for certified gas appliances.

3.2 INSTALLATION OF LISTED VENTS

A. Comply with minimum clearances from combustibles and minimum termination heights according to product listing or NFPA 211, whichever is most stringent.

B. Seal between sections of positive-pressure vents according to manufacturer's written installation instructions, using sealants recommended by manufacturer.

C. Support vents at intervals recommended by manufacturer to support weight of vents and all accessories, without exceeding appliance loading.

D. Lap joints in direction of flow.

E. After completing system installation, including outlet fittings and devices, inspect exposed finish. Remove burrs, dirt, and construction debris, and repair damaged finishes.

END OF SECTION 235123

SECTION 235533.16 - GAS-FIRED UNIT HEATERS

TIPS:

To view non-printing **Editor's Notes** that provide guidance for editing, click on MasterWorks/Single-File Formatting/Toggle/Editor's Notes.

To read **detailed research, technical information about products and materials, and coordination checklists**, click on MasterWorks/Supporting Information.

Content Requests:

<Double click here to submit questions, comments, or suggested edits to this Section.>

PART 1 - GENERAL

1.1 SUMMARY

A. Section includes gas-fired unit heaters.

1.2 ACTION SUBMITTALS

A. Product Data: For each type of gas-fired unit heater.

1. Include rated capacities, operating characteristics, and accessories.

1.3 CLOSEOUT SUBMITTALS

A. Operation and maintenance data.

1.4 WARRANTY

A. Special Warranty: Manufacturer agrees to repair or replace heat exchanger of gas-fired unit heater that fails in materials or workmanship within specified warranty period.

1. Warranty Period: One years from date of Substantial Completion.

PART 2 - PRODUCTS

2.1 MANUFACTURERS

A. Manufacturers: Subject to compliance with requirements, available manufacturers offering products that may be incorporated into the Work include:

1. Lennox Industries, Inc.; Lennox International.
2. REZNOR, a brand of Nortek Global HVAC.
3. Additional manufacturers submitted for and receiving engineer approval prior to bid.

2.2 PERFORMANCE REQUIREMENTS

A. Electrical Components, Devices, and Accessories: Listed and labeled as defined in NFPA 70, by a qualified testing agency, and marked for intended location and application.

2.3 MANUFACTURED UNITS

A. Description: Factory assembled, piped, and wired, and complying with ANSI Z83.8/CSA 2.6.

B. Gas Type: Design burner for natural gas having characteristics same as those of gas available at Project site.

C. Type of Venting: Gravity vented.

D. Housing: Steel, with integral draft hood and inserts for suspension mounting rods.
1. Discharge Louvers: Independently adjustable, horizontal blades.

E. Accessories:

1. Four-point suspension kit.

F. Heat Exchanger: Aluminized steel.

G. Burner Material: Aluminized steel with stainless-steel inserts.

H. Propeller Unit Fan:

1. Formed-steel propeller blades riveted to heavy-gage steel spider bolted to cast-iron hub, dynamically balanced, and resiliently mounted.
2. Fan-Blade Guard: Galvanized steel, complying with OSHA specifications, removable for maintenance.

I. Centrifugal Unit Fan:

1. Steel, centrifugal fan dynamically balanced and resiliently mounted.
2. Belt-Driven Drive Assembly:

a. Resiliently mounted to housing, with the following features:

1) Fan Shaft: Turned, ground, and polished steel; keyed to wheel hub.
2) Shaft Bearings: Permanently lubricated, permanently sealed, self-aligning ball bearings.
3) Pulleys: Cast-iron, adjustable-pitch motor pulley.

J. Motors:

1. Comply with NEMA designation, temperature rating, service factor, and efficiency requirements for motors specified in Section 230513 "Common Motor Requirements for HVAC Equipment."

K. Controls: Regulated redundant gas valve containing pilot solenoid valve, electric gas valve, pilot filter, pressure regulator, pilot shutoff, and manual shutoff all in one body.

1. Gas Control Valve: Single stage.
2. Ignition: Electronically controlled electric spark with flame sensor.
3. Fan Thermal Switch: Operates fan on heat-exchanger temperature.
4. Vent Flow Verification: Differential pressure switch to verify open vent.
5. Control transformer.
6. High Limit: Thermal switch or fuse to stop burner.
7. Thermostat: Devices and wiring are specified in Section 230923.27 "Temperature Instruments."
8. Wall-Mounted Thermostat:

a. Single stage.
b. Fan on-off-automatic switch.
c. 24-V ac.
d. 50 to 90 deg F operating range.

L. Electrical Connection: Factory wire motors and controls for a single electrical connection.

PART 3 - EXECUTION

3.1 INSTALLATION

A. Install and connect gas-fired unit heaters and associated gas and vent features and systems according to NFPA 54, applicable local codes and regulations, and manufacturer's written instructions.

3.2 EQUIPMENT MOUNTING

A. Suspended Units: Suspend from substrate using threaded rods, spring hangers, and building attachments. Secure rods to unit hanger attachments. Adjust hangers so unit is level and plumb.

B. Substrate-Mounted Units: Provide supports connected to substrate. Secure units to supports.

1. Spring hangers are specified in Section 230529 "Hangers and Supports for HVAC Piping and Equipment."
2. Threaded Rods, Spring Hangers, and Building Attachments: Comply with requirements in Section 230529 "Hangers and Supports for HVAC Piping and Equipment" and Section 230548 "Vibration and Seismic Controls for HVAC."
3. Anchor the unit to resist code-required horizontal acceleration.

3.3 CONNECTIONS

A. Piping installation requirements are specified in other Sections. Drawings indicate general arrangement of piping, fittings, and specialties.

B. Where installing piping adjacent to gas-fired unit heater, allow space for service and maintenance.

C. Gas Piping: Comply with Section 231123 "Facility Natural-Gas Piping." Connect gas piping to gas train inlet; provide union with enough clearance for burner removal and service.

D. Vent Connections: Comply with Section 235123 "Gas Vents."

E. Ground equipment according to Section 260526 "Grounding and Bonding for Electrical Systems."

F. Connect wiring according to Section 260519 "Low-Voltage Electrical Power Conductors and Cables."

3.4 FIELD QUALITY CONTROL

A. Manufacturer's Field Service: Engage a factory-authorized service representative to test and inspect components, assemblies, and equipment installations, including connections.

B. Perform the following tests and inspections:

1. Test and adjust controls and safeties. Replace damaged and malfunctioning controls and equipment.
2. Verify bearing lubrication.
3. Verify proper motor rotation.
4. Test Reports: Prepare a written report to record the following:

    a. Test procedures used.
    b. Test results that comply with requirements.
    c. Test results that do not comply with requirements and corrective action taken to achieve compliance with requirements.

C. Gas-fired unit heater will be considered defective if it does not pass tests and inspections.

3.5 ADJUSTING

A. Adjust initial temperature set points.

B. Adjust burner and other unit components for optimum heating performance and efficiency.

3.6 DEMONSTRATION

A. Train Owner's maintenance personnel to adjust, operate, and maintain gas-fired unit heaters.

END OF SECTION 235533.16

SECTION 237313.13 - INDOOR, BASIC AIR-HANDLING UNITS

TIPS:

To view non-printing **Editor's Notes** that provide guidance for editing, click on MasterWorks/Single-File Formatting/Toggle/Editor's Notes.

To read **detailed research, technical information about products and materials, and coordination checklists**, click on MasterWorks/Supporting Information.

Content Requests:

<Double click here to submit questions, comments, or suggested edits to this Section.>

PART 1 - GENERAL

1.1 SUMMARY

A. Section includes factory-assembled, indoor air-handling units with limited features, including the following components and accessories:

1. Casings.
2. Fans, drives, and motors.
3. Coils.

1.2 ACTION SUBMITTALS

A. Product Data: For each air-handling unit.

1.3 CLOSEOUT SUBMITTALS

A. Operation and Maintenance Data: For air-handling units to include in emergency, operation, and maintenance manuals.

1.4 WARRANTY

A. Warranty: Manufacturer agrees to repair or replace components of indoor, basic, air-handling units that fail in materials or workmanship within specified warranty period.

1. Warranty Period: Manufacturer's standard, but not less than one year(s) from date of Substantial Completion.

PART 2 - PRODUCTS

2.1 PERFORMANCE REQUIREMENTS

A. Electrical Components, Devices, and Accessories: Listed and labeled as defined in NFPA 70, by a qualified testing agency, and marked for intended location and application.

B. NFPA Compliance: Comply with NFPA 90A for design, fabrication, and installation of air-handling units and components.

2.2 CAPACITIES AND CHARACTERISTICS

A. See Engineering Drawing Schedules, MF-1, for more information.

2.3 MANUFACTURERS

A. Manufacturers: Subject to compliance with requirements, available manufacturers offering products that may be incorporated into the Work include:

1. Carrier Corporation.
2. Trane.
3. Greenheck
4. Additional manufacturers submitted for and receiving engineer approval prior to bid.

2.4 UNIT CASINGS

A. General Fabrication Requirements for Casings;

1. Forming: Form walls, roofs, and floors with at least two breaks at each joint.
2. Joints: Sheet metal screws or pop rivets.
3. Sealing: Seal all joints with water-resistant sealant. Hermetically seal at each corner and around entire perimeter.
4. Base Rail:

    a. Material: Galvanized steel.
    b. Height: 4 inches.

B. Double-Wall Construction:

1. Outside Casing Wall: Galvanized steel, minimum 18 gauge thick, with manufacturer's standard finish.
2. Inside Casing Wall: G90 galvanized steel, solid, minimum 18 gauge thick.
3. Floor Plate: G90 galvanized steel, minimum 18 gauge thick.
4. Casing Insulation:

a. Materials: Glass-fiber blanket or board insulation, Type I or Type II ASTM C1071 or injected polyurethane foam insulation.
b. Insulation Thickness: 1 inch.
c. Thermal Break: Provide continuity of insulation with no through-casing metal in casing walls, floors, or roofs of air-handling unit.

C. Static-Pressure Classifications:

1. For Unit Sections Upstream of Fans: Minus 2-inch wg.
2. For Unit Sections Downstream and Including Fans: 2-inch wg.

D. Panels and Doors:

1. Panels:

a. Fabrication: Formed and reinforced with same materials and insulation thickness as casing.
b. Fasteners: Two or more camlock type for panel lift-out operation. Arrangement shall allow panels to be opened against airflow.
c. Gasket: Neoprene, applied around entire perimeters of panel frames.
d. Size: Large enough to allow unobstructed access for inspection and maintenance of air-handling unit's internal components.

2. Locations and Applications:

a. Fan Section: Panels.
b. Coil Section: Panels.
c. Access Section: Panels.
d. Access Sections Immediately Upstream and Downstream of Coil Sections: Panels.

2.5 FAN, DRIVE, AND MOTOR SECTION

A. Fan and Drive Assemblies: Statically and dynamically balanced and designed for continuous operation at maximum-rated fan speed and motor horsepower.

B. Fans: Centrifugal, rated according to AMCA 210; galvanized steel; mounted on solid-steel shaft.

1. Shafts: With field-adjustable alignment.

a. Turned, ground, and polished hot-rolled steel with keyway.

2. Shaft Bearings:

a. Heavy-duty, self-aligning, pillow-block type with an L-50 rated life of minimum 100,000 hours according to ABMA 9.

3. Housings: Formed- and reinforced-steel panels to form curved scroll housings with shaped cutoff and spun-metal inlet bell.

a. Bracing: Steel angle or channel supports for mounting and supporting fan scroll, wheel, motor, and accessories.

4. Housings, Plenum Fans: Steel frame and panel; fabricated without fan scroll and volute housing. Provide inlet screens for Type SWSI fans.
5. Forward-Curved, Centrifugal Fan Wheels: Inlet flange, backplate, and shallow blades with inlet and tip curved forward in direction of airflow and mechanically fastened to flange and backplate; steel hub swaged to backplate and fastened to shaft with setscrews.
6. Mounting: For internal vibration isolation. Factory-mount fans with manufacturer's standard vibration isolation mounting devices having a minimum static deflection of 1 inch.
7. Shaft Lubrication Lines: Extended to a location outside the casing.
8. Flexible Connector: Factory fabricated with a fabric strip minimum 3-1/2 inches wide, attached to two strips of minimum 2-3/4-inch-wide by 0.028-inch-thick, galvanized-steel sheet.

a. Flexible Connector Fabric: Glass fabric, double coated with neoprene. Fabrics, coatings, and adhesives shall comply with UL 181, Class 1.

C. Drive, Direct: Factory-mounted, direct drive.

D. Drive, Belt: Factory-mounted, V-belt drive, with adjustable alignment and belt tensioning, and with 1.5 service factor based on fan motor.

1. Pulleys: Cast iron or cast steel with split, tapered bushing, dynamically balanced at the factory.
2. Belts: Oil resistant, non-sparking and nonstatic; in matched sets for multiple-belt drives.
3. Belt Guards: Comply with requirements specified by OSHA and fabricate according to SMACNA's "HVAC Duct Construction Standards"; 0.146-inch- thick, 3/4-inch diamond-mesh wire screen, welded to steel angle frame; prime coated.

E. Motors:

1. Comply with NEMA designation, temperature rating, service factor, and efficiency requirements for motors specified in Section 230513 "Common Motor Requirements for HVAC Equipment."
2. Motor Pulleys: Adjustable pitch for use with 5-hp motors and smaller; fixed pitch for use with motors larger than 5 hp. Select pulley size so pitch adjustment is at the middle of adjustment range at fan design conditions.
3. Controllers, Electrical Devices, and Wiring: Comply with requirements for electrical devices and connections specified in electrical Sections.

2.6 COIL SECTION

A. General Requirements for Coil Section:

1. Comply with AHRI 410.
2. Fabricate coil section to allow removal and replacement of coil for maintenance and to allow in-place access for service and maintenance of coil(s).

3. Coils shall not act as structural component of unit.

B. Heating Coils:

1. Electrical Coils: Comply with UL 1995.

a. Casing Assembly: Slip-in type with galvanized-steel frame.
b. Open Heating Elements: Resistance wire of 80 percent nickel and 20 percent chromium supported and insulated by floating ceramic bushings recessed into casing openings, fastened to supporting brackets, and mounted in galvanized-steel frame.
c. Overtemperature Protection: Disk-type, automatically resetting, thermal-cutout, safety device; serviceable through terminal box without removing heater from coil section.
d. Secondary Protection: Load-carrying, manually resetting or manually replaceable, thermal cutouts; factory wired in series with each heater stage.
e. Control Panel: Unit mounted with disconnecting means and overcurrent protection.

1) Magnetic contactor.
2) Solid-state, stepless pulse controller.
3) Toggle switches, one per step.
4) Step controller.
5) Time-delay relay.
6) Pilot lights, one per step.
7) Airflow proving switch.

2.7 MATERIALS

A. Steel:

1. ASTM A36/A36M for carbon structural steel.
2. ASTM A568/A568M for steel sheet.

B. Stainless Steel:

1. Manufacturer's standard grade for casing.
2. Manufacturer's standard type, ASTM A240/A240M for bare steel exposed to airstream or moisture.

C. Galvanized Steel: ASTM A653/A653M.

D. Aluminum: ASTM B209.

2.8 SOURCE QUALITY CONTROL

A. AHRI 430 Certification: Air-handling units and their components shall be factory tested according to AHRI 430 and shall be listed and labeled by AHRI.

PART 3 - EXECUTION

3.1 INSTALLATION

A. Examine roughing-in for steam, hydronic, and condensate drainage piping systems and electrical services to verify actual locations of connections before installation.

B. Equipment Mounting:
   1. Comply with requirements for vibration isolation devices specified in Section 230548.13 "Vibration Controls for HVAC."

C. Suspended Units: Suspend units from structural-steel support frame using threaded steel rods and spring hangers. Coordinate sizes and locations of structural-steel support members with actual equipment provided. Comply with requirements for vibration isolation devices specified in Section 230548.13 "Vibration Controls for HVAC."

D. Arrange installation of units to provide access space around air-handling units for service and maintenance.

E. Do not operate fan system until filters (temporary or permanent) are in place. Replace temporary filters used during construction and testing with new, clean filters.

F. Connect duct to air-handling units with flexible connections. Comply with requirements in Section 233300 "Air Duct Accessories."

3.2 ELECTRICAL CONNECTIONS

A. Connect wiring according to Section 260519 "Low-Voltage Electrical Power Conductors and Cables."

B. Ground equipment according to Section 260526 "Grounding and Bonding for Electrical Systems."

C. Install electrical devices furnished by manufacturer, but not factory mounted, according to NFPA 70 and NECA 1.

D. Install nameplate for each electrical connection, indicating electrical equipment designation and circuit number feeding connection.

   1. Nameplate shall be laminated acrylic or melamine plastic signs, as specified in Section 260553 "Identification for Electrical Systems."

3.3 CONTROL CONNECTIONS

A. Install control and electrical power wiring to field-mounted control devices.

B. Connect control wiring according to Section 260523 "Control-Voltage Electrical Power Cables."

3.4 FIELD QUALITY CONTROL

A. Perform the following tests and inspections:
   1. Fan Operational Test: After electrical circuitry has been energized, start units to confirm proper motor rotation and unit operation.

B. Air-handling unit and components will be considered defective if unit or components do not pass tests and inspections.

3.5 DEMONSTRATION

A. Train Owner's maintenance personnel to adjust, operate, and maintain air-handling units.

END OF SECTION 237313.13

SECTION 237416.11 - PACKAGED, SMALL-CAPACITY, ROOFTOP AIR-CONDITIONING UNITS

TIPS:

To view non-printing **Editor's Notes** that provide guidance for editing, click on MasterWorks/Single-File Formatting/Toggle/Editor's Notes.

To read **detailed research, technical information about products and materials, and coordination checklists**, click on MasterWorks/Supporting Information.

Content Requests:

<Double click here to submit questions, comments, or suggested edits to this Section.>

PART 1 - GENERAL

1.1 SUMMARY

A. Section includes packaged, small-capacity, rooftop air-conditioning units (RTUs) with the following components:

1. Casings.
2. Fans, drives, and motors.
3. Coils.
4. Refrigerant circuit components.
5. Air filtration.
6. Gas furnaces.
7. Dampers.
8. Electrical power connections.
9. Controls.
10. Roof curbs.
11. Accessories.

1.2 ACTION SUBMITTALS

A. Product Data: For each type of RTU.

1.3 CLOSEOUT SUBMITTALS

A. Operation and Maintenance Data: For RTUs to include in emergency, operation, and maintenance manuals.

1.4 WARRANTY

A. Warranty: Manufacturer agrees to repair or replace components of outdoor, semi-custom, air-handling unit that fail in materials or workmanship within specified warranty period.

1. Warranty Period: (1) year(s) from date of Substantial Completion.
2. Warranty Period for Heat Exchangers: Manufacturer's standard, but not less than five years from date of Substantial Completion

PART 2 - PRODUCTS

2.1 PERFORMANCE REQUIREMENTS

A. UL Compliance: Comply with UL 1995.

B. Wind-Restraint Performance: Unit (& Curb) are installed in a high wind zone and must be permitted to be installed in a 130 MPH wind zone.

2.2 MANUFACTURERS

A. Manufacturers: Subject to compliance with requirements, available manufacturers offering products that may be incorporated into the Work include:

1. Carrier Corporation.
2. Trane.
3. YORK; a Johnson Controls company.
4. Additional manufacturers submitted for and receiving engineer approval prior to bid.

2.3 UNIT CASINGS

A. General Fabrication Requirements for Casings: Formed and reinforced double-wall insulated panels, fabricated to allow removal for access to internal parts and components, with joints between sections sealed.

B. Wall Construction:

1. Outside Casing Wall: Galvanized steel, with manufacturer's standard finish, with pitched roof panels and knockouts with grommet seals for electrical and piping connections and lifting lugs.
2. Casing Insulation:

a. Materials: Injected polyurethane foam insulation or fiberglass insulation.
b. Thermal Break: Provide continuity of insulation with no through-casing metal in casing walls, floors, or roof of unit.

C. Panels and Doors:

1. Panels:

    a. Fabrication: Formed and reinforced with same materials and insulation thickness as casing.
    b. Fasteners: Two or more camlock type for panel lift-out operation. Arrangement shall allow panels to be opened against air-pressure differential.
    c. Gasket: Neoprene, applied around entire perimeters of panel frames.
    d. Size: Large enough to allow inspection and maintenance of air-handling unit's internal components.

2. Locations and Applications:

    a. Fan Section: Inspection and access panels.
    b. Coil Section: Inspection and access panels.
    c. Damper Section: Inspection and access panels.
    d. Filter Section: Inspection and access panels large enough to allow periodic removal and installation of filters.

D. Condensate Drain Pans:

1. Location: Each type of cooling coil.
2. Construction:

    a. Single-wall, non-corrosive.

3. Drain Connection:

    a. Located at lowest point of pan and sized to prevent overflow. Terminate with threaded nipple on end of pan.
    b. Minimum Connection Size: NPS 1.

4. Slope: Minimum 0.125-in./ft. slope in at least two planes to collect condensate from cooling coils (including coil piping connections, coil headers, and return bends) and from humidifiers and to direct water toward drain connection.
5. Width: Entire width of water producing device..
6. Pan-Top Surface Coating for Galvanized-Steel Drain Pans: Asphaltic waterproofing compound.
7. Units with stacked coils shall have an intermediate drain pan to collect condensate from top coil.

2.4 FANS, DRIVES, AND MOTORS

A. Fan and Drive Assemblies: Statically and dynamically balanced and designed for continuous operation at maximum-rated fan speed and motor horsepower.

B. Supply-Air Fans: Centrifugal, rated according to AMCA 210; galvanized or painted steel; mounted on solid-steel shaft.

1. Shafts: With field-adjustable alignment.

a. Turned, ground, and polished hot-rolled steel with keyway.

2. Shaft Bearings:

a. Heavy-duty, self-aligning, pillow-block type with an L-50 rated life of minimum 100,000 hours according to ABMA 9.

3. Housings: Formed- and reinforced-steel panels to form curved scroll housings with shaped cutoff and spun-metal inlet bell.

a. Bracing: Steel angle or channel supports for mounting and supporting fan scroll, wheel, motor, and accessories.

4. Centrifugal Fan Wheels: Inlet flange, backplate, and shallow blades with inlet and tip curved forward in direction of airflow and mechanically fastened to flange and backplate; steel or aluminum hub swaged to backplate and fastened to shaft with setscrews.
5. Mounting: For internal vibration isolation. Factory-mount fans with manufacturer's standard vibration isolation mounting devices having a minimum static deflection of 1 inch.
6. Shaft Lubrication Lines: Extended to a location outside the casing.

C. Drives, Belt: Factory-mounted, V-belt drive, with adjustable alignment and belt tensioning, and with 1.5 service factor based on fan motor.

1. Pulleys: Cast iron or cast steel with split, tapered bushing, dynamically balanced at the factory.
2. Belts: Oil resistant, non-sparking and nonstatic; in matched sets for multiple-belt drives.
3. Belt Guards: Comply with requirements specified by OSHA and fabricate according to SMACNA's "HVAC Duct Construction Standards"; 0.146-inch- thick, 3/4-inch diamond-mesh wire screen, welded to steel angle frame; prime coated.

D. Condenser-Coil Fan: Propeller, mounted on shaft of permanently lubricated motors.

E. Motors:

1. Comply with NEMA designation, temperature rating, service factor, and efficiency requirements for motors specified in Section 230513 "Common Motor Requirements for HVAC Equipment."
2. Motor Sizes: Minimum size as indicated. If not indicated, large enough so driven load will not require motor to operate in service factor range above 1.0.
3. Motor Pulleys: Adjustable pitch for use with 5-hp motors and smaller; fixed pitch for use with motors larger than 5 hp. Select pulley size so pitch adjustment is at the middle of adjustment range at fan design conditions.
4. Controllers, Electrical Devices, and Wiring: Comply with requirements for electrical devices and connections specified in electrical Sections.

2.5 COILS

A. General Requirements for Coils:

1. Comply with AHRI 410.
2. Fabricate coils section to allow for removal and replacement of coil for maintenance and to allow in-place access for service and maintenance of coil(s).
3. Coils shall not act as structural component of unit.

B. Supply-Air Refrigerant Coil:

1. Tubes: Copper.
2. Fins:

    a. Material: Aluminum.

3. Fin and Tube Joints: Mechanical bond.
4. Headers: Seamless-copper headers with brazed connections.
5. Ratings: Designed, tested, and rated according to ASHRAE 33 and AHRI 410.

    a. Working Pressure: Minimum 300 psig.

C. Outdoor-Air Refrigerant Coil:

1. Tubes: Copper.
2. Fins:

    a. Material: Aluminum.

3. Fin and Tube Joints: Mechanical bond.
4. Headers: Seamless-copper headers with brazed connections.
5. Ratings: Designed, tested, and rated according to ASHRAE 33 and AHRI 410.

    a. Working Pressure: Minimum 300 psig.

D. Hot-Gas Reheat Refrigerant Coil:

1. Tubes: Copper.
2. Fins:

    a. Material: Aluminum.

3. Fin and Tube Joints: Mechanical bond.
4. Headers: Seamless-copper headers with brazed connections.
5. Ratings: Designed, tested, and rated according to ASHRAE 33 and AHRI 410.

    a. Working Pressure: Minimum 300 psig.

6. Suction-discharge bypass valve.

2.6 REFRIGERANT CIRCUIT COMPONENTS

A. Compressor: Hermetic scroll, with internal overcurrent and high-temperature protection, internal pressure relief, and crankcase heater.

B. Refrigeration Specialties:

1. Refrigerant: R-410A.
2. Expansion valve with replaceable thermostatic element.
3. Refrigerant filter/dryer.
4. Manual-reset high-pressure safety switch.
5. Automatic-reset low-pressure safety switch.
6. Minimum off-time relay.
7. Automatic-reset compressor motor thermal overload.
8. Brass service valves installed in compressor suction and liquid lines.
9. Four-way reversing valve with a replaceable magnetic coil, thermostatic expansion valves with bypass check valves, and a suction line accumulator.

2.7 AIR FILTRATION

A. Panel Filters:

1. Description: Factory-fabricated, self-supported, disposable air filters with holding frames.
2. Filter Unit Class: UL 900.
3. Media: Interlaced glass, synthetic or cotton fibers coated with nonflammable adhesive and antimicrobial coating.
4. Filter-Media Frame: Beverage board with perforated metal retainer, or metal grid, on outlet side.

2.8 GAS FURNACES

A. Description: Factory assembled, piped, and wired; complying with ANSI Z21.47/CSA 2.3 and NFPA 54.

B. CSA Approval: Designed and certified by and bearing label of CSA.

C. Burners: Stainless steel.
1. Fuel: Natural gas.
2. Ignition: Electronically controlled electric spark or hot-surface igniter with flame sensor.
3. Gas Train: Single-body, regulated, redundant, 24-V ac gas valve assembly containing pilot solenoid valve, pilot filter, pressure regulator, pilot shutoff, and manual shutoff.

D. Heat-Exchanger and Drain Pan: Stainless steel.

E. Venting, Power: Power vented, with integral, motorized centrifugal fan interlocked with gas valve.

F. Safety Controls:

1. Gas Manifold: Safety switches and controls complying with ANSI standards.

2.9 DAMPERS

A. Outdoor- and Return-Air Dampers: Low-leakage, double-skin, airfoil-blade, galvanized-steel dampers with compressible jamb seals and extruded-vinyl blade edge seals with zinc-plated steel operating rods rotating in sintered bronze or nylon bearings mounted in a single galvanized-steel frame, and with operating rods connected with a common linkage. Leakage rate shall not exceed 4 cfm/sq. ft. at 1-inch wg and 8 cfm/sq. ft. at 4-inch wg.

B. Barometric relief dampers.

2.10 CONTROLS: See Engineering Drawings.

2.11 ROOF CURBS: See Engineering Drawings.

2.12 ACCESSORIES: See Engineering Drawings

2.13 MATERIALS

A. Steel:

1. ASTM A36/A36M for carbon structural steel.
2. ASTM A568/A568M for steel sheet.

B. Stainless Steel:

1. Manufacturer's standard grade for casing.
2. Manufacturer's standard type, ASTM A240/A240M for bare steel exposed to airstream or moisture.

C. Galvanized Steel: ASTM A653/A653M.

D. Aluminum: ASTM B209.

2.14 SOURCE QUALITY CONTROL

A. AHRI Compliance:

1. Comply with AHRI 210/240 for testing and rating energy efficiencies for RTUs.
2. Comply with AHRI 340/360 for testing and rating energy efficiencies for RTUs.
3. Comply with AHRI 270 for testing and rating sound performance for RTUs.
4. Comply with AHRI 1060 for testing and rating performance for air-to-air exchanger.

B. AMCA Compliance:

1. Comply with AMCA 11 and bear the AMCA-Certified Ratings Seal for air and sound performance according to AMCA 211 and AMCA 311.
2. Damper leakage tested according to AMCA 500-D.
3. Operating Limits: Classify according to AMCA 99.

PART 3 - EXECUTION

3.1 INSTALLATION

A. Examine roughing-in for RTUs to verify actual locations of piping and duct connections before equipment installation.

B. Roof Curb: Install on roof structure or concrete base, level and secure, according to NRCA's "NRCA Roofing Manual: Membrane Roof Systems." Install RTUs on curbs and coordinate roof penetrations and flashing with roof construction specified in Section 077200 "Roof Accessories." Secure RTUs to upper curb rail, and secure curb base to roof framing or concrete base with anchor bolts. Coordinate sizes and locations of roof curbs with actual equipment provided.

3.2 PIPING CONNECTIONS

A. Piping installation requirements are specified in other Sections. Drawings indicate general arrangement of piping, fittings, and specialties.

B. Where installing piping adjacent to RTU, allow space for service and maintenance.

C. Gas Piping: Comply with applicable requirements in Section 231123 "Facility Natural-Gas Piping." Connect gas piping to burner, full size of gas train inlet, and connect with union and shutoff valve with sufficient clearance for burner removal and service.

3.3 DUCT CONNECTIONS

A. Comply with duct installation requirements specified in other HVAC Sections. Drawings indicate general arrangement of ducts. The following are specific connection requirements:

1. Install ducts to termination at top of roof curb.
2. Remove roof decking only as required for passage of ducts. Do not cut out decking under entire roof curb.
3. Connect supply ducts to RTUs with flexible duct connectors specified in Section 233300 "Air Duct Accessories."
4. Install return-air duct continuously through roof structure.

3.4 ELECTRICAL CONNECTIONS

A. Connect electrical wiring according to Section 260519 "Low-Voltage Electrical Power Conductors and Cables."

B. Ground equipment according to Section 260526 "Grounding and Bonding for Electrical Systems."

C. Install electrical devices furnished by manufacturer, but not factory mounted, according to NFPA 70 and NECA 1.

D. Install nameplate for each electrical connection, indicating electrical equipment designation and circuit number feeding connection.

1. Nameplate shall be laminated acrylic or melamine plastic signs as specified in Section 260553 "Identification for Electrical Systems."
2. Locate nameplate where easily visible.

3.5 CONTROL CONNECTIONS

A. Install control and electrical power wiring to field-mounted control devices.

B. Connect control wiring according to Section 260523 "Control-Voltage Electrical Power Cables."

3.6 FIELD QUALITY CONTROL

A. Perform tests and inspections.

B. Tests and Inspections:

1. After installing RTUs and after electrical circuitry has been energized, test units for compliance with requirements.
2. Inspect for and remove shipping bolts, blocks, and tie-down straps.
3. Operational Test: After electrical circuitry has been energized, start units to confirm proper motor rotation and unit operation.
4. Test and adjust controls and safeties. Replace damaged and malfunctioning controls and equipment.

C. RTU will be considered defective if it does not pass tests and inspections.

3.7 DEMONSTRATION

A. Train Owner's maintenance personnel to adjust, operate, and maintain RTUs.

END OF SECTION 237416.11

SECTION 237433 - DEDICATED OUTDOOR-AIR UNITS

TIPS:

To view non-printing **Editor's Notes** that provide guidance for editing, click on MasterWorks/Single-File Formatting/Toggle/Editor's Notes.

To read **detailed research, technical information about products and materials, and coordination checklists**, click on MasterWorks/Supporting Information.

Content Requests:

<Double click here to submit questions, comments, or suggested edits to this Section.>

PART 1 - GENERAL

1.1 SUMMARY

A. Section includes factory-assembled, dedicated outdoor air-handling units, including multiple components, capable of heating and cooling 100 percent outdoor air.

1.2 ACTION SUBMITTALS

A. Product Data: For each dedicated outdoor-air unit.

1.3 CLOSEOUT SUBMITTALS

A. Operation and maintenance data.

1.4 WARRANTY

A. Warranty: Manufacturer agrees to replace components of dedicated outdoor-air units that fail in materials or workmanship within specified warranty period.

1. Warranty Period for Dedicated Outdoor-Air-Handling Units: One years from date of Substantial Completion.
2. Warranty Period for Compressors: Five years from date of Substantial Completion.
3. Warranty Period for Heat Exchangers: Five years from date of Substantial Completion.

PART 2 - PRODUCTS

2.1 PERFORMANCE REQUIREMENTS

A. Electrical Components, Devices, and Accessories: Listed and labeled as defined in NFPA 70, by an "NRTL" (nationally recognized testing laboratory), and marked for intended location and application.

B. NFPA Compliance: Comply with NFPA 90A for design, fabrication, and installation of units and components.

C. ASHRAE 15 and ASHRAE 34 Compliance: For refrigeration system safety.

A. Wind-Restraint Performance: Wind-Restraint Performance: Unit (& Curb) are installed in a high wind zone and must be permitted to be installed in a 130 MPH wind zone.

2.2 MANUFACTURERS

A. Manufacturers: Subject to compliance with requirements, available manufacturers offering products that may be incorporated into the Work include:

1. AAON.
2. Munters Corporation.
3. Captiveaire
4. Additional manufacturers submitted for and receiving engineer approval prior to bid.

B. Source Limitations: Obtain dedicated outdoor-air units from single manufacturer.

2.3 UNIT CASING

A. General Fabrication Requirements for Casings: Formed and reinforced double-wall insulated panels, fabricated to allow removal for access to internal parts and components, with joints between sections sealed.

B. Configuration: Horizontal unit with bottom discharge for roof-mounting installation.

C. Double-Wall Configuration:

1. Outside Casing Wall: Galvanized steel, minimum 18 gauge thick with corrosion-resistant coating, with pitched roof panels and knockouts with grommet seals for electrical and piping connections and lifting lugs.
2. Inside Casing Wall:

    a. Inside Casing, Burner Section: Galvanized steel, solid, minimum 14-gauge- thick steel.
    b. Inside Casing, All Other Sections: Galvanized steel, solid.

3. Floor Plate: Reinforced metal surface; reinforced to limit deflection when walked on by service personnel. Insulation is provided below metal walking surface.
4. Roof: Standing seam or membrane; sloped to drain water.
5. Casing Insulation:

    a. Materials: Polyurethane foam insulation.
    b. Casing Panel R-Value: Minimum R-13.
    c. Thermal Break: Provide continuity of insulation with no through-casing metal in casing walls, floors, or roofs of air-handling unit.

D. Panels and Doors:

1. Panels:

    a. Fabrication: Formed and reinforced double-wall and insulated panels of same materials and thicknesses as casing.
    b. Fasteners: Two or more camlock-type fasteners for panel lift-out operation. Arrangement shall allow panels to be opened against airflow
    c. Gasket: Neoprene, applied around entire perimeters of panel frames.
    d. Size: Large enough to allow unobstructed access for inspection and maintenance of unit's internal components

2. Doors:

    a. Fabrication: Formed and reinforced double-wall and insulated panels of same materials and thicknesses as casing.
    b. Hinges: A minimum of two ball-bearing hinges or stainless steel piano hinge and two wedge-lever latches, operable from inside and outside. Arrange doors to be opened against airflow. Provide safety latch retainers on doors so that doors do not open uncontrollably.
    c. Gasket: Neoprene, applied around entire perimeters of panel frames.
    d. Size: Large enough to allow for unobstructed access for inspection and maintenance of air-handling unit's internal components.

3. Locations and Applications:

    a. Fan Section: Doors.
    b. Access Section: Doors.
    c. Gas-Fired Burner Section: Panels.
    d. Damper Section: Doors.
    e. Filter Section: Doors large enough to allow periodic removal and installation of filters.
    f. Relief Section: Doors.

E. Condensate Drain Pans:

1. Location: Each refrigerant coil.
2. Construction:

    a. Single-wall, stainless steel sheet.

3. Size: Large enough to collect condensate from cooling coils, including coil piping connections, coil headers, and return bends.
4. Drain Connection:

    a. Located on both ends of pan, at lowest point of pan.
    b. Terminated with threaded nipple.
    c. Minimum Connection Size: NPS 1.

5. Slope: Minimum 0.125-inch/ft. slope in at least two planes to collect condensate from cooling coils (including coil piping connections, coil headers, and return bends) and from humidifiers and to direct water toward drain connection.
6. Length: Extend drain pan downstream from leaving face.
7. Width: Entire width of water-producing device.
8. Depth: A minimum of 2 inches deep.
9. Provide units having stacked coils with intermediate drain pan to collect condensate from top coil.

2.4 FANS, DRIVES, AND MOTORS

A. Fan and Drive Assemblies: Statically and dynamically balanced and designed for continuous operation at maximum-rated fan speed and motor horsepower.

B. Supply-Air Fans and Relief-Air Fans: Centrifugal; galvanized or painted steel; mounted on solid-steel shaft.

1. Shafts: With field-adjustable alignment.

    a. Turned, ground, and polished hot-rolled steel with keyway.

2. Shaft Bearings:

    a. Heavy-duty, self-aligning, pillow-block type with an L-50 rated life of minimum 100,000 hours in accordance with ABMA 9.

3. Housings: Formed- and reinforced-steel panels to form curved scroll housings with shaped cutoff and spun-metal inlet bell.

    a. Bracing: Steel angle or channel supports for mounting and supporting fan scroll, wheel, motor, and accessories.

4. Housings, Plenum Fans: Steel frame and panel; fabricated without fan scroll and volute housing. Provide inlet screens for Type SWSI fans.
5. Backward-Inclined, Centrifugal Fan Wheels: Construction with curved inlet flange, backplate, backward-inclined blades welded or riveted to flange and backplate; steel hub riveted to backplate and fastened to shaft with setscrews.
6. Mounting: For internal vibration isolation. Factory mount fans with manufacturer's standard vibration isolation mounting devices having a minimum static deflection of 1 inch.
7. Shaft Lubrication Lines: Extended to a location outside the casing.

8. Flexible Connector: Factory fabricated with a fabric strip minimum 3-1/2 inches wide, attached to two strips of minimum 2-3/4-inch-wide by 0.028-inch-thick, galvanized-steel sheet.

    a. Flexible Connector Fabric: Glass fabric, double coated with neoprene. Fabrics, coatings, and adhesives shall comply with UL 181, Class 1.

C. Drive, Direct: Factory-mounted direct drive.

D. Drive, Belt: Factory-mounted V-belt drive, with adjustable alignment and belt tensioning, and with 1.5 service factor based on fan motor.

1. Pulleys: Cast iron or cast steel with split, tapered bushing, dynamically balanced at the factory.
2. Belts: Oil resistant, nonsparking and nonstatic; in matched sets for multiple-belt drives.
3. Belt Guards: Comply with requirements specified by OSHA and fabricate in accordance with SMACNA's "HVAC Duct Construction Standards"; 0.146-inch- thick, 3/4-inch-diamond-mesh wire screen, welded to steel angle frame; prime coated.

E. Condenser-Coil Fan: Variable-speed propeller, mounted on shaft of permanently lubricated motors.

F. Motors:

1. Comply with NEMA designation, temperature rating, service factor, enclosure type, and efficiency requirements for motors specified in Section 230513 "Common Motor Requirements for HVAC Equipment."
2. Motor Sizes: Minimum size as indicated. If not indicated, large enough so driven load will not require motor to operate in service factor range above 1.0.
3. Motor Pulleys: Adjustable pitch for use with 5 hp motors and smaller; fixed pitch for use with motors larger than 5 hp. Select pulley size so pitch adjustment is at the middle of adjustment range at fan design conditions.
4. Controllers, Electrical Devices, and Wiring: Comply with requirements for electrical devices and connections specified in electrical Sections.
5. Mount unit-mounted disconnect switches on exterior of unit.

G. Variable-Frequency Motor Controller: By MFG. Serving all fans in fan array.

2.5 COILS

A. General Requirements for Coils:

1. Comply with AHRI 410.
2. Fabricate coils section to allow removal and replacement of coil for maintenance and to allow in-place access for service and maintenance of coil(s).
3. Coils are not to act as structural component of unit.

B. Supply-Air Refrigerant Coils:

1. Tubes: Copper.
2. Fins:

    a. Material: Aluminum.

3. Fin and Tube Joints: Mechanical bond.
4. Headers: Seamless-copper headers with brazed connections.
5. Frames: Galvanized steel.
6. Coatings: Corrosion-resistant coating.
7. Ratings: Designed, tested, and rated in accordance with ASHRAE 33 and AHRI 410.

    a. Working Pressure: Minimum 300 psig.

C. Hot-Gas Reheat Refrigerant Coils:

1. Tubes: Copper.
2. Fins:

    a. Material: Aluminum.

3. Fin and Tube Joints: Mechanical bond.
4. Headers: Seamless-copper headers with brazed connections.
5. Coatings: Corrosion-resistant coating.
6. Ratings: Designed, tested, and rated in accordance with ASHRAE 33 and AHRI 410.

    a. Working Pressure: Minimum 300 psig.
7. Suction-discharge bypass valve.

D. Condenser Refrigerant coils:

1. Tube Material: Copper.
2. Fin Material: Aluminum.
3. Fin and Tube Joint: Mechanical bond.
4. Coating: Corrosion-resistant.

2.6 REFRIGERATION CIRCUIT COMPONENTS

A. Compressors: Hermetic, variable-speed scroll compressors, mounted on integral vibration isolators; with internal overcurrent and high-temperature protection, internal pressure relief.

B. Refrigerant: R-410A.

C. Refrigeration Specialties:

1. Expansion valve with replaceable thermostatic element.
2. Refrigerant filter/dryer.
3. Manual-reset high-pressure safety switch.
4. Automatic-reset low-pressure safety switch.
5. Minimum off-time relay.

6. Automatic-reset compressor motor thermal overload.
7. Thermostat for coil freeze-up protection during low-ambient-temperature operation or loss of air.
8. Brass service valves installed in discharge and liquid lines.
9. Low-ambient kit high-pressure sensor.
10. Modulating hot-gas reheat solenoid valve with a replaceable magnetic coil.

2.7 AIR FILTRATION

A. Panel Filters:

1. Description: Pleated factory-fabricated, self-supported disposable air filters with holding frames.
2. Filter Unit Class: UL 900.
3. Media: Interlaced glass, synthetic, or cotton fibers coated with nonflammable adhesive and antimicrobial coating.
4. Filter-Media Frame: High wet-strength beverage board with perforated metal retainer, or metal grid, on outlet side.

B. Mounting Frames:

1. Panel filters arranged for flat or angular orientation, with access doors on both sides of unit. Filters shall be removable from one side or from access plenum.
2. Cartridge filters arranged for flat orientation, removable from access plenum.
3. Galvanized or stainless steel with gaskets and fasteners, suitable for bolting together into built-up filter banks.

2.8 INDIRECT-FIRED GAS FURNACE HEATING

A. Description: Factory assembled, piped, and wired; and complying with ANSI Z21.47 and with NFPA 54.

B. CSA Approval: Designed and certified by and bearing label of CSA.

C. Burners:

1. Heat-Exchanger Material: Stainless steel.
2. Fuel: Natural gas.
3. Ignition: Electronically controlled electric spark with flame sensor.
4. Gas Control Valve: Electronic modulating.
5. Gas Train: Single-body, regulated, redundant, 24 V ac gas valve assembly containing pilot solenoid valve, pilot filter, pressure regulator, pilot shutoff, and manual shutoff.

D. Venting, Gravity: Gravity vented.

E. Venting, Power: Power vented, with integral, motorized centrifugal fan interlocked with gas valve.

F. Heat-Exchanger Drain Pan: Stainless steel.

G. Safety Controls:

1. Gas Manifold: Safety switches and controls complying with ANSI standards.
2. Vent Flow Verification: Differential pressure switch to verify open vent OR Flame rollout switch.
3. High Limit: Thermal switch or fuse to stop burner.
4. Purge-period timer shall automatically delay burner ignition and bypass low-limit control.
5. Airflow Proving Switch: Differential pressure switch senses correct airflow before energizing pilot.
6. Automatic-Reset, High-Limit Control Device: Stops burner and closes main gas valve if high-limit temperature is exceeded.
7. Safety Lockout Switch: Locks out ignition sequence if burner fails to light after three tries. Controls are reset manually by turning the unit off and on.

2.9 DAMPERS

A. Outdoor- and Relief-Air Dampers: Low-leakage, double-skin, airfoil-blade, galvanized-steel dampers with compressible jamb seals and extruded-vinyl blade edge seals in opposed or parallel-blade arrangement withsteel operating rods rotating in sintered bronze or nylon bearings mounted in a single galvanized-steel frame, and with operating rods connected with a common linkage. Leakage rate shall not exceed 4 cfm/sq. ft. at 1 inch wg and 8 cfm/sq. ft. at 4 inches wg.

B. Electronic Damper Operators:

1. Direct-coupled type designed for minimum 60,000 full-stroke cycles at rated torque.
2. Electronic damper position indicator shall have visual scale indicating percentage of travel and 2 to 10 V dc feedback signal.
3. Operator Motors:

    a. Comply with NEMA designation, temperature rating, service factor, enclosure type, and efficiency requirements for motors specified in Section 230513 "Common Motor Requirements for HVAC Equipment."
    b. Size to operate with sufficient reserve power to provide smooth modulating action or two-position action.
    c. Permanent Split-Capacitor or Shaded-Pole Type: Gear trains completely oil immersed and sealed. Equip spring-return motors with integral spiral-spring mechanism in housings designed for easy removal for service or adjustment of limit switches, auxiliary switches, or feedback potentiometer.

4. Nonspring-Return Motors for Dampers Larger Than 25 Sq. Ft.: Size for running torque of 150 in. x lbf and breakaway torque of 300 in. x lbf.
5. Spring-Return Motors for Dampers Larger Than 25 Sq. Ft.: Size for running and breakaway torque of 150 in. x lbf.
6. Size dampers for running torque calculated as follows:

a. Parallel-Blade Damper with Edge Seals: 7 inch-lb/sq. ft. of damper.
b. Opposed-Blade Damper with Edge Seals: 5 inch-lb/sq. ft. of damper.
c. Parallel-Blade Damper without Edge Seals: 4 inch-lb/sq. ft of damper.
d. Opposed-Blade Damper without Edge Seals: 3 inch-lb/sq. ft. of damper.
e. Dampers with 2 to 3 Inches wg of Pressure Drop or Face Velocities of 1000 to 2500 fpm: Increase running torque by 1.5.
f. Dampers with 3 to 4 Inches wg of Pressure Drop or Face Velocities of 2500 to 3000 fpm: Increase running torque by 2.0.

7. Coupling: V-bolt and V-shaped, toothed cradle.
8. Overload Protection: Electronic overload or digital rotation-sensing circuitry.
9. Fail-Safe Operation: Mechanical, spring-return mechanism with external, manual gear release on nonspring-return actuators.
10. Power Requirements (Two-Position Spring Return): 24 V dc.
11. Power Requirements (Modulating): Maximum 10 VA at 24 V ac or 8 W at 24 V dc.
12. Proportional Signal: 2 to 10 V dc or 4 to 20 mA, and 2 to 10 V dc position feedback signal.
13. Temperature Rating: Minus 22 to plus 122 deg F.

2.10 ELECTRICAL POWER CONNECTIONS

A. Single-Point Power Connection: Factory-installed and -wired switches, motor controllers, transformers, and other necessary electrical devices shall provide a single-point field power connection to unit.

B. Enclosure: NEMA 250, Type 3R, mounted in unit with hinged access door in unit cabinet having a lock and key or padlock and key.

C. Wiring: Numbered and color-coded to match wiring diagram.

D. Wiring Location: Install factory wiring outside an enclosure in a raceway.

E. Factory Wiring: Branch power circuit to each motor and to controls with one of the following disconnecting means:

1. NEMA KS 1, heavy-duty, fusible switch with rejection-type fuse clips rated for fuses. Select and size fuses to provide Type 2 protection in accordance with IEC 60947-4-1.
2. NEMA KS 1, heavy-duty, nonfusible switch.
3. UL 489, motor-circuit protector (circuit breaker) with field-adjustable, short-circuit trip coordinated with motor locked-rotor amperes.

F. Factory-Mounted, Overcurrent-Protection Service: For each motor.

G. Transformer: Factory mounted with primary and secondary fuses and sized with enough capacity to operate electrical load plus spare capacity.

H. Controls: Factory wire unit-mounted controls where indicated.

I. Control Relays: Auxiliary and adjustable time-delay relays.

2.11 CONTROLS

A. Control Valves: Comply with requirements in Section 230923.11 "Control Valves."

B. Control Wiring: Factory wire connection for controls' power supply.

C. Control Devices: Sensors, transmitters, relays, switches, detectors, operators, actuators, and valves shall be manufacturer's standard items to accomplish indicated control functions.

D. Unit-Mounted Status Panel:

1. Cooling/Off/Heating Controls: Control operational mode.
2. Damper Position: Indicate position of outdoor-air dampers in terms of percentage of outdoor air.
3. Status Lights:

    a. Filter dirty.
    b. Fan operating.
    c. Cooling operating.
    d. Heating operating.
    e. Smoke alarm.
    f. General alarm.

4. Digital Numeric Display:

    a. Outdoor airflow.
    b. Supply airflow.
    c. Outdoor dry-bulb temperature.
    d. Outdoor dew point temperature.
    e. Space temperature.
    f. Supply temperature.
    g. Space relative humidity.

E. Refrigeration System Controls: Per MFG & Engineering Drawings Schedule.

F. Furnace Controls: Per MFG & Engineering Drawings Schedule.

G. DDC Temperature Control: Standalone control module for link between unit controls and DDC temperature-control system. Control module shall be compatible with control system specified in Section 230923 "Direct Digital Control (DDC) System for HVAC." Links shall include the following:

1. Start/stop interface relay and relay to notify DDC temperature-control system alarm condition.
2. Hardware interface or additional sensors for the following:

    a. Room temperature.
    b. Discharge-air temperature.
    c. Refrigeration system operation.
    d. Furnace operation.

H. Interface with DDC System for HVAC: Factory-installed hardware and software to enable the DDC system for HVAC to monitor, control, and display unit status and alarms.

1. Industry-accepted, open-protocol communication interface with the DDC system for HVAC shall enable the DDC system for HVAC operator to remotely control and monitor the unit from an operator workstation. Control features and monitoring points displayed locally at unit control panel shall be available through the DDC system for HVAC.

2.12 ROOF CURBS: By MFG. See Engineering Drawings.

A. Wind-Restraint Performance: Wind-Restraint Performance: Unit (& Curb) are installed in a high wind zone and must be permitted to be installed in a 130 MPH wind zone.

2.13 INTAKE AND RELIEF OPENINGS

A. Type: Manufacturer's standard hood or louver, including moisture eliminator, at all unit intake and relief openings.

B. Materials: Match material and finish of casing exterior.

C. Bird Screen: Comply with requirements in ASHRAE 62.1.

D. Configuration: Designed to inhibit wind-driven rain and snow from entering unit.

2.14 MATERIALS

A. Steel:

1. ASTM A36/A36M for carbon structural steel.
2. ASTM A568/A568M for steel sheet.

B. Stainless Steel:

1. Manufacturer's standard grade for casing.
2. Manufacturer's standard type, ASTM A240/A240M for bare steel exposed to airstream or moisture.

C. Galvanized Steel: ASTM A653/A653M.

D. Aluminum: ASTM B209.

E. Comply with Section 230546 "Coatings for HVAC" for corrosion-resistant coating.

F. Corrosion-Resistant Coating: Coat casing, coils and fan guards with a corrosion-resistant coating capable of withstanding a 3,000-hour salt-spray test in accordance with ASTM B117.

1. Standards:

    a. ASTM B117 for salt spray.
    b. ASTM D2794 for minimum impact resistance of 100 in-lb.
    c. ASTM D3359 for cross-hatch adhesion of 5B.

2. Application: Immersion or Spray.
3. Thickness: 1 mil.
4. Gloss: Minimum gloss of 50 gloss units on a single angle 60-degree meter.

2.15 SOURCE QUALITY CONTROL

A. AHRI 920: Manufacturer to certify that performance ratings are in accordance with AHRI 920 if AHRI 920 certification program is not in place. Provide AHRI 920 certification if AHRI 920 certification program is in place.

B. AHRI 260 or AMCA 311 Certification: Test and rate air-handling unit fan sound ratings in accordance with AHRI 260 or AMCA Publication 311.

C. Fan Performance Rating: Factory test fan performance for airflow, pressure, power, air density, rotation speed, and efficiency.

    1. AMCA Certification: Test and rate in accordance with AMCA Publication 211.

D. Damper Leakage and Air Performance: Factory test dampers for leakage and air performance.

    1. AMCA Certification: Test and rate in accordance with AMCA Publication 511.

E. Water Coils: Factory tested to 300 psig in accordance with AHRI 410 and ASHRAE 33.

F. Refrigerant Coils: Factory tested to minimum 300 psig internal pressure and to minimum 300 psig internal pressure while under water, in accordance with AHRI 410 and ASHRAE 33.

PART 3 - EXECUTION

3.1 EXAMINATION

A. Examine areas, and conditions, with Installer present, for compliance with requirements for installation tolerances and other conditions affecting performance of the Work.

3.2 INSTALLATION, GENERAL

A. Roof Curb: Install on roof structure or concrete base, level and secure, in accordance with AHRI Guideline B. Install units on curbs and coordinate roof penetrations and flashing with roof construction specified in Section 077200 "Roof Accessories." Secure units to upper curb

rail, and secure curb base to roof framing or concrete base with anchor bolts. Coordinate sizes and locations of roof curbs with actual equipment provided.

B. Unit Support: Install unit level on structural curbs. Coordinate roof penetrations and flashing with roof construction. Secure units to structural support with anchor bolts. Coordinate sizes and locations of curbs with actual equipment provided.
   1. Comply with requirements for vibration isolation devices specified in Section 230548.13 "Vibration Controls for HVAC."

C. Do not operate fan system until filters (temporary or permanent) are in place. Replace temporary filters used during construction and testing with new, clean filters.

D. Install filter-gauge, static-pressure taps upstream and downstream of filters. Mount filter gauges on outside of filter housing or filter plenum in accessible position. Provide filter gauges on filter banks, installed with separate static-pressure taps upstream and downstream of filters.

E. Connect duct to air-handling units with flexible connections. Comply with requirements in Section 233300 "Air Duct Accessories."

F. Install wall- and duct-mounted sensors furnished by manufacturer for field installation. Install control wiring and make final connections to control devices and unit control panel.

G. Comply with requirements for gas-fired furnace installation in NFPA 54.

H. Install separate devices furnished by manufacturer and not factory installed.

I. Install new filters at completion of equipment installation and before testing, adjusting, and balancing.

3.3 PIPING CONNECTIONS

A. Piping installation requirements are specified in other Sections. Drawings indicate general arrangement of piping, fittings, and specialties.

B. Where installing piping adjacent to units, allow space for service and maintenance.

C. Connect piping to units mounted on vibration isolators with flexible connectors.

D. Refrigerant Piping: Comply with applicable requirements in Section 232300 "Refrigerant Piping." Install shutoff valve and union or flange at each supply and return connection.

E. Gas Piping: Comply with requirements in Section 231123 "Facility Natural-Gas Piping." Provide AGA-approved flexible connectors.

   1. Connect gas piping to furnace, full size of gas train inlet, and connect with union, pressure regulator, and shutoff valve with sufficient clearance for burner removal and service.
   2. Install AGA-approved flexible connectors.

F. Duct Connections:

1. Comply with requirements in Section 233113 "Metal Ducts."
2. Drawings indicate the general arrangement of ducts.
3. Connect ducts to units with flexible duct connectors. Comply with requirements for flexible duct connectors in Section 233300 "Air Duct Accessories."

3.4 ELECTRICAL CONNECTIONS

A. Connect wiring in accordance with Section 260519 "Low-Voltage Electrical Power Conductors and Cables."

B. Ground equipment in accordance with Section 260526 "Grounding and Bonding for Electrical Systems."

C. Install electrical devices furnished by manufacturer, but not factory mounted, in accordance with NFPA 70 and NECA 1.

D. Install nameplate for each electrical connection, indicating electrical equipment designation and circuit number feeding connection.

1. Nameplate shall be laminated acrylic or melamine plastic signs, as specified in Section 260553 "Identification for Electrical Systems."

3.5 CONTROL CONNECTIONS

A. Install control and electrical power wiring to field-mounted control devices.

B. Connect control wiring in accordance with Section 260523 "Control-Voltage Electrical Power Cables."

3.6 STARTUP SERVICE

A. Engage a factory-authorized service representative to perform startup service.

1. Complete installation and startup checks in accordance with manufacturer's written instructions.
2. Inspect units for visible damage to furnace combustion chamber.
3. Perform the following operations for both minimum and maximum firing, and adjust burner for peak efficiency:

a. Measure gas pressure at manifold.
b. Measure combustion-air temperature at inlet to combustion chamber.
c. Measure flue-gas temperature at furnace discharge.
d. Perform flue-gas analysis. Measure and record flue-gas carbon dioxide and oxygen concentration.

e. Measure supply-air temperature and volume when burner is at maximum firing rate and when burner is off. Calculate useful heat to supply air.

4. Verify operation of remote panel, including pilot-light operation and failure modes. Inspect the following:

   a. High-limit heat exchanger.
   b. Alarms.

5. Inspect units for visible damage to refrigerant compressor, condenser and evaporator coils, and fans.
6. Start refrigeration system when outdoor-air temperature is within normal operating limits. and measure and record the following:

   a. Cooling coil leaving-air, dry- and wet-bulb temperatures.
   b. Cooling coil entering-air, dry- and wet-bulb temperatures.
   c. Condenser coil entering-air dry-bulb temperature.
   d. Condenser coil leaving-air dry-bulb temperature.

7. Simulate maximum cooling demand and inspect the following:

   a. Compressor refrigerant suction and hot-gas pressures.
   b. Short-circuiting of air through outside coil or from outside coil to outdoor-air intake.

8. Inspect casing insulation for integrity, moisture content, and adhesion.
9. Verify that clearances have been provided for servicing.
10. Verify that controls are connected and operable.
11. Verify that filters are installed.
12. Clean coils and inspect for construction debris.
13. Clean furnace flue and inspect for construction debris.
14. Inspect operation of power vents.
15. Purge gas line.
16. Verify bearing lubrication.
17. Clean fans and inspect fan-wheel rotation for movement in correct direction without vibration and binding.
18. Adjust fan belts to proper alignment and tension.
19. Start unit.
20. Inspect and record performance of interlocks and protective devices, including response to smoke detectors by fan controls and fire alarm.
21. Operate unit for run-in period.
22. Calibrate controls.
23. Adjust and inspect high-temperature limits.
24. Inspect outdoor-air dampers for proper stroke and interlock with return-air dampers.
25. Verify operational sequence of controls.
26. Measure and record the following airflows. Plot fan volumes on fan curve.

    a. Supply-air volume.
    b. Relief-air flow.

c. Outdoor-air flow.

B. After startup, change filters, verify bearing lubrication, and adjust belt tension.

C. Remove and replace components that do not properly operate, and repeat startup procedures as specified above.

3.7 ADJUSTING

A. Adjust initial temperature and humidity set points.

B. Set field-adjustable switches and circuit-breaker trip ranges as indicated.

C. Occupancy Adjustments: When requested within 12 months from date of Substantial Completion, provide on-site assistance in adjusting system to suit actual occupied conditions. Provide up to two visits to Project during other-than-normal occupancy hours for this purpose.

3.8 CLEANING

A. After completing system installation; testing, adjusting, and balancing dedicated outdoor-air unit and air-distribution systems; and completing startup service, clean air-handling units internally to remove foreign material and construction dirt and dust. Clean fan wheels, casings, dampers, coils, and filter housings, and install new, clean filters.

3.9 FIELD QUALITY CONTROL

A. Manufacturer's Field Service: Engage a factory-authorized service representative to test and inspect components, assemblies, and equipment installations, including connections.

B. Perform the following tests and inspections with the assistance of a factory-authorized service representative:

1. Leak Test: After installation, fill water and steam coils with water, and test coils and connections for leaks.
2. Charge refrigerant coils with refrigerant and test for leaks.
3. Fan Operational Test: After electrical circuitry has been energized, start units to confirm proper motor rotation and unit operation.

3.10 DEMONSTRATION

A. Train Owner's maintenance personnel to adjust, operate, and maintain units.

END OF SECTION 237433

SECTION 238113.11 - PACKAGED TERMINAL AIR-CONDITIONERS, THROUGH-WALL UNITS

TIPS:

To view non-printing **Editor's Notes** that provide guidance for editing, click on MasterWorks/Single-File Formatting/Toggle/Editor's Notes.

To read **detailed research, technical information about products and materials, and coordination checklists**, click on MasterWorks/Supporting Information.

Content Requests:

<Double click here to submit questions, comments, or suggested edits to this Section.>

PART 1 - GENERAL

1.1 SUMMARY

A. Section includes packaged, terminal, through-the-wall air conditioners.

1.2 ACTION SUBMITTALS

A. Product Data: For each type of product indicated.

1.3 CLOSEOUT SUBMITTALS

A. Operation and maintenance data.

1.4 WARRANTY

A. Special Warranty: Manufacturer agrees to repair or replace components of packaged, terminal air conditioners that fail in materials or workmanship within specified warranty period.

1. Warranty Period for Sealed Refrigeration System: Manufacturer's standard, but not less than five years from date of Substantial Completion, including components and labor.
2. Warranty Period for Nonsealed System Parts: Manufacturer's standard, but not less than five years from date of Substantial Completion, including only components and excluding labor.

PART 2 - PRODUCTS

2.1 MANUFACTURERS

A. Manufacturers: Subject to compliance with requirements, available manufacturers offering products that may be incorporated into the Work include:

1. Amana; a division of Whirlpool Corporation.
2. Carrier Corporation.
3. LG Electronics.
4. Additional manufacturers submitted for and receiving engineer approval prior to bid.

2.2 MANUFACTURED UNITS

A. Description: Factory-assembled and -tested, self-contained, packaged, terminal air conditioner with room cabinet, electric refrigeration system, heating, and temperature controls; fully charged with refrigerant and filled with oil; with cord-connected chassis.

B. Electrical Components, Devices, and Accessories: Listed and labeled as defined in NFPA 70, by a qualified testing agency, and marked for intended location and application.

2.3 CHASSIS

A. Cabinet: 0.052-inch- thick galvanized or powder-coated steel with removable front panel with concealed latches.
1. Louvers: Style by Architect.
2. Finish: By Architect. Access Door: Hinged door in top of cabinet for access to controls.
3. Cabinet Extension: Matching cabinet in construction and finish, allowing diversion of airflow to adjoining room; with grille.
4. Subbase: Enameled steel with adjustable leveling feet and adjustable end plates, with factory-installed and -wired, fused disconnect switch and receptacle sized for unit.
5. Wall Sleeves: Galvanized steel with polyester finish.

B. Refrigeration System: Direct-expansion indoor coil with capillary restrictor and hermetically sealed scroll compressor with vibration isolation and overload protection.

1. Indoor and Outdoor Coils: Seamless copper tubes mechanically expanded into aluminum fins.
2. Accumulator.
3. Constant-pressure expansion valve.
4. Reversing valve.
5. Charge: R-410A.

C. Indoor Fan: Forward curved, centrifugal; with motor and positive-pressure ventilation damper with concealed manual operator.

D. Filters: Washable polyurethane in molded plastic frame.

E. Condensate Drain: Drain as indicated on Engineering Drawings

F. Outdoor Fan: Forward curved, centrifugal-type with separate motor.

1. Indoor and Outdoor Fan Motors: Two speed; comply with NEMA designation, temperature rating, service factor, enclosure type, and efficiency requirements for motors specified in Section 230513 "Common Motor Requirements for HVAC Equipment."

a. Fan Motors: Permanently lubricated split capacitor.
b. Motor Sizes: Minimum size as indicated. If not indicated, large enough so driven load will not require motor to operate in service factor range above 1.0.
c. Controllers, Electrical Devices, and Wiring: Comply with requirements for electrical devices and connections specified in electrical Sections.

2.4 HEATING

A. Electric-Resistance Heating Coil: Nickel-chromium-wire, electric-resistance heating elements with contactor and high-temperature-limit switch.

2.5 CONTROLS

A. Control Module: Unit-mounted digital panel with touchpad temperature control and with touchpad for heating, cooling, and fan operation. Include the following features:

1. Low-Ambient Lockout Control: Prevents cooling-cycle operation below 40 deg F outdoor air temperature.
2. Heat-Pump Ambient Control: Field-adjustable switch changes to heat-pump heating operation above 40 deg F and to supplemental heating below plus 25 deg F.
3. Reverse-Cycle Defrost: Solid-state sensor monitors frost buildup on [**indoor**] [**outdoor**] coil and reverses unit to melt frost.

B. Remote Control: As indicated on engineering drawings.

C. Outdoor Air: Manual intake damper.

2.6 SOURCE QUALITY CONTROL

A. Sound-Power Level Ratings: Factory test to comply with AHRI 300, "Sound Rating and Sound Transmission Loss of Packaged Terminal Equipment."

B. Unit Performance Ratings: Factory test to comply with AHRI 310/380/CSA C744, "Packaged Terminal Air-Conditioners and Heat Pumps."

PART 3 - EXECUTION

3.1 INSTALLATION

A. Install units level and plumb, maintaining manufacturer's recommended clearances and tolerances.

B. Install wall sleeves in finished wall assembly; seal and weatherproof. Joint-sealant materials and applications are specified in Section 079200 "Joint Sealants."

C. Install and anchor wall sleeves to withstand, without damage to equipment and structure, seismic forces required by building code.

3.2 FIELD QUALITY CONTROL

A. Tests and Inspections:

1. Inspect for and remove shipping bolts, blocks, and tie-down straps.
2. After installing packaged, terminal air conditioners and after electrical circuitry has been energized, test for compliance with requirements.
3. Operational Test: After electrical circuitry has been energized, start units to confirm proper motor rotation and unit operation.
4. Test and adjust controls and safeties. Replace damaged and malfunctioning controls and equipment.

B. Packaged, terminal air conditioners will be considered defective if they do not pass tests and inspections.

END OF SECTION 238113.11

SECTION 238126 - SPLIT-SYSTEM AIR-CONDITIONERS

PART 1 - GENERAL

1.1 SUMMARY

A. Section includes split-system air-conditioning and heat-pump units consisting of separate evaporator-fan and compressor-condenser components.

1.2 ACTION SUBMITTALS

A. Product Data: For each type of product indicated.

1.3 WARRANTY

A. Special Warranty: Manufacturer's standard form in which manufacturer agrees to repair or replace components of split-system air-conditioning units that fail in materials or workmanship within specified warranty period.

1. Warranty Period:

a. For Compressor: Five year(s) from date of Substantial Completion.
b. For Parts: One year(s) from date of Substantial Completion.
c. For Labor: One year(s) from date of Substantial Completion.

PART 2 - PRODUCTS

2.1 MANUFACTURERS

A. Manufacturers: Subject to compliance with requirements, available manufacturers offering products that may be incorporated into the Work include:

1. Carrier Corporation.
2. Lennox Industries, Inc.; Lennox International.
3. Trane.
4. Goodman.
5. Additional manufacturers submitted for and receiving engineer approval prior to bid.

2.2 INDOOR UNITS (5 TONS OR LESS)

A. Concealed Evaporator-Fan Components:

1. Chassis: Galvanized steel with flanged edges, removable panels for servicing, and insulation on back of panel.
2. Insulation: Faced, glass-fiber duct liner.
3. Refrigerant Coil: Copper tube, with mechanically bonded aluminum fins and thermal-expansion valve. Comply with ARI 206/110.
4. Electric Coil: Helical, nickel-chrome, resistance-wire heating elements; with refractory ceramic support bushings, automatic-reset thermal cutout, built-in magnetic contactors, manual-reset thermal cutout, airflow proving device, and one-time fuses in terminal box for overcurrent protection.
5. Fan: Forward-curved, double-width wheel of galvanized steel; directly connected to motor.
6. Fan Motors:

    a. Comply with NEMA designation, temperature rating, service factor, enclosure type, and efficiency requirements specified in Section 230513 "Common Motor Requirements for HVAC Equipment."
    b. Multitapped, multispeed with internal thermal protection and permanent lubrication.
    c. Wiring Terminations: Connect motor to chassis wiring with plug connection.
7. Filters: Disposable, replaceable.
8. Condensate Drain Pans:

    a. Fabricated with one percent slope in at least two planes to collect condensate from cooling coils (including coil piping connections, coil headers, and return bends) and humidifiers, and to direct water toward drain connection.
        1) Depth: A minimum of 2 inches deep.

    b. Single-wall, galvanized-steel sheet.
    c. Drain Connection: Located at lowest point of pan and sized to prevent overflow. Terminate with threaded nipple on one end of pan.

        1) Minimum Connection Size: NPS 1.

    d. Pan-Top Surface Coating: Asphaltic waterproofing compound.
    e. Units with stacked coils shall have an intermediate drain pan to collect condensate from top coil.

B. Wall-Mounted, Evaporator-Fan Components:

1. Cabinet: Enameled steel with removable panels on front and ends in color selected by Architect, and discharge drain pans with drain connection.
2. Refrigerant Coil: Copper tube, with mechanically bonded aluminum fins and thermal-expansion valve. Comply with ARI 206/110.
3. Fan: Direct drive, centrifugal.
4. Fan Motors:

    a. Comply with NEMA designation, temperature rating, service factor, enclosure type, and efficiency requirements specified in Section 230513 "Common Motor Requirements for HVAC Equipment."

b. Multitapped, multispeed with internal thermal protection and permanent lubrication.
c. NEMA Premium (TM) efficient motors as defined in NEMA MG 1.
d. Controllers, Electrical Devices, and Wiring: Comply with requirements for electrical devices and connections specified in electrical Sections.
e. Mount unit-mounted disconnect switches on exterior of unit.

5. Condensate Drain Pans:

a. Fabricated with one percent slope in at least two planes to collect condensate from cooling coils (including coil piping connections, coil headers, and return bends) and humidifiers, and to direct water toward drain connection.
1) Depth: A minimum of 1 inch deep.

b. Single-wall, galvanized-steel sheet.
c. Drain Connection: Located at lowest point of pan and sized to prevent overflow. Terminate with threaded nipple on one end of pan.

1) Minimum Connection Size: NPS 1.

d. Pan-Top Surface Coating: Asphaltic waterproofing compound.

6. Air Filtration Section:

a. General Requirements for Air Filtration Section:

1) Comply with NFPA 90A.
2) Filter-Holding Frames: Arranged for flat or angular orientation, with access doors on both sides of unit. Filters shall be removable from one side or lifted out from access plenum.

b. Disposable Panel Filters:

1) Factory-fabricated, viscous-coated, flat-panel type.
2) Thickness: 1 inch.
3) Frame: Galvanized steel, with metal grid on outlet side, steel rod grid on inlet side, and hinged; with pull and retaining handles.

2.3 OUTDOOR UNITS (5 TONS OR LESS)

A. Air-Cooled, Compressor-Condenser Components:

1. Casing: Steel, finished with baked enamel in color selected by Architect, with removable panels for access to controls, weep holes for water drainage, and mounting holes in base. Provide brass service valves, fittings, and gage ports on exterior of casing.
2. Compressor: Hermetically sealed with crankcase heater and mounted on vibration isolation device. Compressor motor shall have thermal- and current-sensitive overload devices, start capacitor, relay, and contactor.

a. Compressor Type: Scroll.

b. Refrigerant: R-410A.
c. Refrigerant Coil: Copper tube, with mechanically bonded aluminum fins and liquid subcooler. Comply with ARI 206/110.

3. Heat-Pump Components: Reversing valve and low-temperature-air cutoff thermostat.
4. Fan: Aluminum-propeller type, directly connected to motor.
5. Motor: Permanently lubricated, with integral thermal-overload protection.
6. Mounting Base: Polyethylene.

2.4 ACCESSORIES

A. Automatic-reset timer to prevent rapid cycling of compressor.

B. Refrigerant Line Kits: Soft-annealed copper suction and liquid lines factory cleaned, dried, pressurized, and sealed; factory-insulated suction line with flared fittings at both ends.

C. Drain Hose: For condensate.

PART 3 - EXECUTION

3.1 INSTALLATION

A. Install units level and plumb.

B. Install evaporator-fan components using manufacturer's standard mounting devices securely fastened to building structure.

C. Install roof-mounted, compressor-condenser components on equipment supports specified in Section 077200 "Roof Accessories." Anchor units to supports with removable, cadmium-plated fasteners.

D. Outdoor equipment is installed within a high wind zone. Installation to comply with all requirements for 130 MPH wind zone area.

E. Equipment Mounting:
1. Install ground-mounted, compressor-condenser components on polyethylene mounting base.

F. Install and connect precharged refrigerant tubing to component's quick-connect fittings. Install tubing to allow access to unit.

3.2 CONNECTIONS

A. Piping installation requirements are specified in other Sections. Drawings indicate general arrangement of piping, fittings, and specialties.

B. Where piping is installed adjacent to unit, allow space for service and maintenance of unit.

C. Duct Connections: Duct installation requirements are specified in Section 233113 "Metal Ducts." Drawings indicate the general arrangement of ducts. Connect supply and return ducts to split-system air-conditioning units with flexible duct connectors. Flexible duct connectors are specified in Section 233300 "Air Duct Accessories."

3.3 FIELD QUALITY CONTROL

A. Perform tests and inspections.

B. Tests and Inspections:

1. Leak Test: After installation, charge system and test for leaks. Repair leaks and retest until no leaks exist.
2. Operational Test: After electrical circuitry has been energized, start units to confirm proper motor rotation and unit operation.
3. Test and adjust controls and safeties. Replace damaged and malfunctioning controls and equipment.

C. Remove and replace malfunctioning units and retest as specified above.

3.4 DEMONSTRATION

A. Train Owner's maintenance personnel to adjust, operate, and maintain units.

END OF SECTION 238126

SECTION 238239.19 - WALL AND CEILING UNIT HEATERS

TIPS:

To view non-printing **Editor's Notes** that provide guidance for editing, click on MasterWorks/Single-File Formatting/Toggle/Editor's Notes.

To read **detailed research, technical information about products and materials, and coordination checklists**, click on MasterWorks/Supporting Information.

Content Requests:

<Double click here to submit questions, comments, or suggested edits to this Section.>

PART 1 - GENERAL

1.1 SUMMARY

A. Section includes wall and ceiling heaters with propeller fans and electric-resistance heating coils.

1.2 ACTION SUBMITTALS

A. Product Data: For each type of product.

1. Include rated capacities, operating characteristics, furnished specialties, and accessories.

1.3 CLOSEOUT SUBMITTALS

A. Operation and maintenance data.

PART 2 - PRODUCTS

2.1 MANUFACTURERS

A. Manufacturers: Subject to compliance with requirements, available manufacturers offering products that may be incorporated into the Work include:

1. Markel Products; TPI Corporation.
2. QMark; Marley Engineered Products.
3. Trane.

4. Additional manufacturers submitted for and receiving engineer approval prior to bid.

2.2 DESCRIPTION

A. Assembly including chassis, electric heating coil, fan, motor, and controls. Comply with UL 2021.

B. Electrical Components, Devices, and Accessories: Listed and labeled as defined in NFPA 70, by a qualified testing agency, and marked for intended location and application.

2.3 CABINET

A. Front Panel: Extruded-aluminum bar grille, with removable panels fastened with tamperproof fasteners.

B. Finish: Baked enamel over baked-on primer with manufacturer's standard custom ~~color~~ selected by Architect, applied to factory-assembled and -tested wall and ceiling heaters before shipping.

C. Surface-Mounted Cabinet Enclosure: Steel with finish to match cabinet.

2.4 COIL

A. Electric-Resistance Heating Coil: Nickel-chromium heating wire, free from expansion noise and 60-Hz hum, embedded in magnesium oxide refractory and sealed in corrosion-resistant metallic sheath. Terminate elements in stainless-steel, machine-staked terminals secured with stainless-steel hardware, and limit controls for high-temperature protection.

2.5 FAN AND MOTOR

A. Fan: Aluminum propeller directly connected to motor.

B. Motor: Permanently lubricated. Comply with requirements in Section 230513 "Common Motor Requirements for HVAC Equipment."

2.6 CONTROLS

A. Controls: Unit-mounted thermostat.

B. Electrical Connection: Factory wire motors and controls for a single field connection with disconnect switch.

PART 3 - EXECUTION

3.1 INSTALLATION

A. Install wall and ceiling unit heaters to comply with NFPA 90A.

B. Install wall and ceiling unit heaters level and plumb.

C. Ground equipment according to Section 260526 "Grounding and Bonding for Electrical Systems."

D. Connect wiring according to Section 260519 "Low-Voltage Electrical Power Conductors and Cables."

END OF SECTION 238239.19

SECTION 260519 - LOW-VOLTAGE ELECTRICAL POWER CONDUCTORS AND CABLES

PART 1 - GENERAL

1.1 SUMMARY

A. Section Includes:

1. Copper building wire rated 600 V or less.
2. Aluminum building wire rated 600 V or less.
3. Metal-clad cable, Type MC, rated 600 V or less.
4. Fire-alarm wire and cable.
5. Connectors, splices, and terminations rated 600 V and less.

B. Related Requirements:

1. Section 260513 "Medium-Voltage Cables" for single-conductor and multiconductor cables, cable splices, and terminations for electrical distribution systems with 601 to 35,000 V.
2. Section 260523 "Control-Voltage Electrical Power Cables" for control systems communications cables and Classes 1, 2, and 3 control cables.
3. Section 271500 "Communications Horizontal Cabling" for cabling used for voice and data circuits.

1.2 ACTION SUBMITTALS

A. Product Data: For each type of product.

PART 2 - PRODUCTS

2.1 COPPER BUILDING WIRE

A. Description: Flexible, insulated and uninsulated, drawn copper current-carrying conductor with an overall insulation layer or jacket, or both, rated 600 V or less.

B. Manufacturers: Subject to compliance with requirements, available manufacturers offering products that may be incorporated into the Work include the following:

1. Cerro Wire LLC.
2. Encore Wire Corporation.
3. General Cable Technologies Corporation.
4. Service Wire Co.
5. Additional manufacturers submitted for and receiving engineer approval prior to bid.

C. Standards:

1. Listed and labeled as defined in NFPA 70, by a qualified testing agency, and marked for intended location and use.
2. RoHS compliant.
3. Conductor and Cable Marking: Comply with wire and cable marking according to UL's "Wire and Cable Marking and Application Guide."

D. Conductors: Copper, complying with ASTM B3 for bare annealed copper and with ASTM B8 or ASTM B496 for stranded conductors depending on wire gauges.

E. Conductor Insulation:

1. Type NM: Comply with UL 83 and UL 719.
2. Type USE-2 and Type SE: Comply with UL 854.
3. Type THHN and Type THWN-2: Comply with UL 83.

2.2 ALUMINUM BUILDING WIRE

A. Description: Flexible, insulated and uninsulated, drawn aluminum current-carrying conductor with an overall insulation layer or jacket, or both, rated 600 V or less.

B. Manufacturers: Subject to compliance with requirements, available manufacturers offering products that may be incorporated into the Work include the following:

1. Alpha Wire Company.
2. American Bare Conductor.
3. Belden Inc.
4. Cerro Wire LLC.
5. Encore Wire Corporation.
6. General Cable Technologies Corporation.
7. Okonite Company (The).
8. Southwire Company.
9. WESCO.
10. Additional manufacturers submitted for and receiving engineer approval prior to bid.

C. Standards:

1. Listed and labeled as defined in NFPA 70, by a qualified testing agency, and marked for intended location and use.
2. RoHS compliant.
3. Conductor and Cable Marking: Comply with wire and cable marking according to UL's "Wire and Cable Marking and Application Guide."

D. Conductors: Aluminum, complying with ASTM B800 and ASTM B801.

E. Conductor Insulation:

1. Type NM: Comply with UL 83 and UL 719.

2. Type USE-2 and Type SE: Comply with UL 854.
3. Type THHN and Type THWN-2: Comply with UL 83

2.3 METAL-CLAD CABLE, TYPE MC

A. Description: A factory assembly of one or more current-carrying insulated conductors in an overall metallic sheath.

B. Manufacturers: Subject to compliance with requirements, available manufacturers offering products that may be incorporated into the Work include the following:

1. Alpha Wire Company.
2. American Bare Conductor.
3. Atkore International (AFC Cable Systems).
4. Belden Inc.
5. Encore Wire Corporation.
6. General Cable Technologies Corporation.
7. Okonite Company (The).
8. Service Wire Co.
9. Southwire Company.
10. WESCO.
11. Additional manufacturers submitted for and receiving engineer approval prior to bid.

C. Standards:

1. Listed and labeled as defined in NFPA 70, by a qualified testing agency, and marked for intended location and use.
2. Comply with UL 1569.
3. RoHS compliant.
4. Conductor and Cable Marking: Comply with wire and cable marking according to UL's "Wire and Cable Marking and Application Guide."

D. Circuits:

1. Single circuit and multicircuit with color-coded conductors.
2. Power-Limited Fire-Alarm Circuits: Comply with UL 1424.

E. Conductors: Copper, complying with ASTM B3 for bare annealed copper and with ASTM B8 for stranded conductors or Aluminum, complying with ASTM B800 and ASTM B801.

F. Ground Conductor: Bare unless insulated grounding conductor indicated on drawings.

G. Conductor Insulation:

1. Type TFN/THHN/THWN-2: Comply with UL 83.
2. Type XHHW-2: Comply with UL 44.

H. Armor: Steel or Aluminum, interlocked.

2.4 FIRE-ALARM WIRE AND CABLE

A. Manufacturers: Subject to compliance with requirements, available manufacturers offering products that may be incorporated into the Work include, but are not limited to the following:

1. Allied Wire & Cable Inc.
2. CommScope, Inc.
3. Comtran Corporation.
4. Genesis Cable Products; Honeywell International, Inc.
5. nVent (PYROTENAX).
6. Prysmian Group North America.
7. Radix Wire.
8. Rockbestos-Suprenant Cable Corp.
9. Superior Essex Inc.
10. West Penn Wire.
11. Additional manufacturers submitted for and receiving engineer approval prior to bid.

B. General Wire and Cable Requirements: NRTL listed and labeled as complying with NFPA 70, Article 760.

C. Signaling Line Circuits: Twisted, shielded pair, not less than No. 12 AWG size as recommended by system manufacturer.

1. Circuit Integrity Cable: Twisted shielded pair, NFPA 70, Article 760, Classification CI, for power-limited fire-alarm signal service Type FPL. NRTL listed and labeled as complying with UL 1424 and UL 2196 for a two-hour rating.

D. Non-Power-Limited Circuits: Solid-copper conductors with 600-V rated, 75 deg C, color-coded insulation, and complying with requirements in UL 2196 for a two-hour rating.

1. Low-Voltage Circuits: No. 16 AWG, minimum, in pathway.
2. Line-Voltage Circuits: No. 12 AWG, minimum, in pathway.
3. Multiconductor Armored Cable: NFPA 70, Type MC, copper conductors, Type TFN/THHN conductor insulation, copper drain wire, copper armor with outer jacket with red identifier stripe, NTRL listed for fire-alarm and cable tray installation, plenum rated.

2.5 CONNECTORS AND SPLICES

A. Description: Factory-fabricated connectors, splices, and lugs of size, ampacity rating, material, type, and class for application and service indicated; listed and labeled as defined in NFPA 70, by a qualified testing agency, and marked for intended location and use.

B. Manufacturers: Subject to compliance with requirements, available manufacturers offering products that may be incorporated into the Work include the following:

1. 3M Electrical Products.
2. ABB (Electrification Products Division).
3. Appleton - O-Z/Gedney; Emerson Electric Co., Automation Solutions.

4. Atkore International (AFC Cable Systems).
5. Gardner Bender.
6. Hubbell Incorporated, Power Systems.
7. Ideal Industries, Inc.
8. ILSCO.
9. NSi Industries LLC.
10. Service Wire Co.
11. TE Connectivity Ltd.
12. Additional manufacturers submitted for and receiving engineer approval prior to bid.

C. Jacketed Cable Connectors: For steel and aluminum jacketed cables, zinc die-cast with set screws, designed to connect conductors specified in this Section.

D. Lugs: One piece, seamless, designed to terminate conductors specified in this Section.

PART 3 - EXECUTION

3.1 CONDUCTOR MATERIAL APPLICATIONS

A. Feeders:
1. Copper for feeders smaller than No. 4-4/0 AWG; copper or aluminum for feeders No. 4-4/0 AWG and larger. Conductors shall be solid for No. 10 AWG and smaller; stranded for No. 8 AWG and larger.

B. Branch Circuits:

1. Copper, Solid for No. 10 AWG and smaller; stranded for No. 8 AWG and larger.

C. Power-Limited Fire Alarm and Control: Solid for No. 12 AWG and smaller.

3.2 INSTALLATION OF CONDUCTORS AND CABLES

A. Conceal cables in finished walls, ceilings, and floors unless otherwise indicated.

B. Complete raceway installation between conductor and cable termination points according to Section 260533 "Raceways and Boxes for Electrical Systems" prior to pulling conductors and cables.

C. Use manufacturer-approved pulling compound or lubricant where necessary; compound used must not deteriorate conductor or insulation. Do not exceed manufacturer's recommended maximum pulling tensions and sidewall pressure values.

D. Use pulling means, including fish tape, cable, rope, and basket-weave wire/cable grips, that will not damage cables or raceway.

E. Install exposed cables parallel and perpendicular to surfaces of exposed structural members, and follow surface contours where possible.

F. Support cables according to Section 260529 "Hangers and Supports for Electrical Systems."

3.3 INSTALLATION OF FIRE-ALARM WIRE AND CABLE

A. Comply with NECA 1 and NFPA 72.

B. Wiring Method: Install wiring in metal pathway according to Section 280528 "Pathways for Electronic Safety and Security."

1. Install plenum cable in environmental airspaces, including plenum ceilings.
2. Fire-alarm circuits and equipment control wiring associated with fire-alarm system shall be installed in a dedicated pathway system.

    a. Cables and pathways used for fire-alarm circuits, and equipment control wiring associated with fire-alarm system, may not contain any other wire or cable.

C. Wiring within Enclosures: Separate power-limited and non-power-limited conductors as recommended by manufacturer. Install conductors parallel with or at right angles to sides and back of the enclosure. Bundle, lace, and train conductors to terminal points with no excess. Connect conductors that are terminated, spliced, or interrupted in any enclosure associated with fire-alarm system to terminal blocks. Mark each terminal according to system's wiring diagrams. Make all connections with approved crimp-on terminal spade lugs, pressure-type terminal blocks, or plug connectors.

D. Cable Taps: Use numbered terminal strips in junction, pull, and outlet boxes, cabinets, or equipment enclosures where circuit connections are made.

E. Color-Coding: Color-code fire-alarm conductors differently from the normal building power wiring. Use one color-code for alarm circuit wiring and another for supervisory circuits. Color-code audible alarm-indicating circuits differently from alarm-initiating circuits. Use different colors for visible alarm-indicating devices. Paint fire-alarm system junction boxes and covers red.

F. Wiring to Remote Alarm Transmitting Device: 1-inch conduit between the fire-alarm control panel and the transmitter. Install number of conductors and electrical supervision for connecting wiring as needed to suit monitoring function.

3.4 CONNECTIONS

A. Tighten electrical connectors and terminals according to manufacturer's published torque-tightening values. If manufacturer's torque values are not indicated, use those specified in UL 486A-486B.

B. Make splices, terminations, and taps that are compatible with conductor material and that possess equivalent or better mechanical strength and insulation ratings than unspliced conductors.

1. Use oxide inhibitor in each splice, termination, and tap for aluminum conductors.

C. Wiring at Outlets: Install conductor at each outlet, with at least-12 inches of slack.

D. Comply with requirements in Section 284621.11 "Addressable Fire-Alarm Systems" for connecting, terminating, and identifying wires and cables.

3.5 IDENTIFICATION

A. Identify and color-code conductors and cables according to Section 260553 "Identification for Electrical Systems."

B. Identify each spare conductor at each end with identity number and location of other end of conductor, and identify as spare conductor.

3.6 SLEEVE AND SLEEVE-SEAL INSTALLATION FOR ELECTRICAL PENETRATIONS

A. Install sleeves and sleeve seals at penetrations of exterior floor and wall assemblies. Comply with requirements in Section 260544 "Sleeves and Sleeve Seals for Electrical Raceways and Cabling."

3.7 FIRESTOPPING

A. Apply firestopping to electrical penetrations of fire-rated floor and wall assemblies to restore original fire-resistance rating of assembly according to Section 078413 "Penetration Firestopping."

END OF SECTION 260519

SECTION 260526 - GROUNDING AND BONDING FOR ELECTRICAL SYSTEMS

PART 1 - GENERAL

1.1 SUMMARY

A. Section includes grounding and bonding systems and equipment.

1. Underground distribution grounding.
2. Ground bonding common with lightning protection system.
3. Foundation steel electrodes.

1.2 ACTION SUBMITTALS

A. Product Data: For each type of product.

PART 2 - PRODUCTS

2.1 SYSTEM DESCRIPTION

A. Electrical Components, Devices, and Accessories: Listed and labeled as defined in NFPA 70, by a qualified testing agency, and marked for intended location and application.

B. Comply with UL 467 for grounding and bonding materials and equipment.

2.2 MANUFACTURERS

A. Manufacturers: Subject to compliance with requirements, available manufacturers offering products that may be incorporated into the Work include the following:

1. ABB (Electrification Products Division).
2. Advanced Lightning Technology, Ltd.
3. Appleton - O-Z/Gedney; Emerson Electric Co., Automation Solutions.
4. Burndy; Hubbell Incorporated, Construction and Energy.
5. Dossert; AFL Telecommunications LLC.
6. Fushi Copperweld Inc.
7. Galvan Industries, Inc.; Electrical Products Division, LLC.
8. Harger Lightning & Grounding.
9. ILSCO.
10. nVent (ERICO).
11. Robbins Lightning, Inc.
12. Siemens Industry, Inc., Energy Management Division.
13. Additional manufacturers submitted for and receiving engineer approval prior to bid.

2.3 CONDUCTORS

A. Insulated Conductors: Copper wire or cable insulated for 600 V unless otherwise required by applicable Code or authorities having jurisdiction.

B. Bare Copper Conductors:

1. Solid Conductors: ASTM B3.
2. Stranded Conductors: ASTM B8.
3. Tinned Conductors: ASTM B33.
4. Bonding Cable: 28 kcmil, 14 strands of No. 17 AWG conductor, 1/4 inch in diameter.
5. Bonding Conductor: No. 4 or No. 6 AWG, stranded conductor.
6. Bonding Jumper: Copper tape, braided conductors terminated with copper ferrules; 1-5/8 inches wide and 1/16 inch thick.
7. Tinned Bonding Jumper: Tinned-copper tape, braided conductors terminated with copper ferrules; 1-5/8 inches wide and 1/16 inch thick.

C. Grounding Bus: Predrilled rectangular bars of annealed copper, 1/4 by 4 inches in cross section, with 9/32-inch holes spaced 1-1/8 inches apart. Stand-off insulators for mounting shall comply with UL 891 for use in switchboards, 600 V and shall be Lexan or PVC, impulse tested at 5000 V.

2.4 CONNECTORS

A. Listed and labeled by an NRTL acceptable to authorities having jurisdiction for applications in which used and for specific types, sizes, and combinations of conductors and other items connected.

B. Welded Connectors: Exothermic-welding kits of types recommended by kit manufacturer for materials being joined and installation conditions.

C. Bus-Bar Connectors: Mechanical type, cast silicon bronze, solderless compression or exothermic-type wire terminals, and long-barrel, two-bolt connection to ground bus bar. Or Compression type, copper or copper alloy, with two wire terminals.

D. Beam Clamps: Mechanical type, terminal, ground wire access from four directions, with dual, tin-plated or silicon bronze bolts.

E. Cable-to-Cable Connectors: Compression type, copper or copper alloy.

F. Cable Tray Ground Clamp: Mechanical type, zinc-plated malleable iron.

G. Conduit Hubs: Mechanical type, terminal with threaded hub.

H. Ground Rod Clamps: Mechanical type, copper or copper alloy, terminal with hex head bolt or socket set screw.

I. Ground Rod Clamps: Mechanical type, copper or copper alloy, terminal with hex head bolt.

J. Lay-in Lug Connector: Mechanical type, copper rated for direct burial terminal with set screw.

K. Service Post Connectors: Mechanical type, bronze alloy terminal, in short- and long-stud lengths, capable of single and double conductor connections.

L. Signal Reference Grid Clamp: Mechanical type, stamped-steel terminal with hex head screw.

M. Straps: Solid copper, copper lugs. Rated for 600 A.

N. Tower Ground Clamps: Mechanical type, copper or copper alloy, terminal two-piece clamp.

O. U-Bolt Clamps: Mechanical type, copper or copper alloy, terminal listed for direct burial.

P. Water Pipe Clamps:

1. Mechanical type, two pieces with zinc-plated or stainless-steel bolts.

a. Material: Tin-plated aluminum or Die-cast zinc alloy.
b. Listed for direct burial.

2. U-bolt type with malleable-iron clamp and copper ground connector.

2.5 GROUNDING ELECTRODES

A. Ground Rods: Copper-clad steel; 5/8 by 96 inches.

B. Ground Plates: 1/4 inch thick, hot-dip galvanized.

PART 3 - EXECUTION

3.1 APPLICATIONS

A. Conductors: Install solid conductor for No. 8 AWG and smaller, and stranded conductors for No. 6 AWG and larger unless otherwise indicated.

B. Underground Grounding Conductors: Install barecopper conductor, No. 2/0 AWG minimum.

1. Bury at least 30 inches below grade.

C. Grounding Bus: Install in electrical equipment rooms, in rooms housing service equipment, and elsewhere as indicated.

1. Install bus horizontally, on insulated spacers 2 inches minimum from wall, 6 inches above finished floor unless otherwise indicated.
2. Where indicated on both sides of doorways, route bus up to top of door frame, across top of doorway, and down; connect to horizontal bus.

D. Conductor Terminations and Connections:

1. Pipe and Equipment Grounding Conductor Terminations: Bolted connectors.
2. Underground Connections: Welded connectors except at test wells and as otherwise indicated.
3. Connections to Ground Rods at Test Wells: Bolted connectors.
4. Connections to Structural Steel: Welded connectors.

3.2 GROUNDING AT THE SERVICE

A. Equipment grounding conductors and grounding electrode conductors shall be connected to the ground bus. Install a main bonding jumper between the neutral and ground buses.

3.3 GROUNDING UNDERGROUND DISTRIBUTION SYSTEM COMPONENTS

A. Comply with IEEE C2 grounding requirements.

B. Grounding Manholes and Handholes: Install a driven ground rod through manhole or handhole floor, close to wall, and set rod depth so 4 inches will extend above finished floor. If necessary, install ground rod before manhole is placed and provide No. 1/0 AWG bare, tinned-copper conductor from ground rod into manhole through a waterproof sleeve in manhole wall. Protect ground rods passing through concrete floor with a double wrapping of pressure-sensitive insulating tape or heat-shrunk insulating sleeve from 2 inches above to 6 inches below concrete. Seal floor opening with waterproof, nonshrink grout.

C. Grounding Connections to Manhole Components: Bond exposed-metal parts such as inserts, cable racks, pulling irons, ladders, and cable shields within each manhole or handhole, to ground rod or grounding conductor. Make connections with No. 4 AWG minimum, stranded, hard-drawn copper bonding conductor. Train conductors level or plumb around corners and fasten to manhole walls. Connect to cable armor and cable shields according to written instructions by manufacturer of splicing and termination kits.

D. Pad-Mounted Transformers and Switches: Install two ground rods and ground ring around the pad. Ground pad-mounted equipment and noncurrent-carrying metal items associated with substations by connecting them to underground cable and grounding electrodes. Install tinned-copper conductor not less than No. 2 AWG for ground ring and for taps to equipment grounding terminals. Bury ground ring not less than 6 inches from the foundation.

3.4 EQUIPMENT GROUNDING

A. Install insulated equipment grounding conductors with all feeders and branch circuits.

B. Install insulated equipment grounding conductors with the following items, in addition to those required by NFPA 70:

1. Feeders and branch circuits.
2. Lighting circuits.

3. Receptacle circuits.
4. Single-phase motor and appliance branch circuits.
5. Three-phase motor and appliance branch circuits.
6. Flexible raceway runs.
7. Armored and metal-clad cable runs.
8. Busway Supply Circuits: Install insulated equipment grounding conductor from grounding bus in the switchgear, switchboard, or distribution panel to equipment grounding bar terminal on busway.

C. Air-Duct Equipment Circuits: Install insulated equipment grounding conductor to duct-mounted electrical devices operating at 120 V and more, including air cleaners, heaters, dampers, humidifiers, and other duct electrical equipment. Bond conductor to each unit and to air duct and connected metallic piping.

D. Water Heater, Heat-Tracing, and Antifrost Heating Cables: Install a separate insulated equipment grounding conductor to each electric water heater and heat-tracing cable. Bond conductor to heater units, piping, connected equipment, and components.

3.5 INSTALLATION

A. Grounding Conductors: Route along shortest and straightest paths possible unless otherwise indicated or required by Code. Avoid obstructing access or placing conductors where they may be subjected to strain, impact, or damage.

B. Ground Bonding Common with Lightning Protection System: Comply with NFPA 780 and UL 96 when interconnecting with lightning protection system. Bond electrical power system ground directly to lightning protection system grounding conductor at closest point to electrical service grounding electrode. Use bonding conductor sized same as system grounding electrode conductor, and install in conduit.

C. Ground Rods: Drive rods until tops are 2 inches below finished floor or final grade unless otherwise indicated.

1. Interconnect ground rods with grounding electrode conductor below grade and as otherwise indicated. Make connections without exposing steel or damaging coating if any.

D. Bonding Straps and Jumpers: Install in locations accessible for inspection and maintenance except where routed through short lengths of conduit.

1. Bonding to Structure: Bond straps directly to basic structure, taking care not to penetrate any adjacent parts.
2. Bonding to Equipment Mounted on Vibration Isolation Hangers and Supports: Install bonding so vibration is not transmitted to rigidly mounted equipment.
3. Use exothermic-welded connectors for outdoor locations; if a disconnect-type connection is required, use a bolted clamp.

E. Grounding and Bonding for Piping:

1. Metal Water Service Pipe: Install insulated copper grounding conductors, in conduit, from building's main service equipment, or grounding bus, to main metal water service entrances to building. Connect grounding conductors to main metal water service pipes; use a bolted clamp connector or bolt a lug-type connector to a pipe flange by using one of the lug bolts of the flange. Where a dielectric main water fitting is installed, connect grounding conductor on street side of fitting. Bond metal grounding conductor conduit or sleeve to conductor at each end.
2. Water Meter Piping: Use braided-type bonding jumpers to electrically bypass water meters. Connect to pipe with a bolted connector.
3. Bond each aboveground portion of gas piping system downstream from equipment shutoff valve.

3.6 FIELD QUALITY CONTROL

A. Perform tests and inspections.

B. Tests and Inspections:

1. After installing grounding system but before permanent electrical circuits have been energized, test for compliance with requirements.
2. Inspect physical and mechanical condition. Verify tightness of accessible, bolted, electrical connections with a calibrated torque wrench according to manufacturer's written instructions.

C. Grounding system will be considered defective if it does not pass tests and inspections.

END OF SECTION 260526

SECTION 260529 - HANGERS AND SUPPORTS FOR ELECTRICAL SYSTEMS

PART 1 - GENERAL

1.1 SUMMARY

A. Section Includes:

1. Steel slotted support systems.
2. Conduit and cable support devices.
3. Support for conductors in vertical conduit.
4. Structural steel for fabricated supports and restraints.
5. Mounting, anchoring, and attachment components, including powder-actuated fasteners, mechanical expansion anchors, concrete inserts, clamps, through bolts, toggle bolts, and hanger rods.
6. Fabricated metal equipment support assemblies.

1.2 ACTION SUBMITTALS

A. Product Data: For each type of product.

PART 2 - PRODUCTS

2.1 PERFORMANCE REQUIREMENTS

A. Surface-Burning Characteristics: Comply with ASTM E84; testing by a qualified testing agency. Identify products with appropriate markings of applicable testing agency.

1. Flame Rating: Class 1.
2. Self-extinguishing according to ASTM D635.

2.2 SUPPORT, ANCHORAGE, AND ATTACHMENT COMPONENTS

A. Steel Slotted Support Systems: Preformed steel channels and angles with minimum 13/32-inch-diameter holes at a maximum of 8 inches o.c. in at least one surface.

1. Manufacturers: Subject to compliance with requirements, available manufacturers offering products that may be incorporated into the Work include the following:

a. ABB (Electrification Products Division).
b. Atkore International (Allied Tube & Conduit).
c. Atkore International (Unistrut).
d. Eaton (B-line).

e. Flex-Strut Inc.
f. Gripple Inc.
g. GS Metals Corp.
h. G-Strut.
i. Haydon Corporation.
j. Metal Ties Innovation.
k. MIRO Industries.
l. nVent (CADDY).
m. Wesanco, Inc.
n. Additional manufacturers submitted for and receiving engineer approval prior to bid.

2. Standard: Comply with MFMA-4 factory-fabricated components for field assembly.
3. Material for Channel, Fittings, and Accessories: Galvanized steel, Plain steel, Stainless steel, or Type 304 Stainless steel, Type 316.
4. Channel Width: Selected for applicable load criteria.
5. Metallic Coatings: Hot-dip galvanized after fabrication and applied according to MFMA-4.
6. Nonmetallic Coatings: Manufacturer's standard PVC, polyurethane, or polyester coating applied according to MFMA-4.
7. Painted Coatings: Manufacturer's standard painted coating applied according to MFMA-4.
8. Protect finishes on exposed surfaces from damage by applying a strippable, temporary protective covering before shipping.

B. Conduit and Cable Support Devices: Steel and malleable-iron hangers, clamps, and associated fittings, designed for types and sizes of raceway or cable to be supported.

C. Support for Conductors in Vertical Conduit: Factory-fabricated assembly consisting of threaded body and insulating wedging plug or plugs for nonarmored electrical conductors or cables in riser conduits. Plugs shall have number, size, and shape of conductor gripping pieces as required to suit individual conductors or cables supported. Body shall be made of malleable iron.

D. Structural Steel for Fabricated Supports and Restraints: ASTM A36/A36M steel plates, shapes, and bars; black and galvanized.

E. Mounting, Anchoring, and Attachment Components: Items for fastening electrical items or their supports to building surfaces include the following
1. Through Bolts: Structural type, hex head, and high strength. Comply with ASTM F3125/F3125M, Grade A325.
2. Toggle Bolts: All -steel springhead type.
3. Hanger Rods: Threaded steel.

PART 3 - EXECUTION

3.1 APPLICATION

A. Comply with the following standards for application and installation requirements of hangers and supports, except where requirements on Drawings or in this Section are stricter:

1. NECA 1.
2. NECA 101

B. Comply with requirements in Section 078413 "Penetration Firestopping" for firestopping materials and installation for penetrations through fire-rated walls, ceilings, and assemblies.

C. Comply with requirements for raceways and boxes specified in Section 260533 "Raceways and Boxes for Electrical Systems."

D. Maximum Support Spacing and Minimum Hanger Rod Size for Raceways: Space supports for EMT, IMC, and RMC as required by NFPA 70. Minimum rod size shall be 1/4 inch in diameter.

E. Multiple Raceways or Cables: Install trapeze-type supports fabricated with steel slotted or other support system, sized so capacity can be increased by at least 25 percent in future without exceeding specified design load limits.

1. Secure raceways and cables to these supports with single-bolt conduit clamps.

F. Spring-steel clamps designed for supporting single conduits without bolts may be used for 1-1/2-inch and smaller raceways serving branch circuits and communication systems above suspended ceilings, and for fastening raceways to trapeze supports.

3.2 SUPPORT INSTALLATION

A. Comply with NECA 1 and NECA 101 for installation requirements except as specified in this article.

B. Raceway Support Methods: In addition to methods described in NECA 1, EMT IMC and RMC may be supported by openings through structure members, according to NFPA 70.

C. Strength of Support Assemblies: Where not indicated, select sizes of components so strength will be adequate to carry present and future static loads within specified loading limits. Minimum static design load used for strength determination shall be weight of supported components plus 200 lb.

D. Mounting and Anchorage of Surface-Mounted Equipment and Components: Anchor and fasten electrical items and their supports to building structural elements by the following methods unless otherwise indicated by code:

1. To Wood: Fasten with lag screws or through bolts.

2. Items Mounted on Hollow Walls and Nonstructural Building Surfaces: Mount cabinets, panelboards, disconnect switches, control enclosures, pull and junction boxes, transformers, and other devices on slotted-channel racks attached to substrate by means that comply with seismic-restraint strength and anchorage requirements.

3.3 INSTALLATION OF FABRICATED METAL SUPPORTS

A. Comply with installation requirements in Section 055000 "Metal Fabrications" for site-fabricated metal supports.

B. Cut, fit, and place miscellaneous metal supports accurately in location, alignment, and elevation to support and anchor electrical materials and equipment.

C. Field Welding: Comply with AWS D1.1/D1.1M.

END OF SECTION 260529

SECTION 260533 - RACEWAYS AND BOXES FOR ELECTRICAL SYSTEMS

PART 1 - GENERAL

1.1 SUMMARY

A. Section Includes:

1. Metal conduits and fittings.
2. Nonmetallic conduits and fittings.
3. Metal wireways and auxiliary gutters.
4. Nonmetal wireways and auxiliary gutters.
5. Surface raceways.
6. Boxes, enclosures, and cabinets.
7. Handholes and boxes for exterior underground cabling.

B. Related Requirements:

1. Section 078413 "Penetration Firestopping" for firestopping at conduit and box entrances.

2. Section 270528 "Pathways for Communications Systems" for conduits, wireways, surface pathways, innerduct, boxes, faceplate adapters, enclosures, cabinets, and handholes serving communications systems.

1.2 ACTION SUBMITTALS

A. Product Data: For each type of product.

PART 2 - PRODUCTS

2.1 METAL CONDUITS AND FITTINGS

A. Metal Conduit:

1. Manufacturers: Subject to compliance with requirements, available manufacturers offering products that may be incorporated into the Work include the following:

a. ABB (Electrification Products Division).
b. Anamet Electrical, Inc (Anaconda Sealtite).
c. Appleton - O-Z/Gedney; Emerson Electric Co., Automation Solutions.
d. Atkore International (AFC Cable Systems).
e. Atkore International (Allied Tube & Conduit).
f. Atkore International (Calconduit).
g. Electri-Flex Company.

h. FSR Inc.
i. Korkap.
j. NEC, Inc.
k. NewBasis.
l. Opti-Com Manufacturing Network, Inc (OMNI).
m. Patriot Aluminum Products, LLC.
n. Perma-Cote.
o. Plasti-Bond.
p. Republic Conduit.
q. Southwire Company.
r. Topaz Lighting & Electric.
s. Western Tube and Conduit Corporation.
t. Wheatland Tube Company.
u. Zekelman Industries (Picoma).
v. Additional manufacturers submitted for and receiving engineer approval prior to bid.

2. Listing and Labeling: Metal conduits, tubing, and fittings shall be listed and labeled as defined in NFPA 70, by a qualified testing agency, and marked for intended location and application.
3. GRC: Comply with ANSI C80.1 and UL 6.
4. IMC: Comply with ANSI C80.6 and UL 1242.

5. EMT: Comply with ANSI C80.3 and UL 797.
6. FMC: Comply with UL 1; zinc-coated steel or aluminum.
7. LFMC: Flexible steel conduit with PVC jacket and complying with UL 360.

B. Metal Fittings: Comply with NEMA FB 1 and UL 514B.

1. Manufacturers: Subject to compliance with requirements, available manufacturers offering products that may be incorporated into the Work include the following:

a. ABB (Electrification Products Division).
b. Anamet Electrical, Inc (Anaconda Sealtite).
c. Appleton - O-Z/Gedney; Emerson Electric Co., Automation Solutions.
d. Atkore International (AFC Cable Systems).
e. Atkore International (Allied Tube & Conduit).
f. Atkore International (Calconduit).
g. Electri-Flex Company.
h. FSR Inc.
i. Korkap.
j. NEC, Inc.
k. NewBasis.
l. Opti-Com Manufacturing Network, Inc (OMNI).
m. Patriot Aluminum Products, LLC.
n. Perma-Cote.
o. Plasti-Bond.
p. Republic Conduit.
q. Southwire Company.

r. Topaz Lighting & Electric.
s. Western Tube and Conduit Corporation.
t. Wheatland Tube Company.
u. Zekelman Industries (Picoma).
v. Additional manufacturers submitted for and receiving engineer approval prior to bid.

2. Listing and Labeling: Listed and labeled as defined in NFPA 70, by a qualified testing agency, and marked for intended location and application.
3. Fittings, General: Listed and labeled for type of conduit, location, and use.
4. Conduit Fittings for Hazardous (Classified) Locations: Comply with UL 1203 and NFPA 70.
5. Fittings for EMT:

a. Material: Steel or die cast.
b. Type: Setscrew or compression.

6. Expansion Fittings: PVC or steel to match conduit type, complying with UL 651, rated for environmental conditions where installed, and including flexible external bonding jumper.
7. Coating for Fittings for PVC-Coated Conduit: Minimum thickness of 0.040 inch, with overlapping sleeves protecting threaded joints.

C. Joint Compound for IMC, GRC, or ARC: Approved, as defined in NFPA 70, by authorities having jurisdiction for use in conduit assemblies, and compounded for use to lubricate and protect threaded conduit joints from corrosion and to enhance their conductivity.

2.2 NONMETALLIC CONDUITS AND FITTINGS

A. Nonmetallic Conduit:

1. Manufacturers: Subject to compliance with requirements, available manufacturers offering products that may be incorporated into the Work include the following:

a. ABB (Electrification Products Division).
b. Anamet Electrical, Inc (Anaconda Sealtite).
c. Atkore International (AFC Cable Systems).
d. Cantex Inc.
e. CertainTeed Corporation.
f. Champion Fiberglass, Inc.
g. Condux International, Inc.
h. Electri-Flex Company.
i. FRE Composites.
j. Kraloy Fittings.
k. Lamson & Sessions.
l. Niedax Inc.
m. Orbia Advance Corporation, S.A.B. de C.V. (Dura-Line Communications Group).
n. Raco Taymac Bell; Hubbell Incorporated, Commercial and Industrial.
o. Topaz Lighting & Electric.

p. United Fiberglass of America (UFA).
q. Additional manufacturers submitted for and receiving engineer approval prior to bid.

B. Listing and Labeling: Listed and labeled as defined in NFPA 70, by a qualified testing agency, and marked for intended location and application.

1. ENT: Comply with NEMA TC 13 and UL 1653.
2. RNC: Type EPC-40-PVC, complying with NEMA TC 2 and UL 651 unless otherwise indicated.
3. LFNC: Comply with UL 1660.

C. Nonmetallic Fittings:

1. Manufacturers: Subject to compliance with requirements, available manufacturers offering products that may be incorporated into the Work include the following:

a. ABB (Electrification Products Division).
b. Anamet Electrical, Inc (Anaconda Sealtite).
c. Atkore International (AFC Cable Systems).
d. Cantex Inc.
e. CertainTeed Corporation.
f. Champion Fiberglass, Inc.
g. Condux International, Inc.
h. Electri-Flex Company.
i. FRE Composites.
j. Kraloy Fittings.
k. Lamson & Sessions.
l. Niedax Inc.
m. Orbia Advance Corporation, S.A.B. de C.V. (Dura-Line Communications Group).
n. Raco Taymac Bell; Hubbell Incorporated, Commercial and Industrial.
o. Topaz Lighting & Electric.
p. United Fiberglass of America (UFA).
q. Additional manufacturers submitted for and receiving engineer approval prior to bid.

2. Fittings, General: Listed and labeled for type of conduit, location, and use.
3. Fittings for ENT and RNC: Comply with NEMA TC 3; match to conduit or tubing type and material.
4. Fittings for LFNC: Comply with UL 514B.
5. Solvents and Adhesives: As recommended by conduit manufacturer.

2.3 METAL WIREWAYS AND AUXILIARY GUTTERS

A. Manufacturers: Subject to compliance with requirements, available manufacturers offering products that may be incorporated into the Work include the following:

1. ABB (Electrification Products Division).
2. Eaton (B-line).

3. MonoSystems, Inc.
4. nVent (Hoffman).
5. Schneider Electric USA (Square D).
6. Wiegmann; Hubbell Incorporated, Commercial and Industrial.
7. Additional manufacturers submitted for and receiving engineer approval prior to bid.

B. Description: Sheet metal, complying with UL 870 and NEMA 250, Type 1 Type 3R unless otherwise indicated, and sized according to NFPA 70.

1. Metal wireways installed outdoors shall be listed and labeled as defined in NFPA 70, by a qualified testing agency, and marked for intended location and application.

C. Fittings and Accessories: Include covers, couplings, offsets, elbows, expansion joints, adapters, hold-down straps, end caps, and other fittings to match and mate with wireways as required for complete system.

2.4 NONMETALLIC WIREWAYS AND AUXILIARY GUTTERS

A. Listing and Labeling: Nonmetallic wireways and auxiliary gutters shall be listed and labeled as defined in NFPA 70, by a qualified testing agency, and marked for intended location and application.

B. Description: PVC, extruded and fabricated to required size and shape, and having snap-on cover, mechanically coupled connections, and plastic fasteners.

C. Fittings and Accessories: Couplings, offsets, elbows, expansion joints, adapters, hold-down straps, end caps, and other fittings shall match and mate with wireways as required for complete system.

D. Solvents and Adhesives: As recommended by conduit manufacturer.

2.5 BOXES, ENCLOSURES, AND CABINETS

A. Manufacturers: Subject to compliance with requirements, available manufacturers offering products that may be incorporated into the Work include the following:

1. ABB (Electrification Products Division).
2. Adalet.
3. Appleton - EGS; Emerson Electric Co., Automation Solutions.
4. Appleton - O-Z/Gedney; Emerson Electric Co., Automation Solutions.
5. Eaton (Crouse-Hinds).
6. Erickson Electrical Equipment Company.
7. FSR Inc.
8. Hubbell Incorporated.
9. Kraloy Fittings.
10. Milbank Manufacturing Co.
11. MonoSystems, Inc.
12. nVent (Hoffman).

13. Oldcastle Enclosure Solutions.
14. Plasti-Bond.
15. Raco Taymac Bell; Hubbell Incorporated, Commercial and Industrial.
16. Spring City Electrical Manufacturing Company.
17. Stahlin Non-Metallic Enclosures.
18. Topaz Lighting & Electric.
19. Wiremold; Legrand North America, LLC.
20. Wiring Device-Kellems; Hubbell Incorporated, Commercial and Industrial.
21. Additional manufacturers submitted for and receiving engineer approval prior to bid.

B. General Requirements for Boxes, Enclosures, and Cabinets: Boxes, enclosures, and cabinets installed in wet locations shall be listed for use in wet locations.

C. Sheet Metal Outlet and Device Boxes: Comply with NEMA OS 1 and UL 514A.

D. Cast-Metal Outlet and Device Boxes: Comply with NEMA FB 1, ferrous alloy or aluminum, Type FD, with gasketed cover.

E. Nonmetallic Outlet and Device Boxes: Comply with NEMA OS 2 and UL 514C.

F. Metal Floor Boxes:

1. Material: Cast metal.
2. Type: Fully adjustable.
3. Shape: Rectangular.
4. Listing and Labeling: Metal floor boxes shall be listed and labeled as defined in NFPA 70, by a qualified testing agency, and marked for intended location and application.

G. Nonmetallic Floor Boxes:

1. Listing and Labeling: Nonmetallic floor boxes shall be listed and labeled as defined in NFPA 70, by a qualified testing agency, and marked for intended location and application.

H. Luminaire Outlet Boxes: Nonadjustable, designed for attachment of luminaire weighing 50 lb. Outlet boxes designed for attachment of luminaires weighing more than 50 lb shall be listed and marked for the maximum allowable weight.

I. Paddle Fan Outlet Boxes: Nonadjustable, designed for attachment of paddle fan weighing 70 lb.

1. Listing and labeling: Paddle fan outlet boxes shall be listed and labeled as defined in NFPA 70, by a qualified testing agency, and marked for intended location and application.

J. Small Sheet Metal Pull and Junction Boxes: NEMA OS 1.

K. Cast-Metal Access, Pull, and Junction Boxes: Comply with NEMA FB 1 and UL 1773, cast aluminum or galvanized, cast iron with gasketed cover.

L. Box extensions used to accommodate new building finishes shall be of same material as recessed box.

M. Gangable boxes are prohibited.

N. Hinged-Cover Enclosures: Comply with UL 50 and NEMA 250, Type 1 Type 3R with continuous-hinge cover with flush latch unless otherwise indicated.

1. Metal Enclosures: Steel, finished inside and out with manufacturer's standard enamel.
2. Nonmetallic Enclosures: Plastic.
3. Interior Panels: Steel; all sides finished with manufacturer's standard enamel.

O. Cabinets:

1. NEMA 250, Type 1 Type 3R galvanized-steel box with removable interior panel and removable front, finished inside and out with manufacturer's standard enamel.
2. Hinged door in front cover with flush latch and concealed hinge.
3. Key latch to match panelboards.
4. Metal barriers to separate wiring of different systems and voltage.
5. Accessory feet where required for freestanding equipment.
6. Nonmetallic cabinets shall be listed and labeled as defined in NFPA 70, by a qualified testing agency, and marked for intended location and application.

PART 3 - EXECUTION

3.1 RACEWAY APPLICATION

A. Outdoors: Apply raceway products as specified below unless otherwise indicated:

1. Exposed Conduit: IMC
2. Concealed Conduit, Aboveground: EMT
3. Underground Conduit: RNC, Type EPC-40-PVC, direct buried
4. Connection to Vibrating Equipment (Including Transformers and Hydraulic, Pneumatic, Electric Solenoid, or Motor-Driven Equipment): LFMC.
5. Boxes and Enclosures, Aboveground: NEMA 250, Type 3R

B. Indoors: Apply raceway products as specified below unless otherwise indicated.

1. Exposed, Not Subject to Physical Damage: EMT
2. Exposed, Not Subject to Severe Physical Damage: EMT

3. Concealed in Ceilings and Interior Walls and Partitions: EMT
4. Connection to Vibrating Equipment (Including Transformers and Hydraulic, Pneumatic, Electric Solenoid, or Motor-Driven Equipment): FMC, except use LFMC in damp or wet locations.
5. Damp or Wet Locations: IMC.
6. Boxes and Enclosures: NEMA 250, Type 1, except use NEMA 250, Type 4 stainless steel in institutional and commercial kitchens and damp or wet locations.

C. Minimum Raceway Size: 1/2-inch trade size.

D. Raceway Fittings: Compatible with raceways and suitable for use and location.

1. Rigid and Intermediate Steel Conduit: Use threaded rigid steel conduit fittings unless otherwise indicated. Comply with NEMA FB 2.10.
2. PVC Externally Coated, Rigid Steel Conduits: Use only fittings listed for use with this type of conduit. Patch and seal all joints, nicks, and scrapes in PVC coating after installing conduits and fittings. Use sealant recommended by fitting manufacturer and apply in thickness and number of coats recommended by manufacturer.
3. EMT: Use setscrew when concealed in building structure or located more than 10’ AFF. or compression when accessible to building occupants, steel fittings. Comply with NEMA FB 2.10.
4. Flexible Conduit: Use only fittings listed for use with flexible conduit. Comply with NEMA FB 2.20.

E. Do not install aluminum conduits, boxes, or fittings in contact with concrete or earth.

F. Install surface raceways only where indicated on Drawings.

G. Do not install nonmetallic conduit where ambient temperature exceeds 120 deg F**.**

3.2 INSTALLATION

A. Comply with requirements in Section 260529 "Hangers and Supports for Electrical Systems" for hangers and supports.

B. Comply with NECA 1 and NECA 101 for installation requirements except where requirements on Drawings or in this article are stricter. Comply with NECA 102 for aluminum conduits. Comply with NFPA 70 limitations for types of raceways allowed in specific occupancies and number of floors.

C. Do not install raceways or electrical items on any "explosion-relief" walls or rotating equipment.

D. Do not fasten conduits onto the bottom side of a metal deck roof.

E. Keep raceways at least 6 inches away from parallel runs of flues and steam or hot-water pipes. Install horizontal raceway runs above water and steam piping.

F. Comply with requirements in Section 260529 "Hangers and Supports for Electrical Systems" for hangers and supports.

G. Arrange stub-ups so curved portions of bends are not visible above finished slab.

H. Make bends in raceway using large-radius preformed ells. Field bending shall be according to NFPA 70 minimum radii requirements. Use only equipment specifically designed for material and size involved.

I. Conceal conduit and EMT within finished walls, ceilings, and floors unless otherwise indicated. Install conduits parallel or perpendicular to building lines.

J. Support conduit within 12 inches of enclosures to which attached.

K. Raceways Embedded in Slabs:

1. Run conduit larger than 1-inch trade size, parallel or at right angles to main reinforcement. Where at right angles to reinforcement, place conduit close to slab support. Secure raceways to reinforcement at maximum 10-foot intervals.
2. Arrange raceways to cross building expansion joints at right angles with expansion fittings.
3. Arrange raceways to keep a minimum of 2 inches of concrete cover in all directions.
4. Do not embed threadless fittings in concrete unless specifically approved by Architect for each specific location.
5. Change from ENT to RNC, Type EPC-40-PVC, GRC or IMC before rising above floor.

L. Stub-ups to Above Recessed Ceilings:

1. Use EMT, IMC, or RMC for raceways.
2. Use a conduit bushing or insulated fitting to terminate stub-ups not terminated in hubs or in an enclosure.

M. Terminate threaded conduits into threaded hubs or with locknuts on inside and outside of boxes or cabinets. Install bushings on conduits up to 1-1/4-inch trade size and insulated throat metal bushings on 1-1/2-inch trade size and larger conduits terminated with locknuts. Install insulated throat metal grounding bushings on service conduits.

N. Install pull wires in empty raceways. Use polypropylene or monofilament plastic line with not less than 200-lb tensile strength. Leave at least 12 inches of slack at each end of pull wire. Cap underground raceways designated as spare above grade alongside raceways in use.

O. Surface Raceways:

1. Install surface raceway with a minimum 2-inch radius control at bend points.
2. Secure surface raceway with screws or other anchor-type devices at intervals not exceeding 48 inches and with no less than two supports per straight raceway section. Support surface raceway according to manufacturer's written instructions. Tape and glue are not acceptable support methods.

P. Install raceway sealing fittings at accessible locations according to NFPA 70 and fill them with listed sealing compound. For concealed raceways, install each fitting in a flush steel box with a blank cover plate having a finish similar to that of adjacent plates or surfaces.

Q. Install devices to seal raceway interiors at accessible locations. Locate seals so no fittings or boxes are between the seal and the following changes of environments. Seal the interior of all raceways at the following points:

1. Where conduits pass from warm to cold locations, such as boundaries of refrigerated spaces.

2. Where an underground service raceway enters a building or structure.
3. Conduit extending from interior to exterior of building.
4. Conduit extending into pressurized duct and equipment.
5. Conduit extending into pressurized zones that are automatically controlled to maintain different pressure set points.
6. Where otherwise required by NFPA 70.

R. Expansion-Joint Fittings:

1. Install in each run of aboveground RNC that is located where environmental temperature change may exceed 30 deg F and that has straight-run length that exceeds 25 feet.
2. Install type and quantity of fittings that accommodate temperature change listed for each of the following locations:

3. Install fitting(s) that provide expansion and contraction for at least 0.00041 inch per foot of length of straight run per degree F of temperature change for PVC conduits.
4. Install expansion fittings at all locations where conduits cross building or structure expansion joints.
5. Install each expansion-joint fitting with position, mounting, and piston setting selected according to manufacturer's written instructions for conditions at specific location at time of installation. Install conduit supports to allow for expansion movement.

S. Flexible Conduit Connections: Comply with NEMA RV 3. Use a maximum of 36 inches of flexible conduit for recessed and semirecessed luminaires, equipment subject to vibration, noise transmission, or movement; and for transformers and motors.

1. Use LFMC in damp or wet locations subject to severe physical damage.
2. Use LFMC or LFNC in damp or wet locations not subject to severe physical damage.

T. Mount boxes at heights indicated on Drawings. If mounting heights of boxes are not individually indicated, give priority to ADA requirements. Install boxes with height measured to center of box unless otherwise indicated.

U. Recessed Boxes in Masonry Walls: Saw-cut opening for box in center of cell of masonry block, and install box flush with surface of wall. Prepare block surfaces to provide a flat surface for a raintight connection between the box and cover plate or the supported equipment and box.

V. Horizontally separate boxes mounted on opposite sides of walls so they are not in the same vertical channel.

W. Locate boxes so that cover or plate will not span different building finishes.

X. Support boxes of three gangs or more from more than one side by spanning two framing members or mounting on brackets specifically designed for the purpose.

Y. Fasten junction and pull boxes to or support from building structure. Do not support boxes by conduits.

Z. Set metal floor boxes level and flush with finished floor surface.

AA. Set nonmetallic floor boxes level. Trim after installation to fit flush with finished floor surface.

3.3 INSTALLATION OF UNDERGROUND CONDUIT

A. Direct-Buried Conduit:

1. Excavate trench bottom to provide firm and uniform support for conduit. Prepare trench bottom as specified in Section 312000 "Earth Moving" for pipe less than 6 inches in nominal diameter.
2. Install backfill as specified in Section 312000 "Earth Moving."
3. After installing conduit, backfill and compact. Start at tie-in point, and work toward end of conduit run, leaving conduit at end of run free to move with expansion and contraction as temperature changes during this process. Firmly hand tamp backfill around conduit to provide maximum supporting strength. After placing controlled backfill to within 12 inches of finished grade, make final conduit connection at end of run and complete backfilling with normal compaction as specified in Section 312000 "Earth Moving."
4. Install manufactured duct elbows for stub-up at poles and equipment and at building entrances through floor unless otherwise indicated. Encase elbows for stub-up ducts throughout length of elbow.

    a. Couple steel conduits to ducts with adapters designed for this purpose, and encase coupling with 3 inches of concrete for a minimum of 12 inches on each side of the coupling.
    b. For stub-ups at equipment mounted on outdoor concrete bases and where conduits penetrate building foundations, extend steel conduit horizontally a minimum of 60 inches from edge of foundation or equipment base. Install insulated grounding bushings on terminations at equipment.

5. Underground Warning Tape: Comply with requirements in Section 260553 "Identification for Electrical Systems."

3.4 INSTALLATION OF UNDERGROUND HANDHOLES AND BOXES

A. Install handholes and boxes level and plumb and with orientation and depth coordinated with connecting conduits to minimize bends and deflections required for proper entrances.

B. Unless otherwise indicated, support units on a level bed of crushed stone or gravel, graded from 1/2-inch sieve to No. 4 sieve and compacted to same density as adjacent undisturbed earth.

C. Elevation: In paved areas, set so cover surface will be flush with finished grade. Set covers of other enclosures 1 inch above finished grade.

D. Install handholes with bottom below frost line, 12” below grade.

E. Field-cut openings for conduits according to enclosure manufacturer's written instructions. Cut wall of enclosure with a tool designed for material to be cut. Size holes for terminating fittings to be used, and seal around penetrations after fittings are installed.

3.5 SLEEVE AND SLEEVE-SEAL INSTALLATION FOR ELECTRICAL PENETRATIONS

A. Install sleeves and sleeve seals at penetrations of exterior floor and wall assemblies. Comply with requirements in Section 260544 "Sleeves and Sleeve Seals for Electrical Raceways and Cabling."

3.6 FIRESTOPPING

A. Install firestopping at penetrations of fire-rated floor and wall assemblies. Comply with requirements in Section 078413 "Penetration Firestopping."

3.7 PROTECTION

A. Protect coatings, finishes, and cabinets from damage and deterioration.

1. Repair damage to galvanized finishes with zinc-rich paint recommended by manufacturer.
2. Repair damage to PVC coatings or paint finishes with matching touchup coating recommended by manufacturer.

END OF SECTION 260533

SECTION 260544 - SLEEVES AND SLEEVE SEALS FOR ELECTRICAL RACEWAYS AND CABLING

PART 1 - GENERAL

1.1 RELATED DOCUMENTS

A. Drawings and general provisions of the Contract, including General and Supplementary Conditions and Division 01 Specification Sections, apply to this Section.

1.2 SUMMARY

A. Section Includes:

1. Round sleeves.
2. Rectangular sleeves.
3. Sleeve seal systems.
4. Grout.
5. Pourable sealants.
6. Foam sealants.

1.3 ACTION SUBMITTALS

A. Product Data: For each type of product.

PART 2 - PRODUCTS

2.1 ROUND SLEEVES

A. Wall Sleeves, Steel:

1. Description: ASTM A53/A53M, Type E, Grade B, Schedule 40, zinc coated, plain ends and integral waterstop.

B. Pipe Sleeves, PVC:

1. Description: ASTM D1785, Schedule 40.

C. Sheet Metal Sleeves, Galvanized Steel, Round:

1. Description: Galvanized-steel sheet; thickness not less than 0.0239-inch; round tube closed with welded longitudinal joint, with tabs for screw-fastening the sleeve to the board.

2.2 RECTANGULAR SLEEVES

A. Sheet Metal Sleeves, Galvanized Steel, Rectangular:

1. Description:

a. Material: Galvanized sheet steel.
b. Minimum Metal Thickness:

1) For sleeve cross-section rectangle perimeter less than 50 inches and with no side larger than 16 inches, thickness must be 0.052 inch.
2) For sleeve cross-section rectangle perimeter not less than 50 inches or with one or more sides larger than 16 inches, thickness must be 0.138 inch.

2.3 SLEEVE SEAL SYSTEMS

A. Description: Modular sealing device, designed for field assembly, to fill annular space between sleeve and raceway or cable or between raceway and cable.

1. Sealing Elements: EPDM rubber interlocking links shaped to fit surface of pipe. Include type and number required for pipe material and size of pipe.
2. Pressure Plates: Carbon steel, Fiber-reinforced plastic, or Stainless steel.
3. Connecting Bolts and Nuts: Carbon steel, with corrosion-resistant coating, Stainless steel of length required to secure pressure plates to sealing elements.

2.4 GROUT

A. Description: Nonshrink; recommended for interior and exterior sealing openings in non-fire-rated walls or floors.

1. Standard: ASTM C1107/C1107M, Grade B, post-hardening and volume-adjusting, dry, hydraulic-cement grout.
2. Design Mix: 5000-psi, 28-day compressive strength.
3. Packaging: Premixed and factory packaged.

2.5 POURABLE SEALANTS

A. Description: Single-component, neutral-curing elastomeric sealants of grade indicated below.

1. Grade: Pourable (self-leveling) formulation for openings in floors and other horizontal surfaces that are not fire rated.

2.6 FOAM SEALANTS

A. Description: Multicomponent, liquid elastomers that, when mixed, expand and cure in place to produce a flexible, nonshrinking foam. Foam expansion must not damage cables or crack penetrated structure.

PART 3 - EXECUTION

3.1 INSTALLATION OF SLEEVES FOR NON-FIRE-RATED ELECTRICAL PENETRATIONS

A. Comply with NECA 1.

B. Sleeves for Conduits Penetrating Above-Grade, Non-Fire-Rated, Concrete and Masonry-Unit Floors and Walls:

1. Interior Penetrations of Non-Fire-Rated Walls and Floors:

a. Seal space outside of sleeves with mortar or grout. Pack sealing material solidly between sleeve and wall or floor so no voids remain. Tool exposed surfaces smooth; protect material while curing.
b. Seal annular space between sleeve and raceway or cable, using joint sealant appropriate for size, depth, and location of joint. Comply with requirements in Section 079200 "Joint Sealants."

2. Use pipe sleeves unless penetration arrangement requires rectangular sleeved opening.
3. Size pipe sleeves to provide 1/4-inch annular clear space between sleeve and raceway or cable, unless sleeve seal system is to be installed
4. Install sleeves for wall penetrations unless core-drilled holes or formed openings are used. Install sleeves during erection of walls. Cut sleeves to length for mounting flush with both surfaces of walls. Deburr after cutting.
5. Install sleeves for floor penetrations. Extend sleeves installed in floors 2 inches above finished floor level. Install sleeves during erection of floors.

C. Sleeves for Conduits Penetrating Non-Fire-Rated Wall Assemblies:

1. Use circular metal sleeves unless penetration arrangement requires rectangular sleeved opening.
2. Seal space outside of sleeves with approved joint compound for wall assemblies.

D. Roof-Penetration Sleeves: Seal penetration of individual raceways and cables with flexible boot-type flashing units applied in coordination with roofing work.

E. Aboveground, Exterior-Wall Penetrations: Seal penetrations using steel pipe sleeves and mechanical sleeve seal systems. Size sleeves to allow for 1-inch annular clear space between pipe and sleeve for installing mechanical sleeve seals.

F. Underground, Exterior-Wall and Floor Penetrations:

1. Install steel pipe sleeves with integral waterstops. Size sleeves to allow for 1-inch annular clear space between raceway or cable and sleeve for installing sleeve seal system. Install sleeve during construction of floor or wall.

3.2 INSTALLATION OF RECTANGULAR SLEEVES AND SLEEVE SEALS

A. Install sleeves in existing walls without compromising structural integrity of walls. Do not cut structural elements without reinforcing the wall to maintain the designed weight bearing and wall stiffness.

B. Install conduits and cable with no crossings within the sleeve.

C. Fill opening around conduits and cables with expanding foam without leaving voids.

D. Provide metal sheet covering at both wall surfaces and finish to match surrounding surfaces. Metal sheet must be same material as sleeve.

3.3 INSTALLATION OF SLEEVE SEAL SYSTEMS

A. Install sleeve seal systems in sleeves in exterior concrete walls and slabs-on-grade at raceway entries into building.

B. Install type and number of sealing elements recommended by manufacturer for raceway or cable material and size. Position raceway or cable in center of sleeve. Assemble mechanical sleeve seals and install in annular space between raceway or cable and sleeve. Tighten bolts against pressure plates that cause sealing elements to expand and make watertight seal.

END OF SECTION 260544

SECTION 260553 - IDENTIFICATION FOR ELECTRICAL SYSTEMS

PART 1 - GENERAL

1.1 RELATED DOCUMENTS

A. Drawings and general provisions of the Contract, including General and Supplementary Conditions and Division 01 Specification Sections, apply to this Section.

1.2 SUMMARY

A. Section Includes:

1. Color and legend requirements for raceways, conductors, and warning labels and signs.
2. Labels.
3. Bands and tubes.
4. Tapes and stencils.
5. Tags.
6. Signs.
7. Cable ties.
8. Paint for identification.
9. Fasteners for labels and signs.

PART 2 - PRODUCTS

2.1 PERFORMANCE REQUIREMENTS

A. Comply with NFPA 70.

B. Comply with 29 CFR 1910.144 and 29 CFR 1910.145.

C. Comply with ANSI Z535.4 for safety signs and labels.

D. Comply with NFPA 70E requirements for arc-flash warning labels.

E. Adhesive-attached labeling materials, including label stocks, laminating adhesives, and inks used by label printers, shall comply with UL 969.

F. Thermal Movements: Allow for thermal movements from ambient and surface temperature changes.

1. Temperature Change: 120 deg F, ambient; 180 deg F, material surfaces

2.2 COLOR AND LEGEND REQUIREMENTS

A. Raceways and Cables Carrying Circuits at 600 V or Less:

1. Black letters on an orange field
2. Legend: Indicate voltage and system or service type.

B. Color-Coding for Phase- and Voltage-Level Identification, 600 V or Less: Use colors listed below for ungrounded service feeder and branch-circuit conductors.

1. Color shall be factory applied or field applied for sizes larger than No. 8 AWG if authorities having jurisdiction permit.
2. Colors for 208/120-V Circuits:

    a. Phase A: Black.
    b. Phase B: Red.
    c. Phase C: Blue.

3. Colors for 240-V Circuits:

    a. Phase A: Black.
    b. Phase B: Red.

4. Color for Neutral: White or gray.
5. Color for Equipment Grounds: Bare copper or Green
6. Colors for Isolated Grounds: Green two or more yellow stripes.

C. Warning Label Colors:

1. Identify system voltage with black letters on an orange background.

D. Equipment Identification Labels:

1. Black letters on a white field.

2.3 LABELS

A. Vinyl Wraparound Labels: Preprinted, flexible labels laminated with a clear, weather- and chemical-resistant coating and matching wraparound clear adhesive tape for securing label ends.

1. Manufacturers: Subject to compliance with requirements, available manufacturers offering products that may be incorporated into the Work include the following:

    a. Brady Corporation.
    b. Champion America.
    c. emedco.
    d. Grafoplast Wire Markers.
    e. HellermannTyton.
    f. LEM Products Inc.

g. Marking Services, Inc.
h. Panduit Corp.
i. Seton Identification Products; a Brady Corporation company.
j. Additional manufacturers submitted for and receiving engineer approval prior to bid.

B. Snap-around Labels: Slit, pretensioned, flexible, preprinted, color-coded acrylic sleeves, with diameters sized to suit diameter and that stay in place by gripping action.

1. Manufacturers: Subject to compliance with requirements, available manufacturers offering products that may be incorporated into the Work include the following:

a. Brady Corporation.
b. HellermannTyton.
c. Marking Services, Inc.
d. Panduit Corp.
e. Seton Identification Products; a Brady Corporation company.
f. Additional manufacturers submitted for and receiving engineer approval prior to bid.

C. Self-Adhesive Wraparound Labels: Preprinted, 3-mil-thick, polyester or vinyl flexible label with acrylic pressure-sensitive adhesive.

1. Manufacturers: Subject to compliance with requirements, available manufacturers offering products that may be incorporated into the Work include the following:

a. A'n D Cable Products.
b. Brady Corporation.
c. Brother International Corporation.
d. emedco.
e. Grafoplast Wire Markers.
f. Ideal Industries, Inc.
g. LEM Products Inc.
h. Marking Services, Inc.
i. Panduit Corp.
j. Seton Identification Products; a Brady Corporation company.
k. Additional manufacturers submitted for and receiving engineer approval prior to bid.

2. Self-Lamination: Clear; UV-, weather- and chemical-resistant; self-laminating, protective shield over the legend. Labels sized such that the clear shield overlaps the entire printed legend..
3. Marker for Labels: Machine-printed, permanent, waterproof, black ink recommended by printer manufacturer.

D. Self-Adhesive Labels: Polyester or Vinyl, thermal, transfer-printed, 3-mil-thick, multicolor, weather- and UV-resistant, pressure-sensitive adhesive labels, configured for intended use and location.

1. Manufacturers: Subject to compliance with requirements, available manufacturers offering products that may be incorporated into the Work include the following:

    a. A'n D Cable Products.
    b. Brady Corporation.
    c. Brother International Corporation.
    d. emedco.
    e. Grafoplast Wire Markers.
    f. HellermannTyton.
    g. Ideal Industries, Inc.
    h. LEM Products Inc.
    i. Marking Services, Inc.
    j. Panduit Corp.
    k. Seton Identification Products; a Brady Corporation company.
    l. Additional manufacturers submitted for and receiving engineer approval prior to bid.

2. Minimum Nominal Size:

    a. 1-1/2 by 6 inches for raceway and conductors.
    b. 3-1/2 by 5 inches for equipment.
    c. As required by authorities having jurisdiction.

2.4 BANDS AND TUBES

A. Snap-around, Color-Coding Bands: Slit, pretensioned, flexible, solid-colored acrylic sleeves, 2 inches long, with diameters sized to suit diameter and that stay in place by gripping action.

1. Manufacturers: Subject to compliance with requirements, available manufacturers offering products that may be incorporated into the Work include the following:

    a. Brady Corporation.
    b. HellermannTyton.
    c. Marking Services, Inc.
    d. Panduit Corp.
    e. Additional manufacturers submitted for and receiving engineer approval prior to bid.

B. Heat-Shrink Preprinted Tubes: Flame-retardant polyolefin tubes with machine-printed identification labels, sized to suit diameters of and shrunk to fit firmly around item being identified. Full shrink recovery occurs at a maximum of 200 deg F. Comply with UL 224.

1. Manufacturers: Subject to compliance with requirements, available manufacturers offering products that may be incorporated into the Work include the following:

    a. Brady Corporation.
    b. Panduit Corp.
    c. Additional manufacturers submitted for and receiving engineer approval prior to bid.

2.5 TAPES AND STENCILS

A. Marker Tapes: Vinyl or vinyl-cloth, self-adhesive wraparound type, with circuit identification legend machine printed by thermal transfer or equivalent process.

1. Manufacturers: Subject to compliance with requirements, available manufacturers offering products that may be incorporated into the Work include the following:

a. Carlton Industries, LP.
b. Champion America.
c. HellermannTyton.
d. Ideal Industries, Inc.
e. Marking Services, Inc.
f. Panduit Corp.
g. Additional manufacturers submitted for and receiving engineer approval prior to bid.

B. Self-Adhesive Vinyl Tape: Colored, heavy duty, waterproof, fade resistant; not less than 3 mils thick by 1 to 2 inches wide; compounded for outdoor use.

1. Manufacturers: Subject to compliance with requirements, available manufacturers offering products that may be incorporated into the Work include the following:

a. Brady Corporation.
b. Carlton Industries, LP.
c. emedco.
d. Marking Services, Inc.
e. Additional manufacturers submitted for and receiving engineer approval prior to bid.

C. Tape and Stencil: 4-inch-wide black stripes on 10-inch centers placed diagonally over orange background and is 12 inches wide. Stop stripes at legends.

1. Manufacturers: Subject to compliance with requirements, available manufacturers offering products that may be incorporated into the Work include the following:

a. Brimar Industries, Inc.
b. HellermannTyton.
c. LEM Products Inc.
d. Marking Services, Inc.
e. Seton Identification Products; a Brady Corporation company.
f. Additional manufacturers submitted for and receiving engineer approval prior to bid.

D. Floor Marking Tape: 2-inch-wide, 5-mil pressure-sensitive vinyl tape, with yellow and black stripes and clear vinyl overlay.

1. Manufacturers: Subject to compliance with requirements, available manufacturers offering products that may be incorporated into the Work include the following:

a. Carlton Industries, LP.
b. Seton Identification Products; a Brady Corporation company.
c. Additional manufacturers submitted for and receiving engineer approval prior to bid.

E. Underground-Line Warning Tape:

1. Manufacturers: Subject to compliance with requirements, available manufacturers offering products that may be incorporated into the Work include the following:

a. Brady Corporation.
b. Brimar Industries, Inc.
c. Ideal Industries, Inc.
d. LEM Products Inc.
e. Marking Services, Inc.
f. Reef Industries, Inc.
g. Seton Identification Products; a Brady Corporation company.
h. Additional manufacturers submitted for and receiving engineer approval prior to bid.

2. Tape:

a. Recommended by manufacturer for the method of installation and suitable to identify and locate underground electrical and communications utility lines.
b. Printing on tape shall be permanent and shall not be damaged by burial operations.
c. Tape material and ink shall be chemically inert and not subject to degradation when exposed to acids, alkalis, and other destructive substances commonly found in soils.

3. Color and Printing:

a. Comply with ANSI Z535.1, ANSI Z535.2, ANSI Z535.3, ANSI Z535.4, and ANSI Z535.5.
b. Inscriptions for Red-Colored Tapes: "ELECTRIC LINE, HIGH VOLTAGE"
c. Inscriptions for Orange-Colored Tapes: "TELEPHONE CABLE, CATV CABLE, COMMUNICATIONS CABLE, OPTICAL FIBER CABLE"

F. Stenciled Legend: In nonfading, waterproof, black ink or paint. Minimum letter height shall be 1 inch.

2.6 TAGS

A. Write-on Tags:

1. Manufacturers: Subject to compliance with requirements, available manufacturers offering products that may be incorporated into the Work include the following:

a. Brimar Industries, Inc.
b. Carlton Industries, LP.

c. LEM Products Inc.
d. Seton Identification Products; a Brady Corporation company.
e. Additional manufacturers submitted for and receiving engineer approval prior to bid.

2. Polyester Tags: 0.010 inch thick, with corrosion-resistant grommet and cable tie for attachment.
3. Marker for Tags: Permanent, waterproof, black ink marker recommended by tag manufacturer.

2.7 SIGNS

A. Baked-Enamel Signs:

1. Manufacturers: Subject to compliance with requirements, available manufacturers offering products that may be incorporated into the Work include the following:

a. Carlton Industries, LP.
b. Champion America.
c. emedco.
d. Marking Services, Inc.
e. Additional manufacturers submitted for and receiving engineer approval prior to bid.

2. Preprinted aluminum signs,punched or drilled for fasteners, with colors, legend, and size required for application.
3. 1/4-inch grommets in corners for mounting.
4. Nominal Size: 7 by 10 inches.

B. Metal-Backed Butyrate Signs:

1. Manufacturers: Subject to compliance with requirements, available manufacturers offering products that may be incorporated into the Work include the following:

a. Brady Corporation.
b. Champion America.
c. emedco.
d. Marking Services, Inc.
e. Additional manufacturers submitted for and receiving engineer approval prior to bid.

2. Weather-resistant, nonfading, preprinted, cellulose-acetate butyrate signs, with 0.0396-inch galvanized-steel backing, punched and drilled for fasteners, and with colors, legend, and size required for application.
3. 1/4-inch grommets in corners for mounting.
4. Nominal Size: 10 by 14 inches.

C. Laminated Acrylic or Melamine Plastic Signs:

1. Manufacturers: Subject to compliance with requirements, available manufacturers offering products that may be incorporated into the Work include the following:

    a. Brady Corporation.
    b. Carlton Industries, LP.
    c. emedco.
    d. Marking Services, Inc.
    e. Additional manufacturers submitted for and receiving engineer approval prior to bid.

2. Engraved legend.
3. Thickness:

    a. For signs up to 20 sq. in., minimum 1/16 inch thick.
    b. For signs larger than 20 sq. in., 1/8 inch thick.
    c. Engraved legend with black letters on white face.
    d. Self-adhesive.
    e. Framed with mitered acrylic molding and arranged for attachment at applicable equipment.

2.8 CABLE TIES

A. Manufacturers: Subject to compliance with requirements, available manufacturers offering products that may be incorporated into the Work include the following:

1. HellermannTyton.
2. Ideal Industries, Inc.
3. Marking Services, Inc.
4. Panduit Corp.
5. Additional manufacturers submitted for and receiving engineer approval prior to bid.

B. General-Purpose Cable Ties: Fungus inert, self-extinguishing, one piece, self-locking, and Type 6/6 nylon.

1. Minimum Width: 3/16 inch.
2. Tensile Strength at 73 Deg F according to ASTM D638: 12,000 psi.
3. Temperature Range: Minus 40 to plus 185 deg F.
4. Color: Black, except where used for color-coding.

2.9 MISCELLANEOUS IDENTIFICATION PRODUCTS

A. Paint: Comply with requirements in painting Sections for paint materials and application requirements. Retain paint system applicable for surface material and location (exterior or interior).

B. Fasteners for Labels and Signs: Self-tapping, stainless-steel screws or stainless-steel machine screws with nuts and flat and lock washers.

PART 3 - EXECUTION

3.1 INSTALLATION

A. Verify and coordinate identification names, abbreviations, colors, and other features with requirements in other Sections requiring identification applications, Drawings, Shop Drawings, manufacturer's wiring diagrams, and operation and maintenance manual. Use consistent designations throughout Project.

B. Install identifying devices before installing acoustical ceilings and similar concealment.

C. Verify identity of each item before installing identification products.

D. Coordinate identification with Project Drawings, manufacturer's wiring diagrams, and operation and maintenance manual.

E. Apply identification devices to surfaces that require finish after completing finish work.

F. Install signs with approved legend to facilitate proper identification, operation, and maintenance of electrical systems and connected items.

G. Self-Adhesive Identification Products: Before applying electrical identification products, clean substrates of substances that could impair bond, using materials and methods recommended by manufacturer of identification product.

H. System Identification for Raceways and Cables under 600 V: Identification shall completely encircle cable or conduit. Place identification of two-color markings in contact, side by side.

1. Secure tight to surface of conductor, cable, or raceway.

I. Auxiliary Electrical Systems Conductor Identification: Identify field-installed alarm, control, and signal connections.

J. Elevated Components: Increase sizes of labels, signs, and letters to those appropriate for viewing from the floor.

K. Accessible Fittings for Raceways: Identify the covers of each junction and pull box of the following systems with the wiring system legend and system voltage. System legends shall be as follows:

1. "EMERGENCY POWER."
2. "POWER."

L. Vinyl Wraparound Labels:

1. Secure tight to surface at a location with high visibility and accessibility.
2. Attach labels that are not self-adhesive type with clear vinyl tape, with adhesive appropriate to the location and substrate.

M. Snap-around Labels: Secure tight to surface at a location with high visibility and accessibility.

N. Self-Adhesive Wraparound Labels: Secure tight to surface of raceway or cable at a location with high visibility and accessibility.

O. Self-Adhesive Labels:

1. On each unit of equipment, install unique designation label that is consistent with wiring diagrams, schedules, and operation and maintenance manual.
2. Unless otherwise indicated, provide a single line of text with 1/2-inch-high letters on 1-1/2-inch-high label; where two lines of text are required, use labels 2 inches high.

P. Snap-around Color-Coding Bands: Secure tight to surface at a location with high visibility and accessibility.

Q. Heat-Shrink, Preprinted Tubes: Secure tight to surface at a location with high visibility and accessibility.

R. Marker Tapes: Secure tight to surface at a location with high visibility and accessibility.

S. Self-Adhesive Vinyl Tape: Secure tight to surface at a location with high visibility and accessibility.

1. Field-Applied, Color-Coding Conductor Tape: Apply in half-lapped turns for a minimum distance of 6 inches where splices or taps are made. Apply last two turns of tape with no tension to prevent possible unwinding.

T. Tape and Stencil: Comply with requirements in painting Sections for surface preparation and paint application.

U. Floor Marking Tape: Apply stripes to finished surfaces following manufacturer's written instructions.

V. Underground Line Warning Tape:

1. During backfilling of trenches, install continuous underground-line warning tape directly above cable or raceway at 6 to 8 inches below finished grade. Use multiple tapes where width of multiple lines installed in a common trench or concrete envelope exceeds 16 inches overall.
2. Install underground-line warning tape for direct-buried cables and cables in raceways.

W. Write-on Tags:

1. Place in a location with high visibility and accessibility.
2. Secure using general-purpose cable ties.

X. Baked-Enamel Signs:

1. Attach signs that are not self-adhesive type with mechanical fasteners appropriate to the location and substrate.

2. Unless otherwise indicated, provide a single line of text with 1/2-inch-high letters on minimum 1-1/2-inch-high sign; where two lines of text are required, use signs minimum 2 inches high.

Y. Metal-Backed Butyrate Signs:

1. Attach signs that are not self-adhesive type with mechanical fasteners appropriate to the location and substrate.
2. Unless otherwise indicated, provide a single line of text with 1/2-inch-high letters on minimum 1-1/2-inch-high sign; where two lines of text are required, use signs minimum 2 inches high.

Z. Laminated Acrylic or Melamine Plastic Signs:

1. Attach signs and plastic labels that are not self-adhesive type with mechanical fasteners appropriate to the location and substrate.
2. Unless otherwise indicated, provide a single line of text with 1/2-inch-high letters on minimum 1-1/2-inch-high sign; where two lines of text are required, use signs minimum 2 inches high.

AA. Cable Ties: General purpose, for attaching tags, except as listed below:

1. Outdoors: UV-stabilized nylon.
2. In Spaces Handling Environmental Air: Plenum rated.

3.2 IDENTIFICATION SCHEDULE

A. Install identification materials and devices at locations for most convenient viewing without interference with operation and maintenance of equipment. Install access doors or panels to provide view of identifying devices.

B. Identify conductors, cables, and terminals in enclosures and at junctions, terminals, pull points, and locations of high visibility. Identify by system and circuit designation.

C. Accessible Raceways and Metal-Clad Cables, 600 V or Less, for Service, Feeder, and Branch Circuits, More Than 30 A and 120V to Ground: Identify with self-adhesive raceway labels

1. Locate identification at changes in direction, at penetrations of walls and floors, at 50-foot maximum intervals in straight runs, and at 25-foot maximum intervals in congested areas.

D. Accessible Fittings for Raceways and Cables within Buildings: Identify the covers of each junction and pull box of the following systems with self-adhesive labels containing the wiring system legend and system voltage. System legends shall be as follows:

1. "EMERGENCY POWER."
2. "POWER."

E. Locations of Underground Lines: Underground-line warning tape for power, lighting, communication, and control wiring and optical-fiber cable.

F. Instructional Signs: Self-adhesive labels, including the color code for grounded and ungrounded conductors.

~~G.~~ Warning Labels for Indoor Cabinets, Boxes, and Enclosures for Power and Lighting: Self-adhesive equipment labels

1. Apply to exterior of door, cover, or other access.
2. For equipment with multiple power or control sources, apply to door or cover of equipment, including, but not limited to, the following:

    a. Power-transfer switches.
    b. Controls with external control power connections.

H. Arc Flash Warning Labeling: Self-adhesive labels.

~~I.~~ Operating Instruction Signs: Self-adhesive labels

J. Equipment Identification Labels:

1. Indoor Equipment: Self-adhesive label
2. Outdoor Equipment: Laminated acrylic or melamine sign or Stenciled legend 4 inches high.

END OF SECTION 260553

SECTION 260923 - LIGHTING CONTROL DEVICES

PART 1 - GENERAL

1.1 SUMMARY

A. Section Includes:

1. Time switches.
2. Photoelectric switches
3. Indoor occupancy and vacancy sensors.
4. Switchbox-mounted occupancy and vacancy sensors
5. Lighting contactors.

B. Related Requirements:

1. Section 262726 "Wiring Devices" for wall-box dimmers, non-networkable wall-switch occupancy sensors, and manual light switches.

1.2 ACTION SUBMITTALS

A. Product Data: For each type of product.

1.3 WARRANTY

A. Manufacturer's Warranty: Manufacturer and Installer agree to repair or replace lighting control devices that fail(s) in materials or workmanship within specified warranty period.

1. Warranty Period: One year from date of Substantial Completion.

PART 2 - PRODUCTS

2.1 TIME SWITCHES

A. Manufacturers: Subject to compliance with requirements, available manufacturers offering products that may be incorporated into the Work include the following:

1. Cooper Industries, Inc.
2. Intermatic, Inc.
3. Invensys Controls.
4. Leviton Manufacturing Co., Inc.
5. NSi Industries LLC.
6. TE Connectivity Ltd.

7. Additional manufacturers submitted for receiving engineer approval prior to bid.

B. Electronic Time Switches: Solid state, programmable, with alphanumeric display; complying with UL 917.

1. Listed and labeled as defined in NFPA 70, by a qualified testing agency, and marked for intended location and application.
2. Contact Rating: 20-A ballast load, 120-/240-V ac.
3. Programs: Two on-off set points on a 24-hour schedule, allowing different set points for each day of the week and an annual holiday schedule that overrides the weekly operation on holidays.
4. Circuitry: Allow connection of a photoelectric relay as substitute for on-off function of a program
5. Astronomic Time: Switches indicated to be astronomical time switch to include astronomical time switch, programmed to switch location, to auto calculate dusk & dawn times.
6. Automatic daylight savings time changeover.
7. Battery Backup: Not less than seven days reserve, to maintain schedules and time clock.

2.2 OUTDOOR PHOTOELECTRIC SWITCHES

A. Manufacturers: Subject to compliance with requirements, available manufacturers offering products that may be incorporated into the Work include the following:

1. Cooper Industries, Inc.
2. Intermatic, Inc.
3. Leviton Manufacturing Co., Inc.
4. NSi Industries LLC.
5. TE Connectivity Ltd.
6. Additional manufacturers submitted for receiving engineer approval prior to bid.

B. Description: Solid state; one set of NO dry contacts rated for 24 V dc at 1 A, to operate connected load, complying with UL 773, and compatible with power pack.

1. Listed and labeled as defined in NFPA 70, by a qualified testing agency, and marked for intended location and application.
2. Light-Level Monitoring Range: 1.5 to 10 fc, with an adjustment for turn-on and turn-off levels within that range.
3. Time Delay: Thirty-second minimum, to prevent false operation.
4. Mounting: 1/2-inch threaded male conduit.
5. Failure Mode: Luminaire stays ON.
6. Power Pack: Dry contacts rated for 20-A ballast or LED load at 120- and 277-V ac, for 13-A tungsten at 120-V ac, and for 1 hp at 120-V ac. Sensor has 24-V dc, 150-mA, Class 2 power source, as defined by NFPA 70.

   a. LED status lights to indicate load status.
   b. Plenum rated.

2.3 INDOOR VACANCY SENSORS

A. Manufacturers: Subject to compliance with requirements, available manufacturers offering products that may be incorporated into the Work include the following:

1. Cooper Industries, Inc.
2. Hubbell Control Solutions; Hubbell Incorporated, Lighting.
3. Leviton Manufacturing Co., Inc.
4. Lithonia Lighting; Acuity Brands Lighting, Inc.
5. Lutron Electronics Co., Inc.
6. Schneider Electric USA (Square D).
7. Additional manufacturers submitted for receiving engineer approval prior to bid.

B. General Requirements for Sensors:

1. Wall and Ceiling-mounted, solid-state indoor vacancy sensors.
2. Dual technology.
3. Separate power pack.
4. Hardwired connection to switch.
5. Listed and labeled as defined in NFPA 70, by a qualified testing agency, and marked for intended location and application.
6. Operation:
   a. Vacancy Sensor: Unless otherwise indicated, lights are manually turned on and sensor turns lights off when the room is unoccupied; with a time delay for turning lights off, adjustable over a minimum range of 1 to 15 minutes.
7. Sensor Output: Sensor is powered from the power pack
8. Power: Line voltage.
9. Power Pack: Dry contacts rated for 20-A–LED load at 120- and 277-V ac, for 13-A tungsten at 120-V ac, and for 1 hp at 120-V ac. Sensor has 24-V dc, 150-mA, Class 2 power source, as defined by NFPA 70.
10. Mounting:
    a. Sensor: Suitable for mounting in any position on a standard outlet box.
    b. Relay: Externally mounted through a 1/2-inch knockout in a standard electrical enclosure.
    c. Time-Delay and Sensitivity Adjustments: Recessed and concealed behind hinged door.
11. Indicator: Digital display, to show when motion is detected during testing and normal operation of sensor.
12. Bypass Switch: Override the "on" function in case of sensor failure.
13. Color: To match ceiling/wall otherwise selected by architect.

C. Dual-Technology Type: Wall or Corner mounted; detect occupants in coverage area using PIR and ultrasonic detection methods. The particular technology or combination of technologies that control on-off functions is selectable in the field by operating controls on unit.

1. Sensitivity Adjustment: Separate for each sensing technology.

2. Detector Sensitivity: Detect occurrences of 6-inch-minimum movement of any portion of a human body that presents a target of not less than 36 sq. in., and detect a person of average size and weight moving not less than 12 inches in either a horizontal or a vertical manner at an approximate speed of 12 inches/s.
3. Detection Coverage (Room, Wall Mounted): Detect occupancy anywhere within a 180-degree pattern centered on the sensor over an area of 20ft coverage from switch when mounted 48 inches above finished floor.
4. Detection Coverage (Room, Corner Mounted): Detect occupancy anywhere within a 180-degree pattern centered on the sensor over an area of 20ft coverage from switch when mounted 48 inches above finished floor.

D. Dual-Technology Type: Ceiling mounted; detect occupants in coverage area using PIR and ultrasonic detection methods. The particular technology or combination of technologies that control on-off functions is selectable in the field by operating controls on unit.

1. Sensitivity Adjustment: Separate for each sensing technology.
2. Detector Sensitivity: Detect occurrences of 6-inch-minimum movement of any portion of a human body that presents a target of not less than 36 sq. in., and detect a person of average size and weight moving not less than 12 inches in either a horizontal or a vertical manner at an approximate speed of 12 inches/s.
3. Detection Coverage (Standard Room): Detect occupancy anywhere within a circular area of 1000 sq. ft. when mounted on a 96-inch-high ceiling.

2.4 SWITCHBOX-MOUNTED OCCUPANCY SENSORS

A. Manufacturers: Subject to compliance with requirements, available manufacturers offering products that may be incorporated into the Work include the following:

1. Cooper Industries, Inc.
2. Hubbell Control Solutions; Hubbell Incorporated, Lighting.
3. Leviton Manufacturing Co., Inc.
4. Lithonia Lighting; Acuity Brands Lighting, Inc.
5. Lutron Electronics Co., Inc.
6. Additional manufacturers submitted for receiving engineer approval prior to bid.

B. General Requirements for Sensors: Automatic-wall-switch occupancy sensor with manual on-off switch, suitable for mounting in a single gang switchbox using hardwired connection.

1. Listed and labeled as defined in NFPA 70, by a qualified testing agency, and marked for intended location and application.
2. Occupancy Sensor Operation: Unless otherwise indicated, turn lights on when coverage area is occupied, and turn lights off when unoccupied; with a time delay for turning lights off, adjustable over a minimum range of 1 to 20 minutes.
3. Operating Ambient Conditions: Dry interior conditions, 32 to 120 deg F.
4. Switch Rating: Not less than 800-VA ballast or LED load at 120 V, 1200-VA ballast or LED load at 277 V, and 800-W incandescent.

C. Wall-Switch Sensor Tag M0:

1. Standard Range: 180-degree field of view, field adjustable from 180 to 40 degrees; with a minimum coverage area of 900 sq. ft..
2. Sensing Technology: Dual technology - PIR and ultrasonic.
3. Switch Type: SP, field-selectable automatic "on," or manual "on," automatic "off."
4. Capable of controlling load in three-way application.
5. Voltage: Match the circuit voltage.
6. Concealed, field-adjustable, "off" time-delay selector at up to 20 minutes.
7. Color: Selected by architect.
8. Faceplate: Color matched to switch.

D. Wall-Switch Sensor Tag M6:

1. Standard Range: 210-degree field of view, with a minimum coverage area of 900 sq. ft..
2. Sensing Technology: PIR.
3. Switch Type: SP, field-selectable automatic "on," or manual "on," automatic "off."
4. Capable of controlling load in three-way application.
5. Voltage: Match the circuit voltage.
6. Concealed, field-adjustable, "off" time-delay selector at up to 20 minutes.
7. Color: Selected by architect.
8. Faceplate: Color matched to switch.

2.5 LIGHTING CONTACTORS

A. Manufacturers: Subject to compliance with requirements, available manufacturers offering products that may be incorporated into the Work include the following:

1. ABB (Electrification Products Division).
2. Allen-Bradley/Rockwell Automation.
3. ASCO: a brand of Vertiv.
4. Eaton.
5. Leviton Manufacturing Co., Inc.
6. Schneider Electric USA (Square D).
7. Additional manufacturers submitted for receiving engineer approval prior to bid.

B. Description: Electrically operated and mechanically held, combination-type lighting contactors with nonfused disconnect, complying with NEMA ICS 2 and UL 508.

1. Current Rating for Switching: Listing or rating consistent with type of load served, including tungsten filament, LED, inductive, and high-inrush ballast (ballast with 15 percent or less THD of normal load current).
2. Fault Current Withstand Rating: Equal to or exceeding the available fault current at the point of installation.

PART 3 - EXECUTION

3.1 INSTALLATION

A. Comply with NECA 1.

B. Examine lighting control devices before installation. Reject lighting control devices that are wet, moisture damaged, or mold damaged.

C. Coordinate layout and installation of ceiling-mounted devices with other construction that penetrates ceilings or is supported by them, including light fixtures, HVAC equipment, smoke detectors, fire-suppression systems, and partition assemblies.

D. Install and aim sensors in locations to achieve not less than 90-percent coverage of areas indicated. Do not exceed coverage limits specified in manufacturer's written instructions.

E. Mount electrically held lighting contactors with elastomeric isolator pads to eliminate structure-borne vibration unless contactors are installed in an enclosure with factory-installed vibration isolators.

3.2 WIRING INSTALLATION

A. Wiring Method: Comply with Section 260519 "Low-Voltage Electrical Power Conductors and Cables." Minimum conduit size is 1/2 inch.

B. Wiring within Enclosures: Separate power-limited and nonpower-limited conductors in accordance with conductor manufacturer's written instructions.

C. Size conductors in accordance with lighting control device manufacturer's written instructions unless otherwise indicated.

D. Splices, Taps, and Terminations: Make connections only on numbered terminal strips in junction, pull, and outlet boxes; terminal cabinets; and equipment enclosures.

3.3 IDENTIFICATION

A. Identify components and power and control wiring in accordance with Section 260553 "Identification for Electrical Systems."

B. Label time switches and contactors with a unique designation.

3.4 FIELD QUALITY CONTROL

A. Perform the following tests and inspections:

1. Operational Test: After installing time switches and sensors, and after electrical circuitry has been energized, start units to confirm proper unit operation.
2. Test and adjust controls and safeties. Replace damaged and malfunctioning controls and equipment.

B. Lighting control devices will be considered defective if they do not pass tests and inspections

3.5 DEMONSTRATION

A. Train Owner's maintenance personnel to adjust, operate, and maintain lighting control devices.

END OF SECTION 260923

SECTION 262413 - SWITCHBOARDS

PART 1 - GENERAL

1.1 SUMMARY

A. Section Includes:

1. Service and distribution switchboards rated 600 V and less.
2. Surge protection devices.
3. Disconnecting and overcurrent protective devices.
4. Accessory components and features.
5. Identification.

1.2 ACTION SUBMITTALS

A. Product Data: For each switchboard, overcurrent protective device, surge protection device, ground-fault protector, accessory, and component.

B. Shop Drawings: For each switchboard and related equipment.

1. Include dimensioned plans, elevations, sections, and details, including required clearances and service space around equipment. Show tabulations of installed devices, equipment features, and ratings.
2. Detail enclosure types for types other than NEMA 250, Type 1.
3. Detail bus configuration, current, and voltage ratings.
4. Detail short-circuit current rating of switchboards and overcurrent protective devices.
5. Include evidence of NRTL listing for series rating of installed devices.

1.3 CLOSEOUT SUBMITTALS

A. Operation and maintenance data.

1.4 FIELD CONDITIONS

A. Environmental Limitations:

1. Do not deliver or install switchboards until spaces are enclosed and weathertight, wet work in spaces is complete and dry, work above switchboards is complete, and temporary HVAC system is operating and maintaining ambient temperature and humidity conditions at occupancy levels during the remainder of the construction period.
2. Rate equipment for continuous operation under the following conditions unless otherwise indicated:

a. Ambient Temperature: Not exceeding 104 deg F.
b. Altitude: Not exceeding 6600 feet.

1.5 WARRANTY

A. Manufacturer's Warranty: Manufacturer agrees to repair or replace switchboard enclosures, buswork, overcurrent protective devices, accessories, and factory installed interconnection wiring that fail in materials or workmanship within specified warranty period.

1. Warranty Period: Three years from date of Substantial Completion.

B. Manufacturer's Warranty: Manufacturer's agrees to repair or replace surge protection devices that fail in materials or workmanship within specified warranty period.

1. Warranty Period: Five years from date of Substantial Completion.

PART 2 - PRODUCTS

2.1 SWITCHBOARDS

A. Manufacturers: Subject to compliance with requirements, available manufacturers offering products that may be incorporated into the Work include the following:

1. ABB (Electrification Products Division).
2. Eaton.
3. Schneider Electric USA (Square D).
4. Siemens Industry, Inc., Energy Management Division.
5. Additional manufacturers submitted for and receiving engineer approval prior to bid.

B. Source Limitations: Obtain switchboards, overcurrent protective devices, components, and accessories from single source from single manufacturer.

C. Product Selection for Restricted Space: Drawings indicate maximum dimensions for switchboards including clearances between switchboards and adjacent surfaces and other items. Comply with indicated maximum dimensions.

D. Comply with NEMA PB 2.

E. Comply with NFPA 70.

F. Comply with UL 891.

G. Front-Connected, Front-Accessible Switchboards:

1. Main Devices: Panel mounted.
2. Branch Devices: Panel mounted.
3. Sections front and rear aligned.

H. Nominal System Voltage: 208Y/120 V

I. Indoor Enclosures: Steel, NEMA 250, Type 1.

J. Service Entrance Rating: Switchboards intended for use as service entrance equipment shall contain from one to six service disconnecting means with overcurrent protection, a neutral bus with disconnecting link, a grounding electrode conductor terminal, and a main bonding jumper.

K. Bus Transition and Incoming Pull Sections: Matched and aligned with basic switchboard.

L. Hinged Front Panels: Allow access to circuit breaker, metering, accessory, and blank compartments.

M. Buses and Connections: Three phase, four wire unless otherwise indicated.

1. Provide phase bus arrangement A, B, C from front to back, top to bottom, and left to right when viewed from the front of the switchboard.
2. Phase- and Neutral-Bus Material: Tin-plated, high-strength, electrical-grade aluminum alloy with tin-plated aluminum circuit-breaker line connections.
3. Tin-plated aluminum feeder circuit-breaker line connections.
4. Load Terminals: Insulated, rigidly braced, runback bus extensions, of same material as through buses, equipped with mechanical compression connectors for outgoing circuit conductors. Provide load terminals for future circuit-breaker positions at full-ampere rating of circuit-breaker position.
5. Ground Bus: Minimum-size required by UL 891, hard-drawn copper of 98 percent conductivity, equipped with mechanical compression connectors for feeder and branch-circuit ground conductors.
6. Main-Phase Buses and Equipment-Ground Buses: Uniform capacity for entire length of switchboard's main and distribution sections.
7. Disconnect Links:

    a. Isolate neutral bus from incoming neutral conductors.
    b. Bond neutral bus to equipment-ground bus for switchboards utilized as service equipment or separately derived systems.

8. Neutral Buses: 100 percent of the ampacity of phase buses unless otherwise indicated, equipped with mechanical connectors for outgoing circuit neutral cables. Brace bus extensions for busway feeder neutral bus.

N. Future Devices: Equip compartments with mounting brackets, supports, bus connections, and appurtenances at full rating of circuit-breaker compartment.

2.2 DISCONNECTING AND OVERCURRENT PROTECTIVE DEVICES

A. Molded-Case Circuit Breaker (MCCB): Comply with UL 489, with series-connected rating to meet available fault currents.

1. Thermal-Magnetic Circuit Breakers: Inverse time-current element for low-level overloads and instantaneous magnetic trip element for short circuits. Adjustable magnetic trip setting for circuit-breaker frame sizes 250 A and larger.
2. Adjustable Instantaneous-Trip Circuit Breakers: Magnetic trip element with front-mounted, field-adjustable trip setting.
3. Electronic trip circuit breakers with rms sensing; field-replaceable rating plug or field-replicable electronic trip; and the following field-adjustable settings:

    a. Instantaneous trip.
    b. Long- and short-time pickup levels.
    c. Long and short time adjustments.
    d. Ground-fault pickup level, time delay, and I squared t response.

4. Current-Limiting Circuit Breakers: Frame sizes 400 A and smaller; let-through ratings less than NEMA FU 1, RK-5.
5. Integrally Fused Circuit Breakers: Thermal-magnetic trip element with integral limiter-style fuse listed for use with circuit breaker; trip activation on fuse opening or on opening of fuse compartment door.
6. GFCI Circuit Breakers: Single- and double-pole configurations with Class A ground-fault protection (6-mA trip).
7. Ground-Fault Equipment Protection (GFEP) Circuit Breakers: Class B ground-fault protection (30-mA trip).
8. MCCB Features and Accessories:

    a. Standard frame sizes, trip ratings, and number of poles.
    b. Lugs: Mechanical style, suitable for number, size, trip ratings, and conductor material.
    c. Application Listing: Appropriate for application; Type SWD for switching fluorescent lighting loads; Type HID for feeding fluorescent and high-intensity discharge (HID) lighting circuits.
    d. Ground-Fault Protection: Integrally mounted relay and trip unit with adjustable pickup and time-delay settings, push-to-test feature, and ground-fault indicator.
    e. Zone-Selective Interlocking: Integral with electronic trip unit; for interlocking ground-fault protection function.
    f. Undervoltage Trip: Set to operate at 35 to 75 percent of rated voltage without intentional time delay.
    g. Key Interlock Kit: Externally mounted to prohibit circuit-breaker operation; key shall be removable only when circuit breaker is in off position.

2.3 IDENTIFICATION

A. Service Equipment Label: NRTL labeled for use as service equipment for switchboards with one or more service disconnecting and overcurrent protective devices.

PART 3 - EXECUTION

3.1 INSTALLATION

A. Receive, inspect, handle, and store switchboards according to NECA 400.

B. Install switchboards and accessories according to NECA 400.

C. Equipment Mounting: Install switchboards on concrete base, 4-inch nominal thickness. Comply with requirements for concrete base specified in Section 033000 "Cast-in-Place Concrete."

1. Install conduits entering underneath the switchboard, entering under the vertical section where the conductors will terminate. Install with couplings flush with the concrete base. Extend 2 inches above concrete base after switchboard is anchored in place.
2. Install dowel rods to connect concrete base to concrete floor. Unless otherwise indicated, install dowel rods on 18-inch centers around the full perimeter of concrete base.
3. For supported equipment, install epoxy-coated anchor bolts that extend through concrete base and anchor into structural concrete floor.
4. Place and secure anchorage devices. Use setting drawings, templates, diagrams, instructions, and directions furnished with items to be embedded.
5. Install anchor bolts to elevations required for proper attachment to switchboards.
6. Anchor switchboard to building structure at the top of the switchboard if required or recommended by the manufacturer.

D. Temporary Lifting Provisions: Remove temporary lifting eyes, channels, straps and brackets, and temporary blocking of moving parts from switchboard units and components.

E. Operating Instructions: Frame and mount the printed basic operating instructions for switchboards, including control and key interlocking sequences and emergency procedures. Fabricate frame of finished wood or metal and cover instructions with clear acrylic plastic. Mount on front of switchboards.

F. Install filler plates in unused spaces of panel-mounted sections.

G. Install overcurrent protective devices, surge protection devices, and instrumentation.

H. Comply with requirements for terminating feeder bus specified in Section 262500 "Enclosed Bus Assemblies." Drawings indicate general arrangement of bus, fittings, and specialties.

I. Comply with requirements for terminating cable trays specified in Section 260536 "Cable Trays for Electrical Systems." Drawings indicate general arrangement of cable trays, fittings, and specialties.

3.2 IDENTIFICATION

A. Identify field-installed conductors, interconnecting wiring, and components; provide warning signs complying with requirements for identification specified in Section 260553 "Identification for Electrical Systems."

B. Switchboard Nameplates: Label each switchboard compartment with a nameplate complying with requirements for identification specified in Section 260553 "Identification for Electrical Systems."

C. Device Nameplates: Label each disconnecting and overcurrent protective device and each meter and control device mounted in compartment doors with a nameplate complying with requirements for identification specified in Section 260553 "Identification for Electrical Systems."

3.3 FIELD QUALITY CONTROL

A. Perform the following tests and inspections

1. Acceptance Testing:

    a. Test insulation resistance for each switchboard bus, component, connecting supply, feeder, and control circuit. Open control and metering circuits within the switchboard, and remove neutral connection to surge protection and other electronic devices prior to insulation test. Reconnect after test.
    b. Test continuity of each circuit.

2. Test ground-fault protection of equipment for service equipment per NFPA 70.
3. Perform each visual and mechanical inspection and electrical test stated in NETA Acceptance Testing Specification. Certify compliance with test parameters.
4. Correct malfunctioning units on-site where possible, and retest to demonstrate compliance; otherwise, replace with new units and retest.
5. Test and adjust controls, remote monitoring, and safeties. Replace damaged and malfunctioning controls and equipment.

B. Switchboard will be considered defective if it does not pass tests and inspections.

C. Prepare test and inspection reports, including a certified report that identifies switchboards included and that describes scanning results. Include notation of deficiencies detected, remedial action taken, and observations after remedial action.

3.4 DEMONSTRATION

A. Train Owner's maintenance personnel to adjust, operate, and maintain switchboards, overcurrent protective devices, instrumentation, and accessories.

END OF SECTION 262413

SECTION 262416 - PANELBOARDS

PART 1 - GENERAL

1.1 SUMMARY

A. Section Includes:

1. Distribution panelboards.
2. Lighting and appliance branch-circuit panelboards.

1.2 DEFINITIONS

A. MCCB: Molded-case circuit breaker.

B. SPD: Surge protective device.

1.3 ACTION SUBMITTALS

A. Product Data: For each type of panelboard.

B. Shop Drawings: For each panelboard and related equipment.

1. Include dimensioned plans, elevations, sections, and details.
2. Detail enclosure types including mounting and anchorage, environmental protection, knockouts, corner treatments, covers and doors, gaskets, hinges, and locks.
3. Detail bus configuration, current, and voltage ratings.
4. Short-circuit current rating of panelboards and overcurrent protective devices.
5. Include evidence of NRTL listing for series rating of installed devices.

1.4 CLOSEOUT SUBMITTALS

A. Operation and maintenance data.

1.5 FIELD CONDITIONS

A. Service Conditions: NEMA PB 1, usual service conditions, as follows:

1. Ambient temperatures within limits specified.
2. Altitude not exceeding 6600 feet.

1.6 WARRANTY

A. Manufacturer's Warranty: Manufacturer agrees to repair or replace panelboards that fail in materials or workmanship within specified warranty period.

1. Panelboard Warranty Period: 18-months from date of Substantial Completion.

PART 2 - PRODUCTS

2.1 PANELBOARDS COMMON REQUIREMENTS

A. Electrical Components, Devices, and Accessories: Listed and labeled as defined in NFPA 70, by a qualified testing agency, and marked for intended location and application.

B. Comply with NEMA PB 1.

C. Comply with NFPA 70.

D. Enclosures: Flush and Surface-mounted, dead-front cabinets.

1. Rated for environmental conditions at installed location.

a. Indoor Dry and Clean Locations: NEMA 250, Type 1.
b. Outdoor Locations: NEMA 250, Type 3R.
c. Other Wet or Damp Indoor Locations: NEMA 250, Type 4.

2. Height: 84 inches maximum.
3. Front: Secured to box with concealed trim clamps. For surface-mounted fronts, match box dimensions; for flush-mounted fronts, overlap box. Trims shall cover all live parts and shall have no exposed hardware.

E. Phase, Neutral, and Ground Buses: Tin-plated aluminum

F. Conductor Connectors: Suitable for use with conductor material and sizes.

1. Material: Tin-plated aluminum.
2. Main and Neutral Lugs: Mechanical type, with a lug on the neutral bar for each pole in the panelboard.
3. Ground Lugs and Bus-Configured Terminators: Mechanical type, with a lug on the bar for each pole in the panelboard.

G. NRTL Label: Panelboards shall be labeled by an NRTL acceptable to authority having jurisdiction for use as service equipment with one or more main service disconnecting and overcurrent protective devices. Panelboards shall have meter enclosures, wiring, connections, and other provisions for utility metering. Coordinate with utility company for exact requirements.

H. Future Devices: Panelboards shall have mounting brackets, bus connections, filler plates, and necessary appurtenances required for future installation of devices.

I. Panelboard Short-Circuit Current Rating: Rated for series-connected system with integral or remote upstream overcurrent protective devices and labeled by an NRTL. Include label or manual with size and type of allowable upstream and branch devices listed and labeled by an NRTL for series-connected short-circuit rating.

J. Panelboard Short-Circuit Current Rating: Fully rated to interrupt symmetrical short-circuit current available at terminals. Assembly listed by an NRTL for 100 percent interrupting capacity.

2.2 PERFORMANCE REQUIREMENTS

2.3 POWER PANELBOARDS

A. Manufacturers: Subject to compliance with requirements, available manufacturers offering products that may be incorporated into the Work include the following:

1. ABB (Electrification Products Division).
2. Eaton.
3. Schneider Electric USA (Square D).
4. Siemens Industry, Inc., Energy Management Division.
5. Additional manufacturers submitted for receiving engineer approval prior to bid.

B. Panelboards: NEMA PB 1, distribution type.

C. Doors: Secured with vault-type latch with tumbler lock; keyed alike.

1. For doors more than 36 inches high, provide two latches, keyed alike.

D. Mains: See engineering drawings for specifications.

E. Branch Overcurrent Protective Devices for Circuit-Breaker Frame Sizes 125 A and Smaller: Plug-in circuit breakers.

F. Branch Overcurrent Protective Devices for Circuit-Breaker Frame Sizes Larger Than 125 A: Bolt-on circuit breakers.

2.4 LIGHTING AND APPLIANCE BRANCH-CIRCUIT PANELBOARDS

A. Manufacturers: Subject to compliance with requirements, available manufacturers offering products that may be incorporated into the Work include the following:

1. ABB (Electrification Products Division).

2. Eaton.
3. Schneider Electric USA (Square D).
4. Siemens Industry, Inc., Energy Management Division.
5. Additional manufacturers submitted for receiving engineer approval prior to bid.

B. Panelboards: NEMA PB 1, lighting and appliance branch-circuit type.

C. Mains: See engineering drawings for specifications.

D. Branch Overcurrent Protective Devices: Plug-in-circuit breakers, replaceable without disturbing adjacent units.

E. Doors: Concealed hinges; secured with flush latch with tumbler lock; keyed alike.

2.5 DISCONNECTING AND OVERCURRENT PROTECTIVE DEVICES

A. Manufacturers: Subject to compliance with requirements, available manufacturers offering products that may be incorporated into the Work include the following:

1. ABB (Electrification Products Division).
2. Eaton.
3. Schneider Electric USA (Square D).
4. Siemens Industry, Inc., Energy Management Division.
5. Additional manufacturers submitted for receiving engineer approval prior to bid.

B. MCCB: Comply with UL 489, with series-connected rating to meet available fault currents.

1. Thermal-Magnetic Circuit Breakers:

a. Inverse time-current element for low-level overloads.
b. Instantaneous magnetic trip element for short circuits.
c. Adjustable magnetic trip setting for circuit-breaker frame sizes 250 A and larger.

2. Adjustable Instantaneous-Trip Circuit Breakers: Magnetic trip element with front-mounted, field-adjustable trip setting.
3. Electronic Trip Circuit Breakers:

a. RMS sensing.
b. Field-replaceable rating plug or electronic trip.
c. Digital display of settings, trip targets, and indicated metering displays.
d. Multi-button keypad to access programmable functions and monitored data.
e. Ten-event, trip-history log. Each trip event shall be recorded with type, phase, and magnitude of fault that caused the trip.
f. Integral test jack for connection to portable test set or laptop computer.
g. Field-Adjustable Settings:

1) Instantaneous trip.
2) Long- and short-time pickup levels.
3) Long and short time adjustments.

4) Ground-fault pickup level, time delay, and I squared T response.

4. Current-Limiting Circuit Breakers: Frame sizes 400 A and smaller; let-through ratings less than NEMA FU 1, RK-5.
5. GFCI Circuit Breakers: Single- and double-pole configurations with Class A ground-fault protection (6-mA trip).
6. GFEP Circuit Breakers: Class B ground-fault protection (30-mA trip).
7. Arc-Fault Circuit Interrupter Circuit Breakers: Comply with UL 1699; 120/240-V, single-pole configuration.
8. Subfeed Circuit Breakers: Vertically mounted.
9. MCCB Features and Accessories:

    a. Standard frame sizes, trip ratings, and number of poles.
    b. Breaker handle indicates tripped status.
    c. UL listed for reverse connection without restrictive line or load ratings.
    d. Lugs: Mechanical style, suitable for number, size, trip ratings, and conductor materials.
    e. Application Listing: Appropriate for application; Type SWD for switching fluorescent lighting loads; Type HID for feeding fluorescent and HID lighting circuits.
    f. Ground-Fault Protection: Integrally mounted relay and trip unit with adjustable pickup and time-delay settings, push-to-test feature, and ground-fault indicator.
    g. Handle Padlocking Device: Fixed attachment, for locking circuit-breaker handle in on or off position.
    h. Handle Clamp: Loose attachment, for holding circuit-breaker handle in on position.

C. Fused Switch: NEMA KS 1, Type HD; clips to accommodate specified fuses; lockable handle.

1. Fuses and Spare-Fuse Cabinet: Comply with requirements specified in Section 262813 "Fuses."

2.6 IDENTIFICATION

A. Panelboard Label: Manufacturer's name and trademark, voltage, amperage, number of phases, and number of poles shall be located on the interior of the panelboard door.

B. Breaker Labels: Faceplate shall list current rating, UL and IEC certification standards, and AIC rating.

C. Circuit Directory: Directory card inside panelboard door, mounted in transparent card holder.

PART 3 - EXECUTION

3.1 INSTALLATION

A. Comply with NECA 1.

B. Install panelboards and accessories according to NECA 407.

C. Mount top of trim such that highest breaker is no more than 79 inches above finished floor (48” for panels in dwelling units) unless otherwise indicated.

D. Mount panelboard cabinet plumb and rigid without distortion of box.

E. Mount recessed panelboards with fronts uniformly flush with wall finish and mating with back box.

F. Install overcurrent protective devices and controllers not already factory installed.

G. Make grounding connections and bond neutral for services and separately derived systems to ground. Make connections to grounding electrodes, separate grounds for isolated ground bars, and connections to separate ground bars.

H. Install filler plates in unused spaces.

I. Arrange conductors in gutters into groups and bundle and wrap with wire ties.

3.2 IDENTIFICATION

A. Identify field-installed conductors, interconnecting wiring, and components; install warning signs complying with requirements in Section 260553 "Identification for Electrical Systems."

B. Create a directory to indicate installed circuit loads; incorporate Owner's final room designations. Obtain approval before installing. Handwritten directories are not acceptable. Install directory inside panelboard door.

C. Panelboard Nameplates: Label each panelboard with a nameplate complying with requirements for identification specified in Section 260553 "Identification for Electrical Systems."

D. Device Nameplates: Label each branch circuit device in power panelboards with a nameplate complying with requirements for identification specified in Section 260553 "Identification for Electrical Systems."

E. Install warning signs complying with requirements in Section 260553 "Identification for Electrical Systems" identifying source of remote circuit.

3.3 FIELD QUALITY CONTROL

A. Perform tests and inspections.

B. Acceptance Testing Preparation:

1. Test insulation resistance for each panelboard bus, component, connecting supply, feeder, and control circuit.
2. Test continuity of each circuit.

C. Tests and Inspections:

1. Perform each visual and mechanical inspection and electrical test for low-voltage air circuit breakers stated in NETA ATS. Certify compliance with test parameters.
2. Correct malfunctioning units on-site, where possible, and retest to demonstrate compliance; otherwise, replace with new units and retest.

D. Panelboards will be considered defective if they do not pass tests and inspections.

END OF SECTION 262416

SECTION 262713 - ELECTRICITY METERING

PART 1 - GENERAL

1.1 SUMMARY

A. Section includes electricity metering

1.2 ACTION SUBMITTALS

A. Product Data: For each type of product.

1.3 CLOSEOUT SUBMITTALS

A. Operation and maintenance data.

1.4 COORDINATION

A. Electrical Service Connections: Coordinate with utility companies and utility-furnished components.

PART 2 - PRODUCTS

2.1 SYSTEM DESCRIPTION

A. Electrical Components, Devices, and Accessories: Listed and labeled as defined in NFPA 70, by a qualified testing agency, and marked for intended location and application.

B. Comply with UL 916.

2.2 UTILITY METERING INFRASTRUCTURE

A. Install metering accessories furnished by the utility company, complying with its requirements.

B. Utility-Furnished Meters: Connect data transmission facility of metering equipment installed by the Utility.

1. Data Transmission: Transmit pulse data over control-circuit conductors, classified as Class 1 per NFPA 70, Article 725. Comply with Section 260523 "Control-Voltage Electrical Power Cables."

C. Current-Transformer Cabinets: Comply with requirements of electrical-power utility company.

D. Meter Sockets:

1. Comply with requirements of electrical-power utility company.
2. Meter Sockets: Steady-state and short-circuit current ratings shall meet indicated circuit ratings.

E. Modular Meter Center: Factory-coordinated assembly of a main service disconnect device, wireways, meter socket modules, and feeder circuit breakers arranged in adjacent vertical sections complete with interconnecting buses.

1. Manufacturers: Subject to compliance with requirements, available manufacturers offering products that may be incorporated into the Work include the following:

    a. ABB (Electrification Products Division).
    b. Eaton.
    c. Leviton Manufacturing Co., Inc.
    d. Schneider Electric USA (Square D).
    e. Siemens Industry, Inc., Energy Management Division.
    f. Additional manufacturers submitted for and receiving engineer approval prior to bid.

2. Comply with requirements of utility company for meter center.

    a. Comply with UL 67.

3. Housing: NEMA 250, Type 3R enclosure.
4. Meter Socket Rating: Coordinated with connected feeder circuit rating.
5. Minimum Short-Circuit Rating: Coordinate Short-Circuit Rating with local utility and transformer locations.
6. Steady-state and short-circuit current ratings shall have ratings that match connected circuit ratings.
7. Main Disconnect Device: Circuit breaker, series-combination rated for use with downstream feeder and branch circuit breakers and having an adjustable magnetic trip setting for circuit-breaker frame sizes of 250 A and larger. Comply with requirements in Section 262816 "Enclosed Switches and Circuit Breakers." Circuit breakers shall be operable from outside the enclosure to disconnect the unit. Configure cover so it can be opened only when the disconnect switch is open.
8. Main Disconnect Device: Fusible switch, UL 98 Type GD, series-combination rated by fuse manufacturer to protect downstream feeder and branch circuit breakers. Comply with requirements in Section 262816 "Enclosed Switches and Circuit Breakers." Switch shall be operable from outside the enclosure to disconnect the unit. Configure cover so that it can be opened only when the disconnect switch is open.
9. Feeder Circuit Breakers: Series-combination-rated molded-case units, rated to protect downstream circuit breakers and to house load centers and panelboards that have 10,000A interrupting capacity. Confirm interrupting rating with local utility before purchase.

a. Identification: Complying with requirements in Section 260553 "Identification for Electrical Systems."
b. Physical Protection: Tamper resistant, with hasp for padlock.

F. Arc-Flash Warning Labels:

1. Labels: Comply with requirements for "Arc-Flash Warning Labels" in Section 260573.19 "Arc-Flash Hazard Analysis." Apply a properly sized self-adhesive label at each work location included in the analysis.
2. Labels: Comply with requirements for "Self-Adhesive Equipment Labels" and "Signs" in Section 260553 "Identification for Electrical Systems." Apply a properly sized self-adhesive label for each work location included in the analysis. Labels shall be machine printed, with no field-applied markings.

a. The label shall have an orange header with the wording, "WARNING, ARC-FLASH HAZARD," and shall include the following information taken directly from the arc-flash hazard analysis:

1) Location designation.
2) Nominal voltage.
3) Flash protection boundary.
4) Hazard risk category.
5) Incident energy.
6) Working distance.
7) Engineering report number, revision number, and issue date.

PART 3 - EXECUTION

3.1 INSTALLATION

A. Comply with equipment installation requirements in NECA 1.

B. Install meters furnished by utility company. Install raceways and equipment according to utility company's written instructions. Provide empty conduits for metering leads and extend grounding connections as required by utility company.

C. Install modular meter center according to switchboard installation requirements in NECA 400.

D. Install arc-flash labels as required by NFPA 70.

E. Comply with requirements for identification specified in Section 260553 "Identification for Electrical Systems."

END OF SECTION 262713

SECTION 262719 - MULTI-OUTLET ASSEMBLIES

PART 1 - GENERAL

1.1 RELATED DOCUMENTS

A. Drawings and general provisions of the Contract, including General and Supplementary Conditions and Division 01 Specification Sections, apply to this Section.

1.2 SUMMARY

A. Section Includes:

1. Wall-mounted, surface metal raceway multi-outlet assemblies.
2. Floor-mounted, recessed metal raceway multi-outlet assemblies.
3. Fire-rated, poke-through assemblies.

B. Related Requirements:

1. See Section 260533 "Raceway and Boxes for Electrical Systems" for raceways.
2. See Section 262726 "Wiring Devices" for receptacles and switches.
3. See Section 271513 "Communications Copper Horizontal Cabling" for control-voltage communications outlet devices.

1.3 DEFINITIONS

A. Miniature 8-Position Series Jack (8PSJ): Also called an "8-position 8-contact" (8P8C) modular jack. An unkeyed jack with up to eight contacts commonly used to terminate twisted-pair and multiconductor Ethernet cable. Shape and dimensions are specified by TIA-1096.

1. Caution: This is not the same thing as an FCC "registered jack" RJ45S, now called a miniature "8-position keyed jack" (8PKJ). Ethernet cable plugs do not have rejection keys. Many manufacturers and suppliers incorrectly use "RJ45" as a generic term to describe any 8-position series plug or jack whether or not it has a rejection key.

1.4 ACTION SUBMITTALS

A. Product Data: For each type of product.

PART 2 - PRODUCTS

2.1 WALL-MOUNTED, SURFACE METAL RACEWAY MULTI-OUTLET ASSEMBLIES

A. Performance Criteria:

1. Description: Two-piece surface metal raceway, field assembled and wired or with factory-wired multioutlet harness, including outlets.
2. Standards:

a. Listed and labeled in accordance with UL 5 for exposed power raceway and fittings. Multioutlet assemblies used for communications or data shall also comply with UL 5C for exposed communications raceway and fittings, and UL 2024 for communications cable routing.
b. Provide separate paths for management of telecommunications and power cables.
c. Listed and labeled in accordance with NFPA 70 and NEMA 250 for intended location and use.

B. Wall-Mounted, Surface Metal Raceway Power Multi-Outlet Assembly:

1. Manufacturers: Subject to compliance with requirements, available manufacturers offering products that may be incorporated into the Work include, but are not limited to the following:

a. Wiremold; Legrand North America, LLC.
b. Wiring Device-Kellems; Hubbell Incorporated, Commercial and Industrial.
c. Additional manufacturers submitted for and receiving engineer approval prior to bid.

2. Product Description: Two-piece surface metal raceway for power outlets.
3. Material: Steel or Aluminum, with manufacturer's standard finish.
4. Color: Selected by architect

C. Wall-Mounted, Surface Metal Raceway Power and Communications Multi-Outlet Assembly:

1. Manufacturers: Subject to compliance with requirements, available manufacturers offering products that may be incorporated into the Work include, but are not limited to the following:

a. Wiremold; Legrand North America, LLC.
b. Wiring Device-Kellems; Hubbell Incorporated, Commercial and Industrial.
c. Additional manufacturers submitted for and receiving engineering approval prior to bid.

2. Product Description: Multi-piece surface metal raceway for power and communications/data outlets with separate raceway channels for power and communications wiring and separate covers for each channel.
3. Material: Steel or Aluminum, with manufacturer's standard finish.
4. Color: Selected by architect.

2.2 FLOOR-MOUNTED, RECESSED METAL RACEWAY MULTI-OUTLET ASSEMBLIES

A. Performance Criteria:

1. Description: Two-piece flush mounted, in-floor, metal raceway, with factory-wired multioutlet harness, for installation flush in floor or under floor finish.
2. Standards:

a. Listed and labeled in accordance with UL 5 for exposed power raceway and fittings, UL 5C for exposed communications raceway and fittings, and UL 2024 for communications cable routing.
b. Provide separate paths for management of telecommunications and power cables.
c. Listed and labeled in accordance with NFPA 70 and NEMA 250 for intended location and use.

B. Floor-Mounted, Recessed Metal Raceway Power Multi-Outlet Assembly (FLR.):

1. Manufacturers: Subject to compliance with requirements, available manufacturers offering products that may be incorporated into the Work include, but are not limited to the following:

a. Wiremold; Legrand North America, LLC.
b. Wiring Device-Kellems; Hubbell Incorporated, Commercial and Industrial.
c. Additional manufacturers submitted for and receiving engineer approval prior to bid.

2. Product Description: In-floor, flush-mounted raceway with flush or surface-mounted power receptacle outlets. See engineering plans.
3. Color: Selected by architect.

2.3 FIRE-RATED, POKE-THROUGH ASSEMBLIES

A. Performance Criteria:

1. Description: Factory-fabricated assembly of below-floor junction box with multichannel, through-floor raceway/firestop unit with receptacles or communications outlets installed below floor surface level.
2. Standards:

a. Listed and labeled in accordance with UL 514A for metallic boxes, or in accordance with UL 514C for nonmetallic boxes, including scrub-water exclusion requirements.
b. Provide separate paths for management of telecommunications and power cables.
c. Listed and labeled in accordance with NFPA 70 and NEMA 250 for intended location and use.

3. Fire Rating: Provide unit listed and labeled for fire rating assemblies.

PART 3 - EXECUTION

3.1 INSTALLATION

A. Comply with NECA 1 for installation requirements, except where requirements on Drawings or in this Section are stricter.

B. Comply with NECA 101 for installation requirements for steel raceways, except where requirements on Drawings or in this Section are stricter.

C. Comply with NECA 102 for installation requirements for aluminum raceways, except where requirements on Drawings or in this Section are stricter.

D. Comply with NFPA 70 limitations for types of raceways allowed in specific occupancies.

E. Provide terminations, adapters, boxes, and other fittings required for the installation.

F. Install surface raceway with a minimum 2-inch radius control at bend points.

G. Secure metallic surface raceway with screws or other anchor-type devices at intervals not exceeding 48 inches and with no fewer than two supports per straight raceway section. Support surface raceway according to manufacturer's written instructions. Tape and glue are unacceptable support methods.

H. Do not install aluminum raceways or fittings in contact with concrete.

I. Comply with Section 260553 "Identification for Electrical Systems."

END OF SECTION 262719

SECTION 262726 - WIRING DEVICES

PART 1 - GENERAL

1.1 SUMMARY

A. Section Includes: See engineering plans for where 15A receptacles and switches are allowed.

1. Standard-grade receptacles, 125 V, 15 20 A.
2. USB receptacles.
3. GFCI receptacles, 125 V, 20 A.
4. Toggle switches, 120 V, 15 20 A.
5. Decorator-style devices, 15 20 A.
6. Occupancy sensors.
7. Residential devices.
8. Wall-box dimmers.
9. Wall plates.

1.2 ACTION SUBMITTALS

A. Product Data: For each type of product.

PART 2 - PRODUCTS

2.1 GENERAL WIRING-DEVICE REQUIREMENTS

A. Wiring Devices, Components, and Accessories: Listed and labeled as defined in NFPA 70, by a qualified testing agency, and marked for intended location and use.

B. Comply with NFPA 70.

C. RoHS compliant.

D. Comply with NEMA WD 1.

E. Device Color:

1. Wiring Devices Connected to Normal Power System: As selected by Architect unless otherwise indicated or required by NFPA 70 or device listing.

F. Wall Plate Color: For plastic covers, match device color.

G. Source Limitations: Obtain each type of wiring device and associated wall plate from single source from single manufacturer.

2.2 STANDARD-GRADE RECEPTACLES, 125 V, 20 A (Note see "Residential" device sections for 15 A devices in dwelling units, guest rooms and similar)

A. Duplex Receptacles, 125 V, 20 A

1. Manufacturers: Subject to compliance with requirements, available manufacturers offering products that may be incorporated into the Work include the following:

    a. Eaton (Wiring Devices - Arrow Hart).
    b. Leviton Manufacturing Co., Inc.
    c. Pass & Seymour; Legrand North America, LLC.
    d. Wiring Device-Kellems; Hubbell Incorporated, Commercial and Industrial.
    e. Additional manufacturers submitted for and receiving engineer approval prior to bid.

2. Description: Two pole, three wire, and self-grounding.
3. Configuration: NEMA WD 6, Configuration 5-20R.
4. Standards: Comply with UL 498 and FS W-C-596.

B. Tamper-Resistant Duplex Receptacles, 125 V, 20 A designated as "TR" on drawings.

1. Manufacturers: Subject to compliance with requirements, available manufacturers offering products that may be incorporated into the Work include the following:

    a. Eaton (Wiring Devices - Arrow Hart).
    b. Leviton Manufacturing Co., Inc.
    c. Pass & Seymour; Legrand North America, LLC.
    d. Wiring Device-Kellems; Hubbell Incorporated, Commercial and Industrial.
    e. Additional manufacturers submitted for and receiving engineer approval prior to bid.

2. Description: Two pole, three wire, and self-grounding. Integral shutters that operate only when a plug is inserted in the receptacle.
3. Configuration: NEMA WD 6, Configuration 5-20R.
4. Standards: Comply with UL 498 and FS W-C-596.
5. Marking: Listed and labeled as complying with NFPA 70, "Tamper-Resistant Receptacles" Article.

C. Weather-Resistant Duplex Receptacle, 125 V, 20 A indicated as "WP" on drawings.

1. Manufacturers: Subject to compliance with requirements, available manufacturers offering products that may be incorporated into the Work include the following:

    a. Eaton (Wiring Devices - Arrow Hart).
    b. Leviton Manufacturing Co., Inc.
    c. Pass & Seymour; Legrand North America, LLC.
    d. Wiring Device-Kellems; Hubbell Incorporated, Commercial and Industrial.
    e. Additional manufacturers submitted for and receiving engineer approval prior to bid.

2. Description: Two pole, three wire, and self-grounding. Integral shutters that operate only when a plug is inserted in the receptacle. Square face.
3. Configuration: NEMA WD 6, Configuration 5-20R.
4. Standards: Comply with UL 498.
5. Marking: Listed and labeled as complying with NFPA 70, "Receptacles in Damp or Wet Locations" Article.

D. Tamper- and Weather-Resistant Duplex Receptacles, 125 V, 20 A indicated as “TR,WP” on drawings.

1. Manufacturers: Subject to compliance with requirements, available manufacturers offering products that may be incorporated into the Work include the following:

    a. Eaton (Wiring Devices - Arrow Hart).
    b. Leviton Manufacturing Co., Inc.
    c. Pass & Seymour; Legrand North America, LLC.
    d. Wiring Device-Kellems; Hubbell Incorporated, Commercial and Industrial.
    e. Additional manufacturers submitted for and receiving engineer approval prior to bid.

2. Description: Two pole, three wire, and self-grounding. Integral shutters that operate only when a plug is inserted in the receptacle. Square face.
3. Configuration: NEMA WD 6, Configuration 5-20R.
4. Standards: Comply with UL 498.
5. Marking: Listed and labeled as complying with NFPA 70, "Tamper-Resistant Receptacles" and "Receptacles in Damp or Wet Locations" articles.

2.3 STANDARD-GRADE RECEPTACLES, 125 V, 15 A

A. Duplex Receptacles, 125 V, 15 A:

1. Manufacturers: Subject to compliance with requirements, available manufacturers offering products that may be incorporated into the Work include the following:

    a. Eaton (Wiring Devices - Arrow Hart).
    b. Leviton Manufacturing Co., Inc.
    c. Pass & Seymour; Legrand North America, LLC.
    d. Wiring Device-Kellems; Hubbell Incorporated, Commercial and Industrial.
    e. Additional manufacturers submitted for and receiving engineer approval prior to bid.

2. Description: Two pole, three wire, and self-grounding.
3. Configuration: NEMA WD 6, Configuration 5-15R.
4. Standards: Comply with UL 498 and FS W-C-596.

B. Tamper-Resistant Duplex Receptacles, 125 V, 15 A:

1. Manufacturers: Subject to compliance with requirements, available manufacturers offering products that may be incorporated into the Work include the following:

a. Eaton (Wiring Devices - Arrow Hart).
b. Leviton Manufacturing Co., Inc.
c. Pass & Seymour; Legrand North America, LLC.
d. Wiring Device-Kellems; Hubbell Incorporated, Commercial and Industrial.
e. Additional manufacturers submitted for and receiving engineer approval prior to bid.

2. Description: Two pole, three wire, and self-grounding. Integral shutters that operate only when a plug is inserted in the receptacle.
3. Configuration: NEMA WD 6, Configuration 5-15R.
4. Standards: Comply with UL 498 and FS W-C-596.
5. Marking: Listed and labeled as complying with NFPA 70, "Tamper-Resistant Receptacles" Article.

2.4 USB RECEPTACLES

A. USB Charging Receptacles: USB

1. Manufacturers: Subject to compliance with requirements, available manufacturers offering products that may be incorporated into the Work include the following:

a. Eaton (Wiring Devices - Arrow Hart).
b. Leviton Manufacturing Co., Inc.
c. Pass & Seymour; Legrand North America, LLC.
d. Wiring Device-Kellems; Hubbell Incorporated, Commercial and Industrial.
e. Additional manufacturers submitted for and receiving engineer approval prior to bid.

2. Description: Single-piece, rivetless, nickel-plated, all-brass grounding system. Nickel-plated, brass mounting strap.
3. USB Receptacles: Dual, USB Type A, 5 V dc, and 2.1 A per receptacle (minimum).
4. Standards: Comply with UL 1310 and USB 3.0 devices.

2.5 GFCI RECEPTACLES, 125 V, 20 A (Note see “Residential” device sections for 15 A devices in dwelling units, guest rooms and similar)

A. Duplex GFCI Receptacles, 125 V, 20 A (See engineered drawing legend for designations, including but not limited to “GFI”)

1. Manufacturers: Subject to compliance with requirements, available manufacturers offering products that may be incorporated into the Work include the following:

a. Eaton (Wiring Devices - Arrow Hart).
b. Leviton Manufacturing Co., Inc.
c. Pass & Seymour; Legrand North America, LLC.
d. Wiring Device-Kellems; Hubbell Incorporated, Commercial and Industrial.
e. Additional manufacturers submitted for and receiving engineer approval prior to bid.

2. Description: Integral GFCI with "Test" and "Reset" buttons and LED indicator light. Two pole, three wire, and self-grounding.
3. Configuration: NEMA WD 6, Configuration 5-20R.
4. Type: Feed through.
5. Standards: Comply with UL 498, UL 943 Class A, and FS W-C-596.

B. Tamper-Resistant Duplex GFCI Receptacles, 125 V, 20 A indicated as “TR” along with GFI designation (See subsection A)

1. Manufacturers: Subject to compliance with requirements, available manufacturers offering products that may be incorporated into the Work include the following:

    a. Pass & Seymour; Legrand North America, LLC.
    b. Wiring Device-Kellems; Hubbell Incorporated, Commercial and Industrial.
    c. Additional manufacturers submitted for and receiving engineer approval prior to bid.

2. Description: Integral GFCI with "Test" and "Reset" buttons and LED indicator light. Two pole, three wire, and self-grounding. Integral shutters that operate only when a plug is inserted in the receptacle.
3. Configuration: NEMA WD 6, Configuration 5-20R.
4. Type: Feed through.
5. Standards: Comply with UL 498, UL 943 Class A, and FS W-C-596.
6. Marking: Listed and labeled as complying with NFPA 70, "Tamper-Resistant Receptacles" Article.

C. Tamper- and Weather-Resistant, GFCI Duplex Receptacles, 125 V, 20 A Indicated as “TR, WP” along with standard GFI designations (See subsection A)

1. Manufacturers: Subject to compliance with requirements, available manufacturers offering products that may be incorporated into the Work include the following:

    a. Eaton (Wiring Devices - Arrow Hart).
    b. Leviton Manufacturing Co., Inc.
    c. Pass & Seymour; Legrand North America, LLC.
    d. Wiring Device-Kellems; Hubbell Incorporated, Commercial and Industrial.
    e. Additional manufacturers submitted for and receiving engineer approval prior to bid.

2. Description: Integral GFCI with "Test" and "Reset" buttons and LED indicator light. Two pole, three wire, and self-grounding. Integral shutters that operate only when a plug is inserted in the receptacle. Square face.
3. Configuration: NEMA WD 6, Configuration 5-15R.
4. Type: Feed through.
5. Standards: Comply with UL 498 and UL 943 Class A.
6. Marking: Listed and labeled as complying with NFPA 70, "Tamper-Resistant Receptacles" and "Receptacles in Damp or Wet Locations" articles.

2.6 TOGGLE SWITCHES, 120/277 V, 15 A

A. Single-Pole Switches, 120/277 V, 15 A:

1. Manufacturers: Subject to compliance with requirements, available manufacturers offering products that may be incorporated into the Work include the following:

    a. Eaton (Wiring Devices - Arrow Hart).
    b. Leviton Manufacturing Co., Inc.
    c. Pass & Seymour; Legrand North America, LLC.
    d. Wiring Device-Kellems; Hubbell Incorporated, Commercial and Industrial.
    e. Additional manufacturers submitted for and receiving engineer approval prior to bid.

2. Standards: Comply with UL 20 and FS W-S-896.

B. Two-Pole Switches, 120/277 V, 15 A:

1. Manufacturers: Subject to compliance with requirements, available manufacturers offering products that may be incorporated into the Work include the following:

    a. Eaton (Wiring Devices - Arrow Hart).
    b. Leviton Manufacturing Co., Inc.
    c. Pass & Seymour; Legrand North America, LLC.
    d. Wiring Device-Kellems; Hubbell Incorporated, Commercial and Industrial.
    e. Additional manufacturers submitted for and receiving engineer approval prior to bid.

2. Comply with UL 20 and FS W-S-896.
3. Description: Contact surfaces treated with a coating that kills 99.9 percent of certain common bacteria within two hours when regularly and properly cleaned.
4. Standards: Comply with UL 20 and FS W-S-896.

C. Three-Way Switches, 120/277 V, 15 A:

1. Manufacturers: Subject to compliance with requirements, available manufacturers offering products that may be incorporated into the Work include the following:

    a. Eaton (Wiring Devices - Arrow Hart).
    b. Leviton Manufacturing Co., Inc.
    c. Pass & Seymour; Legrand North America, LLC.
    d. Wiring Device-Kellems; Hubbell Incorporated, Commercial and Industrial.
    e. Additional manufacturers submitted for and receiving engineer approval prior to bid.

2. Comply with UL 20 and FS W-S-896.

2.7 TOGGLE SWITCHES, 120/277 V, 20 A (Note see "Residential" device sections for 15 A devices in dwelling units, guest rooms and similar)

A. Single-Pole Switches, 120/277 V, 20 A

1. Manufacturers: Subject to compliance with requirements, available manufacturers offering products that may be incorporated into the Work include the following:

a. Eaton (Wiring Devices - Arrow Hart).
b. Leviton Manufacturing Co., Inc.
c. Pass & Seymour; Legrand North America, LLC.
d. Wiring Device-Kellems; Hubbell Incorporated, Commercial and Industrial.
e. Additional manufacturers submitted for and receiving engineer approval prior to bid.

2. Standards: Comply with UL 20 and FS W-S-896.

B. Two-Pole Switches, 120/277 V, 20 A indicated as "DP"

1. Manufacturers: Subject to compliance with requirements, available manufacturers offering products that may be incorporated into the Work include the following:

a. Eaton (Wiring Devices - Arrow Hart).
b. Leviton Manufacturing Co., Inc.
c. Pass & Seymour; Legrand North America, LLC.
d. Wiring Device-Kellems; Hubbell Incorporated, Commercial and Industrial.
e. Additional manufacturers submitted for and receiving engineer approval prior to bid.

2. Comply with UL 20 and FS W-S-896.

C. Three-Way Switches, 120/277 V, 20 A indicated as "3":

1. Manufacturers: Subject to compliance with requirements, available manufacturers offering products that may be incorporated into the Work include the following:

a. Eaton (Wiring Devices - Arrow Hart).
b. Leviton Manufacturing Co., Inc.
c. Pass & Seymour; Legrand North America, LLC.
d. Wiring Device-Kellems; Hubbell Incorporated, Commercial and Industrial.
e. Additional manufacturers submitted for and receiving engineer approval prior to bid.

2. Comply with UL 20 and FS W-S-896.

D. Four-Way Switches, 120/277 V, 20 A indicated as "4"

1. Manufacturers: Subject to compliance with requirements, available manufacturers offering products that may be incorporated into the Work include the following:

a. Eaton (Wiring Devices - Arrow Hart).
b. Leviton Manufacturing Co., Inc.
c. Pass & Seymour; Legrand North America, LLC.
d. Wiring Device-Kellems; Hubbell Incorporated, Commercial and Industrial.
e. Additional manufacturers submitted for and receiving engineer approval prior to bid.

2. Standards: Comply with UL 20 and FS W-S-896.

2.8 OCCUPANCY SENSORS

A. See Section 260923 – "Lighting Control Devices"

2.9 TIMER LIGHT SWITCH

A. See Section 260923 – "Lighting Control Devices"

2.10 RESIDENTIAL DEVICES

A. Residential-Grade, Tamper-Resistant, GFCI Receptacles, 125 V, 15 A indicated "TR" along with GFI designations (See legend on engineered plans)

1. Manufacturers: Subject to compliance with requirements, available manufacturers offering products that may be incorporated into the Work include the following:

a. Eaton (Wiring Devices - Arrow Hart).
b. Hubbell Premise Wiring; Hubbell Incorporated, Commercial and Industrial.
c. Leviton Manufacturing Co., Inc.
d. Pass & Seymour; Legrand North America, LLC.
e. Additional manufacturers submitted for and receiving engineer approval prior to bid.

2. Configuration: NEMA WD 6, Configuration 5-15R.
3. Feed-through connectors.
4. Standards: Comply with UL 943 and UL 1699.

B. Residential-Grade, Tamper-Resistant Receptacles, 125 V, 15 A indicated as "TR":

1. Manufacturers: Subject to compliance with requirements, available manufacturers offering products that may be incorporated into the Work include the following:

a. Eaton (Wiring Devices - Arrow Hart).
b. Leviton Manufacturing Co., Inc.
c. Pass & Seymour; Legrand North America, LLC.
d. Wiring Device-Kellems; Hubbell Incorporated, Commercial and Industrial.
e. Additional manufacturers submitted for and receiving engineer approval prior to bid.

2. Configuration: NEMA WD 6, Configuration 5-15R.
3. Feed-through connectors.
4. Standards: Comply with UL 498.

C. Weather- and Tamper-Resistant Receptacles, 125 V, 15 A indicated as “TR, WP”:

1. Manufacturers: Subject to compliance with requirements, available manufacturers offering products that may be incorporated into the Work include the following:

    a. Eaton (Wiring Devices - Arrow Hart).
    b. Leviton Manufacturing Co., Inc.
    c. Pass & Seymour; Legrand North America, LLC.
    d. Wiring Device-Kellems; Hubbell Incorporated, Commercial and Industrial.
    e. Additional manufacturers submitted for and receiving engineer approval prior to bid.

2. Configuration: NEMA WD 6, Configuration 5-15R.
3. Feed-through connectors.
4. Standards: Comply with UL 498.
5. Marked as "Weather Resistant."

D. Fan-Speed Controls indicated as “F”:

1. Manufacturers: Subject to compliance with requirements, available manufacturers offering products that may be incorporated into the Work include the following:

    a. Eaton (Wiring Devices - Arrow Hart).
    b. Hubbell Premise Wiring; Hubbell Incorporated, Commercial and Industrial.
    c. Leviton Manufacturing Co., Inc.
    d. Pass & Seymour; Legrand North America, LLC.
    e. Additional manufacturers submitted for and receiving engineer approval prior to bid.

2. Description: Modular, 120-V ac, full-wave, solid-state units with integral, quiet on-off switches and audible frequency and EMI/RFI filters.
3. Standards: Comply with UL 1917.
4. Coordinate device selection with fan manufacturer.
5. Continuously adjustable toggle switch 1.5 A.

2.11 DIMMERS

A. Wall-Box Dimmers:

1. Manufacturers: Subject to compliance with requirements, available manufacturers offering products that may be incorporated into the Work include the following:

    a. Eaton (Wiring Devices - Arrow Hart).
    b. Leviton Manufacturing Co., Inc.
    c. Lutron Electronics Co., Inc.

d. Additional manufacturers submitted for and receiving engineer approval prior to bid.

2. Control: Continuously adjustable slider w/ on/off switch; with single-pole or three-way switching.
3. Standards: Comply with UL 1472.
4. LED Lamp Dimmer Switches: Modular; compatible with LED lamps; trim potentiometer to adjust low-end dimming; capable of consistent dimming with low end not greater than 10 percent of full brightness.

2.12 WALL PLATES

A. Single Source: Obtain wall plates from same manufacturer of wiring devices.

B. Single and combination types shall match corresponding wiring devices.

1. Plate-Securing Screws: Metal with head color to match plate finish.

PART 3 - EXECUTION

3.1 INSTALLATION

A. Comply with NECA 1, including mounting heights listed in that standard, unless otherwise indicated.

B. Coordination with Other Trades:

1. Keep outlet boxes free of plaster, drywall joint compound, mortar, cement, concrete, dust, paint, and other material that may contaminate the raceway system, conductors, and cables.
2. Install device boxes in brick or block walls so that the cover plate does not cross a joint unless the joint is troweled flush with the face of the wall.
3. Install wiring devices after all wall preparation, including painting, is complete.

C. Device Installation:

1. Connect devices to branch circuits using pigtails that are not less than 6 inches in length.
2. When mounting into metal boxes, remove the fiber or plastic washers used to hold device-mounting screws in yokes, allowing metal-to-metal contact.

D. Receptacle Orientation:

1. Install ground pin of vertically mounted receptacles down, and on horizontally mounted receptacles to the right.

E. Device Plates: Do not use oversized or extra-deep plates. Repair wall finishes and remount outlet boxes when standard device plates do not fit flush or do not cover rough wall opening.

F. Dimmers:

1. Install dimmers within terms of their listing.
2. Verify that dimmers used for fan-speed control are listed for that application.
3. Install unshared neutral conductors on line and load side of dimmers according to manufacturers' device, listing conditions in the written instructions.

G. Arrangement of Devices: Unless otherwise indicated, mount flush, with long dimension vertical and with grounding terminal of receptacles on top. Group adjacent switches under single, multigang wall plates.

H. Adjust locations of floor service outlets and service poles to suit arrangement of partitions and furnishings.

3.2 FIELD QUALITY CONTROL

A. Perform the following tests and inspections

B. Tests for Receptacles:

1. Line Voltage: Acceptable range is 105 to 132 V.
2. Percent Voltage Drop under 15-A Load: A value of 6 percent or higher is unacceptable.
3. Ground Impedance: Values of up to 2 ohms are acceptable.
4. GFCI Trip: Test for tripping values specified in UL 1436 and UL 943.
5. Using the test plug, verify that the device and its outlet box are securely mounted.

C. Wiring device will be considered defective if it does not pass tests and inspections.

D. Prepare test and inspection reports.

END OF SECTION 262726

SECTION 262813 - FUSES

PART 1 - GENERAL

1.1 SUMMARY

A. Section Includes:

1. Cartridge fuses rated 600 V ac and less for use in the following:

a. Panelboards.
b. Switchboards.
c. Enclosed switches.

1.2 ACTION SUBMITTALS

A. Product Data: For each type of product.

PART 2 - PRODUCTS

2.1 MANUFACTURERS

A. Manufacturers: Subject to compliance with requirements, available manufacturers offering products that may be incorporated into the Work include the following:

1. Eaton (Bussmann & Edison).
2. Littelfuse, Inc.
3. Mersen USA.
4. Additional manufacturers submitted for and receiving engineer approval prior to bid.

2.2 CARTRIDGE FUSES

A. Characteristics: NEMA FU 1, current-limiting, nonrenewable cartridge fuses with voltage ratings consistent with circuit voltages.

B. Electrical Components, Devices, and Accessories: Listed and labeled as defined in NFPA 70, by a qualified testing agency, and marked for intended location and application.

C. Comply with NEMA FU 1 for cartridge fuses.

D. Comply with NFPA 70.

E. Coordinate fuse ratings with utilization equipment nameplate limitations of maximum fuse size and with system short-circuit current levels.

PART 3 - EXECUTION

3.1 INSTALLATION

A. Install fuses in fusible devices. Arrange fuses so rating information is readable without removing fuse.

B. Install spare-fuse cabinet(s) in location shown on the Drawings or as indicated in the field by Construction Manager

3.2 IDENTIFICATION

A. Install labels complying with requirements for identification specified in Section 260553 "Identification for Electrical Systems" and indicating fuse replacement information inside of door of each fused switch and adjacent to each fuse block, socket, and holder.

END OF SECTION 262813

SECTION 262816 - ENCLOSED SWITCHES AND CIRCUIT BREAKERS

PART 1 - GENERAL

1.1 SUMMARY

A. Section Includes:

1. Fusible switches.
2. Nonfusible switches.
3. Molded-case circuit breakers (MCCBs).
4. Molded-case switches.
5. Enclosures.

1.2 ACTION SUBMITTALS

A. Product Data: For each type of enclosed switch, circuit breaker, accessory, and component indicated. Include nameplate ratings, dimensioned elevations, sections, weights, and manufacturers' technical data on features, performance, electrical characteristics, ratings, accessories, and finishes.

PART 2 - PRODUCTS

2.1 GENERAL REQUIREMENTS

A. Source Limitations: Obtain enclosed switches and circuit breakers, overcurrent protective devices, components, and accessories, within same product category, from single manufacturer.

B. Product Selection for Restricted Space: Drawings indicate maximum dimensions for enclosed switches and circuit breakers, including clearances between enclosures, and adjacent surfaces and other items. Comply with indicated maximum dimensions.

C. Electrical Components, Devices, and Accessories: Listed and labeled as defined in NFPA 70, by an NRTL, and marked for intended location and application.

D. Comply with NFPA 70.

2.2 FUSIBLE SWITCHES

A. Manufacturers: Subject to compliance with requirements, available manufacturers offering products that may be incorporated into the Work include the following:

1. ABB (Electrification Products Division).

2. Eaton.
3. Schneider Electric USA (Square D).
4. Siemens Industry, Inc., Energy Management Division.
5. Additional manufacturers submitted for and receiving engineer approval prior to bid.

B. Accessories:
1. Service-Rated Switches: Labeled for use as service equipment.

2.3 NONFUSIBLE SWITCHES

A. Manufacturers: Subject to compliance with requirements, available manufacturers offering products that may be incorporated into the Work include the following:

1. ABB (Electrification Products Division).
2. Eaton.
3. Schneider Electric USA (Square D).
4. Siemens Industry, Inc., Energy Management Division.
5. Additional manufacturers submitted for and receiving engineer approval prior to bid.

B. Type GD, General Duty, Three Pole, Single Throw, 240-V ac, 600 A and Smaller: UL 98 and NEMA KS 1, horsepower rated, lockable handle with capability to accept two padlocks, and interlocked with cover in closed position.

2.4 MOLDED-CASE CIRCUIT BREAKERS

A. Manufacturers: Subject to compliance with requirements, available manufacturers offering products that may be incorporated into the Work include the following:

1. ABB (Electrification Products Division).
2. Eaton.
3. NOARK Electric North America.
4. Schneider Electric USA (Square D).
5. Siemens Industry, Inc., Energy Management Division.
6. Additional manufacturers submitted for and receiving engineer approval prior to bid.

B. Circuit breakers shall be constructed using glass-reinforced insulating material. Current carrying components shall be completely isolated from the handle and the accessory mounting area.

C. Circuit breakers shall have a toggle operating mechanism with common tripping of all poles, which provides quick-make, quick-break contact action. The circuit-breaker handle shall be over center, be trip free, and reside in a tripped position between on and off to provide local trip indication. Circuit-breaker escutcheon shall be clearly marked on and off in addition to providing international I/O markings. Equip circuit breaker with a push-to-trip button, located on the face of the circuit breaker to mechanically operate the circuit-breaker tripping mechanism for maintenance and testing purposes.

D. The maximum ampere rating and UL, IEC, or other certification standards with applicable voltage systems and corresponding interrupting ratings shall be clearly marked on face of circuit

breaker. Circuit breakers shall be 100 percent rated or series rated as indicated on the Drawings. Circuit breaker/circuit breaker combinations for series connected interrupting ratings shall be listed by UL as recognized component combinations. Any series rated combination used shall be marked on the end-use equipment along with the statement "Caution - Series Rated System. _____ Amps Available. Identical Replacement Component Required."

E. MCCBs shall be equipped with a device for locking in the isolated position.

F. Lugs shall be suitable for 140 deg F rated wire on 125-A circuit breakers and below

G. Standards: Comply with UL 489 with interrupting capacity to comply with available fault currents.

H. Thermal-Magnetic Circuit Breakers: Inverse time-current thermal element for low-level overloads and instantaneous magnetic trip element for short circuits. Adjustable magnetic trip setting for circuit-breaker frame sizes 250 A and larger.

I. Adjustable, Instantaneous-Trip Circuit Breakers: Magnetic trip element with front-mounted, field-adjustable trip setting.

J. Electronic Trip Circuit Breakers: Field-replaceable rating plug, rms sensing, with the following field-adjustable settings:

1. Long- and short-time pickup levels.
2. Long- and short-time time adjustments.
3. Ground-fault pickup level, time delay, and I-squared t response.

K. Current-Limiting Circuit Breakers: Frame sizes 400 A and smaller, and let-through ratings less than NEMA FU 1, RK-5.

L. Features and Accessories:

1. Standard frame sizes, trip ratings, and number of poles.
2. Application Listing: Appropriate for application; Type SWD for switching fluorescent lighting loads; Type HID for feeding fluorescent and high-intensity discharge lighting circuits.

2.5 ENCLOSURES

A. Enclosed Switches and Circuit Breakers: UL 489, NEMA KS 1, NEMA 250, and UL 50, to comply with environmental conditions at installed location.

B. Enclosure Finish: The enclosure shall be finished with gray baked enamel paint, electrodeposited on cleaned, phosphatized steel (NEMA 250 Type 1) for dry area interior devices and gray baked enamel paint, electrodeposited on cleaned, phosphatized galvannealed steel (NEMA 250 Types 3R, 12) for damp/wet interior or exterior devices

PART 3 - EXECUTION

3.1 ENCLOSURE ENVIRONMENTAL RATING APPLICATIONS

A. Enclosed Switches and Circuit Breakers: Provide enclosures at installed locations with the following environmental ratings.

1. Indoor, Dry and Clean Locations: NEMA 250, Type 1.
2. Outdoor Locations: NEMA 250, Type 3R

3.2 INSTALLATION

A. Coordinate layout and installation of switches, circuit breakers, and components with equipment served and adjacent surfaces. Maintain required workspace clearances and required clearances for equipment access doors and panels.

B. Install individual wall-mounted switches and circuit breakers with tops at uniform height unless otherwise indicated.

C. Temporary Lifting Provisions: Remove temporary lifting of eyes, channels, and brackets and temporary blocking of moving parts from enclosures and components.

D. Install fuses in fusible devices.

E. Comply with NFPA 70 and NECA 1.

3.3 IDENTIFICATION

A. Comply with requirements in Section 260553 "Identification for Electrical Systems."

1. Identify field-installed conductors, interconnecting wiring, and components; provide warning signs.
2. Label each enclosure with engraved metal or laminated-plastic nameplate.

3.4 FIELD QUALITY CONTROL

A. Testing Agency: Owner will engage a qualified testing agency to perform tests and inspections.

B. Testing Agency: Engage a qualified testing agency to perform tests and inspections.

C. Perform tests and inspections

D. Tests and Inspections for Switches:

1. Visual and Mechanical Inspection:

a. Inspect physical and mechanical condition.
b. Inspect anchorage, alignment, grounding, and clearances.
c. Verify that the unit is clean.
d. Verify blade alignment, blade penetration, travel stops, and mechanical operation.
e. Verify that fuse sizes and types match the Specifications and Drawings.
f. Verify that each fuse has adequate mechanical support and contact integrity.
g. Inspect bolted electrical connections for high resistance using one of the two following methods:

    1) Use a low-resistance ohmmeter.

        a) Compare bolted connection resistance values to values of similar connections. Investigate values that deviate from those of similar bolted connections by more than 50 percent of the lowest value.

    2) Verify tightness of accessible bolted electrical connections by calibrated torque-wrench method in accordance with manufacturer's published data or NETA ATS Table 100.12.

        a) Bolt-torque levels shall be in accordance with manufacturer's published data. In the absence of manufacturer's published data, use NETA ATS Table 100.12.

h. Verify that operation and sequencing of interlocking systems is as described in the Specifications and shown on the Drawings.
i. Verify correct phase barrier installation.
j. Verify lubrication of moving current-carrying parts and moving and sliding surfaces.

2. Electrical Tests:

    a. Perform resistance measurements through bolted connections with a low-resistance ohmmeter. Compare bolted connection resistance values to values of similar connections. Investigate values that deviate from adjacent poles or similar switches by more than 50 percent of the lowest value.
    b. Measure contact resistance across each switchblade fuseholder. Drop values shall not exceed the high level of the manufacturer's published data. If manufacturer's published data are not available, investigate values that deviate from adjacent poles or similar switches by more than 50 percent of the lowest value.
    c. Perform insulation-resistance tests for one minute on each pole, phase-to-phase and phase-to-ground with switch closed, and across each open pole. Apply voltage in accordance with manufacturer's published data. In the absence of manufacturer's published data, use Table 100.1 from the NETA ATS. Investigate values of insulation resistance less than those published in Table 100.1 or as recommended in manufacturer's published data.
    d. Measure fuse resistance. Investigate fuse-resistance values that deviate from each other by more than 15 percent.
    e. Perform ground fault test according to NETA ATS 7.14 "Ground Fault Protection Systems, Low-Voltage."

E. Tests and Inspections for Molded Case Circuit Breakers:

1. Visual and Mechanical Inspection:

a. Verify that equipment nameplate data are as described in the Specifications and shown on the Drawings.
b. Inspect physical and mechanical condition.
c. Inspect anchorage, alignment, grounding, and clearances.
d. Verify that the unit is clean.
e. Operate the circuit breaker to ensure smooth operation.
f. Inspect bolted electrical connections for high resistance using one of the two following methods:

1) Use a low-resistance ohmmeter.

a) Compare bolted connection resistance values to values of similar connections. Investigate values that deviate from those of similar bolted connections by more than 50 percent of the lowest value.

2) Verify tightness of accessible bolted electrical connections by calibrated torque-wrench method in accordance with manufacturer's published data or NETA ATS Table 100.12.

a) Bolt-torque levels shall be in accordance with manufacturer's published data. In the absence of manufacturer's published data, use NETA ATS Table 100.12.

g. Inspect operating mechanism, contacts, and chutes in unsealed units.
h. Perform adjustments for final protective device settings in accordance with the coordination study.

2. Electrical Tests:

a. Perform resistance measurements through bolted connections with a low-resistance ohmmeter. Compare bolted connection resistance values to values of similar connections. Investigate values that deviate from adjacent poles or similar switches by more than 50 percent of the lowest value.
b. Perform insulation-resistance tests for one minute on each pole, phase-to-phase and phase-to-ground with circuit breaker closed, and across each open pole. Apply voltage in accordance with manufacturer's published data. In the absence of manufacturer's published data, use Table 100.1 from the NETA ATS. Investigate values of insulation resistance less than those published in Table 100.1 or as recommended in manufacturer's published data.
c. Perform a contact/pole resistance test. Drop values shall not exceed the high level of the manufacturer's published data. If manufacturer's published data are not available, investigate values that deviate from adjacent poles or similar switches by more than 50 percent of the lowest value.
d. Perform insulation resistance tests on all control wiring with respect to ground. Applied potential shall be 500-V dc for 300-V rated cable and 1000-V dc for 600-V rated cable. Test duration shall be one minute. For units with solid state

components, follow manufacturer's recommendation. Insulation resistance values shall be no less than two megohms.

e. Determine the following by primary current injection:

1) Long-time pickup and delay. Pickup values shall be as specified. Trip characteristics shall not exceed manufacturer's published time-current characteristic tolerance band, including adjustment factors.
2) Short-time pickup and delay. Short-time pickup values shall be as specified. Trip characteristics shall not exceed manufacturer's published time-current characteristic tolerance band, including adjustment factors.
3) Ground-fault pickup and time delay. Ground-fault pickup values shall be as specified. Trip characteristics shall not exceed manufacturer's published time-current characteristic tolerance band, including adjustment factors.
4) Instantaneous pickup. Instantaneous pickup values shall be as specified and within manufacturer's published tolerances.

f. Test functionality of the trip unit by means of primary current injection. Pickup values and trip characteristics shall be as specified and within manufacturer's published tolerances.

g. Perform minimum pickup voltage tests on shunt trip and close coils in accordance with manufacturer's published data. Minimum pickup voltage of the shunt trip and close coils shall be as indicated by manufacturer.

h. Verify correct operation of auxiliary features such as trip and pickup indicators; zone interlocking; electrical close and trip operation; trip-free, anti-pump function; and trip unit battery condition. Reset all trip logs and indicators. Investigate units that do not function as designed.

i. Verify operation of charging mechanism. Investigate units that do not function as designed.

3. Correct malfunctioning units on-site, where possible, and retest to demonstrate compliance; otherwise, replace with new units and retest.
4. Test and adjust controls, remote monitoring, and safeties. Replace damaged and malfunctioning controls and equipment.

F. Enclosed switches and circuit breakers will be considered defective if they do not pass tests and inspections.

G. Prepare test and inspection reports.

1. Test procedures used.
2. Include identification of each enclosed switch and circuit breaker tested and describe test results.
3. List deficiencies detected, remedial action taken, and observations after remedial action.

END OF SECTION 262816

SECTION 263213.13 - DIESEL-ENGINE-DRIVEN GENERATOR SETS

PART 1 - GENERAL

1.1 SUMMARY

A. Section includes packaged engine generators used to supply non-emergency power, with the following features:

1. Diesel engine.
2. Diesel fuel-oil system.
3. Control and monitoring.
4. Generator overcurrent and fault protection.
5. Generator, exciter, and voltage regulator.
6. Vibration isolation devices.

B. Related Requirements:

1. Section 263343 "Battery Chargers" for remote engine battery chargers.
2. Section 263600 "Transfer Switches" for transfer switches including sensors and relays to initiate automatic-starting and -stopping signals for engine generators.

1.2 ACTION SUBMITTALS

A. Product Data: For each type of product.

1.3 QUALITY ASSURANCE

A. Installer Qualifications: An authorized representative who is trained and approved by manufacturer.

B. Testing Agency Qualifications: Accredited by NETA.

1. Testing Agency's Field Supervisor: Certified by NETA to supervise on-site testing.

1.4 WARRANTY

A. Manufacturer's Warranty: Manufacturer agrees to repair or replace components of packaged engine generators and associated auxiliary components that fail in materials or workmanship within specified warranty period.

1. Warranty Period: 2 years from date of Substantial Completion.

PART 2 - PRODUCTS

2.1 MANUFACTURERS

A. Manufacturers: Subject to compliance with requirements, available manufacturers offering products that may be incorporated into the Work include, but are not limited to the following:

1. Caterpillar, Inc.; Electric Power Division.
2. Cummins Power Generation.
3. Generac Power Systems, Inc.
4. Additional manufacturers submitted for and receiving engineer approval prior to bid.

2.2 PERFORMANCE REQUIREMENTS

A. B11 Compliance: Comply with B11.19.

B. NFPA Compliance:

1. Comply with NFPA 37.
2. Comply with NFPA 70.
3. Comply with NFPA 99.
4. Comply with NFPA 110 requirements for Level 1 EPSS.

C. UL Compliance: Comply with UL 2200.

D. Engine Exhaust Emissions: Comply with EPA Tier [**2**] [**3**] [**4**] requirements and applicable state and local government requirements.

E. Environmental Conditions: Engine generator system shall withstand the following environmental conditions without mechanical or electrical damage or degradation of performance capability:

1. Relative Humidity: Zero to 95 percent.

2.3 ENGINE GENERATOR ASSEMBLY DESCRIPTION

A. Factory-assembled and -tested, water-cooled engine, with brushless generator and accessories.

B. Electrical Components, Devices, and Accessories: Listed and labeled as defined in NFPA 70, by a qualified testing agency, and marked for intended location and use.

C. See engineering drawings for service load, voltage, and phase.

2.4 DIESEL ENGINE

A. See engineering drawings and additional manufacture specifications for more detail.

PART 3 - EXECUTION

3.1 INSTALLATION

A. Comply with NECA 1 and NECA 404.

B. Comply with packaged engine generator manufacturers' written installation and alignment instructions and with NFPA 110.

3.2 CONNECTIONS

A. Piping installation requirements are specified in other Sections. Drawings indicate general arrangement of piping and specialties.

B. Connect fuel, cooling-system, and exhaust-system piping adjacent to packaged engine generator to allow space for service and maintenance.

C. Connect engine exhaust pipe to engine with flexible connector.

D. Connect fuel piping to engines with a gate valve and union and flexible connector.

E. Ground equipment according to Section 260526 "Grounding and Bonding for Electrical Systems."

F. Connect wiring according to Section 260519 "Low-Voltage Electrical Power Conductors and Cables." Provide a minimum of one 90-degree bend in flexible conduit routed to the engine generator from a stationary element.

G. Balance single-phase loads to obtain a maximum of 10 percent unbalance between any two phases.

3.3 IDENTIFICATION

A. Identify system components according to Section 230553 "Identification for HVAC Piping and Equipment" and Section 260553 "Identification for Electrical Systems."

3.4 FIELD QUALITY CONTROL

A. Perform tests and inspections with the assistance of a factory-authorized service representative.

B. Tests and Inspections:

1. Perform tests recommended by manufacturer and each visual and mechanical inspection and electrical and mechanical test listed in first two subparagraphs below, as specified in NETA ATS. Certify compliance with test parameters.

a. Visual and Mechanical Inspection:

1) Compare equipment nameplate data with Drawings and the Specifications.
2) Inspect physical and mechanical condition.
3) Inspect anchorage, alignment, and grounding.
4) Verify that the unit is clean.

b. Electrical and Mechanical Tests:

1) Perform insulation-resistance tests according to IEEE 43.
2) Test protective relay devices.
3) Verify phase rotation, phasing, and synchronized operation as required by the application.
4) Functionally test engine shutdown for low oil pressure, overtemperature, overspeed, and other protection features as applicable.

2. NFPA 110 Acceptance Tests: Perform tests required by NFPA 110 that are additional to those specified here, including, but not limited to, single-step full-load pickup test.
3. Battery Tests: Equalize charging of battery cells according to manufacturer's written instructions. Record individual cell voltages.

a. Measure charging voltage and voltages between available battery terminals for full-charging and float-charging conditions. Check electrolyte level and specific gravity under both conditions.
b. Test for contact integrity of all connectors. Perform an integrity load test and a capacity load test for the battery.
c. Verify acceptance of charge for each element of the battery after discharge.
d. Verify that measurements are within manufacturer's specifications.

4. Battery-Charger Tests: Verify specified rates of charge for both equalizing and float-charging conditions.
5. System Integrity Tests: Methodically verify proper installation, connection, and integrity of each element of engine generator system before and during system operation. Check for air, exhaust, and fluid leaks.
6. Voltage and Frequency Transient Stability Tests: Use recording oscilloscope to measure voltage and frequency transients for 50 and 100 percent step-load increases and decreases, and verify that performance is as specified.
7. Harmonic-Content Tests: Measure harmonic content of output voltage at 25 and 100 percent of rated linear load. Verify that harmonic content is within specified limits.
8. Noise Level Tests: Measure A-weighted level of noise emanating from engine generator installation, including engine exhaust and cooling-air intake and discharge, at four locations 25 feet (8 m) from edge of the generator enclosure on the property line, and compare measured levels with required values.

C. Coordinate tests with tests for transfer switches and run them concurrently.

D. Test instruments shall have been calibrated within the past 12 months, traceable to NIST Calibration Services, and adequate for making positive observation of test results. Make calibration records available for examination on request.

E. Leak Test: After installation, charge exhaust, coolant, and fuel systems and test for leaks. Repair leaks and retest until no leaks exist.

F. Operational Test: After electrical circuitry has been energized, start units to confirm proper motor rotation and unit operation for generator and associated equipment.

G. Test and adjust controls and safeties. Replace damaged and malfunctioning controls and equipment.

H. Remove and replace malfunctioning units and retest as specified above.

I. Retest: Correct deficiencies identified by tests and observations, and retest until specified requirements are met.

J. Report results of tests and inspections in writing. Record adjustable relay settings and measured insulation resistances, time delays, and other values and observations. Attach a label or tag to each tested component indicating satisfactory completion of tests.

3.5 DEMONSTRATION

A. Engage a factory-authorized service representative to train Owner's maintenance personnel to adjust, operate, and maintain packaged engine generators.

END OF SECTION 263213.13

SECTION 263323.11 - CENTRAL BATTERY EQUIPMENT FOR EMERGENCY LIGHTING

PART 1 - GENERAL

1.1 SUMMARY

A. Section includes interruptible (fast-transfer) central battery equipment rated 600 V and less for emergency lighting:

1.2 DEFINITIONS

A. Interruptible: As used in the Section Text, an off-line, passive-standby or line-interactive, inverter-only unit, with an intentional interruption of power to the load until an internal transfer switch picks up and transfers the load to the unit's inverter and internal battery source on loss of the "normal" source, and then retransfers to the "normal" source when it is restored. Transfer time can be "slow" (up to approximately 1 second) or "fast" (2-4 ms or 40-50 ms, depending on manufacturer).

B. Low Voltage: As defined in NFPA 70 for circuits and equipment operating at less than 50 V or for remote-control, signaling power-limited circuits.

1.3 ACTION SUBMITTALS

A. Product Data: For each type and rating of central battery equipment unit.

B. Shop Drawings: For each type and rating of central battery equipment unit.

1. Include plans, elevations, sections, and mounting details.
2. Include details of equipment assemblies. Indicate dimensions, weights, loads, required clearances, ventilation requirements, method of field assembly, components, and location and size of each field connection.
3. Include system one-line diagram, internal and interconnecting wiring; and diagrams for power, signal, and control wiring.
4. Include elevation, details, and legends of control and indication displays.
5. Include -circuit current (withstand) rating of unit.

1.4 CLOSEOUT SUBMITTALS

A. Operation and maintenance data.

1.5 WARRANTY

A. Special Warranty: Manufacturer agrees to repair or replace central battery equipment that fails in materials or workmanship within specified warranty period. Special warranty, applying to batteries only, applies to materials only, on a prorated basis, for period specified.

1. Warranty Period: Include the following warranty periods, from date of Substantial Completion:

a. Central Battery Equipment (excluding Batteries): Three year(s).
b. Standard VRLA Batteries:

1) Pro Rata: Seven years.

PART 2 - PRODUCTS

2.1 INTERRUPTIBLE (FAST-TRANSFER) CENTRAL BATTERY EQUIPMENT

A. Manufacturers: Subject to compliance with requirements, available manufacturers offering products that may be incorporated into the Work include the following:

1. Cooper Industries, Inc.
2. Dual-Lite.
3. Lithonia Lighting; Acuity Brands Lighting, Inc.
4. IOTA ENGINEERING.
5. Additional manufacturers submitted for receiving engineer approval prior to bid.

B. See engineering plans for specific central battery equipment selected.

C. General Requirements for Interruptible (Fast-Transfer) Central Battery Equipment:

1. Electrical Components, Devices, and Accessories: Listed and labeled as defined in NFPA 70, by a qualified testing agency, and marked for intended location and application.
2. NRTL Compliance: Fabricate and label central battery equipment to comply with UL 924.
3. Comply with the IBC, NFPA 70, and NFPA 101.

D. Performance Requirements:
1. Automatic Operation:

a. Normal Conditions: Supply the load with ac power flowing from normal ac power input terminals, bypassing inverter, with battery connected in parallel via rectifier/charger output.

b. If normal power fails, transfer switch operates and battery supplies constant, regulated ac power through the inverter to the load, with a momentary loss of power to the load.
c. When normal ac power is restored at input supply terminals of unit, controls automatically retransfer the load back to the normal ac supply, with a momentary loss of power to the load. Rectifier/charger then recharges battery.

E. Controls and Indication:

1. Status Indication: Door-mounted, labeled LED indicators or digital screen displaying the following conditions:

a. Normal power available.
b. Status of system.
c. Battery charging status.
d. On battery power.
e. System fault.

PART 3 - EXECUTION

3.1 INSTALLATION

A. Coordinate layout and installation of central battery equipment with other construction including conduit, piping, equipment, and adjacent surfaces. Maintain required workspace clearances and required clearances for equipment access doors and panels.

B. Temporary Lifting Provisions: Remove temporary lifting eyes, channels, and brackets and temporary blocking of moving parts from enclosures and components.

C. Comply with NECA 1.

D. Wiring Method: Install cables in raceways and cable trays except within consoles, cabinets, desks, and counters and except in accessible ceiling spaces and in gypsum board partitions where unenclosed wiring method may be used for low-voltage control and alarm wiring. Conceal raceway and cables except in unfinished spaces.

1. Install plenum cable in environmental air spaces, including plenum ceilings.
2. Comply with requirements for cable trays specified in Section 260536 "Cable Trays for Electrical Systems."
3. Comply with requirements for raceways and boxes specified in Section 260533 "Raceways and Boxes for Electrical Systems."

E. Wiring Method: Conceal conductors and cables in accessible ceilings, walls, and floors where possible.

F. Wiring within Enclosures: Bundle, lace, and train conductors to terminal points with no excess and without exceeding manufacturer's limitations on bending radii. Install lacing bars and distribution spools.

G. Ground equipment according to Section 260526 "Grounding and Bonding for Electrical Systems."

1. Separately Derived Systems: Make grounding connections to grounding electrodes and bonding connections to metallic piping systems as indicated; comply with NFPA 70.

H. Install control wiring between central battery equipment and remote devices. Comply with requirements in Section 260523 "Control-Voltage Electrical Power Cables."

I. Identify central battery equipment, components, and control wiring. Comply with requirements for identification specified in Section 260553 "Identification for Electrical Systems."

3.2 FIELD QUALITY CONTROL

A. Manufacturer's Field Service: Engage a factory-authorized service representative to test and inspect components, assemblies, and equipment installations, including connections.

B. Perform tests and inspections.

C. Tests and Inspections:

1. Inspect central battery equipment, wiring, components, connections, and equipment installation. Test and adjust components and equipment.
2. Test insulation resistance for all external branch circuit, feeder, control, and alarm wiring connected to central battery equipment element and component.
3. Test continuity of each circuit.
4. Perform each visual and mechanical inspection and electrical test stated in manufacturer's written instructions and in NETA Acceptance Testing Specification, including specifically those for batteries, battery chargers, and UPS, regardless of the type of central battery equipment provided. Certify compliance with test parameters.
5. Perform a load-duration test at rated voltage and rated output current to verify the correct functional operation of the unit under full-load stable operating conditions for the minimum time limits required by UL 924. Monitor and record ambient temperature and temperatures within the unit.
6. Correct malfunctioning units on-site, where possible, and retest to demonstrate compliance; otherwise, replace with new units and retest.
7. Test and adjust controls, remote monitoring, and safeties. Replace damaged and malfunctioning controls and equipment.

D. Central battery equipment will be considered defective if it does not pass tests and inspections.

E. Prepare test and inspection reports, including a certified report that identifies central battery equipment and describes all test results. Include notation of deficiencies detected, remedial action taken, and observations made after remedial action.

3.3 DEMONSTRATION

A. Train Owner's maintenance personnel to adjust, operate, and maintain central battery equipment, and to use and reprogram microprocessor-based control, monitoring, and display functions.

END OF SECTION 263323.11

SECTION 263343 - BATTERY CHARGERS

PART 1 - GENERAL

1.1 SUMMARY

A. Section includes battery chargers for emergency engine generators.

1.2 ACTION SUBMITTALS

A. Product Data: For each type of battery charger.

1.3 WARRANTY

A. Manufacturer's Warranty: Manufacturer agrees to repair or replace components of battery chargers that fail in materials or workmanship within specified warranty period.

1. Warranty Period: 2 years from date of Substantial Completion.

PART 2 - PRODUCTS

2.1 PERFORMANCE REQUIREMENTS

A. Electrical Components, Devices, and Accessories: Listed and labeled as defined in NFPA 70, by a qualified testing agency, and marked for intended location and application.

B. UL Compliance: Comply with UL 1236 for Category BBHH. OEM-supplied, open-frame chargers may be UL recognized to Category BBHH provided they are housed in a listed enclosure.

C. NFPA Compliance: Comply with NFPA 110.

D. Environmental Conditions: Battery charger shall withstand the following environmental conditions without mechanical or electrical damage or degradation of performance capability:

1. Relative Humidity: 5 to 95 percent.

2.2 BATTERY CHARGERS FOR EMERGENCY ENGINE GENERATORS

A. Manufacturers: Subject to compliance with requirements, available manufacturers offering products that may be incorporated into the Work include, but are not limited to the following:

1. Cummins Power Generation.
2. GE Power; General Electric Company.
3. Stored Energy Systems LLC.
4. Additional manufacturers submitted for and receiving engineer approval prior to bid.

B. Battery-Charger Operation: Current-limited, constant voltage, boost-and-float-type charger designed for batteries, with the following features:

1. Output Voltage Regulation: Charger regulates output to within plus or minus 0.5 percent of manufacturer-provided voltage settings despite variations of input voltage, input frequency, and output current.
2. Battery Thermal Compensation: Battery temperature compensation with adjustable slope, factory set at minus 0.18 percent per degree C, and equipped for sensing battery temperature.
3. Automatic Dead Battery Recharge: Charger automatically recharges a battery discharged to 0 V at full-rated output current, without the need for user intervention.
4. AC Input: Charger operates from any 47- to 63-Hz ac source with voltage ranging from 90- to 265-V rms.
5. Lead-Acid Battery Longevity and Safety Mode: Charger emulates vehicle duty for which starting batteries are designed to maximize battery life, minimize battery explosion risk, and minimize electrolyte loss in lead-acid batteries.
6. Charger Enclosure: NEMA 250, Type 3R (IP22), wall mounted and rated for generator duty with charger enclosure vibration resistance. Housing materials: aluminum or stainless steel.
7. Battery-Charger Status Indication: Output voltage and current meters on front panel.

2.3 SOURCE QUALITY CONTROL

A. Factory Tests: Test and inspect assembled battery chargers to manufacturer's written instructions. Verify NFPA 110 recharge performance by validating that battery charger is listed to UL 1236 Category BBHH on the UL certification database.

B. Battery charger will be considered defective if it does not pass tests and inspections.

C. Prepare test and inspection reports.

PART 3 - EXECUTION

3.1 BATTERY-CHARGER INSTALLATION

A. Examine areas, mounting locations, and conditions, with Installer present, for compliance with requirements for installation and other conditions affecting battery-charger performance.

B. Follow manufacturer's written instructions to prevent damage from static electricity. Provide clearances for service and ventilation.

C. Identify system components according to Section 260553 "Identification for Electrical Systems."

3.2 CONNECTIONS

A. Ground equipment according to Section 260526 "Grounding and Bonding for Electrical Systems."

B. Connect wiring according to Section 260519 "Low-Voltage Electrical Power Conductors and Cables." Provide branch-circuit overcurrent protection.

C. Comply with requirements for branch-circuit protection and service disconnects in Section 262816 "Enclosed Switches and Circuit Breakers."

3.3 FIELD QUALITY CONTROL

A. Testing Agency: Engage a qualified testing agency to perform tests and inspections.

B. Perform the following tests and inspections with the assistance of a factory-authorized service representative:

1. Verify that certification labels are properly installed. Verify NFPA 110 compliance by validating that battery charger is listed to UL 1236 Category BBHH on the UL certification database.
2. Verify that connections are secure and in the proper locations. Ensure wiring is correctly connected between charger and battery.
3. Operational Test: After electrical circuitry has been energized, apply input voltage to confirm proper unit operation.
4. Test and adjust alarms, display indicators, controls, and safeties.

C. Battery charger will be considered defective if it does not pass tests and inspections.

D. Prepare test and inspection reports.

3.4 DEMONSTRATION

A. Engage a factory-authorized service representative to train Owner's maintenance personnel to adjust, operate, and maintain battery chargers and related equipment.

END OF SECTION 263343

SECTION 263600 - TRANSFER SWITCHES

PART 1 - GENERAL

1.1 SUMMARY

A. Section includes automatic and nonautomatic transfer switches rated 600 V and less.

1.2 ACTION SUBMITTALS

A. Product Data: For each type of product.

1.3 CLOSEOUT SUBMITTALS

A. Operation and maintenance data.

1.4 WARRANTY

A. Manufacturer's Warranty: Manufacturer agrees to repair or replace components of transfer switch or transfer switch components that fail in materials or workmanship within specified warranty period.

1. Warranty Period: Two years from date of Substantial Completion.

PART 2 - PRODUCTS

2.1 PERFORMANCE REQUIREMENTS

A. Electrical Components, Devices, and Accessories: Listed and labeled as defined in NFPA 70, by a qualified testing agency, and marked for intended location and application.

B. Comply with NEMA ICS 1.

C. Comply with NFPA 99.

D. Comply with NFPA 110.

E. Comply with UL 1008 unless requirements of these Specifications are stricter.

F. Indicated Current Ratings: Apply as defined in UL 1008 for continuous loading and total system transfer, including tungsten filament lamp loads not exceeding 30 percent of switch ampere rating, unless otherwise indicated.

G. Tested Fault-Current Closing and Short-Circuit Ratings: Adequate for duty imposed by protective devices at installation locations in Project under the fault conditions indicated, based on testing according to UL 1008.

1. Where transfer switch includes internal fault-current protection, rating of switch and trip unit combination shall exceed indicated fault-current value at installation location.

H. Repetitive Accuracy of Solid-State Controls: All settings shall be plus or minus 2 percent or better over an operating temperature range of minus 20 to plus 70 deg C.

I. Resistance to Damage by Voltage Transients: Components shall meet or exceed voltage-surge withstand capability requirements when tested according to IEEE C62.62. Components shall meet or exceed voltage-impulse withstand test of NEMA ICS 1.

J. Electrical Operation: Accomplish by a nonfused, momentarily energized solenoid or electric-motor-operated mechanism. Switches for emergency or standby purposes shall be mechanically and electrically interlocked in both directions to prevent simultaneous connection to both power sources unless closed transition.

K. Service-Rated Transfer Switch:

1. Comply with UL 869A and UL 489.
2. Provide terminals for bonding the grounding electrode conductor to the grounded service conductor.
3. In systems with a neutral, the bonding connection shall be on the neutral bus.
4. Provide removable link for temporary separation of the service and load grounded conductors.
5. Surge Protective Device: Service rated.
6. Ground-Fault Protection: Comply with UL 1008 for normal and alternative buses.
7. Service Disconnecting Means: Externally operated, manual [**mechanically**] [**electrically**] actuated.

L. Enclosures: General-purpose NEMA 250, Type 1, complying with NEMA ICS 6 and UL 508, unless otherwise indicated.

2.2 AUTOMATIC / MANUAL TRANSFER SWITCHES

A. Manufacturers: Subject to compliance with requirements, available manufacturers offering products that may be incorporated into the Work include, but are not limited to the following:

1. ABB, Electrification Products Division.
2. Caterpillar, Inc.; Electric Power Division.

3. Eaton.
4. Generac Power Systems, Inc.
5. Additional manufacturers submitted for and receiving engineer approval prior to bid.

B. See engineering plans and additional manufacturer's specifications for information on transfer switches

2.3 SOURCE QUALITY CONTROL

A. Prepare test and inspection reports.

1. For each of the tests required by UL 1008, performed on representative devices, for emergency systems. Include results of test for the following conditions:

a. Overvoltage.
b. Undervoltage.
c. Loss of supply voltage.
d. Reduction of supply voltage.
e. Alternative supply voltage or frequency is at minimum acceptable values.
f. Temperature rise.
g. Dielectric voltage-withstand; before and after short-circuit test.
h. Overload.
i. Contact opening.
j. Endurance.
k. Short circuit.
l. Short-time current capability.
m. Receptacle withstand capability.
n. Insulating base and supports damage.

PART 3 - EXECUTION

3.1 INSTALLATION

A. See engineering drawings for transfer switch location.

B. Identify components according to Section 260553 "Identification for Electrical Systems."

C. Set field-adjustable intervals and delays, relays, and engine exerciser clock.

D. Comply with NECA 1.

3.2 CONNECTIONS

A. Wiring Method: Install cables in raceways and cable trays except within electrical enclosures. Conceal raceway and cables except in unfinished spaces.

1. Comply with requirements for raceways and boxes specified in Section 260533 "Raceways and Boxes for Electrical Systems."

B. Wiring within Enclosures: Bundle, lace, and train conductors to terminal points with no excess and without exceeding manufacturer's limitations on bending radii.

C. Ground equipment according to Section 260526 "Grounding and Bonding for Electrical Systems."

D. Route and brace conductors according to manufacturer's written instructions. and Section 260529 "Hangers and Supports for Electrical Systems." Do not obscure manufacturer's markings and labels.

E. Final connections to equipment shall be made with liquidtight, flexible metallic conduit no more than 18 inches (457 mm) in length.

3.3 FIELD QUALITY CONTROL

A. Perform the following tests and inspections with the assistance of a factory-authorized service representative:

1. Visual and Mechanical Inspection:

a. Compare equipment nameplate data with Drawings and Specifications.
b. Inspect physical and mechanical condition.
c. Inspect anchorage, alignment, grounding, and required clearances.
d. Verify that the unit is clean.
e. Verify appropriate lubrication on moving current-carrying parts and on moving and sliding surfaces.
f. Verify that manual transfer warnings are attached and visible.
g. Verify tightness of all control connections.
h. Inspect bolted electrical connections for high resistance using one of the following methods, or both:

1) Use of low-resistance ohmmeter.
2) Verify tightness of accessible bolted electrical connections by calibrated torque-wrench method according to manufacturer's published data.

i. Perform manual transfer operation.
j. Verify positive mechanical interlocking between normal and alternate sources.
k. Perform visual and mechanical inspection of surge arresters.
l. Inspect control power transformers.

1) Inspect for physical damage, cracked insulation, broken leads, tightness of connections, defective wiring, and overall general condition.
2) Verify that primary and secondary fuse or circuit-breaker ratings match Drawings.
3) Verify correct functioning of drawout disconnecting contacts, grounding contacts, and interlocks.

2. Electrical Tests:

    a. Perform insulation-resistance tests on all control wiring with respect to ground.
    b. Perform a contact/pole-resistance test. Compare measured values with manufacturer's acceptable values.
    c. Verify settings and operation of control devices.
    d. Calibrate and set all relays and timers.
    e. Verify phase rotation, phasing, and synchronized operation.
    f. Perform automatic transfer tests.
    g. Verify correct operation and timing of the following functions:

        1) Normal source voltage-sensing and frequency-sensing relays.
        2) Engine start sequence.
        3) Time delay on transfer.
        4) Alternative source voltage-sensing and frequency-sensing relays.
        5) Automatic transfer operation.
        6) Interlocks and limit switch function.
        7) Time delay and retransfer on normal power restoration.
        8) Engine cool-down and shutdown feature.

3. Measure insulation resistance phase-to-phase and phase-to-ground with insulation-resistance tester. Include external annunciation and control circuits. Use test voltages and procedure recommended by manufacturer. Comply with manufacturer's specified minimum resistance.

    a. Check for electrical continuity of circuits and for short circuits.
    b. Inspect for physical damage, proper installation and connection, and integrity of barriers, covers, and safety features.
    c. Verify that manual transfer warnings are properly placed.
    d. Perform manual transfer operation.

4. After energizing circuits, perform each electrical test for transfer switches stated in NETA ATS and demonstrate interlocking sequence and operational function for each switch at least three times.

    a. Simulate power failures of normal source to automatic transfer switches and retransfer from emergency source with normal source available.
    b. Simulate loss of phase-to-ground voltage for each phase of normal source.
    c. Verify time-delay settings.
    d. Verify pickup and dropout voltages by data readout or inspection of control settings.
    e. Perform contact-resistance test across main contacts and correct values exceeding 500 microhms and values for one pole deviating by more than 50 percent from other poles.
    f. Verify proper sequence and correct timing of automatic engine starting, transfer time delay, retransfer time delay on restoration of normal power, and engine cool-down and shutdown.

5. Ground-Fault Tests: Coordinate with testing of ground-fault protective devices for power delivery from both sources.

    a. Verify grounding connections and locations and ratings of sensors.

B. Coordinate tests with tests of generator and run them concurrently.

C. Report results of tests and inspections in writing. Record adjustable relay settings and measured insulation and contact resistances and time delays. Attach a label or tag to each tested component indicating satisfactory completion of tests.

D. Transfer switches will be considered defective if they do not pass tests and inspections.

E. Remove and replace malfunctioning units and retest as specified above.

F. Prepare test and inspection reports.

G. Infrared Scanning: After Substantial Completion, but not more than 60 days after Final Acceptance, perform an infrared scan of each switch. Remove all access panels so joints and connections are accessible to portable scanner.

1. Instrument: Use an infrared scanning device designed to measure temperature or to detect significant deviations from normal values. Provide calibration record for device.
2. Record of Infrared Scanning: Prepare a certified report that identifies switches checked and that describes scanning results. Include notation of deficiencies detected, remedial action taken, and observations after remedial action.
3. Follow-up Infrared Scanning: Perform an additional follow-up infrared scan of each switch 11 months after date of Substantial Completion.

3.4 DEMONSTRATION

A. Train Owner's maintenance personnel to adjust, operate, and maintain transfer switches and related equipment.

B. Training shall include testing ground-fault protective devices and instructions to determine when the ground-fault system shall be retested. Include instructions on where ground-fault sensors are located and how to avoid negating the ground-fault protection scheme during testing and circuit modifications.

C. Coordinate this training with that for generator equipment.

END OF SECTION 263600

SECTION 264113 - LIGHTNING PROTECTION FOR STRUCTURES

PART 1 - GENERAL

1.1 SUMMARY

A. Section includes lightning protection system for the following:

1. Ordinary structures.

1.2 ACTION SUBMITTALS

A. Product Data: For each type of product.

PART 2 - PRODUCTS

2.1 MANUFACTURERS

A. <Manufacturers: Subject to compliance with requirements, available manufacturers offering products that may be incorporated into the Work include the following:

1. Advanced Lightning Technology, Ltd.
2. East Coast Lightning Equipment Inc.
3. Harger Lightning & Grounding.
4. Heary Bros. Lightning Protection Co. Inc.
5. Independent Protection Co.
6. National Lightning Protection.
7. nVent (ERICO).
8. Preferred Lightning Protection.
9. Robbins Lightning, Inc.
10. Thompson Lightning Protection, Inc.
11. Additional manufacturers submitted for receiving engineer approval prior to bid.

2.2 PERFORMANCE REQUIREMENTS

A. NFPA Lightning Protection Standard: Comply with NFPA 780 requirements for Class I buildings.

B. UL Lightning Protection Standard: Comply with UL 96A requirements for Class I buildings.

C. Lightning Protection Components, Devices, and Accessories: Listed and labeled by a qualified testing agency as complying with UL 96, and marked for intended location and application.

PART 3 - EXECUTION

3.1 INSTALLATION

A. Install lightning protection components and systems.

B. Install conductors with direct paths from air terminals to ground connections. Avoid bends less than 90 degrees and 8 inches in radius and narrow loops.

C. Conceal conductors within normal view from exterior locations at grade within 200 feet of building.

D. Ground Ring Electrode: The conductor shall be not less than the main-size lightning conductor.

3.2 CONNECTIONS

A. Aboveground concealed connections, and connections in earth or concrete, shall be done by exothermic welds or by high-compression fittings listed for the purpose.

B. Aboveground exposed connections shall be done using the following types of connectors, listed and labeled for the purpose

C. Bonding Straps and Jumpers: Install in locations accessible for inspection and maintenance, except where routed through short lengths of conduit.

1. Bonding to Structure: Bond straps directly to basic structure, taking care not to penetrate any adjacent parts.
2. Bonding to Equipment Mounted on Vibration Isolation Hangers and Supports: Install bonding so vibration is not transmitted to rigidly mounted equipment.

3.3 FIELD QUALITY CONTROL

A. Special Inspections: Engage a qualified special inspector to perform the following special inspections:

1. Perform inspections as required to obtain a UL Master Label for system.
2. Perform inspections to obtain an LPI certification.

B. Prepare test and inspection reports and certificates.

END OF SECTION 264113

SECTION 265119 - LED INTERIOR LIGHTING

PART 1 - GENERAL

1.1 SUMMARY

A. Section includes the following types of LED luminaires:

1. Cylinders.
2. Downlight.
3. Strip light.
4. Surface mount, linear.
5. Surface mount, nonlinear.
6. Suspended, nonlinear.

1.2 ACTION SUBMITTALS

A. Product Data: For each type of product.

1. Manufacturers' Certified Data: Photometric data certified by manufacturer's laboratory with a current accreditation under the National Voluntary Laboratory Accreditation Program for Energy Efficient Lighting Products.
2. Testing Agency Certified Data: For indicated luminaires, photometric data certified by a qualified independent testing agency. Photometric data for remaining luminaires shall be certified by manufacturer

1.3 CLOSEOUT SUBMITTALS

A. Operation and maintenance data.

1.4 QUALITY ASSURANCE

A. Luminaire Photometric Data Testing Laboratory Qualifications: Luminaire manufacturer's laboratory that is accredited under the NVLAP for Energy Efficient Lighting Products.

B. Luminaire Photometric Data Testing Laboratory Qualifications: Provided by an independent agency, with the experience and capability to conduct the testing indicated, that is an NRTL as defined by OSHA in 29 CFR 1910.7, accredited under the NVLAP for Energy Efficient Lighting Products, and complying with the applicable IES testing standards.

C. Provide luminaires from a single manufacturer for each luminaire type.

D. Each luminaire type shall be binned within a three-step MacAdam Ellipse to ensure color consistency among luminaires.

1.5 WARRANTY

A. Warranty: Manufacturer and Installer agree to repair or replace components of luminaires that fail in materials or workmanship within specified warranty period.

B. Warranty Period: Five year(s) from date of Substantial Completion.

PART 2 - PRODUCTS

2.1 PERFORMANCE REQUIREMENTS

A. Ambient Temperature: 41 to 104 deg F.

1. Relative Humidity: Zero to 95 percent.

B. Altitude: Sea level to 5000 feet.

2.2 LUMINAIRE REQUIREMENTS

A. Electrical Components, Devices, and Accessories: Listed and labeled as defined in NFPA 70, by a qualified testing agency, and marked for intended location and application.

B. Factory-Applied Labels: Comply with UL 1598. Include recommended lamps. Locate labels where they will be readily visible to service personnel, but not seen from normal viewing angles when lamps are in place.

1. Label shall include the following lamp characteristics:

a. "USE ONLY" and include specific lamp type.
b. Lamp diameter, shape, size, wattage, and coating.
c. CCT and CRI.

C. Recessed luminaires shall comply with NEMA LE 4.

2.3 CYLINDER.

A. Manufacturers: Subject to compliance with requirements, available manufacturers offering products that may be incorporated into the Work include the following:

1. Juno Lighting Group by Schneider Electric.
2. Lithonia Lighting; Acuity Brands Lighting, Inc.
3. Sea Gull Lighting.

4. Additional manufacturers submitted for receiving engineer approval prior to bid.

B. See engineering drawings for specifications of lighting fixtures.

2.4 DOWNLIGHT.

A. Manufacturers: Subject to compliance with requirements, available manufacturers offering products that may be incorporated into the Work include the following:

1. Juno Lighting Group by Schneider Electric.
2. Lithonia Lighting; Acuity Brands Lighting, Inc.
3. Sea Gull Lighting.
4. Additional manufacturers submitted for receiving engineer approval prior to bid.

B. See engineering drawings for specifications of lighting fixtures.

2.5 STRIP LIGHT.

A. Manufacturers: Subject to compliance with requirements, available manufacturers offering products that may be incorporated into the Work include the following:

1. Eaton (Lighting).
2. Lithonia Lighting; Acuity Brands Lighting, Inc.
3. Signify North America Corporation (formerly Philips Lighting).
4. Additional manufacturers submitted for receiving engineer approval prior to bid.

B. See engineering drawings for specifications of lighting fixtures.

2.6 SURFACE MOUNT, LINEAR.

A. Manufacturers: Subject to compliance with requirements, available manufacturers offering products that may be incorporated into the Work include the following:

1. Eaton (Lighting).
2. Elite Lighting Corporation.
3. Lithonia Lighting; Acuity Brands Lighting, Inc.
4. Additional manufacturers submitted for receiving engineer approval prior to bid.

B. See engineering drawings for specifications of lighting fixtures.

2.7 SURFACE MOUNT, NONLINEAR

A. Manufacturers: Subject to compliance with requirements, available manufacturers offering products that may be incorporated into the Work include the following:

1. Eaton (Lighting).

2. Elite Lighting Corporation.
3. Lithonia Lighting; Acuity Brands Lighting, Inc.
4. Peerless: Acuity Brands Lighting, Inc.
5. Signify North America Corporation (formerly Philips Lighting).
6. Tech Lighting.
7. Additional manufacturers submitted for receiving engineer approval prior to bid.

B. See engineering drawings for specifications of lighting fixtures.

2.8 SUSPENDED, LINEAR.

A. Manufacturers: Subject to compliance with requirements, available manufacturers offering products that may be incorporated into the Work include the following:

1. Eaton (Lighting).
2. Lithonia Lighting; Acuity Brands Lighting, Inc.
3. Tech Lighting.
4. Additional manufacturers submitted for receiving engineer approval prior to bid.

B. See engineering drawings for specifications of lighting fixtures.

2.9 SUSPENDED, NONLINEAR.

A. Manufacturers: Subject to compliance with requirements, available manufacturers offering products that may be incorporated into the Work include the following:

1. Eaton (Lighting).
2. Edge Lighting.
3. Elite Lighting Corporation.
4. Focal Point LLC.
5. Lithonia Lighting; Acuity Brands Lighting, Inc.
6. Additional manufacturers submitted for receiving engineer approval prior to bid.

B. See engineering drawings for specifications of lighting fixtures.

2.10 MATERIALS

A. Metal Parts:

1. Free of burrs and sharp corners and edges.
2. Sheet metal components shall be steel unless otherwise indicated.
3. Form and support to prevent warping and sagging.

B. Steel:

1. ASTM A36/A36M for carbon structural steel.
2. ASTM A568/A568M for sheet steel.

C. Stainless Steel:

1. 1. Manufacturer's standard grade.
2. 2. Manufacturer's standard type, ASTM A240/240M.

D. Galvanized Steel: ASTM A653/A653M.

E. Aluminum: ASTM B209.

2.11 METAL FINISHES

A. Variations in finishes are unacceptable in the same piece. Variations in finishes of adjoining components are acceptable if they are within the range of approved Samples and if they can be and are assembled or installed to minimize contrast.

2.12 LUMINAIRE SUPPORT

A. Comply with requirements in Section 260529 "Hangers and Supports for Electrical Systems" for channel and angle iron supports and nonmetallic channel and angle supports.

B. Single-Stem Hangers: 1/2-inch steel tubing with swivel ball fittings and ceiling canopy. Finish same as luminaire.

C. Wires: ASTM A641/A641M, Class 3, soft temper, zinc-coated steel, 12 gage.

D. Rod Hangers: 3/16-inch minimum diameter, cadmium-plated, threaded steel rod.

E. Hook Hangers: Integrated assembly matched to luminaire, line voltage, and equipment with threaded attachment, cord, and locking-type plug.

PART 3 - EXECUTION

3.1 INSTALLATION

A. Comply with NECA 1.

B. Install luminaires level, plumb, and square with ceilings and walls unless otherwise indicated.

C. Install lamps in each luminaire.

D. Supports:

1. Sized and rated for luminaire weight.
2. Able to maintain luminaire position after cleaning and relamping.
3. Provide support for luminaire without causing deflection of ceiling or wall.

4. Luminaire-mounting devices shall be capable of supporting a horizontal force of 100 percent of luminaire weight and a vertical force of 400 percent of luminaire weight.

E. Comply with requirements in Section 260519 "Low-Voltage Electrical Power Conductors and Cables" for wiring connections.

3.2 IDENTIFICATION

A. Identify system components, wiring, cabling, and terminals. Comply with requirements for identification specified in Section 260553 "Identification for Electrical Systems."

3.3 FIELD QUALITY CONTROL

A. Perform the following tests and inspections:

1. Operational Test: After installing luminaires, switches, and accessories, and after electrical circuitry has been energized, test units to confirm proper operation.
2. Test for Emergency Lighting: Interrupt power supply to demonstrate proper operation. Verify transfer from normal power to battery power and retransfer to normal.

B. Luminaire will be considered defective if it does not pass operation tests and inspections.

C. Prepare test and inspection reports.

3.4 STARTUP SERVICE

A. Comply with requirements for startup specified in Section 260943.16 "Addressable-Luminaire Lighting Controls."

B. Comply with requirements for startup specified in Section 260943.23 "Relay-Based Lighting Controls."

END OF SECTION 265119

SECTION 265213 - EMERGENCY AND EXIT LIGHTING

PART 1 - GENERAL

1.1 SUMMARY

A. Section Includes:

1. Emergency lighting units.
2. Exit signs.
3. Luminaire supports.

1.2 DEFINITIONS

A. CCT: Correlated color temperature.

B. CRI: Color Rendering Index.

C. Emergency Lighting Unit: A lighting unit with integral or remote emergency battery powered supply and the means for controlling and charging the battery and unit operation.

D. Fixture: See "Luminaire" Paragraph.

E. Lumen: Measured output of lamp and luminaire, or both.

F. Luminaire: Complete lighting unit, including lamp, reflector, and housing.

1.3 ACTION SUBMITTALS

A. Product Data: For each type of emergency lighting unit, exit sign, and emergency lighting support, arranged by designation.

PART 2 - PRODUCTS

2.1 GENERAL REQUIREMENTS FOR EMERGENCY LIGHTING

A. Electrical Components, Devices, and Accessories: Listed and labeled as defined in NFPA 70, by a qualified testing agency, and marked for intended location and application.

B. NRTL Compliance: Fabricate and label emergency lighting units, exit signs, and batteries to comply with UL 924.

C. Comply with NFPA 70 and NFPA 101.

D. Comply with NEMA LE 4 for recessed luminaires.

E. Comply with UL 1598 for recessed luminaires.

F. Internal Type Emergency Power Unit: Self-contained, modular, battery-inverter unit, factory mounted within luminaire body.

1. Operation: Relay automatically turns lamp on when power-supply circuit voltage drops to 80 percent of nominal voltage or below. Lamp automatically disconnects from battery when voltage approaches deep-discharge level. When normal voltage is restored, relay disconnects lamps from battery, and battery is automatically recharged and floated on charger.
2. Environmental Limitations: Rate equipment for continuous operation under the following conditions unless otherwise indicated:

    a. Ambient Temperature: Less than 0 deg F or exceeding 104 deg F, with an average value exceeding 95 deg F over a 24-hour period.

3. Test Push-Button and Indicator Light: Visible and accessible without opening fixture or entering ceiling space.

    a. Push Button: Push-to-test type, in unit housing, simulates loss of normal power and demonstrates unit operability.
    b. Indicator Light: LED indicates normal power on. Normal glow indicates trickle charge; bright glow indicates charging at end of discharge cycle.

4. Battery: Sealed, maintenance-free, nickel-cadmium type.
5. Charger: Fully automatic, solid-state, constant-current type with sealed power transfer relay.
6. Integral Self-Test: Factory-installed electronic device automatically initiates code-required test of unit emergency operation at required intervals. Test failure is annunciated by an integral audible alarm and a flashing red LED.

G. External Type: Self-contained, modular, battery-inverter unit, suitable for powering one or more lamps, remote mounted from luminaire.

1. Emergency Connection: Operate LED lamp continuously. Connect unswitched circuit to battery-inverter unit and switched circuit to luminaire.
2. Operation: Relay automatically turns lamp on when power-supply circuit voltage drops to 80 percent of nominal voltage or below. Lamp automatically disconnects from battery when voltage approaches deep-discharge level. When normal voltage is restored, relay disconnects lamps from battery, and battery is automatically recharged and floated on charger.
3. Nightlight Connection: Operate lamp in a remote fixture continuously.
4. Battery: Sealed, maintenance-free, nickel-cadmium type.
5. Charger: Fully automatic, solid-state, constant-current type.
6. Housing: NEMA 250, Type 1 enclosure listed for installation inside, on top of, or remote from luminaire. Remote assembly shall be located no less than half the distance recommended by the emergency power unit manufacturer, whichever is less.

7. Test Push Button: Push-to-test type, in unit housing, simulates loss of normal power and demonstrates unit operability.
8. LED Indicator Light: Indicates normal power on. Normal glow indicates trickle charge; bright glow indicates charging at end of discharge cycle.
9. Integral Self-Test: Factory-installed electronic device automatically initiates code-required test of unit emergency operation at required intervals. Test failure is annunciated by an integral audible alarm and a flashing red LED.

2.2 EMERGENCY LIGHTING

A. General Requirements for Emergency Lighting Units: Self-contained units.

B. Emergency Luminaires:

1. Manufacturers: Subject to compliance with requirements, available manufacturers offering products that may be incorporated into the Work include the following:

    a. Dual-Lite.
    b. Eaton (Lighting).
    c. Juno Lighting Group by Schneider Electric.
    d. Lithonia Lighting; Acuity Brands Lighting, Inc.
    e. Additional manufacturers submitted for and receiving engineer approval prior to bid.
2. Emergency Luminaires: as indicated on Interior Luminaire Schedule Drawings, with the following additional features:

    a. Operating at nominal voltage of 120 V ac
    b. External emergency power unit.
    c. Rated for installation in damp locations, and for sealed and gasketed fixtures in wet locations.

C. Emergency Lighting Unit:

1. Manufacturers: Subject to compliance with requirements, available manufacturers offering products that may be incorporated into the Work include the following:

    a. Dual-Lite.
    b. Eaton (Lighting).
    c. Evenlite, Inc.
    d. Lithonia Lighting; Acuity Brands Lighting, Inc.
    e. Additional manufacturers submitted for and receiving engineer approval prior to bid.

2. Emergency Lighting Unit: as indicated on Interior Luminaire Schedule Drawings.
3. Operating at nominal voltage of 120 V ac.
4. Wall with universal junction box adaptor.
5. Two LED lamp heads.
6. Internal emergency power unit.
7. External emergency power unit.

2.3 EXIT SIGNS

A. Internally Lighted Signs:

1. Manufacturers: Subject to compliance with requirements, available manufacturers offering products that may be incorporated into the Work include the following:

   a. Eaton (Lighting).
   b. Evenlite, Inc.
   c. Hubbell Incorporated, Lighting.
   d. Lithonia Lighting; Acuity Brands Lighting, Inc.
   e. Kenall.
   f. Additional manufacturers submitted for and receiving engineer approval prior to bid.

2. Operating at nominal voltage of 120 V ac.
3. See engineering plans for how exit signs are powered.

2.4 MATERIALS

A. Metal Parts:

1. Free of burrs and sharp corners and edges.
2. Sheet metal components shall be steel unless otherwise indicated.
3. Form and support to prevent warping and sagging.

B. Doors, Frames, and Other Internal Access:

1. Smooth operating, free of light leakage under operating conditions.
2. Designed to permit relamping without use of tools.
3. Designed to prevent doors, frames, lenses, diffusers, and other components from falling accidentally during relamping and when secured in operating position.

C. Conduit: Electrical metallic tubing minimum 3/4 inch in diameter.

2.5 METAL FINISHES

A. Appearance of Finished Work: Noticeable variations in same piece are not acceptable. Variations in appearance of adjoining components are acceptable if they are within the range of approved Samples and are assembled or installed to minimize contrast.

2.6 LUMINAIRE SUPPORT COMPONENTS

A. Comply with requirements in Section 260529 "Hangers and Supports for Electrical Systems" for channel and angle iron supports and nonmetallic channel and angle supports.

PART 3 - EXECUTION

3.1 INSTALLATION

A. Comply with NECA 1.

B. Install luminaires level, plumb, and square with ceilings and walls unless otherwise indicated.

C. Install lamps in each luminaire.

D. Supports:

1. Sized and rated for luminaire and emergency power unit weight.
2. Able to maintain luminaire position when testing emergency power unit.
3. Provide support for luminaire and emergency power unit without causing deflection of ceiling or wall.
4. Luminaire-mounting devices shall be capable of supporting a horizontal force of 100 percent of luminaire and emergency power unit weight and vertical force of 400 percent of fixture weight.

E. Wall-Mounted Luminaire Support:

1. Attached to structural members in walls.
2. Do not attach fixtures directly to gypsum board.

F. Suspended Luminaire Support:

1. Pendants and Rods: Where longer than 48 inches, brace to limit swinging.
2. Stem-Mounted, Single-Unit Fixtures: Suspend with twin-stem hangers. Support with approved outlet box and accessories that hold stem and provide damping of fixture oscillations. Support outlet box vertically to building structure using approved devices.
3. Do not use ceiling grid as support for pendant luminaires. Connect support wires or rods to building structure.

G. Ceiling Grid Mounted Luminaires:

1. Secure to any required outlet box.
2. Secure emergency power unit using approved fasteners in a minimum of four locations, spaced near corners of emergency power unit.

H. Identify system components, wiring, cabling, and terminals. Comply with requirements for identification specified in Section 260553 "Identification for Electrical Systems."

3.2 FIELD QUALITY CONTROL

A. Perform the following tests and inspections:

1. Test for Emergency Lighting: Interrupt power supply to demonstrate proper operation. Verify transfer from normal power to battery power and retransfer to normal.

B. Luminaire will be considered defective if it does not pass operation tests and inspections.

C. Prepare test and inspection reports.

END OF SECTION 265213

SECTION 265619 - LED EXTERIOR LIGHTING

PART 1 - GENERAL

1.1 SUMMARY

A. Section Includes:

1. Exterior solid-state luminaires that are designed for and exclusively use LED lamp technology.

B. Related Requirements:

1. Section 260923 "Lighting Control Devices" for automatic control of lighting, including time switches, photoelectric relays, occupancy sensors, and multipole lighting relays and contactors.
2. Section 260926 "Lighting Control Panelboards" for panelboard-based lighting control.

1.2 DEFINITIONS

A. CCT: Correlated color temperature.

B. CRI: Color rendering index.

C. Fixture: See "Luminaire."

D. IP: International Protection or Ingress Protection Rating.

E. Lumen: Measured output of lamp and luminaire, or both.

F. Luminaire: Complete lighting unit, including lamp, reflector, and housing.

1.3 ACTION SUBMITTALS

A. Product Data: For each type of luminaire.

1.4 FIELD CONDITIONS

A. Mark locations of exterior luminaires for approval by Architect prior to the start of luminaire installation.

1.5 WARRANTY

A. Warranty: Manufacturer and Installer agree to repair or replace components of luminaires that fail in materials or workmanship within specified warranty period.

1. Warranty Period: 2 year(s) from date of Substantial Completion.

PART 2 - PRODUCTS

2.1 LUMINAIRE REQUIREMENTS

A. Electrical Components, Devices, and Accessories: Listed and labeled as defined in NFPA 70, by a qualified testing agency, and marked for intended location and application.

B. Nominal Operating Voltage: 120 V ac.

C. Lamp Rating: Lamp marked for outdoor use.

D. Source Limitations:
1. For luminaires, obtain each color, grade, finish, type, and variety of luminaire from single source with resources to provide products of consistent quality in appearance and physical properties.

2.2 LUMINAIRE TYPES

A. Exterior Fixtures:

1. See Engineering drawings for specifications of lighting fixtures.

2. Manufacturers: Subject to compliance with requirements, available manufacturers offering products that may be incorporated into the Work include the following:

a. Eaton (Lighting).
b. H.E. Williams.
c. Juno Lighting Group by Schneider Electric.
d. Lithonia Lighting; Acuity Brands Lighting, Inc.
e. RAB Lighting.
f. Signify North America Corporation (formerly Philips Lighting).
g. Additional manufacturers submitted for receiving engineer approval prior to bid.

2.3 MATERIALS

A. Metal Parts: Free of burrs and sharp corners and edges.

B. Doors, Frames, and Other Internal Access: Smooth operating, free of light leakage under operating conditions, and designed to permit relamping without use of tools. Designed to

prevent doors, frames, lenses, diffusers, and other components from falling accidentally during relamping and when secured in operating position. Doors shall be removable for cleaning or replacing lenses.

C. Diffusers and Globes:

1. Acrylic Diffusers: 100 percent virgin acrylic plastic, with high resistance to yellowing and other changes due to aging, exposure to heat, and UV radiation.
2. Glass: Annealed crystal glass unless otherwise indicated.
3. Lens Thickness: At least 0.125 inch minimum unless otherwise indicated.

D. Lens and Refractor Gaskets: Use heat- and aging-resistant resilient gaskets to seal and cushion lenses and refractors in luminaire doors.

E. Housings:

1. Rigidly formed, weather- and light-tight enclosure that will not warp, sag, or deform in use.
2. Provide filter/breather for enclosed luminaires.

2.4 FINISHES

A. Variations in Finishes: Noticeable variations in same piece are unacceptable. Variations in appearance of adjoining components are acceptable if they are within the range of approved Samples and are assembled or installed to minimize contrast.

B. Luminaire Finish: Manufacturer's standard paint applied to factory-assembled and -tested luminaire before shipping. Where indicated, match finish process and color of pole or support materials.

C. Factory-Applied Finish for Aluminum Luminaires: Comply with NAAMM's "Metal Finishes Manual for Architectural and Metal Products" for recommendations for applying and designating finishes.

1. Finish designations prefixed by AA comply with the system established by the Aluminum Association for designating aluminum finishes.
2. Natural Satin Finish: Provide fine, directional, medium satin polish (AA-M32); buff complying with AA-M20 requirements; and seal aluminum surfaces with clear, hard-coat wax.
3. Class I, Clear-Anodic Finish: AA-M32C22A41 (Mechanical Finish: Medium satin; Chemical Finish: Etched, medium matte; Anodic Coating: Architectural Class I, clear coating 0.018 mm or thicker) complying with AAMA 611.
4. Class I, Color-Anodic Finish: AA-M32C22A42/A44 (Mechanical Finish: Medium satin; Chemical Finish: Etched, medium matte; Anodic Coating: Architectural Class I, integrally colored or electrolytically deposited color coating 0.018 mm or thicker), complying with AAMA 611.

    a. Color: Selected by architect.

D. Factory-Applied Finish for Steel Luminaires: Comply with NAAMM's "Metal Finishes Manual for Architectural and Metal Products" for recommendations for applying and designating finishes.

1. Surface Preparation: Clean surfaces to comply with SSPC-SP 1, to remove dirt, oil, grease, and other contaminants that could impair paint bond. Grind welds and polish surfaces to a smooth, even finish. Remove mill scale and rust, if present, from uncoated steel, complying with SSPC-SP 5/NACE No. 1 or SSPC-SP 8.
2. Exterior Surfaces: Manufacturer's standard finish consisting of one or more coats of primer and two finish coats of high-gloss, high-build polyurethane enamel.

a. Color:

1) As selected from manufacturer's standard catalog of colors.

2.5 LUMINAIRE SUPPORT COMPONENTS

A. Comply with requirements in Section 260529 "Hangers and Supports for Electrical Systems" for channel and angle iron supports and nonmetallic channel and angle supports.

PART 3 - EXECUTION

3.1 GENERAL INSTALLATION REQUIREMENTS

A. Comply with NECA 1.

B. Use fastening methods and materials selected to resist seismic forces defined for the application and approved by manufacturer.

C. Install lamps in each luminaire.

D. Fasten luminaire to structural support.

E. Supports:

1. Sized and rated for luminaire weight.
2. Able to maintain luminaire position after cleaning and relamping.
3. Support luminaires without causing deflection of finished surface.
4. Luminaire-mounting devices shall be capable of supporting a horizontal force of 100 percent of luminaire weight and a vertical force of 400 percent of luminaire weight.

F. Wall-Mounted Luminaire Support:

1. Attached to structural members in walls.

G. Wiring Method: Install cables in raceways. Conceal raceways and cables.

H. Coordinate layout and installation of luminaires with other construction.

I. Adjust luminaires that require field adjustment or aiming. Include adjustment of photoelectric device to prevent false operation of relay by artificial light sources, favoring a north orientation.

J. Comply with requirements in Section 260519 "Low-Voltage Electrical Power Conductors and Cables" and Section 260533 "Raceways and Boxes for Electrical Systems" for wiring connections and wiring methods.

3.2 CORROSION PREVENTION

A. Aluminum: Do not use in contact with earth or concrete. When in direct contact with a dissimilar metal, protect aluminum by insulating fittings or treatment.

B. Steel Conduits: Comply with Section 260533 "Raceways and Boxes for Electrical Systems." In concrete foundations, wrap conduit with 0.010-inch-thick, pipe-wrapping plastic tape applied with a 50 percent overlap.

3.3 IDENTIFICATION

A. Identify system components, wiring, cabling, and terminals. Comply with requirements for identification specified in Section 260553 "Identification for Electrical Systems."

3.4 FIELD QUALITY CONTROL

A. Inspect each installed luminaire for damage. Replace damaged luminaires and components.

B. Perform the following tests and inspections:

1. Operational Test: After installing luminaires, switches, and accessories, and after electrical circuitry has been energized, test units to confirm proper operation.
2. Verify operation of photoelectric controls.

C. Illumination Tests:

1. Measure light intensities at night. Use photometers with calibration referenced to NIST standards. Comply with the following IES testing guide(s):

    a. IES LM-5.
    b. IES LM-50.
    c. IES LM-52.
    d. IES LM-64.
    e. IES LM-72.

2. Operational Test: After installing luminaires, switches, and accessories, and after electrical circuitry has been energized, test units to confirm proper operation.

D. Luminaire will be considered defective if it does not pass tests and inspections.

E. Prepare a written report of tests, inspections, observations, and verifications indicating and interpreting results. If adjustments are made to lighting system, retest to demonstrate compliance with standards.

3.5 DEMONSTRATION

A. Train Owner's maintenance personnel to adjust, operate, and maintain luminaires and photocell relays.

END OF SECTION 265619

STS-1000
TELECOMMUNICATIONS WIRING GUIDELINES



STATE TELECOMMUNICATIONS SERVICES
919-981-5555

TABLE OF CONTENTS

1.0 INTRODUCTION 5

1.1 Subject: 5

1.2 Intent: 5

1.3 Authority: 5

1.4 Scope: 5

1.5 Hazardous Material Handling: 6

1.6 Purpose: 6

2.0 APPROACH 7

3.0 WIRING SYSTEM ELEMENTS 7

3.1 Horizontal cabling / wiring: 7

3.2 Telecommunications rooms: 7

3.3 Backbone wiring: 8

3.4 Entrance facility: 8

3.5 Campus distribution: 8

4.0 HORIZONTAL WIRING 8

4.1 Structure: 8

4.2 Major items: 9

4.2.1 Conduit Cable Capacity: 9

4.3 Outlets and Jacks: 13

4.3.1 Cable and Jack Specifications: 13

4.3.2 Location and Spacing: 14

4.3.3 Acceptable cables: 14

4.3.4 Electrical Service: 14

5.0 TELECOMMUNICATIONS ROOMS 15

5.1 Riser Rooms: 15

5.2 Size: 15

5.3 A C Power Outlets: **16**

5.4 Wall Space and Layout: **16**
5.4.1 Equipment Layout within Rack: 17

5.5 Cross Connect Field: **17**

6.0 BACKBONE CABLING **19**

6.1 Riser Design: **19**

6.2 Acceptable cables: **19**

7.0 ENTRANCE FACILITY **19**

7.1 National Electrical Code Adherence: **20**

7.3 Grounding: **20**

7.4 Surge Protectors: **21**

7.5 Sneak Current Fuses: **21**

7.6 Entrance Conduit: **21**

7.7 Innerduct: **21**

8.0 CAMPUS DESIGN **22**

9.0 HANDICAP AND OTHER SPECIAL REQUIREMENTS **24**

9.1 Handicap Requirements: **24**

9.2 Elevator Requirements: **25**
9.2.1 Elevator Telephone: 26
9.2.2 Elevator Wiring: 26
9.2.3 Dial Tone: 26
9.2.4 Elevator Conduit: 26
9.2.5 Backboard: 26

9.3 Code Compliance: **26**

10.0 ADMINISTRATION **27**

10.2 Labeling: **27**

10.3 Cable Tracking: **28**

10.4 Color Coding: **28**

10.5 Records: **29**

11.0 TESTING: **34**

11.1 Multipair UTP Feeder Testing: **34**

11.2 UTP Category 5e and Category 6 Testing Parameters **34**

11.3 Fiber Optic Testing: **34**

GLOSSARY **37**

APPENDIX A: **40**

Recommended Cable Specifications **40**

APPENDIX B: **42**

Recommended Connector Specifications **42**

REFERENCES – THE STATE OF NORTH CAROLINA EXPECTS AND ENFORCES STRICT ADHERENCE TO THE LATEST PUBLISHED VERSIONS OF THE CODES AND STANDARDS REFERENCED ON PAGE 45. ..... **45**

1.0 INTRODUCTION

1.1 Subject:

Telecommunications wiring guidelines apply to the State of North Carolina Executive Branch Agencies. Notwithstanding any other provision of law, North Carolina universities, community colleges, public school systems and local governmental entities may use the information technology programs, services, or contracts offered by the Office of Information Technology Services, including information technology procurement, in accordance with the statutes, policies, and rules of the Office of Information Technology Services. “Local governmental entities” includes local school administrative units, as defined in G.S. 115-C5, and community colleges. Local governmental entities are not required to comply with otherwise applicable competitive bidding requirements when using contracts established by the Office of Information Technology Services. Any other State entities may also use the information technology programs, services, or contracts established by the Office of Information Technology Services, including information technology procurement, in accordance with the statutes, policies, and rules of the Office of Information Technology Services.

1.2 Intent:

It is desired to have a uniform wiring plan for voice, data, image, and video to allow flexibility for personnel changes, office renovations and equipment migration and updates. This cabling system is based on a structured cabling system that is not vendor proprietary and conforms to the TIA / EIA-568-B Commercial Building Wiring Standards. **This document is meant to be dynamic and will change as official standards change.**

1.3 Authority:

N.C.G.S. 147-33.91States the Powers and Duties of the Office of Information Technology Services. N.C.G.S. 147-33.82 States the Power of the State of NC Chief Information Officer (CIO).

1.4 Scope:

These guidelines are intended to provide advisory information for all new state buildings and major renovations. For retrofitting and telecommunications recabling, these guidelines should be used unless there is a strong business case for not doing so. Specifically these guidelines are for wiring in:

* Newly constructed buildings
* Buildings undergoing major renovations
* New long-term leased occupancy
* New multi-building networks with state owned fiber or wire cable

1.5 Hazardous Material Handling:

ANY CONTRACTOR WORKING UNDER CONTRACTUAL AGREEMENT WITH ANY STATE AGENCY, PUBLIC SCHOOL SYSTEM, COMMUNITY COLLEGE, UNIVERSITY, COUNTY, CITY OR LOCAL GOVERNMENTAL AGENCY WITHIN THE STATE OF NORTH CAROLINA SHALL BE RESPONSIBLE FOR CONTACTING THE OWNER OF ANY BUILDING (S) IN WHICH THE DESCRIBED WORK UNDER CONTRACT IS TO BE PERFORMED TO DETERMINE WHETHER ASBESTOS CONTAINING MATERIALS (ACM) AND/OR PRESUMED ASBESTOS CONTAINING MATERIALS (PACM) ARE LOCATED IN SAID BUILDING (S). ONCE THE EXISTENCE OF ACM OR PACM HAS BEEN IDENTIFIED, IT SHALL BE THE CONTRACTOR'S SOLE RESPONSIBILITY TO TAKE NECESSARY SPECIAL PRECAUTIONS AND ACTIONS TO PROTECT ITS EMPLOYEES, SUBCONTRACTORS, THE GENERAL PUBLIC, AND THE BUILDING AND STRUCTURE FROM EXPOSURE TO ASBESTOS WHILE PERFORMING ANY WORK UNDER CONTRACT. THE CONTRACTOR SHALL COMPLY WITH ALL RULES AND GUIDELINES SPECIFIED BY OSHA, EPA, AND THE CLEAN AIR ACT, AND ALL OTHER APPLICABLE LAWS RELATING TO THE EXISTENCE OF OR EXPOSURE TO ACM OR PACM.

These guidelines are based on TIA / EIA-568-B Commercial Building Telecommunications Wiring Standard and the latest published version of Building Industry Consulting Service International's (BICSI) Telecommunications Distribution Methods Manual and Customer Owned Outside Plant Manual. The BICSI manuals are a good source for detailed planning of telecommunications distribution systems.

These guidelines do not recommend a particular method of horizontal distribution (under floor, ceiling, under carpet, etc.) because of the wide disparity of buildings and designers used in this state. The BICSI manual cited above and the TIA / EIA - 569 are excellent references and should be followed for more detail on horizontal pathways and spaces.

The National Electrical Code **(NEC) adopted by the State of NC,** the National Electrical Safety Code **(NESC)** and other national, state and local building codes are recognized as having jurisdiction over related parts of these guidelines.

1.6 Purpose:

These guidelines are intended to give recommended minimum requirements for telecommunications service in general and administrative office space. This guideline addresses the physical pathways, media, and cable administration practices.

The purpose is threefold:

- To provide direction.
- To enable the planning of telecommunications facilities with little knowledge of the specific products that will be installed.

- To define a generic telecommunications wiring system that will support most state agency wiring needs in a multi-vendor and multi-product environment.

2.0 APPROACH

These guidelines follow the general cabling industry practice of using a "structured cabling system" (SCS). An SCS attempts to wire a building for information needs without knowing specifically what equipment will be utilized. An SCS is geared for long-term stability and flexibility and is based on the idea of wiring the building once. Figure 1 is an abbreviated pictorial of such a system. The structured cabling system approach allows the wire and outlets to remain unchanged while the connections and services vary. The main components of a structured cabling system are:

* Common Media - Unshielded twisted pair (UTP) and fiber optic cables are capable of supporting voice, image and data communications. Services can change without affecting the media used to connect the services.

* Star Topology - Media is distributed only from designated distribution points (rooms) within the system. The signal quality improves because the number of connections is limited.

* Cross-connects – Cross-connects and patch panels provide the system with the flexibility to make changes to the service quickly and easily using jumper wires or modular jacks. Agency personnel with little training can make changes to the service in the work area, thereby reducing the amount of time, effort, and cost in making changes.

* Universal outlet - Common universal outlets provide a standard interface that permits connectivity of devices to any service by changing the connection to the outlet and not the outlet itself. Connection to the outlet can be done directly or by using adapters when necessary.

* Administration - An administrative system is used to record installations and should be maintained on a continuing basis.

3.0 WIRING SYSTEM ELEMENTS

3.1 Horizontal cabling / wiring:

Horizontal cable and connecting hardware provide the means of transporting telecommunications signals between the telecommunications outlet / connector in the work area and the horizontal cross-connect in the telecommunications room. These components are the “contents” of the horizontal pathways and spaces. **It is the State of NC minimum standard that the cabling shall be UTP Category 5e with pathway planning for fiber and or copper growth. The State of NC highly recommends researching costs vs. benefits of installing higher Categories (Category 6 & Category 6 Augmented) of Cabling in all new and renovated locations that do not presently have horizontal cabling installed.**

3.2 Telecommunications rooms:

The telecommunications room on each floor is a transition point between the backbone and horizontal distribution pathways. The telecommunications room shall be able to

contain telecommunications equipment, cable terminations, and associated cross-connection wiring. It is here that the logical topology wiring is accomplished. The physical star workstations may be connected in ring or bus topologies in addition to star.

3.3 Backbone wiring:

Backbone wiring is the riser wiring and / or telecommunications room/s interconnecting wiring in multi-story buildings or the main distribution system in a campus environment. It should be fiber optic cable, unless a strong business case can be made for UTP Category 5e or Category 6 for data and UTP Category 3 minimum for analog voice feeder cable.

3.4 Entrance facility:

This is the pathway where a service enters a property or building including the entrance point at the building wall and continuing to the entrance room or space. The demarcation point between the service provider and the user is typically located in the entrance room.

3.5 Campus distribution:

This is the interbuilding connectivity and campus backbone in a complex or multi-building environment.

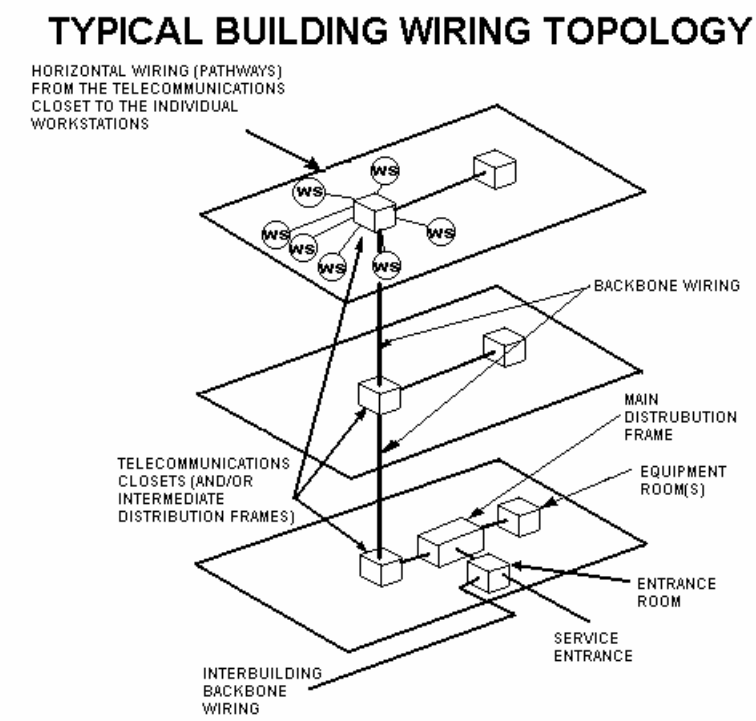

Figure 1 Structured Wiring Diagram

4.0 HORIZONTAL WIRING

4.1 Structure:

The horizontal wiring structure extends from the telecommunications room to the telecommunications outlet. It includes the outlet / connector, the horizontal distribution system cables, the cross-connect in the room and Horizontal Pathways and Spaces. Pathways and spaces are used to distribute and support horizontal cable and

connecting hardware between the work area outlet and the telecommunications room. These pathways are the “container” for the horizontal cabling.

Note: Horizontal cables do not include work area (patch) cables or equipment room (patch) cables. However, the length and type of cable required for connecting telecommunications equipment to the horizontal cabling will significantly affect end-to-end system performance and should be taken into consideration when planning any system.

4.2 Major items:

The major points of the horizontal system are:

* Horizontal pathways and spaces are generally referred to as “horizontal distribution systems” and consist of structures that conceal, protect, and support horizontal cables between the telecommunications outlet / connector used to connect work area equipment (voice, data, and video) at the work area and horizontal cross-connect in the serving telecommunications room.

  Select and design the type and layout of the horizontal distribution systems carefully. After a building is constructed, it may be more difficult to gain access to horizontal cabling. Therefore the skill, effort, and time required to make horizontal cabling changes can be very high. When selecting and designing horizontal distribution systems, it is important to consider the design’s ability to accommodate cabling changes and minimize occupant disruption when horizontal pathways and spaces are accessed.

  In addition to providing for current occupant needs, the horizontal distribution system design must facilitate ongoing maintenance of horizontal cabling and accommodate future additions to and changes in cabling, equipment and services.

  The pathway design should allow for a minimum of three cables run per individual work area. Although minimally, only two cables are required, the additional pathway capacity is needed to facilitate future additions and changes as the user’s needs evolve.

4.2.1 Conduit Cable Capacity:

The following table provides guidelines used by ANSI / TIA / EIA – 569 for cable fill capacity for conduits ranging from ½-inch trade size to 4-inch trade size that have no more than two 90 degree bends (180 degrees total) and are no longer than 100 feet. The number of cables that can be installed is actually limited by the allowed maximum pulling tensions of the cables.

IMPORTANT: Flexible conduit is not recommended for use in buildings because it tends to creep, shift and damage cable sheaths. Use only in situations where it is the only practical alternative and increase the conduit size by one trade size.

Conduit Inside Diameter (Inches)	Conduit Trade Size (Inches)	Cable Outside Diameter (Inches)									
		0.13	0.18	0.22	0.24 *	0.29	0.31	0.37	0.53	0.62	0.70
.629	1/2	1	1	0	0	0	0	0	0	0	0
.826	3/4	6	5	4	3	2	2	1	0	0	0
1.06	1	8	8	7	6	3	3	2	1	0	0
1.37	1-1/4	16	14	12	10	6	4	3	1	1	1
1.61	1-1/2	20	18	16	15	7	6	4	2	1	1
2.08	2	30	26	22	20	14	12	7	4	3	2
2.48	2-1/2	45	40	36	30	17	14	12	6	3	3
3.07	3	70	60	50	40	20	20	17	7	6	6
3.58	3-1/2							12	12	7	6
4.05	4							30	14	12	7

Table of Conduit Capacities for Various Sized UTP Cabling used by ANSI / TIA / EIA-569-A

*** Typical sizes for Cat 5e - UTP Cables**

NOTE: New requirements were added to the National Electrical Code in 2002 for removal of abandoned cables:

645.5 (D) (6)	Information technology equipment rooms
760.3 (A)	Fire alarm systems
770.3 and 770.54 (B)	Fiber optics
800.52 (B)	Communications circuits
820.3 (A) and 820.53 (B) (1)	CATV and radio distribution systems

Avoiding potential sources of electromagnetic interference (e.g., motors and transformers that share distribution space & copiers used in work areas) must be a primary consideration when designing horizontal pathways.

All horizontal pathways that penetrate fire-rated barriers shall be fire stopped in accordance with applicable codes.

When telecommunications horizontal pathways or cabling are placed in a hazardous location, such as an explosive or combustible atmosphere, observe all requirements of the applicable electrical code.

The main types of horizontal pathways are:

Conduit. Cable Tray. Ladder Rack. Under Floor ducts. Access (raised) floors. J-Hooks. Cellular floors. Ceiling Zones. Mechanically Fastened Raceways.

Many buildings require a combination of two or more of these systems to meet all distribution needs. For example, an office area in a building may require an under floor or overhead system, while an isolated telecommunications outlet location may best be served by an individual conduit.

Overhead cabling above ceiling tiles shall be attached to an appropriate support system connected to the building structure rather than the ceiling tile grid or hangers. Special consideration shall be given to length of cable span between supports and maximum number of cables in a support for cable Category Compliance. [The maximum unsupported cable span when using Category Compliant hangers (often referred to as J-hooks) for open wire cable systems shall be no more than 5 ft. and the typical number of .25 in. diameter cables supported by either shall not exceed the hanger manufacturer's specifications for Category Compliance. A dual run shall be counted as 2 cables but one dual drop.] For large quantities of cables (50 to75) that convene at the telecommunications room and other areas, provide sufficient support that is specifically designed to support the required cable weight and volume while maintaining Category Compliance (no more than 12 inches of cable sag between supports). There shall be a minimum of three inches of clearance between the cable support system and the ceiling tile support grid. Plenum rated cable shall be used if the space above the ceiling tile system is an environmental air space.

* In the "ceiling zones" method of ceiling distribution, divide the usable floor area into zones of 365 square ft. to 900 square ft. each. When convenient, it is preferable that zones be divided by building support columns. Cabling to each zone may be placed within the ceiling plenum area (where permitted by applicable codes) or installed in enclosed conduits or raceways. The pathways should extend from the telecommunications room to the mid-point of the zone. From that point,

the cables (or pathway) should be extended to the top of the utility columns or wall, then down to work area outlet boxes.

* Horizontal cabling must be designed to accommodate diverse user applications including: Voice Communications
Data Communications
Local area networks (LANs)
The designer should also consider incorporating other building information systems (e.g., CATV, alarms, security, audio, video, automated building systems and other telecommunications systems) when selecting and designing horizontal cabling. In addition to accommodating existing telecommunications needs, consider accommodating a diversity of applications in order to reduce or even eliminate the need for horizontal cabling changes as user requirements evolve.

* Star topology - each work area outlet shall be cabled directly to a horizontal cross-connect in the telecommunications room. This does not preclude physical bus and ring topology; this is done in the telecommunications room.

  Splices are not permitted for twisted-pair horizontal cabling. Bridged taps (multiple appearances of the same cable pairs at several distribution points) are not permitted in horizontal cabling.

* Advanced planning considers the use of fiber optic cabling to all training rooms, conference rooms and computer rooms. On a business case basis, pathways of innerduct, raceways and conduit are to be provided to support the use of fiber optic cabling.

* Cable length maximums are specific to the media itself - e.g. 90 meters (295 feet) for UTP cabling from the horizontal cross-connect to the outlet / connector and 6 meters (20 feet) for patch cords and cross-connect jumpers in the horizontal cross-connect.

  In establishing limits on horizontal cable lengths, a 10m (33 ft.) allowance was made for combined length of patch cables and cables used to connect equipment in the work area and telecommunications room. All equipment cables should meet or exceed the same performance requirements as the patch cords.

  The 6m (20 ft.) maximum length specified for patch cables does not include additional cable lengths needed to connect to active equipment. For example, if 3m (10 ft.) of cable are used for each work area connection, the 10 m (33 ft.) total allowance provides for up to 7m (23 ft.) of combined length per channel for patch cables and equipment cables in the telecommunications room.

4.3 Outlets and Jacks:

4.3.1 Cable and Jack Specifications:

This suggested configuration would serve most needs. It consists of four pairs (8 wires) of unshielded twisted pair (UTP) for voice and another four pairs for data applications. These cables shall be Category 5e UTP cables as **a minimum standard**. **The State of NC highly recommends researching costs vs. benefits of installing higher Categories (Category 6 & Category 6 Augmented) of Cabling in all new and renovated locations that do not presently have horizontal cabling installed.** The performance for these cables shall be defined by TIA / EIA 568-B.

All voice and data pairs are terminated in RJ45 wiring configuration. The outlet looks like a regular telephone jack to the casual observer. This jack shall be Category 5e compliant or higher as defined by TIA / EIA-568-B. These jacks shall be wired with the T568A pinout configuration. A faceplate shall be provided.

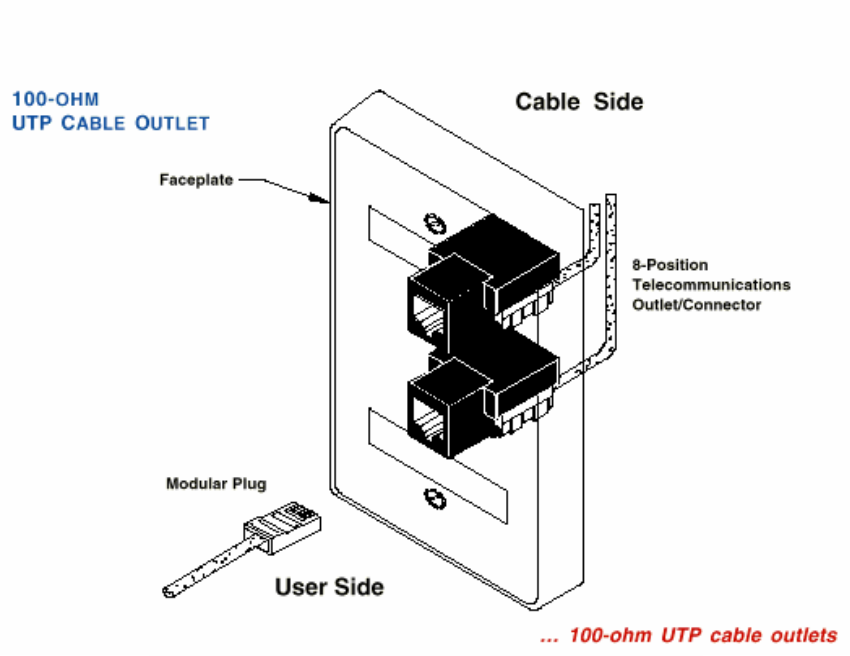

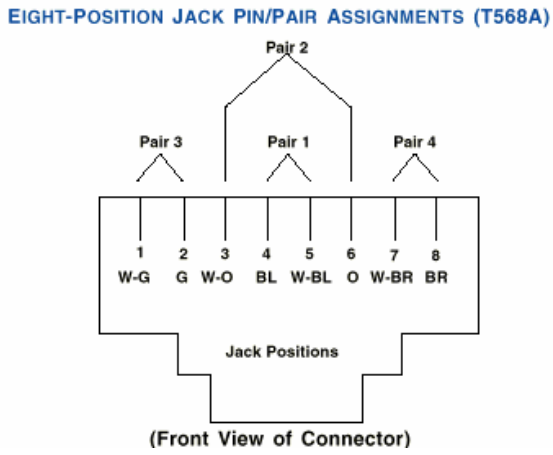

Figure 2 T568A Jack Pinout

HORIZONTAL CABLING SCHEMATIC

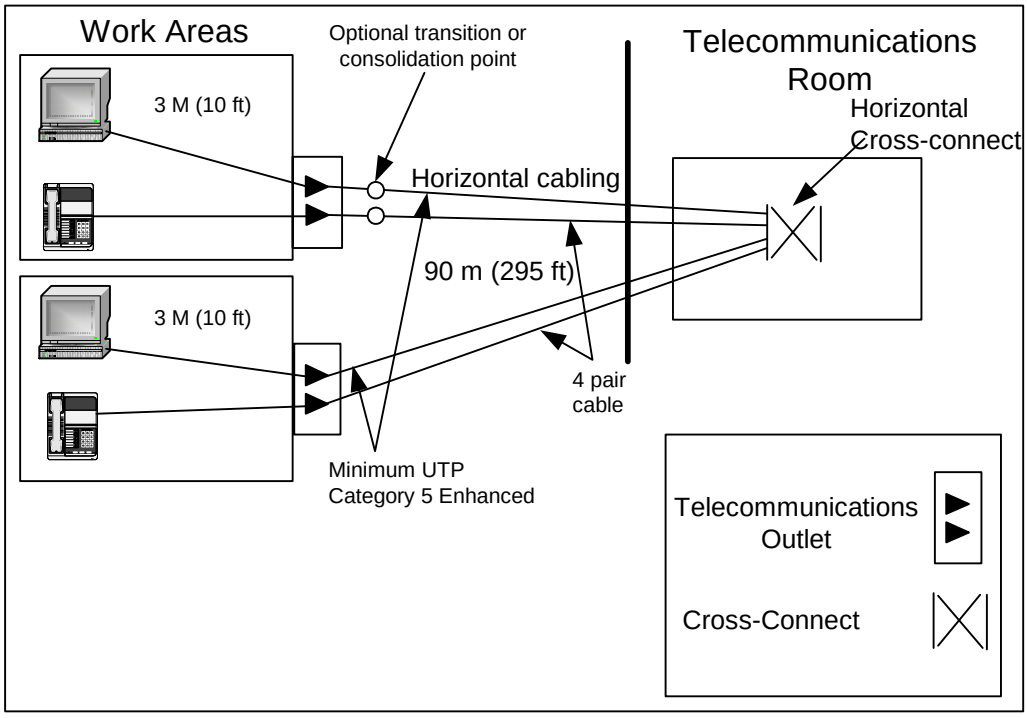

Figure 3 Horizontal Cabling Schematic

4.3.2 Location and Spacing:

Outlets should be located to provide connectivity to every workspace location. If workspace locations have not been determined, then outlets should be provided for every 100 square feet of usable workspace. Each conference room should be provided with at least one outlet. A power failure telephone outlet shall be placed at the location of the main answering position. Consideration should be given to spaces that may be eventually used as work spaces and outlets provided accordingly. Outlets shall be mounted 18" above the finished floor.

4.3.3 Acceptable cables:

Unshielded Twisted Pair - Category 5e, Category 6 (TIA / EIA-568-B) or higher
Unshielded Twisted Pair - TIA / EIA 568-B, -CMR or CMP NEC Rating.

50/125 Micrometers Laser Optimized Class 1a Graded Index - OFNR or OFNP NEC Rating (Fiber
Distributed Data Interface - FDDI compatible).

62.5/125 Micrometers Class 1a Graded Index - OFNR or OFNP NEC Rating (Fiber Distributed Data Interface - FDDI compatible).

4.3.4 Electrical Service:

A minimum of three duplex 120 Volt AC power outlets shall be provided for each workspace location or private office and fused at 20 amperes.

5.0 TELECOMMUNICATIONS ROOMS

The telecommunications room shall be located as close as practicable to the center of the area served and preferably in the core area. The telecommunications room space shall be dedicated to the telecommunications function and related support facilities. Telecommunications closet space should not be shared with electrical installations other than those for telecommunications equipment. This document assumes the shared use of the telecommunications needs of all occupants of the area served.

NOTE: All telecommunications backboards shall be void free and fire-retardant or treated on all six sides with at least two coats of fire retardant paint. If fire retardant paint is used, plywood shall be repainted on all 6 sides at manufacturer specified intervals.

5.1 Riser Rooms:

In multi-story buildings, rooms shall be centrally located and stacked, when practicable. Rooms are placed directly above each other with riser pathways between them.

5.2 Size:

Equipment rooms and telecommunications rooms must be large enough to house equipment, controllers, equipment racks, fiber optic equipment, and Service Provider lines.

Even if the customer does not anticipate any growth, the equipment room should include adequate space to support equipment changes with minimal disruption. There are likely to be many equipment changes during the useful life of any equipment room.

In addition to space for telecommunications equipment and cabling, an equipment room must include space for any environmental control equipment, power conditioners, and Uninterruptible Power Supply (UPS) systems that will be installed there.

Special consideration to space should be given in the event a Local Area Network (LAN) now exists or will exist in the future. The minimum ceiling height is 8 ft 6 in. There shall be a minimum of one telecommunications room per floor. Additional rooms (one for each area up to 10,000 square feet) should be provided when:

(1) The floor area to be served exceeds 10,000 square feet, or

(2) The horizontal distribution distance to the workstation exceeds 90 meters (295 feet).

Based on square footage served, telecommunications rooms shall be minimally sized according to the table below:

Serving Area Square Feet	Room Size
10,000	10’ x 11’
8,000	9’ x 10’
5,000	7’ x 10’

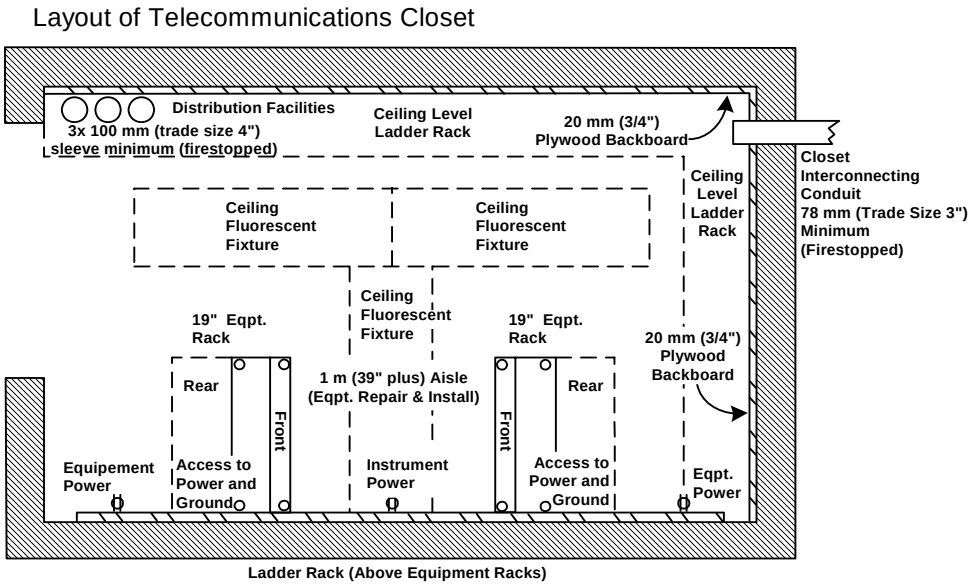

Telecommunications room doors should always swing to the <u>outside</u>!

Figure 4 Typical Telecommunications Room

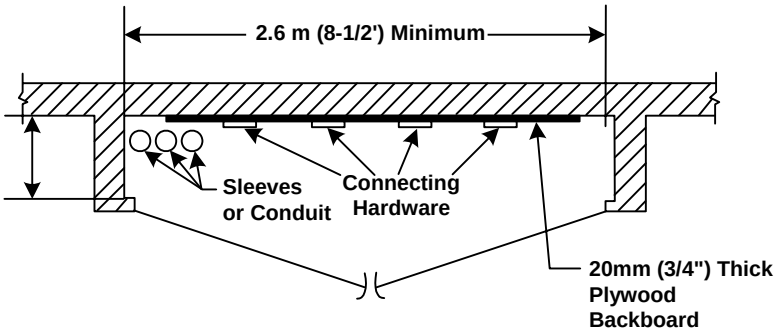

Figure 5 Typical Shallow Telecommunications Closet

5.3 A C Power Outlets:

A minimum of two dedicated 20 A, 120 V AC duplex electrical outlets, each on separate circuits, shall be provided for equipment power. In addition, convenience duplex outlets shall be placed at 6 feet intervals around the perimeter walls, at a height of 6 inches above the floor. If emergency power is available, consideration shall be given to automatic switchover of power. Specific outlets for equipment and convenience along with their locations shall be coordinated with the telecommunications system designer/s.

5.4 Wall Space and Layout:

Wall space should be provided that is adequate for termination of cables and equipment including equipment racks with access to the complete riser cable. Figure 4 and Figure 5 show typical telecommunications room layouts. The preferred equipment rack will be a floor mounted 7' high rack with horizontal supports connected to the wall at the upper 1/3 of the rack with clearance of 36" on all sides unless multiple racks are mounted side by side with cable management adjacent. A single wall mounted equipment rack is acceptable for a small installation where growth is not anticipated.

5.4.1 Equipment Layout within Rack:

Passive equipment (e.g., patch panels) shall be located in top of equipment rack with active equipment (e.g., switches, concentrators, hubs, multiplexers, routers) located in lower section. Any rack-mounted ac power bars should be located in the very bottom of the equipment rack. Equipment racks shall be fitted in front, sides and rear with cable management components such as wireminders of sufficient quantity for a neat and clean installation. Patch cables shall be arranged in a manner that will cause minimal disruption when changes are necessary. Equipment racks shall be mounted so as to leave 36 inches of clearance to wall from any piece of equipment protruding from the front or back of rack.

5.5 Cross Connect Field:

Non IP termination blocks shall be mounted on 4' X 8' sheets of 3/4" fire retardant plywood. The intermediate voice distribution frames located in the telecommunications rooms consist of plywood-mounted, quiet-front Krone type IDC blocks or 110 type cross connect blocks that terminate the interframe backbone and the horizontal distribution system.

Intermediate distribution frame blocks installed in racks should be divided into sections with the top section for fiber and copper patch panels and the bottom section for active electronics. Interframe backbone blocks will always appear closest to the backbone cable. Station blocks that terminate the horizontal distribution system wires should appear farthest from the backbone. All in-use blocks should be clearly labeled. Regardless of the block type used, the number of twists must be maintained all the way to the punch down.

110 type IDC connecting clips should be installed for every installed cable pair.

Patch cable type #110P connecting blocks may be used at some locations and punch down type #110A connecting blocks at other locations depending on frequency of change and expertise of personnel that perform cross connectivity. Access clearance for front and sides of equipment racks or backboard shall be 3 feet beyond any mounted items.

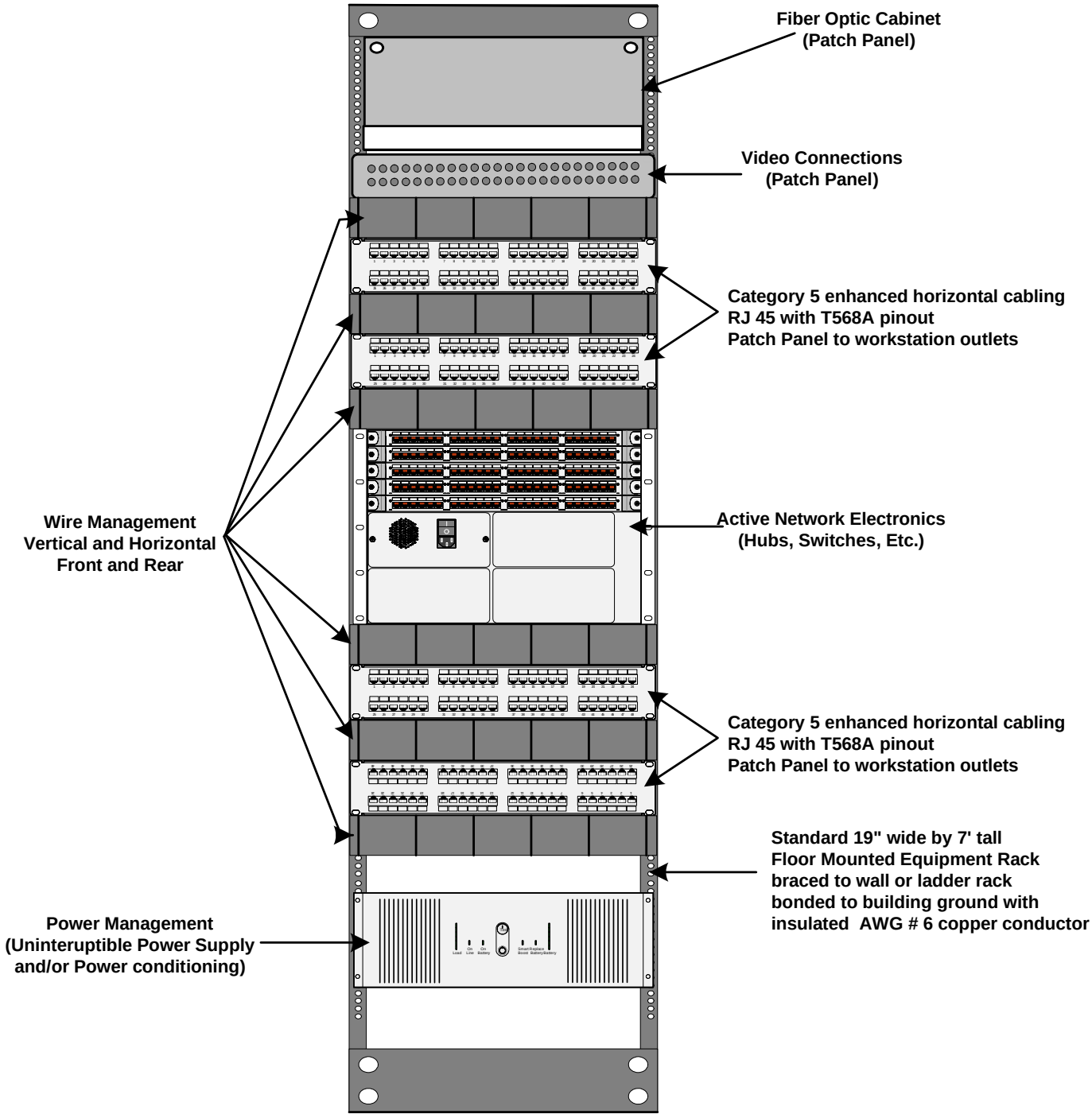

Figure 6 Data Distribution Frame Layouts

6.0 BACKBONE CABLING

6.1 Riser Design:

The riser connects telecommunications rooms with the common equipment providing a high capacity riser cable. Fiber should be used in data backbone and specific voice and video application backbone unless there is a strong business case for not doing so. Risers consist of a minimum of 6-strand multimode fiber optic cable in high-rise buildings and in any other buildings where the distance is greater than 295 feet.

For locations that do not anticipate the use of optical fiber, Unshielded Twisted Pair (UTP) riser cable should be sized to accommodate 50 percent growth over the number of initially installed dual 4 pair workstations. Even if no fiber is installed initially, the pathways of conduit and duct should allow room for the later addition of fiber.

6.2 Acceptable cables:

All Categories of cabling shall meet the TIA / EIA 568-B and 598 standard.
Inside plant fiber cable shall comply with ANSI / ICEA S-83-596.
Outside Plant fiber cable shall comply with ANSI / ICEA S-87-640.

Voice & Data:

Unshielded Twisted Pair – 100 ohm Category 5e Data Grade with transmission characteristics specified to a minimum of 100 MHz**,** CMR or CMP NEC Rating.

Unshielded Twisted Pair – 100 ohm Category 6 Data Grade with transmission characteristics specified to a minimum of 250 MHz**,** CMR or CMP NEC Rating.

50/125 μm Class Ia Graded Index Multimode Optical Fiber**,** OFNR, OFNP, Outdoor or Indoor / Outdoor (I/O) NEC Rating.

62.5/125 μm Class Ia Graded Index Multimode Optical Fiber**,** OFNR, OFNP, Outdoor or Indoor / Outdoor (I/O) NEC Rating.

8.3/125 μm Class IVa Dispersion-Unshifted Single-mode Optical Fiber, OFNR, OFNP, Outdoor or Indoor / Outdoor (I/O) NEC Rating.

Video:

***** RG-11 and RG-6 broadband (75 ohm) Coaxial Cable, CL2 or CL2P NEC Rating

* UTP has proven to be capable of transmitting high quality video signals for certain applications by use of a commercially available video adapter. Products supporting true broadband (multiple channels) color signals on UTP are available. Coaxial Cables and Singlemode Fiber Optic Cables remain the media of choice for long distance video transmission and for backbone video feeder systems.

Note: ITS only recommends the use of polyethylene sheathed or interlocking armored cable for all "Outside Plant" applications.

7.0 ENTRANCE FACILITY

7.1 National Electrical Code Adherence:

All telephone communications circuits shall be installed in accordance with the latest published version of Article 800 of the National Electrical Code.

Exception: The "Protective Devices" requirements of paragraph 800-2 are to apply to all outside circuits of any length whether aerial or underground. All arrestors shall be solid-state type, tested and listed per ANSI/UL 497 1995 or later. They shall be installed on each telephone circuit entering a building as close as practicable to the point of entry.

7.2 Protectors:

All protectors shall be grounded using AWG 12 (minimum) copper wire for single line or double line, AWG 10 for three through six lines, and AWG 6 for seven or more lines. This conductor shall be connected to the building's Grounding Electrode System described by NEC 250-81 in accordance with NEC 800-31 (b) 5. The primary protector shall be 189B1 with AT&T 3C1SC equivalent protector units (solid state type).

7.3 Grounding:

TIA / EIA 607 covers requirements for telecommunications grounding and bonding as a system. The major guidelines are as follows:

- A permanent infrastructure for telecommunications grounding and bonding is specified to be independent of telecommunications cabling.
- Telecommunications bonding connections are always implemented in accessible locations with approved components.
- Minimum #6 AWG insulated copper bonding conductors (Telecommunications Bonding Backbone [TBB]) are installed through every major telecommunications pathway (backbone pathway) and directly bonded to a telecommunications grounding busbar (TGB) in each telecommunications equipment location.
- A Telecommunications Main Grounding Busbar (TMGB) is directly bonded to the electrical service ground. All TBBs end on this busbar.
- Generally, each TBB should be a continuous conductor from the TMGB to the farthest TGB. Intermediate TGBs should be bond connected to the TBB with a short bonding conductor.

The increasing need for the reliable transfer of massive amounts of information creates an environment where electrical protection takes highest priority. The main consideration in developing requirements for grounding, bonding, and electrical protection is safeguarding of personnel, property and equipment from the potential harm created by foreign electrical voltages and currents.

The protection of telecommunications facilities is an essential part of any distribution system. The National Electrical Code defines grounding and bonding parameters for telecommunications from the aspect of human safety. NEC Articles 250 and 800 cover the general requirements for grounding, bonding, and protecting electrical and

telecommunications circuits. NEC requirements are considered the minimum for safeguarding personnel and equipment.

It is the state standard that telecommunications systems be isolated to the building ground. Neutral ground current problems are so severe in some modern buildings that telecommunications systems fail to work. Equipment manufacturers' grounding and bonding instructions shall be closely adhered to.

Multi-line cable with separate shield is to be grounded per "7.2" above, where it enters any building, but by separate conductor. The cable shield is to be removed for a length of at least 12 inches on the equipment side of this ground connection, or non-shielded cable used from this point to the equipment.

The telecommunications equipment is to be Single Point Grounded (SPG). This single point ground consists of bonding together, at one point, the station equipment grounding connection, the green power wire, the inside cable shield (if any), and the station protector grounding conductors*.*

7.4 Surge Protectors:

The AC power circuit that feeds telecommunications equipment (cabinets, key switches, PCs, any and all peripheral equipment including digital announcers and music on hold devices) shall be provided with a surge protector. No equipment other than related peripherals shall be connected to this circuit.

7.5 Sneak Current Fuses:

Certain station equipment (usually with circuits of 100 OHM or less impedance to ground) may require secondary protection also referred to as "Sneak Current Fuses" to prevent equipment failure, line hazard, and danger to personnel. The vendor providing the devices that require secondary protection shall install secondary protection.

7.6 Entrance Conduit:

Sizes: Entrance conduit size will vary with number of cable pairs entering building, but the absolute minimum shall be two 2-inch conduits. Buildings larger than 10,000 square feet shall have at least three 4-inch conduits. Riser sleeves or conduit shall be at least three inches. (Provisions may be made for non-continuous sleeves for riser rather than conduit). Conduit for horizontal service from floor equipment rooms to jack locations shall be 3/4 inch or greater depending upon expected number of cables and planned growth. Planned capacity should be for 100% redundancy.

Entrance conduit shall extend from entrance (termination) room beyond any paved areas. All exposed portions of "Outside Plant" conduit shall be minimum schedule 80 PVC or rigid steel to a depth of not less than 24-inches below final finished grade.

Location: Elevator shafts shall be excluded for possible locations of any conduit.

7.7 Innerduct:

A sleeved physical channel shall be provided for fiber optic cable unless interlocking armored cable is deployed. This is to be within the conduit system, unless the "innerduct" is plenum rated. Above ceiling innerduct not encased in a conduit must be

UL Approved and bear designations stating so. Innerduct shall contain a pull string if no fiber is pulled at the time of the installation of innerduct.

8.0 CAMPUS DESIGN

This section is intended as a typical campus distribution structure. This type of distribution occurs primarily on state governmental, university and community college campuses, but can be used to interconnect buildings anywhere a number of buildings are functionally collocated with property rights of way.

Figure 7 shows a four building campus. The Service Provider (local telephone company) enters the property and continues cabling to Building A. The SP terminates connections on plywood-mounted 110-type cross connect blocks in the Entrance Facility. This is the demarcation point and the owner / agency is responsible for wiring beyond this point. It is the responsibility of the property owner to provide the pathway from the property line to the entrance facility.

The Main Cross-connect is the focal point for interbuilding communications. There is one Main Cross-connect where the Service Provider and outside facility cabling is terminated. Cables are then distributed to other floors and to other buildings. The Main Cross-connect should be centrally located.

A campus distribution system can be viewed as a common communications network, but each building should be treated individually for basic wiring considerations of:

Bonding
Grounding
Electrical Protection
Building codes and regulations
Fire stopping.

Interbuilding cables should consist of optical glass fiber of not less than twelve (12) multimode fibers plus six (6) single mode fibers. Fiber cables should be in innerduct inside conduit.

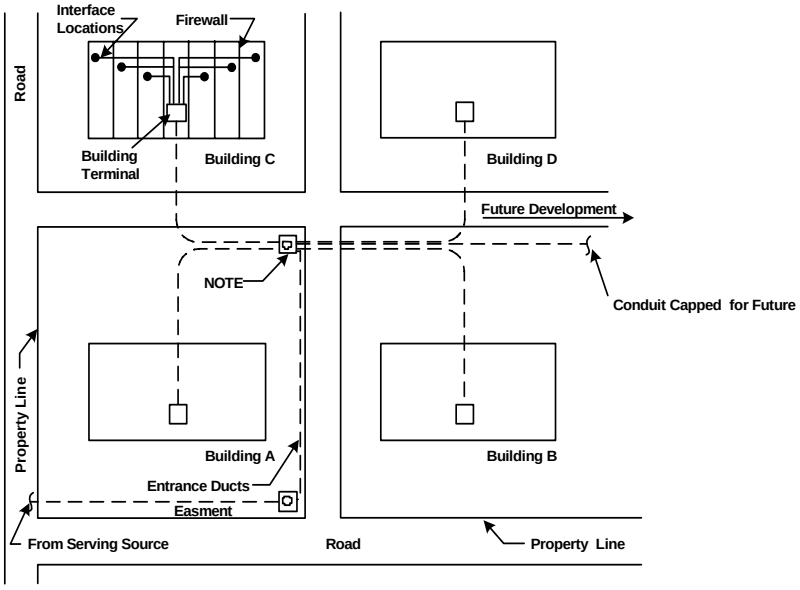

Figure 7 Typical Campus Wiring System

9.0 HANDICAP AND OTHER SPECIAL REQUIREMENTS

9.1 Handicap Requirements:

Compliance with The Americans With Disabilities Act (ADA) (36CFR Part 1191) shall be maintained at all times. This act specifies text control telephones and volume control telephones be provided along with signage wherever banks of pay phones are installed. It also details mounting heights and clearances for telephones.

Allowed Dimensions for Side Reach Telephones

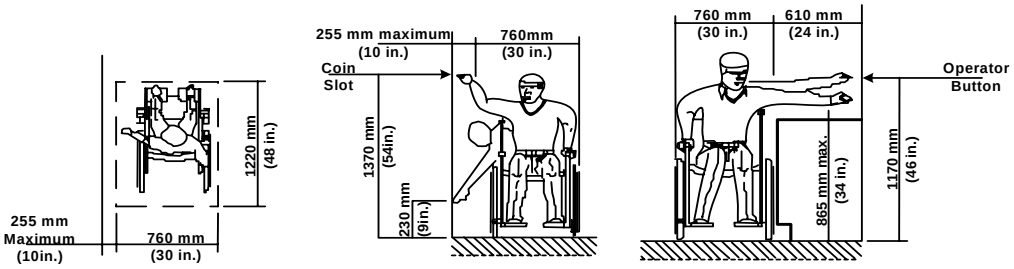

Clear Floor Space Parallel Approach | High and Low Side Reach Limits | Maximum Side Reach over Obstruction

NOTE:

The minimum height for all electical and communications systems receptacles on walls (i.e., outlets, and jacks) must be 380 mm (15 in.)above finished floor.

Figure 8 ADA Mounting Heights & Clearances For Side Reach

Allowed Dimensions for Forward Reach Telephones

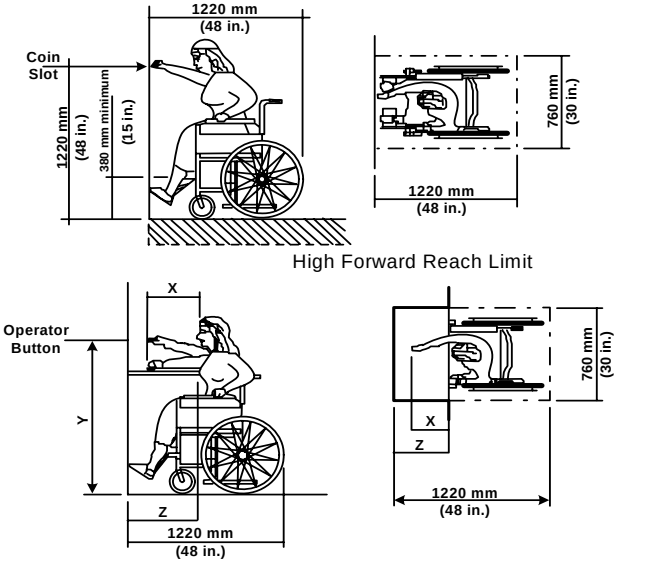

High Forward Reach Limit

NOTE: X shall be <635 mm (25in.) wide; Z shall be >510 mm (20in.), then y shall be1220 mm maximum (48 in.). When X is 510 to 635 (20-25 in.), then y shall be 1120 mm (44 in.) maximum.

Maximum forward reach over an obstruction

Figure 9 ADA Mounting Heights & Clearances For Forward Reach

All "banks" of public telephones shall have at least one telephone, which can be used by physically disabled, including those in wheel chairs and those with hearing and sight disabilities. The following are minimum requirements:

A clear floor or ground space at least 30” by 48” that allows either a forward or parallel approach by a person using a wheelchair shall be provided at telephones. Bases, enclosures, and fixed seats shall not impede approaches to telephones by people who use wheelchairs. The highest operable mechanism shall be placed no more than 48 inches above the floor for forward reach telephones and 54 inches above the floor for side reach telephones. If side reach occurs over an obstruction 24 inches wide and 34 inches high, the maximum height allowed is 46 inches.

The telephone shall be hearing aid compatible with volume control capable of a minimum of 12dbA and a maximum of 18dbA above normal for the handset with instructions for use. If an automatic reset is provided then 18dbA may be exceeded.

Text telephones used with a pay telephone shall be permanently affixed within, or adjacent to, the telephone enclosure. If an acoustic coupler is used, the telephone cord shall be sufficiently long to allow connection of the text telephone and the telephone receiver.

Pay telephones designed to accommodate a portable text telephone shall be equipped with a shelf and an electrical outlet within or adjacent to the telephone enclosure. The telephone handset shall be capable of being placed flush on the surface of the shelf. The shelf shall be capable of accommodating a text telephone and shall have 6” minimum vertical clearance in the area where the text telephone is to be placed.

The telephone shall be equipped for those with sight disabilities with visual and tactile instructions for use. Large tactile letters shall be used for instructions. On every floor where telephones are installed, at least one should be placed so that the dial and hand set are no more than 4 feet above the floor, equipped for those with hearing and sight disabilities and so identified with visual and tactile instructions for use.

Controls and operating mechanisms shall be operable by a force of five pounds or less; operation shall not require the use of a fine grasp, tight pinching motion or a turning, wrist-twisting motion for activation.

9.2 Elevator Requirements:

Emergency two-way communication systems between the elevator and a point outside the hoist way shall be provided. The highest operable part of a two-way communication system shall be a maximum of 48” from the floor of the car. If the system uses a handset then the length of the cord from the panel to the handset shall be at least 29”. The emergency intercommunication system shall not require voice communication (e.g., autodial to enunciator with location identification).

9.2.1 Elevator Telephone:
A single line wall telephone set shall be installed in each elevator in a telephone box supplied by the company installing the elevator.

9.2.2 Elevator Wiring:
The telephone for each elevator shall be wired so it is independent of the telephone system in the rest of the building. A separate line is required for each elevator.

9.2.3 Dial Tone:
The telephone system in each elevator shall have dial tone in order to pass inspection.

9.2.4 Elevator Conduit:
A three-quarter-inch conduit should be placed between the elevator control room and the nearest telecommunications room.

9.2.5 Backboard:
A one-half inch backboard should be glued to the inside rear wall of the telephone box in the elevator.

9.3 Code Compliance:
All wiring shall comply with Article 800 of the National Electrical Code, the American National Standards Institute and the National Electric Safety Code (NESC) and shall be subject to acceptance tests as described in FCC Rules and Regulations, Title 47, Section 28.215, Chapter 1, Part 68. The primary application of these guidelines for communications is directed to (a) protective devices and methods for "exposed" cable and wiring, (b) separation of power circuits, and (c) fire stopping and special fire resistant and low-smoke producing cable in specified environments. All new cable and wire installed in air plenums and ducts shall be flame resistant and have low smoke properties in accordance with Article 800-3 (d) of the *latest published version of the National Electrical Code and shall be so classified by Underwriters Laboratories, Inc. All cable installed in steam tunnels must be able to withstand temperatures of 125 degrees centigrade.

* The NEC is revised every three years.

10.0 ADMINISTRATION

- TIA / EIA 606 Administration Standard for the Telecommunications Infrastructure of Commercial Buildings is incorporated by reference. Compliance shall be maintained.
- Each pathway (conduit, tray, raceway, etc.) that conveys telecommunications media from space to space shall be given a unique identifier and labeled at each end-point.
- Each telecommunications space (equipment room, telecommunications room, work area, entrance facility, manhole and handhole) shall be uniquely identified and labeled.
- Each cable shall be uniquely identified and labeled at each end.
- Each cable record must indicate the cable type by manufacturer and manufacturer's designation, and document every pair/conductor in the cable. Cable identifier must be linked to all pathways in which it runs.
- Each piece of termination hardware such as a patch panel or wiring block shall be uniquely named and labeled.
- Termination position on cross-connect shall be identified by type, the pair / conductor terminated and a user code.

10.2 Labeling:

Each work area shall be labeled with a unique identifying number. A consistent labeling and numbering scheme shall be used. The labeling shall be clearly legible on the outlet face and the termination end. The numbering plan shall identify the source and destination of the cable for horizontal runs.

A sample numbering plan is: 208A-A1/241B

Where 208 is the telecommunications room #:
"A" is the patch panel identification,
"A1" is the "A" Block and the first position,
"241" is the workstation room #,
And "B" is the workspace of the user in room 241.

Horizontal cable shall be labeled at the workstation end and the cross-connect end. Backbone cables (whether riser or horizontal) shall have an identifying number that is labeled at each end. Labels shall be the same color on each end. Performance documentation must use the same labeling scheme.

10.3 Cable Tracking:

To support future expansion, reconfiguration and maintenance, complete records of all system characteristics should be developed and maintained. On each element in the route, identification labels should be completed and attached. Labels should meet the requirements of UL 969 Standard for Marking and Labeling Systems. A Final Report should record system configuration, unique identifier, fiber labels, pathways and "as built" details. The mandatory elements of Figure 10 must all be included. Loss measurements and OTDR traces should also be included with the records.

As a part of any cable installation, records of the connections are required. Changes to wiring should be maintained and accurate records made available at all times. A physical inventory should be performed on a periodic basis.

Tracking can be done manually, with a computer-based system or both. It is recommended that any installation having 200 or more devices (telephones, PCs, terminals, printers, LAN devices, plotters, etc.) pursue a computer-based system. There are reasonably priced systems available that can be implemented compliant to the TIA / EIA-606 standard this document references.

For major renovations or extensive additions, records are required. Existing buildings shall have records modified as moves, adds and changes (MACs) are done in the building. Work orders for wiring changes should be retained with other records for backup and research reasons.

10.4 Color Coding:

TERMINATION TYPE	COLOR	COMMENTS
Demarcation Point	Orange	Central Office Terminations
Network Connections	Green	Network connections or auxiliary circuits
Common Equipment, PBX, host, LANs, Muxes	Purple	Used for all major switching & data terminations
1st Level Backbone	White	Main cross-connect to Intermediate cross-connect
2nd Level Backbone	Gray	Intermediate cross-connect to telecommunications room
Station	Blue	Horizontal cable terminations
Interbuilding	Brown	Campus cable terminations
Key systems	Red	Key Telephone Systems
Miscellaneous	Yellow	Auxiliary, maintenance alarms, security

10.5 Records:

Figure 10 shows a summary of required records and linkages. Figures 11 - 14 are examples of what results from these requirements. Following these guidelines will provide detailed information that can save many labor hours in trouble shooting and planning.

	RECORD	REQUIRED INFORMATION	REQUIRED LINKAGES
PATHWAYS & SPACES	PATHWAY	Pathway identifier Pathway type Pathway fill Pathway loading	Cable records Space records Pathway records Grounding records
	SPACE	Space identifier Space type	Pathway records Cable records Grounding records
WIRING	CABLE	Cable identifier Cable type Unterminated. Pair / conductor numbers. Damaged pair / conductor numbers. Available pair/cond. numbers.	Termination position records Splice records Pathway records Grounding records
	TERMINATION HARDWARE	Term. hardware identifier Term. hardware type Damaged position nos.	Termination position records Space Records Grounding records
	TERMINATION POSITION	Term. hardware identifier Term. position type User code Cable pair/cond. nos.	Cable records Other term. position records Termination hardware records Space records
	SPLICE	Splice identifier Splice type	Cable records Space records
GROUNDING BONDING	TMGB	TMGB identifier Busbar type Grounding conductor identifier Resistance to earth Date measurement taken	Bonding conductor records Space records
	BONDING CONDUCTOR	Bonding conductor identifier Conductor type Busbar identifier	Grounding busbar records pathway records
	Telecommunications Grounding Bar	Busbar identifier Busbar type	Bonding conductor records Space records

Figure 10 Summary of Record Elements

	SAMPLE DATA
REQUIRED INFORMATION	
Pathway identifier	**CD34**
Pathway type	**2 in. EMT**
Pathway fill	**20%**
Pathway loading	**n/a**
REQUIRED LINKAGES	
Cable records	**C0001, C0002**
Space record (end 1)	**D306**
Space record (end 2)	**3A**
Space records (access)	
Pathway records (other)	**n/a**
Grounding record	**n/a**
OPTIONAL INFORMATION	
Pathway length	**132 ft**
Pathway max. fill	**40%**
Pathway max. load	**n/a**
Pathway condition	**ok**
Pathway usage	**horizontal distribution**
Number of bends	**2**
Drawing number	**C3**
UPC	**n/a**
Misc. information	
OTHER LINKAGES	
Other record 1	**B35**
Other record 2	

Figure 11 Example of a Single Pathway Record for a conduit

	SAMPLE DATA
REQUIRED INFORMATION	
Space Identifier	**3A**
Space type	**TC**
REQUIRED LINKAGES	
Pathway Records	**CD34, CT64, SL02-05, CD02**
Cable records	**C0001, C0011, CB02**
Grounding record	**TGB35**
OPTIONAL INFORMATION	
Space size	**10 ft x 11 ft**
Space locations	**3-A4**
Area serviced	**Q-4**
Door lock key number	**1425**
Misc. Information	
OTHER LINKAGES	
Other record 1	**E34**
Other record 2	**AC304**
Other record 3	**AU1**
Other record 4	

Figure 12 Example of a Single Space Record for a telecommunications closet

	SAMPLE DATA
REQUIRED INFORMATION	
Space identifier	**D306**
Space type	**W A**
REQUIRED LINKAGES	
Pathway records	**CD34**
Cable records	**C0001**
Grounding record	**n/a**
OPTIONAL INFORMATION	
Space size	**10 ft x 12 ft**
Space location	**n/a**
Area served	**n/a**
Door lock key number	**n/a**
Misc. Information	
OTHER LINKAGES	
Other record 1	**PC569**
Other record 2	**TR3**
Other record 3	**Smith, John**
Other record 4	

Figure 13 Example of a Space Record for a work area

	SAMPLE DATA	
REQUIRED INFORMATION		
Cable identifier	**C0011**	
Cable type	**4-pr. UTP, EIA-568A spec.**	
Unterminated pair conductor numbers	**0**	
REQUIRED LINKAGES		
	End 1	**End 2**
Pr 1-4, Term. pos. record	**J00011**	**3A-C17-005**
Splice records	**n/a**	
Pathway records	**CT64**	
Grounding record	**n/a**	
OPTIONAL INFORMATION		
Cable length	**165 ft**	
UPC	**n/a**	
Ownership	**n/a**	
Misc. information		
OTHER LINKAGES		
Other record 1		

Figure 14 Example of a Cable Record for a horizontal UTP cable

11.0 TESTING:

All test data shall be documented and provided to the purchasing agency at the time of acceptance.

11.1 Multipair UTP Feeder Testing:

All cable pairs shall be tested for the following conditions:

1. Polarity
2. Reversal of pairs
3. Wire transpositions
4. Continuity
5. Opens
6. Shorts

11.2 UTP Category 5e and Category 6 Testing Parameters

The current field acceptance test parameters for twisted-pair cabling are:

- Wire Map (continuity)
- Insertion Loss
- Length
- NEXT loss, pair-to-pair, measured from local end
- NEXT loss, pair-to-pair, measured from far-end
- NEXT loss, power sum, measured from local end
- NEXT loss, power sum, measured from far-end
- ELFEXT, pair-to-pair
- ELFEXT, power sum
- Return loss, measured from local end
- Return loss, measured from far-end
- Propagation delay
- Delay skew
- ACR
- Power Sum (PSACR).

NOTE: The above parameters will also apply to Class D and higher as specified in ISO / IEC 11801.

11.3 Fiber Optic Testing:

SYSTEM TESTING

Optical fiber splices, fusion or mechanical, shall not exceed a maximum optical attenuation of 0.3 dB when measured in accordance with ANSI / EIA / TIA- 455-34, Method A (factory testing) or ANSI / EIA / TIA-455-59 (field testing).

Optical fiber splices, fusion or mechanical, shall have a minimum return loss of 20 dB for multimode, 26 dB for singlemode, when measured in accordance with ANSI / EIA / TIA-455-107. The minimum singlemode return loss for broadband analog video (CATV) applications is 55dB.

Upon completion of the passive optical cable system, the system must be tested to ensure compliance with the design and link loss specifications.

The single most important test is end-to-end attenuation test that measures the optical power loss between cable termination points. The attenuation of a system at one wavelength is not necessarily related to the attenuation at the other, except for short links such as horizontal cabling. The best way to verify the cabling meets the loss limit is to measure each segment between patch panels. Because of the stress and bending that cables undergo during installation, measurement of the attenuation of each link with connectors in place is required after installation.

The tests include:

Power meter tests - For building risers, power meter tests are required. Disregard OTDR testing for runs less than 2 km.

Testing of End-to-End Attenuation on each fiber span at both operational wavelengths:

- 850 / 1310 nm for multimode fiber
- 1550 nm for single mode fiber

Testing in one direction is required. Test results shall be retained for inclusion into the documentation package. Link attenuation does not include any active devices or passive devices other than cable, connectors and splices (e.g., link attenuation does not include such devices as optical bypass switches, couplers, repeaters, or optical amplifiers.

Connector loss readings of each mated connector should be recorded using an OTDR at 850 nm and 1310 nm in one direction.

Optical Time Domain Reflectometer (OTDR) Signature Traces of each terminated fiber should be recorded at 850 nm and 1310 nm for fiber continuity purposes. OTDR testing is mandatory for runs longer than 2 KM.

A Final Report shall be compiled that records system configuration, fiber labels, cable routes and "as built" details. Loss measurements with calibrated light source and power meter shall be included. OTDR traces shall also be included when requested in advance.

Leave the jumpers attached to the optical source and optical power meter.

Disconnect the two jumpers at the adapter.

Attach the optical source/Test Jumper 1 to one end of the system fiber to be tested.

Attach the optical power meter/Test Jumper 2 to the other end of the system fiber.

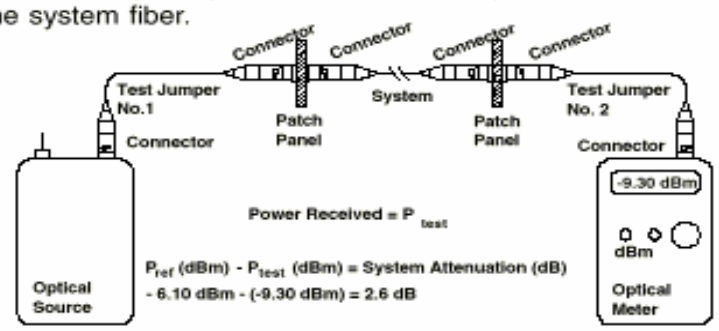

Record the test power (P_{test}).

Subtract the test power (P_{test}) from the reference power (P_{ref}) recorded in Stage 1 to determine the end-to-end attenuation:

Attenuation (dB) = P_{ref} - P_{test}

Figure 15 Fiber Link Test Setup

GLOSSARY

ADMINISTRATION - The process of documenting the initial wiring and management of the wiring system after the initial installation. It includes two major components: a standard labeling system and a records system.

AMERICAN WIRE GAGE (AWG) - An American industrial standard for measuring the diameter of copper, aluminum and other conductors; e.g. AWG #22 is a 0.64 millimeter (0.0253 inches) diameter solid conductor and AWG #24 is a 0.5 millimeter (0.0201 inches) diameter solid conductor.

ANSI - American National Standards Institute.

BUILDING MAIN DISTRIBUTION FRAME (MDF) – Old term removed from standards language but left in this document for reference. The interface between the public network and/or the interbuilding backbone, and the interframe backbone.
The MDF is usually in the Entrance Room (ER) or Main Telecommunications Room (MTR).

EIA - Electronics Industries Alliance.

ENTRANCE FACILITY (EF) - Facility where outside circuits/wiring enter a building through weatherproof sleeves and are terminated on blocks providing electronic protection to guard against damage from electrical disturbances such as lightning. In a single building, this is the point of demarcation between the serving telephone utility and the user.

EQUIPMENT ROOM - An area within a building where major components of large telecommunications systems (PBX's, data switches and communications processors) are housed. Equipment rooms are often distinct from telecommunications closets due to the size and quantity of the equipment they contain.

HORIZONTAL DISTRIBUTION SYSTEM (HDS) - The wiring that connects the intermediate distribution frame in the telecommunications closet to the telecommunications outlet. Horizontal distribution cabling is commonly run through the space provided by drop-tile ceilings or routed through ducts in floors and walls.

IEEE – The Institute of Electrical and Electronics Engineers, Inc.

IEEE 10 Gb/s Ethernet over copper – Category 6e / Class e Cabling – Only ratified by IEEE at the time of publication of this document. Category 6e / class e standards describe a new performance range for unshielded and screened twisted-pair cabling. Category 6 / class e is intended to specify the best performance that UTP and STP cabling solutions can be designed to deliver. Category 6 / class e is specified in the frequency range of at least 1 - 500 MHz. For Category 6 / class e, the 8-position modular jack interface will be mandatory at the work area. Category 6 / class e will be backward compatible which means that applications running on lower categories / classes will also be supported. If different category / class components are to be mixed with Category 6 / class E components, the combination shall meet the transmission requirements of the lowest performing category / class component. TIA, CENELEC, ISO, and others have collaborated closely on the development of these standards and their requirements are very much in harmony.

INTERBUILDING BACKBONE - The transmission facilities that connect the campus/complex main distribution frame to the building main distribution frames of each building in the complex. Includes multi-agency metropolitan areas with state right of way.

INTERFRAME BACKBONE - The transmission facilities that originate from the building main distribution frame and are vertically or horizontally distributed to each intermediate distribution frame in the building.

INTERMEDIATE CROSS CONNECT - Typically the equipment used to link the backbone and horizontal wiring systems. The intermediate cross connect is usually located in a telecommunications closet.

LINKAGE - A connection between a record and an identifier or between records.

INTERMEDIATE DISTRIBUTION FRAME (IDF) – Old term removed from standards language left in this document for reference. Replaced by Auxiliary Telecommunications Room. The cross connect between the interframe backbone (IFB) and the horizontal distribution system (HDS). The IDF may also serve as a connection point for per-floor Local Area Networking equipment. The IDF is normally in the Auxiliary Telecommunications Room (ATR).

MAIN CROSS CONNECT - Typically the equipment used to link the interbuilding and intrabuilding wiring systems. The main cross connect is usually located in the building entrance facility.

NETWORK INTERFACE (NI) - Contains the demarcation point between outside provider networks and the campus/complex or building distribution. Includes carrier test, loop back, and disconnect capability.

MEGAHERTZ (MHz) - Unit of frequency equal to one million cycles per second.

NEC - National Electrical Code.

NEXT - Near End Cross Talk - Signal distortion caused by the coupling of an outgoing signal at the originating end of a circuit with the incoming signal being received from the other end of the circuit

NFPA - National Fire Protection Association.

OSHA - Occupational Safety and Health Administration.

PATCH CORD - A length of wire, or fiber cable, with connectors on each end used to join telecommunications circuits.

PATHWAY - A raceway, sleeve, or exposed location for the placing of telecommunications cable.

TELECOMMUNICATIONS ROOM (TR) - The space in a building designed to provide a secure, suitable environment for the installation of cable, telecommunications equipment, and termination and administration systems. Telecommunications rooms are the points where the backbone and horizontal distribution facilities intersect. They are floor-serving rooms whose function is to terminate and connect the backbone cable system to the horizontal cable system and to house electronics that assist in the distribution of information to that floor.

TELECOMMUNICATIONS INFRASTRUCTURE - The components (telecommunications spaces, cable pathways, grounding, wiring and termination hardware) that together provide the basic support for the distribution of all telecommunications information.

TELECOMMUNICATIONS MAIN GROUNDING BUSBAR (TMGB) - Primary grounding for the entire telecommunications in a building or structure.

TELECOMMUNICATIONS GROUNDING BUSBAR (TGB) - Auxiliary grounding for the telecommunications in a satellite telecommunications closet and tying into the telecommunications bonding backbone.

TELECOMMUNICATIONS BONDING BACKBONE (TBB) - A #6 AWG or larger insulated bonding conductor that provides direct bonding between different locations in a building.

TIA - Telecommunications Industries Association.

UNSHIELDED TWISTED PAIR - (UTP) wiring consisting of two insulated wires twisted around each other to reduce induction, thus interference, from one wire to the other. Twisted pair wire comes in bundles with varying numbers of pairs of wires, from two pair (four wires) to many thousands of pairs. UTP wiring is used to wire voice and data networks within buildings because it is relatively easy to install.

STAR - A network topology in which each telecommunications outlet is connected only to a distribution frame by a point-to-point link and connections between distributions frames are by point-to-point links.

TELECOMMUNICATIONS OUTLET (TO) - The interface between the building network (horizontal distribution system) and the work area connection to the user's equipment (phone and/or terminal device).

WORK AREA CONNECTION - The interface between the outlet and the user/terminal equipment. Includes media converters and media adapters, such as baluns and / or patch cords.

APPENDIX A:

Recommended Cable Specifications

This guideline recognizes the following type cables:

Fiber optic Multimode - Riser, Inter-building applications, and horizontal pathways

Fiber optic Singlemode - Inter-building applications, video applications

Unshielded Twisted Pair (UTP) - Category 5e, Category 6 and above (TIA / EIA 568-B)
-Horizontal Distribution

Copper Data Cable Specification

The standards recognizing the data handling characteristics of all twisted pair cable and connectors are the ANSI / TIA / EIA-568-B. Although other levels are specified in these standards, this specific guidelines document standardizes on a minimum standard of Category 5e for all voice and data telecommunications UTP horizontal wiring. Category 5e cable is intended for LAN speeds at 100 Megabits per second at a frequency up to 100 MHz. Category 6 cable is intended for LAN speeds at 1000 Megabits (1 Gigabit) per second at a frequency up to 250 MHz. Category 6 augmented cable is intended for LAN speeds at 10 Gigabits per second at a frequency up to 625 MHz.

Note: ITS only recommends the use of polyethylene sheathed or interlocking armored cable for all "Outside Plant" applications.

Multimode Fiber Specification

Fiber type: 50/125 micron Laser Optimized Class 1a Graded Index Multimode, FDDI Compliant

Cladding Diameter:	125 Microns
Core Eccentricity:	7.5% maximum (1.5% typical)
Numerical aperture:	.275 plus or minus .015
Attenuation:	3.50 dB/km @ 850 NM 1.50 dB/km @ 1300 NM
Bandwidth:	500 MHz at 850 NM 500 MHz @ 1300 NM
Fiber connectors: SC type	.75 dB maximum insertion loss
Cable bend radius:	10 times diameter during installation

Fiber type: 62.5/125 micron Class 1a Graded Index Multimode, FDDI Compliant

Cladding Diameter:	125 Microns
Core Eccentricity:	7.5% maximum (1.5% typical)
Numerical aperture:	.275 plus or minus .015
Attenuation:	3.50 dB/km @ 850 NM 1.50 dB/km @ 1300 NM
Bandwidth:	160 MHz at 850 NM 500 MHz @ 1300 NM
Fiber connectors: SC type	.75 dB maximum insertion loss
Cable bend radius:	10 times diameter during installation

Single Mode Fiber Specifications

Fiber type: 8.3 Micron Class Ia Dispersion-Unshifted Singlemode Optical Fibers

Cladding diameter:	125 Microns
Attenuation:	0.5 dB/km @ 1310 NM 0.5 dB/km @ 1550 NM

Zero dispersion wavelength 1300 -1320 NM

UL Ratings:	OFNR for riser usage OFNP for Plenum usage
Cable bend radius:	10 times diameter during installation

APPENDIX B:

Recommended Connector Specifications

Using Standard Connectors

The 568SC connector is recommended throughout the optical fiber network. If the optoelectronics require other connectors, jumpers can act as a transition between connectors in a system and connectors in the electronics.

Migration Path for ST Compatible Users

Because of the large number of users with an installed base of ST-compatible connectors, the ANSI / TIA / EIA-568-A specification previously recognized a number of viable options for these users.
The options are:

- Remain with ST-compatible simplex connectors for both future and existing networks.
- Switch to a duplex ST-compatible interface which will allow the user to re-use existing connectors and adapters (see the illustrations below).
- Retrofit existing networks by using a hybrid adapter of 568SC to ST compatible.
- Switch to the 568SC interface for both future and/or existing networks.

THE 568SC INTERFACE

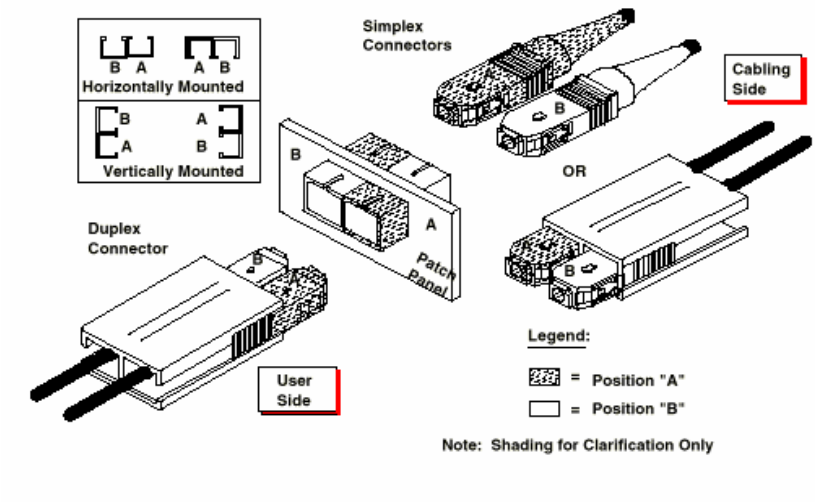

DUPLEX ST-COMPATIBLE INTERFACE

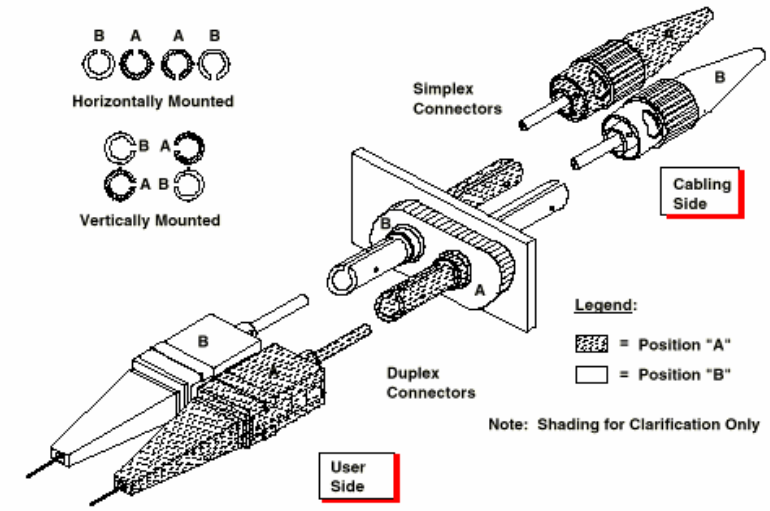

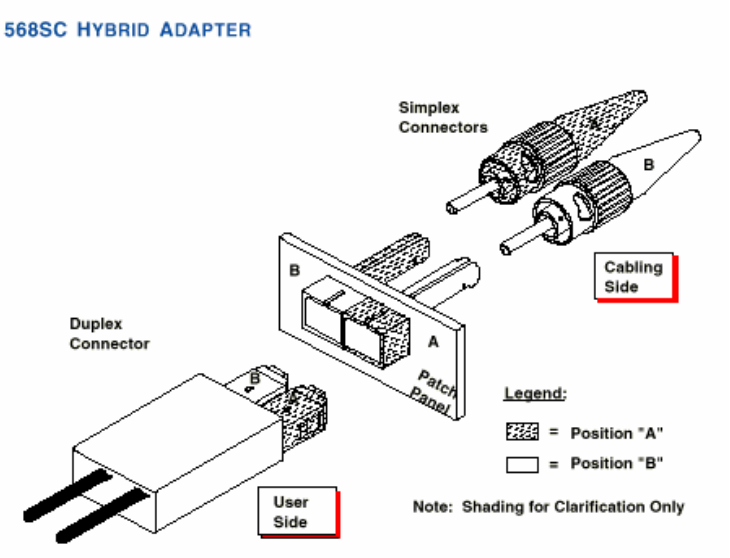

Figure 17 Fiber Connector Types

REFERENCES – The State of North Carolina expects and enforces strict adherence to the latest published versions of the codes and standards referenced on page 45.

Americans with Disabilities Act (ADA) Accessibility Guidelines for Buildings and Facilities; Final Guidelines (July 1991) – 36 CFR Part 1191

Measurement of Optical Power Loss of Installed Single-Mode Fiber Cable Plant – TIA / EIA-526 -7 (OFSTP-7)

Optical Power Loss Measurements of Installed Multimode Fiber Cable Plant – TIA / EIA-526 - 14 (OFSTP-14A)

Commercial Building Telecommunications Wiring Standard – TIA / EIA-568 - B.1

Commercial Building Telecommunications Wiring Standard – TIA / EIA-568 - B.2

Commercial Building Telecommunications Wiring Standard – TIA / EIA-568 - B.3

Telecommunications Pathways and Spaces – TIA / EIA - 569

Residential Telecommunications Cabling Standard – TIA / EIA - 570

Optical Fiber Cable Color Coding – TIA / EIA - 598

Administration Standard for the Telecommunications Infrastructure of Commercial Buildings – ANSI / TIA / EIA-606

Commercial Building Grounding and Bonding Requirements for Telecommunications – TIA / EIA - 607

Customer-Owned Outside Plant Telecommunications Standard – TIA / EIA -758

Detail Specification for 62.5-μm Core Diameter / 125-μm Class 1a Multimode Graded Index Optical Waveguide Fibers – TIA / EIA - 492AAAA

Generic Requirements for Optical Fiber and Optical Fiber Cable – Bellcore TR-TSY-000020

National Electrical Code (NEC) Articles 600, 700 & 800

National Fire Protection Association (NFPA) NFPA - 71, - 72, - 75, - 780.

BICSI - Telecommunications Distribution Methods Manual (Newest Edition)
Building Industry Consulting Service International

BICSI - Customer-Owned Outside Plant Design Manual (Newest Edition)
Building Industry Consulting Service International

Customer –Owned Outside Plant Telecommunications Cabling Standard TIA / EIA –758 - 1

SECTION 270526 - GROUNDING AND BONDING FOR COMMUNICATIONS SYSTEMS

PART 1 - GENERAL

1.1 SUMMARY

A. Section Includes:

1. Grounding conductors.
2. Grounding connectors.
3. Grounding busbars.
4. Grounding labeling.

1.2 ACTION SUBMITTALS

A. Product Data: For each type of product.

PART 2 - PRODUCTS

2.1 SYSTEM DESCRIPTION

A. Electrical Components, Devices, and Accessories: Listed and labeled as defined in NFPA 70, by a qualified testing agency, and marked for intended location and application.

B. Comply with UL 467 for grounding and bonding materials and equipment.

C. Comply with TIA-607-B.

2.2 CONDUCTORS

A. Manufacturers: Subject to compliance with requirements, available manufacturers offering products that may be incorporated into the Work include the following:

1. Harger Lightning & Grounding.
2. Panduit Corp.
3. TE Connectivity Ltd.
4. Additional manufacturers submitted for receiving engineer approval prior to bid.

B. Comply with UL 486A-486B.

C. Insulated Conductors: Stranded copper wire, green or green with yellow stripe insulation, insulated for 600 V, and complying with UL 83.

1. Ground wire for custom-length equipment ground jumpers shall be No. 6 AWG, 19-strand, UL-listed, Type THHN wire.

D. Bare Copper Conductors:

1. Solid Conductors: ASTM B3.
2. Stranded Conductors: ASTM B8.
3. Tinned Conductors: ASTM B33.
4. Bonding Cable: 28 kcmils, 14 strands of No. 17 AWG conductor, and 1/4 inch in diameter.
5. Bonding Conductor: No. 4 or No. 6 AWG, stranded conductor.
6. Bonding Jumper: Tinned-copper tape, braided conductors terminated with two-hole copper ferrules; 1-5/8 inches wide and 1/16 inch thick.

2.3 CONNECTORS

A. Manufacturers: Subject to compliance with requirements, available manufacturers offering products that may be incorporated into the Work include the following:

1. Burndy; Hubbell Incorporated, Construction and Energy.
2. Chatsworth Products, Inc.
3. Harger Lightning & Grounding.
4. Panduit Corp.
5. TE Connectivity Ltd.
6. Additional manufacturers submitted for receiving engineer approval prior to bid.

B. Irreversible connectors listed for the purpose. Listed by an NRTL as complying with NFPA 70 for specific types, sizes, and combinations of conductors and other items connected. Comply with UL 486A-486B.

C. Compression Wire Connectors: Crimp-and-compress connectors that bond to the conductor when the connector is compressed around the conductor. Comply with UL 467.

1. Electroplated tinned copper, C and H shaped.

D. Busbar Connectors: Cast silicon bronze, solderless compression-type, mechanical connector; with a long barrel and two holes spaced on 5/8- or 1-inch centers for a two-bolt connection to the busbar.

E. Welded Connectors: Exothermic-welding kits of types recommended by kit manufacturer for materials being joined and installation conditions.

2.4 GROUNDING BUSBARS

A. Manufacturers: Subject to compliance with requirements, available manufacturers offering products that may be incorporated into the Work include the following:

1. Chatsworth Products, Inc.

2. Harger Lightning & Grounding.
3. Panduit Corp.
4. Additional manufacturers submitted for receiving engineer approval prior to bid.

B. TMGB: Predrilled, wall-mounted, rectangular bars of hard-drawn solid copper, 1/4 by 4 inches in cross section, length as indicated on Drawings. The busbar shall be NRTL listed for use as TMGB and shall comply with TIA-607-B.

1. Predrilling shall be with holes for use with lugs specified in this Section.
2. Mounting Hardware: Stand-off brackets that provide a 4-inch clearance to access the rear of the busbar. Brackets and bolts shall be stainless steel.
3. Stand-off insulators for mounting shall be Lexan or PVC. Comply with UL 891 for use in 600-V switchboards, impulse tested at 5000 V.

C. TGB: Predrilled rectangular bars of hard-drawn solid copper, 1/4 by 2 inches in cross section, length as indicated on Drawings. The busbar shall be for wall mounting, shall be NRTL listed as complying with UL 467, and shall comply with TIA-607-B.

1. Predrilling shall be with holes for use with lugs specified in this Section.
2. Mounting Hardware: Stand-off brackets that provide at least a 2-inch clearance to access the rear of the busbar. Brackets and bolts shall be stainless steel.
3. Stand-off insulators for mounting shall be Lexan or PVC. Comply with UL 891 for use in 600-V switchboards, impulse tested at 5000 V.

D. Rack and Cabinet Grounding Busbars: Rectangular bars of hard-drawn solid copper, accepting conductors ranging from No. 14 to No. 2/0 AWG, NRTL listed as complying with UL 467, and complying with TIA-607-B. Predrilling shall be with holes for use with lugs specified in this Section.

1. Cabinet-Mounted Busbar: Terminal block, with stainless-steel or copper-plated hardware for attachment to the cabinet.
2. Rack-Mounted Horizontal Busbar: Designed for mounting in 19- or 23-inch equipment racks. Include a copper splice bar for transitioning to an adjoining rack, and stainless-steel or copper-plated hardware for attachment to the rack.
3. Rack-Mounted Vertical Busbar: 72 or 36 inches long, with stainless-steel or copper-plated hardware for attachment to the rack.

2.5 IDENTIFICATION

A. Comply with requirements for identification products in Section 270553 "Identification for Communications Systems."

PART 3 - EXECUTION

3.1 EXAMINATION

A. Examine the ac grounding electrode system and equipment grounding for compliance with requirements for maximum ground-resistance level and other conditions affecting performance of grounding and bonding of the electrical system.

B. Inspect the test results of the ac grounding system measured at the point of BCT connection.

C. Prepare written report, endorsed by Installer, listing conditions detrimental to performance of the Work.

D. Proceed with connection of the BCT only after unsatisfactory conditions have been corrected.

3.2 INSTALLATION

A. Bonding shall include the ac utility power service entrance, the communications cable entrance, and the grounding electrode system. The bonding of these elements shall form a loop so that each element is connected to at least two others.

B. Comply with NECA 1.

C. Comply with TIA-607-B.

3.3 APPLICATION

A. Conductors: Install solid conductor for No. 8 AWG and smaller and stranded conductors for No. 6 AWG and larger unless otherwise indicated.

1. The bonding conductors between the TGB and structural steel of steel-frame buildings shall not be smaller than No. 6 AWG.
2. The bonding conductors between the TMGB and structural steel of steel-frame buildings shall not be smaller than No. 6 AWG.

B. Underground Grounding Conductors: Install bare tinned-copper conductor, No. 2 AWG minimum.

C. Conductor Terminations and Connections:

1. Pipe and Equipment Grounding Conductor Terminations: Bolted connectors.
2. Underground Connections: Welded connectors except at test wells and as otherwise indicated.
3. Connections to Ground Rods at Test Wells: Bolted connectors.
4. Connections to Structural Steel: Welded connectors.

D. Conductor Support:

1. Secure grounding and bonding conductors at intervals of not less than 36 inches.

E. Grounding and Bonding Conductors:

1. Install in the straightest and shortest route between the origination and termination point, and no longer than required. The bend radius shall not be smaller than eight times the diameter of the conductor. No one bend may exceed 90 degrees.
2. Install without splices.
3. Support at not more than 36-inch intervals.
4. Install grounding and bonding conductors in 3/4-inch PVC conduit until conduit enters a telecommunications room. The grounding and bonding conductor pathway through a plenum shall be in EMT. Conductors shall not be installed in EMT unless otherwise indicated.

    a. If a grounding and bonding conductor is installed in ferrous metallic conduit, bond the conductor to the conduit using a grounding bushing that complies with requirements in Section 270528 "Pathways for Communications Systems," and bond both ends of the conduit to a TGB.

3.4 GROUNDING BUSBARS

A. Indicate locations of grounding busbars on Drawings. Install busbars horizontally, on insulated spacers 2 inches minimum from wall, 12 inches above finished floor unless otherwise indicated.

B. Where indicated on both sides of doorways, route bus up to top of door frame, across top of doorway, and down; connect to horizontal bus.

3.5 CONNECTIONS

A. Bond metallic equipment in a telecommunications equipment room to the grounding busbar in that room, using equipment grounding conductors not smaller than No. 6 AWG.

B. Stacking of conductors under a single bolt is not permitted when connecting to busbars.

C. Assemble the wire connector to the conductor, complying with manufacturer's written instructions and as follows:

1. Use crimping tool and the die specific to the connector.
2. Pretwist the conductor.
3. Apply an antioxidant compound to all bolted and compression connections.

D. Primary Protector: Bond to the TMGB with insulated bonding conductor.

E. Interconnections: Interconnect all TGBs with the TMGB with the telecommunications backbone conductor. If more than one TMGB is installed, interconnect TMGBs using the grounding equalizer conductor. The telecommunications backbone conductor and grounding equalizer conductor size shall not be less than 2 kcmils/linear foot of conductor length, up to a maximum size of No. 3/0 AWG unless otherwise indicated.

F. Telecommunications Enclosures and Equipment Racks: Bond metallic components of enclosures to the telecommunications bonding and grounding system. Install top-mounted rack grounding busbar unless the enclosure and rack are manufactured with the busbar. Bond the equipment grounding busbar to the TGB No. 2 AWG bonding conductors.

G. Structural Steel: Where the structural steel of a steel frame building is readily accessible within the room or space, bond each TGB and TMGB to the vertical steel of the building frame.

H. Electrical Power Panelboards: Where an electrical panelboard for telecommunications equipment is located in the same room or space, bond each TGB to the ground bar of the panelboard.

I. Shielded Cable: Bond the shield of shielded cable to the TGB in communications rooms and spaces. Comply with TIA-568-C.1 and TIA-568-C.2 when grounding shielded balanced twisted-pair cables.

J. Rack- and Cabinet-Mounted Equipment: Bond powered equipment chassis to the cabinet or rack grounding bar. Power connection shall comply with NFPA 70; the equipment grounding conductor in the power cord of cord- and plug-connected equipment shall be considered as a supplement to bonding requirements in this Section.

K. Access Floors: Bond all metal parts of access floors to the TGB.

3.6 IDENTIFICATION

A. Labels shall be preprinted or computer-printed type.

1. Label TMGB(s) with "fs-TMGB," where "fs" is the telecommunications space identifier for the space containing the TMGB.
2. Label TGB(s) with "fs-TGB," where "fs" is the telecommunications space identifier for the space containing the TGB.
3. Label the BCT and each telecommunications backbone conductor at its attachment point: "WARNING! TELECOMMUNICATIONS BONDING CONDUCTOR. DO NOT REMOVE OR DISCONNECT!"

3.7 FIELD QUALITY CONTROL

A. Perform tests and inspections.

B. Tests and Inspections:

1. Inspect physical and mechanical condition. Verify tightness of accessible, bolted, electrical connections with a calibrated torque wrench according to manufacturer's written instructions.
2. Test the bonding connections of the system using an ac earth ground-resistance tester, taking two-point bonding measurements in each telecommunications equipment room containing a TMGB and a TGB and using the process recommended by BICSI TDMM. Conduct tests with the facility in operation.

a. Measure the resistance between the busbar and the nearest available grounding electrode. The maximum acceptable value of this bonding resistance is 100 milliohms.

3. Test for ground loop currents using a digital clamp-on ammeter, with a full-scale of not more than 10 A, displaying current in increments of 0.01 A at an accuracy of plus/minus 2.0 percent.

a. With the grounding infrastructure completed and the communications system electronics operating, measure the current in every conductor connected to the TMGB and in each TGB. Maximum acceptable ac current level is 1 A.

C. Excessive Ground Resistance: If resistance to ground at the BCT exceeds 5 ohms, notify Engineer promptly and include recommendations to reduce ground resistance.

D. Grounding system will be considered defective if it does not pass tests and inspections.

END OF SECTION 270526

SECTION 270528 - PATHWAYS FOR COMMUNICATIONS SYSTEMS

PART 1 - GENERAL

1.1 SUMMARY

A. Section Includes:

1. Metal conduits and fittings.
2. Nonmetallic conduits and fittings.
3. Optical-fiber-cable pathways and fittings.
4. Boxes, enclosures, and cabinets.

1.2 ACTION SUBMITTALS

A. Product data for each type of product.

PART 2 - PRODUCTS

2.1 METAL CONDUITS AND FITTINGS

A. Description: Metal raceway of circular cross section with manufacturer-fabricated fittings.

B. Manufacturers: Subject to compliance with requirements, available manufacturers offering products that may be incorporated into the Work include the following:

1. ABB (Electrification Products Division).
2. Alpha Wire.
3. Anamet Electrical, Inc (Anaconda Sealtite).
4. Appleton - O-Z/Gedney; Emerson Electric Co., Automation Solutions.
5. Atkore International (AFC Cable Systems).
6. Atkore International (Allied Tube & Conduit).
7. Electri-Flex Company.
8. Plasti-Bond.
9. Republic Conduit.
10. Southwire Company.
11. Western Tube and Conduit Corporation.
12. Wheatland Tube Company.
13. Zekelman Industries (Picoma).
14. Additional manufacturers submitted for receiving engineer approval prior to bid.

C. General Requirements for Metal Conduits and Fittings:

1. Listed and labeled as defined in NFPA 70, by a nationally recognized testing laboratory, and marked for intended location and application.
2. Comply with TIA-569-D.

D. GRC: Comply with ANSI C80.1 and UL 6.

E. ARC: Comply with ANSI C80.5 and UL 6A.

F. IMC: Comply with ANSI C80.6 and UL 1242.

G. PVC-Coated Steel Conduit: PVC-coated IMC.

1. Comply with NEMA RN 1.
2. Coating Thickness: 0.040 inch, minimum.

H. EMT: Comply with ANSI C80.3 and UL 797.

I. Fittings for Metal Conduit: Comply with NEMA FB 1 and UL 514B.

1. Conduit Fittings for Hazardous (Classified) Locations: Comply with UL 1203 and NFPA 70.
2. Fittings for EMT:

    a. Material: Steel or die cast.
    b. Type: Setscrew or compression.

3. Expansion Fittings: PVC or steel to match conduit type, complying with UL-467, rated for environmental conditions where installed, and including flexible external bonding jumper.
4. Coating for Fittings for PVC-Coated Conduit: Minimum thickness of 0.040 inch, with overlapping sleeves protecting threaded joints.

J. Joint Compound for IMC, GRC, or ARC: Approved, as defined in NFPA 70, by authorities having jurisdiction for use in conduit assemblies, and compounded for use to lubricate and protect threaded conduit joints from corrosion and to enhance their conductivity.

2.2 NONMETALLIC CONDUITS AND FITTINGS

A. Description: Nonmetallic raceway of circular section with manufacturer-fabricated fittings.

B. Manufacturers: Subject to compliance with requirements, available manufacturers offering products that may be incorporated into the Work include the following:

1. ABB (Electrification Products Division).
2. Anamet Electrical, Inc (Anaconda Sealtite).
3. Atkore International (AFC Cable Systems).
4. Atkore International (Allied Tube & Conduit).
5. Cantex Inc.
6. Carlon; a brand of Thomas & Betts Corporation.

7. CertainTeed Corporation.
8. Condux International, Inc.
9. Dura-Line.
10. Electri-Flex Company.
11. Kraloy Fittings.
12. Lamson & Sessions.
13. Niedax Inc.
14. Orbia Advance Corporation, S.A.B. de C.V. (Dura-Line Communications Group).
15. Raco Taymac Bell; Hubbell Incorporated, Commercial and Industrial.
16. Additional manufacturers submitted for receiving engineer approval prior to bid.

C. General Requirements for Nonmetallic Conduits and Fittings:

1. Listed and labeled as defined in NFPA 70, by an NRTL, and marked for intended location and application.
2. Comply with TIA-569-D.

D. RNC: Type EPC-40-PVC, complying with NEMA TC 2 and UL 651 unless otherwise indicated.

E. Rigid HDPE: Comply with UL 651A.

F. Continuous HDPE: Comply with UL 651A.

G. RTRC: Comply with UL 2515A and NEMA TC 14.

1. Fittings: Comply with NEMA TC 3; match to conduit or tubing type and material.

2.3 OPTICAL-FIBER-CABLE PATHWAYS AND FITTINGS

A. Description: Comply with UL 2024; flexible-type pathway with a circular cross section, approved for plenum riser or general-use installation unless otherwise indicated.

B. Manufacturers: Subject to compliance with requirements, available manufacturers offering products that may be incorporated into the Work include the following:

1. Alpha Wire.
2. Carlon; a brand of Thomas & Betts Corporation.
3. Dura-Line.
4. Endot Industries Inc.
5. IPEX USA LLC.
6. Additional manufacturers submitted for receiving engineer approval prior to bid.

2.4 BOXES, ENCLOSURES, AND CABINETS

A. Description: Enclosures for communications.

B. Manufacturers: Subject to compliance with requirements, available manufacturers offering products that may be incorporated into the Work include the following:

1. ABB (Electrification Products Division).
2. Adalet.
3. Appleton - EGS; Emerson Electric Co., Automation Solutions.
4. Appleton - O-Z/Gedney; Emerson Electric Co., Automation Solutions.
5. Carlon; a brand of Thomas & Betts Corporation.
6. Eaton (Crouse-Hinds).
7. Erickson Electrical Equipment Company.
8. FSR Inc.
9. Milbank Manufacturing Co.
10. Molex Industrial Products Group; Woodhead Brand.
11. MonoSystems, Inc.
12. nVent (Hoffman).
13. Oldcastle Enclosure Solutions.
14. Plasti-Bond.
15. Quazite; Hubbell Incorporated, Power Systems.
16. Raco Taymac Bell; Hubbell Incorporated, Commercial and Industrial.
17. Spring City Electrical Manufacturing Company.
18. Stahlin Non-Metallic Enclosures.
19. Wiremold; Legrand North America, LLC.
20. Additional manufacturers submitted for receiving engineer approval prior to bid.

C. General Requirements for Boxes, Enclosures, and Cabinets:

1. Comply with TIA-569-D.
2. Boxes, enclosures, and cabinets installed in wet locations shall be listed and labeled as defined in NFPA 70, by an NRTL, and marked for use in wet locations.
3. Box extensions used to accommodate new building finishes shall be of same material as recessed box.
4. Device Box Dimensions: 4 inches square by 2-1/8 inches deep or 4 inches by 2-1/8 inches by 2-1/8 inches deep depending on required space.
5. Gangable boxes are prohibited.

D. Sheet Metal Outlet and Device Boxes: Comply with NEMA OS 1 and UL 514A.

E. Cast-Metal Outlet and Device Boxes: Comply with NEMA FB 1, ferrous alloy, Type FD, with gasketed cover.

F. Metal Floor Boxes:

1. Material: Cast metal.
2. Type: Fully adjustable.
3. Shape: Rectangular.
4. Metal floor boxes shall be listed and labeled as defined in NFPA 70, by a qualified testing agency, and marked for intended location and application.

G. Nonmetallic Floor Boxes: Nonadjustable, round.

1. Nonmetallic floor boxes shall be listed and labeled as defined in NFPA 70, by a qualified testing agency, and marked for intended location and application.

H. Small Sheet Metal Pull and Junction Boxes: NEMA OS 1.

I. Cast-Metal Access, Pull, and Junction Boxes: Comply with NEMA FB 1 and UL 1773, cast aluminum with gasketed cover.

J. Nonmetallic Outlet and Device Boxes: Comply with NEMA OS 2 and UL 514C.

K. Hinged-Cover Enclosures: Comply with UL 50 and NEMA 250, Type 1 for dry interior spaces Type 3R for exterior spaces Type 4 for interior wet/damp areas with continuous-hinge cover with flush latch unless otherwise indicated.

1. Metal Enclosures: Steel, finished inside and out with manufacturer's standard enamel.
2. Nonmetallic Enclosures:

   a. Material: Plastic or Fiberglass.

3. Interior Panels: Steel; all sides finished with manufacturer's standard enamel.

L. Cabinets:

1. NEMA 250, Type 1 for dry interior spaces Type 3R for exterior spaces galvanized-steel box with removable interior panel and removable front, finished inside and out with manufacturer's standard enamel.
2. Hinged door in front cover with flush latch and concealed hinge.
3. Key latch to match panelboards.
4. Metal barriers to separate wiring of different systems and voltage.
5. Accessory feet where required for freestanding equipment.
6. Nonmetallic cabinets shall be listed and labeled as defined in NFPA 70, by a qualified testing agency, and marked for intended location and application.

PART 3 - EXECUTION

3.1 PATHWAY APPLICATION

A. Minimum Pathway Size: 3/4-inch trade size for copper and aluminum cables, and 1 inch for optical-fiber cables. Contractor to confirm sizes with project owner and their IT vendor.

B. Pathway Fittings: Compatible with pathways and suitable for use and location.

C. Do not install aluminum conduits, boxes, or fittings in contact with concrete or earth.

~~D.~~ Do not install nonmetallic conduit where ambient temperature exceeds 120 deg F~~.~~

3.2 INSTALLATION

A. Comply with the following standards for installation requirements except where requirements on Drawings or in this Section are stricter:

1. NECA 1.
2. NECA/BICSI 568.
3. TIA-569-D.
4. NECA 101
5. NECA 102.

B. Comply with NFPA 70 limitations for types of pathways allowed in specific occupancies and number of floors.

C. Comply with requirements in Section 078413 "Penetration Firestopping" for firestopping materials and installation for penetrations through fire-rated walls, ceilings, and assemblies.

D. Comply with requirements in Section 270529 "Hangers and Supports for Communications Systems" for hangers and supports.

E. Comply with requirements in Section 270544 "Sleeves and Sleeve Seals for Communications Pathways and Cabling" for sleeves and sleeve seals for communications.

F. Keep pathways at least 6 inches away from parallel runs of flues and steam or hot-water pipes. Install horizontal pathway runs above water and steam piping.

G. Complete pathway installation before starting conductor installation.

H. Install no more than the equivalent of four 90-degree bends in any pathway run. Support within 12 inches of changes in direction. Utilize long radius ells for all optical-fiber cables.

I. Conceal rigid conduit within finished walls, ceilings, and floors unless otherwise indicated. Install conduits parallel or perpendicular to building lines.

J. Support conduit within 12 inches of enclosures to which attached.

K. Pathways Embedded in Slabs:

1. Run conduit larger than 1-inch trade size, parallel or at right angles to main reinforcement. Where at right angles to reinforcement, place conduit close to slab support. Secure pathways to reinforcement at maximum 10-foot intervals.
2. Arrange pathways to cross building expansion joints at right angles with expansion fittings. Comply with requirements for expansion joints specified in this article.
3. Arrange pathways to keep a minimum of 2 inches of concrete cover in all directions.
4. Do not embed threadless fittings in concrete unless specifically approved by Engineer for each specific location.

L. Stub-ups to Above Recessed Ceilings:

1. Use EMT, IMC, or RMC for pathways.

2. Use a conduit bushing or insulated fitting to terminate stub-ups not terminated in hubs or in an enclosure.

M. Threaded Conduit Joints, Exposed to Wet, Damp, Corrosive, or Outdoor Conditions: Apply listed compound to threads of pathway and fittings before making up joints. Follow compound manufacturer's written instructions.

N. Coat field-cut threads on PVC-coated pathway with a corrosion-preventing conductive compound prior to assembly.

O. Do not rely on locknuts to penetrate nonconductive coatings on enclosures. Remove coatings in the locknut area prior to assembling conduit to enclosure, to assure a continuous ground path.

P. Cut conduit perpendicular to the length. For conduits of 2-inch trade size and larger, use roll cutter or a guide to ensure cut is straight and perpendicular to the length.

Q. Install pull wires in empty pathways. Use polypropylene or monofilament plastic line with not less than 200-lb tensile strength. Leave at least 12 inches of slack at each end of pull wire. Secure pull wire, so it cannot fall into conduit. Cap pathways designated as spare alongside pathways in use.

R. Pathways for Optical-Fiber and Communications Cable: Install pathways, metal and nonmetallic, rigid and flexible, as follows:

1. 3/4-Inch Trade Size and Smaller: Install pathways in maximum lengths of 50 feet.
2. 1-Inch Trade Size and Larger: Install pathways in maximum lengths of 75 feet.
3. Install with a maximum of two 90-degree bends or equivalent for each length of pathway unless Drawings show stricter requirements. Separate lengths with pull or junction boxes or terminations at distribution frames or cabinets where necessary to comply with these requirements.

S. Install pathway-sealing fittings at accessible locations according to NFPA 70 and fill them with listed sealing compound. For concealed pathways, install each fitting in a flush steel box with a blank cover plate having a finish similar to that of adjacent plates or surfaces. Install pathway-sealing fittings according to NFPA 70.

T. Install devices to seal pathway interiors at accessible locations. Locate seals, so no fittings or boxes are between the seal and the following changes of environments. Seal the interior of all pathways at the following points:

1. Where conduits pass from warm to cold locations, such as boundaries of refrigerated spaces.
2. Where an underground service pathway enters a building or structure.
3. Where otherwise required by NFPA 70.

U. Comply with manufacturer's written instructions for solvent welding PVC conduit and fittings.

V. Expansion-Joint Fittings:

1. Install in each run of aboveground RNC that is located where environmental temperature change may exceed 30 deg F, and that has straight-run length that exceeds 25 feet. Install in each run of aboveground RMC and EMT that is located where environmental temperature change may exceed 100 deg F, and that has straight-run length that exceeds 100 feet.

2. Install fitting(s) that provide expansion and contraction for at least 0.00041 inch per foot of length of straight run per deg F of temperature change for PVC conduits. Install fitting(s) that provide expansion and contraction for at least 0.000078 inch per foot of length of straight run per deg F of temperature change for metal conduits.
3. Install expansion fittings at all locations where conduits cross building or structure expansion joints.
4. Install each expansion-joint fitting with position, mounting, and piston setting selected according to manufacturer's written instructions for conditions at specific location at time of installation. Install conduit supports to allow for expansion movement.

W. Mount boxes at heights indicated on Drawings. Install boxes with height measured to center of box unless otherwise indicated.

X. Recessed Boxes in Masonry Walls: Saw-cut opening for box in center of cell of masonry block, and install box flush with surface of wall. Prepare block surface to provide a flat surface for a raintight connection between box and cover plate or supported equipment and box.

Y. Horizontally separate boxes mounted on opposite sides of walls, so they are not in the same vertical channel.

Z. Fasten junction and pull boxes to or support from building structure. Do not support boxes by conduits.

AA. Set metal floor boxes level and flush with finished floor surface.

BB. Set nonmetallic floor boxes level. Trim after installation to fit flush with finished floor surface.

3.3 INSTALLATION OF UNDERGROUND CONDUIT

A. Direct-Buried Conduit:

1. Excavate trench bottom to provide firm and uniform support for conduit. Install backfill.
2. After installing conduit, backfill and compact.
3. Install manufactured duct elbows for stub-ups at poles and equipment and at building entrances through floor unless otherwise indicated. Install manufactured rigid steel conduit elbows for stub-ups at poles and equipment and at building entrances through floor.

    a. Couple steel conduits to ducts with adapters designed for this purpose, and encase coupling with 3 inches of concrete around conduit for a minimum of 12 inches on each side of the coupling.
    b. For stub-ups at equipment mounted on outdoor concrete bases and where conduits penetrate building foundations, extend steel conduit horizontally a minimum of 60

inches from edge of foundation or equipment base. Install insulated grounding bushings on terminations at equipment.

4. Underground Warning Tape: Comply with requirements in Section 270553 "Identification for Communications Systems."

3.4 INSTALLATION OF UNDERGROUND HANDHOLES AND BOXES

A. Install handholes and boxes level and plumb and with orientation and depth coordinated with connecting conduits to minimize bends and deflections required for proper entrances.

B. Unless otherwise indicated, support units on a level bed of crushed stone or gravel, graded from 1/2-inch sieve to No. 4 sieve and compacted to same density as adjacent undisturbed earth.

C. Elevation: In paved areas, set so cover surface will be flush with finished grade. Set covers of other enclosures 1 inch above finished grade.

D. Field cut openings for conduits according to enclosure manufacturer's written instructions. Cut wall of enclosure with a tool designed for material to be cut. Size holes for terminating fittings to be used, and seal around penetrations after fittings are installed.

3.5 SLEEVE AND SLEEVE-SEAL INSTALLATION FOR COMMUNICATIONS PENETRATIONS

A. Install sleeves and sleeve seals at penetrations of exterior floor and wall assemblies. Comply with requirements in Section 270544 "Sleeves and Sleeve Seals for Communications Pathways and Cabling."

3.6 FIRESTOPPING

A. Install firestopping at penetrations of fire-rated floor and wall assemblies. Comply with requirements in Section 078413 "Penetration Firestopping."

3.7 PROTECTION

A. Protect coatings, finishes, and cabinets from damage or deterioration.

1. Repair damage to galvanized finishes with zinc-rich paint recommended by manufacturer.
2. Repair damage to PVC coatings or paint finishes with matching touchup coating recommended by manufacturer.

END OF SECTION 270528

SECTION 270529 - HANGERS AND SUPPORTS FOR COMMUNICATIONS SYSTEMS

PART 1 - GENERAL

1.1 SUMMARY

A. Section Includes:

1. Steel slotted support systems for communication raceways.
2. Conduit and cable support devices.
3. Support for conductors in vertical conduit.
4. Structural steel for fabricated supports and restraints.
5. Mounting, anchoring, and attachment components, including powder-actuated fasteners, mechanical expansion anchors, concrete inserts, clamps, through bolts, toggle bolts, and hanger rods.
6. Fabricated metal equipment support assemblies.

B. Related Requirements:

1.2 ACTION SUBMITTALS

A. Product Data: For each type of product.

PART 2 - PRODUCTS

2.1 PERFORMANCE REQUIREMENTS

A. Delegated Design: Engage a qualified professional engineer, as defined in Section 014000 "Quality Requirements," to design hanger and support system.

B. Surface-Burning Characteristics: Comply with ASTM E84; testing by a qualified testing agency. Identify products with appropriate markings of applicable testing agency.

1. Flame Rating: Class 1.
2. Self-extinguishing according to ASTM D635.

2.2 SUPPORT, ANCHORAGE, AND ATTACHMENT COMPONENTS

A. Steel Slotted Support Systems: Preformed steel channels and angles, with minimum 13/32-inch-diameter holes at a maximum of 8 inches o.c. in at least one surface.

1. Standard: Comply with MFMA-4 factory-fabricated components for field assembly.
2. Material for Channel, Fittings, and Accessories: Galvanized steel

3. Metallic Coatings: Hot-dip galvanized after fabrication and applied according to MFMA-4.
4. Nonmetallic Coatings: Manufacturer's standard PVC, polyurethane, or polyester coating applied according to MFMA-4.
5. Painted Coatings: Manufacturer's standard painted coating applied according to MFMA-4.
6. Protect finishes on exposed surfaces from damage by applying a strippable, temporary protective covering before shipping.
7. Channel Dimensions: Selected for applicable load criteria.

B. Conduit and Cable Support Devices: Steel clamps, hangers, and associated fittings, designed for types and sizes of raceway or cable to be supported.

C. Support for Conductors in Vertical Conduit: Factory-fabricated assembly consisting of threaded body and insulating wedging plug or plugs for nonarmored communications conductors or cables in riser conduits. Plugs shall have number, size, and shape of conductor gripping pieces as required to suit individual conductors or cables supported. Body shall be made of malleable iron.

D. Structural Steel for Fabricated Supports and Restraints: ASTM A36/A36M steel plates, shapes, and bars; black and galvanized.

E. Mounting, Anchoring, and Attachment Components: Items for fastening electrical items or their supports to building surfaces include the following:

1. Powder-Actuated Fasteners: Threaded-steel stud for use in hardened portland cement concrete, steel, or wood, with tension, shear, and pullout capacities appropriate for supported loads and building materials where used.

2. Mechanical-Expansion Anchors: Insert-wedge-type zinc-coated steel for use in hardened portland cement concrete, with tension, shear, and pullout capacities appropriate for supported loads and building materials where used.

3. Concrete Inserts: Steel or malleable-iron, slotted support system units are similar to MSS Type 18 units and comply with MFMA-4 or MSS SP-58.
4. Clamps for Attachment to Steel Structural Elements: MSS SP-58 units are suitable for attached structural element.
5. Through Bolts: Structural type, hex head, and high strength. Comply with ASTM F3125/F3125M,Grade A325.
6. Toggle Bolts: All-steel springhead type.
7. Hanger Rods: Threaded steel.

2.3 FABRICATED METAL EQUIPMENT SUPPORT ASSEMBLIES

A. Description: Welded or bolted structural-steel shapes, shop or field fabricated to fit dimensions of supported equipment.

B. Materials: Comply with requirements in Section 055000 "Metal Fabrications" for steel shapes and plates.

PART 3 - EXECUTION

3.1 APPLICATION

A. Comply with the following standards for application and installation requirements of hangers and supports, except where requirements on Drawings or in this Section are stricter:

1. NECA 1.
2. NECA/BICSI 568.
3. TIA-569-C.
4. NECA 101.
5. NECA 102.
6. NECA 105.
7. NECA 111.

B. Comply with requirements in Section 078413 "Penetration Firestopping" for firestopping materials and installation for penetrations through fire-rated walls, ceilings, and assemblies.

C. Comply with requirements for pathways specified in Section 270528 "Pathways for Communications Systems."

D. Maximum Support Spacing and Minimum Hanger Rod Size for Raceway: Space supports for EMTs, IMCs, and RMCs as required by NFPA 70. Minimum rod size shall be 1/4 inch in diameter.

E. Multiple Raceways or Cables: Install trapeze-type supports fabricated with steel slotted or other support system, sized so capacity can be increased by at least 25 percent in future without exceeding specified design load limits.

1. Secure raceways and cables to these supports with single-bolt conduit clamps.

F. Spring-steel clamps designed for supporting single conduits without bolts may be used for 1-1/2-inch and smaller raceways serving branch circuits and communication systems above suspended ceilings and for fastening raceways to trapeze supports.

3.2 SUPPORT INSTALLATION

A. Raceway Support Methods: In addition to methods described in NECA 1, EMT IMC and RMC may be supported by openings through structure members, according to NFPA 70.

B. Strength of Support Assemblies: Where not indicated, select sizes of components, so strength will be adequate to carry present and future static loads within specified loading limits. Minimum static design load used for strength determination shall be weight of supported components plus 200 lb.

C. Mounting and Anchorage of Surface-Mounted Equipment and Components: Anchor and fasten communications items and their supports to building structural elements by the following methods unless otherwise indicated by code:

1. To Wood: Fasten with lag screws or through bolts.
2. To New Concrete: Bolt to concrete inserts.
3. To Masonry: Use approved toggle-type bolts on hollow masonry units and expansion anchor fasteners on solid masonry units.
4. To Existing Concrete: Use expansion anchor fasteners.
5. Instead of expansion anchors, powder-actuated-driven threaded studs, provided with lock washers and nuts, may be used in existing standard-weight concrete 4 inches thick or greater. Do not use for anchorage to lightweight-aggregate concrete or for slabs less than 4 inches thick.
6. To Steel: –Beam clamps (MSS SP-58, Type 19, 21, 23, 25, or 27), complying with MSS SP-69.
7. To Light Steel: Sheet metal screws.
8. Items Mounted on Hollow Walls and Nonstructural Building Surfaces: Mount cabinets, panelboards, disconnect switches, control enclosures, pull and junction boxes, transformers, and other devices on slotted-channel racks attached to substrate by means that comply with seismic-restraint strength and anchorage requirements.

D. Drill holes for expansion anchors in concrete at locations and to depths that avoid the need for reinforcing bars.

3.3 INSTALLATION OF FABRICATED METAL SUPPORTS

A. Comply with installation requirements in Section 055000 "Metal Fabrications" for site-fabricated metal supports.

B. Cut, fit, and place miscellaneous metal supports accurately in location, alignment, and elevation to support and anchor communications materials and equipment.

C. Field Welding: Comply with AWS D1.1/D1.1M.

3.4 PAINTING

A. Touchup: Clean field welds and abraded areas of shop paint. Paint exposed areas immediately after erecting hangers and supports. Use same materials as used for shop painting. Comply with SSPC-PA 1 requirements for touching up field-painted surfaces.

1. Apply paint by brush or spray to provide minimum dry film thickness of 2.0 mils.

B. Galvanized Surfaces: Clean welds, bolted connections, and abraded areas, and apply galvanizing-repair paint to comply with ASTM A780.

END OF SECTION 270529

SECTION 270544 - SLEEVES AND SLEEVE SEALS FOR COMMUNICATIONS PATHWAYS AND CABLING

PART 1 - GENERAL

1.1 RELATED DOCUMENTS

A. Drawings and general provisions of the Contract, including General and Supplementary Conditions and Division 01 Specification Sections, apply to this Section.

1.2 SUMMARY

A. Section Includes:

1. Round sleeves.
2. Rectangular sleeves.
3. Sleeve seal systems.
4. Grout.
5. Pourable sealants.
6. Foam sealants.

1.3 ACTION SUBMITTALS

A. Product Data: For each type of product.

PART 2 - PRODUCTS

2.1 ROUND SLEEVES

A. Wall Sleeves, Steel:

1. Manufacturers: Subject to compliance with requirements, available manufacturers offering products that may be incorporated into the Work include the following:

a. Advance Products & Systems, LLC.
b. CCI Piping Systems.
c. Flexicraft Industries.
d. GPT; an EnPro Industries company.
e. Additional manufacturers submitted for receiving engineer approval prior to bid.

2. Description: ASTM A53/A53M, Type E, Grade B, Schedule 40, zinc coated, plain ends and integral waterstop.

B. Pipe Sleeves, PVC:

1. Manufacturers: Subject to compliance with requirements, available manufacturers offering products that may be incorporated into the Work include the following:

   a. CCI Piping Systems.
   b. GPT; an EnPro Industries company.
   c. Metraflex Company (The).
   d. Additional manufacturers submitted for receiving engineer approval prior to bid.

2. Description: ASTM D1785, Schedule 40.

C. Sheet Metal Sleeves, Galvanized Steel, Round:

1. Manufacturers: Subject to compliance with requirements, available manufacturers offering products that may be incorporated into the Work include the following:

   a. Benefast.
   b. Specified Technologies, Inc.
   c. Additional manufacturers submitted for receiving engineer approval prior to bid.

2. Description: Galvanized-steel sheet; thickness not less than 0.0239-inch; round tube closed with welded longitudinal joint, with tabs for screw-fastening the sleeve to the board.

2.2 RECTANGULAR SLEEVES

A. Sheet Metal Sleeves, Galvanized Steel, Rectangular:

1. Manufacturers: Subject to compliance with requirements, available manufacturers offering products that may be incorporated into the Work include the following:

   a. Abesco Fire LLC.
   b. Specified Technologies, Inc.
   c. Wiremold; Legrand North America, LLC.
   d. Additional manufacturers submitted for receiving engineer approval prior to bid.

2. Description:

   a. Material: Galvanized sheet steel.
   b. Minimum Metal Thickness:

      1) For sleeve cross-section rectangle perimeter less than 50 inches and with no side larger than 16 inches, thickness must be 0.052 inch.
      2) For sleeve cross-section rectangle perimeter not less than 50 inches or with one or more sides larger than 16 inches, thickness must be 0.138 inch.

2.3 SLEEVE SEAL SYSTEMS

A. Manufacturers: Subject to compliance with requirements, available manufacturers offering products that may be incorporated into the Work include the following:

1. Advance Products & Systems, Inc.
2. BWM Company.
3. CALPICO, Inc.
4. Flexicraft Industries.
5. Metraflex Company (The).
6. Pipeline Seal and Insulator, Inc.
7. Proco Products, Inc.
8. Additional manufacturers submitted for receiving engineer approval prior to bid.

B. Description: Modular sealing device, designed for field assembly, to fill annular space between sleeve and pathway or cable or between pathway and cable.

1. Sealing Elements: EPDM rubber interlocking links shaped to fit surface of pipe. Include type and number required for pipe material and size of pipe.
2. Pressure Plates: -Fiber-reinforced plastic-.
3. Connecting Bolts and Nuts: Carbon steel, with corrosion-resistant coating, of length required to secure pressure plates to sealing elements.

2.4 GROUT

A. Description: Nonshrink; recommended for interior and exterior sealing openings in non-fire-rated walls or floors.

1. Standard: ASTM C1107/C1107M, Grade B, post-hardening and volume-adjusting, dry, hydraulic-cement grout.
2. Design Mix: 5000-psi, 28-day compressive strength.
3. Packaging: Premixed and factory packaged.

2.5 POURABLE SEALANTS

A. Manufacturers: Subject to compliance with requirements, available manufacturers offering products that may be incorporated into the Work include the following:

1. Carlisle SynTec Incorporated.
2. GAF.
3. Johns Manville; a Berkshire Hathaway company.
4. Additional manufacturers submitted for receiving engineer approval prior to bid.

B. Description: Single-component, neutral-curing elastomeric sealants of grade indicated below.

1. Grade: Pourable (self-leveling) formulation for openings in floors and other horizontal surfaces that are not fire rated.

2.6 FOAM SEALANTS

A. Manufacturers: Subject to compliance with requirements, available manufacturers offering products that may be incorporated into the Work include the following:

1. Dow Chemical Company (The).
2. Innovative Chemical Products (Building Solutions Group).
3. Additional manufacturers submitted for receiving engineer approval prior to bid.

B. Description: Multicomponent, liquid elastomers that, when mixed, expand and cure in place to produce a flexible, nonshrinking foam. Foam expansion must not damage cables or crack penetrated structure.

PART 3 - EXECUTION

3.1 INSTALLATION OF SLEEVES FOR NON-FIRE-RATED ELECTRICAL PENETRATIONS

A. Comply with NECA 1.

B. Sleeves for Conduits Penetrating Above-Grade, Non-Fire-Rated, Concrete and Masonry-Unit Floors and Walls:

1. Interior Penetrations of Non-Fire-Rated Walls and Floors:

a. Seal space outside of sleeves with mortar or grout. Pack sealing material solidly between sleeve and wall or floor so no voids remain. Tool exposed surfaces smooth; protect material while curing.
b. Seal annular space between sleeve and pathway or cable, using joint sealant appropriate for size, depth, and location of joint. Comply with requirements in Section 079200 "Joint Sealants."

2. Use pipe sleeves unless penetration arrangement requires rectangular sleeved opening.
3. Size pipe sleeves to provide 1/4-inch annular clear space between sleeve and pathway or cable, unless sleeve seal system is to be installed.
4. Install sleeves for wall penetrations unless core-drilled holes or formed openings are used. Install sleeves during erection of walls. Cut sleeves to length for mounting flush with both surfaces of walls. Deburr after cutting.
5. Install sleeves for floor penetrations. Extend sleeves installed in floors 2 inches above finished floor level. Install sleeves during erection of floors.

C. Sleeves for Conduits Penetrating Non-Fire-Rated Wall Assemblies:

1. Use circular metal sleeves unless penetration arrangement requires rectangular sleeved opening.
2. Seal space outside of sleeves with approved joint compound for wall assemblies.

D. Roof-Penetration Sleeves: Seal penetration of individual pathways and cables with flexible boot-type flashing units applied in coordination with roofing work.

E. Aboveground, Exterior-Wall Penetrations: Seal penetrations using steel pipe sleeves and mechanical sleeve seal systems. Size sleeves to allow for 1-inch annular clear space between pipe and sleeve for installing mechanical sleeve seals.

F. Underground, Exterior-Wall and Floor Penetrations:

1. Install steel pipe sleeves with integral waterstops. Size sleeves to allow for 1-inch annular clear space between pathway or cable and sleeve for installing sleeve seal system. Install sleeve during construction of floor or wall.
2. Install steel pipe sleeves. Size sleeves to allow for 1-inch annular clear space between pathway or cable and sleeve for installing sleeve seal system. Grout sleeve into wall or floor opening.

3.2 INSTALLATION OF RECTANGULAR SLEEVES AND SLEEVE SEALS

A. Install sleeves in existing walls without compromising structural integrity of walls. Do not cut structural elements without reinforcing the wall to maintain the designed weight bearing and wall stiffness.

B. Install conduits and cable with no crossings within the sleeve.

C. Fill opening around conduits and cables with expanding foam without leaving voids.

D. Provide metal sheet covering at both wall surfaces and finish to match surrounding surfaces. Metal sheet must be same material as sleeve.

3.3 INSTALLATION OF SLEEVE SEAL SYSTEMS

A. Install sleeve seal systems in sleeves in exterior concrete walls and slabs-on-grade at pathway entries into building.

B. Install type and number of sealing elements recommended by manufacturer for pathway or cable material and size. Position pathway or cable in center of sleeve. Assemble mechanical sleeve seals and install in annular space between pathway or cable and sleeve. Tighten bolts against pressure plates that cause sealing elements to expand and make watertight seal.

END OF SECTION 270544

SECTION 281500 - ACCESS CONTROL HARDWARE DEVICES

PART 1 - GENERAL

1.1 RELATED DOCUMENTS

A. Drawings and general provisions of the Contract, including General and Supplementary Conditions and Division 01 Specification Sections, apply to this Section.

1.2 SUMMARY

A. Section Includes:

1. Card readers, credential cards, and keypads

B. Related Requirements:

1. Section 281300 "Access Control System Software and Database Management" for control and monitoring applications, workstations, and interfaces.

1.3 ACTION SUBMITTALS

A. Product Data: For each type of product indicated.

B. Shop Drawings: Include plans, elevations, sections, details, and attachments to other work.

C. Product Schedules.

D. Samples: For workstation outlets, jacks, jack assemblies, and faceplates. For each exposed product and for each color and texture specified.

PART 2 - PRODUCTS

2.1 OPERATION

A. Security access system hardware shall use a single database for access-control and credential-creation functions.

2.2 PERFORMANCE REQUIREMENTS

A. Electrical Components, Devices, and Accessories: Listed and labeled as defined in NFPA 70, by a qualified testing agency, and marked for intended location and application.

B. Comply with NFPA 70, "National Electrical Code."

2.3 CARD READERS, CREDENTIAL CARDS, AND KEYPADS

A. Manufacturers: Subject to compliance with requirements, available manufacturers offering products that may be incorporated into the Work include, but are not limited to the following:

1. ABB, Industrial Automation Division.
2. Honeywell International Inc.
3. Schneider Electric USA, Inc.
4. Additional manufacturers submitted for and receiving engineer approval prior to bid.

B. Card Readers:

1. E.C. to coordinate card reader selection and requirements with G.C., owner, and architect.

C. Keypads:

1. E.C. to coordinate keypad selection and requirements with G.C., owner, and architect.

D. Credential Cards:

1. E.C. to coordinate credential cards and requirements with G.C., owner, and architect.

PART 3 - EXECUTION

3.1 INSTALLATION

A. Comply with recommendations in SIA CP-01.

B. Comply with TIA 606-B, "Administration Standard for Commercial Telecommunications Infrastructure."

C. Product Schedules: Obtain detailed product schedules from manufacturer of access-control system or develop product schedules to suit Project. Fill in all data available from Project plans and specifications and publish as Product Schedules for review and approval.

D. In meetings with Architect and Owner, present Product Schedules and review, adjust, and prepare final setup documents. Use approved, final Product Schedules to set up system software.

3.2 GROUNDING

A. Comply with Section 270526 "Grounding and Bonding for Communications Systems."

B. Comply with IEEE 1100, "Recommended Practice for Power and Grounding Electronic Equipment."

C. Ground cable shields, drain conductors, and equipment to eliminate shock hazard and to minimize ground loops, common-mode returns, noise pickup, cross talk, and other impairments.

D. Bond shields and drain conductors to ground at only one point in each circuit.

E. Signal Ground:

1. Terminal: Locate in each equipment room and wiring closet; isolate from power system and equipment grounding.
2. Bus: Mount on wall of main equipment room with standoff insulators.
3. Backbone Cable: Extend from signal ground bus to signal ground terminal in each equipment room and wiring closet.

3.3 IDENTIFICATION

A. In addition to requirements in this article, comply with applicable requirements in Section 270553 "Identification for Communications Systems" and with TIA 606-B.

3.4 SYSTEM SOFTWARE AND HARDWARE

A. Develop, install, and test software and hardware, and perform database tests for the complete and proper operation of systems involved. Assign software license to Owner.

3.5 FIELD QUALITY CONTROL

A. Perform tests and inspections.

1. Manufacturer's Field Service: Engage a factory-authorized service representative to inspect components, assemblies, and equipment installations, including connections, and to assist in testing.

B. Tests and Inspections:

1. LAN Cable Procedures: Inspect for physical damage and test each conductor signal path for continuity and shorts. Use tester approved for type and kind of installed cable. Test for faulty connectors, splices, and terminations. Test according to TIA 568-C.1, "Commercial Building Telecommunications Cabling Standards - Part 1: General Requirements." Link performance for balanced twisted-pair cables must comply with minimum criteria in TIA 568-C.1.
2. Test each circuit and component of each system. Tests shall include, but are not limited to, measurements of power-supply output under maximum load, signal loop resistance, and leakage to ground where applicable. System components with battery backup shall be operated on battery power for a period of not less than 10 percent of the calculated

battery operating time. Provide special equipment and software if testing requires special or dedicated equipment.

3. Operational Test: After installation of cables and connectors, demonstrate product capability and compliance with requirements. Test each signal path for end-to-end performance from each end of all pairs installed. Remove temporary connections when tests have been satisfactorily completed.

C. Devices and circuits will be considered defective if they do not pass tests and inspections.

D. Prepare test and inspection reports.

3.6 STARTUP SERVICE

A. Engage a factory-authorized service representative to supervise and assist with startup service.

1. Complete installation and startup checks according to approved procedures that were developed in "Preparation" Article and with manufacturer's written instructions.
2. Enroll and prepare badges and access cards for Owner's operators, management, and security personnel.

END OF SECTION 281500

SECTION 284621.11 - ADDRESSABLE FIRE-ALARM SYSTEMS

PART 1 - GENERAL

1.1 SUMMARY

A. Section Includes:

1. Addressable fire-alarm system.
2. Fire-alarm control unit (FACU).
3. Manual fire-alarm boxes.
4. System smoke detectors.
5. Duct smoke detectors.
6. Heat detectors.
7. Fire-alarm notification appliances.
8. Fire-alarm graphic annunciators.
9. Fire-alarm remote annunciators.
10. Digital alarm communicator transmitters (DACTs).
11. Fire-alarm radio transmitters.

B. Related Requirements:

1. Section 087100 "Door Hardware" for magnetic door holders that release in response to fire-alarm outputs.
2. Section 260519 "Low-Voltage Electrical Power Conductors and Cables" or Section 260523 "Control Voltage Electrical Power Cables" for cables and conductors for fire-alarm systems.
3. Section 284700 "Mass Notification" for mass notification features that are required in addition to fire-alarm system and equipment requirements specified in this Section.

1.2 DEFINITIONS

A. DACT: Digital alarm communicator transmitter.

B. FACU: Fire-alarm control unit.

C. Voltage Class: For specified circuits and equipment, voltage classes are defined as follows:

1. Control Voltage: Listed and labeled for use in remote-control, signaling, and power-limited circuits supplied by a Class 2 or Class 3 power supply having rated output not greater than 150 V and 5 A, allowing use of alternate wiring methods complying with NFPA 70, Article 725.
2. Low Voltage: Listed and labeled for use in circuits supplied by a Class 1 or other power supply having rated output not greater than 1000 V, requiring use of wiring methods complying with NFPA 70, Article 300, Part I.

1.3 ACTION SUBMITTALS

A. Approved Permit Submittal: Submittals must be approved by authorities having jurisdiction prior to submitting them to Architect.

B. Product Data: For each type of product, including furnished options and accessories.

1. Include construction details, material descriptions, dimensions, profiles, and finishes.
2. Include rated capacities, operating characteristics, and electrical characteristics.

C. Shop Drawings: For fire-alarm system.

1. Comply with recommendations and requirements in "Documentation" section of "Fundamentals" chapter in NFPA 72.
2. Include plans, elevations, sections, and details, including details of attachments to other Work.
3. Include details of equipment assemblies. Indicate dimensions, weights, loads, required clearances, method of field assembly, components, and locations. Indicate conductor sizes, indicate termination locations and requirements, and distinguish between factory and field wiring.
4. Annunciator panel details as required by authorities having jurisdiction.
5. Detail assembly and support requirements.
6. Include voltage drop calculations for notification-appliance circuits.
7. Include battery-size calculations.
8. Include input/output matrix.
9. Include written statement from manufacturer that equipment and components have been tested as a system and comply with requirements in this Section and in NFPA 72.
10. Include performance parameters and installation details for each detector.
11. Verify that each duct detector is listed for complete range of air velocity, temperature, and humidity possible when air-handling system is operating.
12. Provide control wiring diagrams for fire-alarm interface to HVAC; coordinate location of duct smoke detectors and access to them.

    a. Show critical dimensions that relate to placement and support of sampling tubes, detector housing, and remote status and alarm indicators.
    b. Show field wiring and equipment required for HVAC unit shutdown on alarm.
    c. Locate detectors in accordance with manufacturer's written instructions.
13. Include floor plans to indicate final outlet locations showing address of each addressable device. Show size and route of cable and conduits and point-to-point wiring diagrams.

1.4 CLOSEOUT SUBMITTALS

A. Operation and Maintenance Data: For fire-alarm systems and components to include in emergency, operation, and maintenance manuals.

1. In addition to items specified in Section 017823 "Operation and Maintenance Data," include the following:

a. Comply with "Records" section of "Inspection, Testing and Maintenance" chapter in NFPA 72.
b. Provide "Fire-Alarm and Emergency Communications System Record of Completion Documents" in accordance with "Completion Documents" Article in "Documentation" section of "Fundamentals" chapter in NFPA 72.
c. Complete wiring diagrams showing connections between devices and equipment. Each conductor must be numbered at every junction point with indication of origination and termination points.
d. Riser diagram.
e. Device addresses.
f. Air-sampling system sample port locations and modeling program report showing layout meets performance criteria.
g. Record copy of site-specific software.
h. Provide "Inspection and Testing Form" in accordance with "Inspection, Testing and Maintenance" chapter in NFPA 72, and include the following:

    1) Equipment tested.
    2) Frequency of testing of installed components.
    3) Frequency of inspection of installed components.
    4) Requirements and recommendations related to results of maintenance.
    5) Manufacturer's user training manuals.

i. Manufacturer's required maintenance related to system warranty requirements.
j. Abbreviated operating instructions for mounting at FACU and each annunciator unit.

1.5 QUALITY ASSURANCE

A. Installer Qualifications:

1. Personnel must be trained and certified by manufacturer for installation of units required for this Project.
2. Installation must be by personnel certified by NICET as fire-alarm technician.
3. Licensed or certified by authorities having jurisdiction.

1.6 FIELD CONDITIONS

1.7 WARRANTY

A. Special Warranty: Manufacturer agrees to repair or replace fire-alarm system equipment and components that fail because of defects in materials or workmanship within specified warranty period.

PART 2 - PRODUCTS

2.1 ADDRESSABLE FIRE-ALARM SYSTEM

A. Description:

1. Noncoded, UL-certified addressable system, with multiplexed signal transmission and horn-and-strobe notification for evacuation.

B. Performance Criteria:

1. Regulatory Requirements:

a. Fire-Alarm Components, Devices, and Accessories: Listed and labeled by a NRTL in accordance with NFPA 70 for use with selected fire-alarm system and marked for intended location and application.

2. General Characteristics:

a. Automatic sensitivity control of certain smoke detectors.
b. Fire-alarm signal initiation must be by one or more of the following devices and systems:

1) Manual stations.
2) Heat detectors.
3) Smoke detectors.
4) Duct smoke detectors.
5) Automatic sprinkler system water flow.

c. Fire-alarm signal must initiate the following actions:

1) Continuously operate alarm notification appliances.
2) Identify alarm and specific initiating device at FACU, connected network control panels, off-premises network control panels, and remote annunciators.
3) Transmit alarm signal to remote alarm receiving station.
4) Release fire and smoke doors held open by magnetic door holders.
5) Switch HVAC equipment controls to fire-alarm mode.
6) Recall elevators to primary or alternate recall floors.
7) Activate elevator power shunt trip.
8) Record events in system memory.
9) Indicate device in alarm on graphic annunciator.

d. Supervisory signal initiation must be by one or more of the following devices and actions:

1) Valve supervisory switch.
2) Zones or individual devices have been disabled.
3) FACU has lost communication with network.

e. System trouble signal initiation must be by one or more of the following devices and actions:

1) Open circuits, shorts, and grounds in designated circuits.
2) Opening, tampering with, or removing alarm-initiating and supervisory signal-initiating devices.
3) Loss of communication with addressable sensor, input module, relay, control module, remote annunciator, printer interface, or Ethernet module.
4) Loss of primary power at FACU.
5) Ground or single break in internal circuits of FACU.
6) Abnormal ac voltage at FACU.
7) Break in standby battery circuitry.
8) Failure of battery charging.
9) Abnormal position of switch at FACU or annunciator.
10) Hose cabinet door open.

f. System Supervisory Signal Actions:

1) Initiate notification appliances.
2) Identify specific device initiating event at FACU, connected network control panels, and remote annunciators.
3) Record event on system printer.
4) After time delay of 200 seconds, transmit trouble or supervisory signal to remote alarm receiving station.
5) Transmit system status to building management system.
6) Display system status on graphic annunciator.

g. Network Communications:

1) Provide network communications for fire-alarm system in accordance with fire-alarm manufacturer's written instructions.
2) Provide network communications pathway per manufacturer's written instructions and requirements in NFPA 72 and NFPA 70.

h. Document Storage Box:

1) Description: Enclosure to accommodate standard 8-1/2-by-11 inch manuals and loose document records. Legend sheet will be permanently attached to door for system required documentation, key contacts, and system information. Provide two key ring holders with location to mount standard business cards for key contact personnel.
2) Material and Finish: 18-gauge cold-rolled steel; four mounting holes.
3) Color: Red powder-coat epoxy finish.
4) Labeling: Permanently screened with 1 inch high lettering "SYSTEM RECORD DOCUMENTS" with white indelible ink.
5) Security: Locked with 3/4 inch barrel lock. Provide solid 12 inch stainless steel piano hinge.

2.2 FIRE-ALARM CONTROL UNIT (FACU)

A. Manufacturers: Subject to compliance with requirements, available manufacturers offering products that may be incorporated into the Work include the following:

1. Honeywell International (Fire-Lite Alarms).
2. Honeywell International (Honeywell Gamewell-FCI).
3. Honeywell International (Notifier).
4. Additional manufacturers submitted for receiving engineer approval prior to bid.

B. Description: Field-programmable, microprocessor-based, modular, power-limited design with electronic modules.

C. Performance Criteria:

1. Regulatory Requirements: Comply with NFPA 72 and UL 864.
2. General Characteristics:

a. System software and programs must be held in nonvolatile flash, electrically erasable, programmable, read-only memory, retaining information through failure of primary and secondary power supplies.
b. Include real-time clock for time annotation of events on event recorder and printer.
c. Provide communication between FACU and remote circuit interface panels, annunciators, and displays.
d. FACU must be listed for connection to central-station signaling system service.
e. Provide nonvolatile memory for system database, logic, and operating system and event history. System must require no manual input to initialize in the event of complete power down condition. FACU must provide minimum 500-event history log.
f. Addressable Initiation Device Circuits: FACU must indicate which communication zones have been silenced and must provide selective silencing of alarm notification appliance by building communication zone.

1) Addressable Control Circuits for Operation of Notification Appliances and Mechanical Equipment: FACU must be listed for releasing service.

g. Fire-Alarm Annunciator: Arranged for interface between human operator at FACU and addressable system components including annunciation and supervision. Display alarm, supervisory, and component status messages and programming and control menu.

1) Annunciator and Display: LCD, 80 characters, minimum.
2) Keypad: Arranged to permit entry and execution of programming, display, and control commands.

h. Alphanumeric Display and System Controls: Arranged for interface between human operator at FACU and addressable system components including annunciation and supervision. Display alarm, supervisory, and component status messages and programming and control menu.

1) Annunciator and Display: LCD, three line(s) of 80 characters, minimum.
2) Keypad: Arranged to permit entry and execution of programming, display, and control commands.

i. Initiating-Device, Notification-Appliance, and Signaling-Line Circuits:

1) Pathway Class Designations: NFPA 72, Class B
2) Pathway Survivability: Level 0
3) Install no more than 256 addressable devices on each signaling-line circuit.
4) Install fault circuit isolators to comply with circuit performance requirements of NFPA 72 or with manufacturer's written instructions, whichever is more conservative.

j. Notification-Appliance Circuit:

1) Audible appliances must sound in three-pulse temporal pattern, as defined in NFPA 72.
2) Where notification appliances provide signals to sleeping areas, alarm signal must be 520 Hz square wave with intensity 15 dB above average ambient sound level or 5 dB above maximum sound level, or at least 75 dB(A-weighted), whichever is greater, measured at pillow.
3) Visual alarm appliances must flash in synchronization where multiple appliances are in same field of view, as defined in NFPA 72.

k. Elevator Recall: Initiate by one of the following alarm-initiating devices:

1) Elevator lobby detectors except lobby detector on designated floor.
2) Smoke detectors in elevator machine room.
3) Smoke detectors in elevator hoistway.

l. Elevator controller must be programmed to move cars to alternate recall floor if lobby detectors located on designated recall floors are activated.

m. Water-flow alarm connected to sprinkler in elevator shaft and elevator machine room must shut down elevators associated with location without time delay.

1) Water-flow switch associated with sprinkler in elevator pit may have delay to allow elevators to move to designated floor.

n. Door Controls: Door hold-open devices that are controlled by smoke detectors at doors in smoke-barrier walls must not be connected to fire-alarm system.

o. Transmission to Remote Alarm Receiving Station: Automatically transmit alarm, supervisory, and trouble signals to remote alarm station.

p. Primary Power: 24 V(dc) obtained from 120 V(ac) service and power-supply module. Initiating devices, notification appliances, signaling lines, trouble signals, and supervisory and DACT must be powered by 24 V(dc) source.

q. Alarm current draw of entire fire-alarm system must not exceed 80 percent of power-supply module rating.

r. Secondary Power: 24 V(dc) supply system with batteries, automatic battery charger, and automatic transfer switch.

D. Accessories:

1. Instructions: Computer printout or typewritten instruction card mounted behind plastic or glass cover in stainless steel or aluminum frame. Include interpretation and describe appropriate response for displays and signals. Briefly describe functional operation of system under normal, alarm, and trouble conditions.

2.3 MANUAL FIRE-ALARM BOXES

A. Manufacturers: Subject to compliance with requirements, available manufacturers offering products that may be incorporated into the Work include the following:

1. Honeywell International (Fire-Lite Alarms).
2. Honeywell International (Honeywell Gamewell-FCI).
3. Honeywell International (Notifier).
4. Additional manufacturers submitted for receiving engineer approval prior to bid.

B. General Requirements for Manual Fire-Alarm Boxes: Comply with UL 38. Boxes must be finished in red with molded, raised-letter operating instructions in contrasting color; must show visible indication of operation; and must be mounted on recessed outlet box. If indicated as surface mounted, provide manufacturer's surface back box.

1. Single-action mechanism, pull-lever type; with integral addressable module arranged to communicate manual-station status (normal, alarm, or trouble) to FACU.
2. Station Reset: Key- or wrench-operated switch.
3. Able to perform at up to 90 percent relative humidity at 90 deg F.
4. Able to be used in indoor areas.

2.4 SYSTEM SMOKE DETECTORS

A. Photoelectric Smoke Detectors:

1. Manufacturers: Subject to compliance with requirements, available manufacturers offering products that may be incorporated into the Work include the following:

a. Honeywell International (Fire-Lite Alarms).
b. Honeywell International (Honeywell Gamewell-FCI).
c. Honeywell International (Notifier).
d. Additional manufacturers submitted for receiving engineer approval prior to bid.

2. Performance Criteria:

a. Regulatory Requirements:

1) NFPA 72.
2) UL 268.

b. General Characteristics:

1) Integral Addressable Module: Arranged to communicate detector status (normal, alarm, or trouble) to FACU.
2) Base Mounting: Detector and associated electronic components must be mounted in twist-lock module that connects to fixed base. Provide terminals in fixed base for connection to building wiring.
3) Self-Restoring: Detectors do not require resetting or readjustment after actuation to restore them to normal operation.
4) Integral Visual-Indicating Light: LED type, indicating detector has operated and power-on status.
5) Detector address must be accessible from FACU and must be able to identify detector's location within system and its sensitivity setting.
6) Operator at FACU, having designated access level, must be able to manually access the following for each detector:

    a) Primary status.
    b) Device type.
    c) Present average value.
    d) Present sensitivity selected.
    e) Sensor range (normal, dirty, etc.).

7) Detector must have functional humidity range within 10 to 90 percent relative humidity.
8) Color: Coordinate with architect.
9) Remote Control: Unless otherwise indicated, detectors must be digital-addressable type, individually monitored at FACU for calibration, sensitivity, and alarm condition and individually adjustable for sensitivity by FACU.
10) Rate-of-rise temperature characteristic of combination smoke- and heat-detection units must be selectable at FACU for 15 or 20 deg F per minute.
11) Fixed-temperature sensing characteristic of combination smoke- and heat-detection units must be independent of rate-of-rise sensing and must be settable at FACU to operate at 135 or 155 deg F.
12) Multiple levels of detection sensitivity for each sensor.
13) Sensitivity levels based on time of day.

B. Ionization Smoke Detectors:

1. Manufacturers: Subject to compliance with requirements, available manufacturers offering products that may be incorporated into the Work include the following:

    a. Honeywell International (Fire-Lite Alarms).
    b. Honeywell International (Honeywell Gamewell-FCI).
    c. Honeywell International (Notifier).
    d. Additional manufacturers submitted for receiving engineer approval prior to bid.

2. Performance Criteria:

    a. Regulatory Requirements:

1) NFPA 72.
2) UL 268.

b. General Characteristics:
1) Integral Addressable Module: Arranged to communicate detector status (normal, alarm, or trouble) to FACU.
2) Base Mounting: Detector and associated electronic components must be mounted in twist-lock module that connects to fixed base. Provide terminals in fixed base for connection to building wiring.
3) Self-Restoring: Detectors do not require resetting or readjustment after actuation to restore them to normal operation.
4) Integral Visual-Indicating Light: LED type, indicating detector has operated.
5) Detector address must be accessible from FACU and must be able to identify detector's location within system and its sensitivity setting.
6) Operator at FACU, having designated access level, must be able to manually access the following for each detector:

a) Primary status.
b) Device type.
c) Present average value.
d) Present sensitivity selected.
e) Sensor range (normal, dirty, etc.).

7) Detector must have functional humidity range within 10 to 90 percent relative humidity.
8) Color: Selected by architect.
9) Remote Control: Unless otherwise indicated, detectors must be digital-addressable type, individually monitored at FACU for calibration, sensitivity, and alarm condition and individually adjustable for sensitivity by FACU.
10) Rate-of-rise temperature characteristic of combination smoke- and heat-detection units must be selectable at FACU for 15 or 20 deg F per minute.
11) Fixed-temperature sensing characteristic of combination smoke- and heat-detection units must be independent of rate-of-rise sensing and must be settable at FACU to operate at 135 or 155 deg F.

2.5 DUCT SMOKE DETECTORS

A. Manufacturers: Subject to compliance with requirements, available manufacturers offering products that may be incorporated into the Work include the following:

1. Honeywell International (Fire-Lite Alarms).
2. Honeywell International (Honeywell Gamewell-FCI).
3. Honeywell International (Notifier).
4. Additional manufacturers submitted for receiving engineer approval prior to bid.

B. Description: Photoelectric-type, duct-mounted smoke detector.

C. Performance Criteria:

1. Regulatory Requirements:

    a. NFPA 72.
    b. UL 268A.

2. General Characteristics:
    a. Integral Addressable Module: Arranged to communicate detector status (normal, alarm, or trouble) to FACU.
    b. Self-Restoring: Detectors do not require resetting or readjustment after actuation to restore them to normal operation.
    c. Integral Visual-Indicating Light: LED type, indicating detector has operated and power-on status.
    d. Detector address must be accessible from FACU and must be able to identify detector's location within system and its sensitivity setting.
    e. Operator at FACU, having designated access level, must be able to manually access the following for each detector:

        1) Primary status.
        2) Device type.
        3) Present average value.
        4) Present sensitivity selected.
        5) Sensor range (normal, dirty, etc.).

    f. Weatherproof Duct Housing Enclosure: NEMA 250, Type 4X; NRTL listed for use with supplied detector for smoke detection in HVAC system ducts.
    g. Each sensor must have multiple levels of detection sensitivity.
    h. Sampling Tubes: Design and dimensions as recommended by manufacturer for specific duct size, air velocity, and installation conditions where applied.
    i. Relay Fan Shutdown: Fully programmable relay rated to interrupt fan motor-control circuit.

2.6 HEAT DETECTORS

A. Combination-Type Heat Detectors:

1. Manufacturers: Subject to compliance with requirements, available manufacturers offering products that may be incorporated into the Work include the following:

    a. Honeywell International (Fire-Lite Alarms).
    b. Honeywell International (Honeywell Gamewell-FCI).
    c. Honeywell International (Notifier).
    d. Additional manufacturers submitted for receiving engineer approval prior to bid.

2. Performance Criteria:

    a. Regulatory Requirements:

        1) NFPA 72.
        2) UL 521.

b. General Characteristics:

1) Temperature sensors must test for and communicate sensitivity range of device.

c. Actuated by fixed temperature of 135 deg F or rate of rise that exceeds 15 deg F per minute unless otherwise indicated.
d. Mounting: Twist-lock base interchangeable with smoke-detector bases.
e. Integral Addressable Module: Arranged to communicate detector status (normal, alarm, or trouble) to FACU.
f. Detector must have functional humidity range of percent relative humidity.
g. Color: Coordinate with architect.

B. Fixed-Temperature-Type Heat Detectors:

1. Manufacturers: Subject to compliance with requirements, available manufacturers offering products that may be incorporated into the Work include the following:

a. Honeywell International (Fire-Lite Alarms).
b. Honeywell International (Honeywell Gamewell-FCI).
c. Honeywell International (Notifier).
d. Additional manufacturers submitted for receiving engineer approval prior to bid.

2. Performance Criteria:

a. Regulatory Requirements:

1) NFPA 72.
2) UL 521.

b. General Characteristics:

1) Actuated by temperature that exceeds fixed temperature of 190 deg F
2) Mounting: Twist-lock base interchangeable with smoke-detector bases.
3) Integral Addressable Module: Arranged to communicate detector status (normal, alarm, or trouble) to FACU.
4) Detector must have functional humidity range of 10 to 90 percent.
5) Color: Coordinate with architect.

2.7 FIRE-ALARM NOTIFICATION APPLIANCES

A. Fire-Alarm Audible Notification Appliances:

1. Manufacturers: Subject to compliance with requirements, available manufacturers offering products that may be incorporated into the Work include the following:

a. Eaton (Life Safety - Wheelock).
b. Honeywell International (Notifier).
c. Siemens Industry, Inc. (Building Technologies Division).

d. Additional manufacturers submitted for receiving engineer approval prior to bid.

2. Description: Horns, bells, or other notification devices that cannot output voice messages.
3. Performance Criteria:

a. Regulatory Requirements:

1) NFPA 72.

b. General Characteristics:

1) Connected to notification-appliance signal circuits, zoned as indicated, equipped for mounting as indicated, and with screw terminals for system connections.

B. Fire-Alarm Visible Notification Appliances:

1. Manufacturers: Subject to compliance with requirements, available manufacturers offering products that may be incorporated into the Work include the following:

a. Eaton (Life Safety - Wheelock).
b. Honeywell International (Notifier).
c. Siemens Industry, Inc. (Building Technologies Division).
d. Additional manufacturers submitted for receiving engineer approval prior to bid.

2. Performance Criteria:

a. Regulatory Requirements:

1) NFPA 72.
2) UL 1971.

b. General Characteristics:

1) Rated Light Output:

a) See engineering drawings for light output values.
b) 15/30/75/110 cd, selectable in field.

2) Clear or nominal white polycarbonate lens mounted on aluminum faceplate.
3) Mounting: Wall mounted unless otherwise indicated.
4) For units with guards to prevent physical damage, light output ratings must be determined with guards in place.
5) Flashing must be in temporal pattern, synchronized with other units.
6) Strobe Leads: Factory connected to screw terminals.
7) Mounting Faceplate: Factory Finish to be selected by architect, must be Red or White.

2.8 FIRE-ALARM REMOTE ANNUNCIATORS

A. Manufacturers: Subject to compliance with requirements, available manufacturers offering products that may be incorporated into the Work include the following:

1. Bosch Security Systems, Inc.

2. Additional manufacturers submitted for receiving engineer approval prior to bid.

B. Performance Criteria:

1. Regulatory Requirements:

a. NFPA 72.

2. General Characteristics:

a. Annunciator functions must match those of FACU for alarm, supervisory, and trouble indications. Manual switching functions must match those of FACU, including acknowledging, silencing, resetting, and testing.

1) Mounting: Flush cabinet, NEMA 250, Type 1.

b. Display Type and Functional Performance: Alphanumeric display and LED indicating lights must match those of FACU. Provide controls to acknowledge, silence, reset, and test functions for alarm, supervisory, and trouble signals.

2.9 DIGITAL ALARM COMMUNICATOR TRANSMITTERS (DACTs)

A. Manufacturers: Subject to compliance with requirements, available manufacturers offering products that may be incorporated into the Work include the following:

1. Bosch Security Systems, Inc.
2. Potter Electric Signal Company, LLC.
3. United Technologies Corporation (UTC Climate, Controls & Security - Edwards).
4. Additional manufacturers submitted for receiving engineer approval prior to bid.

B. Performance Criteria:

1. Regulatory Requirements:

a. NFPA 72.

2. General Characteristics:

a. DACT must be acceptable to remote central station and must be listed for fire-alarm use.
b. Functional Performance: Unit must receive alarm, supervisory, or trouble signal from FACU and automatically capture telephone line(s) and dial preset number for

remote central station. When contact is made with central station(s), signals must be transmitted. If service on either line is interrupted for longer than 45 seconds, transmitter must initiate local trouble signal and transmit signal indicating loss of telephone line to remote alarm receiving station over remaining line. Transmitter must automatically report telephone service restoration to central station. If service is lost on both telephone lines, transmitter must initiate local trouble signal.

c. Local functions and display at DACT must include the following:

1) Verification that both telephone lines are available.
2) Programming device.
3) LED display.
4) Manual test report function and manual transmission clear indication.
5) Communications failure with central station or FACU.

d. Digital data transmission must include the following:

1) Address of alarm-initiating device.
2) Address of supervisory signal.
3) Address of trouble-initiating device.
4) Loss of ac supply.
5) Loss of power.
6) Low battery.
7) Abnormal test signal.
8) Communication bus failure.

e. Secondary Power: Integral rechargeable battery and automatic charger.
f. Self-Test: Conducted automatically every 24 hours with report transmitted to central station.

PART 3 - EXECUTION

3.1 EXAMINATION

A. Examine areas and conditions for compliance with requirements for ventilation, temperature, humidity, and other conditions affecting performance of the Work.

1. Verify that manufacturer's written instructions for environmental conditions have been permanently established in spaces where equipment and wiring are installed, before installation begins.

B. Examine roughing-in for electrical connections to verify actual locations of connections before installation.

C. Proceed with installation only after unsatisfactory conditions have been corrected.

3.2 PREPARATION

A. Preinstallation Testing: Perform verification of functionality of installed components of existing system prior to starting work. Document equipment or components not functioning as designed.

3.3 INSTALLATION OF EQUIPMENT

A. Comply with NECA 305, NFPA 72, NFPA 101, and requirements of authorities having jurisdiction for installation and testing of fire-alarm equipment. Install electrical wiring to comply with requirements in NFPA 70 including, but not limited to, Article 760, "Fire Alarm Systems."

1. Devices placed in service before other trades have completed cleanup must be replaced.
2. Devices installed, but not yet placed, in service must be protected from construction dust, debris, dirt, moisture, and damage in accordance with manufacturer's written storage instructions.

B. Install wall-mounted equipment, with tops of cabinets not more than 78 inch above finished floor.

C. Manual Fire-Alarm Boxes:

1. Install manual fire-alarm box in normal path of egress within 60 inch of exit doorway.
2. Mount manual fire-alarm box on background of contrasting color.
3. Operable part of manual fire-alarm box must be between 42 and 48 inch above floor level. Devices must be mounted at same height unless otherwise indicated.

D. Smoke- and Heat-Detector Spacing:

1. Comply with "Smoke-Sensing Fire Detectors" section in "Initiating Devices" chapter in NFPA 72, for smoke-detector spacing.
2. Comply with "Heat-Sensing Fire Detectors" section in "Initiating Devices" chapter in NFPA 72, for heat-detector spacing.
3. Smooth ceiling spacing must not exceed 30 ft..
4. Spacing of detectors for irregular areas, for irregular ceiling construction, and for high ceiling areas must be determined in accordance with Annex Ain NFPA 72.
5. HVAC: Locate detectors not closer than 60 inch from air-supply diffuser or return-air opening.
6. Lighting Fixtures: Locate detectors not closer than 12 inch from lighting fixture and not directly above pendant mounted or indirect lighting.

E. Install cover on each smoke detector that is not placed in service during construction. Cover must remain in place except during system testing. Remove cover prior to system turnover.

F. Duct Smoke Detectors: Comply with NFPA 72 and NFPA 90A. Install sampling tubes so they extend full width of duct. Tubes more than 36 inch long must be supported at both ends.

1. Do not install smoke detector in duct smoke-detector housing during construction. Install detector only during system testing and prior to system turnover.

G. Elevator Shafts: Coordinate temperature rating and location with sprinkler rating and location. Do not install smoke detectors in sprinklered elevator shafts.

H. Remote Status and Alarm Indicators: Install in visible location near each smoke detector, sprinkler water-flow switch, and valve-tamper switch that is not readily visible from normal viewing position.

I. Audible Alarm-Indicating Devices: Install not less than 6 inch below ceiling. Install bells and horns on flush-mounted back boxes with device-operating mechanism concealed behind grille. Install devices at same height unless otherwise indicated.

J. Visible Alarm-Indicating Devices: Install adjacent to each alarm bell or alarm horn and at least 6 inch below ceiling. Install devices at same height unless otherwise indicated.

K. Device Location-Indicating Lights: Locate in public space near device they monitor.

3.4 ELECTRICAL CONNECTIONS

A. Connect wiring in accordance with Section 260519 "Low-Voltage Electrical Power Conductors and Cables."

B. Ground equipment in accordance with Section 260526 "Grounding and Bonding for Electrical Systems."

C. Install electrical devices furnished by manufacturer, but not factory mounted, in accordance with NFPA 70 and NECA 1.

D. Install nameplate for each electrical connection, indicating electrical equipment designation and circuit number feeding connection.

1. Nameplate must be laminated acrylic or melamine plastic signs, as specified in Section 260553 "Identification for Electrical Systems."

3.5 CONTROL CONNECTIONS

A. Install control and electrical power wiring to field-mounted control devices.

B. Connect control wiring in accordance with Section 260523 "Control-Voltage Electrical Power Cables."

C. Install nameplate for each control connection, indicating field control panel designation and I/O control designation feeding connection.

3.6 PATHWAYS

A. Pathways above recessed ceilings and in inaccessible locations may be routed exposed.

1. Exposed pathways located less than 96 inch above floor must be installed in EMT.

B. Exposed EMT must be painted red enamel.

3.7 CONNECTIONS

A. For fire-protection systems related to doors in fire-rated walls and partitions and to doors in smoke partitions, comply with requirements in Section 087100 "Door Hardware." Connect hardware and devices to fire-alarm system.

1. Verify that hardware and devices are listed for use with installed fire-alarm system before making connections.

B. Make addressable connections with supervised interface device to the following devices and systems. Install interface device less than 36 inch from device controlled. Make addressable confirmation connection when such feedback is available at device or system being controlled.

1. Magnetically held-open doors.
2. Alarm-initiating connection to elevator recall system and components.
3. Supervisory connections at valve supervisory switches.
4. Supervisory connections at low-air-pressure switch of each dry-pipe sprinkler system.
5. Supervisory connections at elevator shunt-trip breaker.
6. Supervisory connections at fire-pump power failure including dead-phase or phase-reversal condition.
7. Supervisory connections at fire-pump engine control panel.

3.8 IDENTIFICATION

A. Identify system components, wiring, cabling, and terminals. Comply with requirements for identification specified in Section 270553 "Identification for Communications Systems."

B. Install framed instructions in location visible from FACU.

3.9 GROUNDING

A. Ground FACU and associated circuits in accordance with Section 260526 "Grounding and Bonding for Electrical Systems."

B. Ground shielded cables at control panel location only. Insulate shield at device location.

3.10 FIELD QUALITY CONTROL

A. Field tests must be witnessed by authorities having jurisdiction.

B. Administrant for Tests and Inspections:

1. Engage factory-authorized service representative to administer and perform tests and inspections on components, assemblies, and equipment installations, including connections.

C. Tests and Inspections:

1. Visual Inspection: Conduct visual inspection prior to testing.

   a. Inspection must be based on completed record Drawings and system documentation that is required by "Completion Documents, Preparation" table in "Documentation" section of "Fundamentals" chapter in NFPA 72.
   b. Comply with "Visual Inspection Frequencies" table in "Inspection" section of "Inspection, Testing and Maintenance" chapter in NFPA 72; retain "Initial/Reacceptance" column and list only installed components.

2. System Testing: Comply with "Test Methods" table in "Testing" section of "Inspection, Testing and Maintenance" chapter in NFPA 72.
3. Factory-authorized service representative must prepare "Fire Alarm System Record of Completion" in "Documentation" section of "Fundamentals" chapter in NFPA 72 and "Inspection and Testing Form" in "Records" section of "Inspection, Testing and Maintenance" chapter in NFPA 72.

D. Reacceptance Testing: Perform reacceptance testing to verify proper operation of added or replaced devices and appliances.

E. Fire-alarm system will be considered defective if it does not pass tests and inspections.

F. Prepare test and inspection reports.

G. Maintenance Test and Inspection: Perform tests and inspections listed for weekly, monthly, quarterly, and semiannual periods. Use forms developed for initial tests and inspections.

H. Annual Test and Inspection: One year after date of Substantial Completion, test fire-alarm system complying with visual and testing inspection requirements in NFPA 72. Use forms developed for initial tests and inspections.

3.11 DEMONSTRATION

A. Train Owner's maintenance personnel to adjust, operate, and maintain fire-alarm system.-Allow Owner to record training.

END OF SECTION 284621.11

SECTION 312000 - EXCAVATION AND GRADING

1.1 GENERAL

A. Include all labor, material and equipment necessary for and incidental to the execution of all erosion control, clearing, grubbing, and grading work as shown on the plans.

B. Visit the site and examine all conditions that may affect the scope of work.

C. Maintain bench marks and other reference points. If disturbed or destroyed, replace as necessary. Maintain property corners and boundary markers. If disturbed or destroyed, replace as necessary.

D. Take necessary precautions to prevent blocking of sewers, filling of ditches and washing of earth onto existing pavement during heavy rains. After heavy rains promptly clean up any debris and sedimentation that may have occurred, or might be damaging to sewers, ditches, and pavements. Comply with all local ordinances relative to erosion control. Comply with requirements of the National Pollutant Discharge Elimination System (NPDES) and/or Water Pollution Prevention, as required. The General Contractor to comply with general and specific permit requirements (e.g. notifications, inspection/monitoring, recordkeeping/reporting, maintenance of all erosion control devices, etc.).

E. Topographic and property surveys giving lot size, ground elevations, obstructions on site, locations and depths of sewers, conduits, pipes, existing structures, curbs, pavements, tracts, and soil boring data giving the nature of ground and sub-surface conditions have been obtained from reliable sources. The accuracy of this data is not guaranteed, and is furnished solely as an accommodation to the Contractor. Use of this data shall be made at the Contractor's discretion. No additional compensation will be granted due to the Contractor's lack of knowledge of site conditions. Prior to bid submission, conduct any additional surveys and soils tests you may deem necessary to verify the accuracy of the information provided.

F. All site work is to be done in accordance with the plans and specification. The soils report is made available for the convenience of the Contractor. Data on indicated subsurface conditions are not intended as representations or warranties of accuracy or continuity between soil borings. It is expressly understood that Owner will not be responsible for interpretations or conclusions drawn therefrom by Contractor. Additional test borings and other exploratory operations may be made by Contractor. for the purpose of preparing his bid but these will be at no cost to the Owner.

G. Contractor is responsible for estimating and calculating all cut and fill quantities. Prior to bid submission the Contractor shall conduct any additional surveys and soil tests he deems necessary to calculate the cut and fill quantities properly. Additional surveys and tests made by the Contractor shall be made at no cost to the Owner.

H. Contractor is responsible for restoring offsite areas disturbed in performance of the work.

I. Contractor to maintain clean access drives. Keep mud and construction debris onsite. Clean offsite roadways when needed.

J. Contractor to provide requested unit prices.

1.2 WORK INCLUDED

A. Erosion Control measures

B. Clearing and removal of debris.

C. Protection of trees.

D. Topsoil removal and stockpiling.

E. Grading, Earthwork

F. Proofrolling

G. Compaction.

H. Clean-up.

1.3 WORK SPECIFIED ELSEWHERE

A. Excavating Support Systems, Section 315000.

B. Excavation and backfill for Mechanical and Electrical trades.

1.4 QUALITY ASSURANCE

A. General

1. The Owner will employ and pay for the services of an independent testing agency to provide testing and inspection of the site grading work. The testing agency shall be licensed in the state where the

structure is located and all testing and inspections shall be performed under the supervision of an engineer registered in the state where the structure is located.

2. Site grading work and materials shall be tested and inspected as the work progresses. Failure to detect any defective work or material shall not in any way prevent later rejection when such defect is discovered nor shall it obligate the Owner's Representative for final acceptance.

3. The testing agency shall report all test and inspection results to the Civil Engineer, Architect, Owner and Contractor immediately after they are performed. All test and inspection reports shall be signed and sealed by an engineer registered in the state where the structure is located and shall include the exact location of the work represented by the test.

4. The testing agency and its representatives are not authorized to revoke, alter, relax, enlarge or release any requirement of the contract documents, approve or accept any portion of the work, perform any duties of the Contractor, or be a party to scheduling of work.

5. The Contractor shall notify the testing agency a minimum of 24 hours in advance of all site grading work.

6. Records of inspection shall be kept available to the building official during progress of work and for two (2) years after completion of the project. Records shall be preserved by the independent testing agency.

B. The testing agency shall conduct site grading inspections and testing as necessary to determine that:

1. All topsoil and organic matter have been removed from the building and paved areas.

2. All grading and proofrolling have been performed per the specifications.

3. Approval of all on-site and off-site fill materials.

4. All fill materials have been compacted per the specifications.

1.5 EROSION CONTROL

A. Install and maintain during construction all erosion control measures as required by local ordinance and as specified on the drawings.

1.6 CLEARING AND REMOVAL OF DEBRIS

A. All obstructions within the building, paving or planted areas shall be removed. Grub out roots of all trees and remove stumps.

B. Remove from site all trees, stumps, debris piles, or other refuse encountered during clearing and grading.

C. Refer to Section 002050, DEMOLITION, and Drawings for demolition work required.

1.7 PROTECTION OF TREES (as applicable)

A. All trees which are outside the limits of grading operations are to remain in place and be maintained, unless otherwise noted on the plans.

1.8 TOPSOIL REMOVAL & STOCKPILING

A. Remove all topsoil and organic matter from cut and fill areas before grading operations start.

B. Stockpile a sufficient amount of topsoil for later distribution in planted areas. All excess topsoil is to be removed from the site.

C. Before placing fill, remove all debris subject to termite attack, rot or corrosion, and all other deleterious materials from areas to be filled.

D. If, during the course of excavation work, unsuitable soil per the Soils Report is encountered, soil undercut volume (if any) will be measured in the ground (i.e. in place). Contract unit cost (if any) will be based upon the in-ground volume as measured by the Geotechnical Engineer and the Owner's representative.

1.9 GRADING

A. Prior to grading, set grade stakes to establish finish contours.

B. Perform grading to a tolerance of plus or minus 1 inch within building and paved areas.

C. Allow for the thicknesses of the floor slab and base material within building

limits, for the pavement and its base in paved areas and for topsoil replacement in landscaped areas.

D. Unless otherwise indicated on the plans, grading shall be evenly sloped to provide drainage. Round top and bottom of banks and at other breaks in grade.

E. Provide suitable off-site fill material, or alternately, dispose of all excess material as required, to achieve the final grades shown on the plans.

1.10 ROCK EXCAVATION:

A. All excavation work shall be considered unclassified.

B. Should rock be encountered in the cut areas or in the trenches, use a backhoe or ripper until the use of such equipment is not practical.

C. Remove all rock if encountered, at no additional cost to Owner.

D. Remove rock to depths designated on plans below slabs, footings, and pavement, and below areas to receive lawns and planting.

E. When blasting is required, such work shall be conducted only by firms who are specialized and are licensed to do this work and have adequate insurance coverage.

1.11 PROOFROLLING

A. After clearing, grubbing and organic topsoil removal all areas in the building and pavement footprints shall be densified in place using a medium weight vibratory roller. The purpose of the vibratory rolling is to densify soils loosened by the demolition, to improve the exposed subgrade soils for floor slab and pavement support and to potentially improve the foundation bearing soils. The roller shall make at least six passes across the site, with the second set of three passes perpendicular to the first three passes. If water is brought to the surface by the vibratory rolling, the operation shall be discontinued until the water subsides. Vibratory rolling shall be completed during dry weather.

After the vibratory rolling, pore pressures shall be allowed to dissipate for a minimum of 16 hours. After the waiting period, proofrolling shall be performed on the exposed subgrade soils in areas to receive fill or at the subgrade elevation in cut areas with a fully loaded tandem-axel dump truck or similar rubber-tired construction equipment. The proofrolling shall be performed during a period of dry weather to avoid degrading an otherwise suitable subgrade. The proofrolling operations shall be observed by a

representative of the Geotechnical Engineer. Subgrade soils that exhibit excessive rutting or deflection during proofrolling shall be repaired as directed by the Geotechnical Engineer or the Owner's Representative.

B. Soft, organic, highly plastic, or excessively wet soils or old fill materials encountered during the proofrolling operation, causing deflection or not acceptable by the Geotechnical Engineer, shall be excavated and replaced with clean fill or material specified by the Geotechnical Engineer in the field to facilitate compaction. Payment for unsuitable soil removal and replacement shall be at the Unit Price for Unsuitable Soil Removal and Replacement.

1.12 COMPACTION

A. Suitable on-site or off site materials may be used as fill. All fill shall consist of clean material which is free of roots and debris. Refer to Soils Report for acceptable fill materials.

B. Off-site borrow material must be approved by the independent testing agency. Approval will be based upon the results of tests conducted by a qualified soils testing laboratory.

C. Fill within building lines and under paved areas shall be placed in loose horizontal layers not more than 9-inches thick (4"-6" in areas where hand operated compaction equipment is used). Interim grade shall always be kept sloped and crowned to facilitate run-off. Place no fill on frozen or on excessively wet or dry subgrade. Fill material shall be at ±2% of optimum moisture content as determined by the standard Proctor test at the time of placement and compaction.

D. The bottom of all trenches, and the soil under areas where underground structures are to be constructed and/or installed, shall be compacted to a minimum of 95% of the Standard Proctor maximum dry density, per ASTM D-698 prior to pipe and structure installation. All fill material placed adjacent to and above piping and structures shall be placed in 4'-6 inch layers and shall be compacted to 95% per ASTM D-698. Fill material shall be at ±2% of optimum moisture content as determined by the standard Proctor test at the time of placement and compaction.

E. Fill the upper eighteen (18) inches under building slabs & paved areas shall be compacted to 95% of the Standard Proctor maximum dry density (ASTM D-698). Fill material shall be at ±2% of optimum moisture content as determined by the standard Proctor test at the time of placement and compaction.

F. Continuous wall footing trenches and individual footing pits shall be

excavated to footing line and bottom grade. Foundation soils shall be compacted with suitable mechanical equipment to achieve the specified level of density to the required depth. Foundation bottom grade shall be tested to confirm that adequate foundation bearing condition are present prior to the placement of concrete. Dynamic Cone Penetrometer tests (ASTM 399) shall be used for verification, as determined by the project Geotechnical Engineer.

G. Contractor shall protect and maintain all finished compacted areas. Any finished compacted subgrade area which deflects one inch (1") or more as a result of construction traffic shall be cut, disced, and recompacted or stabilized. The depth of the cut, discing procedure, compaction or stabilization requirements shall be determined by the Geotechnical Engineer in the field.

H. The Contractor is responsible for wetting, drying, dewatering, and moisture control for subgrade soils.

I. All fill material shall be free of debris and fibrous organic material.

J. To ensure workability with a minimum compactive effort, it is essential that the material be kept at or near the optimum moisture content during compaction.

K. Moisture Control: Where subgrade or layer of soil material must be moisture conditioned before compaction, uniformly apply water to surface of subgrade, or layer of soil material, to prevent free water appearing on surface during or subsequent to compaction operations.

1. Remove and replace, or scarify and air dry, soil material that is too wet to permit compaction to specified density.

2. Soil material that has been removed because it is too wet to permit compaction may be stockpiled or spread and allowed to dry. Assist drying by discing, harrowing or pulverizing until moisture content is reduced to a satisfactory value.

3. Stabilization of wet fill material using cement, lime or other chemical methods, and/or geotextiles, will be considered and may be approved subject to the review and approval of the Geotechnical Engineer. Submit proposed stabilization method, including geotextile materials, proposed chemical stabilization materials, mix quantities, or methods and testing criteria for review and approval by the Owner and the Geotechnical Engineer.

1.13 CLEAN-UP

A. The entire site shall be raked clean of all trash and other debris after completion of grading work and excess material removed from the site, prior to proceeding with seeding/sodding. Remove all pavement base, etc. from planting areas.

B. Erosion control measures shall be removed after permanent landscaping has been established, or at a time set by the local authorities.

END SECTION 312000

SECTION 313116 - TERMITE CONTROL

PART 1 - GENERAL

1.1 RELATED DOCUMENTS

A. Drawings and general provisions of the Contract, including General and Supplementary Conditions and Division 01 Specification Sections, apply to this Section.

1.2 SUMMARY

A. Section Includes:

1. Soil treatment.

1.3 ACTION SUBMITTALS

A. Product Data: For each type of product.

1. Include construction details, material descriptions, dimensions of individual components, and profiles for termite control products.
2. Include the EPA-Registered Label for termiticide products.

1.4 INFORMATIONAL SUBMITTALS

A. Qualification Data: For qualified Installer.

B. Product Certificates: For each type of termite control product.

C. Soil Treatment Application Report: After application of termiticide is completed, submit report for Owner's records and include the following:

1. Date and time of application.
2. Moisture content of soil before application.
3. Termiticide brand name and manufacturer.
4. Quantity of undiluted termiticide used.
5. Dilutions, methods, volumes used, and rates of application.
6. Areas of application.
7. Water source for application.

D. Sample Warranties: For special warranties.

1.5 FIELD CONDITIONS

A. Soil Treatment:

1. Environmental Limitations: To ensure penetration, do not treat soil that is water saturated or frozen. Do not treat soil while precipitation is occurring. Comply with requirements of the EPA-Registered Label and requirements of authorities having jurisdiction.
2. Related Work: Coordinate soil treatment application with excavating, filling, grading, and concreting operations. Treat soil under footings, grade beams, and ground-supported slabs before construction.

1.6 WARRANTY

A. Soil Treatment Special Warranty: Manufacturer's standard form, signed by Applicator and Contractor, certifying that termite control work consisting of applied soil termiticide treatment will prevent infestation of subterranean termites, including Formosan termites (Coptotermes formosanus). If subterranean termite activity or damage is discovered during warranty period, re-treat soil and repair or replace damage caused by termite infestation.

1. Warranty Period: Five years from date of Substantial Completion.

PART 2 - PRODUCTS

2.1 MANUFACTURERS

A. Source Limitations: Obtain termite control products from single source from single manufacturer.

2.2 SOIL TREATMENT

A. Termiticide: EPA-Registered termiticide acceptable to authorities having jurisdiction, in an aqueous solution formulated to prevent termite infestation.

1. Products: Subject to compliance with requirements, provide one of the following:

a. BASF Corporation; Phantom or Termidor.
b. Bayer Environmental Science; Premise 2, Premise 75, Premise Pre-Construction, or Premise Pro.
c. Ensystex, Inc; Maxxthor SC, Prother SC2, or Prother WSP.
d. Syngenta; Demon Max.

2. Service Life of Treatment: Soil treatment termiticide that is effective for not less than five years against infestation of subterranean termites.

PART 3 - EXECUTION

3.1 EXAMINATION

A. Examine substrates, areas, and conditions, with Applicator present, for compliance with requirements for moisture content of soil per termiticide label, interfaces with earthwork, slab and foundation work, landscaping, utility installation, and other conditions affecting performance of termite control.

B. Proceed with application only after unsatisfactory conditions have been corrected.

3.2 PREPARATION

A. General: Prepare work areas according to the requirements of authorities having jurisdiction and according to manufacturer's written instructions before beginning application and installation of termite control treatment(s). Remove extraneous sources of wood cellulose and other edible materials, such as wood debris, tree stumps and roots, stakes, formwork, and construction waste wood from soil within and around foundations.

B. Soil Treatment Preparation: Remove foreign matter and impermeable soil materials that could decrease treatment effectiveness on areas to be treated. Loosen, rake, and level soil to be treated, except previously compacted areas under slabs and footings. Termiticides may be applied before placing compacted fill under slabs if recommended in writing by termiticide manufacturer.

1. Fit filling hose connected to water source at the site with a backflow preventer, according to requirements of authorities having jurisdiction.

3.3 APPLYING SOIL TREATMENT

A. Application: Mix soil treatment termiticide solution to a uniform consistency. Distribute treatment uniformly. Apply treatment at the product's EPA-Registered Label volume and rate for maximum specified concentration of termiticide to the following so that a continuous horizontal and vertical termiticidal barrier or treated zone is established around and under building construction.

1. Slabs-on-Grade and Basement Slabs: Under ground-supported slab construction, including footings, building slabs, and attached slabs as an overall treatment. Treat soil materials before concrete footings and slabs are placed.
2. Foundations: Soil adjacent to and along the entire inside perimeter of foundation walls; along both sides of interior partition walls; around plumbing pipes and electric conduit penetrating the slab; around interior column footers, piers, and chimney bases; and along the entire outside perimeter, from grade to bottom of footing.
3. Crawlspaces: Soil under and adjacent to foundations. Treat adjacent areas, including around entrance platform, porches, and equipment bases. Apply overall treatment only where attached concrete platform and porches are on fill or ground.

4. Masonry: Treat voids.
5. Penetrations: At expansion joints, control joints, and areas where slabs and below-grade walls will be penetrated.

B. Post warning signs in areas of application.

C. Reapply soil treatment solution to areas disturbed by subsequent excavation, grading, landscaping, or other construction activities following application.

3.4 PROTECTION

A. Avoid disturbance of treated soil after application. Keep off treated areas until completely dry.

B. Protect termiticide solution dispersed in treated soils and fills from being diluted by exposure to water spillage or weather until ground-supported slabs are installed. Use waterproof barrier according to EPA-Registered Label instructions.

END OF SECTION 313116

SECTION 315000 - EXCAVATION SUPPORT SYSTEMS

1.1 General

A. Related Documents: Drawings and general provisions of Contract, including General and Supplementary Conditions and Division 1 Specification Sections, apply to this Section. All shoring shall comply with OSHA requirements.

B. Summary
1. This Section includes, but is not limited to, the following:
(1) Shoring and bracing necessary to protect existing buildings, streets, walkways, utilities, wetlands and other improvements and excavation against loss of ground or caving embankments.
(2) Maintenance of shoring and bracing.
(3) Removal of shoring and bracing, as required.

2. Types of shoring and bracing systems include, but are not limited to, the following:
(1) Steel H-section (soldier) piles.
(2) Timber lagging.
(3) Steel sheet piles.

3. Building excavation is specified in Division 2 Excavation and Grading Section 312000.

C. Submittals
1. General: Submit the following in accordance with Conditions of Contract and Division 1 Specification Sections.

2. Layout drawings for excavation support system and other data prepared by, or under the supervision of, a qualified Professional Engineer. System design and calculations must be acceptable to local authorities having jurisdiction.

D. Quality Assurance
1. Engineer Qualifications: A Professional Engineer legally authorized to practice in jurisdiction where Project is located, and experienced in providing engineering services for excavation support systems similar in extent required for this Project.

2. Supervision: Contractor shall engage and assign supervision of excavation support system to a qualified Professional Engineer foundation consultant.

3. Regulations: Comply with codes and ordinances of governing authorities having jurisdiction.

E. Job Conditions

1. Before starting work, verify governing dimensions and elevations. Verify condition of adjoining properties. Take photographs to record any existing settlement or cracking of structures, pavements, and other improvements. Prepare a list of such damages, verified by dated photographs, and signed by Contractor and others conducting investigation.

2. Survey adjacent structures and improvements, employing qualified surveyor, establishing exact elevations at fixed points to act as benchmarks. Clearly identify benchmarks and record existing elevations.

3. During excavation, resurvey benchmarks weekly, maintaining accurate log of surveyed elevations for comparison with original elevations. Promptly notify Civil Engineer, Architect, and Owner if changes in elevations occur or if cracks, sags, or other damage is evident.

F. Existing Utilities

1. Protect existing active sewer, water, gas, electricity and other utility services and structures.

2. Notify municipal agencies and service utility companies having jurisdiction. Comply with requirements of governing authorities and agencies for protection, relocation, removal, and discontinuing of services.

1.2 Products

A. Materials

1. General: Provide adequate shoring and bracing materials which will support loads imposed. Materials need not be new, but should be in serviceable condition.
2. Structural Steel: ASTM A 36.
3. Steel Sheet Piles: ASTM A 328.
4. Timber Lagging: Any species, rough-cut, mixed hardwood, nominal 3 inches thick, unless otherwise indicated on the approved layout drawings.

1.3 Execution

A. Shoring - Wherever shoring is required, locate the system to clear permanent construction and to permit forming and finishing of concrete surfaces. Provide shoring system adequately anchored and braced to resist earth and hydrostatic pressures.

B. Bracing

Locate bracing to clear columns, floor framing construction, and other permanent work. If necessary to move a brace, install new bracing prior to removal of original brace.

1. Do not place bracing where it will be cast into or included in permanent concrete work, except as otherwise acceptable to Architect.

2. Install internal bracing, if required, to prevent spreading or distortion of braced frames.

3. Maintain bracing until structural elements are supported by other bracing or until permanent construction is able to withstand lateral earth and hydrostatic pressures.

4. Remove sheeting, shoring, and bracing in stages to avoid disturbance to underlying soils and damage to structures, pavements, facilities, and utilities.

5. Repair or replace, as acceptable to Civil Engineer, Architect, and Owner, adjacent work damaged or displaced through installation or removal of shoring and bracing work.

END SECTION 315000

SECTION 321216 - ASPHALT PAVING

1.1 GENERAL

A. Include all labor, material and equipment to completely install all bituminous paving.

1.2 WORK SPECIFIED ELSEWHERE

A. Excavation, grading and preparation of sub-grade.

1.3 SUBMITTALS

A. Asphalt mix design shall be submitted to the Civil Engineer.

1.4 QUALITY ASSURANCE

A. General

1. The Owner will employ and pay for the services of an independent testing agency to provide testing and inspection of the asphaltic concrete and stone base work. The testing agency shall be licensed in the state where the structure is located and shall meet the requirements of "Recommended Practices for Inspection and Testing Agencies for Concrete, Steel, and Bituminous Materials as Used in Construction" (ASTM E329). All testing and inspections shall be performed under the supervision of an engineer registered in the state where the structure is located.

2. Asphaltic concrete and stone base materials and operations shall be tested and inspected as the work progresses. Failure to detect any defective work or material shall not in any way prevent later rejection when such defect is discovered nor shall it obligate the Owner's Representative for final acceptance.

3. The testing agency shall report all test and inspection results to the Civil Engineer, Architect, Owner and Contractor immediately after they are performed. All test and inspection reports shall be signed and sealed by an engineer registered in the state where the structure is located, and shall include the exact location of the work represented by the test.

4. The testing agency and its representatives are not authorized to revoke, alter, relax, enlarge or release any requirement of the contract documents, approve or accept any portion of the work, perform any duties of the Contractor, or be a party to scheduling of work.

5. The Contractor shall notify the testing agency a minimum of 24 hours in advance of all asphaltic concrete and stone base work.

6. Records of inspection shall be kept available to the building official during progress of work and for two years after completion of the project. Records shall be preserved by the independent testing agency.

B. The testing agency shall conduct pre-placement inspections as necessary to determine that:

1. Paving subgrade areas have been constructed per the Soils Report and specifications criteria.

2. All paving section subgrade areas have been inspected, tested and accepted.

C. The testing agency shall conduct tests as necessary to determine that:

1. All materials used in the production of asphaltic concrete and stone base meet the requirements of the project specifications.

D. The testing agency shall conduct asphaltic concrete and stone base placement inspections as necessary to determine that:

1. Asphaltic concrete has been mixed and transported in accordance with the project specifications.

2. Asphaltic concrete is conveyed to the place of final deposit by methods which prevent separation or loss of material.

3. Asphaltic concrete and stone base are properly compacted. Perform at least one density test for every 20,000 SF of pavement area. Verify stone base thickness by checking stone base thickness at least once for every 20,000 SF of pavement area.

4. Asphaltic concrete is finished within the tolerances specified in section 1.11 (C) (7) below.

E. The testing agency shall conduct post-placement inspection as necessary to determine that:

1. All surface defects are repaired in accordance with the project specifications.

1.5 TRANSPORTATION OF MIXTURES

A. The mixture shall be transported from the paving plant to the work in tight vehicles with metal bottoms previously cleaned of all foreign materials. The truck beds shall be raised and the inside lubricated with a thin oil to prevent the mixture from adhering to the bed. An excess of lubricant will not be permitted. Each load shall be covered with canvas or other suitable material of sufficient size to protect it from the weather.

1.6 MATERIALS

A. Aggregate for rolled stone base course shall be clean, crushed rock, free from thin or elongated pieces, soft or disintegrated materials, or other foreign matter. Stone shall meet the criteria established for crushed stone base established by the local Department of Transportation.

B. Base Paving Section Bid: Include in bid the cost to install pavement cross section as recommended in the Soils Report and as detailed on the drawings.

1.7 AGGREGATE FOR ASPHALTIC CONCRETE

A. Coarse Aggregate shall be natural crushed stone produced from sound, durable rock, free from objectionable coatings. This aggregate shall conform to the requirements of ASTM D-692 and local D.O.T. Standard Specification.

B. Fine Aggregate shall consist of natural sand or by special permission may be fines produced by the crushing of natural stone. The fine aggregate shall conform to the requirements of ASTM C-1073 and mineral filler shall conform to ASTM D-242 and local D.O.T. Standard Specification.

C. Asphalt Cement shall conform to ASTM D-946 and local D.O.T. Standard Specification.

1.8 ASPHALTIC CONCRETE MIXTURES

A. Asphaltic concrete mixture shall consist of mineral aggregates and asphalt cement combined in such proportions that the composition by weight of the finished mix shall be within the following range for the type specified.

B. Asphaltic concrete mixture shall be type per local D.O.T. Standard Specifications for Road and Bridge (latest edition) for the type and thickness specified on the plans.

1.9 ROLLED STONE BASE

A. Preparation of Mixture: The exact proportions of aggregate and water shall be regulated so as to produce a uniform satisfactory mixture. The order of sequence in which the aggregate and water shall be drawn or weighted may vary under different conditions. The percentage of water in the mixture may vary with moisture conditions and sources of aggregate, but in no case shall the percentage of water be more than 12 percent by weight, of the total mixture. The finished mixture shall have a moisture content necessary to obtain the maximum density required to comply with the standard compaction test herein specified. In general, the proper moisture content can be judged by the appearance of free water on the surface of the particles. Excess moisture resulting in run-off shall be avoided.

1.10 CONSTRUCTION OF STONE BASE

A. In no case will the Contractor be permitted to place the mixture or manipulate it on muddy or frozen subgrade. Also, no frost or frozen particles shall be placed on the subgrade or compacted.

B. Before starting the construction of surface courses, the base shall be cleaned and adjusted to conform with the cross section shown on the plans and to the lines, grades and thickness established. For the purpose of these specifications, this work shall include sweeping, removing all loose, caked or foreign materials. The total cost of adjusting and compacting subgrades and for cleaning and restoring base courses shall be included in the contract price.

C. After the subgrade has been properly prepared, the mixture shall be uniformly spread by blades, or other approved equipment, in successive layers of courses to such depth that, when compacted, the base will have the minimum thickness shown on the typical cross section. The Contractor may construct the base in any number of layers which he may find convenient to facilitate compacting, except that, in no case, shall any individual layer have a compacted thickness of more than 4". Each layer shall be compacted, as hereinafter specified, before any succeeding layer is placed. Placement of base shall be in accordance with local D.O.T. Standard Specification.

D. If the mixture becomes too dry to permit compaction, water shall be added during the compacting operations in such an amount as to insure proper compaction. If for any reason, the mixture is too wet for proper compaction it shall be allowed to dry until the proper moisture content is obtained.

E. The mixture shall be handled in such manner as to avoid undue segregation.

If segregation occurs or if the mixture becomes contaminated, such segregated or contaminated materials shall be replaced with materials of suitable quality and gradation, except that areas of surface segregation may be corrected by spreading a quantity of stone screening sufficient to close the voids and bind the loose material firmly in place. The screening shall be wet and rolled so as to create a dense and uniform surface. Segregated or contaminated materials shall be removed and replaced with suitable material at the sole expense of the Contractor. The Contractor shall restrict hauling over the completed or partially completed work after inclement weather, or at any time when subgrade material is soft and there is tendency for the subgrade material to work into the surface material. Any screenings used in correcting areas of surface segregation will be measured and paid for as a part of the aggregate constituting the base course. All extra work or expense involved due to screenings being required shall be the Contractor's obligations without extra cost to Owner. Compaction shall be performed by the use of any approved equipment, within the limits of these specifications, which will produce satisfactory results.

F. Shaping and compaction shall be carried on until a true, even, uniform base course of the proper grade, cross section and density is obtained. Proper moisture content shall be maintained by wetting the surface as required during shaping and compacting operations. The use of excess water, resulting in run-off or in the formation of a slurry on the surface, shall be avoided.

G. Final rolling on the top course of multiple course construction or the top of single course construction shall be accomplished by self-propelled smooth-wheeled roller weighing not less than seven (7) tons, nor more than ten (10) tons.

H. The density to be obtained in the completed base shall be at least 98% of the Standard Proctor maximum dry density, per ASTM D-698.

1.11 CONSTRUCTION OF ASPHALTIC SURFACE

A. Mixing Plant shall conform to ASTM D-995 and local D.O.T. Standard Specification.

B. Preparation of Mixture: The bituminous cement shall be carefully heated without damage by overheating to a workable temperature. The final mixture shall not exceed 350 degrees F. when discharged.

C. Application

1. Spreading of mixture shall be done at mixture temperature above 250 degrees F. and only when weather conditions are suitable.

2. Use hand rakers for inaccessible locations and mechanical spreading and finishing machine of type approved by owner's Representative.

3. Side forms to serve as screed or strike off control to insure surface true to elevation or to prevent squeezing out or side shoving under roller or lateral displacement shall be used where applicable. Forms shall be of height equal to thickness of finished course.

4. Rolling shall be carried out while mixture is still hot, with self-propelled roller having weight of 200 lbs. per lineal inch of roller. Rolling shall be paralleled to spreading of mixture, from edge toward center, and in manner consistent with good practice getting proper compaction without cracking, shoving or otherwise displacing mixture during hardening process. All places inaccessible to roller shall be compacted by hand tampers or vibratory plates.

5. Mixture shall be placed continuously. Roller shall not pass over unprotected end of freshly laid mixture unless further laying is to be delayed for sufficient time to permit mixture to become chilled. In such case, edge of mixture shall be cut back and trimmed to expose unsealed or granular surface for full specified depth of finish course.

6. At end of each day's work, joints shall be formed by laying and rolling mixture against boards of thickness of compacted mixture. When laying is resumed, above mentioned exposed edges shall be painted with thin coat of asphaltic cement, and fresh mixture shall be raked against joint, thoroughly tamped with hand tampers, and rolled.

7. After final compression, the surface shall be smooth and true to the established crown and grade. It shall have the average thickness specified and shall at no point vary more than one quarter (1/4) inch from the specified thickness. Any low or defective places shall immediately be remedied by cutting out the course at such spots and replacing it with fresh hot mixture which shall be immediately compacted to conform with surrounding area and shall be thoroughly bonded to it. The finished pavement shall be set free from depressions exceeding one-eight (1/8) inch as measured with a ten (10) foot straight edge paralleling the center line of the roadway. No traffic shall be permitted on the finished pavement until it has cooled to atmospheric temperature.

1.12 PAVEMENT PAINTING

A. Scope of Work

1. Layout and paint white striping on parking lot surfaces designating parking spaces, driving lanes and other elements noted on the site drawings. Comply with local ordinances when completing this work.

2. Do not apply paint in snow, rain, fog or mist, or when relative humidity exceeds 85% unless otherwise permitted by manufacturer. When surface temperature is below 50 degrees F. do not apply paints and special coatings, unless otherwise specified. Stop exterior work sufficiently early to permit film to set up before condensation, frost and moisture, caused by night temperature drops, occur. Do not begin exterior painting until frost or condensation evaporates and surface is moisture free. Comply with manufacturer's written requirements and local D.O.T Standard Specification.

3. Traffic paint shall be installed in two (2) coats. The minimum required total Dry Film Thickness (DFT) shall be measured in mils.

B. Materials

1. Parking Areas: All parking lot striping and arrows:

2 coats Pratt and Lambert Traffic Paint (or approved equal - each coat 2.0 mils DFT)
30 days between coats.
Color: White.

1.13 PROTECTION

A. Provide adequate protection for all adjacent work and areas against any damage or injury by employees, materials, tools, or equipment used in connection with this contract.

B. Maintenance of finished asphaltic concrete surfacing will be required until acceptance of work by Owner.

END SECTION - 321216

SECTION 321313 - PORTLAND CEMENT CONCRETE PAVING

1.1 General

A. Related Documents: Drawings and general provisions of Contract, including General and Supplementary Conditions and Division 1 Specification Sections, apply to this section.

B. Summary

1. Extent of Portland cement concrete paving is shown on drawings, including curbs, gutters, walkways, sidewalks, flumes, and pavement.
2. Prepared sub-base is specified in "Excavation and Backfill" section.
3. Concrete and related materials.
4. Joint fillers and sealers.
5. See Division 3 for concrete used within buildings and structural concrete.

C. Submittals: Provide samples, manufacturer's product data, test reports, and materials certifications as required in referenced sections for concrete and joint fillers and sealers.

D. Quality Assurance: Codes and Standards - Comply with local governing regulations if more stringent than herein specified.

E. Job Conditions - Traffic Control: Maintain access for vehicular and pedestrian traffic as required for other construction activities.

1. Coordinate with requirements for "Temporary Facilities" specified in Division 1.

1.2 Products

A. Materials

1. Forms: Steel, wood, or other suitable material of size and strength to resist movement during concrete placement and to retain horizontal and vertical alignment until removal. Use straight forms, free of distortion and defects.

(1) Use flexible spring steel forms or laminated boards to form radius bends as required. Coat forms with a non-staining form release agent that will not discolor or deface surface of concrete.

2. Welded Wire Mesh: Welded plain cold-drawn steel wire fabric, ASTM A-185.

3. Reinforcing Steel: Deformed billet steel bars, ASTM A615, grade 40.

4. Portland cement concrete for curb and gutter, sidewalks and miscellaneous cast-in-place flumes and other minor site structures shall have a minimum 28 day compressive strength of 3500 psi, a non-vibrated slump between 2.5 and 4 inches, minimum cement content of 564 pounds per cubic yard, an air entrainment of 5-7% and a maximum water-cement ratio of 0.57.

5. Portland cement concrete for slabs in front of loading docks and dumpsters shall have a minimum 28 day compressive strength of 4500 psi, a non-vibrated slump between 2.5 and 4 inches, minimum cement content of 658 pounds per cubic yard, an air entrainment of 5-7% and a maximum water-cement ratio of 0.49.

6. Joint filler shall be self-leveling flexible polyurethane joint sealant.
   (1) Products:
      a. Euclid Chemical Co: Eucolastic II.
      b. Pecora: urexpan NR 200.
      c. Sonneborn Building Products – Sonoclastil SL 2 Sealant.
      d. Tremco: THC 900.
      e. Vulkem: Vulkem 45.
   (2) Description:
      a. Hardness- Shore “A”: A30 minimum
      b. Movement Capability: +/-25%.
      c. USDAQ Approved.

7. Concrete curing agents shall be free from any impurities which may be detrimental to the concrete and meet the requirements specified in Section 296 of North Carolina Department of Transportation Standard Specifications for Roads and Structures.

8. Aggregate for Portland cement concrete shall meet the requirements for fine and course aggregate of Section 914 of the North Carolina

Department of Transportation Standard Specifications for Roads and Structures.

9. Portland cement and admixtures shall meet the requirements of Section 1000-4 of the North Carolina Department of Transportation Standard Specifications for Roads and Structures.

10. Water for mixing or curing the concrete shall be free from injurious amounts of oil, salt acid or other products injurious to the finished.

1.3 Concrete Mix, Design, and Testing

A. Design

1. Comply with requirements of applicable Division 3 sections for concrete mix design, sampling and testing, and quality control and as herein specified.

2. Design mix to produce normal-weight concrete consisting of Portland cement, aggregate, water-reducing or high-range water-reducing admixture (superplasticizer), air-entraining admixture, and water to produce the following properties:

For curb and gutter, sidewalks and miscellaneous cast-in-place flumes and other minor site structures:

(1) Compressive Strength: 3500 psi, minimum at 28 days, unless otherwise indicated.
(2) Non-vibrated slump between 2.5 and 4 inches.
(3) Minimum cement content of 564 pounds per cubic yard.
(4) Air entrainment of 5-7%.
(5) Maximum water cement ratio of 0.532.

3. For slab in front of loading docks and dumpster pads:

(1) Compressive Strength: 4500 psi, minimum at 28 days, unless otherwise indicated.
(2) Non-vibrated slump between 2.5 and 4 inches.
(3) Minimum cement content of 658 pounds per cubic yard.
(4) Air entrainment of 5-7%.
(5) Maximum water cement ratio of 0.49.

1.4 Execution

A. Surface Preparation

1. Remove loose material from compacted sub-base surface immediately before placing concrete.

2. Proof-roll prepared sub-base surface to check for unstable areas and need for additional compaction. Do not begin paving work until such conditions have been corrected and are ready to receive paving.

B. Form Construction

1. Set forms to required grades and lines, braced and secured. Install forms to allow continuous progress of work and so that forms can remain in place at least 24 hours after concrete placement.

   (1) Slope step treads at 1/4 inch per foot to drain.

2. Reinforcement: Locate, place and support reinforcement as indicated.

C. Concrete Placement

1. General: Comply with requirements of Division 3 sections for mixing and placing concrete, and as herein specified.

2. Place concrete by methods that prevent segregation of mix. Consolidate concrete along face of forms and adjacent to transverse joints with internal vibrator. Keep vibrator away from joint assemblies, reinforcement, or side forms. Use only square-faced shovels for hand-spreading and consolidation. Consolidate with care to prevent dislocation of reinforcing, dowels, and joint devices.

3. Deposit and spread concrete in a continuous operation between transverse joints as far as possible. If interrupted for more than 1/2 hour, place a construction joint.

4. Curbs and Gutters: Automatic machine may be used for curb

and gutter placement at Contractor's option. If machine placement is to be used, submit revised mix design and laboratory test results that meet or exceed minimums specified. Machine placement must produce curbs and gutters to required cross-section, lines, grades, finish, and jointing as specified for formed concrete. If results are not acceptable, remove and replace with formed concrete as specified.

5. Concrete Paving: Place concrete using a concrete pump; depositing concrete directly from a concrete truck will not be allowed for concrete paving. Driving loaded concrete trucks over prepared subgrade will not be allowed.

D. Joints

1. General: Construct expansion, weakened-plane (contraction), and construction joints true to line with face perpendicular to surface of concrete.

2. Sawed Joints: Form weakened-plane joints with powered saws equipped with shatterproof abrasive or diamond-rimmed blades. Cut joints one inch (1") deep into hardened concrete at maximum fifteen foot (15') spacing, in both directions, as soon as surface will not be torn, abraded, or otherwise damaged by cutting action. Seal with joint filler material as specified below.

3. Inserts: Use embedded strips of metal to form weakened-plane joints. Carefully set strips into plastic concrete.

4. Expansion joints: Use pre-molded expansion joint material. Seal joints with joint filler material as specified below.

5. Construct transverse joints at right angles to the centerline, unless otherwise indicated. Construct contraction joints at intervals equal to the width of sidewalks and at 10' maximum spacing in curb and gutter and slabs. Seal joints with joint filler material as specified below.

6. Construction Joints: Place construction joints at end of placements and at locations where placement operations are stopped for more than 1/2 hour, except where such placements terminate at expansion joints. Seal joints with joint filler material as specified below.

7. Expansion Joints: Provide pre-molded expansion joint filler abutting concrete curbs, catch basins, manholes, inlets, structures, walks, and other fixed objects, unless otherwise indicated. Provide expansion joint at a maximum 50' spacing (or as indicated on the plans) for slabs, sidewalks and curb and gutter. Seal joints with joint filler material as specified below.

8. Joint filler material shall be mixed and installed in strict accordance with manufacturer's printed installation instructions except where more stringent requirements are shown or specified. Joint surfaces shall be primed as required by manufacturer to insure bonding. Provide backer rod in joint at a uniform depth of ½ the joint width, a minimum depth of ¼" and a maximum depth of ½". Take all necessary steps to prevent three sided adhesion. Final cured profile shall be flush with concrete slab surface. See Section B.1.f. – Products.

E. Concrete Finishing

1. After striking-off and consolidating concrete, smooth surface by screening and floating. Use hand methods only where mechanical floating is not possible. Adjust floating to compact surface and produce uniform texture.

2. After floating, test surface for trueness with a 10' straightedge. Distribute concrete as required to remove surface irregularities, and refloat repaired areas to provide a continuous smooth finish.

3. Work edges of gutters, back top edge of curb, and formed joints with an edging tool, and round to 1/2" radius, unless otherwise indicated. Eliminate tool marks on concrete surface.

4. After completion of floating and troweling when excess moisture or surface sheen has disappeared, broom surface, perpendicular to line of traffic. Repeat operation if required to provide a fine line texture acceptable to owner.

5. Do not remove forms for 24 hours after concrete has been placed. After form removal, clean ends of joints and point-up any minor honeycombed areas. Remove and replace areas or

sections with major defects, as directed by Owner.

6. For joint sealing see Section D - Joints

F. Curing:

1. Protect and cure finished concrete paving in compliance with applicable requirements of Division 3 sections.

2. Repairs And Protections: Repair or replace broken or defective concrete, as directed by Architect.

1.5 QUALITY ASSURANCE

A. General

1. The Owner will employ and pay for the services of an independent testing agency to provide testing and inspection of the Portland Cement Concrete and stone base work. The testing agency shall be licensed in the state where the structure is located and shall meet the requirements of "Recommended Practices for Inspection and Testing Agencies for Concrete, Steel, and Bituminous Materials as Used in Construction" (ASTM E329). All testing and inspections shall be performed under the supervision of an engineer registered in the state where the structure is located.

2. Portland cement concrete and stone base materials and operations shall be tested and inspected as the work progresses. Failure to detect any defective work or material shall not in any way prevent later rejection when such defect is discovered nor shall it obligate the Owner's Representative for final acceptance.

3. The testing agency shall report all test and inspection results to the Project Manager, Owner and Contractor immediately after they are performed. All test and inspection reports shall be signed and sealed by an engineer registered in the state where the structure is located and shall include the exact location of the work represented by the test.

4. The testing agency and its representatives are not authorized to revoke, alter, relax, enlarge or release any requirement of the contract documents, approve or accept any portion of the work, perform any duties of the Contractor, or be a party to scheduling of work.

5. The Contractor shall notify the testing agency a minimum of 24 hours in advance of all Portland cement concrete and stone base work.

6. Records of inspection shall be kept available to the building official during progress of work and for two years after completion of the project. Records shall be preserved by the independent testing agency.

7. The testing agency shall conduct pre-placement inspections as necessary to determine that:

   (1) Paving subgrade areas have been constructed per the Soils Report and specifications criteria

   (2) All paving section subgrade areas have been inspected, tested and accepted.

8. The testing agency shall conduct tests as necessary to determine that:

   (1) All materials used in the production of Portland concrete meet the requirements of the project specifications.

   (2) The testing agency shall conduct Portland cement concrete and stone base placement inspections as necessary to determine that:

   (3) Portland cement concrete has been mixed and transported in accordance with the project specifications.

   (4) Portland cement concrete is conveyed to the place of final deposit by methods which prevent separation or loss of material.

   (5) Portland cement concrete and stone base are properly compacted. Perform at least one density test for every 20,000 SF of pavement area. [Verify stone base

thickness by checking stone base thickness at least once for every 20,000 SF of pavement area.

(6) Portland cement concrete is finished free from depressions exceeding one-eight (1/8) inch as measured with a ten (10) foot straight edge in any direction.

9. The Owner shall conduct post-placement inspection as necessary to determine that:

(1) All surface defects are repaired in accordance with the project specifications.

-END OF SECTION-

SECTION 323117 – ORNAMENTAL WELDED WIRE FENCE AND GATES

PART 1 - GENERAL

1.1 RELATED DOCUMENTS

A. Drawings and general provisions of the Contract, including General and Supplementary Conditions and Division 1 Specification Sections, apply to this Section.

1.2 SUMMARY

A. This Section includes the following:

1. Hot dip galvanized, polyester powder finish coated, steel fencing panel, post and accessory system.
2. Gate operator.
3. Grounding and bonding.

B. Related Sections include the following:

1. Division 31 "Earthwork" for filling and for grading work.
2. Section 033000 "Cast-in-Place Concrete" for concrete equipment bases/pads for gate operators, drives, and controls and post footings.
3. Division 26 “Electrical” for electrical service and connections for motor operators, controls, limit switches, and other powered devices and for system disconnect switches.

1.3 SUBMITTALS

A. Product Data: Material descriptions, construction details, dimensions of individual components and profiles, and finishes for the following:

1. Fence and gate posts, rails, and fittings.
2. Gates and hardware.
3. Gate operators, including operating instructions.
4. Motors: Show nameplate data, ratings, characteristics, and mounting arrangements.

B. Shop Drawings: Show locations of fence, each gate, posts, rails, and details of gate swing, or other operation, hardware, and accessories. Indicate materials, dimensions, sizes, weights, and finishes of components. Include plans, elevations, sections, gate swing and other required installation and operational clearances, and details of post anchorage and attachment and bracing.

1. Gate Operator: Show locations and details for installing operator components, switches, and controls. Indicate motor size, electrical characteristics, drive arrangement, mounting, and grounding provisions.

2. Wiring Diagrams: Power and control wiring and communication features and access control features. Differentiate between manufacturer-installed and field-installed wiring and between components provided by gate operator manufacturer and those provided by others.

C. Samples for Initial Selection: Manufacturer's color charts or 6-inch (150-mm) lengths of actual units showing the manufacturer's standard range of colors available for components with factory-applied color finishes.

D. Samples for Verification: For the following products, in sizes indicated. Prepare Samples from the same material to be used for the Work.

1. Polyester powder coating in 6-inch (150-mm) lengths on shapes for posts, rails, gate framing and wires, and on full-sized units for accessories.

E. Product Certificates: Signed by manufacturers of fences and gates certifying that products furnished comply with requirements.

F. Qualification Data: For firms and persons specified in "Quality Assurance" Article to demonstrate their capabilities and experience. Include lists of completed projects with project names and addresses, names and addresses of architects and owners, and other information specified.

G. Maintenance Data: For the following to include in maintenance manuals specified in Division 1:

1. Finishes.
2. Gate operator.

1.4 QUALITY ASSURANCE

A. Installer Qualifications: An experienced installer who has completed fences and gates similar in material, design, and extent to those indicated for this Project and whose work has resulted in construction with a record of successful in-service performance.

B. Source Limitations for Fences and Gates: Obtain each color, grade, finish, type, and variety of component for fences and gates from one source with resources to provide fences and gates of consistent quality in appearance and physical properties.

C. Electrical Components, Devices, and Accessories: Listed and labeled as defined in NFPA 70, Article 100, by a testing agency acceptable to authorities having jurisdiction, and marked for intended use.

D. UL Standard: Provide gate operators that comply with UL 325.

E. Emergency Access Requirements: Comply with requirements of authorities having jurisdiction for automatic gate operators serving as a required means of access.

1.5 PROJECT CONDITIONS

A. Existing Utilities: Do not interrupt utilities serving facilities occupied by Owner or others unless permitted under the following conditions and then only after arranging to provide temporary utility services according to requirements indicated:

1. Notify Architect not less than two days in advance of proposed utility interruptions.
2. Do not proceed with utility interruptions without Architect's written permission.

B. Field Measurements: Verify layout information for fences and gates shown on Drawings in relation to property survey and existing structures. Verify dimensions by field measurements.

PART 2 - PRODUCTS

2.1 MANUFACTURERS

A. Basis-of-Design: Subject to compliance with requirements, provide the following product, or comparable product as approved by the Architect:

1. TWINBAR® Fencing System:

a. MFR Manufacturing Corp, Inc..
1065 Sill Ave
Aurora, IL 60506
TEL: 815-552-3333 FAX: 815-552-3315
Website: www.mfrcorp.com e-mail: info@mfrcorp.com

2.2 FENCE POSTS

A. Posts are made of square or rectangular tubular steel of different sizes depending on the required overall height.

2.3 FENCE PANELS

A. Steel Mesh Fence Panels: Consisting of prefabricated panels of wire mesh formed by vertical rods placed between two horizontal rods. The rods are electro-forge welded at each crossing. The standard panel length is 8'-3". Heights of more than 8' are accomplished by combining panels with a different or equal height. Mesh is galvanized and powder polyester coated after fabrication into panels..

B. Provide fabricated panels of height, mesh size and with post **size** as indicated below:

Type TWINBAR®
Meshsize 2" x 8" (50x200mm) on center
Vertical rods are dia. 1/4"= 4-gauge, (6mm)
2 Horizontal rods are dia. 1/4"= 4-gauge, (6mm)

Panel Width and Post Spacing 8'-3" (2510mm)
Fence Types and Height available

Panel Height	Mesh Size available	Post Type
6'-0" (1830)	2" x 8"(50x200)	2-3/8" x 1-5/8" (60x40)

2.4 GATES

A. This Section includes the following:

1. Double swing gate.

B. Metal Tubing framed gates, to match panel system. Steel. galvanized and powder polyester coated after fabrication.

1. Gate Height: 5 feet.

C. Hardware: Latches permitting operation from both sides of gate, hinges, center gate stops and, for each gate leaf more than 5 feet (1.5 m) wide, keepers. Fabricate latches with integral eye openings for padlocking; padlock accessible from both sides of gate.

D. Slide Gate Track Assembly: Manufacturer's standard track, with framing supports, bracing, and accessories, engineered to support size, weight, width, operation, and design of gate and roller assemblies.

E. Guide Posts and Roller Guards.

2.5 GATE OPERATOR

A. General: Provide factory-assembled automatic gate operation system designed for gate size, type, weight, construction, use, traffic-flow patterns, and operation frequency. Provide operation system for gate specified, of size and capacity and with features, characteristics, and accessories suitable for Project conditions, recommended and provided by gate manufacturer complete with electric motor and factory-prewired motor controls, remote-control stations, control devices, power disconnect switch, obstruction detection device, lockable weatherproof enclosures protecting controls and all operating parts, and accessories required for proper operation. Provide enclosures with corrosion-resistant-protective and decorative finish and two keys per lock. Include wiring from motor controls to motor. Coordinate operator wiring requirements and electrical characteristics with building electrical system.

1. Provide operator designed so motor may be removed without disturbing limit-switch adjustment and without affecting auxiliary emergency operator.
2. Provide operator with UL approval.
3. Provide electronic components with built-in troubleshooting diagnostic feature.
4. Provide unit designed and wired for both right-hand/left-hand opening, permitting universal installation.

B. Comply with NFPA 70.

C. Control Equipment: Comply with NEMA ICS 1, NEMA ICS 2, and NEMA ICS 6, with NFPA 70, Class 2 control circuit, maximum 24-V ac or dc.

D. Electrohydraulic Operation: Provide unit designed for mounting in location as selected by the Architect; consisting of electric motor, pump, hydraulic actuator to suit gate type, valves, heater to maintain constant temperature, and cold-weather hydraulic fluid; with hydraulic locking in both directions.

E. Operation Cycle Requirements: Design gate operator to operate for not less than the following duty and cycles per hour. One cycle equals one gate opening plus one gate closing.

1. Heavy Duty: 25 cycles per hour.

F. Gate Operation Speed: Minimum 45 fpm.

G. Electric Motors: High-starting torque, reversible, continuous-duty, insulated electric motors, complying with NEMA MG 1, sized to start and operate size and weight of gate considering Project's service conditions without exceeding nameplate ratings or considering service factor.

1. Service Factor: According to NEMA MG 1, unless otherwise indicated.
2. Enclosure: Totally enclosed, nonventilated or fan-cooled motors, fitted with plugged drain.
3. Thermal Protection: Internal manual reset.
4. Motor: Motor horsepower as recommended by operator manufacturer.

H. Remote Controls: Electric controls separated from gate and motor and drive mechanism, with NEMA ICS 6, Type 4 enclosure for mounting as selected by the Architect, and with space for additional optional equipment. Provide remote-control device(s) as selected by the Architect from the manufacturer's full range.

1. Control Station: As selected by the Architect from the manufacturer's full range.
2. Card Reader: As selected by the Architect from the manufacturer's full range.

3. Digital Keypad Entry Unit: As selected by the Architect from the manufacturer's full range.

4. Vehicle Loop Detector System: System including automatic closing timer with adjustable time delay before closing timer cut-off switch and loop detector designed to open and close gate, hold gate open until traffic clears, and reverse gate. Provide electronic detector, with adjustable detection patterns, adjustable sensitivity and frequency settings, and panel indicator light designed to detect presence or transit of a vehicle over an embedded loop of wire and to emit a signal activating the gate operator. Provide number of loops consisting of multiple strands of wire, number of turns, loop size, and method of placement at location shown on Drawings, as recommended in writing by detection system manufacturer for function indicated.

a. Loop: Wire, in size indicated for field assembly, and sealant; style for pave-over or saw-cut installation.

5. Vehicle Presence Detector: System including automatic closing timer with adjustable time delay before closing timer cut-off switch and presence detector designed to open and close gate, hold gate open until traffic clears, and reverse gate. Provide retroreflective or emitter/receiver type detector, with adjustable detection zone pattern and sensitivity, designed to detect the presence or transit of a vehicle in gate pathway by interrupting an infrared beam in zone pattern and to emit a signal activating the gate operator.

I. Obstruction Detection Devices: Provide each motorized gate with automatic safety sensor(s). Activation of sensor(s) causes operator to immediately function as follows:

1. Action: Reverse gate in both opening and closing cycles and hold until clear of obstruction.
2. Internal Sensor: Built-in torque or current monitor senses gate is obstructed.

3. Photoelectric/Infrared Sensor System: Designed to detect an obstruction in partition's path by interruption of an infrared beam in the zone pattern without obstruction contacting gate.

J. Limit Switches: Adjustable switches, interlocked with motor controls and set to automatically stop gate at fully retracted and fully extended positions.

K. Emergency Release Mechanism: Quick disconnect release of operator drive system of the following type of mechanism, permitting manual operation if operator fails. Design system so control circuit power is disconnected during manual operation.

1. Type: Integral fail-safe release, allowing gate to be pushed open without mechanical devices, keys, cranks, or special knowledge.

L. Operating Features: Include the following:

1. Digital Microprocessor Control: Electronic programmable means for setting, changing, and adjusting control features with capability of monitoring and auditing gate activity. Provide unit that is isolated from voltage spikes and surges.
2. Fully Systems Compatible: With controlling circuit board capable of accepting any type of input from external devices.
3. Master/Slave Capability: Control stations designed and wired for gate pair operation.
4. Automatic Closing Timer: With adjustable time delay before closing and timer cut-off switch.
5. Open Override Circuit: Designed to override closing commands.
6. Reversal Time Delay: Designed to protect gate system from shock load on reversal in both directions.
7. Maximum Run Timer: Designed to prevent damage to gate system by shutting down system if normal time to open gate is exceeded.
8. Clock Timer: 24-hour, seven-day programmable for regular events.

M. Accessories: Include the following:

1. Mounting kit including pedestal.
2. Audio Warning Module: Provide ADA-compliant audible alarm sounding three to five seconds in advance of gate operation and continuing until gate stops moving.

3. Visual Warning Module: Provide ADA-compliant visible constant- or strobe-light alarm sounding three to five seconds in advance of gate operation and continuing until gate stops moving.
4. Battery Backup System: Battery-powered drive and access control system, independent of primary drive system, opening gate if power fails.
5. External electric-powered lock with delay timer allowing time for lock to release before gate operates.

    a. Type: Solenoid or magnetic for swing gate.

6. Fire and/or Postal box if required.
7. Fire strobe and/or siren sensor if required.
8. Instructional, Safety, and Warning Labels and Signs: Manufacturer's standard for components and features specified.

2.6 CAST-IN-PLACE CONCRETE

A. General: Comply with Section 033000 “Cast-in-Place Concrete.”

2.7 GROUT AND ANCHORING CEMENT

A. Nonshrink, Nonmetallic Grout: Premixed, factory-packaged, nonstaining, noncorrosive, nongaseous grout complying with ASTM C 1107. Provide grout, recommended in writing by manufacturer, for exterior applications.

B. Erosion-Resistant Anchoring Cement: Factory-packaged, nonshrink, nonstaining, hydraulic-controlled expansion cement formulation for mixing with potable water at Project site to create pourable anchoring, patching, and grouting compound. Provide formulation that is resistant to erosion from water exposure without needing protection by a sealer or waterproof coating and that is recommended in writing by manufacturer for exterior applications.

2.8 FENCE GROUNDING

A. Conductors: Bare, solid wire for No. 6 AWG and smaller; stranded wire for No. 4 AWG and larger.

1. Material Above Finished Grade: Copper or aluminum as selected by the Architect.
2. Material On or Below Finished Grade: Copper.
3. Bonding Jumpers: Braided copper tape, 1 inch (25 mm) wide, woven of No. 30 AWG bare copper wire, terminated with copper ferrules.

B. Connectors and Ground Rods: Listed in UL 467.

PART 3 - EXECUTION

3.1 EXAMINATION

A. Examine areas and conditions, with Installer present, for compliance with requirements for a verified survey of property lines and legal boundaries, site clearing, earthwork, pavement work, and other conditions affecting performance.

1. Do not begin installation before final grading is completed, unless otherwise permitted by Architect.

B. Proceed with installation only after unsatisfactory conditions have been corrected.

3.2 PREPARATION

A. Stake locations of fence lines, gates, and terminal posts. Do not exceed intervals of 500 feet or line of sight between stakes. Indicate locations of utilities, lawn sprinkler system, underground structures, benchmarks, and property monuments.

3.3 INSTALLATION, GENERAL

A. Install fencing on established boundary lines inside property line.

B. Post Excavation: Drill or hand-excavate holes for posts to diameters and spacings indicated, in firm, undisturbed or compacted soil.

C. Post Setting: Hand-excavate holes for post foundations in firm, undisturbed or compacted soil. Set posts in concrete footing. Protect portion of posts aboveground from concrete splatter. Place concrete around posts and vibrate or tamp for consolidation. Using mechanical devices to set posts is not permitted. Verify that posts are set plumb, aligned, and at correct height and spacing, and hold in position during placement and finishing operations until concrete is sufficiently cured.

1. Dimensions and Profile: 12” diameter for terminal posts, 10” diameter for intermediate posts. Concrete to be 6” deeper than post length in ground.
2. Concealed Concrete Footings: Stop footings 2 inches (50 mm) below grade to allow covering with surface material.
3. Posts Set into Concrete in Sleeves: Use steel pipe sleeves preset and anchored into concrete for installing posts. After posts have been inserted into sleeves, fill annular space between post and sleeve with nonshrink, nonmetallic grout, or anchoring cement, mixed and placed to comply with anchoring material manufacturer's written instructions, and finished sloped to drain water away from post.

4. Mounting Plate Installation: Bolt mounting plates attached to each post to slab or structure as indicated, using expansion bolts.

3.4 FENCE INSTALLATION

A. Terminal Posts: Locate terminal end, corner, and gate posts at changes in horizontal or vertical

alignment of 15 degrees or more.

B. Line Posts: Space line posts uniformly at 8 feet 3 inches o.c.

C. Mesh Panels: Apply panels to outside of enclosing posts. Leave 1 inch between finish grade or surface and bottom of panel, unless otherwise indicated. Anchor panel to posts with pre-assembled mounting brackets lock bar. All post-panel connections are utilizing a patented nylon setting to reduce rattling noise caused by wind, vibrations or other sources

D. Fasteners: install nuts on the side of the fence opposite the panel side. Peen ends of bolts or score threads to prevent removal of nuts.

3.5 GATE INSTALLATION

A. General: Install gates according to manufacturer's written instructions, level, plumb, and secure for full opening without interference. Attach hardware using tamper-resistant or concealed means. Install ground-set items in concrete for anchorage. Adjust hardware for smooth operation and lubricate where necessary.

3.6 GATE OPERATOR INSTALLATION

A. General: Install gate operators according to manufacturer's written instructions, aligned and true to fence line and grade.

B. Excavation for Support Posts, Pedestals, and Concrete Bases/Pads: Hand-excavate holes for bases/pads, in firm, undisturbed or compacted soil to dimensions and depths and at locations as required by gate operator component manufacturer's written instructions and as indicated on Drawings.

C. Concrete Bases/Pads: Cast-in-place or precast concrete, made of not less than 3000-psi (20.7-MPa) compressive strength (28 days), depth not less than 12 inches (300 mm), dimensioned and reinforced according to gate operator component manufacturer's written instructions and as indicated on Drawings.

D. Vehicle Loop Detector System: Cut grooves in pavement and bury and seal wire loop according to manufacturer's written instructions. Connect to equipment operated by detector.

E. Comply with NFPA 70 and manufacturer's written instructions for grounding of electric-powered motors, controls, and other devices.

3.7 GROUNDING AND BONDING

A. Fence Grounding: Install at maximum intervals of 1500 feet (450 m) except as follows:

1. Fences within 100 Feet (30 m) of Buildings, Structures, Walkways, and Roadways: Ground at maximum intervals of 750 feet (225 m).

a. Gates and Other Fence Openings: Ground fence on each side of opening.

1) Bond metal gates to gate posts.
2) Bond across openings, with and without gates, except openings indicated as intentional fence discontinuities. Use No. 2 AWG wire and bury it at least 18 inches (460 mm) below finished grade.

B. Protection at Crossings of Overhead Electrical Power Lines: Ground fence at location of crossing and at a maximum distance of 150 feet (45 m) on each side of crossing.

C. Fences Enclosing Electrical Power Distribution Equipment: Ground as required by IEEE C2, unless otherwise indicated.

D. Grounding Method: At each grounding location, drive a ground rod vertically until the top is 6 inches (150 mm) below finished grade. Connect rod to fence with No. 6 AWG conductor. Connect conductor to each fence component at the grounding location.

E. Bonding Method for Gates: Connect bonding jumper between gate post and gate frame.

F. Connections: Make connections so possibility of galvanic action or electrolysis is minimized. Select connectors, connection hardware, conductors, and connection methods so metals in direct contact will be galvanically compatible.

1. Use electroplated or hot-tin-coated materials to ensure high conductivity and to make contact points closer in order of galvanic series.
2. Make connections with clean, bare metal at points of contact.
3. Make aluminum-to-steel connections with stainless-steel separators and mechanical clamps.
4. Make aluminum-to-galvanized-steel connections with tin-plated copper jumpers and mechanical clamps.
5. Coat and seal connections having dissimilar metals with inert material to prevent future penetration of moisture to contact surfaces.

G. Bonding to Lightning Protection System: If fence terminates at lightning-protected building or structure, ground the fence and bond the fence grounding conductor to lightning protection down conductor or lightning protection grounding conductor complying with NFPA 780.

3.8 FIELD QUALITY CONTROL

A. Ground-Resistance Testing Agency: Owner will engage a qualified independent testing agency to perform field quality-control testing.

B. Ground-Resistance Tests: Subject completed grounding system to a megger test at each grounding location. Measure ground resistance not less than two full days after last trace of precipitation, without soil having been moistened by any means other than natural drainage or seepage and without chemical treatment or other artificial means of reducing natural ground resistance. Perform tests by two-point method according to IEEE 81.

C. Desired Maximum Grounding Resistance Value: 25 ohms.

D. Excessive Ground Resistance: If resistance to ground exceeds desired value, notify Architect promptly. Include recommendations to reduce ground resistance and proposal to accomplish recommended work.

E. Report: Prepare test reports, certified by testing agency, of ground resistance at each test location. Include observations of weather and other phenomena that may affect test results.

3.9 ADJUSTING

A. Gate: Adjust gate to operate smoothly, easily, and quietly, free from binding, warp, excessive deflection, distortion, nonalignment, misplacement, disruption, or malfunction, throughout entire operational range. Confirm that latches and locks engage accurately and securely without forcing or binding.

B. Automatic Gate Operator: Energize circuits to electrical equipment and devices. Adjust operators, controls, safety devices, alarms, and limit switches.

1. Electrohydraulic Operator: Purge operating system, adjust pressure and fluid levels, and check for leaks.
2. Operational Test: After electrical circuitry has been energized, start units to confirm proper motor rotation and unit operation. Test controls, alarms, and safeties. Remove damaged and malfunctioning units, replace with new units, and retest.

C. Lubricate hardware, gate operator, and other moving parts.

3.10 DEMONSTRATION

A. Engage a factory-authorized service representative to train Owner's personnel to adjust, operate, and maintain gates.

1. Test and adjust operators, controls, alarms, safety devices, hardware, and other operable components. Replace damaged or malfunctioning operable components.
2. Train Owner's personnel on procedures and schedules for starting and stopping, troubleshooting, servicing, and maintaining equipment and schedules.
3. Review data in maintenance manuals. Refer to Division 1 Section "Contract Closeout."
4. Review data in maintenance manuals. Refer to Division 1 Section "Operation and Maintenance Data."
5. Schedule training with Owner, through Architect, with at least seven days' advance notice.

END OF SECTION 323117

SECTION 323119 - DECORATIVE METAL GATES

PART 1 - GENERAL

1.1 RELATED DOCUMENTS

A. Drawings and general provisions of the Contract, including General and Supplementary Conditions and Division 01 Specification Sections, apply to this Section.

1.2 SUMMARY

A. Section Includes:

1. Decorative metallic-coated-steel swing gates with metal panel slat infill at dumpster enclosure.

1.3 ACTION SUBMITTALS

A. Product Data: For each type of product.

B. Shop Drawings: For gates. Include plans, elevations, sections, details, and attachments to other work.

C. Samples: For each gate material and for each color specified.

1. Provide Samples 12 inches in length for linear materials.

1.4 INFORMATIONAL SUBMITTALS

A. Field quality-control reports.

B. Product Test Reports: For decorative metallic-coated-steel gates, including finish, indicating compliance with referenced standard and other specified requirements.

1.5 CLOSEOUT SUBMITTALS

A. Maintenance Data: For gate operators to include in maintenance manuals.

1.6 QUALITY ASSURANCE

A. Installer Qualifications: Fabricator of products.

B. Mockups: Build mockups to verify selections made under Sample submittals, to demonstrate aesthetic effects, and to set quality standards for fabrication and installation.

1. Subject to compliance with requirements, approved mockups may become part of the completed Work if undisturbed at time of Substantial Completion.

PART 2 - PRODUCTS

2.1 PERFORMANCE REQUIREMENTS

A. Lightning-Protection System: Maximum grounding-resistance value of 25 ohms under normal dry conditions.

2.2 SWING GATES

A. Gate Configuration: Double leaf.

B. Gate Frame Height: As indicated.

C. Gate Opening Width: As indicated.

D. Galvanized-Steel Frames and Bracing: Fabricate members from square tubes 2 by 2 inches formed from 0.108-inch nominal-thickness, metallic-coated steel sheet or formed from 0.105-inch nominal-thickness steel sheet and hot-dip galvanized after fabrication, unless otherwise indicated.

E. Frame Corner Construction: Welded or assembled with corner fittings and 5/16-inch-diameter, adjustable truss rods for panels 5 feet wide or wider.

F. Infill: Horizontal metal panel slat infill as selected by the Architect.

G. Hardware: Latches permitting operation from both sides of gate, hinges, and keepers for each gate leaf more than 5 feet wide. Provide center gate stops and cane bolts for pairs of gates.

H. Hinges: BHMA A156.1, Grade 1, suitable for exterior use.

1. Function: 39 - Full surface, triple weight, antifriction bearing.
2. Material: Wrought steel, forged steel, cast steel, or malleable iron; galvanized.

I. Cane Bolts: Provide for inactive leaf of pairs of gates. Fabricated from 1/2-inch- diameter, round steel bars, hot-dip galvanized after fabrication. Finish to match gates. Provide galvanized-steel pipe strikes to receive cane bolts in both open and closed positions.

J. Finish exposed welds to comply with NOMMA Guideline 1, Finish #4 - good-quality, uniform undressed weld with minimal splatter.

K. Galvanizing: For items other than hardware that are indicated to be galvanized, hot-dip galvanize to comply with ASTM A 123/A 123M. For hardware items, hot-dip galvanize to comply with ASTM A 153/A 153M.

L. Metallic-Coated-Steel Finish: High-performance coating.

2.3 STEEL AND IRON

A. Plates, Shapes, and Bars: ASTM A 36/A 36M.

B. Bars (Pickets): Hot-rolled, carbon steel complying with ASTM A 29/A 29M, Grade 1010.

C. Tubing: ASTM A 500/A 500M, cold-formed steel tubing.

D. Bar Grating: NAAMM MBG 531.

1. Bars: Hot-rolled steel strip, ASTM A 1011/A 1011M, Commercial Steel, Type B.
2. Wire Rods: ASTM A 510.

E. Uncoated Steel Sheet: Cold-rolled steel sheet, ASTM A 1008/A 1008M, Structural Steel, Grade 50.

F. Galvanized-Steel Sheet: ASTM A 653/A 653M, structural quality, Grade 50, with G90 coating.

G. Aluminum-Zinc, Alloy-Coated Steel Sheet: ASTM A 792/A 792M, structural quality, Grade 50, with AZ60 coating.

H. Castings: Either gray or malleable iron unless otherwise indicated.

1. Gray Iron: ASTM A 48/A 48M, Class 30.
2. Malleable Iron: ASTM A 47/A 47M.

2.4 COATING MATERIALS

A. Epoxy Primer for Galvanized Steel: Epoxy primer recommended in writing by topcoat manufacturer.

2.5 MISCELLANEOUS MATERIALS

A. Welding Rods and Bare Electrodes: Select according to AWS specifications for metal alloy welded.

1. For aluminum, provide type and alloy as recommended by producer of metal to be welded and as required for strength and compatibility in fabricated items.

B. Concrete: Normal-weight, air-entrained, ready-mix concrete complying with requirements in Section 033000 "Cast-in-Place Concrete" with a minimum 28-day compressive strength of 3000 psi, 3-inch slump, and 1-inch maximum aggregate size or dry, packaged, normal-weight concrete mix complying with ASTM C 387/C 387M mixed with potable water according to manufacturer's written instructions.

C. Nonshrink Grout: Factory-packaged, nonstaining, noncorrosive, nongaseous grout complying with ASTM C 1107/C 1107M and specifically recommended by manufacturer for exterior applications.

2.6 METALLIC-COATED-STEEL FINISHES

A. Galvanized Finish: Clean welds, mechanical connections, and abraded areas, and repair galvanizing to comply with ASTM A 780/A 780M.

B. Surface Preparation: Clean surfaces with nonpetroleum solvent so surfaces are free of oil and other contaminants. After cleaning, apply a zinc-phosphate conversion coating suited to the organic coating to be applied over it. Clean welds, mechanical connections, and abraded areas, and repair galvanizing to comply with ASTM A 780/A 780M.

C. High-Performance Coating: Apply epoxy primer, polyurethane intermediate coat, and polyurethane topcoat to prepared surfaces. Comply with coating manufacturer's written instructions and with requirements in SSPC-PA 1, "Paint Application Specification No. 1: Shop, Field, and Maintenance Painting of Steel," for shop painting. Apply at spreading rates recommended by coating manufacturer.

1. Color: As selected by the Architect from the manufacturer's full range.

PART 3 - EXECUTION

3.1 EXAMINATION

A. Examine areas and conditions, with Installer present, for compliance with requirements for site clearing, earthwork, pavement work, construction layout, and other conditions affecting performance of the Work.

B. Do not begin installation before final grading is completed unless otherwise permitted by Architect.

C. Proceed with installation only after unsatisfactory conditions have been corrected.

3.2 PREPARATION

A. Stake locations of gates, and terminal posts. Do not exceed intervals of 500 feet or line of sight between stakes. Indicate locations of utilities, lawn sprinkler system, underground structures, benchmarks, and property monuments.

1. Construction layout and field engineering are specified in Section 017300 "Execution."

3.3 GATE INSTALLATION

A. Install gates according to manufacturer's written instructions, level, plumb, and secure for full opening without interference. Attach hardware using tamper-resistant or concealed means. Install ground-set items in concrete for anchorage. Adjust hardware for smooth operation and lubricate where necessary.

3.4 ADJUSTING

A. Gates: Adjust gates to operate smoothly, easily, and quietly, free of binding, warp, excessive deflection, distortion, nonalignment, misplacement, disruption, or malfunction, throughout entire operational range. Confirm that latches and locks engage accurately and securely without forcing or binding.

B. Lubricate hardware and other moving parts.

END OF SECTION 323119

SECTION 329300 - LANDSCAPING

1.1 GENERAL

A. The general provisions of Division 1 apply to the work specified in this Section

B. The work in this Section consists of furnishing all materials, accessories, equipment, tools, transportation and performing all services and labor required to completely execute the fertilizing, liming, seeding, and landscaping work as per the drawings and as herein specified.

C. Liming, fertilizing, and seeding shall include all disturbed areas and all areas shown on plans.

D. Location, quantity, and size of all plants shall be as indicated on the drawings.

E. All materials shall be subject to the approval of the Owner's Representative.

F. All soil and rubbish resulting from the work to be removed from site.

G. Contractor shall repair damage of any kind done to the building, parking lot or to the work of other Contractors by the carelessness of his own workmen or otherwise during the progress of work.

1.2 JOB CONDITIONS

A. Before commencing work, this contractor shall verify all conditions at the job. Report any necessary corrections immediately to the General Contractor. Do not proceed until corrections (if any required) are made. Commencing work implies this contractor's acceptance of job conditions.

1.3 PLANTS

A. Plants shall be typical of their species and variety; have normal growth habits; well-developed branches, densely foliated vigorous fibrous root systems, and shall be free from defects and injuries.

B. Quality and size of plants, spread of roots, and size of balls shall be in accordance with ASA Z60.1-1959, "American Standard for Nursery Stock" as published by the American Association of Nurserymen, Inc.

C. Plants shall be pruned as specified before planting.

D. Plants shall be freshly dug and nursery grown.

E. Each bundle of plants and all separate plants shall be properly identified by weatherproof labels securely attached thereto before delivery to project site.

F. Shrubs shall be well-shaped and full.

G. All trees must have straight trunks with a single leader intact. Bark shall be free of abrasion; all fresh cuts over 1-1/4 inch shall be calloused over.

H. Trees will not be accepted which have had their leaders cut or which have leaders damaged so that cutting is necessary.

1.4 DIGGING AND HANDLING

A. Handle all plants so that roots and foliage are adequately protected at all times.

B. No plant shall be bound with rope or wire at any time so as to damage the bark, break branches or destroy its natural shape.

C. Balled, burlapped plants shall come from soil which will hold firm ball.

D. Container sizes refer to inside diameter of pot. The plants must have been growing in the specified pot for a minimum of three months and a maximum of one year prior to delivery.

1.5 PLANTING TREES AND SHRUBS

A. Work shall be done under the supervision of an experienced nurseryman approved by the Owner's Representative.

B. When conditions are such, by reason of drought, high winds, excessive moisture, or other similar factors, that satisfactory results are not likely to be obtained, work shall be stopped. It shall not be resumed until desired results can be obtained or until approved alternate or corrective measures and procedures are adopted.

C. The depth for excavation of plant pits shall be the depth below finished grade required to accommodate beneath the ball or roots a bed of top soil not less than 6 inches in depth. The ball or roots shall rest on this bed when the plant is properly set to finished grade.

D. Set all plants plumb and straight. Set at such a level that, after settlement, a

normal relationship of the crown of the plant with the ground surface will be established. Locate plant in the center of the pit.

E. When balled, burlapped plants are set, tamp topsoil carefully under and around base of ball to fill all voids. Remove all burlap, ropes, and wires from sides and tops of balls, but do not remove burlap from under ball.

F. Plant pits and shrub beds shall not be backfilled with topsoil until approved by Owner's Representative.

G. Backfilling topsoil shall be placed in not more than 6 inches increments of depth between tampings. Water thoroughly at each level with a solution of root stimulant and water.

H. All planted areas, not including seeded or sod areas, shall receive a permeable fabric weed barrier prior to placing mulch or ground cover.

1.6 GUYING AND STAKING

A. All guying, staking and wrapping shall be done immediately after planting.

B. Protect all trees from contact with wires and stakes by sections of rubber hose sufficient length to prevent injury to the tree.

C. For balled, burlapped plants: Drive stakes into ground outside periphery of ball of tree.

D. Plants shall stand plumb after staking and guying.

E. All seals and labels are to remain unbroken and visible on plant material until final inspection. Remove all seals and labels immediately after final inspection.

1.7 PRUNING

A. Prune in a manner to retain height and spread as given in the Plant List.

B. Prune in a manner to preserve natural character of plant and in a manner appropriate to its particular requirement in the landscape design.

1.8 GROUND PREPARATION

A. Not earlier than 24 hours before sod is to be laid, the soil surface to be sodded shall be worked to a depth of not less than two (2) inches with a weighted disc rototiller, pulvimixer, or other equipment approved by the

Owner's Representative, until the surface is smooth, free from debris, washes, gulleys, clods and stones. If as a result of a rain, the prepared surface becomes eroded or crusted before the sod is to be laid, it shall again be placed in condition for sodding.

1.9 MULCHING

A. Mulch to be grade shredded hardwood mulch. Apply at least 3" of Mulch to earth saucers and plant beds immediately upon completion of planting. Refer to Section 002900, Paragraph 1.5.I., for weed barrier placement required prior to application of mulch.

1.10 MAINTENANCE AND WATERING

A. This contractor shall maintain all seeded areas until the seeded areas are established. If necessary, the contractor shall provide netting in addition to mulch and tack in areas that are difficult establish ground cover. The contractor shall fill, re-grade and re-seed any eroded areas greater than 2 square feet in area as quickly as possible after being notified of the defect. If the eroded area(s) are not repaired within one week (seven calendar days), the Owner may have the repairs done by other and deduct the cost of these repairs from monies due the contractor or charge the money against the warranty bond if the repair is done during the warranty period.

B. Contractor to furnish watering hoses and sprinkling equipment for his use during watering period.

1.11 WARRANTY

A. The work under this section shall be warrantied for one (1) year from the date of acceptance. Warranty shall cover replacement of unhealthy plants, defects in workmanship and establishment of groundcover. The warranty on any plant or workmanship corrected under the warranty shall extend the warranty for the replaced plant or workmanship for one year from the date of replacement or correction of defects in workmanship.

-END OF SECTION-

SECTION 329400 - MODULAR CONCRETE BLOCK WALL SYSTEM

PART 1: GENERAL

1.01 Description

A. Work shall consist of furnishing and construction of a modular concrete block retaining wall system in accordance with these specifications and in reasonably close conformity with the lines, grades, design, and dimensions shown on the plans.

B. Work includes preparing foundation soil, furnishing and installing leveling pad, unit drainage fill and backfill to the lines and grades shown on the construction drawings.

C. Work includes furnishing and installing geogrid soil reinforcement of the type, size, location, and lengths designated on the construction drawings.

D. Coordinate design & installation with landscaping, guard rail, fencing and direct burial site lighting.

1.02 Related Sections

A. Section 02211- Excavation and Grading

1.03 Reference Documents

A. American Society for Testing and Materials (ASTM)

1. ASTM C140 Sampling and Testing Concrete Masonry Units
2. ASTM C1372 Specification for Dry-Cast Segmental Retaining Wall Units
3. ASTM D422 Particle-Size Analysis of Soils
4. ASTM D698 Laboratory Compaction Characteristics of Soil - Standard Effort
5. ASTM D1557 Laboratory Compaction Characteristics of Soil - Modified Effort
6. ASTM D3034 Polyvinyl Chloride Pipe (PVC)
7. ASTM D4318 Liquid Limit, Plastic Limit and Plasticity Index of Soils
8. ASTM D4475 Horizontal Shear Strength of Pultruded Reinforced Plastic Rods
9. ASTM D4476 Flexural Properties of Fiber Reinforced Pultruded Plastic Rods
10. ASTM D4595 Tensile Properties of Geotextiles - Wide Width Strip

11. ASTM D5262 Unconfined Tension Creep Behavior of Geosynthetics
12. ASTM D5818 Evaluate Installation Damage of Geosynthetics
13. ASTM D6637 Tensile Properties of Geogrids – Single or Multi-Rib
14. ASTM D6638 Connection Strength - Reinforcement/Segmental Units
15. ASTM D6706 Geosynthetic Pullout Resistance in Soil
16. ASTM D6916 Shear Strength Between Segmental Concrete Units

B. American Association of State Highway and Transportation Officials (AASHTO)

1. AASHTO M 252 Corrugated Polyethylene Drainage Pipe

C. Geosynthetic Research Institute (GRI)

1. GRI-GG4 Determination of Long Term Design Strength of Geogrids
2. GRI-GG5 Determination of Geogrid (soil) Pullout

D. National Concrete Masonry Association (NCMA)

1. NCMA SRWU-1 Test Method for Determining Connection Strength of SRW
2. NCMA SRWU-2 Test Method for Determining Shear Strength of SRW

1.04 Submittals/Certification

A. Contractor shall submit a Manufacturer's certification, prior to start of work, that the retaining wall system components meet the requirements of this specification and the structure design.

B. Contractor shall submit construction drawings and design calculations for the retaining wall system prepared and stamped by a Professional Engineer registered in the state of the project. The engineering designs, techniques, and material evaluations shall be in accordance with the Manufacturer's Design Manual, NCMA Design Guidelines For Segmental Retaining Walls, or the AASHTO Standard Specifications for Highway Bridges (whichever is applicable to designer).

C. Contractor shall submit a test report documenting strength of specific modular concrete unit and geogrid reinforcement connection. The maximum design tensile load of the geogrid shall be equal to the laboratory tested ultimate strength of geogrid / facing unit connection at a

maximum normal force limited by the "Hinge Height" of the structure divided by a safety factor of 1.5. The connection strength evaluation shall be performed in accordance with ASTM D6638 (NCMA SRWU-1).

1.05 Quality Assurance

A. Contractor shall submit a list of five (5) previously constructed projects of similar size and magnitude by the wall installer where the specific retaining wall system has been constructed successfully. Contact names and telephone numbers shall be listed for each project.

C. Contractor shall provide evidence that the design engineer has a minimum of five years of documentable experience in the design for reinforced soil structures. The design engineer shall provide proof of current professional liability insurance with an aggregate coverage limit of not less than $2,000,000.

D. Owner shall provide soil testing and quality assurance inspection during earthwork and wall construction operations. Contractor shall provide any quality control testing or inspection not provided by the Owner. Owner's quality assurance program does not relieve the contractor of responsibility for quality control and wall performance.

1.06 Delivery, Storage and Handling

A. Contractor shall check all materials upon delivery to assure that the proper type, grade, color, and certification has been received.

B. Contractor shall protect all materials from damage due to jobsite conditions and in accordance with manufacturer's recommendations. Damaged materials shall not be incorporated into the work.

PART 2: PRODUCTS

2.01 Definitions

A. Modular Unit - a concrete retaining wall element machine made from Portland cement, water, and aggregates.

B. Structural Geogrid - a structural element formed by a regular network of integrally connected tensile elements with apertures of sufficient size to allow interlocking with surrounding soil, rock, or earth and function primarily as reinforcement.

C. Unit Drainage Fill - drainage aggregate, which is placed within and immediately behind the modular concrete units.

D. Reinforced Backfill - compacted soil, which is placed within the reinforced soil volume as outlined on the plans.

2.02 Modular Concrete Retaining Wall Units

A. Modular concrete units shall conform to the following architectural requirements:

1. Face color - concrete gray, unless otherwise specified.
2. Face finish - sculptured rock face in angular tri-planer configuration. Other face finishes may be allowed with approval of Owner.
3. Bond configuration - running with bonds nominally located at midpoint vertically adjacent units, in both straight and curved alignments.
4. Exposed surfaces of units shall be free of chips, cracks or other imperfections when viewed from a distance of 10 feet under diffused lighting.

B. Modular concrete materials shall conform to the requirements of ASTM C1372 - Standard Specifications for Segmental Retaining Wall Units.

C. Modular concrete units shall conform to the following structural and geometric requirements measured in accordance with ASTM C140 Sampling and Testing Concrete Masonry Units:

1. Compressive strength: ≥ 3000 psi (21 MPa);
2. Absorption: 8 % (6% in northern states) for standard weight aggregates;
3. Dimensional tolerances: ± 1/8" (3 mm) from nominal unit dimensions not including rough split face, ±1/16" (1.5 mm) unit height - top and bottom planes;
4. Unit size: 8" (203 mm) (H) x 18" (457 mm)(W) x 18" (457 mm)(D) minimum;
5. Unit weight: 100 lbs/unit (45 kg) minimum for standard weight aggregates.

D. Modular concrete units shall conform to the following performance testing:

1. Inter -unit shear strength in accordance with ASTM D6916 (NCMA SRWU-2): 1500 plf (21 kN/m) minimum at 2 psi (13 MPa) normal pressure;
2. Geogrid/unit peak connection strength in accordance with ASTM D6638 (NCMA SRWU-1): 900 plf (13 kN/m) minimum at 2-psi (13 MPa) normal force.

E. Modular concrete units shall conform to the following constructability requirements:

1. Vertical setback: 1/8" (3 mm) ± per course (near vertical) or 1" (25 mm) + per course – TO BE SPECIFIED ON THE CONSTRUCTION DRAWINGS SUBMITTED BY THE CONSTRACTOR;
2. Alignment and grid positioning mechanism - fiberglass pins, two per unit minimum;
3. Maximum horizontal gap between erected units shall be ≤ 1/2 inch (13 mm).

2.03 Shear Connectors

A. Shear connectors shall be 1/2-inch (12 mm) diameter thermoset isopthalic polyester resin-pultruded fiberglass reinforcement rods or equivalent to provide connection between vertically and horizontally adjacent units with the following requirements:

1. Flexural Strength in accordance with ASTM D4476: 128,000 psi (882 MPa) minimum;
2. Short Beam Shear in accordance with ASTM D4475: 6,400 psi (44 MPa) minimum.

B. Shear connectors shall be capable of holding the geogrid in the proper design position during grid pre-tensioning and backfilling.

2.04 Base Leveling Pad Material

A. Material shall consist of a compacted crushed stone base or non-reinforced concrete as shown on the construction drawings.

2.05 Unit Drainage Fill

A. Unit drainage fill shall consist of clean 1" (25 mm) minus crushed stone or crushed gravel meeting the following gradation tested in accordance with ASTM D-422:

Sieve Size	Percent Passing
1 inch (25 mm)	100
3/4-inch (19 mm)	75-100
No. 4	0 - 10
No. 50	0 - 5

B. One cubic foot (0.028 m3), minimum, of drainage fill shall be used for each square foot (0.093 m2) of wall face. Drainage fill shall be placed within cores of, between, and behind units to meet this requirement.

2.06 Reinforced Backfill

A. Reinforced backfill shall be free of debris and meet the following gradation tested in accordance with ASTM D-422:

Sieve Size	Percent Passing
2-inch (50 mm)	100
3/4-inch (19 mm)	100-75
No. 40	0-60
No. 200	0-35

Plasticity Index (PI) <15 and Liquid Limit <40 per ASTM D-4318.

B. The maximum aggregate size shall be limited to 3/4 inch (19 mm) unless field tests have been performed to evaluate potential strength reductions to the geogrid design due to damage during construction.

C. Material can be site-excavated soils where the above requirements can be met. Unsuitable soils for backfill (high plastic clays or organic soils) shall not be used in the backfill or in the reinforced soil mass.

D. Contractor shall submit reinforced fill sample and laboratory test results to the Architect/Engineer for approval prior to the use of any proposed reinforced fill material.

2.07 Geogrid Soil Reinforcement

A. Geosynthetic reinforcement shall consist of geogrids manufactured specifically for soil reinforcement applications and shall be manufactured from high tenacity polyester yarn or high-density polyethylene. Polyester geogrid shall be knitted from high tenacity polyester filament yarn with a molecular weight exceeding 25,000 Meg/m and a carboxyl end group values less than 30. Polyester geogrid shall be coated with an impregnated PVC coating that resists peeling, cracking, and stripping.

B. Ta, Long Term Allowable Tensile Design Load, of the geogrid material shall be determined as follows:

Ta = Tult / (RFcr*RFd*RFid*FS)
Ta shall be evaluated based on a 75-year design life.

1. Tult, Short Term Ultimate Tensile Strength shall be determined in accordance with ASTM D4595 or ASTM D6637.
   Tult is based on the minimum average roll values (MARV).

2. RFcr, Reduction Factor for Long Term Tension Creep
   RFcr shall be determined from 10,000-hour creep testing performed in accordance with ASTM D5262. Reduction value = 1.45 minimum.

3. RFd, Reduction Factor for Durability
   RFd shall be determined from polymer specific durability testing covering the range of expected soil environments. RFd = 1.10 minimum.

4. RFid, Reduction Factor for Installation Damage
   RFid shall be determined from product specific construction damage testing performed in accordance with ASTM D5818 (GRI-GG4). Test results shall be provided for each product to be used with project specific or more severe soil type. RFid = 1.05 minimum.

5. FS, Overall Design Factor of Safety
   FS shall be 1.5 unless otherwise noted for the maximum allowable working stress calculation.

C. The maximum design tensile load of the geogrid shall not exceed the laboratory tested ultimate strength of the geogrid/facing unit connection as limited by the "Hinge Height" divided by a factor of safety of 1.5. The connection strength testing and computation procedures shall be in accordance with ASTM D6638 Connection Strength between Geosynthetic Reinforcement and Segmental Concrete Units (NCMA SRWU-1).

D. Soil Interaction Coefficient, Ci
Ci values shall be determined per ASTM D6706 (GRI:GG5) at a maximum 0.75-inch (19 mm) displacement.

E. Manufacturing Quality Control
The geogrid manufacturer shall have a manufacturing quality control program that includes QC testing by an independent laboratory.
The QC testing shall include:
Tensile Strength Testing
Melt Flow Index (HDPE)
Molecular Weight (Polyester)

2.08 Drainage Pipe

A. If required, the drainage pipe shall be perforated or slotted PVC pipe manufactured in accordance with ASTM D-3034 or corrugated HDPE pipe manufactured in accordance with AASHTO M252.

2.09 Geotextile Filter Fabric

A. When required, Geotextile filter fabric shall be 4.0 oz/sy, polypropylene, needlepunched nonwoven fabric.

PART 3: EXECUTION

3.01 Excavation

A. Contractor shall excavate to the lines and grades shown on the construction drawings. Owner's representative shall inspect the excavation and approve prior to placement of leveling material or fill soils. Proof roll foundation area as directed to determine if remedial work is required.

B. Over-excavation and replacement of unsuitable foundation soils and replacement with approved compacted fill will be compensated as agreed upon with the Owner.

3.02 Base Leveling Pad

A. Leveling pad material shall be placed to the lines and grades shown on the construction drawings, to a minimum thickness of 6 inches (150 mm) and extend laterally a minimum of 6" (150 mm) in front and behind the modular wall unit.

B. Soil leveling pad materials shall be compacted to a minimum of 95 % Standard Proctor density per ASTM D-698 or 92% Modified Proctor Density per ASTM D1557.

C. Leveling pad shall be prepared to insure full contact to the base surface of the concrete units.

3.03 Modular Unit Installation

A. First course of units shall be placed on the leveling pad at the appropriate line and grade. Alignment and level shall be checked in all directions and insure that all units are in full contact with the base and properly seated.

B. Place the front of units side-by-side. Do not leave gaps between adjacent units. Layout of corners and curves shall be in accordance with manufacturer's recommendations.

C. Install shear/connecting devices per manufacturer's recommendations.

D. Place and compact drainage fill within and behind wall units. Place and compact backfill soil behind drainage fill. Follow wall erection and drainage fill closely with structure backfill.

E. Maximum stacked vertical height of wall units, prior to unit drainage fill and backfill placement and compaction, shall not exceed two courses.

3.04 Structural Geogrid Installation

A. Geogrid shall be oriented with the highest strength axis perpendicular to the wall alignment.

B. Geogrid reinforcement shall be placed at the strengths, lengths, and elevations shown on the construction design drawings or as directed by the Engineer.

C. The geogrid shall be laid horizontally on compacted backfill and attached to the modular wall units. Place the next course of modular concrete units

over the geogrid. The geogrid shall be pulled taut, and anchored prior to backfill placement on the geogrid.

D. Geogrid reinforcements shall be continuous throughout their embedment lengths and placed side-by-side to provide 100% coverage at each level. Spliced connections between shorter pieces of geogrid or gaps between adjacent pieces of geogrid are not permitted.

3.05 Reinforced Backfill Placement

A. Reinforced backfill shall be placed, spread, and compacted in such a manner that minimizes the development of slack in the geogrid and installation damage.

B. Reinforced backfill shall be placed and compacted in lifts not to exceed 6 inches (150 mm) where hand compaction is used, or 8 - 10 inches (200 to 250 mm) where heavy compaction equipment is used. Lift thickness shall be decreased to achieve the required density as required.

C. Reinforced backfill shall be compacted to a minimum of 95 % Standard Proctor density per ASTM D-698 or 92% Modified Proctor Density per ASTM D1557. The moisture content of the backfill material prior to and during compaction shall be uniformly distributed throughout each layer and shall be dry of optimum, + 0%, - 3%.

D. Only lightweight hand-operated equipment shall be allowed within 3 feet (1m) from the tail of the modular concrete unit.

E. Tracked construction equipment shall not be operated directly upon the geogrid reinforcement. A minimum fill thickness of 6 inches (150 mm) is required prior to operation of tracked vehicles over the geogrid. Tracked vehicle turning should be kept to a minimum to prevent tracks from displacing the fill and damaging the geogrid.

F. Rubber tired equipment may pass over geogrid reinforcement at slow speeds, less than 10 MPH (15 KPH). Sudden braking and sharp turning shall be avoided.

G. At the end of each day's operation, the Contractor shall slope the last lift of reinforced backfill away from the wall units to direct runoff away from wall face. The Contractor shall not allow surface runoff from adjacent areas to enter the wall construction site.

3.06 Cap Installation

A. Cap units shall be glued to underlying units with an all-weather adhesive recommended by the manufacturer.

3.07 As-built Construction Tolerances

A. Vertical alignment: ± 1.5" (40 mm) over any 10' (3 m) distance.

B. Wall Batter: within 2 degrees of design batter.

C. Horizontal alignment: ± 1.5" (40 mm) over any 10' (3 m) distance. Corners, bends & curves: ± 1 ft (300 mm) to theoretical location.

D. Maximum horizontal gap between erected units shall be ≤ 1/2 inch (13 mm).

3.08 Field Quality Control

A. Quality Assurance - The Owner shall/may engage inspection and testing services, including independent laboratories, to provide quality assurance and testing services during construction. This does not relieve the Contractor from securing the necessary construction control testing.

B. Quality assurance should include foundation soil inspection. Verification of geotechnical design parameters, and verification that the contractor's quality control testing is adequate as a minimum. Quality assurance shall also include observation of construction for general compliance with design drawings and project specifications. Quality assurance is best performed by the site geotechnical engineer.

C. Quality Control – The Contractor shall engage inspection and testing services to perform the minimum quality control testing described in the retaining wall design plans and specifications. Only qualified and experienced technicians and engineers shall perform testing and inspection services.

D. Quality control testing shall include soil and backfill testing to verify soil types and compaction and verification that the retaining wall is being constructed in accordance with the design plans and project specifications.

-END OF SECTION-

SECTION 331200 - WATER PIPING

1.1 GENERAL

A. Related documents

1. Drawings and general provisions of Contract, including General and Supplementary Conditions and other Division 1 Specification Sections, apply to this Section.

2. Local Department of Transportation Standard Specifications and Details and **Cape Fear Public Utility Authority** specifications and details.

3. Coordinate with Fire Protection Drawings & Specifications.

B. Summary

1. This Section includes water line and fire line extensions and water service piping and appurtenances from the source of potable water to a point 1 foot above finished floor inside the building.

2. Related Sections: The following Sections contain requirements that relate to this Section:

(1) Division 1 “Testing”.

(2) Division 2 “Excavation and Backfill” for excavation and backfill required for water service piping and structures.

(3) Division 15 Section “Plumbing Systems” for interior building water piping systems and equipment.

3. Products installed but not furnished under this Section include water meters provided by the utility company to the site, ready for installation.

C. Submittals

1. General: Submit the following in accordance with Conditions of Contract and Division 1 Specification Sections.

2. Product data for pipes, valves, meter setter yoke, backflow preventers

and identification devices.

3. Shop drawings for precast concrete valve pits and meter pit, including frames and covers, also above ground enclosures (if applicable).

4. Record drawings at project closeout of service piping and products in accordance with requirements of Division 1.

5. Maintenance data for valves and backflow preventer, for inclusion in Operating and Maintenance Manuals.

6. Comply with **Cape Fear Public Utility Authority** submittal, record keeping and AS BUILT requirements.

D. Quality Assurance

1. Comply with requirements of the local D.O.T. Standard Specifications and Details and local water utility agency specifications and details.

2. Obtain approval from governing agencies for taps, public waterline extensions and private water line extensions.

E. Delivery, Storage and Handling

1. Handling: Use a sling to handle valves whose size requires handling by crane or lift. Rig valves to avoid damage to exposed valve parts. Do not use hand wheels or stems as lifting or rigging points.

F. Project Conditions

1. Site Information: Perform site survey, research public utility records, and verify existing utility locations. Verify that water service piping may be installed in compliance with the original design and referenced standards. Notify Owner and Architect of differences between field conditions and plans.

G. Sequencing and Scheduling

1. Coordinate work on public water mains and connection to public water main with governing agencies having authority for water main management.

2. Coordinate service location to building with interior water distribution piping as shown on plumbing plans.

3. Coordinate with other utility work.

1.2 PRODUCTS

A. Refer to the site construction drawings for any specifications on pipes and pipe fittings, valves, anchorages, pits and vaults. The more restrictive specifications shall apply.

B. Pipe and Pipe Fittings, General

1. Pipe and pipe fitting materials shall be compatible with each other. Where more than one type of material or product is indicated, selection is Installer's option.

2. Ductile Iron Pipe 4 inches and larger: AWWA C151, Class 50, except that pipe smaller than 6-inch size shall be Class 51.

3. PVC (Polyvinyl Chloride) Pipe 4 inches and larger: AWWA C900; Class 200; with bell end and elastomeric gasket, with plain end for cast-iron or ductile-iron fittings, or with plain end for PVC elastomeric gasket fittings.

(1) Ductile Iron and Cast-Iron Fittings: AWWA C110, ductile-iron or cast-iron, 250-psi pressure rating; or AWWA C153, ductile-iron compact fittings, 350-psi pressure rating; of dimension to match pipe outside diameter.

4. Copper Water Tube 2 Inches and Smaller: ASTM B 88; Type K, seamless, annealed temper.

5. PVC (Polyvinyl Chloride) Pipe 3 Inches and Smaller: ASTM D 1785, Schedule 40.

6. Couplings: Iron body sleeve assembly fabricated to match outside diameters of pipes to be joined.

C. Valves

1. Non-rising Stem Gate Valves 3 Inches and Larger: AWWA C500, cast-iron double disc, bronze disc and seat rings, or AWWA C509, resilient seated; bronze stem, cast-iron or ductile-iron body and bonnet, stem nut, 200-psi working pressure, mechanical joint ends.

2. Rising Stem Gate Valves, 3 Inches and larger: AWWA C500, cast-iron double disc, bronze disc and seat rings, or AWWA C509, resilient seated; cast-iron or ductile-iron body and bonnet, OS&Y, bronze stem, 200-psi working pressure, flanged ends.

3. Non-rising Stem Gate Valves, 2 Inches and Smaller: MSS SP-80; body and screw bonnet of ASTM B 62 cast bronze; with Class 125 threaded ends, solid wedge, non-rising copper-silicon allow stem, brass packing gland, Teflon-impregnated packing, and malleable iron hand wheel.

4. Valve Boxes: Traffic rated (HS 20) cast-iron box having top section and cover with lettering "WATER", bottom section with base of size to fit over valve and barrel approximately 5 inches in diameter, and adjustable cast-iron extension of length required for depth of bury and valve.

5. Curb Stops: Bronze body, ground key plug or ball, and wide tee head, with inlet and outlet to match service piping material.

6. Tapping Sleeve and Tapping Valve: Provide a complete assembly, including tapping sleeve, tapping valve, and bolts and nuts. The sleeve and the valve shall be compatible with the tapping machine to be used.

7. Service Clamps and Corporation Stops: Provide a complete assembly, including service clamp, corporation stop, and bolts and nuts. The clamp and stop shall be compatible with the drilling machine to be used.

D. Anchorages

1. Clamps, Straps, and Washers: ASTM A 506, steel.

2. Rods: ASTM A 575, steel.

3. Rod Couplings: ASTM A 197, malleable iron.

4. Bolts: ASTM A 307, steel.

5. Cast-Iron Washers: ASTM A 126, gray iron.

6. Concrete Reaction Backing: Portland cement concrete mix, 3000 psi.

E. Valve Pits, Meter Pit, and Above Ground Vaults

1. Concrete: Portland cement mix, 3000 psi.

2. Reinforcement: Steel conforming to the following:

(1) Fabric: ASTM A 185, welded wire fabric, plain.

(2) Reinforcement Bars: ASTM A 615, Grade 60, deformed.

(3) Above ground heated boxes for backflow preventers.

3. Ladder: ASTM A 36, steel, or polyethylene-encased cast-iron or steel steps.

4. Manhole: ASTM A 48, Class 35, gray iron, 24-inch minimum diameter traffic frame and cover, of size and weight indicated.

5. Manhole: ASTM A 536, Grade 60-40-18, ductile iron, 24-inch minimum diameter traffic frame and cover, of size and weight indicated.

6. Drain: ANSI A112.21.1M, area drain, cast iron, of size indicated. Traffic rated lids shall be used in all areas. Body shall have anchor flange, light-duty cast-iron grate, and bottom outlet. Drain shall have integral or field-installed bronze ball or clapper-type backwater valve. Above ground vaults shall have positive drainage to the exterior of the vault.

F. Water Meter: Water meter will be furnished by the Local water utility agency on payment of meter setting fee. Meet Local water utility agency requirements for meter box.

G. Meter Setter: Meet Local water utility agency requirements for size specified on plans.

H. Fire Hydrants: Meet Local water utility agency requirements as specified on plans. Provide pipe bollards as shown on the plans. Paint all above ground piping, valves, bollards and hydrants.

1.3 EXECUTION

A. Refer to the site construction drawings for any specifications on the installation of piping and pipe fittings, valves and anchorages. Also refer to the site drawings for specifications on pipe tests and cleaning. The more restrictive specifications shall apply.

B. Preparation of Buried Pipe Foundation

1. Refer to Specification Section 312000 – Excavation and Grading, for trench compaction criteria. If rock or unsuitable soils are encountered, all work shall comply with Specification Section 312000.

2. Grade trench bottom to provide a smooth, firm, stable, and rock-free foundation throughout the length of the piping.

3. Remove unstable, soft, and unsuitable materials at the surface upon which pipes are to be laid and backfill with clean sand or gravel to indicated level.

C. Installation of Pipe and Pipe Fittings

1. Ductile-Iron Pipe: Install with cement-mortar-lined, ductile-iron or cast-iron, mechanical joint or push-on joint fittings and rubber gaskets in accordance with AWWA C600.

2. PVC (Polyvinyl Chloride) Pipe: Install with cement-mortar-lined, ductile-iron or cast-iron, mechanical joint or push-on fittings and rubber gaskets in accordance with AWWA M23.

3. Copper Tube: Install with wrought copper, solder joint, pressure fittings, and Sn95 Tin-Antimony solder in accordance with CDA "Copper Tube" Handbook.

4. PVC (Polyvinyl Chloride) Pipe: Install with PVC, Schedule 80 socket-type, solvent cement or elastomeric gasketed fittings in accordance with manufacturer's installation instructions.

5. Depth of Cover: Provide minimum cover over piping of 12 inches below average location frost depth or 36 inches below finished grade, whichever is greater.

6. Water Main Connection: Arrange and pay for tap in water main, of size and in location as indicated, from the Local water utility agency.

7. Water Main Connection: Tap water main with size and in location as indicated, in accordance with requirements of the Local water management agency.

8. Water Service Termination: Terminate water service piping 1 foot above finished floor inside the building in location and invert as indicated. Provide temporary pipe plug for piping extension into building.

D. Installation of Valves

1. General Application: Use mechanical joint end valves for 3-inch and larger buried installation. Use threaded and flanged end valves for installation in pits and inside building. Use bronze corporation stops and valves, with ends compatible to piping, for 2-inch and smaller installation.

2. AWWA-Type Gate Valves: Comply with AWWA C600. Install buried valves with stem pointing up and with cast-iron valve box.

3. Bronze Corporation Stops and Curb Stops: Comply with manufacturer's installation instructions. Install buried curb stops with head pointed up.

E. Installation of Anchorages: Provide anchorages for tees, plugs and caps, bends, crosses, valves, and hydrant branches.

F. Application of Protective Coatings: Apply full coat of asphalt or other acceptable corrosion-retarding material to surfaces of installed ferrous anchorage devices.

G. Field Quality Control

1. Piping Tests: Conduct piping tests before joints are covered and after thrust blocks have sufficiently hardened. Fill pipeline 24 hours prior to testing and apply test pressure to stabilize system. Use only potable water. Provide one compaction test for every 100 LF, or part thereof, of line installed.

2. Hydrostatic Tests: Test at not less than 1-1/2 times working pressure for 2 hours minimum, or as required by local or state agencies.

   Increase pressure in 50-psi increments and inspect each joint between increments. Hold at test pressure for one hour; decrease to 0 psi. Slowly increase gain to test pressure and hold for one more hour. Maximum allowable leakage is 2 quarts per hour per 100 joints. Remake leaking joints with new materials and repeat test until leakage is within above limits.

3. Castings shall be wire-brushed or otherwise prepared for painting and painted with a flat black rust inhibitive paint.

H. Cleaning - Clean and disinfect water distribution piping. Flush and test fire protection lines per fire protection specifications; fire protection engineer to witness flushing of fire lines.

I. Valve Schedule: Non-rising Stem Gate Valves - 4 Inches and Larger.

- END OF SECTION -

SECTION 333000 - SANITARY SEWERS

1.1 GENERAL

A. Related documents: Drawings and general provisions of Contract, including General and Supplementary Conditions and other Division 1 Specification Sections, apply to this Section.

B. **Construction shall conform to Cape Fear Public Utility Authority specifications and details.**

C. Summary: This Section includes sanitary sewerage system piping and appurtenances from a point 5 feet outside the building to the point of connection to public sewer. Connection to the public sewer to be by Contractor, unless sewer agency has that responsibility.

D. Submittals

1. General: Submit the following in accordance with Conditions of Contract and Division 1 Specification Sections.

2. Product data for drainage piping specialties.

3. Shop drawings for precast concrete sanitary manholes, including frames and covers.

4. Record drawings at project closeout of installed sanitary sewer service piping and products in accordance with requirements of Division 1.

E. Project Conditions

1. Site Information: Perform site survey, research public utility records, and verify existing utility locations. Verify that sanitary sewerage system piping may be installed in compliance with original design and referenced standards.

F. Sequencing and Scheduling

1. Coordinate connection to public sewer with **Cape Fear Public Utility Authority**.

2. Coordinate with interior building sanitary drainage piping.

3. Coordinate with other utility work.

1.2 PRODUCTS

A. Refer to the site construction drawings for any specifications on pipes and pipe fittings, manholes and cleanouts. The more restrictive specifications shall apply.

B. Pipe and Fittings

1. General: Provide pipe and pipe fitting materials compatible with each other. Where more than one type of materials or products is indicated, selection is Installer's option.

2. Hub and Spigot Cast-Iron Soil Pipe and Fittings: ASTM A 74, gray cast iron for compression gasket joints.

3. Hubless Cast-Iron Soil Pipe and Fittings: CISPI 301, gray cast iron, for coupling joints.

4. Ductile-Iron Pressure Pipe: AWWA C151, Class 50, for push-on joints.

5. Ductile-Iron Sewer Pipe: ASTM A 746, Class 50, for push-on joints.

6. PVC (Polyvinyl Chloride) Sewer Pipe and Fittings: ASTM D 3034, SDR 35, for elastomeric gasket joints.

7. PVC (Polyvinyl Chloride) Sewer Pipe and Fittings: ASTM D 1785, Schedule 40 for solvent weld joints.

8. Couplings: Rubber or elastomeric sleeve and stainless steel band assembly fabricated to match outside diameters of pipes to be jointed.

9. Couplings: Rubber or elastomeric compression gasket, made to match pipe inside diameter or hub, and adjoining pipe outside diameter.

C. Manholes: Precast Concrete Manholes: Use sewer utility agencies having jurisdiction and approval authority standard specifications and details.

D. Cleanouts: General - Provide cast-iron or Schedule 80 PVC ferrule and countersunk brass cleanout plug. Provide round cast-iron access frame and heavy-duty, secured, scored cast-iron cover in paved areas with a concrete apron (18" x 18" x 12" deep).

1.3 EXECUTION

A. Refer to the site construction drawings for any specifications on the installation of sanitary sewer piping, pipe joints, manholes, cleanouts and tap connection. Also refer to the site drawings for specifications on pipe testing and cleaning. The more restrictive specifications shall apply.

B. Preparation of Foundation for Buried Sanitary Sewerage Systems

1. Refer to Specification Section 312000- Excavation and Grading, for trench compaction criteria. If rock or unsuitable soil are encountered, all work shall comply with Specification Section 312000.

2. Grade trench bottom to provide a smooth, firm, stable, and rock-free foundation, throughout the length of the pipe.

3. Remove unstable, soft, and unsuitable materials at the surface upon which pipes are to be laid, and backfill with clean sand or gravel to indicated level.

C. Pipe Applications for Underground Sanitary Sewers

1. Pipe sizes 4 to 54 inches: Ductile-iron sewer pipe.

2. Pipe sizes 15 inches and smaller: PVC gasket joint sewer pipe and fittings; AWWA C-900.

3. Pipe sizes 6 inches and smaller: PVC solvent cement joint sewer pipe and fittings; ASTM D 17858, Schedule 40.

D. Installation, General

1. General Locations and Arrangements: Drawings (plans and details) indicate the general location and arrangement of the underground sanitary sewerage system piping. Location and arrangement of piping layout take into account many design considerations. Install the piping as indicated, to the extent practical. Prior to any rerouting, obtain Owner’s approval.

2. Install piping pitched down in direction of flow, at minimum slope of 2 percent, except where indicated otherwise.

3. Extend sanitary sewerage system piping to connect to building sanitary drains, of sizes and in locations indicated.

E. Pipe Joint Construction and Installation

1. Join and install ductile-iron pipe with ductile-iron or cast-iron push-on joint fittings and rubber gaskets in accordance with AWWA C600, except that anchorages are not required.

2. Join and install PVC pipe as follows:

(a) Solvent cement joint pipe and fittings, joining with solvent cement in accordance with ASTM D 2855 and ASTM F 402.

(b) Pipe and gasketed fittings, joining and elastomeric seals in accordance with ASTM D 3212.

(c) Installation in accordance with ASTM D 2321.

3. Join different types of pipe with standard manufactured couplings and fittings intended for that purpose.

F. Manholes

1. General: Install manholes complete with accessories as indicated. Form continuous concrete or split pipe section channels and benches between inlets and outlets. Set tops of frames and covers flush with finish surface where manholes occur in pavements. Elsewhere, set tops 1 foot above finish surface, unless otherwise indicated.

2. Construct cast-in-place manholes as indicated.

3. Castings shall be wire-brushed or otherwise prepared for painting and painted with a flat black rust inhibitive paint.

G. Cleanouts

1. Install cleanouts and extension from sewer pipe to cleanout at grade as indicated. Set cleanout frame and cover in concrete block 12” by 12” by 6” inches deep, except where location is in concrete paving. Set top of cleanout 1 inch above surrounding earth grade or flush with grade when installed in paving.

2. Castings shall be wire-brushed or otherwise prepared for painting and painted with a flat black rust inhibitive paint.

H. Tap Connections

1. Make connections to existing piping and underground structures piping that is indicated to remain in place. Provide sufficiently strong closures to withstand hydrostatic or earth pressure that may result after ends of abandoned utilities have been closed.

I. Field Quality Control

1. Testing: Perform testing of completed piping and manholes in accordance with **Cape Fear Public Utility Authority** requirements. See Section 312000 and Division 1 for testing requirements. Perform one compaction test for every 100 LF, or part thereof, of line installed and under each structure. Perform compaction testing for every 8” lift of backfill in trench and under structure.

2. Cleaning: Clear interior of piping and structures of dirt and other superfluous material as work progresses. Maintain swab or drag in piping and pull past each joint as it is completed.

3. Interior Inspection: Inspect piping to determine whether line displacement or other damage has occurred. Test all lines between manholes using a mandrill of the size specified by the local jurisdiction having authority.

- END OF SECTION -

SECTION 334100 - STORM SEWERS

1.1 General

A. Related Documents: Drawings and general provisions of Contract, including General and Supplementary Conditions and other Division 1 Specification Sections, apply to this Section.

B. Related Sections: 312000 – Excavation and Grading.

C. Summary: This Section includes storm sewerage system piping and appurtenances from a point 5 feet outside the building to the point of discharge or connection to existing storm sewer.

D. Submittals

1. General: Submit the following in accordance with Conditions of Contract and Division 1 Specification Sections.

2. Product data for drainage piping specialties.

3. Shop drawings for precast concrete storm drainage manholes and catch basins, including frames, covers, and grates.

E. Project Conditions: Verify that storm sewerage system piping may be installed in compliance with original design and referenced standards.

F. Sequencing and Scheduling

1. Coordinate with interior building storm drainage piping.
2. Coordinate with other utility work.

1.2 Products

A. Pipe and Fittings

1. General: Provide pipe and pipe fitting materials compatible with each other.

2. PVC (Polyvinyl Chloride) Sewer Pipe and Fittings: ASTM D1785, PVC pipe, schedule 40.

3. Reinforced Concrete Sewer Pipe and Fittings: ASTM C 76, Class III, Wall B, for mastic joints.

4. Non-reinforced Concrete Sewer Pipe and Fittings: ASTM C 14, Class 2, for mastic joints.

B. Manholes

1. Precast Concrete Manholes: ASTM C 478, precast reinforced concrete, of depth indicated.

2. Cast-in-Place Manholes: Reinforced concrete of dimensions and with appurtenances indicated.

   (1) Bottom, Walls, and Top: Reinforced concrete.
   (2) Channel and Bench: Concrete.
   (3) Steps: Cast into sidewall at 12- to 16-inch intervals.

3. Manhole Steps: 12 inch wide cast iron, galvanized steel or steel encased in corrosion resistant material (rubber or plastic).

4. Manhole Frames and Covers: Heavy-duty traffic bearing, cast iron, 24-inch inside diameter by 7- to 9-inch riser with 4-inch minimum width flange, and 26-inch-diameter cover, indented top design, with lettering "STORM SEWER" cast into cover.

C. Cleanouts: Provide cast-iron or schedule 80 PVC ferrule and countersunk brass cleanout plug, with round cast-iron access frame and heavy-duty, secured, scoriated cast-iron cover.

D. Catch Basins

1. Precast Concrete Catch Basins: ASTM C 478 or ASTM C 858, precast reinforced concrete, of depth indicated. Sections shall have provision for rubber gasket joints. Base section slab shall have minimum thickness of 6 inches, riser sections shall have minimum thickness of 4 inches and be 48 inches inside diameter, and top section and grade rings shall match 24-inch frame and grate, unless otherwise indicated.

2. Cast-in-Place Catch Basins: Reinforced concrete of dimensions and with appurtenances indicated.

   (1) Bottom, Walls, and Top: Reinforced concrete.
   (2) Channel and Bench: Concrete.

3. Catch Basin Steps: 12 inch wide cast iron, galvanized steel or steel encased in corrosion resistant material (rubber or plastic).

4. Catch Basin Frames and Grates: ASTM A 536 Grade 60-40-18, heavy-duty, ductile iron, 24-inch inside diameter by 7- to 9-inch riser with 4-inch minimum width flange, and 26-inch-diameter flat grate having small square or short slotted drainage openings.

5. Curb Inlets: Precast concrete of dimensions conforming to utility standards.

E. Concrete and Reinforcement

a. Concrete: Portland cement mix, 3,500 psi.

b. Reinforcement: Steel conforming to the following:

(1) Fabric: ASTM A 185, welded wire fabric, plain.
(2) Reinforcement Bars: ASTM A 615, Grade 60, deformed.

1.3 Execution

A. Preparation of Foundation for Buried Storm Sewer Systems

1. Grade trench bottom to provide a smooth, firm, stable, and rock-free foundation, throughout the length of the pipe.

2. Remove unstable, soft, or unsuitable materials at the surface upon which pipes are to be laid, and backfill with clean sand, pea gravel or crushed stone (100% passing 1-1/2" sieve and 0-5% passing a No. 50 sieve) to indicated level.

B. Pipe Applications for Underground Storm Sewers

1. Pipe sizes 12 inches and Larger: Reinforced concrete sewer pipe and fittings.

2. Pipe sizes smaller than 12 inches: PVC sewer pipe or non-reinforced concrete sewer pipe.

C. Installation, General

1. General Locations and Arrangements: Drawings (plans and details) indicate the general location and arrangement of the underground storm sewerage system piping. Location and arrangement of piping layout take into account many design considerations. Install the piping as indicated, to the extent practical.

2. Install piping pitched down in direction of flow, at minimum slope of 1 percent, except where indicated otherwise.

3. Extend storm sewerage system piping to connect to building storm drains, of sizes and in locations indicated.

D. Pipe and Tube Joint Construction and Installation

1. Join concrete pipe and fittings with mastic in accordance with applicable provisions of ACPA "Concrete Pipe Installation Manual."

E. Manholes

1. General: Install manholes complete with accessories as indicated. Form continuous concrete or split pipe section channel and benches between inlets and outlet. Set tops of frames and covers flush with finish surface where manholes occur in pavements. Elsewhere, set tops 1 inch above finish surface, unless otherwise indicated.

2. Construct cast-in-place manholes as indicated.

3. Apply bituminous mastic coating at joints of sections.

F. Cleanouts

1. Install cleanouts and extension from sewer pipe to clean out at grade as indicated. Set cleanout frame and cover in concrete pad 12"x 12"x 6" deep (minimum), except where location is in concrete paving. Set top of cleanout 1 inch above surrounding earth grade or flush with grade when installed in paving. Coordinate with section 02730 G.

2. Castings shall be wire-brushed or otherwise prepared for painting and painted with a flat black rust inhibitive paint.

G. Catch Basins

1. Construct catch basins to sizes and shapes indicated.
2. Set frames and grates to elevations indicated.

H. Tap Connections

1. Make connections to existing piping and underground structures so that finished work will conform as nearly as practicable to the requirements specified for new work.

2. Make branch connections from side into existing 24-inch or larger piping or to underground structures by cutting opening into existing unit sufficiently large to allow 3 inches of concrete to be packed around entering connection. Cut end of connection pipe passing through pipe or structure wall to conform to shape of and be flush with inside wall, unless otherwise indicated. On outside of pipe or structure wall, encase entering connection in 6 inches of concrete for minimum length of 12 inches to provide additional support of collar from connection to undisturbed ground.

3. Protect existing piping and structures to prevent concrete or debris from entering while making tap connections. Remove debris, concrete, or other extraneous material that may accumulate.

I. Field Quality Control

1. Testing: Perform testing of completed piping in accordance with local authorities having jurisdiction. See Division 1 for testing requirements. Perform one compaction test for every 100 LF, or part thereof, of line installed and under each structure. Perform compaction testing for every 8” lift of backfill in trench and under structure.

2. Cleaning: Clear interior of piping and structures of dirt and other superfluous material as work progresses. Maintain swab or drag in piping and pull past each joint as it is completed.

3. Interior Inspection: Inspect piping to determine whether line displacement or other damage has occurred.

4. Castings shall be wire-brushed or otherwise prepared for painting and painted with a flat black rust inhibitive paint.

-END OF SECTION-

SECTION 334600 - SUBDRAINAGE

PART 1 - GENERAL

1.1 RELATED DOCUMENTS

A. Drawings and general provisions of the Contract, including General and Supplementary Conditions and Division 01 Specification Sections, apply to this Section.

1.2 SUMMARY

A. Section Includes:

1. Perforated-wall pipe and fittings.
2. Drainage conduits.
3. Drainage panels.
4. Geotextile filter fabrics.

1.3 ACTION SUBMITTALS

A. Product Data:

1. Drainage conduits, including rated capacities.
2. Drainage panels, including rated capacities.
3. Geotextile filter fabrics.

PART 2 - PRODUCTS

2.1 PERFORATED-WALL PIPES AND FITTINGS

A. Perforated PE Pipe and Fittings:

1. NPS 6 and Smaller: ASTM F 405 or AASHTO M 252, Type CP; corrugated, for coupled joints.
2. NPS 8 and Larger: ASTM F 667; AASHTO M 252, Type CP; or AASHTO M 294, Type CP; corrugated; for coupled joints.
3. Couplings: Manufacturer's standard, band type.

2.2 DRAINAGE CONDUITS

A. Molded-Sheet Drainage Conduits: Prefabricated geocomposite with cuspated, molded-plastic drainage core wrapped in geotextile filter fabric.

1. Manufacturers: Subject to compliance with requirements, provide products by one of the following:

a. American Wick Drain.
b. JDR Enterprises, Inc.
c. TenCate Geosynthetics.

2. Nominal Size: 12 inches high by approximately 1 inch thick.

a. Minimum In-Plane Flow: 30 gpm at hydraulic gradient of 1.0 when tested according to ASTM D 4716, unless otherwise required.

3. Filter Fabric: PP geotextile.
4. Fittings: HDPE with combination NPS 4 and NPS 6 outlet connection.

B. Single-Pipe Drainage Conduits: Prefabricated geocomposite with perforated corrugated core molded from HDPE complying with ASTM D 3350 and wrapped in geotextile filter fabric.

1. Manufacturers: Subject to compliance with requirements, provide products by the following:

a. Advanced Drainage Systems, Inc.

2. Nominal Size: 12 inches high by approximately 1 inch thick.

a. Minimum In-Plane Flow: 30 gpm at hydraulic gradient of 1.0 when tested according to ASTM D 4716, unless otherwise indicated.

3. Filter Fabric: PP geotextile.
4. Fittings: HDPE with combination NPS 4 and NPS 6 outlet connection.
5. Couplings: Corrugated HDPE band.

2.3 DRAINAGE PANELS

A. Molded-Sheet Drainage Panels: Prefabricated geocomposite, 36 to 60 inches wide with drainage core faced with geotextile filter fabric.

1. Basis-of-Design Product: Subject to compliance with requirements, provide “Hydrocut 220” by GCP Applied Technologies Inc., (previously W.R. Grace Construction Products,) or a comparable product by one of the following:

a. American Wick Drain.
b. Cosella-Dörken Products, Inc.
c. Eljen Corporation.

d. JDR Enterprises, Inc.
e. Midwest Diversified Technologies Incorporated.
f. Sika Greenstreak.
g. TenCate Geosynthetics.
h. Trace-LINQ Inc.

2. Drainage Core: Three-dimensional, nonbiodegradable, molded PP.

   a. Minimum Compressive Strength: 18,000 lbf/sq. ft. when tested according to ASTM D 1621.
   b. Minimum In-Plane Flow Rate: 7 gpm/ft. of unit width at hydraulic gradient of 1.0 and compressive stress of 25 psig when tested according to ASTM D 4716.

3. Filter Fabric: Nonwoven needle-punched geotextile, manufactured for subsurface drainage, made from polyolefins or polyesters; with elongation greater than 50 percent; complying with the following properties determined according to AASHTO M 288:

   a. Survivability: Class 2.
   b. Apparent Opening Size: No. 60 sieve, maximum.
   c. Permittivity: 0.2 per second, minimum.

4. Film Backing: Polymeric film bonded to drainage core surface.

2.4 WATERPROOFING FELTS

A. Material: Comply with ASTM D 226, Type I, asphalt or ASTM D 227, coal-tar-saturated organic felt.

2.5 GEOTEXTILE FILTER FABRICS

A. Description: Fabric of PP or polyester fibers or combination of both, with flow rate range from 110 to 330 gpm/sq. ft. when tested according to ASTM D 4491.

B. Structure Type: Nonwoven, needle-punched continuous filament.

1. Survivability: AASHTO M 288 Class 2.
2. Styles: Flat and sock.

PART 3 - EXECUTION

3.1 EXAMINATION

A. Examine surfaces and areas for suitable conditions where subdrainage systems are to be installed.

B. If subdrainage is required for landscaping, locate and mark existing utilities, underground structures, and aboveground obstructions before beginning installation and avoid disruption and damage of services.

C. Verify that drainage panels installed as part of foundation wall waterproofing is properly positioned to drain into subdrainage system.

D. Proceed with installation only after unsatisfactory conditions have been corrected.

3.2 EARTHWORK

A. Excavating, trenching, and backfilling are specified in Section 312000 "Earth Moving."

3.3 FOUNDATION DRAINAGE INSTALLATION

A. Place impervious fill material on subgrade adjacent to bottom of footing after concrete footing forms have been removed. Place and compact impervious fill to dimensions indicated, but not less than 6 inches deep and 12 inches wide.

B. Lay flat-style geotextile filter fabric in trench and overlap trench sides.

C. Place supporting layer of drainage course over compacted subgrade and geotextile filter fabric, to compacted depth of not less than 4 inches.

D. Encase pipe with sock-style geotextile filter fabric before installing pipe. Connect sock sections with adhesive or tape.

E. Install drainage piping as indicated in Part 3 "Piping Installation" Article for foundation subdrainage.

F. Add drainage course to width of at least 6 inches on side away from wall and to top of pipe to perform tests.

G. After satisfactory testing, cover drainage piping to width of at least 6 inches on side away from footing and above top of pipe to within 12 inches of finish grade.

H. Install drainage course and wrap top of drainage course with flat-style geotextile filter fabric.

I. Place layer of flat-style geotextile filter fabric over top of drainage course, overlapping edges at least 4 inches.

J. Install drainage panels on foundation walls as follows:

1. Coordinate placement with other drainage materials.
2. Lay perforated drainage pipe at base of footing. Install as indicated in Part 3 "Piping Installation" Article.

3. Separate 4 inches of fabric at beginning of roll and cut away 4 inches of core. Wrap fabric around end of remaining core.
4. Attach panels to wall beginning at subdrainage pipe. Place and secure molded-sheet drainage panels, with geotextile facing away from wall.

K. Place backfill material over compacted drainage course. Place material in loose-depth layers not exceeding 6 inches. Thoroughly compact each layer. Final backfill to finish elevations and slope away from building.

3.4 PIPING INSTALLATION

A. Install piping beginning at low points of system, true to grades and alignment indicated, with unbroken continuity of invert. Bed piping with full bearing in filtering material. Install gaskets, seals, sleeves, and couplings according to manufacturer's written instructions and other requirements indicated.

1. Foundation Subdrainage: Install piping level and with a minimum cover of 36 inches unless otherwise indicated.
2. Lay perforated pipe with perforations down.
3. Excavate recesses in trench bottom for bell ends of pipe. Lay pipe with bells facing upslope and with spigot end entered fully into adjacent bell.

B. Use increasers, reducers, and couplings made for different sizes or materials of pipes and fittings being connected. Reduction of pipe size in direction of flow is prohibited.

C. Install thermoplastic piping according to ASTM D 2321.

3.5 PIPE JOINT CONSTRUCTION

A. Join perforated PE pipe and fittings with couplings according to ASTM D 3212 with loose banded, coupled, or push-on joints.

B. Special Pipe Couplings: Join piping made of different materials and dimensions with special couplings made for this application. Use couplings that are compatible with and fit materials and dimensions of both pipes.

3.6 CLEANOUT INSTALLATION

A. Comply with requirements for cleanouts specified in Section 334100 "Storm Utility Drainage Piping."

B. Cleanouts for Foundation Subdrainage:

1. Install cleanouts from piping to grade. Locate cleanouts at beginning of piping run and at changes in direction. Install fittings so cleanouts open in direction of flow in piping.

2. In vehicular-traffic areas, use NPS 4 cast-iron soil pipe and fittings for piping branch fittings and riser extensions to cleanout. Set cleanout frames and covers in a cast-in-place concrete anchor, 18 by 18 by 12 inches deep. Set top of cleanout flush with grade.
3. In nonvehicular-traffic areas, use NPS 4 PVC pipe and fittings for piping branch fittings and riser extensions to cleanout. Set cleanout frames and covers in a cast-in-place concrete anchor, 12 by 12 by 4 inches deep. Set top of cleanout 1 inch above grade.

3.7 CONNECTIONS

A. Connect low elevations of subdrainage system to building's solid-wall-piping storm drainage system.

3.8 CLEANING

A. Clear interior of installed piping and structures of dirt and other superfluous material as work progresses. Maintain swab or drag in piping and pull past each joint as it is completed. Place plugs in ends of uncompleted pipe at end of each day or when work stops.

END OF SECTION 334600

July 1 2020
JOB: HTW

The Healing Place of New Hanover County
1000 Medical Center Drive
Wilmington, North Carolina

CAPE FEAR PUBLIC UTILITY AUTHORITY SPECIFICATIONS

- 01 30 00 CFPUA Pre-Con Checklist
- 01 30 00 Administrative Requirements
- 01 33 00 Submittals
- 01 35 00 Special Procedures
- 01 40 00 Quality Requirements
- 01 60 00 Product Requirements
- 01 70 00 Execution and Closeout Requirements
- 02 41 00 Demolition
- 02 82 13 Asbestos Abatement for Utilities
- 31 23 34.01 Excavating, Trenching, Dewatering and Backfilling for Utility Work
- 33 01 12 Identification for Utility Piping
- 33 01 30.86 Manhole Rim Adjustment
- 33 05 05.31 Hydrostatic Testing
- 33 05 07.23 Jacking and Boring
- 33 05 09.33 Thrust Restraint for Utility Piping
- 33 05 13 Precast Concrete Manholes and Utility Structures
- 33 14 13 Water Distribution Piping
- 33 14 14 Public Water Service Connections
- 33 14 20 Disinfection of Water Pipelines and Appurtenances
- 33 14 22 Testing of Sanitary Sewer Mains and Manholes
- 33 31 11 Sanitary Sewer Gravity Mains

CAPE FEAR PUBLIC UTILITY AUTHORITY MATERIALS

- Section A Pipe
- Section B Fittings and Accessories
- Section C Joint Restraints
- Section D Valves and Accessories
- Section E Fire Hydrants
- Section F Service Saddles and Tapping Devices
- Section G Brass Service Materials
- Section H Repair Sleeves Coupling Clamps & Non-Pressure Adapters
- Section I Castings and Access Covers
- Section J Service Boxes
- Section K Miscellaneous
- Section L Electrical
- Section M Coatings and Sealants
- Section N Concrete
- Section O Structures

The SITE Group
1111 Oberlin Road
Raleigh NC 27605
919-832-6658 (o)
919-839-2255 (f)

Engineering Department
235 Government Center Drive
Wilmington, NC 28403
Phone: (910) 332-6560
Fax: (910) 332-6353
www.cfpua.org

CFPUA PRE-CON CHECKLIST

□ 1. CFPUA Technical Specifications, Material Specification Manual and Details must be followed.

□ 2. For scheduling purposes, the contractor must give two business days' notice (by e-mail) to the assigned CFPUA inspector (the exact date will be determined by the CFPUA Inspector and CFPUA Operations schedule) for each of the following:

- When construction begins
- Operating any CFPUA valve (including tapping, tie-in, fire line or service valves)
- If the contractor pulls off the site for more than two (2) weeks
- Installing a sewer main out of a tie-in to an existing manhole
- Cutting in a new manhole on an existing line
- Coring an existing manhole
- Tapping an existing sewer main, water main or force main.
- Any bores and threading carrier pipes
- All camera work, testing, chlorination and water sampling
- Setting up or operating a sewer by-pass

□ 3. The contractor is to notify the Design Engineer with any request to deviate from the CFPUA approved For Construction stamped plans. The Design Engineer will then notify the CFPUA Project Manager for review and final approval by CFPUA. The design engineer and CFPUA must approve the deviation prior to work beginning.

□ 4. Any changes to CFPUA details must be approved by the CFPUA Project Manager. These changes will be noted/clouded on CFPUA Detail Sheet.

□ 5. Notify the CFPUA Inspector when material is delivered to the job site for verification that materials meet CFPUA Technical Specifications, Material Specification Manual or approved submittal.

□ 6. No CFPUA valve shall be operated without a CFPUA Inspector or CFPUA Water Quality employee present.

□ 7. Any work after normal working hours (Monday – Friday 7:00 AM – 3:30 PM) must be pre-approved and scheduled with the CFPUA Project Manager and Inspector. An "After Hours Inspection Fee" will be charged unless after hours work is required by CFPUA.

□ 8. All shutdowns must be pre-approved and scheduled with the CFPUA Project Manager and Inspector. They will coordinate with the proper CFPUA departments. Shutdowns on critical lines will require a pre-shutdown meeting. Additional information and pre-inspection of material will be required.

□ 9. No cutting in of manholes on existing sewer, water or sewer force main tie-ins or shutdowns will be made on Friday thru Monday unless pre-approved by CFPUA Operations.

□ 10. It is the Contractor's responsibility to request CFPUA Standard Operating Procedures for items not covered in the Technical Specifications, Material Specification Manual and Details (i.e. abandoning infrastructure, work on older materials, shut down procedures, coring locations in manholes).

Cape Fear Public Utility Authority
Stewardship. Sustainability. Service.

Engineering Department
235 Government Center Drive
Wilmington, NC 28403
Phone: (910) 332-6560
Fax: (910) 332-6353
www.cfpua.org

□ 11. For meters 3" or greater, when the meter vault installation is approved and the main/service line is certified and activated (if permitted), the CFPUA Inspector will send an email to the Developer, Builder, Contractor and CFPUA Meter Services that a "Large Meter Set Installation Appointment" can be requested. The contractor will call (910)332-6550 to make the request two business days in advance.

□ 12. It is the Contractor's responsibility to verify that corporation stops or valves are open on all services

□ 13. Boring and Jacking
- Approved "Boring and Jacking Plan" per CFPUA SPECS (33 05 07.23).
- Approved pipe (mechanical or restrained joints) to be used when main is to be operating under pressure per CFPUA SPECS (33 05 07.23 and 33 05 09.33).

□ 14. Sewer Bypass Pumping (CFPUA Spec 01 51 00)
- Must submit and have approved a "Bypass Pumping Plan" per CFPUA SPECS (01 51 00 1.4).
- All bypass pumping operations must be monitored 24 hours / 7 days a week.
- Monitoring person must be properly trained, experienced and mechanically qualified.

□ 15. In the event of a water/sewer main line or service break, the CFPUA Emergency number (910-332-6565) will be called immediately. Then, the CFPUA Inspector will be notified to assist in obtaining the proper response, if any, from CFPUA.

□ 16. In the event an acceptance test, i.e. hydro test, bac-t sample, chlorination, air, vacuum … has to be repeated at no fault of CFPUA a "Water/Sewer Line Acceptance Testing Reinspection" fee will apply. If the testing is after normal working hours (Monday – Friday 7:00 AM – 3:30 PM) a "Water/Sewer Line Acceptance Testing Reinspection – After Hours Fee" will apply.

□ 17. Shrubs, bushes, trees and similar vegetation shall be planted in a manner that will provide a minimum of three feet unrestricted access from the meter box and clean-out to the road. No shrubs, bushes, or trees shall be planted within three feet around the meter box or clean-out that may hinder Authority's ability to maintain infrastructure. Small (less than 18" diameter and height), shallow rooted or seasonal planting may be approved within three feet of the meter box or cleanout, provided that these plantings do not hinder the Authority's ability to access and maintain the infrastructure at the planting's mature growth.

□ 18. As built and CCTV inspections are completed in the order that they are received. The typical review time is generally ten (10) to fifteen (15) business days for CCTV and five (5) to twenty (20) business days for as-built's but will depend on the complexity of the project, size and quality of the submittal.

□ 19 Provide a minimum of six (6) inches of separation between edge of manhole core holes and manhole barrel joints. Provide a minimum of six (6) inches separation between edges of core holes. Coring the manhole cone section is not allowed. All manhole main line and service piping shall be installed at a minimum of crown to crown of the largest diameter pipe.

□ 20 Prior to the contractor scheduling a tap inspection the following items must be completed:
- All CFPUA fees must be paid.
- A copy of the NCDOT encroachment agreement or City of Wilmington Street Cut permit must be sent to the CFPUA Construction Project Manager.
- If an encroachment or street cut permit is not required, an email from the owner of the right of way stating such must be sent to the CFPUA Construction Project Manager.

Engineering Department
235 Government Center Drive
Wilmington, NC 28403
Phone: (910) 332-6560
Fax: (910) 332-6353
www.cfpua.org

□ 21. Failure to comply with any of the above-mentioned items shall result in CFPUA Community Compliance issuing a Notice of Violation for failure to comply.

_____ _____

Project Name CFPUA File #

_____ Date: _____

Contractor Signature (required)

_____ Date: _____

CFPUA Project Manager/Project Engineer Signature

SECTION 01 30 00

ADMINISTRATIVE REQUIREMENTS

(DEVELOPMENT PROJECTS)

PART 1 GENERAL

1.1 SECTION INCLUDES

A. Coordination and Project conditions.

B. Preconstruction meeting (CFPUA Pre-Con Checklist Attached).

C. Progress meetings.

D. Preinstallation meetings.

E. Inspections.

F. Testing and Gravity Sewer Video.

G. Closeout Documentation.

H. Final Construction Completion

1.2 COORDINATION AND PROJECT CONDITIONS

A. Coordinate scheduling, submittals, and Work of various Sections of Project Manual to ensure efficient and orderly sequence of installation of interdependent construction elements.

B. Verify that utility requirements and characteristics of operating equipment are compatible with building utilities. Coordinate Work of various Sections having interdependent responsibilities for installing, connecting to, and placing operating equipment in service.

C. Coordinate space requirements, supports, and installation of mechanical and electrical Work indicated diagrammatically on Drawings. Follow routing shown for pipes, ducts, and conduit as closely as practical. Use spaces efficiently to maximize accessibility for other installations, for maintenance, and for repairs.

D. Coordination Meetings: In addition to other meetings specified in this Section, hold coordination meetings with personnel and Subcontractors to ensure coordination of Work.

1.3 PRECONSTRUCTION MEETING

A. A pre-construction conference is required for every development project that requires the construction of water and/or sewer facilities.

B. The pre-construction meeting must be scheduled through the CFPUA construction Manager with at least two (2) business day notice.

C. Pre-construction meeting can be held after receipt of all applicable permits, approval of the final construction drawings and material shop drawings, verification of contractor licensing and payment of all outstanding fees.

D. Attendance Required: Engineer, Owner or Owner's representative, Licensed Utility Contractor, major Subcontractors, and CFPUA Project/Construction Managers.

E. Minimum Agenda:
   1. Discuss the approved drawings;
   2. Discuss the general construction sequence and schedule;
   3. Review general construction inspection procedures and requirements;
   4. Discuss lines of communication;
   5. Discuss typical project pitfalls and time savers;
   6. Discuss project challenges. The contractor is encouraged to review the project ahead of the pre-con, ask for clarifications, and introduce any particular challenges that he/she anticipate in the construction of the project.
   7. Other topics per the pre-con checklist.

F. At the end of the pre-construction meeting, the developer will receive a copy of the sign in sheet, signed pre-construction checklist, stamped approved construction plans and specifications.

1.4 PROGRESS MEETINGS

A. Schedule and administer meetings through progress of the Work.

B. Make arrangements for meetings, prepare agenda with copies for participants, and preside over meetings.

C. Attendance Required: Job Superintendent, major Subcontractors, Engineer or Owner's Representative, CFPUA Inspector and CFPUA Project/Construction Manager, as appropriate to agenda topics for each meeting.

D. Minimum Agenda:
   1. Review minutes of previous meetings.
   2. Review of Work progress.
   3. Field observations, problems, and decisions.
   4. Identification of problems impeding planned progress.
   5. Review of submittal schedule and status of submittals.
   6. Review of off-site fabrication and delivery schedules.
   7. Maintenance of Progress Schedule.
   8. Planned progress during succeeding work period.
   9. Coordination of project progress.
   10. Maintenance of quality and work standards.
   11. Effect of proposed changes on Progress Schedule and coordination.
   12. Other business relating to Work.

1.5 PREINSTALLATION MEETINGS

A. When required in individual Specification Sections, convene preinstallation meetings at Project Site before starting Work of specific Section.

B. Require attendance of parties directly affecting, or affected by, Work of specific Section.

C. Notify Engineer and CFPUA Project/Construction Manager four days in advance of meeting date.

D. Prepare agenda and preside over meeting:
   1. Review conditions of installation, preparation, and installation procedures.
   2. Review coordination with related Work.

E. Record minutes and distribute copies to participants within two days after meeting.

1.6 INSPECTIONS

A. Material Inspection
   1. Before any work is started on the project, the Contractor shall make submittals to the Engineering in accordance with the requirements of CFPUA Specification Section 01 33 00, Submittals. The CFPUA Inspector shall be notified when any material is delivered to the job site.
   2. The CFPUA Inspector will verify that all materials meet CFPUA specifications, details, and/or approved submittal.
   3. The CFPUA Inspector will notify the Contractor and the CFPUA Construction Manager of any unapproved material, and that the unapproved material must be removed from the project site.

B. General Inspection
   1. Routine and unscheduled of ongoing projects will be made by CFPUA personnel during the construction phase to ensure conformance with the approved plans, CFPUA specifications and details, as well as compliance with this guidance manual.
   2. Projects approved for construction by the CFPUA automatically authorizes CFPUA inspection personnel access to the construction site at all times for the purpose of inspecting constructed facilities or observing construction operations in progress. CFPUA Inspectors will take appropriate action, as outlined herein, when improper material or unacceptable workmanship is detected on the project and will notify the CFPUA Construction Manager, Contractor, Engineer and/or Developer.
   3. CFPUA Inspectors shall make periodic checks during all phases of construction to ensure that the contractor is complying fully with project design and specifications including:
      a. CFPUA valves are not to be operated without a CFPUA Inspector or CFPUA Water Quality personnel present (Notice of Violations will be given if failure to comply).

b. Any work after normal working hours (Monday – Friday 7:00 AM – 3:30 PM) must be pre-approved and scheduled with the CFPUA Construction Manager and Inspector.
c. All shut downs must be pre-approved and scheduled with the CFPUA Construction Manager and Inspector (they will coordinate with the proper CFPUA departments).
d. Water or sewer force main tie-ins or shut downs will not be conducted on Friday through Monday unless pre-approved by CFPUA Operations.
e. Contractor is to give two (2) business days notification for scheduling to the assigned CFPUA Inspector for each of the following:
    1) Operating any CFPUA valve (includes tapping valves).
    2) When beginning construction and if the contractor pulls off the site.
    3) Laying out of any connection in existing manholes.
    4) Cutting in any new manholes on existing lines.
    5) Coring any manholes.
    6) Connecting onto existing sewer force mains.
    7) Connecting onto existing water lines.
    8) Any bores and threading carrier pipes.
    9) All camera work, testing, chlorination and water sampling.
    10) All testing.

1.7 TESTING AND GRAVITY SEWER VIDEO

All structures, pressure piping and gravity sewer piping shall be tested by the contractor as specified in the CFPUA Specifications in accordance with applicable regulations and as directed by the CFPUA Inspector. All testing must be conducted in the presence of the CFPUA Inspector. The Contractor is to give two (2) business days notification for scheduling, to the assigned CFPUA Inspector for all testing.

1.8 CLOSEOUT DOCUMENTATION

A. The purpose of the as-built record drawings is to verify that the water and sewer system serving the project were installed per CFPUA Technical Specifications, in accordance with the approved construction permit, and recorded to show the actual locations of the water and sewer assets to be conveyed to CFPUA for ownership, operation and maintenance.

B. Paper As-built Drawings

Two (2) sets of as-built record drawings shall be provided in accordance with CFPUA Specification Section for review. The as-built checklist and an example of the plan's cover sheet are provided in the CFPUA Development Process and Procedures manual. It shall be the engineer's responsibility to assure that the most current as-built checklist is used and to check the as-builts for conformance with this checklist before submitting the as-builts.

C. Plans and Checklist

Certified, surveyed record drawings (as-built plans), sealed by a North Carolina licensed Professional Land Surveyor or Professional Engineer (engineer seal required

for profiles), shall be furnished to CFPUA by the Engineer of Record (or Developer, where applicable) prior to completion and acceptance of the infrastructure by CFPUA. The as-built plans shall conform to the as-built checklist.

D. As-built Submission

Two (2) sets of as-built record drawings shall be submitted to the CFPUA Inspector.

1. Sewer projects – Prior to the review of the camera inspection of the installed infrastructure.
2. Water projects – After the infrastructure has been installed and pressure testing and disinfection has been completed and approved by CFPUA.

E. CFPUA Inspector's Review

The CFPUA Inspector will review the as-built drawings for compliance with the CFPUA As-built Checklist. The CFPUA Inspector will field verify the location of all water and sewer items on the as-builts. Comments will be provided to the contractor and engineer.

F. Final Sealed As-Built Drawings

Once the CFPUA Inspector approves the as-built drawing, a final copy is to be submitted on original base Mylar sheets (24" X 36"). A PDF and digital copy must be provided to CFPUA. Final Sealed as-built drawings must be submitted per the CFPUA Development Process and Procedures manual.

1.9 FINAL CONSTRUCTION COMPLETION

A. Items Required for Completion

Construction is considered complete when the following items are successfully satisfied:

1. Testing (hydro, water samples, air, vacuum, mandrel, and pump station).
2. As-Built Drawings.
3. Camera Inspection (gravity sewer).
4. Walk through acceptance inspection.

B. Once complete, the project is ready to move toward certification and conveyance.

PART 2 PRODUCTS - NOT USED

PART 3 EXECUTION – NOT USED

END OF SECTION

SECTION 01 33 00

SUBMITTALS

(DEVELOPMENT PROJECTS)

PART 1 GENERAL

1.1 DESCRIPTION

A. Definitions.

B. Submittal procedures.

C. Use of electronic CAD files of Project Drawings.

D. Shop Drawings.

E. Certificates.

F. Manufacturer's instructions.

G. Manufacturer's field reports.

H. Contractor review.

I. Engineer review.

1.2 DEFINITIONS

A. Action Submittals: Written and graphic information and physical samples that require Architect/Engineer's responsive action.

B. Informational Submittals: Written and graphic information and physical Samples that do not require Engineer's responsive action. Submittals may be rejected for not complying with requirements.

1.3 CONSTRUCTION PROGRESS SCHEDULE

A. At Preconstruction Meeting, submit proposed complete bar chart schedule for review.

B. Submit updated schedules at monthly progress meetings.

C. Schedule Updates:
   1. Overall percent complete, projected and actual.
   2. Completion progress by listed activity and subactivity, to within five working days prior to submittal.
   3. Changes in Work scope and activities modified since submittal.
   4. Delays in submittals or resubmittals, deliveries, or Work.
   5. Adjusted or modified sequences of Work.

6. Other identifiable changes.
7. Revised projections of progress and completion.

D. Narrative Progress Report:
1. Submit with each monthly submission of Progress Schedule.
2. Summary of Work completed during the past period between reports.
3. Work planned during the next period.
4. Explanation of differences between summary of Work completed and Work planned in previously submitted report.
5. Current and anticipated delaying factors and estimated impact on other activities and completion milestones.
6. Corrective action taken or proposed.

1.4 SUBMITTAL PROCEDURES

A. Transmit each submittal with Engineer-accepted form.

B. Sequentially number transmittal forms. Mark revised submittals with original number and sequential alphabetic suffix.

C. Identify: Project, Contractor, Subcontractor and supplier, pertinent Drawing and detail number, and Specification Section number appropriate to submittal.

D. Apply Contractor's stamp, signed or initialed, certifying that review, approval, verification of products required, field dimensions, adjacent construction Work, and coordination of information is according to requirements of the Work and Contract Documents.

E. Schedule submittals to expedite Project, and deliver to Engineer at business address or submit electronic submittals via email as PDF electronic files. Coordinate submission of related items.

F. Identify variations in Contract Documents and product or system limitations that may be detrimental to successful performance of completed Work.

G. Allow space on submittals for Contractor and Engineer review stamps.

H. When revised for resubmission, identify changes made since previous submission.

I. Distribute copies of reviewed submittals as appropriate. Instruct parties to promptly report inability to comply with requirements.

J. Submittals not requested will not be recognized nor processed.

K. Incomplete Submittals: CFPUA will not review. Complete submittals for each item are required. Delays resulting from incomplete submittals are not the responsibility of CFPUA.

1.5 SHOP DRAWINGS

A. Shop Drawings: Submit to Engineer for assessing conformance with information given and design concept expressed in Contract Documents.

B. Indicate special utility and electrical characteristics, utility connection requirements, and location of utility outlets for service for functional equipment and appliances.

C. When required by individual Specification Sections, provide Shop Drawings signed and sealed by a professional Engineer responsible for designing components shown on Shop Drawings.
   1. Include signed and sealed calculations to support design.
   2. Submit Shop Drawings and calculations in form suitable for submission to and approval by authorities having jurisdiction.
   3. Make revisions and provide additional information when required by authorities having jurisdiction.

D. Submittals
   1. Submit number of opaque reproductions Contractor requires, plus one copy Engineer will retain, or
   2. Submit electronic submittals via email as PDF electronic files.

E. After review, produce copies and distribute.

1.6 CERTIFICATES

A. Informational Submit: Submit certification by manufacturer, installation/application Subcontractor, or Contractor to Engineer, and CFPUA in quantities specified for Product Data.

B. Indicate material or product conforms to or exceeds specified requirements. Submit supporting reference data, affidavits, and certifications as appropriate.

C. Certificates may be recent or previous test results on material or product but must be acceptable to Engineer and CFPUA.

1.7 MANUFACTURER'S INSTRUCTIONS

A. Submit manufacturer's installation instructions for Engineer's and CFPUA knowledge.

B. Submit printed instructions for delivery, storage, assembly, installation, startup, adjusting, and finishing, to Engineer and CFPUA in quantities specified for Product Data.

C. Indicate special procedures, perimeter conditions requiring special attention, and special environmental criteria required for application or installation.

1.8 MANUFACTURER'S FIELD REPORTS

A. Submit reports for Engineer's knowledge as Contract administrator or for Owner and CFPUA’s knowledge.

B. Submit report in duplicate within 5 days of observation to Engineer and CFPUA for information.

C. Submit reports for information for assessing conformance with information given and design concept expressed in Contract Documents.

1.9 CONTRACTOR REVIEW

A. Review for compliance with Contract Documents and approve submittals before transmitting to Engineer.

B. Contractor: Responsible for:
1. Determination and verification of materials including manufacturer's catalog numbers.
2. Determination and verification of field measurements and field construction criteria.
3. Checking and coordinating information in submittal with requirements of Work and of Contract Documents.
4. Determination of accuracy and completeness of dimensions and quantities.
5. Confirmation and coordination of dimensions and field conditions at Site.
6. Construction means, techniques, sequences, and procedures.
7. Safety precautions.
8. Coordination and performance of Work of all trades.

C. Stamp, sign or initial, and date each submittal to certify compliance with requirements of Contract Documents.

D. Do not fabricate products or begin Work for which submittals are required until approved submittals have been received from CFPUA.

1.10 ENGINEER REVIEW

A. Informational submittals and other similar data are for Architect/Engineer's information, do not require Architect/Engineer's responsive action, and will not be reviewed or returned with comment.

B. Submittals made by Contractor that are not required by Contract Documents may be returned without action.

C. Submittal approval does not authorize changes to Contract requirements unless accompanied by Change Order or Work Change Directive.

D. Owner may withhold monies due to Contractor to cover additional costs beyond the second submittal review.

PART 2 PRODUCTS – NOT USED

PART 3 EXECUTION – NOT USED

END OF SECTION

SECTION 01 35 00

SPECIAL PROCEDURES

PART 1 GENERAL

1.1 DESCRIPTION

A. Pre-Construction Audio/Video Inspections and Photography

B. Safety Plan

C. Work Along Streets, Highways, and Railroads

D. Notification to Local Residents Impacted by Work

E. Protection of Work and Property

F. Responsibility for Damage

G. CFPUA Water Supply and Backflow Prevention

H. NCDEQ Minimum Separation of Water and Sewer Facilities

I. Restoration of Disturbed Areas

J. Regulatory Enforcement Actions Imposed

1.2 PRE-CONSTRUCTION AUDIO-VIDEO INSPECTIONS AND PHOTOGRAPHY

A. The Contractor shall be responsible for performing and submitting audio-video (AV) inspections and photographs of the project areas prior to performing any Work. AV inspections and photographs shall clearly document preconstruction conditions at all proposed Work locations. AV inspections and photography work shall be considered incidental to the contract.

B. The purpose of the AV inspections and photographs shall be to document the pre-construction conditions for comparison with the final restored Work. If Engineer, Owner, or third-party claims damage or deficient restoration in a Work area that cannot be disproved by preconstruction A/V inspections and photographs, then Contractor shall be responsible for repairs or additional restoration at no additional cost, and as necessary to resolve the claim.

C. The AV inspection shall be submitted in an electronic format accompanied with the following:
   1. Data stored on USB flash drive
   2. Map of overall work area showing;
      a. AV sequence and direction of travel
      b. AV elapsed time by location at no greater than 5 minute intervals

1.3 SAFETY PLAN

A. The Contractor shall prepare a detailed Safety Plan. This plan shall indicate the intended procedures to be used by the Contractor to comply with all OSHA requirements. Such Plan should further identify a competent person that will work with each crew. Safety plan shall be available for review at the job site at all times.

1.4 WORK ALONG STREETS, HIGHWAYS AND RAILROADS

A. Traffic Control and Maintenance:
   1. The proposed work may be performed within rights-of-way or easements as follows:
      a. NC Department of Transportation public streets and roads
         1) Encroachment agreement obtained by Engineer/Owner
      b. City of Wilmington public streets and roads
         1) Encroachment permit obtained by Contractor
      c. CSX rights-of-way
         1) Encroachment permit obtained by Engineer/Owner
      d. Dedicated utility rights-of-way or easements
         1) Encroachment obtained by Contractor/Owner
   2. Contractor shall adhere to the bounds as set forth in all rights-of-way and easements unless prior written approval of the current property owner is obtained and submitted to the Engineer and State, City, and local utility authorities for approval.
   3. Contractor shall submit a traffic control plan for approval by NCDOT or City of Wilmington in accordance with the respective encroachment agreement. When feasible, at least one lane of traffic will be safely maintained at all times when construction is in progress, otherwise, a detour plan must be submitted and approved with the traffic control plan.
   4. Traffic will be maintained on all streets or private drives throughout the work. All matters related to traffic maintenance must be done in a manner consistent with the Manual on Uniform Traffic Control Devices, City of Wilmington Traffic Standards and/or the NCDOT's "Uniform Traffic Control Devices". No roads shall be closed for construction activities unless approved otherwise.
   5. Access to businesses and residences along the roads shall be maintained at all times. All lanes will be open when work is suspended for three hours or longer. Warning signs and devices will be placed in advance of all construction activity in accordance with the most recent copy of the Manual on Uniform Traffic Control Devices, the City of Wilmington Traffic Standards and the North Carolina Department of Transportation's "Uniform Traffic Control Devices".
   6. The Contractor shall provide all appropriate signing and barricades and shall provide flag persons at all times and places necessary.
   7. Traffic control will be strictly enforced in order to provide fire and police protection to the area and access to drives while construction is in progress.
   8. In the event of a necessary road or driveway closure, occupants and/or property owners must be notified a minimum of two business days in advance to any private drive closings.
   9. Where businesses have only one means of access, the Contractor shall provide an alternative means of access or perform work during hours when the business is closed.

10. Property owners and surrounding residents will be provided an additional notice if work is to extend outside normal business hours.
11. For projects requiring City of Wilmington right-of-way permit, the Contractor is always required to keep a copy of the permit at the construction site .
12. The Contractor will notify CFPUA two business days prior to commencing any construction within any right-of-way or easement.

B. Installation of Pipe Under Streets, Highways and Railroads:
1. The Contractor shall furnish and install protective steel pipe casings and/or carrier pipe under highways/railroads in the pipe size, thickness, length, location and details as shown on the drawings and specified herein.
2. The construction shall not be started until the necessary permits have been obtained, a copy is at the job site, and proper notice and approval for construction has been obtained from the owner of the street/highway/railroad and the Engineer.
3. All necessary materials, equipment, labor and traffic protection devices shall be on the job site before starting the Work.
4. Steel casings and the installation thereof required for street/highway/railroad crossings shall be in accordance with the permitted standards and requirements of the City of Wilmington, NCDOT, or CSX Railroads.

1.5 NOTIFICATION TO LOCAL RESIDENTS IMPACTED BY WORK

A. The Contractor shall provide work schedules, traffic control plans, and other information needed for accurate notifications to local residents of construction activity area. The Contractor shall coordinate with CFPUA, NCDOT and the City of Wilmington to provide public notifications within seven (7) days prior to beginning work in an area. CFPUA shall be responsible for issuing public notification to the media when necessary. Contractor shall be responsible for placing door hangars in advance of scheduled work. Copies of door hangars to be distributed to local residents shall be submitted to the CFPUA Project Manager for approval prior to distribution.

1.6 PROTECTION OF WORK AND PROPERTY

A. Property Monuments: The Contractor shall be responsible for the preservation of all public and private property, and shall protect carefully from disturbance or damage all land monuments and property markers until the Engineer has witnessed or otherwise referenced their location and shall not move them until directed. Any property monuments, iron pins, etc., disturbed by the Contractor's actions will be restored at the Contractor's expense. Only licensed land surveyors will be utilized to restore property monuments, etc.

B. Clearing: To lessen the impact to adjacent property owners, the Contractor will submit a request to the Engineer and Owner for any clearing activities. Only the area required for access and Work will be cleared, as approved by the Engineer and CFPUA.

C. Protection of Shallow Buried Pipelines: The Contractor shall protect the integrity of all shallow public and private utility mains at all times, via approved resources such as

wood road mats, crane mats, PE mats, road plates, etc, to be installed prior to the beginning of work. The approved protection method shall be maintained during and properly removed at the end of the Work.

D. Tree Protection: All trees located in the road right-of-way and along the sewer easements shall be protected from damage. Any trees damaged shall be replaced to the satisfaction of the Engineer and CFPUA at no additional cost to the Owner.

1.7 RESPONSIBILITY FOR DAMAGE

A. The Contractor shall be responsible for all damage or injury to property of any character, during the prosecution of the work, resulting from any act, omission, neglect, or misconduct in his manner or method of executing the work, or at any time due to defective work or materials, and said responsibility will not be released until the project shall have been completed and accepted.

B. When or where any direct or indirect damage or injury is done to public or private property by or on account of any act, omission, neglect, or misconduct in the execution of the work, or inconsequence of the non-execution thereof by the contractor, he shall restore, at his own expense, such property to a condition equal to or better than existing before such damage or injury was done, by repairing, rebuilding, or otherwise restoring as may be directed, or he shall make good such damage or injury in an acceptable manner.

1.8 CFPUA WATER SUPPLY AND BACKFLOW PREVENTION REQUIREMENTS

A. The Contractor shall meet all CFPUA requirements for connecting to hydrants. The Contractor shall obtain a permit for connecting to the CFPUA's hydrants. The permit application is titled "Procedure for Obtaining Special Water Use" and can be obtained from CFPUA, Community Compliance at 628 Groundwater Way, Wilmington, NC 28411.

B. The requirements for connecting to hydrants are specified by the CFPUA, Community Compliance. No mobile hydrant meter shall be connected to an CFPUA hydrant without approval from Community Compliance. The Contractor is responsible for the purchase and assembly of an approved mobile hydrant meter with backflow preventer assembly. All approved standard assemblies can be obtained from Community Compliance. A permit and complete assembly are required for each vehicle that will obtain water – meters cannot be moved from one vehicle to another unless otherwise approved by the CFPUA, Community Compliance. The hydrants shall be operated in a manner as defined by CFPUA. The Contractor shall be responsible for any damage caused by improper operation of hydrants. The Contractor is responsible for meeting all requirements whether listed herein or not.

C. The Contractor shall submit to the Engineer or CFPUA, a copy of the approved permit for each vehicle prior to obtaining water.

D. Backflow Prevention
   1. Typical Design Template for Mobile Hydrant Meter with Reduced Pressure Backflow Prevention Shown Below:



Coupling w/ hose connector	RP backflow preventer	Coupling	Meter	Connection for hose to hydrant

a. Diameters may vary, a 2” meter assembly is shown. When assembly is set up for a smaller size meter (e.g. 3/4”), then the couplings would be 3/4” or 5/8”.
b. Fire hose fitting shall be a 2-1/2" Wilmington Thread. Adapters are available for Wilmington Thread to National Standard Thread.
c. Meters shall register in gallons. Kent, Sensus, Hersey, or Neptune meters are approved for this application.
d. Local material suppliers for this assembly:
    1) Core and Main – 6501 Amsterdam Way
    2) National Water Works – 407 Landmark Drive
    3) Wilmington Rubber & Gasket – 609 Greenfield Street
    4) Fortiline Waterworks – 3321 US-421 N.
e. A partial list of approved reduced pressure backflow preventers follows. Others may also be approved.

Febco 835B	Conbraco 40-202-A2	Watts 009M2QT	Wilkins 975	Ames 4000B
Febco 825	Conbraco 40-203-02	Watts 909	Wilkins 975XL	Ames 4000SS
Febco 825Y	Conbraco 40-205-A4	Watts 009QT	Wilkins 975XLV	
Febco 860	Conbraco 40-200-02	Watts 009M1QT	Wilkins 575	
	Conbraco 40-204-99T	Watts 009SSQT		
	Conbraco 40-203-A2			

1.9 NCDEQ MINIMUM SEPARATION OF WATER AND SEWER UTILITIES

A. In accordance with 15A NCAC 02T .0305 (f), the following minimum separations shall be provided for the sewer system except as allowed by Paragraph (g) of this Rule:

1. Storm sewers and other utilities not listed below (vertical)	24 inches
2. Water mains (vertical-water over sewer including in benched trenches)	18 inches
(horizontal)	10 feet
3. Reclaimed water lines (vertical – reclaimed over sewer)	18 inches
(horizontal)	2 feet
4. Any private or public water supply source, including any wells, WS-I waters or Class I or Class II impounded reservoirs used as a source of drinking water	100 feet
5. Waters classified WS (except WS-I or WS-V), B, SA, ORW, HQW, or SB from normal high water (or tide elevation) and wetlands	50 feet
6. Any other stream, lake, impoundment, or ground water lowering and surface drainage ditches	10 feet
7. Any building foundation	5 feet
8. Any basement	10 feet
9. Top slope of embankment or cuts of 2 feet or more vertical height	10 feet
10. Drainage systems and interceptor drains	5 feet
11. Any swimming pool	10 feet
12. Final earth grade (vertical)	36 inches

B. In accordance with 15A NCAC 02T .0305 (g), the following alternatives where separations in Paragraph (f) of this Rule cannot be achieved. Nothing in this Paragraph shall supersede the allowable alternatives provided in the Commission for Public Health Public Water Supply Rules (15A NCAC 18C), Commission for Public Health Sanitation Rules (15A NCAC 18A) or the Groundwater Protection Rules (15A NCAC 02L and 15A NCAC 02C) that pertain to the separation of sewer systems to water mains or public or private wells:

1. For storm sewers, engineering solutions such as ductile iron pipe or structural bridging to prevent crushing the underlying pipe.
2. For public or private wells, piping materials, testing methods and acceptability standards meeting water main standards shall be used where these minimum separations cannot be maintained. All appurtenances shall be outside the 100-foot radius. The minimum separation shall however not be less than 25-feet from a private well or 50-feet from a public well.
3. For public water mains horizontal or vertical separations, alternatives as described in 15A NCAC 18C .0906(b) and (c) as follows:
    a. (b) Crossing a Water Main Over a Sewer. Whenever it is necessary for a water main to cross over a sewer, the water main shall be laid at such an elevation that the bottom of the water main is at least 18 inches above the top of the sewer, unless local conditions or barriers prevent an 18-inch vertical separation, in which case, both the water main and sewer shall be

constructed of ferrous materials and with joints that are equivalent to water main standards for a distance of 10-feet on each side of the point of crossing.

b. (c) Crossing a Water Main Under a Sewer. Whenever it is necessary for a water main to cross under a sewer, both the water main and the sewer shall be constructed of ferrous materials and with joints equivalent to water main standards for a distance of 10-feet on each side of the point of crossing. A section of water main pipe shall be centered at the point of crossing.

4. For less than 36-inches cover from final earth grade, ductile iron pipe shall be specified. Ductile iron pipe or other pipe with proper bedding to develop design supporting strength shall be provided where sewers are subject to traffic bearing loads.
5. For all other separations, materials, testing methods and acceptability standards meeting water main standards (15A NCAC 18C).

1.10 RESTORATION OF DISTURBED AREAS

A. The Contractor will be required to complete all restoration to disturbed areas within a timely manner following work completion.

B. All restoration work shall conform to the CFPUA, City of Wilmington, and NCDOT permits for replacement and/or restoration and shall equal or exceed pre-construction conditions.

C. Restorations include, but is not limited to, grading, seeding, mulching, pavement, sidewalks, driveways, storm drain pipes, curbs and gutters, fences, sign replacement and mailbox replacement.

D. Existing fences that are disturbed during construction shall be repaired or replaced to a condition equal to or better than the original unless a release is obtained in writing from the property owner and submitted to the Engineer or CFPUA. All fences shall be replaced immediately after operations have cleared the fence line.

E. Restoration of affected areas shall begin immediately upon termination of operations in the area disturbed.

F. If the Contractor fails to adhere to this provision, all Work operations will be stopped until compliance is met.

G. Restoration will be performed by the Contractor to the satisfaction of the Engineer and State, City or local utility permitting authorities.

H. All costs for restoration shall be incidental to the contract.

1.11 REGULATORY ENFORCEMENT ACTIONS IMPOSED

A. The Contractor shall be fully responsible for any and all violations of regulatory permit conditions issued for the Work. In the event that a violation occurs or if a Notice of Violation (NOV) is received, the Contractor shall take immediate action to correct the violation as directed or required by State and Federal Agencies, Engineer or CFPUA.

Any penalties and fines resulting from such violation shall be assessed to the Contractor. In the event that a violation resulting from the Contractor's activities results in a Cease Work Order by the U.S. Corps of Engineers or other responsible state or federal agency, the Contractor shall be held fully responsible for all damages resulting from such delay and any associated penalties.

PART 2 PRODUCTS – NOT USED

PART 3 EXECUTION – NOT USED

END OF SECTION

SECTION 01 40 00

QUALITY REQUIREMENTS

PART 1 GENERAL

1.1 SECTION INCLUDES

A. Quality control.

B. References.

C. Labeling.

D. Testing and inspection services.

E. Manufacturers' field services.

1.2 QUALITY CONTROL

A. Monitor quality control over suppliers, manufacturers, products, services, Site conditions, and workmanship, to produce Work of specified quality.

B. Comply with specified standards as the minimum quality for the Work except where more stringent tolerances, codes, or specified requirements indicate higher standards or more precise workmanship.

C. Perform Work using persons qualified to produce required and specified quality.

D. Supervise performance of Work in such manner and by such means to ensure that Work, whether completed or in progress, will not be subjected to harmful, dangerous, damaging, or otherwise deleterious exposure during construction period.

1.3 REFERENCES

A. For products or workmanship specified by association, trade, or other consensus standards, comply with requirements of standard except when more rigid requirements are specified or are required by applicable codes.

B. Conform to reference standard by date of issue current as of date for receiving Bids except where specific date is established by code.

C. Obtain copies of standards and maintain on Site when required by product Specification Sections.

D. When requirements of indicated reference standards conflict with Contract Documents, request clarification from Engineer before proceeding.

E. Neither contractual relationships, duties, or responsibilities of parties in Contract nor those of Engineer shall be altered from Contract Documents by mention or inference in reference documents.

1.4 LABELING

A. Attach label from agency approved by authorities having jurisdiction for products, assemblies, and systems required to be labeled.

B. Label Information: Include manufacturer's or fabricator's identification, approved agency identification, and the following information, as applicable, on each label:
   1. Model number.
   2. Serial number.
   3. Performance characteristics.

1.5 TESTING AND INSPECTION SERVICES

A. Testing Services Provided by Contractor: Testing necessary to satisfy Contractor's internal quality control procedures shall be the sole responsibility of Contractor. Unless otherwise specified, Contractor shall provide all testing services in connection with the following:
   1. Any inspections, tests or approvals required for Engineer acceptance of materials or equipment to be incorporated in the Work. This includes any items required for acceptance of materials, concrete mix designs or equipment submitted for approval prior to Contractor’s purchase for incorporation in the Work.
   2. Tightness testing of containment structures and pressure, leakage, or disinfection testing of piping as specified.
   3. Any Work (or part thereof) required by the Contract Documents to be approved by Owner, Engineer or other designated individual or entity. Contractor shall assume full responsibility for arranging and obtaining such approvals, pay all costs in connection therewith and submit to Engineer the required certificates of approval. Excluding those conducted directly by an Authority Having Jurisdiction or expressly specified to be conducted directly by Contractor, inspections and tests shall be performed by independent inspectors, approved agencies or other qualified individuals or entities acceptable to Owner and Engineer.

B. Testing Services and Special Inspections Provided by Owner: Testing services provided by Owner are for the sole benefit of Owner and/or as required by the governing building code. Owner shall employ and pay for the services of an independent testing laboratory, approved agency or other qualified individual or entities for inspections, tests or approvals required by the Contract Documents for field quality control. These include items indicated as Owner provided in the following sections:
   1. 03 05 00 Concrete (For Smaller Projects)
   2. 32 13 01 Concrete Sidewalks, Driveways, and Gutters
   3. 31 23 34.01 Excavating, Trenching, Dewatering and Backfilling
   4. 33 14 20 Disinfection of Water Pipelines, Facilities and Appurtenances
   5. 43 21 39.13 Submersible End Suction Pumps
   6. Other materials and equipment at the discretion of Owner.

Contractor shall provide access to the site and Work. Contractor shall give timely notice of the readiness of the Work for inspection, tests or approvals and shall cooperate with the inspection and testing personnel to facilitate the required tests and inspections. Contractor shall furnish all sample materials and cooperate in the testing activities, including sampling. Contractor shall interrupt the Work when necessary to allow testing, including sampling, to be performed. When testing activities, including sampling, are performed in the field by Engineer or Agency personnel, Contractor shall furnish personnel and facilities to assist in the activities as required.

C. Transmittal of Test Reports: Written reports of tests and engineering data furnished by Contractor for Engineer's review of materials and equipment proposed to be used in the Work shall be submitted as specified for Submittals – 01 33 00.

1.6 MANUFACTURER'S FIELD SERVICES

A. When specified in individual specification Sections, require material or product suppliers or manufacturers to provide qualified staff personnel to observe Site conditions, conditions of surfaces and installation, quality of workmanship, startup of equipment, testing, adjusting, and balancing of equipment as applicable, and to initiate instructions when necessary.

PART 2 PRODUCTS – NOT USED

PART 3 EXECUTION – NOT USED

END OF SECTION

SECTION 01 60 00

PRODUCT REQUIREMENTS

PART 1 GENERAL

1.1 SECTION INCLUDES

A. Products.

B. Product delivery requirements.

C. Product storage and handling requirements.

D. Product options.

1.2 PRODUCTS

A. At minimum, comply with specified requirements and reference standards in CFPUA Materials Specification Manual (MSM).

B. MSM specified products define standard of quality, type, function, dimension, appearance, and performance required.

C. Furnish products of qualified manufacturers that are suitable for intended use. Furnish products of each type by single manufacturer unless specified otherwise. Confirm that manufacturer's production capacity can provide sufficient product, on time, to meet Project requirements.

1.3 PRODUCT DELIVERY REQUIREMENTS

A. Transport and handle products according to manufacturer's instructions.

B. Promptly inspect shipments to ensure products comply with requirements, quantities are correct, and products are undamaged.

C. Provide equipment and personnel to handle products; use methods to prevent soiling, disfigurement, or damage.

1.4 PRODUCT STORAGE AND HANDLING REQUIREMENTS

A. Store and protect products according to manufacturer's instructions.

B. Store products with seals and labels intact and legible.

C. Store sensitive products in weathertight, climate-controlled enclosures in an environment suitable to product.

D. For exterior storage of fabricated products, place products on sloped supports aboveground.

E. Provide bonded off-Site storage and protection when Site does not permit on-Site storage or protection.

F. Cover products subject to deterioration with impervious sheet covering. Provide ventilation to prevent condensation and degradation of products.

G. Store loose granular materials on solid flat surfaces in well-drained area. Prevent mixing with foreign matter.

H. Provide equipment and personnel to store products; use methods to prevent soiling, disfigurement, or damage.

1.5 PRODUCT OPTIONS

A. Products Specified by Reference Standards or by MSM Description Only: Products complying with specified reference standards or description.

B. Products Specified by Naming Three or More Manufacturers: Products of manufacturers named and complying with Specifications; no options or substitutions allowed without CFPUA approval.

C. Substitutions to be reviewed and permitted before bid receipt or final plan approval.

PART 2 PRODUCTS – NOT USED

PART 3 EXECUTION – NOT USED

END OF SECTION

SECTION 01 70 00

EXECUTION AND CLOSEOUT REQUIREMENTS

(DEVELOPMENT PROJECTS)

PART 1 GENERAL

1.1 SECTION INCLUDES

A. Field surveying.

B. Closeout procedures.

C. Starting of systems.

D. Demonstration and instructions.

E. Project record documents.

F. Operation and maintenance data.

G. Spare parts and maintenance products.

H. Product warranties and product bonds.

I. Examination.

J. Execution.

K. Cutting and patching.

L. Protecting installed construction.

M. Final cleaning.

N. Certification, Conveyance, and Plats.

1.2 FIELD SURVEYING

A. Employ licensed land surveyor for Project layout and location records.

B. Locate and protect survey control and reference points. Promptly notify Engineer of discrepancies discovered.

C. Control datum for survey is established by Engineer-provided survey and indicated on Drawings.

D. Verify easements; confirm Drawing dimensions and elevations.

E. Provide field surveying and recording services. Establish elevations, lines, and points using recognized survey practices.

F. Protect survey control points prior to starting Site Work; preserve permanent reference points during construction.

G. Replace dislocated survey control points based on original survey control. Make no changes without prior written notice to Engineer.

H. Final Record Survey: Prior to Substantial Completion, submit markup of final record in accordance with Project Record Documents in this section.

1.3 CLOSEOUT PROCEDURES

A. Prerequisites to Utility Activation: Complete following items before requesting Utility Activation, either for entire Work or for portions of Work:
   1. Complete testing, adjusting, balancing of systems and equipment, demonstrations, and instructions to CFPUA's operating and maintenance personnel as specified in compliance with this Section and CFPUA Specification Section 01 30 00, Administrative Requirements.
   2. Submit maintenance manuals, spare parts, Project record documents, markups, gravity sewer video inspection, warranty letters and other similar final record data in compliance with this Section.
   3. Coordinate Final Walk Through inspection by CFPUA to establish basis for request that Work is complete.
   4. Make final change-over of locks and transmit keys directly to CFPUA. Advise CFPUA's personnel of change-over in security provisions.
   5. Discontinue or change over and remove temporary facilities and services from Project Site.
   6. Perform final cleaning according to this Section.

1.4 STARTING OF SYSTEMS

A. Coordinate schedule for startup of various equipment and systems.

B. Notify Engineer seven days prior to startup of each item.

C. Verify that each piece of equipment or system has been checked for proper lubrication, drive rotation, belt tension, control sequence, and for conditions which may cause damage.

D. Verify that tests, meter readings, and electrical characteristics agree with those required by equipment or system manufacturer.

E. Verify that wiring and support components for equipment are complete and tested.

F. Execute startup under supervision of manufacturer's representative or Contractors' personnel according to manufacturer's instructions.

G. When specified in individual Specification Sections, require manufacturer to provide authorized representative who will be present at Site to inspect, check, and approve equipment or system installation prior to startup and will supervise placing equipment or system in operation.

H. Submit a written report that equipment or system has been properly installed and is functioning correctly.

1.5 DEMONSTRATION AND INSTRUCTIONS

A. Demonstrate operation and maintenance of products to CFPUA personnel.

B. Demonstrate Project equipment and instructed by authorized manufacturer's representative who is knowledgeable about the Project.

C. Use operation and maintenance manuals as basis for instruction. Review contents of manual with CFPUA personnel in detail to explain all aspects of operation and maintenance.

D. Demonstrate startup, operation, control, adjustment, troubleshooting, servicing, maintenance, and shutdown of each item of equipment at scheduled time, at equipment location.

1.6 PROJECT RECORD DOCUMENTS

A. Maintain one set of the following record documents; record actual revisions to the Work:
   1. Drawings.
   2. Specifications.
   3. Reviewed Shop Drawings, product data, and Samples.
   4. Manufacturer's instruction for assembly, installation, and adjusting.

B. Ensure entries are complete and accurate, enabling future reference by Owner.

C. Record information concurrent with construction progress, not less than weekly. Report recording status at progress meetings.

D. Specifications: Legibly mark and record, at each product Section, description of actual products installed, including the following:
   1. Manufacturer's name and product model and number.
   2. Product substitutions or alternates used.
   3. Changes made by Addenda and modifications.

E. Record Drawings and Shop Drawings: Legibly mark each item to record actual construction as follows:
   1. Include Contract modifications such as Addenda, supplementary instructions, change directives, field orders, minor changes in the Work, and change orders.
   2. Include locations of concealed elements of the Work.
   3. Identify depth of buried utility lines and provide dimensions showing distances from permanent facility components that are parallel to utilities.

4. Dimension ends, corners, and junctions of buried utilities to permanent facility components using triangulation.
5. Identify and locate existing buried or concealed items encountered during Project.
6. Measured horizontal and vertical locations of underground utilities and appurtenances, referenced to permanent surface improvements.
7. Measured locations of internal utilities and appurtenances concealed in construction, referenced to visible and accessible features of the Work.
8. Field changes of dimension and detail.
9. Details not on original Drawings.

F. Certified, surveyed record drawings ("as-built" plans), sealed by a North Carolina licensed Professional Land Surveyor and/or Professional Engineer, shall be furnished to the Cape Fear Public Utility Authority (Authority) by the Engineer of Record (or Developer where applicable) upon completion and acceptance of the infrastructure by the Authority. The "as-built" plans shall conform to the as-built checklist included herein.

G. For sewer projects, the "as-built" plans shall include accurate information regarding pipe size, pipe material, pipe length, manhole construction (size of manhole, invert, rim, alignment, location), services, and pump stations along with any relevant rights-of-way, property boundaries and easements. Plans shall also include sewer profiles showing any utility crossings along with the aforementioned information.

H. For pump station projects, the "as-built" plans shall include accurate information regarding interior and exterior pipe sizes, material, length, as well as all structural dimensions of the pump station, all electrical equipment (make and model), pump information (make, model, and impeller size), and site layout information. Top plan, sectional plan, and full cross-section views are required on the "as-built" plans.

I. For water projects, the "as-built" plans shall include accurate information regarding pipe size, pipe material, pipe length, valve locations (and turn direction), hydrant locations, fitting locations, services, and blow-off locations along with any relevant rights-of-way, property boundaries and easements.

J. Submit marked-up paper copy documents to Engineer at each payment request and before Substantial Completion.

K. Digital "as-built" information shall be provided by the Engineer of Record in AutoCAD format and PDF format with seal, signature, and date by surveyor and engineer and shall include all information required on the "as-built" drawings. No other digital formats will be accepted.

AS-BUILT CHECK LIST Rev. 5
CAPE FEAR PUBLIC UTILITY AUTHORITY

Date: _____

Subdivision name: _____

Reviewed by: _____

CFPUA Project Number: _____

W	S	#	√ - COMPLETED	X -INCOMPLETE	N/A - NOT APPLICABLE
		1	Name of subdivision (if applicable), owners name, date of construction, north arrow, scale, vicinity map and as-built plan		
		2	Drawings shall indicate water/sewer phases and their relationship to subdivision phases		
		3	Sheet numbers and number of total sheets.		
		4	Clearly indexed cover sheet with location of plan - profile sheets on cover sheet, by sheet number		
		5	Accurate location map and index planning map at a scale of 1 inch = 200 feet.		
		6	Total linear feet on cover sheet listed by phases:		
			Water lines:	Gravity lines:	Force main:
		7	Certifications notes listed by phase and location on cover sheet		
		8	All inverts into and out of manholes shall be field verified to 1/100 ft.		
		9	Show manhole top elevation & flood elevation or surface water flow levels @ each MH.		
		10	Elevations shall be tied to mean sea level. Indicate any benchmarks within project area.		
		11	Manhole sewer monuments, if manhole is buried.		
		12	Show approximate vertical and horizontal separations of waterlines, sewer mains, and force mains to proposed or existing utilities and structures (includes storm water piping)		
		13	For each sewer reach, show pipe diameter, length, type, slope, existing surface elevations and proposed finish grades. Show station or distance to beginning and end of change in pipe material.		
		14	Show location of air release valves, gate valves and fittings along water main and sanitary sewer force main.		
		15	Show stations and material types for force main.		
		16	Plans shall show stubs for individual services. C/O shown open circle, water meters open box. Sewer Cleanouts (COs) shall be located by measuring from each manhole along the sewer main up stream to a point which lies on a line that is perpendicular to the sewer main and connects said point and C.O. - zero point shall be the immediate downstream manhole and measured from main to C/O, i.e., 127/14R. No stations shall be used. Indicate size and location of all of services.		
		17	Indicate size of services greater than 4".		
		18	Indicate manhole service taps, service casing &/or material transition.		
		19	All lettering shall be at least 0.10 inches in height. The scale shall be 1" = 50' (horizontal) and 1" = 5' (vertical).		
		20	As-built plans shall be inked on original base mylar sheets (24" X 36"), or the engineer shall provide drawings on Dupont Crovx Erasable Image (wash-off) sheets or approved equal. A PDF and digital copy (format no older than AutoCAD 2005) must be provided to the Authority. All drawings shall become the property of the Cape Fear Public Utility Authority.		
		21	Reference ties into existing sewer systems by title and page of as-built drawing for existing system. The Authority will assist with obtaining this information, (i.e. existing manhole number, project name, CFPUA number and sheet number. Show information on plan-profile sheet and cover sheet.		
		22	Lot numbers, property lines and owner reference lines, street names and all easements		
		23	Engineer's seal and Surveyor's seal as applicable or required		
		24	Show all water supply wells within 50' & community wells within 100' of sewer main.		
		25	Water & sewer layers to be bolder line type than drainage, streets, etc.		
		26	Make contour lines very light or turn off		

Date Final Inspection Completed _____

Inspectors Signature _____

Approved:

Revision:

1.7 OPERATION AND MAINTENANCE DATA

A. Submit in PDF composite electronic indexed file.

B. Submit data bound in 8-1/2 x 11-inch text pages, three D side ring binders with durable plastic covers.

C. Prepare binder cover with printed title "OPERATION AND MAINTENANCE INSTRUCTIONS," title of Project**,** and subject matter of binder when multiple binders are required.

D. Internally subdivide binder contents with permanent page dividers, logically organized as described below; with tab titling clearly printed under reinforced laminated plastic tabs.

E. Drawings: Provide with reinforced punched binder tab. Bind in with text; fold larger drawings to size of text pages.

F. Contents: Prepare table of contents for each volume, with each product or system description identified, typed on white paper, in three parts as follows:
   1. Part 1: Directory, listing names, addresses, and telephone numbers of Engineer, Contractor, Subcontractors, and major equipment suppliers.
   2. Part 2: Operation and maintenance instructions, arranged by system and subdivided by Specification Section. For each category, identify names, addresses, and telephone numbers of Subcontractors and suppliers. Include the following:
      a. Significant design criteria.
      b. List of equipment.
      c. Parts list for each component.
      d. Operating instructions.
      e. Maintenance instructions for equipment and systems.
      f. Contact information for warranty items.
      g. Safety precautions to be taken when operating and maintaining or working near equipment.
   3. Part 3: Project documents and certificates, including the following:
      a. Shop Drawings and product data.
      b. Certificates.
      c. Photocopies of warranties and bonds.

1.8 SPARE PARTS AND MAINTENANCE PRODUCTS

A. Furnish spare parts, maintenance, and extra products in quantities specified in individual Specification Sections.

B. Deliver to Project Site and place in location as directed by CFPUA; obtain receipt prior to final payment.

1.9 PRODUCT WARRANTIES AND PRODUCT BONDS

A. Obtain warranties and bonds executed in duplicate by responsible Subcontractors, suppliers, and manufacturers within ten days after completion of applicable item of Work.

B. Execute and assemble transferable warranty documents and bonds from Subcontractors, suppliers, and manufacturers.

C. Verify documents are in proper form, contain full information, and are notarized.

D. Co-execute submittals when required.

E. Include table of contents and assemble in three D side ring binder with durable plastic cover.

F. Submit prior to final completion.

G. Time of Submittals:
   1. For equipment or component parts of equipment put into service during construction with CFPUA's permission, submit documents within ten days after acceptance.
   2. Make other submittals prior to final completion.

PART 2 PRODUCTS – NOT USED

PART 3 EXECUTION

3.1 EXAMINATION

A. Verify that existing Site conditions are acceptable for subsequent Work. Beginning new Work means acceptance of existing conditions.

B. Examine and verify specific conditions described in individual Specification Sections.

C. Verify that utility services are available with correct characteristics and in correct locations.

3.2 EXECUTION

A. Comply with manufacturer's installation instructions, performing each step, in sequence. Maintain one set of manufacturer's installation instructions at Project Site during installation and until completion of construction.

B. When manufacturer's installation instructions conflict with Contract Documents, request clarification from Engineer before proceeding.

C. Verify that field measurements are as indicated on approved Shop Drawings or as instructed by manufacturer.

D. Secure products in place with positive anchorage devices designed and sized to withstand stresses, vibration, physical distortion, or disfigurement.
   1. Secure Work true to line and level and within specified tolerances, or if not specified, industry-recognized tolerances.
   2. Physically separate products in place, provide electrical insulation, or provide protective coatings to prevent galvanic action or corrosion between dissimilar metals.

E. Allow for expansion of materials.

F. Mounting Heights: Where not indicated, mount individual units of Work at industry recognized standard mounting heights for particular application indicated.
   1. Refer questionable mounting heights choices to Engineer for final decision.

G. Adjust operating products and equipment to ensure smooth and unhindered operation.

H. Clean and perform maintenance on installed Work as frequently as necessary through remainder of construction period. Lubricate operable components as recommended by manufacturer.

3.3 CUTTING AND PATCHING

A. Employ skilled and experienced installers to perform cutting and patching.

B. Submit written request in advance of cutting or altering elements affecting:
   1. Structural integrity of element.
   2. Integrity of weather-exposed or moisture-resistant elements.
   3. Efficiency, maintenance, or safety of element.
   4. Work of CFPUA or separate contractor.

C. Execute cutting, fitting, and patching including excavation and fill to complete Work and to:
   1. Fit the several parts together, to integrate with other Work.
   2. Uncover Work to install or correct ill-timed Work.
   3. Remove and replace defective and nonconforming Work.
   4. Provide openings in elements of Work for penetrations of mechanical and electrical Work.

D. Execute Work by methods to avoid damage to other Work and to provide proper surfaces to receive patching and finishing.

E. Cut masonry and concrete materials using masonry saw or core drill.

F. Restore Work with new products according to requirements of Contract Documents.

G. Fit Work tight to pipes, sleeves, ducts, conduits, and other penetrations through surfaces.

H. Maintain integrity of wall, ceiling, or floor construction; completely seal voids.

I. Refinish surfaces to match adjacent finishes. For continuous surfaces, refinish to nearest joint or intersection; for equipment assembly, refinish entire unit.

J. Identify hazardous substances or conditions exposed during the Work to Engineer for decision or remedy.

3.4 PROTECTING INSTALLED CONSTRUCTION

A. Protect installed Work and provide special protection where specified in individual Specification Sections.

B. Provide temporary and removable protection for installed products. Control activity in immediate Work area to prevent damage.

C. Protect corrosion protected (coated) surfaces. When activity is necessary, obtain recommendations for protection from coating material manufacturer.

D. Prohibit traffic from landscaped areas.

3.5 FINAL CLEANING

A. Execute final cleaning prior to final Project assessment.

B. Clean Site and Facilities; sweep paved areas, rake clean landscaped surfaces.

C. Remove waste and surplus materials, rubbish, and construction facilities from Site.

3.6 Certification, Conveyance, and Plats

A. Follow the Certification, Conveyance, and requirements outlined in the Development Process and Procedures Manual.

END OF SECTION

SECTION 02 41 00

DEMOLITION

PART 1 GENERAL

1.1 SUMMARY

A. Provide all labor, materials, equipment, and incidentals as shown, specified and required for all demolition, removal, and disposal of Work.

B. Scope:
   1. Demolition and removal of existing materials and equipment as shown or indicated in the Contract Documents. The Work includes demolition of foundations, piping, manholes, paving, curbs, sidewalks, gutters, fencing and similar existing facilities to a minimum of 5 ft below grade.
   2. Demolition and removal of all Underground Facilities underneath, and above-grade piping and utilities, in the building(s) and structures shown or indicated for demolition, unless the Underground Facilities or above-grade facilities are shown or are indicated to remain.
   3. Remove from slabs and foundations that are to be demolished all utilities embedded in such construction.
   4. Demolitions and removals specified under other Sections shall comply with requirements of this Section.
   5. Perform demolition Work within areas shown or indicated.
   6. Pay all costs associated with transporting and, as applicable, disposing of materials and equipment resulting from demolition.

1.2 RELATED REQUIREMENTS

A. Section 01 70 00 – Execution and Closeout Requirements.

B. Section 32 92 01 – Seeding and Sodding.

C. Section 31 23 34 – Excavation, Trenching, Dewatering and Backfilling.

1.3 ITEMS TO REMAIN IN PLACE

A. Take necessary precautions to avoid damage to existing items that remain in-place.

B. Trees are to be protected.

1.4 COORDINATION

A. Prior to start of Work, Contractor shall confirm with Owner and Engineer that all utilities and services are inactive. Contractor is responsible for disconnecting all services as indicated.

1.5 SUBMITTALS

A. Informational Submittals: Submit the following:
   1. Demolition and Removal Plan: Not less than ten days prior to starting demolition Work, submit acceptable plan for demolition and removal Work, including:
      a. Plan for coordinating shut offs, capping, temporary services, and continuing utility services.
      b. Equipment proposed for use in demolition operations.
      c. Recycling/disposal facility(ies) proposed, including facility owner, facility name, location, and processes. Include copy of appropriate permits and licenses, and compliance status.
      d. Planned demolition operating sequences.
      e. Detailed schedule of demolition Work in accordance with the accepted Process Schedule.

1.6 QUALITY ASSURANCE

A. Qualifications:
   1. Electrical Removals: Entity and personnel performing electrical removals shall be electrician legally qualified to perform electrical construction and electrical work in the jurisdiction where the Site is located.
   2. Plumbing Removals: Entity and personnel performing plumbing removals shall be plumber legally qualified to perform plumbing construction and plumbing work in the jurisdiction where the Site is located.

B. Regulatory Requirements:
   1. Demolition, removal, and disposal Work shall be in accordance with 29 CFR 1926.850 through 29 CFR 1926.860 (Subpart T - Demolition), and all other Laws and Regulations.
   2. Comply with requirements of authorities having jurisdiction.

PART 2 PRODUCTS

A. Backfill Materials: Refer to Section 31 23 34 - Excavation, Dewatering, Trenching, and Backfilling and Section 32 92 01 Seeding and Sodding.

PART 3 EXECUTION

3.1 NOTIFICATION

A. At least 48 hours prior to commencing demolition or removal, notify Engineer and Owner in writing of planned start of demolition Work. Do not start removals without permission of Engineer and Owner of infrastructure to be demolished.

B. Protection of Surrounding Areas and Facilities:
   1. Perform demolition and removal Work in manner that prevents damage and injury to property, structures, occupants, the public, and facilities. Do not interfere with use of, and free and safe access to and from, structures and properties.
   2. Closing or obstructing of roads, drives, sidewalks, and passageways adjacent to the Work is not allowed unless indicated otherwise in the Contract Documents. Conduct the Work with minimum interference to vehicular and pedestrian traffic.

3. No area, section, or component of floors, roofs, walls, or other structural element will be allowed to be left standing without sufficient bracing, shoring, or lateral support to prevent collapse or failure.
4. Provide temporary barriers, lighting, sidewalk sheds, and other necessary protection.
5. Repair damage to facilities that are to remain.

C. Existing Utilities: In addition to requirements of the General Conditions, Supplementary Conditions, and Division 01 Specifications, do the following:
1. Should uncharted or incorrectly charted Underground Facilities be encountered, Contractor responsibilities shall be in accordance with the General Conditions as may be modified by the Supplementary Conditions. Cooperate with utility owners in keeping adjacent services and facilities in operation.
2. Sanitary Sewer: Before proceeding with demolition, locate and cap all sewer lines and service laterals discharging from the building or structure being demolished.
3. Water Piping: Before proceeding with demolition, locate and cap all potable and non-potable waterlines and service laterals serving the building or structure being demolished.
4. Shutdown of all other utility services shall be coordinated by Contractor.

3.2 DEMOLITION – GENERAL

A. Locate construction equipment used for demolition Work and remove demolished materials and equipment to avoid imposing excessive loading on supporting and adjacent walls, floors, framing, facilities, and Underground Facilities.

B. Pollution Controls:
1. Use water sprinkling, temporary enclosures, and other suitable methods to limit emissions of dust and dirt to lowest practical level. Comply with Section 01 50 00 – Temporary Facilities and Controls.
2. Do not use water when water may create hazardous or objectionable conditions such as icing, flooding, or pollution.
3. Clean adjacent structures, facilities, properties, and improvements of dust, dirt, and debris caused by demolition Work, in accordance with the General Conditions.

C. Explosives:
1. Do not bring explosives to the Site or use explosives.

D. Building or Structure Demolition:
1. Unless otherwise approved by Engineer, proceed with demolition from top of building or structure to the ground. Complete demolition Work above each floor or tier before disturbing supporting members of lower levels.
2. Demolish concrete and masonry in small sections.
3. Remove structural framing members and lower to ground using hoists, cranes, or other suitable methods. Do not throw or drop to the ground.
4. Break up and remove foundations and slabs-on-grade unless otherwise shown or indicated as remaining in place.

E. Demolition of Site Improvements:

1. Pavement, Sidewalks, Curbs, and Gutters: Demolition of asphalt or concrete pavement, sidewalks, curbs, and gutters, as applicable, shall terminate at cut edges. Edges shall be linear and have a vertical cut face.
2. Fencing, Guardrails, and Bollards: Remove to the limits shown or indicated on the Drawings. Completely remove below-grade posts and concrete.
3. Manholes, Vaults, Chambers, and Handholes: Remove to the limits shown or indicated on the Drawings.
4. Underground Facilities Other than Manholes, Vaults, Chambers, and Handholes: Remove to the extent shown or indicated on the Drawings. Unless otherwise shown or indicated, cap ends of piping to remain in place in accordance with the "Mechanical Removals" Article in this Section.
5. Landscaping: Comply with Section 32 92 01 – Seeding and Sodding.

F. Salvage and Ownership:
1. Refer to Section 01 70 00 – Execution and Closeout Requirements, for requirements on salvage, ownership, and handling of equipment and materials removed during demolition and removal Work.
2. Materials and equipment to remain Owner's property shall be carefully removed and appropriately handled by Contractor to avoid damage and invalidation of warranties in effect, and shall be cleaned and stored at the Site (or other site specified in the Contract Documents) at place designated by Engineer or Owner.

G. Finishing of Surfaces Exposed by Removals: Unless otherwise shown or indicated in the Contract Documents, surfaces of walls, floors, ceilings, and other areas exposed by removals, and that will remain as finished surfaces, shall be repaired and re finished with materials that match existing adjacent surface, or as otherwise approved by Engineer.

3.3 WATER / SEWER UTILITY STRUCTURE ABANDONMENT

A. Manholes, vaults, wet wells and other underground utility structures to be abandoned (TBA), as noted on the Drawings, shall be demolished to 5 feet below grade. All pipes entering or exiting the structure shall be capped as noted on Design Drawings. The structure shall be filled with granular material, topped with suitable backfill material compacted to 90% standard proctor, or better, and prepared for seeding. Access must be along established utility easements and only allowed during dry conditions. Any disturbed areas at the structure or en route to the structure will be seeded and mulched.

B. Where a gravity sewer main is to be abandoned, the Contractor shall furnish and install the necessary materials to cap both the upstream and downstream manhole inverts, or, as directed by the Engineer to properly abandon the sewer main. The sewer main shall be capped on each end and abandoned in place.

C. Where a sewer force main or water main is to be abandoned, the Contractor shall furnish and install the necessary materials to cap the terminal end of the main, or where shown on the drawing or directed by the Engineer to properly abandon the main.

D. Mains abandoned within existing road or street rights-of-way shall comply with the permit requirement of the Owner (NC DOT or City of Wilmington).

E. Mains to be abandoned shall be filled with flowable fill unless otherwise directed by Owner and Engineer.

F. Pressurized mains shall be abandoned and capped with appropriate fittings and restraints as indicated on the drawings.

3.4 DISPOSAL OF DEMOLITION DEBRIS

A. Remove from the Site all debris, waste, rubbish, and material resulting from demolition operations and equipment used in demolition Work. Comply with the General Conditions, Supplementary Conditions.

B. Transportation and Disposal:
   1. Non-hazardous Material: Properly transport and dispose of non-hazardous demolition debris to a permitted landfill or other suitable location permitted by the Division of Solid Waste Management, in accordance with Laws and Regulations. Non-hazardous material does not contain Asbestos, PCBs, Petroleum, Hazardous Waste, Radioactive Material, or other material designated as hazardous in Laws and Regulations.
   2. Hazardous Material: When handling and disposal of hazardous materials is included in the Work, properly transport and dispose of hazardous materials in accordance with the Contract Documents and Laws and Regulations.

C. Submit to Engineer information required in this Section on proposed facility(ies) where demolition material will be recycled. Upon request, Engineer or Owner, shall be allowed to visit recycling facility(ies) to verify adequacy and compliance status. During such visits, recycling facility operator shall cooperate and assist Engineer and Owner.

END OF SECTION

SECTION 02 82 13

ASBESTOS ABATEMENT FOR UTILITIES

PART 1 GENERAL

1.1 SUMMARY

A. Scope:
   1. Provide all labor, materials, equipment and incidentals as shown, specified and required for all removal and disposal of material containing or coated with ACM.

B. Section Includes:
   1. Cutting or removal of pipelines coatings containing or coated with ACM.
   2. Monitoring of Work area during cutting and cleaning operations.

1.2 REFERENCES

A. Comply with applicable provisions and recommendations of the following, except where otherwise shown or specified:
   1. ANSI/AIHA Z9.2, Fundamentals Governing the Design and Operation of Local Exhaust Ventilation Systems.
   2. ANSI/ISEA Z87.1, Occupational and Educational Eye and Protection Devices.
   3. ANSI Z88.2, Respiratory Protection.
   4. ASTM D4397, Specification for Polyethylene Sheeting for Construction, Industrial, and Agricultural Applications.
   5. ASTM E1368, Practice for Visual Inspection of Asbestos Abatement Projects.
   6. NFPA 10, Portable Fire Extinguishers.
   7. NFPA 90A, Installation of Air Conditioning and Ventilating Systems.
   8. NFPA 101, Life Safety Code.
   9. NFPA 701, Methods of Fire Tests for Flame Propagation of Textiles and Films.
   10. NIOSH NMAM, NIOSH Manual of Analytical Methods.
   11. UL 586, High-Efficiency, Particulate, Air Filter Units.
   12. USEPA 340/1-90-018, Asbestos/NESHAP Regulated Asbestos Containing Materials Guidance.

1.3 DEFINITIONS

A. ACM: Asbestos-containing material.

1.4 SUBMITTALS

A. Product Data: Manufacturer information on respirators and air monitor.

B. Manufacturer's Certificate: Products meet or exceed specified requirements.

C. Qualification and certification Statements:
   1. Qualifications and certifications for contractor, on-Site representative, and disposal firm.

1.5 QUALITY ASSURANCE

A. Perform Work according to OSHA and North Carolina Department of Public Health standards.

B. Contractor: Company certified in repairing, modifying, cleaning, or removing AC pipe or ACM-coated pipe as specified in this Section.

C. On-Site Representative: Person trained and certified in performing Work of this Section.

D. Disposal Firm: Company certified in packaging and hauling ACM to disposal site.

E. Active Waste Disposal Site: Solid waste disposal site permitted to accept ACM waste.

1.6 DELIVERY, STORAGE, AND HANDLING

A. Store materials according to manufacturer instructions.

B. Respirators Not in Use:
   1. Store in sanitary location that protects respirators from dust, sunlight, heat, extreme cold, excessive moisture, and potentially damaging chemicals.
   2. Place in plastic bags or closed containers.

PART 2 PRODUCTS

2.1 RESPIRATORS

A. Manufacturers:
   1. Furnish materials according to 29 CFR Part 1926, CFR 11 Part 30, and 29 CFR Part 1910.

B. Description:
   1. Comply with manufacturer's recommendations, 29 CFR Part 1926.1101, and shall be approved by the Mine Safety and Health Administration and NIOSH (MSHA/NIOSH) for use in environments containing airborne Asbestos fibers.
   2. Type: Half-face mask; reusable after washing.
   3. Maintenance: Replaceable filters and cartridges only.
   4. Single-use respirators are not acceptable.
      a. Filters: Type H, high-efficiency particulate air (HEPA). As a minimum a powered-air purifying respirator (PAPR) equipped with HEPA cartridges shall be worn during startup of Asbestos removal activities, unless otherwise approved in writing by the CIH.

C. Performance and Design Criteria:
   1. Application: Asbestos abatement for concentrations up to 10 times permissible exposure limit (PEL).
   2. Design: Low profile.

2.2 AIR MONITOR

A. Manufacturers:
   1. Furnish materials according to N.C. General Statute §130A-444 through 452 - Asbestos Hazard Management, 10A NCAC 41C .0601 - Asbestos Hazard Management Program, and 40 CFR 61-141-157 Subpart M, standards.

PART 3 EXECUTION

3.1 PREPARATION

A. Perform ACM removal without damage to or contamination of adjacent Work or existing area.

3.2 APPLICATION

A. Cutting and Disposal:
   1. Transport removed piping to a central staging area to cut for transport or disposal.
   2. Deposit pipeline pieces in leakproof metal collection box secured with tarpaulin covers.
   3. Transport filled boxes to an approved landfill.
   4. A licensed and certified asbestos supervisor will accompany transport vehicles to manage transport process.
   5. Maintain supply of fresh water near cutting operation to keep freshly cut areas of ACM damp while cutting piping.
   6. Individually wrap each joint of piping and pipe ends prior to loading.

3.3 FIELD QUALITY CONTROL

A. Sample Testing:
   1. When required in Bid Form, test pipe or pipe coating for asbestos prior to repairing, modifying, or removing pipelines by removing samples of pipe or coating along entire length of piping to be removed and have testing laboratory determine quantity of asbestos that may be present.
   2. Testing and evaluation, including obtaining of samples, shall be by Owner's designated independent testing firm.

END OF SECTION

SECTION 31 23 34.01

EXCAVATING, TRENCHING, DEWATERING AND BACKFILLING FOR UTILITY WORK

PART 1 GENERAL

1.1 SUMMARY

A. Furnish all labor, equipment, supplies and materials, and perform all operations in connection with the following:
   1. Clearing, grubbing, and preparation of the site; removal and disposal of all debris;
   2. Pipeline and utility structure excavations including trenching, subgrade preparation, embedment, backfilling, pumping and dewatering
   3. Tunneled (trenchless construction) crossings;
   4. Sheeting, shoring, and protection of work;
   5. Borrow, transportation, handling, storage, and disposal of suitable and unsuitable materials for pipelines, utility structures, site fills, curb and gutters, sidewalks, driveways, and pavements
   6. Subgrade preparation, grading, wetting, rolling, surfacing and other operations pertaining to the site work
   7. Protection of adjacent property;

B. No classification of excavated materials will be made. Excavation includes all materials regardless of type, character, composition, moisture, or condition thereof.

C. Related Requirements:
   1. Section 03 05 00 - Concrete
   2. Section 32 92 01 - Seeding and Sodding
   3. Section 33 14 13 - Water Distribution Piping, Valves, Hydrants, and Appurtenances
   4. Section 31 31 11 - Sanitary Sewer Gravity Mains
   5. Section 33 31 23 - Sanitary Sewer Force Mains, Valves, and Appurtenances
   6. Section 33 32 11 - Wastewater Pumping Stations

1.2 REFERENCES

A. Definitions:
   1. "Subgrade" is the uppermost surface of native soil material unmoved from cuts; the bottom of excavation.

B. Reference Standards:
   1. OSHA - Safety and Health Regulations for Construction, Chapter XVII of Title 29, CFR, Part 126
   2. NCDOT Positive Shoring Plan - issued with Right-of-Way Encroachment Agreement
   3. AASHTO T99/T180 - Standard Method of Test for Moisture-Density Relations of Soils.
   4. ASTM C136 - Sieve analysis of fine and coarse aggregates.
   5. ASTM D448 - Standard Classification for Sizes of Aggregate for Road and Bridge Construction.

6. ASTM D698 - Tests for moisture-density relations of soils and soil-aggregate mixture using 5.5 lb (2.49 kg) rammer and 12 inch (305 mm) drop.
7. ASTM D2321 – Underground Installation of Thermoplastic Pipe for Sewers and Other Gravity-Flow Applications.
8. ASTM D2487 - Classification of Soils for Engineering Purposes.
9. ASTM D4253 - Test Methods for Maximum Index Density and Unit Weight of Soils Using a Vibratory Table.
10. ASTM D4254 - Test Methods for Minimum Index Density and Unit Weight of Soils and Calculation of Relative Density.
11. ASTM D4318 - Test Methods for Liquid Limit, Plastic Limit, and Plasticity Index of Soils.
12. ASTM D4832 - Test Method for Preparation and Testing of Controlled Low Strength Material (CLSM) Test Cylinders.
13. ASTM D6023 - Test Method for Density (Unit Weight), Yield, Cement Content, and Air Content (Gravimetric) of Controlled Low-Strength Material (CLSM).
14. ASTM D6938 - Standard Test Methods for In-Place Density and Water Content of Soil and Soil-Aggregate by Nuclear Methods (Shallow Depth).

1.3 SUBMITTALS

A. Contractor Excavation Protection Plans or NCDOT Positive Shoring Plans:
   1. Provide sheeting, shoring, and bracing materials and installation required to protect excavations and adjacent structures and property.
   2. At least 30 days before starting construction on sheeting and shoring, and in accordance with the OSHA and NCDOT requirements, the Contractor shall ensure the sheeting and shoring design engineer complete and submit the Protective System Design Certificate(s) for the sheeting and shoring systems that the Contractor will install.
   3. If required by the OSHA regulations to protect existing facilities, the Contractor shall submit separate certificates for each unique design. The certificate(s) shall be signed and sealed by the registered professional engineer that designed the protection system.

B. Geotextile Fabrics: Samples, manufacturer’s product data, installation instructions

C. Embedment and Backfills Materials:
   1. Name and location of proposed material suppliers.
   2. Standard test results for materials proposed by independent materials testing firm.

D. Trench Shields: Fabricator/manufacturer certifications

1.4 QUALITY ASSURANCE

A. Contractor to provide experienced on-site Safety Officer and Superintendent to comply with OSHA regulations for site excavations and engineered shoring plans.

B. Safety Officer and Superintendent shall hold OSHA 30-Hour Construction Certifications and classified as the competent person.

1.5 EXISTING SITE CONDITIONS

A. Every reasonable effort has been made to provide accurate information on existing site conditions. The Contractor should become familiar with the site and satisfy himself as to the scope of the work involved and the materials to be encountered. Any significant change in conditions should be immediately brought to the attention of the Engineer.

PART 2 PRODUCTS

2.1 MATERIALS

A. Geotextile Fabric. The fabric shall be provided in rolls wrapped with covering for protection from mud, dirt, dust, and debris.

1. Geotextile Fabric Type A. Geotextile fabric Type A shall be provided for installation at locations indicated on the Drawings and as specified herein. Geotextile Fabric Type A shall be a nonwoven fabric consisting of only continuous chains of polymeric filaments or yarns of polyester formed into a stable network by needle punching. The fabric shall be inert to commonly encountered chemicals; shall be resistant to mildew, rot, ultraviolet light, insects, and rodents; and shall have the indicated properties:

Property	Test Method	Unit	Minimum Average Roll Value *
Fabric Weight	ASTM D3776	oz/yd2	5.7
Grab Strength	ASTM D4632	lb	155
Grab Elongation	ASTM D4632	percent	50
Mullen Burst Strength	ASTM D3786	psi	190
Apparent Opening Size	CW-02215	U.S. Std. Sieve Size	70

* Minimum average roll value in weakest principal direction.

B. Polyethylene Film: Polyethylene film beneath concrete slabs or slab base course material shall be Product Standard PS17, 6 mil minimum thickness.

C. Granular Materials and Soils: Five classes defined according to properties and characteristics as follows.

a. **Class I** - Angular, 25 mm (1-in.) to No.4 (3/16 in.) in size, #57 or #67 graded stone or equivalent regional material from crushed rock, slag, and/or coral.

b. **Class II** - Coarse sands and gravels with maximum size of 25 mm (1-in.), including variously graded sands and gravels containing small percentages of fines, generally granular and non-cohesive, either wet or dry. Soil Types GW, GP, SW, and SP are included in this class.

c. **Class III** - Fine sand and clayey gravels, including fine sands, sand-clay mixtures, and gravel-clay mixtures. Soil Types GM, GC, SM, and SC are included in this class.

d. **Class IV** - Silt, silty clays, and clays, including inorganic clays and silts of medium to high plasticity and liquid limits. Soil Types MH, ML, CH, and CL are included in this class. These materials are not acceptable for bedding, haunching, or initial backfill.
e. **Class V** - This class includes the organic soil, OL, OH, PT as well as soils containing frozen earth, debris, rocks, larger than 37.5 mm (1-1/2 in.) in diameter, and other foreign materials. These materials are not acceptable for bedding, haunching, initial backfill, or final backfill.

D. General Fill:
1. Use soils free of organic matter, refuse, rocks and lumps greater than 4 inches in diameter and other deleterious matter.
2. Fill shall have a liquid limit not greater than 45, and plasticity index not greater than 25.
3. Previously excavated materials complying with the Contract Documents requirements for general fill may be used for general fill.
4. When on-site materials are found unsuitable for use as general fill, provide approved off-site general fill materials. Prior to using off-site material as general fill, furnish submittal for and obtain Engineer's approval of the material proposed for use.
5. General fill material not otherwise specified shall be Class II or III.

E. Granular Fill: Granular fill under floor slabs shall be Class I material.

F. Structural Fill: Fill material placed inside the line of the building foundation or slab shall be Class I or II.

G. Fill Under Pavement: Fill material used beneath pavement and for road shoulders shall be Class II or III.

H. Topsoil: Natural, friable soil free of subsoil, stumps, rocks larger than 2 inches in diameter, weeds and other material detrimental to plant growth.

I. Concrete: Concrete placed for cradles, thrust blocks, or encasement shall be Class B concrete as specified in Section 03 05 00 Concrete.

J. Subbase Material:
1. Material shall be naturally- or artificially-graded mixture of natural or crushed gravel, crushed stone, or natural or crushed sand. Crushed slag is unacceptable.

K. Drainage Fill:
1. Material shall be washed, uniformly-graded mixture of crushed stone, or crushed or uncrushed gravel, with 100 percent passing 1-1/2-inch sieve and not more than 10 percent passing a No. 4 sieve (#57 or #67 stone).

L. Controlled Low Strength Material (CLSM):
1. CLSM shall be self-leveling and self-compacting cementitious material.
a. Cement: Type I or Type II Portland cement complying with ASTM C150/C150M.
b. Fly Ash Mineral Admixture: Comply with ASTM C618, Class F.

c. Water: Clean, potable.
d. Admixtures: Provide admixtures in accordance with product manufacturer's published instructions. Admixtures shall be compatible with each other. Do not use calcium chloride or admixtures containing chloride ions. Use only admixtures that have been tested and approved in the mix designs.
e. Fine Aggregates: ASTM C33/C33M.

2. CLSM Mix:
   a. Cement Content: 50 pounds per cubic yard.
   b. Fly Ash Mineral Admixture: 250 pounds per cubic yard.
   c. Fine Aggregate Content: 2910 pounds per cubic yard.
   d. Water Content: 500 pounds per cubic yard.
   e. Admixtures shall comply with manufacturer's recommendations for use with CLSM.
   f. Unconfined compressive strength shall be not more than 100 psi.
   g. Adjustment of Mixes.
      1) Mix design adjustments may be requested by Contractor when warranted by characteristics of materials, Site conditions, weather, test results, or other, similar circumstances.
      2) Submit for Engineer's approval laboratory test data for adjusted mix designs, including compressive strength test results.
      3) Implement adjusted mix designs only after Engineer's approval.
      4) Adjustments to mix designs shall not result in additional costs to Owner.

2.2 SOURCE QUALITY CONTROL

A. Perform quality assurance testing, and submit results to Engineer, in accordance with the 'Submittals" Article in Part 1 of this Section.

PART 3 EXECUTION

3.1 INSPECTION

A. Familiarization: Prior to commencement of the Work, become thoroughly familiar with the site, the site conditions, and all portions of the work specified in this Section.

B. Provide Engineer with sufficient notice and with means to examine areas and conditions under which excavating, filling, and grading will be performed. Do not proceed with the Work until unsatisfactory conditions are corrected.

C. Approvals: Backfilling and grading operations near foundations, walls, pipes and other portions of the work to be covered shall not commence until the Engineer has completed all required inspections, tests and approvals. Work covered prior to inspection shall be uncovered for inspection purposes and backfilled.

3.2 SUBSURFACE UTILITY LOCATION AND EXPLORATION

A. Existing Utilities Location:

1. Prior to excavation, Contractor shall contact local underground alert hotlines, “North Carolina 811” and/or individual utility owners for marking underground utilities. A survey shall be made of the utility size, material, location, and elevation prior to trench excavation and information shall be recorded on the record Drawings maintained by the Contractor.
2. Once utilities are marked and recorded, Contractor shall excavate to expose the existing utilities in advance of the construction.
3. Perform all work required in connection with excavating, stockpiling, maintaining, sheeting, shoring, filling, and replacing pavement for utility location pits.
4. Contractor shall be responsible for the definite location of each existing underground utility involved within the area of excavation for the Work and exercise care during such location work to avoid damaging and disrupting the affected underground facilities or structures. Contractor shall be responsible for repairing, at his expense, damage to underground facility or structures caused during exploratory Work.

3.3 PREPARATION

A. Surface Preparation
1. Clearing: Areas designated for clearing and required for construction operations shall be cleared of trees, brush, structures and other materials within the defined rights-of-way, easements, and limits of disturbance indicated. Trees which are to remain shall be protected during clearing operations and subsequent work.
2. Grubbing: Roots, stumps and other materials shall be grubbed from the cleared areas to a depth of at least 18 inches. Tree stumps shall be grubbed in their entirety, including tap roots where applicable.
3. Topsoil: Strip existing topsoil to a depth of 4 inches from areas to be excavated or graded. Stockpile the topsoil in a suitable area for use during final grading operations. Protect the topsoil from excessive erosion.
4. Unsuitable Material: Remove sod, muck or other unsuitable material to firm subsoil in areas designated for filling or grading operations.
5. Disposal: Trees, stumps, roots, rubbish, unsuitable soil or other material resulting from surface preparation shall be remove from the site by the Contractor and disposed of.

B. Prohibited Work:
1. Burning or blasting and use of explosives is not allowed.

C. Dust Control:
1. Control objectionable dust caused by Contractor’s operation of vehicles and equipment, clearing and other actions. To minimize airborne dust, apply water or use methods subject to approval of authorities having jurisdiction.

3.4 EXCESS WATER CONTROL

A. General Dewatering:
1. Grade and maintain all areas of the site to preclude surface runoff into excavations and prevent ponding of water.
2. Remove all soil softened or eroded by the presence of water and replace with suitable backfill material.

3. Provide and maintain drainage and dewatering equipment to remove and dispose of all surface water and ground water entering excavations, or other parts of the Work areas. Keep excavations dry during execution of Work, subgrade preparation, and continually thereafter until the pipeline or structure to be built therein is acceptable to Engineer and backfilling operations are completed and acceptable to Engineer.
4. Provide temporary drainage ditches and temporary dikes, and provide required temporary pumping and other work necessary for diverting or removing rainfall and all other accumulations of surface water from excavations and fill areas. Perform diversion and removal of surface water in manner that prevents accumulation of water behind permanent or temporary structures and at any other locations in the construction area where such accumulations may be detrimental.
5. Water used for working or processing, resulting from dewatering operations, or containing oils or sediments that will reduce the quality of the surface water or groundwater downstream of the point of discharge, shall not be directly discharged. Divert such waters through temporary settling basin or filter before discharging to surface water, groundwater, or drainage routes.
6. Contractor shall be responsible for condition of piping, conduits, and channels used for drainage and such piping, conduits, and channels shall be clean and free of sediment.

B. Temporary Dewatering Systems:
1. Contractor shall design, provide, and operate dewatering system to include sufficient trenches, sumps, pumps, hose, piping, well points, deep wells, and similar facilities, necessary to depress and maintain groundwater level below the base of each excavation during all stages of construction operations.
2. Design and operate dewatering system to avoid settlement and damage to existing structures and underground facilities.
3. Groundwater table shall be lowered in advance of excavation for a sufficient period of time to allow dewatering of fine grain soils.
4. Maintain groundwater level at excavations 2-feet below lowest subgrade excavation until the structure has sufficient strength and weight to withstand horizontal and vertical soil and water pressures from natural groundwater.
5. Operate dewatering system continuously, 24-hours per day, 7-days per week. Provide standby pumping facilities and personnel to maintain the continued effectiveness of the system. Do not discontinue dewatering operations without first obtaining Engineer's acceptance for such discontinuation.
6. Locate elements of temporary dewatering system to allow continuous dewatering operation without interfering with the Work to the extent practicable.
7. Where portions of dewatering system are located in the area of permanent construction, submit to and obtain Engineer's acceptance of details of proposed methods of constructing the Work at such location. Control of ground water shall continue until the permanent construction provides sufficient dead load to withstand hydrostatic uplift of the normal groundwater, until concrete has attained sufficient strength to withstand earth and hydrostatic loads, and until waterproofing Work is completed.
8. Perform pumping of water from excavations in a manner that prevents carrying away of unsolidified concrete materials, and that avoids damaging the subgrade.

C. Disposal of Water Removed by Dewatering System:

1. Contractor's dewatering system shall discharge to in accordance with the NC Sedimentation Pollution Control Act, NCDEQ Erosion Control Permit, and NC Stormwater Permit for Construction Activities.
2. Convey water from excavations in closed conduits. Do not use trench excavations as temporary drainage ditches.
3. Dispose of water removed from excavations in a manner that does not endanger health and safety, property, the Work, and other portions of the Project.
4. Dispose of water in manner that causes no inconvenience to Owner, others involved in the Project, and adjacent and downstream properties.

3.5 SHEETING, SHORING AND BRACING

A. General:
   1. Design and provide sheeting, shoring, bracing, cofferdams, and similar excavation supports as shown, specified, and required for the Work. Where sheeting, shoring, bracing or trench boxes are used, they must be designed and sealed by a professional engineer licensed to practice in the State of North Carolina.
   2. Clearances and types of temporary sheeting, shoring, bracing, and similar excavation supports, insofar as they may affect the finished character of the Work and the design of sheeting to be left in place, will be subject to the Engineer's approval; but Contractor is responsible for adequacy of all sheeting, shoring, bracing, cofferdams, and similar excavation supports.
   3. Materials:
      a. Previously-used materials shall be in good condition, and shall not be damaged or excessively pitted. All steel or wood sheeting designated to remain in place shall be new. New or used sheeting may be used for temporary sheeting, shoring, and bracing.
      b. All steel work for sheeting, shoring, bracing, cofferdams and other excavation supports, shall be in accordance with ANSI/AISC 360, except that field welding will be allowed.
      c. When required, provide permanent steel sheet piling or treated timber sheet piling where subsequent removal of sheet piling might allow lateral movement of soil under adjacent structures
   4. As excavation progresses, carry down shoring, bracing, cofferdams, and similar excavation supports to required elevation at bottom of excavation.
   5. Maintain sheeting, shoring, bracing, bracing, and other excavation supports in excavations regardless of time-period excavations will be open.
   6. Unless otherwise shown, specified, or directed, remove materials used for temporary construction when the Work is completed. Perform such removal in manner not injurious to the structures and underground facilities, their appearance, and adjacent construction.

B. Removal of Shoring, Sheeting and Bracing:
   1. Remove sheeting and bracing from excavations, unless otherwise directed by Engineer in writing. Perform removal to avoid damaging the Work and adjacent construction. Removal shall be equal on both sides of excavation to ensure no unequal loads on structures and underground facilities.
   2. Defer removal of sheeting and bracing, where removal may cause soil to come into contact with concrete, until the following conditions are satisfied:
      a. Concrete has cured for not less than 7 days.

b. Wall and floor framing, up to and including grade level floors, is in place.

3. When shoring is installed that does not extend below the invert of the underground structure, the shoring shall be removed. Backfill and compaction shall be executed in conformance with the specifications.

C. Shoring Left in Place:
   1. Only shoring authorized by the Engineer and approved by the Engineer shall be left in place.
   2. When shoring is installed to extend below the underground structure, the shoring shall remain with the top edge 4-feet below the finished grade.

D. Sheeting Left in Place:
   1. Materials: Steel sheeting shown or indicated to be left in place shall consist of rolled sections of continuous interlocking type. Steel sheeting material designated to be left in place shall be new. Type and design of the sheeting and bracing shall comply with the above requirements for steel work for all sheeting and bracing.
   2. Installation:
      a. Steel sheeting to be left in place shall be driven straight to lines and grades as shown, indicated, or directed. Piles shall penetrate into firm materials with secure interlocking throughout pile's entire length. Damaged piling having faulty alignment shall be pulled and replaced by new piling.
      b. Type of guide structure used and method of driving steel sheeting to be left in place shall be determined by Contractor's professional engineer.
   3. Cut off at elevations shown, indicated, or directed by Engineer sheeting left in place and remove cut off pilings from the Site.
   4. Clean wales, braces, and all other items to be embedded in the permanent structure, and ensure that concrete surrounding the embedded element is sound and free of air pockets and harmful inclusions. Provisions shall include the cutting of holes in the webs and flanges of wale and bracing members, and welding of steel diaphragm waterstops perpendicular to the centerline of brace ends that are to be embedded.

3.6 TRENCH EXCAVATION

A. Cutting Existing Surface Pavements.
   1. Cuts in concrete pavement and concrete base pavements shall be no larger than necessary to provide adequate working space for proper installation of pipe and appurtenances.
   2. Cutting shall be started with a concrete saw in a manner which will provide a clean groove at least 1-½ inches deep along each side of the trench and along the perimeter of cuts for structures.
   3. Concrete pavement and concrete base pavement over trenches excavated for pipelines shall be removed so that a shoulder not less than 12-inches in width at any point is left between the cut edge of the pavement and the top edge of the trench.
   4. Pavement cuts shall be made to and between straight or accurately marked curved lines which, unless otherwise required, shall be parallel to the center line of the trench.
   5. Pavement removal for connections to existing lines or structures shall not exceed the extent necessary for the installation.

6. Where the trench parallels the length of concrete walks, and the trench location is all or partially under the walk, the entire walk shall be removed and replaced.
7. Where the trench crosses drives, walks, curbs, or other surface construction, the surface construction shall be removed and subsequently replaced between existing joints or between saw cuts as specified for pavement.

B. Trench Width: Trenches shall be excavated to a width which will provide adequate working space and sidewall clearance for proper installation, jointing, and embedment haunching. Trench banks from the top of the pipe to trench bottom shall be as vertical as practicable.

C. Over-Excavation: Over-depth excavation carried below required grade, unless authorized by the Engineer, shall be backfilled with Class I material and compacted as embedment at no additional cost to Owner.

D. Alignment and Depth: Trench to the lines and grades shown on the drawings. Where elevations are not shown, trench to a depth sufficient to provide at least 36-inches of cover above the top of pipe, unless otherwise specified. Grade trenches to provide a constant slope free of sags and high spots.

E. Dewatering: Keep trenches free of water.

F. Trench Bracing: Properly brace, sheet and support trench walls as soil conditions indicate and in conformance OSHA regulations. Provide adequate bracing and shoring to protect adjacent improvements according to contractor submitted excavation plan or NCDOT positive shoring plan. Contractor shall provide certification for all premanufactured trench bracing devices prior to any excavation activities.

G. Bedding, Haunching and Backfill: Tamp to provide firm, even bedding. Excavate bedding material to match the shape of the bottom of the pipe and bell, as detailed in the drawings. Shovel slice haunching material to provide full bearing around the bottom of the pipe.

H. Method of Compaction Density Testing: ASTM D698 Standard Proctor

I. Pipe Trench Construction: (Depth measured from top of pipe to final grade)
   1. Type A – Sewer mains 12-feet and deeper
      a. Bedding, Haunching, and Initial Backfill – Class I bedding material, 4-inch minimum depth or 1/8 pipe diameter from stable subgrade to pipe invert; Class I hauching and initial backfill from invert to 6-inces above top of pipe; compact all zones to 95% standard density.
      b. Final Backfill – Class II material from top of initial backfill to ground surface; compact to 95% standard density.
   2. Type B – Sewer mains between 6-feet and 12-feet deep (occasional water and sewer force mains)
      a. Bedding and Haunching – Class I bedding material, 4-inch minimum depth or 1/8 pipe diameter from stable subgrade to pipe invert; Class I haunching to spring-line of pipe; compact both zones to 95% standard density.
      b. Initial Backfill – Class II material from spring-line of pipe to 6-inches above top of pipe; compact to 95% standard density.

c. Final Backfill – Class II or III material from top of initial backfill to ground surface; compact to 95% standard density.

3. Type C – Sewer, water, and sewer force mains 3-feet to 6-feet deep
   a. Bedding and Haunching – Class I material 4-inch minimum depth or 1/8 pipe diameter from stable subgrade to 1/6 pipe outside diameter above invert; compact to 95% standard density.
   b. Initial Backfill – Class II or III material from top of pipe to a minimum of 6-inches above top of pipe; compact to 95 standard density.
   c. Final Backfill – Class II or III material from top of initial backfill to ground surface; compact to 95% standard density.
4. Type S – Water and sewer service lines 3-feet to 6-feet deep
   a. Bedding, Haunching, and Initial Backfill – Class I or II material 3-inch minimum depth from stable subgrade to 3-inch minimum above top of pipe; compact to 95% standard density.
   b. Final Backfill – Class II or III material from top of initial backfill to ground surface; compact to 95 percent standard density.

J. Trench Compaction Lifts:
   1. Embedment and initial backfill zones – 6-inch lifts
   2. Final backfill zone – 8-inch lifts

K. Subgrade Stabilization: Wet, yielding and mucky trench bottoms shall be stabilized by removal of the material and replacement with sufficient Class I embedment material to correct the instability.

L. Backfilling Under NCDOT or City Pavements
   1. As indicated on standard detail drawings
      a. Top 12-inches of final backfill for road or street subbase shall be compacted to 98% standard density or;
      b. CLSM trench embedment and backfill.

M. Trench Shields:
   1. When using a shield for installing pipe, bottom of the shield shall not extend below pipe spring-line and haunching embedment.
   2. When using a shield for installing structures, bottom of the shield shall not extend below the top of the bedding for the structures.
   3. When removing the shield or moving the shield ahead, exercise extreme care to prevent moving piping, structures, and other underground facilities, and prevent disturbance of bedding material for piping, structures, and other underground facilities. When piping, structures, or underground facilities are disturbed, remove and reinstall the disturbed items.

3.7 SITE AND STRUCTURE EXCAVATION

A. Perform all excavation required to complete the Work as shown, specified, and required. Excavation shall include the removal and replacement of all asphalt, concrete, curb, rock, earth, fences, trees, shrubs, and other materials as applicable within the defined rights-of-way, easements, and limits of disturbance indicated.

B. Excavation Protection:

1. Under all other conditions, excavations shall be sloped and benched, shielded, or shored and braced.
2. Provide and maintain excavation protection system(s) in accordance with submittals accepted by Engineer.

C. All areas of the site shall be graded and maintained at all times to prevent surface runoff from draining into the excavations, and to prevent ponding of water therein.

D. Excavation shall be accomplished in accordance with the grades and lines as established by the Engineer and as required by the work to be performed. Exercise care to prevent undercutting lower than the required subgrades. When excavations are made below required grades without written order of Engineer, fill such excavations with compacted select fill material, as directed by Engineer, at Contractor's expense.

E. Extend excavations sufficiently on each side of foundation slabs, wet wells, manholes, valve vaults, and similar construction to allow setting of forms, installation of shoring and bracing, and the safe sloping of banks, as necessary.

F. General Site Subgrades:
1. Subgrades shall be firm, dense, and thoroughly compacted and consolidated; shall be free from mud, muck, and other soft or unsuitable materials; and shall remain firm and intact under all construction operations. Subgrades that are otherwise solid but become soft or mucky on top due to construction operations shall be reinforced with select fill. Finished elevation of stabilized subgrades shall not be above subgrade elevations shown.
2. If, in Engineer's opinion, subgrade becomes softened or mucky because of construction delays, failure to dewater properly, or other cause within Contractor's control, subgrade shall be excavated to firm material, trimmed, and backfilled with select fill material at Contractor's expense.
3. Upon completion of site preparation and excavation, scarify to a depth of 12-inches and compact as specified. For areas to receive fill, the compacted subgrade shall be scarified to a depth of 4-inches prior to placing the fill.

G. Proof-rolling Subgrades:
1. Prior to placing fill or constructing pavements or slabs-on-grade, proof-roll the subgrade surface with sufficient proof-rolling apparatus. Before starting proof-rolling, submit to and obtain acceptance from Engineer of proof-rolling apparatus and procedure to be used.
2. Proof-rolling operations shall be made in the presence of Engineer. Notify Engineer in advance of start of proof-rolling operations.
3. Subgrades displaying pronounced elasticity or deformation, deflection, cracking, or rutting shall be stabilized as directed by Engineer. Unsuitable materials shall be undercut to the depth directed by Engineer and replaced with select fill material. Other suitable stabilization methods may be directed by Engineer.

H. Excavated Materials to be Used as Fill:
1. All materials from excavation, considered as suitable by the Engineer, shall be used as fill wherever required, and the Contractor shall arrange his work so that this usage of excavated materials will be possible.
2. Stockpile excavated materials that are acceptable for use as fill.

3. As excavation proceeds, keep stockpiles of excavated materials suitable for use as fill separate from unsuitable materials and waste materials.
4. Place, grade, and shape stockpiles for proper drainage.
5. Locate and retain soil materials away from edge of excavations.
6. Dispose of excess soil material and waste materials.
7. Stockpiled excavated soils for use as select fill or general fill shall be tested and classified by laboratory as on-Site select fill or on-Site general fill. Perform required quality assurance testing for material verification on stockpiled materials as soon as possible to demonstrate compliance of excavated materials.

3.8 SITE AND STRUCTURE FILL AND COMPACTION

A. Provide and compact all fill required for the finished grades as shown on the drawings.

B. Place fill in excavations as promptly as progress of the Work allows, but not until completing the following:
   1. Engineer's authorization after observation of construction below finish grade, including damp-proofing, waterproofing, perimeter insulation, and similar Work.
   2. Inspection, testing, approval and recording of locations of underground facilities.
   3. Removal of concrete formwork.
   4. Removal of shoring and bracing, and filling of voids with satisfactory materials.
   5. Removal of trash and debris.
   6. Permanent or temporary horizontal bracing is in place on horizontally-supported walls.
   7. Field testing of tanks, underground facilities including piping and conduits, and water-retaining structures.

C. Fill that includes organic materials, debris, roots, trash, stones or other unacceptable material shall be removed and replaced with approved fill material.

D. Borrow: The Contractor will supply all borrow necessary and will provide all labor and equipment necessary to dig and haul such borrow.

E. Placement:
   1. Place fill to the grades shown or indicated. Bring up evenly on all sides fill around structures and underground facilities.
   2. Fill shall be spread in successive layers of loose material not more than 8 inches in depth. Each layer shall be spread uniformly by motor grader or other approved device and rolled with an approved tamping or 3-wheeled power roller until thoroughly compacted to 90 percent of maximum density obtained at optimum moisture content, as determined by the AASHTO Standard Method T-180.
   3. Fill areas shall be undercut and proof-rolled as directed by Engineer.
   4. Place fill materials at moisture content and density as specified in Table 31 23 34-A of this Section and this Article's requirements on compaction density. Furnish and use equipment capable of adding measured amounts of water to the fill materials to bring fill materials to a condition within required moisture content range. Furnish and use equipment capable of disking, aerating, and mixing the fill materials to ensure reasonable uniformity of moisture content throughout the fill materials, and to reduce moisture content of borrow materials by air drying, when necessary. When subgrade or lift of fill materials requires moisture-conditioning

before compaction, fill material shall be sufficiently mixed or worked on the subgrade to ensure uniform moisture content throughout the lift of material to be compacted. Materials at moisture content in excess of specified limit shall be dried by aeration or stockpiled for drying.

5. Perform compaction with equipment suitable for the type of fill material placed. Select and use equipment capable of providing the minimum density required. Use lightweight or hand operated compaction equipment within horizontal distance of 10 feet from the wall of completed, below-grade structures. Furnish and use equipment capable of compacting in restricted areas next to structures and around piping and underground facilities. Effectiveness of the equipment selected by Contractor shall be tested at start of compacted fill Work by constructing a small section of fill within the area where fill will be placed. If tests on the test section of fill indicate that required compaction is not obtained, do one or more of the following: increase the amount of coverages, decrease the lift thicknesses, or use different compactor equipment.
6. Place fill materials in horizontal, loose lifts, not exceeding specified uncompacted thickness. Place fill in a manner ensuring uniform lift thickness after placing. Mechanically compact each lift, by not less than two complete coverages of the compactor. One coverage is defined as the conditions reached when all portions of the fill lift have been subjected to the direct contact of compactor's compacting surface. Compaction of fill materials by inundation with water is unacceptable.
7. Do not place fill materials when standing water is present on surface of the area where fill will be placed. Do not compact fill when standing water is present on the fill to be compacted. Do not place or compact fill in a frozen condition or on top of frozen material. Fill containing organic materials or other unacceptable material previously described shall be removed and replaced prior to compaction.
8. If required densities are not obtained because of improper control of placement or compaction procedures, or because of inadequate or improperly-functioning compaction equipment, Contractor shall perform all work required to provide the required densities. Such work shall include, at no additional cost to Owner, complete removal of unacceptable fill areas and replacement and re-compaction until acceptable fill is provided.
9. Repair, at Contractor's expense, observed or measured settlement. Make repairs and replacements as required within 30 days after being so advised by Engineer.
10. When any portion of the fill is constructed on an old road bed, the existing surfaces shall be scarified and manipulated as directed by the Engineer in order that, when compacted, it shall have a uniform density. Fills shall be shaped and maintained at all times during their construction to prevent an accumulation of standing water in the event of rain.

F. Fill Against Concrete:
   1. Placing fill against concrete below finished grade is not allowed until the concrete has attained its specified strength, as determined by duration of concrete curing and testing of field-cured concrete cylinders. Requirements for strength and curing time are in Section 03 05 00 – Concrete.
   2. Backfill structural foundation units as soon as practicable, after concrete has gained sufficient strength to avoid damage, to avoid ponding of surface water and accumulation of debris.
   3. Where fill is placed against waterproofed surface, exercise care that waterproofing material is not damaged.

G. Fill in Electrical Ductbank Trenches:
   1. Provide general fill for full depth of electrical ductbank trench, below and above electrical ductbank.
   2. Where one ductbank passes beneath another pipe or ductbank, provide select fill to the elevation of the bottom of upper ductbank or pipe, as applicable.
   3. Placing and compacting fill in electrical ductbank trenches shall comply with Type S trench construction requirements.

H. Pavement:
   1. Compact the subgrade and fill material beneath paved areas and shoulders to a minimum 98 percent ASTM D698 maximum density at optimum moisture content.
   2. Place 1-½ inches of temporary asphalt concrete pavement immediately after filling excavations in paved roadways and other paved areas that will remain for permanent use.
   3. Maintain surface of paved area over the fill in good and safe condition during progress of the Work, and promptly fill depressions over and adjacent to the fill area caused by settlement of fill.
   4. Permanent replacement pavement shall be equal to that of the existing roadways, unless otherwise shown or specified.

I. Subbase Placement:
   1. Provide subbase material where shown to the limits shown or indicated.
   2. Place subbase material in compacted lifts not exceeding depth of 6-inches each.

J. Drainage Fill Placement:
   1. Provide drainage fill material where shown to the limits shown or indicated.
   2. Place drainage fill material in compacted layers of uniform thickness not exceeding depth of 6-inches each. Compact lifts of drainage fill using suitable compaction equipment.

K. Granular Fill Placement
   1. Place granular fill on compacted, unscarified fill or subgrade.

L. Compaction Density Requirements:
   1. Compaction required for all types of fills shall be in accordance with Table 31 23 34-A of this Section. Moisten material or aerate the material as necessary to provide the moisture content that will facilitate obtaining the required compaction.
   2. Fill shall be wetted and thoroughly mixed to achieve optimum moisture content plus-or-minus 3-percent, with the following exceptions:
      a. On-site clayey soils: Optimum to plus 3-percent.
   3. Replace natural, undisturbed soils or compacted soil subsequently disturbed or removed by construction operations with materials compacted as indicated in Table 31 23 34-A.

TABLE 31 23 34-A

REQUIRED MINIMUM DENSITY

Material	Percent Compaction (ASTM D698)	Uncompacted Lift (inches)
General Fill		
More than 5-feet below final grade	100	8
Less than 5-feet below final grade	95	8
Select Fill		
Below concrete slabs or mats	100	8
Below pavement and sidewalks	100	12
Behind concrete walls	95	8
Subbase Material		
Below pavement and sidewalks	100	12
All other locations	100	8
Drainage Fill	N/A	6
Structural Fill	98	-
Granular Fill	100	-
Landscaped Areas		
Subgrade	98	-
Topsoil	85	

4. Field quality control testing for density; to verify that specified density was obtained, will be performed during each day of compaction Work. Responsibility for field quality control testing is specified in the "Field Quality Control" Article in Part 3.
5. When field quality control testing indicates unsatisfactory compaction, provide additional compaction necessary to obtain the specified compaction. Perform additional compaction Work at no additional cost to Owner until specified compaction is obtained. Such work includes complete removal of unacceptable (as determined by Engineer) fill areas and replacement and re-compaction until acceptable fill is provided in accordance with the Contract Documents.

M. Replacement of Unacceptable Excavated Materials: In cases where over-excavation to replace unacceptable soil materials is required, backfill the excavation to required subgrade with select fill material and thoroughly compact in accordance with Table 31 23 34-A and the associated "Compaction Density Requirements" in this Article. Slope the sides of excavation in accordance with the maximum inclinations specified for each structure location

3.9 SITE GRADING

A. General:
1. Uniformly grade areas within limits of grading under this Section, including adjacent transition areas. Finished grades should be smooth and provide positive drainage.
   a. Rough Grade Plus or minus 0.1 foot
   b. Finish Grade Plus or minus 0.1 foot

2. Smooth subgrade surfaces within specified tolerances, compact with uniform levels or slopes between points where elevations are shown, or between such points and existing grades.

B. Topsoil: The top 4-inches of soil in landscaped areas shall be topsoil.

C. Protection: Protect areas which have been graded from equipment traffic.

D. Grading Outside Building Lines: Grade areas adjacent to building lines to drain away from structures and to prevent ponding. Finish surfaces free of irregular surface changes, and shall comply with the following:

E. Grassed Areas or Areas Covered with Gravel, Stone, Wood Chips, or Other Special Cover: Finish areas to receive topsoil or special cover to within not more than one inch above or below the required subgrade elevations.

F. Sidewalks: Shape surface of areas under sidewalks to line, grade, and cross section, with finish surface not more than 1-inch above or below the required subgrade elevation.

G. Pavements: Shape surface of areas under pavement to line, grade, and cross section, with finish surface not more than ½-inch above or below the required subgrade elevation.

H. Grading Surface of Fill Under Concrete Slabs: Grade smooth and even, free of voids, compacted as specified, and to required elevation. Provide final grades within a tolerance of ½-inch when tested with a 10-foot straight edge.

I. Compaction: After grading, compact subgrade surfaces to the depth and percentage of maximum density for each area classification.

3.10 CONTROLLED LOW STRENGTH MATERIAL (CLSM)

A. Controlled Low Strength Materials Placement:
1. Discharge CLSM from the mixer by reasonable means into the space to be filled.
2. Bring the fill material uniformly up to the fill line indicated on drawings.
3. Placement of fill over the CLSM may proceed after a curing period of not less than 3-days.

3.11 SITE PAVEMENT SUBBASE COURSE

A. General:
1. Place subbase material, in layers of specified thickness, over ground surface to support pavement base course.
2. After completing filling and grading, shape and compact pavement subgrade to an even, firm foundation in accordance with this Section. Remove unsuitable subgrade materials, including soft materials, boulders, vegetation, and loose stones, and replace with compacted fill material as directed by Engineer.

B. Undercutting: Undercutting, unless authorized by the Engineer, shall be replaced and compacted at the Contractor's expense. If the material, after excavation to subgrade, is found to be soft, spongy or unfit for use as subgrade, such unsuitable material shall be removed to a depth as directed by the Engineer and the subgrade shall be brought to proper elevation by filling with suitable material from excavation or from an approved borrow site.

C. Grade Control:
   1. During construction, maintain lines and grades including crown and cross-slope of subbase course.

D. Placing of Pavement Subbase Course:
   1. Place subbase course material on prepared subgrade in layers of uniform thickness, in accordance with indicated cross-section and thickness. Maintain optimum moisture content for compacting subbase material during placing operations.
   2. When indicated on the drawings, provide geotextile separation fabric over the prepared subgrade

E. Compaction and Grade Control: Comply with compaction requirements for excavation and fill in this Section, and the following requirements:
   a. Compaction with roller shall begin at the sides of the area to be paved and continue toward the center. Continue compaction until there is no movement of the course ahead of the roller.
   b. After compaction of top lift of pavement subbase, provide and uniformly spread pipe bedding material and screenings compacted, on the surface, and sweep using gang-dragged broom, followed by compaction.
   c. After rolling, check for grade with a line not less than 40-feet in length; depression over ½-inch deep shall be filled to satisfaction of Engineer.
   d. After completing compaction, other than that necessary for bringing material for the next course, do not haul or drive over the compacted subbase.
   e. Do not install pavement subbase in excess of 500-feet in length without compacting to prevent softening of the subgrade.
   f. If subgrade material becomes churned up into or mixed with the subbase material, remove the mixed material and replace with clean, compacted subbase material.

3.12 DISPOSAL OF EXCAVATED MATERIALS

A. Unsuitable materials encountered in an excavation shall be removed by the Contractor and backfilled with suitable material and compacted. Unsuitable materials include organic soils, muck, soft and compressible silts and clays and running sands.

B. Excavated materials not required for topsoil, fill or backfill shall be removed from the site of the work by the Contractor, but none shall be deposited on private property without written consent of the property owner.

3.13 TEMPORARY BARRIERS

A. Provide temporary barrier surrounding excavations and excavation work areas to provide temporary protection to persons and property. Barrier shall have openings only at vehicular, equipment, and worker access points.

B. Minimum Material Requirements for Temporary Barriers:
   1. Temporary barrier shall not be less snow fence-type fencing, 4-feet high.
   2. Fence shall be constructed of vertical hardwood slats measuring not less than 1-1/2 inches by 1/4 inch interwoven with strands of horizontal wire, or shall be of equivalent plastic construction.
   3. Posts:
      a. Posts shall be steel, either “U”-, “Y”-, “T”-shaped, or channel section.
      b. Posts shall have a nominal weight of not less than 0.33-pound per linear foot, exclusive of the anchor.
      c. Posts shall have tapered anchors weighing not less than 0.67 pounds, each firmly attached by means of welding, riveting or clamping.
      d. Posts shall have corrugations, knobs, notches, or studs placed and constructed to engage a substantial number of fence line wire in the proper position.
      e. Provide each post with sufficient quantity of galvanized wire fasteners or clamps, of not less than 0.120 inch diameter, for attaching fence wire to post.

3.14 FIELD QUALITY CONTROL

A. Field inspection, sampling and testing shall be performed.

B. Site Tests: Owner will employ an independent testing laboratory to perform field quality control testing.
   1. Testing Laboratory Scope:
      a. Perform field moisture content and density tests to ensure that the specified compaction of embedment and fill materials has been obtained.
      b. Perform tests of actual unconfined compressive strength or bearing tests on structure subgrades.
      c. Report results of each test to CFPUA, Engineer, and Contractor.
   2. Authority and Duties of Testing Laboratory:
      a. Technicians representing the testing laboratory shall inspect the materials in the field, perform testing, and report findings. When materials furnished or the Work performed does not comply, technician will direct attention of CFPUA, Engineer, and Contractor to such failure.
      b. Technician will not act as foreman or perform other duties for Contractor. Work will be checked as it progresses, but failure to detect defective Work or non-complying materials shall not in any way prevent later rejection when defect is discovered. Technicians are not authorized to revoke, alter, relax, enlarge, or release requirements, or to approve any portion of the Work.
   3. Responsibilities and Duties of Contractor:
      a. To facilitate testing laboratory, Contractor shall advise testing laboratory at least 2-days in advance of excavating filling operations to allow for assignment of personnel for field quality control testing.

b. It shall be Contractor's responsibility to control construction operations to accomplish the specified compaction for fill and trench construction and confirm tests verify that Contractor has complied, and is complying relative to compaction control.
c. Contractor shall demonstrate adequacy of compaction equipment and procedures before exceeding one or more of the following quantities of earthwork:
    1) 200 linear feet of trench embedment and backfill.
    2) 10 cubic yards of select fill.
    3) 100 cubic yards of general fill.
    4) 50 cubic yards of subbase material.
d. Each test location shall include tests for each layer, type, or class of fill to finish grade.

4. Testing laboratory will inspect and indicate acceptable subgrades and fill layers using the interval/units listed below as a guide. Actual inspection and testing interval/units will vary based on specific project conditions.
    a. Trenches for pipelines and underground facilities (including buried ductbanks):
        1) In Open Fields: Two locations every 1,000 linear feet.
        2) Along Dirt or Gravel Roads or Off Traveled Right-of-Way: Two locations every 500 linear feet.
        3) Crossing Paved Roads: Two locations along each crossing.
        4) Under Pavement Cuts or Within Two Feet of Pavement Edges: One location every 400 linear feet.
    b. Footing Subgrade: For each stratum of soil on which footings will be placed, perform not less than one test to verify required design bearing capacities. Subsequent verification and approval of each footing subgrade may be based on a visual comparison of each subgrade with related tested strata, when acceptable to Engineer.
    c. For Select Fill: On 30-foot intervals on all sides of the structure for every compacted lift, but not less than one per lift on each side of the structure for structures less than 60 feet long on a side.
    d. For General Fill: One per 1,000 square feet on every compacted lift.
    e. Subbase Material: One per 1,000 square feet on every compacted lift.
5. Test reports shall be provided to Owner, Engineer and Contractor.
6. If testing laboratory reports or inspections indicate subgrade, fills, or bedding compaction below specified density, Contractor shall remove unacceptable materials as necessary and replace with specified materials and provide additional compaction at Contractor's expense until subgrades, bedding, and fill are acceptable.

END OF SECTION

TABLE 1 Classes of Embedment and Backfill Materials

Class	Type	Soil Group Symbol D 2487	Description	Percentage Passing Sieve Sizes			Atterberg Limits		Coefficients	
				1½ in. (40 mm)	No. 4 (4.75 mm)	No. 200 (0.075 mm)	LL	PI	Uniformity C_U	Curvature C_C
IA	Manufactured Aggregates: open-graded, clean	None	Angular, crushed stone or rock, crushed gravel, broken coral, crushed slag, cinders or shells; large void content; contain little or no fines.	100 %	≤10 %	<5 %	Non Plastic			
IB	Manufactured, Processed Aggregates: dense-graded, clean	None	Angular, crushed stone (or other Class 1A materials) and stone sand mixtures with gradations selected to minimize migration of adjacent soils; contain little or no fines (see X1.3).	100 %	≤50 %	<5 %	Non Plastic			
II	Coarse-Grained Soils, clean	GW	Well-graded gravels and gravel-sand mixtures; little or no fines.	100 %	<50 % of "Course Fraction"	<5 %	Non Plastic		>4	1 to 3
		GP	Poorly graded gravels and gravel-sand mixtures; little or no fines.						<4	<1 or >3
		SW	Well-graded sands and gravelly sands; little or no fines.		>50 % of "Course Fraction"				>6	1 to 3
		SP	Poorly graded sands and gravelly sands; little or no fines.						<6	<1 or >3
	Coarse-Grained Soils, borderline clean to w/fines	e.g. GW-GC, SP-SM.	Sands and gravels which are borderline between clean and with fines.	100 %	Varies	5 % to 12 %	Non Plastic		Same as for GW, GP, SW and SP	
III	Coarse-Grained Soils With Fines	GM	Silty gravels, gravel-sand-silt mixtures.	100 %	<50 % of "Course Fraction"	12 % to 50 %		<4 or <"A" Line		
		GC	Clayey gravels, gravel-sand-clay mixtures.					<7 and >"A" Line		
		SM	Silty sands, sand-silt mixtures.		>50 % of "Course Fraction"			>4 or <"A" Line		
		SC	Clayey sands, sand-clay mixtures.					>7 and >"A" Line		
IVA[A]	Fine-Grained Soils (Inorganic)	ML	Inorganic silts and very fine sands, rock flour, silty or clayey fine sands, silts with slight plasticity.	100 %	100 %	>50 %	<50	<4 or <"A" Line		
		CL	Inorganic clays of low to medium plasticity, gravelly clays, sandy clays, silty clays, lean clays.					>7 and >"A" Line		
IVB	Fine-Grained Soils (Inorganic)	MH	Inorganic silts, micaceous or diatomaceous fine sandy or silty soils, elastic silts.	100 %	100 %	>50 %	>50	<"A" Line		
		CH	Inorganic clays of high plasticity, fat clays.					>"A" Line		
V	Organic Soils	OL	Organic silts and organic silty clays of low plasticity.	100 %	100 %	>50 %	<50	<4 or <"A" Line		
		OH	Organic clays of medium to high plasticity, organic silts.				>50	<"A" Line		
	Highly Organic	PT	Peat and other high organic soils.							

[A] Includes Test Method D 2487 borderline classifications and dual symbols depending on plasticity index and liquid limit.

Note—"Course Fraction" as used in this table is defined as material retained on a No. 200 sieve.

SECTION 33 01 12

IDENTIFICATION FOR UTILITIES PIPING

PART 1 GENERAL

1.1 SUMMARY

A. Section Includes:
   1. Underground Pipeline Detection and Warning.
      a. Tracer wire system
         1) Vinyl/PVC adhesive tape.
         2) Polyethylene adhesive tape.
         3) Direct bury wire splice kits.
      b. Tracer wire system testing
      c. Metal detectable underground warning tape.
      d. Marker posts.
   2. Above Ground Piping and Valve Identification at CFPUA Facility Sites.
      a. Tags
      b. Applied pipe markers.

B. Related Requirements:
   1. Section 09 91 00 - Painting and Coating: Execution requirements for painting specified by this Section.
   2. Section 33 05 07.13 - Horizontal Directional Drilling: Materials and methods for piping and appurtenances.
   3. Section 33 05 07.23 - Jacking and Boring: Materials and methods for carrier pipes and appurtenances.
   4. Section 33 14 13 - Water Distribution Piping and Appurtenances: Materials and methods for piping and appurtenances.
   5. Section 33 14 14 - Public Water Service Connections: Materials and methods for piping, valves, and appurtenances.
   6. Section 33 14 13 - Water Distribution Valves, Fire Hydrants, and Backflow Prevention: Materials and methods for valves, and appurtenances.
   7. Section 33 31 23 - Sanitary Sewer Force Mains, Valves and Appurtenances: Materials and methods for piping, valves, and appurtenances.
   8. Section 40 71 00 - Magnetic Flow Meter
   9. Section 43 21 39.13 - Submersible End Suction Pumps: Materials and methods for piping, valves, pumps, and other station equipment.

1.2 REFERENCE STANDARDS

A. NCGS 87-8A Underground Utility and Damage Prevention Act

B. American Public Works Association: Uniform Color Code

C. American Society of Mechanical Engineers: ASME A13.1 - Scheme for the Identification of Piping Systems.

1.3 SUBMITTALS

A. Product Data: Submit manufacturer's catalog literature for each product required.

PART 2 PRODUCTS

2.1 UNDERGROUND PIPELINE DETECTION AND WARNING

1. Tracer Wire
   a. Vinyl/PVC adhesive tape.
   b. Polyethylene adhesive tape.
2. Direct bury wire splice kits.
3. Metal detectable underground warning tape.
4. Refer to CFPUA Material Specification Manual (MSM) for the following products:

MSM Section	**Material**
K-Miscellaneous	Warning Tape
L-Electrical	Wire and splice kits

2.2 ABOVE GROUND PIPING AND VALVE IDENTIFICATION

A. Above Grade Pipe Identification
   1. Color-Coding and Lettering Size: Conform to ASME A13.1.
   2. Applied Pipe Markers
      a. Factory-fabricated, flexible, semi-rigid plastic.
      b. Preformed to fit around pipe or pipe covering.
      c. Larger sizes may have maximum sheet size with spring fastener.
   3. Applied Tape Pipe Markers
      a. Flexible, vinyl film tape with pressure-sensitive adhesive backing and printed markings.
   4. Stencils
      a. Clean-cut symbols.
      b. Letters:
         1) Up to 2-inch Outside Diameter of Insulation or Pipe === ½-inch high letters.
         2) 2-½- to 6-inch Outside Diameter of Insulation or Pipe == 1-inch high letters.
         3) Over 6-inch Outside Diameter of Insulation or Pipe == 1-¾-inch high letters.
         4) Stencil Paint: As specified in Section 099000 - Painting and Coating; semi-gloss enamel.

B. Valves
   1. Plastic Tags
      a. Laminated three-layer plastic with engraved letters on light, contrasting background color.
      b. Minimum Tag Size and Configuration: 1-½ inch.
   2. Metal Tags
      a. Stainless-steel construction; stamped letters.

b. Minimum Tag Size and Configuration: 1-½ inch with finished edges.

PART 3 EXECUTION

3.1 PREPARATION

A. Identify prescribed materials and color code for each pipeline type to be installed.

B. Degrease and clean surfaces to receive adhesive for identification materials.

C. Prepare surfaces as specified in Section 09 90 00 - Painting and Coating for stencil painting.

3.2 INSTALLATION

A. Buried Pipeline Detection and Warning
   1. Tracer wire system termination and access.
      a. Tracer wire systems must be installed as a single continuous wire. No looping or coiling of wire is allowed.
      b. All tracer wire termination points must be grade level/in-ground access boxes identified with “sewer” or “water” cast into the cap.
      c. A minimum of 2 ft. of excess/slack wire is required in all tracer wire access boxes after meeting final elevation.
      d. Runs without service laterals or hydrants shall provide intermediate tracer wire access at minimum 1,000-foot intervals and must be provided utilizing a grade level/in-ground access box located at the edge of the road right-of-way and outside the roadway surface.
      e. Termination and access shall be installed as indicated on the Drawings for all pressure piping at the following locations:
         1) Cast iron boxes located at minimum 1,000-foot intervals
         2) All in-line valve boxes on water mains and services and on sewer force mains and services.
         3) At hydrant valve boxes and hydrants
         4) Water meter service boxes
   2. Tracer wire repairs
      a. Any damage occurring during installation of the tracer wire must be immediately repaired by removing the damaged wire, and installing a new section of wire with approved connectors. Taping and/or spray coating shall not be allowed.
   3. Tracer wire attachment and connections
      a. Tracer wire shall be installed at the top half (11-1 o’clock position) of the pipe and secured (taped/tied) at 12-foot intervals.
      b. Mainline tracer wire shall not be connected to existing conductive pipes. Treat as a mainline dead end and ground using an anode buried at the same depth as the tracer wire.
      c. All service lateral tracer wires shall be a single wire, connected to the mainline tracer wire using a mainline to lateral lug connector, installed without cutting/splicing the mainline tracer wire.

d. In occurrences where an existing tracer wire is encountered on an existing utility that is being extended or tied into, the new tracer wire and existing tracer wire shall be connected using approved splice connectors and shall be properly grounded at the splice location as specified.
e. A mainline tracer wire must be installed, with all service lateral tracer wires properly connected to the mainline tracer wire, to ensure full tracing/locating capabilities from a single connection point.
f. Lay Mainline tracer wire continuously on the North or East side of valves and fittings.
g. Tracer wire on all service laterals must terminate at an approved tracer wire access located directly above the service lateral at the edge of road right of way.
h. Connect tracer wire using direct bury splice kits in accordance with manufacturer's recommendations

4. Tracer wire testing and verification
   a. Provide locating equipment to verify tracer wire locating system in presence of CFPUA or ENGINEER construction observer.
   b. The test will take the following form:
      1) A standard 5-watt generator will be used to provide an AC current on the wire.
      2) The frequency of the signal from the generator will be initially restricted to 33 kHz or less.
      3) A standard hand-held detector will be used to trace the signal.
   c. The installed tracer wire will be deemed to pass the test if using the above set up:
      1) The tracer wire is accessible at all access points.
      2) The tracer wire can be traced from access point to access point.
      3) Widely-spaced access points can be traced out in the worst-case from each end to a common meeting point between them.
      4) Depth readings are consistent and accurate to within a 15:1 depth to diameter ratio.
5. Horizontal Directional Drill and Bore/Jack Crossings
   a. Follow special tracer wire procedures identified in those specification sections.

B. Buried Pipeline Metal Detectable Warning Tape
   a. For all diameter potable water mains (excluding 1-inch service lines) and all diameter sewerage force mains
      1) Install 1'-6" deep and directly above pipeline during backfilling operation.

C. Above Ground Piping and Valve Identification at CFPUA Facility Sites:
1. Piping:
   a. Identify with plastic tape pipe markers or stenciled painting.
   b. Apply stencil painting as specified in Section 09 90 00 - Painting and Coating.
   c. Identify service, flow direction, and pressure.
   d. Install in clear view and align with axis of piping.

e. Locate identification not to exceed 20 feet on straight runs, including risers and drops, adjacent to each valve and tee, at each side of penetration of structure or enclosure, and at each obstruction.

2. Valves:
   a. Install tags using corrosion-resistant chain.
   b. Number tags consecutively by type and location.

END OF SECTION

SECTION 33 01 30.86

MANHOLE RIM ADJUSTMENT

PART 1 GENERAL

1.1 SUMMARY

A. Section Includes:
   1. Raising manhole frames and covers.
   2. Replacing manhole frames and covers.

B. Related Requirements:
   1. Section 33 05 13 – Precast Concrete Manholes and Utility Structures

1.2 REFERENCES

A. CFPUA Material Specification Manual (MSM)

1.3 SUBMITTALS

A. Product Data: Manufacturer information for manhole covers and riser rings construction, features, configuration, and dimensions.

B. Manufacturer's Certificate: Products meet or exceed specified requirements.

1.4 DELIVERY, STORAGE, AND HANDLING

A. Store materials according to manufacturer instructions.

B. Protection:
   1. Protect materials from moisture and dust by storing in clean, dry location remote from construction operations areas.
   2. Provide additional protection according to manufacturer instructions.

1.5 FIELD CONDITIONS

A. Field Measurements:
   1. Verify field measurements prior to fabrication.

PART 2 PRODUCTS

2.1 MATERIAL SPECIFICATION MANUAL

A. Refer to CFPUA Material Specification Manual (MSM) for the following products:

MSM No.	Product

I	Manhole Casting/ Standard Ring and Cover
K	Manhole Casting Adjustment Rings/ HDPE
N	Concrete/ Non-Shrink Grout, Type S Mortar

2.2 RISER RINGS

A. Clay Brick Units:
   1. Description:
      a. Solid units.
      b. Comply with ASTM C32 or AASHTO M91.

B. Precast circular rings.

PART 3 EXECUTION

3.1 EXAMINATION

A. Verify and locate manholes requiring grade adjustment.

3.2 INSTALLATION

A. Raising Manhole Frames and Covers:
   1. Locate and raise manholes to grade as indicated.
      a. Cone Sections:
         1) Do not adjust elevation greater than 8 inches without addition of a new manhole section.
         2) Use no more than three courses (8 inches) of brick or precast concrete riser rings to achieve indicated elevation for frame and cover.
      b. Flat Top Manholes:
         1) Shall not be adjusted more than a single course of brick (4 inches).

B. Replacing Manhole Frames and Covers:
   1. Locate manholes for replacement of frames and covers as indicated.
   2. Deliver removed manhole frames and covers to Owner as maintenance materials.
   3. Install new frames and covers for manholes as indicated.
   4. Adjust new frames and covers to match finished grade as indicated.
   5. Seal joints between manholes and manhole frames.

C. Paving Restoration:
   1. Restore bituminous paving areas as specified.

D. Landscaping Restoration:
   1. Restore grassed areas as specified.

END OF SECTION

SECTION 33 05 05.31

HYDROSTATIC TESTING

PART 1 GENERAL

1.1 SUMMARY

A. Section Includes: Hydrostatic testing of pressure piping.

B. Related Requirements:
   1. Section 33 31 23, Sanitary Sewer Force Mains, Valves and Appurtenances: Pipe materials and accessories normally encountered with municipal sanitary sewage force mains.
   2. Section 33 14 13, Water Distribution Piping, Valves, Hydrants and Appurtenances: Pipe materials and accessories normally encountered with pressurized water distribution systems.

1.2 REFERENCE STANDARDS

A. American Water Works Association:
   1. AWWA C600 - Installation of Ductile-Iron Water Mains and Their Appurtenances.

1.3 ADMINISTRATIVE REQUIREMENTS

A. The foreman of the contracting crew must speak fluent English.

B. Any event requiring a CFPUA representative to be present will require a minimum of two (2) business day notice to schedule the event.

C. No valves are to be operated unless a CFPUA representative is present. Any valves operated without a CFPUA representative present or a directive may be subject to penalties in accordance with CFPUA's Ordinance.

1.4 SUBMITTALS

A. Section 01 33 00, Submittals.

B. Submit following items prior to start of testing upon request:
   1. Testing procedures.
   2. List of test equipment.
   3. Testing sequence schedule.
   4. Provisions for disposal of flushing and test water.
   5. Certification of test gage calibration.

C. Test and Evaluation Reports: Indicate results of piping tests.

D. Qualifications Statement:
   1. Submit qualifications for applicator upon request.

PART 2 PRODUCTS

2.1 HYDROSTATIC TESTING

A. Equipment:
   1. Pressure pump.
   2. Pressure hose.
   3. Water meter.
   4. Test connections.
   5. Pressure relief valve.
   6. Pressure Gage: Calibrated to 0.1 psi.

PART 3 EXECUTION

3.1 EXAMINATION

A. Section 01 70 00, Execution and Closeout Requirements: Requirements for installation examination.

B. Verify that piping and appurtenances are installed and ready for testing.

C. Verify that trenches are backfilled.

D. Verify that pressure piping thrust restraints have been installed. Where any section of piping is provided with concrete thrust blocking, the hydrostatic test shall not be made until at least 5 days after installation of the concrete thrust blocking unless otherwise approved.

3.2 FIELD QUALITY CONTROL

A. Section 01 70 00, Execution and Closeout Requirements.

B. Testing of Pressure Piping to be performed according to AWWA C600 and the following:
   1. Hydrostatic testing procedure:
      a. Testing shall be performed in the presence of the CFPUA representative. Testing shall be scheduled with CFPUA a minimum of two business days in advance and shall not proceed until granted approval by CFPUA. The contractor will pre-test the lines prior to the CFPUA representative arrival. The contractor is to cancel the test if the lines will not pass the required test, correct all visible leakage, and locate and repair leakage in lines which exceeds the specified amounts. When completed, the contractor will re-schedule the test.
      b. Slowly fill with clean potable water portion of piping to be tested, expelling air from piping. Fill and test mains and services.
      c. Close air vents after air is expelled.

d. Raise pressure to specified test pressure. For purposes of testing, working pressure shall be 100 psi and test pressure shall be 150 psi. The pressure gauge must be liquid filled with 2 psi increments maximum. The gauge must be a minimum of three feet above grade. No more than 3 psi can be lost during the two-hour test. The gauge must return to 0 psi when the test is completed. There will be no allowable leakage. Air testing will not be accepted on mains and services, but will be accepted for tapping sleeves, 40 psi for 15 minutes or hydrostatic testing @150 psi for 15 min with zero pressure loss for both.
e. Observe joints, fittings, and valves undergoing testing.

2. Hydrostatic Testing Requirements for Pipe Burst Installations
   a. Subject pipe burst installations to a pressure test before connecting to direct bury mains. Testing shall be performed in the presence of the CFPUA representative. Testing shall be scheduled with CFPUA a minimum of two business days in advance and shall not proceed until granted approval by CFPUA.
   b. The pipe shall be filled with clean potable water and pressurized to 1.5 times the working pressure at the point of testing with a minimum of 150 psi, for a period of no less than 24 hours and then subjected to the specified test pressure.
   c. Pretest pipe burst installations for a period of 2 hours before notifying CFPUA that the main is ready for a final pressure test. No final pressure test shall begin after 2:00 pm.
   d. Perform testing as follows:
      1) Test pressure shall be at least 1.5 times the working pressure at the point of testing with a minimum of 150 psi. Test pressure shall not be less than 1.25 times the working pressure at the highest point along the test section. Test pressure shall not exceed the pipe or thrust restraint design pressure. Test pressure shall not vary by more than +/- 5 psi for the duration of the test.
      2) The pressure test duration shall be 2 hours.
      3) Ensure that the pipe is full of water and that the air has been removed before testing.
   e. Pressure testing is the responsibility of the Contractor, who shall provide materials, labor, and equipment.
3. If testing of piping and appurtenances indicates leakage greater than that allowed, locate source of leakage, make corrections, and retest until leakage is within acceptable limits.
4. Correct visible leaks regardless of quantity of leakage.

END OF SECTION

SECTION 33 05 07.23

JACKING AND BORING

PART 1 GENERAL

1.1 SUMMARY

A. SCOPE:

1. Design, furnish and install the proposed piping alignment by jacking and boring construction methods, as shown on the drawings and conform to this specification. The work includes, but not limited to, survey, design, excavation, dewatering, removal of all materials encountered in the jacking and boring operations, disposal of all material not required in the work, grouting bulkheads, testing, cleaning, restoration, and incidentals as shown on the drawings and as specified herein.
2. The jacking and boring construction method shall consist of pushing (jacking) the casing pipe into the earth with a boring auger rotating with the casing/pipe to remove the spoil. The operations are to be completed while simultaneously providing ground stabilization techniques. The method shall include provisions for preventing uncontrolled inflow of loose or saturated soils.
    a. Contractor is responsible for completing any additional geotechnical/subsurface investigations required to establish the appropriate parameters (i.e., limiting pressures, setback distances, depth of cover, etc.) for completing the design of the jacking and alignment, as specified herein.
    b. Owner is responsible for obtaining the required general construction permits, easements and approvals, from the NCDOT or railroad agency. When encasement pipe is installed in the State right-of-ways the entire installation shall be as required by NCDOT. Where encasement pipe is installed in Railroad right-of-ways the entire installation shall be as required by the appropriate railroad agency. Where encasement pipe is installed across rivers, the entire installation shall be as required by USACE/NCDEQ. Where encasement pipe is installed in the City of Wilmington right-of-ways the contractor will pay and be responsible for obtaining the permits.
3. General:
    a. Be responsible for the final design and constructed product, furnishing the design data, obtaining approval from agencies and for the safety of the operations and for personnel engaged in the work.
    b. Be responsible for furnishing the qualified labor and superintendence necessary for this method of construction.
    c. Furnish all items necessary to perform the jack and boring, and construct both the casing and carrier piping to the lines and grade shown on the drawings.
    d. Installation of all jointing and gasketing materials, specials, flexible couplings, mechanical couplings, harnessed and flanged adapters, sleeves, tie rods, and all other Work required to complete the jack and bore, or tunneling installations.
    e. Any modifications, damages or detrimental consequences to the existing ground conditions, structures, facilities or utilities as a result of the Contractor's Work shall be repaired and restored to its original condition as directed by the Engineer at no additional cost to the owner.

4. Coordination:
    a. Review installation procedures under other Sections and other contracts and coordinate with the Work that is related to this Section.
    b. Be responsible for coordinating construction activities with the respective authorities.
5. Related Sections:
    a. Section 32 92 01 – Seeding and Sodding.
    b. Section 31 23 34 – Excavation, Trenching, Dewatering, and Backfilling.
    c. Cape Fear Materials Specification Manual for the following materials:
        1) Ductile Iron Pipe.
        2) PVC C-900

1.2 COORDINATION

A. Section 01 30 00 – Administrative Requirements: Requirements for coordination.

B. Coordinate Work of this Section with the NCDOT, Cape Fear Public Utility Authority, City of Wilmington (COW), public agencies, and owners of public utilities or other facilities.

1.3 QUALITY ASSURANCE

A. Reference Standards: Comply with applicable provisions and recommendations of the following, except as otherwise shown or specified.
    1. American Railway Engineering Association: Specifications, Part 5; Pipeline - Crossings Under Tracks or Located on Railroad Property - For Flammable and Nonflammable Substances.
    2. Steel casing pipe conforming to ASTM A-139 and AWWA C200.
    3. Carrier piping, Ductile Iron Pressure Class 250, ANS/ AWWA C151/A21.51, installation per ANSI/AWWA C600.
    4. Latest edition of ASTM D1248, ASTM D3350, ASTM F-714.

B. All supervisory personnel must be adequately trained and will have at least ten years of experience in jack and boring operations. Contractor will have to submit the names and resumes of all supervisory field personnel prior to the start of construction.

C. Materials and methods of construction used on railroad property shall be subject to the approval of the specific railroad company. Contractor to conduct work operations fully within the railroad company rules, regulations, and requirements.

1.4 SUBMITTALS

A. Engineer will base the review of submitted details and data on the requirements of the completed work, safety of the work in regard to the public, potential for damage to public or private utilities and other existing structures and facilities, and the potential for unnecessary delay in the execution of the work. Such review shall not be construed to relieve the Contractor in any way of his responsibilities under the contract.

B. Contractor shall not proceed with field activities until the required drawings and submittals are reviewed and accepted by the Engineer.

C. Prepare and submit to the Engineer and Owner for review and approval no less than 20 days prior to starting the bore:
   1. Jacking and Boring Plan describing the equipment, methods, operational procedures, construction sequence, contingency plans, and other items of concern to be performed during the jacking and boring construction.
   2. Project Safety Plan.
   3. Submit site layout, equipment arrangement, and entry/exit pits drawings and technical specifications of the machine and equipment (including any modifications) proposed.
   4. Construction drawings, Specifications, and Contingency plans shall be submitted on the following items:
      a. Complete details of the site clearing, excavation, drainage, security, and equipment mobilization including, but not limited to, the methods, procedures and equipment arrangement to be used during the construction.
      b. Complete details, drawings, and calculations signed and seal by an Engineer licensed in the state of North Carolina, of the significant factors and constraints associated with jacking and boring installations including, but not limited to, fluid pressures, jacking forces, pipe capacities, jacking and receiving pits shoring design, etc.
      c. Provide plan and profile of the proposed jacking and boring alignments, indicating depth, angle of deflection, and radius of all pipe bends along the alignment.
      d. Complete details of the grouting techniques/methods to be utilized for filling grout into the annulus between the adjacent soils and the outside of the casing piping, including but not limited to, fitting procedures, equipment, pumping procedures, fluid pressures, mixtures and plug systems. Also include methods of monitoring and controlling the grouting pressures.
      e. Method of monitoring and controlling the specified line and grade of excavation including, but not limited to, the methods, procedures, reliability, and necessary ancillary equipment to be used during construction operations.
      f. Complete details of the groundwater control, launching seals, muck/spoils containment, dewatering, drying, and removal including, but not limited to, the methods, procedures, equipment, contingency plans and off-site disposal location.
      g. Complete details of the casing and carrier piping capacities, maximum jacking loads, storage, assembly, and installation including, but not limited to, the methods, procedures, and equipment to be used.

D. Quality Control Methods: At least 10 days prior to the start of the jacking and boring submit a description of his quality control methods he proposes to use during the operations to the Engineer. The submittal shall describe:
   1. Procedures for controlling and checking line and grade.
   2. Field forms for establishing and checking line and grade.

E. Safety: Procedures including, but not limited to, monitoring for gases encountered shall be submitted.

F. Hazardous chemical list as well as all MSDS and technical data sheets.

G. Contractor must demonstrate expertise in "trenchless" methods by providing a list of five (5) utility references for which similar work has been performed in the last two years. The references should include a name and telephone number where contact can be made to verify the Contractor's capability. The Contractor must provide documentation showing successful completion of the projects used for reference. Conventional trenching experience will not be considered applicable.

H. Have completed jacking and boring casing installations of same diameter or larger and have successfully completed lengths equal to the drawings or longer, crossings of railroads, and crossings of major state roads. Provide documentation in qualification submittal.

I. Contractor is required to bring to the attention of the Engineer any known discrepancies with actual jacking and boring methods that the Contractor will be performing. This shall be stated, in writing, to Engineer no later than the pre-construction meeting.

J. As-Built Drawings:
   1. Submit As-built documentation to Engineer and Owner within 7 days of the drill operation.

1.5 PRODUCT DELIVERY, STORAGE AND HANDLING

A. Deliver materials to the site to ensure uninterrupted progress of the Work.

B. Handle all pipe, fittings, specials and accessories carefully with approved handling devices. Handling devices shall include ropes, fabric, or rubber-protected slings and straps. Chains, cables, or hooks inserted into the pipe ends shall NOT be used. Two slings spread apart shall be used for lifting each length of pipe. Do not drop or roll material off trucks.

C. Store pipes and fittings on heavy wood blocking or platforms so they are not in contact with the ground. Pipe supports shall be spaced suitably and of such widths as not to allow deformation of the pipe at the point of contact with the supports.

D. Stacking of pipe shall be limited to a height that will not cause deformation of the bottom pipes under anticipated temperature conditions.

E. All ends of stored piping shall be securely capped/plugged to prevent entry of soil, debris, and vermin.

PART 2 PRODUCTS

2.1 JACK AND BORING SYSTEM, GENERAL:

A. The jack and boring system shall consist of, but not limited to, the following components:
   1. Jacking system suitable for forcing the casing through the embankment.
   2. Auger Boring and Spoil removal system.

3. Pipe lubrication system.

B. Jacking and Boring over-cut shall not exceed ½-inch on the outside radius of the casing pipe being installed.

C. The excavation equipment and system shall be fully capable of excavating and removing all material that will be encountered during the construction operations.

D. The automated spoil transportation system shall match the excavation rate to the rate of spoil removal, maintaining settlement or heave within tolerances specified herein.
   1. If a slurry spoil transportation system is used, the groundwater pressure may be managed by use of the slurry pumps (which may be variable speed), pressure control valves and a flow meter. A slurry bypass unit shall be included in the system to allow the direction of flow to be changed and isolated, as needed. A solids separation process shall be provided when using slurry transportation systems. The process shall be designed to provide adequate separation of the spoil from the slurry so that the clean slurry can be returned to the cutting head for reuse.
   2. If an Auger spoil transportation system is utilized, the groundwater pressures may be managed by controlling the volume of spoil removal with respect to the advance rate (Earth Pressure Balance Method) and the application of compressed air. In soils with excessive groundwater, approval of the Engineer shall be required for the earth pressure balance auger systems. Approval shall be based on the evaluation of the equipment's ability to balance soil and groundwater pressures at the face, stability of the soils and the significance of the groundwater present.
   3. Contractor to identify and submit for approval the type of separation system to be used.

E. Pipe Jacking Equipment:
   1. The main jacks shall be mounted in a jacking frame and located in the drive (starting) shaft. The jacking frame successively pushes the steel casing pipes toward a receiving shaft. The jacking capacity shall be sufficient to push the auger/boring machine and/or length of casing piping through the ground.
   2. The main jacking equipment installed shall have a capacity greater than the anticipated jacking load. The hydraulic cylinder extension rate shall be synchronized with the excavation rate of the boring, which shall be determined by the specific soils conditions.
   3. Provide intermediate jacking stations when the total anticipated jacking force needed to complete the installation exceeds the designed maximum jacking force of the pipe.

F. Pipe Lubrication System:
   1. A pipe lubrication system may be utilized when anticipated jacking forces on the pipe are expected to exceed the capacity of the main jacks or exceed the pipe design strength with the appropriate safety factor. A prior approved lubricant shall be injected at the rear of the auger, or boring machine and, if necessary, through the casing pipe walls to lower the friction developed on the surface of the pipe during jacking and thereby reduce the jacking forces.

2.2 MATERIALS

A. Refer to the CFPUA Materials Specification Manual for a list of applicable materials including:
   1. Piping used for the conveyance of water, wastewater, and non-potable water, including:
      a. Ductile Iron Pipe: All ductile iron carrier pipe installed with joint inside an encasement pipe must utilize rigid restrained joints.
         1) A - Ductile Iron Pipe/ Restrained Push- On Joint/ TR Flex Joint (4" thru 36")
         2) A - Ductile Iron Pipe/ Restrained Push- On Joint/ Flex- Ring Joint (4" thru 36")
         3) A - PVC Pipe Restrained Joint Pipe & Couplings C – 900 (4" thru 12")

   2. Casing Pipe
      a. Use only new, welded or seamless steel pipe per ASTM A-139, Grade B. Casing minimum thickness to be 0.625-inches, or as required by the site-specific regulatory agencies or property owner. The casing wall thickness shall be designed to accommodate the maximum jacking load allowed, as well as the expected earth and live loads. Be fully responsible for the sufficiency of the casing thickness provided.
      b. Joints in steel casing pipe shall be butt-welded joints, conforming to the requirements of AWWA C206. Pipe 36 inches in diameter and larger shall be welded both inside and outside of the pipe/casing.
      c. After welding, the joint and the surrounding damaged or uncoated area shall be coated with the same material and to the same thickness as the shop applied coating.
      d. All steel casing pipe and welds shall meet or exceed either the site specific regulatory agency's requirement, or the manufacturer's minimum wall thickness to meet or exceed the greater of either: installation (jacking), loading, or carrier load requirements.
      e. The size (diameter) of the steel casing shall be in accordance with the table below. Larger encasement pipe sizes may be substituted upon per-approval or as directed by the Engineer or Owner.

Carrier Pipe OD	Encasement Pipe OD	Roadway Encasement Thickness	Encasement Pipe ID	Railroad Encasement Thickness	Encasement Pipe ID
6", 8", 10"	16"	0.250"	15.5"	0.281"	15.438"
12", 14", 16"	24"	0.250"	23.5"	0.375"	23.25"
18", 20"	30"	0.312"	29.376"	0.469"	29.062"
24"	36"	0.375"	35.25"	0.531"	34.938"
30"	42"	0.500"	41"	0.625"	40.75"
36"	48"	0.500"	47"	0.688"	46.624"

Exceptions to encasement pipe requirements shall be as shown on the drawings.

      f. All steel pipes shall be designed for the external and internal loads to which they will be subjected. Steel casing shall meet ASTM specifications and be designed to meet or exceed a minimum live load of a Cooper E-80 loading. The loading consists of 80 kip (356 kN) axle loads spaced 5-feet (1.5 m) on centers.
      g. K - Casing Insulators / Stainless Steel

h. Casing End Seals:
   1) Seal each end of casing pipe with brick and Type @ Mortar.

PART 3 EXECUTION

3.1 INSTALLATION

A. General:
   1. Comply with the lawful requirements of the North Carolina Department of Transportation, Cape Fear Public Utility Authority, public agencies, and owners of public utilities or other facilities respecting the safeguarding of structures and improvements that might be endangered by the jacking and boring, or microtunneling construction operations.
   2. Install the required steel casing by means of jacking and boring, specified herein, and as recommended by the pipe manufacturer.
   3. The jacking and boring, along with the installation of the casing pipe shall be done simultaneously and continuously until the casing pipe is in final position.
   4. Be responsible for his means and methods of jacking and boring, and shall ensure the safety of the work, the Contractor's employees, the public, and adjacent property, whether public or private.
   5. Maintain traffic flow at all times during the progress of the work. Provide adequate signs, barricades, flag persons, lights and other control devices in accordance with the provisions and requirements of the North Carolina Department of Transportation or City of Wilmington standards. No lanes of traffic shall be closed without prior approval.
   6. Contractor to provide erosion and sediment control to minimize erosion and the transport of sediment beyond the limits of the work area.
   7. Anticipate that portions of the jacking and boring will be below the groundwater table and dewatering will be required.
   8. Comply with all local, state, and federal laws, rules, and regulations at all times to prevent pollution of the air, ground, and water.
   9. Locate, mark and protect existing utilities and facilities in the work area. Perform test pits as required.
   10. If there is a conflict between manufacturer's recommendations and the Drawings or Specifications, request instructions from Engineer in writing, before proceeding.

B. Jacking and Boring Operations:
   1. Provide and maintain adequate boring equipment and install support systems as required.
   2. The boring operations shall be progressed on a 24-hour basis without stoppage (except for adding lengths of pipe) until the leading edge of the casing pipe has reached the receiving pit, unless identified otherwise by state agency's permit.
   3. The boring operations shall consist of excavating the embankment material ahead of the casing, remove excavated material through the pipe and force the pipe through the embankment with jacks into the spaced provided. No jetting, sluicing, or wet boring is permitted.
   4. All surfaces shall be smooth and uniform without bulges, dents, or warping of lengths, and only new pipe shall be used.

5. Finished lengths of pipe shall be furnished with beveled cut ends to facilitate proper welding of transverse joints. The diameter and wall thickness of the pipe shown on the drawings is the minimum required and no extra compensation shall be claimed by the Contractor if a larger and thicker pipe is used. Contractor is responsible in the event that the casing does buckle or collapse during these operations.
6. The over-cut by the cutting head shall not exceed the outside diameter of the casing pipe by more than ½-inch.
7. Required launching and receiving pits/shafts shall be excavated and maintained to the minimum dimensions necessary to perform the operations and allow for safe working practices.
8. The pits or shafts shall be adequately barricaded, sheeted, braced, dewatered, and ventilated as required, in accordance with applicable specifications and regulations.
9. Contractor to use thrust blocks designed to distribute loads in a uniform manner so that any deflection of the thrust block is uniform and does not impart excessive load on the shaft itself or cause the jacking frame to become misaligned.
10. Position jacks so that the resultant force is applied along the centerline of the casing pipe, and force is applied evenly to the entire end of the pipe.
11. Backstops shall be provided for adequately distributing the jack thrust without causing deformation of the soil or other damage.
12. Contractor to monitor and control the jacking pressure/force applied to ensure that pipe manufacturer's recommended limits are not exceeded.
13. Contractor responsible for all testing, survey, and documentation of the pre/post construction site conditions, in which to provide as a basis of comparison for the post construction conditions to be evaluated.
14. Once jacking has begun, the operation must continue without interruption, insofar as practical, to prevent the pipe from becoming firmly set in the embankment.

C. Steel Casing Installation
1. The installation of the casing shall be in accordance with manufacturer's recommendations and subject to the approval of the agency having jurisdiction.
2. The casing pipe shall be adequately protected to prevent crushing or other damage under the jacking pressures. Provide timbers for cushioning between the pipe pushed end and the jacking equipment.
3. The casing installation shall not produce upheaval, settlement, cracking, movement of the road.
4. Install casing piping concurrent with the bore, as earth is removed.
5. Surplus and unsuitable excavated material shall be disposed of by the Contractor.

D. Carrier Pipe Installation
1. All joints of the carrier piping, within the casing shall be restrained in accordance with the Section 33 31 23 – Sanitary Sewer Force Mains, Valves and Appurtenances.
2. Clean all dirt and debris from the casing piping.
3. Attach the centered/restrained casing spacers/guides to the carrier pipe sections, as required to prevent excessive sag, bending, shear stress and to support the pipe barrel in accordance with pipe manufacturer's recommendations. Piping is NOT to be supported by bells/joints.

4. A spacer shall be placed such that it supports the carrier pipe within 2 feet of the casing ends and a minimum of three spacers per 20-foot pipe section. For pipe sections, longer or shorter than 20 feet, follow the manufacturer's instructions and recommendations.
5. Lubricant for pipe guides shall be drilling mud or flax soap. Petroleum, or Oil based products are NOT allowed.
6. Protect and preserve the interior surfaces of the steel casing from damage.
7. Contractor to provide brick casing end seals.
8. K - Tracer wire shall be continued through casing.

E. Transitions from One Type of Pipe to Another:
1. Provide all necessary adapters, specials and connection pieces required when connecting different types and sizes of pipe or connecting pipe made by different manufacturers.

END OF SECTION

SECTION 33 05 09.33

THRUST RESTRAINT FOR UTILITY PIPING

PART 1 GENERAL

1.1 SUMMARY

A. Section Includes:
   1. Pipe joint restraint systems for all pressurized mains (water and wastewater force).
   2. Includes fittings, valves, dead-ends, and other locations where change in pipe direction requires joint restraint.

B. Related Requirements:
   1. Section 33 05 05.31 – Hydrostatic Testing of Water Distribution and Sanitary Sewer Force Mains: Materials and methods for pipeline cleaning and testing.
   2. Section 33 05 07.13 - Horizontal Directional Drilling: Materials and methods for piping and appurtenances.
   3. Section 33 05 07.23 - Jacking and Boring: Materials and methods for carrier pipes and appurtenances.
   4. Section 33 14 13 - Water Distribution Piping and Appurtenances: Materials and methods for piping and appurtenances.
   5. Section 33 14 13 - Water Distribution Valves, Fire Hydrants, and Backflow Prevention: Materials and methods for valves, and appurtenances.
   6. Section 33 31 23 - Sanitary Sewer Force Mains, Valves and Appurtenances: Materials and methods for piping, valves, and appurtenances.
   7. Section 40 95 01 - Duplex Submersible Wastewater Pumping Stations: Materials and methods for piping, valves, pumps, and other station equipment.

1.2 REFERENCE STANDARDS

A. American Water Works Association:
   1. AWWA C600 - Installation of Ductile-Iron Water Mains and Their Appurtenances.

B. ASTM International:
   1. ASTM A536 – Standard Specification for Ductile Iron Castings.

1.3 COORDINATION

A. General – Coordinate Work of this Section with the installation and modification of pressure main valves, bends, reducers, and dead-end fittings and pipe joints that require restraint.

B. Joint Restraint Systems – Field or factory applied joint restraint systems shall be used unless otherwise indicated by the ENGINEER. When multiple valves, bends, fittings are in close proximity, ENGINEER to design adequate total restraint length required for fitting combination(s). The combined fitting restrained length total must equal the

sum of the individual fitting restrained lengths. Individual restrained end lengths applied to combined fitting end lengths can result in failure during testing or operation.

C. Thrust Blocks – Concrete thrust blocking shall only be used when required for special installations, such as such as cut-in tees, tapping sleeves, plugged/capped sections removed from service, or other situations that would require retrofitting an existing service pipeline with joint restraints. ENGINEER shall design adequate size and weight of blocking to be installed for special installations.

1.4 SUBMITTALS

A. Product Data: Submit manufacturer catalog information for restrained joint details and installation instructions.

B. Shop Drawings:
   1. Indicate restrained joint details and materials being used.
   2. Submit schedules showing restraint device models and locations to be installed.
   3. Include restrained joint installation procedures.

C. Manufacturer's Certificate: Certify that products meet or exceed specified requirements.

D. Manufacturer Instructions: Submit detailed instructions on installation requirements, including storage and handling procedures.

1.5 CLOSEOUT SUBMITTALS

A. Project Record Documents: Record locations of joint restraints on design plan and profile drawings by begin and end station as proceeds daily and transfer field data to final record drawing submittal.

1.6 QUALITY ASSURANCE

A. Perform Work according to AWWA 600 standards and manufacturer instructions.

B. Perform pressure testing according to Section 33 05 05.31 – Hydrostatic Testing of Water Distribution and Sanitary Sewer Force Mains.

1.7 DELIVERY, STORAGE, AND HANDLING

A. Inspection: Accept materials on Site in manufacturer's original packaging and inspect for damage.

B. Store materials according to manufacturer instructions.

C. Protection:
   1. Protect materials from moisture and dust by storing in clean, dry location remote from construction operations areas.
   2. Provide additional protection according to manufacturer instructions.

PART 2 PRODUCTS

2.1 PERFORMANCE AND DESIGN CRITERIA

A. Provide pressure pipelines (water and force mains) with restrained joints and/or blocking at any change in direction including hydrant assemblies, bends, tees, reducers, blow-offs, dead-end mains, cut-in tees, tapping sleeves, etc. Thrust restraint shall be designed for a minimum pressure of **150 psi** at the lowest elevation in the pipeline test section.

2.2 JOINT RESTRAINT SYSTEMS

A. Refer to CFPUA Material Specification Manual (MSM) for the following products:

MSM Section	Material
C	Joint Restraints

B. Unless otherwise indicated, joint restraint systems may be factory or field applied systems.

PART 3 EXECUTION

3.1 EXAMINATION

A. Verify location of piping restraint locations in advance of pipe laying operations.

B. Verify that pipe and fittings identified for restraint are ready to receive Work and the correct restraint device is applied to that location.

C. Field measure and verify pipe restraint lengths indicated on drawings for Work to be installed.

3.2 PREPARATION

A. Clean surfaces of pipe and fittings that are to receive joint restraint systems.

3.3 INSTALLATION

A. Install joint restraint system such that joints are mechanically locked together to prevent joint separation in accordance with the manufacturer recommendations.

B. In special installations where concrete thrust blocking is required, allow 7-day minimum cure time before placing pipe pressure load on concrete blocking.

END OF SECTION

SECTION 33 05 13

PRECAST CONCRETE MANHOLES AND UTILITY STRUCTURES

PART 1 GENERAL

1.1 SUMMARY

A. Section Includes:
   1. Modular precast concrete manholes and structures with tongue-and-groove joints and masonry transition to cover frame, covers, anchorage, and accessories.

B. Related Sections:
   1. CFPUA Material Specification Manual (MSM)
   2. Section 01 51 00 – Bypass Pumping.
   3. Section 03 05 00 – Concrete.
   4. Section 31 23 34 – Excavating, Trenching, Dewatering and Backfilling.
   5. Section 33 01 30.86 – Manhole Rim Adjustment.
   6. Section 33 14 22 – Testing of Sanitary Sewer Mains and Manholes.
   7. Section 33 31 1 – Sanitary Sewer Gravity Mains.
   8. Section 33 32 23 – Sanitary Sewer Force Mains, Valves and Appurtenances.

1.2 REFERENCE STANDARDS

A. American Association of State Highway Transportation Officials:
   1. AASHTO M91 – Standard Specification for Sewer and Manhole Brick (Made from Clay or Shale).
   2. AASHTO M306 – Standard Specification for Drainage, Sewer, Utility, and Related Castings.

B. American Concrete Institute:
   1. ACI 530 – Building Code Requirements and Specification for Masonry Structures.

C. ASTM International:
   1. ASTM A48 – Standard Specification for Gray Iron Castings.
   2. ASTM A123M – Standard Specification for Zinc (Hot-Dip Galvanized) Coatings on Iron and Steel Products.
   3. ASTM C32 – Standard Specification for Sewer and Manhole Brick (Made from Clay or Shale).
   4. ASTM C478 – Standard Specification for Circular Precast Reinforced Concrete Manhole Sections.
   5. ASTM C497 – Standard Test Methods for Concrete Pipe, Manhole Sections, or Tile.
   6. ASTM C877 – Standard Specification for External Sealing Bands for Concrete Pipe, Manholes, and Precast Box Sections.
   7. ASTM C913 – Standard Specification for Precast Concrete Water and Wastewater Structures.
   8. ASTM C990 – Standard Specification for Joints for Concrete Pipe, Manholes, and Precast Box Sections Using Preformed Flexible Joint Sealants.

1.3 QUALITY ASSURANCE

A. Perform Work according to ASTM and AASHTO standards and manufacturer's instructions.

1.4 WARRANTY

A. Section 01 70 00 – Execution and Closeout Requirements.

B. Furnish a one-year manufacturer's warranty for concrete manholes and structures.

1.5 SUBMITTALS

A. Section 01 33 00 – Submittal Procedures.

B. Submittals:
   1. Section 01 70 00 – Execution and Closeout Requirements.
   2. Product Data: Submit manufacturer information for manhole covers, component construction, features, configuration, and dimensions.
   3. Manufacturer Instructions: Submit detailed instructions on installation requirements, including storage and handling procedures.
   4. Shop Drawings:
      a. Indicate structure locations and elevations.
      b. Indicate sizes and elevations of piping, conduit and penetrations.
   5. Source Quality-Control Submittals: Indicate results of factory tests and inspections.
   6. Qualifications Statement: Submit qualifications for manufacturer.
   7. Project Record Documents: Record actual locations of manholes and connections, and record invert elevations.

1.6 SITE CONDITIONS

A. DELIVERY, STORAGE, AND HANDLING
   1. Section 01 60 00 – Product Requirements.
   2. Inspection: Accept materials on Site in manufacturer's original packaging and inspect for damage.
   3. Handling: Comply with precast concrete manufacturer instructions and ASTM C913 for unloading and moving precast manholes and drainage structures.
   4. Bent Reinforcing steel bars are not permitted for use as lifting devices.
   5. Lifting devices shall be evaluated and approved by the Engineer.
   6. Storage:
      a. Store materials according to manufacturer instructions.
      b. Store precast concrete manholes and drainage structures to prevent damage to Owner's property or other public or private property.
      c. Repair property damaged from materials storage.
   7. Protection:
      a. Protect materials from moisture and dust by storing in clean, dry location remote from construction operations areas.
      b. Provide additional protection according to manufacturer instructions.

B. EXISTING CONDITIONS
   1. Field Measurements:
      a. Verify field measurements prior to fabrication.
      b. Indicate field measurements on Shop Drawings.

PART 2 PRODUCTS

2.1 MATERIAL SPECIFICATION MANUAL

A. Refer to CFPUA Material Specification Manual (MSM) for the following products:

MSM Section	Product
I	Castings and Access Covers
M	Coatings and Sealants
O	Structures

2.2 SOURCE QUALITY CONTROL

A. Section 01 40 00 – Quality Requirements: Requirements for testing, inspection, and analysis.

B. Provide shop inspection and testing of completed assembly.

C. Verify that items provided have met factory testing requirements and are inspected upon delivery.

D. Certificate of Compliance:
   1. If manufacturer is approved by authorities having jurisdiction, submit certificate of compliance indicating Work performed at manufacturer's facility conforms to Contract Documents.

2.3 MATERIALS AND ACCESSORIES

A. Lining Systems
   1. MSM Section M – Coatings and Sealants
   2. Sewerkote Duramer 1030
   3. Zebron 386
   4. NeoPoxy NPR-5300
   5. Raven Lining System 405
   6. Warren Environmental S-301
   7. Sherwin-Williams SherFlex Elastomeric
   8. Sherwin Williams Dura-Plate 6100
   9. SpectraShield Liner Systems

B. Grouts
   1. MSM Section N - Concrete
   2. Section 03 05 00 - Concrete

C. Sewer Guards
   1. Stainless steel straps, anchors and sewer guards required at all Manholes.

PART 3 EXECUTION

3.1 EXAMINATION

A. Section 01 70 00 – Execution and Closeout Requirements: Requirements for installation examination.

B. Verify that items provided by other Sections of Work are properly sized and located.

C. Verify that built-in items are in proper location and are ready for roughing into Work.

D. Verify that excavation base is ready to receive Work and excavation dimensions and elevations are as indicated on Drawings.

3.2 PREPARATION

A. Mark each precast structure by indentation or waterproof paint showing date of manufacture, manufacturer, and identifying symbols and numbers as indicated on Drawings to indicate its intended use.

B. Coordinate placement of inlet and outlet pipe or duct sleeves as required by other Sections.

C. Do not install manholes and structures where Site conditions induce loads exceeding structural capacity of manholes or structures.

D. Inspect precast concrete manholes and structures immediately prior to placement in excavation to verify that they are internally clean and free from damage; remove and replace damaged units.

3.3 INSTALLATION

A. Conduct operations not to interfere with, interrupt, damage, destroy, or endanger integrity of surface structures or utilities in immediate or adjacent areas.

B. Correct over-excavation with Class 1 aggregate.

C. Remove large stones or other hard matter impeding consistent backfilling or compaction.

D. Protect manhole and structures from damage or displacement while backfilling operation is in progress.

E. Excavating:
   1. As specified in Section 31 23 34 – Excavating, Trenching, Dewatering and Backfilling and in indicated locations and depths.

2. Provide clearance around sidewalls of manhole or structure for construction operations.
3. If ground water is encountered, prevent accumulation of water in excavations; place manhole or structure in dry trench.
4. Where possibility exists of watertight manhole or structure becoming buoyant in flooded excavation, anchor manhole or structure to avoid flotation as approved by Engineer.

F. Base and Alignment:
1. Install manholes and structures supported at proper grade and alignment on compacted crushed-stone bedding or piles as indicated on Drawings.
2. Grout base of shaft sections to achieve slope to exit piping, trowel smooth, and contour to form continuous drainage channel.
3. Form and place manhole or structure cylinders plumb and level, to correct dimensions and elevations.

G. Coating:
1. Structure shall be painted with two coats of bituminous interior coating system at a rate of 120 square feet per gallon for each coat.
   a. Prior to testing wet well shall be coated. See MSM Section M – Coatings and Sealants.

H. Precast Concrete Manholes:
1. Lift precast components at lifting points designated by manufacturer.
2. When lowering manholes and structures into excavations and joining pipe to units, take precautions to ensure that interior of pipeline and structure remains clean.
3. Assembly:
   a. Assemble multi-section manholes and structures by lowering each section into excavation.
   b. Install rubber gasket joints between precast sections according to manufacturer recommendations.
   c. Lower, set level, and firmly position base section before placing additional sections.
4. Remove foreign materials from joint surfaces and verify that sealing materials are placed properly.
5. Maintain alignment between sections by using guide devices affixed to lower section.
6. Joint sealing materials may be installed on Site or at manufacturer's plant.
7. Verify that installed manholes and structures meet required alignment and grade.
8. Remove knockouts or cut structure to receive piping without creating openings larger than required to receive pipe; fill annular spaces with mortar.
9. Cut pipe flush with interior of structure.
10. Shape inverts through manhole and structures as indicated on Drawings.

I. Grouting:
1. Section 03 05 00 – Concrete
2. Verify all surfaces have been inspected and prepared for application. All surfaces shall be free of dirt, oil, grease and other contaminants.
3. Surface shall be clean, sound and roughened to ensure a sufficient bond.

4. Surface shall be saturated up to 24 hours prior to application but free of standing water at the time of application.
5. Provide sufficient support for items to be embedded into the work. Diagrams, templates and other forms can be used to properly locate such items.
6. Refer to Manufacturer's instructions for proper grouting application and installation.
7. Application shall be inspected immediately after and any defects repaired or removed for re-installation if directed by the Engineer.

J. Castings:
1. Set frame and cover at finished grade for manholes and other structures with covers located within unpaved areas and graded away from cover.
2. Set frames using mortar and masonry as indicated on Drawings.
3. Lay concrete brick in full bed of mortar and completely fill joints.
4. If more than one course of concrete brick is required, stagger vertical joints.

K. Backfilling: As specified in Section 31 23 34 – Excavating, Trenching, Dewatering and Backfilling.
1. All structures shall be leak tested prior to backfilling.

3.4 FIELD QUALITY CONTROL

A. Section 01 40 00 – Quality Requirements.

B. Testing:
1. Perform testing in accordance to ASTM C497.
2. Concrete Manhole Sections: As specified in Section 33 14 22 – Testing of Sanitary Sewer Mains and Manholes.
3. Conduct a visual inspection of concrete structures.
4. Repair all visible and detectable leaks.
5. Leakage testing for structures shall be performed prior to backfilling by the following procedure:
   a. Temporarily plug all wall sleeves, piping entrances and other openings during test period.
   b. Fill structure to overflow level.
   c. Allow to stand for a minimum of four (4) hours.
   d. Refill to overflow level.
   e. Allow to stand for 24 hours.
   f. Examine exterior surfaces and joints for leakage. Measure drop in surface water. Allowable leakage is a drop of ½ inch or less during the test period and no visible signs of leakage.
   g. Repair all visible and detectable leaks. If leakage exceeds allowable limit, the structure shall be repaired by approved method per Engineer.

C. Equipment Acceptance: Contractor shall adjust, repair, modify, or replace components failing to perform as specified and rerun tests at no cost to the Owner.

3.5 ADJUSTING

A. Section 01 70 00 – Execution and Closeout Requirements.

B. Vertical Adjustment of Existing Manholes and Structures:
   1. As specified in Section 33 01 30.86 – Manhole Rim Adjustment.

END OF SECTION

SECTION 33 14 13

WATER DISTRIBUTION PIPING, VALVES, HYDRANTS, AND APPURTENANCES

PART 1 GENERAL

1.1 DESCRIPTION

A. Section Includes Installation of:
   1. Pipe and fittings for public water mains and service connections.
   2. Valves, fire hydrants, blow offs, sampling stations, air release assemblies, and other water distributions appurtenances.

B. Related Requirements:
   1. CFPUA Material Specification Manual (MSM).
   2. Section 03 05 00, Concrete.
   3. Section 09 91 00, Painting and Protective Coatings.
   4. Section 31 23 34, Excavating, Trenching, Dewatering and Backfilling.
   5. Section 33 01 12, Identification for Utilities Piping.
   6. Section 33 05 05.31, Hydrostatic Testing.
   7. Section 33 05 09.33, Thrust Restraint for Utility Piping.
   8. Section 33 05 13, Precast Concrete Manholes and Utility Structures.
   9. Section 33 14 14, Public Water Service Connections.
   10. Section 33 14 20, Disinfection of Water Pipelines, Facilities and Appurtenances.

1.2 REFERENCES

A. American Association of State Highway and Transportation Officials:
   1. AASHTO T 180 – Standard Method of Test for Moisture-Density Relations of Soils Using a 4.54-kg (10-lb) Rammer and a 457-mm (18-in.) Drop.

B. American Society of Mechanical Engineers:
   1. ASME B16.1 – Gray Iron Pipe Flanges and Flanged Fittings: Classes 25, 125, and 250.

C. ASTM International:
   1. ASTM A307 – Standard Specification for Carbon Steel Bolts, Studs, and Threaded Rod 60 000 PSI Tensile Strength.
   2. ASTM D698 – Standard Test Methods for Laboratory Compaction Characteristics of Soil Using Standard Effort (12 400 ft-lbf/ft3 (600 kN-m/m3).
   3. ASTM D1557 – Standard Test Methods for Laboratory Compaction Characteristics of Soil Using Modified Effort (56,000 ft-lbf/ft3 (2,700 kN-m/m3).
   4. ASTM D1785 – Standard Specification for Poly(Vinyl Chloride) (PVC) Plastic Pipe, Schedules 40, 80, and 120.
   5. ASTM D2241 – Standard Specification for Poly(Vinyl Chloride) (PVC) Pressure-Rated Pipe (SDR Series).
   6. ASTM D3035 – Standard Specification for Polyethylene (PE) Plastic Pipe (DR-PR) Based on Controlled Outside Diameter.
   7. ASTM D3139 – Standard Specification for Joints for Plastic Pressure Pipes Using Flexible Elastomeric Seals.

8. ASTM D6938 – Standard Test Method for In-Place Density and Water Content of Soil and Soil-Aggregate by Nuclear Methods (Shallow Depth).
9. ASTM F477 – Standard Specification for Elastomeric Seals (Gaskets) for Joining Plastic Pipe.

D. American Water Works Association:
1. AWWA C104 – Cement-Mortar Lining for Ductile-Iron Pipe and Fittings.
2. AWWA C105 – Polyethylene Encasement for Ductile-Iron Pipe Systems.
3. AWWA C110 – Ductile-Iron and Gray-Iron Fittings.
4. AWWA C111 – Rubber-Gasket Joints for Ductile-Iron Pressure Pipe and Fittings.
5. AWWA C115 – Flanged Ductile-Iron Pipe with Ductile-Iron or Gray-Iron Threaded Flanges.
6. AWWA C116 – Protective Fusion-Bonded Coatings for the Interior and Exterior Surfaces of Ductile-Iron and Gray Iron Fittings.
7. AWWA C151 – Ductile-Iron Pipe, Centrifugally Cast.
8. AWWA C153 – Ductile-Iron Compact Fittings.
9. AWWA C500 – Metal-Seated Gate Valves for Water Supply Service.
10. AWWA C502 – Dry-Barrel Fire Hydrants.
11. AWWA C509 – Resilient-Seated Gate Valves for Water Supply Service.
12. AWWA C512 – Air-Release, Air/Vacuum, and Combination Air Valves for Water and Wastewater Service.
13. AWWA C550 – Protective Interior Coatings for Valves and Hydrants.
14. AWWA C600 – Installation of Ductile-Iron Mains and Their Appurtenances.
15. AWWA C605 – Underground Installation of Polyvinyl Chloride (PVC) and Molecularly Oriented Polyvinyl Chloride (PVCO) Pressure Pipe and Fittings.
16. AWWA C900 – Polyvinyl Chloride (PVC) Pressure Pipe and Fabricated Fittings, 4 In. Through 60 In. (100 mm Through 1,500 mm), for Water Transmission and Distribution.
17. AWWA C901 – Polyethylene (PE) Pressure Pipe and Tubing, 1/2 In. (13 mm) Through 3 In. (76 mm), for Water Service.
18. AWWA C906 – Polyethylene Pressure Pipe and Fittings, 4-In. Through 65-In. for Waterworks.

E. Manufacturers Standardization Society of the Valve and Fittings Industry:
1. MSS SP-60 – Connecting Flange Joints between Tapping Sleeves and Tapping Valves.

F. National Fire Protection Association:
1. NFPA 24 – Standard for the Installation of Private Fire Service Mains and Their Appurtenances.
2. NFPA 291 – Recommended Practice for Fire Flow Testing and Marking of Hydrants.

G. NSF International:
1. NSF 61 – Drinking Water System Components - Health Effects.
2. NSF 372 – Drinking Water System Components - Lead Content.

1.3 ADMINISTRATIVE REQUIREMENTS

A. Section 01 30 00, Administrative Requirements

B. Coordination:
   1. Coordinate Work of this Section with termination of water main connection at Site boundary, connection to CFPUA, and trenching.
   2. The existing system must be kept in operation at all times. Where connections are made to existing mains or other shutdowns are necessary, permission must be obtained and arrangements must be made with the CFPUA Distribution ORC, Utility Services Division for removing from service those mains that will be affected.
   3. No valves are to be operated unless a CFPUA representative is present. Any valves operated without a CFPUA representative present or a directive may be subject of penalties in accordance with CFPUA's ordinance.
   4. Notify CFPUA no less than two business days prior to an event requiring a CFPUA representative to be present.
   5. The Contractor shall, at least two business days in advance, notify citizens subject to interruption of service by means of door hangers or any other approved method of the starting time and duration of such interruption.

1.4 SUBMITTALS

A. Section 01 33 00, Submittals: Requirements for submittals.

B. Product Data/Source Quality:
   1. Manufacturer information regarding pipe, pipe fittings, valves, hydrants and appurtenances including component material, assembly and parts diagrams.
   2. Shop test results and inspection data, certified by manufacturer.

C. Testing Procedures:
   1. Submit proposed testing procedures, methods, apparatus, and sequencing. Obtain ENGINEER and CFPUA approval prior to commencing testing.

D. Manufacturer Instructions:
   1. Detailed instructions on installation requirements, including storage and handling procedures.

E. Manufacturer's Certificate:
   1. Certify that products meet or exceed specified requirements.

F. Field Quality-Control Submittals:
   1. Results of Contractor-furnished laboratory testing and field test results.

1.5 CLOSEOUT SUBMITTALS:

A. Section 01 70 00, Execution and Closeout Requirements.

B. Project Record Documents:
   1. Maintain accurate and up-to-date record documents showing modifications made in the field, in accordance with approved submittals, and other Contract modifications relative to buried piping Work.
   2. Record actual locations of piping mains, valves, hydrants, connections, thrust restraints, elevations, and other utilities found and not indicated on design plans.

C. Operations and Maintenance Data:
   1. Furnish in operations and maintenance manuals complete data for materials in accordance with Section 01 60 00, Product Requirements.

1.6 QUALITY ASSURANCE

A. Qualifications: Company specializing in manufacturing products specified in the CFPUA Materials Specification Manual.
   1. Cast manufacturer's name, pressure rating, and year of fabrication into valve body.

B. Materials in Contact with Potable Water: Certified according to NSF 61 and NSF 372.

C. Perform Work according to AWWA and PVC Pipe Association standards.

1.7 DELIVERY, STORAGE, AND HANDLING

A. Section 01 60 00, Product Requirements.

B. Inspection: Accept materials on Site in manufacturer's original packaging and inspect for damage.

C. Storage:
   1. Store materials according to manufacturer instructions.
   2. Block individual and stockpiled pipe lengths to prevent moving.
   3. Do not place pipe or pipe materials on private property or in areas obstructing pedestrian or vehicle traffic.
   4. Store PE and PVC materials out of sunlight.

D. Protection:
   1. Protect materials from moisture and dust by storing in clean, dry location remote from construction operations areas.
   2. Provide additional protection according to manufacturer instructions.

1.8 SITE CONDITIONS

A. Field Measurements:
   1. Verify field measurements prior to fabrication.
   2. Indicate field measurements on Shop Drawings.

1.9 WARRANTY

A. Section 01 70 00, Execution and Closeout Requirements.

B. Furnish 10-year manufacturer's warranty for valves.

PART 2 PRODUCTS

2.1 CFPUA MATERIAL SPECIFICATION MANUAL

A. Refer to CFPUA Material Specification Manual (MSM) for the following products:

MSM Section	Material
A	Pipe
B	Fittings and Accessories
C	Joint Restraints
D	Valves and Accessories
E	Fire Hydrants
F	Service Saddles and Tapping Devices
I	Castings & Aluminum Access Covers
K	Miscellaneous
L	Electrical
M	Coatings and Sealants

2.2 MATERIALS & ACCESSORIES

A. Bedding, Cover, and Backfill:
   1. As specified in Section 31 23 34, Excavating, Trenching, Dewatering and Backfilling.

B. Pipe Location Wire: As specified in Section 33 01 12, Identification for Utilities Piping.

C. Thrust Restraints: As specified in Section 33 05 09.33, Thrust Restraint for Utility Piping.

D. Service Connections: As specified in Section 33 14 14, Public Water Service Connections.

E. Vaults and Utility Boxes: As specified in Section 33 05 13, Precast Concrete Manholes and Utility Structures.

F. Fire Hydrant Drainage Gravel: Provide #57 Stone.

PART 3 EXECUTION

3.1 EXAMINATION

A. Section 01 70 00, Execution and Closeout Requirements.

B. Identify project horizontal and vertical control points, establish easement and right-of-way lines, stakeout construction points for work and pipeline alignments, establish limits of disturbance.

C. Determine exact location and size of water mains, valves, hydrants, and appurtenances from Drawings

D. Verify location and elevation of existing facilities prior to excavation and installation of proposed interconnecting water mains, valves, and hydrants.

3.2 PREPARATION

A. Section 01 35 00, Special Procedures.
   1. Pre-construction Site Audio/Video Inspections and Photography:
   2. Show mailboxes, curbing, lawns, driveways, signs, culverts, and other existing Site features.

B. Section 01 70 00, Execution and Closeout Requirements.

C. All materials, unless otherwise directed, shall be unloaded as nearby as possible to the location of installation by the Contractor. Materials shall be handled with care to avoid damage.

D. All materials found during the progress of work to have flaws, cracks, or other defects will be rejected by the Engineer regardless of whether or not it has been installed and shall be replaced by and at the expense of the Contractor.

E. All PVC pressure pipe, upon delivery to the site and until such time as it is placed in the trench, shall be shielded from the weather and direct sunlight to prevent pipe deterioration.

F. Slings, hooks, or tongs used for lifting shall be padded in such a manner as to prevent damage to exterior surfaces, interior linings and components. If any part of the coating, lining or components is damaged, the repairs or replacement shall be made by the Contractor at his expense and in a manner satisfactory to the Engineer prior to attempting installation.

G. Pipe Cutting:
   1. Cut pipe ends square, ream pipe and tube ends to full pipe diameter, and remove burrs.
   2. Use only equipment specifically designed for pipe cutting; use of chisels or hand saws is not permitted.
   3. Grind edges smooth with beveled end for push-on connections.

H. Remove scale and dirt on inside and outside before assembly.

I. Prepare pipe connections to equipment with flanges or unions.

3.3 INSTALLATION

A. Placement: As specified in Section 31 23 34, Trenching, Excavation, Dewatering and Backfilling.
   1. All mains shall be laid and maintained at the required lines and grades with fittings, valves and appurtenances at the described locations. All pipe shall be laid to the depth as shown on the drawings, or when a depth is not indicated, with a minimum cover of thirty-six (36) inches and a maximum of (60) inches below finished grade. Grade lines shall be set by the Contractor. Realignments must be approved by the Engineer. The Contractor shall have suitable survey equipment on the site at all times.

2. After placement in the trench the spigot end of the pipe shall be centered in the bell and the pipe shall be driven home and then brought to the proper line and grade by tamping approved backfill material under it, except for the bell. Joint deflection shall not exceed manufacturer's limit.
3. The Work shall at all times progress with caution so as to prevent damage to underground obstructions both known and unknown. Should an obstruction not shown on the drawings be encountered, the Engineer shall be immediately notified and he shall be responsible for alteration to the design should realignment be necessary. Notify the Engineer far enough in advance to allow the realignment to be accomplished by deflection in the pipe joints.

B. Pipe and Fittings:
1. Handle and assemble pipe according to manufacturer instructions.
2. Install pipe and fittings in strict conformance with AWWA C600.
3. Install plastic pipe in conformance with ASTM D2774 and recommended practices of the UNI-BELL Plastic Pipe Association.
4. Joint Deflection: Maximum joint deflection shall meet requirements of AWWA C600 or AWWA Manual of Practice M23.
5. Prevent foreign material from entering pipe during placement. Seal pipe openings with watertight plugs during Work stoppages using plugs designed for that purpose. If trench contains standing water in joining zone, plug shall remain in place until the trench has been pumped dry before proceeding pipe laying.
6. Allow for expansion and contraction without stressing pipe or joints.
7. Install access fittings to permit disinfection of water system performed under Section 33 14 20 – Disinfection of Water Distribution Mains.
    a. Blowoffs shall be installed for pipe flushing, disinfection, and test sampling.
    b. Blowoffs shall be located as follows:
        1) Dead ends.
        2) Stub-outs greater than one pipe section in length for future interconnecting mains.
        3) Valves closed against disinfection, flushing, and sampling.
    c. Blowoff should be installed as follows:
        1) Opening pointing downward.
        2) Minimum 24-inches clearance between opening and ground for proper sampling.
8. Cover: Measure depth of cover from final surface grade to top of pipe barrel and record.
9. Jointing:
    a. Fused HDPE:
        1) HDPE Pipe shall be joined by the butt-fusion process in accordance with pipe manufacturer’s directions.
        2) Contractor shall provide butt-fusion technicians who are trained and certified by the HDPE pipe manufacturer to complete the project. The date of technician certification shall not exceed 12 months before commencing construction.
        3) Butt-fusion means the butt-joining of the pipe by softening the aligned faces of the pipe ends in a suitable apparatus and pressing them together under controlled pressure.

4) The internal and external beads resulting from the butt-fusion process shall be visible and examined for penetration 360 degrees around the pipe diameter.
5) DI/HDPE Mechanical Joint Adaptors shall be ductile iron mechanical joint fittings per CFPUA Material Specification Manual and shall be joined to the HDPE pipe by a heat-fused joint on one end, and connected to a ductile iron pipe valve, or fitting with a mechanical joint on the other end.
6) Solvent epoxy cementing, electro-fusion couplings and mechanical joining with bolt on wrap around clamps or mechanical joints without an adapter shall not be used for connections.

b. Push-On Joints:
1) The inside of the bell and the outside of the spigot end shall be thoroughly cleaned to remove dirt, grit, oil or excess coatings and other foreign matter. For ductile iron pipe, the gasket shall be flexed inward and inserted in the gasket recess of the bell socket.
2) A thin film of gasket lubricant shall be applied to either the inside surface of the gasket or the spigot ends, care will be taken to avoid contact with the ground.
3) The joint shall be completed by forcing the plain end to the bottom of the socket with a forked tool or jacking device or other approved method. All pipe shall have depth mark prior to insertion. Pipe cut in the field shall be filed to resemble the spigot end of manufactured pipe.
4) When deflection is required the joint shall be completed prior to setting the deflection. The deflection shall conform to applicable AWWA Standards or manufacturer's recommendation.

c. Mechanical Joints:
1) The inside of the socket, the outside of the spigot end and the gland shall be thoroughly cleaned and or washed with an approved solution to remove dirt, grit, oil or excess coatings and foreign matter to improve gasket seating.
2) The gland shall then be placed on the plain end of the pipe with the lip extension toward the plain end, followed by the gasket with the narrow edge of the gasket toward the plain end of the pipe.
3) The pipe shall be inserted into the socket and the gasket pressed firmly and evenly into the gasket recess. The joint shall be kept straight during the assembly and any deflection required shall be done after the joint has been assembled but prior to tightening the bolts.

C. Valves:
1. Valves shall be set and joined to the pipe and each type of joint as specified for pipe.
2. Cast iron valve boxes shall be firmly supported, maintained centered and plumb over the operating nut of the valve. Outside of paved areas, valve boxes shall be set in a 2' diameter x 6" thick concrete collar. The box cover shall be flush with the surface of the finished pavement. All water main valve box lids shall have the word “WATER” cast in the lid.
3. All reasonable effort must be made to locate valves/valve boxes, back of curb, in grass areas and at street corners, whenever possible.
4. Valve boxes in areas that will require sod at a later date must be left one to two inches above existing grade (to allow for sod thickness).

5. All valves must be centered over the operating nut/wheel and all valves, after being fully opened, will be backed off one-quarter turn to prevent them from being jammed open. This procedure should take place only after the main has passed pressure testing and has been certified by the Engineer.
6. Should the operating nut be more than three feet below the final grade, an extension shall be supplied and installed by the Contractor. The extension shall bring the nut to within twelve (12) inches of final grade.

D. Installing Valves on Existing Mains
   1. When installing valves in existing mains (cutting-in), the Contractor shall insure that the pipe is kept clean at all times and no debris, ground water, mud, oil, etc., will make their way into the pipe.

E. Installation of Tapping Sleeves and Valves
   1. Install the tapping sleeve and valve and pressure test prior to making the tap.
   2. If leaks are present, the Contractor shall repair them to the satisfaction of the Engineer or Resident Project Representative.
   3. Complete the tapping operation and close tapping valve.
   4. Tapping valve shall not be opened until new main has been tested and certified for operation.

F. Hydrants
   1. Each hydrant shall be connected to the main with a 6-inch branch line.
   2. Hydrants shall be set with the pumper nozzle facing the roadway and with the center of the lowest outlet not less than 18 inches above the finished surrounding grade and the operating nut not more than 48 inches above the finished surrounding grade.
   3. Set fire hydrants with safety flange not more than 6 inches and not less than 2 inches above grade.
   4. The hydrant shall be set in a bed of # 57 stone which shall surround the barrel at least 12 inches in all directions.
   5. Hydrants and tees (runs and branches) shall be restrained using field-applied restraint system per CFPUA MSM.
   6. Provide support blocking and drainage gravel while installing fire hydrants; do not block drain hole.
   7. After main-line pressure testing, flush fire hydrants and check for proper drainage.

G. Thrust Restraints: As specified in Section 33 05 09.33, Thrust Restraint for Utility Piping.
   1. New main construction shall be restrained by means of field or factory applied systems as shown on the Engineer drawings.
   2. Thrust blocks in new mains is prohibited except when directed by the Engineer.
   3. Where a fitting or device is to be inserted into an existing main, thrust blocking shall be installed as directed by the Engineer or CFPUA.

H. Polyethylene (PE) encasement when indicated for ductile iron pipe and fittings:
   1. Encase piping in PE as indicated on Drawings to prevent contact with surrounding soil material or insulation from adjacent cathodic protection system.
   2. Comply with AWWA C105.
   3. Where pipe exits ground, terminate encasement 3 to 6 inches above surface.

I. Pipe Locator Wire: Install per Section 33 01 12, Identification for Utilities Piping.

J. Service Connections: As specified in Section 33 14 14, Public Water Service Connections.

K. Disinfection of Potable Water Piping Systems: As specified in Section 33 14 20, Disinfection of Water Distribution Mains.

L. Pipe Markers: According to CFPUA Details and Material Specification Manual.

3.4 FIELD QUALITY CONTROL

A. Section 01 70 00, Execution and Closeout Requirements.

B. Section 33 05 05.31, Hydrostatic Testing.
   1. Pressure test piping system according to AWWA C600.

C. Section 33 14 20, Disinfection of Water Pipelines, Facilities, and Appurtenances.

D. Pigging – Flushing and Cleaning Alternative for Large Mains
   1. For mains where flowrates cannot be achieved to create minimum cleaning velocities of 2 feet per second or greater, cleaning of the new piping system by pigging methods shall be established for the project by the Engineer. Pigging includes the following measures:
      a. Pig launching and retrieval equipment to minimize additional valves, fittings and auxiliary water supplies.
      b. Valves and blowoff assemblies, which are installed as part of the project, shall be used as much as possible to minimize the number of temporary ports required for pigging.
      c. Pig materials used shall be specifically manufactured for flushing and cleaning pressure pipes, bends and valves. The pigs shall be able to go through bends, open valves and fittings, and provide adequate cleaning of the pipe.
      d. Pigging shall be accomplished by the controlled and pressurized passage of a series of hydraulic or pneumatic polyurethane plugs of varying dimensions, coatings, and densities.
      e. Pigs shall be selected by the Contractor and approved by the Engineer.
      f. The Contractor shall provide means to enter the pig into the system, control and regulate flow, monitor flows and pressures, and to remove the pig from the system.
      g. The Contractor shall maintain constant surveillance of the pig while active in the pipe system and immediately report problems encountered or any malfunctions discovered in the piping system.

END OF SECTION

SECTION 33 14 14

PUBLIC WATER SERVICE CONNECTIONS

PART 1 GENERAL

1.1 SUMMARY

A. Section Includes:
   1. Pipe and fittings for water service connections to small commercial, light industrial, and residential homes 2" service and smaller.
   2. Corporation stop assemblies.
   3. Curb stop assemblies.
   4. Backflow preventers.
   5. Meter setting equipment.
   6. Meter boxes.
   7. Trenching, bedding, and cover.

B. Related Requirements:
   1. CFPUA Material Specification Manual (MSM).
   2. Section 31 23 34 – Excavating, Trenching, Dewatering and Backfilling.
   3. Section 33 14 13 – Water Distribution Piping and Appurtenances.
   4. Section 33 14 13 – Water Distribution Valves and Fire Hydrants.
   5. Section 33 14 20 – Disinfection of Water Distribution Mains.
   6. Section 33 05 13 – Precast Concrete Manholes and Utility Structures.

C. CFPUA provides potable water service which may be interrupted for repairs, system expansion, or other general requirements. CFPUA does not guarantee adequate fire flow for protection of life or property. There shall be no domestic use taps allowed on a dedicated fire line. Some facility owners choose to utilize this interruptible potable water supply from the CFPUA system for fire protection. If facility owners choose to utilize the potable water system for fire protection flow, the service for fire protection shall be configured according to Part 3 of this Section.

1.2 REFERENCES

A. American Association of State Highway and Transportation Officials:
   1. AASHTO T 180 - Standard Method of Test for Moisture-Density Relations of Soils Using a 4.54-kg (10-lb) Rammer and a 457-mm (18-in.) Drop.

B. American Society of Mechanical Engineers:
   1. ASME B16.18 – Cast Copper Alloy Solder Joint Pressure Fittings.
   2. ASME B16.22 – Wrought Copper and Copper Alloy Solder Joint Pressure Fittings.

C. American Society of Sanitary Engineering:
   1. ASSE 1012 – Performance Requirements for Backflow Preventers with an Intermediate Atmospheric Vent.

2. ASSE 1013 – Performance Requirements for Reduced Pressure Principle Backflow Preventers and Reduced Pressure Principle Fire Protection Backflow Preventers.

D. ASTM International:
   1. ASTM B62 – Standard Specification for Composition Bronze or Ounce Metal Castings.
   2. ASTM D698 – Standard Test Methods for Laboratory Compaction Characteristics of Soil Using Standard Effort (12,400 ft-lbf/ft3 (600 kN-m/m3).
   3. ASTM D1557 – Standard Test Methods for Laboratory Compaction Characteristics of Soil Using Modified Effort (56,000 ft-lbf/ft3 (2,700 kN-m/m3).
   4. ASTM D2737 - Standard Specification for Polyethylene (PE) Plastic Tubing.
   5. ASTM D3350 - Standard Specification for Polyethylene Plastics Pipe and Fittings Materials.
   6. ASTM D6938 – Standard Test Method for In-Place Density and Water Content of Soil and Soil-Aggregate by Nuclear Methods (Shallow Depth).

E. American Welding Society:
   1. AWS A5.8/A5.8M - Specification for Filler Metals for Brazing and Braze Welding.

F. American Water Works Association:
   1. AWWA C509 – Resilient-Seated Gate Valves for Water Supply Service.
   2. AWWA C600 – Installation of Ductile-Iron Mains and Their Appurtenances.
   3. AWWA C800 – Underground Service Line Valves and Fittings.
   4. AWWA C901 – Polyethylene (PE) Pressure Pipe and Tubing, 1/2 In. (13 mm) Through 3 In. (76 mm), for Water Service.
   5. AWWA M6 – Water Meters – Selection, Installation, Testing, and Maintenance.

1.3 ADMINISTRATIVE REQUIREMENTS

A. Any event requiring a CFPUA representative to be present shall require a minimum of 2 business day notice to schedule the event.

B. No valves are to be operated unless a CFPUA representative is present. Any valves operated without a CFPUA representative present or a directive may be subject ot penalties in accordance with CFPUA's ordinance.

1.4 SUBMITTALS

A. Section 01 33 00 – Submittal Procedures.

B. Informational Submittals:
   1. Product Data: Submit manufacturer information regarding pipe materials, pipe fittings, corporation stop assemblies, curb stop assemblies, meters, meter setting equipment, service saddles, backflow preventers, and accessories.
   2. Manufacturer's Certificate: Certify that products meet or exceed specified requirements.
   3. Manufacturer Instructions: Submit detailed instructions on installation requirements, including storage and handling procedures.

C. Action Submittals:
   1. Test Reports: Submit all the results of the bacteriological tests to the CFPUA Engineering Inspector.
   2. Field Quality-Control Submittals: Indicate results of Contractor-furnished tests and inspections.
   3. Qualifications Statement:
      a. Submit qualifications for manufacturer.

1.5 CLOSEOUT SUBMITTALS

A. Section 01 70 00 – Execution and Closeout Requirements.

B. Project Record Documents: Record actual locations of piping mains, curb stops, connections, thrust restraints, pressure-pipe centerline elevations, and gravity-pipe invert elevations.

C. Identify and describe unexpected variations to subsoil conditions or discovery of uncharted utilities.

1.6 QUALITY ASSURANCE

A. Qualifications:
   1. Manufacturer: Company specializing in manufacturing products specified in this Section with minimum three years' documented experience.

B. Perform Work according to CFPUA standards and details.

1.7 DELIVERY, STORAGE, AND HANDLING

A. Section 01 60 00 – Product Requirements.

B. Inspection: Accept materials on Site in manufacturer's original packaging and inspect for damage.

C. Store materials according to manufacturer instructions.

D. Protection:
   1. Protect materials from moisture and dust by storing in clean, dry location remote from construction operations areas.
   2. Provide additional protection according to manufacturer instructions.

PART 2 PRODUCTS

2.1 MATERIAL SPECIFICATION MANUAL

A. Refer to CFPUA Material Specification Manual (MSM) for the following products:

MSM No.	Product
A	Polyethylene Service Tubing
F	Service Saddles/ Hinged Type for 2” PVC
F	Service Saddles/ Brass Alloy/ Stainless Steel Straps for Cast, Ductile & PVC Pipe
F	Service Saddles/ Ductile Iron/ Stainless Steel Straps for Cast, Ductile & PVC Pipe
F	Service Saddles/ Ductile Iron/ Stainless Steel Straps for HDPE Pipe
F	Service Saddles/ Hinged Type for 2” HDPE
G	Inline Valves
G	Straight Couplings (3/4" X 1”)
G	Straight Couplings (1”)
G	Meter Setters (5/8" X 3/4" Meter)
G	Meter Setters (1" Meter)
G	Meter Setters (1 1/2"& 2” Meter)
G	Dual Service U-Branch (5/8" X 3/4" Meter)
G	Dual Service U-Branch (1" METER)
G	Curb Stop Assemblies
J	Meter Box (5/8”, 3/4", & 1”) Single Service Non-Traffic Areas
J	Meter Box (5/8”, 3/4", & 1”) Dual Service Non-Traffic Areas
J	Meter Box (5/8”, 3/4", & 1”) Single Service Traffic Rated
J	Meter Box (5/8”, 3/4", & 1”) Dual Service Traffic Rated
J	Meter Box (1 1/2", & 2”) Single Service Non-Traffic Areas
J	Meter Box (1 1/2", & 2”) Single Service Traffic Rated
J	Lid Details (5/8”, 3/4", & 1”) Single Service Non-Traffic Areas
J	Lid Details (5/8”, 3/4", & 1”) Dual Service Non-Traffic Areas
J	Lid Details (5/8”, 3/4", & 1”) Single Service Traffic Rated
J	Lid Details (5/8”, 3/4", & 1”) Dual Service Traffic Rated
J	Lid Details (1 1/2" & 2”) Single Service Non-Traffic Areas
J	Lid Details (1 1/2" & 2”) Single Service Traffic Rated
L	Tracer Wire (Solid Copper)
L	Direct Bury Wire Splice Kit

2.2 CURB STOP ASSEMBLIES

A. For ⅝” – 1” services both single and double box service provide curb stop on CTS line 12” from Inlet of meter setter.

B. Curb stop on 2-inch service not required for 1 1/2" and 2”.

2.3 WATER METERS SINGLE SERVICE

A. Meter box shall be installed flush with grade. Box shall be sized and centered around the meter assembly to allow for access and future maintenance.

2.4 DUAL SERVICE

A. Meter box shall be installed flush with grade. Box shall be sized and centered around the meter assembly to allow for access and future maintenance.

B. U-branch shall be installed prior to meter setter.

C. Meter setter shall be installed to allow 3 to 6 -inches from top of meter from bottom of lid.

D. Meter setter shall be installed in the upright position.

2.5 MATERIALS

A. Bedding: As specified in Section 31 23 34 – Excavating, Trenching, Dewatering and Backfilling.

B. Cover: As specified in Section 31 23 34 – Excavating, Trenching, Dewatering and Backfilling.

C. Soil Backfill from Above Pipe to Finish Grade: As specified in Section 31 23 34 – Excavating, Trenching, Dewatering and Backfilling.

PART 3 EXECUTION

3.1 EXAMINATION

A. Section 01 70 00 – Execution and Closeout Requirements.

B. Verify that building service connections and municipal utility water main sizes, locations, and inverts are as indicated on Shop Drawings.

3.2 PREPARATION

A. Section 01 70 00 – Execution and Closeout Requirements.

B. Cut pipe ends square, ream pipe and tube ends to full pipe diameter, and remove burrs.

C. Remove scale and dirt from inside and outside of piping before assembly.

3.3 INSTALLATION

A. 1” Service Corporation Stop Assemblies:
   1. Make connection for each different kind of water main, using suitable materials, equipment, and methods as approved by Engineer.
   2. Provide service clamps for mains constructed of materials other than cast iron or ductile iron.
   3. Location:
      a. Locate and stagger corporation stops at least 36 inches apart longitudinally.
   4. Plastic Pipe Mains:
      a. Provide full support for service clamp for full circumference of pipe, with minimum 2-inch width of bearing area.

b. Exercise care against crushing or causing other damage to mains at time of tapping or installation of service clamp or corporation stop.
5. Use seals or other devices such that no leaks are present in mains at points of tapping.
6. Do not backfill and cover service connections until installation has been approved by Engineer and CFPUA inspector.

B. Bedding:
1. Excavate pipe trench as specified in Section 31 23 34 – Excavating, Trenching, Dewatering, and Backfilling.
2. Placement:
a. Place bedding material as indicated on Drawings.
b. Level fill materials in one continuous layer not exceeding 8 inches of compacted depth.
c. Compact to 95 percent maximum density.
3. Place fill materials as specified in Section 31 23 34 – Excavating, Trenching, Dewatering and Backfilling.

C. Pipe and Fittings:
1. Maintain separation of water main from **sewer piping** according to code.
2. Group piping with other Site piping Work whenever practical.
3. Install pipe to allow for expansion and contraction without stressing pipe or joints.
4. Install access fittings to permit disinfection of water system.
5. Jointing of Pipe:
a. Connections between different types of pipe and accessories shall be made with transition fittings approved by CFPUA's representative.
b. Service laterals shall consist of a tapping saddle, corporation stop and a length of PE pipe with no joint installed between the main service tap and the service stop. Service laterals shall be installed perpendicular to the water main. Contractor shall install all material per the CFPUA Material Specification Manual allowing for meter installation at a later date by CFPUA personnel. Locator wire shall be installed as per specifications.
6. Thrust Restraints: Form and place concrete for thrust restraints at each elbow or change of direction of pipe.
7. Establish elevations of buried piping with not less than 3 feet of cover.
8. Pipe Markers: According to CFPUA MSM.
9. Backfill trench as specified in Section 31 23 34 – Excavation, Trenching, Dewatering and Backfill for Pipes.

D. Curb Stop Assemblies:
1. Set curb stops on 95% compacted soil.

E. Water Meters: 2" and smaller shall be set by CFPUA.

F. Backflow Preventers:
1. Install backflow preventers where indicated on Drawings and according to manufacturer instructions.
2. Testing and Installation Requirements: Comply with CFPUA requirements and plumbing codes, see CFPUA's website under Departments, Environmental Management – Backflow and Cross Connections.

G. Service Connections:
   1. Install water service according to as indicated on Drawings.
   2. Install water service to 18” of right-of-way and connect to building water service as specified in CFPUA details and referenced in CFPUA Material Specification Manual.
   3. All meters installed on lines greater than 2-inch diameter must have a strainer and be installed in an appropriately sized, approved meter vault that provides sufficient access for reading, maintenance, and protection in accordance with Water Meter Vaults specification.

H. Service Intended for Fire Protection:
   1. Two taps shall be installed, one for potable water and one for fire flow. The potable water tap shall be installed and metered in accordance with this Section. The fire flow tap shall not be metered and the fire flow system shall be fully segregated from the potable system throughout the facility. A valve will be installed at the tap and the right-of-way or easement line denoting the CFPUA owned/privately owned boundary. A privately owned, privately maintained backflow prevention device shall be installed in the line immediately after entering a structure in accordance with the North Carolina State Building Code and the CFPUA Cross Connection Control Ordinance.

I. Pipe Locator Wire: As specified in Section 33 01 12 – Identification for Utilities Piping.

J. Disinfection of Water Piping System: Flush and disinfect system as specified in Section 33 14 20 – Disinfection of Water Distribution Mains.

3.4 TOLERANCES

A. Install pipe to indicated elevation to within tolerance of **1** inch.

3.5 FIELD QUALITY CONTROL

A. Section 01 40 00 – Quality Requirements.

B. Pressure test water distribution system according to Section 33 05 05.31– Hydrostatic Testing of Water Distribution and Sanitary Sewer Force Mains.

C. If tests indicate Work does not meet specified requirements, remove Work, replace, and retest.

END OF SECTION

SECTION 33 14 20

DISINFECTION OF WATER PIPELINES, FACILITIES AND APPURTENANCES

PART 1 GENERAL

1.1 SUMMARY

A. Section Includes:
   1. Essential procedures for disinfecting new and repaired water mains. All new water mains, services, and appurtenances shall be disinfected before they are placed in service. All water mains taken out of service for inspection, repair, or other activities shall be disinfected before they are returned to service.
   2. Testing and reporting of results.

B. Each unit of constructed water main, services, and appurtenances shall be disinfected with chlorine upon successful completion of the hydrostatic test. The disinfection procedure shall be performed in strict conformance with Cape Fear Public Utility Authority (CFPUA) procedures for disinfecting water mains, as outlined in paragraphs 3.2 and 3.3 of this Section.

C. Related Requirements:
   1. CFPUA Material Specification Manual (MSM).
   2. Section 33 14 13 – Water Distribution Piping, Valves, Hydrants and Appurtenances.
   3. Section 33 14 14 – Public Water Service Connections.

1.2 REFERENCE STANDARDS

A. American Water Works Association:
   1. AWWA B300 – Hypochlorites.
   2. AWWA C651 – Disinfecting Water Mains.
   3. AWWA M12 – Simplified Procedures for Water Examination.
   4. APHA, AWWA, WEF – Standard Methods for the Examination of Water and Wastewater.

B. North Carolina Public Water Supply:
   1. NCPWS Rules Governing Public Water Systems Section .1000 – Disinfection of Water Supply Systems.

1.3 ADMINISTRATIVE REQUIREMENTS

A. Any event requiring a CFPUA representative to be present will require a two-business day notice to schedule the event.

B. No valves are to be operated unless a CFPUA representative is present. Any valves operated without a CFPUA representative present or a directive may be subject to penalties in accordance with CFPUA's Ordinance.

C. The Contractor shall pay particular attention to the scheduling requirements outlined in the procedures. The Contractor shall be responsible for furnishing and installing all required chlorine injection and monitoring ports at no additional cost to CFPUA.

D. The mains will in no case be accepted by CFPUA for public use until the CFPUA Engineer approves the mains as having been properly disinfected.

1.4 SUBMITTALS

A. Section 01 33 00 – Submittal Procedures.

B. Submittals:
1. Product Data: Submit manufacturer information for proposed chemicals and treatment doses.
2. Manufacturer's Certificate: Certify that products meet or exceed specified requirements.
3. Disinfection Procedure: Submit description of procedure, including type of disinfectant and calculations indicating quantities of disinfectants required to produce specified chlorine concentration.
4. Certify that final water complies with disinfectant quality standards of CFPUA.
5. Test and Evaluation Reports: Indicate testing results comparative to specified requirements. All lab reports shall be from certified lab and submitted to CFPUA representative.
6. Field Quality-Control Submittals: Indicate results of Contractor-furnished tests and inspections.

1.5 CLOSEOUT SUBMITTALS

A. Section 01 70 00 – Execution and Closeout Requirements.

B. Disinfection Report:
1. Type and form of disinfectant used.
2. Date and time of disinfectant injection start and completion.
3. Test locations.
4. Name of person collecting samples.
5. Initial and 24-hour disinfectant residuals in treated water in ppm for each outlet tested.
6. Date and time of flushing start and completion.
7. Disinfectant residual after flushing in ppm for each outlet tested.

1.6 QUALITY ASSURANCE

A. Perform Work according to AWWA C651.

B. QUALIFICATIONS
1. Manufacturer: Company specializing in manufacturing products specified in this Section with minimum three years' documented experience.
2. Applicator: Company specializing in performing Work of this Section with minimum three years' documented experience.

PART 2 PRODUCTS

2.1 DISINFECTION CHEMICALS

A. Chemicals:
   1. Calcium hypochlorite: Comply with AWWA B300.
   2. Sodium hypochlorite: Comply with AWWA B300.

2.2 CHLORINE RESIDUAL TEST KITS

1. Test kits shall use methodology conforming with *Standard Methods for the Examination of Water and Wastewater* or AWWA Manual M12.
2. Manufacturers:
   a. Hach Company.
   b. LaMotte.
   c. Fisher Scientific.
   d. Hellige.
   e. Or equal.

PART 3 EXECUTION

3.1 PREVENTIVE AND CORRECTIVE MEASURES DURING CONSTRUCTION

Heavy particulates generally contain bacteria and prevent even very high chlorine concentrations from contacting and killing such organisms. It is, therefore, essential that the procedures of this section be observed to assure that a water main and its appurtenances are thoroughly clean for the final disinfection by chlorination. Also, any connection of a new water main to the active distribution system prior to receipt of satisfactory samples may constitute a cross-connection. Therefore, the new main must be isolated until all bacteriological and other tests are satisfactorily completed.

A. KEEPING PIPE CLEAN AND DRY: Precautions shall be taken to protect the interiors of pipes, fittings, and valves against contamination. Pipe delivered for construction shall be strung so as to minimize the entrance of foreign material. All openings in the pipeline shall be closed with watertight plugs when work is stopped at the end of the day or for other reasons.

B. JOINTS: Joints of all pipes in the trench shall be completed before work is stopped. If water accumulates in the trench, the plugs shall remain in place until the trench is dry.

C. PACKING MATERIAL: All packing material shall consist of molded or tubular rubber rings, or other approved material. Lead or asbestos material in any form shall not be permitted.

D. SEALING MATERIALS: No contaminated material or any material capable of supporting prolific growth of microorganisms shall be used for sealing or lubricating joints. Sealing and lubricating material or gaskets shall be handled in a manner that avoids

contamination. The lubricant used in the installation of sealing gaskets shall be suitable for use in potable water. It shall be delivered to the job in closed containers and shall be kept clean. Soil conditions could warrant the upgrade of gasket material to a volatile resistant material.

E. CLEANING OF PIPE AND APPURTENANCES: If dirt enters the pipe, it shall be removed and the interior pipe surface cleaned. If, in the opinion of the CFPUA representative, the dirt remaining in the pipe will not be removed by the flushing operation, then the interior shall be cleaned by mechanical means such as a hydraulically propelled foam pig or other suitable device. The cleaning method used shall not force mud or debris into the interior pipe joint spaces and shall be acceptable to CFPUA.

F. FLOODING BY STORM OR ACCIDENT DURING CONSTRUCTION: If the main is flooded during construction, it shall be cleared of the floodwater by draining and flushing with potable water until the main is clean. The section of pipeline shall be flushed until water from the pipe runs clear.

3.2 EXAMINATION

A. Section 01 70 00 – Execution and Closeout Requirements.

B. Chlorination Planning:
   1. Before calling the CFPUA office for a time to be set up for disinfection, all of the following shall be installed or supplied by the Contractor at no cost to CFPUA. This list shall be checked and/or assembled before the CFPUA Engineering personnel arrive.
      a. A valve may be required to be installed in the line to be disinfected near the CFPUA water main connection.
      b. A blowoff of a brass or approved material faucet may be required to be installed at the dead end of the line, at all closed valves, and every 1,200 feet to be disinfected for flushing purposes and bacteria sampling. The opening to this blowoff should point downward, and there should be at least twenty-four inches clearance between the opening and the ground for proper sampling.
      c. Mains connecting other mains with open valves within the system to be disinfected may cause “short circuits” resulting in improper disinfection. Valves on these connecting mains shall be checked to see if they should be closed to eliminate this problem. Blowoffs should be at both sides of valves closed to prevent “short circuits”.
      d. Successful hydrostatic testing and CFPUA acceptance of said testing of the line is required before disinfection procedures.
      e. A clean container shall be used to mix and/or dissolve the hypochlorite.
      f. A clean, new wooden mixer shall be present for mixing and dissolving the hypochlorite.
      g. A pump for pumping the chlorine solution into the line shall be present. This pump shall be gasoline or electrically powered chemical feed pump designed for feeding chlorine solutions. For small applications, the solutions may be fed with a hand pump; for example, a hydraulic test pump. Feed lines shall be of such material and strength as to withstand safely the maximum pres-

sures that may be created by the pumps. All connections shall be checked for tightness before the hypochlorite solution is applied to the main.

h. All temporary blowoffs and injection points shall be properly abandoned and physically disconnected when directed by CFPUA prior to the line being placed into service.

C. Verify that access fittings have been installed under Section 33 14 13 – Water Distribution Piping and Appurtenances.

D. Perform scheduling and disinfecting activity with startup, water pressure testing, adjusting and balancing, and demonstration procedures, including coordination with related systems.

3.3 DISINFECTION PROCEDURE FOR NEW WATER MAINS AND FIRELINES

A. Provide required equipment to perform Work of this Section.

B. Method of Chlorination:

1. Use the continuous feed method for disinfection of all new water mains. This method must give a minimum of 10 mg/L of chlorine residual at the end of the 24-hr period.
   a. Continuous-Feed Method**:** The continuous-feed method is the process in which a concentrated solution of chlorine is injected into the water main. Caution shall be observed during the handling and injection of the chlorine solution as chlorine in any form is very toxic and any error could be harmful to the employees and to the public.
   b. Preliminary Flushing: Before chlorine solutions are injected, the main shall be filled with potable water to eliminate air pockets and shall be flushed to remove particulates. The flushing velocity in the main shall not be less than 3.0 ft/sec (preferably 3.5 ft/sec) unless the CFPUA representative determines that conditions do not permit the required flow or that the flow will cause undue problems when discharged to waste. An acceptable flushing velocity shall then be determined and used.
   c. Procedure for Chlorinating the Main:
      1) Water supplied from the existing distribution system or other Approved public water supply shall be made to flow at a constant, measured rate into the newly installed water main. In the absence of a meter, the rate may be approximated by Approved method.
      2) At a point, not more than 10 ft downstream from the beginning of the new main, water entering the new main shall receive a dose of chlorine fed at a constant rate such that the water will have not less than 50 mg/L and not greater than 100 mg/L free chlorine residual. To ensure that this concentration is provided, measure the chlorine concentration at regular intervals of distance and time in accordance with the procedures described in the current edition of *Standard Methods for the Examination of Water and Wastewater* or AWWA Manual M12, or by using Approved chlorine test kits.
      3) During the application of the chlorine, valves shall be adjusted by or under the supervision of the CFPUA representative to prevent the chlorine solution from entering the existing water system. The chlorine injection

shall not cease until the entire water main is filled with a chlorine concentration of not less than 50 mg/L. All appurtenances and valves shall be operated to ensure that the chlorine solution has contact with them. The chlorinated water shall be allowed to remain for a period of not less than 24-hours.

4) At the end of the 24-hour period, the chlorine residual shall be measured and shall not be less than 10 mg/L in any samples collected along the water main and at the end of said water main.

C. Final Flushing:

1. Clearing the Main of Highly Chlorinated Water: Highly chlorinated water shall not remain in prolonged contact with pipe. At the end of the 24-hour contact period, the water shall be removed in order to prevent damage to the pipe lining or corrosion damage to the pipe itself. The highly-chlorinated water shall be flushed from the main until chlorine measurements show that the concentration in the water leaving the main is no higher than that generally prevailing in the distribution system.
2. Disposing of Highly Chlorinated Water: A neutralizing chemical shall be applied to the chlorinated water to be discharged to neutralize thoroughly the chlorine residual. Chlorine residual of water being disposed shall be neutralized by treating with one of the chemicals listed below:
   a. Ascorbic Acid
   b. Sodium Ascorbate
   c. Sulfur Dioxide
   d. Sodium Bisulfate
   e. Sodium Sulfite
   f. Sodium Thiosulfate

D. Bacteriological and Other Tests:

1. Standard Conditions: After final flushing and before the new main is opened to the distribution system, two consecutive sets of acceptable samples, taken at least 24-hours apart, shall be collected from the new main. Samples shall be collected from every 1,200-ft of new water main, from the end of the water line, and from each branch. All samples shall be tested in accordance with *Standard Methods for the Examination of Water and Wastewater*. All samples shall show the absence of coliform organisms, and a free chlorine residual equal to the level present in the existing system and shall have no visible color or particulate matter. **Must be submitted in the form of an official report by a certified lab.**
2. Special Conditions: If in the opinion of CFPUA, excess contamination has been allowed to enter the water main during construction or other events, bacteriological samples shall be taken at intervals of approximately 400 to 500 ft and shall be identified by location. Samples shall be taken of water that has stood in the new main for at least 16 hours after final flushing has been completed.
3. Sampling Procedures: Sample collection shall be in accordance with *Standard Methods for the Examination of Water and Wastewater*. A copper or PVC assembly or a combination blowoff and sampling tap may be used for mains up to 8-inches diameter. Fire hydrants may not be used for sampling purposes. After samples have been collected, analyzed, and accepted, the sampling assemblies may be removed and retained for future use. All bacteriological analysis must be completed by a N.C. certified Drinking Water laboratory. The utility contractor

shall be responsible for all costs associated with the sampling and analysis of all samples required for acceptance. **All Lab Reports shall be delivered to the CFPUA Representative before any activation can proceed.**

E. Replace permanent system devices that were removed for disinfection.

3.4 DISINFECTION PROCEDURE FOR REPAIRED WATER MAINS

A. The following procedures apply primarily when mains are wholly or partially de-watered. After the appropriate repair procedures have been completed, the existing main may be returned to service prior to completion of the bacteriological testing to minimize the time customers are out of water. Leaks or breaks that are repaired with clamping devices while the mains remain full of water under pressure present little danger of contamination and require no disinfection.

B. The following procedure is considered as a minimum that may be used.
   1. Swabbing with Hypochlorite Solution: The interior of all pipe and fittings used in making repair (particularly couplings and tapping sleeves) shall be swabbed with a five (5) percent hypochlorite solution (300 mg/l concentration) before they are installed.
   2. Flushing: Thorough flushing is the most practical means of removing contamination introduced during repairs. If valve and hydrant locations permit, flushing toward the work location from both directions independently is recommended. Flushing shall be started as soon as the repairs are completed and shall be continued until discolored water and particulate matter are eliminated.
   3. Slug Chlorination: When practical, in addition to the procedures above, the section of main in which the break is located shall be isolated, all service connections shut off, and the section flushed and chlorinated with a high concentration of chlorine (as much as 300 mg/L), and the concentration allowed to stay in contact with the main for a minimum of 15 minutes. After chlorination, flushing shall be resumed and continued until discolored water is eliminated and the water is free of noticeable high chlorine odor. A chlorine residual of no greater than 3.0 mg/L shall be acceptable.
   4. Sampling: Bacteriological samples shall be taken after repairs are completed to provide a record for determining the procedure's effectiveness. If the direction of flow is known, sample locations shall be determined. If the direction of flow is unknown, then samples shall be taken on each side of the main break. If bacteriological samples are unacceptable, the CFPUA representative shall determine corrective action. Daily sampling shall be continued until two successive daily samples are acceptable.

3.5 REPEAT DISINFECTION OF WATER MAIN

A. If the initial disinfection fails to produce satisfactory results as per specifications, the new main shall be reflushed, rechlorinated and resampled; CFPUA may also require further cleaning methods (i.e. pigging the line) if the disinfections fails twice. If check samples also fail to produce acceptable results, the new main shall be reflushed and rechlorinated by the continuous-feed method of chlorination until satisfactory results are obtained.

B. High velocities in the existing system, resulting from flushing the new main may disturb sediment that has accumulated in the existing mains. When check samples are taken, it is advisable to also sample water entering the new main.

3.6 CONNECTION TO EXISTING SYSTEM

A. The NCPWS certifications, final acceptance, opening of valves and activation of the existing water system will only be allowed after satisfactory samples and chlorine levels have been produced. All sampling devices and blowoffs must be removed from the water main by the contractor prior to acceptance by CFPUA. The CFPUA Operations Department will activate the system when their procedures are completed.

3.7 FIELD QUALITY CONTROL

A. Section 01 70 00 – Execution and Closeout Requirements.

END OF SECTION

SECTION 33 14 22

TESTING OF SANITARY SEWER MAINS AND MANHOLES

PART 1 GENERAL

1.1 SUMMARY

A. Section includes testing and inspection of gravity sewer main, manholes, and service laterals in accordance with NCDEQ and CFPUA requirements. Location or project specific testing requirements and procedures shall be set forth by CFPUA and Engineer in approval conditions. CCTV shall be required as a minimum. Additional Testing may be requested.

B. Sewer mains, service laterals, and manholes shall be inspected and tested in accordance with the reference standards and following table with notes.

	CCTV Inspection	Low Pressure Air Test	Exfiltration Test	Deflection Test	Infiltration/Exfiltration Limit	Vacuum Test
Sewer Mains	Yes	Yes (Note 1)	Yes (Note 2)	Yes (Note 3)	100 gpdim (Note 4)	
Sewer Laterals	Yes	Yes (Note 1)			100 gpdim (Note 4)	
Manholes	Yes					Yes (Note 5)

Notes:

1. When sewer main diameters are 24-inches and smaller; unless water table is 2-feet or more above the top of pipe at upstream end of main or the calculated air test pressure is greater than 9 psi.
2. When sewer main diameters are greater than 24-inches.
3. Mandrel pull test after backfill is placed and stable at grade for 30-days. As an alternative to waiting 30-days to permit stabilization of the soil-pipe system, certified test results from an independent testing firm verifying that the backfill of the trench has been compacted to a least 95% maximum density may be accepted by CFPUA.
4. 100-gallons per nominal diameter-inch-mile for section tested and under 2-feet positive head.
5. Not applicable to existing manholes modified or rehabilitated.
6. Vertical compaction testing shall shall be performed at two (2) feet above the pipe and be completed in 2 ft lifts.
7. Horizontal compaction testing shall be performed at the tie-in point and every 100 ft thereafter.
8. Manhole compaction testing is to be performed in 2 ft lifts.

C. Related Requirements:
   1. Section 33 05 13 – Precast Concrete Manholes and Utility Structures.
   2. Section 33 31 11 – Sanitary Sewer Gravity Mains.

1.2 REFERENCES

A. NC-DEQ Minimum Design Criteria for the Permitting of Gravity Sewers.

B. American Water Works Association:
   1. AWWA C600 - Installation of Ductile-Iron Water Mains and Their Appurtenances.
   2. AWWA M23 – PVC Pipe – Design and Installation.

C. ASTM International:
   1. ASTM C1244 - Standard Test Method for Concrete Sewer Manholes by the Negative Air Pressure (Vacuum) Test Prior to Backfill.
   2. ASTM D2122 - Standard Test Method for Determining Dimensions of Thermoplastic Pipe and Fittings.
   3. ASTM F1416 – Standard Practice for Installation Acceptance of Plastic Non-Pressure Sewer Lines Using Low-Pressure Air

D. Uni-Bell PVC Pipe Association:
   1. UNI-B-6-98 – Recommended Practice for Low-Pressure Air Testing of Installed Sewer Pipe.

1.3 ADMINISTRATIVE REQUIREMENTS

A. Acceptance of any deviation from these testing requirements is at the sole discretion of the CFPUA.

B. All defects in the pipelines, manholes and appurtenances shall be remedied by the Contractor at no additional expense to CFPUA and will be re-inspected as outlined in this Section.

1.4 SUBMITTALS

A. Section 01 33 00 – Submittal Procedures.

B. Submit following items prior to start of testing:
   1. Testing procedures.
   2. List of test equipment.
   3. Testing sequence schedule.
   4. Provisions for disposal of flushing and test water.
   5. Test gage calibration.
   6. Deflection mandrel drawings and calculations.

C. Test Results: Certified copies of test results shall be furnished to the Owner and CFPUA within 1 week.

D. CCTV Inspection: Submit two copies of the CCTV inspection to CFPUA on hard drives. The digital media recordings, television inspection logs, and digital photographs shall be named and labeled to indicate the specific sewer segment, location, and contents.

PART 2 PRODUCTS

2.1 CCTV INSPECTION EQUIPMENT

A. The equipment used for the CCTV inspection shall be specifically designed and constructed for sanitary or pressure sewer inspection. Lighting for the camera shall be suitable to allow a clear picture of the entire periphery of the pipe. The camera shall be operative in 100% humidity conditions. The camera shall be a color, pan-and-tilt model. The camera shall be capable of being moved through the line in either direction at a uniform rate. A push camera system is acceptable for sewer laterals.

B. The camera, television monitor, and other components of the video system shall be capable of producing picture quality and resolution to the satisfaction of the Engineer.

C. Inspections shall be submitted to the Engineer or Owner in electronic (digital) NASSCO format that can be imported and exported with other NASSCO PACP certified software including POSM.

2.2 DEFLECTION TESTING OF PLASTIC SEWER PIPING

1. "Go/ No Go" mandrel.
2. Pull/retrieval ropes.

2.3 EXFILTRATION TESTING

A. Equipment:
1. Plugs.
2. Pump.
3. Measuring Device.

2.4 INFILTRATION TESTING

A. Equipment:
1. V-notch weirs.

2.5 LOW-PRESSURE AIR TESTING

A. Equipment:
1. Air compressor.
2. Air supply line.
3. Shutoff valves.
4. Pressure regulator.
5. Pressure relief valve.
6. Stopwatch.
7. Plugs.
8. Pressure Gage: Calibrate to 0.1 psi.
9. Clear tubing for water table measurement.

2.6 VACUUM TESTING

A. Equipment:
1. Vacuum pump.
2. Vacuum line.
3. Vacuum Tester Base:
   a. Compression band seal.

b. Outlet port.
4. Shutoff Valve.
5. Stopwatch.
6. Plugs.
7. Vacuum Gage: Calibrated to 0.1 in. Hg.

PART 3 EXECUTION

3.1 EXAMINATION

A. Section 01 70 00 – Execution and Closeout Requirements.

B. Verify the following:
1. Piping and manholes installation methods are compatible with testing requirements.
2. Testing equipment is calibrated and functioning.
3. Test procedures and recording methods have been submitted and approved.

3.2 PREPARATION

A. Section 01 70 00 – Execution and Closeout Requirements.

B. Plugs:
1. Plug outlets, wye branches, and laterals.
2. Brace plugs to resist test pressures.

3.3 FIELD QUALITY CONTROL

A. Section 01 40 00 – Quality Requirements

B. Section 01 70 00 – Execution and Closeout Requirements.

C. CCTV Procedures:
1. After the sewers are completely cleaned and water is introduced, the sewers shall be inspected by means of closed-circuit television to verify that the sewers have been thoroughly cleaned, to locate active sewer services and other connections, to document the condition, and to locate sewer defects.
2. Existing flow in the sewer being inspected shall be temporarily bypassed in accordance with the Bypass Pumping Plan if satisfactory images cannot be obtained with flow on the sewer. CFPUA will determine if the images are satisfactory.
3. Provide ventilation and air movement to prevent the presence of vapor or mist in the sewer.
4. CCTV inspections shall be performed in accordance with PACP© standards including the specific date and time of inspection.
5. The camera shall be moved through the sewer by devices that do not obstruct the camera view, or interfere with proper documentation of the sewer conditions, such as manual or power winches, TV cable, and powered rewinds.

6. When manually operated winches are used to pull the television camera through the line, two-way radios, telephones, or other suitable means of communication shall be established between the two manholes or access points to ensure adequate communications between members of the crew.
7. The camera shall be moved through the line in either direction at a moderate rate, stopping to permit proper documentation of the condition. In no case shall the television camera be pulled at a speed greater than 30-feet per minute. The camera shall be stopped at joints, defects, points of significance, tributary connections, service laterals, and other connections and shall be panned, tilted, and rotated to fully view the defects and connections. Inspections shall be documented.
8. Perform dye testing during the CCTV inspections to locate and confirm active service laterals when directed to by Engineer or CFPUA.
9. Inspections shall be performed from manhole centerline to manhole centerline or access point to access point.
10. Record accurate measurements of distances. Accuracy of the distance meter shall be checked above grade by a suitable device. The accuracy shall be within 1 percent.

D. Deflection Testing of Plastic Sewer Piping:
1. Perform vertical ring deflection testing on PVC sewer piping after backfilling has been in place for at least 30 days.
2. Allowable maximum deflection for installed plastic sewer pipe is no greater than five percent of original vertical internal diameter.
3. Perform deflection testing using "go, no go" mandrel.
4. Mandrel Diameter:
   a. Not less than 95 percent of base or average ID of pipe.
   b. Pipe Diameter: Comply with ASTM D2122.
5. Perform testing without mechanical pulling devices.
6. Locate, excavate, replace, and retest piping that exceeds allowable deflection.

E. Exfiltration Testing of Pipes Larger Than 24 Inches in Diameter:
1. Perform exfiltration testing not exceeding 100 gal. for each inch of pipe diameter for each mile per day for each reach of piping undergoing testing.
2. Perform testing with minimum positive head of 2 feet.

F. Infiltration Testing:
1. Maximum Allowable Infiltration: 100 gallons per nominal inch diameter of pipe for each mile per day for the reach of piping undergoing testing.
2. Include allowances for leakage from manholes.

G. Low-Pressure Air Testing:
1. Testing shall be accomplished by plugging the line at each end with pneumatic plugs.
2. Test each reach of gravity sewer piping between manholes.
3. Low-pressure air test all connected service laterals.
4. Introduce air pressure slowly to approximately 4 psig.
5. Determine ground water elevation above spring line of piping.
6. For every foot of ground water above spring line of piping, increase starting air test pressure by 0.43 psi.
7. Do not increase pressure above 9 psig.

8. Allow pressure to stabilize for at least five minutes.
9. Adjust pressure to 3.5 psig or to increased test pressure as determined above when ground water is present.
10. Do not make allowance for laterals unless a test section having more than 625 square feet of lateral surface area fails to pass the air test. Adjust the time required according to UNI-B-6-98.
11. Minimum Testing Duration in Minutes:
    a. Shall be calculated by multiplying the nominal pipe size (inches) by 0.625.
12. Record drop in pressure during testing period.
13. If air pressure drops more than 1.0 psi during testing period, piping has failed.
14. If 1.0 psi air pressure drop has not occurred during testing period, piping is acceptable; discontinue testing.
15. If piping fails, test reach of piping in incremental stages until leaks are isolated, repair leaks, and retest entire reach between manholes.
16. If unsatisfactory testing results are achieved, make necessary repairs and retest until result meets criteria.
17. Repair visible leaks regardless of quantity of leakage.
18. UNI-B-6-98 TABLE I – MINIMUM SPECIFIED TIME REQUIRED FOR A 1.0 PSIG PRESSURE DROP FOR SIZE AND LENGTH OF PIPE INDICATED FOR Q=0.0015

Min. Pipe Dia. (in.)	Time (min: sec)	Length For Min. Time (ft)	Time For Longer Length (sec)	Time (min:sec) for Length (L) Shown 100 ft	150 ft	200 ft	250 ft	300 ft	350 ft
4	3:46	597	.380 L	3:46	3:46	3:46	3:46	3:46	3:46
6	5:40	398	.854 L	5:40	5:40	5:40	5:40	5:40	5:40
8	7:34	298	1.520 L	7:34	7:34	7:34	7:34	7:36	8:52
10	9:26	239	2.374 L	9:26	9:26	9:26	9:53	11:52	13:51
12	11:20	199	3.418 L	11:20	11:20	11:24	14:15	17:05	19:56
15	14:10	159	5.342 L	14:10	14:10	17:48	22:15	26:42	31:09
18	17:00	133	7.692 L	17:00	19:13	25:38	32:03	38:27	44:52
21	19:50	114	10.470 L	19:50	26:10	34:54	43:37	52:21	61:00
24	22:40	99	13.674 L	22:47	34:11	45:34	56:58	68:22	79:46

H. Vacuum Testing:
1. Repair both outside and inside of joint to ensure permanent seal.
2. Test manholes prior to backfill.
3. Test manholes with manhole frame set in place.
4. Vacuum Testing:
    a. Comply with ASTM C1244.
    b. Plug pipe openings; securely brace plugs and pipe.
    c. Plug lift holes with non-shrink grout.
    d. Inflate compression band to create seal between vacuum base and structure.
    e. Connect vacuum pump to outlet port with valve open, then draw vacuum to 10 in. Hg (5 psig).
    f. Close valve.
    g. Manhole Test Duration in Seconds:
        1) Manhole Diameter of 4 Feet: 60.
        2) Manhole Diameter of 5 Feet: 75.

3) Manhole Diameter of 6 Feet: 90.

h. Record vacuum drop during test period.

i. If vacuum drop is greater than 1 in. Hg during testing period, repair and retest manhole.

j. If vacuum drop of 1.0 in. Hg does not occur during test period, manhole is acceptable; discontinue testing.

k. If vacuum test fails to meet 1.0-in. Hg drop in specified time after repair, repair and retest manhole.

5. If unsatisfactory testing results are achieved, repair manhole and retest until result meets criteria.

6. Repair visible leaks regardless of quantity of leakage.

END OF SECTION

SECTION 33 31 11

SANITARY SEWER GRAVITY MAINS

PART 1 GENERAL

1.1 DESCRIPTION

A. Section Includes Installation of:
   1. Pipe and fittings for sewer gravity mains.
   2. Gasket materials, couplings and other gravity main appurtenances.

B. Related Requirements:
   1. CFPUA Material Specification Manual (MSM).
   2. Section 01 50 00 – Bypass Pumping.
   3. Section 03 05 00 – Concrete.
   4. Section 31 23 34 – Excavation, Trenching, Dewatering and Backfilling.
   5. Section 33 01 12 – Identification for Utilities Piping
   6. Section 33 14 22 – Testing of Gravity Sewer Mains and Manholes.
   7. Section 33 05 13 – Precast Concrete Manholes and Utility Structures.
   8. Section 33 05 07.13 – Utility Horizontal Directional Drilling.
   9. Section 33 05 07.23 – Jacking and Boring Pipe Construction.

1.2 REFERENCE STANDARDS

A. American Water Works Association:
   1. AWWA C105 - Polyethylene Encasement for Ductile-Iron Pipe Systems.
   2. AWWA C111 – Rubber-Gasket Joints for Ductile-Iron Pressure Pipe and Fittings.
   3. AWWA C115 - Flanged Ductile-Iron Pipe with Ductile-Iron or Gray-Iron Threaded Flanges.
   4. AWWA C116 – Protective Fusion-Bonded Coatings for the Interior and Exterior Surfaces of Ductile-Iron and Gray Iron Fittings.
   5. AWWA C151 – Ductile-Iron Pipe, Centrifugally Cast.
   6. AWWA C153 – Ductile-Iron Compact Fittings.
   7. AWWA C600 – Installation of Ductile Iron Mains and Their Appurtenances.
   8. AWWA C605 – Underground Installation of Polyvinyl Chloride (PVC) and Molecularly Oriented Polyvinyl Chloride (PVCO) Pressure Pipe and Fittings.
   9. AWWA C900 – Polyvinyl Chloride (PVC) Pressure Pipe and Fabricated Fittings, 4 In. Through 60 In. for Water Transmission and Distribution.
   10. AWWA C906 – Polyethylene Pressure Pipe and Fittings, 4-In. Through 65-In. for Waterworks.

B. ASTM International:
   1. ASTM D698 – 12e2 Standard Test Methods for Laboratory Compaction Characteristics of Soil Using Standard Effort (12,400 ft-lbf/ft3 (600 kN-m/m3)).
   2. ASTM D1557 – 12e1 Standard Test Methods for Laboratory Compaction Characteristics of Soil Using Modified Effort (56,000 ft-lbf/ft3 (2,700 kN-m/m3)).
   3. ASTM D1785 – Standard Specification for Poly (Vinyl Cloride) (PVC) Plastic Pipe, Schedules 40, 80, and 120.

4. ASTM D2241 – Standard Specification for Poly Vinyl Chloride (PVC) Pressure-Rated Pipe (SDR Series).
5. ASTM D6938 – Standard Test Method for In-Place Density and Water Content of Soil and Soil-Aggregate by Nuclear Methods (Shallow Depth).
6. ASTM F477 - Standard Specification for Elastomeric Seals (Gaskets) for Joining Plastic Pipe.

1.3 ADMINISTRATIVE REQUIREMENTS

A. Section 01 30 00 – Administrative Requirements

B. Coordination:
   1. Coordinate Work of this Section with connection to CFPUA and trenching.
   2. The existing system must be kept in operation at all times. Where connections are made to existing mains or other shutdowns are necessary, permission must be obtained and arrangements must be made with the CFPUA Wastewater Collections ORC, Utility Services Division for removing from service those mains that will be affected.
   3. Notify CFPUA no less than two business days prior to an event requiring a CFPUA representative to be present.
   4. The Contractor shall, at least two (2) business days in advance, notify citizens subject to interruption of service by means of door hangers or any other approved method of the starting time and duration of such interruption.
   5. Bypass pumping and hauling operations may be required to interrupt service. A bypass pumping plan shall be submitted in accordance with Section 01 50 00. Shutdowns must be held to a minimum in both number and duration.

1.4 SUBMITTALS

A. Section 01 33 00 – Submittals: Requirements for submittals.

B. Product Data/Source Quality:
   1. Manufacturer’s literature and specifications, as applicable, for products specified in this Section.
   2. Shop test results and inspection data, certified by manufacturer.

C. Testing Procedures:
   1. Submit proposed testing procedures, methods, apparatus, and sequencing. Obtain ENGINEER’s approval prior to commencing testing.

D. Manufacturer Instructions:
   1. Submit manufacturer's instructions for handling, storing, and installing pipes and appurtenances.

E. Manufacturer Certificates:
   1. Certificates of compliance with referenced standards, where applicable, including those of AWWA and others required by Engineer.

F. Field Quality Control Submittals:
   1. Results of Contractor furnished testing and inspections.

1.5 CLOSEOUT SUBMITTALS

A. 01 70 00 – Execution and Closeout Requirements

B. Project Record Documents:
   1. Maintain accurate and up-to-date record documents showing modifications made in the field, in accordance with approved submittals, and other Contract modifications relative to buried piping Work.

   2. Record actual locations and elevations of piping mains, valves, hydrants, manholes, service laterals, cleanouts, connections, thrust restraints, and other utilities found and not indicated on design plans.

C. Operations and Maintenance Data:
   1. Furnish in operations and maintenance manuals complete data for materials in accordance with 01 60 00 Product Requirements.

1.6 QUALITY ASSURANCE

A. Qualifications: Company specializing in manufacturing products specified in the CFPUA Materials Specification Manual.

B. Perform Work according to AWWA and PVC Pipe Association standards.

C. The bell ends of pipe shall face the direction of laying unless otherwise directed by the Engineer, for lines on appreciable slope, the Engineer may require that bell ends face upgrade.

D. All stainless-steel fasteners shall be 316.

1.7 DELIVERY, STORAGE, AND HANDLING

A. Section 01 60 00 – Product Requirements.

B. Inspection: Accept materials on Site in manufacturer's original packaging and inspect for damage.

C. Storage:
   1. Store materials according to manufacturer instructions.
   2. Block individual and stockpiled pipe lengths to prevent moving.
   3. Do not place pipe or pipe materials on private property or in areas obstructing pedestrian or vehicle traffic.
   4. Store PE and PVC materials out of sunlight.

D. Protection:
   1. Protect materials from moisture and dust by storing in clean, dry location remote from construction operations areas.
   2. Provide additional protection according to manufacturer instructions.

1.8 SITE CONDITIONS

A. Field Measurements:
   1. Verify field measurements prior to fabrication.
   2. Indicate field measurements on Shop Drawings.
   3. A minimum of ten-foot utility easement must be provided along the frontage of all lots and as shown for new developments.

1.9 WARRANTY

1. Section 01 70 00 – Execution and Closeout Requirements.

PART 2 PRODUCTS

2.1 CFPUA MATERIALS SPECIFICATION MANUAL

A. Refer to CFPUA Material Specification Manual (MSM) for the following products:

MSM Section	Material
A	Pipe
B	Fittings and Accessories
C	Joint Restraints
I	Castings & Aluminum Access Covers
K	Miscellaneous
L	Electrical
M	Coatings and Sealants
N.	Concrete

2.2 MATERIALS & ACCESSORIES

A. Bedding, Cover, and Backfill:
   1. As specified in Section 31 23 34 – Excavating, Trenching, Dewatering and Backfilling.

B. Manholes:

   1. As specified in Section 33 05 13 – Precast Concrete Manholes and Utility Structures.

PART 3 EXECUTION

3.1 EXAMINATION

A. Section 01 70 00 – Execution and Closeout Requirements.

B. Identify required lines, levels, contours, and datum locations.

C. Determine exact location and size of water mains, valves, hydrants, and appurtenances from Drawings.

D. Verify location and elevation of existing facilities prior to excavation and installation of proposed gravity sewer mains and services.

3.2 PREPARATION

A. Section 01 35 00 – Special Procedures
   1. Pre-construction Site Audio/Video Inspections and Photography:
   2. Show mailboxes, curbing, lawns, driveways, signs, culverts, and other existing Site features.

B. Section 01 70 00 – Execution and Closeout Requirements.

C. All materials, unless otherwise directed, shall be unloaded as nearby as possible to the location of installation by the Contractor. Materials shall be handled with care to avoid damage.

D. All materials found during the progress of work to have flaws, cracks, or other defects will be rejected by the Engineer regardless of whether or not it has been installed and shall be replaced by and at the expense of the Contractor.

E. All PVC pipe, upon delivery to the site and until such time as it is placed in the trench, shall be shielded from the weather and direct sunlight to prevent pipe deterioration.

F. Slings, hooks, or tongs used for lifting shall be padded in such a manner as to prevent damage to exterior surfaces, interior linings and components. If any part of the coating, lining or components is damaged, the repairs or replacement shall be made by the Contractor at his expense and in a manner satisfactory to the Engineer prior to attempting installation.

G. Pipe Cutting:
   1. Cut pipe ends square, ream pipe and tube ends to full pipe diameter, and remove burrs.
   2. Use only equipment specifically designed for pipe cutting; use of chisels or hand saws is not permitted.
   3. Grind edges smooth with beveled end for push-on connections.

H. Remove scale and dirt on inside and outside before assembly.

3.3 INSTALLATION

A. Placement: As specified in Section 31 23 34 – Trenching, Excavation, Dewatering and Backfilling.
   1. All mains shall be laid and maintained at the required lines and grades with fittings and appurtenances at the described locations. All pipe shall be laid to the depth as shown on the drawings, or when a depth is not indicated, with a minimum cover of thirty-six (36) inches unless otherwise shown or approved by engineer. Grade lines shall be set by the Contractor. Realignments must be approved by the

Engineer. The Contractor shall have suitable survey equipment on the site at all times.

2. After placement in the trench the spigot end of the pipe shall be centered in the bell and the pipe shall be driven home and then brought to the proper line and grade by tamping approved backfill material under it, except for the bell. Joint deflection shall not exceed manufacturer's limit.
3. The Work shall at all times progress with caution so as to prevent damage to underground obstructions both known and unknown. Should an obstruction not shown on the drawings be encountered, the Engineer shall be immediately notified and he shall be responsible for alteration to the design should realignment be necessary. Notify the Engineer far enough in advance to allow the realignment to be accomplished by deflection in the pipe joints.

B. Pipe and Fittings
   1. Handle and assemble pipe according to manufacturer instructions.
   2. Install pipe and fittings in strict conformance with AWWA C600.
   3. Joint Deflection: Maximum joint deflection shall meet requirements of AWWA C600 or AWWA Manual of Practice M23.
   4. Prevent foreign material from entering pipe during placement and Work stoppages using plugs designed for that purpose. If trench contains standing water in joining zone, plug shall remain in place until the trench has been pumped dry before proceeding pipe laying.
   5. Allow for expansion and contraction without stressing pipe or joints.
   6. Solvent epoxy cementing, electro-fusion couplings and mechanical joining with bolt on wrap around clamps or mechanical joints without an adapter shall not be used for connections.

C. Push-On Joints
   1. The inside of the bell and the outside of the spigot end shall be thoroughly cleaned to remove dirt, grit, oil or excess coatings and other foreign matter. For ductile iron pipe, the gasket shall be flexed inward and inserted in the gasket recess of the bell socket.
   2. A thin film of gasket lubricant shall be applied to either the inside surface of the gasket or the spigot ends, care will be taken to avoid contact with the ground.
   3. The joint shall be completed by forcing the plain end to the bottom of the socket with a forked tool or jacking device or other approved method. All pipe shall have depth mark prior to insertion. Pipe cut in the field shall be filed to resemble the spigot end of manufactured pipe.
   4. When deflection is required the joint shall be completed prior to setting the deflection. The deflection shall conform to applicable AWWA Standards or manufacturer's recommendation.

D. Mechanical Joints
   1. The inside of the socket, the outside of the spigot end and the gland shall be thoroughly cleaned and or washed with an approved solution to remove dirt, grit, oil or excess coatings and foreign matter to improve gasket seating.
   2. The gland shall then be placed on the plain end of the pipe with the lip extension toward the plain end, followed by the gasket with the narrow edge of the gasket toward the plain end of the pipe.

3. The pipe shall be inserted into the socket and the gasket pressed firmly and evenly into the gasket recess. The joint shall be kept straight during the assembly and any deflection required shall be done after the joint has been assembled but prior to tightening the bolts.

E. Polyethylene Encasement
   1. Polyethylene (PE) encasement when indicated for ductile iron pipe and fittings:
   2. Encase piping in PE as indicated on Drawings to prevent contact with surrounding soil material or insulation from adjacent cathodic protection system.
   3. Comply with AWWA C105.

F. Transition from One Type of Pipe to Another
   1. Provide necessary adapters, special, and connection pieces required when connecting different types and sizes of pipe or connecting pipe made by different manufacturers.
   2. Sewer service laterals shall be connected in accordance with Cape Fear Public Utility Authority Standard Drawing Details.
   3. No flexible couplings shall be used.

G. Pipe Restraint
   1. Provide restraint on ductile iron piping systems where shown or indicated in the Contract Documents below but not limited to:
      a. All ductile iron pipe aerial crossings and carrier pipes with any joints supported on pier or inside an encasement pipe shall require the use of a rigid joint restraint.
      b. All ductile iron pipe carrier pipes installed with joints inside an encasement pipe must utilize rigid restrained joints.

H. Service Connections
   1. In new sewer construction, PVC service connections shall be made by means of a wye, DIP service connections shall be made by means of a wye or a tee. All joints connected to the wye unit shall remain flexible.
   2. Service pipe for all properties shall be laid to the property line and plugged, as shown on the Standard Details. All sewer services shall be installed perpendicular to the main and terminate at the Right-Of-Way line. Sewer services in Cul-De-Sacs are required to be perpendicular, or must originate in end of line manhole and terminate at Right-of-Way, no acute angles to downstream main.
   3. All services tying into ductile iron mains shall be constructed of class 50, DIP with Protecto 401 ceramic epoxy lining.
   4. Cleanouts shall be located a minimum of 6 feet from all property corners. Water meter boxes are to be a minimum of 5 feet from the property corner.
   5. In cases of extra depth where service pipe cannot be laid on a continuous grade to the property line, the Contractor shall construct risers as shown on the Plans. When pipe cannot be adequately supported on undisturbed earth, it shall be supported on a concrete cradle.
   6. Trench and backfill or bore to install lateral. Bore shall accommodate pipe without void around pipe. Bore shall be at least 5’ from the edge of pavement or back of curb on either side of the roadway unless approval to the contrary is given by the engineer.
   7. Connect lateral with wye.

8. Install sewer lateral with plug and one-way clean-out. Clean-out shall consist of a ¼ bend long sweep, with the necessary vertical 4" Schedule 40 PVC/DWV pipe stack. The clean-out plug shall be installed into a cast iron box and cover.

I. Service Reconnections
   1. Service reconnections require adapters for all joints that will not connect properly with ordinary factory joints. Approved pipe cutting methods shall be used to cut any pipe required for the connection. No mortar or collars shall be used on reconnections unless specifically approved by the Engineer.
   2. No flexible couplings shall be used.

J. Joining New Pipe to Old Pipe
   1. Joining PVC pipe to existing vitrified clay pipe requires an adapter approved in the Cape Fear Public Utility Authority's Materials Specification Manual for all joints that will not connect properly with ordinary factory joints. Approved pipe cutting methods must be used to cut any pipe required for the connection. No mortar or collars shall be used for such connections unless approved by the Engineer.
   2. No flexible couplings shall be used.

K. Joining Pipe to Manholes or Other Structures
   1. All manhole connection holes shall be core drilled with a maximum hole diameter not to exceed one and a half times the pipe diameter.
   2. Approved standard groutable PVC-to-manhole fitting approved in the Cape Fear Public Utility Authority's Materials Specification Manual, or a flexible rubber boot may also be used at the manhole connection. The connection at the manhole wall shall be flexible and water tight. Any annular space inside the manhole at the connection shall be filled with approved caulking material or joint filler.
   3. Pipe connections to existing manholes shall be made so that finished work will conform, as nearly as possible to the essential requirements for new manhole construction, as specified above. Drop connections on existing manholes *shall be strengthened by use of eight #6 pins*, placed around the drop elbow and tee, or inside PVC drops may be used.
   4. Provide a minimum of six (6) inches of seperation between edge of manhole core holes and manhole barrel joints. Provide a minimum six (6) inches seperation between edges of core holes. Coring the manhole cone section is not allowed.

L. Sewer Guards
   1. Sewer guards are required at all manholes. Stainless steel sewer guards are required at manholes located in traffic areas.

M. Pipe Markers: According to CFPUA Details and Material Specification Manual.

3.4 FIELD QUALITY CONTROL

A. Section 01 70 00 – Execution and Closeout Requirements.

B. Section 33 14 22 – Testing of Sanitary Sewer Mains and Manholes.

END OF SECTION

Section A: Pipe	Effective Date: 01-01-20 Revision #: 2

A 1 PVC Pipe - Schedule 40

A 2 PVC Pipe - Schedule 80

A 3 Polyethylene Service Tubing

A 3.1 Polyethylene 2" Potable Water Main Tubing

A 3.2 High Density Polyethylene Pipe (HDPE)

A 4 PVC Pipe (2" SDR-21)

A 5 PVC Pipe (AWWA C – 900) – Potable Water (4" thru 24")

A 5.1 PVC Pipe (AWWA C – 900) – Sewer (4" thru 24")

A 5.2 PVC Pipe Restrained Joint Pipe & Couplings (AWWA C – 900) (4" thru 16")

A 5.3 PVC Pipe Fusible (AWWA C-900) - Potable Water (4" thru 24")

A 5.3.1 PVC Pipe Fusible (AWWA C-900) - Sewer Force Main (4" thru 24")

A 6 Ductile Iron Pipe/ Push-On Joint/ Class 350 (4" thru 36")

A 6.1 Ductile Iron Pipe/ Flanged Joint/ Class 53

A 6.2 Ductile Iron Pipe/ Restrained Push-On Joint/ TR Flex Joint (4" thru 36")

A 6.3 Ductile Iron Pipe/ Restrained Push-On Joint/ Flex- Ring Joint (4" thru 48")

A 7 Stainless Steel Pipe

A 8 Galvanized Pipe (Temporary)

A 1 – PVC PIPE - SCHEDULE 40:

Effective Date: 01-01-20
Revision #: 2

MATERIAL/ SPECIFICATION:

Schedule 40 Polyvinyl Chloride, PVC, Pipe shall meet or exceed the performance specifications of:

- ASTM D1785, dimensional requirements, minimum burst and sustained pressure requirements, maximum operating pressure, and test procedures for determining pipe quality with respect to workmanship and materials.
- Shall comply with and be labeled as approved by the National Sanitation Foundation (NSF) for use in potable water lines meeting NSF 14, 61 or "NSF-pw".
- ASTM D1784, manufactured from compounds with Cell Classification 12454B (Type 1, Grade 1 material).

CONNECTIONS:

- Plain end X plain end.
- Plain end X solvent weld bell.

DIMENSIONS:

- 20' standard joint length.



MANUFACTURER:

- CHARLOTTE PIPE AND FOUNDRY
- COLONIAL
- DIAMOND PLASTICS
- FREEDOM PLASTICS
- NAPCO
- NATIONAL PIPE & PLASTICS
- JM EAGLE
- IPEX
- PIPELIFE

RESTRICTIONS:

Use of this product is limited to:

- Sewer service laterals
- 2" Water blow offs
- Water lines

A 2 – PVC PIPE - SCHEDULE 80:

Effective Date: 01-01-20
Revision #: 2

MATERIAL/ SPECIFICATION:

Schedule 80 Polyvinyl Chloride, PVC, Pipe shall meet or exceed the performance specifications of:

- ASTM D1785, dimensional requirements, minimum burst and sustained pressure requirements, maximum operating pressure, and test procedures for determining pipe quality with respect to workmanship and materials.
- Shall comply with and be labeled as approved by the National Sanitation Foundation (NSF) for use in potable water lines meeting NSF 14, 61 or "NSF-pw".
- ASTM D1784, manufactured from compounds with Cell Classification 12454B (Type 1, Grade 1 material).

CONNECTION:

- Plain end X plain end
- Plain end X solvent weld bell

DIMENSIONS:

- 20' standard joint length

SIZES:

- 3/4"
- 1"
- 1-1/2"
- 2"



MANUFACTURER:

- CHEMTROL
- CHARLOTTE PIPE AND FOUNDRY
- COLONIAL
- ESLON THERMOPLASTICS
- FREEDOM PLASTICS
- NATIONAL PIPE AND PLASTICS
- WORLD OF PLASTICS, INC.
- JM EAGLE
- IPEX
- NORTH AMERICAN PIPE
- PIPELIFE

RESTRICTIONS:

- Pump station chemical feed applications downstream from backflow preventer.

A 3 – POLYETHYLENE SERVICE TUBING:

Effective Date: 01-01-20
Revision #: 2

SPECIFICATION/ MATERIAL:
PE-3608 High Density Polyethylene, HDPE, tubing shall meet or exceed the performance specifications of:

- PE-3608 Resin listed in Plastic Pipe Institute TR4 Cell classification per ASTM Standards D3350 = 345444 or 345464.
- ASTM Standards D2737 dimensional standard, Copper Tubing Size, CTS, controlled outside diameter.
- AWWA C901
- MFG. Shall be listed with the Plastic Pipe Institute as meeting the recipe and mixing requirements for pipe in this classification.

POTABLE WATER REQUIREMENT:
- Shall comply with and be labeled as approved by the National Sanitation Foundation (NSF) for use in potable water lines meeting NSF 14, 61 or "NSF-pw".

PRESSURE RATING:
- 200-psi. operating pressure @ 73.4 F

COLOR-CODED:
- Blue - potable water

DIMENSIONS:
- Copper tubing size, C.T.S. O.D. controlled
- DR-9

SIZES:
- 1"
- 2"



MANUFACTURER:
- DURA-LINE PW TUBING
- ADS
- CHARTER PLASTICS
- ENDOT

RESTRICTIONS:
Use of this product is limited to:

- Water service lines

Cape Fear Public Utility Authority
Stewardship. Sustainability. Service.

A 3.1 – POLYETHYLENE 2" POTABLE WATER MAIN TUBING:

Effective Date: 01-01-20
Revision #: 2

SPECIFICATION/ MATERIAL:

PE-3608 High Density Polyethylene, HDPE, tubing shall meet or exceed the performance specifications of:

- PE-3608 Resin listed in Plastic Pipe Institute TR4 Cell classification per ASTM Standards D3350 = 345444 or 345464E.
- ASTM Standards D3035 dimensional standard, Iron Pipe Size, IPS, controlled outside diameter.
- AWWA C901
- MFG. Shall be listed with the Plastic Pipe Institute as meeting the recipe and mixing requirements for pipe in this classification.
- Shall comply with and be labeled as approved by the National Sanitation Foundation (NSF) for use in potable water lines meeting NSF 14, 61 or "NSFpw".

PRESSURE RATING:

- 200-psi. operating pressure @ 73.4 F

COLOR-CODED:

- Blue - potable water
- Black with minimum of three (3) evenly spaced blue stripes - potable water

DIMENSIONS:

- Iron pipe size, I.P.S. O.D. controlled
- DR-9

SIZES:

- 2"



MANUFACTURER:

- CHARTER PLASTICS/BLUE STRIPE PIPE
- ENDOPURE/ BLUE WITH CLEAR CORE
- LAMSON VYLON/ PRESSURE FLEX WATER
- ADS

RESTRICTIONS:

Use of this product is limited to:

- 2" potable water mains

A 3.2 – HIGH DENSITY POLYETHYLENE PIPE (HDPE) 4”-36”:

Effective Date: 01-01-20
Revision #: 2

MATERIAL/ SPECIFICATION:

PE-4710 High Density Polyethylene, HDPE, pipe shall meet or exceed the performance specifications of:

- PE-4710 Resin listed in Plastic Pipe Institute TR4.
- Cell classification per ASTM D3350 = 345444C or 345464C for black OR 345444E or 345464E for non-black & color.
- ASTM F 714, minimum wall values.
- AWWA C906.
- MFG. Shall be listed with the Plastic Pipe Institute as meeting the recipe and mixing requirements for pipe in this classification.

POTABLE WATER REQUIREMENTS:

- Shall comply with and be labeled as approved by the National Sanitation Foundation (NSF) for use in potable water lines meeting NSF 14, 61 or "NSF-pw”.

COLOR– CODED:

- Blue - potable water.
- Green - sanitary sewer/ force main.

DIMENSIONS:

- Ductile iron pipe size O.D., D.I.P.S.
- DR-11, DR-13.5

PRESSURE RATING:

- 200-psi. operating pressure @ 73.4 F for DR-11.
- 160-psi. operating pressure @ 73.4 F for DR-13.5

JOINING RESTRICTIONS:

- Compression type connections are not acceptable in new installations.
- Pipe joints shall be butt fusion.
- No electro fusion coupling joints will be accepted.
- Flange or mechanical joint adapters shall be used for pipe and fitting transitions.

RESTRICTIONS:

- DR-13.5 considered for mains 6” and larger when hydraulic or availability restrictions apply. Submittal to and approval by CFPUA required.

FIRE MAIN PRESSURE RATING & REQUIREMENTS:

- Dimension Ratio (DR) DR-11, pressure class 200 for fire mains.
- Factory Mutual Approved (FM) pipe.



MANUFACTURER:

- CHARTER PLASTICS/ STRIPE PIPE
- CP CHEMICAL
- PERFORMANCE PIPE DRISCOPLEX
- FLYING W PLASTICS
- JM EAGLE PE PIPE
- LAMSON VYLON/ PRESSURE FLEX WATER
- RINKER MATERIALS– POLY PIPE
- WL PLASTICS

A 4 – PVC Pipe (2" SDR 21):

Effective Date: 01-01-20
Revision #: 2

MATERIAL/ SPECIFICATION:

2" SDR 21 Polyvinyl Chloride, PVC, Pipe shall meet or exceed the performance specifications of:

- ASTM D2241 or latest revision thereof.
- ASTM D1784, manufactured from compounds with cell classification 12454B.
- Shall comply with and be labeled as approved by the National Sanitation Foundation (NSF) for use in potable water lines meeting NSF 14, 61 or "NSF-pw".
- Push-on integral bell type supplied with elastomeric gaskets installed.
- Joints per ASTM D3139 testing requirements.
- Gaskets per ASTM F477.
- Pipe shall be clean and ends shall be tarped during shipment.
- Standard Dimension Ratio (SDR) 21.
- No solvent-cement weld pipe or fittings will be accepted.

PRESSURE RATING:

- 200 psi. at 23 Degrees C (73.4 Degrees F)

COLOR-CODED:

- Blue - potable water

DIMENSIONS:

- Iron pipe size (IPS) Outside diameter controlled
- 20' and 21' standard joint length



MANUFACTURER:

- CHARLOTTE PIPE AND FOUNDRY
- DIAMOND PLASTICS
- FREEDOM PLASTICS
- JM EAGLE
- NAPCO
- NATIONAL PIPE & PLASTICS
- PIPELIFE

RESTRICTIONS:

Use of this product limited to:

- 2" Water Mains

A 5 – PVC PIPE (AWWA C-900) - POTABLE WATER (4" THRU 24"):

Effective Date: 01-01-20
Revision #: 2

MATERIAL/ SPECIFICATION:

AWWA C-900 Polyvinyl Chloride, PVC, Pipe shall meet or exceed the performance specifications of:

- ASTM D1784, manufactured from compounds with cell classification 12454A or 12454B.
- Push-on integral bell type joints per ASTM D3139 testing requirements, supplied with elastomeric gaskets installed.
- Gaskets per ASTM F477.
- Shall comply with and be labeled as approved by the National Sanitation Foundation (NSF) for use in potable water lines meeting NSF 14, 61 or "NSF-pw".
- Pipe shall be clean and ends shall be tarped during shipment.
- No solvent-cement weld pipe or fittings will be accepted.
- Affidavit of compliance to this specification shall be available upon request.

COLOR– CODED:

- Blue - potable water

DIMENSIONS:

- Ductile iron pipe size O.D., D.I.P.S.
- DR-18, DR-14
- 20' standard joint length

PRESSURE RATING:

- 235-psi. operating pressure @ 73 F for DR-18.
- 305-psi. operating pressure @ 73 F for DR-14.

RESTRICTIONS:

- DR-14 is a design option for special installations. CFPUA approval required.

FIRE MAIN PRESSURE RATING & REQUIREMENTS:

- Dimension Ratio (DR) 14, pressure class 200 for fire mains.
- Factory Mutual Approved (FM) and Underwriter Laboratory Listed (UL) as noted by (UL/FM) required on DR 14 pipe.
- No solvent-cement weld pipe or fittings will be accepted.



MANUFACTURER:

- DIAMOND PLASTICS
- FREEDOM PLASTICS
- JM EAGLE/ BLUE BRUTE
- NAPCO
- NATIONAL PIPE & PLASTICS
- PIPELIFE

A 5.1 – PVC PIPE (AWWA C-900) - SEWER (4" THRU 24"):

Effective Date: 01-01-20
Revision #: 2

MATERIAL/ SPECIFICATION:

AWWA C-900 Polyvinyl Chloride, PVC, Pipe shall meet or exceed the performance specifications of:

- ASTM D1784, manufactured from compounds with cell classification 12454A or 12454B.
- Push-on integral bell type joints per ASTM D3139 testing requirements, supplied with elastomeric gaskets installed.
- Gaskets per ASTM F477
- Pigment stabilizers and ultraviolet inhibitors shall be used to prevent fading for a period of six (6) months after delivery.
- Pipe shall be clean and ends shall be tarped during shipment.
- No solvent-cement weld pipe or fittings will be accepted.
- Affidavit of compliance to this specification shall be available upon request.



COLOR– CODED:

- Green - sanitary sewer

DIMENSIONS:

- Ductile iron pipe size O.D., D.I.P.S.
- DR-18, DR-14
- 20' standard joint length
- Shorter joints acceptable for sewer only

PRESSURE RATING:

- 235-psi. operating pressure @ 73 F for DR-18.
- 305-psi. operating pressure @ 73 F for DR-14.

MANUFACTURER:

- DIAMOND PLASTICS
- FREEDOM PLASTICS
- JM EAGLE/ BLUE BRUTE
- NAPCO
- NATIONAL PIPE & PLASTICS
- PIPELIFE

RESTRICTIONS:

- DR-14 is a design option for special installations. CFPUA approval required.

A 5.2 – PVC PIPE RESTRAINED JOINT PIPE & COUPLINGS (AWWA C-900) (4" THRU 16"):

Effective Date: 01-01-20
Revision #: 2

MATERIAL/ SPECIFICATION:

AWWA C-900, Pipe shall meet or exceed the performance specifications of:

- ASTM D1784, manufactured from compounds with cell classification 12454A or 12454B.
- Shall comply with and be labeled as approved by the National Sanitation Foundation (NSF) for use in potable water lines meeting NSF 14, 61 or "NSF-pw" for all blue pipe (potable water installation).
- Joined using separate couplings that have built in sealing gaskets (O-rings) and restraining grooves.
- Shall be joined using high-strength flexible plastic splines inserted into mating precision-machine grooves, which align when the pipe is fully inserted, providing a full 3600 restraint with evenly distributed loading.
- Joints per ASTM D3139 testing requirements.
- Gaskets per ASTM F477.
- Pipe shall be clean and ends shall be tarped during shipment.
- No solvent-cement weld pipe or fittings will be accepted.
- Affidavit of compliance to this specification shall be available upon request.

COLOR– CODED:

- Blue– potable water
- Green– sanitary sewer/ force main

DIMENSIONS:

- Ductile iron pipe size O.D., D.I.P.S.
- DR-18, DR-14.
- 20' standard joint length.

PRESSURE RATING:

- 235-psi. operating pressure @ 73 F for DR-18.
- 305-psi. operating pressure @ 73 F for DR-14.





MANUFACTURER:

- CERTAINTEED– CERTA-LOK
- JM EAGLE LOC 900
- DIAMOND LOK-21

RESTRICTIONS:

- Only for low profile carrier pipes inside casings with prior approval by CFPUA.
- DR-14 is a design option for special installations. CFPUA approval required.

A 5.3 – PVC PIPE FUSIBLE (AWWA C-900) - POTABLE WATER (4" THRU 24"):

Effective Date: 01-01-20
Revision #: 2

MATERIAL/ SPECIFICATION:

Fusible AWWA C-900 Polyvinyl Chloride, PVC, Pipe shall meet or exceed the performance specifications of:

- ASTM D1784, manufactured from compounds with cell classification 12454.
- Manufacture shall be listed with the Plastic Pipe Institute (PPI) as meeting the recipe and mixing requirements for pipe in this classification.
- Extruded with a unique formulation, for fusible pipe, that meets all requirements of PPI TR-2 "PPI PVC Range Composition Listing of Qualified Ingredients".
- Shall comply with and be labeled as approved by the National Sanitation Foundation (NSF) for use in potable water lines meeting NSF 61 or NSF-pw.
- Pipe shall be clean and ends shall be tarped during shipment.
- Pipe shall be extruded with plain ends. The end shall be square to the pipe and free of any bevel or chamfer.
- Fusible pipe shall be joined per the manufacture's recommendation.
- Installation shall not exceed manufacture's bending radius and safe pulling force.
- No solvent-cement weld pipe or fittings will be accepted.
- Affidavit of compliance to this specification shall be available upon request.

COLOR– CODED:

- Blue - potable water

DIMENSIONS:

- Ductile iron pipe size O.D., D.I.P.S.
- DR-18 DR-14
- 20', 30' or 40' standard joint length.

RESTRICTIONS:

- DR-14 is a design option for special installations. CFPUA approval required.

PRESSURE RATING:

- 235-psi. operating pressure @ 73 F for DR-18.
- 305-psi. operating pressure @ 73 F for DR-14.



MANUFACTURER:

- UNDERGROUND SOLUTIONS

Cape Fear Public Utility Authority
Stewardship. Sustainability. Service.

A 5.3.1 – PVC PIPE FUSIBLE (AWWA C-900) - SEWER FORCE MAIN (4" THRU 24"):

Effective Date: 01-01-20
Revision #: 2

MATERIAL/ SPECIFICATION:

Fusible AWWA C-900 Polyvinyl Chloride, PVC, Pipe shall meet or exceed the performance specifications of:

- ASTM D1784, manufactured from compounds with cell classification 12454.
- Manufacture shall be listed with the Plastic Pipe Institute (PPI) as meeting the recipe and mixing requirements for pipe in this classification.
- Extruded with a unique formulation, for fusible pipe, that meets all requirements of PPI TR-2 "PPI PVC Range Composition Listing of Qualified Ingredients".
- Pipe shall be clean and ends shall be tarped during shipment.
- Pipe shall be extruded with plain ends. The end shall be square to the pipe and free of any bevel of chamfer.
- Fusible pipe shall be joined per the manufacture's recommendation.
- Installation shall not exceed manufacture's bending radius and safe pulling force.
- No solvent-cement weld pipe or fittings will be accepted.
- Affidavit of compliance to this specification shall be available upon request.

COLOR– CODED:

- Green - sewer force main

DIMENSIONS:

- Ductile iron pipe size O.D., D.I.P.S.
- DR-14, DR-18
- 20', 30' or 40' standard joint length.

PRESSURE RATING:

- 235-psi. operating pressure @ 73 F for DR-18.
- 305-psi. operating pressure @ 73 F for DR-14.

RESTRICTIONS:

- DR-14 is a design option for special installations. CFPUA approval required.



MANUFACTURER:

- UNDERGROUND SOLUTIONS

A 6 – DUCTILE IRON PIPE/ PUSH-ON JOINT/ CLASS 350 (4" THRU 36"):

Effective Date: 01-01-20
Revision #: 2

MATERIAL/ SPECIFICATION:

- Pipe shall conform with AWWA C151 (ANSIA21.51). Additionally, pipe exterior shall be coated with a layer of arc-sprayed zinc per ISO 8179. The mass of zinc shall be 200 g/m2 of pipe surface area. A finishing layer topcoat system shall conform to ISO 8179-1 Ductile iron pipes – External zinc based coating – Part 1: Metallic zinc with finishing layer.
- Gaskets shall be furnished in accordance with AWWA C111 (ANSI– A21.11).
- Pipe supplied must have ISO 9001 or later certification, or poured in a foundry located in the U.S.A.
- Shall comply with and be labeled as approved by the National Sanitation Foundation (NSF) for use in potable water lines meeting NSF 61.
- Factory Mutual Approved (FM) and Underwriter Laboratory Listed (UL) as noted by (UL/FM) for sizes four (4") thru twelve (12") inch.
- Affidavit of compliance to this specification shall be available upon request.

DIMENSIONS:

- 18' or 20' standard joint length.

PRESSURE RATING:

- Class 350- psi. for sizes 4" thru 24" pipe.
- Class 250- psi for sizes 30" thru 36" pipe.

RESTRICTIONS:

COATING & LINING:

Potable Water:

- Exterior - AWWA C151 (ANSI-A21.51), per above ISO 8179-1 requirements.
- Interior - AWWA C104 (ANSI-A21.4), cement mortar lining and asphaltic coating.

Sanitary Sewers and Force Mains:

- Exterior - AWWA C151 (ANSIA21.51) per above ISO 8179-1 requirements.
- Interior - Coated (factory applied) or approved equal with an amine cured novolac epoxy, containing at least 20% by volume of ceramic quartz pigment "PROTECTO 401" or "PERMOX CTF" (40 mils nominal) or polyamine ceramic epoxy containing at least 20% by volume ceramic hollow microspheres "tnemec series 431 permashield pl" (40 mils nominal).
- The inside of the bell socket including a portion of the gasket cavity and a portion of the pipe barrel are also coated with the above products (6" mils nominal, 10 maximum).

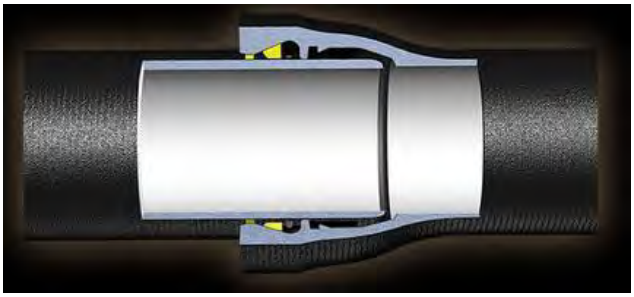

MANUFACTURER:

- AMERICAN CAST IRON– FASTITE
- McWANE, INC.– TYTON
- US PIPE & FOUNDRY– TYTON

Cape Fear Public Utility Authority
Stewardship. Sustainability. Service.

A 6.1 – DUCTILE IRON PIPE/ FLANGE JOINT/ MINIMUM CLASS 53:

Effective Date: 01-01-20
Revision #: 2

MATERIAL/ SPECIFICATION:
Flange pipe shall meet or exceed the performance specifications of:

- Pipe shall conform with AWWA C151 (ANSIA21.51).
- Flanges shall conform to the chemical and physical properties specified for ductile iron fittings in ANSI/AWWA C 110/A21.10.
- Shall conform to AWWA C115 (ANSI-A21.15) flange pipe and fitting joints.
- Shall be drilled and faced to conform with ANSI B16.1 Class 125 flanges.

GASKETS SHALL BE RING OR FULL-FACE TYPE AND PRODUCED FROM ONE OF THE FOLLOWING MATERIALS:

- EPDM (Ethylene Propylene Diene Monomer)
- Nitrile Buna-N (NBR) (Acrylonitrile Butadiene)
- Viton; Fluorel (FKM) (Fluorocarbon)
- Pipe supplied must have ISO 9001 or later certification, or poured in a foundry located in the U.S.A.
- Shall comply with and be labeled as approved by the National Sanitation Foundation (NSF) for use in potable water lines meeting NSF 61.
- Affidavit of compliance to this specification shall be available upon request.

DIMENSIONS:

- Ductile iron pipe size O.D., D.I.P.S.
- 18' or 20' standard joint length or as specified for project.

PRESSURE RATING:

- Class 250-psi. for sizes 4" thru 24" pipe.

RESTRICTIONS:

- Flange pipe is for use in inside buildings, above ground outside, or inside underground vault or manhole service applications.

COATING & LINING:

Potable Water:

- Exterior - AWWA C151 (ANSI-A21.51), per above ISO 8179-1 requirements.
- Interior - AWWA C104 (ANSI-A21.4), cement mortar lining and asphaltic coating.

Sanitary Sewers and Force Mains:

- Exterior - AWWA C151 (ANSIA21.51). per above ISO 8179-1 requirements.
- Interior - Coated (factory applied) or approved equal with an amine cured novolac epoxy, containing at least 20% by volume of ceramic quartz pigment "PROTECTO 401" or "PERMOX CTF" (40 mils nominal) or polyamine ceramic epoxy containing at least 20% by volume ceramic hollow microspheres "TNEMEC SERIES 431 PERMA-SHIELD PL" (40 mils nominal).



MANUFACTURER:

- AMERICAN CAST IRON
- McWANE, INC.
- US PIPE & FOUNDRY

A 6.2 – DUCTILE IRON PIPE/ RESTRAINED PUSH-ON JOINT/TR FLEX JOINT (4" THRU 36"):

Effective Date: 01-01-20
Revision #: 2

MATERIAL/ SPECIFICATION:

Restrained pipe shall meet or exceed the performance specifications of:

- Shall conform with AWWA C150 (ANSI– A21.50) thicknesses and strength.
- Shall conform with AWWA C151 (ANSI-A21.51), Additionally, pipe exterior shall be coated with a layer of arc-sprayed zinc per ISO 8179. The mass of zinc shall be 200 g/m2 of pipe surface area. A finishing layer topcoat shall be applied to the zinc. The zinc coating system shall conform to ISO 8179-1 "Ductile iron pipe – External zinc based coating – Part 1: Metallic zinc with finishing layer.
- Gaskets shall be furnished in accordance with AWWA C111 (ANSI– A21.11).
- Shall use a standard size Tyton gasket.
- Shall use ductile iron locking segments, inserted through a slot (or slots) in the bell face, to provide a positive axial lock between the bell interior surface and a retainer weldment on the spigot end of the pipe.
- Pipe supplied must have ISO 9001 or later certification, or poured in a foundry located in the U.S.A.
- Shall comply with and be labeled as approved by the National Sanitation Foundation (NSF) for use in potable water lines meeting NSF 61.
- Factory Mutual Approved (FM) and Underwriter Laboratory Listed (UL) as noted by (UL/FM) for sizes four (4") thru twelve (12") inch.
- Affidavit of compliance to this specification shall be available upon request.

PRESSURE RATING:

- Class 350-psi. for sizes 4" thru 24" pipe.
- Class 250-psi. for sizes 30" thru 36" pipe.

DIMENSIONS:

- Ductile iron pipe size O.D., D.I.P.S.
- 18' or 20' standard joint length.

RESTRICTIONS:

COATING & LINING:

Potable Water:

- Exterior - AWWA C151 (ANSI-A21.51) per above ISO 8179- 1 requirements.
- Interior - AWWA C104 (ANSI-A21.4), cement mortar lining and asphaltic coating.

Sanitary Sewers and Force Mains:

- Exterior - AWWA C151 (ANSIA21.51) per above ISO 8179-1 requirements.
- Interior - Coated (factory applied) or approved equal with an amine cured novolac epoxy, containing at least 20% by volume of ceramic quartz pigment "PROTECTO 401" or "PERMOX CTF" (40 mils nominal) or polyamine ceramic epoxy containing at least 20% by volume ceramic hollow microspheres "TNEMEC SERIES 431 PERMA-SHIELD PL" (40 mils nominal).



MANUFACTURER:

- US PIPE & FOUNDRY– TR FLEX
- McWANE, INC.– TR FLEX

Cape Fear Public Utility Authority
Stewardship. Sustainability. Service.

A 6.3 – DUCTILE IRON PIPE/ RESTRAINED PUSH-ON JOINT/FLEX– RING JOINT (4" THRU 48"):

Effective Date: 01-01-20
Revision #: 2

MATERIAL/ SPECIFICATION:

Restrained pipe shall meet or exceed the performance specifications of:

- Shall conform with AWWA C150 (ANSI– A21.50) thicknesses and strength.
- Shall conform with AWWA C151 (ANSI-A21.51), Additionally, pipe exterior shall be coated with a layer of arc-sprayed zinc per ISO 8179. The mass of zinc shall be 200 g/m2 of pipe surface area. A finishing layer topcoat shall be applied to the zinc. The zinc coating system shall conform to ISO 8179-1- Ductile iron pipe – External zinc based coating – Part 1: Metallic zinc with finishing layer.
- Gaskets shall be furnished in accordance with AWWA C111 (ANSI-A21.11).
- Shall use a standard size Fastite gasket.
- Pipe supplied must have ISO 9001 or later certification, or poured in a foundry located in the U.S.A.
- Shall comply with and be labeled as approved by the National Sanitation Foundation (NSF) for use in potable water lines meeting NSF 61.
- Factory Mutual Approved (FM) and Underwriter Laboratory Listed (UL) as noted by (UL/FM) for sizes four (4") thru twelve (12") inch.
- Affidavit of compliance to this specification shall be available upon request.

PRESSURE RATING:

- Class 350-psi. for sizes 4" thru 24" pipe.
- Class 250-psi. for sizes 30" thru 36" pipe.

DIMENSIONS:

- Ductile iron pipe size O.D., D.I.P.S.
- 18' or 20' standard joint length.

ADDITIONAL INFORMATION:

- Standard Flex-Ring segments are yellow.
- Field Flex-Ring segments are black.

RESTRICTIONS:

COATING & LINING:

Potable Water:

- Exterior - AWWA C151 (ANSI-A21.51) per above ISO 8179-1 requirements.
- Interior - AWWA C104 (ANSI-A21.4), cement mortar lining and asphaltic coating.

Sanitary Sewers and Force Mains:

- Exterior - AWWA C151 (ANSIA21.51) per above ISO 8179-1 requirements.
- Interior - Coated (factory applied) or approved equal with an amine cured novolac epoxy, containing at least 20% by volume of ceramic quartz pigment "PROTECTO 401" or "PERMOX CTF" (40 mils nominal) or polyamine ceramic epoxy containing at least 20% by volume ceramic hollow microspheres "TNEMEC SERIES 431 PERMA-SHIELD PL" (40 mils nominal).



MANUFACTURER:

- AMERICAN CAST IRON– FLEX-RING

Cape Fear Public Utility Authority
Stewardship. Sustainability. Service.

A 7 – STAINLESS STEEL PIPE:

Effective Date: 01-01-20
Revision #: 2

MATERIAL/ SPECIFICATION:

- Schedule 40, 316 stainless steel pipe.
- Specifications shall conform to ANSI/ASME 36.19.

CONNECTIONS:

- Pipe shall have NPT threads on both ends and a coupling on one end making a full joint, mipt X fipt. As required on detail drawings.

DIMENSIONS:

- 21' standard joint length.



MANUFACTURER:

- OPEN

RESTRICTIONS:

- This material is required for air/vacuum release valve piping or other special uses as noted on detail drawings.

A 8 – GALVANIZED PIPE (TEMPORARY):

Effective Date: 01-01-20
Revision #: 2

MATERIAL/ SPECIFICATION:

- Schedule 40, galvanized steel pipe.
- Specifications shall conform to ASTM A-53 grade-A or latest revision thereof.

CONNECTIONS:

- Pipe shall have NPT threads on both ends and a coupling on one end making a full joint, mipt X fipt.

DIMENSIONS:

- 21’ standard joint length.



MANUFACTURER:

- OPEN

RESTRICTIONS:

- This material is only used for temporary sampling and flushing points during pipeline construction.
- Galvanized pipe is not acceptable for any other use.

Section B: Fittings and Accessories	Effective Date: 01-01-20 Revision #: 2

B 1 PVC Fittings - Schedule 40

B 2 PVC Fittings - Schedule 80

B 3 HDPE Flange & Mechanical Joint Adapters (AWWA C 906)

B 4 HDPE Pipe Wall Stiffeners

B 5 Plastic Fittings (SDR-21)

B 6 PVC Fittings - Gasketed (AWWA C 900)

B 7 Brass Fittings/Miscellaneous

B 8 Flanged Joint Fittings (AWWA C 110)

B 8.1 Flange Joint Accessory Kits

B 9 Mechanical Joint Fittings (AWWA C 110 Full Body), (4" thru 36")

B 10 Mechanical Joint Fittings (AWWA C 153 Compact Body), (4" thru 48")

B 11 Mechanical Joint Accessory Kits

B 12 Mechanical Joint Connector

B 13 Push-on Restrained Joint Fittings (4" thru 36") TR Flex

B 14 Push-on Restrained Joint Fittings (4" thru 48") Flex Ring

B 15 Uni-Fit Wide Range Adapter

B 1 – PVC FITTINGS – Schedule 40:

Effective Date: 01-01-20
Revision #: 2

SPECIFICATION/MATERIAL:
Schedule 40 PVC fittings shall meet or exceed the performance specifications of:

- ASTM Standards D2466, this standard covers Schedule 40 PVC threaded and socket pressure fittings. The standard stipulates thread and socket specifications as well as minimum lengths, wall thicknesses, burst pressures, material classification, quality, and requirements for marking identification.
- Shall comply with and be labeled as approved by the National Sanitation Foundation (NSF) for use in potable water lines, when used in a potable water installation.

CONNECTIONS:
- **Tees** - Solvent Weld (slip) X Solvent Weld (slip)
- **Union** - Solvent Weld (slip) X Solvent Weld (slip), Female Pipe Thread (FPT) X Female Pipe Thread (FPT)
- **Elbow** - Solvent Weld (slip) X Solvent Weld (slip)
- **Cross** - Solvent Weld (slip) X Solvent Weld (slip)
- **Couplings** - Solvent Weld (slip) X Solvent Weld (slip)
- **Riser Extender** - Male Pipe Thread (MPT) X Female Pipe Thread (FPT)
- **Adapters** - Male Pipe Thread (MPT) X Solvent weld (slip)
- **Bushing** – Spigot X Solvent Weld (slip), Spigot X Female Pipe Thread (FPT), Male Pipe Thread (MPT) X Female Pipe Thread (FPT)
- **Cap** - Solvent Weld (slip), Female Pipe Thread (FPT)
- **Plug** - Spigot, Male Pipe Thread (MPT)
- **Wye** - Solvent Weld (slip) X Solvent Weld (slip) X Solvent Weld (slip)

RESTRICTIONS:
- 4” and 6” sewer service laterals from main to service cleanout at right-of-way
- 2” water blow-offs

COLOR-CODED:
- White- all services
- Gray- all services

SIZES:
- 2”
- 4”
- 6”



MANUFACTURER:
- COLONIAL
- CHARLOTTE PIPE AND FOUNDRY
- IPEX
- LASCO
- SPEARS

B 2 – PVC FITTINGS – Schedule 80:

Effective Date: 01-01-20
Revision #: 2

SPECIFICATION/MATERIAL:
Schedule 80 fittings shall meet or exceed the performance specifications of:

- ASTM Standards D-2467, solvent weld and pressure fittings, dimensions, thread gauging, minimum wall thickness and burst pressure, material classification, various quality aspects and requirements for marking identification for plugs.
- ASTM Standards D-1784, manufactured from compounds with cell classification 12454B (type 1, grade 1 material) for nipples & plugs.
- ASTM Standards D-1785, dimensional requirements, minimum burst and sustained pressure requirements, maximum operating pressure, and test procedures for determining pipe quality with respect to workmanship and materials for nipples.
- Shall comply with and be labeled as approved by the National Sanitation Foundation (NSF) for use in potable water lines.

CONNECTION:
- **Tees** - Solvent Weld (slip) X Solvent Weld (slip)
- **O-Ring**
- **Elbow** - Solvent Weld (slip) X Solvent Weld (slip)
- **Cross** - Solvent Weld (slip) X Solvent Weld (slip)
- **Couplings** - Solvent Weld (slip) X Solvent Weld (slip)
- **Adapters** - Male Pipe Thread (MPT) X Solvent weld (slip), Female Pipe Thread (FPT) X Solvent weld (slip)
- **Bushing** – Spigot X Solvent Weld (slip), Spigot X Female Pipe Thread (FPT), Male Pipe Thread (MPT) X Female Pipe Thread (FPT)
- **Cap** - Solvent Weld (slip), Female Pipe Thread (FPT)
- **Plug** - Spigot, Male Pipe Thread (MPT)
- **Flange** - Solid Style, Blind, Loose Ring
- **Wye** - Solvent Weld (slip) X Solvent Weld (slip) X Solvent Weld (slip)
- **Union** - Solvent Weld (slip) X Male Pipe Thread (MPT), Solvent Weld (slip) X Solvent Weld (slip), Female Pipe Thread (FPT) X Female Pipe Thread (FPT), Solvent Weld (slip) X Female Pipe Thread

RESTRICTIONS:
- Pump station chemical feed applications downstream from backflow prevention devices

SIZES:
- 3/4"
- 1"
- 1-1/2"
- 2"

COLOR-CODED:
- White- all services
- Gray- all services



MANUFACTURER:
- CHEMTROL/ NIBCO
- CHARLOTTE PIPE AND FOUNDRY
- IPEX
- LASCO
- SPEARS

Cape Fear Public Utility Authority
Stewardship. Sustainability. Service.

B 3 – HIGH DENSITY POLYETHYLENE (HDPE) FLANGE AND MECHANICAL JOINT ADAPTERS (AWWA C906):

Effective Date: 01-01-20
Revision #: 2

SPECIFICATION/MATERIAL:
High Density Polyethylene (HDPE) fittings shall meet or exceed the performance specifications of:

- PE-3608 Resin listed in Plastic Pipe Institute TR4.
- Cell classification per ASTM Standards D-3350 = 345464C or 345464C (black).
- ASTM Standards D3035, minimum wall values.
- AWWA C906.
- Stainless Steel inserts are required.
- MFG. Shall be listed with the Plastic Pipe Institute as meeting the recipe and mixing requirements for pipe in this classification.

POTABLE WATER REQUIREMENTS:
- Shall comply with and be labeled as approved by the National Sanitation Foundation (NSF) for use in potable water lines meeting NSF 14, 61 or "NSF-pw".

COLOR- CODED:
- Black- all service

DIMENSIONS:
- Ductile iron pipe size O.D., D.I.P.S.
- DR-9, DR-11

SIZES:
- 4" thru 24"

PRESSURE RATING:
- 160-psi. operating pressure @ 73.4 F for DR-11.
- 200-psi. operating pressure @ 73.4 F for DR-9.

DESIGN:
- Plain end (PE) X mechanical joint (MJ).
- Plain end (PE) X flange joint (FL).

INCLUDE:
- Ductile iron gland ring.
- Rubber gasket.
- Proper size, length and number of 316 SS bolts and nuts.

RESTRICTIONS:
- Mechanical joint adapters for butterfly valves must be specified to ensure proper valve operation.

FIRE MAIN PRESSURE RATING & REQUIREMENTS:
- Dimension Ratio (DR) DR-9, pressure class 200 for fire mains.
- Factory Mutual Approved (FM).
- Stainless Steel insert stiffener required.

FLANGE ADAPTER



MECHANICAL JOINT ADAPTER

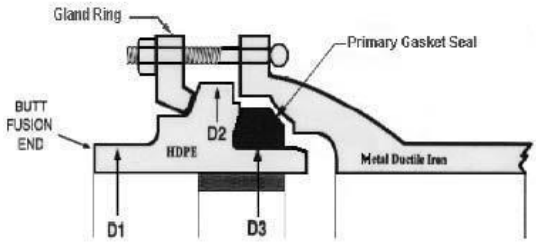



MANUFACTURER:
- CENTRAL PLASTICS
- CP CHEMICAL/PERFORMANCE PIPE
- IPEX/FRIATEC
- INDEPENDENT PIPE PRODUCTS
- ORION ENTERPRISES, INC.
- SPECIFIED FITTINGS
- DRISCO PLEX

Cape Fear Public Utility Authority
Stewardship. Sustainability. Service.

B 4 – HIGH DENSITY POLYETHYLENE (HDPE) PIPE WALL STIFFENERS:

Effective Date: 01-01-20
Revision #: 2

SPECIFICATION/MATERIAL:

High Density Polyethylene (HDPE) pipe wall stiffeners shall meet or exceed the performance specifications of:

- Stiffeners shall be suitable for use with HDPE pipe made in accordance with ANSI/AWWA C906, SDR 9 and 11.
- Shall be suitable for use with standard mechanical joint pipe or fittings made in accordance with ANSI/AWWA C111/A21.11, or ANSI/AWWA C153/A21.53 of the latest revision.
- ASTM Standard A 240 type 304 or 316 stainless steel.

DESIGN:

- Shall be either one or two-piece design.
- Shall fit securely in the inside of pipe.

PRESSURE RATING:

- Stiffeners shall be suitable for use at pressures up to 150 psi.



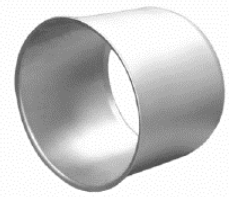

JCM 230/231 Stiffener



MANUFACTURER:

- CASCADE- CPS-IPS SERIES
- JCM- 230 & 231 SERIES
- ROMAC STAINLESS STEEL STIFFENER
- DRISCO PLEX
- A.Y. MCDONALD
- FORD METER BOX

RESTRICTIONS:

Cape Fear Public Utility Authority
Stewardship. Sustainability. Service.

B 5 – PLASTIC FITTINGS (SDR-21):

Effective Date: 01-01-20
Revision #: 2

SPECIFICATION/MATERIAL:
Plastic fittings (SDR-21) shall meet or exceed the performance specifications of:

- ASTM Standards D 1784, manufactured from compounds with cell classification 12454B (type 1, grade 1 material).
- Joints per ASTM Standards D 3139 testing requirements.
- Gaskets per ASTM Standards F477.
- No solvent-cement weld pipe or fittings will be accepted.
- Standard Dimension Ratio (SDR) 21.
- Shall comply with and be labeled as approved by the National Sanitation Foundation (NSF) for use in potable water lines.

PRESSURE RATING:
- 200 psi. at 23 Degrees C (73.4 Degrees F)

CONNECTIONS:
- Male Iron Pipe Thread (MIPT) X Push-on integral bell type supplied with elastomeric gaskets installed.
- Push-on integral bell X Push-on integral bell supplied with elastomeric gaskets installed.

COLOR-CODED:
- White- all services

DIMENSIONS:
- Iron pipe size (IPS) Outside diameter controlled.

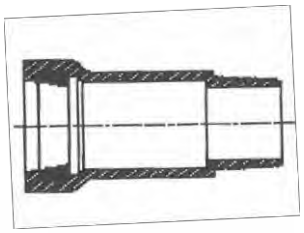

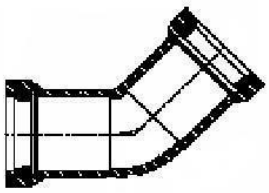

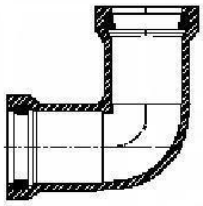

MANUFACTURER:
- FLO-CONTROL
- HARCO
- MULTI FITTING- CYCLE TOUGH 4000

RESTRICTIONS:
- Only male threads will be accepted in this section.
- Use of this product is limited to two-inch diameter pressure applications.
- Prior approval required.

B 6 – PVC FITTINGS - GASKETED PVC (AWWA C 900):

Effective Date: 01-01-20
Revision #: 2

SPECIFICATION/MATERIAL:
Plastic fittings (AWWA C 900) shall meet or exceed the performance specifications of:

- Shall be manufactured in one piece of injection molded or fabricated from a PVC compound meeting ASTM Standards D 1784.
- Gaskets per ASTM Standards F477.
- ASTM Standards D 1784, manufactured from compounds with cell classification 124548 (type 1, grade 1 material).
- No solvent-cement weld pipe or fittings will be accepted on sizes less than or equal to 8".
- Joint per ASTM Standards D3139 bell joint using elastomeric gaskets.



WALL THICKNESS DIMENSIONS:
- C-900 DR18, 150 psi, minimum requirement.

CONNECTIONS:
- Male Iron Pipe Thread (MIPT) X Push-on integral bell type supplied with elastomeric gaskets installed.
- Female Iron Pipe Thread (FIPT) X Push-on integral bell type supplied with elastomeric gaskets installed.
- Push-on integral bell X Push-on integral bell supplied with elastomeric gaskets installed.
- Spigot X Push-on integral bell supplied with elastomeric gaskets installed.

RESTRICTIONS:
- Only for use with gravity sewer laterals and mains.
- Fabricated fittings are not acceptable in sizes smaller than 10".

MANUFACTURER:
- FREEDOM PLASTICS, INC.
- HARCO
- MACON PLASTICS, INC .
- MUL TI-FITTINGS
- PLASTIC TRENDS, INC .
- SPECIFIED FITTINGS, INC.
- GPK PRODUCTS

B 7 – BRASS FITTINGS/ MISCELLANEOUS:

Effective Date: 01-01-20
Revision #: 2

SPECIFICATION/MATERIAL:

Nipples, caps, plugs, tees, bend, and bushings shall meet or exceed the performance specifications of:

- Brass body conforming to AWWA C800 (ASTM Standards B62 85-5-5-5) or the latest revisions thereof.
- All threads shall be standard iron pipe thread.
- All nipples shall conform to ASTM Standards B43 (Red Brass Nipples) or latest revision thereof.

CONNECTIONS:

- Male iron pipe thread X male iron pipe thread.
- Female iron pipe thread X female iron pipe thread.
- Male iron pipe thread X female iron pipe thread.



MANUFACTURER:

- A.Y. MCDONALD
- BOSHART INDUSTRIES
- CAMBRIDGE BRASS
- FORD
- LEE BRASS
- MERIT BRASS

RESTRICTIONS:

B 8 – FLANGED JOINT FITTINGS (AWWA C110):

Effective Date: 01-01-20
Revision #: 2

SPECIFICATION/MATERIAL:

Flanged fittings shall meet or exceed the performance specifications of:

- Fittings shall be ductile iron per ASTM A536 or cast iron per ASTM A 126.
- Shall be produced in accordance with laying lengths specified in ANSI/ AWWA C110/ A 21.1 0.
- Rubber gasket joints in accordance with ANSI/AWWA C111/A21.11.
- Flange surface shall be faced and drilled in accordance with ANSI Class 125 B16.1.
- Nuts, bolts and gaskets shall be designed to withstand the design and test pressures of the pipe.
- All fittings shall have distinctly cast upon them the manufacture's identification, pressure rating, nominal diameter and number of degrees or fraction of a circle on all bends.
- Fittings supplied must have ISO 9001 or later certification, or poured in a foundry located in the U.S.A.
- Shall comply with and be labeled as approved by the National Sanitation Foundation (NSF) for use in potable water lines meeting NSF 61.
- Factory Mutual Approved (FM) and Underwriter Laboratory Listed (UL) as noted by (UUFM) for sizes four 4" thru 12". Markings must be cast on the fitting at time of manufacture to meet this requirement.
- Affidavit of compliance to this specification shall be available upon request.
- Bosses and base elbows may be required.

PRESSURE RATING:

- Minimum of 250-psi. for sizes 4" thru 24".

RESTRICTIONS:

COATING & LINING:

Potable and Reclaimed Water:

- Exterior coating: asphaltic or red epoxy coating.
- AWWA C104 (ANSI-A21.4), cement mortar lining and asphaltic coating.
- AWWA C116 (ANSI-A21 .16) epoxy coating both inside and out.

Sanitary Sewer and Force Mains:

- Exterior coating: asphaltic or red epoxy coating.
- Sewer pipe shall have the interior coated (factory applied) or approved equal with an amine cured novolac epoxy, containing at least 20% by volume of ceramic quartz pigment "PROTECTO 401" (40 mils nominal) or polyamine ceramic epoxy containing at least 20% by volume ceramic hollow microspheres “TNEMEC SERIES 431 PERMASHIELD PL” (40 mils nominal).



MANUFACTURER:

- AMERICAN CAST IRON
- CLOW
- MCWANE, INC.
- SIGMA CORP
- STAR PIPE PRODUCTS
- TYLER UNION FOUNDRY
- US PIPE
- SIP INDUSTRIES

B 8.1 – FLANGE JOINT ACCESSORY KITS:

Effective Date: 01-01-20
Revision #: 2

SPECIFICATION/MATERIAL:
Flange Joint Accessory Kits shall meet or exceed the performance specifications of:

- Designed to work with flange pipe and fittings per ANSI/ AWWAC110/A21.10 and ANSI B16.1 125 pound class.
- Rubber gasket joints in accordance with ANSI/AWWA C111/A21.11.
- Nuts, bolts and gaskets shall be designed to withstand the design and test pressures of the pipe.
- Flat ring gaskets are acceptable, but full face gaskets are preferred.

HEX BOLTS, NUTS & LOCK WASHERS:
- Threads per ANSI B1 .1 course thread series, Class 2A external and Class 2B internal.
- Stainless steel, Type 316.

GASKET:
- Synthetic red rubber per ASTM 13303.
- SBR- Buna-S.
- EPDM (ethylene propylene).
- NBR- Nitrile Buna-N.
- Viton; Fluorel (FKM).

REQUIREMENTS:
- Each accessory kit shall be a boxed package.

RESTRICTIONS:

INCLUDE:
- One (1) rubber gasket.
- Proper number and size of bolts and nuts required for each pipe fitting face.
- Proper number and size lock washers when required.

ADDITIONAL REQUIREMENTS:
- Lock washers are required when installed as part of a sewer pumping facility.



MANUFACTURER:
- AMERICAN CAST IRON
- CLOW
- GRIFFIN PIPE PRODUCTS
- MCWANE, INC.
- SIGMA CORP.
- STAR PIPE PRODUCTS
- TYLER UNION FOUNDRY
- US PIPE

B 9 – MECHANICAL JOINT FITTINGS (AWWA C110 FULL BODY), (4" THRU 36"):

Effective Date: 01-01-20
Revision #: 2

SPECIFICATION/MATERIAL:

Mechanical joint, full body, fittings shall meet or exceed the performance specifications of:

- Fittings shall be ductile iron per ASTM A536.
- Shall be produced in accordance with laying lengths and body thickness specified in ANSI/ AWWA C110/ A 21.10.
- Rubber gasket joints in accordance with ANSI/ AWWA C111/A21.11.
- All fittings shall have distinctly cast upon them the manufacture's identification, pressure rating, nominal diameter and number of degrees or fraction of a circle on all bends.
- Ductile iron fittings shall have the letters "01" or “Ductile" cast on them.
- Fittings supplied must have ISO 9001 or later certification, or poured in a foundry located in the U.S.A.
- Shall comply with and be labeled as approved by the National Sanitation Foundation (NSF) for use in potable water lines meeting NSF 61.
- Sizes four (4") thru twelve (12") inch Factory Mutual Approved (FM) or Underwriter Laboratory Listed (UL) is required. Marking must be cast on the fitting at time of manufacture to meet this requirement.
- Affidavit of compliance to this specification shall be available upon request.

COATING & LINING:

Potable and Reclaimed Water:

- Exterior coating: asphaltic coating.
- AWWA C104 (ANSI-A21.4), cement mortar lining and asphaltic coating.
- AWWA C116 (ANSI-A21.16) epoxy coating both inside and out.

Sanitary Sewer and Force Mains:

- Exterior coating: asphaltic coating.
- Sewer pipe shall have the interior coated (factory applied) or approved equal with an amine cured novolac epoxy, containing at least 20% by volume of ceramic quartz pigment "PROTECTO 401" or “PERMOX CTF” (40 mils nominal) or polyamine ceramic epoxy containing at least 20% by volume ceramic hollow microspheres “TNEMEC SERIES 431 PERMASHIELD PL” (40 mils nominal).

PRESSURE RATING:

- Minimum of 350-psi. for sizes 4" thru 24".
- Minimum of 250-psi. for sizes 30" thru 36".



MANUFACTURER:

- AMERICAN CAST IRON
- CLOW
- MCWANE, INC.
- SIGMA CORP.
- STAR PIPE PRODUCTS
- TYLER UNION FOUNDRY
- US PIPE

B 9 – CONTINUED:	
RESTRICTIONS:	

B 10 – MECHANICAL JOINT FITTINGS (AWWA C153 COMPACT BODY), (4" THRU 48"):

Effective Date: 01-01-20
Revision #: 2

SPECIFICATION/MATERIAL:

Mechanical joint, compact or short body, fittings shall meet or exceed the performance specifications of:

- Fittings shall be ductile iron.
- Shall be produced in accordance with laying lengths and body thickness specified in ANSI/ AWWA C153/ A 21.53.
- Rubber gasket joints in accordance with ANSI/ AWWA C111/ A21 .11.
- Exterior shall be coated with a layer of arc-sprayed zinc per ISO 8179. The mass of zinc shall be 200 g/m2 of pipe surface area. A finishing layer topcoat shall be applied to the zinc. The zinc coating system shall conform to ISO 8179-1 “Ductile iron pipe – External zinc based coating – Part 1: Metallic zinc with finishing layer.
- All fittings shall have distinctly cast upon them the manufacture's identification, pressure rating, nominal diameter and number of degrees or fraction of a circle on all bends.
- Ductile iron fittings shall have the letters "DI" or "Ductile" cast on them.
- Fittings supplied must have ISO 9001 or later certification, or poured in a foundry located in the U.S.A.
- Shall comply with and be labeled as approved by the National Sanitation Foundation (NSF) for use in potable water lines meeting NSF 61.
- Sizes 4" thru 12" Factory Mutual Approved (FM) or Underwriter Laboratory Listed (UL) is required. Marking must be cast on the fitting at time of manufacture to meet this requirement.
- Affidavit of compliance to this specification shall be available upon request.

PRESSURE RATING:

- Minimum of 350-psi. for sizes 4" thru 24".
- Minimum of 250-psi. for sizes 30" thru 36".

RESTRICTIONS:

COATING & LINING:

Potable Water:

- Exterior - AWWA C151 (ANSI-A21.51) per above ISO 8179- 1 requirements.
- Interior - AWWA C104 (ANSI-A21.4), cement mortar lining and asphaltic coating.

Sanitary Sewers and Force Mains:

- Exterior - AWWA C151 (ANSIA21.51) per above ISO 8179-1 requirements.
- Interior - Coated (factory applied) or approved equal with an amine cured novolac epoxy, containing at least 20% by volume of ceramic quartz pigment “PROTECTO 401” or “PERMOX CTF” (40 mils nominal) or polyamine ceramic epoxy containing at least 20% by volume ceramic hollow microspheres “TNEMEC SERIES 431 PERMA-SHIELD PL” (40 mils nominal).
- The inside of the bell socket including a portion of the gasket cavity and a portion of the pipe barrel are coated with 8-mils (minimum) of epoxy.



MANUFACTURER:

- AMERICAN CAST IRON
- CLOW
- MCWANE, INC.
- SIGMA CORP.
- STAR PIPE PRODUCTS
- TYLER UNION FOUNDRY
- US PIPE
- SIP INDUSTRIES

B 11 – MECHANICAL JOINT ACCESSORY KITS:

Effective Date: 01-01-20
Revision #: 2

SPECIFICATION/MATERIAL:

Mechanical Joint Ductile Iron Pipe Fitting Accessory Kits shall meet or exceed the performance specifications of:

- Rubber gasket joints in accordance with ANSI/AWWA C111/A21.11 and the latest revisions thereto.
- Accessory kits for 4" through 12" sizes shall also conform to ANSI/AWWA C153/A21.53 and the latest revisions thereto.
- Accessory kits for 14" through 36" sizes shall also conform to ANSI/AWWA C110/A21.10 and the latest revisions thereto.
- Nuts, bolts and gaskets shall be designed to withstand the design and test pressures of the pipe.
- Mechanical joint glands shall be ductile iron.
- Tee bolts and nuts shall be 316 SS.
- Glands supplied must have ISO 9001 or later certification, or poured in a foundry located in the U.S.A.

GASKET MATERIAL:

- SBR- Buna-S.
- EPDM (ethylene propylene).
- NBR- Nitrile Buna-N.
- Viton; Fluorel (FKM).

INCLUDE:

- One (1) ductile iron gland.
- One (1) rubber gasket:
- Proper number of 316SS bolts and nuts required for each pipe fitting face.



MANUFACTURER:

- AMERICAN CAST IRON
- CLOW
- GRIFFIN PIPE PRODUCTS
- MCWANE, INC.
- SIGMA CORP.
- STAR PIPE PRODUCTS
- TYLER UNION FOUNDRY
- US PIPE
- MIDWEST (BOLTS)
- ACTIVE SCREW (BOLTS)

RESTRICTIONS:

B 12 – MECHANICAL JOINT CONNECTOR:

Effective Date: 01-01-20
Revision #: 2

SPECIFICATION:

- Material supplied must have ISO 9001 or later certification, or poured in a foundry located in the U.S.A.
- Restraint devices for nominal pipe sizes 4" thru 24" shall consist of joining two mechanical joint fittings or a fitting to a valve, incorporated into a gland that shall meet or exceed the following:

MATERIAL:

- Ductile iron conforming to ASTM Standards A 80-55-06 and the Latest revision thereto.
- Supplied with a fusion epoxy coating both inside and out in accordance with AWWA C116 (ANSIA21.16).

NUTS AND BOLTS:

- 316 stainless steel conforming to AWWA C111/A21.11 AND ASTM Standards A242.

GASKET:

Standard mechanical joint (MJ) gaskets conforming to:

- AWWA C111/ ASTM Standards F-477, made of:
- SBR– Buna-S.
- EPDM– Ethylene Propylene.
- NBR– Nitrile Buna-N.

INCLUDE:

- 1 each – Foster Adaptor.
- 2 each – Proper size MJ Gaskets.
- Proper number and size 316 stainless steel bolts and nuts.

RESTRICTIONS:

- May not fit both "run" and "branch" on compact tees or crosses.
- Must have epoxy coating (not visible in all photos).
- CFPUA approval required.



MANUFACTURER:

- INFACT CORPORATION– FOSTER ADAPTER
- OPEN

B 13 – PUSH-ON JOINT RESTRAINED FITTINGS (4"THRU 36") TR FLEX:

Effective Date: 01-01-20
Revision #: 2

SPECIFICATION/MATERIAL:

Push-on restrained fittings shall meet or exceed the performance specifications of:

- Fittings shall be ductile iron, per ASTM A536, and have a modified Tyton Joint socket connection.
- Shall use ductile iron locking segments, inserted through a slot (or slots) in the bell face, to provide a positive axial lock between the bell interior surface and a retainer weldment on the spigot end of the pipe.
- Shall be produced in accordance with principals specified in ANSI/ AWWA C110/ A 21.10 and ANSI/ AWWA C153/ A21.53.
- Exterior shall be coated with a layer of arc-sprayed zinc per ISO 8179. The mass of zinc shall be 200 g/m2 of pipe surface area. A finishing layer topcoat shall be applied to the zinc. The zinc coating system shall conform to ISO 8179-1 "Ductile iron pipe – External zinc based coating – Part 1: Metallic zinc with finishing layer.
- Rubber gasket joints in accordance with ANSI/ AWWA C111/A21.11.
- All fittings shall have distinctly cast upon them the manufacture's identification, pressure rating, nominal diameter and number of degrees or fraction of a circle on all bends.
- Fittings supplied must have ISO 9001 or later certification, or poured in a foundry located in the U.S.A.
- Shall comply with and be labeled as approved by the National Sanitation Foundation (NSF) for use in potable water lines meeting NSF 61.
- Affidavit of compliance to this specification shall be available upon request.

PRESSURE RATING:

- Minimum of 350-psi for sizes 4" thru 24".
- Minimum of 250-psi for sizes 30" thru 36".

COATING & LINING:

Potable Water:

- Exterior - AWWA C151 (ANSI-A21.51) per above ISO 8179- 1 requirements.
- Interior - AWWA C104 (ANSI-A21.4), cement mortar lining and asphaltic coating.

Sanitary Sewers and Force Mains:

- Exterior - AWWA C151 (ANSIA21.51) per above ISO 8179-1 requirements.
- Interior - Coated (factory applied) or approved equal with an amine cured novolac epoxy, containing at least 20% by volume of ceramic quartz pigment "PROTECTO 401" or "PERMOX CTF" (40 mils nominal) or polyamine ceramic epoxy containing at least 20% by volume ceramic hollow microspheres "TNEMEC SERIES 431 PERMA-SHIELD PL" (40 mils nominal).



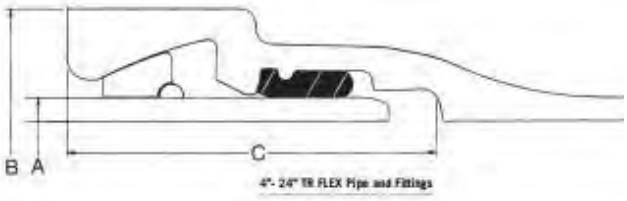

4"- 24" TR FLEX Pipe and Fittings

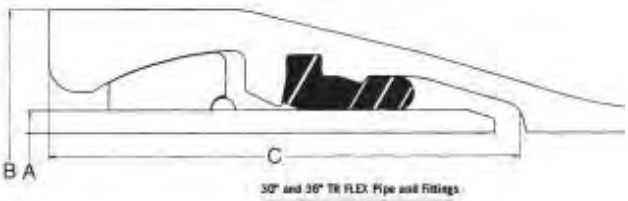

30" and 36" TR FLEX Pipe and Fittings

MANUFACTURER:

- AMERICAN CAST IRON – FLEX-RING

RESTRICTIONS:

- US Pipe-Red Field Lok 350 gasket shall be used for field cut pipe connections which do not have a factory weldment.
- Plain end fittings not allowed.

B 14 – PUSH-ON JOINT RESTRAINED FITTINGS (4"THRU 48") FLEX-RING:

Effective Date: 01-01-20
Revision #: 2

SPECIFICATION/MATERIAL:

Push-on restrained fittings shall meet or exceed the performance specifications of:

- Fittings shall be ductile iron, per ASTM A536, and have a modified Fastite Joint socket connection.
- Shall use ductile iron locking segments, inserted through a slot (or slots) in the bell face, to provide a positive axial lock between the bell interior surface and a retainer weldment on the spigot end of the pipe.
- Shall be produced in accordance with principals specified in ANSI/ AWWA C110/ A 21.10 and ANSI/ AWWA C153/ A21.53.
- Exterior shall be coated with a layer of arc-sprayed zinc per ISO 8179. The mass of zinc shall be 200 g/m2 of pipe surface area. A finishing layer topcoat shall be applied to the zinc. The zinc coating system shall conform to ISO 8179-1 "Ductile iron pipe – External zinc based coating – Part 1: Metallic zinc with finishing layer.
- Rubber gasket joints in accordance with ANSI/ AWWA C111/A21.11.
- All fittings shall have distinctly cast upon them the manufacture's identification, pressure rating, nominal diameter and number of degrees or fraction of a circle on all bends.
- Fittings supplied must have ISO 9001 or later certification, or poured in a foundry located in the U.S.A.
- Shall comply with and be labeled as approved by the National Sanitation Foundation (NSF) for use in potable water lines meeting NSF 61.
- Affidavit of compliance to this specification shall be available upon request.

PRESSURE RATING:

- Minimum of 350-psi for sizes 4" thru 24".
- Minimum of 250-psi for sizes 30" thru 48".

RESTRICTIONS:

- American Amarillo Fast Grip gaskets shall be used for field cut pipe connections, which do not have a factory weldment.
- Plain end fittings are not allowed.

COATING & LINING:

Potable Water:

- Exterior - AWWA C151 (ANSI-A21.51) per above ISO 8179- 1 requirements.
- Interior - AWWA C104 (ANSI-A21.4), cement mortar lining and asphaltic coating.

Sanitary Sewers and Force Mains:

- Exterior - AWWA C151 (ANSIA21.51) per above ISO 8179-1 requirements.
- Interior - Coated (factory applied) or approved equal with an amine cured novolac epoxy, containing at least 20% by volume of ceramic quartz pigment "PROTECTO 401" or "PERMOX CTF" (40 mils nominal) or polyamine ceramic epoxy containing at least 20% by volume ceramic hollow microspheres "TNEMEC SERIES 431 PERMA-SHIELD PL" (40 mils nominal).

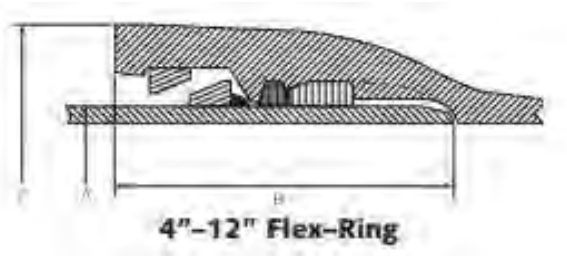

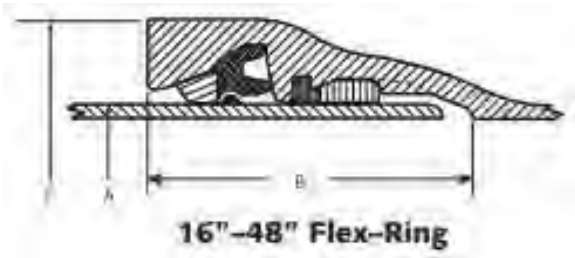

MANUFACTURER:

- AMERICAN CAST IRON – FLEX-RING

Cape Fear Public Utility Authority
Stewardship. Sustainability. Service.

B 15 - UNI-FIT WIDE RANGE ADAPTER:

Effective Date: 01-01-20
Revision #: 2

SPECIFICATION:

Uni-fit wide range adapter shall meet or exceed the performance specifications of:

- Fittings shall be ductile iron per ASTM A536.
- Shall be manufactured in accordance with AWWA C110.
- Flange surface shall be flat faced and drilled in accordance with ANSI Class 125 B16.1.
- Shall comply with and be labeled as approved by the National Sanitation Foundation (NSF) for use in potable water lines meeting NSF 61.

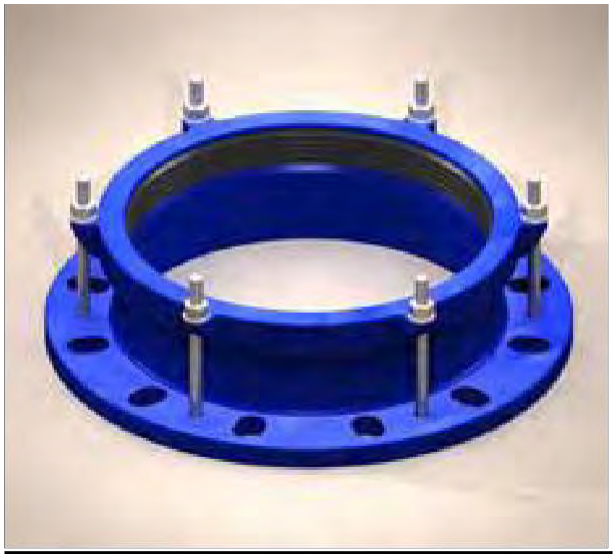

MATERIAL:

Gasket:
- EPDM (ethylene propylene)
- Styrene Butadiene Rubber (SBR)

Bolts:
- Stainless Steel Type 304

Nuts and Washers:
- Stainless Steel Type 304

Coating:
- Fusion Bonded Epoxy Coating Brass in compliance with AWWA C550

REQUIREMENTS:
- Minimum working pressure of 150 psi.

MANUFACTURER:
- NAPAC, INC. - Model 4428

RESTRICTIONS:

Use of this product is limited to:

- Installation of 3” and larger water meters

Section C: Joint Restraints	Effective Date: 01-01-20 Revision #: 2

C 1 Joint Restraints/ Bell & Spigot Joint/ New & In-Service Installations (2" IPS PVC Pipe)

C 1.1 Joint Restraints/ Bell & Spigot Joint/ New & In-Service Installations (AWWA C-900 PVC Pipe)

C 1.1.1 Joint Restraints/ Bell & Spigot Joint/ New & In-Service Installation (AWWA C-900 PVC & DI Pipe)

C 1.2 Joint Restraints/ Bell & Spigot Joint/ New Installations Only (AWWA C-900 PVC Pipe)

C 1.3 Joint Restraints/ Plain End to Mechanical Joint (AWWA C-900 PVC Pipe)

C 2 Joint Restraints/ Multiple Wedge Style Mechanical Joint (AWWA C-900 PVC Pipe)

C 2.1 Joint Restraints/ Multiple Wedge/MJ/ Split Gland/ Existing Installations Only (AWWA C-900 PVC Pipe)

C 3 Joint Restraints/Multiple Wedge Style/ Bell & Spigot Joint/ New Installation/ (DI Pipe)

C 3.1 Joint Restraints/Multiple Wedge Style/ Bell & Spigot Joint/ Existing Installations/ (DI Pipe)

C 4 Joint Restraints/Multiple Wedge Style Mechanical Joint (DI Pipe)

C 4.1 Joint Restrains/Multiple Wedge Style MJ/ Split Gland Existing Installations Only (DI Pipe)

C 5 Joint Restraint Gaskets / DI Pipe (Push On Joint)

C 1 – JOINT RESTRAINTS/ BELL/ SPIGOT JOINT/ NEW & IN-SERVICE INSTALLATIONS/ 2" IPS PVC PIPE:

Effective Date: 01-01-20
Revision #: 2

SPECIFICATION:

Restraint devices for nominal IPS pipe joints and fittings on size 2 inch shall consist of two split rings with multiple gripping wedges or a series of serrations to grip the pipe in conjunction with a sufficient number of bolts connecting the retainer on one pipe to the other, shall meet or exceed the performance specifications of:

- Material supplied must have ISO 9001 or later certification, or poured in a foundry located in the U.S.A.
- Affidavit of compliance to this specification shall be available upon request.
- Shall posses a minimum rating of twice (2:1) the pressure rating of the pipe.

MATERIAL:

- Ductile iron- ASTM Standards A536. Grade 65-45-12.
- T-bolts, rods and hex nuts- 316 SS.

DESIGN:

- Restraint devices for PVC pipe shall consist of two split rings a series of serrations to grip the pipe in conjunction with a sufficient number of bolts connecting the retainer on one pipe to the retainer on the next pipe or fitting.
- Shall be capable of installation on a new installation and in-service pipelines without disrupting pipe line service.

INCLUDE:

- Four (4)- Split ring halves
- Two (2)- Side clamping bolts and nuts
- Two (2) - Proper number, length and size, T-bolts and nuts or tie rods and nuts.



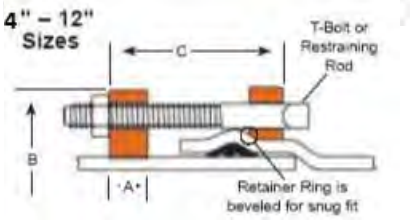

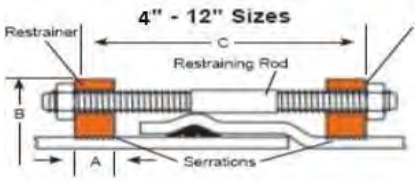

MANUFACTURER:

- EBAA IRON- 6500, 7500 SERIES
- FORD- UNIFLANGE 1350, 1360, 1390 SERIES
- SIGMA- PVP SERIES (BELL & SPIGOT ONLY)

RESTRICTIONS:

Cape Fear Public Utility Authority
Stewardship. Sustainability. Service.

C 1.1 – JOINT RESTRAINTS / BELL / SPIGOT JOINT / NEW & IN-SERVICE INSTALLATIONS/ (AWWA C-900) PVC PIPE:

Effective Date: 01-01-20
Revision #: 2

SPECIFICATION:

Restraint devices for nominal pipe sizes 4 inch through 12 inch shall consist of two split rings with multiple gripping wedges or a series of serrations to grip the pipe in conjunction with a sufficient number of bolts connecting the retainer on one pipe to the other, shall meet or exceed the performance specifications of:

- Material supplied must have ISO 9001 or later certification, or poured in a foundry located in the U.S.A.
- Affidavit of compliance to this specification shall be available upon request.
- Shall posses a minimum rating of twice (2:1) the pressure rating of the pipe.

MATERIAL:

- Ductile Iron- ASTM Standards A536. Grade 65-45-12.
- T-bolts, rods and hex nuts- 316 SS.

DESIGN:

- Restraint devices for PVC pipe shall consist of two split rings with multiple gripping wedges or a series of serrations to grip the pipe in conjunction with a sufficient number of bolts connecting the retainer on one pipe to the retainer on the next pipe.
- Shall be capable of installation on a new installation and in-service pipelines without disrupting pipe line service.

INCLUDE:

- Four (4)- Split ring halves
- Four (4)- Side clamping bolts and nuts
- Proper number, length and size, T-bolts and nuts or tie rods and nuts.

RESTRICTIONS:

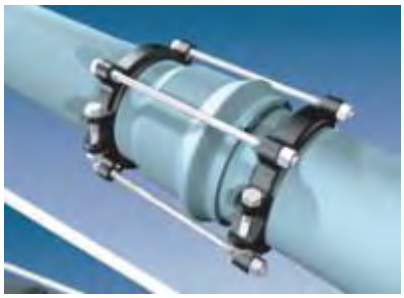

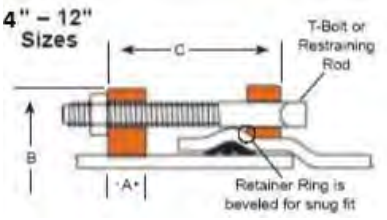

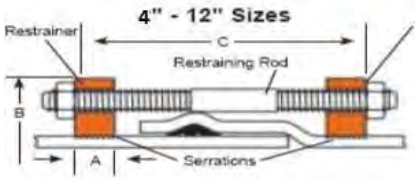

MANUFACTURER:

- EBAA IRON- 1500 & 1600 SERIES
- FORD- UNIFLANGE 1390 SERIES
- STAR PRODUCTS-1100, 1100G2, & 1200 SERIES
- SIGMA- PV-LOK- PWP SERIES
- SMITH-BLAIR- 165 BELL-LOCK
- ROMAC 600 SERIES

C 1.1.1 – Joint Restraints/ Bell & Spigot Joint/ New & In-Service Installation (AWWA C-900) PVC & DI Pipe:

Effective Date: 01-01-20
Revision #: 2

SPECIFICATION:

Dual use (PVC & DI pipe) bell and spigot restraint devices for nominal pipe sizes 4" through 12" shall meet or exceed the performance specifications of:

- Material supplied must have ISO 9001 or later certification, or poured in a foundry located in the U.S.A.
- Affidavit of compliance to this specification shall be available upon request.
- Shall posses a minimum rating of twice (2:1) the pressure rating of the pipe.
- Shall be capable of new and in-service installations on PVC and DI pipe.

MATERIAL:

- Ductile Iron- ASTM Standards A536. Grade 65-45-12.
- T-bolts, rods and hex nuts- 316 SS.

DESIGN:

- Restraint devices for PVC & DI pipe shall consist of a split ring behind the pipe bell and a split ring with multiple gripping wedges and/or a series of serrations to grip the pipe spigot in conjunction with a sufficient number of bolts connecting the bell ring on one pipe to the retainer on the next pipe.
- Shall be capable of installation on a new installation and in-service pipelines without disrupting pipe line service.
- Gripping wedges and/or a series of serrations are optional on the bell ring, required on spigot ring.

RESTRICTIONS:

REQUIREMENTS:

- Each accessory kit shall be a boxed package.

INCLUDE:

- Four (4) - Split ring halves.
- Four (4) - Side clamping bolts and nuts.
- Proper number, length and size, T-bolts and nuts or tie rods and nuts.



MANUFACTURER:

- EBAA IRON-1500TD & 1600TD SERIES
- SIGMA PV-LOK MODEL PWP

C 1.2 – JOINT RESTRAINTS / BELL & SPIGOT JOINT / NEW INSTALLATIONS ONLY / (AWWA C-900) PVC PIPE:

Effective Date: 01-01-20
Revision #: 2

SPECIFICATION:

Restraint devices for nominal pipe sizes 4" thru 12" shall consist of one solid ring and one split or solid ring with multiple gripping wedges or a series of serrations to grip the pipe in conjunction with a sufficient number of bolts connecting the retainer on the spigot pipe to the bell of the other, shall meet or exceed the performance specifications of:

- Material supplied must have ISO 9001 or later certification. or poured in a foundry located in the U.S.A.
- Affidavit of compliance to this specification shall be available upon request.
- Shall posses a minimum rating of twice (2:1) the pressure rating of the pipe.

MATERIAL:

- Ductile Iron- ASTM Standards A536. Grade 65-45-12.
- T -bolts, rods and hex nuts- 316 SS.

DESIGN:

- Restraint devices for PVC pipe shall consist of one split ring or two solid rings with multiple gripping wedges or a series of serrations to grip the pipe in conjunction with a sufficient number of bolts connecting the retainer on one pipe to the retainer on the next pipe.
- Shall be capable of installation on new installation pipelines.

RESTRICTIONS:

INCLUDE:

- Two (2) - Split grip ring halves or One solid ring.
- One (1) - Solid behind the bell ring.
- Two (2) - Side clamping bolts and nuts, if required.

Proper number, length and size. T-bolts and nuts or tie rods and nuts.

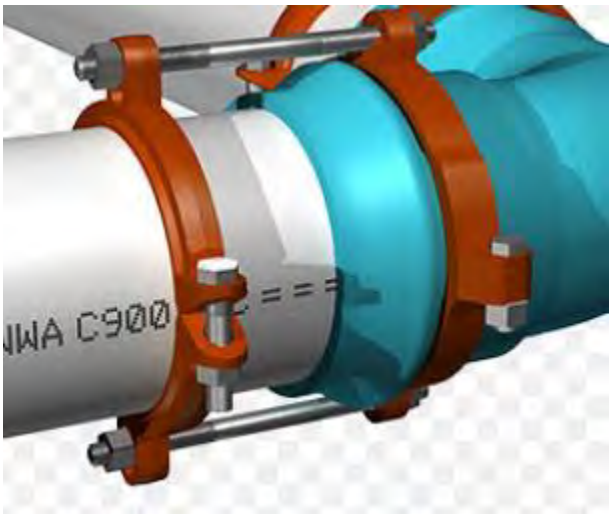

MANUFACTURER:

- FORD- UNIFLANGE 1350 SERIES- Not for use on DR-14 PVC pipe.
- STAR PRODUCTS- PVC STARGRIP-4100P
- ROMAC 600 SERIES

C 1.3 – JOINT RESTRAINTS / PLAIN END TO MECHANICAL JOINT / (AWWA C-900) PVC PIPE:

Effective Date: 01-01-20
Revision #: 2

SPECIFICATION:

Restraint devices for nominal pipe sizes 4" thru 12" shall consist of a split ring with multiple gripping wedges or a series of serrations to grip the pipe in conjunction with a sufficient number of bolts connecting the retainer to the joint, shall meet or exceed the performance specifications of:

- Material supplied must have ISO 9001 or later certification, or poured in a foundry located in the U.S.A.
- Affidavit of compliance to this specification shall be available upon request.
- Shall posses a minimum rating of twice (2:1) the pressure rating of the pipe.

MATERIAL:

- Ductile Iron- ASTM Standards A536. Grade 65-45-12.
- T -bolts, rods and hex nuts- 316 SS.

DESIGN:

- Restraint devices for PVC pipe shall consist of a split ring with multiple gripping wedges or a series of serrations to grip the pipe in conjunction with a sufficient number of bolts connecting the retainer to the joint.

INCLUDE:

- Two (2) - Split ring halves
- Two (2) - Side clamping bolts and nuts
- Proper number, length and size, T-bolts and nuts or tie rods and nuts.



MANUFACTURER:

- EBAA IRON- 15PFOO SERIES
- FORD- UNIFLANGE 1300 SERIES
- STAR PRODUCTS- 1000C SERIES
- SIGMA- PV-LOK - PWM SERIES
- SMITH-BLAIR- 115 BELL-LOCK

RESTRICTIONS:

- For use in existing, in-service pipelines only.

C 2 – JOINT RESTRAINTS / MULTIPLE WEDGE STYLE MECHANICAL JOINT / (AWWA C-900) PVC PIPE:

Effective Date: 01-01-20
Revision #: 2

SPECIFICATION:

Restraint devices for nominal pipe sizes 4" thru 12" shall consist of multiple gripping wedge incorporated into a follower gland shall meet or exceed the performance specifications of:

- Application requirements of AWWA C110 (ANSI-A21.10) or latest revision thereof.
- AWWA C 153 (ANSI-A21.53) or latest revision thereof.
- AWWA C111 (ANSI-A21.11) or latest revision thereof.
- ASTM Standards F 1674-96 "Standard Test Method for Joint Restraint Products for use with PVC pipe".
- Factory Mutual Approved (FM) and Underwriter Laboratory Listed (UL) as noted by (UL/FM) for sizes through 12".
- Material supplied must have ISO 9001 or later certification, or poured in a foundry located in the U.S.A.
- Affidavit of compliance to this specification shall be available upon request.

MATERIAL:

- Gland: Ductile iron conforming to the applicable provisions of AWWA C 111 (ANSI - A21.11) and ASTM A536.80.
- Wedges: Ductile iron heat treated to a minimum hardness of 370 BHN.

DESIGN:

- Multiple gripping wedges incorporated within a mechanical joint follower gland, that when actuated, impart increasing resistance to pipe separation as pressure increases restraint nuts must be shear type torque design.
- Must include a minimum safety factor of 2:1 in all sizes.

RESTRICTIONS:

INCLUDE:

- One (1) ductile iron gland
- One (1) rubber gasket
- Proper number of 316 SS T-bolts and nuts for each MJ pipe fitting face.



MANUFACTURER:

- EBAA IRON- MEGA LUG 2000PV SERIES
- FORD- UNIFLANGE 1500 SERIES
- SMITH-BLAIR- CAM-LOCK 120
- STAR PIPE PRODUCTS- STARGRIP 4000 AND 4000G2 SERIES
- SIGMA ONE LOK SERIES SLCE

C 2.1 – JOINT RESTRAINTS/ MULTIPLE WEDGE STYLE MECHANICAL JOINT/ SPLIT GLAND/ EXISTING INSTALLATIONS ONLY/ (AWWA C-900) PVC PIPE:

Effective Date: 01-01-20
Revision #: 2

SPECIFICATION:

Restraint devices for nominal pipe sizes 4" through 12" shall consist of multiple gripping wedge incorporated into a follower gland shall meet or exceed the performance specifications of:

- Application requirements of AWWA C110 (ANSI-A21.10) or latest revision thereof.
- Application requirements of AWWA C153 (ANSI-A21.53) or latest revision thereof.
- Application requirements of AWWA C111 (ANSI-A21.11) or latest revision thereof.
- Material supplied must have ISO 9001 or later certification, or poured in a foundry located in the U.S.A.
- Shall posses a minimum rating of twice (2:1) the pressure rating of the pipe.
- Affidavit of compliance to this specification shall be available upon request.

MATERIAL:

- Gland: Ductile iron conforming to the applicable provisions of ASTM A 536, Grade 65-45-12.
- Wedges: Ductile iron heat treated to a minimum hardness of 370 BHN.

DESIGN:

- Multiple gripping wedges incorporated within a split mechanical joint follower gland, that when actuated, impart increasing resistance to pipe separation as pressure increases restraint nuts must be shear type torque design.
- Must include a minimum safety factor of 2:1 in all sizes.

RESTRICTIONS:

- For use in existing, in-service pipelines only.

INCLUDE:

- One (1) ductile iron split gland
- One (1) rubber gasket
- Proper number of 316 SS T-bolts and nuts for each mechanical joint pipe fitting face.



MANUFACTURER:

- EBAA IRON - MEGA LUG 2000SV SERIES

C 3 – JOINT RESTRAINTS/ MULTIPLE WEDGE STYLE/ BELL & SPIGOT JOINT/ NEW INSTALLATIONS ONLY/ DI PIPE:

Effective Date: 01-01-20
Revision #: 2

SPECIFICATION:

Restraint devices for nominal pipe sizes 4" thru 24" shall consist of multiple gripping wedge incorporated into one or two follower glands and shall meet or exceed the performance specifications of:

- Application requirements of AWWA C110 (ANSI-A21.10) or latest revision thereof.
- AWWA C153 (ANSI-A21.53) or latest revision thereof.
- AWWA C111 (ANSI-A21.11) or latest revision thereof.
- Material supplied must have ISO 9001 or later Certification, or poured in a foundry located in the U.S.A.
- Shall posses a minimum rating of twice (2:1) the pressure rating of the pipe.
- Affidavit of compliance to this specification shall be available upon request.

MATERIAL:

- Glands: Ductile iron conforming to the applicable provisions of AWWA C 111 (ANSI-A21.11) and ASTM A536.80.
- Wedges: Ductile iron heat treated to a minimum hardness of 370 BHN.

RESTRICTIONS:

INCLUDE:

- Two (2) ductile iron glands
- Proper number, length and size, 316 SS T-bolts and nuts or tie rods and nuts.

OPTIONAL:

- May be installed on existing pipelines if product is capable.



MANUFACTURER:

- EBAA IRON- 1700 SERIES
- FORD- UNIFLANGE 1450 SERIES
- SIGMA- ONE LOKI SLDEH
- STAR PRODUCTS- STAGRIP 3100P SERIES

C 3.1 – JOINT RESTRAINTS/ MULTIPLE WEDGE STYLE/ BELL & SPIGOT JOINT/ SPLIT GLANDS/ EXISTING INSTALLATIONS/ DI PIPE:

Effective Date: 01-01-20
Revision #: 2

SPECIFICATION:

Restraint devices for nominal pipe sizes 4" thru 24" shall consist of multiple gripping wedge incorporated into one or two follower split glands and shall meet or exceed the performance specifications of:

- Application requirements of AWWA C110 (ANSI-A21.10) or latest revision thereof.
- Application requirements of AWWA C153 (ANSI-A21.53) or latest revision thereof.
- Application requirements of AWWA C111 (ANSI-A21.11) or latest revision thereof.
- Material supplied must have ISO 9001 or later certification, or poured in a foundry located in the U.S.A.
- Shall posses a minimum rating of twice (2:1) the pressure rating of the pipe.
- Affidavit of compliance to this specification shall be available upon request.

MATERIAL:

- Glands: Ductile iron conforming to the applicable provisions ASTM A536, Grade 65-45-12.
- Wedges: Ductile iron heat treated to a minimum hardness of 370 BHN.

INCLUDE:

- Two (2) ductile iron split glands
- Proper number, length and size, 316 SS T-bolts and nuts or tie rods and nuts.

OPTIONAL:

- May be installed on new pipelines if product is capable.



MANUFACTURER:

- EBAA IRON- 1100HD SERIES
- STAR PRODUCTS- STAGRIP 3100S SERIES
- SIGMA ONE LOK SERIES SSLDH

RESTRICTIONS:

Cape Fear Public Utility Authority
Stewardship. Sustainability. Service.

C 4 – JOINT RESTRAINTS/ MULTIPLE WEDGE STYLE MECHANICAL JOINT/ DI PIPE:

Effective Date: 01-01-20
Revision #: 2

SPECIFICATION:

Restraint devices for nominal pipe sizes 4" through 24" shall consist of multiple gripping wedge incorporated into a follower gland shall meet or exceed the performance specifications of:

- Application requirements of AWWA C110 (ANSI-A21.10) or latest revision thereof.
- AWWA C153 (ANSI-A21.53) or latest revision thereof.
- AWWA C111 (ANSI-A21.11) or latest revision thereof.
- Factory Mutual Approved (FM) and Underwriter Laboratory Listed (UL) as noted by (UUFM) for sizes through 12".
- Underwriter Laboratory Listed (UL) as noted by (UL) for sizes through 24".
- Material supplied must have ISO 9001 or later certification, or poured in a foundry located in the U.S.A.
- Affidavit of compliance to this specification shall be available upon request.

MATERIAL:

- Gland: Ductile iron conforming to the applicable provisions of AWWA C 111 (ANSI-A21.11) and ASTM A536.BO.
- Wedges: Ductile iron heat treated to a minimum hardness of 370 BHN.

DESIGN:

- Multiple gripping wedges incorporated within a mechanical joint follower gland, that when actuated, impart increasing resistance to pipe separation as pressure increases restraint nuts must be shear type torque design.
- Must include a minimum safety factor of 2:1 in all sizes.

RESTRICTIONS:

INCLUDE:

- One (1) ductile iron gland
- One (1) rubber gasket
- Proper number of 316 SS T-bolts and nuts for each MJ pipe fitting face.



MANUFACTURER:

- EBAA IRON- MEGA LUG 1100, 1100SD, 1100SDB
- FORD- UNIFLANGE 1400 SERIES
- GRIFFIN- WEDGE ACTION
- ROMAC- ROMA GRIP! DI PIPE
- SIGMA- ONE LOKI SLDE
- SMITH-BLAIR- CAM-LOCK 111
- STAR PIPE PRODUCTS- STARGRIP 3000 SERIES

C 4.1 – JOINT RESTRAINTS/ MULTIPLE WEDGE STYLE MECHANICAL JOINT/ SPLIT GLAND/ EXISTING INSTALLATIONS ONLY/ DI PIPE:

Effective Date: 01-01-20
Revision #: 2

SPECIFICATION:

Restraint devices for nominal pipe sizes 4" through 24" shall consist of multiple gripping wedge incorporated into a mechanical joint follower gland, shall meet or exceed the performance specifications of:

- Application requirements of AWWA C110 (ANSI-A21, 10) or latest revision thereof.
- AWWA C 153 (ANSI-A21.53) or latest revision thereof.
- AWWA C 111 (ANSI-A21.11) or latest revision thereof.
- Shall posses a minimum rating of twice (2:1) the pressure rating of the pipe.
- Material supplied must have ISO 9001 or later certification, or poured in a foundry located in the U.S.A.
- Affidavit of compliance to this specification shall be available upon request.

MATERIAL:

- Gland: Ductile iron conforming to the applicable provisions of ASTM A536, Grade 65-45-12.
- Wedges: Ductile iron heat treated to a minimum hardness of 370 BHN.

INCLUDE:

- One (1) ductile iron gland
- One (1) rubber gasket
- Proper number of 316 SS T bolts and nuts for each MJ pipe fitting face.



MANUFACTURER:

- EBAA IRON- MEGA LUG 1100S0 SERIES
- STAR PIPE PRODUCTS- STARGRIP 3000S SERIES
- SIGMA ONE LOK SERIES SSLD

RESTRICTIONS:

- For use in existing, in-service pipelines only.

C 5 – JOINT RESTRAINTS GASKETS/ DI PIPE (PUSH ON JOINT):

Effective Date: 01-01-20
Revision #: 2

SPECIFICATION:

Restraint devices for nominal pipe sizes 4" through 24" for push-on Tyton Joint or Fastite Joint pipe and fittings, consisting of multiple gripping wedges integral to the gasket that are compressed when the joint is pushed home, that shall meet or exceed the performance specifications of:

- AWWA C 111 (ANSI-A21.11) or latest revision thereof.
- Factory Mutual Approved (FM) and Underwriter Laboratory Listed (UL) as noted by (UL/FM) for sizes through 12".
- Material supplied must have ISO 9001 or later certification, or poured in a foundry located in the U.S.A.
- Application requirements of AWWA C110 (ANSI – A21.10) or AWWA C 153 (ANSI – A21.53), latest revision thereof.

MATERIAL:

Gaskets:

- SBR- Buna-S
- EPDM-Ethylene Propylene
- NBR-Buna-N

Locking Segments:

- Stainless Steel vulcanized into the gasket

DESIGN:

- Gaskets shall be colored. The color shall be consistent throughout the entire cross section of the gasket. The color shall not be attained by surface coating, it shall be inherent within the rubber.
- Restrained gaskets are for use only in push-on joints.
- Both American's Amarillo Fast Grip Gaskets and US Pipe, Red Field Lok 350 gaskets are acceptable.

RESTRICTIONS:

- For low profile carrier pipes inside casings with prior approval by CFPUA.
- Amarillo Fast Grip gaskets shall only be installed in Fastite bell joints.
- Red Field Lok 350 & Blue Sure Stop 350 gaskets shall only be installed in Tyton bell joints.

INCLUDE:

- One-Restraint push-on joint gasket.



MANUFACTURER:

- AMERICAN CAST IRON AMARILLO FAST GRIP GASKET
- McWANE, INC. – BLUE SURE STOP 350 GASKET
- US PIPE – RED FIELD LOK 350 GASKET

Cape Fear Public Utility Authority
Stewardship. Sustainability. Service.

Section D: Valves and Accessories	Effective Date: 01-01-20 Revision #: 2

D 1 Valves- Resilient Seat/ 2” (FIPT X FIPT)

D 1.1 Valves - AWWA C509/ Resilient Seat/ 2” Thru 12” (MJ X MJ)

D 1.2 Tap Valves - AWWA C509/ Resilient Seat/ 4” Thru 12” (FLG X MJ)

D 1.3 Valves- Resilient Seat/ 2” Thru 12” (FLG X FLG)

D 1.4 Valves- Resilient Seat/ 14” Thru 48” (MJ X MJ)

D 1.5 Valves- Eccentric Plug/ 4” Thru 24” (FLG X FLG)

D 2 Check Valve- Resilient Seat/ Potable Water 2” Thru 30” (FLG X FLG)

D 3 Swing Check Valves - Potable Water 2” Thru 16” (FLG X FLG)

D 3.1 Swing Check Valves - Sanitary Sewer 4” Thru 16” (FLG X FLG)

D 3.2 Swing Check Valves/ Resilient Seat- Sanitary Sewer 3” Thru 12” (FLG X FLG)

D 4 Combination Air Valves - Stainless Steel/ Sanitary Sewer/ For 2” Thru 12” Mains

D 4.1 Combination Air Valves- Stainless Steel/ Sanitary Sewer/ For 12” And Larger Mains

D 5 Air Release Valves (UL/FM) - Potable Water

D 6 Air Release Valves (2”) - Potable Water

D 7 Full Flange Pressure Sensor

D 8 Post Type Hydrants

D9 Reduced Pressure Detector Assembly / 2 ½” Thru 10”

D10 Double Check Detector Assembly / 3” Thru 10”

D 1 – VALVES - RESILIENT SEAT/ 2" (FIPT X FIPT):

Effective Date: 01-01-20
Revision #: 2

SPECIFICATION:

- Resilient seat or wedge (RW) line valves shall meet or exceed the performance specifications of AWWA C509 or C515 for resilient seat gate valves with non-rising stems (NRS).
- Both ends shall have Female Iron Pipe Threads (FIPT).
- ANSI/ AWWA C550, all interior and exterior body and bonnet surfaces shall be coated with a fusion bonded epoxy coating.
- Valves supplied must have ISO 9001 or later certification, or poured in a foundry located in the U.S.A.
- Shall comply with and be labeled as approved by the National Sanitation Foundation (NSF) for use in potable water lines meeting NSF 61.
- Affidavit of compliance to this specification shall be available upon request.

MATERIAL:

Body:

- Cast or ductile iron conforming to ASTM Standards A126 or A536.

Wedge:

- Ductile iron fully encapsulated (no exposed iron) or bronze vulcanized with EPDM (ethylene-propylene) rubber.

Seal & O-rings:

- Triple O-ring seals, Nitrile Buna-N or EPDM rubber.

Stuffing Box & Operating Nut:

- Cast or ductile iron conforming to ASTM Standards A126 or A536.

Stem:

- Bronze per ASTM Standards B584 or stainless steel per AISI 430F.

Hex Head Nuts and Bolts:

- 316 Stainless steel.

DESIGN:

- Resilient seat gate valve, NRS, open left (counterclockwise).
- Both ends shall have female iron pipe threads (FIPT).
- Pressure rated for 200 psi minimum.
- Two-inch (2”) square operating nut.

RESTRICTIONS:

SIZE:

- 2”



MANUFACTURER:

- AMERICAN AFC-2500 SERIES
- AMERICAN AVK 03-063-39
- CLOW VALVE 2639 & 2640
- KENNEDY VALVE KS-RW 8057 or 7057
- M & H VALVE COMPANY 4067-07
- MUELLER A-2360 SERIES
- U.S. PIPE A-USP0-8

D 1.1 – VALVES - AWWA C509/C515 RESILIENT SEAT/ 2" thru 12" (MJ X MJ):

Effective Date: 01-01-20
Revision #: 2

SPECIFICATION:

Resilient seat or wedge (RW) line valves shall meet or exceed the performance specifications of AWWA C509 or C515 for resilient seat gate valves with non-rising stems (NRS) and meet the following specific provisions:

- Both ends shall be mechanical joint in accordance with ANSI/ AWWA C111/A21.11.
- ANSI/ AWWA C550, all interior and exterior body and bonnet surfaces shall be coated with a fusion bonded epoxy coating.
- Valves supplied must have ISO 9001 or later certification, or poured in a foundry located in the U.S.A.
- Shall comply with and be labeled as approved by the National Sanitation Foundation (NSF) for use in potable water lines meeting NSF 61.
- Factory Mutual Approved (FM) and Underwriter Laboratory Listed (UL) as noted by (UL/FM).
- Shall have UL, FM mark displayed visibly and permanently on the valve.
- Affidavit of compliance to this specification shall be available upon request.

MATERIAL:

Body:
- Ductile iron conforming to ASTM Standards A126 or A536.

Wedge:
- Cast or ductile iron fully encapsulated (no exposed iron) with EPDM (ethylene-propylene) rubber

Seal & O-rings:
- Triple O-ring seals Nitrile Buna-N or EPDM rubber.

Stuffing Box & Operating Nut:
- Cast or ductile iron conforming to ASTM Standards A126 or A536.

Stem:
- Copper alloy/ bronze.

Hex Head Nuts and Bolts:
- 316 Stainless steel.

RESTRICTIONS:

DESIGN:
- Resilient seat gate valve, NRS, open left (counterclockwise)
- Both ends shall be mechanical joint (MJ).
- Pressure rated for 250 psi minimum.
- 2” square operating nut.

SIZE:
- 2” thru 12”

INCLUDE:
- Two– properly sized mechanical joint accessory kits.


[MJ x MJ]

MANUFACTURER:
- AMERICAN AFC 2500 SERIES
- AMERICAN AVK 25 or 45 SERIES
- CLOW VALVE 2638, 2639 & 2640 SERIES
- KENNEDY VALVE KS-RW 7571 & 8571 SERIES
- M & H VALVE COMPANY 4067 & 7000 SERIES
- MUELLER A-2361 SERIES
- US PIPE A-USPO-23 SERIES

D 1.2 – TAP VALVES - AWWA C509/C515 RESILIENT SEAT/ 4" THRU 12" (FLG X MJ):

Effective Date: 01-01-20
Revision #: 2

SPECIFICATION:

- Resilient seat or wedge (RW) tap valves shall meet or exceed the performance specifications of AWWA C509 or C515 for resilient seat gate valves with non-rising stems (NRS).
- One end shall be mechanical joint in accordance with ANSI/AWWA C111/A21.11.
- One end shall be flange design with a raised tapping alignment centering ring and conform to MSS SP-60 standard.
- ANSI/AWWA C550, all interior and exterior body and bonnet surfaces shall be coated with a fusion bonded epoxy coating.
- Valves supplied must have ISO 9001 or later certification, or poured in a foundry located in the U.S.A.
- Shall comply with and be labeled as approved by the National Sanitation Foundation (NSF) for use in potable water lines meeting NSF 61.
- Factory Mutual Approved (FM) and Underwriter Laboratory Listed (UL) as noted by (UL/FM).
- Shall have UL, FM mark displayed visibly and permanently on the valve.
- Affidavit of compliance to this specification shall be available upon request.

MATERIAL:

Body:

- Cast or ductile iron conforming to ASTM Standards A126 or A536.

Wedge:

- Cast or ductile iron fully encapsulated (no exposed iron) with EPDM (ethylene-propylene) rubber.

Seal & O-rings:

- Triple O-ring seals Nitrile Buna-N or EPDM rubber.

Stuffing Box & Operating Nut:

- Cast or ductile iron conforming to ASTM Standards A536.

Stem:

- Copper alloy/ bronze.

Hex Head Nuts and Bolts:

- 316 Stainless steel.

RESTRICTIONS:

SIZE:

- 4" thru 12"

INCLUDE:

- One– properly sized mechanical joint accessory kit.
- One– properly sized flange joint accessory kit.

DESIGN:

- Resilient seat gate valve, NRS, open left counterclockwise).
- Pressure rated for 250 psi minimum.
- 2" square operating nut.



MANUFACTURER:

- AMERICAN AFC-2500 SERIES
- AMERICAN AVK 45 (DI) SERIES
- CLOW VALVE 2638, 2639 & 2640 SERIES
- KENNEDY VALVE KS-RW 7950 & 8950 SERIES
- M & H VALVE COMPANY 4751 & 7590 SERIES
- MUELLER A-2361 SERIES
- US PIPE T-USPO-19 SERIES

D 1.3 – VALVES - RESILIENT SEAT/ 2" thru 12" (FLG X FLG):

Effective Date: 01-01-20
Revision #: 2

SPECIFICATION:

- Resilient seat or wedge (RW) control valves shall meet or exceed the performance specifications of AWWA C509 or C515 for resilient seat gate valves with non- rising stems (NRS).
- Both ends shall be flanged, faced and drilled in accordance with ANSI Class 125 B16.1.
- ANSI/ AWWA C550, all interior and exterior body and bonnet surfaces shall be coated with a fusion bonded epoxy coating.
- Valves supplied must have ISO 9001 or later certification, or poured in a foundry located in the U.S.A.
- Factory Mutual Approved (FM) and Underwrite Laboratory Listed (UL) as noted by *(UL/FM).
- Affidavit of compliance to this specification shall be available upon request.

MATERIAL:

Body:

- Cast or ductile iron conforming to ASTM Standards A126 or A536.

Wedge:

- Ductile iron fully encapsulated (no exposed iron) with EPDM (ethylene-propylene) rubber.

Seal & O-rings:

- Triple O-Ring seals Nitrile Buna-N or EPDM rubber.

Stuffing Box & Operating Nut:

- Ductile iron conforming to ASTM Standards A126 or A536.

Stem:

- Copper alloy/ bronze.

Hex Head Nuts and Bolts:

- 316 Stainless steel.

DESIGN:

- Resilient seat gate valve, NRS, open left (counterclockwise).
- Both ends shall be flange joint (FLG).
- Pressure rated for 250 psi minimum.
- Operated by a ductile or cast iron hand wheel.

RESTRICTIONS:

SIZE:

- 2” thru 12”
- Two (2) properly sized flange joint accessory kit.



MANUFACTURER:

- AMERICAN AFC-2500 SERIES
- AMERICAN AVK 25 (CI) & 45 (DI) SERIES
- CLOW VALVE 2638, 2639 & 2640 SERIES
- KENNEDY VALVE KS-RW
- M & H VALVE COMPANY
- MUELLER A-2360 SERIES
- US PIPE A-USPO-6 SERIES

D 1.4 – VALVES- RESILIENT SEAT/ 14” thru 48” (MJ X MJ):

Effective Date: 01-01-20
Revision #: 2

SPECIFICATION:

Resilient seat or wedge (RW) line valves shall meet or exceed the performance specifications of:

- Valves shall be ductile iron.
- AWWA C509 or C515 for resilient seat gate valves with non-rising stems (NRS).
- Both ends shall be mechanical joint in accordance with ANSI/AWWA C111/A21.11.
- ANSI/AWWA C550, all interior and exterior body and bonnet surfaces shall be coated with a fusion bonded epoxy coating.
- Valves supplied must have ISO 9001 or later certification, or poured in a foundry located in the U.S.A.
- Shall comply with and be labeled as approved by the National Sanitation Foundation (NSF) for use in potable water lines meeting NSF 61.
- Affidavit of compliance to this specification shall be available upon request.

MATERIAL:

Body:
- Ductile iron conforming to ASTM Standards A536.

Wedge:
- Ductile iron fully encapsulated (no exposed iron) with EPDM (ethylene-propylene) rubber.

Seal & O-rings:
- Triple O-ring seals Nitrile Buna-N or EPDM rubber.

Stuffing Box & Operating Nut:
- Ductile iron conforming to ASTM Standards A536.

Stem:
- Copper alloy in accordance with AWWA C515 Standards.

Bonnet Hex Head Nuts and Bolts:
- 316 Stainless steel (no socket head bolts allowed).

DESIGN:
- Resilient seat gate valve, NRS, open left (counterclockwise).
- Both ends shall be mechanical joint (MJ).
- Pressure rated for 150 psi minimum.
- 2” square operating nut.

RESTRICTIONS:

SIZE:
- 14” thru 48”

ADDITIONAL REQUIREMENTS:
- Valves 16” and larger require a gear operator.
- Valves 30” and larger require a bypass valve.
- Valves shall be installed vertical when used in raw sewer or sludge applications.



MANUFACTURER:
- AMERICAN AFC-2500 SERIES
- CLOW VALVE CO.
- KENNEDY RW
- MUELLER A-2361 SERIES
- US PIPE A-USP1 SERIES

D 1.5 – VALVES- ECCENTRIC PLUG/ 4" thru 24" (FLG X FLG):

Effective Date: 01-01-20
Revision #: 2

SPECIFICATION:

Eccentric plug valves shall meet or exceed the performance specifications of:

- Shall be designed and manufactured to have a minimum wall thickness per AWWA C 517-16.
- Interior ferrous metal surfaces shall be epoxy coated to comply with AWWA C550.
- Port area shall be a minimum 80% of full pipe area.
- Shall be non-lubricating type.
- Bearings shall be sintered, oil impregnated type 316 stainless steel.
- Stem packing seals shall be repackable while under pressure without removing the bonnet from the valve.
- Both ends shall be flanged, faced and drilled in accordance with ANSI Class 125 B16.1.
- Affidavit of compliance to this specification shall be available upon request.

MATERIAL:

Body:

- Cast iron or ductile iron conforming to ASTM Standards A126 or A536.

Plug:

- Cast iron or ductile iron encapsulated with Nitrile Buna-N or EPDM (ethylene-propylene) rubber.

Seal & O-rings:

- Nitrile Buna-N or EPDM rubber.

RESTRICTIONS:

- Use of this product is limited to pumping station valve vaults.

DESIGN:

- Both ends shall be flange joint (FLG).
- Pressure rated for 150 psi minimum.
- Shall rotate 90 degrees (quarter turn) from full-open to full-closed position.
- Operated by a ductile or cast iron lever.
- Plug valves 6" and larger shall be gear operated.



MANUFACTURER:

- CLOW VALVE CO.
- DEZURIK
- HENRY PRATT CO.
- MILLIKEN VALVE CO.
- VAL-MATIC

D 2 – Check Valve- Resilient Seat/ Potable Water 2" Thru 30" (FLG X FLG):

Effective Date: 01-01-20
Revision #: 2

SPECIFICATION:

- Check valves shall meet or exceed the performance specifications of ANSI/AWWA C508 standards.
- Shall have resilient seat.
- Shall be manufactured from ductile iron per ASTM Standards A536 65-45-12.
- Shall be pressure rated for 250 psi (minimum) working pressure.
- Both ends shall be flanged, faced and drilled in accordance with ANSI B16.1, Class 125.
- All ferrous interior and exterior body and bonnet surfaces shall be coated with a fusion bonded epoxy coating in compliance with ANSI/AWWA C550.
- Valves supplied must have ISO 9001 or later certification, or poured in a foundry located in the U.S.A.
- Shall comply with and be labeled as approved by the National Sanitation Foundation (NSF) for use in potable water lines meeting NSF 61.
- A mechanical indicator shall be provided to provide disc position.
- Affidavit of compliance to this specification shall be available upon request.

MATERIAL:

Body:

- Ductile iron, ASTM Standards A536 grade 65-45-12.

Disc:

- Ductile iron, encapsulated with:
  - EPDM (ethylene-propylene) rubber
  - Buna- N rubber

Shaft:

- Stainless steel.

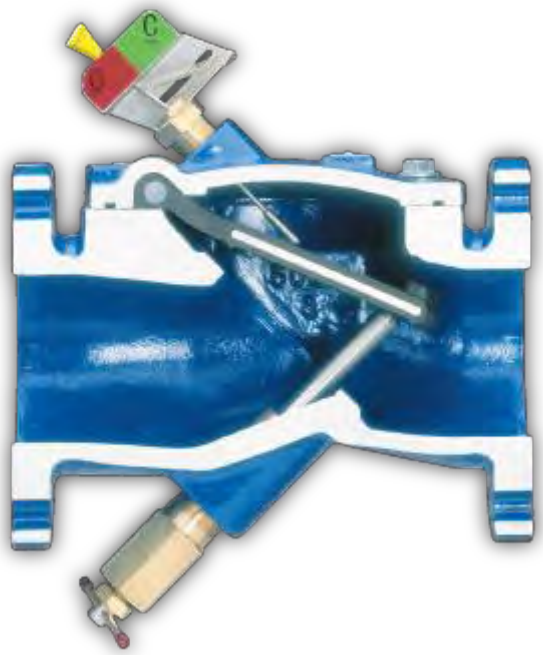

MANUFACTURER:

- AMERICAN FLOW CONTROL
- DEZURIK-APCO
- VAL-MATIC VALVE & MFG. CORP.

RESTRICTIONS:

Cape Fear Public Utility Authority
Stewardship. Sustainability. Service.

D 3 – SWING CHECK VALVES - POTABLE WATER 2" THRU 16" (FLG X FLG):

Effective Date: 01-01-20
Revision #: 2

SPECIFICATION:

- Check valves shall meet or exceed the performance specifications of AWWA C508, swing check valves.
- Shall be manufactured from ductile iron per ASTM Standards A536 65-45-12.
- Shall be pressure rated for 175 psi (minimum) working pressure.
- Both ends shall be flanged, faced and drilled in accordance with ANSI B16.1, Class 125.
- All ferrous interior and exterior body and bonnet surfaces shall be coated with a fusion bonded epoxy coating in compliance with ANSI/AWWA C550.
- Valves supplied must have ISO 9001 or later certification, or poured in a foundry located in the U.S.A.
- Shall comply with and be labeled as approved by the National Sanitation Foundation (NSF) for use in potable water lines meeting NSF 61.
- Factory Mutual Approved (FM) and Underwriter Laboratory Listed (UL) as noted by *(UL/FM).
- Affidavit of compliance to this specification shall be available upon request.

MATERIAL:

Body:

- Ductile iron, ASTM Standards A536 grade 65 45-12.

Disc:

- Bronze with EPDM (ethylene-propylene) rubber facing and a stainless steel shaft.



MANUFACTURER:

- AMERICAN FLOW CONTROL
- DEZURIK-APCO
- GA INDUSTRIES
- KENNEDY VALVE
- M&H VALVE
- MUELLER

RESTRICTIONS:

D 3.1 – SWING CHECK VALVES- SANITARY SEWER 4" THRU 16" (FLG X FLG):

Effective Date: 01-01-20
Revision #: 2

SPECIFICATION:

- Check valves shall meet or exceed the performance specifications of AWWA C508, swing check valves.
- Horizontal swing type with bolted bonnets.
- Shall be manufactured from ductile iron per ASTM Standards A536 65-45-12 (cast iron per ASTM Standards A126 Class B).
- Shall be pressure rated for 175 psi. (minimum) working pressure.
- Both ends shall be flanged, faced and drilled in accordance with ANSI B16.1, Class 125.
- Valves supplied must have ISO 9001 or later certification, or poured in a foundry located in the U.S.A.
- Shall be furnished with an outside lever and weight.
- Affidavit of compliance to this specification shall be available upon request.

MATERIAL:

Body:

- Ductile iron, ASTM Standards A536 grade 65 45-12.

Disc:

- Cast or ductile iron with bronze seat and a 316 stainless steel shaft.



MANUFACTURER:

- AMERICAN FLOW CONTROL
- DEZURIK-APCO
- GA INDUSTRIES
- KENNEDY VALVE
- M&H VALVE
- MUELLER

RESTRICTIONS:

Cape Fear Public Utility Authority
Stewardship. Sustainability. Service.

D 3.2 – SWING CHECK VALVES/ RESILIENT SEAT– SANITARY SEWER (3" THRU 12") (FLG X FLG):

Effective Date: 01-01-20
Revision #: 2

SPECIFICATION:

- Check valves shall meet or exceed the performance specifications of AWWA C508, swing check valves.
- Shall be manufactured from ductile iron per ASTM Standards A536 65-45-12.
- Body and bonnet shall have fusion bonded epoxy coating on interior and exterior complying with AWWA C550.
- Shall be pressure rated for 175 psi (minimum) working pressure.
- Both ends shall be flanged, faced and drilled in accordance with ANSI B16.1, Class 125.
- Shall have a resilient seat that is drop tight, even at low pressure.
- Shall have no obstructions in the flow path for a 100% clear waterway.
- Valves supplied must have ISO 9001 or later certification, or poured in a foundry located in the U.S.A.
- Shall be furnished with an outside lever and spring.
- Affidavit of compliance to this specification shall be available upon request.

MATERIAL:

Body:

- Ductile iron, ASTM Standards A536 grade 65-45-12.

Disc:

- Shall be a carbon steel core completely encapsulated with EPDM.

Bonnet Bolts:

- 316 stainless steel.

Hinge and Hinge Pin:

- 316 stainless steel, hinge on 10"-12" is ductile iron.

O-Rings:

- Acrylonitrile-butadiene rubber (NBR).

RESTRICTIONS:

DESIGN:

- Shall be designed such that the disc, hinge, and bonnet can be removed as one assembly.
- Can be mounted vertically or horizontally.
- All internal exposed metal is stainless steel.



MANUFACTURER:

- AMERICAN AVK SERIES 41/ 42-43X

Cape Fear Public Utility Authority
Stewardship. Sustainability. Service.

D 4 – COMBINATION AIR VALVES– STAINLESS STEEL/ SANITARY SEWER/ 2" thru 12" FORCE MAINS:

Effective Date: 01-01-20
Revision #: 2

SPECIFICATION:

- Combination air valves for sewage shall meet or exceed the performance specifications of AWWA C512-15.
- Shall be specially designed to operate with liquids carrying solid particles such as sewage and effluent.
- Shall release accumulated air from the system while the system is under pressure.
- The valve must discharge air at high velocity during the filling of the system and admit air during its drainage.
- The valve shall be a double or triple float design.
- Shall be pressure rated for at least 75 psi.
- Shall be test pressure rated for at least 1.5 times working pressure.
- Threaded connection shall be National Pipe Thread (NPT).
- Shall be equipped with a gauge or relief port.
- Valves supplied must have ISO 9001 or later certification, or manufactured in the U.S.A.
- Affidavit of compliance to this specification shall be available upon request.

MATERIAL:

Body:

- Reinforced Nylon/316 Stainless Steel.

Outer Metal Parts:

- 304, 316 Stainless Steel and epoxy coated ductile iron.

Inner Metal Parts:

- 316 Stainless Steel.

Floats:

- Plastic materials/ Foamed Polypropylene or High Density Polyethylene.

O-Rings & Seals:

- Nitrile Buna-N or EPDM (ethylene-propylene) rubber.

RESTRICTIONS:

- For force main sizes up and including twelve (12") inch.

CONNECTIONS:

Inlet:

- 2" Standard Male Iron Pipe Threads (MNPT).

Outlet:

- Stainless Steel screen mesh & cover.
- Flushing connection.



MANUFACTURER:

- ARI USA, INC.– MODEL D-020
- GA INDUSTRICS
- APCO VALVES
- VAL-MATIC

D 4.1 – COMBINATION AIR VALVES– STAINLESS STEEL/ SANITARY SEWER/ 12" AND LARGER FORCE MAINS:

Effective Date: 01-01-20
Revision #: 2

SPECIFICATION:

- Combination air valves for sewage shall meet or exceed the performance specifications of AWWA C512-15.
- Shall be specially designed to operate with liquids carrying solid particles such as sewage and effluent.
- Shall release accumulated air from the system while the system is under pressure.
- The valve must discharge air at high velocity during the filling of the system and admit air during its drainage.
- The valve shall be a double or triple float design.
- Shall be pressure rated for at least 150 psi.
- Shall be test pressure rated for at least 1.5 times working pressure.
- Flange surface shall be faced and drilled in accordance with ANSI Class 125 B16.1.
- Valves supplied must have ISO 9001 or later certification, or manufactured in the U.S.A.
- Affidavit of compliance to this specification shall be available upon request.

CONNECTIONS:

Inlet:

- 4" Flange for mains up to and including 24" mains.
- 6" Flange for mains larger than 24".

Outlet:

- Stainless Steel screen mesh & cover.
- Flushing connection.

RESTRICTIONS:

- For force main sizes 12" and larger.

MATERIAL:

Body:

- 316 Stainless Steel.

Outer Metal Parts:

- 316 Stainless Steel

Inner Metal Parts:

- 316 Stainless Steel.

Floats:

- Plastic materials/ Foamed Polypropylene, High Density Polyethylene or 316 Stainless Steel.

O-Ring:

- Nitrile Buna-N or EPDM (ethylene epropylene) rubber.



MANUFACTURER:

- ARI USA, INC.– Model D -020

D 5 – AIR RELEASE VALVES (UL/FM)- POTABLE WATER:

Effective Date: 01-01-20
Revision #: 2

SPECIFICATION:

Air release valves for potable water shall meet or exceed the performance specifications of:

- Shall be automatic float operated designed to release accumulated air from the piping system while the system is in operation and under pressure.
- AWWA C512.
- Shall be Underwriters Laboratories Listed (UL) and Factory Mutual Approved (FM) as noted by (UL/FM).
- Shall have a screened hood.
- The valve body shall be threaded with National Pipe Thread (NPT) inlets and outlets.
- Shall be pressure rated for at least 175 psi.
- Shall be test pressure rated for at least 1.5 times working pressure.
- Valves supplied must have ISO 9001 or later certification, or manufactured in the U.S.A.
- Affidavit of compliance to this specification shall be available upon request.

CONNECTIONS:

Inlet:

- 1” Standard Female Iron Pipe Threads (FNPT).

RESTRICTIONS/ OPTIONAL USE:

- UL/FM is required on valves installed on potable mains in sizes 12” and smaller.

MATERIAL:

Body & Cover:

- Cast iron or ductile iron conforming to ASTM Standards A126 or A536.

Coating:

- Fusion bonded epoxy.

Outer trim:

- Stainless Steel.

Inner metal parts:

- 316 Stainless Steel.

Inner rubber parts:

- Nitrile Buna-N, EPDM (ethylene propylene) or Viton rubber.



MANUFACTURER:

- VALVE MATIC MFG. CORP.– VM-15AH
- VALVE MATIC MFG. CORP.– VM-22H
- OPEN

D 6 – AIR RELEASE VALVES (2") - POTABLE WATER:

Effective Date: 01-01-20
Revision #: 2

SPECIFICATION:

Air release valves for potable water shall meet or exceed the performance specifications of:

- Shall be automatic float operated designed to release accumulated air from the piping system while the system is in operation and under pressure.
- AWWA C512.
- Shall have a screened hood (not shown in detail).
- The valve body shall be threaded with National Pipe Thread (NPT) inlets and outlets.
- Shall be pressure rated for at least 150 psi.
- Shall be test pressure rated for at least 1.5 times working pressure.
- Valves supplied must have ISO 9001 or later certification, or manufactured in the U.S.A.
- Affidavit of compliance to this specification shall be available upon request.

CONNECTIONS:

Inlet:

- 2" Standard Female National Pipe Threads (FNPT).

MATERIAL:

Body & Cover:

- Cast iron or ductile iron conforming to ASTM Standards A126 or A536.

Coating:

- Exterior shall have universal alkyd primer.

Outer Trim:

- Stainless Steel.

Inner Metal Parts:

- 316 Stainless Steel.

Inner Rubber Parts:

- Nitrile Buna-N, EPDM (ethylene propylene) or Viton rubber.



MANUFACTURER:

- VALVEMATIC MFG. CORP – VM-45
- OPEN

RESTRICTIONS/OPTIONAL USE:

- Acceptable for use on potable main sizes over 12" only.

D 7 – FULL FLANGE PRESSURE SENSOR:

Effective Date: 01-01-20
Revision #: 2

SPECIFICATION:

Full flange sensors shall meet or exceed the performance specifications of:

- Protect and isolate pressure gauge.
- Full 360-deg pressure reading.
- Self-cleaning flex action, non-clogging.
- 2-1/2" diameter companion pressure gauge, ±1% accuracy, pressure range as indicated on drawings.
- Affidavit of compliance to this specification shall be available upon request.

CONNECTIONS:

- ANSI B16.5 Class 150 flanges, carbon steel or PVC

MATERIAL:

Body:

- Carbon steel or PVC.

Lining:

- Sleeve lining material recommended for raw sewage.

Fill Fluid:

- Ethylene glycol and water, vegetable oil, silicon oil.



MANUFACTURER:

- RED VALVE SERIES 40
- ONYX

RESTRICTIONS/OPTIONAL USE:

- Pressure gauge installations for valve vaults and meter vaults at wastewater pumping stations.

D 8 – POST TYPE HYDRANTS:

Effective Date: 01-01-20
Revision #: 2

SPECIFICATION:

Post type hydrants shall meet or exceed the performance specifications of:

- ANSI/AWWA C502.
- Post type dry barrel design.

MATERIAL:

Hydrant Shoe/Elbow:
- Cast iron, ASTM A0126 Class B

Stand Pipe:
- Ductile iron ASTM A-126

Main Valve Rod:
- Steel C1117 HFS

Operating Nut:
- Bronze alloy CDA 84400, ASTM B-584

Lubricating Nut:
- Brass

INLET SIZE AND TYPE:
- 2” mechanical joint.

OUTLET SIZE AND TYPE:
- 2-1/2” hose nozzle.



RESTIRCTIONS:
- Not for fire protection. For use only at pump station sites.

MANUFACTURER:
- MUELLER
- M&H
- KUPFERLE FOUNDRY COMPANY

D 9 – REDUCED PRESSURE DETECTOR ASSEMBLY / 2 ½" thru 10"

Effective Date: 01-01-20
Revision #: 2

SPECIFICATION:

Reduced Pressure Detector Assembly shall meet or exceed the performance specification of:

- AWWA C511-92
- Shall be installed on fire protection systems when connected to a public water supply.
- The unit shall be a complete assembly including UL listed and FM approved OSY shutoff valves.
- Shall be coated with approved AWWA epoxy coating.
- Assemblies supplied must have ISO 9001 or later certification, or poured in a foundry located in the U.S.A.
- Temperature Range: 33°F – 140°F
- Maximum Working Pressure: 175 psi
- Affidavit of compliance to this specification shall be available upon request.



MATERIALS

Body:
- Epoxy coated cast iron

Discs:
- Rubber

Seat and Disc Holder:
- Bronze

Trim:
- Stainless Steel

SIZE
- 2 ½" – 10"

MANUFACTURER:
- WATTS – Model Series 909 RPDA
- OPEN

RESTRICTIONS:

Cape Fear Public Utility Authority
Stewardship. Sustainability. Service.

D 10 – DOUBLE CHECK DETECTOR ASSEMBLY / 3" thru 10"

Effective Date: 01-01-20
Revision #: 2

SPECIFICATION:

Reduced Pressure Detector Assembly shall meet or exceed the performance specification of:

- AWWA C510
- The assembly shall meet the basic requirements of ASSE 1048
- Shall be installed on fire protection systems when connected to a public water supply.
- The unit shall be a complete assembly including UL listed resilient seated OSY shutoff valves and test cocks
- The auxiliary line shall consist of an approved backflow preventer and water meter.
- Shall be coated with approved AWWA epoxy coating.
- Assemblies supplied must have ISO 9001 or later certification, or poured in a foundry located in the U.S.A.
- Temperature Range: 33°F – 110°F continuous,
- 140°F intermittent
- Maximum Working Pressure: 175 psi
- Affidavit of compliance to this specification shall be available upon request.



MATERIALS

Body:
- Epoxy coated cast iron

Discs:
- Rubber

Seat and Disc Holder:
- Bronze

Trim:
- Stainless Steel

SIZE
- 3" – 10"

MANUFACTURER:
- WATTS – Model Series 709 DCDA
- OPEN

RESTRICTIONS:

Cape Fear Public Utility Authority
Stewardship. Sustainability. Service.

Section E: Fire Hydrants	Effective Date: 01-01-20 Revision #: 2

E 1 Fire Hydrants

E 1 – FIRE HYDRANTS:	Effective Date: 01-01-20 Revision #: 2

SPECIFICATION/ MATERIAL:

All fire hydrants shall fully comply with all provisions of American Water Works Association C-502 (Dry Barrel Fire Hydrants) latest revision thereof, Factory Mutual Approved (FM) and Underwriter Laboratory Listed (UL) as noted by (UL/FM) (AWWA, U.L. and F.M. COLOPHONS MUST BE CAST IN UPPER BARREL OF EACH HYDRANT) and meet the following specific provisions:

- It will be compression type, opening counterclockwise, against the pressure and closing with the pressure.
- Drain outlets shall be provided.
- Hydrant bonnet assembly shall be provided with a grease or oil reservoir and lubrication system that automatically circulates lubricant to all operating stem threads and bearing surfaces each time the hydrant is operated. The system shall be completely sealed from the waterway and from external contaminants.
- The grease or oil used for lubrication shall be nontoxic and safe for use in potable water systems.
- All hydrants will be of the traffic “breakaway” type with safety stem coupling and breakable flange that permits full 360° rotation of the nozzle section. Cut down bolts are not acceptable for this requirement.
- Main valve opening of the hydrant will not be less than 5-1/4” and open against the pressure.
- Hydrant nozzles will consist of two (2) hose nozzles and one (1) pumper nozzle. Primary outlet shall be a 5” Storz quick connection. Sided outlets shall have American National standard fire hose coupling threads.
- All nozzles shall be field replaceable with non corrosive locking devices.
- Caulked nozzles are prohibited.
- Nozzle chains shall be provided.
- An all bronze hydrant valve seat ring shall thread directly into an all bronze ring and shall be located between the lower hydrant barrel and base securely retained in this position.
- Upper valve plate must be B62 bronze, or epoxy coated, if used.



E 1 – FIRE HYDRANTS (CONTINUED):

SPECIFICATION/MATERIAL (CONT.)

- The hydrant will be designed with an anti-friction bearing, so located that it will reduce the torque required to operate the hydrant.
- All internal stem pins or bolts and nuts shall be stainless steel.
- The safety stem coupling shall be of either Cast Iron, Bronze, or Stainless Steel.
- The operating stem, safety stem coupling and main valve assembly shall be capable of withstanding an application of 200 ft-lbs. of torque against either the full open or closed position with no damage to components. Downward stem travel shall be limited by a travel stop location in the upper housing of the hydrant or a stop in the shoe assembly.
- Operating nut and nozzle cap wrench nuts shall conform to existing specifications for this utility.
- The opening between the operating nut and dome shall have a weather shield or seal.
- The ferrous waterway of the hydrant's shoe must be epoxy coated.
- The shoe assembly must be designed to allow all of the MJ gland tee bolts to be inserted from the shoe body side.
- Centerline of pumper connection shall be a minimum of eighteen-inches (18") above ground line.
- Ground line shall be three-inches (3") or less below break flange.
- Main rubber valve shall be EPDM (ethylene propylene) rubber.
- Affidavit of compliance to this specification shall be available upon request.
- 316 stainless steel fasteners.

RESTRICTIONS:

BURY LENGTH:

- Fire hydrant length, also known as the bury length, shall be as shown of CFPUA Standard Details.

COLOR:

- Hydrant final color shall be red using a factory applied powder coating.

INLET SIZE AND TYPE:

- Inlet shall be six-inch (6") Mechanical Joint (MJ).

ADDITIONAL REQUIREMENTS:

- Only factory authorized repair parts and extensions will be acceptable.

MANUFACTURER:

- AMERICAN AVK NOSTALGIC 2780 SERIES
- AMERICAN FLOW CONTROL B-84-B
- AMERICAN FLOW CONTROL WATEROUS PACER
- CLOW MEDALLION
- KENNEDY GUARDIAN K81-D
- MUELLER SUPER CENTURION A-423
- US PIPE METROPOLITAN M-94

Section F: Service Saddles and Tapping Devices	Effective Date: 01-01-20 Revision #: 2

F 1 Service Saddles/ Hinged Type for 2" PVC

F 1.1 Service Saddles/ Brass Alloy/ Stainless Steel Straps for Cast, Ductile & PVC Pipe

F 1.2 Service Saddles/ Ductile Iron/ Stainless Steel Straps for Cast, Ductile & PVC Pipe

F 2 Tap Sleeves 4" Thru 24", Flange Connection (Fabricated Stainless Steel)

F 2.1 Tap Sleeves 4" Thru 12", Mechanical Joint Connection (Fabricated Stainless Steel)

F 3 Sewer Service Saddles/ Ductile Iron/ Stainless Steel Straps/Non-Pressure

F 1 – SERVICE SADDLE, BRASS/ ALLOY/ HINGED TYPE/ 2” PVC:

Effective Date: 01-01-20
Revision #: 2

SPECIFICATION:
Brass alloy service saddles shall meet or exceed the performance specifications of:

- ASTM Standards B62 (85-5-5-5) brass.
- ASTM Standards D2000 gaskets seals.
- Strap shall be a single hinged strap.
- Strap shall have a curvature accurately formed to meet the diameter of the pipe.
- Gasket shall be securely glued or imbedded in the body of the clamp to ensure a positive seal against the pipe.
- NSF Standards 61.

MATERIAL:
Body:
- Brass per ASTM Standards B62

Straps:
- Brass per ASTM Standards B62

Bolts & Nuts:
- Brass per ASTM Standards B62

Gasket:
- EPDM (ethylene propylene).
- Nitrile Buna-N (Acrylonitrile butadiene- (NBR)).
- Viton; Fluorel (FKM)

Coating:
- Brass: None

DESIGN:
- For 2” IPS PVC pipe.

OUTLETS:
- 1” shall be female AWWA CC taper female threads.
- 2” shall be female iron pipe threads.





MANUFACTURER:
- A.Y. MCDONALD MODEL- 3891
- FORD MODEL- S70
- MUELLER MODEL- S13420

RESTRICTIONS:
- Hinged saddles are not acceptable

F 1.1 – SERVICE SADDLES / BRASS ALLOY / STAINLESS STEEL STRAPS FOR CAST IRON, DUCTILE IRON & PVC PIPE:

Effective Date: 01-01-20
Revision #: 2

SPECIFICATION:

- Brass alloy service saddles shall meet or exceed the performance specifications of:

- ASTM Standards B62 (85-5-5-5) brass.
- ASTM Standards D2000 gaskets seals.
- Single or multiple stainless steel straps three-inches wide or more. Single strap preferred.
- Welds shall be fully passivated for corrosion resistance.
- Straps shall have a curvature accurately formed to lubricant treated nuts to prevent galling.
- Gasket shall be securely glued or imbedded in the body of the clamp to ensure a positive seal against the pipe.
- NSF Standards 61.

MATERIAL:

Body:

- Brass per ASTM Standards B62

Straps:

- Stainless steel, 18-8 type 304

Nuts, Bolts & Washers:

- Stainless steel, 18-8 type 316

Gasket:

- EPDM (ethylene propylene)
- Nitrile Buna-N (Acrylonitrile butadiene (NBR)).
- Viton; Fluorel (FKM)

Coating:

- Brass: None

DESIGN:

- For cast iron, ductile iron and PVC pipe.

OUTLETS:

- 1” shall be female AWWA CC taper female threads.
- 2” shall be female iron pipe threads.

RESTRICTIONS:

- Shall be used for connections to 12” mains or smaller.
- Hinged saddles are not acceptable





MANUFACTURER:

- A.Y. MCDONALD– 3845, 3846 & 3855, 3856 SERIES
- FORD– 202BS STYLE
- MUELLER– BR2S SERIES
- POWER SEAL–3409 SERIES
- ROMAC– 202BS SERIES
- SMITH BLAIR– 325, 393 SERIES

F 1.2 – SERVICE SADDLES/ DUCTILE IRON/ STAINLESS STEEL STRAPS FOR CAST IRON, DUCTILE IRON & PVC PIPE:

Effective Date: 01-01-20
Revision #: 2

SPECIFICATION:
Ductile iron service saddles shall meet or exceed the performance specifications of:

- ASTM Standards A536 ductile iron.
- ASTM Standards D2000 gaskets seals.
- Single or multiple stainless steel straps three-inches wide or more. Single strap preferred.
- Welds shall be fully passivated for corrosion resistance.
- Straps shall have a curvature accurately formed to meet the diameter of the pipe.
- Fusion nylon or fusion epoxy coating, minimum 12 mils thick.
- Lubricant treated nuts to prevent galling.
- Gasket shall be securely glued or imbedded in the body of the clamp to ensure a positive seal against the pipe.
- NSF Standards 61.

MATERIAL:
Body:
- Ductile iron per ASTM Standards A536

Straps:
- Stainless steel, 18-8 type 304

Nuts, Bolts & Washers:
- Stainless steel, 18-8 type 316

Gasket:
- EPDM (ethylene propylene).
- Nitrile Buna-N (Acrylonitrile butadiene (NBR)).
- Viton; Fluorel (FKM)

Coating:
- Ductile iron: fusion epoxy or nylon.

DESIGN:
- For ductile iron, cast iron, and PVC pipe.

RESTRICTIONS:
- Shall be used for connections to 12” mains or smaller.
- Hinged saddles are not acceptable

OUTLETS:
- 1” shall be female AWWA CC taper female threads.
- 2” shall be female iron pipe threads.



MANUFACTURER:
- A.Y. MCDONALD- 4845A, 4846A, 4855A, 4856A SERIES
- CASCADE– CNS2 STYLE
- DRESSER-291 SERIES per spec.
- FORD– FC202 STYLE
- JCM– 406 SERIES
- MUELLER– DR2S SERIES
- POWER SEAL–3417DI, 3417SW
- ROMAC– 202NS SERIES
- SMITH BLAIR– 397, 317 SERIES

F 2 – TAP SLEEVES 4" THRU 24" FLANGE CONNECTION/ FABRICATED STAINLESS STEEL:

Effective Date: 01-01-20
Revision #: 2

SPECIFICATION:

Service saddles shall meet or exceed the performance specifications of:

- ASTM Standards D2000 gaskets seals.
- AWWA C115 and C223
- Outlet branch O-ring seal type gasket.
- ASTM Standards A240, 18-8 type 304 stainless steel.
- Welds shall be fully passivated for corrosion resistance.
- Body shall have a curvature accurately formed to meet the diameter of the pipe.
- Lubricant treated nuts to prevent galling.
- Gasket shall be securely glued or imbedded in the body of the clamp to ensure a positive seal against the pipe.
- NSF Standards 61.

MATERIAL:

Body:
- Stainless steel, 18-8 type 304.

Flange:
- Stainless steel, 18-8 type 304.

Nuts, Bolts & Washers:
- Stainless steel, type 316.

Gasket:
- EPDM (ethylene propylene).
- Nitrile Buna-N (Acrylonitrile butadiene (NBR)).
- Viton; Fluorel (FKM)

DESIGN:
- For ductile iron, cast iron and PVC pipe.

CONNECTION:
- Flange shall conform to AWWA C228 Class SD and recessed for tapping valve (MSS-SP60).

RESTRICTIONS:

ADDITIONAL REQUIREMENTS:
- This product is for connection of branch lines to existing in-service pipelines.



MANUFACTURER:
- FORD METER BOX STYLE FTSS
- JCM 432 SERIES
- POWER SEAL 3490AS SERIES
- ROMAC SST III SERIES

F 2.1 – TAP SLEEVES 4" THRU 12", MECHANICAL JOINT CONNECTION/ FABRICATED STAINLESS STEEL:

Effective Date: 01-01-20
Revision #: 2

SPECIFICATION:
Service saddles shall meet or exceed the performance specifications of:

- AWWA C110 mechanical joint dimensions.
- ASTM Standards D2000 gaskets seals.
- Outlet branch O-ring seal type gasket.
- 18-8 type 304 stainless steel.
- Welds shall be fully passivated for corrosion resistance.
- Body shall have a curvature accurately formed to meet the diameter of the pipe.
- Lubricant treated nuts to prevent galling.
- Gasket shall be securely glued or imbedded in the body of the clamp to ensure a positive seal against the pipe.
- NSF Standards 61.

MATERIAL:
Body:
• Stainless steel, 18-8 type 304.
Flange:
• Stainless steel, 18-8 type 304.
Nuts, Bolts & Washers:
• Stainless steel, type 316
Gasket:
• EPDM (ethylene propylene).
• Nitrile Buna-N (Acrylonitrile butadiene (NBR)).
• Viton; Fluorel (FKM)

DESIGN:
- For ductile iron, cast iron and PVC pipe.

CONNECTION:
- Mechanical Joint (MJ).

RESTRICTIONS:

ADDITIONAL REQUIREMENTS:
- This product is for connection of branch lines to existing in-service pipelines.



MANUFACTURER:
- FORD METER BOX STYLE FTSS MJ
- JCM 432 SERIES MJ
- POWER SEAL 3490AS SERIES MJ
- ROMAC SST III SERIES MJ

F 3 – SEWER SERVICE SADDLES/ DUCTILE IRON/ STAINLESS STEEL STRAPS/ NON-PRESSURE:

Effective Date: 01-01-20
Revision #: 2

SPECIFICATION:

Ductile iron service saddles shall meet or exceed the performance specifications of:

- ASTM Standards A536 ductile iron.
- ASTM Standards D2000 gaskets seals.
- Type 304 stainless steel.
- Strap shall be a single strap three-inches or more wide.
- Welds shall be fully passivated for corrosion resistance.
- Straps shall have sufficient length to fit a wide range of pipe diameters.
- Fusion nylon or fusion epoxy coating, minimum 12 mils thick or shop coat paint finish.
- Lubricant treated nuts to prevent galling.
- Gasket shall be securely glued or imbedded in the body of the clamp or inserted in the body of the clamp to ensure a positive seal against the pipe.

MATERIAL:

Body:

- Ductile iron per ASTM Standards A536 Grade 65-45-12 or Cast Iron per ASTM A126.

Straps:

- Stainless steel, ASTM A 240 type 304

Bolts, Nuts & Washers:

- Stainless steel, ASTM A193, A194, A240 type 304

Gasket:

- SBR (Styrene Butadiene).
- Polyisoprene
- EPDM (ethylene propylene).
- Nitrile Buna-N (Acrylonitrile butadiene (NBR)).
- Viton; Fluorel (FKM).

Coating:

- Ductile iron= fusion epoxy, nylon or shop coat paint finish.

RESTRICTIONS:

- Hinged saddles are not acceptable.

DESIGN:

- For ductile iron, cast iron, and poly vinyl chloride (PVC) pipe.

OUTLETS:

- 4” and 6”





MANUFACTURER:

- ROMAC– STYLE “CB” SEWER SADDLE
- GENECO SEALTITE SEWER PIPE SADDLE
- FORD METER BOX FSS SEWER SADDLE

Cape Fear Public Utility Authority
Stewardship. Sustainability. Service.

Section G: Brass Service Materials	Effective Date: 01-01-20 Revision #: 2

G 1 Inline Valves

G 2 Straight Couplings

G 3 Meter Setters (5/8" X 3/4" Meter)

G 3.1 Meter Setters (1" Meter)

G 3.2 Meter Setters (1 1/2"& 2" Meter)

G 4 Dual Service U-Branch (5/8" X 3/4" Meter)

G 4.1 Dual Service U-Branch (1" Meter)

G 5 Compound Meters

G 6 High Resolution Encoder

G 7 Migratable Endpoint

G 1 – INLINE VALVES:

Effective Date: 01-01-20
Revision #: 2

SPECIFICATION/ MATERIAL:

Compression type brass fittings & accessories with external gripping devices shall meet or exceed the performance specifications of:

- Manufactured in compliance with ANSI/AWWA C800 (latest revision).
- Certified to NSF/ANSI 61 and NSF/ANSI 372
- Brass components in contact with potable water conform to ASTM B584, UNS C89833 (latest revision) and identified with "NL".
- Connection stop shall have compression nut and gasket service line connections.
- Size of corporation stop shall match that of service line.
- Stainless steel insert stiffeners

Set Screw:
- 316 Stainless Steel

Gasket:
- EPDM

Connections:
- CTS x FIP



MANUFACTURER:
- McDonald: 76102 22 (1")
- Ford: B-41-44-4W-NL (1")

RESTRICTIONS:

Cape Fear Public Utility Authority
Stewardship. Sustainability. Service.

G 2 – STRAIGHT COUPLINGS:

Effective Date: 01-01-20
Revision #: 2

SPECIFICATION/ MATERIAL:

Meter couplings shall meet or exceed the performance specifications of:

- Brass components in contact with potable water conform to ASTM B584, UNS C89833 (latest revision) and identified with “NL”.
- Manufactured in compliance with ANSI/AWWA C800 (latest revision).
- Certified to NSF/ANSI 61 and NSF/ANSI 372
- Stainless steel insert stiffeners.

Set Screw:
- 316 Stainless Steel

Gasket:
- EPDM

Connections:
- CTS x MIP



MANUFACTURER:
- McDonald: 74753-22 (3/4" X 1”) and (1” X 1”)
- Ford: C-84-34-NL (3/4” X 1”)
- Ford: C-84-77-NL (2”)
- Ford: C-84-44-NL (1” X 1”)

RESTRICTIONS:

G 3 – METER SETTERS (5/8" X 3/4" METER):

Effective Date: 01-01-20
Revision #: 2

SPECIFICATION:

Meter setters shall meet or exceed the performance specifications of:

- Castings shall be made of ASTM Standards 862 (85-5-5-5) brass.
- Applicable parts of AWWA C800.

MATERIAL:

Body:
- ASTM Standards B-62 Brass.

Riser:
- Copper.

Seal & O-rings:
- EPDM rubber.

Trim:
- Brass.

Solder:
- Lead-free.

DESIGN:
- Ball type curb stop valve design.
- Valve shall have padlock wings.
- Shall have swivel meter saddle nut connections for 5/8” X 3/4" water meters

CONNECTIONS:
- Both top inlet and outlet sides shall be meter saddle nut.
- Single Service: CTS X CTS
- Dual Service: FPT X CTS

SIZES:
- Meter size: Five-eighths X three-quarter inch (5/8” x 3/4”).
- Setter height: Seven inch (7”).

INCLUDED AND DELIVERED WITH SETTERS:
- Two (1/8") thick EPDM rubber meter gaskets.



MANUFACTURER:

Single Meter:
- McDonald: 722-207 WW 22 44
- Ford: VBB72-7W-44-44-NL

Dual Meter:
- McDonald: 725-207-WW-D2-33
- Ford: VBB72-7W-14-33-NL

RESTRICTIONS:

G 3.1 – METER SETTERS (1" METER):

Effective Date: 01-01-20
Revision #: 2

SPECIFICATION:

Meter setters shall meet or exceed the performance specifications of:

- Castings shall be made of ASTM Standards 862 (85-5-5-5) brass.
- Applicable parts of AWWA C800.

MATERIAL:

Body:
- ASTM Standards B-62 Brass.

Riser:
- Copper.

Seal & O-rings:
- EPDM rubber.

Trim:
- Brass.

Solder:
- Lead-free.

DESIGN:
- Ball type curb stop valve design.
- Valve shall have padlock wings.
- Shall have swivel meter saddle nut connections for 1" water meters.

CONNECTIONS:
- Both bottom inlet and outlet sides shall be CTS.
- Both top inlet and outlet sides shall be meter saddle nut.

SIZES:
- Meter size: One inch (1”).
- Setter height: Seven inch (7”).

INCLUDED AND DELIVERED WITH SETTERS:
- Two (1/8") thick EPDM rubber meter gaskets.



MANUFACTURER:

Single Service:
- McDonald: 722-410 WW 22 44
- Ford: VBB74-10W-44-44-NL

Dual Service
- McDonald: 725-410WW-D2-44
- Ford: VBB74-10W-14-44-NL

RESTRICTIONS:

Cape Fear Public Utility Authority
Stewardship. Sustainability. Service.

G 3.2 – METER SETTERS (1 1/2"& 2" METER):

Effective Date: 01-01-20
Revision #: 2

SPECIFICATION:

Meter setters shall meet or exceed the performance specifications of:

- Castings shall be made of ASTM Standards 862 (85-5-5-5) brass.
- Applicable parts of AWWA C800.

MATERIAL:

Body:
- ASTM Standards B-62 Brass.

Riser:
- Copper.

Seal & O-rings:
- EPDM rubber.

Trim:
- Brass.

Solder:
- Lead-free.

DESIGN:
- Ball type curb stop valve design.
- Valve shall have padlock wings.
- Shall have swivel meter saddle nut connections for 1 1/2" and 2" water meters.

CONNECTIONS:
- Both bottom inlet and outlet sides shall be CTS.
- Both top inlet and outlet sides shall be meter saddle nut.

SIZES:
- 1-1/2" and 2" water meters.

INCLUDED AND DELIVERED WITH SETTERS:
- Two (1/8") thick EPDM rubber meter gaskets.
- Two male thread nipples by compression (2")

RESTRICTIONS:

Use of this product is limited to:

- Single Service Meter

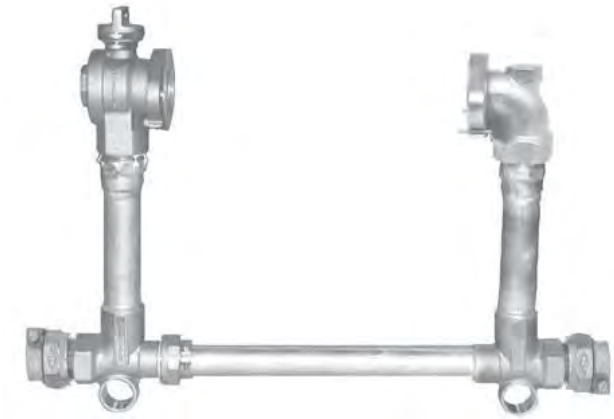

MANUFACTURER:
- McDonald: 720-R-612 WWFF 665 (1-1/2")
- McDonald: 722-R-712 WW 22 77 (2")
- Ford: VBB76-12-HB-44-77-NL (1-1/2")
- Ford: VBB77-15-HB-44-77-NL (2")

G 4 – Dual Service U-Branch (5/8" X 3/4" METER):

Effective Date: 01-01-20
Revision #: 2

SPECIFICATION/ MATERIAL:

U-Branch fittings shall meet or exceed the performance specifications of:

- Brass components in contact with potable water conform to ASTM B584, UNS C89833 (latest revision) and identified with “NL”
- Manufactured in compliance with ANSI/AWWA C800 (latest revision)
- Certified to NSF/ANSI 61 and NSF/ANSI 372

CONNECTIONS:

- 1” CTS X 3/4" MNPT.

DESIGN:

- One (1") inch tailpiece must be machined inside and outside.

INCLUDE:

- One tail piece
- One meter nut



MANUFACTURER:

- McDonald: 708 U2M
- Ford: U48-43-NL

RESTRICTIONS:

Use of this product is limited to:

- 5/8” x 3/4" Dual Meter

Cape Fear Public Utility Authority
Stewardship. Sustainability. Service.

G 4.1 – Dual Service U-Branch (1" METER):

Effective Date: 01-01-20
Revision #: 2

SPECIFICATION/ MATERIAL:

U-Branch fittings shall meet or exceed the performance specifications of:

- Brass components in contact with potable water conform to ASTM B584, UNS C89833 (latest revision) and identified with “NL”
- Manufactured in compliance with ANSI/AWWA C800 (latest revision)
- Certified to NSF/ANSI 61 and NSF/ANSI 372

CONNECTIONS:

- 2” CTS X 1" MNPT.

DESIGN:

- One (1") inch tailpiece must be machined inside and outside.

INCLUDE:

- One tail piece
- One meter nut



MANUFACTURER:

- McDonald: 708 U2M
- Ford: U48-74-AWT-NL

RESTRICTIONS:

Use of this product is limited to:

- 1" Dual Meter

G 5 – Compound Meters (3”, 4” and 6”):

Effective Date: 01-01-20
Revision #: 2

SPECIFICATION/ MATERIAL:

Large meters shall meet or exceed the following performance specifications:

- Lead-free bronze alloy
- AWWA Standard C700
- NSF/ANSI Standards 61 and 372
- 316 stainless steel hardware
- EPDM gasket

SIZE:

Compound meters and strainers shall conform to the following lay lengths:

3” Compound meter with strainer – 24”
4” Compound meter with strainer – 29”
6” Compound meter with strainer – 33”

LOW FLOW REGISTRATION:

- 3” - .25 gpm
- 4” - .375 gpm
- 6” - .375 gpm

DESIGN:

- Meters and encoders must be compatible with Badger Meter AMR/AMI systems
- TORX tamper resistant seal screw

INCLUDE:

- Test plug
- Bronze Plate Strainer



MANUFACTURER:

- Badger Meter

RESTRICTIONS:

Cape Fear Public Utility Authority
Stewardship. Sustainability. Service.

G 6 – High Resolution Encoder:

Effective Date: 01-01-20
Revision #: 2

SPECIFICATION/ MATERIAL:

High resolution encoders shall meet or exceed the following performance specifications:

- Provide connectivity with Badger Meter ORION AMR/AMI endpoints.
- Eight-dial resolution to AMR/AMI endpoints.
- Eight-dial mechanical odometer wheel stack.
- Thermoplastic shroud assembly.
- Signal Type: 3-wire synchronous for AMR/AMI solutions (red=clock/power, black=ground, green=data)
- Unit of Measure shall be gallons

DESIGN:

INCLUDE:

- 25’ pre-sized wire harness.
- Factory potted with Nicor in-line connector allowing connectivity to an endpoint without need for a field splice.

OPERATING TEMPERATURE:

- -40°F – 140°F



MANUFACTURER:

- Badger Meter

RESTRICTIONS:

- Shall be installed with compound meters

G 7 – Migratable Endpoint:

Effective Date: 01-01-20
Revision #: 2

SPECIFICATION/ MATERIAL:

Migratable endpoints shall meet or exceed the following performance specifications:

- 90 days of hourly historical interval meter data within the nonvolatile memory.
- Compatibility with High Resolution Encoder (HRE)
- Two-way communication

INCLUDE:

- Factory potted with Nicor In-line connector



MANUFACTURER:

- Badger Meter

RESTRICTIONS:

- Shall be installed with compound meters.

Cape Fear Public Utility Authority
Stewardship. Sustainability. Service.

Section H: Repair Sleeves, Couplings, Clamps & Non-Pressure Adapters	Effective Date: 01-01-20 Revision #: 2

H 1 Pipe Adapters, Non-Pressure

H 1.2 Pipe Adapters, Concrete Manhole Connection Boots:

H 2 Repair Clamps/ Ductile Iron Lugs (Pipe Savers)

H 3 Repair Clamps/ All Stainless Steel (Pipe Savers)

H 4 Full Seal Clamps

H 5 Bell Joint Leak Clamp

H 6 Repair Coupling/ Restrained/ DI, CI, PVC, & HDPE (4” thru 12”)

H 6.1 Repair Coupling/ Non-Restrained/ Transition (2” thru 12”)

H 1 – PIPE ADAPTERS, NON-PRESSURE:

Effective Date: 01-01-20
Revision #: 2

SPECIFICATION/ MATERIAL:

Non-pressure pipe adapters shall meet or exceed the performance specifications proscribed in:

- ASTM Standards D 5926 standard specification for Poly Vinyl Chloride (PVC) or manufactured with synthetic rubbers and ASTM Standards C 425 standard specification for watertight compression sealed joints of vitrified clay pipe and ASTM Standards C1173 standard specification for flexible transition couplings for underground piping systems.
- The connector shall be molded or extruded and vulcanized from materials whose physical/chemical properties meet or exceed the physical/chemical resistant properties outline in ASTM C 5926.
- The material shall resistant to ozone, weathering, aging, and chemicals, including acids, alkalis, animal and vegetable fats, oils and petroleum products.
- Bands and screw assembly shall be manufactured from totally non-magnetic series 300 stainless steel.
- The size and application colophons must be embossed on each adapter.





MANUFACTURER:

- FERNCO INC.
- INDIANA SEAL-GPK
- MISSION RUBBER

RESTRICTIONS:

- For repairs and connections to existing vitrified clay pipe (VCP) facilities.
- For repairs and connections to other pipe materials for resistance to heavy earth loads and improved alignment use.

H 1.2 – PIPE ADAPTERS, CONCRETE MANHOLE CONNECTION BOOTS:

Effective Date: 01-01-20
Revision #: 2

SPECIFICATION:

Concrete manhole pipe adapters shall meet or exceed the performance specifications in:

- ASTM Standards C 923, Resilient connectors between reinforced concrete manhole structures, pipes and laterals.
- Manhole adapters shall create a watertight flexible seal around pipes entering sanitary manhole walls.
- The material shall resistant to ozone, weathering, aging, and chemicals, including acids, alkalis, animal and vegetable fats, oils and petroleum products.
- Shall be made of elastomeric Poly Vinyl Chloride (PVC), ethylene propylene (EPDM) or polyisoprene rubber.
- The size and application colophons must be cast on each adapter.
- Bands and screw assembly shall be manufactured from totally non-magnetic series 300 stainless steel.

REQUIREMENT:

- Shall be used for connections to existing and new pre-cast manhole and structures.





MANUFACTURER:

- A-Lok Products
- Kor-N-Seal (NPS)
- OPEN

RESTRICTIONS:

H 2 – REPAIR CLAMPS/ DUCTILE IRON LUGS (PIPE SAVERS):

Effective Date: 01-01-20
Revision #: 2

SPECIFICATION:
Leak repair clamps shall meet or exceed the performance specifications of:

- ASTM Standards A536 ductile iron.
- 18-8 type 304 stainless steel.
- Gasket shall be securely glued or imbedded in the band of the clamp to ensure a positive seal against the pipe.
- Gaskets shall have ribbed surface.

MATERIAL:
Lugs:
- Ductile iron per ASTM Standards A536

Band:
- Stainless steel, 18-8 type 304.

Bolts, Nuts & Washers:
- 316 stainless steel.

Gasket:
- EPDM (ethylene propylene).
- Nitrile Buna-N (Acrylonitrile butadiene (NBR)).
- Viton; Fluorel (FKM)

Coating:
- Ductile iron: shop coat.
- Stainless steel: none.

DESIGN:
- For patching holes in iron pipe size O.D. pipe.

WIDTH OF CLAMP/ NUMBER OF BOLTS:
- 3": One (1) bolt
- 6": Two (2) bolts





MANUFACTURER:
- CASCADE CFC SERIES
- DRESSER STYLE 118
- FORD FSC SERIES
- JCM 110 SERIES
- MUELLER 212 SERIES
- TOTAL PIPING SOLUTIONS 4100 SERIES
- POWER SEAL 3151 SERIES
- ROMAC SC SERIES
- SMITH-BLAIR 245 SERIES

RESTRICTIONS:
- For repairs to existing, in-service pipelines by CFPUA personnel only.

H 3 – REPAIR CLAMPS/ ALL STAINLESS STEEL (PIPE SAVERS):

Effective Date: 01-01-20
Revision #: 2

SPECIFICATION:

Leak repair clamps shall meet or exceed the Performance specifications of:

- 18-8 type 304 stainless steel.
- Type 304 cast stainless steel per ASTM Standards A743.
- Gasket shall be securely glued or imbedded in the band of the clamp to ensure a positive seal against the pipe.
- Lubricant treated nuts to prevent galling.
- Gaskets shall have ribbed surface.

.

MATERIAL:

Lugs:

- Type 304 cast stainless steel.

Band:

- Stainless steel, 18-8 type 304.

Bolts, Nuts & Washers:

- 316 stainless steel with lubricant treated nuts to prevent galling.

Gasket:

- EPDM (ethylene propylene).
- Nitrile Buna-N (Acrylonitrile butadiene (NBR)).
- Viton; Fluorel (FKM)

Coating:

- Stainless steel: none.

DESIGN:

- For patching holes in iron pipe size O.D. pipe.
- Only cast lug design will be accepted.

WIDTH OF CLAMP/ NUMBER OF BOLTS

- 3": One (1) bolt
- 6": Two (2) bolts



MANUFACTURER:

- FORD FLSC
- SMITH-BLAIR 248
- ROMAC SCS

RESTRICTIONS:

- For repairs to existing, in-service pipelines by CFPUA personnel only.

Cape Fear Public Utility Authority
Stewardship. Sustainability. Service.

H 4 – FULL SEAL CLAMPS:

Effective Date: 01-01-20
Revision #: 2

SPECIFICATION:
Full circle leak repair clamps shall meet or exceed the performance specifications of:

- ASTM Standards A536 ductile iron.
- 18-8 type 304 stainless steel.
- Gasket shall be securely glued or imbedded in the band of the clamp to ensure a positive seal against the pipe.
- Gaskets shall have ribbed surface.

MATERIAL:
Lugs:
- Ductile iron per ASTM Standards A536

Band:
- Stainless steel, 18-8 type 304.

Bolts, Nuts & Washers:
- Low alloy steel per AWWA C 111.

Gasket:
- EPDM (ethylene propylene).
- Nitrile Buna-N (Acrylonitrile butadiene (NBR)).
- Viton; Fluorel (FKM)

Coating:
- Ductile iron: shop coat.
- Stainless steel: none.

DESIGN:
- For patching full circle holes in cast iron pipe size O.D. pipe.

ADDITIONAL REQUIREMENTS:
- Spring washers may be required for use on HDPE pipe (consult manufactures documentation).





MANUFACTURER:
- CASCADE CDR1
- DRESSER STYLE 360
- FORD F1 SERIES
- JCM 101 SERIES
- MUELLER 500 SERIES
- POWER SEAL 3121 SERIES
- ROMAC CL1 SERIES
- SMITH-BLAIR 226 SERIES

RESTRICTIONS:
- For repairs to existing, in-service pipelines only.

H 5 – BELL JOINT LEAK CLAMP:

Effective Date: 01-01-20
Revision #: 2

SPECIFICATION:
Leak repair clamps shall meet or exceed the Performance specifications of:

- ASTM Standards A536 ductile iron.
- Low alloy steel per AWWA C111.
- ASTM Standards D2000 gasket seals.

MATERIAL:
Bell and Spigot Rings:
- Ductile iron per ASTM Standards A536.

Bolts, Nuts & Washers:
- 316 stainless steel.

Gasket:
- EPDM (ethylene propylene).
- SBR (styrene butadiene)
- Nitrile Buna-N (Acrylonitrile butadiene (NBR)).
- Viton; Fluorel (FKM)

Coating:
- Ductile iron: fusion bonded epoxy.

DESIGN:
- For leak repairs in bell joints on cast iron, ductile iron and C-900 PVC pipe.





- **MANUFACTURER:**
- FORD FBC SERIES
- MUELLER PIPE JOINT REPAIR CLAMP
- POWER SEAL 3232 SERIES
- ROMAC STYLE 516

RESTRICTIONS:
- For repairs to existing, in-service pipelines only.

H 6 – REPAIR COUPLING/ RESTRAINED/ DI, CI, PVC, & HDPE, (4" THRU 12"):

Effective Date: 01-01-20
Revision #: 2

SPECIFICATION:

Restraining repair sleeves or couplings shall meet or exceed the performance specifications of:

- Shall connect and restrain two plain end pipes of the same or dissimilar materials.
- Shall provide axial restraint by use of multiple gripping wedges incorporated into the follower glands coupled together with threaded rods.
- ASTM Standards A536 ductile iron.
- Low alloy steel per AWWA C111 (ANSI - A21.11) or latest revision thereof.
- ASTM Standards D2000 gasket seals.
- Shall posses a minimum rating of twice (2:1) the pressure rating of the pipe.
- Material supplied must have ISO 9001 or later certification, or poured in a foundry located in the U.S.A.
- Affidavit of compliance to this specification shall be available upon request.



MATERIAL:

End Ring & Sleeve Body:

- Ductile iron per ASTM Standards A536, minimum 65-45-12.

Bolts, Nuts & Rods:

- Low alloy steel per ANSI/ AWWA C111/ A21.11.

Gasket:

- EPDM (ethylene propylene).
- SBR (styrene butadiene).
- Nitrile Buna-N (Acrylonitrile butadiene (NBR)).
- Viton; Fluorel (FKM).

Coating:

- Coupling Body: fusion bonded epoxy.

APPLICATION:

- For leak repairs to join two plain end pipes of the same or dissimilar material.
- For use on cast iron, ductile iron, HDPE, and C-900 PVC pipe.

MANUFACTURER:

- EBBA IRON – 3800 SERIES

RESTRICTIONS:

- For repairs to existing, in-service pipelines only.
- Insert stiffener is required on HDPE pipe.

Cape Fear Public Utility Authority
Stewardship. Sustainability. Service.

H 6.1 – REPAIR COUPLING/ NON-RESTRAINED/ TRANSITION (2” THRU 12”):

Effective Date: 01-01-20
Revision #: 2

SPECIFICATION:

Non-restraining transmission repair sleeves or couplings shall meet or exceed the performance specifications of:

- Shall connect two plain end pipes of dissimilar or similar diameters.
- Shall join pipes with diameter differences as listed in “Minimum Required Coupling Size Range” in a single coupling kit.
- Shall have a two layer gasket, with a removable layer to allow for pipe diameter range expansion OR have separate gaskets included in a boxed kit to cover the required size range.
- NSF-61 for gaskets and coatings.
- Shall be pressure rated for a minimum working pressure of 150psi.
- Material supplied must have ISO 9001 or later certification, or poured in a foundry located in the U.S.A.
- Affidavit of compliance to this specification shall be available upon request.

MATERIAL:

End Ring & Sleeve Body:

- Carbon Steel.
- Ductile Iron.

Bolts, Nuts:

- 304 stainless steel with no-gall coating.

Gasket:

- EPDM (ethylene propylene).
- SBR (styrene butadiene).
- Nitrile Buna-N (Acrylonitrile butadiene (NBR)).
- Viton; Fluorel (FKM).

Coating:

- Coupling Body & end rings: NSF-61 fusion bonded epoxy.

RESTRICTIONS:

- For repairs to existing, in-service pipelines only.
- Shall not be used where joint restraint is required.

APPLICATION:

- For leak repairs to join two plain end pipes of dissimilar or similar diameters.
- For use on cast iron, ductile iron, AC, and PVC pipe.

MINIMUM REQUIRED COUPLING SIZE RANGE:

- 2”- (2.375” to 2.50”)-(IPS thru CIP)
- 3”- (3.50” to 4.13”)-(IPS thru AC 200)
- 4”- (4.50” to 5.35”)-(IPS thru AC 200)
- 6”- (6.625” to 7.56”)-(IPS thru AC 200)
- 8”- (8.625” to 9.74”)- (IPS thru AC 200)
- 10”- (10.75” to 11.95”)-(IPS thru AC 150)
- 12”- (12.75” to 13.20”)-(IPS thru DIP)
- 12”- (13.20” to 14.38”)-(DIP thru AC 350)



MANUFACTURER:

- CASCADE WATERWORK MFG.- OMEGA CRCER
- FORD FC2W
- HYMAX
- ROMAC MACRO

Cape Fear Public Utility Authority
Stewardship. Sustainability. Service.

Section I: Castings and Aluminum Covers	Effective Date: 01-01-20 Revision #: 2

I 1 Valve Boxes

I 2 Service Clean-out Box and Lid

I 3 Manhole Casting/ Standard Ring and Cover

I 4 Access Covers/ Aluminum

I 1 – VALVE BOXES:

Effective Date: 01-01-20
Revision #: 2

SPECIFICATION/ MATERIAL:

Valve boxes shall meet or exceed the performance specifications of:

- Valve boxes shall be screw type.
- Lid shall be marked “WATER” or “SANITARY SEWER” (to match service type application).
- Produced for gray cast iron.
- ASTM Standards A48, Class 30– 35.
- Shall be designed, constructed and capable of withstanding a minimum H-20 type loading.
- Shall be cleaned according to good foundry practice, chipped and ground as needed to remove fins and rough places on castings.
- Shall have a paint or seal-coated finish.
- The lid shall fit flush in the top of the box without forcing and shall not rock.
- Shall have a non-tip lid with a minimum skirt of one and one-half (1-1/2”), for a total lid height of three and one-half (3-1/2”) inches.
- Shall have a five and one quarter (5 1/4”) inch shaft.

REQUIREMENTS:

- For federally funded or DOT projects all castings shall be poured at a foundry located in the U.S.A. or have ISO 9001 or later certification.
- Affidavit of compliance.
- All castings shall be true and free of holes.
- All castings shall have manufacturers cast mark and part number clearly visible on each component.
- Fixed riser extensions shall be available for the box top section to be considered for approval.
- Riser sections shall be continuously compatible to achieve any desired height in one (1”) and two (2”) inch increments plus or minus a half (1/2”) inch.
- Locking covers shall be available.



MANUFACTURER:

- STAR PIPE PRODUCTS
- TYLER PIPE/ UNION FOUNDRY CO

RESTRICTIONS:

I 2 – SERVICE CLEAN-OUT BOX & LID:

Effective Date: 01-01-20
Revision #: 2

SPECIFICATION/ MATERIAL:

Service clean-out box and lid shall meet or exceed the performance specifications of:

- Box and lid shall be gray cast iron or ductile iron.
- ASTM Standards A48 Class 30B (gray cast iron).
- ASTM Standards A536 Grade 65-45-12 (ductile).
- Shall be designed, constructed and capable of withstanding a minimum H-20 type loading.
- Shall be cleaned according to good foundry practice chipped and ground as needed to remove fins and rough places on castings.
- Bearing surfaces shall be machined to ensure a proper fit and prevent rattling and fit flush without forcing.
- Lid shall be labeled with “CO” for clean-out.
- A nominal 6” diameter by 12” minimum cast iron box and cover.



REQUIREMENTS:

- For federally funded or DOT projects, all castings shall be poured at a foundry located in the U.S.A. or have ISO 9001 or later certification.
- Affidavit of compliance.
- All castings shall be true and free of holes.
- All castings shall have manufacturers cast mark and part number clearly visible on each component.

MANUFACTURER:

- U.S. FOUNDRY & MFG. CORP.
- STAR PIPE PRODUCTS
- CAPITOL FOUNDRY OF VIRGINIA
- GENERAL FOUNDRIES, INC.

RESTRICTIONS:

I 3 – MANHOLE CASTINGS/ STANDARD RING & COVER:

Effective Date: 01-01-20
Revision #: 2

SPECIFICATION/ MATERIAL:

Manhole castings, standard ring and cover, shall meet or exceed the performance specifications of:

- Ring and covers shall be gray cast iron or ductile iron.
- ASTM Standards A48 Class 35B (gray cast iron).
- ASTM Standards A536 Grade 65-45-12 (ductile).
- Shall be designed, constructed and capable of withstanding a minimum H-20 type loading.
- Shall be cleaned according to good foundry practice, chipped and ground as needed to remove fins and rough places on castings.
- Bearing surfaces shall be machined to ensure a proper fit and prevent rattling and fit flush without forcing.
- Cover shall be labeled with “SANITARY SEWER”.



DIMENSIONS:

- Clear opening – 24” for standard & water tight covers
- Frame height – 7-1/2” located in pavement

INCLUDE:

- Ring and covers shall be palletized and banded.
- All covers shall have lifting bars in lieu of pick holes.
- Side sealing gaskets for watertight frame & cover locations.

REQUIREMENTS:

- For federally funded or DOT projects all castings shall be poured at a foundry located in the U.S.A. or have ISO 9001 or later certification.
- Affidavit of compliance.
- All castings shall be true and free of holes.
- All castings shall have manufacturers cast mark and part number clearly visible on each component.
- Watertight and bolted covers shall be available.

RESTRICTIONS:

- Frame and covers on manholes permanently located in non-traffic areas and elevated 2’ or more above finished grade may be considered for non-H20 type loading requirements.

MANUFACTURER:

- CAPITOL FOUNDRY OF VIRGINIA
- GENERAL FOUNDRIES, INC.
- U.S. FOUNDRY & MFG. CORP.
- STAR PIPE PRODUCTS

I 4 – ACCESS COVERS (ALUMINUM):

Effective Date: 01-01-20
Revision #: 2

SPECIFICATION/ MATERIAL:

Aluminum access covers shall meet or exceed the performance specifications of:

- Shall be designed, constructed and capable of withstanding a minimum 300-pound per square foot live load.
- If subject to traffic, shall be designed and capable of withstanding a minimum AASHTO HS-20 load.
- Shall have checkered or diamond pattern finish on cover surface.
- Shall have vandal-proof recessed stainless steel hinges.
- Hasp will be fabricated round bar stock mounted vertically and drilled to accept a padlock.
- A fall prevention system shall be incorporated into the access frame.
- Doors over 50 lbs. in pull-weight shall be torsion bar loaded.
- All covers shall have a locking safety handle to hold them in the open position.
- Shall be cast into top slab of wet well or valve vault.
- Shall be sized to provide a clear opening to allow for service and removal of equipment (including pumps).
- For federally funded or DOT projects, access covers must have ISO 9001 or later certification, or manufactured in a factory located in the U.S.A.
- Affidavit of compliance to this specification shall be available upon request.



FALL PREVENTION SYSTEM:

Grate:

- Shall be FRP or aluminum with 316 stainless steel components.
- Shall withstand a 300 pound per square foot load.
- Shall lock in place and rotate open 90 degrees.
- Shall be removable.

MANUFACTURER:

- THE BILCO COMPANY
- HALLIDAY PRODUCTS
- U.S.F. FABRICATION INC.
- OPEN

RESTRICTIONS:

Section J: Service Boxes	Effective Date: 01-01-20 Revision #: 2

J 1 Meter Box (5/8” & 1”) Single Service Non-Traffic Areas

J 2 Meter Box (5/8”) Dual Service Non-Traffic Areas

J 3 Meter Box (5/8” & 1”) Single Service Traffic Rated

J 4 Meter Box (5/8”) Dual Service Traffic Rated

J 5 Meter Box (1 1/2", & 2”) Single Service Traffic and Non-Traffic Rated

J 6 Lid Details (5/8” & 1”) Single Service Non-Traffic Areas

J 7 Lid Details (5/8”) Dual Service Non-Traffic Areas

J 8 Lid Details (5/8” & 1”) Single Service Traffic Rated

J 9 Lid Details (5/8”) Dual Service Traffic Rated

J 10 Lid Details (1-1/2" & 2”) Single Service Traffic and Non-Traffic Rated

J 1 – METER BOX (5/8” & 1”) SINGLE SERVICE NON-TRAFFIC AREAS:

Effective Date: 01-01-20
Revision #: 2

SPECIFICATION/ MATERIAL:

5/8” & 1” water meter box 1015-12, shall meet or exceed the performance specifications of:

- Boxes and Lids shall be designed and tested to meet ASTM C857 load rating standards and have labeling to indicate this loading.
- Box and Lid shall be made of a High-Density Polyethylene material.
- Box shall be compatible with Lid from Material Specification J 6.

DIMENSIONS:

- Box shall have minimum outside dimensions as follows: 11” wide X 16” long measured at top collar & 16” wide X 20” long measured at box bottom.
- Overall height of box shall be 12".

APPLICATIONS & APPLICATION REQUIREMENTS:

- Acceptable in non-traffic applications only.
- 5/8” & 1” Single Service metered services.
- Box shall be black in color.
- See Material Specification J 6 for lid details.



MANUFACTURER:

- Carson 1015-12 (Part No. 1015-2026)
- Or Equal

RESTRICTIONS:

Use of this product is limited to:

- 5/8” & 1” single Service
- Acceptable in non-traffic applications only

J 2 – METER BOX (5/8") DUAL SERVICE NON-TRAFFIC AREAS:

Effective Date: 01-01-20
Revision #: 2

SPECIFICATION/ MATERIAL:

- 5/8" water meter box 1220-12, shall meet or exceed the performance specifications of:
- Boxes and Lids shall be designed and tested to meet ASTM C857 load rating standards and have labeling to indicate this loading.
- Box and Lid shall be made of a High-Density Polyethylene material.
- Box shall be compatible with Lid from Material Specification J 7.
- Box must have two "mouse holes".

DIMENSIONS:

- Box shall have minimum outside dimensions as follows: 14" wide X 21" long measured at top collar & 19" wide X 25" long measured at box bottom.
- Overall height of box shall be 12".

APPLICATIONS & APPLICATION REQUIREMENTS:

- Acceptable in non-traffic applications only.
- 5/8" Dual Service metered services.
- Box shall be black in color.
- See Material Specification J 7 for lid details.



MANUFACTURER:

- Carson 1220-12 (Part No. 1220-2005)
- Or Equal

RESTRICTIONS:

Use of this product is limited to:

- 5/8" Dual Service
- Acceptable in non-traffic applications only

J 3 – METER BOX (5/8" & 1") SINGLE SERVICE TRAFFIC RATED:

Effective Date: 01-01-20
Revision #: 2

SPECIFICATION/ MATERIAL:

5/8" & 1" water meter box 1015-12 BCF-XL, shall meet or exceed the performance specifications of:

- Boxes and Lids shall be designed and tested to meet ASTM A48, Class 30B and ANSI/SCTE 77 Tier 15 load rating standards and have labeling to indicate this loading.
- Box and Lid shall be made of a Polyolefin material.
- Box shall be compatible with Lid from Material Specification J 8.

DIMENSIONS:

- Box shall have minimum outside dimensions as follows: 13" wide X 18" long measured at top collar & 9" wide X 14" long measured at box bottom.
- Overall height of box shall be 12".

APPLICATIONS & APPLICATION REQUIREMENTS:

- Acceptable in traffic applications only.
- 5/8" & 1" Single Service metered services.
- Box shall be black in color.
- See Material Specification J 8 for lid details.

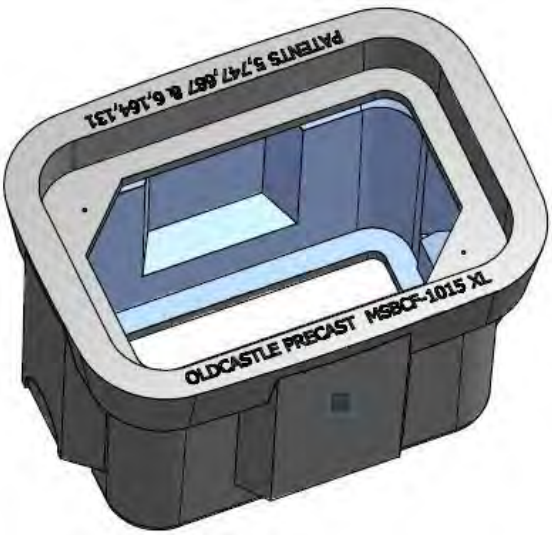

MANUFACTURER:

- Carson 1015-12 BCF-XL (Part No. 1015-2022)
- Or Equal

RESTRICTIONS:

Use of this product is limited to:

- 5/8" & 1" Single Service
- Acceptable only in occasional, non-deliberate traffic applications.
- Not acceptable in deliberate heavy vehicular traffic applications when AASHTO H-20 load rating is required.

J 4 – Meter Box (5/8") Dual Service Traffic Rated:

Effective Date: 01-01-20
Revision #: 2

SPECIFICATION/ MATERIAL:

5/8" Dual traffic rated water meter box 1416-12 BCF-XL, shall meet or exceed the performance specifications of:

- Boxes and Lids shall be designed and tested to meet ASTM A48, Class 30B and ANSI/SCTE 77 Tier 15 load rating standards and have labeling to indicate this loading.
- Box and Lid shall be made of a Polyolefinmaterial.
- Box shall be compatible with Lid from Material Specification J 9.

DIMENSIONS:

- Box shall have minimum outside dimensions as follows: 17" wide X 19" long measured at top collar & 13" wide X 15" long measured at box bottom.
- Overall height of box shall be 12".

APPLICATIONS & APPLICATION REQUIREMENTS:

- Acceptable in traffic applications only.
- 5/8" Dual Service metered services.
- Box shall be black in color.
- See Material Specification J 9 for lid details.

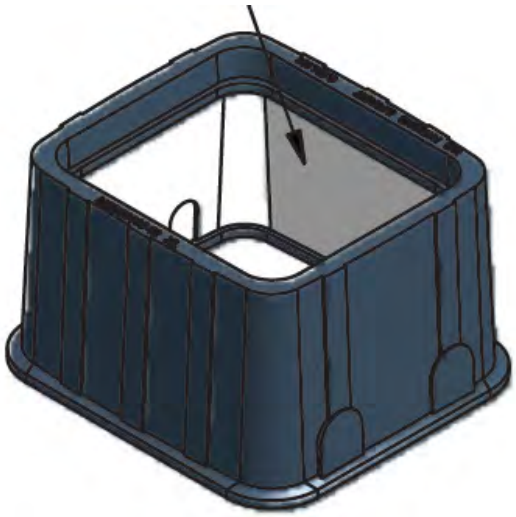

MANUFACTURER:

- Carson 1416MSBC-XL (Part No. 1416-2006)
- Or Equal

RESTRICTIONS:

Use of this product is limited to:

- 5/8" Dual Service
- Acceptable only in occasional non-deliberate traffic applications.
- Not acceptable in deliberate heavy traffic applications when ASHTO H-20 is required.

J 5 – METER BOX (1-1/2" & 2") SINGLE SERVICE TRAFFIC AND NON-TRAFFIC RATED:

Effective Date: 01-01-20
Revision #: 2

SPECIFICATION/ MATERIAL:

1-1/2" & 2" water meter box 1730-18 BCF-XL, shall meet or exceed the performance specifications of:

- Boxes and Lids shall be designed and tested to meet ASTM A48, Class 30B and ANSI/SCTE 77 Tier 15 load rating standards and have labeling to indicate this loading.
- Box and Lid shall be made of a Polyolefinmaterial.
- Box shall be compatible with Lid from Material Specification J 10.

DIMENSIONS:

- Box shall have minimum outside dimensions as follows: 21" wide X 34" long measured at top collar & 20" wide X 32" long measured at box bottom.
- Overall height of box shall be 18".

APPLICATIONS & APPLICATION REQUIREMENTS:

- 1-1/2" & 2" Single Service metered services.
- Box shall be black in color.
- See Material Specification J 10 for lid details.



MANUFACTURER:

- Carson 1730-18 BCF-XL (Part No. 1730-1202)
- Or Equal

RESTRICTIONS:

Use of this product is limited to:

- 1-1/2" & 2" Single Service
- Acceptable in non-traffic and occasional traffic applications
- Not acceptable in deliberate heavy vehicular traffic applications when ASHTO H-20 is required.

J 6 – LID DETAILS (5/8" & 1") SINGLE SERVICE NON-TRAFFIC AREAS:

Effective Date: 01-01-20
Revision #: 2

SPECIFICATION/ MATERIAL:

5/8" & 1" water meter Lid 1419 Flush Cover, shall meet or exceed the performance specifications of:

- Lid shall be designed and tested to meet ASTM C857 load rating standards and have labeling to indicate this loading.
- Lid shall be made of a High-Density Polyethylene material.
- Lid shall be compatible with Box from Material Specification J 1.

DIMENSIONS:

- Lid shall have minimum outside dimensions as follows: 10" wide X 15" long.
- Lid shall have a 3-3/8" recessed portion for flush mount and a 2" thru hole for the transmitter.

APPLICATIONS & APPLICATION REQUIREMENTS:

- Acceptable in non-traffic applications only.
- 5/8" & 1" Single Service metered services.
- Lid shall be black in color.
- See Material Specification J 1 for box details.
- The lid shall have a lifting slot with locking pin.
- All lids shall be embossed "Water Meter" and patterned with a non-skid surface.



MANUFACTURER:

- Carson 1419 Flush Cover (Part No. 1419-4212)
- Or Equal

RESTRICTIONS:

Use of this product is limited to:

- 5/8" & 1" Single Service
- Acceptable in non-traffic applications only

Cape Fear Public Utility Authority
Stewardship. Sustainability. Service.

J 7 – LID DETAILS (5/8") DUAL SERVICE NON-TRAFFIC AREAS:

Effective Date: 01-01-20
Revision #: 2

SPECIFICATION/ MATERIAL:

5/8" water meter TriCast 1220 Dual Pedestrian Cape Fear lid shall meet or exceed the performance specifications of:

- Lid shall be designed and tested to meet ASTM C857 load rating standards and have labeling to indicate this loading.
- Lid shall be made of a High-Density Polyethylene material.
- Lid shall be compatible with Box from Material Specification J 2.

DIMENSIONS:

- Lid shall have minimum outside dimensions as follows: 13" wide X 19" long.
- Lid shall have two 3 3/8" recessed portion for flush mount and a 2" thru hole for the transmitters.

APPLICATIONS & APPLICATION REQUIREMENTS:

- Acceptable in non-traffic applications only.
- 5/8" Dual Service metered services.
- Lid shall be black in color.
- See Material Specification J 2 for box details.
- The lid shall have a lifting slot with locking pin.
- All lids shall be embossed "Water Meter" and patterned with a non-skid surface.



MANUFACTURER:

- TriCast - 1220 Dual Pedestrian Cape Fear (Part No. T-CP1220DBR)
- Or Equal

RESTRICTIONS:

Use of this product is limited to:

- 5/8" Dual Service
- Acceptable in non-traffic applications only

Cape Fear Public Utility Authority
Stewardship. Sustainability. Service.

J 8 – LID DETAILS (5/8" & 1") SINGLE SERVICE TRAFFIC RATED:

Effective Date: 01-01-20
Revision #: 2

SPECIFICATION/ MATERIAL:

5/8" & 1" water meter FLX09P Flush Cover, shall meet or exceed the performance specifications of:

- Lid shall be designed and tested to meet ASTM A48, Class 30B and ANSI Tier 15 load rating standards and have labeling to indicate this loading
- Lid shall be made of a Polyolefin material.
- Lid shall be compatible with Box from Material Specification J 3.

DIMENSIONS:

- Lid shall have minimum outside dimensions as follows: 10" wide X 15" long.
- Lid shall have a 3 1/4" recessed portion for flush mount and a 2" thru hole for the transmitter.

APPLICATIONS & APPLICATION REQUIREMENTS:

- 5/8" & 1" Single Service metered services.
- Lid shall be black in color.
- See Material Specification J 3 for box details.
- The lid shall have a lifting slot with locking pin.
- All lids shall be embossed "Water Meter" and patterned with a non-skid surface.

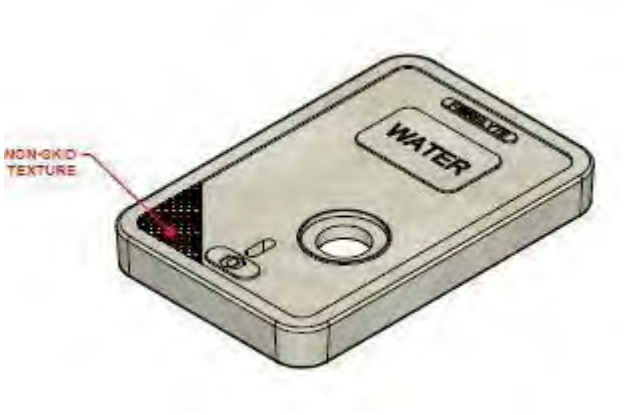

MANUFACTURER:

- Badger Orion FLX09P Flush Cover (Part No. 02001350)
- Or Equal

RESTRICTIONS:

Use of this product is limited to:

- 5/8" & 1" Single Service
- Acceptable only in occasional non-deliberate traffic applications.
- Not acceptable in deliberate heavy vehicular traffic applications when ASHTO H-20 is required.

J 9 – LID DETAILS (5/8") DUAL SERVICE TRAFFIC RATED:

Effective Date: 01-01-20
Revision #: 2

SPECIFICATION/ MATERIAL:

5/8" water meter FL1416P Dual Recess Flush Cover, shall meet or exceed the performance specifications of:

- Lid shall be designed and tested to meet ASTM A48, Class 30B and ANSI Tier 15 load rating standards and have labeling to indicate this loading
- Lid shall be made of a Polyolefin material.
- Lid shall be compatible with Box from Material Specification J 4.

DIMENSIONS:

- Lid shall have minimum outside dimensions as follows: 12" wide X 20" long.
- Lid shall have two 3 1/4" recessed portion for flush mount and a 2" thru hole for the transmitters.

APPLICATIONS & APPLICATION REQUIREMENTS:

- 5/8" Dual Service metered services.
- See Material Specification J 4 for box details.
- The lid shall have a lifting slot with locking pin.
- All lids shall be embossed "Water Meter" and patterned with a non-skid surface.

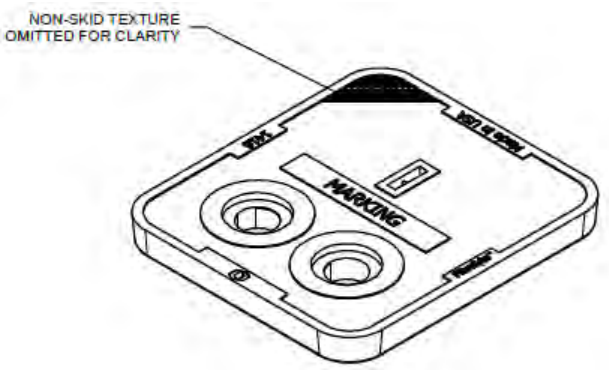

MANUFACTURER:

- Badger Orion FL1416P Dual Recess (Part No. 02001399)
- Or Equal

RESTRICTIONS:

Use of this product is limited to:

- (5/8") Dual Service
- Acceptable only in occasional non-deliberate traffic applications.
- Not acceptable in deliberate heavy vehicular traffic applications when ASHTO H-20 is required.

J 10 – LID DETAILS (1-1/2" & 2") SINGLE SERVICE TRAFFIC AND NON-TRAFFIC RATED:

Effective Date: 01-01-20
Revision #: 2

SPECIFICATION/ MATERIAL:

1-1/2" & 2" water meter FL369P Flush Cover, shall meet or exceed the performance specifications of:

- Lid shall be designed and tested to meet ASTM A48, Class 30B and ANSI Tier 15 load rating standards and have labeling to indicate this loading
- Lid shall be made of a Polyolefin material.
- Lid shall be compatible with Box from Material Specification J 5.

DIMENSIONS:

- Lid shall have minimum outside dimensions as follows: 17" wide X 30" long.
- Lid shall have a 3-1/4" recessed portion for flush mount and a 2" thru hole for the transmitter.

APPLICATIONS & APPLICATION REQUIREMENTS:

- 1-1/2" & 2" Single Service metered services.
- See Material Specification J 5 for box details.
- The lid shall have a lifting slot with locking pin.
- All lids shall be embossed "Water Meter" and patterned with a non-skid surface



Manufacturer:

- Badger Orion FL36P Flush Cover (Part No. 02001576)
- Or Equal

RESTRICTIONS:

Use of this product is limited to:

- (1-1/2" & 2") Single Service
- Acceptable in non-traffic and occasional non-deliberate traffic applications.
- Not acceptable in deliberate heavy vehicular traffic applications when ASHTO H-20 is required.

Section K: Miscellaneous	Effective Date: 01-01-20 Revision #: 2

K 1 Casing Insulators/ Stainless Steel

K 2 Polyethylene Encasement

K 3 Manhole Inserts

K 4 Pipe Saddle Support/ Valve Vaults/ Adjustable

K 5 Cylindrical Wall Seals & Line Sleeves

K 6 Metal Detectable Underground Warning Tape

K 7 Sanitary Sewer/ Inside Drop Bowls

K 8 Flange Insulating Gasket Kits

K 9 Sampling Station

K 1 – CASING INSULATORS/ STAINLESS STEEL:

Effective Date: 01-01-20
Revision #: 2

SPECIFICATION:

Casing Insulators shall meet or exceed the Performance specifications of:

- Must ensure electrical insulation between the two pipes.
- Shall permanently prevent bells from resting on casing pipe.
- Shall be resistant to corrosion.
- Band widths of 8” or 12”.

MATERIAL:

Panel & Riser:

- Type 304 stainless steel per ASTM Standards A240.

Liner:

- Elastomeric PVC per ASTM Standards D149 or extruded EPDM rubber.

Skids:

- Glass reinforced nylon or Ultra High Molecular Weight (UHMW) polyethylene per ASTM Standards D638.

Fasteners:

- Type 316 stainless steel per ASTM Standards A193.

REQUIREMENTS:

- Band width requirement determined by weight, pipe and fluid, and spacing.

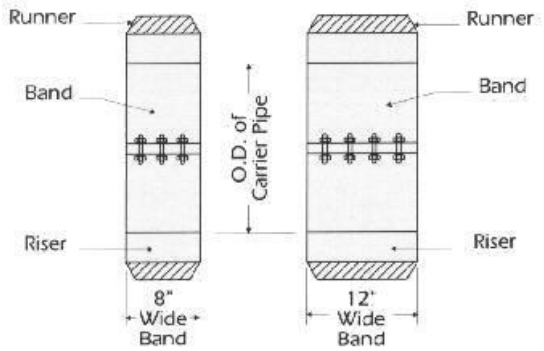



MANUFACTURER:

- BWM COMPANY- MODEL BWM-SS
- CASCADE WATERWORKS- MODEL CCS
- CCI PIPELINE SYSTEMS- MODEL CSS
- PIPELINE SEAL AND INSULATOR- MODEL S8G-2 & S12G-2
- POWER SEAL- MODEL 4810
- SPIDER MFG. INC.

RESTRICTIONS:

K 2 – POLYETHYLENE ENCASEMENT:

Effective Date: 01-01-20
Revision #: 2

SPECIFICATION:

Polyethylene film shall meet or exceed the performance specifications of:

- ANSI/ AWWA C105/A21.5, Polyethylene Encasement for Ductile-Iron Pipe Systems.
- Shall have minimum thickness of 0.008” or 8-mil.
- Shall be linear low-density polyethylene film.
- Shall be supplied in rolled tube form, suitable for installation method “A” as outlined in reference standard.
- The tube shall be sized according to the pipe being protected.
- Film shall be color coded.

COLOR-CODED:

- Blue– potable water
- Green– sanitary sewer/ force main

TUBE SIZE:

Nominal pipe diameter	Minimum flat tube width
4”	14”
6”	16”
8”	20”
10”	24”
12”	27”
14”	30”
16”	34”
18”	37”
20”	41”
24”	54”
30”	67”
36”-42”	81”
48”	95”

RESTRICTIONS:

MARKING REQUIREMENTS:

- Manufactures name or trademark
- Year of manufacture
- ANSI/ AWWA C105/ A21.5
- Thickness/ type (LLDPE)
- Size
- Warning- Corrosion Protection- Repair Any Damage



MANUFACTURER:

- OPEN

Cape Fear Public Utility Authority
Stewardship. Sustainability. Service.

K 3 – MANHOLE INSERT:

Effective Date: 01-01-20
Revision #: 2

SPECIFICATION:

Manhole inserts shall meet or exceed the performance specifications of:

- Shall reduce or eliminate inflow thru manhole cover.
- Shall have a deep-dish design to allow for easy removal and replacement of the manhole cover (i.e., cover rotation).
- Body shall be manufactured of high density copolymer (HDPE) for non-traffic area.
- Body shall be manufactured of 304 stainless steel with a thickness of not less than 18-gauge for traffic areas.
- Shall have a sealing gasket made of Nitrile Buna-N (Acrylonitrile butadiene (NBR)), EPDM (Ethylene
- Propylene Diene Monomer) or closed cell neoprene.
- Shall have a handle made of 1/8" minimum, 304 stainless steel cable. Plastic coating of handle is optional or 1" heavy weight polypropylene.
- The handle shall be attached using two 304 stainless steel round head bolts with flat washers and self locking bolts or stainless steel pop rivets.

ADDITIONAL REQUIREMENTS:

When hydrogen sulfide (H2S) gas levels warrant relief; a relief valve shall be provided and meet the following:

- The gas relief valve shall be designed to release at a pressure of 0.5 to 1.5 psi and have a water leak down rate no greater than 5 gallons per 24 hours.



MANUFACTURER:

- ROWLAND INC. - INFLOW SHIELD
- SEALING SYSTEMS INC.
- SOUTHWESTERN PACKING & SEALS - RAINSTOPPER
- OPEN

RESTRICTIONS:

K 4 – PIPE SADDLE SUPPORT/VALVE VAULTS/ADJUSTABLE:

Effective Date: 01-01-20
Revision #: 2

SPECIFICATION:

Adjustable pipe saddle supports shall meet or exceed the performance specifications of:

- Shall be a stanchion type support for vertical adjustment of stationary pipe.
- Shall comply with Federal Specification A-A-1192A (type 38) and the Manufactures Standardization Society (MMS), MSS-SP-69 (type 38).
- Material shall be an assembled cast iron saddle, locknut nipple and special cast iron reducer.
- Shall have a Galvanized finish.
- Shall be capable of vertical adjustments of 4-1/2”.



MANUFACTURER:

- ANVIL INTERNATIONAL, INC.- MODEL 264
- EMPIRE
- OPEN

RESTRICTIONS:

- For supporting pipe in pump station valve vaults only.

K 5 – CYLINDRICAL WALL SEALS & LINE SLEEVES:

Effective Date: 01-01-20
Revision #: 2

SPECIFICATION:

Cylindrical wall seals & line sleeves shall meet or exceed the performance specifications of:

- Rubber links shall meet ASTM D2000 M3 BA510.
- Stainless steel shall meet ASTM F593, with a 85,000 psi average tensile strength.
- Hydrostatic seal shall be capable of holding 20 psig (40 feet of head) between the pipe and barrier through which it passes.
- Wall sleeves shall be high impact resistant HDPE or PVC.
- Wall sleeves shall have a integral water stop collar.
- Hole forming disks can be used for holes above 29" in diameter.
- Pressure plates shall be a composite material.
- Components and system shall be manufactured at a plant with a current ISO-9001:2000 registration.

MATERIAL:

Bolts and nuts:

- ANSI type 316 Stainless Steel.

Pressure plates:

- Reinforced nylon polymer.

Gasket:

- Nitrile Buna-N.
- EPDM (Ethylene Propylene Diene Monomer).
- Viton; Fluorel (FKM) (Fluorocarbon).

ADDITIONAL INFORMATION:

- For pipe penetrations through concrete vaults.
- Holes can be cored into concrete barriers.



MANUFACTURER:

- ADVANCE PRODUCTS & SYSTEMS, INC. MODELS " S-304", "S-316", "OS-304", "OS-316"
- PIPELINE SEAL AND INSULATOR, INC.-
- LINK-SEAL- MODELS "S-316" & "OS-316"
- OPEN

RESTRICTIONS:

K 6 – METAL DETECTABLE UNDERGROUND WARNING TAPE:

Effective Date: 01-01-20
Revision #: 2

SPECIFICATION:

Metal detectable underground tape shall meet or exceed the performance specifications of:

- Shall have a solid aluminum foil core with permanent printing under a protective layer to maintain the integrity and legibility of the warning sign.
- The aluminum core shall be laminated with a polyethylene layer.
- The inert polyethylene plastic shall be impervious to all known alkalis, acids, chemical reagents, and solvents likely to be encountered in the soil.
- Tape shall have a minimum thickness of 5 mils.
- The warning label shall be in black ink.
- The warning label shall be printed over a background color matching the type service.
- Affidavit of compliance to this specification shall be available upon request.

REQUIREMENTS:

Color code:

- Blue: Potable Water
- Green: Sanitary Sewer

Width:

- Minimum of 2-inches.



MANUFACTURER:

- EMPIRE LEVEL MFG. CORP.
- MERCO TAPE COMPANY- M225
- PRESCO
- TRUMBULL- 364-49XX
- OPEN

RESTRICTIONS:

- Required for all force mains
- Required for all portable water mains

K 7 – SANITARY SEWER INSIDE DROP BOWL:

Effective Date: 01-01-20
Revision #: 2

SPECIFICATION:

Sanitary sewer inside drop bowls shall meet or exceed the performance specifications of:

- Shall be a plastic composite collection device designed to facilitate a controlled drop of effluent into the main stream flow of a sanitary sewer manhole.
- Shall be fabricated from marine grade fiberglass.
- Shall have an optional hood for use in force main applications.
- Clamping pipe supports brackets shall be manufactured from totally non-magnetic 11-gauge type 316 stainless steel.
- Bolts, washers and nuts shall be manufactured from totally non-magnetic 18-8 316 stainless steel.
- Secure bowl and pipe support brackets to wall with lead tamp-in expansion anchors.
- Seal bowl to wall with an approved marine grade high-performance polyurethane adhesive sealant.
- Connection from drop bowl to drop pipe shall be by approved external flexible pipe adapter.
- The bowl size shall be determined by incoming pipe size and flow rate.
- The bowl assembly shall be installed as per manufacturer's instructions.
- Affidavit of compliance to this specification shall be available upon request.



MANUFACTURER:

- DURAN INC.- RELINER INSIDE DROP SYSTEM
- OPEN

RESTRICTIONS:

- Must be approved by CFPUA.
- For manhole rehabilitation only.

K 8 – FLANGE INSULATING GASKET KITS:

Effective Date: 01-01-20
Revision #: 2

SPECIFICATION:

Flange insulating gasket kits shall meet or exceed the performance specifications of:

- Designed and manufactured to work with flange pipe and fittings per ANSI B16.1 125 pound class specifications.
- Shall create an insulated joint to separate a branch connection from a cathodically protected pipeline.
- Nuts, bolts and gasket shall be designed to withstand the design and test pressures of the pipe.
- Each kit shall be individually packaged in a reinforced cardboard box, which is clearly labeled as to its contents.

MUST INCLUDE:

Gasket:

- Gasket shall be full-faced isolating and sealing – Type “E”, 1/8 inch thick, manufactured from Nema grade G-10 glass reinforced epoxy retainer with a Nitrile, Viton or EPDM seal. The G-10 retainer shall have a 550 volt/mil dielectric strength and a minimum 50,000 psi compressive strength.

Sleeve:

- Shall have one full length Nema grade G-10 sleeve for every flange bolt. The G-10 shall be a 1/32 inch thick tube with a 400 volt/mil dielectric strength.

Washer:

- Shall have two insulating washers manufactured from Nema grade G-10 glass reinforced epoxy for each bolt hole. Their compressive strength shall be 50,000 psi, dielectric strength 550 volts/mil. Two, 1/8 inch thick zinc plated, hot rolled steel washers for each bolt. The I.D. of all washers shall fit over the isolating sleeve and both the steel and isolating washers shall have a same I.D. and O.D.
- Products supplied must have ISO 9001 or later certification.
- Affidavit of compliance to this specification shall be available upon request.

RESTRICTIONS:

- Must be approved by CFPUA, for insulating cathodically protected aerial pipelines only.

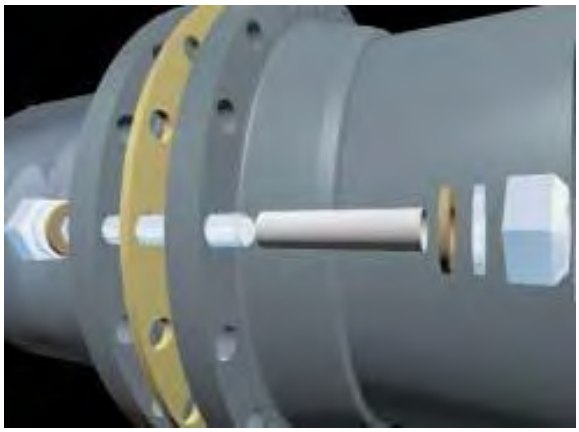

MANUFACTURER:

- ADVANCE PRODUCTS & SYSTEMS, INC.
- PIPELINE SEAL AND INSULATOR, INC.
- OPEN

K 9 – Sampling Station:

Effective Date: 01-01-20
Revision #: 2

SPECIFICATION:

Sampling Stations shall meet or exceed the performance specifications of:

- Stainless steel standpipe with 1” fittings and connections and a 3/4" reducer.
- All stations shall be enclosed in a lockable, nonremovable, aluminum-cast housing.



MANUFACTURER:

- KUPFERLE FOUNDRY COMPANY
- OPEN

RESTRICTIONS:

Section L: Electrical	Effective Date: 01-01-20 Revision #: 2

L 1 Tracer Wire (Solid Copper)

L 1.1 Tracer Wire (Copper Clad Steel)

L 2 Direct Bury Wire Splice Kit

L 1 – TRACER WIRE (SOLID COPPER):

Effective Date: 01-01-20
Revision #: 2

SPECIFICATION:

Tracer wire shall meet or exceed the performance specifications of:

- Manufactured for the purpose of direct burial power applications in accordance with the National Electric Code.
- Conductor shall be soft drawn bare copper meeting the requirements of ASTM Standard Specification B-3.
- Shall be a minimum gauge size 10.
- Conductor shall be solid strand.
- Insulation shall be polyvinylchloride (PVC) or low density, high molecular weight polyethylene for applications of up to 600 volts.
- Insulation shall be color coded per type service.
- Shall be constructed in accordance with Underwriter Laboratories, Inc.
- Thermoplastic Heat and Water resistant Nylon coated (THWN).

COLOR-CODED:

- Blue: Potable water
- Green: Sanitary sewer/ force main





MANUFACTURER:

- OPEN

RESTRICTIONS:

- For service lines up to 2” in diameter installed by directional drill.

L 1.1 – TRACER WIRE (COPPER CLAD STEEL):

Effective Date: 01-01-20
Revision #: 2

SPECIFICATION:

Tracer wire (Copper-Clad Steel Wire) shall meet or exceed the performance specifications of:

- Conductor shall be copper-clad steel wire composed of a steel core with a uniform and continuous copper cladding thoroughly bonded to the steel throughout.
- Cladding: The steel and copper Interface must have a metallurgical bond achieved through a high heat and pressure bonding process. Established process for porosity-free material.
- Steel: Extra high strength with 0.54 carbon or greater. Verified to meet required mechanical properties.
- Copper: UNS-C10200; of copper according to ASTM B-170 (latest revision). High conductivity, oxygen free copper to achieve optimal signal performance.
- Shall be a minimum gauge size 12AWG (.0808" diameter).
- Shall have an average tensile break load of 1100 lbs.
- Conductor shall be solid strand.
- Surface Condition; Shall be free of any defects, including flakes, grooves, pits, and voids. Wire shall be smooth, bright and shiny, and free of excessive copper dust and residual drawing lubricants.
- Insulation shall be color coded per type service.

INSULATION & THICKNESS REQUIREMENTS:

- Insulation shall be high molecular weight-high density polyethylene (HDPE) jacket complying with ASTM-D1248, 30-volt rating.
- 30 mil insulation for 2" to 8" pipe Installed by directional drill and all sizes installed by open cut.
- 45 mil insulation for 10" and larger pipe and all subaqueous pipe installed by directional drill.

COLOR-CODED:

- Blue: Potable water
- Green: Sanitary sewer/ force main

RESTRICTIONS:

- Shall not be used in open cut installations.
- Required on pipe installed by horizontal directional drill.



MANUFACTURER:

- Copperhead Industries LLC. - 1245X EHS
- OPEN

L 2 – DIRECT BURY SPLICE KITS:

Effective Date: 01-01-20
Revision #: 2

SPECIFICATION:

Direct bury water proof wire connectors shall meet or exceed the performance specifications of:

- UL Standards 486D, direct bury wire splices.
- Shall be compatible with THWN insulation thickness and AWG solid strand copper wiring.
- Shall use a silicone insulating gel sealant.

DESIGN:

- Shall splice and effectively moisture seal three to four (minimum) # 10 conductors as part of the installation of tracer wire in pipe line construction.



MANUFACTURER:

- 3M- DBR-6 DIRECT BURY SPLICE KIT
- KING INNOVATION– KING 6 BLUE

RESTRICTIONS:

Section M: Coatings & Sealants	Effective Date: 01-01-20 Revision #: 2

M 1 Chemically Activated Acrylic Gel

M 1.1 Chemically Activated Acrylamide Gel

M 1.2 Water Activated Polymer Solution/ Foam

M 2 Pipe Gasket Lubricants

M 3 PTFE “Teflon” Thread Sealant Tape

M 4 Flexible Joint Sealants

M 4.1 Flexible Butyl Joint Sealants

M 5 Polyurethane Adhesive Sealant/ Caulk

M 6 Protecto 401 / Permox CTF / Tnemec Series 431 Permashield PL Touch-up Kit

M 1 – CHEMICALLY ACTIVATED ACRYLIC GEL:

Effective Date: 01-01-20
Revision #: 2

SPECIFICATION:

Chemically activated acrylic gel (grout) shall meet or exceed the performance specifications of:

- Shall be a water solution of acrylic resin.
- Shall form an elastic and cohesive gel with the addition of a catalyst which stops flowing water.
- Gel set time shall be controllable from a few seconds to several hours even in flowing water.
- Shall have approximately the same viscosity as water (1 to 2 centipoises) in solution.
- When catalyzed, shall produce a gel which is nontoxic.
- Shall have a tracer dye added if colorless.
- Shall be mixed and applied per manufactures recommendations.

CATALYST:

- AV-101 Catalyst T+ or Chemical grout monomer, Triethanolamine (TEA) catalyst & water.
- AV-103 Catalyst SP or Sodium Persulfate (SP) initiator & water.

POSSIBLE ADDITIVES:

- AV-105 Ethylene Glycol: Protects against freezing.
- AV-257 Icoset: Increases compressive and tensile strength.
- AC 50W: Root Inhibitor.



RESTRICTIONS:

For sealing existing or rehabilitated, in-service gravity sewers and manholes including:

- Sewer joint sealing.
- Sewer laterals.
- Manhole waterproofing.
- Lateral connections to cured in-place liners.
- Not for potable water applications.
- For soil stabilization.
- Shall not be used after 6-12 months from manufactures date depending on manufacture.

MANUFACTURER:

- AVANTI INTERNATIONAL- AV-118 DURIFLEX ACRYLIC GEL
- DE NEEF CONSTRUCTION CHEMICALS INC.- AC-400 ACRYLATE GROUT
- OPEN

M 1.1 – CHEMICALLY ACTIVATED ACRYLAMIDE GEL:

Effective Date: 01-01-20
Revision #: 2

SPECIFICATION:

Chemically activated acrylamide gel (grout) shall meet or exceed the performance specifications of:

- Shall be a water solution of three or more chemicals which is a blend of Acrylamide Monomer (AM) and Methylenebisacrylamide (MBA).
- Shall form an elastic and cohesive gel with the addition of catalysts which stops flowing water.
- Gel set time shall be controllable from a few seconds to several hours even in flowing water.
- Shall have approximately the same viscosity as water (1 to 2 centipoises) in solution.
- Shall have a tracer dye added.
- Shall be mixed and applied per manufactures recommendations.

CATALYST:

- AV-101 Catalyst T+.
- AV-102 Catalyst AP.

POSSIBLE ADDITIVES:

- AV-105 Ethylene Glycol: Protects against freezing.
- AV-257 Icoset: Increases compressive and tensile strength.
- AC 50W: Root Inhibitor.
- Dye: Tracer Dyes



MANUFACTURER:

- AVANTI INTERNATIONAL- AV-100
- OPEN

RESTRICTIONS:

For sealing existing or rehabilitated, in-service gravity sewers and manholes including:

- Sewer joint sealing.
- Sewer laterals.
- Manhole waterproofing.
- Lateral connections to cured in-place liners.
- Not for potable water applications.
- For soil stabilization.
- Shall not be used after 12 months from manufacture date.

M 1.2 – WATER ACTIVATED POLYMER SOLUTION/ FOAM:

Effective Date: 01-01-20
Revision #: 2

SPECIFICATION:

Water activated polymer solution which cures when reacted with water (grout) shall meet or exceed the performance specifications of:

- Shall prevent water infiltration unto sub-grade structures and pipes.
- Shall be either hydrophilic or hydrophobic polyurethane.
- Shall form a strong film, gel, or foam of polyurethane, with the addition of or contact with water, which stops flowing water.
- Shall have an approximate viscosity of 120- 2500 centipoises in solution.
- Shall be mixed and applied per manufactures recommendations.
- Shall be supplied in cartridges for use with or without a caulking gun.



MANUFACTURER:

- AVANTI INTERNATIONAL- AV-202 MULTIGROUT
- DE NEEF CONSTRUCTION CHEMICALS, INC.- HYDRO-ACTIVE CUT “HOT SHOT”
- OPEN

RESTRICTIONS:

For sealing existing or rehabilitated, in-service gravity sewers and manholes including:

- Large cracks or joints in concrete.
- Precast structures.
- Manhole waterproofing.
- Manhole connections or pipe penetrations.

M 2 – PIPE GASKET LUBRICANTS:

Effective Date: 01-01-20
Revision #: 2

SPECIFICATION:

Pipe gasket lubricants shall meet or exceed the performance specifications of:

- AWWA C-111 (ANSI-A21.11), Rubber-gasket joints for ductile-iron pressure pipe and fittings.
- Shall be suitable for lubricating the parts of the joint for assembly.
- Shall be nontoxic.
- Shall not support the growth of bacteria.
- Shall have no deteriorating effects on the gasket material.
- Shall not impart taste or odor to the water in the pipe.
- Containers shall be labeled with the trade name of the lubricant.
- Shall comply with and be labeled as approved by the National Sanitation Foundation (NSF) for use in potable water lines meeting NSF 61.
- Affidavit of compliance to this specification shall be available upon request.



MANUFACTURER:

- EASE-ON PIPE JOINT LUBRICANT
- J.C. WHITLAM- BLUE LUBE
- OPEN

RESTRICTIONS

Cape Fear Public Utility Authority
Stewardship. Sustainability. Service.

M 3 – PTFE "TEFLON" THREAD SEALANT TAPE:

Effective Date: 01-01-20
Revision #: 2

SPECIFICATION:

PTFE (polytetrafluoroethylene) "Teflon" thread sealant tape shall meet or exceed the performance specifications of:

- Shall meet MIL-T-27730A specifications.
- Shall be Underwriters Laboratory Listed as noted (UL).
- Shall comply with and be labeled as approved by the National Sanitation Foundation (NSF) for use in potable water lines meeting NSF 61.
- Shall be nontoxic.
- Shall not support the growth of bacteria.
- Shall not impart taste or odor to the water in the pipe.
- Affidavit of compliance to this specification shall be available upon request.

ADDITIONAL REQUIREMENTS:

Color	White
Density	Standard .5 - .7
Thickness	.003" - .0038"
Temperature	-450°F to +500°F
Pressure	Hard vacuum to 10,000 PSI.
Package	Plastic Spool & Shell
Width	.75" or 1"
Length per spool	260" or 520"



MANUFACTURER:

- MERCO TAPE COMPANY- M55
- OPEN

RESTRICTIONS:

Cape Fear Public Utility Authority
Stewardship. Sustainability. Service.

M 4 – FLEXIBLE JOINT SEALANTS:

Effective Date: 01-01-20
Revision #: 2

SPECIFICATION:

Preformed flexible plastic joint sealant (gaskets) shall meet or exceed the performance specifications of:

- ASTM C-990 standard specification for joints,concrete pipe, manholes and pre-cast box sections.
- Federal Specification SS-S210-A, “Sealing Compound Preformed Plastic for Pipe Joints”, Type 1, Rope Form.
- AASHTO M-198 75 1.
- Shall be produced from blends of refined hydrocarbon resins and plasticizing compounds reinforced with inert mineral filler.
- Shall appear as a semi-solid black strip.
- Shall contain no solvents, irritating fumes or obnoxious odors.
- The compound shall not depend on oxidizing, evaporating, or chemical action for its adhesive or cohesive strength.
- Shall be supplied in extruded rope-form of suitable cross-section and of such size as to fill the joint space when manhole sections are stacked.
- Shall be protected by a suitable removable two-piece wrapper.
- Affidavit of compliance to this specification shall be available upon request.



MANUFACTURER:

- HENRY COMPANY- RAM-NEK/ RN101
- OPEN

RESTRICTIONS:

Cape Fear Public Utility Authority
Stewardship. Sustainability. Service.

M 4.1 – FLEXIBLE BUTYL JOINT SEALANTS:

Effective Date: 01-01-20
Revision #: 2

SPECIFICATION:

Preformed flexible butyl plastic joint sealant (gaskets) shall meet or exceed the performance specifications of:

- ASTM C-990 standard specification for joints, concrete pipe, manholes and pre-cast box sections.
- Federal Specification SS-S210-A, "Sealing Compound Preformed Plastic for Pipe Joints", Type 1, Rope Form.
- AASHTO M-198B.
- Shall be produced from special blend of butyl and asphalt.
- Shall appear as a extruded black fluid coil.
- Shall be protected by a suitable removable two piece wrapper.
- Affidavit of compliance to this specification shall be available upon request.



	TEST METHOD	REQUIRED
Chemical Composition		
Hydrocarbon, % by weight	ASTM D 4-80	50-70
Inert Mineral Filler, % by weight	AASHTO T111	30-50
Volatile Matter, % by weight	ASTM D 6-80	2.0 Max.
Physical Properties*		
Specific gravity, @ 77F.	ASTM D 71-84	1.2-1.35
Ductility at 77F, cm	ASTM D 113-85	5.0 min.
Softening Point, Ring & Ball, @ 77F	ASTM D 36-86	320 min.
Penetration, Cone, @ 77 F, 150 g, 5 sec., in 0.1 mm	ASTM D 217-82	50-120
Flash Point, Cleveland Open Cup, F	ASTM D 92-85	600 min.
Fire Point, Cleveland Open Cup, F	ASTM D 92-85	625 min.
Compression Test @77° F lbf/in³	ASTM C 972	100 max.
Compression Test @ 32° F lbf/in³	ASTM D 972	200 max.
Sag or Flow Resistance		
Sag or flow resistance, in vertical position for 5 days @ 135 F	FS SS-S-210A sect. 4.5.3/ASTM C 990	No sagging
Chemical Resistance		
30 days immersion @ room temperature in each of the following:	FS SS-S-2120A sect. 3.6/ASTM C 990	
5% Solution of Caustic Potash		No visible Deterioration
5% Solution of Hydrochloric Acid		No visible Deterioration
5% Solution of Sulfuric Acid		No visible Deterioration
Saturated Hydrogen Sulfide Solution		No visible Deterioration

MANUFACTURER:

- HENRY COMPANY- BUTYL-NEK/ BN109
- OPEN

RESTRICTIONS:

M 5 – POLYURETHANE ADHESIVE SEALANT/ CAULK:

Effective Date: 01-01-20
Revision #: 2

SPECIFICATION:

High-performance polyurethane adhesive & sealant shall meet or exceed the performance specifications of:

- Shall be a high-performance marine grade polyurethane adhesive sealant.
- Shall have a minimum tensile strength of 600 psi.
- Shall have a minimum 900% elongation before breaking.
- Shall be suitable for above and below water applications.
- Shall not shrink.
- Shall create a permanent bond with fiberglass and gel coat material.
- Affidavit of compliance to this specification shall be available upon request.

INTENDED USE:

- Installation of inside drop bowl.
- Sealing of bowl to manhole wall.



MANUFACTURER:

- 3M MARINE ADHESIVE SEALANT 5200
- 3M MARINE ADHESIVE SEALANT FAST CURE 5200

RESTRICTIONS:

Cape Fear Public Utility Authority
Stewardship. Sustainability. Service.

M 6 – PROTECTO 401 / PERMOX CTF / TNEMEC SERIES 431 PERMASHIELD PL TOUCH-UP KIT:

Effective Date: 01-01-20
Revision #: 2

SPECIFICATION:

Touch-up kits shall meet or exceed the performance specifications of:

- Shall be applied per manufactures procedure.
- Affidavit of compliance to this specification shall be available upon request.

SURFACE PREPARATION:

- The surface preparation shall be equal to the specifications for the project or as outlined in the touch-up procedure.
- Shall not be applied over wet or frozen surfaces.

APPLICATION DATA:

- Dry film thickness shall be as outlined in specifications.

INTENDED USE:

- Sealing of cut ends of lined pipe.
- Repairing field damaged areas of lined pipe and fittings.





MANUFACTURER:

- PROTECTO 401
- PERMOX CTF
- TNEMEC SERIES 431 PERMASHIELD PL

RESTRICTIONS:

Cape Fear Public Utility Authority
Stewardship. Sustainability. Service.

Section N: Concrete	Effective Date: 01-01-20 Revision #: 2

N 1 Concrete/ Type S Mortar

N 2 Cement/ Calcium Aluminate

N 3 Cement/ Calcium Aluminate Lining System/ Sanitary Sewer

N 4 Concrete/ High Early Concrete Mix

N 5 Non-Shrink Grout

N 1 – CONCRETE/ TYPE S MORTAR:

Effective Date: 01-01-20
Revision #: 2

SPECIFICATION:

Type S Mortar shall meet or exceed the performance specification of:

- ASTM C1329, ASTM C270
- All walls shall be cleaned and free from orange material and harmful amount of dissolved acids, alkalies, and salts.
- Resistance to freeze – thaw deterioration.

TECHNICAL DATA:

- Compressive Strengthen
- 7 Days – 1300 psi
- 28 Days – 2100 psi



MANUFACTURER:

- QUIKRETE
- CEMEX
- OPEN

RESTRICTIONS:

N 2 – CEMENT/ CALCIUM ALUMINATE:

Effective Date: 01-01-20
Revision #: 2

SPECIFICATION:

Calcium aluminate cement shall meet or exceed the performance specifications of:

- Made with 100% fused calcium aluminate aggregate and calcium aluminate cement.

Compressive strength per ASTM C109 shall meet the following minimums:

- 1 hour – 400psi
- 24 hours – 2000psi
- 28 days – 9000 psi
- Shall have a minimum bond of 2000psi per ASTM C882.
- Shall have no shrinkage @ 95% R.H. per ASTM C596.

APPLICATION:

- For use where harsh hydrogen sulfide conditions exist in sanitary sewers.
- For construction or reconstruction of the bench and invert in concrete, masonry, or inert (such as fiberglass) lined manholes, wet wells and lift stations.



MANUFACTURER:

- STRONG SEAL– BENCH MIX
- OPEN

RESTRICTIONS:

- Only permitted for the rehabilitation or reconstruction of manhole benches.

N 3 – CEMENT/ CALCIUM ALUMINATE LINING SYSTEM/ SANITARY SEWER:

Effective Date: 01-01-20
Revision #: 2

SPECIFICATION:

Calcium aluminate cement lining system shall meet or exceed the performance specifications of:

- Lining material shall provide a corrosion resistant liner to prevent any deterioration of concrete surfaces from hydrogen sulfide and other corrosive gases/acids produced by wastewater and to prevent infiltration.
- Shall be 100% calcium aluminate cement with 100% calcium aluminate aggregate.
- Manufacture shall warrant material and workmanship for a minimum period of ten (10) years.
- Shall be designed to withstand long-term exposure to a bacterially corrosive hydrogen sulfide environment that may be expected to produce a pH of 1 on normal Portland Cement concrete or typical brick and mortar surfaces.
- Mortar furnished under this specification shall be a pre-packaged mortar, including all cement, aggregate, and any required admixtures of fibers.
- It is the intent of this specification that the contractor only be required to add the proper amount of potable water so as to produce a mortar suitable for pneumatic application.
- Typical package weights shall not be less than 50 pounds.
- To ensure total unit responsibility, all materials and installation shall be furnished by, and coordinated with, one supplier/ manufacture.
- The chemical composition of the cement portion as well as the aggregates of the mortar mix shall be as follows:

Chemical analysis main constituents			
Al_2O_3	CaO	$FeO+Fe_2O_3$	SiO_2
39% - 44%	34% - 38%	9% - 15%	6% - 8%

RESTRICTIONS:

- Use of this product is restricted to coating rehabilitation of existing manhole structures.

The design properties of the mortar mix shall be as follows:

TYPICAL MATERIAL PROPERTIES* (*PERFORMED BY AN INDEPENDENT TESTING LABORATORY @ 14-16% water*)

SEWPERCOAT® PG		24 HRS	7 DAYS	28 DAYS
ASTM C 109	Compressive Strength, psi	>5,500	>6,000	>7,000
ASTM C 348	Flexural Strength, psi	>900	>1,100	>1,300
ASTM C 157	Shrinkage after 28d immersion, %	< 0.04	< 0.05	< 0.07
ASTM C 496	Splitting Tensile Strength, psi	>550	>600	>700
ASTM C 882	Bond Strength by Slant Shear, psi		>2500	>2500
ASTM C 666	Freeze-Thaw – 300 cyc, Rel. Dyn. Modulus	102		
ASTM C 642	Volume of Permeable Voids (40 days), %	15		
ASTM C 642	Apparent Density (40 days)	2.74		
ASTM C 469	Modulus of Elasticity (28 days), ksi	>5,000		

*The test results above were obtained under standard laboratory conditions and are presented as typical material properties only. Those properties presented above are not warranted or guaranteed by Kerneos. Properties obtained from field cast specimens may result in values different than those listed above. The warranted material properties are presented in section two of this Product Data Sheet.



MANUFACTURER:

- KERNEOS ALUMINATE TECHNOLOGIES
- SEWPERCOAT “PG”
- OPEN

Cape Fear Public Utility Authority
Stewardship. Sustainability. Service.

N 4 – CONCRETE/ HIGH EARLY CONCRETE MIX:

Effective Date: 01-01-20
Revision #: 2

SPECIFICATION:

High early concrete mix shall meet or exceed the performance specifications of:

- Shall be used above or below grade, interior or exterior.
- High early concrete mix furnished under this specification shall be a pre-packaged product, including all cement and any required admixtures.
- It is the intent of this specification that the contractor only be required to add the proper amount of clean potable water so as to produce a concrete mix suitable for application.
- Coverage: A 60-lb. bag yields approximately 0.45 cu ft.
- An 80-lb. bag yields approximately 0.6 cu ft.
- Packaging: 60-lb. & 80-lb. bags.
- Shelf life: One year from date of manufacture.

TECHNICAL DATA:

- Shall have a minimum compressive strength, ASTM C-387, 1 day- 1500psi, 3 day- 2500psi, 7 day- 3500, 28 day- 5000.
- Slump range- 2”-3”.



MANUFACTURER:

- QUIKRETE- QUIKRETE 5000 HIGH EARLY STRENGTH CONCRETE MIX #1007
- A.W. COOK CEMENT
- OPEN

RESTRICTIONS:

Use of this product is restricted to small nonstructural concrete repairs where truck mix is not practical and should be limited to:

- Sidewalk panel replacement.
- Curb and gutter section replacement.
- Valve box pads.

N 5 – NON-SHRINK GROUT:

Effective Date: 01-01-20
Revision #: 2

SPECIFICATION:

Non-shrink grout shall meet or exceed the performance specifications of:

- ASTM C928 R
- ASTM C1107
- Non-shrink, high strength, high flow material
- Shall be used above or below grade, interior or exterior.
- It is the intent of this specification that the contractor only be required to add the proper amount of clean potable water so as to produce a mix suitable for application.
- When hardened, does not shrink so it's final volume is greater than or equal to the original installed volume.
- Can be utilized in a fluid, flowable or plastic consistency. Respective compressive strengths will vary based on consistency.
- In accordance with ASTM C1107, grout shall be maintained at 70 degrees F to achieve specified performance.

Technical Data

Consistency	Plastic	Flowable
24 Hours	5,000 psi	4,500 psi
7 Days	6,000 psi	5,500 psi
28 Days	8,000 psi	7,500 psi



MANUFACTURER:

- QUIKRETE
- SIKAGROUT
- OPEN

RESTRICTIONS:

This product can be used for load transfers, structural repairs and reinforcing steel, to include:

- Anchor Bolts
- Reinforcing Steel
- Manhole Repairs
- Load Transfers
- Bearing Plates

Section O: Structures	Effective Date: 01-01-20 Revision #: 2

O 1 Fiberglass Manholes/ Sanitary Sewer

O 2 Fiberglass Manhole Liners/ Sanitary Sewer

O 3 Fiberglass Wet Well Liners/ Sanitary Sewer

O 4 Multi-Component Stress Panel Liner System/ Sanitary Sewer

O 5 Polymorphic Resin Liner System/ Sanitary Sewer

O 6 Precast Manholes

O 6.1 Precast Wet Well

O 6.2 Precast Valve Vaults

O 1 – FIBERGLASS MANHOLE/ SANITARY SEWER:

Effective Date: 01-01-20
Revision #: 2

SPECIFICATION:

Fiberglass manholes shall meet or exceed the performance specifications of:

- Shall be manufactured from commercial grade polyester resin or other suitable polyester or vinyl ester resins with fiberglass reinforcements specifically manufactured for use with sewage.
- Shall be a one-piece unit.
- Shall have no vertical seams.
- Shall meet ASTM Standards D 3753, Fiber-glass Reinforced Polyester Manholes and Wet Wells.
- Reinforcing material shall be Grade “E” type glass in the form of continuous roving and chop roving, having a coupling agent that will provide a suitable bond between the glass reinforcement and the resin.
- The inter surface shall be a resin-rich layer of 0.010 to 0.020 inches thick.
- The concentric cone section shall be affixed to the barrel section at the factory with resin-glass reinforced joint resulting in a one-piece unit.
- The manhole wall thickness shall not be less than 0.50 (1/2”) inches.
- Shall provide an area for which a grade ring or brick can be installed to accept a typical metal ring & cover and have strength to support a traffic load without damage to the manhole.
- As a UV inhibitor the resin on the exterior surface shall have a color pigment added for a minimum thickness of .125 inches.
- Stub out connections shall be made by using a fiberglass reinforced pipe stub out as a sealing surface for an approved manhole connection boot.
- Invert and bench area can be either a noncorrosive material completely enclosed in a minimum 1/4-inch layer of fiberglass chop or concrete coated with an approved coating.
- Shall have a minimum dynamic-load rating of 16,000 lbs. (AASHTO HS-20) when tested in accordance with ASTM D 3753 and shall not leak, crack or suffer other damage when load tested to 40,000 lbs.

SPECIFICATION (CONT.)

- Shall meet or exceed NBS PS 15-69 physical properties as listed in table 1, of that standard:
  - Ultimate Tensile Strength (psi) 15,000
  - Flexural Strength (psi) 22,000
  - Flexural Modulus or elasticity (psi) 1,000,000
- Shall have a concrete base, 8” thick when less than 12’ deep and 12” thick when more than 12’ deep.
- The base shall extend a minimum of 1 foot from the outside wall of the manhole.
- The base shall be sized to act as an anti-floatation device for the entire unit.
- Shall be sized per construction drawings.
- Affidavit of compliance to this specification shall be available upon request.

IDENTIFICATION:

Each manhole shall be marked inside and out with the following information:

- Manufactures name and trademark
- Manufactures factory location
- Manufactures serial number or date code
- Total length or nominal diameter





O 1 – CONTINUED:	MANUFACTURER: • CONTAINMENT SOLUTIONS, INC. • L.F. MANUFACTURING, INC. • OPEN
RESTRICTIONS:	

O 2 – FIBERGLASS MANHOLE LINER/ SANITARY SEWER:

Effective Date: 01-01-20
Revision #: 2

SPECIFICATION:

Fiberglass manhole liners shall meet or exceed the performance specifications of:

- Shall be manufactured from commercial grade polyester resin or other suitable polyester or vinyl ester resins with fiberglass reinforcements specifically manufactured for use with sewage.
- Shall be a one-piece unit.
- Shall have no vertical seams.
- Shall meet ASTM Standards D 3753, Fiber-glass Reinforced Polyester Manholes and Wet Wells.
- Reinforcing material shall be Grade “E” type glass in the form of continuous roving and chop roving, having a coupling agent that will provide a suitable bond between the glass reinforcement and the resin.
- The inter surface shall be a resin-rich layer of 0.010 to 0.020 inches thick.
- The concentric cone section shall be affixed to the barrel section at the factory with resin-glass reinforced joint resulting in a one-piece unit.
- The liner wall thickness shall not be less than 0.50 (1/2”) inches.
- Shall provide an area for which a grade ring or brick can be installed to accept a typical metal ring & cover and have strength to support a traffic load without damage to the manhole.
- As a UV inhibitor the resin on the exterior surface shall have a color pigment added for a minimum thickness of 0.125 inches.
- Shall have a minimum dynamic-load rating of 16,000 lbs. (AASHTO HS-20) when tested in accordance with ASTM D 3753 and shall not leak, crack or suffer other damage when load tested to 40,000 lbs.
- Shall meet or exceed NBS PS 15-69 physical properties as listed in table 1, of that standard:
  - Ultimate Tensile Strength (psi) 15,000
  - Flexural Strength (psi) 22,000
  - Flexural Modulus or elasticity (psi) 1,000,000
- Shall be sized per construction drawings.

RESTRICTIONS:

- Rehabilitation only.

SPECIFICATION (continued)

- Pipe entering through the manhole wall with an invert equal to or higher than the bench will be sealed all around the interior wall by use of a fiberglass patch kit. There will be no exposed mortar above bench or fillet level.
- Affidavit of compliance to this specification shall be available upon request.

IDENTIFICATION:

Each manhole liner shall be marked inside and out with the following information:

- Manufactures name and trademark
- Manufactures factory location
- Manufactures serial number or date code
- Total length or nominal diameter



MANUFACTURER:

- CONTAINMENT SOLUTIONS, INC.
- L.F. MANUFACTURING, INC.
- OPEN

O 3 – FIBERGLASS WETWELL LINER/ SANITARY SEWER:

Effective Date: 01-01-20
Revision #: 2

SPECIFICATION:

Fiberglass wet well liners shall meet or exceed the performance specifications of:

- Shall be manufactured from commercial grade polyester resin or other suitable polyester or vinylester resins with fiberglass reinforcements specifically manufactured for use with sewage.
- Shall be a one-piece unit.
- The wet good liner pipe shall have plain ends and have no vertical seams.
- Fiberglass tops and hatch openings shall be provided.
- Shall meet ASTM Standards D 3753, Fiber-glass Reinforced Polyester Manholes and Wet Wells.
- Reinforcing material shall be Grade “E” type glass in the form of continuous roving and chop roving, having a coupling agent that will provide a suitable bond between the glass reinforcement and the resin.
- The inter surface shall be a resin-rich layer of 0.010 to 0.020 inches thick.
- The liner wall thickness shall not be less than 0.625 (5/8”) inches.
- As a UV inhibitor the resin on the exterior surface shall have a color pigment added for a minimum thickness of 0.125 inches.
- Shall have a minimum dynamic-load rating of 16,000 lbs. (AASHTO HS-20) when tested in accordance with ASTM D 3753 and shall not leak, crack or suffer other damage when load tested to 40,000 lbs.
- Shall meet or exceed NBS PS 15-69 physical properties as listed in table 1, of that standard:
  - Ultimate Tensile Strength (psi) 15,000
  - Flexural Strength (psi) 22,000
  - Flexural Modulus or elasticity (psi) 1,000,000
- Shall be sized per construction drawings.

RESTRICTIONS:

- Diameters of 5’ or less.

SPECIFICATION (continued):

- Pipe entering through the wet well wall with an invert equal to or higher than the bench will be sealed all around the interior wall by use of a fiberglass patch kit.
- Affidavit of compliance to this specification shall be available upon request.

IDENTIFICATION:

Each wet well liner shall be marked inside and out with the following information:

- Manufactures name and trademark
- Manufactures factory location
- Manufactures serial number or date code
- Total length or nominal diameter



MANUFACTURER:

- CONTAINMENT SOLUTIONS, INC.
- L.F. MANUFACTURING, INC.
- OPEN

O 4 – MULTI-COMPONENT STRESS PANEL LINER SYSTEM/ SANITARY SEWER:

Effective Date: 01-01-20
Revision #: 2

SPECIFICATION:

Multi-layered poly resin composite protective manhole and wet well liner system shall meet or exceed the performance specifications of:

- Shall provide a waterproof, corrosion resistant liner to prevent any deterioration of concrete surfaces from hydrogen sulfide and other corrosive gases/acids produced by wastewater.
- Manufacture shall warrant material and workmanship for a minimum period of ten (10) years.
- Shall be a non load-bearing component.
- To ensure total unit responsibility, all material and installation shall be furnished by, and coordinated with, one supplier/ manufacturer.
- The interior surfaces to be protected shall include the walls, ceiling, benches and pipe entries.
- Total thickness of multi-component stress panel liner shall be a minimum of 500 mils and shall sustain a 300 PSI pull test.
- Use of this system is restricted to rehabilitation of existing structures.

PHYSICAL/ MATERIAL PROPERTIES:

1. Liner.

Installation	Liner
Moisture barrier	Modified Polymer
Surfacer	Polyurethane/Polymeric blend foam
Final corrosion barrier	Modified polymer

2. Modified polymer shall be sprayable, solvent free, two-component polymeric, moisture/chemical barrier specifically developed for the corrosive wastewater environment.

TYPICAL CHEMICAL ANALYSIS

"A" Component

Viscosity, 77° F, cps., ASTM D-1638	300-400
Physical State	Liquid
Color	Clear to amber
Hygroscopicity	Reacts with water

"B" Component

Viscosity, 160° F, cps., ASTM D-1638	400-600
Physical State	Liquid
Color	Flamingo Pink
Non-Volatile	100%

Reaction Profile (100 grams, 175° F sample)

Gel Time, seconds	1-2
Tack Free Time, seconds	15
Cure Time, seconds	30

Processing

A System / B System, volume ratio	1.00 / 1.00

RESTRICTIONS:

PHYSICAL/ MATERIAL PROPERTIES (continued):

Typical Physical Properties

Tensile Strength, PSI	>1500
Elongation, %	>125
Tear Strength, PSI	350
Shore D Hardness	55-65
100% Modulus, PSI	>1500

3. Polyurethane Rigid Structure Foam, low viscosity two-component, containing flame retardants.

TYPICAL CHEMICAL ANALYSIS

"A" Component

Viscosity, 77° F, cps., ASTM D-1638	200
Physical State	Liquid
Color	Dark Brown
Hygroscopicity	Reacts with water and evolves CO_2 gas

"B" Component

Viscosity, 77° F, cps., ASTM D-1638	600-1000
Physical State	Liquid
Color	Tan
Hygroscopicity	Absorbs water rapidly thus changing ratio

Reaction Profile (100 grams, 77° F sample)

Cream Time, seconds	1-4
Tack Free time, seconds	5-8
Rise Time, seconds	6-10

Processing

A System / B System, volume ratio	1.00 / 1.00

Typical Physical Properties

Density, nominal, core, lbs/ft3 ASTM D-1622 @ 74° F	4-10
Compression Strength, ASTM D-1621 @74° F parallel rise; PSI	90-150
Closed Cell Content, % - ASTM 1940 @ 74° F	Over 90
Shear Strength, PSI - ASTM C-273 @ 74° F	225-250





MANUFACTURER:

- CONCRETE CONSERVATION, INC.-
- SPECTRA-SHIELD
- OPEN

Cape Fear Public Utility Authority
Stewardship. Sustainability. Service.

O 5 – POLYMORPHIC RESIN LINER SYSTEM / SANITARY SEWER:

Effective Date: 01-01-20
Revision #: 2

SPECIFICATION:

Polymorphic resin protective manhole and wet well liner system shall meet or exceed the performance specifications of:

- Manufacture shall warrant material and workmanship for a minimum period of ten (10) years.
- Shall be a modified ispthalic polyester liner system made of two-components, 100% solid, known as polymorphic resin as described below.
- Shall provide a waterproof, corrosion resistant liner to prevent any deterioration of concrete surfaces from hydrogen sulfide and other corrosive gases/acids produced by wastewater.
- Can be used to rehabilitate and protect concrete, steel, fiberglass, or masonry surfaces.
- System shall restore structural integrity of brick/concrete structures.
- Shall use an approved quick setting cementitious material to bring substrate to profile.
- To ensure total unit responsibility, all material and installation shall be furnished by, and coordinated with, one supplier/ manufacturer.
- The resin based material shall be used to form the sprayed on/structure enhanced monolithic liner covering all interior surfaces to be protected and shall include the walls, ceiling, benches, inverts and pipe entries.
- Application of liner system shall be in strict accordance with manufacture's recommendation.
- The three coat system is made of a prime coat (DS-101 10-25 mils thick), intermediate coat (DS301 75-150 mils thick), and a final coat (DS-401 10-25 mils thick). Final installation shall be a minimum thickness of 150 mils and not more than 250 mils thick.

RESTRICTIONS:

MINIMUM PHYSICAL/ MATERIAL PROPERTIES

Flexural Strength	ASTM D790	8,630 psi
Compressive Strength	ASTM D695	15,120 psi
Tensile Strength	ASTM D638	4,900 psi
Barcol Hardness	Impressor #L25	72-75
Adhesive Strength	Direct to Metal	1,582 psi
Adhesive Strength	Direct to Concrete	Substrate Failure



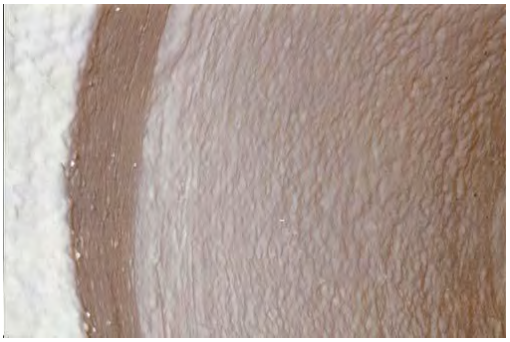

MANUFACTURER:

- ZEBRON 386
- OPEN

O 6 – PRECAST MANHOLES:

Effective Date: 01-01-20
Revision #: 2

SPECIFICATION:

- Precast manhole shall meet or exceed the performance specifications of ASTM C478 & C913 for round structures.
- Openings shall be manufactured per ASTM C76, coring shall be specified per plans.
- Structure to be watertight and resist buoyant force.
- Standard manhole precast riser sections shall not exceed 4-feet; larger pump station wet well sections may be approved.
- Concrete shall conform to:
  - Compressive strength 4,000 psi @ 28-days
  - Air content 4% min.
  - Aggregate: ASTM C33
  - Cementitious materials: minimum of 564 lbs./yd3.
  - Free of organic impurities.
- Manholes 4-feet deep or less shall have an eccentric cone or a flat top.
- Manholes over 4-feet deep shall have an eccentric cone.
- Manholes shall have a minimum inside diameter of 4-feet for sewer mains 12-inches and smaller.
- Manholes shall be 5-feet for sewer mains larger than 12-inches.
- 5-foot manholes shall have an 8” extended base.
- 4-foot manholes shall have a 6” extended base.
- Extended bases shall have a minimum thickness of 6-inches.
- Manholes at ground level and located in traffic areas shall have anti-inflow inserts per Section K.
- Lift and handling devices shall have safety factor of 4 or greater.
- Corrosion linings as specified and indicated on design drawings.

RESTRICTIONS:

SPECIFICATION (continued):

- Vents in remote or outfall areas shall be constructed of aluminum or 316 SST and shall extend a minimum of 2-feet above 100-year flood with integral non-corrosive insect screen.
- Vents in residential neighborhoods and commercial areas require special approval on a case-by-case basis.
- Watertight joints using ASTM C990 preformed flexible sealants.
- Pipe to manhole connections shall conform to ASTM C923 per Section H.
- Cylindrical wall seals per Section K.
- The location of the pipe connectors shall vary from the plans no more than ½-inch vertically and 5-degrees horizontally.



MANUFACTURES:

- OLD CASTLE
- TINDALL
- STAY-RIGHT
- CAPE FEAR PRECAST
- OPEN

O 6.1 – PRECAST WET WELL:

Effective Date: 01-01-20
Revision #: 2

SPECIFICATION:

Precast wet wells for pump stations shall meet or exceed the preceding performance specifications of precast manhole with supplemental requirements as indicated below:

- Concrete 5,000 psi compressive strength @ 28-days.
- Minimum wall thickness shall be 5” for 5’-0”, 6” for 6’-0” and 8” for 8’-0”.
- Provide 1-inch cover all reinforcing steel.
- Base section shall include a 1’-0” extended base unless otherwise specified.
- All fasteners, wedge anchors, bolts, and hooks shall be 316 stainless steel.
- Support grip for each float and dower cord shall be “Hubbell” closed mesh series 024-17-xxx.
- Raintight aluminum hatch per design drawings, lockable with matching eye and padlock per Section I.
- Top shall be set as minimum of 2’ above 100-year flood EL.
- Subject to leakage testing requirements per specifications.



RESTRICTIONS:

- **MANUFACTURES:**
- OLD CASTLE
- TINDALL
- STAY-RIGHT
- CAPE FEAR PRECAST
- OPEN

O 6.2 – PRECAST VAULTS:

Effective Date: 01-01-20
Revision #: 2

SPECIFICATION:

Precast concrete valve vaults shall meet or exceed the preceding requirements for precast manholes and with supplement requirements as indicated below:

- Conform to ASTM C913 & C890 for rectangular/square structures.
- Minimum 4’ x 4’ x 4’ with a minimum base thickness of 6” and minimum wall thickness of 5”.
- Live load rating of AASHTO HS20-44.
- Access hatches shall be pad lockable frame and cover, with a ¼” watertight aluminum plate and 1/8” thick x 3” wide 316 stainless steel hinges per Section I.
- Step to be installed 18” below hatch on a non-hinged side.
- Shall be watertight structure. Subject to leakage testing requirements per specifications.



MANUFACTURES:

- OLD CASTLE
- TINDALL
- STAY-RIGHT
- CAPE FEAR PRECAST
- OPEN

RESTRICTIONS: