THE DAVIS COMMUNITY

New Community Center

1011 Porter's Neck Road | Wilmington, North Carolina 28411



Architects

Bowman Murray Hemingway Architects, PC
514 Market Street
Wilmington, North Carolina 28401
Phone (910) 762-2621

Consultants

Plumbing & Mechanical
CBHF Engineers, PLLC
3808 Park Avenue
Wilmington, NC 28403
(910) 791-4000

Electrical
McFadyen Engineers, PLLC
4411 Peachtree Avenue
Wilmington, NC 28403
(910) 399-1125

Structural
Woods Engineering
254 N Front Street
Wilmington, NC 28401
(910) 343-8007

Interior Design
Big Sky Design
4037 Masonboro Loop Road Ste 2K
Wilmington, NC 28409
(910) 793-3992

Drawing Index

ARCHITECTURAL
A001 Title Sheet
A002 Appendix B
A003 Life Safety Plan
A004 Occupancy and Phasing Plan
A005 Fire Rated Assemblies
A100 Existing Site Plan
A101 Site Plan Phase One
A102 Site Plan Phase Two
A200 Floor Plan
A201 Enlarged Floor Plan
A202 Enlarged Floor Plan
A300 South Elevations
A301 East Elevations
A302 West Elevations
A303 North Elevations
A304 North Promenade 2 Elevations
A400 Building Sections
A401 Enlarged Sections
A402 Enlarged Sections
A403 Enlarged Sections
A404 Enlarged North Entrance Plan and Details
A600 Enlarged Millwork Plans
A601 Millwork Sections and Details
A602 Enlarged Toilet Room and Locker Room Plans
A603 Enlarged Fireplace Plan, Elevation & Details
A604 Enlarged Planter and Fountain Plans, Elevations
A605 O P E N
A606 Enlarged Kitchen Plan
A607 O P E N
A608 Enlarged Playhouse Stage, Ramp & Stair Plan & Details
A609 Enlarged Plan at Chapel
A700 Door Schedules
A800 Reflected Ceiling Plan
A801 Reflected Ceiling Plan Materials
A900 Roof Plan

INTERIOR DESIGN
ID-1 Floor Patterns
ID-2 Furniture Layouts
ID-3 Elevations Referencing Finishes
ID-4 Elevations Referencing Finishes
ID-5 Elevations Referencing Finishes
ID-6 Schedules and Legends

STRUCTURAL
S101 General Notes
S102 General Notes
SD201 South Roof Framing Demo Plan
S201 South Foundation Plan
S202 North Foundation Plan
S203 South Roof Framing Plan
S204 North Roof Framing Plan
S301 Foundation Sections and Details
S401 Framing Sections and Details
S501 X-Bracing Sections and Details

PLUMBING
P001 Plumbing Legend, Abbreviations, Schedules and Loads
P002 Plumbing Loads
P003 Plumbing Waste Vent Diagram
P101 Plumbing Waste Vent Plan
P102 Plumbing Roof Plan
P201 Plumbing Domestic Water Plan
P301 Plumbing Gas Piping Plan
P302 Plumbing Roof Plan
P401 Plumbing Enlarged Plans
P402 Plumbing Enlarged Plans

MECHANICAL
M001 HVAC Legend Code Compliance, Abbreviations and Schedules
M002 HVAC Schedules
M003 HVAC Details
M004 HVAC Details
M005 Kitchen Hood
M006 Kitchen Hood
M007 Kitchen Hood
M101 HVAC First Floor Plan
M102 HVAC Roof Plan

ELECTRICAL
E101 Abbreviations, Legend, Electrical General Notes and Energy Summary
E102 Electrical Singe Line Diagram
E103 Electrical Panel Schedules
E104 Electrical Details
E105 Electrical Details
E106 Lighting Fixture Schedule and Electrical Details
E106.1 Lighting Fixture Schedule
E107 Telecommunications and Fire Alarm Riser Diagrams
E108 Power Plan
E109 Lighting Plan
E110 Systems Plan
E111 Roof Power Plan
E112 Partial Demolition and Lighting Plan

Vicinity Map

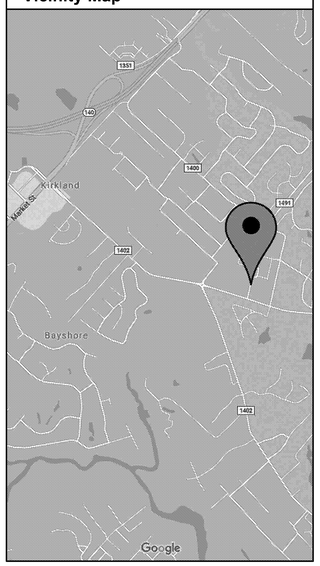

BOWMAN MURRAY HEMINGWAY
ARCHITECTS
514 Market Street
Wilmington, NC 28401
Tel - (910) 762-2621
Fax - (910) 762-8506

PERMIT DRAWINGS FOR REVIEW ONLY

BOWMAN MURRAY HEMINGWAY ARCHITECTURAL CORPORATION CERT. NO. 50424 NORTH CAROLINA WILMINGTON, N. C.

THE DAVIS COMMUNITY
New Community Center
1011 Porter's Neck Road
Wilmington, North Carolina 28411

REV.	DATE	DESCRIPTION

NO.	DATE	ISSUE NOTE

Project Manager	Drawn By
David Ball	David Ball
Date	Reviewed By
October 22, 2020	Bruce Bowman
Project ID	-

Sheet Title
Title Sheet

Sheet No.
A001

2018 APPENDIX B
BUILDING CODE SUMMARY FOR ALL COMMERCIAL PROJECTS

Name of Project: The Davis Community - New Community Center
Address: 1011 Porter's Neck Road, Wilmington Zip Code 28411
Proposed Use: Administration and Community Center
Owner or Authorized Agent Charles Long
Phone #: 910.686.7195 E-mail CharlesL@thedaviscommunity.org
Owned By: ☐ City / County ☒ Private ☐ State
Code Enforcement Jurisdiction: ☐ City: ☒ County: ☐ State

LEAD DESIGN PROFESSIONAL: Bruce Bowman, AIA

DESIGNER	FIRM	NAME	LIC.#	TELE.#	E-MAIL
Architectural	Bowman,Murray,Hemingway	Bruce Bowman	5951	910.762.2621	bowman@bmharch.com
Civil					
Electrical	McFadyen Engineers	Duncan McFadyen	8433	910.399.1125	dmcfadyen@mcfadyenengineers.com
Fire Alarm	(Deligated Design)				
Plumbing	CBHF Engineers	Jim Benson	10592	910.791.4000	jbenson@cbhfengineers.com
Mechanical	CBHF Engineers	Jim Benson	10592	910.791.4000	jbenson@cbhfengineers.com
Sprinkler/Standpipe	(Deligated Design)				
Structural	Woods Engineering	Don Woods	19497	910.343.8007	adam@woodeng.com
Retaining Walls > 5' High					
Other					

2018 NC BUILDING CODE: ☒ New Building ☐ Addition ☐ Renovation
☐ 1st Time Interior Completion
☐ Shell / Core
☒ Phased Construction

2018 NC EXISTING BUILDING CODE: Existing: ☐ Prescriptive ☐ Repair ☐ Chapter 14
Alteration: ☐ Level I ☐ Level II ☐ Level III
☐ Historic Property ☐ Change of Use

CONSTRUCTED: (date) 1965 **CURRENT OCCUPANCY(S)** (Ch. 3): Business / Assembly
RENOVATED: (date) _____ **PROPOSED OCCUPANCY(S) (Ch. 3):** Business / Assembly
RISK CATEGORY (Table 1604.5): Current: ☐ I ☐ II ☒ III ☐ IV
Proposed: ☐ I ☐ II ☒ III ☐ IV

BASIC BUILDING DATA
Construction Type: (check all that apply) ☐ I-A ☐ I-B ☐ II-A ☐ II-B ☐ III-A ☒ III-B ☐ IV ☐ V-A ☐ V-B
Sprinklers: ☐ No ☐ Partial ☐ Yes ☒ NFPA 13 ☐ NFPA 13R ☐ NFPA 13D
Standpipes: ☒ No ☐ Yes **Class:** ☐ I ☐ II ☐ III ☐ Wet ☐ Dry
Fire District: ☒ No ☐ Yes **Flood Hazard Area:** ☒ No ☐ Yes
Special Inspections Required: ☐ No ☐ Yes

GROSS BUILDING AREA TABLE

Floor	Existing (sq ft)	New (sq ft)	Sub Total (sq ft)	Upfit (sq ft)
Third Floor	n/a	n/a	n/a	
Second Floor	n/a	n/a	n/a	
Mezzanine	n/a	n/a	n/a	
First Floor	n/a	35,342	35,342	
Basement	n/a	n/a	n/a	
Total	0	35,342**	35,342**	

** AREA INCLUDES COVERED PATIO AND PORTE COCHERE.

ALLOWABLE AREA

Primary Occupancy Classification(s):
Assembly ☐ A-1 ☒ A-2 ☒ A-3 ☐ A-4 ☐ A-5
Business ☒
Educational ☐
Factory ☐ F-1 Moderate ☐ F-2 Low
Hazardous ☐ H-1 Detonate ☐ H-2 Deflagrate ☐ H-3 Combust ☐ H-4 Health ☐ H-5 HPM
Institutional ☐ I-1 Condition ☐ 1 ☐ 2
☐ I-2 Condition ☐ 1 ☐ 2
☐ I-3 Condition ☐ 1 ☐ 2 ☐ 3 ☐ 4 ☐ 5
☐ I-4
Mercantile ☐
Residential ☐ R-1 ☐ R-2 ☐ R-3 ☐ R-4
Storage ☐ S-1 Moderate ☐ S-2 Low ☐ High-piled
☐ Parking Garage ☐ Open ☐ Enclosed ☐ Repair Garage
Utility and Miscellaneous ☐

Accessory Occupancy Classification(s): _____
Incidental Uses (Table 509): _____
Special Uses (Chapter 4 – List Code Sections): _____
Special Provisions: (Chapter 5 – List Code Sections): _____
Mixed Occupancy: ☐ No ☒ Yes Separation: 0 Hr. Exception: 508.3

☒ Non-Separated Use (508.3) - The required type of construction for the building shall be determined by applying the height and area limitations for each of the applicable occupancies to the entire building. The most restrictive type of construction, so determined, shall apply to the entire building.

☐ Separated Use (508.4) See below for area calculations for each story, the area of the occupancy shall be such that the sum of the ratios of the actual floor area of each use divided by the allowable floor area for each use shall not exceed 1.

$\frac{\text{Actual Area of Occupancy A}}{\text{Allowable Area of Occupancy A}} + \frac{\text{Actual Area of Occupancy B}}{\text{Allowable Area of Occupancy B}} \leq 1$

_____ + _____ + + = ≤ 1.00

STORY NO.	DESCRIPTION AND USE	(A) BLDG AREA PER STORY (ACTUAL)	(B) TABLE 506.2 AREA [3]	(C) [1,2] AREA FOR FRONTAGE INCREASE	(D) [2,3] ALLOWABLE AREA PER STORY OR UNLIMITED
1st	Bus/Assembly	35,342**	38,000	5,985	43,985

**Building area shown includes 2,270 SF of exterior area covered by roof/canopy.

[1] Frontage area increases from Section 506.2 are computed thus:
a. Perimeter which fronts a public way or open space having 20 feet minimum width = 724 (F)
b. Total Building Perimeter = 819 (P)
c. Ratio (F/P) = .88 (F/P)
d. W = Maximum width of public way = 30'+ (W)
e. Percent of frontage increase Iƒ = 100 [F/P - 0.25] x W/30 = 63 (%)

[2] Unlimited area applicable under conditions of Section 507.

[3] Maximum Building Area = total number of stories in the building x D (maximum 3 stories) (506.2).

[4] The maximum area of open parking garages must comply with Table 406.5.4. The maximum area of air traffic control towers must comply with Table 412.3.1.

[5] Frontage increase is based on the unsprinklered area value in Table 506.2.

ALLOWABLE HEIGHT

	ALLOWABLE	SHOWN ON PLANS	CODE REFERENCE
Building Height in Feet (Table 504.3)	75'	26'-8"	--
Building Height in Stories (Table 504.4)	3	1	--

Provide code reference if the "Shown on Plans" quantity is not based on Table 504.3 or 504.4.

FIRE PROTECTION REQUIREMENTS

BUILDING ELEMENT	FIRE SEPARATION DISTANCE (FEET)	RATING REQ'D	RATING PROVIDED (W/ ____ REDUCTION)	DETAIL # AND SHEET #	DESIGN # FOR RATED ASSEMBLY	DESIGN # FOR RATED PENETRATION	DESIGN # FOR RATED JOINTS
Structural frame, including columns,girders,& trusses		0-hr	n/a				
Bearing walls							
Exterior							
North	30+	2-hr	2-hr	#4/A005 FRAME WALL		UL U423	
East	30+	2-hr	2-hr				
West	30+	2-hr	2-hr	#2B/A005 COLUMNS		#NCBC TBL 722.2.4 PRESCRIPTIVE	
South	30+	2-hr	2-hr				
Interior		n/a	n/a				
Nonbearing walls and partitions							
Exterior Walls							
North	30+	0-hr	0-hr				
East	30+	0-hr	0-hr				
West	30+	0-hr	0-hr				
South	30+	0-hr	0-hr				
Interior Walls		0-hr	0-hr				
Floor Construction Including beams & joists		n/a	n/a				
Floor Ceiling Assembly		n/a	n/a				
Columns Supporting Floors		n/a	n/a				
Roof Construction, including supporting beams and joists		0-hr	0-hr				
Roof Ceiling Assembly		0-hr	0-hr				
Columns Supporting Roof		2-hr	2-hr	#2D/A005 COLUMNS		#NCBC TBL 722.2.4 PRESCRIPTIVE	
Shaft Enclos.- Exit		0-hr	0-hr				
Shaft Enclos.- Other		0-hr	0-hr				
Corridor Separation		0-hr	0-hr				
Horizontal Exit		2-hr	2-hr	#4/A005 FRAME WALL		UL U423	
Occupancy / Fire Barrier Separation		n/a	n/a				
Party / Fire Wall Separation		3-hr	n/a	#2A/A005 MASONRY WALL		#NCBC TBL 722.3.2 PRESCRIPTIVE	
Smoke Barrier Separation		n/a	n/a				
Smoke Partition		n/a	n/a				
Tenant / Dwelling Unit / Sleeping Separation		n/a	n/a				
Incidental Use Separation		0-hr	0-hr				

* Indicate section number permitting reduction

PERCENTAGE OF WALL OPENING CALCULATIONS

FIRE SEPARATION DISTANCE (FEET) FROM PROPERTY LINES	DEGREE OF OPENINGS PROTECTION (TABLE 705.8)	ALLOWABLE AREA (%)	ACTUAL SHOWN ON PLANS (%)
30+	unprotected, sprinklered	no limit	n/a
5	unprotected, sprinklered	25%	22%
5	unprotected, sprinklered	25%	18%

LIFE SAFETY SYSTEM REQUIREMENTS

Emergency Lighting	☐ No	☒ Yes	
Exit Signs	☐ No	☒ Yes	
Fire Alarms	☐ No	☒ Yes	
Smoke Detection Systems	☐ No	☒ Yes	☐ Partial _____
Carbon Monoxide Detection	☒ No	☐ Yes	

LIFE SAFETY PLAN REQUIREMENTS

Life Safety Plan Sheet #: A003

☒ Fire and / or smoke rated wall locations (Chapter 7)
☒ Assumed and real property line locations (if not onthe site plan)
☒ Exterior wall opening area with respect to distance to assumed property lines (705.8)
☒ Occupancy Use for each area as it relates to occupant load calculation (Table 1004.1.2)
☒ Occupant loads for each area
☒ Exit access travel distances (1017)
☒ Common path of travel distances (Tables 1006.2.1 & 1006.3.2(1))
☒ Dead end lengths (1020.4)
☒ Clear exit widths for each exit door
☒ Maximum calculated occupant load capacity each exit door can accommodate based on egress width (1005.3)
☒ Actual occupant load for each exit door
☐ A separate schematic plan indicating where fire rated floor/ceiling and/or roof structure is provided for purposes of occupancy separation
☒ Location of doors with panic hardware (1010.1.10)
☐ Location of doors with delayed egress locks and the amount of delay (1010.1.9.7)
☐ Location of doors with electromagnetic egress locks (1010.1.9.9)
☐ Location of doors equipped with hold-open devices
☐ Location of emergency escape windows (1030)
☐ The square footage of each fire area (202)
☐ The square footage of each smoke compartment for Occupancy Classification I-2 (407.5)
☐ Note any code exceptions or table notes that may have been utilized regarding the items above

ACCESSIBLE DWELLING UNITS
(SECTION 1107)
[NO DWELLING UNITS - NOT APPLICABLE]

ACCESSIBLE PARKING
(SECTION 1106)

LOT OR PARKING AREA	TOTAL # OF PARKING SPACES		# OF ACCESSIBLE SPACES PROVIDED			
	REQUIRED	PROVIDED	REGULAR W/ 5' ACCESS AISLE	VAN SPACES WITH 132" ACCESS AISLE	VAN SPACES WITH 8' ACCESS AISLE	TOTAL # ACCESSIBLE PROVIDED
EXISTING	4	8	7		1	8
TOTAL	4	8	7		1	8

ZONING REQUIREMENTS: (1) SPACE PER 400 GROSS SQUARE FEET
BUILDING AREA: 35,342 SF ; 35,342 / 400 = 88.36 = 89 SPACES TOTAL (PROJECT AREA)

ACCESSIBLE PARKING REQUIRED FOR PROJECT AREA = 4 SPACES PER NCBC TBL 1106.1
EXISTING PARKING PROVIDED ON-SITE.
ADDITIONAL NEW PARKING PROVIDED AS PART OF PROJECT.

PLUMBING FIXTURE REQUIREMENTS
(TABLE 2902.1)

USE		WATER CLOSETS M	WATER CLOSETS F	WATER CLOSETS UNI	URINALS	LAVATORIES M	LAVATORIES F	LAVATORIES UNI	SHOWERS & TUBS	DRINKING FOUNTAINS REGULAR	DRINKING FOUNTAINS ACCESSIBLE
SPACE	EXISTING	0	0	0	0	0	0	0	N/A	0	0
	NEW	3	8	0	2	5	6	0	N/A	2	2
	REQUIRED	4	7	0	2	5	5	0	N/A	2	2

PLUMBING FIXTURE CALCULATIONS

A-2 ASSEMBLY — RATIO — OCCUPANTS
DINING ROOM #179 — 1:15 — 94
KITCHEN #150 — 1:200 — 10
KITCHEN OFFICE #153 — 1:100 — 1
TOTAL A-2 — **105 = 53 EACH**

ASSEMBLY A2	MEN	WOMEN
OCCUPANTS	53	53
WC RATIO	1:75	1:75
# WC REQ'D	0.71 = **1 WC**	0.71 = **1 WC**
LAV RATIO	1:200	1:200
# LAV REQ'D	0.27 = **1 LAV**	0.27 = **1 LAV**
DRINKING FOUNTAINS:	(N/A AS PER NCPC 410.4 EXCEPTION FOR RESTAURANTS)	= **0 DF**

A-3 ASSEMBLY — RATIO — OCCUPANTS
NORTH LOBBY #138 — 1:15 — 4
MUSIC & CRAFTS #178 — 1:15 — 94
CHAPEL & MULTI-USE #181 — 1:15 — 145
SOUTH PROMENADE #182 — 1:50 — 16
COMMUNITY PLAYHOUSE #183 — 1:15 — 123
STAGE — 1:15 — 17
LIBRARY STACKS #185 — 1:100 — 5
LIBRARY READING #185 — 1:50 — 10
LIVING ROOM #186 — 1:50 — 20
THEATER #133 — 1:30 — 30
BREAKROOM #159 — 1:15 — 34
TOTAL A-3 — **498 = 249 EACH SEX**

ASSEMBLY A3	MEN	WOMEN
OCCUPANTS	249	249
WC RATIO	1:125	1:65
# WC REQ'D	1.99 = **2 WC**	3.83 = **4 WC**
LAV RATIO	1:200	1:200
# LAV REQ'D	1.25 = **2 LAV**	1.25 = **2 LAV**
DRINKING FOUNTAINS:		1:500 = 498/500 = **1 DF**

B BUSINESS — OCCUPANTS
ADMINISTRATION — 1:100 — 64
SALES AREA — 1:100 — 13
ACCOUNTING — 1:100 — 11
HOUSE & DIETITIAN #157,158 — 1:100 — 2
EXAM OFFICES #172,173 — 1:100 — 3
TOTAL B BUSINESS — **93 = 47 EACH**

BUSINESS	MEN	WOMEN
OCCUPANTS	47	47
WC RATIO	1:25 up to 50 then 1:50	1:25 up to 50 then 1:50
# WC REQ'D	47/25 = **2 WC**	47/25 = **2 WC**
LAV RATIO	1:40 up to 80 then 1:80	1:40 up to 80 then 1:80
# LAV REQ'D	47/40 = **2 LAV**	47/40 = **2 LAV**
DRINKING FOUNTAINS:		1:100 = 93/100 = **1 DF**

TOTAL OCCUPANTS .....= 696

TOTAL FIXTURES REQUIRED:
MEN: (5) WATER CLOSETS; (5) LAVATORIES
WOMEN: (7) WATER CLOSETS; (5) LAVATORIES
DRINKING FOUNTAINS: (2) DF

TOTAL FIXTURES PROVIDED:
MEN: (4) WATER CLOSETS; (2) URINALS; (5) LAVATORIES
WOMEN: (8) WATER CLOSETS; (6) LAVATORIES
DRINKING FOUNTAINS: (2) DF

SPECIAL APPROVALS

Special approval: (Local Jurisdiction, Department of Insurance, SBCCI, ICC, etc., describe below.)
Local Jurisdiction

ENERGY SUMMARY

ENERGY REQUIREMENTS:
The following data shall be considered minimum and any special attribute required to meet the energy code shall also be provided. Each Designer shall furnish the required portions of the project information for the plan data sheet. If performance method, state the annual energy cost for the standard reference design vs annual energy cost for the proposed design.

Existing building envelope complies with code: ☐ No ☐ Yes *(The remainder of this section is not applicable)*
Exempt Building: ☐ No ☐ Yes (Provide code or statutory reference): _____
Climate Zone ☒ 3A ☐ 4A ☐ 5A
Method of Compliance: Energy Code ☐ Performance ☒ Prescriptive
ASHRAE 90.1 ☐ Performance ☐ Prescriptive
(If "Other" specify source here). _____

THERMAL ENVELOPE: (Prescriptive method only)

Roof/ceiling Assembly (each assembly)
Description of assembly: Standing seam metal roof on w.p. membrane on rigid insulation on wood decking
U-Value of total assembly: 0.04 min.
R-Value of insulation: R-25 min.
Skylights in each assembly: n/a
U-Value of skylight: _____
Total square footage of skylights in each assembly: _____

Exterior Walls (each assembly)
Description of assembly: Cementitious siding on rigid insulation on air-moisture barrier on fiberglass gyp. sheathing on 6" metal studs @ 16" o.c. with unfaced batt insulation.
U-Value of total assembly: 0.036 (0.5 siding + 7.5 c.i. + 0.5 sheathing +19 = R 27.5)
R-Value of insulation: 7.5 c.i. + 19 = 26.5
Openings (windows or doors with glazing)
U-Value of assembly: 0.45 max.
Solar heat gain coefficient: 0.25 min.
projection factor: (varies)
Door R-Values: 0.70 max. (opaque)

Walls below grade (each assembly)
Description of assembly: n/a
U-Value of total assembly: _____
R-Value of insulation: _____

Floors over unconditioned space (each assembly)
Description of assembly: n/a
U-Value of total assembly: _____
R-Value of insulation: _____

Floor Slab on Grade
Description of assembly: Concrete slab on vapor retarder on grade
U-Value of total assembly: n/a
R-Value of insulation: n/a
Horizontal/vertical requirement: n/a
slab heated: _____

STRUCTURAL DESIGN

DESIGN LOADS:
Importance Factors: Wind (I_w) 1.0; Snow (I_s) 1.1; Seismic (I_E) 1.25

Live Loads: Roof 20 psf; Mezzanine n/a psf; Floor 100 psf
Ground Snow Loads: 10 psf
Wind Loads: Basic Wind Speed 154 mph (ASCE-7); Exposure Category B

SEISMIC DESIGN CATEGORY: ☐ A ☐ B ☒ C ☐ D
Provide the following Seismic Design Parameters:
Risk Category (Table 1604.5) ☐ I ☐ II ☒ III ☐ IV
Spectral Response Acceleration SS 0.2 %g SI 0.086 %g
Site Classification (ASCE 7) ☐ A ☐ B ☐ C ☒ D ☐ E ☐ F
Data Source: ☒ Field Test ☐ Presumptive ☐ Historical Data
Basic Structural System ☐ Bearing Wall ☐ Dual w/Special Moment Frame
☒ Building Frame ☐ Dual w/Intermediate R/C or Special Steel
☐ Moment Frame ☐ Inverted Pendulum
Analysis Procedure ☐ Simplified ☒ Equivalent Lateral Force ☐ Dynamic
Architectural, Mechanical, Components anchored? ☒ Yes ☐ No

LATERAL DESIGN CONTROL: Earthquake ☐ Wind ☒
SOIL BEARING CAPACITIES:
Field Test (provide copy of test report) 2.000 psf
Presumptive Bearing capacity _____ psf
Pile size, type, and capacity _____

MECHANICAL SUMMARY

MECHANICAL SYSTEMS, SERVICE SYSTEMS AND EQUIPMENT
Thermal Zone 3A - Warm/Humid
winter dry bulb: 23˚F
summer dry bulb: 95˚F

Interior design conditions
winter dry bulb: 70˚DF
summer dry bulb: 75˚F
relative humidity: 60˚RH*
*Design not controlled

Building heating load: 567.0 MBH
Building cooling load: 870.3 MBH

Mechanical Spacing Conditioning System
Unitary
description of unit: See Schedules
heating efficiency: See Schedules
cooling efficiency: See Schedules
size category of unit: See Schedules
Boiler
Size category. If oversized, state reason: n/a
Chiller
Size category. If oversized, state reason: n/a
List equipment efficiencies: See Schedules

ELECTRICAL SUMMARY

[SEE ELECTRICAL DRAWINGS]

BOWMAN MURRAY HEMINGWAY
ARCHITECTS
514 Market Street
Wilmington, NC 28401
Tel - (910) 762-2621
Fax - (910) 762-8506

BOWMAN MURRAY HEMINGWAY ARCHITECTS, PA — REGISTERED ARCHITECTURAL CORPORATION — CERT. NO. 50424 — NORTH CAROLINA — WILMINGTON, N. C.

BRUCE F. BOWMAN — REGISTERED ARCHITECT — 5951 — NORTH CAROLINA — WILMINGTON, NC

THE DAVIS COMMUNITY
New Community Center
1101 Porter's Neck Road
Wilmington, North Carolina 28411

REV.	DATE	DESCRIPTION

NO.	DATE	ISSUE NOTE

Project Manager: David Ball
Drawn By: Andrew Tyhacz
Date: October 22, 2020
Reviewed By: Bruce Bowman
Project ID

Project Title: **Appendix B**

Sheet No.: A002

MEANS OF EGRESS SUMMARY

OCCUPANCY LOAD
CALCULATED TOTAL EGRESS LOAD: 696 OCCUPANTS
(BASED ON PLUMBING FIXTURES REQUIRED - SEE APPENDIX B)

NUMBER OF EXITS
REQUIRED: 3
PROVIDED: 5 FROM CENTRAL CORRIDOR
12 TOTAL FROM BUILDING

MAIN EXIT CAPACITY REQUIRED = 696 / 2 = 348 MINIMUM
MAIN EXIT CAPACITY PROVIDED = 645 (EXIT #E1 and #E6)

EXIT SEPARATION - BUILDING:
REQUIRED = 261 FT / 3 = 87 FT MIN.
PROVIDED = 244 FT

EXIT SEPARATION - ADMINISTRATION SUITE:
REQUIRED = 120 FT / 3 = 40 FT MIN.
PROVIDED = 72 FT

EXIT SIZING
DOORS:
MINIMUM PROVIDED: 36" = 32" CLEAR WIDTH; 32 / 0.2 = 160 OCC. CAPACITY
[MINIMUM ACCESSIBLE WIDTH REQUIRED = 32" CLEAR WIDTH]

CORRIDORS:
MINIMUM WIDTH PROVIDED: 60" ; 60 / 0.2 = 300 OCC. CAPACITY
[MINIMUM ACCESSIBLE WIDTH REQUIRED = 48" CLEAR WIDTH]

TRAVEL DISTANCE
COMMON PATH OF EGRESS:
75 FT. MAX. PERMITTED

EXIT ACCESS DISTANCE:
250 FT. MAX. PERMITTED WITH SPRINKLER SYSTEM

DEAD END CORRIDORS
20 FT MAXIMUM DEAD END PERMITTED

Legend

- 3-HOUR FIRE WALL / FIRE BARRIER
- 2-HOUR FIRE BARRIER
- 1-HOUR FIRE BARRIER
- E# — EXIT DISCHARGE
- (##) — OCCUPANCY LOAD OF SPACE
- (##) — ACCUMULATED OCCUPANCY LOAD AT POINT ON EGRESS PATH
- (##) — MAIN CORRIDOR 5 FT CLEAR WIDTH EGRESS PATH TO MAIN EXITS #E1 & #E6
- ### TD TO E# — EXIT ACCESS TRAVEL DISTANCE TO EXIT DISCHARGE #

EXIT #E5 & #E5A
36" SINGLE SWING

32" CLEAR WIDTH PROVIDED
CAPACITY PROVIDED = 160 OCC.
CAPACITY REQUIRED = 68 OCC.

EXIT #E6
AUTO BI-PARTING w/BREAK-OUT (INTERIOR AND EXTERIOR)
129" CLEAR WIDTH PROVIDED WITH 4 PANEL BREAK-OUT
CAPACITY PROVIDED = 645 OCC.
CAPACITY REQUIRED = 345 OCC.
(MAIN EXIT LOAD)

EXIT #E7
36" MIN. WIDE SINGLE SWING

32" MIN. CLEAR WIDTH PROVIDED
CAPACITY PROVIDED = 160 OCC.
CAPACITY REQUIRED = 9 OCC.

EXIT #E8
36" SINGLE SWING

32" CLEAR WIDTH PROVIDED
CAPACITY PROVIDED = 160 OCC.
CAPACITY REQUIRED = 10 OCC.

EXIT #E9
36" SINGLE SWING - PANIC HDW

32" CLEAR WIDTH PROVIDED
CAPACITY PROVIDED = 160 OCC.
CAPACITY REQUIRED = 44 OCC.

EXIT #E4A & E4B
46" SINGLE SWING - PANIC HDW

42" CLEAR WIDTH PROVIDED
CAPACITY PROVIDED = 210 OCC.
CAPACITY REQUIRED = 67 OCC.

41.75" CLEAR WIDTH PROVIDED
FOR PASSAGE OF BEDS.

EXIT #E3A & #E3B
DOUBLE 36" DOORS - PANIC HDW

64" CLEAR WIDTH PROVIDED
CAPACITY PROVIDED= 320 OCC.
CAPACITY REQUIRED= 73 / 145 OCC.

EXIT #E2
36" SINGLE SWING - PANIC HDW

32" CLEAR WIDTH PROVIDED
CAPACITY PROVIDED = 160 OCC.
CAPACITY REQUIRED = 10 OCC.

EXIT #E1
AUTO BI-PARTING w/BREAK-OUT (INTERIOR AND EXTERIOR)
129" CLEAR WIDTH PROVIDED
WITH 4 PANEL BREAK-OUT
CAPACITY PROVIDED = 645 OCC.
CAPACITY REQUIRED = 345 OCC.
(MAIN EXIT LOAD)

EXIT #E12
36" SINGLE SWING - PANIC HDW

32" CLEAR WIDTH PROVIDED
CAPACITY PROVIDED = 160 OCC.
CAPACITY REQUIRED = 10 OCC.

EXIT #E11A & #E11B
DOUBLE 36" DOORS - PANIC HDW

64" CLEAR WIDTH PROVIDED
CAPACITY PROVIDED= 320 OCC.
CAPACITY REQUIRED= 78 / 122 OCC.

EXIT #E10A & E10B
46" SINGLE SWING - PANIC HDW

42" CLEAR WIDTH PROVIDED
CAPACITY PROVIDED = 210 OCC.
CAPACITY REQUIRED = 42 OCC.

41.75" CLEAR WIDTH PROVIDED
FOR PASSAGE OF BEDS.

BUILDING #3 EAST WING
SKILLED NURSING I-2
CONST: TYPE: IIB SPRINKLERED

NO WORK THIS PROJECT

BUILDING #2 CENTRAL BUILDING
ASSEMBLY OCCUPANCY
CONST: TYPE IIIB SPRINKLERED

COMMUNITY CENTER
RECONSTRUCTION (ALTERATION LEVEL 3)

BUILDING #1 WEST WING
SKILLED NURSING I-2
CONST: TYPE: IIB SPRINKLERED

NO WORK THIS PROJECT

ENTRY CANOPY
NON-COMBUSTIBLE EXTERIOR WALLS, UNRATED
INTERIOR COLUMN, UNRATED (TYPICAL)
EX. PORTE COCHERE
EX. COVERED PATIO
EX. NON-COMBUSTIBLE WALKWAY CANOPYS
DASHED LINE OF EX. ROOF OVERHANG
3-HR FIREWALL
244' EXIT SEPARATION BETWEEN #E1 & #E6
120' (SUITE)
103.6' EXIT SEPARATION
261' (BUILDING DIAG.)
37'-3" TYP. MAX.)
72' EXIT SEPARATION
103.6' EXIT SEPARATION

1 A003 LIFE SAFETY PLAN
Scale: 1/16" = 1'-0"

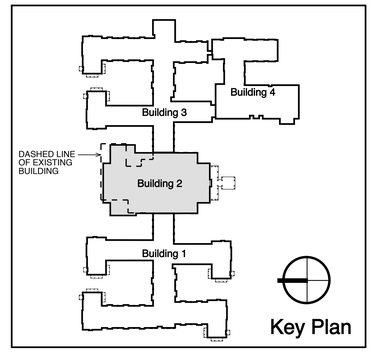

BOWMAN MURRAY HEMINGWAY
ARCHITECTS
514 Market Street
Wilmington, NC 28401
Tel - (910) 762-2621
Fax - (910) 762-8506

BOWMAN MURRAY HEMINGWAY ARCHITECTS, PA — CERT. NO. 50424 — NORTH CAROLINA — WILMINGTON, N. C.

BRUCE F. BOWMAN — REGISTERED ARCHITECT — 5951 — NORTH CAROLINA — WILMINGTON, NC

THE DAVIS COMMUNITY
New Community Center
1101 Porter's Neck Road
Wilmington, North Carolina 28411

REV	DATE	DESCRIPTION

NO.	DATE	ISSUE NOTE

Project Manager: David Ball	Drawn By: Andrew Tyhacz
Date: October 22, 2020	Reviewed By: Bruce Bowman
Project ID	

Project Title
Life Safety Plan

Sheet No.
A003

Legend

- NON-RATED EXIT ACCESS; 5 FT CLEAR WIDTH MAINTAINED
- SMOKE-TIGHT CORRIDORS
- HORIZONTAL EXIT
- 3-HOUR FIRE WALL / FIRE BARRIER
- 2-HOUR FIRE BARRIER
- 1-HOUR FIRE BARRIER
- BUSINESS OCCUPANCY
- ASSEMBLY OCCUPANCY

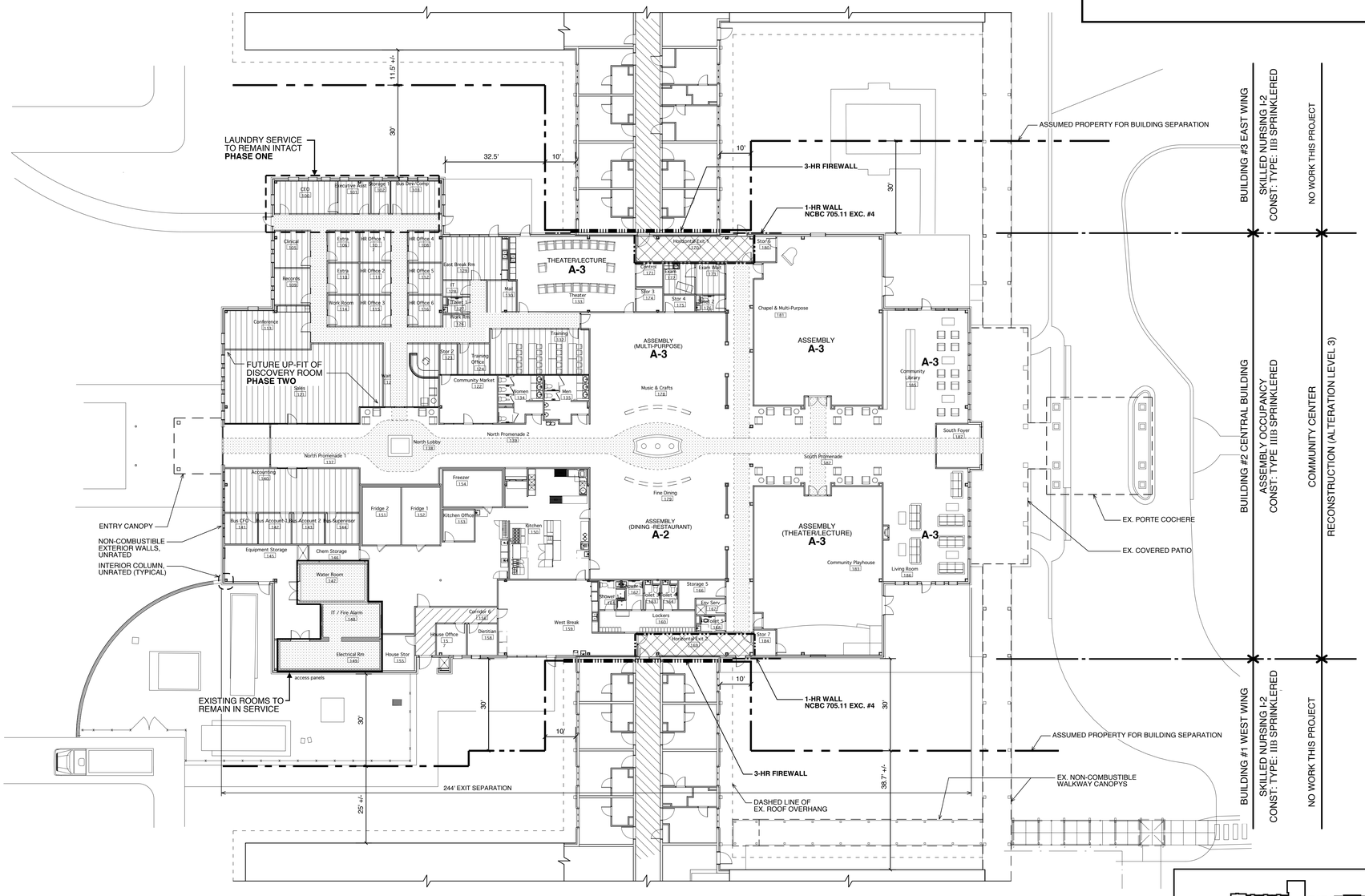

1 / A004 OCCUPANCY & PHASING PLAN
Scale: 1/16" = 1'-0"

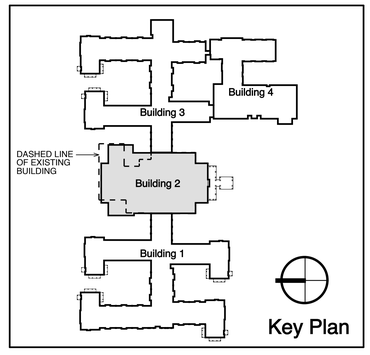

BOWMAN MURRAY HEMINGWAY
ARCHITECTS
514 Market Street
Wilmington, NC 28401
Tel - (910) 762-2621
Fax - (910) 762-8506

BOWMAN MURRAY HEMINGWAY ARCHITECTS, PA — REGISTERED ARCHITECTURAL CORPORATION — CERT. NO. 50424 — NORTH CAROLINA — WILMINGTON, N. C.

BRUCE F. BOWMAN — REGISTERED ARCHITECT — 5951 — NORTH CAROLINA — WILMINGTON, NC

THE DAVIS COMMUNITY
New Community Center

1101 Porter's Neck Road
Wilmington, North Carolina 28411

REV	DATE	DESCRIPTION

NO.	DATE	ISSUE NOTE

Project Manager: David Ball	Drawn By: Andrew Tyhacz
Date: October 22, 2020	Reviewed By: Bruce Bowman
Project ID	

Project Title
Occupancy & Phasing Plan

Sheet No.
A004

TABLE 722.3.2
MINIMUM EQUIVALENT THICKNESS (inches) OF BEARING OR NONBEARING CONCRETE MASONRY WALLS[a,b,c,d]

TYPE OF AGGREGATE	FIRE-RESISTANCE RATING (hours)															
	1/2	3/4	1	1 1/4	1 1/2	1 3/4	2	2 1/4	2 1/2	2 3/4	3	3 1/4	3 1/2	3 3/4	4
Pumice or expanded slag	1.5	1.9	2.1	2.5	2.7	3.0	3.2	3.4	3.6	3.8	4.0	4.2	4.4	4.5	4.7
Expanded shale, clay or slate	1.8	2.2	2.6	2.9	3.3	3.4	3.6	3.8	4.0	4.2	4.4	4.6	4.8	4.9	5.1
Limestone, cinders or unexpanded slag	1.9	2.3	2.7	3.1	3.4	3.7	4.0	4.3	4.5	4.8	5.0	5.2	5.5	5.7	5.9
Calcareous or siliceous gravel	2.0	2.4	2.8	3.2	3.6	3.9	4.2	4.5	4.8	5.0	5.3	5.5	5.8	6.0	6.2

For SI: 1 inch = 25.4 mm.

a. Values between those shown in the table can be determined by direct interpolation.

b. Where combustible members are framed into the wall, the thickness of solid material between the end of each member and the opposite face of the wall, or between members set in from opposite sides, shall be not less than 93 percent of the thickness shown in the table.

c. Requirements of ASTM C55, ASTM C73, ASTM C90 or ASTM C744 shall apply.

d. Minimum required equivalent thickness corresponding to the hourly *fire-resistance rating* for units with a combination of aggregate shall be determined by linear interpolation based on the percent by volume of each aggregate used in manufacture.

2A A005 Rated Concrete Masonry Walls
2018 NCBC Prescriptive

TABLE 722.2.4
MINIMUM DIMENSION OF CONCRETE COLUMNS (inches)

TYPES OF CONCRETE	FIRE-RESISTANCE RATING (hours)				
	1	1 1/2	2[a]	3[a]	4[b]
Siliceous	8	9	10	12	14
Carbonate	8	9	10	11	12
Sand-lightweight	8	8 1/2	9	10 1/2	12

For SI: 1 inch = 25 mm.

a. The minimum dimension is permitted to be reduced to 8 inches for rectangular columns with two parallel sides not less than 36 inches in length.

b. The minimum dimension is permitted to be reduced to 10 inches for rectangular columns with two parallel sides not less than 36 inches in length.

2B A005 Rated Concrete Columns
2018 NCBC Prescriptive

TABLE 722.5.1(7)
MINIMUM COVER (inch) FOR STEEL COLUMNS ENCASED IN NORMAL-WEIGHT CONCRETE[a][FIGURE 722.5.1(6)(c)]

STRUCTURAL SHAPE	FIRE-RESISTANCE RATING (hours)				
	1	1 1/2	2	3	4
W14 × 233	1	1	1	1 1/2	2
× 176					
× 132				2	2 1/2
× 90			1 1/2		
× 61		1 1/2		2 1/2	3
× 48					
× 43					
W12 × 152		1	1	2	2 1/2
× 96					
× 65		1 1/2	1 1/2	2 1/2	3
× 50					
× 40					
W10 × 88	1	1 1/2	1 1/2	2 1/2	3
× 49					
× 45					
× 39					3 1/2
× 33			2	3	
W8 × 67	1	1	1 1/2	2 1/2	3
× 58					
× 48		1 1/2	2	3	3 1/2
× 31					
× 21					4
× 18					
W6 × 25	1	1 1/2	2	3	3 1/2
× 20		2	2[c]	3 1/2	4
× 16					
× 15	1 1/2				
× 9					

For SI: 1 inch = 25.4 mm.

a. The tabulated thicknesses are based upon the assumed properties of normal-weight concrete given in Table 722.5.1(2).

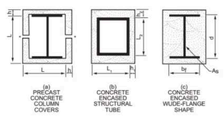
h
L
h
L
h
L
h
h
h

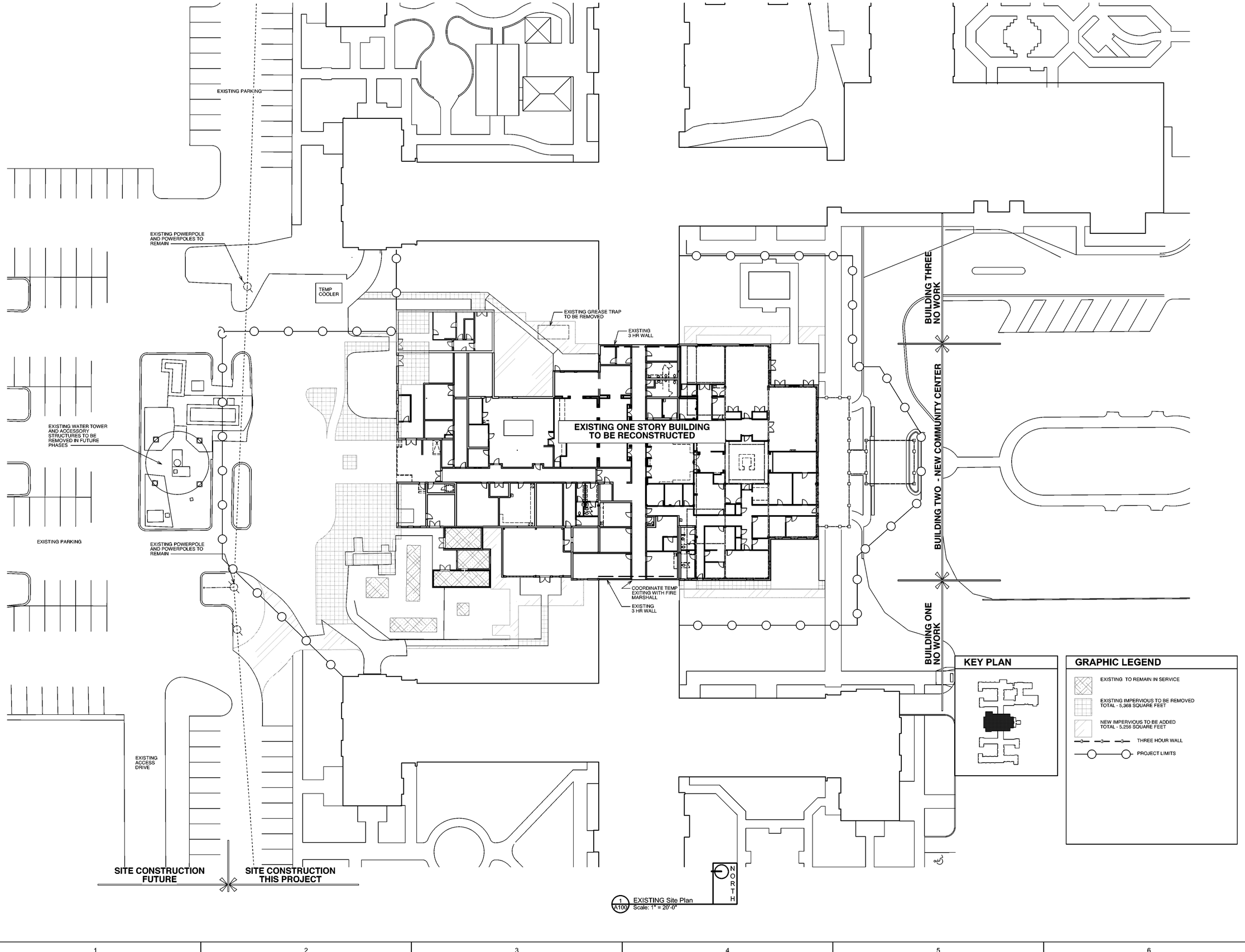

KEY PLAN

GRAPHIC LEGEND

- EXISTING TO REMAIN IN SERVICE
- EXISTING IMPERVIOUS TO BE REMOVED TOTAL - 5,368 SQUARE FEET
- NEW IMPERVIOUS TO BE ADDED TOTAL - 5,256 SQUARE FEET
- THREE HOUR WALL
- PROJECT LIMITS

BOWMAN MURRAY HEMINGWAY
ARCHITECTS
514 Market Street
Wilmington, NC 28401
Tel - (910) 762-2621
Fax - (910) 762-8506

PERMIT DRAWINGS FOR REVIEW ONLY

BOWMAN MURRAY HEMINGWAY ARCHITECTURAL CORPORATION CERT. NO. 50424 NORTH CAROLINA WILMINGTON, N. C.

THE DAVIS COMMUNITY
New Community Center

1011 Porter's Neck Road
Wilmington, North Carolina 28411

REV.	DATE	DESCRIPTION

NO.	DATE	ISSUE NOTE

Project Manager	Drawn By
David Ball	
Date	Reviewed By
October 22, 2020	
Project ID	-

Sheet Title

EXISTING Site Plan

Sheet No.

A100

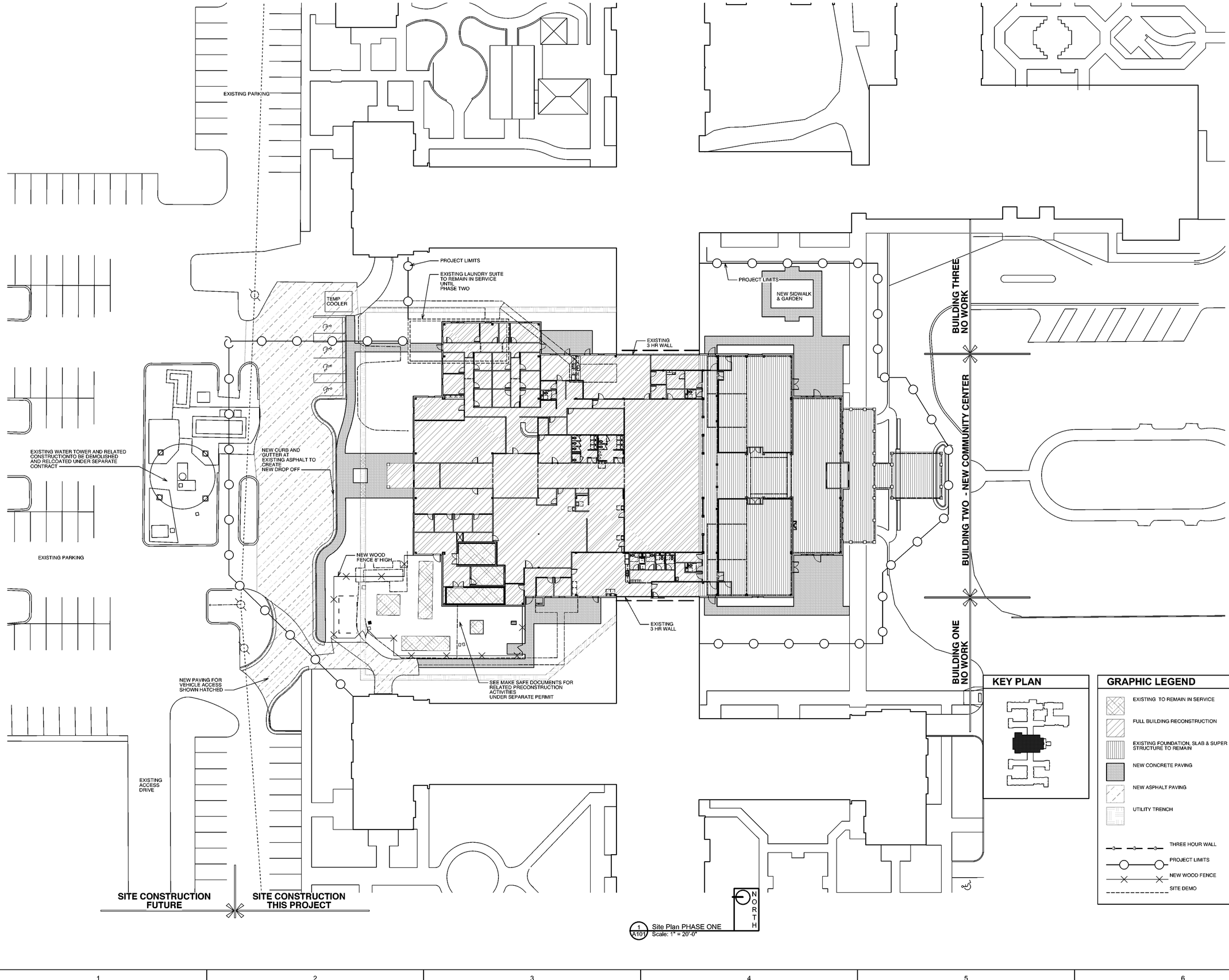

1 A101 Site Plan PHASE ONE
Scale: 1" = 20'-0"

KEY PLAN

GRAPHIC LEGEND

- EXISTING TO REMAIN IN SERVICE
- FULL BUILDING RECONSTRUCTION
- EXISTING FOUNDATION, SLAB & SUPER STRUCTURE TO REMAIN
- NEW CONCRETE PAVING
- NEW ASPHALT PAVING
- UTILITY TRENCH
- THREE HOUR WALL
- PROJECT LIMITS
- NEW WOOD FENCE
- SITE DEMO

BOWMAN MURRAY HEMINGWAY
ARCHITECTS
514 Market Street
Wilmington, NC 28401
Tel - (910) 762-2621
Fax - (910) 762-8506

PERMIT DRAWINGS FOR REVIEW ONLY

BOWMAN MURRAY HEMINGWAY ARCHITECTURAL ASSOCIATES, PA — CERT. NO. 50424 — NORTH CAROLINA — WILMINGTON, N. C.

THE DAVIS COMMUNITY
New Community Center

1011 Porter's Neck Road
Wilmington, North Carolina 28411

REV.	DATE	DESCRIPTION

NO.	DATE	ISSUE NOTE

Project Manager	Drawn By
David Ball	
Date	Reviewed By
October 22, 2020	
Project ID	
-	

Sheet Title

Site Plan PHASE ONE

Sheet No.

A101

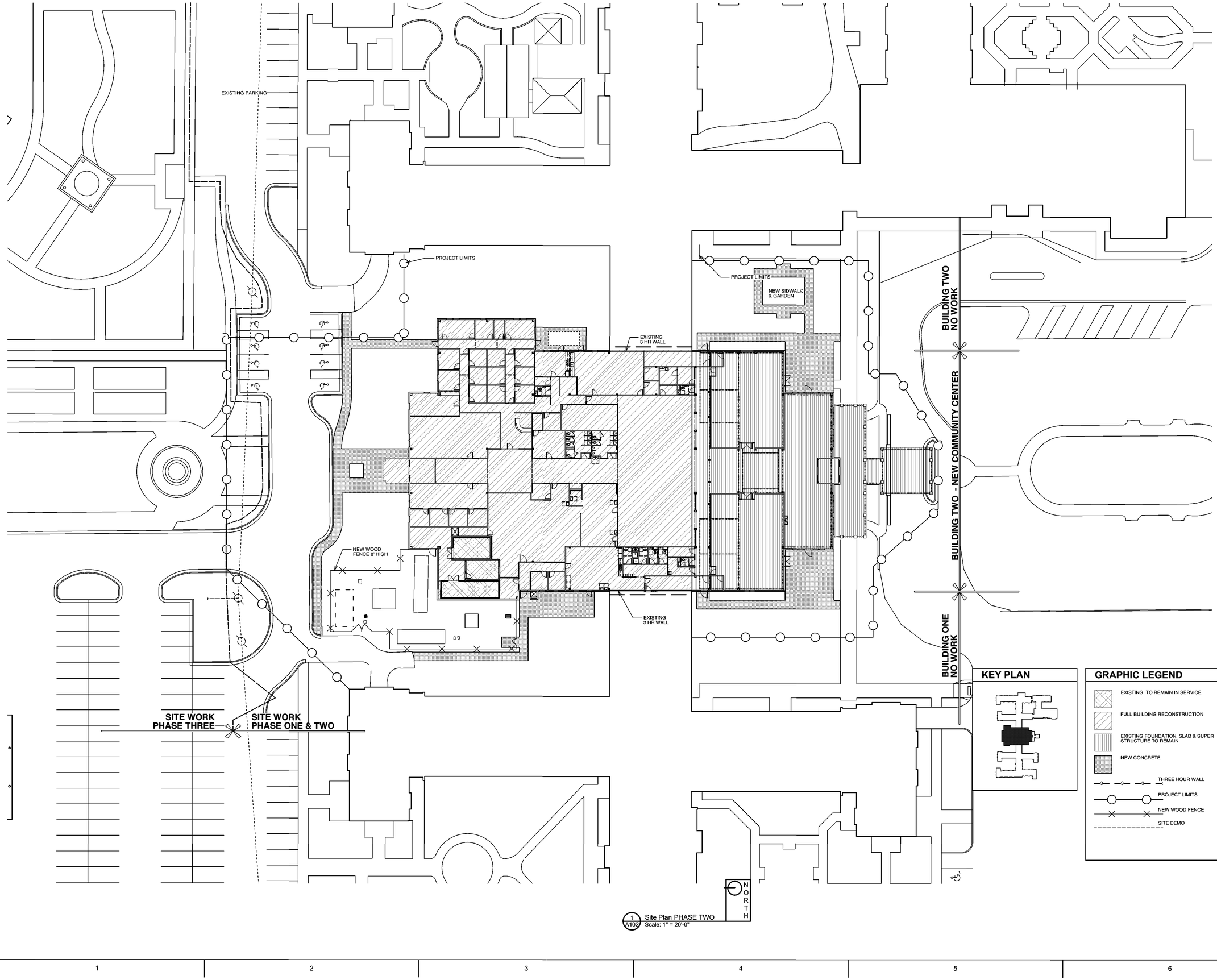

1 A102 Site Plan PHASE TWO
Scale: 1" = 20'-0"

KEY PLAN

GRAPHIC LEGEND

- EXISTING TO REMAIN IN SERVICE
- FULL BUILDING RECONSTRUCTION
- EXISTING FOUNDATION, SLAB & SUPER STRUCTURE TO REMAIN
- NEW CONCRETE
- THREE HOUR WALL
- PROJECT LIMITS
- NEW WOOD FENCE
- SITE DEMO

BOWMAN MURRAY HEMINGWAY
ARCHITECTS
514 Market Street
Wilmington, NC 28401
Tel - (910) 762-2621
Fax - (910) 762-8506

PERMIT DRAWINGS FOR REVIEW ONLY

BOWMAN MURRAY HEMINGWAY ARCHITECTS, PA
CERT. NO. 50424
WILMINGTON, N. C.

THE DAVIS COMMUNITY
New Community Center

1011 Porter's Neck Road
Wilmington, North Carolina 28411

REV.	DATE	DESCRIPTION

NO.	DATE	ISSUE NOTE

Project Manager: David Ball	Drawn By
Date: October 22, 2020	Reviewed By
Project ID: -	

Sheet Title
Site Plan PHASE TWO

Sheet No.
A102

SEE A201 | SEE A202 | EXISTING FOUNDATION, SLAB, AND SUPERSTRUCTURE TO REMAIN

PROJECT LIMITS

DASHED LINE INDICATES LAUNDRY TO REMAIN SEE 2/ A201 FOR PHASE ONE

ASSUMED PROPERTY LINE 30' MINIMUM

NEW SIDWALK & GARDEN

NEW SIDWALK

45 MINUTE DOOR
1 HOUR WALL

2 HOUR WALL

EXISTING 3 HOUR WALL

CHAPEL PATIO

EAST PATIO

WEST PATIO

PATIO GRILL

PROJECT LIMITS

CEO 100
Executive Asst 101
Storage 1 102
Angie's Office 103
Corridor 1 104
Clinical 105
Extra 106
HR Office 1 107
HR Office 4 108
Records 109
Corr 2 117
Extra 110
HR Office 2 111
Corr 3 118
HR Office 5 112
Work Room 114
HR Office 3 115
HR Office 6 116
Conference 113
East Break Rm 129
IT 128
Toilet 127
Corridor 5 131
Mail 130
Theater 133
Control 171
Exam 172
Exam Wait 173
Stor 3 174
Stor 4 175
Toilet 2 176
Stor 6 180
Horizontal Exit 1 170
Chapel / Activity Center 181
Community Library 185
Corridor 4 119
Work Rm 126
Training 132
Stor 2 123
Training Office 124
Waiting 120
Sales 121
Community Market 122
Women 134
Men 135
Music & Crafts 178
North Foyer 136
North Promenade 1 137
North Lobby 138
North Promenade 2 139
South Promenade 182
South Foyer 187
NORTH ENTRY
SOUTH ENTRY
PORTE COCHERE A400
Accounting 140
Kitchen Office 153
DEPRESS SLAB AT WALKIN UNITS
Bus CFO 141
Bus Account 1 142
Bus Account 2 143
Bus Supervisor 144
Freezer 151
Fridge 1 152
Fridge 2 154
Fire Dining 179
Living Room 186
Equipment Storage 145
Chem Storage 146
Kitchen 150
Community Playhouse 183
Water Room 147
EXISTING STRUCTURE SHOWN HATCHED
17' Fire Alarm 148
Showers 162
Toilet 3 163
Toilet 4 164
Storage 5 166
Shower 161
Toilet 5 167
Lockers 160
FOUNTAIN CONTROL
Janitor 168
West Break 159
Corridor 6 156
House Office 157
Dietitian 158
Electrical Rm 149
House Stor 155
Horizontal Exit 2 169
EXISTING 3 HOUR WALL
Stor 7 165
ROOF ACCESS LADDER
EXISTING FUEL TANK
TRASH CORRAL
GREASE INTERCEPTOR
DIESEL GENERATOR #1
EXISTING TRANSFORMER
EXISTING DROP INLET
DIESEL GENERATOR #2
WOOD FENCE, SEE LANDSCAPE PLANS FOR DESIGN & HEIGHT
GREASE DUMPSTER

1 A200 Floor Plan
Scale: 1" = 10'-0"

NORTH

KEY PLAN

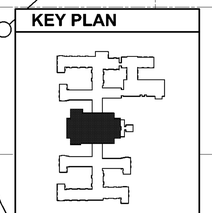

CONSTRUCTION NOTES

1. THE CONTRACTOR IS TO FIELD VERIFY ALL DIMENSIONS AND REPORT ANY DISCREPANCIES TO THE ARCHITECT.
2. ALL DIMENSIONS ARE TO FINISH WALL SURFACE UNLESS NOTED OTHERWISE.
3. THE CONTRACTOR SHALL PROVIDE ALL BLOCKING REQUIRED TO ANCHOR ALL WALL OR CEILING MOUNTED ITEMS, INCLUDING BUT NOT LIMITED TO CASEWORK, MILLWORK, DOORSTOPS, AND EQUIPMENT.
4. THE CONTRACTOR SHALL CONFIRM AND COORDINATE ALL MECHANICAL, ELECTRICAL, AND PLUMBING ITEMS.
5. PROVIDE WALL FURRING AS REQUIRED TO ENCLOSE ANY INCIDENTAL ENGINEERING ELEMENTS NOT SHOWN - SEE ENGINEERING DWGS.
6. WORK SHOWN BEYOND CONTRACTOR LIMITS FOR FULL ACCESS SHALL BE SCHEDULED WITH OWNER INCLUDING TEMPORARY EXITING

GRAPHIC LEGEND

- NEW CONCRETE SIDEWALK
- EXISTING WALL
- NEW WALL
- HALF WALL
- COOLER WALL
- ONE HOUR WALL
- TWO HOUR WALL
- THREE HOUR WALL
- PROJECT LIMITS
- NEW WOOD FENCE
- 123 ROOM IDENTIFICATION
- F.E.C. FIRE EXTINGUISHER CABINET
- DOOR REFERENCE NUMBER
- AREA OF DEPRESSED SLAB
- EXISTING SLAB TO REMAIN
- MAINTAIN EGRESS PATHS FOR CLEAR TRAVEL

BOWMAN MURRAY HEMINGWAY
ARCHITECTS
514 Market Street
Wilmington, NC 28401
Tel - (910) 762-2621
Fax - (910) 762-8506

PERMIT DRAWINGS FOR REVIEW ONLY

BOWMAN MURRAY HEMINGWAY ARCHITECTS, PA ARCHITECTURAL CORPORATION CERT. NO. 50424 NORTH CAROLINA WILMINGTON, N. C.

THE DAVIS COMMUNITY
New Community Center

1011 Porter's Neck Road
Wilmington, North Carolina 28411

REV.	DATE	DESCRIPTION

NO.	DATE	ISSUE NOTE

Project Manager: David Ball	Drawn By: David Ball
Date: October 22, 2020	Reviewed By: Bruce Bowman
Project ID: -	

Sheet Title: **Floor Plans**

Sheet No.: A200

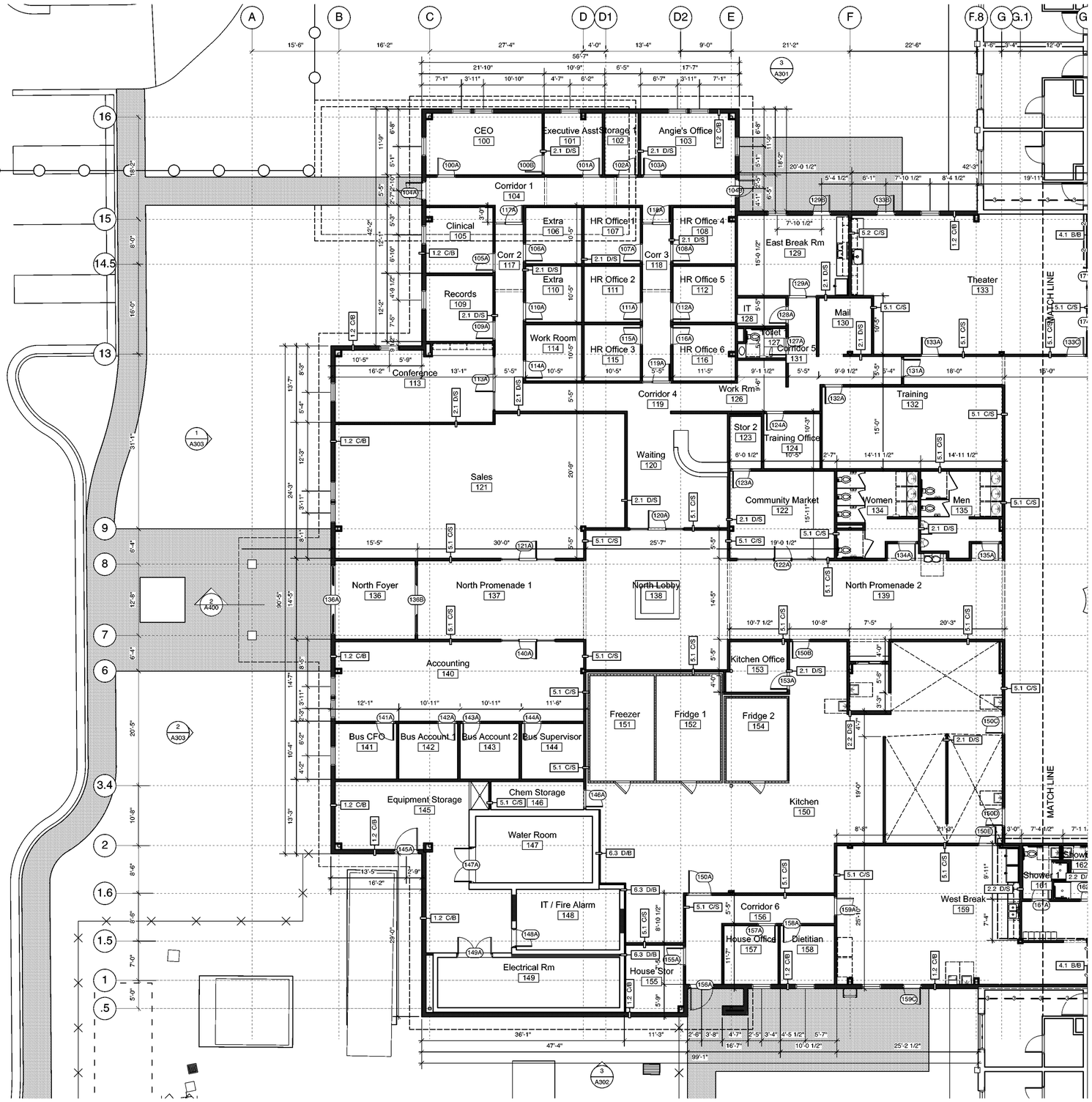

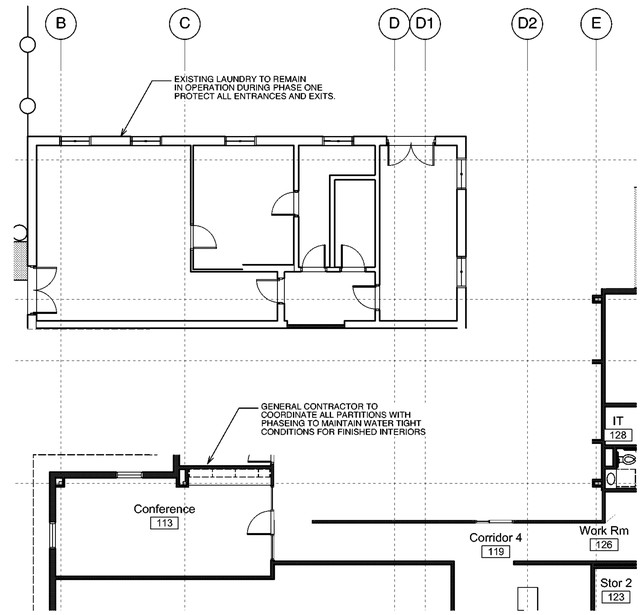

2 A201 Phase One Pre Laundry Demo
Scale: 1/8" = 1'-0"

1 A201 Enlarged Floor Plan
Scale: 1/8" = 1'-0"

CONSTRUCTION NOTES

1. THE CONTRACTOR IS TO FIELD VERIFY ALL DIMENSIONS AND REPORT ANY DISCREPANCIES TO THE ARCHITECT.
2. ALL DIMENSIONS ARE TO FINISH WALL SURFACE UNLESS NOTED OTHERWISE.
3. THE CONTRACTOR SHALL PROVIDE ALL BLOCKING REQUIRED TO ANCHOR ALL WALL OR CEILING MOUNTED ITEMS, INCLUDING BUT NOT LIMITED TO CASEWORK, MILLWORK, DOORSTOPS, AND EQUIPMENT.
4. THE CONTRACTOR SHALL CONFIRM AND COORDINATE ALL MECHANICAL, ELECTRICAL, AND PLUMBING ITEMS.
5. PROVIDE WALL FURRING AS REQUIRED TO ENCLOSE ANY INCIDENTAL ENGINEERING ELEMENTS NOT SHOWN - SEE ENGINEERING DWGS.
6. WORK SHOWN BEYOND CONTRACTOR LIMITS FOR FULL ACCESS SHALL BE SCHEDULED WITH OWNER INCLUDING TEMPORARY EXITING

KEY PLAN

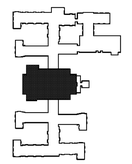

GRAPHIC LEGEND

- NEW CONCRETE SIDEWALK
- EXISTING WALL
- NEW WALL
- HALF WALL
- COOLER WALL
- ONE HOUR WALL
- TWO HOUR WALL
- THREE HOUR WALL
- PROJECT LIMITS
- NEW WOOD FENCE
- 123 ROOM IDENTIFICATION
- F.E.C. FIRE EXTINGUISHER CABINET
- 149A DOOR REFERENCE NUMBER
- 6.3 B/S WALL DATA TAG SEE A701 ** WALLS WITH OUT DATA TAGS TO BE 2.1 D/S WALLS TYPE

BOWMAN MURRAY HEMINGWAY
ARCHITECTS
514 Market Street
Wilmington, NC 28401
Tel - (910) 762-2621
Fax - (910) 762-8506

PERMIT DRAWINGS FOR REVIEW ONLY

BOWMAN MURRAY HEMINGWAY ARCHITECTS CERT. NO. 50424 NORTH CAROLINA WILMINGTON, N. C.

THE DAVIS COMMUNITY
New Community Center
1011 Porter's Neck Road
Wilmington, North Carolina 28411

REV.	DATE	DESCRIPTION

NO.	DATE	ISSUE NOTE

Project Manager: David Ball	Drawn By: David Ball
Date: October 22, 2020	Reviewed By: Bruce Bowman
Project ID: -	

Sheet Title: **Enlarged Floor Plan**

Sheet No.: A201

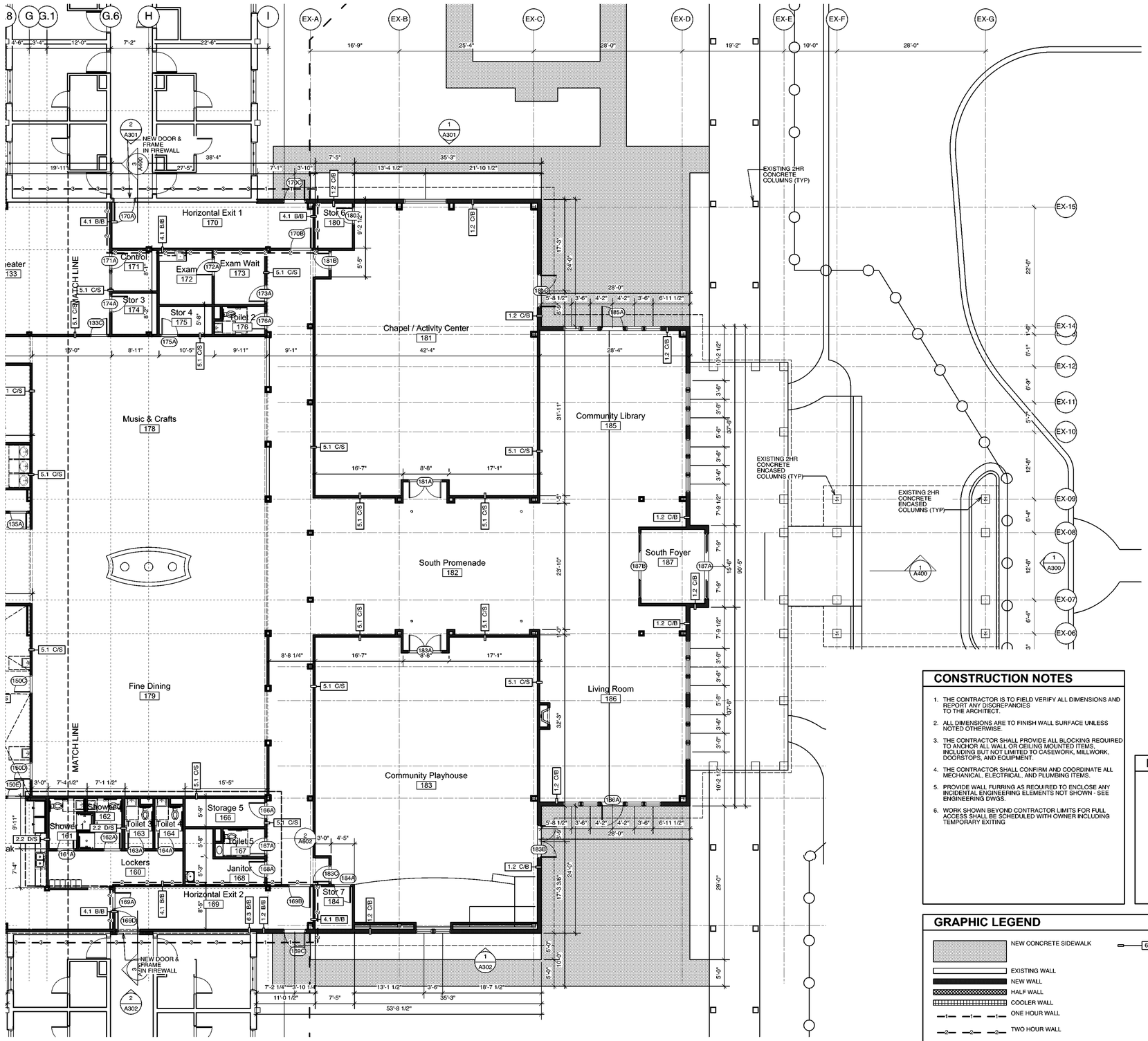

1 A202 Enlarged Floor Plan
Scale: 1/8" = 1'-0"

CONSTRUCTION NOTES

1. THE CONTRACTOR IS TO FIELD VERIFY ALL DIMENSIONS AND REPORT ANY DISCREPANCIES TO THE ARCHITECT.
2. ALL DIMENSIONS ARE TO FINISH WALL SURFACE UNLESS NOTED OTHERWISE.
3. THE CONTRACTOR SHALL PROVIDE ALL BLOCKING REQUIRED TO ANCHOR ALL WALL OR CEILING MOUNTED ITEMS, INCLUDING BUT NOT LIMITED TO CASEWORK, MILLWORK, DOORSTOPS, AND EQUIPMENT.
4. THE CONTRACTOR SHALL CONFIRM AND COORDINATE ALL MECHANICAL, ELECTRICAL, AND PLUMBING ITEMS.
5. PROVIDE WALL FURRING AS REQUIRED TO ENCLOSE ANY INCIDENTAL ENGINEERING ELEMENTS NOT SHOWN - SEE ENGINEERING DWGS.
6. WORK SHOWN BEYOND CONTRACTOR LIMITS FOR FULL ACCESS SHALL BE SCHEDULED WITH OWNER INCLUDING TEMPORARY EXITING

KEY PLAN

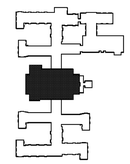

GRAPHIC LEGEND

- NEW CONCRETE SIDEWALK
- EXISTING WALL
- NEW WALL
- HALF WALL
- COOLER WALL
- ONE HOUR WALL
- TWO HOUR WALL
- THREE HOUR WALL
- PROJECT LIMITS
- NEW WOOD FENCE
- 123 — ROOM IDENTIFICATION
- F.E.C. — FIRE EXTINGUISHER CABINET
- 149A — DOOR REFERENCE NUMBER
- 6.3 B/S — WALL DATA TAG SEE A701 ** WALLS WITH OUT DATA TAGS TO BE 2.1 D/S WALLS TYPE

BOWMAN MURRAY HEMINGWAY
ARCHITECTS
514 Market Street
Wilmington, NC 28401
Tel - (910) 762-2621
Fax - (910) 762-8506

PERMIT DRAWINGS FOR REVIEW ONLY

BOWMAN MURRAY HEMINGWAY ARCHITECTURAL ASSOCIATES PLLC — CERT. NO. 50424 — NORTH CAROLINA — WILMINGTON, N. C.

THE DAVIS COMMUNITY
New Community Center

1011 Porter's Neck Road
Wilmington, North Carolina 28411

REV.	DATE	DESCRIPTION

NO.	DATE	ISSUE NOTE

Project Manager	Drawn By
David Ball	David Ball
Date	Reviewed By
October 22, 2020	Bruce Bowman
Project ID	
-	

Sheet Title
Enlarged Floor Plan

Sheet No.
A202

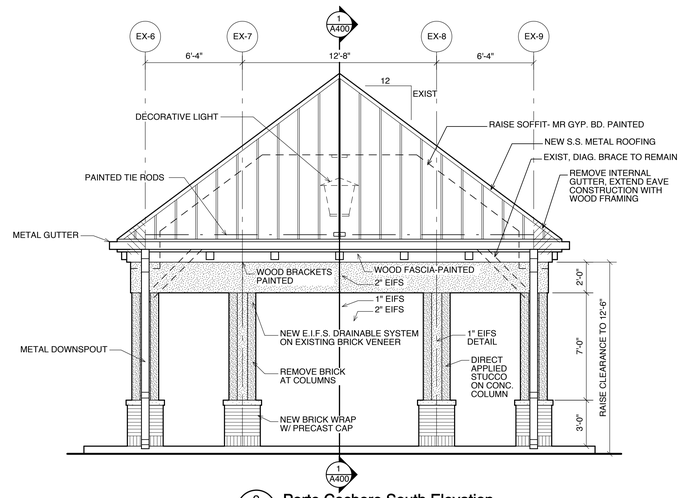

2 A300 Porte Cochere South Elevation
Scale: 1/4" = 1'-0"

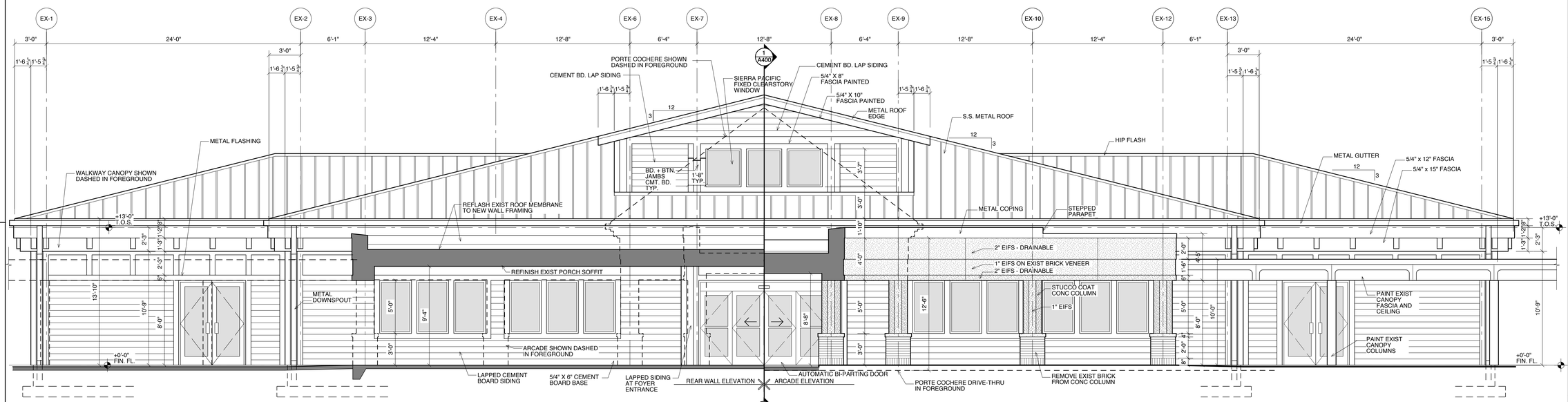

1 A300 South Elevation
Scale: 1/4" = 1'-0"

BOWMAN MURRAY HEMINGWAY
ARCHITECTS
514 Market Street
Wilmington, NC 28401
Tel - (910) 762-2621
Fax - (910) 762-8506

PERMIT DRAWING 5951 FOR REVIEW ONLY

BOWMAN, MURRAY, HEMINGWAY ARCHITECTS, P.A. REGISTERED ARCHITECTURAL CORPORATION NORTH CAROLINA WILMINGTON, N.C. CERT. NO. 50424

THE DAVIS COMMUNITY
New Community Center

1101 Porter's Neck Road
Wilmington, North Carolina 28411

REV	DATE	DESCRIPTION

NO.	DATE	ISSUE NOTE

Project Manager: David Ball	Drawn By: Anthony Watson
Date: October 22, 2020	Reviewed By: Bruce Bowman
Project ID	

Project Title

South Elevations

Sheet No.

A300

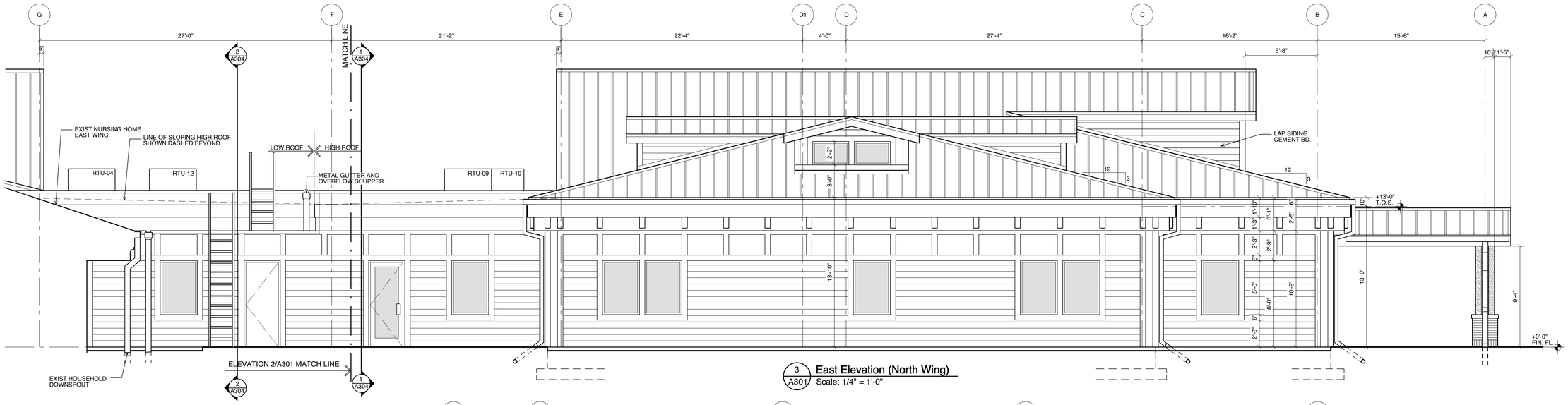

3 A301 **East Elevation (North Wing)**
Scale: 1/4" = 1'-0"

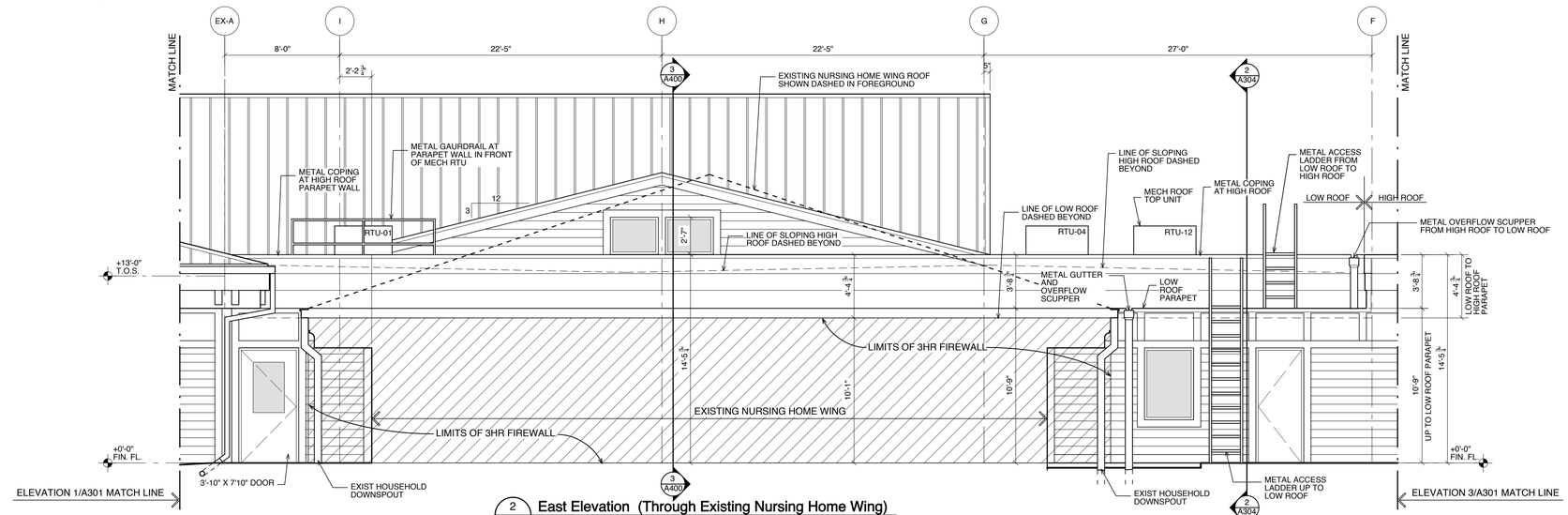

2 A301 **East Elevation (Through Existing Nursing Home Wing)**
Scale: 1/4" = 1'-0"

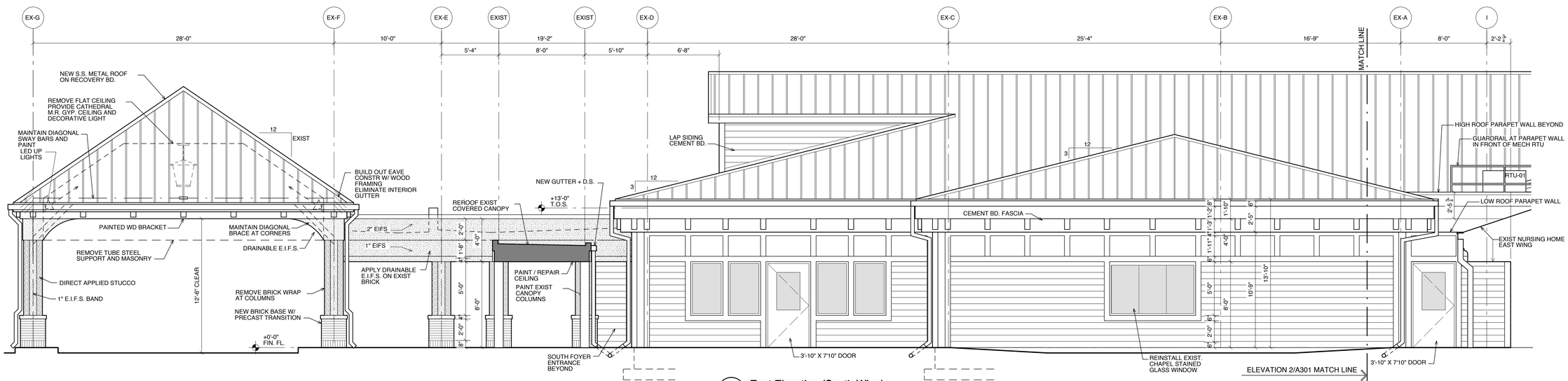

1 A301 **East Elevation (South Wing)**
Scale: 1/4" = 1'-0"

BOWMAN MURRAY HEMINGWAY
ARCHITECTS
514 Market Street
Wilmington, NC 28401
Tel - (910) 762-2621
Fax - (910) 762-8506

PERMIT DRAWING 5951 FOR REVIEW ONLY — NOT FOR CONSTRUCTION

BOWMAN, MURRAY, HEMINGWAY, ARCHITECTS, P.A. — REGISTERED ARCHITECTURAL CORPORATION — NORTH CAROLINA — CERT. NO. 50424 — WILMINGTON, N.C.

THE DAVIS COMMUNITY
New Community Center
1101 Porter's Neck Road
Wilmington, North Carolina 28411

REV	DATE	DESCRIPTION

NO.	DATE	ISSUE NOTE

Project Manager: David Ball	Drawn By: Anthony Watson
Date: October 22, 2020	Reviewed By: Bruce Bowman
Project ID	

Project Title
East Elevations

Sheet No.
A301

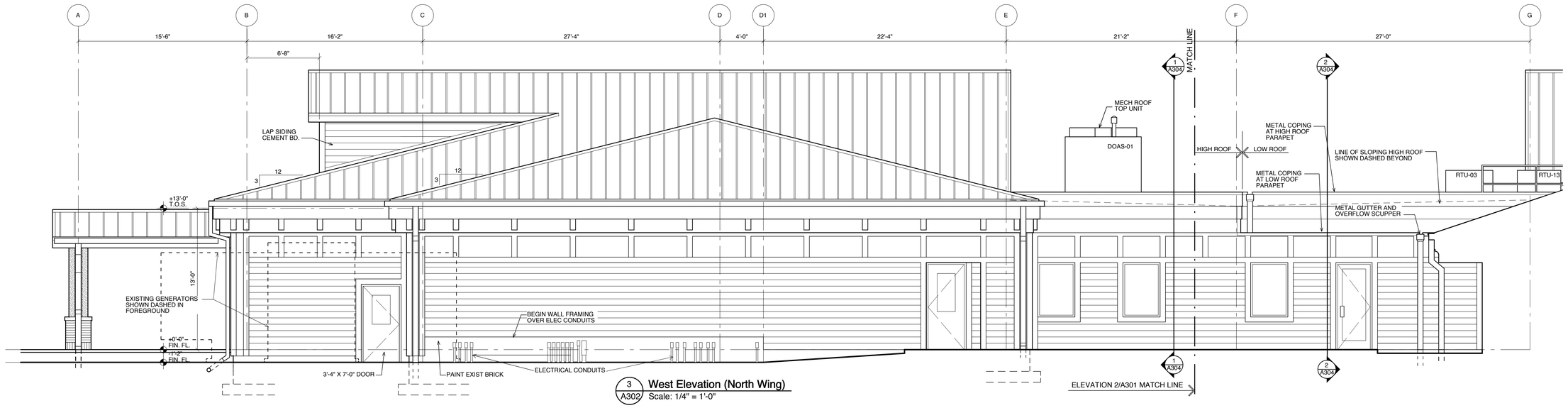

3 A302 **West Elevation (North Wing)**
Scale: 1/4" = 1'-0"

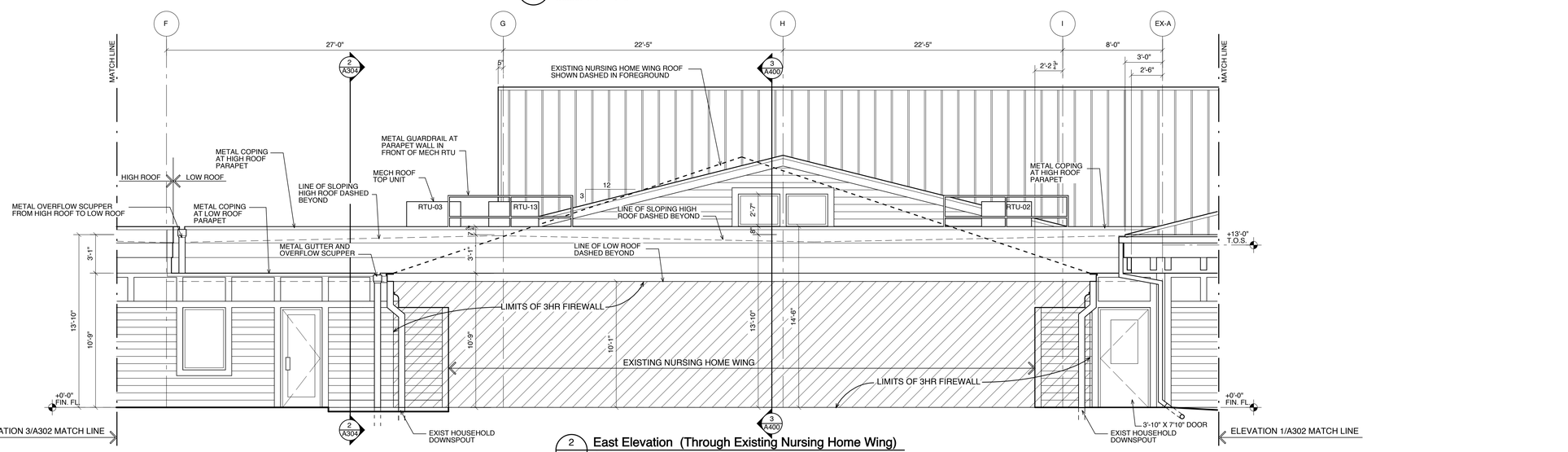

2 A302 **East Elevation (Through Existing Nursing Home Wing)**
Scale: 1/4" = 1'-0"

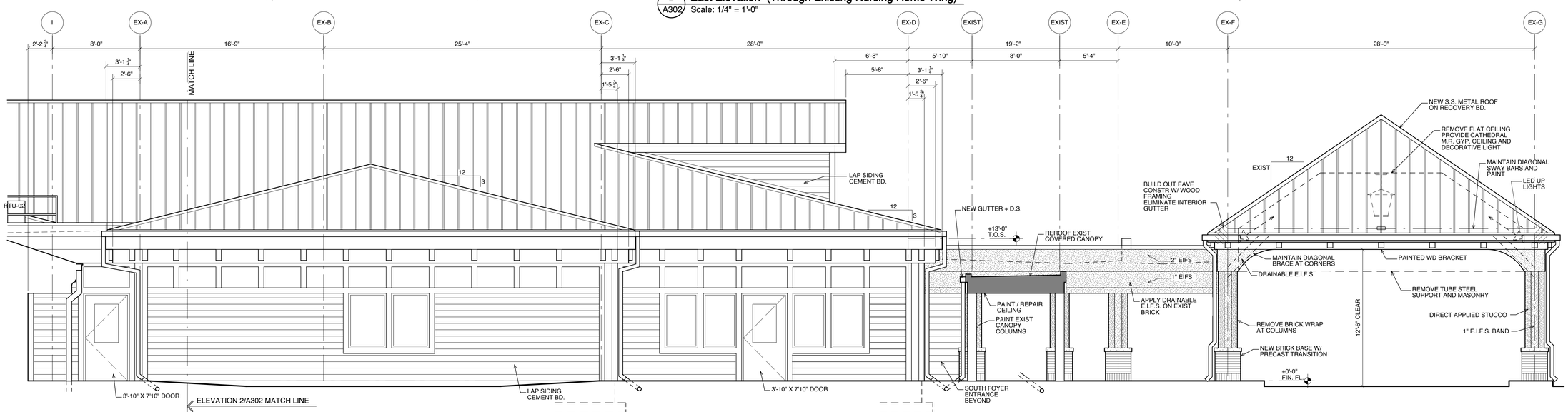

1 A302 **West Elevation (South Wing)**
Scale: 1/4" = 1'-0"

BOWMAN MURRAY HEMINGWAY
ARCHITECTS
514 Market Street
Wilmington, NC 28401
Tel - (910) 762-2621
Fax - (910) 762-8506

PERMIT DRAWING 5951 FOR REVIEW ONLY
BOWMAN MURRAY HEMINGWAY ARCHITECTS CO.

BOWMAN MURRAY HEMINGWAY ARCHITECTS CO. CERT. NO. 50424 NORTH CAROLINA WILMINGTON, N.C.

THE DAVIS COMMUNITY
New Community Center
1101 Porter's Neck Road
Wilmington, North Carolina 28411

REV	DATE	DESCRIPTION

NO.	DATE	ISSUE NOTE

Project Manager: David Ball	Drawn By: Anthony Watson
Date: October 22, 2020	Reviewed By: Bruce Bowman
Project ID	

Project Title

West Elevations

Sheet No.

A302

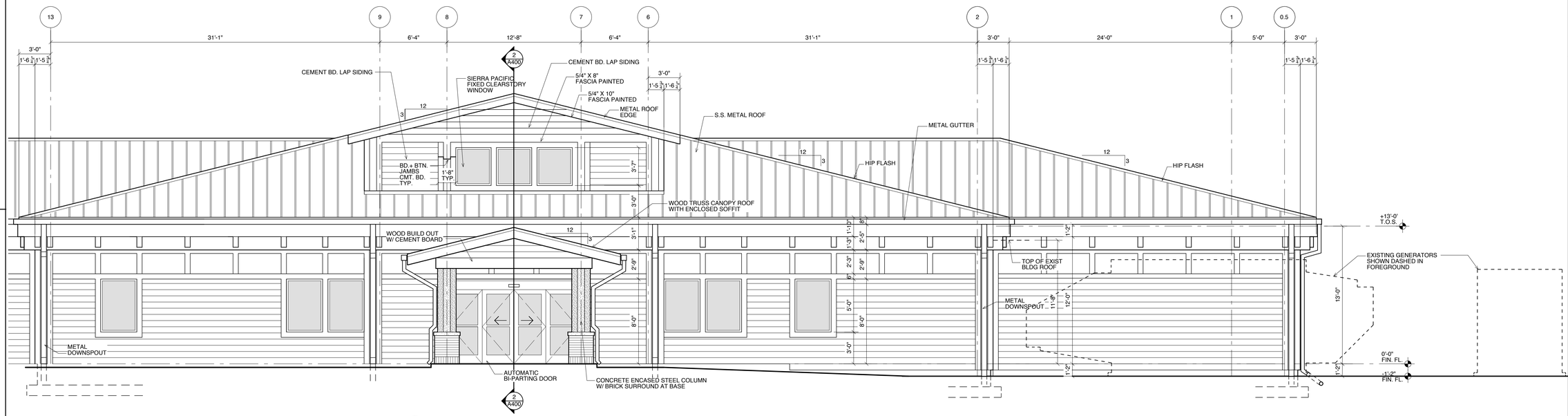

2 A303 North Elevation (With Covered Entry)
Scale: 1/4" = 1'-0"

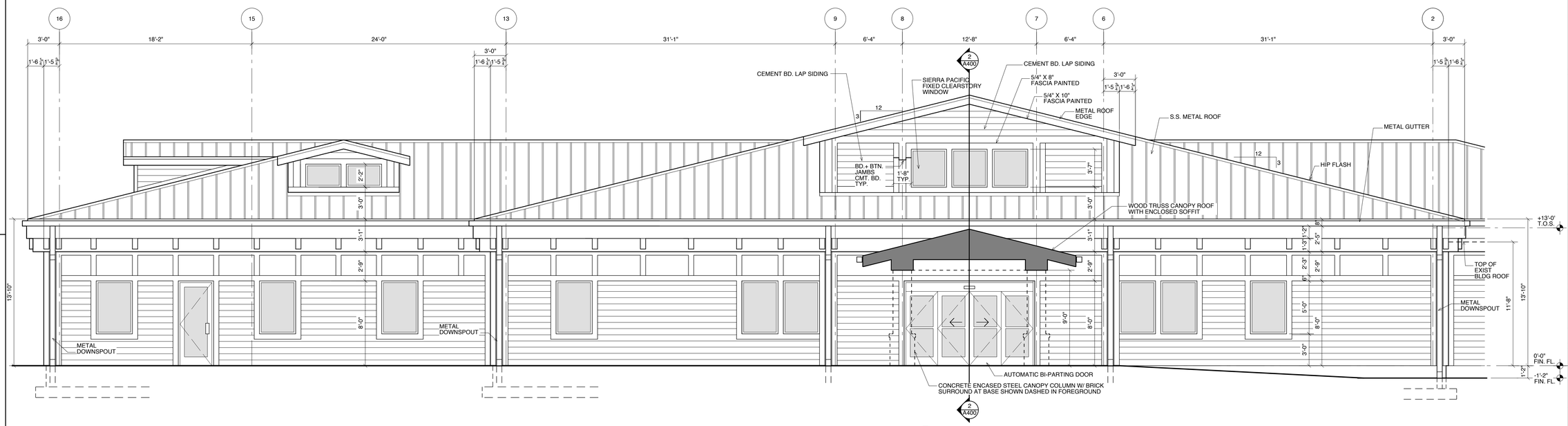

1 A303 North Elevation
Scale: 1/4" = 1'-0"

BOWMAN MURRAY HEMINGWAY
ARCHITECTS
514 Market Street
Wilmington, NC 28401
Tel - (910) 762-2621
Fax - (910) 762-8506

PERMIT DRAWING 5951 FOR REVIEW ONLY

BOWMAN, MURRAY, HEMINGWAY, ARCHITECTS, CO. REGISTERED ARCHITECTURAL CORPORATION NORTH CAROLINA WILMINGTON, N.C. CERT. NO. 50424

THE DAVIS COMMUNITY
New Community Center
1101 Porter's Neck Road
Wilmington, North Carolina 28411

REV	DATE	DESCRIPTION

NO.	DATE	ISSUE NOTE

Project Manager: David Ball	Drawn By: Anthony Watson
Date: October 22, 2020	Reviewed By: Bruce Bowman
Project ID	

Project Title
North Elevations

Sheet No.
A303

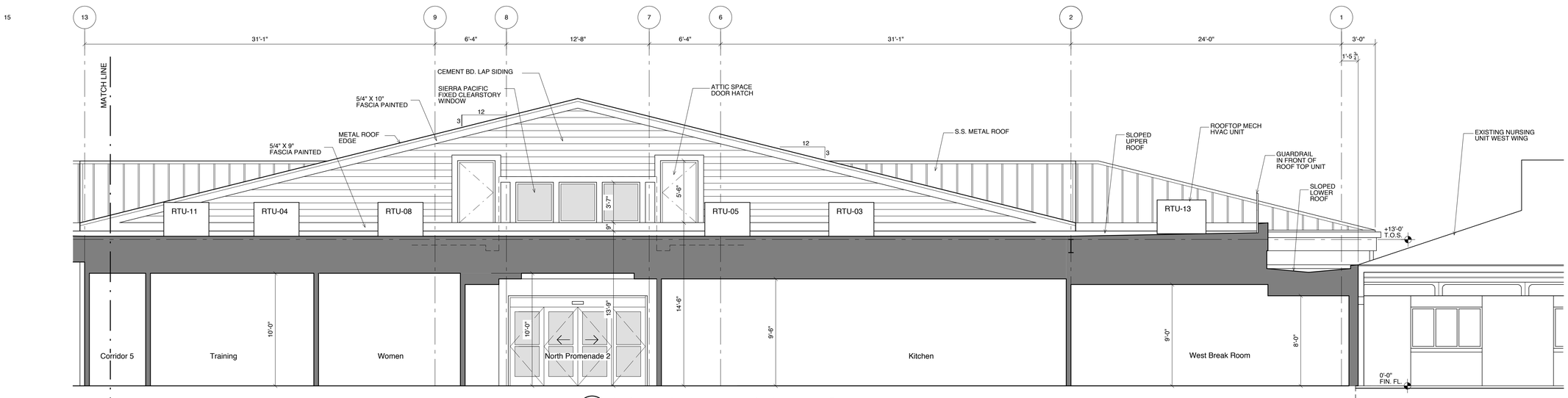

ELEVATION 2/A304 MATCH LINE

2 A304 **North Elevation Through North Promenade 2**
Scale: 1/4" = 1'-0"

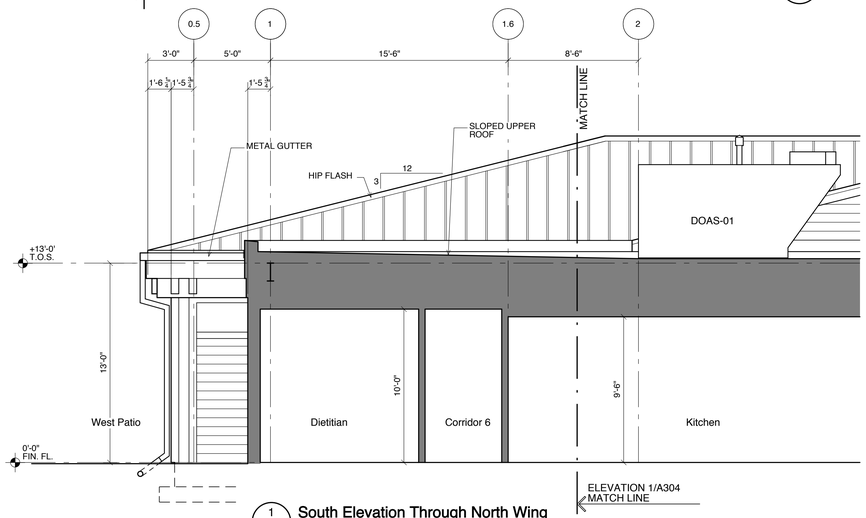

ELEVATION 1/A304 MATCH LINE

1 A304 **South Elevation Through North Wing**
Scale: 1/4" = 1'-0"

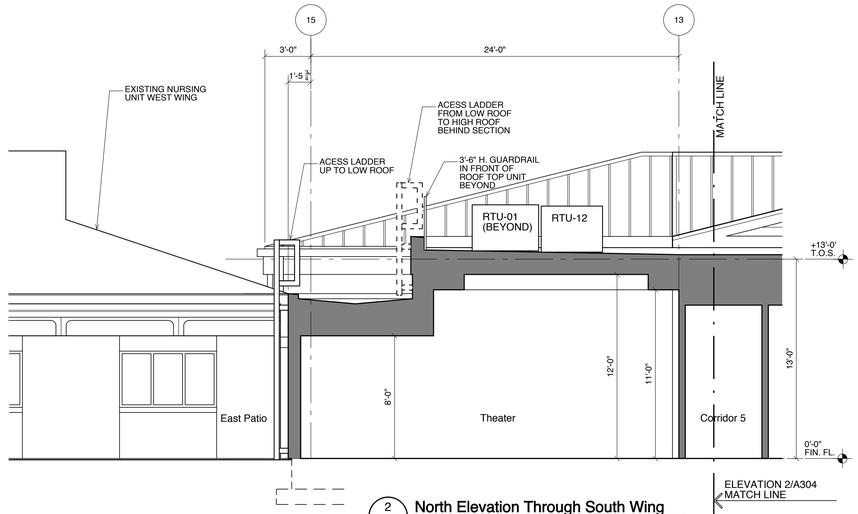

ELEVATION 2/A304 MATCH LINE

2 A304 **North Elevation Through South Wing**
Scale: 1/4" = 1'-0"

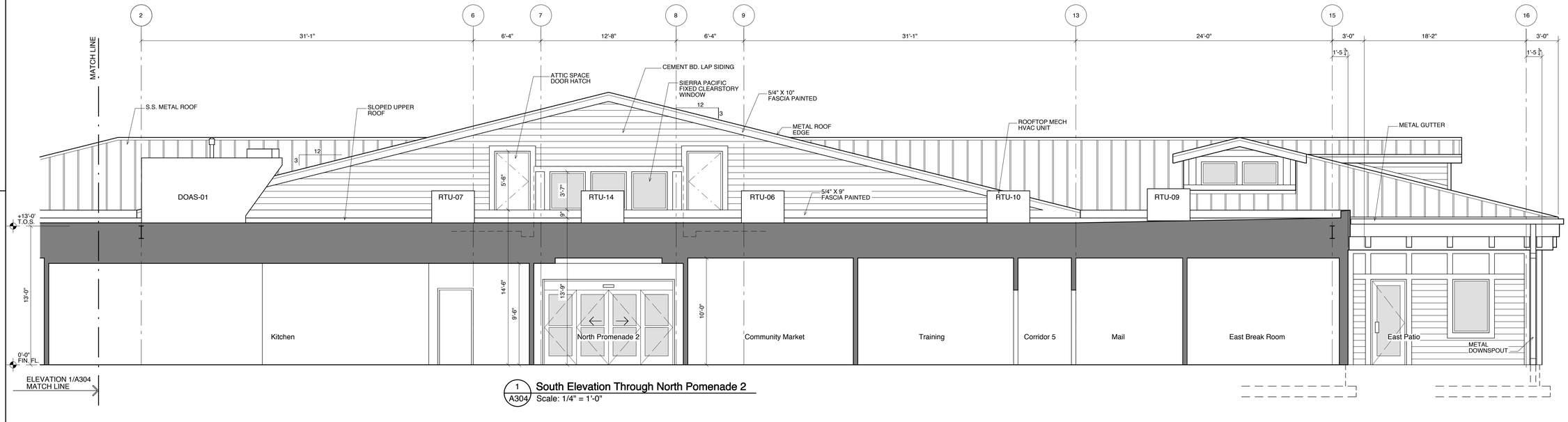

ELEVATION 1/A304 MATCH LINE

1 A304 **South Elevation Through North Pomenade 2**
Scale: 1/4" = 1'-0"

BOWMAN MURRAY HEMINGWAY
ARCHITECTS
514 Market Street
Wilmington, NC 28401
Tel - (910) 762-2621
Fax - (910) 762-8506

PERMIT DRAWING 5951 FOR REVIEW ONLY

BOWMAN MURRAY HEMINGWAY ARCHITECTS CO. REGISTERED ARCHITECTURAL CORPORATION NORTH CAROLINA WILMINGTON, N. C. CERT. NO. 50424

THE DAVIS COMMUNITY
New Community Center
1101 Porter's Neck Road
Wilmington, North Carolina 28411

REV	DATE	DESCRIPTION

NO.	DATE	ISSUE NOTE

Project Manager: David Ball	Drawn By: Anthony Watson
Date: October 22, 2020	Reviewed By: Bruce Bowman
Project ID	

Project Title

North Promenade 2 Elevations

Sheet No.

A304

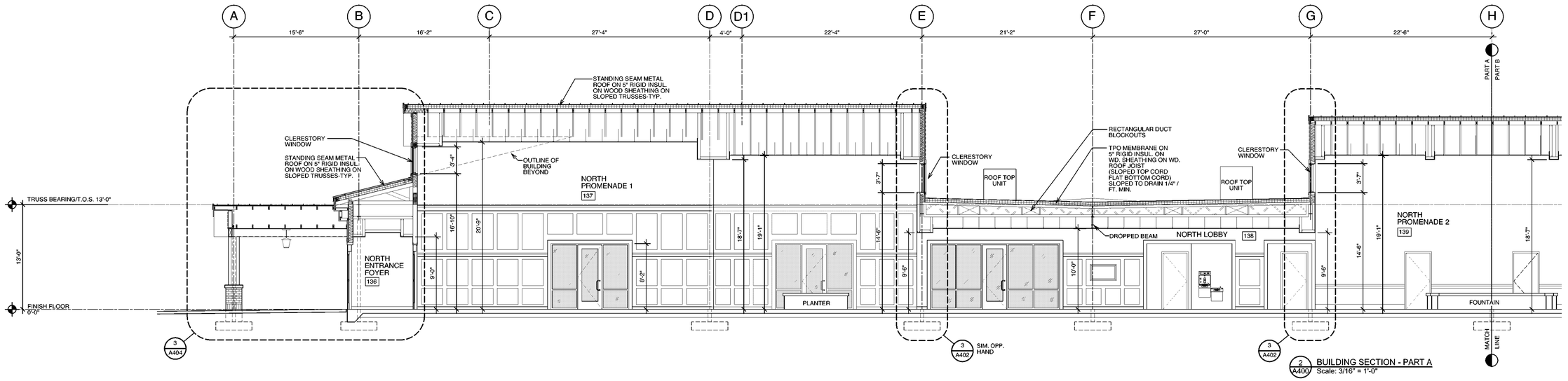

BOWMAN MURRAY HEMINGWAY
ARCHITECTS
514 Market Street
Wilmington, NC 28401
Tel - (910) 762-2621
Fax - (910) 762-8506

PERMIT DRAWINGS FOR REVIEW ONLY

BOWMAN, MURRAY, HEMINGWAY, ARCHITECTS, P.A. CERT. NO. 50424 WILMINGTON, N. C.

THE DAVIS COMMUNITY
New Community Center

1011 Porter's Neck Road
Wilmington, North Carolina 28411

REV.	DATE	DESCRIPTION

NO.	DATE	ISSUE NOTE

Project Manager: David Ball	Drawn By: DP
Date: October 22, 2020	Reviewed By: Bruce Bowman
Project ID: -	

Sheet Title
Building Sections

Sheet No.
A400

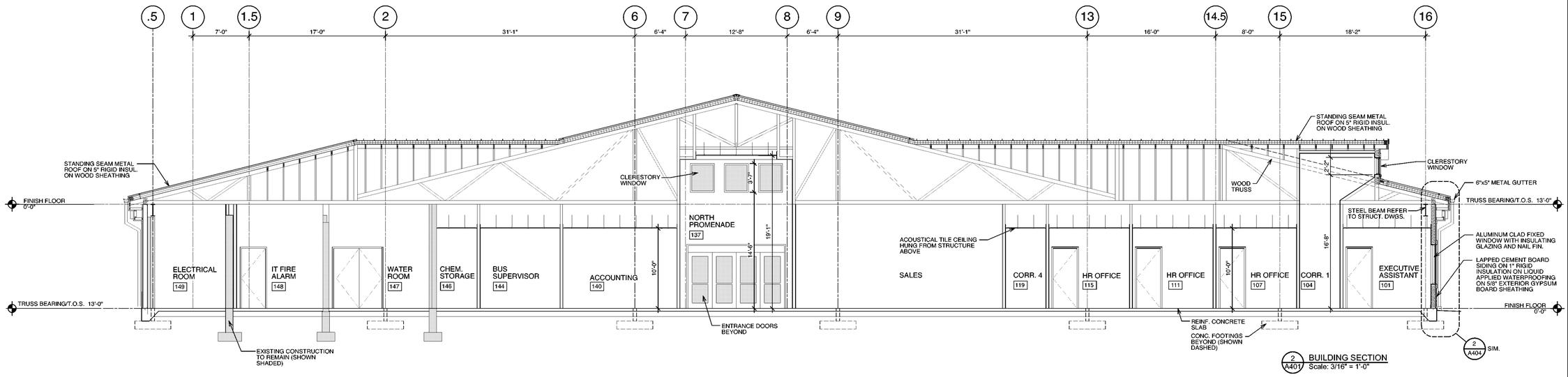

2 A401 BUILDING SECTION
Scale: 3/16" = 1'-0"

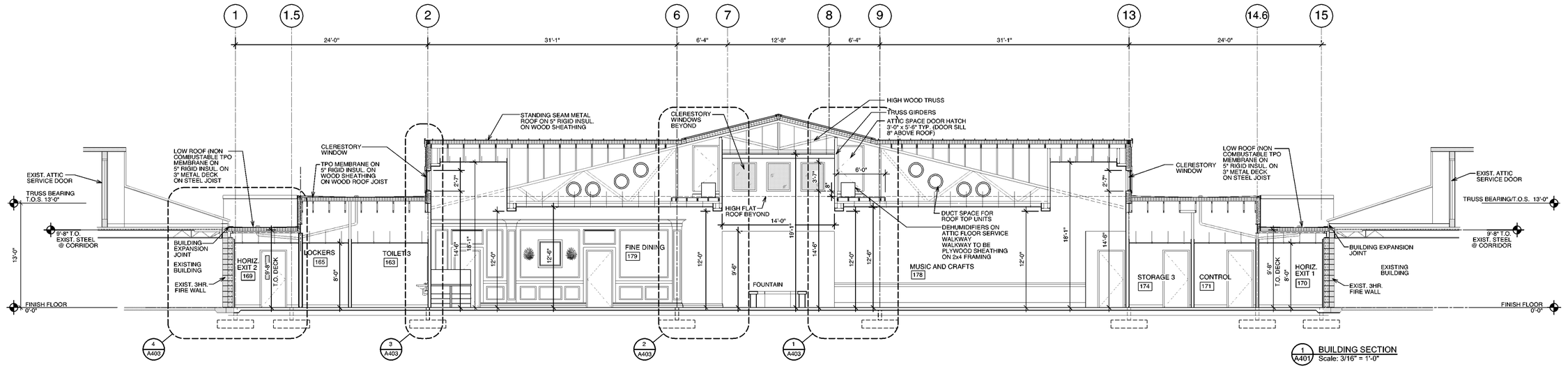

1 A401 BUILDING SECTION
Scale: 3/16" = 1'-0"

BOWMAN MURRAY HEMINGWAY
ARCHITECTS
514 Market Street
Wilmington, NC 28401
Tel - (910) 762-2621
Fax - (910) 762-8506

PERMIT DRAWINGS FOR REVIEW ONLY

BOWMAN, MURRAY, HEMINGWAY, ARCHITECTS, P.A. CERT. NO. 50424 WILMINGTON, N. C.

THE DAVIS COMMUNITY
New Community Center

1011 Porter's Neck Road
Wilmington, North Carolina 28411

REV.	DATE	DESCRIPTION

NO.	DATE	ISSUE NOTE

Project Manager	Drawn By
David Ball	DP
Date	Reviewed By
October 22, 2020	Bruce Bowman
Project ID	
-	

Sheet Title

Building Sections

Sheet No.

A401

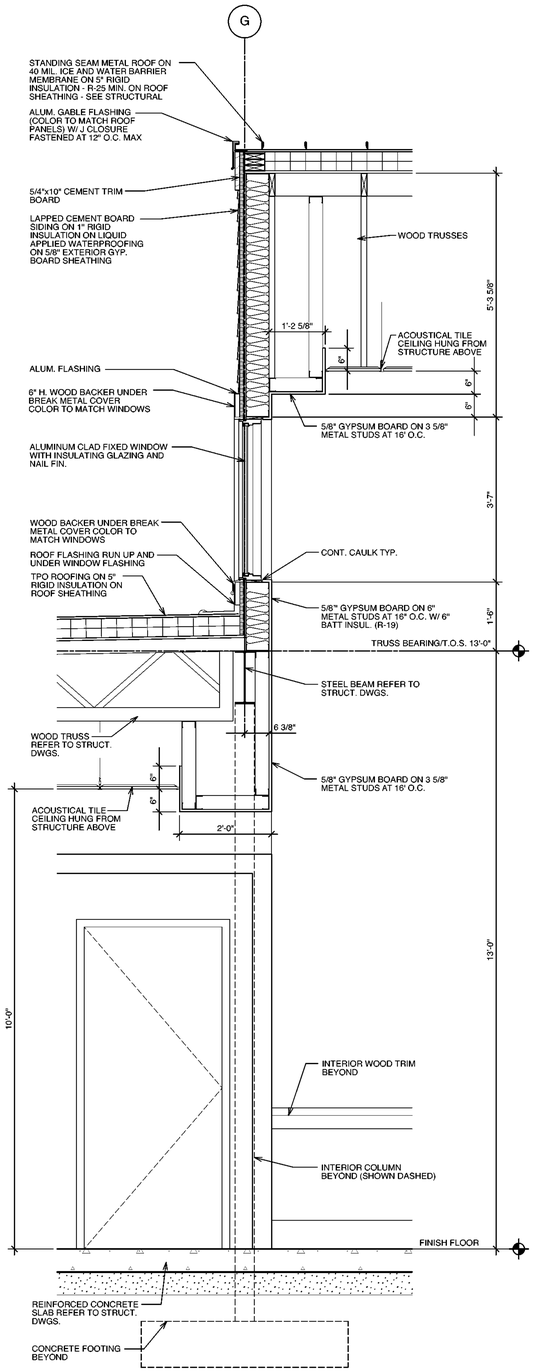

3 A402 ENLARGED SECTION
Scale: 3/4" = 1'-0"

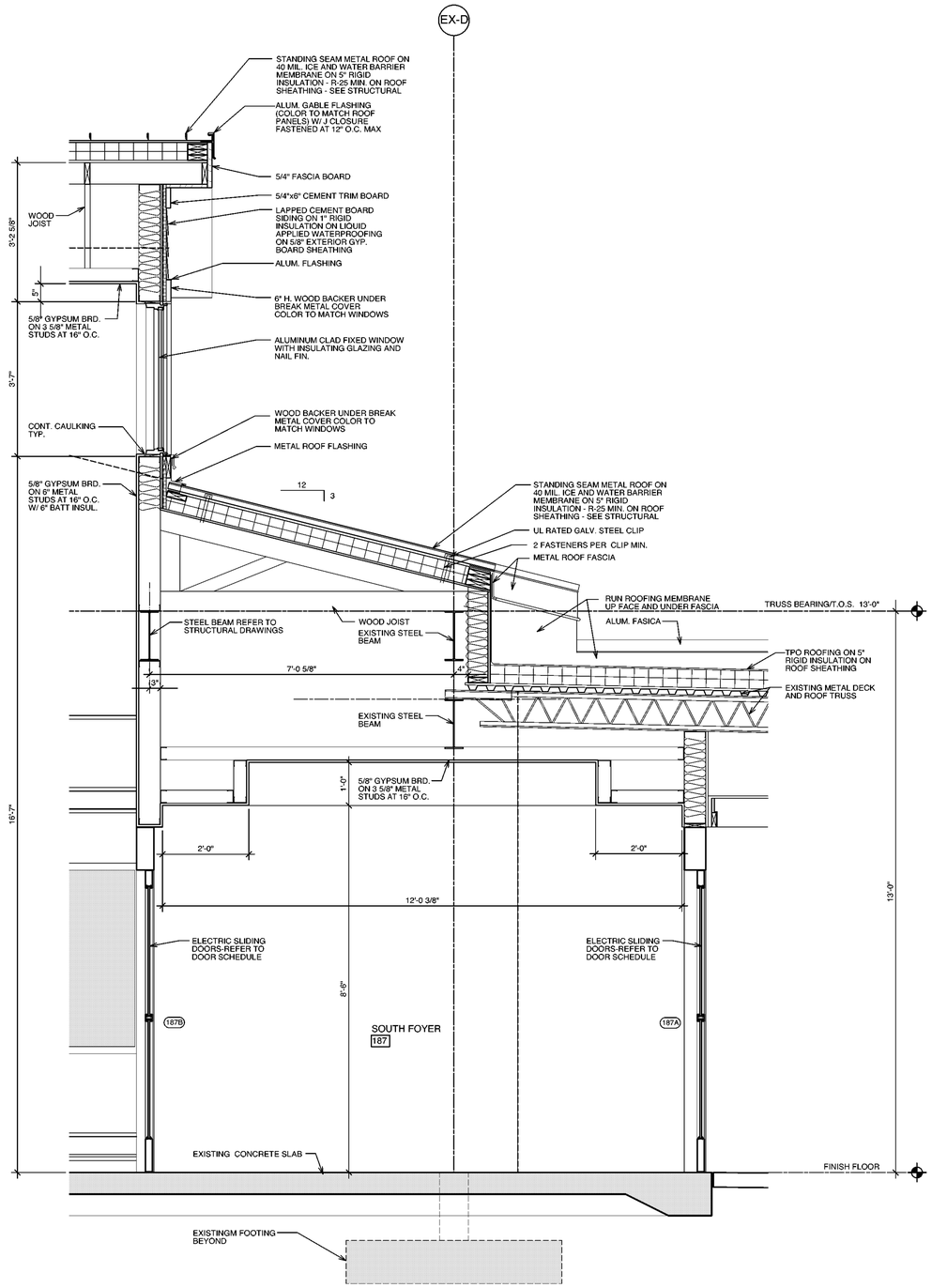

2 A402 ENLARGED SECTION @ SOUTH ENTRANCE
Scale: 3/4" = 1'-0"

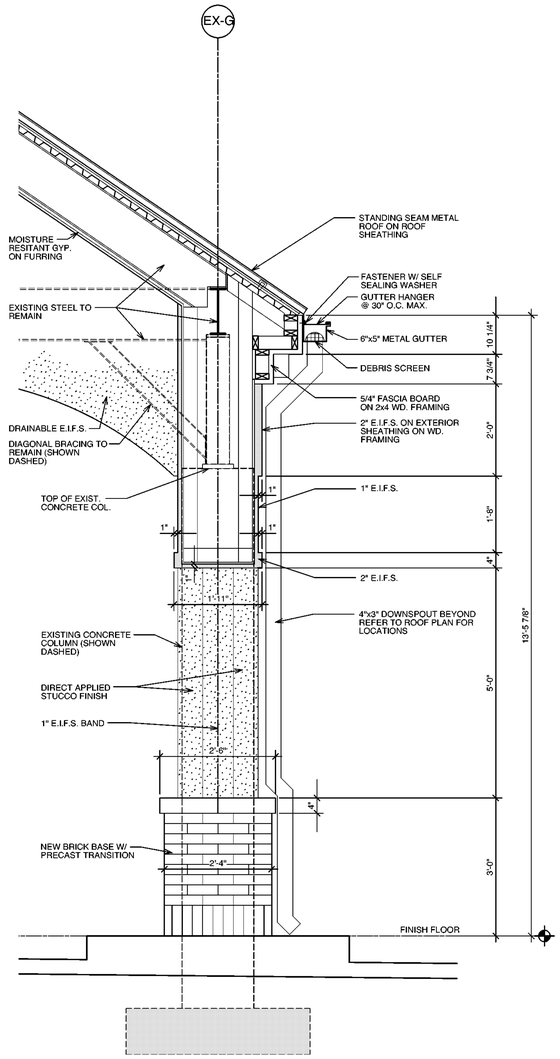

1 A402 ENLARGED SECTION
Scale: 3/4" = 1'-0"

BOWMAN MURRAY HEMINGWAY
ARCHITECTS
514 Market Street
Wilmington, NC 28401
Tel - (910) 762-2621
Fax - (910) 762-8506

PERMIT DRAWINGS FOR REVIEW ONLY

BOWMAN, MURRAY, HEMINGWAY ARCHITECTS, P.A. REGISTERED ARCHITECTURAL CORPORATION CERT. NO. 50424 WILMINGTON, N.C. NORTH CAROLINA

THE DAVIS COMMUNITY
New Community Center

1011 Porter's Neck Road
Wilmington, North Carolina 28411

REV.	DATE	DESCRIPTION

NO.	DATE	ISSUE NOTE

Project Manager: David Ball	Drawn By: DP
Date: October 22, 2020	Reviewed By: Bruce Bowman
Project ID: -	

Sheet Title
Enlarged Sections

Sheet No.
A402

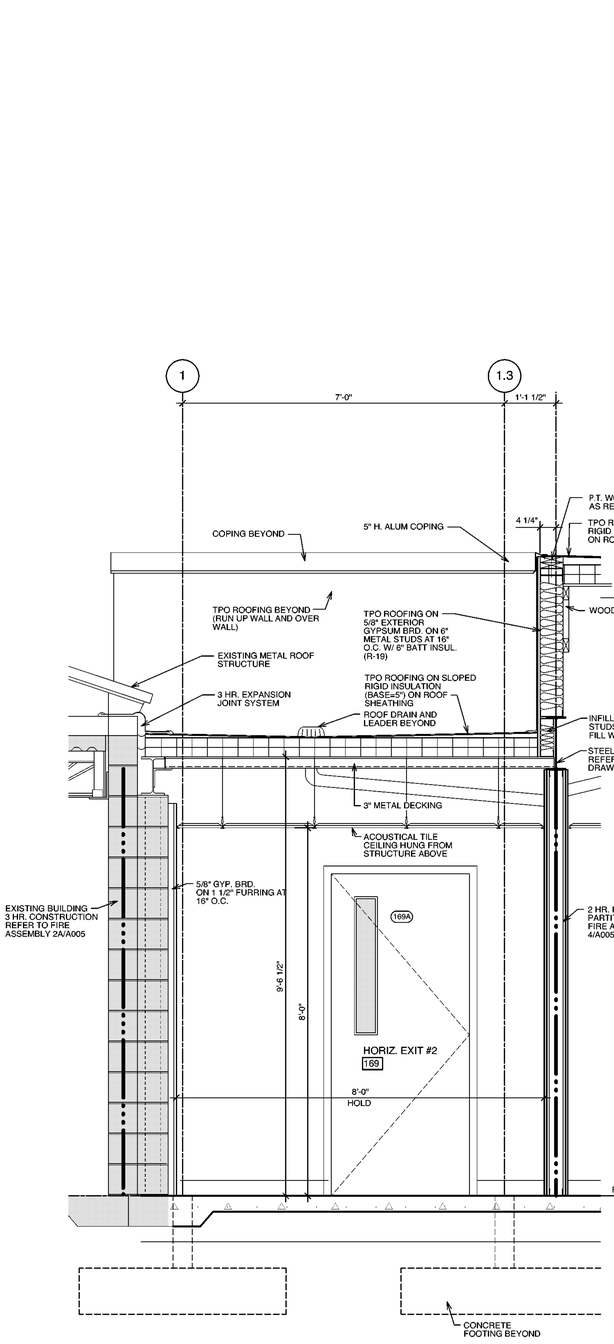

4 A403 ENLARGED SECTION
Scale: 3/4" = 1'-0"

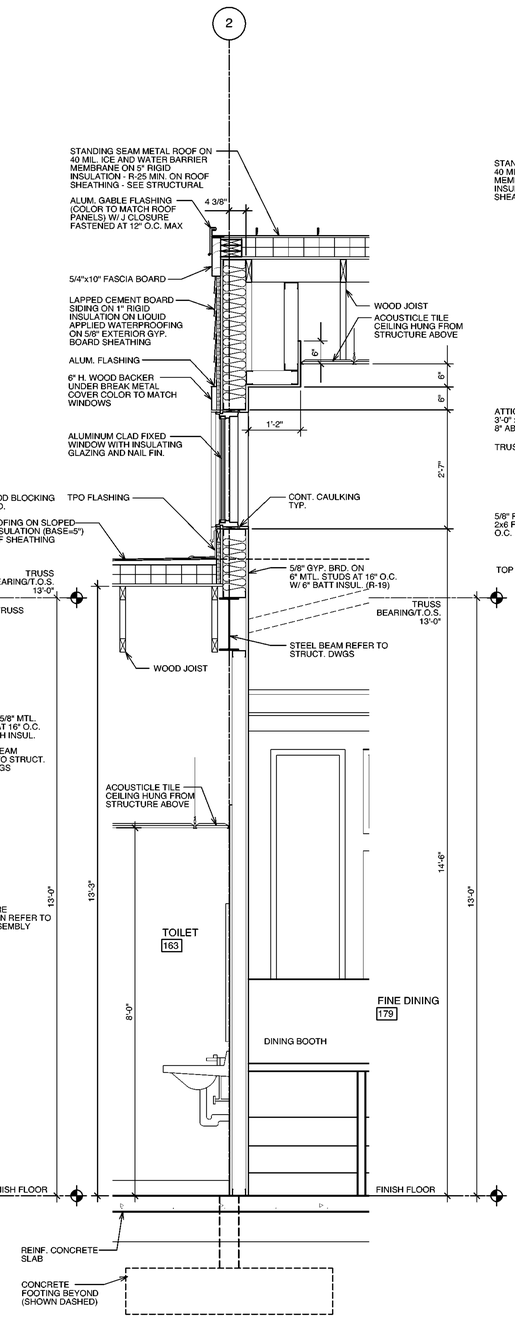

3 A403 ENLARGED SECTION
Scale: 3/4" = 1'-0"

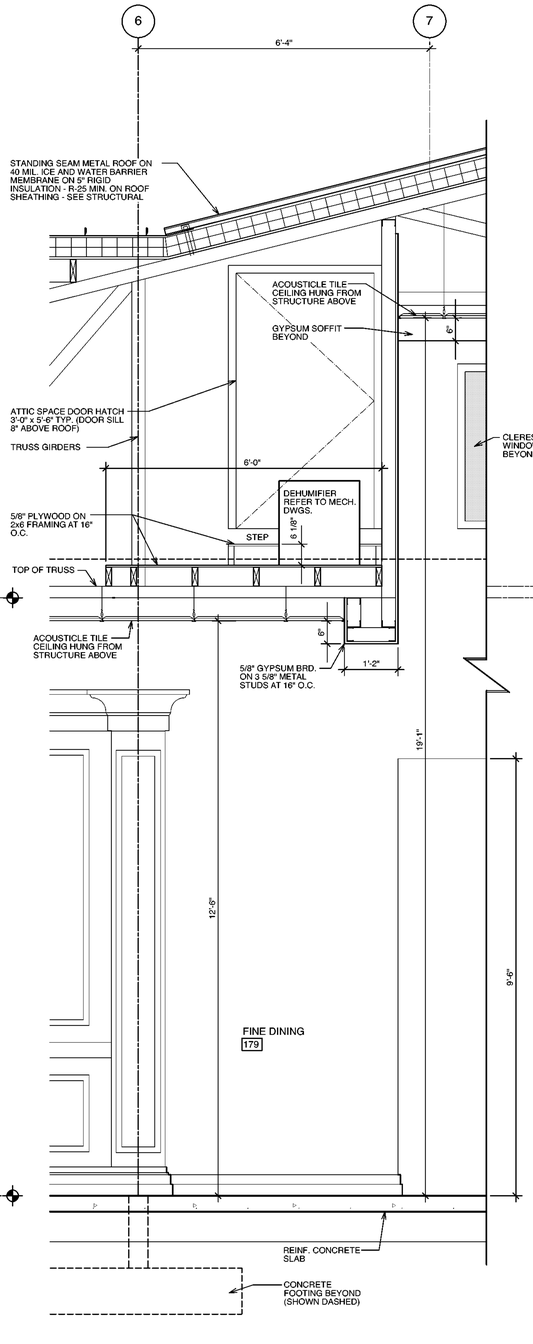

2 A403 ENLARGED SECTION
Scale: 3/4" = 1'-0"

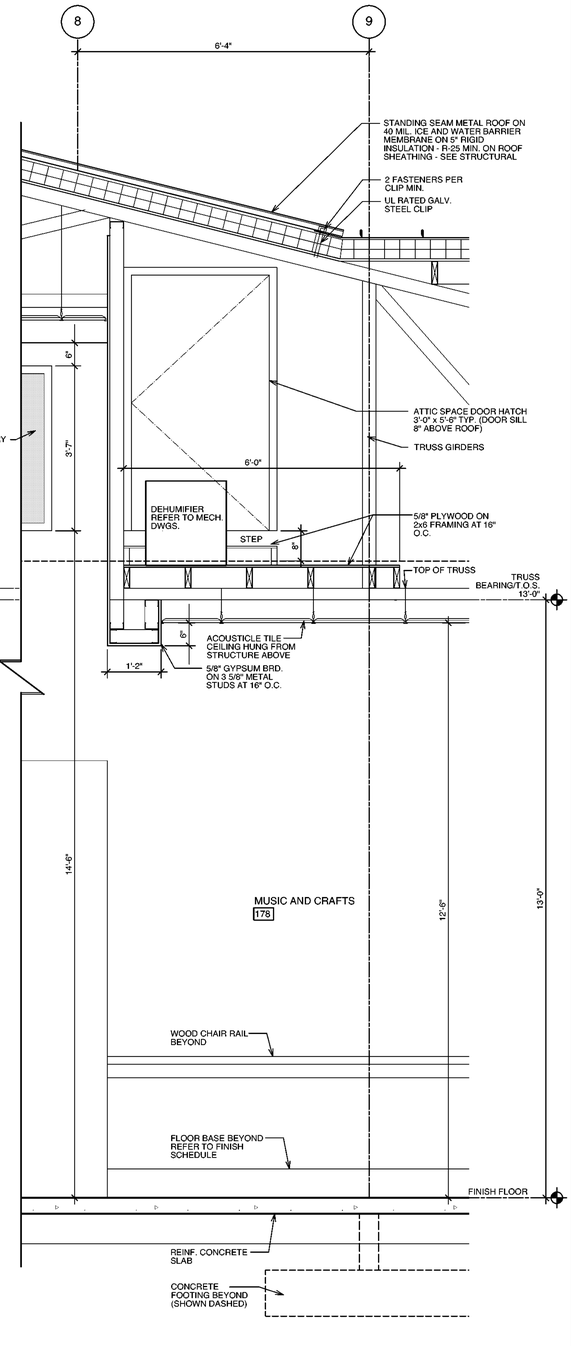

1 A403 ENLARGED SECTION
Scale: 3/4" = 1'-0"

BOWMAN MURRAY HEMINGWAY
ARCHITECTS
514 Market Street
Wilmington, NC 28401
Tel - (910) 762-2621
Fax - (910) 762-8506

PERMIT DRAWINGS FOR REVIEW ONLY

BOWMAN, MURRAY, HEMINGWAY, ARCHITECTS, P.A. CERT. NO. 50424 NORTH CAROLINA WILMINGTON, N. C.

THE DAVIS COMMUNITY
New Community Center

1011 Porter's Neck Road
Wilmington, North Carolina 28411

REV.	DATE	DESCRIPTION

NO.	DATE	ISSUE NOTE

Project Manager: David Ball	Drawn By: DP
Date: October 22, 2020	Reviewed By: Bruce Bowman
Project ID: -	

Sheet Title
Enlarged Sections

Sheet No.
A403

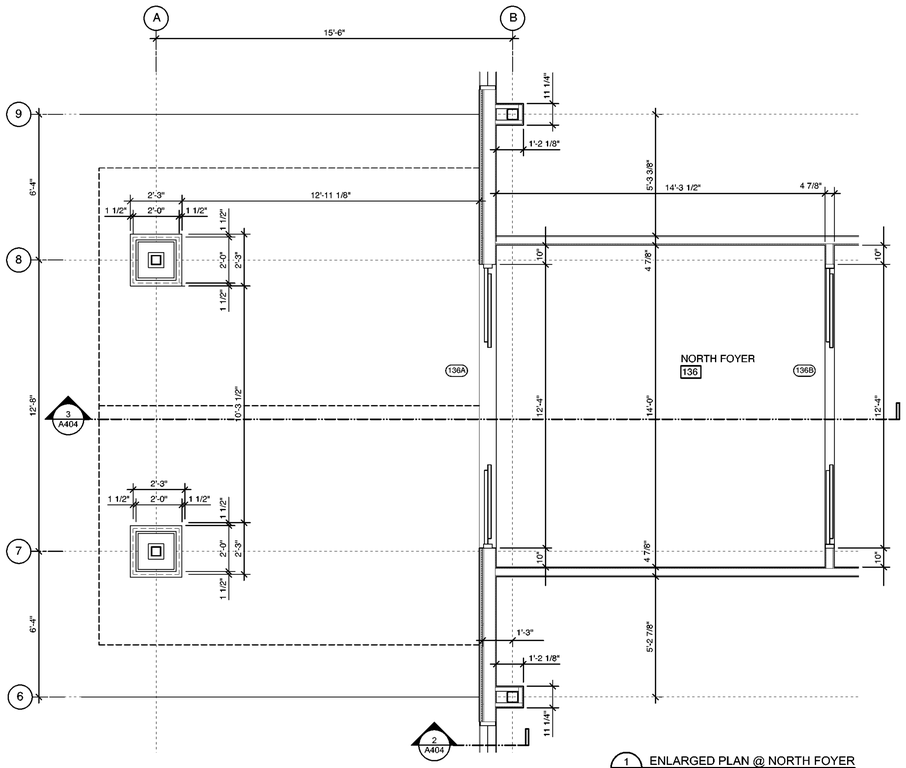

1 A404 ENLARGED PLAN @ NORTH FOYER
Scale: 3/8" = 1'-0"

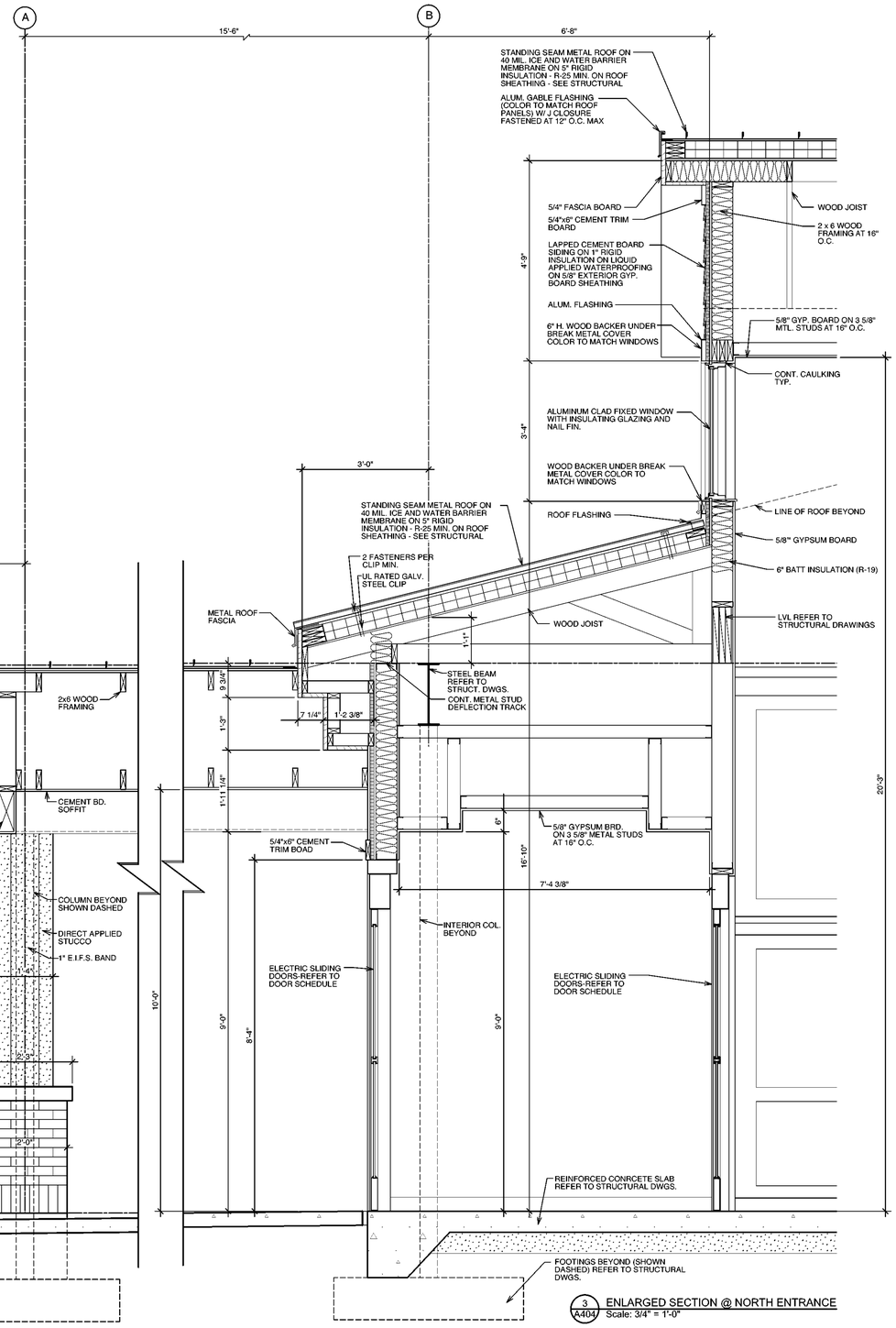

3 A404 ENLARGED SECTION @ NORTH ENTRANCE
Scale: 3/4" = 1'-0"

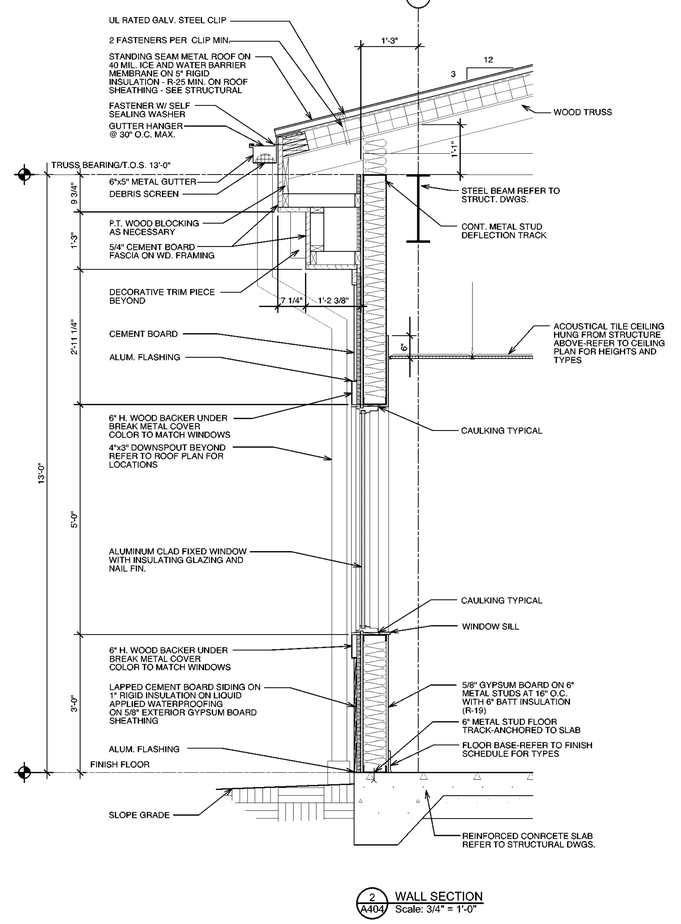

2 A404 WALL SECTION
Scale: 3/4" = 1'-0"

BOWMAN MURRAY HEMINGWAY
ARCHITECTS
514 Market Street
Wilmington, NC 28401
Tel - (910) 762-2621
Fax - (910) 762-8506

PERMIT DRAWINGS FOR REVIEW ONLY

BOWMAN, MURRAY, HEMINGWAY, ARCHITECTS, PA. CERT. NO. 50424 NORTH CAROLINA WILMINGTON, N. C.

THE DAVIS COMMUNITY
New Community Center

1011 Porter's Neck Road
Wilmington, North Carolina 28411

REV.	DATE	DESCRIPTION

NO.	DATE	ISSUE NOTE

Project Manager: David Ball	Drawn By: DP
Date: October 22, 2020	Reviewed By: Bruce Bowman
Project ID: -	

Sheet Title
Enlarged North Entrance Plan and Details

Sheet No.
A404

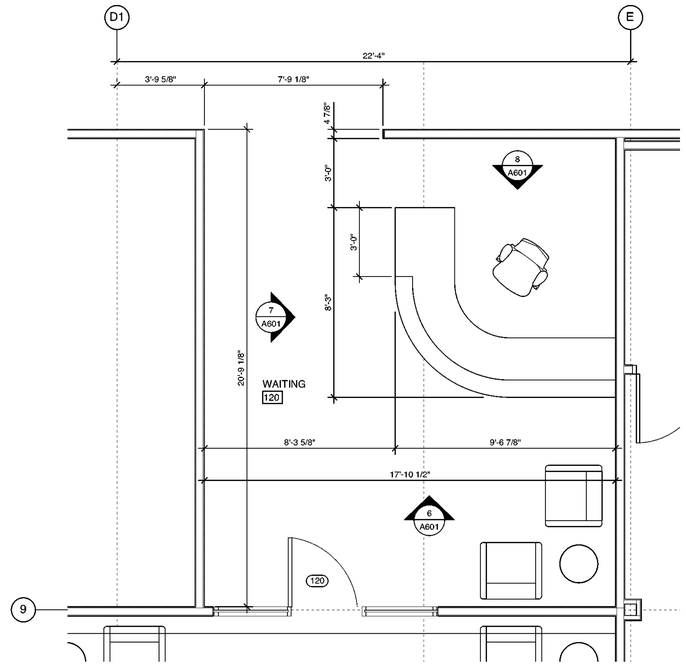

5 A600 ENLARGED MILLWORK PLAN @ WAITING 120 DESK
Scale: 3/8" = 1'-0"

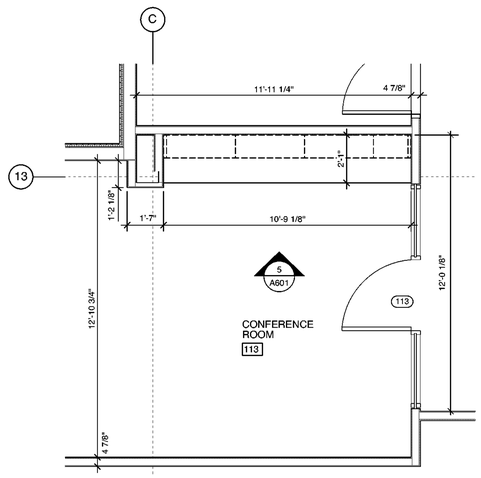

4 A600 ENLARGED MILLWORK PLAN @ CONFERENCE ROOM
Scale: 3/8" = 1'-0"

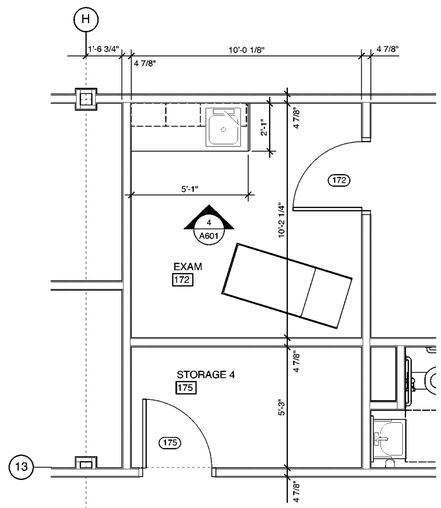

3 A600 ENLARGED MILLWORK PLAN @ EXAM ROOM 172
Scale: 3/8" = 1'-0"

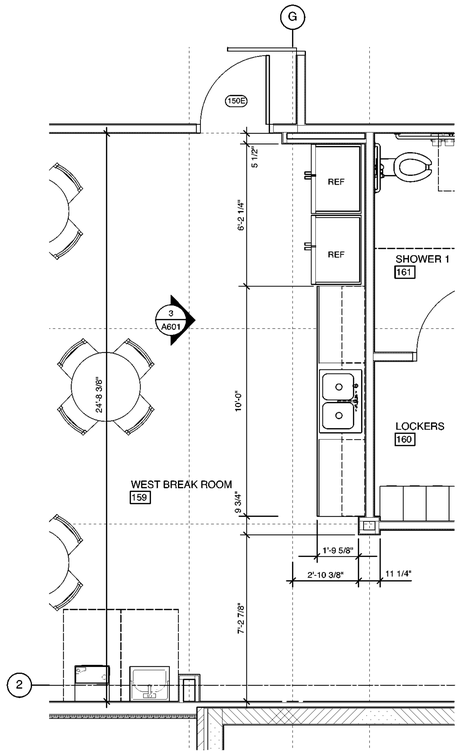

2 A600 ENLARGED MILLWORK PLAN @ WEST BREAK ROOM 159
Scale: 3/8" = 1'-0"

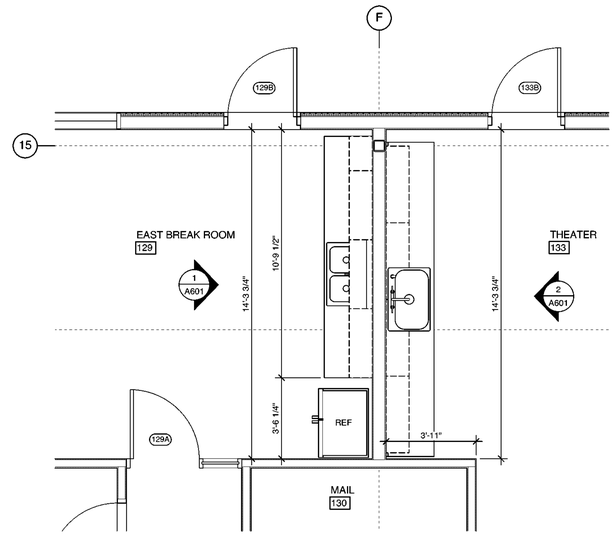

1 A600 ENLARGED MILLWORK PLAN @ BREAK ROOM 129 & THEATER 133
Scale: 3/8" = 1'-0"

BOWMAN
MURRAY
HEMINGWAY
ARCHITECTS
514 Market Street
Wilmington, NC 28401
Tel - (910) 762-2621
Fax - (910) 762-8506

PERMIT DRAWINGS FOR REVIEW ONLY

BOWMAN, MURRAY, HEMINGWAY, ARCHITECTS, PROFESSIONAL ARCHITECTURAL CORPORATION, CERT. NO. 50424, NORTH CAROLINA, WILMINGTON, N. C.

THE DAVIS COMMUNITY
New Community Center

1011 Porter's Neck Road
Wilmington, North Carolina 28411

REV.	DATE	DESCRIPTION

NO.	DATE	ISSUE NOTE

Project Manager: David Ball	Drawn By: DP
Date: October 22, 2020	Reviewed By: Bruce Bowman
Project ID: -	

Sheet Title
Enlarged Millwork Plans

Sheet No.
A600

LEGEND OF MATERIALS			
(A) ENDS	3/4" MELAMINE	○	✱
(B) FLOOR	3/4" MELAMINE	○	✱
(C) BACK	1/2" MELAMINE		✱
(D) BACK MOUNTING RAIL	3/4" MELAMINE	○	✱
(E) FRONT MOUNTING RAIL	3/4" MELAMINE	○	✱
(F) INT. MOUNTING RAIL	3/4" MELAMINE	○	✱
(G) DOOR	3/4" MELAMINE	○	✱
(H) DRAWER FRONT	3/4" MELAMINE	○	✱
(J) DRAWER SIDES & BACK	3/4" MELAMINE	○	
(K) DRAWER FLOOR	3/4" MELAMINE	○	
(L) SHELF	3/4" MELAMINE	○	✱
(M) TOE BOARD ASSEMBLY	3/4" HARDWOOD	○	
(N) COUNTERTOP/BACKSPLASH	1/2" SOLID SURFACE W/ 1-1/4" RADIUS EDGE		
(O) WALL CABINET TOP	3/4" MELAMINE	○	✱

○ WITH PLASTIC LAMINATE EXTERIOR
✱ WITH MATCHING EDGE

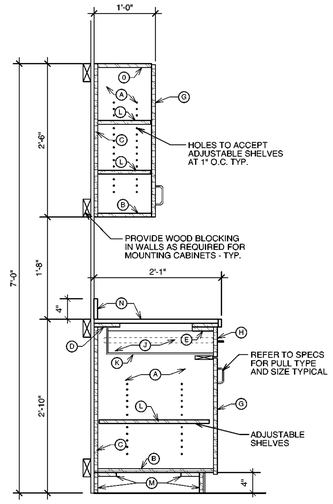

12 A601 MILLWORK SECTION
Scale: 1" = 1'-0"

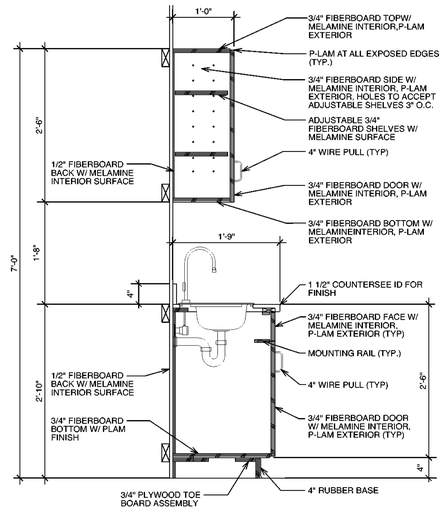

11 A601 MILLWORK SECTION @ EXAM ROOM
Scale: 1" = 1'-0"

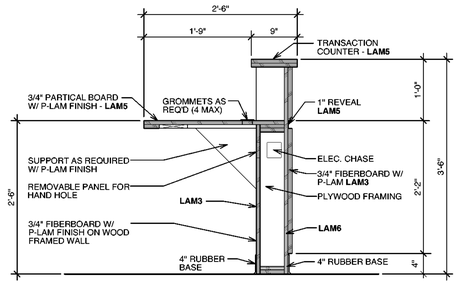

10 A601 Millwork Section @ Admin Desk
Scale: 1" = 1'-0"

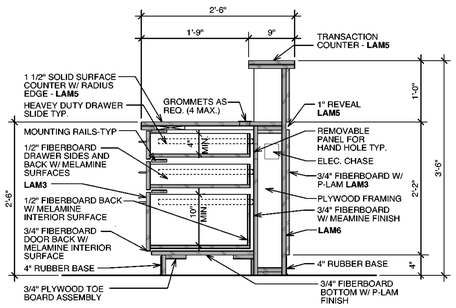

9 A601 MILLWORK SECTION @ ADMIN DESK
Scale: 1" = 1'-0"

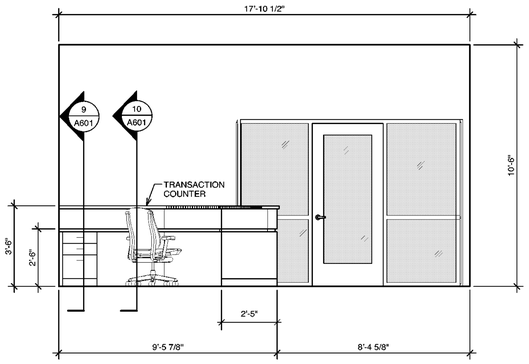

8 A601 MILLWORK ELEVATION @ WAITING DESK
Scale: 3/8" = 1'-0"

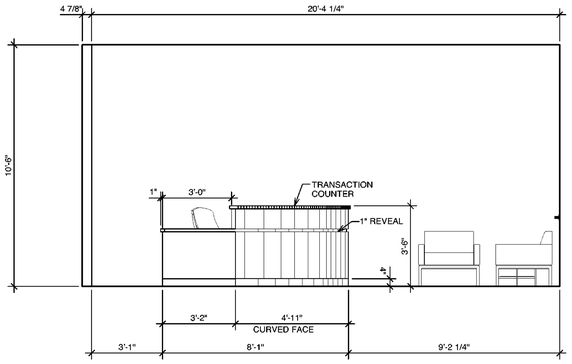

7 A601 ELEVATION @ WAITING DESK
Scale: 3/8" = 1'-0"

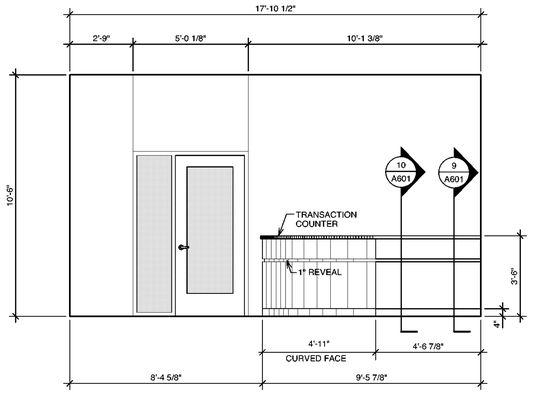

6 A601 ELEVATION @ WAITING DESK
Scale: 3/8" = 1'-0"

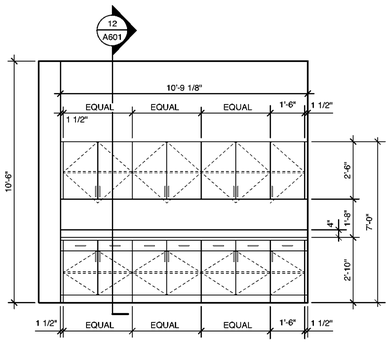

5 A601 MILLWORK ELEVATION @ CONFERENCE ROOM
Scale: 3/8" = 1'-0"

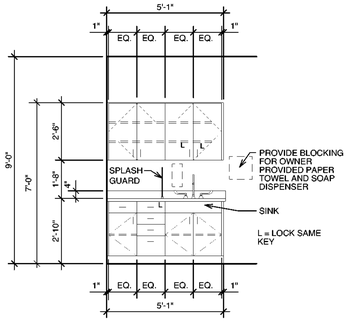

4 A601 MILLWORK ELEVATION @ EXAM ROOM
Scale: 3/8" = 1'-0"

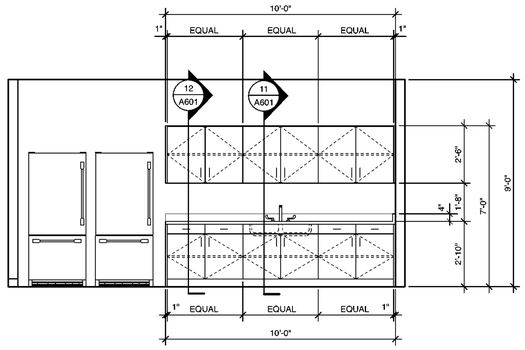

3 A601 MILLWORK ELEVATION @ BREAK ROOM
Scale: 3/8" = 1'-0"

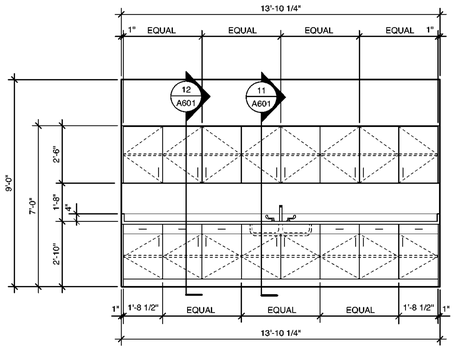

2 A601 MILLWORK ELEVATION @ THEATER
Scale: 3/8" = 1'-0"

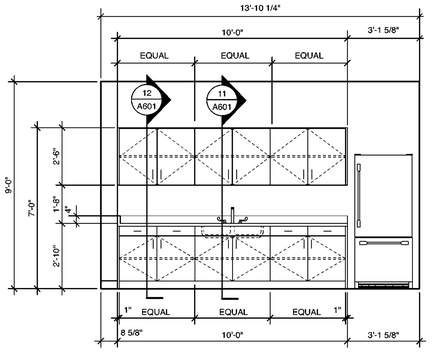

1 A601 MILLWORK ELEVATION @ BREAK ROOM
Scale: 3/8" = 1'-0"

BOWMAN MURRAY HEMINGWAY
ARCHITECTS
514 Market Street
Wilmington, NC 28401
Tel - (910) 762-2621
Fax - (910) 762-8506

PERMIT DRAWINGS FOR REVIEW ONLY

BOWMAN, MURRAY, HEMINGWAY, ARCHITECTS, PA, CERT. NO. 50424, WILMINGTON, N. C.

THE DAVIS COMMUNITY
New Community Center
1011 Porter's Neck Road
Wilmington, North Carolina 28411

REV.	DATE	DESCRIPTION

NO.	DATE	ISSUE NOTE

Project Manager: David Ball	Drawn By: DP
Date: October 22, 2020	Reviewed By: Bruce Bowman
Project ID: -	

Sheet Title
Millwork Sections and Details

Sheet No.
A601

	TOILET ACCESSORIES	MNTG. HT.
T1	Handicapped Grab Bar-24" (TOILET)	36"
T2	Handicapped Grab Bar-42" (TOILET)	36"
T3	Vertical Handicapped Grab Bar-18" (TOILET AND SHOWER)	40"
T4	Handicapped Grab Bar-36" (TOILET)	36"
T5	Frame Mirror - 2'-0" Wide x 3'-0"	40" (bottom)
T6	Transfer Type Folding Shower Seat (L-shaped)	18"
T7	Clothes Hook	48"
T8	Full Body Mirror - 3'-0" Wide x 6'-0"	15" (bottom)
T9	Toilet Tissue Dispenser- Double Roll	18"
T10	Wall Mt. Soap Dispenser	40" (bottom)
T11	Paper Towel Dispenser	48"

NOTE: Mounting heights are to operating mechanism where applicable.

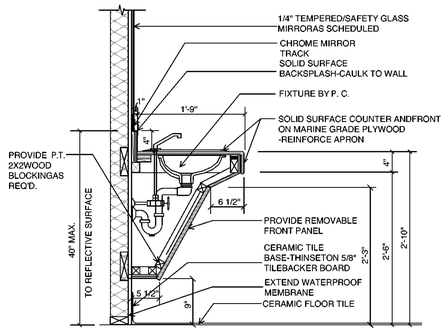

12 A602 LAVITORY SINK DETAIL
Scale: 1" = 1'-0"

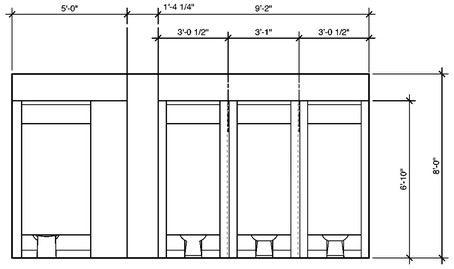

11 A602 ELEVATION @ WOMENS TOILET ROOM
Scale: 3/8" = 1'-0"

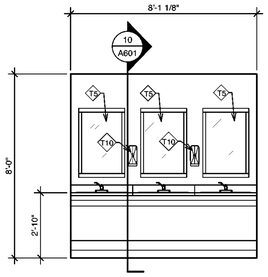

10 A602 ELEVATION @ TOILET ROOM
Scale: 3/8" = 1'-0"

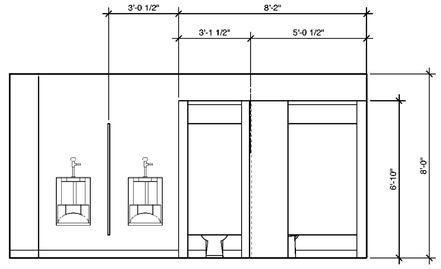

9 A602 ELEVATION @ TOILET ROOM
Scale: 3/8" = 1'-0"

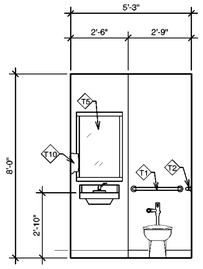

8 A602 ELEVATION @ TOILET ROOM
Scale: 3/8" = 1'-0"

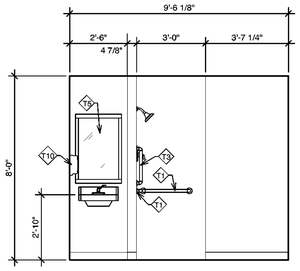

7 A602 ELEVATION @ TOILET ROOM
Scale: 3/8" = 1'-0"

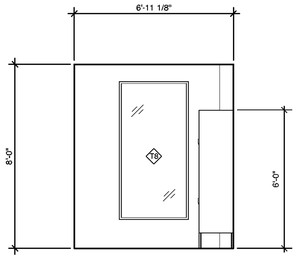

6 A602 ELEVATION @ LOCKERS 160
Scale: 3/8" = 1'-0"

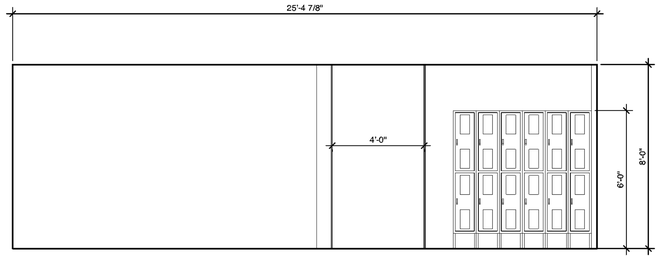

5 A602 ELEVATION @ LOCKERS #160
Scale: 3/8" = 1'-0"

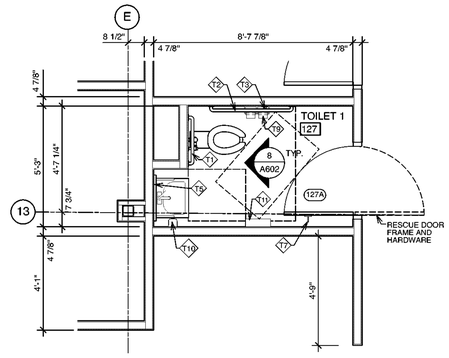

4 A602 ENLARGED PLAN @ TOILET 127
Scale: 3/8" = 1'-0"

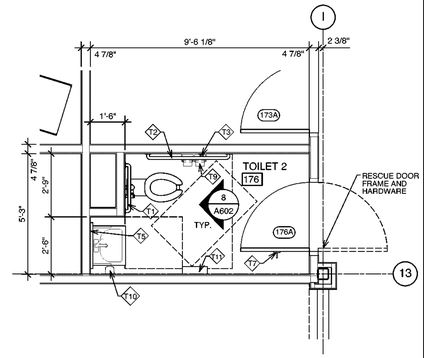

3 A602 ENLARGED PLAN @ TOILET 176
Scale: 3/8" = 1'-0"

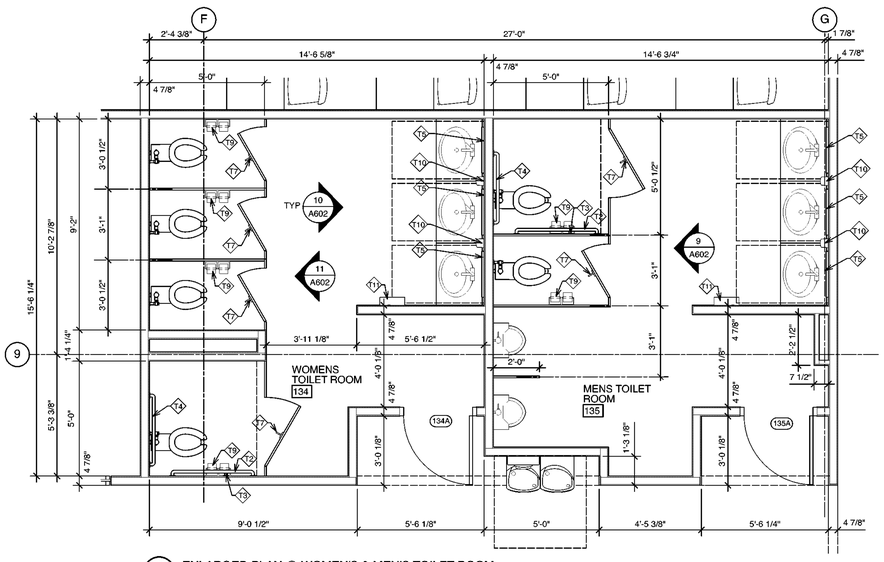

2 A602 ENLARGED PLAN @ WOMEN'S & MEN'S TOILET ROOM
Scale: 3/8" = 1'-0"

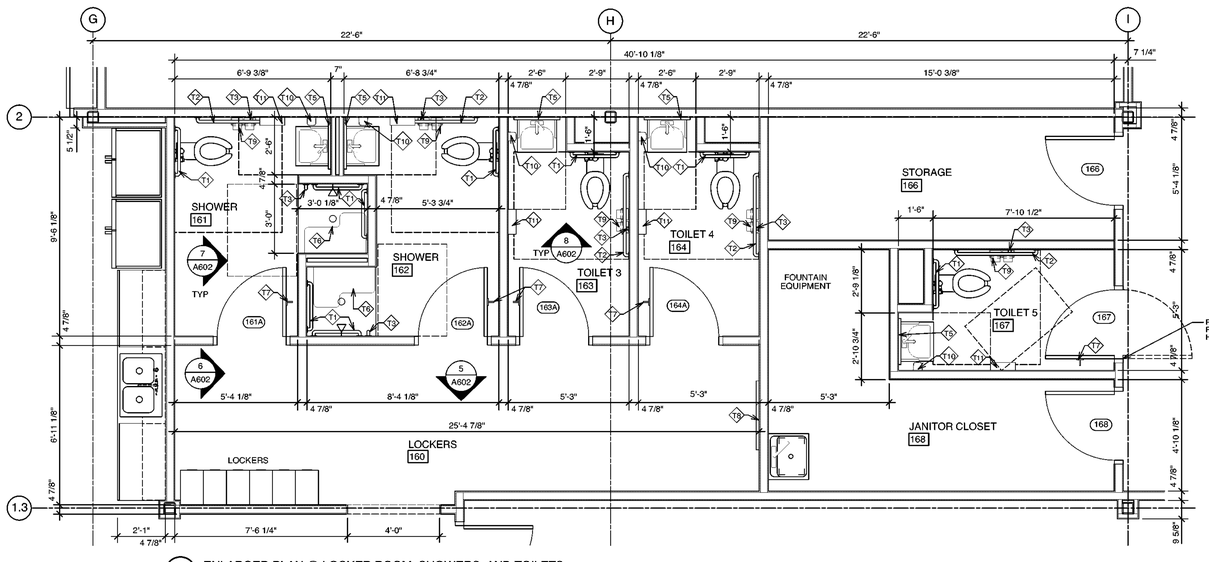

1 A602 ENLARGED PLAN @ LOCKER ROOM, SHOWERS, AND TOILETS
Scale: 3/8" = 1'-0"

BOWMAN MURRAY HEMINGWAY
ARCHITECTS
514 Market Street
Wilmington, NC 28401
Tel - (910) 762-2621
Fax - (910) 762-8506

PERMIT DRAWINGS FOR REVIEW ONLY

BOWMAN, MURRAY, HEMINGWAY, ARCHITECTS, P.A. CERT. NO. 50424 NORTH CAROLINA WILMINGTON, N. C.

THE DAVIS COMMUNITY
New Community Center

1011 Porter's Neck Road
Wilmington, North Carolina 28411

REV.	DATE	DESCRIPTION

NO.	DATE	ISSUE NOTE

Project Manager	Drawn By
David Ball	DP
Date	Reviewed By
October 22, 2020	Bruce Bowman
Project ID	-

Sheet Title
Enlarged Toilet Room and Locker Room Plans

Sheet No.
A602

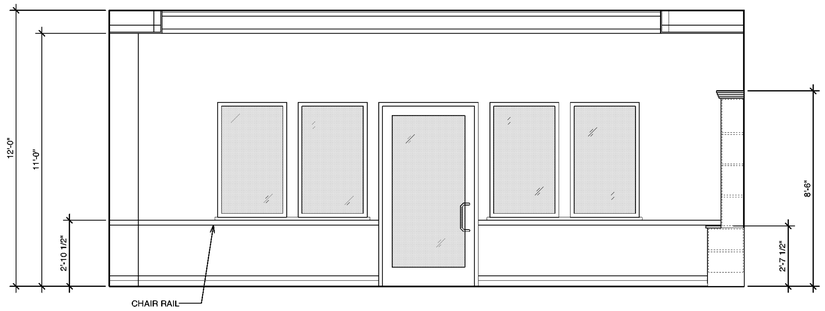

3 A603 ELEVATION @ LIVING ROOM
Scale: 3/8" = 1'-0"

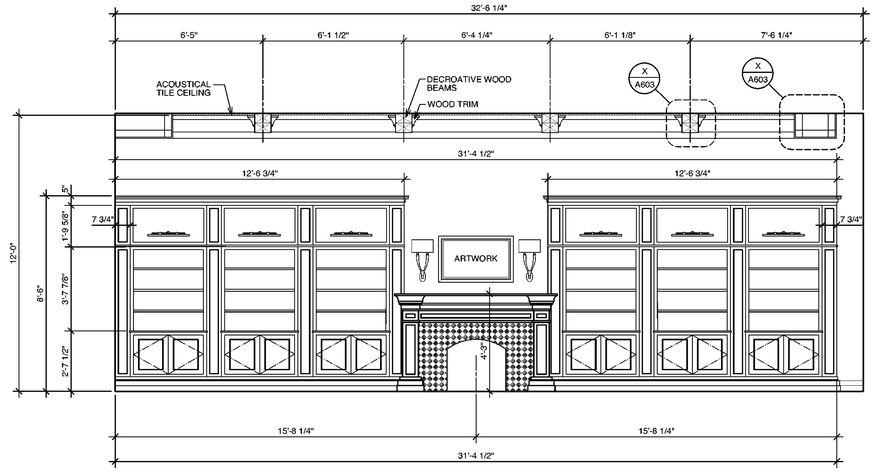

2 A603 ELEVATION @ FIREPLACE
Scale: 3/8" = 1'-0"

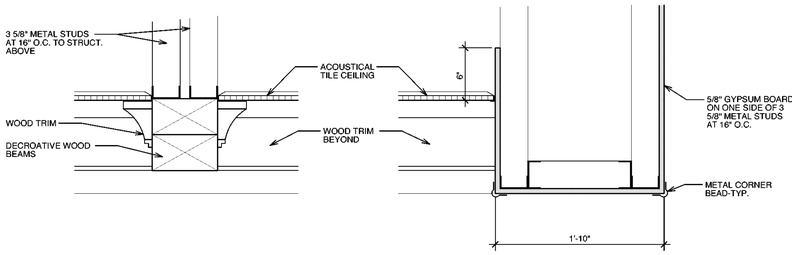

5 A603 SECTION @ CEILING BEAM
Scale: 1 1/2" = 1'-0"

4 A603 DETAIL @ CEILING SOFFIT
Scale: 1 1/2" = 1'-0"

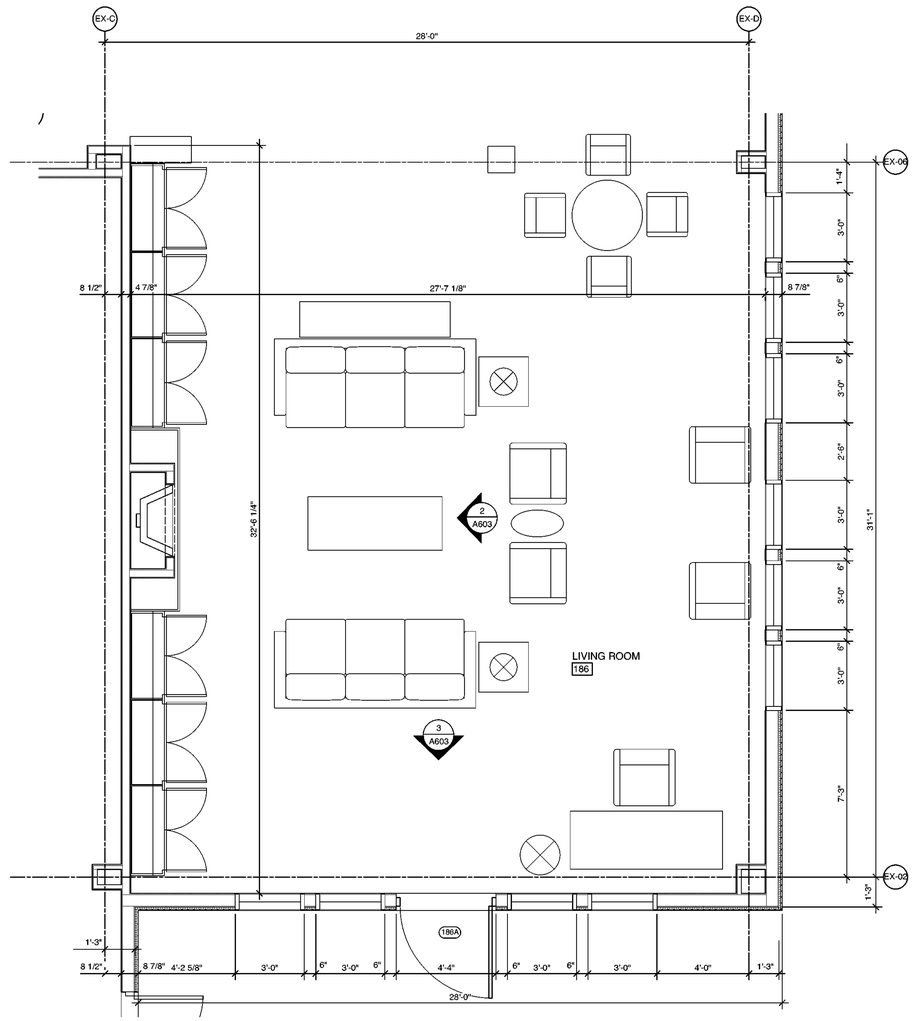

1 A603 ENLARGED PLAN @ FIREPLACE
Scale: 3/8" = 1'-0"

BOWMAN MURRAY HEMINGWAY
ARCHITECTS
514 Market Street
Wilmington, NC 28401
Tel - (910) 762-2621
Fax - (910) 762-8506

PERMIT DRAWINGS FOR REVIEW ONLY

BOWMAN MURRAY HEMINGWAY ARCHITECTS, PC
REGISTERED ARCHITECTURAL CORPORATION
CERT. NO. 50424
NORTH CAROLINA
WILMINGTON, N.C.

THE DAVIS COMMUNITY
New Community Center

1011 Porter's Neck Road
Wilmington, North Carolina 28411

REV.	DATE	DESCRIPTION

NO.	DATE	ISSUE NOTE

Project Manager: David Ball	Drawn By: DP
Date: October 22, 2020	Reviewed By: Bruce Bowman
Project ID: -	

Sheet Title
Enlarged Fireplace Plan, Elevation and Details

Sheet No.
A603

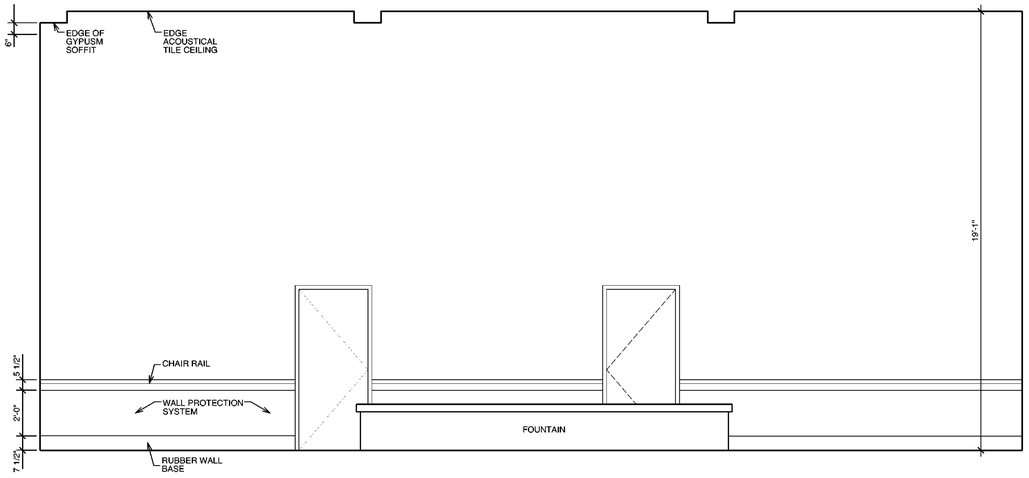

7 A604 ELEVATION @ FOUNTAIN
Scale: 3/8" = 1'-0"

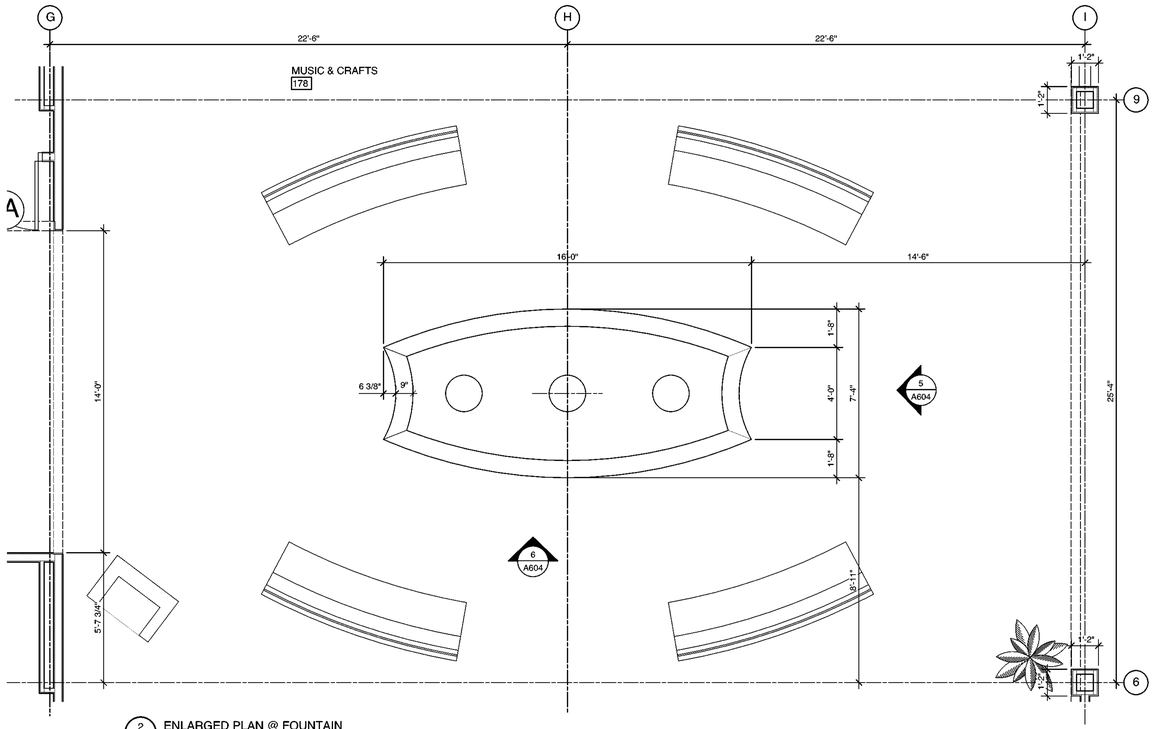

2 A604 ENLARGED PLAN @ FOUNTAIN
Scale: 3/8" = 1'-0"

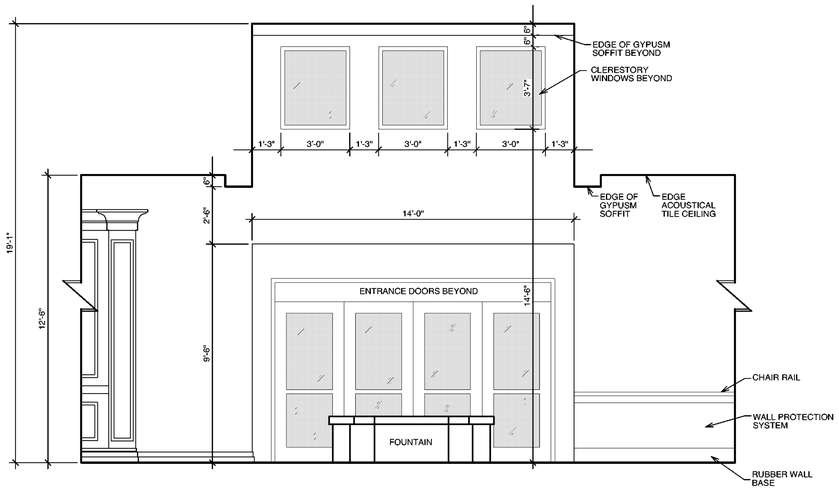

5 A604 ELEVATION @ FOUNTAIN
Scale: 3/8" = 1'-0"

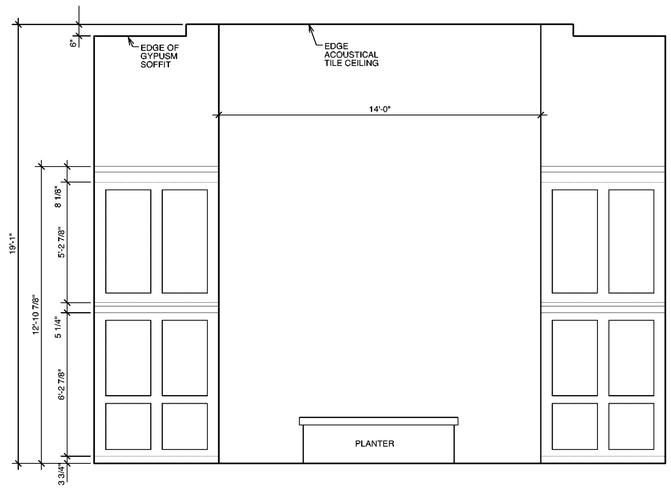

4 A604 ELEVATION @ PLANTER
Scale: 3/8" = 1'-0"



3 A604 ELEVATION @ PLANTER
Scale: 3/8" = 1'-0"

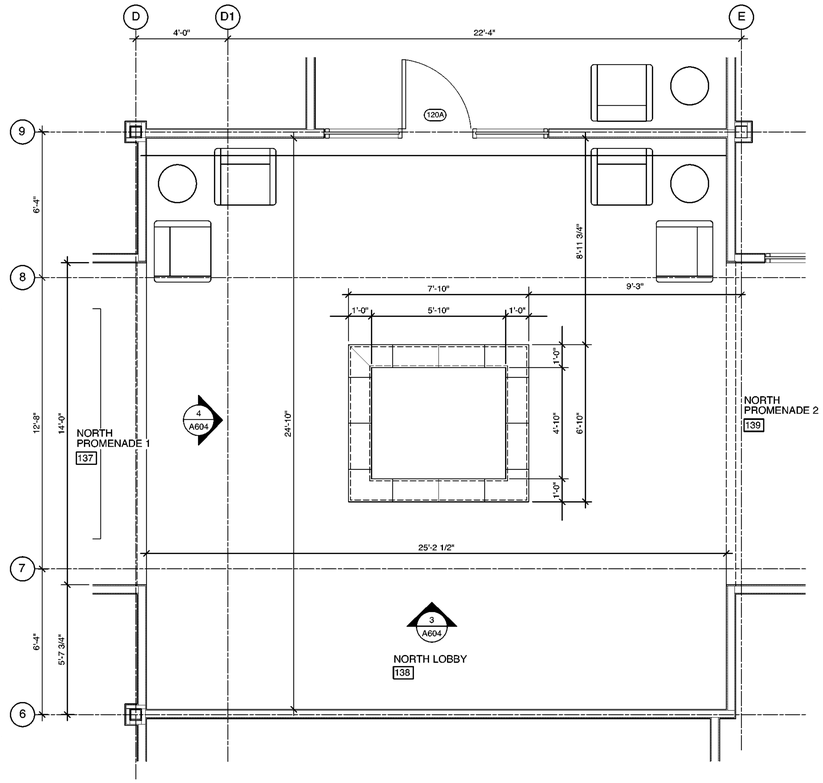

1 A604 ENLARGED PLAN @ PLANTER
Scale: 3/8" = 1'-0"

BOWMAN MURRAY HEMINGWAY
ARCHITECTS
514 Market Street
Wilmington, NC 28401
Tel - (910) 762-2621
Fax - (910) 762-8506

PERMIT DRAWINGS FOR REVIEW ONLY

BOWMAN, MURRAY, HEMINGWAY, ARCHITECTS, P.A. CERT. NO. 50424 NORTH CAROLINA WILMINGTON, N.C.

THE DAVIS COMMUNITY
New Community Center

1011 Porter's Neck Road
Wilmington, North Carolina 28411

REV.	DATE	DESCRIPTION

NO.	DATE	ISSUE NOTE

Project Manager	Drawn By
David Ball	DP
Date	Reviewed By
October 22, 2020	Bruce Bowman
Project ID	-

Sheet Title
Enlarged Planter and Fountain Plans, and Elevations

Sheet No.
A604

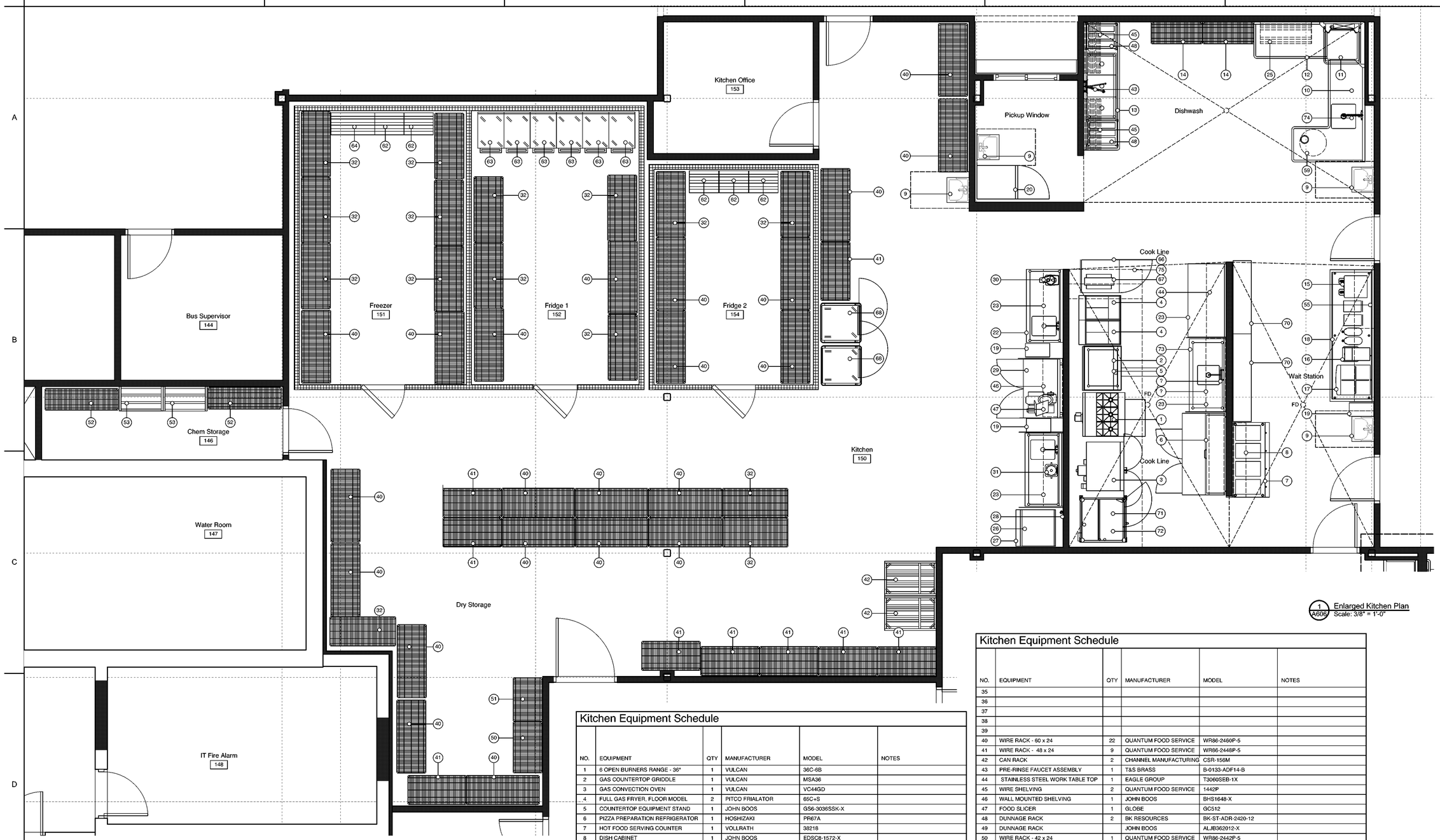

1 A606 Enlarged Kitchen Plan
Scale: 3/8" = 1'-0"

Kitchen Equipment Schedule

NO.	EQUIPMENT	QTY	MANUFACTURER	MODEL	NOTES
1	6 OPEN BURNERS RANGE - 36"	1	VULCAN	36C-6B	
2	GAS COUNTERTOP GRIDDLE	1	VULCAN	MSA36	
3	GAS CONVECTION OVEN	1	VULCAN	VC44GD	
4	FULL GAS FRYER, FLOOR MODEL	2	PITCO FRIALATOR	65C+S	
5	COUNTERTOP EQUIPMENT STAND	1	JOHN BOOS	GS6-3036SSK-X	
6	PIZZA PREPARATION REFRIGERATOR	1	HOSHIZAKI	PR67A	
7	HOT FOOD SERVING COUNTER	1	VOLLRATH	38218	
8	DISH CABINET	1	JOHN BOOS	EDSC8-1572-X	
9	HAND SINK	4	JOHN BOOS	PBHS-W-1410-P-SSLR-X	
10	SOILED "L" SHAPED DISHTABLE	1	EAGLE GROUP	SDTCIR-84-16/3	
11	VENTLESS DISHWASHER, DOOR TYPE	1	JACKSON WWS	DYNATEMP VER	
12	CLEAN DISHTABLE	1	EAGLE GROUP	CDTL-60-16/3-SL-X	
13	THREE (3) COMPARTMENT SINK	1	JOHN BOOS	3PB1824-2D24	
14	WIRE RACK - 24 x 18	2	QUANTUM FOOD SERVICE	WR86-1824P-5	
15	COFFEE BREWER	1	GRINDMASTER	UNIC-CRATHCO PBC-2W	
16	ICED TEA BREWER	1	BUNN	41400.0002	
17	ICE DISPENSER	1	FOLLETT LLC	110CM-NI-S	
18	WORK TABLE	1	JOHN BOOS	4CO4R5-36108	
19	TRASH RECEPTACLE	3	CARLISLE	34202303	
20	REACH-IN REFRIGERATOR	1	HOSHIZAKI	R1A-FSL	
21	WORK TABLE, WITH PREP SINK	1	JOHN BOOS	EPT6R5-3060SSK-L-X	
22	WORK TABLE, WITH PREP SINK	1	JOHN BOOS	EPT6R5-3060SSK-R	
23	SHELVING, WALL MOUNTED	2	JOHN BOOS	BHS1660-16/304	
24					
25	DISHTABLE SORTING SHELF	1	JOHN BOOS	BHS1842-TS-X	
26	CUBE-STYLE ICE MAKER	1	SCOTSMAN	C0630SW-32	
27	ICE BIN FOR ICE MACHINES	1	SCOTSMAN	B530S	
28	ICE MACH WATER FILTRATION SYSTEM	1	3M PURIFICATION	ICE125-S	
29	REFRIGERATED WORK TOP	1	TURBO AIR	TWR-48SD-N	
30	FOOD PROCESSOR	1	ROBOT COUPE	R2N	
31	COMMERCIAL FOOD BLENDER	1	WARING	CB15	
32	WIRE RACK - 54 x 24	15	QUANTUM FOOD SERVICE	WR86-2454P-5	
33					
34					

Kitchen Equipment Schedule

NO.	EQUIPMENT	QTY	MANUFACTURER	MODEL	NOTES
35					
36					
37					
38					
39					
40	WIRE RACK - 60 x 24	22	QUANTUM FOOD SERVICE	WR86-2460P-5	
41	WIRE RACK - 48 x 24	9	QUANTUM FOOD SERVICE	WR86-2448P-5	
42	CAN RACK	2	CHANNEL MANUFACTURING	CSR-156M	
43	PRE-RINSE FAUCET ASSEMBLY	1	T&S BRASS	B-0133-ADF14-B	
44	STAINLESS STEEL WORK TABLE TOP	1	EAGLE GROUP	T3060SEB-1X	
45	WIRE SHELVING	2	QUANTUM FOOD SERVICE	1442P	
46	WALL MOUNTED SHELVING	1	JOHN BOOS	BHS1648-X	
47	FOOD SLICER	1	GLOBE	GC512	
48	DUNNAGE RACK	2	BK RESOURCES	BK-ST-ADR-2420-12	
49	DUNNAGE RACK		JOHN BOOS	ALJB362012-X	
50	WIRE RACK - 42 x 24	1	QUANTUM FOOD SERVICE	WR86-2442P-5	
51	WIRE RACK - 36 x 24	1	QUANTUM FOOD SERVICE	WR86-2436P-5	
52	WIRE RACK - 60 x 18	2	QUANTUM FOOD SERVICE	WR86-1860P-5	
53	DUNNAGE RACK	2	JOHN BOOS	ALJB362012-X	
54	WALL MOUNTED SHELVING	1	JOHN BOOS	BHS1660-X	
55	WALL MOUNTED SHELVING	1	JOHN BOOS	BHS1648-X	
56					
57					
58					
59	COMMERCIAL WASTE CONTAINER	1	RUBBERMAID	FG263200DGRN	
60					
61					
62	DUNNAGE RACK	5	CHANNEL	CA2024	
63	FOOD PAN CABINET, ENCLOSED	6	CAMBRO	1826DTC131	
64	DUNNAGE RACK	1	CHANNEL	CA2036	
65					
66	REACH-IN UNDERCOUNTER FREEZER	1	HOSHIZAKI	UF27A-LP	
67	FRENCH FRY WARMER	1	HATCO	GRFF	
68	MOBILE HEATED CABINET	2	OOD WARMING EQUIPMENT	MTU-12	
69					
70	DISH CABINET	2	JOHN BOOS	EDSC8-1560-X	
71	GAS COMBI OVEN	1	ALTO-SHAAM	CTC10-10G	
72	OVEN EQUIPMENT STAND	1	ALTO-SHAAM	5015711	
73	60" SS WORK TABLE	1	JOHN BOOS	ST4R5-3060SSK	
74	PRE-RINSE FAUCET ASSEMBLY	1	T&S BRASS	B-0113-CR-B	
75	HOOD	1			

BOWMAN MURRAY HEMINGWAY
ARCHITECTS
514 Market Street
Wilmington, NC 28401
Tel - (910) 762-2621
Fax - (910) 762-8506

PERMIT DRAWINGS FOR REVIEW ONLY

BOWMAN MURRAY HEMINGWAY ARCHITECTURAL CORPORATION CERT. NO. 50424 NORTH CAROLINA WILMINGTON, N. C.

THE DAVIS COMMUNITY
New Community Center

1011 Porter's Neck Road
Wilmington, North Carolina 28411

REV.	DATE	DESCRIPTION

NO.	DATE	ISSUE NOTE

Project Manager	Drawn By
David Ball	David Ball
Date	Reviewed By
October 22, 2020	Bruce Bowman
Project ID	
-	

Sheet Title

Enlarged Kitchen Plan

Sheet No.

A606

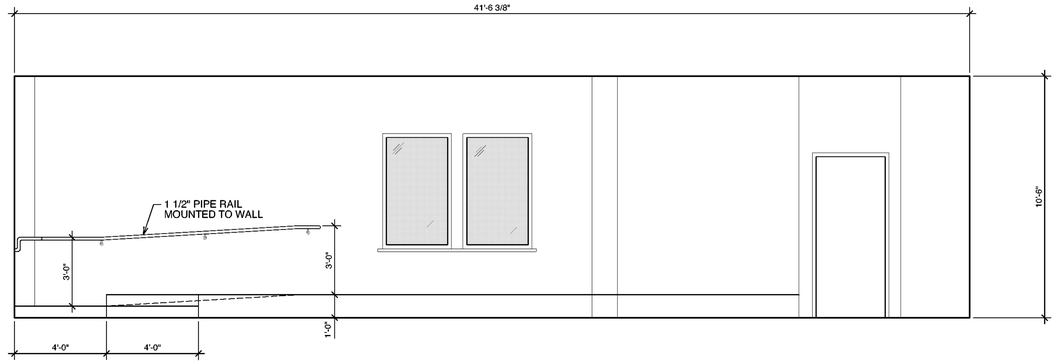

2 A608 INTERIOR ELEVATION @ PLAYHOUSE STAGE
Scale: 3/8" = 1'-0"

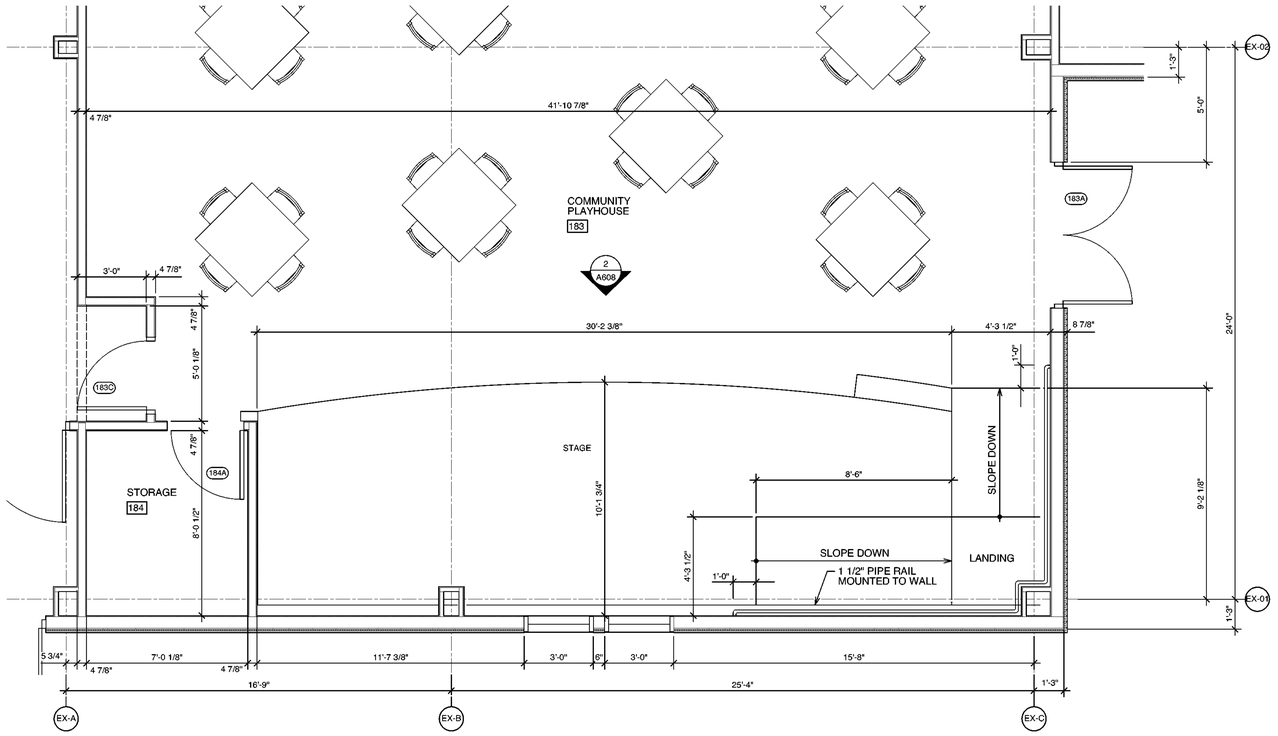

1 A608 ENLARGED PLAN @ PLAYHOUSE STAGE, RAMP & STAIR
Scale: 3/8" = 1'-0"

BOWMAN
MURRAY
HEMINGWAY
ARCHITECTS
514 Market Street
Wilmington, NC 28401
Tel - (910) 762-2621
Fax - (910) 762-8506

PERMIT DRAWINGS FOR REVIEW ONLY

BOWMAN, MURRAY, HEMINGWAY, ARCHITECTS, P.A. CERT. NO. 50424 WILMINGTON, N.C.

THE DAVIS COMMUNITY
New Community Center

1011 Porter's Neck Road
Wilmington, North Carolina 28411

REV.	DATE	DESCRIPTION

NO.	DATE	ISSUE NOTE

Project Manager: David Ball	Drawn By: DP
Date: October 22, 2020	Reviewed By: Bruce Bowman
Project ID: -	

Sheet Title
Enlarged Playhouse Stage, Ramp and Stair Plan and Details

Sheet No.
A608

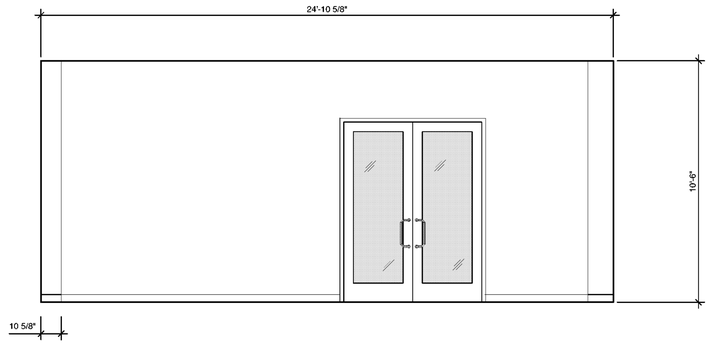

3 A609 INTERIOR ELEVATION @ CHAPEL STAGE
Scale: 3/8" = 1'-0"

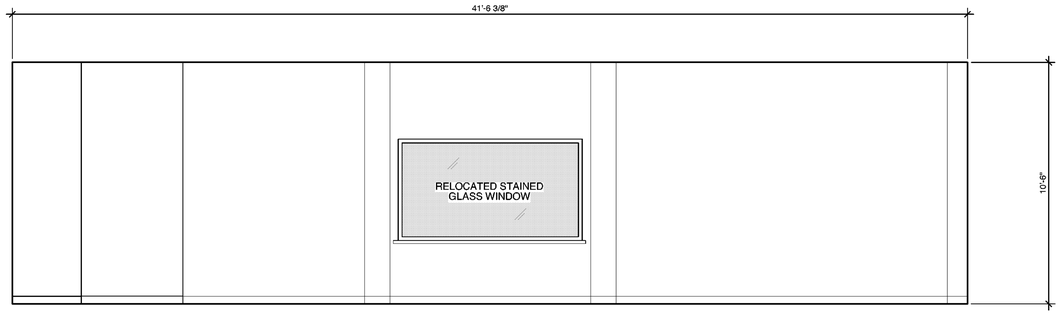

2 A609 INTERIOR ELEVATION @ CHAPEL STAGE
Scale: 3/8" = 1'-0"

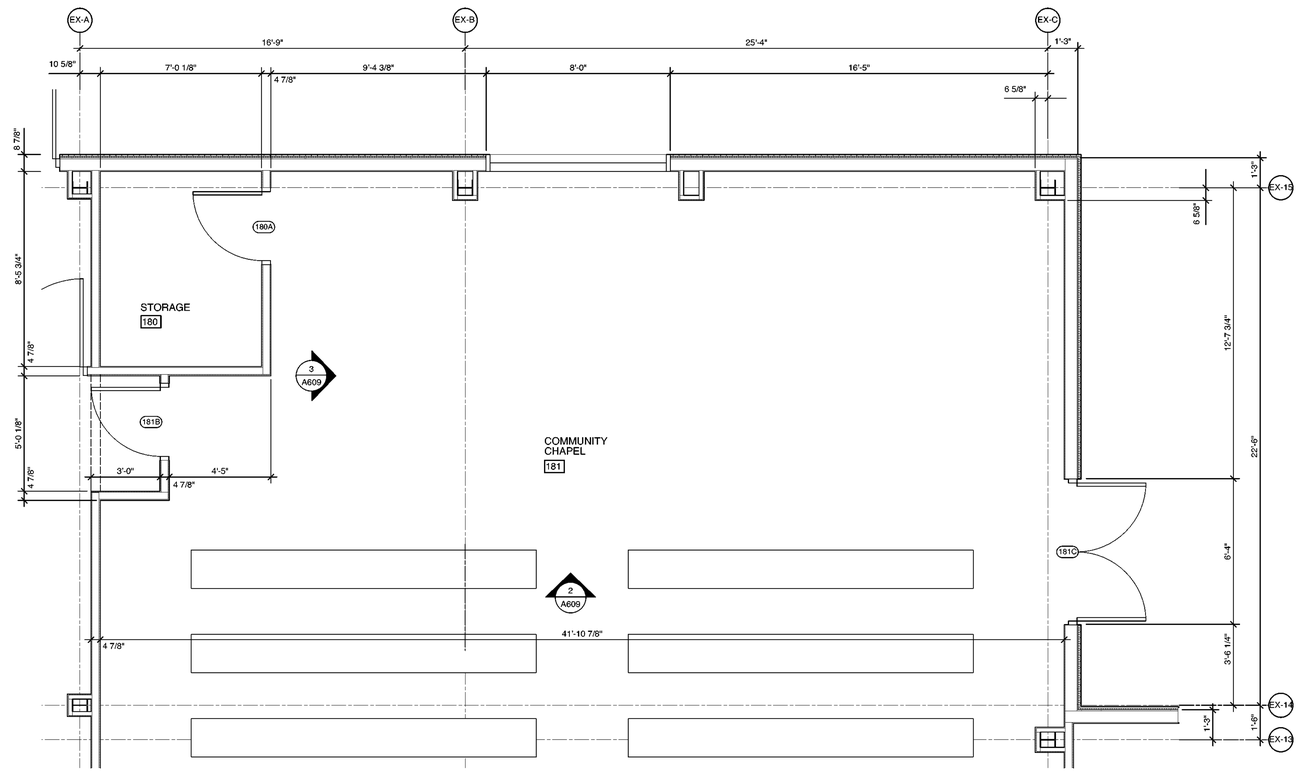

1 A609 ENLARGED PLAN @ CHAPEL STAGE, STAIR & RAMP
Scale: 3/8" = 1'-0"

BOWMAN MURRAY HEMINGWAY
ARCHITECTS
514 Market Street
Wilmington, NC 28401
Tel - (910) 762-2621
Fax - (910) 762-8506

PERMIT DRAWINGS FOR REVIEW ONLY

BOWMAN, MURRAY, HEMINGWAY, ARCHITECTS, P.C. CERT. NO. 50424 WILMINGTON, N. C.

THE DAVIS COMMUNITY
New Community Center

1011 Porter's Neck Road
Wilmington, North Carolina 28411

REV.	DATE	DESCRIPTION

NO.	DATE	ISSUE NOTE

Project Manager	Drawn By
David Ball	DP
Date	Reviewed By
October 22, 2020	Bruce Bowman
Project ID	-

Sheet Title

Enlarged Plan at Chapel

Sheet No.

A609

Door Hardware

HW1 *PASSAGE*
1 1/2 PAIR HINGES
1 PASSAGE CYLINDRICAL LOCKSET
1 WALL STOP

HW2 *SUITE*
1 1/2 PAIR HINGES
1 PASSAGE CYLINDRICAL LOCKSET
1 CLOSER
1 WALL STOP

HW3 *TOILET*
1 1/2 PAIR HINGES
1 PRIVACY CYLINDRICAL LOCKSET
1 WALL STOP

HW4 *STORAGE / MECHANICAL*
1 1/2 PAIR HINGES
1 STORAGE CYLINDRICA LOCKSET
1 CLOSER
1 WALL STOP

HW5 *TOILET WITH RESCUE STRIKE*
2 PIVOT HINGES
1 RESCUE STRIKE
2 DOOR STRIKE BRUSHES
1 WALL STOP
1 DOOR HOOK

HW6 *ENTRANCE*
2 PAIR HINGES
1 ENTRANCE CYLINDRICAL LOCKSET
1 RIM PANIC DEVICE
1 CLOSER
1 WALLSTOP
1 ADA THRESHOLD
1 WEATHERSTRIP SET

HW7 *EXTERIOR STOREROOM*
1 1/2 PAIR HINGES
1 STOREROOM CYLINDRICAL LOCKSET
1 CLOSER
1 WALLSTOP
1 ADA THRESHOLD
1 WEATHERSTRIP SET

HW8 *STOREROOM*
3 PAIR HINGES
1 STOREROOM CYLINDRICAL LOCKSET
1 CLOSER
1 WALLSTOP
1 ADA THRESHOLD
1 HEAD / FOOT BOLT SET

HW9 *ALUMINUM STOREFRONT*
1 1/2 PAIR HINGES
1 ENTRANCE CYLINDRICAL LOCKSET
1 RIM PANIC DEVICE
1 WALLSTOP
1 ADA THRESHOLD
1 WEATHERSTRIP SET

HW10 *FIREWALL*
2 PAIR HINGES
1 RIM PANIC DEVICE
1 WALLSTOP
1 CLOSER
1 SMOKE GASKET
REAPPLY SPECIAL LOCKING HARDWARE FROM EXISTING DOOR

HW11 *ACTIVITIES*
4 PAIR HINGES
1 CLASSROOM CYLINDRICAL LOCKSET
2 CLOSERS
2 WALLSTOPS
2 SURFACE MOUNTED VERTICAL ROD EXIT DEVICES
2 SOUNDSEALS

HW12 *ACTIVITY SUITES*
2 PAIR HINGES
1 CLASSROOM CYLINDRICAL LOCKSET
1 RIM PANIC DEVICE
1 CLOSER
1 WALLSTOP
1 SOUNDSEAL

HW13 *ACTIVITY SUITES*
2 PAIR HINGES
1 CLASSROOM CYLINDRICAL LOCKSET
1 RIM PANIC DEVICE
1 CLOSER
1 WALLSTOP
1 SOUNDSEAL

HW14 *OFFICE*
1 1/2 PAIR HINGES
1 ENTRANCE CYLINDRICA LOCKSET
1 DOOR HOOK
1 WALL STOP

HW15 *PUSH PULL*
1 1/2 PAIR HINGES
1 PUSH PULL SET
1 CLOSER
1 WALL STOP

Door & Frame Notes

1. COORDINATE ALL OPENINGS IN DOORS WITH NATIONAL DOOR STANDARDS AND CODES.
2. PROVIDE TEMPERED GLASS OR OTHER SAFETY GLASS IN AND ADJOINING DOORS AND AS INDICATED.
3. ANCHOR ALL EXTERIOR DOOR AND GARAGE DOOR FRAMES TO MEET NC WIND LOAD REQUIREMENTS.
4. HOLLOW METAL DOORS ARE TO BE 16 GAGE FACE SHEETS IN 16 GAGE FRAMES.
5. INSULATE H.M. DOORS AND GALVANIZE DOOR AND FRAMES AS NOTED.
6. SEE PLAN FOR LOCATION OF OPPOSITE HAND APPLICATIONS.
7. PROVIDE FIRE GLASS IN ALL FIRE RATED DOORS.

Hardware Notes

1. ALL HARDWARE FINISH SHALL BE 26D EQUAL TO MATCH.
2. LOCKSETS ARE TO BE CORININRUSSWIN CL3500 GRADE II CYLINDRICAL LEVER SERIES WITH REMOVABLE CORES.
3. ALL EXIT OR EXIT EGRESS DOORS SHALL BE FREE EGRESS UNLESS LOCKED BY SPECIAL LOCKING PROVISIONS COMPLIANT WITH NCBC SECTION 407.12.
4. ALL DOORS OVER 36" WIDE OR 84" TALL SHALL HAVE MINIMUM 4 HINGES PER LEAF.
5. ALL EXTERIOR DOOR HINGES SHALL BE STAINLESS STEEL NON REMOVABLE PIN.
6. ALL FIRE RATED DOORS SHALL UTILIZE FIRE RATED HARDWARE.
7. PROVIDE FLOOR STOPS WHERE WALL STOPS ARE NOT APPROPRIATE.
8. RESIDENT ACCESS TOILETS THAT HAVE SWINGING DOORS SHALL BE EQUIPPED WITH RESCUE FRAME AND STRIKE.
9. ALL DOOR FRONTS FACING RESILLENT OR TILE FLOORS SHALL HAVE VINYL MOP PLATES 6" X DOOR WIDTH LESS 2".

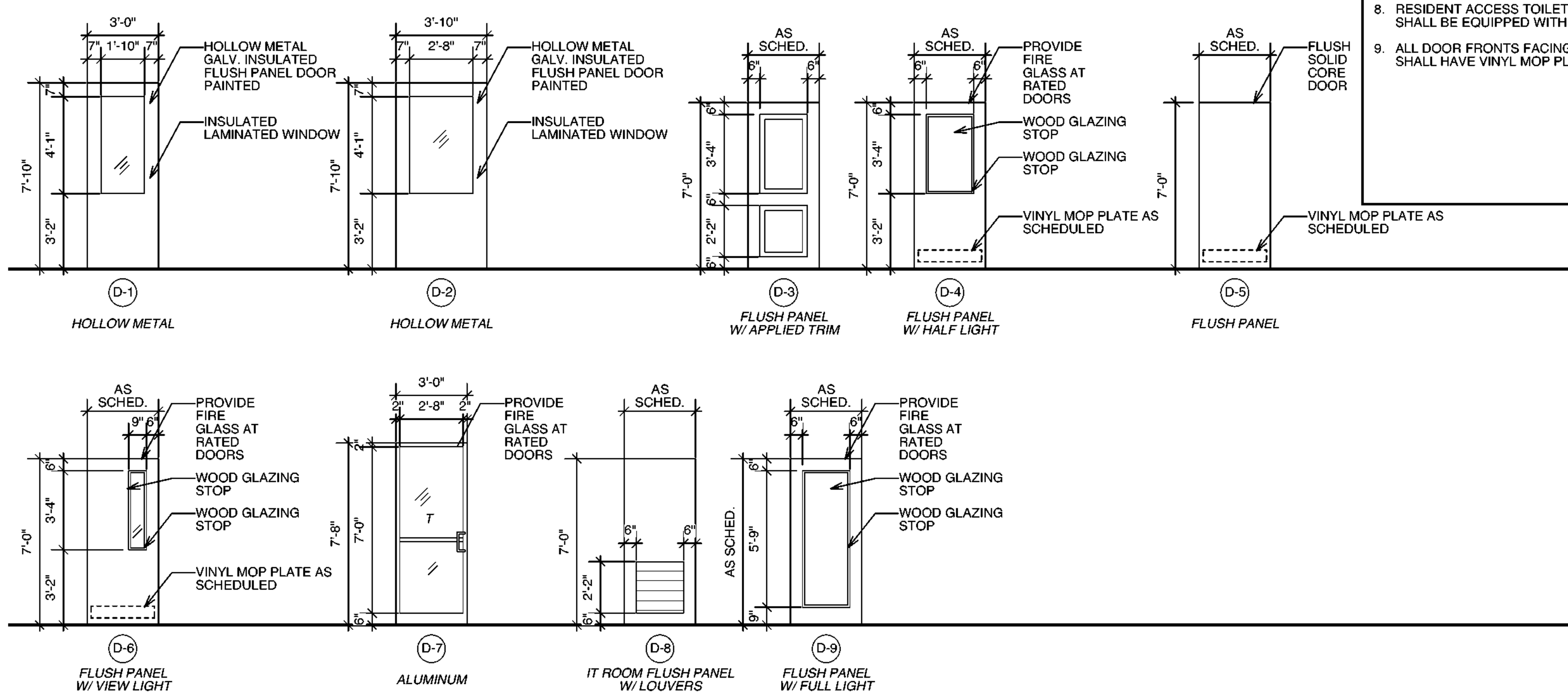

2 A700 **Door Elevations**
Scale: 1/4" = 1'-0"

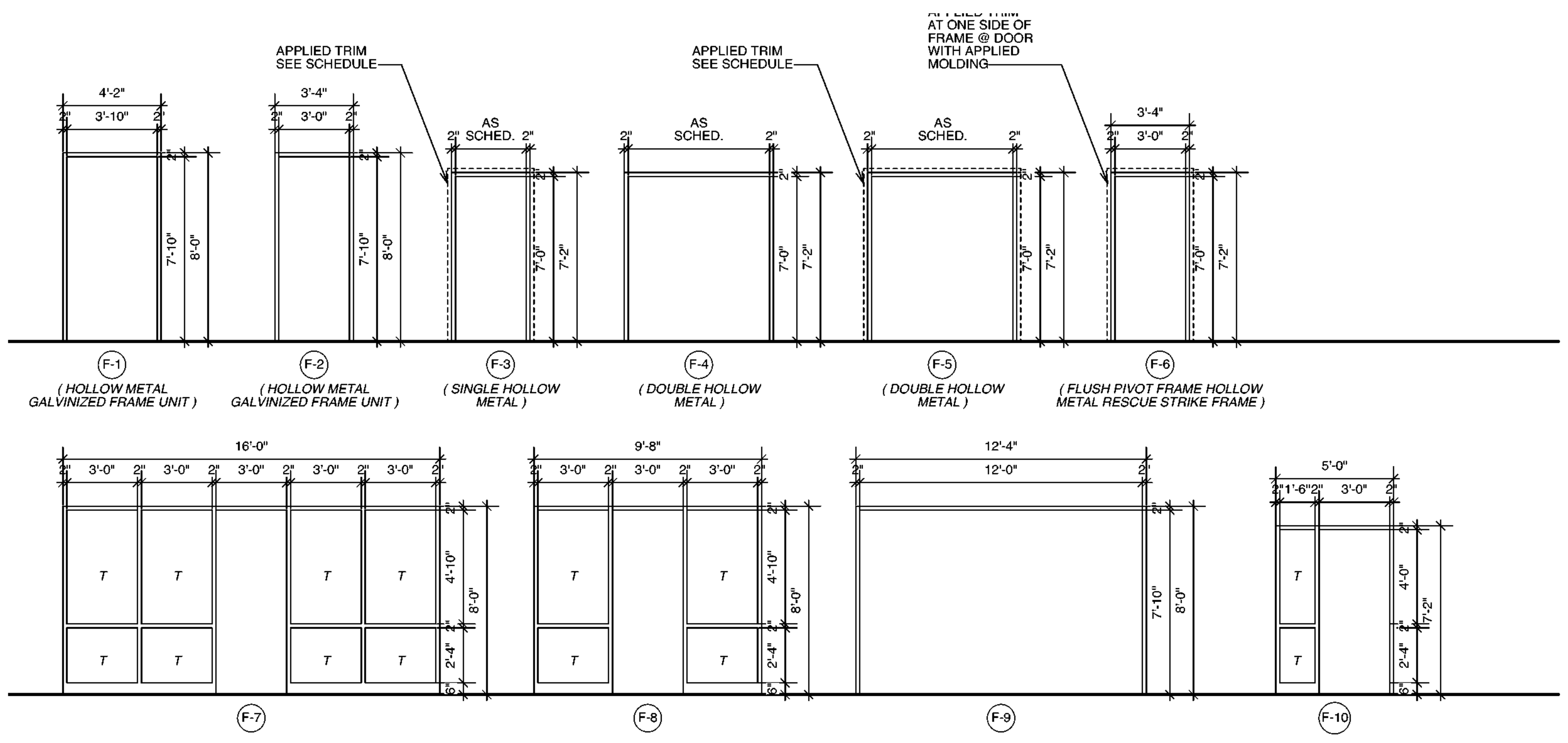

1 A700 **Door Frame Elevations**
Scale: 1/4" = 1'-0"

Door Schedule

NO	ROOM TYPE	SIZE: W x H x T	DOOR MAT.	FRAME MAT.	DOOR ELEV.	FRAME ELEV.	HDW	DOOR FINISH	GLAZING	NOTES
100A	OFFICE	3'-0" x 7'-0" x 1 3/4"	WD	HM	D4	F3	HW14	PAINTED		
100B	OFFICE	3'-0" x 7'-0" x 1 3/4"	WD	HM	D4	F3	HW14	PAINTED		
101A	OFFICE	3'-0" x 7'-0" x 1 3/4"	WD	HM	D4	F3	HW14	PAINTED		
102A	STORAGE	3'-0" x 7'-0" x 1 3/4"	WD	HM	D5	F3	HW2	PAINTED		
103A	OFFICE	3'-0" x 7'-0" x 1 3/4"	WD	HM	D4	F3	HW14	PAINTED		
104A	CORRIDOR	3'-0" x 7'-10" x 1 3/4"	ALUM	ALUM	D7	F2	HW9	MANUF	1/4" TEMPERED	
104B	CORRIDOR	3'-0" x 7'-10" x 1 3/4"	ALUM	ALUM	D7	F2	HW9	MANUF	1/4" TEMPERED	
105A	OFFICE	3'-0" x 7'-0" x 1 3/4"	WD	HM	D4	F3	HW14	PAINTED		
106A	OFFICE	3'-0" x 7'-0" x 1 3/4"	WD	HM	D4	F3	HW14	PAINTED		
107A	OFFICE	3'-0" x 7'-0" x 1 3/4"	WD	HM	D4	F3	HW14	PAINTED		
108A	OFFICE	3'-0" x 7'-0" x 1 3/4"	WD	HM	D4	F3	HW14	PAINTED		
109A	OFFICE	3'-0" x 7'-0" x 1 3/4"	WD	HM	D4	F3	HW14	PAINTED		
110A	OFFICE	3'-0" x 7'-0" x 1 3/4"	WD	HM	D4	F3	HW14	PAINTED		
111A	OFFICE	3'-0" x 7'-0" x 1 3/4"	WD	HM	D4	F3	HW14	PAINTED		
112A	OFFICE	3'-0" x 7'-0" x 1 3/4"	WD	HM	D4	F3	HW14	PAINTED		
113A	CONFERENCE	3'-0" x 7'-10" x 1 3/4"	WD	ALUM	D9		HW4	PAINTED	1/4" TEMPERED	
114A	OFFICE	3'-0" x 7'-0" x 1 3/4"	WD	HM	D4	F3	HW14	PAINTED		
115A	OFFICE	3'-0" x 7'-0" x 1 3/4"	WD	HM	D4	F3	HW14	PAINTED		
116A	OFFICE	3'-0" x 7'-0" x 1 3/4"	WD	HM	D4	F3	HW14	PAINTED		
117A	CORRIDOR	3'-0" x 7'-0" x 1 3/4"	WD	ALUM	D9	F10	HW4	PAINTED	1/4" TEMPERED	
118A	CORRIDOR	3'-0" x 7'-0" x 1 3/4"	WD	ALUM	D9	F10	HW4	PAINTED	1/4" TEMPERED	
119A	CORRIDOR	3'-0" x 7'-0" x 1 3/4"	WD	ALUM	D9	F10	HW4	PAINTED	1/4" TEMPERED	
120A	WAITING	3'-0" x 7'-10" x 1 3/4"	WD	ALUM	D9	F8	HW4	PAINTED	1/4" TEMPERED	
121A	SALES	3'-0" x 7'-10" x 1 3/4"	WD	ALUM	D9	F8	HW4	PAINTED	1/4" TEMPERED	
122A	MARKET	3'-0" x 7'-10" x 1 3/4"	WD	ALUM	D9	F7	HW4	PAINTED	1/4" TEMPERED	
123A	STORAGE	3'-0" x 7'-0" x 1 3/4"	WD	HM	D5	F3	HW2	PAINTED		
124A	OFFICE	3'-0" x 7'-0" x 1 3/4"	WD	HM	D4	F3	HW14	PAINTED		
127A	TOILET	3'-0" x 7'-0" x 1 3/4"	WD	HM	D5	F3	HW3	PAINTED		
128A	IT	3'-0" x 7'-0" x 1 3/4"	WD	HM	D8	F3	HW2	PAINTED		
129A	BREAK	3'-0" x 7'-0" x 1 3/4"	WD	HM	D5	F3	HW1	PAINTED		
129B	BREAK	3'-0" x 7'-10" x 1 3/4"	ALUM	ALUM	D7	F2	HW9	MANUF	1/4" TEMPERED	
131A	CORRIDOR	3'-0" x 7'-0" x 1 3/4"	WD	HM	D5	F3		PAINTED		
132A	TRAINING	3'-0" x 7'-0" x 1 3/4"	WD	HM	D5	F3	HW12	PAINTED		
133A	THEATER	3'-0" x 7'-0" x 1 3/4"	WD	HM	D5	F3	HW12	PAINTED		APPLIED MOLDING
133B	THEATER	3'-0" x 7'-10" x 1 3/4"	ALUM	ALUM	D7	F2	HW9	MANUF	1/4" TEMPERED	
133C	THEATER	3'-0" x 7'-0" x 1 3/4"	WD	HM	D5	F3	HW12	PAINTED		APPLIED MOLDING
134A	WOMEN'S ROOM	3'-0" x 7'-0" x 1 3/4"	WD	HM	D5	F3	HW15	PAINTED		
135A	MEN'S ROOM	3'-0" x 7'-0" x 1 3/4"	WD	HM	D5	F3	HW15	PAINTED		
136A	FOYER	11'-8" x 7'-0" x 1 3/4"	ALUM	ALUM	AUTOMATIC	F9		MANUF	1/4" TEMPERED	
136B	FOYER	11'-8" x 7'-0" x 1 3/4"	ALUM	ALUM	AUTOMATIC	F9		MANUF	1/4" TEMPERED	
140A	ACCOUNTING	3'-0" x 7'-10" x 1 3/4"	WD	ALUM	D9	F8	HW4	PAINTED	1/4" TEMPERED	
141A	OFFICE	3'-0" x 7'-0" x 1 3/4"	WD	HM	D4	F3	HW14	PAINTED		
142A	OFFICE	3'-0" x 7'-0" x 1 3/4"	WD	HM	D4	F3	HW14	PAINTED		
143A	OFFICE	3'-0" x 7'-0" x 1 3/4"	WD	HM	D4	F3	HW14	PAINTED		
144A	OFFICE	3'-0" x 7'-0" x 1 3/4"	WD	HM	D4	F3	HW14	PAINTED		
145A	STORAGE	3'-6" x 7'-10" x 1 3/4"	WD	HM			HW7	PAINTED		
146A	STORAGE	3'-0" x 7'-0" x 1 3/4"	WD	HM	D5	F3	HW2	PAINTED		
147A	WATER ROOM	(2)3'-0" x 7'-0" x 1 3/4"	HM	HM	D5	F4	HW9	PAINTED		
148A	IT	3'-0" x 7'-0" x 1 3/4"	WD	HM	D5	F3	HW2	PAINTED		
149A	ELECTRICAL ROOM	(2)3'-0" x 7'-0" x 1 3/4"	HM	HM	D5	F4	HW9	PAINTED		
150A	KITCHEN	4'-0" x 7'-0" x 1 3/4"	WD	HM	D4	F5	HW12	PAINTED		
150B	KITCHEN	3'-0" x 7'-0" x 1 3/4"	WD	HM	D4	F3	HW12	PAINTED		
150C	KITCHEN	3'-0" x 7'-0" x 1 3/4"	WD	HM	D4	F3		PAINTED		DOUBLE SWING
150D	KITCHEN	3'-0" x 7'-0" x 1 3/4"	WD	HM	D4	F3		PAINTED		DOUBLE SWING
150E	KITCHEN	3'-0" x 7'-0" x 1 3/4"	WD	HM	D4	F3	HW12	PAINTED		
153A	OFFICE	3'-0" x 7'-0" x 1 3/4"	WD	HM	D4	F5	HW14	PAINTED		
155A	STORAGE	3'-0" x 7'-0" x 1 3/4"	WD	HM	D5	F3	HW2	PAINTED		
156A	CORRIDOR	4'-0" x 7'-0" x 1 3/4"	WD	HM	D6	F3	HW6	PAINTED		
157A	OFFICE	3'-0" x 7'-0" x 1 3/4"	WD	HM	D4	F3	HW14	PAINTED		
158A	OFFICE	3'-0" x 7'-0" x 1 3/4"	WD	HM	D4	F3	HW14	PAINTED		
159A	BREAK	3'-0" x 7'-0" x 1 3/4"	WD	HM	D5	F3	HW1	PAINTED		
159B	BREAK	3'-0" x 7'-0" x 1 3/4"	WD	HM	D5	F3	HW1	PAINTED		
159C	BREAK	3'-0" x 7'-10" x 1 3/4"	ALUM	ALUM	D7	F2	HW9	MANUF	1/4" TEMPERED	
161A	SHOWER	3'-0" x 7'-0" x 1 3/4"	WD	HM	D5	F3	HW3	PAINTED		
162A	SHOWER	3'-0" x 7'-0" x 1 3/4"	WD	HM	D5	F3	HW3	PAINTED		
163A	TOILET	3'-0" x 7'-0" x 1 3/4"	WD	HM	D5	F3	HW3	PAINTED		
164A	TOILET	3'-0" x 7'-0" x 1 3/4"	WD	HM	D5	F3	HW3	PAINTED		
166A	STORAGE	3'-0" x 7'-0" x 1 3/4"	WD	HM	D5	F3	HW2	PAINTED		
167A	TOILET	3'-0" x 7'-0" x 1 3/4"	WD	HM	D5	F3	HW3	PAINTED		
168A	JANITOR	3'-0" x 7'-0" x 1 3/4"	WD	HM	D5	F3	HW2	PAINTED		
169A	CORRIDOR	3'-0" x 7'-0" x 1 3/4"	WD	HM	D5	F3	HW1	PAINTED		
169B	CORRIDOR	4'-0" x 7'-0" x 1 3/4"	WD	HM	D4	F3	HW13	PAINTED	FIRE GLASS	90 MIN RATED DOOR
169C	CORRIDOR	4'-0" x 7'-10" x 1 3/4"	HM	HM	D1	F2	HW13	PAINTED	FIRE GLASS	45 MIN RATED DOOR
169D	CORRIDOR	4'-0" x 7'-0" x 1 3/4"	WD	HM	D4	F3	HW13	PAINTED	FIRE GLASS	90 MIN RATED DOOR
170A	CORRIDOR	4'-0" x 7'-0" x 1 3/4"	WD	HM	D4	F3	HW13	PAINTED	FIRE GLASS	90 MIN RATED DOOR
170B	CORRIDOR	4'-0" x 7'-0" x 1 3/4"	WD	HM	D4	F3	HW13	PAINTED	FIRE GLASS	90 MIN RATED DOOR
170C	CORRIDOR	4'-0" x 7'-10" x 1 3/4"	HM	HM	D1	F2	HW13	PAINTED	FIRE GLASS	45 MIN RATED DOOR
171A	CONTROL	3'-0" x 7'-0" x 1 3/4"	WD	HM	D4	F3	HW2	PAINTED		
172A	EXAM	3'-0" x 7'-0" x 1 3/4"	WD	HM	D3	F3	HW1	PAINTED		
173A	EXAM WAIT	3'-0" x 7'-0" x 1 3/4"	WD	HM	D3	F3	HW1	PAINTED		
174A	STORAGE	3'-0" x 7'-0" x 1 3/4"	WD	HM	D5	F3	HW2	PAINTED		
175A	STORAGE	3'-0" x 7'-0" x 1 3/4"	WD	HM	D5	F3	HW2	PAINTED		
176A	TOILET	3'-0" x 7'-0" x 1 3/4"	WD	HM	D5	F3	HW3	PAINTED		
180A	STORAGE	3'-0" x 7'-0" x 1 3/4"	WD	HM	D5	F3	HW2	PAINTED		
181A	CHAPEL	(2) 3'-0" x 7'-0" x 1 3/4"	WD	HM	D3	F5	HW11	PAINTED		APPLIED MOLDING
181B	CHAPEL	3'-0" x 7'-0" x 1 3/4"	WD	HM	D5	F3	HW12	PAINTED		APPLIED MOLDING
181C	CHAPEL	(2)3'-0" x 7'-10" x 1 3/4"	ALUM	ALUM	D2			PAINTED	1/4" TEMPERED	APPLIED MOLDING
183A	PLAYHOUSE	(2) 3'-0" x 7'-0" x 1 3/4"	WD	HM	D3	F5	HW11	PAINTED		APPLIED MOLDING
183B	PLAYHOUSE	(2)3'-0" x 7'-10" x 1 3/4"	ALUM	ALUM	D2			PAINTED	1/4" TEMPERED	APPLIED MOLDING
183C	PLAYHOUSE	3'-0" x 7'-0" x 1 3/4"	WD	HM	D5	F3	HW12	PAINTED		APPLIED MOLDING
184A	STORAGE	3'-0" x 7'-0" x 1 3/4"	WD	HM	D5	F3	HW2	PAINTED		
185A	LIBRARY	4'-0" x 7'-10" x 1 3/4"	ALUM	ALUM	D2	F3		PAINTED	1/4" TEMPERED	APPLIED MOLDING
186A	LIVING ROOM	4'-0" x 7'-10" x 1 3/4"	ALUM	ALUM	D2	F3		PAINTED	1/4" TEMPERED	APPLIED MOLDING
187A	FOYER	11'-8" x 7'-0" x 1 3/4"	ALUM	ALUM	AUTOMATIC	F9		MANUF	1/4" TEMPERED	
187B	FOYER	11'-8" x 7'-0" x 1 3/4"	ALUM	ALUM	AUTOMATIC	F9		MANUF	1/4" TEMPERED	

BOWMAN MURRAY HEMINGWAY
ARCHITECTS
514 Market Street
Wilmington, NC 28401
Tel - (910) 762-2621
Fax - (910) 762-8506

PERMIT DRAWINGS FOR REVIEW ONLY

BOWMAN, MURRAY, HEMINGWAY ARCHITECTS, PC — REGISTERED ARCHITECTURAL CORPORATION — CERT. NO. 50424 — NORTH CAROLINA — WILMINGTON, N.C.

THE DAVIS COMMUNITY
New Community Center
1011 Porter's Neck Road
Wilmington, North Carolina 28411

REV.	DATE	DESCRIPTION

NO.	DATE	ISSUE NOTE

Project Manager: David Ball
Drawn By: David Ball
Date: October 22, 2020
Reviewed By: Bruce Bowman
Project ID: -

Sheet Title: **Door Schedules**

Sheet No.: A700

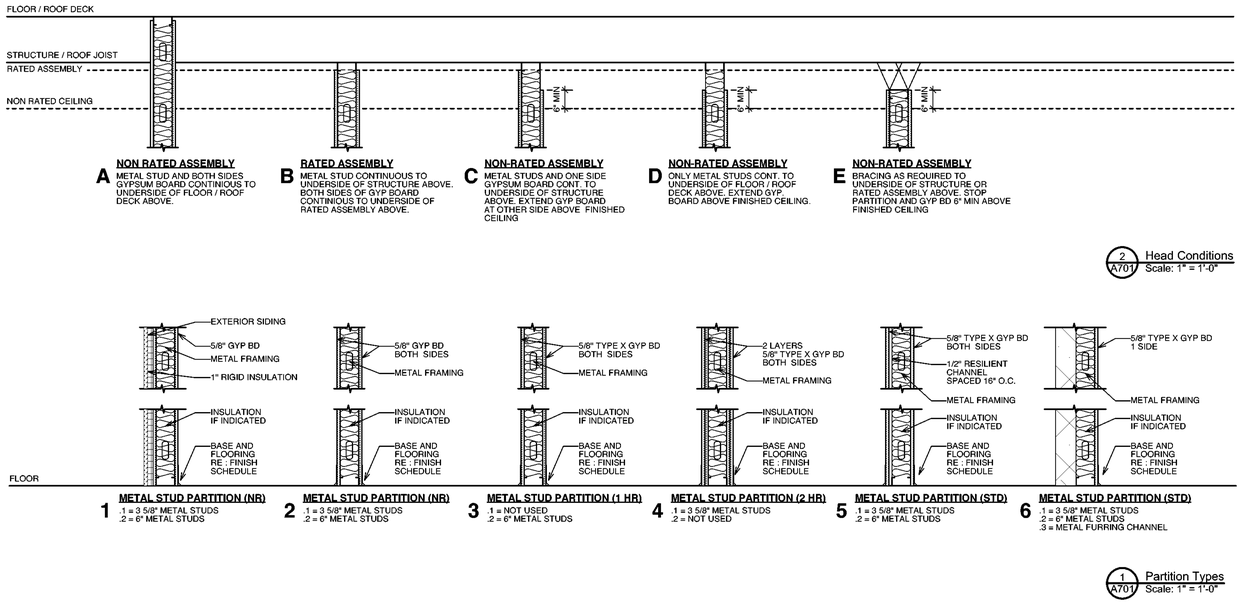

A **NON RATED ASSEMBLY**
METAL STUD AND BOTH SIDES GYPSUM BOARD CONTINIOUS TO UNDERSIDE OF FLOOR / ROOF DECK ABOVE.

B **RATED ASSEMBLY**
METAL STUD CONTINUOUS TO UNDERSIDE OF STRUCTURE ABOVE. BOTH SIDES OF GYP BOARD CONTINIOUS TO UNDERSIDE OF RATED ASSEMBLY ABOVE.

C **NON-RATED ASSEMBLY**
METAL STUDS AND ONE SIDE GYPSUM BOARD CONT. TO UNDERSIDE OF STRUCTURE ABOVE. EXTEND GYP BOARD AT OTHER SIDE ABOVE FINISHED CEILING

D **NON-RATED ASSEMBLY**
ONLY METAL STUDS CONT. TO UNDERSIDE OF FLOOR / ROOF DECK ABOVE, EXTEND GYP. BOARD ABOVE FINISHED CEILING.

E **NON-RATED ASSEMBLY**
BRACING AS REQUIRED TO UNDERSIDE OF STRUCTURE OR RATED ASSEMBLY ABOVE. STOP PARTITION AND GYP BD 6" MIN ABOVE FINISHED CEILING

2 / A701 Head Conditions
Scale: 1" = 1'-0"

1 **METAL STUD PARTITION (NR)**
.1 = 3 5/8" METAL STUDS
.2 = 6" METAL STUDS

2 **METAL STUD PARTITION (NR)**
.1 = 3 5/8" METAL STUDS
.2 = 6" METAL STUDS

3 **METAL STUD PARTITION (1 HR)**
.1 = NOT USED
.2 = 6" METAL STUDS

4 **METAL STUD PARTITION (2 HR)**
.1 = 3 5/8" METAL STUDS
.2 = NOT USED

5 **METAL STUD PARTITION (STD)**
.1 = 3 5/8" METAL STUDS
.2 = 6" METAL STUDS

6 **METAL STUD PARTITION (STD)**
.1 = 3 5/8" METAL STUDS
.2 = 6" METAL STUDS
.3 = METAL FURRING CHANNEL

1 / A701 Partition Types
Scale: 1" = 1'-0"

Partition Notes

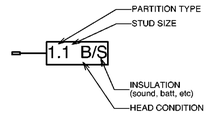

1. PARTITION TYPE SYMBOLS ARE NOTED ON THE FLOOR PLANS.
2. STUDS ARE 16" O.C. UNLESS NOTED OTHERWISE OR STRUCTURALLY INDICATED OTHERWISE.
3. ALL GYPSUM BOARD IS TO BE 5/8" TYPE "X" UNO.
4. REFERENCE CODE PLANS FOR LOCATIONS AND EXTENTS OR LIMITS OF RATED PARTITIONS.
5. ALL FIRE RATED ASSEMBLIES ARE BASED UPON IBC U.L. AND U.S. GYPSUM ASSOCIATION TEST DATA, FIRE RATED PARTITIONS ARE TO BE CONSTRUCTED ON ACCORDANCE WITH THE REQUIREMENTS OF THE TESTING AGENCIES. REFER TO SPECIFIC TEST REPORTS INDICATED FOR REQUIRED COMPONENTS AND ASSEMBLY.
6. ACOUSTIC PARTITIONS ARE TO BE CONSTRUCTED IN ACCORDANCE WITH THE REQUIREMENTS OF THE TESTING AGENCIES, REFER TO SPECIFIC TEST REPORTS FOR REQUIRED COMPONENTS AND ASSEMBLY, PROVIDE ACOUSTIC SEALANT AROUND WALL PERIMETER AND OPENINGS AT BASE GYP. BD. LAYER, SEAL ALL PENETRATIONS AND OFFSET BY (1) STUD MIN.
7. PROVIDING BRACING AT LOCATIONS PER US GYPSUM GUIDELINES FOR METAL OR WOOD PARTITION FRAMING.
8. SUBSTITUTE MOISTURE RESISTANCE GYPSUM WALLBOARD PANELS – TYPE "X" ON THE SIDE OF THE PARTITION WHERE THE FOLLOWING SITUATION OCCURS:
   a. BEHIND PRE-FAB SHOWER UNITS INCLUDING THOSE WITH PRE-FAB WALL LINERS
   b. BEHIND AND CONTINUOUS WITH TOILETS, MOP SINKS, HAND SINKS, LAVATORIES, VANITIES, KITCHEN DISHWASHING SINKS, DISHWASHING APPLIANCES AND WATER HEATERS.
   c. WHERE PLUMBING PENETRATIONS – WATER SUPPLY, SEWER, OR DRAINAGE OCCUR.
   d. PERPENDICULAR TO TOILETS INSTALLED AT INSIDE CORNERS.
9. SUBSTITUTE CEMENTITIOUS BACKERBOARD PANELS ON THE SIDE OF THE PARTITION WHERE THE FOLLOWING SITUATION OCCURS:
   a. FIELD APPLIED TILED SHOWER WALLS
   b. CERAMIC TILE INSTALLATION
10. ALL OTHER PARTITIONS ARE TO BE CONSTRUCTED WITH THE REQUIREMENTS OF THE SPECIFIC MATERIALS MANUFACTURER AND INDUSTRY STANDARDS.
11. BLOCKING IS REQUIRED AT THE FOLLOWING LOCATIONS WALL, MTD CABINETS, ACCESSORIES, EQUIPMENT, DOOR STOPS, HOLD OPENS, TOILET ROOM PARTITIONS AND ACCESSORIES AND OTHER LOCATIONS AS REQUIRED BY MANUFACTURERS SPECIFICATIONS OR INDUSTRY STANDARDS.
12. PARTITION CONTINUITY – PARTITIONS NOT DEFINED SHALL BE THE SAME TYPES AS NEAREST ADJACENT PARTITION FUNCTIONING OR ENCLOSING SIMILARLY INCLUDING ACROSS ALL DOOR / WINDOW OPENINGS.
13. REFERENCE PROJECT SPECIFICATIONS
    09 21 16 GYPSUM BOARD ASSEMBLIES
    09 22 16 NON-STRUCTURAL METAL FRAMING
    09 30 00 CEMENTITIOUS BACKER BOARD
    05 40 00 COLD FORMED METAL FRAMING
    06 10 00 ROUGH CARPENTRY
    07 21 00 BATT INSULATION
    07 84 00 FIRE STOPPING
    07 90 05 JOINT AND ACOUSTIC SEALANTS
14. RATED WALL MARKING AND IDENTIFICATION:
    PER SECTION 703 OF THE INTERNATIONAL BUILDING CODE (IBC) AND OR LOCALLY ADOPTED BUILDING CODES BASED ON THE ICB, FIRE WALLS, FIRE BARRIERS, FIRE PARTITIONS, SMOKE BARRIERS AND SMOKE PARTITIONS OR ANY OTHER WALL REQUIRED TO HAVE PROTECTED OPENINGS OR PENETRATIONS SHALL BE EFFECTIVELY AND PERMANENTLY IDENTIFIED WITH SIGNS OR STENCILING SUCH IDENTIFICATION SHALL:
    A. BE LOCATED IN ACCESSIBLE CONCEALED FLOOR, FLOOR CEILING OR ATTIC SPACES.
    B. BE REPEATED AT INTERVALS ALONG THE WALL OR PARTITION AND INCLUDING SUGGESTED WORDINGS " FIRE AND / OR SMOKE BARRIER – PROTECT ALL OPENINGS" OR OTHER WORDINGS.

BOWMAN MURRAY HEMINGWAY
ARCHITECTS
514 Market Street
Wilmington, NC 28401
Tel - (910) 762-2621
Fax - (910) 762-8506

PERMIT DRAWINGS FOR REVIEW ONLY

BOWMAN MURRAY HEMINGWAY ARCHITECTS, PA NORTH CAROLINA CERT. NO. 50424 WILMINGTON, N. C.

THE DAVIS COMMUNITY
New Community Center
1011 Porter's Neck Road
Wilmington, North Carolina 28411

REV.	DATE	DESCRIPTION

NO.	DATE	ISSUE NOTE

Project Manager	Drawn By
David Ball	David Ball
Date	Reviewed By
October 22, 2020	Bruce Bowman
Project ID	-

Sheet Title
Wall Types

Sheet No.
A701

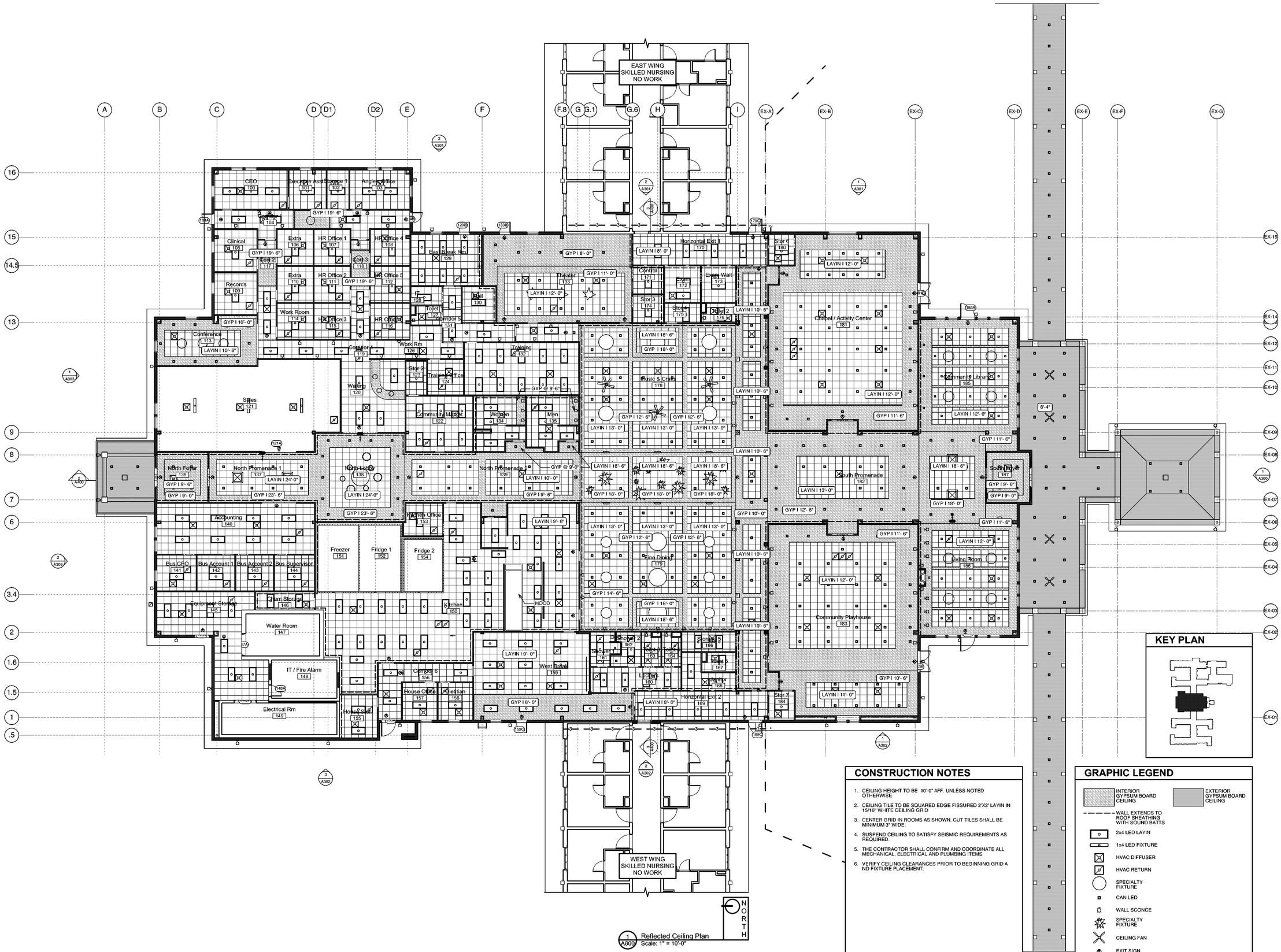

1 A800 Reflected Ceiling Plan
Scale: 1" = 10'-0"

CONSTRUCTION NOTES

1. CEILING HEIGHT TO BE 10'-0" AFF. UNLESS NOTED OTHERWISE
2. CEILING TILE TO BE SQUARED EDGE FISSURED 2'X2' LAYIN IN 15/16" WHITE CEILING GRID
3. CENTER GRID IN ROOMS AS SHOWN. CUT TILES SHALL BE MINIMUM 3" WIDE.
4. SUSPEND CEILING TO SATISFY SEISMIC REQUIREMENTS AS REQUIRED.
5. THE CONTRACTOR SHALL CONFIRM AND COORDINATE ALL MECHANICAL, ELECTRICAL AND PLUMBING ITEMS
6. VERIFY CEILING CLEARANCES PRIOR TO BEGINNING GRID A ND FIXTURE PLACEMENT.

GRAPHIC LEGEND

- INTERIOR GYPSUM BOARD CEILING
- EXTERIOR GYPSUM BOARD CEILING
- WALL EXTENDS TO ROOF SHEATHING WITH SOUND BATTS
- 2x4 LED LAYIN
- 1x4 LED FIXTURE
- HVAC DIFFUSER
- HVAC RETURN
- SPECIALTY FIXTURE
- CAN LED
- WALL SCONCE
- SPECIALTY FIXTURE
- CEILING FAN
- EXIT SIGN

KEY PLAN

BOWMAN MURRAY HEMINGWAY
ARCHITECTS
514 Market Street
Wilmington, NC 28401
Tel - (910) 762-2621
Fax - (910) 762-8506

PERMIT DRAWINGS FOR REVIEW ONLY

BOWMAN MURRAY HEMINGWAY ARCHITECTS PA CERT. NO. 50424 NORTH CAROLINA WILMINGTON, N. C.

THE DAVIS COMMUNITY
New Community Center

1011 Porter's Neck Road
Wilmington, North Carolina 28411

REV.	DATE	DESCRIPTION

NO.	DATE	ISSUE NOTE

Project Manager: David Ball	Drawn By: David Ball
Date: October 22, 2020	Reviewed By: Bruce Bowman
Project ID: -	

Sheet Title
Reflected Ceiling Plan

Sheet No.
A800

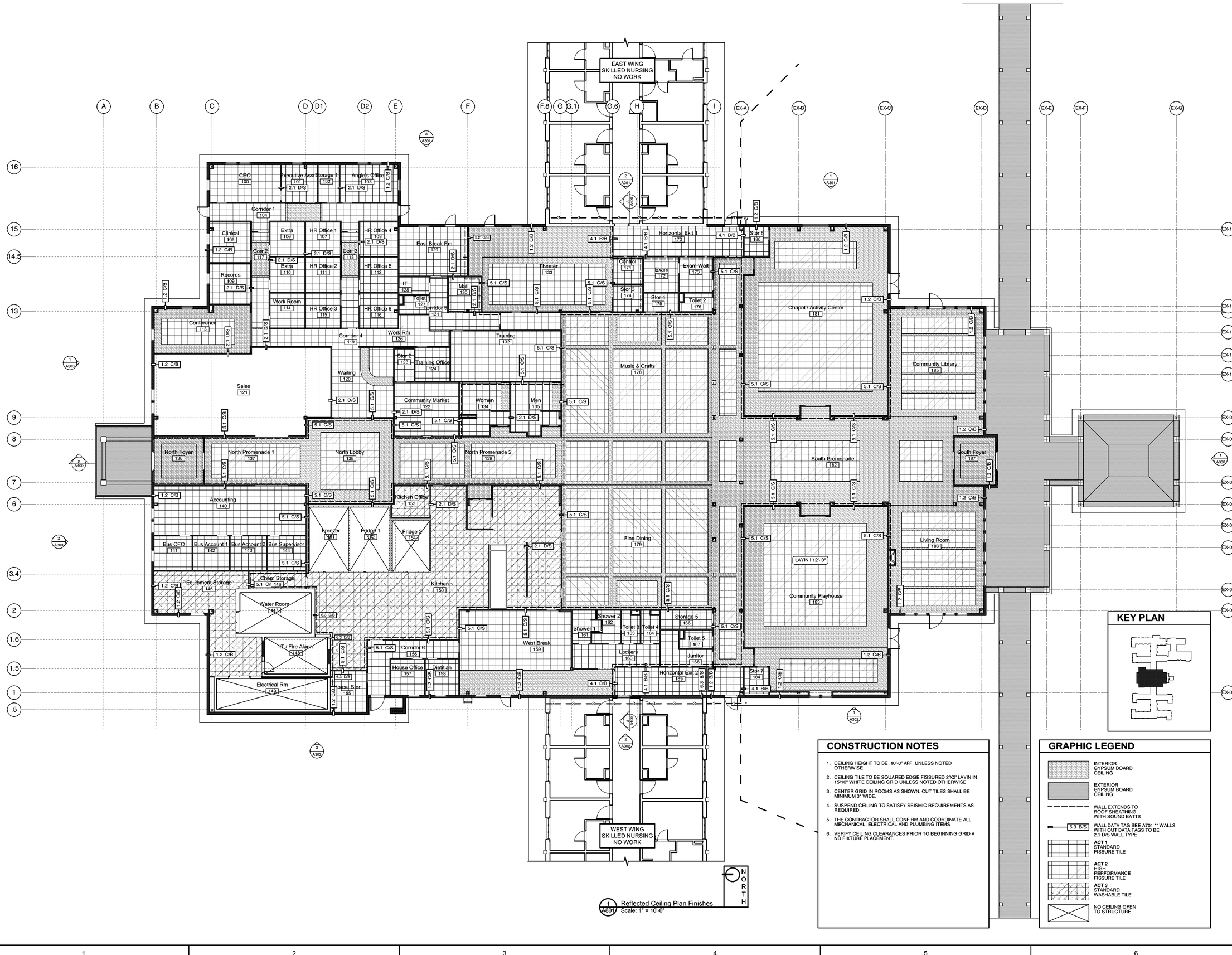

KEY PLAN

CONSTRUCTION NOTES

1. CEILING HEIGHT TO BE 10'-0" AFF. UNLESS NOTED OTHERWISE
2. CEILING TILE TO BE SQUARED EDGE FISSURED 2'X2' LAYIN IN 15/16" WHITE CEILING GRID UNLESS NOTED OTHERWISE
3. CENTER GRID IN ROOMS AS SHOWN. CUT TILES SHALL BE MINIMUM 3" WIDE.
4. SUSPEND CEILING TO SATISFY SEISMIC REQUIREMENTS AS REQUIRED.
5. THE CONTRACTOR SHALL CONFIRM AND COORDINATE ALL MECHANICAL, ELECTRICAL AND PLUMBING ITEMS
6. VERIFY CEILING CLEARANCES PRIOR TO BEGINNING GRID A ND FIXTURE PLACEMENT.

GRAPHIC LEGEND

- INTERIOR GYPSUM BOARD CEILING
- EXTERIOR GYPSUM BOARD CEILING
- WALL EXTENDS TO ROOF SHEATHING WITH SOUND BATTS
- 6.3 B/S — WALL DATA TAG SEE A701 ** WALLS WITH OUT DATA TAGS TO BE 2.1 D/S WALL TYPE
- **ACT 1** STANDARD FISSURE TILE
- **ACT 2** HIGH PERFORMANCE FISSURE TILE
- **ACT 3** STANDARD WASHABLE TILE
- NO CEILING OPEN TO STRUCTURE

BOWMAN MURRAY HEMINGWAY
ARCHITECTS
514 Market Street
Wilmington, NC 28401
Tel - (910) 762-2621
Fax - (910) 762-8506

PERMIT DRAWINGS FOR REVIEW ONLY

BOWMAN MURRAY HEMINGWAY ARCHITECTS PA — CERT. NO. 50424 — NORTH CAROLINA — WILMINGTON, N. C.

THE DAVIS COMMUNITY
New Community Center

1011 Porter's Neck Road
Wilmington, North Carolina 28411

REV.	DATE	DESCRIPTION

NO.	DATE	ISSUE NOTE

Project Manager: David Ball	Drawn By: David Ball
Date: October 22, 2020	Reviewed By: Bruce Bowman
Project ID: -	

Sheet Title

Reflected Ceiling Plan Finishes

Sheet No.

A801

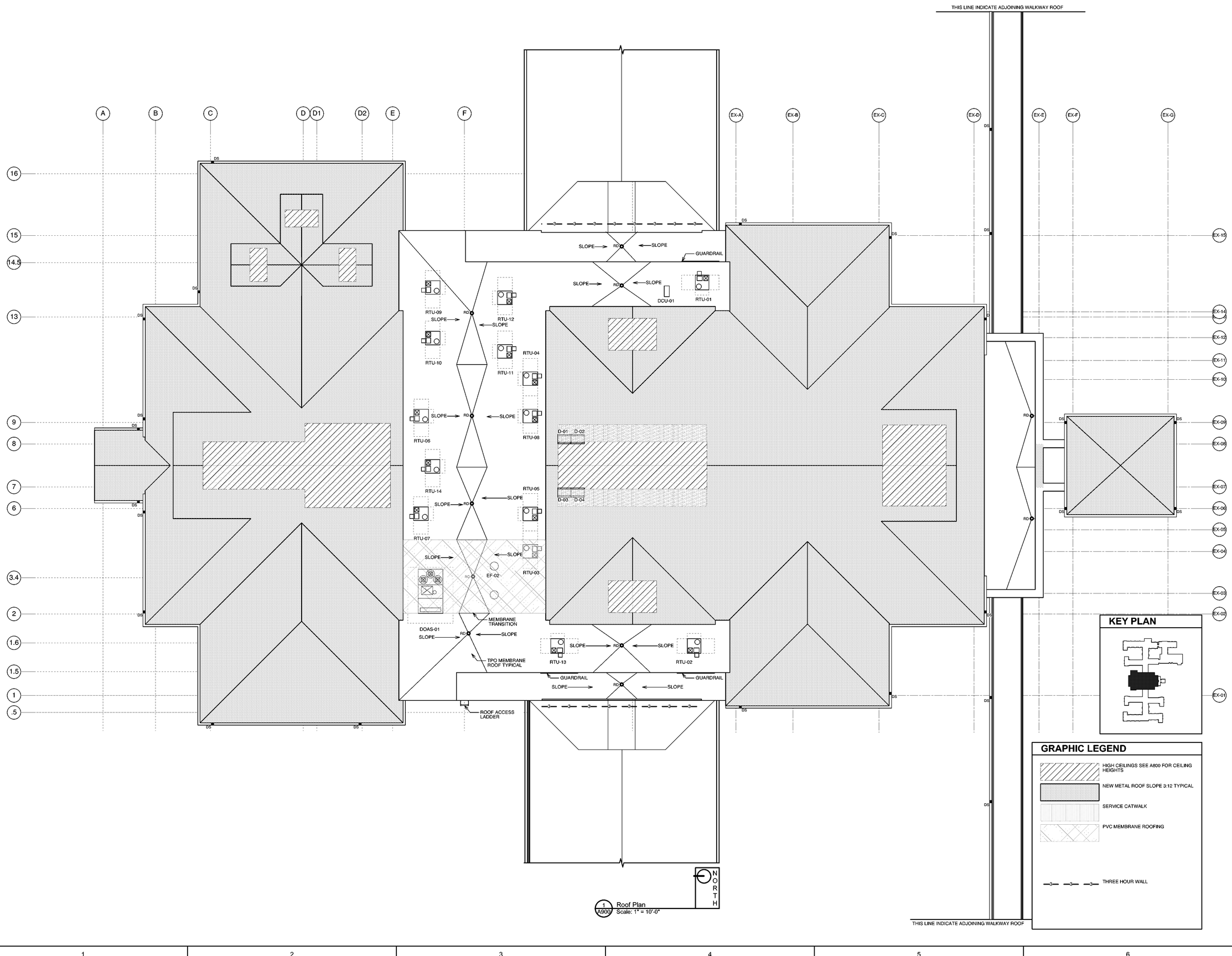

BOWMAN MURRAY HEMINGWAY
ARCHITECTS
514 Market Street
Wilmington, NC 28401
Tel - (910) 762-2621
Fax - (910) 762-8506

PERMIT DRAWINGS FOR REVIEW ONLY

BOWMAN MURRAY HEMINGWAY ARCHITECTS, PA
CERT. NO. 50424
NORTH CAROLINA
WILMINGTON, N. C.

THE DAVIS COMMUNITY
New Community Center

1011 Porter's Neck Road
Wilmington, North Carolina 28411

KEY PLAN

GRAPHIC LEGEND

- HIGH CEILINGS SEE A800 FOR CEILING HEIGHTS
- NEW METAL ROOF SLOPE 3:12 TYPICAL
- SERVICE CATWALK
- PVC MEMBRANE ROOFING
- THREE HOUR WALL

REV.	DATE	DESCRIPTION

NO.	DATE	ISSUE NOTE

Project Manager: David Ball	Drawn By: David Ball
Date: October 22, 2020	Reviewed By: Bruce Bowman
Project ID: -	

Sheet Title: **Roof Plan**

Sheet No.: A900

Electrical General Notes

1. THE CONTRACTOR SHALL REVIEW THE ARCHITECTURAL DRAWINGS AND SPECIFICATIONS FOR WORK REQUIREMENTS, THE AMOUNT OF SPACE AVAILABLE FOR ELECTRICAL EQUIPMENT, AND LAYOUT HIS WORK IN A COMPATIBLE AND COMPLEMENTARY MANNER.
2. THE CONTRACTOR SHALL ALSO BE RESPONSIBLE FOR THOROUGHLY FAMILIARIZING HIMSELF WITH ANY CONTRACTUAL REQUIREMENTS AS MAY BE SET FORTH IN THE OTHER DIVISIONS OF THE PROJECT SPECIFICATIONS.
3. UNLESS SPECIFICALLY NOTED OTHERWISE, SYSTEMS PROVIDED OR INSTALLED BY THE ELECTRICAL CONTRACTOR SHALL BE COMPLETE AND FULLY-FUNCTIONING AFTER INSTALLATION. INCIDENTAL COMPONENTS MAY NOT BE SHOWN, AND ALL WORK WHICH MAY BE REASONABLY IMPLIED AS BEING INCIDENTAL TO THIS WORK, BUT REQUIRED FOR THE PROPER OPERATION OF THE EQUIPMENT OR SYSTEM, SHALL BE PROVIDED AT NO ADDITIONAL COST TO THE OWNER. ADDITIONAL CIRCUITS SHALL BE INSTALLED WHEREVER NEEDED TO CONFORM TO THE SPECIFIC REQUIREMENTS OF EQUIPMENT.
4. BIDDERS SHALL HAVE A WORKING KNOWLEDGE OF LOCAL CODES AND ORDINANCES AND SHALL INCLUDE IN THEIR BIDS THE COSTS FOR ALL WORK INSTALLED IN STRICT ACCORDANCE WITH GOVERNING CODES, THE CONSTRUCTION DOCUMENTS NOTWITHSTANDING.
5. TEMPORARY POWER CONNECTIONS AS REQUIRED SHALL BE PROVIDED BY THE CONTRACTOR AT NO ADDITIONAL EXPENSE TO THE OWNER. ALL TEMPORARY EQUIPMENT WIRING SHALL BE IN ACCORDANCE WITH THE NATIONAL ELECTRICAL CODE. THE CONTRACTOR SHALL PROVIDE DETAILS, METHODS, MATERIALS, ETC. TO THE ARCHITECT/ENGINEER PRIOR TO MAKING TEMPORARY CONNECTIONS. FURNISH AND INSTALL ALL EQUIPMENT AND MATERIALS INCLUDING CONTROL EQUIPMENT, MOTOR STARTERS, BRANCH AND FEEDER CIRCUIT BREAKERS, PANELBOARDS, TRANSFORMERS, ETC. FOR TEMPORARY POWER. COORDINATE WITH THE OWNER AS REQUIRED.
6. THE WORK SHALL INCLUDE COMPLETE TESTING OF ALL EQUIPMENT AND WIRING AT THE COMPLETION OF WORK AND ANY MINOR CORRECTIONS, CHANGES OR ADJUSTMENTS NECESSARY FOR THE PROPER FUNCTIONING OF THE SYSTEM AND EQUIPMENT.
7. ALL EQUIPMENT SHOWN DOTTED OR DASHED IS BY OTHERS OR IS EXISTING, AS NOTED.
8. ALL ELECTRICAL EQUIPMENT SHALL, AT ALL TIMES DURING CONSTRUCTION, BE ADEQUATELY PROTECTED AGAINST MECHANICAL INJURY, OR DAMAGE BY WATER AND/OR THE ELEMENTS. ELECTRICAL EQUIPMENT SHALL BE STORED IN DRY PERMANENT SHELTERS. PROVIDE HEATING FOR EQUIPMENT SUBJECT TO MOISTURE DAMAGE OR DAMAGE FROM CONDENSATION. IF AN APPARATUS HAS BEEN DAMAGED, OR HAS BEEN SUBJECT TO POSSIBLE INJURY BY WATER OR THE ELEMENTS, SUCH DAMAGE SHALL BE REPLACED AT NO ADDITIONAL COST TO THE OWNER.
9. DO NOT SCALE ELECTRICAL DRAWINGS. FIELD VERIFY ALL DIMENSIONS AND/OR REFER TO THE ARCHITECTURAL DRAWINGS FOR DIMENSIONS.
10. CIRCUIT LAYOUTS ARE NOT INTENDED TO SHOW THE NUMBER OF FITTINGS, OR OTHER INSTALLATION DETAILS. UNLESS NOTED OTHERWISE, THE EXACT ROUTING OF FEEDER AND BRANCH CIRCUIT RACEWAYS AND CABLES IS THE RESPONSIBILITY OF THE CONTRACTOR. RISER AND GENERAL CIRCUIT ARRANGEMENTS ARE SHOWN SCHEMATICALLY/DIAGRAMMATICALLY ONLY. THE CONTRACTOR SHALL ROUTE CONDUITS AND CABLES AS REQUIRED BY THE CONDITIONS OF THE INSTALLATION.
11. UNLESS DIMENSIONED, DEVICE LOCATIONS SHOWN ON THE DRAWINGS ARE APPROXIMATE. ADJUST EXACT LOCATIONS AS REQUIRED TO SERVE THE INTENDED PURPOSE AND TO AVOID CONFLICTS AND INTERFERENCES WITH OTHER TRADES. EXACT DEVICE LOCATIONS SHALL BE AS INDICATED ON THE ARCHITECTURAL DRAWINGS OR AS DIMENSIONED. IF NOT SHOWN ON THE ARCHITECTURAL DRAWINGS OR DIMENSIONED ON THE ELECTRICAL DRAWINGS, VERIFY EXACT LOCATION WITH THE ARCHITECT/ENGINEER PRIOR TO ROUGH-IN.
12. CONDUIT TERMINATING IN PRESSED STEEL BOXES SHALL HAVE DOUBLE LOCKNUTS AND INSULATED BUSHINGS. CONDUITS TERMINATING IN GASKETED ENCLOSURES SHALL BE TERMINATED WITH GROUNDING TYPE CONDUIT HUBS.
13. DEVICE BOXES SHOWN BACK-TO-BACK SHALL BE OFFSET A MINIMUM OF TWELVE (12) INCHES TO REDUCE SOUND TRANSMISSION BETWEEN ROOMS.
14. THE DRAWINGS INDICATE THE NUMBER OF BRANCH CIRCUIT HOMERUN PHASE CONDUCTORS VIA ARROWHEADS. PROVIDE NEUTRAL AND EQUIPMENT GROUND CONDUCTORS AS REQUIRED. ADDITIONAL CONDUCTORS REQUIRED FOR CONTROL SHALL BE INCLUDED EVEN IF NOT EXPLICITLY SHOWN.
15. SEAL ALL CONDUIT OPENINGS THROUGH EXTERIOR BUILDING WALLS WATERTIGHT.
16. ALL EXTERIOR WIRING DEVICES, BOXES, ETC. SHALL BE WEATHERPROOF. LIGHTING FIXTURES SHALL BE APPROPRIATELY RATED AND LISTED FOR THE ENVIRONMENT.
17. MAINTAIN CEILING FIRE RATINGS WITH ALL NECESSARY LIGHTING FIXTURE TRIM, ACCESSORIES, OPTIONS AND/OR FIELD FABRICATED SHROUDS COMPLYING WITH ALL APPLICABLE CODES.
18. RACEWAYS AND CABLES PENETRATING FLOORS, CEILINGS OR WALLS SHALL BE PROPERLY SEALED SMOKETIGHT.
19. RACEWAYS AND CABLES PENETRATING RATED CEILING OR WALL ASSEMBLIES SHALL BE PROPERLY SEALED IN ACCORDANCE WITH THE CORRESPONDING UNDERWRITERS LABORATORIES (OR OTHER APPROVED THIRD PARTY TESTING AGENCY) APPROVED AND LISTED FIRESTOPPING MATERIALS AND MANUFACTURER APPROVED INSTALLATION TECHNIQUES COMPLYING WITH ALL APPLICABLE CODES. SEE ARCHITECTURAL DRAWINGS FOR IDENTIFICATION OF RATED WALLS AND CEILINGS.
20. LIGHTING FIXTURES MOUNTED IN FIRE-RATED CEILINGS SHALL BE PROVIDED WITH ACCESSORIES NECESSARY TO MAINTAIN THE CEILING FIRE RATING.
21. ALL RACEWAYS AND CABLES SHALL BE CONCEALED EXCEPT THOSE SHOWN ON DRAWINGS TO BE EXPOSED. IF APPLICABLE, MATCH EXISTING RACEWAY INSTALLATION METHODS AND ROUTINGS AT OR NEAR EXISTING FACILITIES.
22. INSTALL EXPOSED RACEWAYS PARALLEL TO OR AT RIGHT ANGLES TO NEARBY SURFACES OR STRUCTURAL MEMBERS, AND FOLLOW THE SURFACE CONTOURS AS MUCH AS POSSIBLE. NO DIAGONAL RUNS WILL BE ALLOWED. ALL CONDUITS SHALL BE RUN STRAIGHT AND TRUE. RUN PARALLEL OR BANKED RACEWAYS TOGETHER ON COMMON SUPPORTS WHERE PRACTICAL. MAKE BENDS IN PARALLEL OR BANKED RUNS FROM SAME CENTERLINE TO MAKE BENDS PARALLEL.
23. PROVIDE AND PLACE ALL SLEEVES FOR CONDUITS PENETRATING WALLS, FLOORS, PARTITIONS, ETC. LOCATE ALL NECESSARY SLOTS FOR ELECTRICAL WORK AND FORM BEFORE CONCRETE IS POURED.
24. PATCHING OF WATERPROOFED SURFACES SHALL RENDER THE AREA OF THE PATCHING COMPLETELY WATERPROOF.
25. ALL MOTORS, DRY TYPE TRANSFORMERS AND OTHER VIBRATING EQUIPMENT SHALL BE CONNECTED TO THE CONDUIT SYSTEM BY MEANS OF A SHORT SECTION (18 INCH MINIMUM) OF FLEXIBLE CONDUIT UNLESS OTHERWISE INDICATED. AN EQUIPMENT GROUNDING CONDUCTOR SHALL BE INSTALLED INSIDE THE FLEXIBLE CONDUIT AND TERMINATE AT THE LOAD END WITH AN APPROVED GROUNDING CLAMP OR LUG.
26. SURFACE MOUNTED PANELBOARDS, JUNCTION, OUTLET AND PULL BOXES, RACEWAYS, ETC., INSTALLED ON EXTERIOR SURFACES OR INSIDE ON EXTERIOR WALLS SHALL BE SUPPORTED BY SPACERS TO PROVIDE A 1/4" MINIMUM CLEARANCE BETWEEN THE WALL AND EQUIPMENT.
27. CEILING MOUNTED DEVICES INSTALLED IN ACOUSTICAL TILE CEILING AREAS SHALL BE SUPPORTED FROM THE STRUCTURE ABOVE WITH RODS OF SUFFICIENT SIZE TO PREVENT VERTICAL MOVEMENT OF THE OUTLET BOX. BRIDGES ALONE ARE NOT ADEQUATE UNLESS SPECIFICALLY APPROVED. CEILING MOUNTED EXIT LIGHT FIXTURES SHALL BE INSTALLED LEVEL. DO NOT SUPPORT DEVICES FROM ACOUSTICAL CEILING TILE.
28. PRIOR TO TRENCHING IN ANY AREA, THE CONTRACTOR SHALL CONTACT ELECTRICAL POWER, COMMUNICATIONS/DATA/FIBER, CABLE TELEVISION, GAS AND WATER UTILITY PROVIDERS AND HAVE ALL UTILITIES IN THE AREA IDENTIFIED. DAMAGE TO ANY UNDERGROUND UTILITIES OR STRUCTURES SHALL BE REPAIRED BY THE CONTRACTOR AT NO ADDITIONAL COST TO THE PROJECT.
29. ALL UNDERGROUND RACEWAYS SHALL BE IDENTIFIED BY UNDERGROUND LINE MARKING TAPE LOCATED DIRECTLY ABOVE THE RACEWAY AT 6 TO 8 INCHES BELOW FINISHED GRADE. SEE SPECIFICATIONS SECTION 260553.
30. WHERE UNDERGROUND SERVICE, FEEDER AND BRANCH CIRCUIT RACEWAYS ARE REQUIRED TO TURN UP INTO CABINETS, EQUIPMENT, ETC., AND ON TO POLES, THE ELBOW REQUIRED AND THE STUB-UP OUT OF THE SLAB OR EARTH SHALL BE OF PLASTIC-COATED RIGID STEEL. ALTERNATELY, FIELD APPLIED CORROSION PROTECTION WRAPS MAY BE USED, IN EQUIVALENT THICKNESS TO FACTORY APPLIED MATERIALS, WITH THE SPECIFIC APPROVAL OF THE ARCHITECT/ENGINEER.
31. PROVIDE 200% RATED NEUTRAL FEEDERS AND NEUTRAL BARS FOR PANELBOARDS FED BY K-RATED TRANSFORMERS, EVEN IF NOT SHOWN ON THE POWER RISER DIAGRAM AND/OR PANELBOARD SCHEDULES.
32. PROVIDE MACHINE PRINTED, LAMINATED, CLEAR WITH BLACK LETTERING, ADHESIVE BACKED RECEPTACLE DEVICE PLATE LABELS IDENTIFYING THE CIRCUIT FEEDING THE DEVICE. LABELS SHALL INDICATE PANEL AND CIRCUIT NUMBER. INSTALL CENTERED ON UPPER PORTION OF THE DEVICE PLATE. SEE SPECIFICATIONS SECTION 260553 FOR REQUIREMENTS.
33. FINAL TYPED PANELBOARD DIRECTORIES INSTALLED IN THE PANELBOARD DOOR POCKET SHALL INCLUDE FINAL ACTUAL ROOM NAMES AND NUMBERS IN ADDITION TO THE GENERAL DESCRIPTION SHOWN ON THE PANEL SCHEDULES ON THE DRAWINGS.
34. UNLESS NOTED OTHERWISE, CONDUCTOR SIZING IS BASED ON 75 DEGREE C. COPPER NEC RATINGS, UNLESS NOTED OTHERWISE. THE CONTRACTOR SHALL VERIFY, PRIOR TO INSTALLATION OF CONDUCTORS OR CONDUIT FEEDING ANY EQUIPMENT, THE ELECTRICAL EQUIPMENT IS RATED FOR USE WITH 75 DEGREE C. WIRING. IF ANY EQUIPMENT IS RATED FOR USE WITH LESS THAN 75 DEGREE C. CONDUCTORS, THE CONTRACTOR SHALL NOTIFY THE ARCHITECT/ENGINEER IMMEDIATELY FOR EVALUATION/CORRECTION.
35. DO NOT PULL CONDUCTORS UNTIL THE CONDUIT SYSTEM IS COMPLETE IN EVERY DETAIL. IN THE CASE OF CONCEALED WORK, "COMPLETE" MEANS UNTIL ALL ROUGH PLASTERING OR MASONRY HAS BEEN COMPLETED.
36. WHERE SIZE IS NOT SHOWN ON THE DRAWINGS, BRANCH CIRCUITS SHALL CONSIST OF #12 OR #10 AWG MINIMUM PHASE, NEUTRAL AND EQUIPMENT GROUND CONDUCTORS IN 1/2" MINIMUM RACEWAY. REFER TO THE "MINIMUM CONDUCTORS SIZE CHART" ON THE DRAWINGS AND INCREASE CONDUCTORS SIZES AS REQUIRED TO MAINTAIN A MAXIMUM OF 3% VOLTAGE DROP.
37. ALTERNATE MULTIWIRE RECEPTACLE CIRCUITS SUCH THAT ADJACENT RECEPTACLES ARE ON DIFFERENT CIRCUITS.
38. COMMON NEUTRAL BRANCH CIRCUITS ARE NOT PERMITTED. PROVIDE SEPARATE, INDIVIDUAL NEUTRAL CONDUCTORS FOR ALL LIGHTING AND RECEPTACLE BRANCH CIRCUITS.
39. MC CABLE SHALL BE SUPPORTED IN STRAIGHT LINES USING APPROVED SUPPORTING MEANS AND IN COMPLIANCE WITH THE NEC. DEDICATED SUPPORT WIRES MAY BE USED ABOVE FINISHED CEILINGS AND SHALL BE PAINTED RED PRIOR TO INSTALLATION. DO NOT SUPPORT CABLE WITH CEILING GRID SUPPORTS WIRES. DO NOT DRAPE CABLE OVER CEILINGS, LIGTING FIXTURES, CONDUIT, DUCTWORK, PIPING OR EQUIPMENT.
40. KEEP CONDUCTOR SPLICES TO A MINIMUM. INSTALL SPLICES AND TAPES THAT POSSESS EQUIVALENT OR BETTER MECHANICAL STRENGTH AND INSULATION RATINGS THAN CONDUCTORS BEING SPLICED. USE SPLICE AND TAP CONNECTORS COMPATIBLE WITH CONDUCTOR MATERIAL. INSTALL CONDUCTORS AT EACH OUTLET WITH AT LEAST 6 INCHES OF SLACK. CONNECT OUTLETS AND COMPONENTS TO WIRING AND TO GROUND AS INDICATED AND INSTRUCTED BY THE MANUFACTURER.
41. DO NOT SPLICE BRANCH CIRCUIT HOMERUNS WITHOUT THE PERMISSION OF THE ARCHITECT/ENGINEER. HOMERUNS SHALL BE CONTINUOUS FROM THE LAST OUTLET BOX TO THE SERVING PANELBOARD.
42. DO NOT COMBINE BRANCH CIRCUIT HOMERUNS UNLESS SPECIFICALLY INDICATED ON THE DRAWINGS.
43. DO NOT CHANGE CIRCUITING SHOWN WITHOUT PERMISSION OF THE ARCHITECT/ENGINEER.
44. TROUGH TAPS SHALL BE AT SWITCH/CIRCUIT BREAKER AMPACITY, UNLESS NOTED OTHERWISE.
45. INSTALL WIRING DEVICES AT HEIGHTS AS SHOWN ON THE DRAWINGS. ALSO COORDINATE MOUNTING HEIGHTS WITH THE ARCHITECTURAL DRAWINGS AND CASEWORK DETAILS. IF CONFLICTING, ARCHITECTURAL DRAWINGS AND DETAILS SHALL GOVERN.
46. PROVIDE GROUND FAULT CIRCUIT-INTERRUPTER (GFCI) PROTECTION FOR PERSONNEL IN ACCORDANCE WITH NEC ART. 210.8 (B) INCLUDING ALL ELECTRIC WATER COOLERS, KITCHEN EQUIPMENT, EXTERIOR RECEPTACLES AND RECEPTACLES IN AREAS SUBJECT TO POSSIBLE WET CONDITIONS. ALL RECEPTACLES INSTALLED WITHIN 6 FEET OF A SINK SHALL BE GFI PROTECTED. ALL RECEPTACLES IN NON-RESIDENTIAL KITCHENS SHALL BE GFI PROTECTED.
47. GFCI RECEPTACLES SHALL BE READILY ACCESSIBLE AFTER INSTALLATION. IF CONDITIONS OF THE INSTALLATION TO NOT ALLOW FOR READY ACCESS, PROVIDE A STANDARD RECEPTACLE AND PROVIDE A GFCI CIRCUIT BREAKER TO FEED THE RECEPTACLE.
48. IN AREAS IN WHICH DUAL LEVEL SWITCHING IS INDICATED (TYPICALLY BY 2 OR MORE ADJACENT, GANGED SWITCHES), PROVIDE THE APPROPRIATE NUMBER OF CONDUCTORS TO FACILITATE THIS FUNCTION (AS TYPICALLY SHOWN).
49. IF NOT CIRCUITED, CONNECT BATTERY PACK TYPE EMERGENCY LIGHTING FIXTURES TO THE UNSWITCHED LIGHTING CIRCUIT SERVING THE SPACE LIGHTED BY THE EMERGENCY FIXTURES. THESE CONNECTIONS ARE INTENTIONALLY NOT SHOWN TO MAINTAIN DRAWING CLARITY.
50. COORDINATE LIGHTING FIXTURE LOCATIONS WITH THE ARCHITECTURAL REFLECTED CEILING PLAN. IF CONFLICTS ARE NOTED, REQUEST CLARIFICATION FROM THE ARCHITECT/ENGINEER BEFORE PROCEEDING.
51. ADJACENT SWITCHES SHALL BE GANGED. INSTALL BARRIERS BETWEEN 277 VOLT AND UNLIKE VOLTAGE SECTIONS.
52. ADJACENT RECEPTACLES AND DATA/TELEPHONE OUTLETS SHALL BE INSTALLED 6 INCHES CENTER TO CENTER AND SHALL BE AT THE SAME ELEVATION.
53. SEPARATE NEUTRALS ARE REQUIRED FOR ALL LINE VOLTAGE DIMMED LIGHTING CIRCUITS.
54. WHERE THE DRAWINGS INDICATE A LIGHTING FIXTURE IS TO BE PROVIDED WITH SPECIAL FEATURES/SWITCHING (DIMMING, MULTI-LEVEL, ETC.), THE CONTRACTOR SHALL PROVIDE THESE FIXTURES WITH THE APPROPRIATE DRIVERS TO ACCOMMODATE THE SPECIAL FEATURE. THE CONTRACTOR SHALL PROVIDE THE FIXTURES AS INDICATED IN THE LIGHTING FIXTURE SCHEDULE WITH MODIFICATIONS AS REQUIRED BY DRAWING NOTES.
55. COORDINATE LOCATIONS OF PLUMBING, MECHANICAL, DATA, LOW VOLTAGE SYSTEMS AND AUDIO/VISUAL EQUIPMENT AND OF OWNER-PROVIDED EQUIPMENT WITH THE RESPECTIVE CONTRACTORS AND VENDORS AND THE OWNER BEFORE ROUGH-IN. ADJUST LIGHTING FIXTURES, RECEPTACLES AND ELECTRICAL EQUIPMENT TO ACCOMMODATE THIS EQUIPMENT. ADVISE THE ARCHITECT/ENGINEER OF CONFLICTS BEFORE ROUGH-IN. SEE SPECIFICATIONS SECTION 260580 FOR ADDITIONAL DETAIL INVOLVING WORK WITH OTHER TRADES.
56. THE LOCATIONS OF ELECTRICAL EQUIPMENT SERVING MECHANICAL, PLUMBING AND FOOD SERVICE EQUIPMENT MAY NOT BE SHOWN PRECISELY ON THE ELECTRICAL DRAWINGS DUE TO THE VARIABILITY OF INSTALLATIONS, SPACE AND EQUIPMENT ROOM ARRANGEMENTS AND THE EQUIPMENT PROVIDED. LOCATIONS OF ELECTRICAL EQUIPMENT, PANELBOARDS, WIRING TROUGHS, LOCAL DISCONNECTING MEANS, ETC. SHALL BE COORDINATED WITH THE RESPECTIVE CONTRACTORS PRIOR TO ROUGH-IN. LOCATE AND/OR ADJUST EQUIPMENT LOCATIONS SHOWN IN CONSULTATION WITH OTHER TRADES TO MAINTAIN VISIBILITY OF THE EQUIPMENT FROM DISCONNECTING MEANS AND PROVIDE ACCESS AND WORKING SPACE IN COMPLIANCE WITH CODES.
57. BEFORE COMMENCING WORK OR ORDERING MATERIALS, THE CONTRACTOR SHALL COORDINATE WITH OTHER TRADES AND VERIFY THE NAMEPLATE RATINGS OF ALL EQUIPMENT (MOTORS, HEATERS, COMPRESSORS, ETC.) AND ADJUST THE RATINGS OF THE ELECTRICAL EQUIPMENT (SWITCHES, FUSES, CIRCUIT BREAKERS, CONDUCTORS, RACEWAYS, ETC.) AS APPROPRIATE TO SERVE THIS EQUIPMENT.
58. COORDINATE ALL EQUIPMENT TERMINATIONS, PLUGS AND CORDSETS WITH VENDOR EQUIPMENT AND VERIFY ALL DEVICE LOCATIONS FOR SPECIALTY EQUIPMENT WITH CASEWORK PRIOR TO ROUGH-IN.
59. THE LAYOUT AND PLACEMENT OF ELECTRICAL DISTRIBUTION EQUIPMENT IN ELECTRICAL AND MECHANICAL EQUIPMENT ROOMS IS BASED ON PUBLISHED EQUIPMENT SIZES AND SHALL BE FOLLOWED AS CLOSELY AS POSSIBLE. DEVIATIONS FROM CONFIGURATIONS SHOWN IS THE RESPONSIBILITY OF THE CONTRACTOR. PROVIDE NATIONAL ELECTRIC CODE REQUIRED CLEARANCES FOR ALL ELECTRICAL EQUIPMENT, PANELBOARDS, TRANSFORMERS, SAFETY SWITCHES, ETC. COORDINATE RESOLUTION OF CONFLICTS WITH OTHER TRADES. ADVISE THE ARCHITECT/ENGINEER OF CONFLICTS BEFORE ROUGH-IN.
60. THE EXACT SPACING OF SMOKE AND HEAT DETECTORS AND A/V DEVICES SHALL BE FOLLOWED AS CLOSELY AS POSSIBLE WITH POSITIONS SHOWN ON THE DRAWINGS. DETECTOR SPACING IS BASED UPON NFPA 72 INCLUDING APPENDIX A. SLIGHT ADJUSTMENTS MAY BE MADE IN SPACING IF REQUIRED BY FIELD CONDITIONS, BUT SPACING SHALL NOT EXCEED ADA, NFPA AND EQUIPMENT MANUFACTURERS SPACING CRITERIA. DO NOT INSTALL SMOKE DETECTORS WITHIN 3 FEET OF SUPPLY AIR DIFFUSERS OR RETURN GRILLES. PROVIDE FLEX CONDUIT CONNECTION TO SMOKE AND HEAT DETECTORS OF ADEQUATE LENGTH TO ALLOW HORIZONTAL ADJUSTMENT OF FOUR FEET FROM POSITION INDICATED ON DRAWINGS.
61. INSTALLATION INFORMATION PACKED WITH LIGHTING FIXTURES, DEVICES AND EQUIPMENT SHALL BE RETAINED FOR INCLUSION IN THE OPERATIONS AND MAINTENANCE MANUALS.
62. PROTECT ALL EXISTING POWER, COMMUNICATIONS, DATA, TELEPHONE, LIFE SAFETY, FIRE ALARM, ACCESS CONTROL, SECURITY, PUBLIC ADDRESS, NURSE CALL, PAGING, CLOSED CIRCUIT TV SYSTEMS, ETC. AND MAINTAIN THEM IN OPERATION THROUGHOUT THE PROGRESS OF THE WORK. NOTIFY THE OWNER AND ARCHITECT/ENGINEER IF SHUTDOWNS ARE REQUIRED PRIOR TO ANY OUTAGE OF SERVICE. WHERE THE DURATION OF A PROPOSED OUTAGE CANNOT BE TOLERATED BY THE OWNER PROVIDE TEMPORARY CONNECTIONS AS REQUIRED TO MAINTAIN SERVICE.
63. THE CONTRACTOR SHALL PERFORM ALL CUTTING AND PATCHING NECESSARY TO INSTALL ALL EQUIPMENT AS REQUIRED AND SHALL REESTABLISH ALL FINISHES TO THEIR ORIGINAL CONDITION WHERE CUTTING AND PATCHING OCCUR. ALL CUTTING AND PATCHING SHALL BE DONE IN A THOROUGHLY WORKMANSHIP MANNER. SAW CUT CONCRETE AND MASONRY PRIOR TO BREAKING OUT SECTIONS. ALL PATCHING MATERIALS AND WORKMANSHIP SHALL BE IN ACCORDANCE WITH DIVISION 9 OF THESE SPECIFICATIONS AND PERFORMED BY TRADESMEN EXPERIENCED IN THAT WORK. ALL WORK SHALL BE SUBJECT TO THE APPROVAL OF THE ARCHITECT/ENGINEER.
64. CORE DRILL HOLES IN EXISTING CONCRETE WALLS AS REQUIRED.
65. INSTALL WORK AT SUCH TIME AS TO REQUIRE THE MINIMUM AMOUNT TO CUTTING AND PATCHING.
66. CUT OPENINGS ONLY LARGE ENOUGH TO ALLOW EASY INSTALLATION OF THE CONDUIT.
67. EXISTING CIRCUITING WHERE SHOWN IS FOR CONVENIENCE PURPOSES ONLY. VERIFICATION OF EXISTING WIRING DESTINATION, TERMINATION AND ADDITIONS OF NEW LOADS IS THE RESPONSIBILITY OF THE CONTRACTOR.
68. MAINTAIN CONTINUITY OF ALL EXISTING CIRCUITS TO REMAIN OR PORTIONS THEREOF AFFECTED BY THIS WORK.
69. DESIGN AND ADDITION OF NEW CIRCUITING IS BASED ON THE ENGINEER'S BEST INFORMATION REGARDING EXISTING CONDITIONS AND CURRENT RECORD DRAWINGS. AVAILABILITY OF ADEQUATE CIRCUIT BREAKER SPACE FOR NEW WORK IN EXISTING PANELBOARDS SHALL BE VERIFIED BY THE CONTRACTOR. IF ADEQUATE SPACE IS NOT AVAILABLE FOR NEW CIRCUIT BREAKERS THE CONTRACTOR SHALL NOTIFY THE ENGINEER FOR RESOLUTION BEFORE PROCEEDING.
70. TRACE OUT EXISTING WIRING THAT IS TO BE RELOCATED, OR REMOVED AND PERFORM THE RELOCATION OR REMOVAL WORK AS REQUIRED FOR A COMPLETE OPERATING AND SAFE SYSTEM.
71. THE EXISTING ELECTRICAL SYSTEMS DEPICTED ON THESE DRAWINGS HAVE BEEN COMPILED BY THE ENGINEER FROM THE OWNER'S RECORD DRAWINGS AND LIMITED FIELD VERIFICATION OF THE EXISTING CONDITIONS FOR THE PURPOSE OF INDICATING THE WORK REQUIRED AND ARE BELIEVED TO BE CORRECT. NOTWITHSTANDING, THE CONTRACTOR SHALL VERIFY ALL DIMENSIONS, POINTS OF ACCESS AND FIELD CONDITIONS AFFECTING HIS WORK.
72. THE CONTRACTOR SHALL VISIT THE SITE AND BECOME FAMILIAR WITH THE EXISTING ELECTRICAL SYSTEMS AND THE EXISTING BUILDING. THE SUBMISSION OF THIS PROPOSAL BY THE CONTRACTOR SHALL BE CONSIDERED EVIDENCE THAT HE OR HIS REPRESENTATIVE HAS VISITED THE SITE AND BUILDINGS AND NOTED THE LOCATION AND CONDITIONS UNDER WHICH THE WORK WILL BE PERFORMED AND THAT HE TAKES FULL RESPONSIBILITY OF ALL FACTORS GOVERNING HIS WORK. NO EXTRAS WILL BE CONSIDERED BECAUSE OF ADDITIONAL WORK NECESSITATED BY EXISTING JOB CONDITIONS THAT ARE NOT INDICATED ON THE DRAWINGS.
73. SOME EXISTING RECEPTACLE, LIGHTING OR OTHER LOADS MAY BE SERVED BY CIRCUITS INDICATED TO BE REMOVED. IF SUCH CONDITIONS ARE DISCOVERED, REQUEST THE ARCHITECT/ENGINEER PROVIDE NEW CIRCUIT NUMBER FOR THE LOAD. DO NOT INDISCRIMINATELY CONNECT TO THE NEAREST CIRCUIT.
74. ALL UNUSED OUTLET BOXES SHALL BE REMOVED OR, WITH SPECIFIC APPROVAL OF THE ARCHITECT/ENGINEER, SHALL BE BLANKED WITH STAINLESS STEEL PLATES. ALL OPENINGS IN EXISTING WALLS AND CEILINGS MADE BY THIS CONTRACTOR SHALL BE REPAIRED TO AN EQUAL FINISH AS ADJACENT SURFACES.
75. PROVIDE ALL ELECTRICAL RELOCATION WORK ASSOCIATED WITH THE RELOCATING OF EQUIPMENT FOR THE EXISTING FACILITIES, INCLUDING DISCONNECTING ALL EXISTING WIRING AND CONDUITS AND PROVIDING NEW WIRING AND CONDUITS TO THE RELOCATED EQUIPMENT.

SELECTIVE DEMOLITION NOTES

76. THE ELECTRICAL CONTRACTOR SHALL REVIEW THE ARCHITECTURAL, MECHANICAL, PLUMBING AND ELECTRICAL DRAWINGS AND SPECIFICATIONS FOR DEMOLITION REQUIREMENTS AND CARRY OUT THE WORK IN A COMPATIBLE AND COMPLEMENTARY MANNER. SECURE AND REMOVE ALL WIRING DEVICES, BOXES, FIXTURES, EXPOSED ABANDONED RACEWAYS, HANGARS, ETC., MADE OBSOLETE BY THESE ALTERATIONS AND AS SHOWN ON THE DRAWINGS. REMOVE UNUSED EXPOSED CONDUIT AND WIRING BACK TO POINT OF CONCEALMENT INCLUDING ABANDONED CONDUIT ABOVE ACCESSIBLE CEILINGS. REMOVE UNUSED WIRING IN CONCEALED CONDUITS BACK TO SOURCE OR NEAREST POINT OF USAGE. BLANK ABANDONED KNOCKOUTS IN REMAINING BOXES. INSTALL BLANK PLATES FOR ALL UNUSED OUTLETS THAT WILL REMAIN AS A RESULT OF THIS CONSTRUCTION. ALL SUCH WORK SHALL BE IN STRICT ACCORDANCE WITH ALL APPLICABLE CODES AND ORDINANCES. ALL ITEMS TO BE REMOVED OR MODIFIED MAY NOT BE SHOWN, HOWEVER, THIS CONTRACTOR SHALL REMOVE ANY ELECTRICAL WORK AS REQUIRED BY THE CONSTRUCTION OR AS DIRECTED BY THE OWNER OR ARCHITECT/ENGINEER. SURVEY THE AFFECTED AREAS BEFORE SUBMITTING A BID AS ALL EXISTING CONDITIONS CANNOT BE COMPLETELY DEPICTED ON THE DRAWINGS AND SOME UNUSUAL CONDITIONS MAY EXIST.
77. THE ACCESSIBLE PORTIONS OF ABANDONED FREE RUN CABLES (VOICE, DATA, VIDEO, ALARM, ETC.) SHALL BE REMOVED. VERIFY THAT ABANDONED WIRING AND EQUIPMENT SERVE ONLY ABANDONED FACILITIES.
78. REMOVE, RELOCATE, AND EXTEND EXISTING INSTALLATIONS TO ACCOMMODATE THE WORK.
79. PROVIDE TEMPORARY AND/OR PERMANENT WIRING AND CONNECTIONS AS SHOWN AND/OR AS REQUIRED BY CONDITIONS TO MAINTAIN EXISTING SYSTEMS IN SERVICE DURING CONSTRUCTION. WHEN WORK MUST BE PERFORMED ON ENERGIZED EQUIPMENT OR CIRCUITS, AND WHEN SUCH WORK IS SPECIFICALLY APPROVED BY THE OWNER AND PERMITTED BY REGULATORY AUTHORITIES, USE PERSONNEL EXPERIENCED IN SUCH OPERATIONS.
80. EXISTING ELECTRICAL SERVICE: COORDINATE POWER OUTAGES WITH THE OWNER AND UTILITY COMPANY. MAINTAIN EXISTING SYSTEMS IN SERVICE. DISABLE SYSTEMS ONLY TO MAKE SWITCHOVERS AND CONNECTIONS. OBTAIN WRITTEN PERMISSION FROM THE OWNER AT LEAST 24 HOURS BEFORE PARTIALLY OR COMPLETELY DISABLING SYSTEM. MINIMIZE OUTAGE DURATION. MAKE TEMPORARY CONNECTIONS TO MAINTAIN SERVICE IN AREAS ADJACENT TO WORK AREA.
81. EXISTING FIRE ALARM SYSTEM: COORDINATE FIRE ALARM SYSTEM WORK AND MAINTAIN THE EXISTING SYSTEM IN SERVICE UNTIL THE NEW AREA IS ACCEPTED. DISABLE SYSTEM ONLY TO MAKE SWITCHOVERS AND CONNECTIONS. NOTIFY THE OWNER AND LOCAL FIRE SERVICE AT LEAST 24 HOURS BEFORE PARTIALLY OR COMPLETELY DISABLING SYSTEM. LIMIT OUTAGES TO NORMAL BUSINESS HOURS ONLY AND MINIMIZE OUTAGE DURATION. MAKE TEMPORARY CONNECTIONS TO MAINTAIN SERVICE IN AREAS ADJACENT TO WORK AREA.
82. MAINTAIN ACCESS TO EXISTING ELECTRICAL INSTALLATIONS WHICH REMAIN ACTIVE. MODIFY INSTALLATION OR PROVIDE ACCESS PANEL AS APPROPRIATE.
83. PROTECT EXISTING EQUIPMENT AND CIRCUITS TO REMAIN AND EXTEND AS REQUIRED UTILIZING MATCHING CONDUCTORS AND CONDUIT SIZE AND TYPE.
84. RECONNECT EXISTING CIRCUITS SEPARATED AS A RESULT OF THIS CONSTRUCTION.
85. THE EXISTING ADJACENT FACILITIES WILL REMAIN OCCUPIED BY THE OWNER THROUGHOUT THE PROJECT. AS SUCH, WORK WILL REQUIRE SPECIAL EFFORT BY THIS CONTRACTOR TO ALLOW THE WORK TO PROCEED IN A TIMELY MANNER. ALL ELECTRICAL WORK SHALL BE COORDINATED WITH THE OWNER AND GENERAL CONTRACTOR SO AS TO MINIMIZE DISRUPTION OF THE OWNER'S USE OF THE FACILITIES AND MAINTAIN THE CONSTRUCTION SEQUENCE OF THE GENERAL CONTRACTOR. SEE ARCHITECTURAL DRAWINGS AND SPECIFICATIONS FOR ADDITIONAL INSTRUCTIONS CONCERNING PHASING AND SEQUENCE OF WORK. ALSO SEE SPECIFICATIONS SECTION TITLED "EXISTING BUILDINGS AND CONSTRUCTION" FOR ADDITIONAL REQUIREMENTS.
86. SAFETY
    A. COMPLY WITH OSHA AND NEC ARC FLASH PROTECTION REQUIREMENTS.
    B. FOR EQUIPMENT BEING REMOVED AND REPLACED, THE C

Dry Type Transformer Schedule

MARK	LOCATION	SOURCE	LOAD	RATING (KVA)	PRI. VOLTS	SEC. VOLTS	GRND'G. ELECTR. CONDX.	TEMP. RISE (DEG. C.)	K RATING	REMARKS
T-2HVAC	MECHANICAL 0007	PANEL "4MDP"	PANEL "2HVAC"	112.5	480	120/208	1/0	115		175A PRIMARY CB, NOTE 3
T-2NE1	MECHANICAL 0007	PANEL "4MDP"	PANEL "2NE1"	75	480	120/208	2	115	13	125A PRIMARY CB, NOTE 3
T-2NE3	MECHANICAL 0007	PANEL "4MDP"	PANEL "2NE2"	75	480	120/208	2	115	13	125A PRIMARY CB, NOTE 3

NOTES:
1. ALL TRANSFORMERS ARE THREE PHASE, DELTA-WYE CONNECTED, FLOOR MOUNTED, K RATED 1, UNO.
2. GROUNDING ELECTRODE CONDUCTOR (GRND'G. ELECTR. CONDX.) IS SHOWN IN AWG.
3. PROVIDE TRANSFORMER WITH AN INTEGRAL PRIMARY MOLDED CASE CIRCUIT BREAKER SIZE AS INDICATED. SEE SPECS SECTION 262200 PARA. 2.3.
4. SEE SPECIFICATIONS SECTION 262200 FOR TRANSFORMER MATERIALS AND INSTALLATION DETAILS.

SURGE PROTECTION DEVICES (SPD) SCHEDULE

SPD TYPE	LOCATION	FEEDER CIRCUIT BREAKER
SERVICE ENTRANCE	EXISTING MAIN SWITCHBOARD DISTRIBUTION SECTION	EXISTING CB #3, SQUARE D LX363000, 3/200 SPARE, REPLACE TRIP UNIT WITH 30A
PANELBOARD	EXISTING PANELBOARD CB	REMOVE EXISTING 3/100 CB AT POLES 32,34,36 AND REPLACE WITH NEW SQUARE D FA36030, 3/30 CB
PANELBOARD	EXISTING PANELBOARD 4MDP	REMOVE EXISTING CB #9, SQUARE D HGA36040, 3/60 SPARE AND PROVIDE AN HGA36030 3/30 CB. DELIVER THE SPARE CB TO THE OWNER.
PANELBOARD	EXISTING PANELBOARD 4LS	REMOVE EXISTING 1/20 CBs AT POLES 14,16,18 AND INSTALL NEW SQUARE D EDB34030, 3/30 CB
PANELBOARD	EXISTING PANELBOARD 4N	PROVIDE AND INSTALL A NEW GED TED134030, 3/30 CB IN AVAILABLE SPACE. IF SPACE IS NOT AVAILABLE REMOVE THE EXISTING CB #4, GED TED134060, 3/60 SPARE AND INSTALL THE NEW 3/30 IN THAT SPACE. DELIVER THE SPARE CB TO THE OWNER.

NOTES
1. UPDATE ALL SWITCHBOARD AND PANELBOARD SCHEDULES TO REFLECT ABOVE REVISIONS.
2. KEEP SPD CONDUCTORS AS SHORT AND STRAIGHT AS POSSIBLE.
3. THE SPD BASIS OF DESIGN SPDs REQUIRE 30A CBs. PROVIDE MANUFACTURER RECOMMENDED CBs IF THEY DIFFER FROM 30A.
4. REFER TO SPECS SECTION 264313 FOR SPD REQUIREMENTS.

EXISTING PANEL 4MDP BRANCH CIRCUIT BREAKER MODIFICATIONS

LOAD	PANEL 4MDP FEEDER CIRCUIT BREAKER
PANEL 4NE	EXISTING CB #11, 3/60 SPARE
PANEL 4HVAC	REMOVE EXISTING CB #12, SQUARE D HGA36060, 3/60 SPARE AND PROVIDE AN JGA36225 3/225 CB. DELIVER THE SPARE CB TO THE OWNER.
TRANSFORMER T-2HVAC	PROVIDE A SQUARE D JGA36175 3/175 CB AND INSTALL IN EXISTING SPACE 17.
TRANSFORMER T-2NE1	PROVIDE A SQUARE D JGA36125 3/125 CB AND INSTALL IN EXISTING SPACE 18.
TRANSFORMER T-2NE2	PROVIDE A SQUARE D JGA36125 3/125 CB AND INSTALL IN EXISTING SPACE 19.

NOTES:
1. PROVIDE ALL NECESSARY MOUNTING HARDWARE AND ACCESSORIES AS REQUIRED TO INSTALL NEW CIRCUIT BREAKERS.
2. UPDATE ALL SWITCHBOARD AND PANELBOARD SCHEDULES TO REFLECT ABOVE REVISIONS.

HOUSEHOLD "D" | HOUSEHOLD "C" | HOUSEHOLD "B" | HOUSEHOLD "A" | COMMUNITY CENTER "E" | HOUSEHOLD "F" | HOUSEHOLD "G" | HOUSEHOLD "H" | STAND ALONE HOUSEHOLD "J" | STAND ALONE HOUSEHOLD "K"

NIC | NIC

1 - Electrical Single Line Diagram
not to scale

McFadyen Engineers, PLLC
4411 Peachtree Avenue Wilmington, NC 28403 Phone: 910.399.1125
© Copyright 2020 McFadyen Engineers, PLLC NC: P-1010

BOWMAN MURRAY HEMINGWAY ARCHITECTS
514 Market Street
Wilmington, NC 28406
Tel - 910.762-2621
Fax - 910.762-8506

SOUTH CAROLINA PERMIT NOT VALID FOR CONSTRUCTION DRAWINGS UNLESS SIGNED AND SEALED FOR REVIEW ONLY DUNCAN McFADYEN

THE DAVIS COMMUNITY
New Community Center
1011 Porter's Neck Road
Wilmington, North Carolina 28411

REV.	DATE	DESCRIPTION

NO.	DATE	ISSUE NOTE

Project Manager: RDM	Drawn By: WP
Date: October 22, 2020	Reviewed By: RDM
Project ID	

Sheet Title: Electrical Single Line Diagram

Sheet No.: E102

PANEL "2NE1"

TYPE:	208	120	VOLTS	3	PHASE,	4	WIRE		PROVIDE	XX	EQUIPMENT GROUND BUS
BOLT-ON	MOUNT:	SURFACE							IF	XX	200 % NEUTRAL BUS
HINGED TRIM	FEED:	TOP							CHECKED		ULSE LABEL
	NEMA –	1	ENCLOSURE								ISOLATED GROUND BAR

LOAD SERVED	LOAD VA	CKT BKR POLES/TRIP	CKT #	LOAD VA A	LOAD VA B	LOAD VA C	CKT #	CKT BKR POLES/TRIP	LOAD VA	LOAD SERVED
PROJECTOR 133	500	1/20	1	2,500			2	1/20	1,800	FOUNTAIN 178
RECEPTACLES 133	720	1/20	3		1,220		4	1/20	500	EWC 139
RECEPTACLE 133	1,000	1/20	5			1,500	6	1/20	500	EWC 139
RECEPTACLE 133	1,000	1/20	7	1,900			8	1/20	900	RECEPTACLES 134,135,139,PV-03,PV-04
RECEPTACLE 133	1,000	1/20	9		2,080		10	1/20	1,080	RECEPTACLES 120,138
RECEPTACLE 129	1,000	1/20	11			1,720	12	1/20	720	RECEPTACLES 137
RECEPTACLE 129	1,000	1/20	13	1,500			14	1/20	500	AUTOMATIC DOOR 136
REFRIGERATOR 129	1,200	1/20	15		2,460		16	1/20	1,260	RECEPTACLES 120,123,124,132
RECEPTACLE 128	360	1/20	17			1,080	18	1/20	720	RECEPTACLES 132
RECEPTACLE 128	360	1/20	19	1,080			20	1/20	720	RECEPTACLES 132
RECEPTACLES 127,129,130,PV-01,PV-02	900	1/20	21		1,400		22	1/20	500	PROJECTOR 132
RECEPTACLES 116,119,131	1,620	1/20	23			2,700	24	1/20	1,080	RECEPTACLES 178
RECEPTACLES 106,107,110,111,114,115	1,080	1/20	25	2,340			26	1/20	1,260	RECEPTACLES 181
RECEPTACLES 106,107,110,111,114,115	1,080	1/20	27		1,580		28	1/20	500	PROJECTOR 181
RECEPTACLES 106,107,110,111,114,115	1,080	1/20	29			2,880	30	1/20	1,800	RECEPTACLES 181
RECEPTACLE 113	1,000	1/20	31	2,800			32	1/20	1,800	RECEPTACLES 181
RECEPTACLE 113	1,000	1/20	33		2,800		34	1/20	1,800	RECEPTACLES 181
RECEPTACLES 113	720	1/20	35			1,440	36	1/20	720	RECEPTACLES 172,173,PV-10,PV-11
PROJECTOR 113	500	1/20	37	1,500			38	1/20	1,000	RECEPTACLE 171
RECEPTACLES 105,109	1,080	1/20	39		2,080		40	1/20	1,000	RECEPTACLE 171
RECEPTACLES 104,117	900	1/20	41			2,160	42	1/20	1,260	RECEPTACLES 170,174,175,176,178,PV-09
RECEPTACLES 100,101,102,103	1,080	1/20	43	2,580			44	1/20	1,500	COPIER
RECEPTACLES 100,101,102,103	1,080	1/20	45		2,580		46	1/20	1,500	COPIER
EXTERIOR RECEPTACLES	720	1/20	47			1,440	48	1/20	720	RECEPTACLE DISPLAY 138
REFRIGERATOR 122	1,500	1/20	49	2,600			50	1/20	1,100	LIGHTING
REFRIGERATOR 122	1,500	1/20	51		2,920		52	1/20	1,420	LIGHTING
COOLER 122	1,500	1/20	53			2,480	54	1/20	980	LIGHTING
RECEPTACLES 122	720	1/20	55	2,120			56	1/20	1,400	LIGHTING
SPARE		1/20	57		980		58	1/20	980	LIGHTING
SPARE		1/20	59			1,050	60	1/20	1,050	LIGHTING
SPARE		1/20	61	1,000			62	1/20	1,000	EXTERIOR LIGHTS THRU TS
SPARE		1/20	63		1,550		64	1/20	1,550	LIGHTING
SPARE		1/20	65				66	1/20		SPARE
SPARE		1/20	67				68	1/20		SPARE
SPARE		1/20	69				70	1/20		SPARE
SPARE		1/20	71				72	1/20		SPARE
SPARE		1/20	73				74	1/20		SPARE
SPARE		1/20	75				76	1/20		SPARE
SPARE		1/20	77				78	1/20		SPARE
SPARE		1/20	79				80	1/20		SPARE
SPARE		2/30	81				82	2/30		SPARE
			83				84			
SPARE				21,720	21,650	18,450	TOTAL VA			225 A. BUS (COPPER, UNO)
1. COORDINATE CIRCUIT BREAKER TRIP WITH EQUIPMENT.				181	180	154	TOTAL AMPERES			225 A. MAIN CIRCUIT BREAKER
2. PROVIDE CIRCUIT BREAKER LOCKING DEVICE FOR FACU AND UNIT TYPE SMOKE DETECTOR CIRCUITS.				35%	33%	30%	PHASE BALANCE			14 KAIC MINIMUM RATING

DEMAND SUMMARY:	CONN. (VA)	DEMAND FACTOR	DEMAND (VA)	NOTES
R: TOTAL RECEPTACLES (VA) =	39,320			
RECEPTACLES FIRST 10 KVA	10,000	1.00	10,000	
RECEPTACLES > 10 KVA	29,320	0.50	14,660	
L: LIGHTING	6,930	1.25	8,663	
M: MISCELLANEOUS EQUIPMENT	13,020	1.00	13,020	
O: OTHER EQUIPMENT (CONTINUOUS)		1.25		
B: LARGEST MOTOR		1.25		
H: HVAC EQUIPMENT (FLA = MCA X 0.8)		1.00		
K: KITCHEN EQUIPMENT		1.00		DEMAND FACTOR PER NEC TABLE 220.56
TOTAL CONNECTED (VA)	59,270			
TOTAL DEMAND (VA)			46,343	
TOTAL DEMAND (AMPERES)			128.6	
PANEL DEMAND LOADING VS RATING		57.2%		

PANEL "2NE2"

TYPE:	208	120	VOLTS	3	PHASE,	4	WIRE		PROVIDE	XX	EQUIPMENT GROUND BUS
BOLT-ON	MOUNT:	FLUSH							IF	XX	200 % NEUTRAL BUS
HINGED TRIM	FEED:	TOP							CHECKED		ULSE LABEL
	NEMA –	1	ENCLOSURE								ISOLATED GROUND BAR

LOAD SERVED	LOAD VA	CKT BKR POLES/TRIP	CKT #	LOAD VA A	LOAD VA B	LOAD VA C	CKT #	CKT BKR POLES/TRIP	LOAD VA	LOAD SERVED
RECEPTACLE 161	1,500	1/20	1	2,760			2	1/20	1,260	RECEPTACLES 159,160,165,167,168,PV-07,PV-08
RECEPTACLE 162	1,500	1/20	3		2,040		4	1/20	540	RECEPTACLES 169,179
RECEPTACLE 163	1,500	1/20	5			2,760	6	1/20	1,260	RECEPTACLES 183, 184
RECEPTACLE 164	1,500	1/20	7	2,500			8	1/20	1,000	RECEPTACLE 183
REFRIGERATOR 159	1,000	1/20	9		2,000		10	1/20	1,000	RECEPTACLE 183
REFRIGERATOR 159	1,000	1/20	11			2,000	12	1/20	1,000	RECEPTACLE 183
RECEPTACLE 159	1,000	1/20	13	1,500			14	1/20	500	PROJECTOR 183
RECEPTACLE 159	1,000	1/20	15		2,080		16	1/20	1,080	RECEPTACLES 186
EWC 158	1,000	1/20	17			1,540	18	1/20	540	FLOOR BOXES 186
VENDING 159	1,000	1/20	19	1,500			20	1/20	500	AUTOMATIC DOOR 187
VENDING 159	1,000	1/20	21		2,080		22	1/20	1,080	RECEPTACLES AND FLOOR BOXES 185
RECEPTACLES 157,158	1,080	1/20	23			2,520	24	1/20	1,440	RECEPTACLES 182
RECEPTACLES 155,156	540	1/20	25	1,260			26	1/20	720	RECEPTACLES 179
RECEPTACLES 145,146,PV-05	540	1/20	27		1,620		28	1/20	1,080	EXTERIOR RECEPTACLES
RECEPTACLES 141,142,143,144	1,080	1/20	29			1,440	30	1/20	360	EXTERIOR RECEPTACLES
RECEPTACLES 141,142,143,144	1,080	1/20	31	2,880			32	1/20	1,800	FOUNTAIN EQUIPMENT 168
RECEPTACLES 140	720	1/20	33		1,260		34	1/20	540	RECEPTACLES 135
RECEPTACLES 140	720	1/20	35			1,720	36	1/20	1,000	LIGHTING
SPARE		1/20	37	1,100			38	1/20	1,100	LIGHTING
SPARE		1/20	39		985		40	1/20	985	LIGHTING
SPARE		1/20	41			600	42	1/20	600	LIGHTING
SPARE		1/20	43				44	1/20		SPARE
SPARE		1/20	45				46	1/20		SPARE
SPARE		1/20	47				48	1/20		SPARE
SPARE		1/20	49				50	1/20		SPARE
SPARE		1/20	51				52	1/20		SPARE
SPARE		1/20	53				54	1/20		SPARE
SPARE		1/20	55				56	1/20		SPARE
SPARE		1/20	57				58	1/20		SPARE
SPARE		1/20	59				60	1/20		SPARE
SPARE		1/20	61				62	1/20		SPARE
SPARE		1/20	63				64	1/20		SPARE
SPARE		1/20	65				66	1/20		SPARE
SPARE		1/20	67				68	1/20		SPARE
SPARE		1/20	69				70	1/20		SPARE
SPARE		1/20	71				72	1/20		SPARE
SPARE		1/20	73				74	1/20		SPARE
SPARE		1/20	75				76	1/20		SPARE
SPARE		1/20	77				78	1/20		SPARE
SPARE		1/20	79				80	1/20		SPARE
SPARE		2/30	81				82	2/30		SPARE
			83				84			
SPARE				13,500	12,065	12,580	TOTAL VA			225 A. BUS (COPPER, UNO)
1. COORDINATE CIRCUIT BREAKER TRIP WITH EQUIPMENT.				113	101	105	TOTAL AMPERES			225 A. MAIN CIRCUIT BREAKER
2. PROVIDE CIRCUIT BREAKER LOCKING DEVICE FOR FACU AND UNIT TYPE SMOKE DETECTOR CIRCUITS.				35%	32%	33%	PHASE BALANCE			14 KAIC MINIMUM RATING

DEMAND SUMMARY:	CONN. (VA)	DEMAND FACTOR	DEMAND (VA)	NOTES
R: TOTAL RECEPTACLES (VA) =	27,660			
RECEPTACLES FIRST 10 KVA	10,000	1.00	10,000	
RECEPTACLES > 10 KVA	17,660	0.50	8,830	
L: LIGHTING	3,885	1.25	4,606	
M: MISCELLANEOUS EQUIPMENT	6,800	1.00	6,800	
O: OTHER EQUIPMENT (CONTINUOUS)		1.25		
B: LARGEST MOTOR		1.25		
H: HVAC EQUIPMENT (FLA = MCA X 0.8)		1.00		
K: KITCHEN EQUIPMENT		1.00		DEMAND FACTOR PER NEC TABLE 220.56
TOTAL CONNECTED (VA)	38,145			
TOTAL DEMAND (VA)			30,236	
TOTAL DEMAND (AMPERES)			83.9	
PANEL DEMAND LOADING VS RATING		37.3%		

KITCHEN EQUIPMENT ELECTRICAL SCHEDULE

ITEM NO	QTY	CATEGORY	V	PH	A	HZ	HP	VA	CONNECTION TYPE	PLUG NEMA CONFIG	CONN HEIGHT	REMARKS
3	2	Convection Oven, Gas	120	1	7.7	60		924	CORD & PLUG	FV	FV	Existing/Relocated
6	1	Pizza Preparation Refrigerator	115	1	6	60	1/3	690	CORD & PLUG	5-15P	FV	
7	1	Hot Food Serving Counter / Table	208	1	13.3	60		2766.4	CORD & PLUG	6-20P	FV	
11	1	Dishwasher, Door Type, Ventless	208	3	46.3	60		38493	HARDWIRE			Leased by Owner
15	1	Coffee Brewer	120	1		60		1600	CORD & PLUG	FV	FV	By Vendor
16	1	Iced Tea Brewer	120	1	14.4	60		1728	CORD & PLUG	5-15P	FV	By Vendor
17	1	Ice Dispenser	115	1	4	60		460	CORD & PLUG	5-15P	FV	
20	1	Reach-In Refrigerator	115	1	5	60	1/4	575	CORD & PLUG	5-15P	FV	
26	1	Ice Maker, Cube-Style	208	1	9.8	60		2038.4	HARDWIRE			Existing/Relocated
29	1	Refrigerated Work Top	115	1	2.7	60	1/5	310.5	CORD & PLUG	5-15P	FV	
30	1	Food Processor, Benchtop / Countertop	120	1	7.0	60	1	840	CORD & PLUG	5-15P	FV	
31	1	Commercial Food Blender	120	1	15.0	60	3-3/4	1800	CORD & PLUG	FV	FV	
47	1	Food Slicer, Electric	115	1	4.8	60	1/3	552	CORD & PLUG	5-15P	FV	
56	1	Exhaust Hood System	See Mechanical Drawings Equipment Schedule						HARDWIRE			
57	2	Walk In Cooler, Modular, Remote Cond.	208	3		60		4323	HARDWIRE			
58	1	Walk In Freezer Modular, Remote Cond.	208	3		60		5763	HARDWIRE			
66	1	Reach-In Undercounter Freezer	115	1	2.3	60	1/5	265	CORD & PLUG	5-15P	FV	
67	1	French Fry Warmer	120	1	4.2	60		504	CORD & PLUG	5-15P	FV	
68	2	Mobile Heated Cabinet	120	1	13.8	60		1656	CORD & PLUG	5-15P	FV	
71	1	Combi Oven, Gas	120	1	7.0	60		840	HARDWIRE			

NOTES:
1. "FV" INDICATES NO CONFIGURATION GIVEN, FIELD VERIFY.

PANEL "4HVAC"

TYPE:	480	277	VOLTS	3	PHASE,	4	WIRE		PROVIDE	XX	EQUIPMENT GROUND BUS
BOLT-ON	MOUNT:	SURFACE							IF	XX	100 % NEUTRAL BUS
HINGED TRIM	FEED:	BOTTOM							CHECKED		ULSE LABEL
	NEMA –	1	ENCLOSURE								ISOLATED GROUND BAR

LOAD SERVED	LOAD VA	CKT BKR POLES/TRIP	CKT #	LOAD VA A	LOAD VA B	LOAD VA C	CKT #	CKT BKR POLES/TRIP	LOAD VA	LOAD SERVED
	2,550		1	4,462			2		1,912	
RTU-01	2,550	3/15	3		4,462		4	3/15	1,912	RTU-07
	2,550		5			4,462	6		1,912	
	2,550		7	4,462			8		1,912	
RTU-02	2,550	3/15	9		4,462		10	3/15	1,912	RTU-08
	2,550		11			4,462	12		1,912	
	3,399		13	5,949			14		2,550	
RTU-03	3,399	3/20	15		5,949		16	3/15	2,550	RTU-09
	3,399		17			5,949	18		2,550	
	3,399		19	5,312			20		1,912	
RTU-04	3,399	3/20	21		5,312		22	3/15	1,912	RTU-10
	3,399		23			5,312	24		1,912	
	3,399		25	5,312			26		1,912	
RTU-05	3,399	3/20	27		5,312		28	3/15	1,912	RTU-13
	3,399		29			5,312	30		1,912	
	3,399		31	15,914			32		12,514	
RTU-06	3,399	3/20	33		15,914		34	3/80	12,514	DOAS-01
	3,399		35			15,914	36		12,514	
			37				38			
		3/70	39				40	3/70		SPARE
			41				42			
NOTES:				41,409	41,409	41,409	TOTAL VA			225 A. BUS (COPPER, UNO)
1. COORDINATE CIRCUIT BREAKER TRIP WITH EQUIPMENT.				149	149	149	TOTAL AMPERES			225 A. MAIN LUGS
				33%	33%	33%	PHASE BALANCE			30 KAIC MINIMUM RATING

DEMAND SUMMARY:	CONN. (VA)	DEMAND FACTOR	DEMAND (VA)	NOTES
R: TOTAL RECEPTACLES (VA) =				
RECEPTACLES FIRST 10 KVA		1.00		
RECEPTACLES > 10 KVA		0.50		
L: LIGHTING		1.25		
M: MISCELLANEOUS EQUIPMENT		1.00		
O: OTHER EQUIPMENT (CONTINUOUS)		1.25		
B: LARGEST MOTOR	37,543	1.25	46,928	
H: HVAC EQUIPMENT (FLA = MCA X 0.8)	86,685	1.00	86,685	
K: KITCHEN EQUIPMENT		1.00		DEMAND FACTOR PER NEC TABLE 220.56
TOTAL CONNECTED (VA)	124,228			
TOTAL DEMAND (VA)			133,613	
TOTAL DEMAND (AMPERES)			160.7	
PANEL DEMAND LOADING VS RATING		71.4%		

PANEL "2HVAC"

TYPE:	208	120	VOLTS	3	PHASE,	4	WIRE		PROVIDE	XX	EQUIPMENT GROUND BUS
BOLT-ON	MOUNT:	SURFACE							IF	XX	100 % NEUTRAL BUS
HINGED TRIM	FEED:	BOTTOM							CHECKED		ULSE LABEL
	NEMA –	1	ENCLOSURE								ISOLATED GROUND BAR

LOAD SERVED	LOAD VA	CKT BKR POLES/TRIP	CKT #	LOAD VA A	LOAD VA B	LOAD VA C	CKT #	CKT BKR POLES/TRIP	LOAD VA	LOAD SERVED
SPARE		1/20	1	1,800			2	1/20	1,800	ROOF RECEPTACLES
SPARE		1/20	3		1,584		4	1/20	1,584	DEHUMIDIFIER D-01
SPARE		1/20	5			1,584	6	1/20	1,584	DEHUMIDIFIER D-03
SPARE		1/20	7	1,584			8	1/20	1,584	DEHUMIDIFIER D-03
SPARE		1/20	9		1,584		10	1/20	1,584	DEHUMIDIFIER D-04
SPARE		1/20	11			25	12	1/20	25	VENTILATOR PV-06
SPARE		1/20	13				14	1/20		SPARE
SPARE		1/20	15				16	1/20		SPARE
SPARE		1/20	17				18	1/20		SPARE
SPARE		1/20	19				20	1/20		SPARE
DHP-01	1,839	2/25	21		1,839		22	2/25		SPARE
	1,839		23			1,839	24			
RTU-11	1,664	2/30	25	1,664			26	2/25		SPARE
	1,664		27		1,664		28			
RTU-12	1,664	2/30	29			1,664	30	2/30		SPARE
	1,664		31	1,664			32			
RTU-14	1,664	2/30	33		1,664		34	2/30		SPARE
	1,664		35			1,664	36			
			37	26,515			38		26,515	
SPARE		3/30	39		25,260		40	3/250	25,260	PANEL "K"
			41			26,894	42		26,894	
NOTES:				33,227	33,560	33,670	TOTAL VA			400 A. BUS (COPPER, UNO)
1. COORDINATE CIRCUIT BREAKER TRIP WITH EQUIPMENT.				277	280	281	TOTAL AMPERES			400 A. MAIN CIRCUIT BREAKER
				33%	33%	34%	PHASE BALANCE			18 KAIC MINIMUM RATING

DEMAND SUMMARY:	CONN. (VA)	DEMAND FACTOR	DEMAND (VA)	NOTES
R: TOTAL RECEPTACLES (VA) =	3,240			
RECEPTACLES FIRST 10 KVA	3,240	1.00	3,240	
RECEPTACLES > 10 KVA		0.50		
L: LIGHTING		1.25		
M: MISCELLANEOUS EQUIPMENT	325	1.00	325	
O: OTHER EQUIPMENT (CONTINUOUS)		1.25		
B: LARGEST MOTOR	3,328	1.25	4,160	
H: HVAC EQUIPMENT (FLA = MCA X 0.8)	18,359	1.00	18,359	
K: KITCHEN EQUIPMENT	75,248	0.65	48,911	DEMAND FACTOR PER NEC TABLE 220.56
TOTAL CONNECTED (VA)	100,492			
TOTAL DEMAND (VA)			74,987	
TOTAL DEMAND (AMPERES)			208.1	
PANEL DEMAND LOADING VS RATING		52.0%		

PANEL "K"

TYPE:	208	120	VOLTS	3	PHASE,	4	WIRE		PROVIDE	XX	EQUIPMENT GROUND BUS
BOLT-ON	MOUNT:	FLUSH							IF	XX	100 % NEUTRAL BUS
HINGED TRIM	FEED:	TOP							CHECKED		ULSE LABEL
	NEMA –	1	ENCLOSURE								ISOLATED GROUND BAR

LOAD SERVED	LOAD VA	CKT BKR POLES/TRIP	CKT #	LOAD VA A	LOAD VA B	LOAD VA C	CKT #	CKT BKR POLES/TRIP	LOAD VA	LOAD SERVED
FOOD PROCESSOR (30)	840	1/20	1	1,740			2	1/20	900	RECEPTACLES 150
FOOD SLICER (47)	552	1/20	3		1,092		4	1/20	540	RECEPTACLES 153
REFRIGERATED WORK TOP (29)	324	1/20	5			828	6	1/20	504	UNDERCOUNTER FREEZER (67)
FOOD BLENDER (31)	1,800	1/20	7	2,065			8	1/20	265	FRY DUMP STATION (66)
SPARE		1/20	9		575		10	1/20	575	REACH-IN REFRIGERATOR (20)
PIZZA PREP REFRIG (6)	690	1/20	11			2,290	12	1/20	1,600	COFFEE BREWER (15)
CONVECTION OVEN (3)	924	1/20	13	2,604			14	1/20	1,680	ICED TEA BREWER (16)
CONVECTION OVEN (3)	924	1/20	15		1,384		16	1/20	460	ICE DISPENSER (17)
FREEZER DOOR HEATER (58)	200	1/20	17			1,856	18	1/20	1,656	HOT FOOD CABINET (68)
KITCHEN HOOD LIGHTS (58)	400	1/20	19	2,056			20	1/20	1,656	HOT FOOD CABINET (68)
KITCHEN HOOD CONTROLS (58)	200	1/20	21		1,028		22	1/20	828	FAN KEF-1
FRIDGE 1 EVAPORATOR (57)	216	1/20	23			1,044	24	1/20	828	FAN KEF-2
FRIDGE 2 EVAPORATOR (57)	216	1/20	25	416			26	1/20	200	OHM1, OHM2
FREEZER EVAPORATOR (58)	1,020	1/20	27		1,145		28	1/20	125	CP1
COMBI GAS OVEN (71)	840	1/20	29			840	30	1/20		SPARE
SPARE		1/20	31				32	1/20		SPARE
SPARE		1/20	33				34	1/20		SPARE
SPARE		1/20	35				36	1/20		SPARE
SPARE		1/20	37				38	1/20		SPARE
HOT FOOD SERVING COUNTER (7)	1,383	2/20	39		1,383		40	1/20		SPARE
	1,383		41			1,383	42	1/20		SPARE
	1,441		43	1,441			44	1/20		SPARE
FRIDGE 1 CONDENSER (67)	1,441	3/15	45		2,460		46	2/30	1,019	ICE MAKER (28)
	1,441		47			2,460	48		1,019	
	1,441		49	3,362			50		1,921	
FRIDGE 2 CONDENSER (67)	1,441	3/15	51		3,362		52	3/30	1,921	FREEZER CONDENSER
	1,441		53			3,362	54		1,921	
			55	12,831			56		12,831	
SPARE		3/30	57		12,831		58	3/60	12,831	DISHWASHER (11)
			59			12,831	60		12,831	
NOTES:				26,515	25,260	26,804	TOTAL VA			250 A. BUS (COPPER, UNO)
1. COORDINATE CIRCUIT BREAKER TRIP WITH EQUIPMENT.				221	211	224	TOTAL AMPERES			250 A. MAIN LUGS
2. ALL CIRCUIT BREAKERS TO BE GFCI TYPE.				34%	32%	34%	PHASE BALANCE			
3. NUMBERS IN PARENTHESES ARE EQUIPMENT NUMBERS FROM FOOD SERVICE DRAWINGS.										14 KAIC MINIMUM RATING
4. PROVIDE STAINLESS STEEL TRIM.										

DEMAND SUMMARY:	CONN. (VA)	DEMAND FACTOR	DEMAND (VA)	NOTES
R: TOTAL RECEPTACLES (VA) =	1,440			
RECEPTACLES FIRST 10 KVA	1,440	1.00	1,440	
RECEPTACLES > 10 KVA		0.50		
L: LIGHTING		1.25		
M: MISCELLANEOUS EQUIPMENT	325	1.00	325	
O: OTHER EQUIPMENT (CONTINUOUS)		1.25		
B: LARGEST MOTOR		1.25		
H: HVAC EQUIPMENT (FLA = MCA X 0.8)	1,656	1.00	1,656	
K: KITCHEN EQUIPMENT	75,248	0.65	48,911	DEMAND FACTOR PER NEC TABLE 220.56
TOTAL CONNECTED (VA)	78,669			
TOTAL DEMAND (VA)			52,332	
TOTAL DEMAND (AMPERES)			145.3	
PANEL DEMAND LOADING VS RATING		58.1%		

Important Note

NOTE: ARRANGE PANELBOARD BRANCH CIRCUIT BREAKERS AS SHOWN ON THE ABOVE SCHEDULES. AGREEMENT OF CIRCUIT BREAKER (POLE) NUMBERS WITH THE PANEL SCHEDULES AND ELECTRICAL FLOOR PLANS IS REQUIRED IN ORDER TO AVOID CONFUSION DURING CONSTRUCTION. REDRAWING THE CIRCUITRY FOR RECORD DRAWING PURPOSES AND ACCURATE DOCUMENTATION OF THE AS-BUILT CONDITIONS.

McFadyen Engineers, PLLC
4411 Peachtree Avenue Wilmington, NC 28403 Phone : 910.399.1125

© Copyright 2020 McFadyen Engineers, PLLC

NC P-1010

DAVIS COMMUNITY SKILLED NURSING FACILITY
EXISTING ELECTRICAL UTILITY SERVICE EQUIPMENT CAPACITY CALCULATION

	KW	AMPERES	REMARKS
DUKE ENERGY MAXIMUM RECORDED DEMAND FOR THE PERIOD 6/2019 – 7/2020	638.0	767.4	NOTE 1
TIMES 1.25 PER NEC 220.87	797.5	959.2	
EXISTING UTILITY SERVICE EQUIPMENT RATING/CAPACITY		1600.0	
AVAILABLE SURPLUS UTILITY SERVICE EQUIPMENT CAPACITY		640.8	
RENOVATED COMMUNITY CENTER ADDITIONAL LOAD	-100.0	-120.3	NOTES 2 & 3

NOTES:
1. MAXIMUM RECORDED DUKE ENERGY DEMAND FOR THE PERIOD 1/20/20 – 2/19/20
2. THE RENOVATED COMMUNITY CENTER IS APPROXIMATELY 2,650 SF (8.9%) LARGER THAN THE ORIGINAL FOOTPRINT, BUT THE LAUNDRY HAS BEEN RELOCATED TO THE CENTRAL SERVICES BUILDING, MECHANICAL EQUIPMENT WILL BE REPLACED WITH HIGH EFFICIENCY EQUIPMENT AND LED LIGHTING REPLACES FLUORESCENT LIGHTING THROUGHOUT. ADDITIONALLY, THE EXISTING AREA I

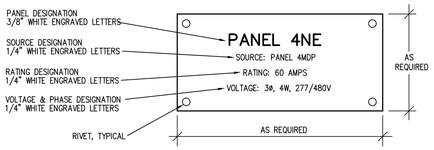

1 - Panelboard "4NE" Nameplate Detail
Not to Scale

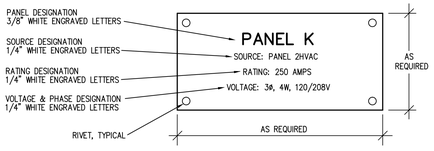

2 - Panelboard "K" Nameplate Detail
Not to Scale

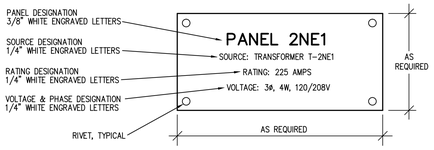

3 - Panelboard "2NE1" Nameplate Detail
Not to Scale

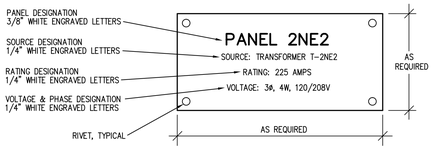

4 - Panelboard "2NE2" Nameplate Detail
Not to Scale

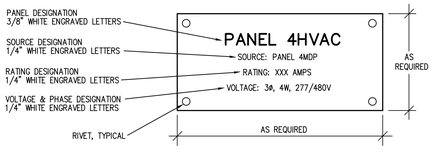

5 - Panelboard "HVAC4" Nameplate Detail
Not to Scale

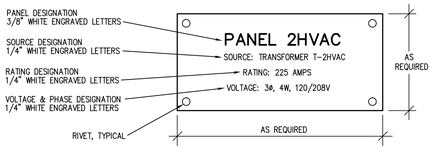

6 - Panelboard "HVAC2" Nameplate Detail
Not to Scale

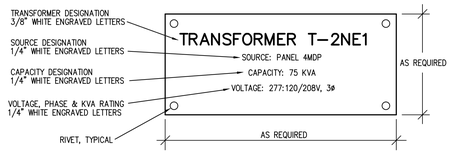

7 - Transformer "T-2NE1" Nameplate Detail
Not to Scale

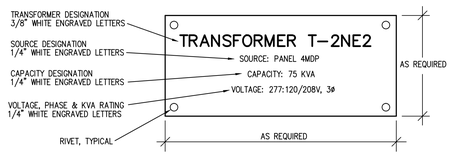

8 - Transformer "T-2NE2" Nameplate Detail
Not to Scale

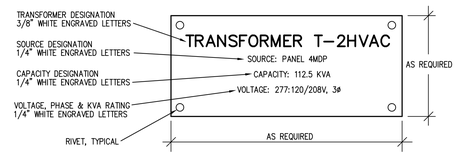

9 - Transformer "T-2HVAC" Nameplate Detail
Not to Scale



10 - Electrical Equipment Warning Label Detail
Not to Scale

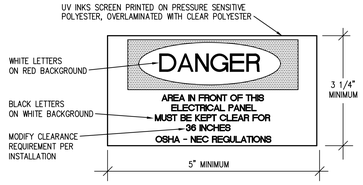

11 - NEC Working Space Label Detail
Not to Scale

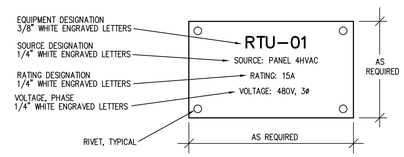

SIMILAR FOR RTU-01 THRU RTU-10 AND RTU-13

12 - Typical Equipment Nameplate Detail
Not to Scale

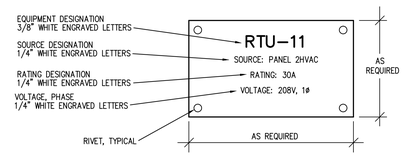

SIMILAR FOR RTU-11, RTU-12 AND RTU-14

13 - Typical Equipment Nameplate Detail
Not to Scale

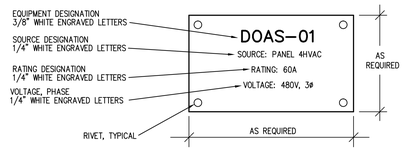

14 - Typical Equipment Nameplate Detail
Not to Scale

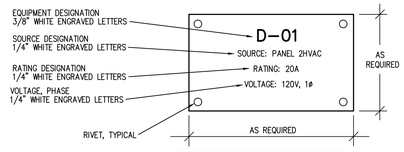

SIMILAR FOR D-01, D-02, D-03 AND D-04

15 - Typical Equipment Nameplate Detail
Not to Scale

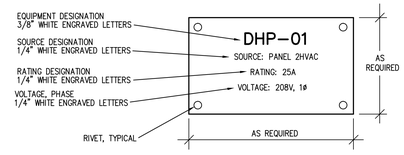

16 - Typical Equipment Nameplate Detail
Not to Scale

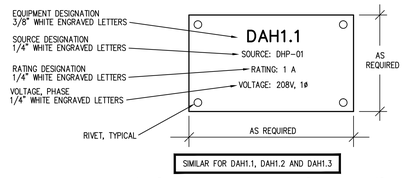

SIMILAR FOR DAH1.1, DAH1.2 AND DAH1.3

17 - Typical Equipment Nameplate Detail
Not to Scale

McFadyen Engineers, PLLC
4411 Peachtree Avenue Wilmington, NC 28403 Phone : 910.399.1125
© Co yright 2020 McFadyen Engineers, PLLC NC: P-1010

BOWMAN MURRAY HEMINGWAY ARCHITECTS
514 Market Street
Wilmington, NC 28406
Tel - :910::762-2621
Fa::- :910::762-8506

NORTH CAROLINA PROFESSIONAL ENGINEER SEAL 028411 DUNCAN McFADYEN
PERMIT DRAWINGS - FOR REVIEW ONLY

THE DAVIS COMMUNITY
New Community Center
1011 Porter's Neck Road
Wilmington, North Carolina 28411

REV.	DATE	DESCRIPTION

NO.	DATE	ISSUE NOTE

Project Manager: RDM	Drawn By: WP□
Date: Octo er 22, 2020	Reviewed By: RDM
Project ID	

Sheet Title: Electrical Details

Sheet No.: E104

McFadyen Engineers, PLLC
4411 Peachtree Avenue Wilmington, NC 28403 Phone : 910.399.1125
© Co□yright 2020 McFadyen Engineers, PLLC
NC□P-1010

BOWMAN MURRAY HEMINGWAY ARCHITECTS
514 Market Street
Wilmington, NC 28406
Tel - □910□762-2621
Fa□- □910□762-8506

NORTH CAROLINA PROFESSIONAL ENGINEER SEAL R. DUNCAN McFADYEN
PERMIT DRAWINGS - FOR REVIEW ONLY

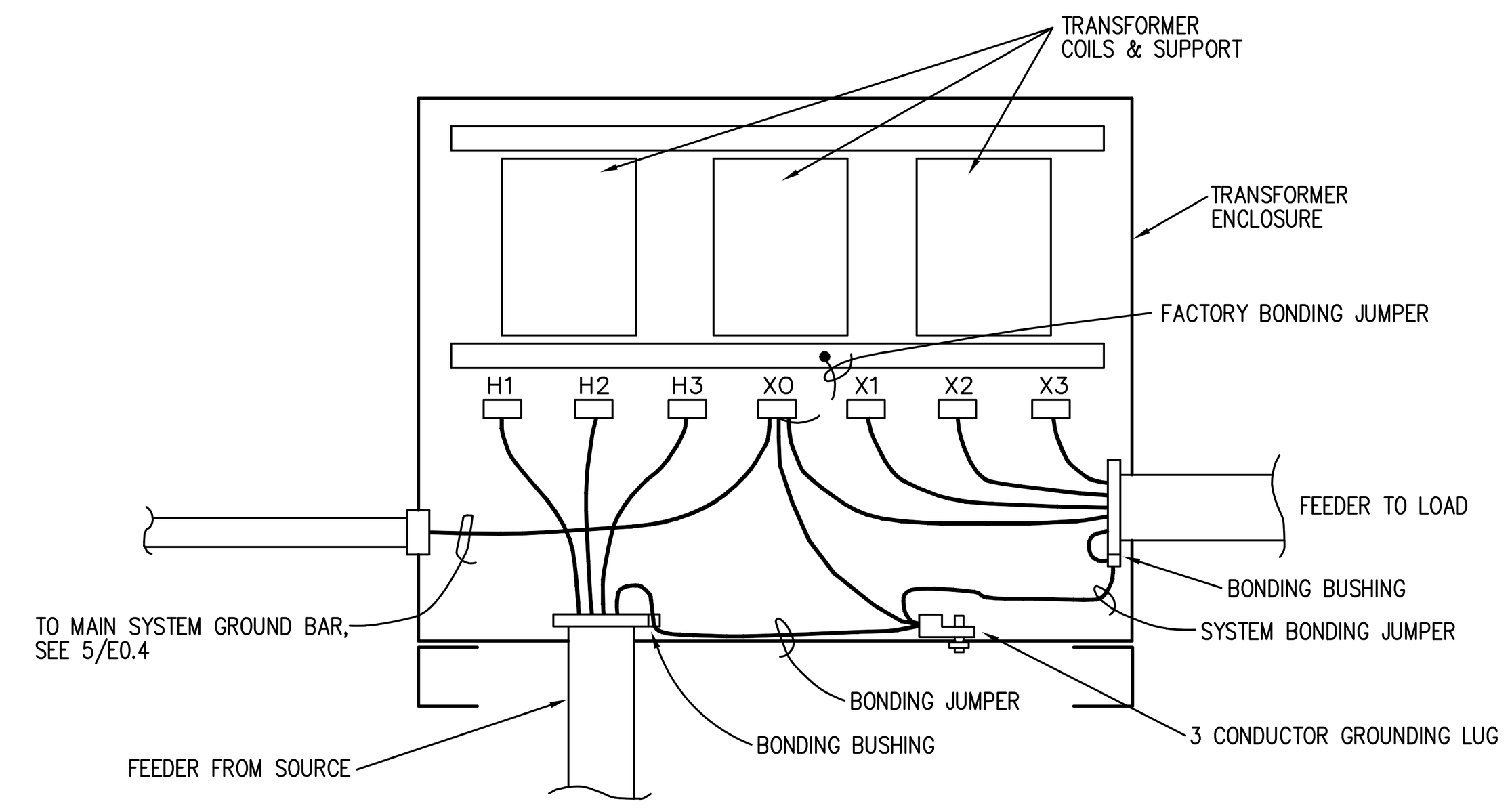

3 - Dry Type Transformer Bonding Detail
Not to Scale

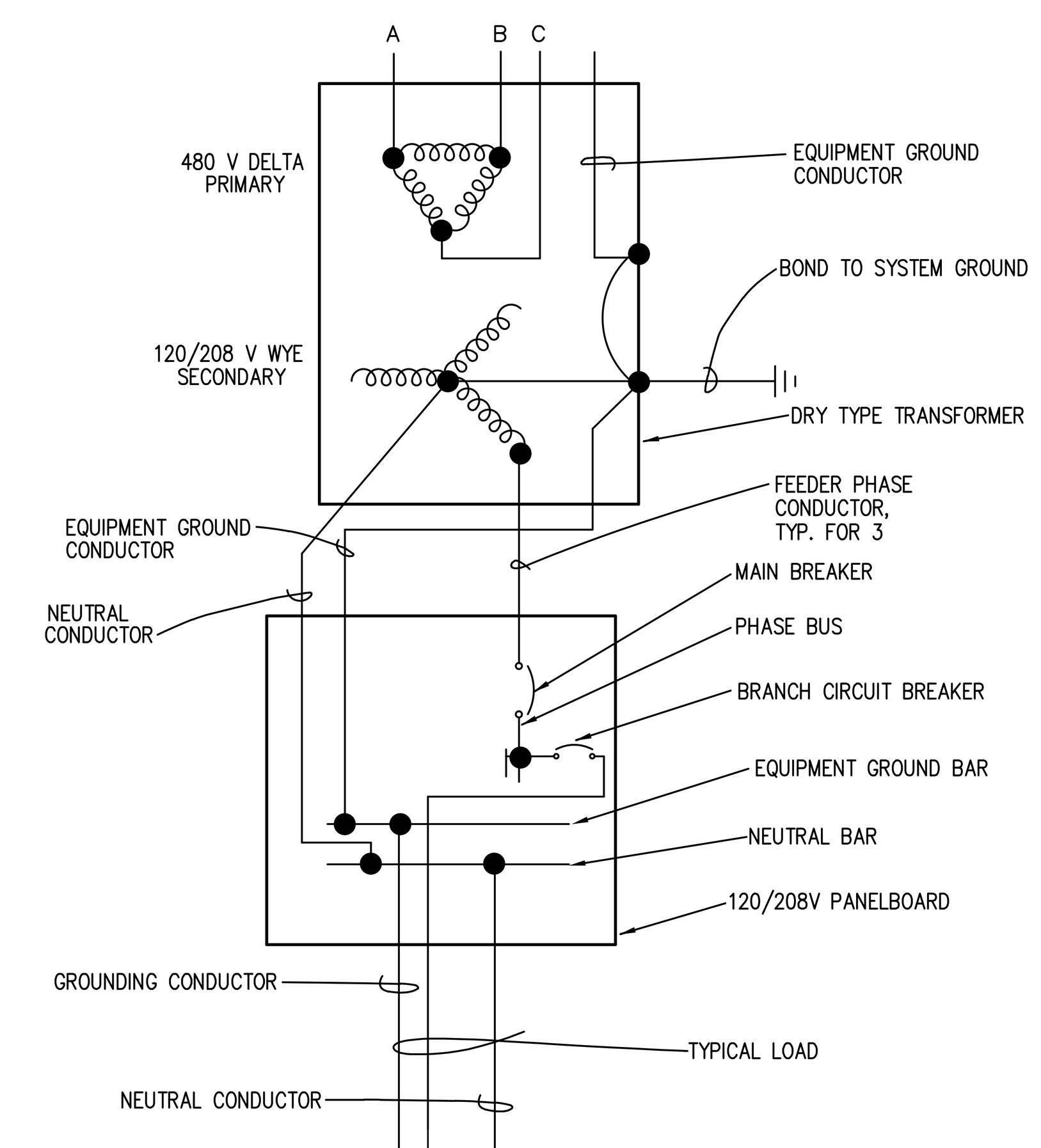

4 - Transformer Grounding System Detail
Not to Scale

System No. W-L-1054
December 04, 2002
F Ratings – 1 and 2 Hr (See Items 1 and 3)
T Rating – 0 Hr
L Rating At Ambient – Less Than 1 CFM/Sq Ft
L Rating At 400 F – 4 CFM/Sq Ft

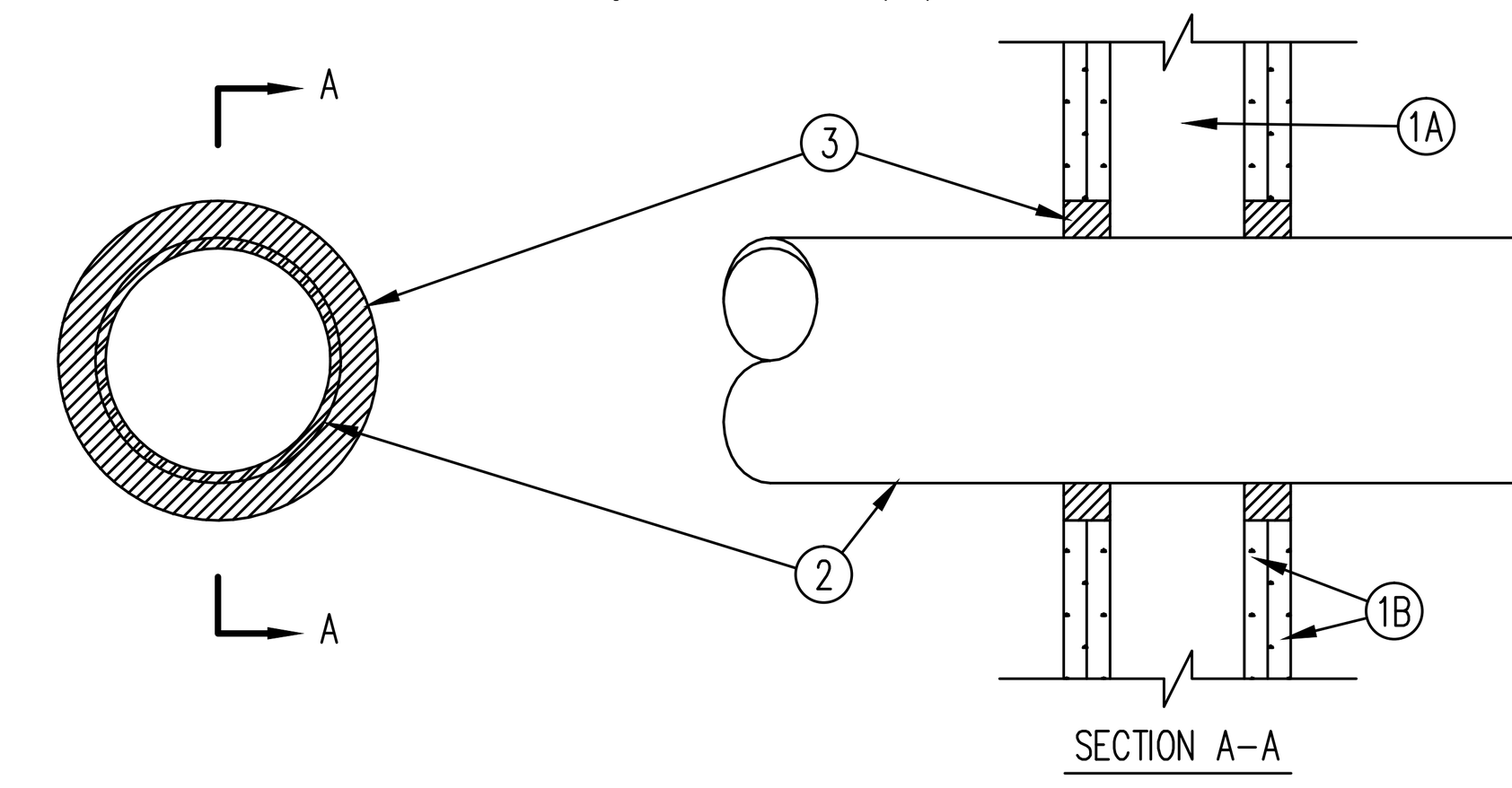

1. Wall Assembly – The 1 or 2 hr fire-rated gypsum wallboard/stud wall assembly shall be constructed of the materials and in the manner specified in the individual U300 or U400 Series Wall and Partition Designs in the UL Fire Resistance Directory and shall include the following construction features:
   A. Studs – Wall framing may consist of either wood studs or steel channel studs. Wood studs to consist of nom 2 by 4 in. lumber spaced 16 in. OC. Steel studs to be min 2-1/4 in. wide and spaced max 24 in. OC. When steel studs are used and the diam of opening exceeds the width of stud cavity, the opening shall be framed on all sides using lengths of steel stud installed between the vertical studs and screw-attached to the steel studs at each end. The framed opening in the wall shall be 4 to 6 in. wider and 4 to 6 in. higher than the diam of the penetrating item such that, when the penetrating item is installed in the opening, a 2 to 3 in. clearance is present between the penetrating item and the framing on all four sides.
   B. Gypsum Board* – 3/8 in. thick, 4 ft wide with square or tapered edges. The gypsum board type, thickness, number of layers, fastener type and sheet orientation shall be as specified in the individual U300 or U400 Series Design in the UL Fire Resistance Directory. Max diam of opening is 32-1/4 in. for steel stud walls. Max diam of opening is 14-1/4 in. for wood stud walls.
   The F Rating of the firestop system is equal to the fire rating of the wall assembly.
2. Through-Penetrants – One metallic pipe, conduit or tubing to be installed either concentrically or eccentrically within the firestop system. The annular space shall be min 0 in. to max 2-1/4 in. Pipe may be installed with continuous point contact. Pipe, conduit or tubing may be installed at an angle not greater than 45 degrees from perpendicular. Pipe, conduit or tubing to be rigidly supported on both sides of wall assembly. The following types and sizes of metallic pipes, conduits or tubing may be used:
   A. Steel Pipe – Nom 30 in diam (or smaller) Schedule 10 (or heavier) steel pipe.
   B. Iron Pipe – Nom 30 in. diam (or smaller) cast or ductile iron pipe.
   C. Conduit – Nom 4 in diam (or smaller) steel electrical metallic tubing or 6 in. diam steel conduit.
   D. Copper Tubing – Nom 6 in. diam (or smaller) Type L (or heavier) copper tubing.
   E. Copper Pipe – Nom 6 in. diam (or smaller) regular (or heavier) copper pipe.
3. Fill, Void or Cavity Material* – Sealant – Min 3/8 in. thickness of fill material applied within the annulus, flush with both surfaces of wall. At the point or continuous contact locations between pipe and wall, a min 1/4 in. diam bead of fill material shall be applied at the pipe wall interface on both surfaces of wall .
HILTI CONSTRUCTION CHEMICALS, DIV OF
HILTI INC – FS-One Sealant

Filename = XHEZ.W-L-1054
Copyright December 04, 2002 Underwriters Laboratories, INC.
Reprinted from the UL Online Directory with permission from Underwriters Laboratories INC.

5 - 1 and 2 Hour Firewall Penetration Detail
NOT TO SCALE

System No. C-AJ-1226
October 30, 2003
F Rating – 3 Hr
T Rating – 0 Hr
L Rating At Ambient – Less Than 1 CFM/Sq Ft
L Rating At 400 F – 4 CFM/Sq Ft

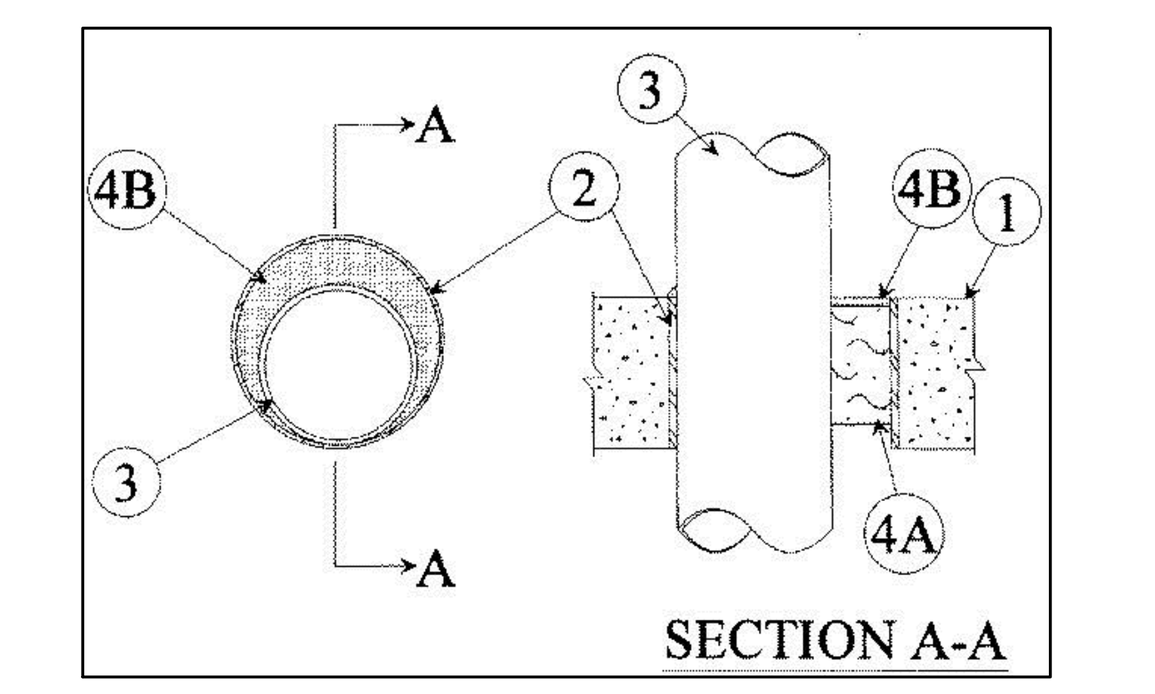

1. Floor or Wall Assembly – Min 4-1/4 in. thick reinforced lightweight or normal weight (100-150 pcf) concrete. Wall may also be constructed of any UL Classified Concrete Blocks*. Max diam of opening is 32 in.
2. Metallic Sleeve – (Optional) Nom 32 in. diam (or smaller) Schedule 40 (or heavier) steel sleeve cast or grouted into floor or wall assembly, flush with floor or wall surfaces or extending a max of 3 in. above floor or beyond both surfaces of wall.
3. Through-Penetrant – One metallic pipe, tube or conduit to be installed either concentrically or eccentrically within the firestop system. The annular space between penetrant and periphery of opening shall be min 0 in. (point contact) to max 1-7/8 in. Penetrant may be installed with continuous point contact. Penetrant to be rigidly supported on both sides of floor or wall assembly. The following types and sizes of metallic penetrants may be used:
   A. Steel Pipe – Nom 30 in. diam (or smaller) Schedule 10 (or heavier) steel pipe.
   B. Iron Pipe – Nom 30 in. diam (or smaller) cast or ductile iron pipe.
   C. Copper Pipe – Nom 6 in. diam (or smaller) Regular (or heavier) copper pipe.
   D. Copper Tubing – Nom 6 in. diam (or smaller) Type L (or heavier) copper tubing.
   E. Conduit – Nom 6 in. diam (or smaller) steel conduit.
   F. Conduit – Nom 4 in. diam (or smaller) steel electrical metallic tubing (EMT).
4. Firestop System – The firestop system shall consist of the following:
   A. Packing Material – Min 4 in. thickness of min 4 pcf mineral wool batt insulation firmly packed into opening as a permanent form. Packing material to be recessed from top surface of floor or sleeve or from both surfaces of wall or sleeve as required to accommodate the required thickness of fill material.
   B. Fill, Void or Cavity Material* – Sealant – Min 1/4 in. thickness of fill material applied within the annulus, flush with top surface of floor or sleeve or with both surfaces of wall or sleeve. At the point or continuous contact locations between penetrant and concrete or sleeve, a min 1/4 in. diam bead of fill material shall be applied at the concrete or sleeve/ pipe penetrant interface on the top surface of floor and on both surfaces of wall.
   HILTI CONSTRUCTION CHEMICALS, DIV OF
   HILTI INC – FS-One Sealant
*Bearing the UL Classification Mark

Filename = XHEZ.C-AJ-1226
Copyright 2005 Underwriters Laboratories, INC.
Reprinted from the UL Online Directory with permission
from Underwriters Laboratories INC.

6 - 3 Hour Firewall Penetration Detail
NOT TO SCALE

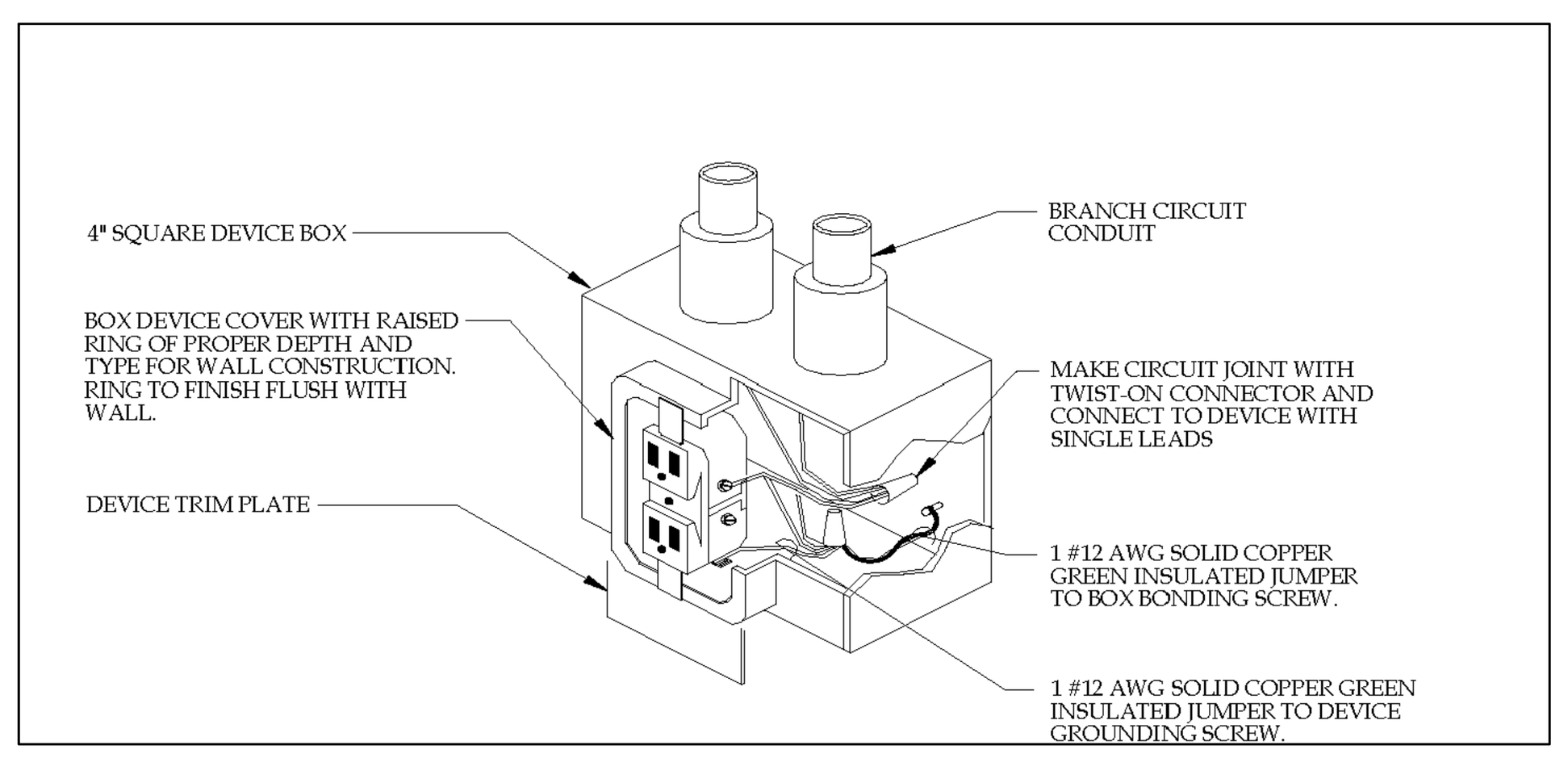

7 - Receptacle Grounding Detail
NOT TO SCALE

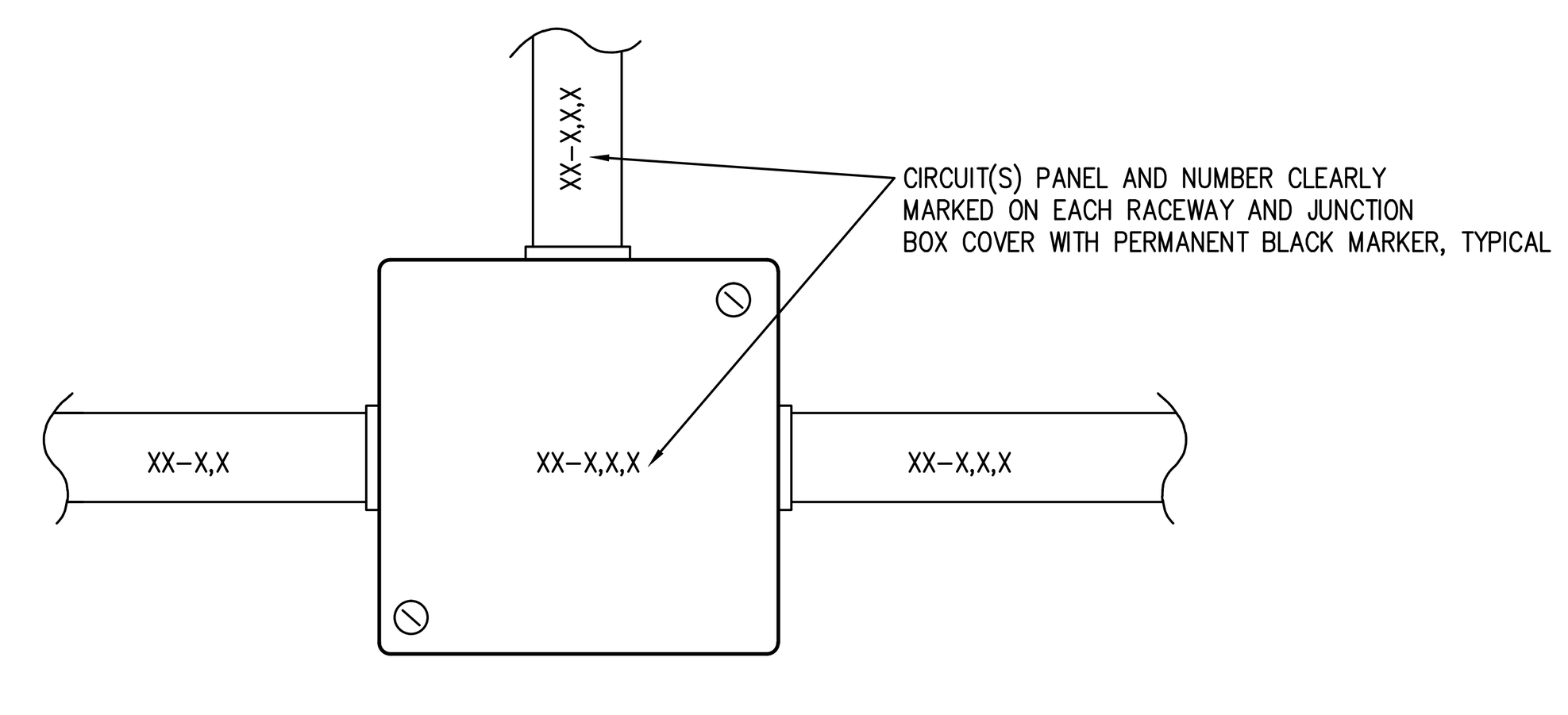

9 - Circuit Identification Detail
NOT TO SCALE

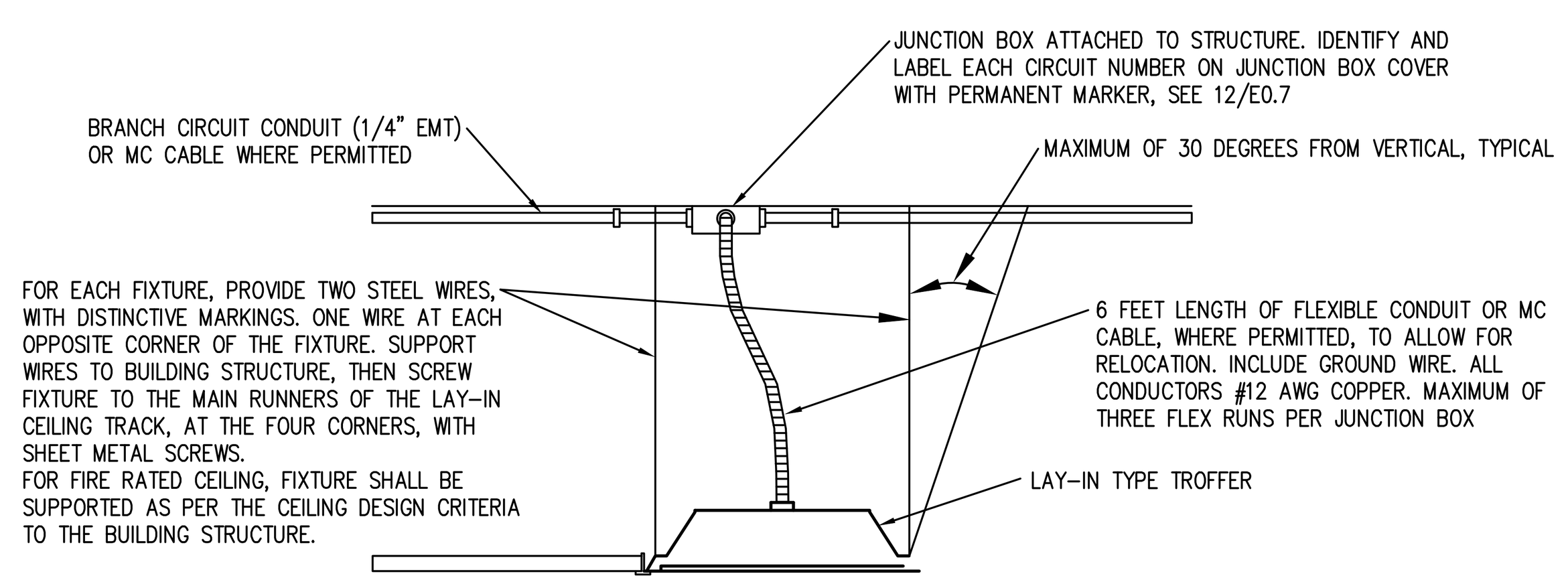

8 - Lighting Fixture Mounting and Installation Detail
Not to Scale

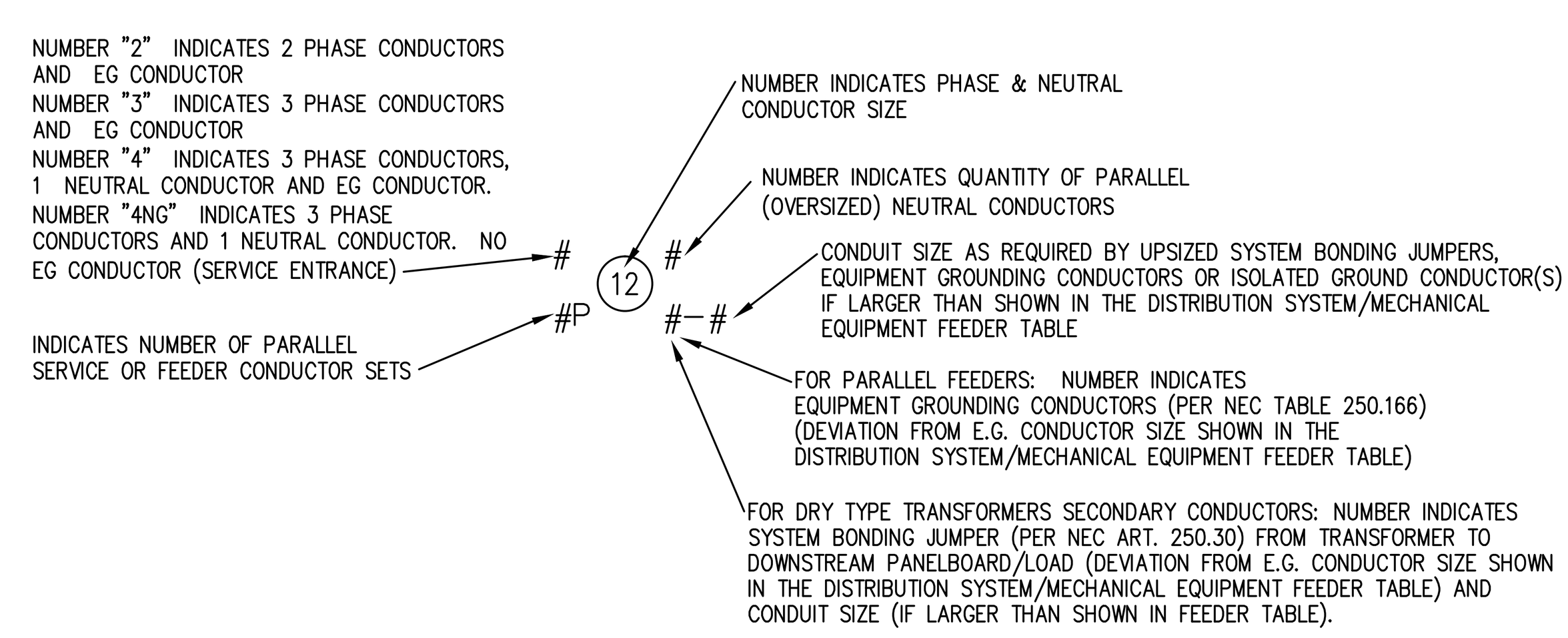

2 - Feeder Identification Detail
Not to Scale

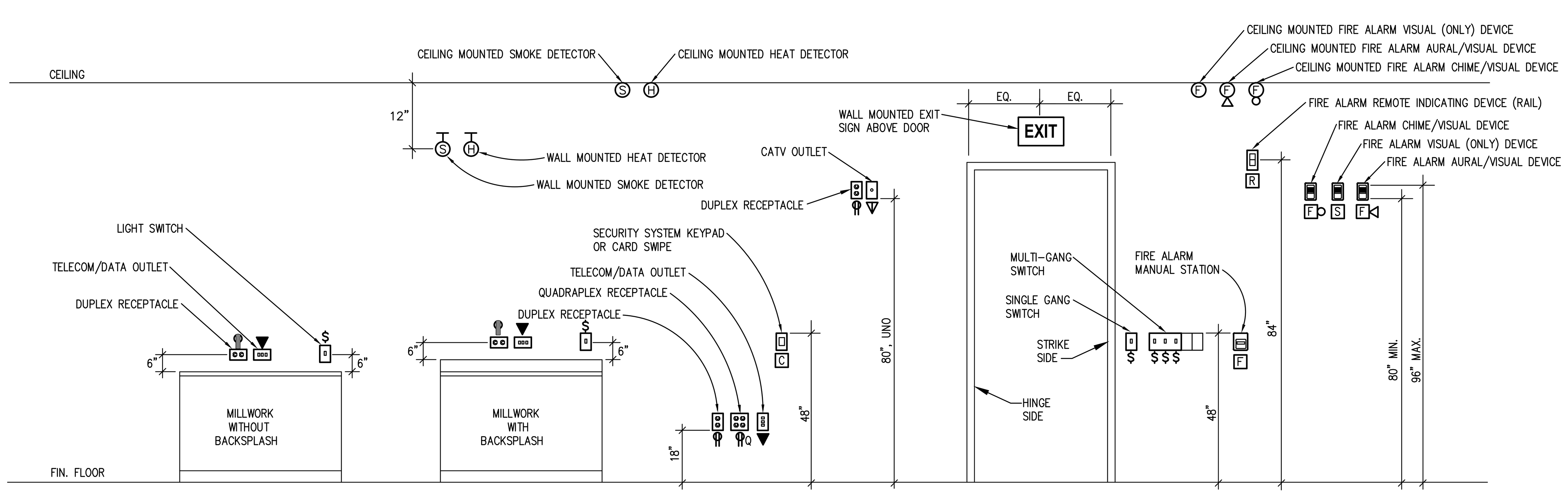

NOTE: TELECOM/DATA OUTLETS ARE TO BE INSTALLED AT THE SAME HEIGHT AS ADJACENT RECEPTACLE, UNO

1 - Standard Device Mounting Height Detail
Not to Scale

MINIMUM CONDUCTORS SIZE CHART
PROVIDE THE FOLLOWING MINIMUM SIZES FOR BRANCH CIRCUIT CONDUCTORS:

SINGLE PHASE CIRCUITS

CONDUCTOR SIZE (AWG)	BRANCH CIRCUIT BREAKER TRIP (AMPERES)	CIRCUIT VOLTAGE MAXIMUM ALLOWABLE CIRCUIT LENGTH (FEET)			
		120	208	240	277
#12	15	81	141	163	188
#10	15	135	234	270	312
#8	15	204	355	409	473
#12	20	61	106	122	141
#10	20	101	175	202	233
#8	20	153	266	307	354
#10	30	67	117	135	155
#8	30	102	177	204	236

THREE PHASE CIRCUITS

CONDUCTOR SIZE (AWG)	BRANCH CIRCUIT BREAKER TRIP (AMPERES)	CIRCUIT VOLTAGE MAXIMUM ALLOWABLE CIRCUIT LENGTH (FEET)			
			208	240	480
#12	15		163	188	377
#10	15		270	312	624
#12	20		122	141	283
#10	20		202	234	468
#10	30		135	156	312
#8	30		205	236	473
#8	40		153	177	354
#6	40		239	276	553
#8	50		123	142	283
#6	50		191	221	442
#6	60		159	184	368
#4	60		245	283	567

NOTES:
1. CONDUCTOR LENGTHS ARE BASED ON SINGLE & THREE PHASE, 90% POWER FACTOR LOADS USING 75°C COPPER CONDUCTORS IN EMT RACEWAYS TO ACHIEVE NO MORE THAN 3 PERCENT VOLTAGE DROP.
2. CALCULATIONS ASSUME LOADS OF 80% OF CIRCUIT BREAKER TRIP (12A, 16A & 24A, 32A, 40A & 48A, RESPECTIVELY) ARE CONCENTRATED AT THE END OF THE CIRCUITS.
3. IF LOAD CHARACTERISTICS DIFFER FROM ABOVE, CALCULATE USING KNOWN CHARACTERISTICS AND SUBMIT CALCULATIONS TO THE ARCHITECT/ENGINEER DOCUMENTING 3% OR LESS VOLTAGE DROP UNDER THE ACTUAL LOAD CONDITIONS.
4. WHEN A DEDICATED SINGLE LOAD LESS THAN NOTED ABOVE IS KNOWN, THE CONTRACTOR MAY UTILIZE SMALLER CONDUCTORS UPON SUBMISSION OF VOLTAGE DROP CALCULATIONS DOCUMENTING 3% OR LESS VOLTAGE DROP. THE MINIMUM LOAD SHALL BE ASSUMED TO BE 60% OF THE CB TRIP RATING REGARDLESS OF ACTUAL DEDICATED LOAD.
5. USE THE LARGER OF THE CONDUCTORS INDICATED ON THE DRAWINGS OR THIS TABLE.

Power Distribution System/Utilization Equipment Conductor Identification Table

ID#	MAX OCP	CONDUCTORS	CONDUIT SIZE
2 (12)	20	2#12 & 1#12 EG	1/4"
3 (12)	20	3#12 & 1#12 EG	1/4"
4 (12)	20	4#12 & 1#12 EG	1/4"
2 (10)	30	2#10 & 1#10 EG	1/4"
3 (10)	30	3#10 & 1#10 EG	1/4"
4 (10)	30	4#10 & 1#10 EG	1/4"
2 (8)	50	2#8 & 1#10 EG	1/4"
3 (8)	50	3#8 & 1#10 EG	3/4"
4 (8)	50	4#8 & 1#10 EG	1"
2 (6)	70	2#6 & 1#8 EG	1"
3 (6)	70	3#6 & 1#8 EG	1"
4 (6)	70	4#6 & 1#8 EG	1"
2 (4)	90	2#4 & 1#8 EG	1"
3 (4)	90	3#4 & 1#8 EG	1"
4 (4)	90	4#4 & 1#8 EG	1 1/4"
2 (3)	100	2#3 & 1#8 EG	1 1/4"
3 (3)	100	3#3 & 1#8 EG	1 1/4"
4 (3)	100	4#3 & 1#8 EG	1 1/4"
2 (2)	115	2#2 & 1#6 EG	1 1/4"
3 (2)	115	3#2 & 1#6 EG	1 1/4"
4 (2)	115	4#2 & 1#6 EG	1 1/4"
2 (1)	125	2#1 & 1#6 EG	1 1/4"
3 (1)	125	3#1 & 1#6 EG	1 1/4"
4 (1)	125	4#1 & 1#6 EG	1 1/4"
3 (1/0)	150	3#1/0 & 1#6 EG	1 1/4"
4 (1/0)	150	4#1/0 & 1#6 EG	2"
3 (2/0)	175	3#2/0 & 1#6 EG	2"
4 (2/0)	175	4#2/0 & 1#6 EG	2"
3 (3/0)	200	3#3/0 & 1#6 EG	2"
4 (3/0)	200	4#3/0 & 1#6 EG	2"
3 (4/0)	225	3#4/0 & 1#4 EG	2"
4 (4/0)	225	4#4/0 & 1#4 EG	2 1/4"
3 (250)	250	3#250 KCMIL & 1#4 EG	2 1/4"
4 (250)	250	4#250 KCMIL & 1#4 EG	2 1/4"
3 (300)	300	3#300 KCMIL & 1#4 EG	2 1/4"
4 (300)	300	4#300 KCMIL & 1#4 EG	3"
3 (350)	300	3#350 KCMIL & 1#3 EG	2 1/4"
4 (350)	300	4#350 KCMIL & 1#3 EG	3"
3 (400)	350	3#400 & 1#3 EG	2 1/4"
4 (400)	350	4#400 & 1#3 EG	3"
3 (500)	400	3#500 KCMIL & 1#3 EG	3"
4 (500)	400	4#500 KCMIL & 1#3 EG	3 1/4"

1. TABLE IS FOR THHN/THWN INSULATED COPPER CONDUCTORS USING 75°C RATING IN EMT ONLY. OTHER INSULATION AND RACEWAY TYPES MAY REQUIRE LARGER RACEWAYS AND ARE THE RESPONSIBILITY OF THE CONTRACTOR TO ASSURE CODE COMPLIANCE.
2. SOME DRY TYPE TRANSFORMER SECONDARY CONDUCTORS AND PARALLEL CONDUCTORS REQUIRE UPSIZED BONDING JUMPERS, UPSIZED EQUIPMENT GROUND CONDUCTORS AND LARGER RACEWAYS THAN SHOWN IN THIS TABLE.
3. OVERSIZED AND PARALLELED NEUTRAL CONDUCTORS MAY ALSO REQUIRE LARGER RACEWAYS THAN INDICATED.
4. CONDUIT SIZING IS CODE MINIMUM. LARGER SIZES MAY BE REQUIRED.
5. REFER TO THE CONDUCTORS IDENTIFICATION DETAIL FOR ADDITIONAL INFORMATION.
6. MAX OCP = MAXIMUM OCP DEVICE DESIGN AMPACITY

THE DAVIS COMMUNITY
New Community Center
1011 Porter's Neck Road
Wilmington, North Carolina 28411

REV.	DATE	DESCRIPTION

NO.	DATE	ISSUE NOTE

Project Manager: RDM	Drawn By: WP□
Date: Octo□er 22, 2020	Reviewed By: RDM
Project ID	

Sheet Title
Electrical Details

Sheet No.
E105

LIGHTING FIXTURE SCHEDULE

MARK	DESCRIPTION.	SIZE/APERTURE	VOLTS	LAMPS	WATTS	LENS	TRIM/DOOR	TRIM COLOR	MOUNTING HEIGHT	REMARKS	MANUFACTURER
L1	LAY-IN GRID LED	2'x4'	UNIV.	4000 LUMEN 3500K LED	32	ADP DIFFUSER	FLUSH STEEL	WHITE	RECESSED GRID MOUNTED	10%, 0-10V GZ10 DIMMING DRIVER	LITHONIA "2BLT" SERIES
L1A	LAY-IN GRID LED	2'x4'	UNIV.	3000 LUMEN 3500K LED	24	ADP DIFFUSER	FLUSH STEEL	WHITE	RECESSED GRID MOUNTED	10%, 0-10V GZ10 DIMMING DRIVER	LITHONIA "2BLT" SERIES
L2	LAY-IN GRID LED	2'x4'	UNIV.	7200 LUMEN 3500K LED	54	0.125" ACRYLIC PRISMATIC	FLUSH STEEL	WHITE	RECESSED GRID MOUNTED	10%, 0-10V GZ10 DIMMING DRIVER	LITHONIA "2GTL" SERIES
L3	LAY-IN GRID LED	2'x4'	UNIV.	6000 LUMEN 3500K LED	49	0.125" ACRYLIC PRISMATIC	FLUSH STEEL	WHITE	RECESSED GRID MOUNTED	10%, 0-10V GZ10 DIMMING DRIVER	LITHONIA "2GTL" SERIES
L4	LAY-IN GRID LED	2'x4'	UNIV.	4800 LUMEN 3500K LED	36	0.125" ACRYLIC PRISMATIC	FLUSH STEEL	WHITE	RECESSED GRID MOUNTED	10%, 0-10V GZ10 DIMMING DRIVER	LITHONIA "2GTL" SERIES
L5	SURFACE MOUNTED LED	4'	UNIV.	4146 LUMEN 3500K LED	38	DIFFUSE POLYCARBONATE	FLUSH STEEL	WHITE	SURFACE CEILING	80 CRI	LITHONIA "CDS" SERIES
L6	LED LIGHT TAPE	LENGTH AS INDICATED	277/24	205 LUMENS / LF 3500K LED	2.2W/LF	_____	_____	_____	SURFACE UNDER CABINET	80 CRI, 24VDC REMOTE DRIVER(S), RATING AS REQUIRED, STARTER AND JOINER CABLES, CUTTING TOOL, SM1, FR, SA ALUMINUM CHANNEL. FIELD VERIFY EXACT LOCATION PRIOR TO ROUGH-IN	DANALITE "FLEXCONNECT" SERIES
L6A	LED LIGHT TAPE	LENGTH AS INDICATED	277/24	315 LUMENS / LF 2700K LED	4.4W/LF	_____	_____	_____	SURFACE IN LIGHT COVE	80 CRI, 24VDC REMOTE DRIVER (S), RATING AS REQUIRED, STARTER AND JOINER CABLES, CUTTING TOOL, SM5, CL, SA CHANNEL. FIELD VERIFY EXACT LOCATION PRIOR TO ROUGH-IN	DANALITE "FLEXCONNECT" SERIES
L7	RECESSED LED DOWNLIGHT	6"	UNIV.	3000 LUMEN 2700K LED	38	_____	ALUMINUM	WHITE	RECESSED CEILING	SWITCHABLE, 0-10V 10% DIMMING LED DRIVER, DOWNLIGHT APERTURE, SEMI-SPECULAR DIFFUSER	LITHONIA "LDN6 SWITCHABLE" SERIES
L8	RECESSED LED DOWNLIGHT	6"	UNIV.	2000 LUMEN 2700K LED	25	_____	ALUMINUM	WHITE	RECESSED CEILING	SWITCHABLE,0-10V, 10% DIMMING LED DRIVER, DOWNLIGHT APERTURE, SEMI-SPECULAR DIFFUSER	LITHONIA "LDN6 SWITCHABLE" SERIES
L9	RECESSED LED DOWNLIGHT	4"	UNIV.	2500 LUMEN 2700K LED	32	_____	ALUMINUM	WHITE	RECESSED CEILING	SWITCHABLE, 0-10V, 10% DIMMING LED DRIVER, DOWNLIGHT APERTURE, SEMI-SPECULAR DIFFUSER	LITHONIA "LDN4 SWITCHABLE" SERIES
L11	SURFACE MOUNTED LED WRAPAROUND	4'	UNIV.	4800 LUMEN 3500K LED	41	ACRYLIC	STEEL	WHITE	SURFACE CEILING	GTZ 0-10V DIMMING, 80 CRI	LITHONIA "LBL4" SERIES
L12	WALL MOUNTED LED AREA LIGHT	16" x 15"	UNIV.	10C, 6983 LUMEN 4000K LED	39	GLASS	_____	DARL BRONZE	WALL AT 7'-6"	WET LOCATION LABEL	LITHONIA "TWH LED" SERIES
L13	WALL MOUNTED LED AREA LIGHT	16" x 15"	UNIV.	20C, 8427 LUMEN 4000K LED	72	GLASS	_____	DARK BRONZE	WALL AT 7'-6"	1000 mA DRIVER, TYPE III MEDIUM DISTRIBUTION, WET LOCATION LABEL	LITHONIA "TWH LED" SERIES
X1	EXIT LIGHT	_____	UNIV	RED LED	5	_____	POLYCARBONATE	WHITE	FLUSH CEILING	RED LED, 6" LETTERS, SINGLE OR DOUBLE FACE UNITS AND CHEVRONS AS INDICATED, SELF DIAGNOSTICS	LITHONIA "LQM" SERIES
X2	EXIT LIGHT	_____	UNIV	RED LED	5	_____	POLYCARBONATE	WHITE	WALL OVER DOOR	RED LED, 6" LETTERS, SINGLE OR DOUBLE FACE UNITS AND CHEVRONS AS INDICATED, SELF DIAGNOSTICS	LITHONIA "LQM" SERIES
E	EMERGENCY LIGHT	_____	UNIV	2 - 1.5W LED	3	_____	POLYCARBONATE	WHITE	WALL / 7'-6"	INTERNAL 90 MINUTE BATTERY BACKUP, SELF DIAGNOSTICS	LITHONIA "ELM2 LED" SERIES

NOTES:
1. ACRYLIC PRISMATIC LENSES SHALL BE 0.125" NOMINAL MINIMUM THICKNESS.
2. ALL EXIT AND EMERGENCY FIXTURES SHALL COMPLY WITH NCSBC STANDARDS AND HAVE AUTOMATIC TESTING DEVICES.
3. LED EMERGENCY BATTERY SHALL PROVIDE 1400 MINIMUM LUMENS OUTPUT FOR 90 MINUTES MINIMUM.
4. SEE SPECIFICATIONS SECTIONS 265100 AND 265200 FOR ADDITIONAL REQUIREMENTS.
5. THE FIRST FIXTURE NAMED IN THE MANUFACTURER COLUMN IS THE BASIS OF DESIGN. OTHER FIXTURES ARE SIMILAR IN THE OPINION OF THE ARCHITECT AND ENGINEER. IF THE CONTRACTOR ELECTS TO SUBMIT A FIXTURE OTHER THAN THE BASIS OF DESIGN FIXTURE, INCLUDING ONE OF THE TWO SIMILAR FIXTURES, REQUIREMENTS OF NOTES 6 AND 7 APPLY.

6. LIGHTING FIXTURES HAVE BEEN SELECTED AND SPECIFIED TO ACHIEVE REQUIRED/DESIRED ILLUMINATION LEVELS AND OTHER CHARACTERISTICS IN THEIR RESPECTIVE AREAS. SPECIFIED FIXTURES HAVE SPECIFIC CHARACTERISTICS WHICH MAY CREATE UNIQUE ILLUMINATION RESULTS ESSENTIAL TO THE PROJECT. LIGHTING FIXTURES PROVIDED SHALL MEET THE ASTHETICS, DETAILS, AND SPECIFICATIONS STATED ABOVE AND IN THE DIVISION 26 SPECIFICATIONS, AND MOUNTING HEIGHTS AND SPACINGS SHOWN ON THE DRAWINGS. ANY DEVIATIONS FROM THE SPECIFIED FIXTURES SHALL DEEM ALL PARTIES IN THE SUPPLY CHAIN AND CONTRACTOR RESPONSIBLE FOR PROVIDING DETAILED COMPARISONS OF THE SPECIFIED FIXTURE AND THE PROPOSED FIXTURE FOR ARCHITECT AND ENGINEER REVIEW IN DETERMINING EQUALITY. PROVIDE COMPLETE POINT BY POINT ILLUMINATION STUDIES FOR ALL SUBSTITUTIONS.

7. SUBSTITUTIONS MAY BE APPROVED BY THE ARCHITECT AND ENGINEER IF THEY ARE JUDGED TO BE EQUAL TO THE SPECIFIED FIXTURES. 'EQUAL'MAY INCLUDE, AT THE SOLE DISCRETION OF THE ARCHITECT AND ENGINEER, LENS MATERIAL AND CHARACTERISTICS, COLORS, REFLECTORS, HOUSING MATERIAL AND CONFIGURATION, FINISHES, PHOTOMETRICS, EFFICIENCY, OPTIONS, FUNCTIONALITY, ETC..

NOTE:
OCCUPANCY SENSOR WIRING SCHEMATICS ARE PROVIDED TO INDICATE SWITCHING FUNCTION(S) REQUIRED. COMPONENTS AND CONNECTIONS BETWEEN COMPONENTS ARE REPRESENTATIVE ONLY AND MAY NOT BE APPLICABLE FOR ALL MANUFACTURER'S DEVICES. CONSULT ACTUAL APPROVED DEVICE MANUFACTURER APPLICATION INFORMATION AND INSTALLATION INSTRUCTIONS FOR COMPONENTS AND WIRING REQUIRED BEFORE ROUGHING IN AND INSTALLING SYSTEMS.

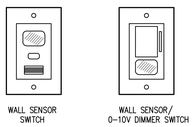

1 - Occupancy Sensor Wall Switch Plate Detail
NOT TO SCALE

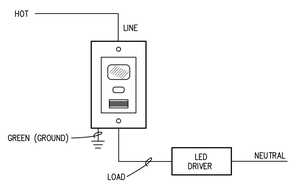

2 - Wall Box Occupancy Sensor Switch Wiring Diagram
NOT TO SCALE

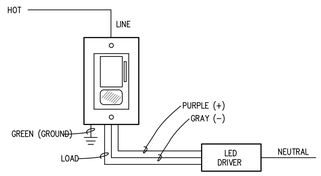

3 - Wall Box Combination Occupancy Sensor/0-10 Volt Dimmer Switch, Single Circuit Wiring Diagram
NOT TO SCALE

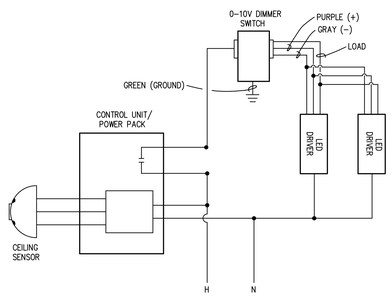

4 - Ceiling Mounted Occupancy Sensor, Wall Mounted 0-10 Volt Dimmer Switch, Single Circuit Wiring Diagram
NOT TO SCALE

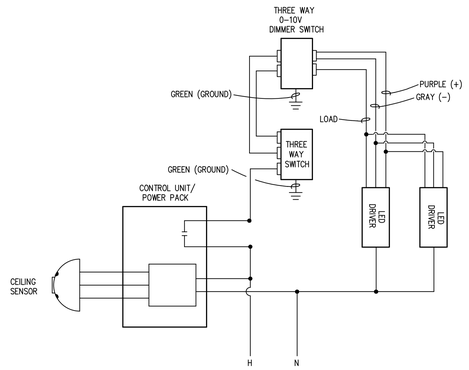

5 - Ceiling Mounted Occupancy Sensor, Wall Mounted Three Way, 0-10 Volt Dimmer Switch, Single Circuit Wiring Diagram
NOT TO SCALE

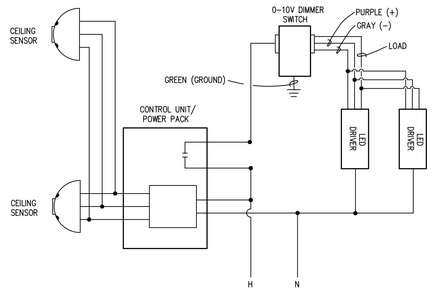

6 - Multiple Ceiling Mounted Occupancy Sensor, Wall Mounted 0-10 Volt Dimmer Switch, Single Circuit Wiring Diagram
NOT TO SCALE

McFadyen Engineers, PLLC
4411 Peachtree Avenue Wilmington, NC 28403 Phone : 910.399.1125

© Co yright 2020 McFadyen Engineers, PLLC NC□ P-1010

BOWMAN MURRAY HEMINGWAY ARCHITECTS
514 Market Street
Wilmington, NC 28406
Tel - 910□762-2621
Fa□ - 910□762-8506

NORTH CAROLINA LICENSED ARCHITECT SEAL 30,111 DUNCAN McFADYEN

PERMIT SET DRAWINGS FOR REVIEW ONLY

THE DAVIS COMMUNITY
New Community Center

1011 Porter's Neck Road
Wilmington, North Carolina 28411

REV.	DATE	DESCRIPTION

NO.	DATE	ISSUE NOTE

Project Manager: RDM	Drawn By: WP□
Date: Octo er 22, 2020	Reviewed By: RDM
Project ID	

Sheet Title
Lighting Fixture Schedule and Electrical Details

Sheet No.
E106

INTERIOR DESIGNER LIGHTING FIXTURE SCHEDULE

MARK	DESCRIPTION.	SIZE/APERTURE	VOLTS	LAMPS	WATTS	LENS	TRIM/DOOR	TRIM COLOR	MOUNTING HEIGHT	REMARKS	MANUFACTURER
A	PENDANT MOUNTED LED	BY INTERIOR DESIGNER	120	6 – 4.5W (60W EQUIVALENT) E12, DIMMABLE, 450 LUMEN, 80 CRI 2700K LED CANDELABRA	27	BY INTERIOR DESIGNER	BY INTERIOR DESIGNER	BY INTERIOR DESIGNER	BY INTERIOR DESIGNER	FIXTURE PROVIDED BY INTERIOR DESIGNER, INSTALLED BY ELECTRICIAL CONTRACTOR. ALL QUESTIONS SHOULD BE DIRECTED TO JENNIFER KRANER, BIG SKY DESIGNS, 910–793–3992. LAMPS PROVIDED BY OWNER, INSTALLED BY ELECTRICAL CONTRACTOR	BY INTERIOR DESIGNER
B	PENDANT MOUNTED LED	BY INTERIOR DESIGNER	120	12 – 4W (40W EQUIVALENT) E12, 300 LUMEN, 80 CRI,CANDELABRA 2700K LED CANDELABRA	48	BY INTERIOR DESIGNER	BY INTERIOR DESIGNER	BY INTERIOR DESIGNER	BY INTERIOR DESIGNER	FIXTURE PROVIDED BY INTERIOR DESIGNER, INSTALLED BY ELECTRICAL CONTRACTOR. ALL QUESTIONS SHOULD BE DIRECTED TO JENNIFER KRANER, BIG SKY DESIGNS, 910–793–3992. LAMPS PROVIDED BY OWNER, INSTALLED BY ELECTRICAL CONTRACTOR	BY INTERIOR DESIGNER
C	PENDANT MOUNTED LED	BY INTERIOR DESIGNER	120	4 – 7W (60W EQUIVALENT) E12, 500 LUMEN, 80 CRI, 2700K LED, FLAME TIP CANDELABRA	28	BY INTERIOR DESIGNER	BY INTERIOR DESIGNER	BY INTERIOR DESIGNER	BY INTERIOR DESIGNER	FIXTURE PROVIDED BY INTERIOR DESIGNER, INSTALLED BY ELECTRICAL CONTRACTOR. ALL QUESTIONS SHOULD BE DIRECTED TO JENNIFER KRANER, BIG SKY DESIGNS, 910–793–3992. LAMPS PROVIDED BY OWNER, INSTALLED BY ELECTRICAL CONTRACTOR	BY INTERIOR DESIGNER
D	PENDANT MOUNTED LED	BY INTERIOR DESIGNER	120	10 – 7W (60W EQUIVALENT) E12, 500 LUMEN, 80 CRI, 2700K LED, FLAME TIP CANDELABRA	70	BY INTERIOR DESIGNER	BY INTERIOR DESIGNER	BY INTERIOR DESIGNER	BY INTERIOR DESIGNER	FIXTURE PROVIDED BY INTERIOR DESIGNER, INSTALLED BY ELECTRICAL CONTRACTOR. ALL QUESTIONS SHOULD BE DIRECTED TO JENNIFER KRANER, BIG SKY DESIGNS, 910–793–3992. LAMPS PROVIDED BY OWNER, INSTALLED BY ELECTRICAL CONTRACTOR	BY INTERIOR DESIGNER
E	PENDANT MOUNTED LED	BY INTERIOR DESIGNER	120	10 – 4.5W (60W EQUIVALENT) E12, DIMMABLE, 450 LUMEN, 80 CRI, 2700K LED, CANDELABRA	45	BY INTERIOR DESIGNER	BY INTERIOR DESIGNER	BY INTERIOR DESIGNER	BY INTERIOR DESIGNER	FIXTURE PROVIDED BY INTERIOR DESIGNER, INSTALLED BY ELECTRICAL CONTRACTOR. ALL QUESTIONS SHOULD BE DIRECTED TO JENNIFER KRANER, BIG SKY DESIGNS, 910–793–3992. LAMPS PROVIDED BY OWNER, INSTALLED BY ELECTRICAL CONTRACTOR	BY INTERIOR DESIGNER
F	PENDANT MOUNTED LED	BY INTERIOR DESIGNER	120	3 – 7W (60W EQUIVALENT) E26, DIMMABLE, 800 LUMEN, 2700K LED	21	BY INTERIOR DESIGNER	BY INTERIOR DESIGNER	BY INTERIOR DESIGNER	BY INTERIOR DESIGNER	FIXTURE PROVIDED BY INTERIOR DESIGNER, INSTALLED BY ELECTRICAL CONTRACTOR. ALL QUESTIONS SHOULD BE DIRECTED TO JENNIFER KRANER, BIG SKY DESIGNS, 910–793–3992. LAMPS PROVIDED BY OWNER, INSTALLED BY ELECTRICAL CONTRACTOR	BY INTERIOR DESIGNER
G	PENDANT MOUNTED LED	BY INTERIOR DESIGNER	120	1 – 10W (100W EQUIVALENT) E26, DIMMABLE, 1050 LUMEN, 2700K LED	10	BY INTERIOR DESIGNER	BY INTERIOR DESIGNER	BY INTERIOR DESIGNER	BY INTERIOR DESIGNER	FIXTURE PROVIDED BY INTERIOR DESIGNER, INSTALLED BY ELECTRICAL CONTRACTOR. ALL QUESTIONS SHOULD BE DIRECTED TO JENNIFER KRANER, BIG SKY DESIGNS, 910–793–3992. LAMPS PROVIDED BY OWNER, INSTALLED BY ELECTRICAL CONTRACTOR	BY INTERIOR DESIGNER
H	PENDANT MOUNTED LED	BY INTERIOR DESIGNER	120	1 – 8.5W (75W EQUIVALENT) E26, DIMMABLE, 800 LUMEN, 2700K LED	8.5	BY INTERIOR DESIGNER	BY INTERIOR DESIGNER	BY INTERIOR DESIGNER	BY INTERIOR DESIGNER	FIXTURE PROVIDED BY INTERIOR DESIGNER, INSTALLED BY ELECTRICAL CONTRACTOR. ALL QUESTIONS SHOULD BE DIRECTED TO JENNIFER KRANER, BIG SKY DESIGNS, 910–793–3992. LAMPS PROVIDED BY OWNER, INSTALLED BY ELECTRICAL CONTRACTOR	BY INTERIOR DESIGNER
J	PENDANT MOUNTED LED	BY INTERIOR DESIGNER	120	3 – 4.5W (60W EQUIVALENT) E12, DIMMABLE, 450 LUMEN, 80 CRI 2700K LED CANDELABRA	13.5	BY INTERIOR DESIGNER	BY INTERIOR DESIGNER	BY INTERIOR DESIGNER	BY INTERIOR DESIGNER	FIXTURE PROVIDED BY INTERIOR DESIGNER, INSTALLED BY ELECTRICAL CONTRACTOR. ALL QUESTIONS SHOULD BE DIRECTED TO JENNIFER KRANER, BIG SKY DESIGNS, 910–793–3992. LAMPS PROVIDED BY OWNER, INSTALLED BY ELECTRICAL CONTRACTOR	BY INTERIOR DESIGNER
K	PENDANT MOUNTED LED	BY INTERIOR DESIGNER	120	3 – 4.5W (60W EQUIVALENT) E12, DIMMABLE, 450 LUMEN, 80 CRI 2700K LED CANDELABRA	13.5	BY INTERIOR DESIGNER	BY INTERIOR DESIGNER	BY INTERIOR DESIGNER	BY INTERIOR DESIGNER	FIXTURE PROVIDED BY INTERIOR DESIGNER, INSTALLED BY ELECTRICAL CONTRACTOR. ALL QUESTIONS SHOULD BE DIRECTED TO JENNIFER KRANER, BIG SKY DESIGNS, 910–793–3992. LAMPS PROVIDED BY OWNER, INSTALLED BY ELECTRICAL CONTRACTOR	BY INTERIOR DESIGNER
L	PENDANT MOUNTED LED	BY INTERIOR DESIGNER	120	10 – 4W (40W EQUIVALENT) T4, G9, DIMMABLE, 2700K LED	40	BY INTERIOR DESIGNER	BY INTERIOR DESIGNER	BY INTERIOR DESIGNER	BY INTERIOR DESIGNER	FIXTURE PROVIDED BY INTERIOR DESIGNER, INSTALLED BY ELECTRICAL CONTRACTOR. ALL QUESTIONS SHOULD BE DIRECTED TO JENNIFER KRANER, BIG SKY DESIGNS, 910–793–3992. LAMPS PROVIDED BY OWNER, INSTALLED BY ELECTRICAL CONTRACTOR	BY INTERIOR DESIGNER
M	WALL MOUNTED LED SCONCE	BY INTERIOR DESIGNER	120	1 – 13W LED	13	BY INTERIOR DESIGNER	BY INTERIOR DESIGNER	BY INTERIOR DESIGNER	BY INTERIOR DESIGNER	FIXTURE PROVIDED BY INTERIOR DESIGNER, INSTALLED BY ELECTRICAL CONTRACTOR. ALL QUESTIONS SHOULD BE DIRECTED TO JENNIFER KRANER, BIG SKY DESIGNS, 910–793–3992.	BY INTERIOR DESIGNER
N	WALL MOUNTED LED SCONCE	BY INTERIOR DESIGNER	120	1 – 9.5W (13W EQUIVALENT) A19, GU24, 800 LUMENT, 2700K LED	9.5	BY INTERIOR DESIGNER	BY INTERIOR DESIGNER	BY INTERIOR DESIGNER	BY INTERIOR DESIGNER	FIXTURE PROVIDED BY INTERIOR DESIGNER, INSTALLED BY ELECTRICAL CONTRACTOR. ALL QUESTIONS SHOULD BE DIRECTED TO JENNIFER KRANER, BIG SKY DESIGNS, 910–793–3992. LAMPS PROVIDED BY OWNER, INSTALLED BY ELECTRICAL CONTRACTOR	BY INTERIOR DESIGNER
P	PENDANT MOUNTED LED	BY INTERIOR DESIGNER	120	3 – 4.5W (60W EQUIVALENT) E12, DIMMABLE, 450 LUMEN, 80 CRI 2700K LED CANDELABRA	13.5	BY INTERIOR DESIGNER	BY INTERIOR DESIGNER	BY INTERIOR DESIGNER	BY INTERIOR DESIGNER	FIXTURE PROVIDED BY INTERIOR DESIGNER, INSTALLED BY ELECTRICAL CONTRACTOR. ALL QUESTIONS SHOULD BE DIRECTED TO JENNIFER KRANER, BIG SKY DESIGNS, 910–793–3992. LAMPS PROVIDED BY OWNER, INSTALLED BY ELECTRICAL CONTRACTOR	BY INTERIOR DESIGNER
Q	WALL MOUNTED LED SCONCE	BY INTERIOR DESIGNER	120	2 – 4W (40W EQUIVALENT) E12, 300 LUMEN, 80 CRI,CANDELABRA 2700K LED CANDELABRA	8	BY INTERIOR DESIGNER	BY INTERIOR DESIGNER	BY INTERIOR DESIGNER	BY INTERIOR DESIGNER	FIXTURE PROVIDED BY INTERIOR DESIGNER, INSTALLED BY ELECTRICAL CONTRACTOR. ALL QUESTIONS SHOULD BE DIRECTED TO JENNIFER KRANER, BIG SKY DESIGNS, 910–793–3992. LAMPS PROVIDED BY OWNER, INSTALLED BY ELECTRICAL CONTRACTOR	BY INTERIOR DESIGNER
R	WALL MOUNTED ART LIGHT	BY INTERIOR DESIGNER	120	2 – 25W T	50	BY INTERIOR DESIGNER	BY INTERIOR DESIGNER	BY INTERIOR DESIGNER	BY INTERIOR DESIGNER	FIXTURE PROVIDED BY INTERIOR DESIGNER, INSTALLED BY ELECTRICAL CONTRACTOR. ALL QUESTIONS SHOULD BE DIRECTED TO JENNIFER KRANER, BIG SKY DESIGNS, 910–793–3992.	BY INTERIOR DESIGNER
S	WALL MOUNTED LED SCONCE	BY INTERIOR DESIGNER	120	2 – 4W (40W EQUIVALENT) E12, 300 LUMEN, 80 CRI,CANDELABRA 2700K LED CANDELABRA	8	BY INTERIOR DESIGNER	BY INTERIOR DESIGNER	BY INTERIOR DESIGNER	BY INTERIOR DESIGNER	FIXTURE PROVIDED BY INTERIOR DESIGNER, INSTALLED BY ELECTRICAL CONTRACTOR. ALL QUESTIONS SHOULD BE DIRECTED TO JENNIFER KRANER, BIG SKY DESIGNS, 910–793–3992. LAMPS PROVIDED BY OWNER, INSTALLED BY ELECTRICAL CONTRACTOR	BY INTERIOR DESIGNER
T	WALL MOUNTED LED SCONCE	BY INTERIOR DESIGNER	120	2 – 4W (40W EQUIVALENT) E12, 300 LUMEN, 80 CRI,CANDELABRA 2700K LED CANDELABRA	8	BY INTERIOR DESIGNER	BY INTERIOR DESIGNER	BY INTERIOR DESIGNER	BY INTERIOR DESIGNER	FIXTURE PROVIDED BY INTERIOR DESIGNER, INSTALLED BY ELECTRICAL CONTRACTOR. ALL QUESTIONS SHOULD BE DIRECTED TO JENNIFER KRANER, BIG SKY DESIGNS, 910–793–3992. LAMPS PROVIDED BY OWNER, INSTALLED BY ELECTRICAL CONTRACTOR	BY INTERIOR DESIGNER
U	WALL MOUNTED LED SCONCE	BY INTERIOR DESIGNER	120	1 – 6.5W LED B	6.5	BY INTERIOR DESIGNER	BY INTERIOR DESIGNER	BY INTERIOR DESIGNER	BY INTERIOR DESIGNER	FIXTURE PROVIDED BY INTERIOR DESIGNER, INSTALLED BY ELECTRICAL CONTRACTOR. ALL QUESTIONS SHOULD BE DIRECTED TO JENNIFER KRANER, BIG SKY DESIGNS, 910–793–3992.	BY INTERIOR DESIGNER
V	PENDANT MOUNTED LED	BY INTERIOR DESIGNER	120	6 – 4.5W (60W EQUIVALENT) E12, DIMMABLE, 450 LUMEN, 80 CRI 2700K LED CANDELABRA	27	BY INTERIOR DESIGNER	BY INTERIOR DESIGNER	BY INTERIOR DESIGNER	BY INTERIOR DESIGNER	FIXTURE PROVIDED BY INTERIOR DESIGNER, INSTALLED BY ELECTRICAL CONTRACTOR. ALL QUESTIONS SHOULD BE DIRECTED TO JENNIFER KRANER, BIG SKY DESIGNS, 910–793–3992. LAMPS PROVIDED BY OWNER, INSTALLED BY ELECTRICAL CONTRACTOR	BY INTERIOR DESIGNER
W	PENDANT MOUNTED LED	BY INTERIOR DESIGNER	120	10 – 7W (60W EQUIVALENT) E12, 500 LUMEN, 80 CRI, 2700K LED, FLAME TIP CANDELABRA	70	BY INTERIOR DESIGNER	BY INTERIOR DESIGNER	BY INTERIOR DESIGNER	BY INTERIOR DESIGNER	FIXTURE PROVIDED BY INTERIOR DESIGNER, INSTALLED BY ELECTRICAL CONTRACTOR. ALL QUESTIONS SHOULD BE DIRECTED TO JENNIFER KRANER, BIG SKY DESIGNS, 910–793–3992. LAMPS PROVIDED BY OWNER, INSTALLED BY ELECTRICAL CONTRACTOR	BY INTERIOR DESIGNER
X	PENDANT MOUNTED LED	BY INTERIOR DESIGNER	120	3 – 2.5W (25W EQUIVALENT) E12, 200 LUMEN, 80 CRI, 2700K LED, FLAME TIP CANDELABRA	7.5	BY INTERIOR DESIGNER	BY INTERIOR DESIGNER	BY INTERIOR DESIGNER	BY INTERIOR DESIGNER	FIXTURE PROVIDED BY INTERIOR DESIGNER, INSTALLED BY ELECTRICAL CONTRACTOR. ALL QUESTIONS SHOULD BE DIRECTED TO JENNIFER KRANER, BIG SKY DESIGNS, 910–793–3992. LAMPS PROVIDED BY OWNER, INSTALLED BY ELECTRICAL CONTRACTOR	BY INTERIOR DESIGNER
Y	WALL MOUNTED LED SCONCE	BY INTERIOR DESIGNER	120	2 – 7W (60W EQUIVALENT) E12, 500 LUMEN, 80 CRI, 2700K LED, FLAME TIP CANDELABRA	14	BY INTERIOR DESIGNER	BY INTERIOR DESIGNER	BY INTERIOR DESIGNER	BY INTERIOR DESIGNER	FIXTURE PROVIDED BY INTERIOR DESIGNER, INSTALLED BY ELECTRICAL CONTRACTOR. ALL QUESTIONS SHOULD BE DIRECTED TO JENNIFER KRANER, BIG SKY DESIGNS, 910–793–3992. LAMPS PROVIDED BY OWNER, INSTALLED BY ELECTRICAL CONTRACTOR	BY INTERIOR DESIGNER
Z	PENDANT MOUNTED LED	BY INTERIOR DESIGNER	120	1 – 9 W (60W EQUIVALENT) A19, 750 LUMEN, 2700K LED	9	BY INTERIOR DESIGNER	BY INTERIOR DESIGNER	BY INTERIOR DESIGNER	BY INTERIOR DESIGNER	FIXTURE PROVIDED BY INTERIOR DESIGNER, INSTALLED BY ELECTRICAL CONTRACTOR. ALL QUESTIONS SHOULD BE DIRECTED TO JENNIFER KRANER, BIG SKY DESIGNS, 910–793–3992. LAMPS PROVIDED BY OWNER, INSTALLED BY ELECTRICAL CONTRACTOR	BY INTERIOR DESIGNER
AA	WALL MOUNTED LED SCONCE	BY INTERIOR DESIGNER	120	1–18W LED	18	BY INTERIOR DESIGNER	BY INTERIOR DESIGNER	BY INTERIOR DESIGNER	BY INTERIOR DESIGNER	FIXTURE PROVIDED BY INTERIOR DESIGNER, INSTALLED BY ELECTRICAL CONTRACTOR. ALL QUESTIONS SHOULD BE DIRECTED TO JENNIFER KRANER, BIG SKY DESIGNS, 910–793–3992.	BY INTERIOR DESIGNER
BB	WALL MOUNTED LED SCONCE	BY INTERIOR DESIGNER	120	1–14.5 LED	14.5	BY INTERIOR DESIGNER	BY INTERIOR DESIGNER	BY INTERIOR DESIGNER	BY INTERIOR DESIGNER	FIXTURE PROVIDED BY INTERIOR DESIGNER, INSTALLED BY ELECTRICAL CONTRACTOR. ALL QUESTIONS SHOULD BE DIRECTED TO JENNIFER KRANER, BIG SKY DESIGNS, 910–793–3992.	BY INTERIOR DESIGNER
CC	PENDANT MOUNTED LED	BY INTERIOR DESIGNER	120	1 – 3W (25W EQUIVALENT) A19, DIMMABLE, 270 LUMEN, 2700K LED	3	BY INTERIOR DESIGNER	BY INTERIOR DESIGNER	BY INTERIOR DESIGNER	BY INTERIOR DESIGNER	FIXTURE PROVIDED BY INTERIOR DESIGNER, INSTALLED BY ELECTRCIAL CONTRACTOR. ALL QUESTIONS SHOULD BE DIRECTED TO JENNIFER KRANER, BIG SKY DESIGNS, 910–793–3992. LAMPS PROVIDED BY OWNER, INSTALLED BY ELECTRICAL CONTRACTOR	BY INTERIOR DESIGNER
DD	WALL MOUNTED LED SCONCE	BY INTERIOR DESIGNER	120	1 – 7W (60W EQUIVALENT) E12, 500 LUMEN, 80 CRI, 2700K LED, FLAME TIP CANDELABRA	7	BY INTERIOR DESIGNER	BY INTERIOR DESIGNER	BY INTERIOR DESIGNER	BY INTERIOR DESIGNER	FIXTURE PROVIDED BY INTERIOR DESIGNER, INSTALLED BY ELECTRICAL CONTRACTOR. ALL QUESTIONS SHOULD BE DIRECTED TO JENNIFER KRANER, BIG SKY DESIGNS, 910–793–3992. LAMPS PROVIDED BY OWNER, INSTALLED BY ELECTRICAL CONTRACTOR	BY INTERIOR DESIGNER
EE	WALL MOUNTED LED SCONCE	BY INTERIOR DESIGNER	120	3 – 7W (60W EQUIVALENT) E26, DIMMABLE, 800 LUMEN, 2700K LED	21	BY INTERIOR DESIGNER	BY INTERIOR DESIGNER	BY INTERIOR DESIGNER	BY INTERIOR DESIGNER	FIXTURE PROVIDED BY INTERIOR DESIGNER, INSTALLED BY ELECTRICAL CONTRACTOR. ALL QUESTIONS SHOULD BE DIRECTED TO JENNIFER KRANER, BIG SKY DESIGNS, 910–793–3992. LAMPS PROVIDED BY OWNER, INSTALLED BY ELECTRICAL CONTRACTOR	BY INTERIOR DESIGNER
FF	WALL MOUNTED LED SCONCE	BY INTERIOR DESIGNER	120	3 – 13.5W (100W EQUIVALENT) A19, 1600 LUMEN, 2700K LED,	40.5	BY INTERIOR DESIGNER	BY INTERIOR DESIGNER	BY INTERIOR DESIGNER	BY INTERIOR DESIGNER	FIXTURE PROVIDED BY INTERIOR DESIGNER, INSTALLED BY ELECTRICAL CONTRACTOR. ALL QUESTIONS SHOULD BE DIRECTED TO JENNIFER KRANER, BIG SKY DESIGNS, 910–793–3992. LAMPS PROVIDED BY OWNER, INSTALLED BY ELECTRICAL CONTRACTOR	BY INTERIOR DESIGNER
GG	WALL MOUNTED LED SCONCE	BY INTERIOR DESIGNER	120	2 – 4.5W (60W EQUIVALENT) E12, DIMMABLE, 450 LUMEN, 80 CRI 2700K LED CANDELABRA	9	BY INTERIOR DESIGNER	BY INTERIOR DESIGNER	BY INTERIOR DESIGNER	BY INTERIOR DESIGNER	FIXTURE PROVIDED BY INTERIOR DESIGNER, INSTALLED BY ELECTRICAL CONTRACTOR. ALL QUESTIONS SHOULD BE DIRECTED TO JENNIFER KRANER, BIG SKY DESIGNS, 910–793–3992. LAMPS PROVIDED BY OWNER, INSTALLED BY ELECTRICAL CONTRACTOR	BY INTERIOR DESIGNER

McFadyen Engineers, PLLC
4411 Peachtree Avenue Wilmington, NC 28403 Phone: 910.399.1125

© Copyright 2020 McFadyen Engineers, PLLC NC: P-1010

BOWMAN MURRAY HEMINGWAY ARCHITECTS
514 Market Street
Wilmington, NC 28406
Tel - 910.762-2621
Fax - 910.762-8506

NOT FOR CONSTRUCTION
PERMIT SET DRAWINGS - FOR REVIEW ONLY
DUNCAN MCFADYEN

THE DAVIS COMMUNITY
New Community Center

1011 Porter's Neck Road
Wilmington, North Carolina 28411

REV.	DATE	DESCRIPTION

NO.	DATE	ISSUE NOTE

Project Manager: RDM	Drawn By: WP
Date: October 22, 2020	Reviewed By: RDM
Project ID:	

Sheet Title: Lighting Fixture Schedule

Sheet No.: E106.1

Fire Alarm System Control Matrix

SYSTEM INPUTS	NOTE	SYSTEM OUTPUTS: ACTUATE COMMON ALARM SIGNAL INDICATOR	ACTUATE NOTIFICATION APPLIANCES	ACTUATE COMMON TROUBLE SIGNAL INDICATOR	ACTUATE COMMON SUPERVISORY SIGNAL INDICATOR	ALARM SIGNAL TO MONITORING SERVICE	SUPERVISORY SIGNAL TO MONITORING SERVICE	TROUBLE SIGNAL TO MONITORING SERVICE	DISPLAY/PRINT CHANGE OF STATUS	RELEASE MAGNETICALLY HELD DOORS	SIGNAL HVAC CONTROL SYSTEM	ACTUATE SMOKE DAMPERS
SMOKE DETECTORS		X	X			X			X	X	X	X
HEAT DETECTORS		X	X			X			X	X	X	X
MANUAL PULL STATIONS		X	X			X			X	X	X	X
SYSTEM TROUBLE CONDITION				X				X				
LOSS OF FACU AC POWER	1			X				X				
GROUND FAULT				X				X				
SHORT CIRCUIT				X				X				
OPEN CIRCUIT				X				X				
KITCEN HOOD ANSUL SYSTEM		X	X			X			X	X	X	X
AHU SHUTDOWN AND SMOKE DAMPER OVERRIDE SWITCH					X		X					
SPRINKLER SYSTEM FLOW SWITCH	2	X	X			X			X	X	X	X
FIRE PROTECTION PIPING HEAT TRACE FAILURE	2,5				X		X					
SPRINKLER SYSTEM TAMPER SWITCH	2				X		X					
SPRINKLER PRESSURE SWITCH	2				X		X					
RPZ TAMPER SWITCH	2,5				X		X					
RPZ HOT BOX LOW TEMPERATURE	2,5				X		X					

NOTES:
1. ONLY AFTER LOSS OF POWER FOR > 8 HOURS.
2. REFER TO FIRE PROTECTION DRAWINGS FOR SPRINKLER DEVICE LOCATIONS.
3. TYPICAL, QUANTITIES OF DEVICES ARE NOT SHOWN, SEE FIRE PROTECTION DRAWINGS FOR QUANTITIES AND LOCATIONS.
4. SEE MECHANICAL DRAWINGS FOR LOCATIONS.
5. IF PRESNT.
6. THIS IS A ABBREVIATED CONTROL MATRIX. REFER TO SPECS SECTION 283111 AND THE MECHANICAL DRAWINGS AND SPECS FOR ADDITIONAL REQUIREMENTS.

Fire Alarm Legend

F	FIRE ALARM MANUAL STATION, 48" AFF
WP F	WEATHERPROOF FIRE ALARM MANUAL STATION, 48" AFF
75 F	FIRE ALARM CHIME/VISUAL DEVICE, 80" AFF, "75" INDICATES CANDELLA RATING
75 F	FIRE ALARM AURAL/VISUAL DEVICE, CEILING MOUNTED, "75" INDICATES CANDELLA RATING
WP 75 F	WEATHERPROOF FIRE ALARM CHIME/VISUAL DEVICE, 80" AFF, "75" INDICATES CANDELLA RATING
15 S	FIRE ALARM VISUAL (ONLY) DEVICE, 80" AFF, "15" INDICATES CANDELLA RATING
15 F	FIRE ALARM VISUAL (ONLY) DEVICE, CEILING MOUNTED, "15" INDICATES CANDELLA RATING
S	SMOKE DETECTOR, CEILING MOUNTED
S	DUCT MOUNTED SMOKE DETECTOR
H	HEAT DETECTOR, CEILING MOUNTED
I	FIRE ALARM ISOLATION MODULE
C	FIRE ALARM SYSTEM CONTROL MODULE
M	FIRE ALARM SYSTEM MONITOR MODULE
R	DUCT MOUNTED SMOKE DETECTOR REMOTE INDICATION DEVICE, 80" AFF
TB	FIRE ALARM SYSTEM TERMINAL BOX

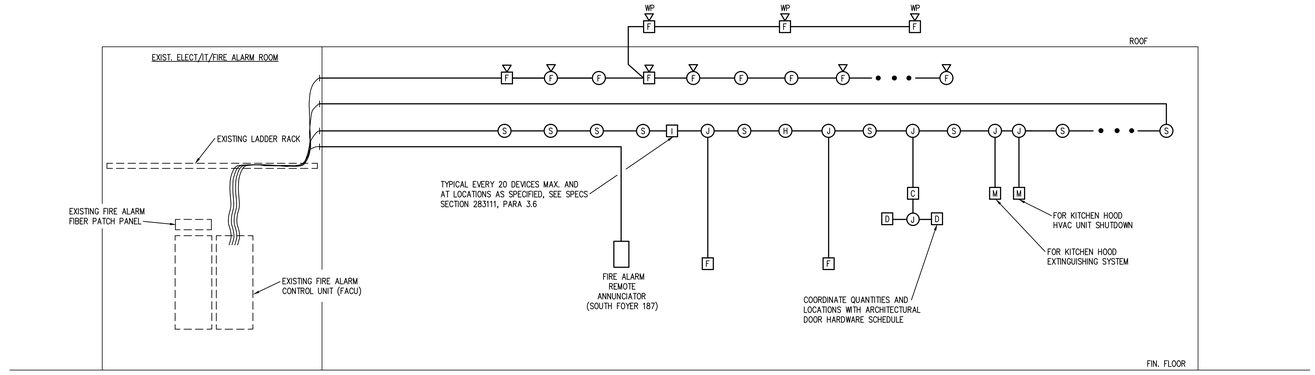

5 - Functional Fire Alarm Riser Diagram
Not to Scale

NOTES: 1. RISER DIAGRAM IS DEPICTIVE (FUNCTIONAL) ONLY. ALL DEVICES ARE NOT SHOWN
2. SEE SPECIFICATIONS SECTION 283111 FOR DETAILS.

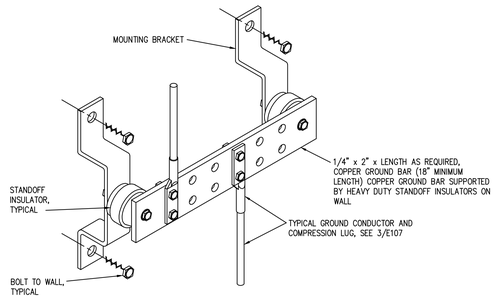

2 - Typical Ground Bar Mounting Detail
Not to Scale

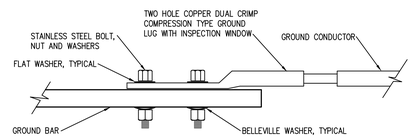

3 - Typical Ground Bar Connection Detail
Not to Scale

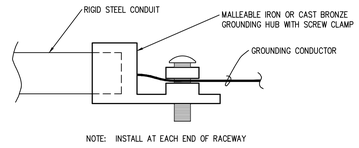

4 - Conduit and Grounding Conductor Grounding Detail
Not to Scale

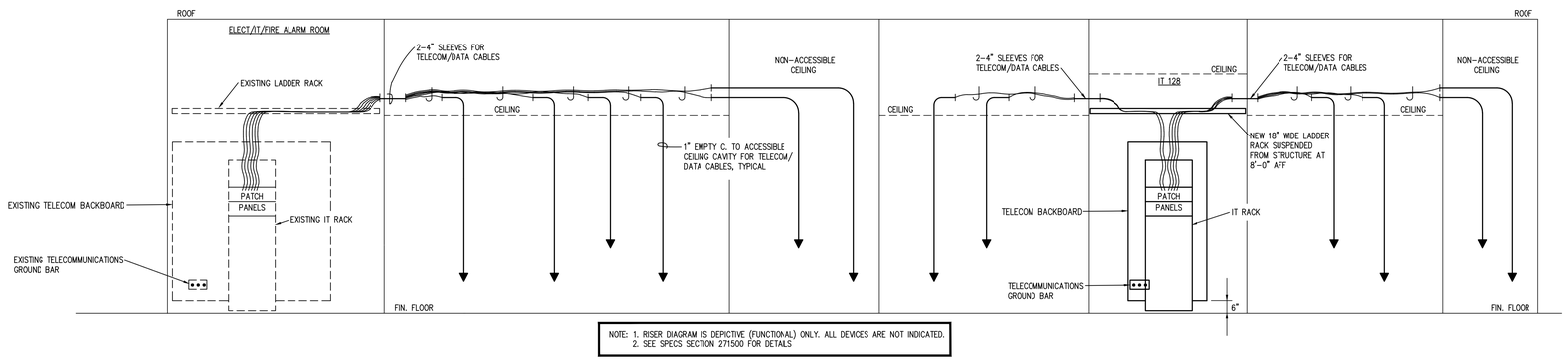

NOTE: 1. RISER DIAGRAM IS DEPICTIVE (FUNCTIONAL) ONLY. ALL DEVICES ARE NOT INDICATED.
2. SEE SPECS SECTION 271500 FOR DETAILS

1 - Functional Telecommunications Riser Diagram
Not to Scale

McFadyen Engineers, PLLC
4411 Peachtree Avenue Wilmington, NC 28403 Phone: 910.399.1125

© Copyright 2020 McFadyen Engineers, PLLC NC□P-1010

BOWMAN MURRAY HEMINGWAY ARCHITECTS
514 Market Street
Wilmington, NC 28406
Tel - 910□762-2621
Fax - 910□762-8506

PERMIT SET DRAWINGS - FOR REVIEW ONLY - NOT FOR CONSTRUCTION

THE DAVIS COMMUNITY
New Community Center

1011 Porter's Neck Road
Wilmington, North Carolina 28411

REV.	DATE	DESCRIPTION

NO.	DATE	ISSUE NOTE

Project Manager: RDM	Drawn By: WP□
Date: Octo□er 22, 2020	Reviewed By: RDM
Project ID	

Sheet Title
Telecommunications and Fire Alarm Riser Diagrams

Sheet No.
E107

McFadyen Engineers, PLLC
4411 Peachtree Avenue Wilmington, NC 28403 Phone: 910.399.1125
© Copyright 2020 McFadyen Engineers, PLLC NC P-1010

BOWMAN MURRAY HEMINGWAY ARCHITECTS
514 Market Street
Wilmington, NC 28406
Tel - 910.762-2621
Fax - 910.762-8506

NORTH CAROLINA PROFESSIONAL
DRAWINGS
FOR REVIEW
ONLY
DUNCAN McFADYEN

THE DAVIS COMMUNITY
New Community Center

1011 Porter's Neck Road
Wilmington, North Carolina 28411

REV.	DATE	DESCRIPTION

NO.	DATE	ISSUE NOTE

Project Manager	Drawn By
RDM	WP
Date	Reviewed By
October 22, 2020	RDM
Project ID	

Sheet Title: Power Plan

Sheet No.: E108

1 - Power Plan
Scale: 1/8" = 1'-0"

McFadyen Engineers, PLLC
4411 Peachtree Avenue Wilmington, NC 28403 Phone : 910.399.1125
© Copyright 2020 McFadyen Engineers, PLLC
NC : P-1010

BOWMAN MURRAY HEMINGWAY ARCHITECTS
514 Market Street
Wilmington, NC 28406
Tel - 910 762-2621
Fa - 910 762-8506

PERMIT DRAWINGS FOR REVIEW ONLY
NOT FOR CONSTRUCTION
DUNCAN MCFADYEN

THE DAVIS COMMUNITY
New Community Center

1011 Porter's Neck Road
Wilmington, North Carolina 28411

REV.	DATE	DESCRIPTION

NO.	DATE	ISSUE NOTE

Project Manager	Drawn By
RDM	WP
Date	Reviewed By
Octo er 22, 2020	RDM
Project ID	

Sheet Title

Lighting Plan

Sheet No.

E109

1 - Lighting Plan
Scale: 1/8" = 1'-0"

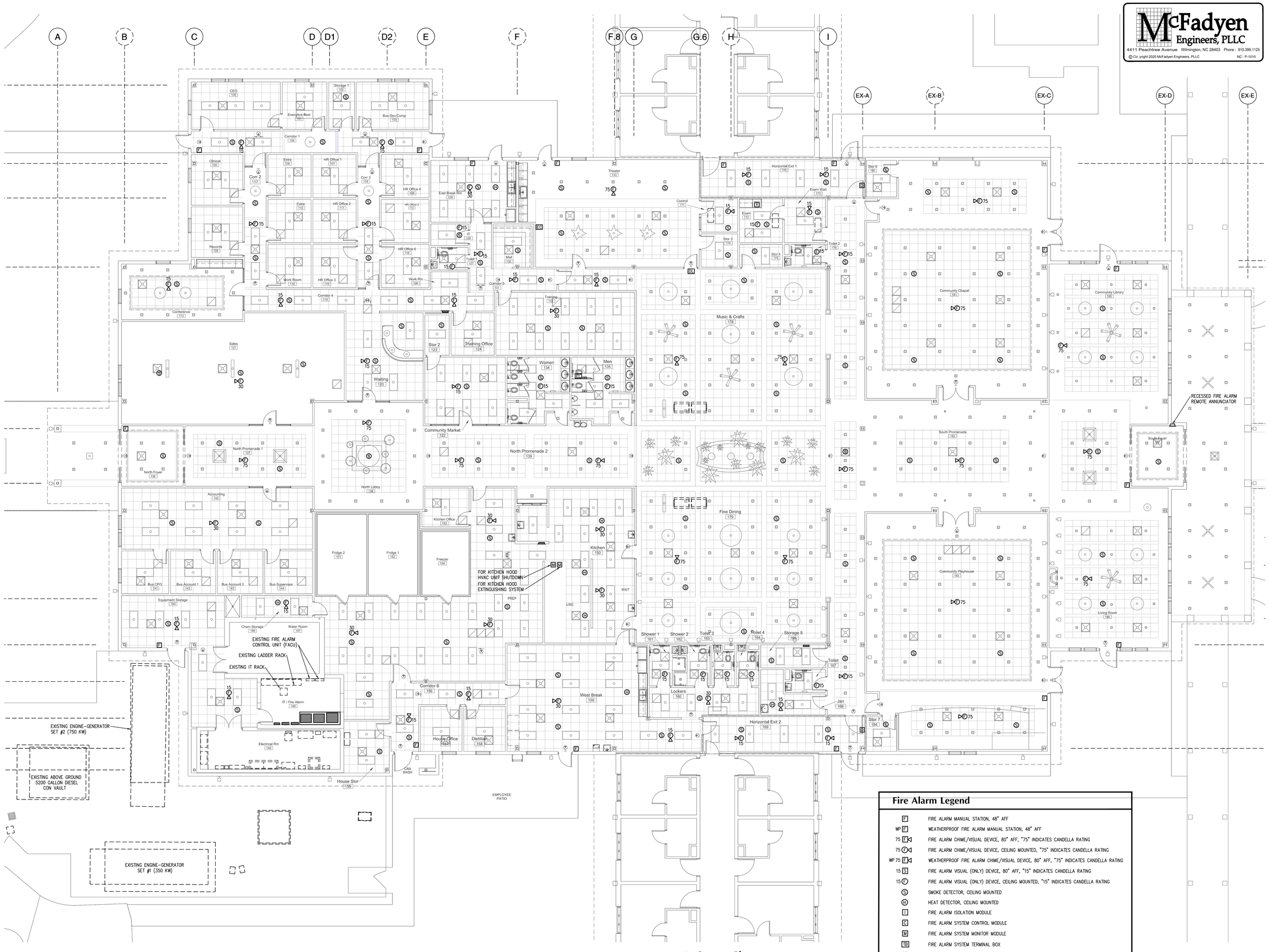

1 - Systems Plan

Scale: 1/8" = 1'-0"

Fire Alarm Legend

F	FIRE ALARM MANUAL STATION, 48" AFF
WP F	WEATHERPROOF FIRE ALARM MANUAL STATION, 48" AFF
75 F	FIRE ALARM CHIME/VISUAL DEVICE, 80" AFF, "75" INDICATES CANDELLA RATING
75 C	FIRE ALARM CHIME/VISUAL DEVICE, CEILING MOUNTED, "75" INDICATES CANDELLA RATING
WP 75 F	WEATHERPROOF FIRE ALARM CHIME/VISUAL DEVICE, 80" AFF, "75" INDICATES CANDELLA RATING
15 S	FIRE ALARM VISUAL (ONLY) DEVICE, 80" AFF, "15" INDICATES CANDELLA RATING
15 C	FIRE ALARM VISUAL (ONLY) DEVICE, CEILING MOUNTED, "15" INDICATES CANDELLA RATING
S	SMOKE DETECTOR, CEILING MOUNTED
H	HEAT DETECTOR, CEILING MOUNTED
I	FIRE ALARM ISOLATION MODULE
C	FIRE ALARM SYSTEM CONTROL MODULE
M	FIRE ALARM SYSTEM MONITOR MODULE
TB	FIRE ALARM SYSTEM TERMINAL BOX
D	DOOR HOLD OPEN DEVICE

McFadyen Engineers, PLLC
4411 Peachtree Avenue Wilmington, NC 28403 Phone: 910.399.1125
© Copyright 2020 McFadyen Engineers, PLLC NC: P-1010

BOWMAN MURRAY HEMINGWAY ARCHITECTS
514 Market Street
Wilmington, NC 28406
Tel - 910.762-2621
Fax - 910.762-8506

NORTH CAROLINA PROFESSIONAL ENGINEER SEAL 049911 DUNCAN McFADYEN

PERMIT SET DRAWINGS FOR REVIEW ONLY

THE DAVIS COMMUNITY
New Community Center

1011 Porter's Neck Road
Wilmington, North Carolina 28411

REV.	DATE	DESCRIPTION

NO.	DATE	ISSUE NOTE

Project Manager: RDM	Drawn By: WP
Date: October 22, 2020	Reviewed By: RDM
Project ID	

Sheet Title: Systems Plan

Sheet No.: E110

McFadyen Engineers, PLLC
4411 Peachtree Avenue Wilmington, NC 28403 Phone: 910.399.1125
© Copyright 2020 McFadyen Engineers, PLLC NC: P-1010

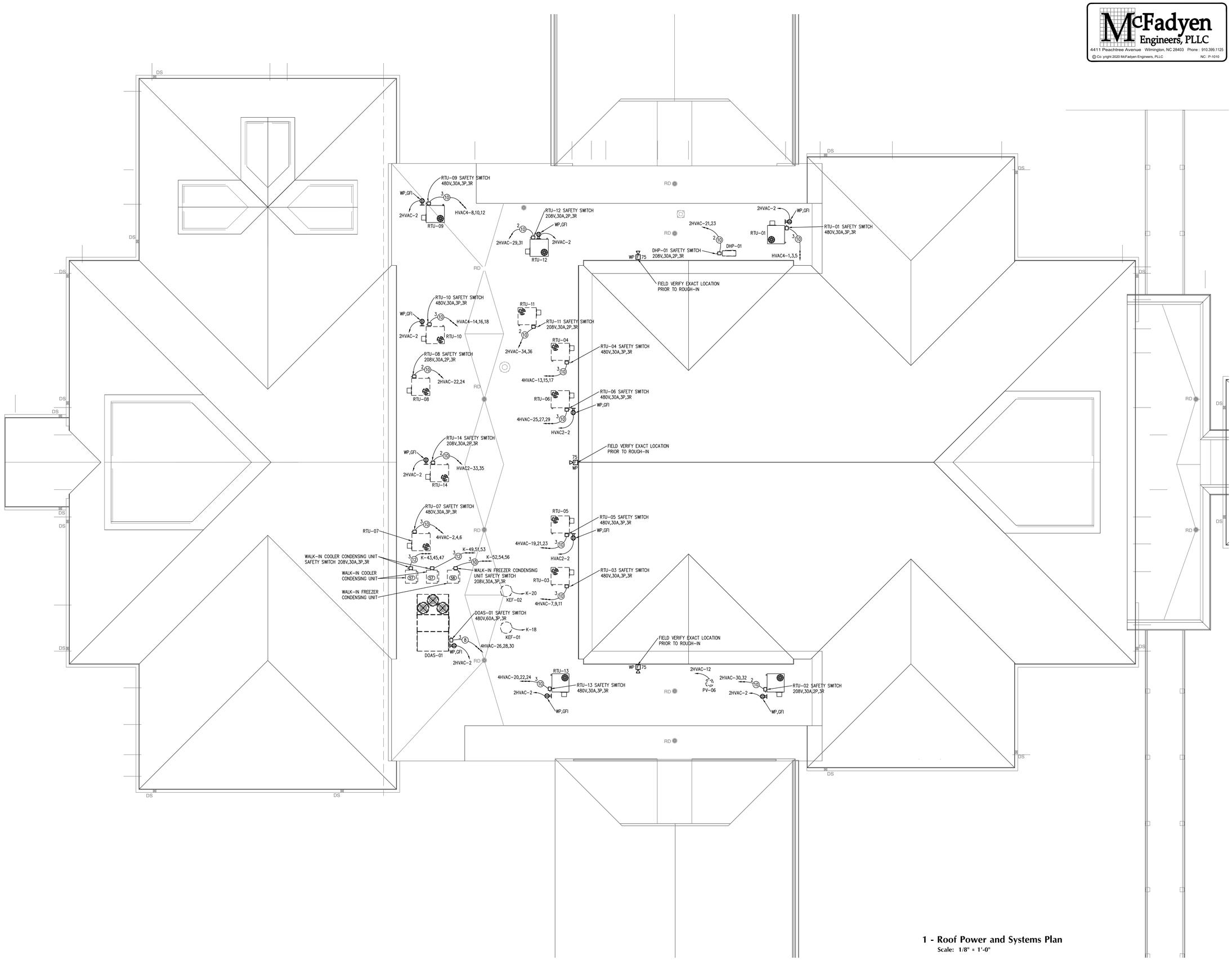

1 - Roof Power and Systems Plan
Scale: 1/8" = 1'-0"

BOWMAN MURRAY HEMINGWAY ARCHITECTS
514 Market Street
Wilmington, NC 28406
Tel :- 910::762-2621
Fa::- 910::762-8506

NORTH CAROLINA LICENSED ARCHITECT
DUNCAN McFADYEN
PERMIT SET DRAWINGS FOR REVIEW ONLY

THE DAVIS COMMUNITY
New Community Center

1011 Porter's Neck Road
Wilmington, North Carolina 28411

REV.	DATE	DESCRIPTION

NO.	DATE	ISSUE NOTE

Project Manager	Drawn By
RDM	WP::
Date	Reviewed By
Octo::er 22, 2020	RDM
Project ID	

Sheet Title
Roof Power and Systems Plan

Sheet No.
E111

McFadyen Engineers, PLLC
4411 Peachtree Avenue Wilmington, NC 28403 Phone: 910.399.1125
© Copyright 2020 McFadyen Engineers, PLLC NC: P-1010

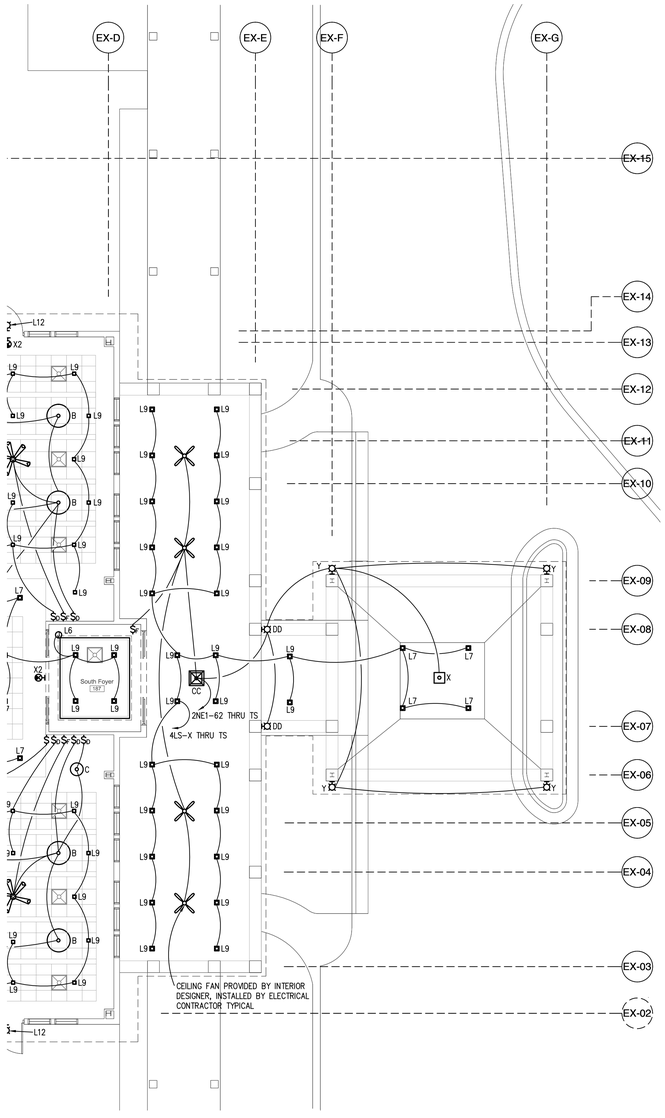

1 - Partial Lighting Plan
Scale: 1/8" = 1'-0"

BOWMAN MURRAY HEMINGWAY ARCHITECTS
514 Market Street
Wilmington, NC 28406
Tel :- 910::762-2621
Fa::- 910::762-8506

NORTH CAROLINA LICENSED ARCHITECT DUNCAN McFADYEN
PERMIT DRAWINGS - FOR REVIEW ONLY

THE DAVIS COMMUNITY
New Community Center
1011 Porter's Neck Road
Wilmington, North Carolina 28411

REV.	DATE	DESCRIPTION

NO.	DATE	ISSUE NOTE

Project Manager: RDM	Drawn By: WP::
Date: Octo::er 22, 2020	Reviewed By: RDM
Project ID	

Sheet Title
Partial Lighting Plan

Sheet No.
E112



1 FLOOR PATTERNS
SCALE: 1/8" = 1'-0"

FLOORING KEY

CPT 1	CPT-4	CPT-7	CPT-10	LVT-3	LVT-6	ST LVT-1	TL-1	FLOOR PATTERN DIRECTION
CPT-2	CPT-5	CPT-8	LVT-1	LVT-4	VCT-1	ST LVT-2	TL-2	
CPT-3	CPT-6	CPT-9	LVT-2	LVT-5	EPOXY	ST LVT-3	CONCRETE	

N

BOWMAN MURRAY HEMINGWAY ARCHITECTS
514 Market Street
Wilmington, NC 28401
Tel - (910) 762-2621
Fax - (910) 762-8506

USE FOR REVIEW ONLY — NOT FOR CONSTRUCTION — WILMINGTON, NC

BOWMAN MURRAY HEMINGWAY ARCHITECTS — CERT. NO. 50424 — WILMINGTON, N.C.

BIG SKY INTERIOR DESIGN
4037 Masonboro Loop Road Ste 2K
Wilmington, NC 28409
O 910-793-3992
F 910-793-3995
www.bigskydesignonline.com

project information:
DAVIS COMMUNITY CENTER 2020
1011 PORTERS NECK RD, WILMINGTON, NC 28411

Permit Drawings for Review Only

revisions:

notes:

drawn by: JK / JS

date: 10/22/2020

drawing title:
FLOOR PATTERNS

sheet no.:
ID-1

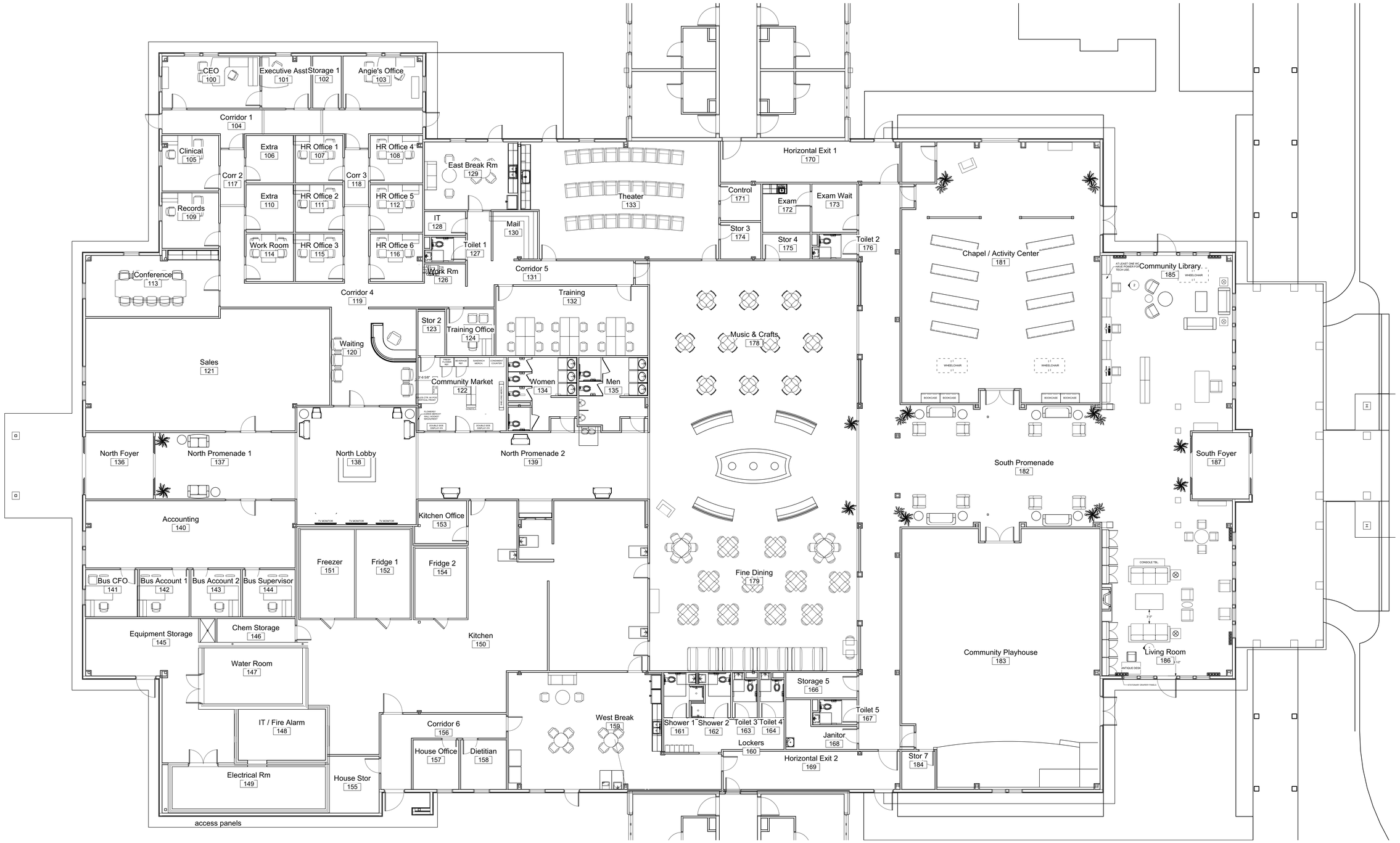

2 FURNITURE LAYOUTS
SCALE: 1/8" = 1'-0"

N

BOWMAN MURRAY HEMINGWAY ARCHITECTS
514 Market Street
Wilmington, NC 28401
Tel - (910) 762-2621
Fax - (910) 762-8506

FOR REVIEW ONLY

BIG SKY INTERIOR DESIGN
4037 Masonboro Loop Road Ste 2K
Wilmington, NC 28409
O 910-793-3992
F 910-793-3995
www.bigskydesignonline.com

project information:
DAVIS COMMUNITY CENTER 2020
1011 PORTERS NECK RD, WILMINGTON, NC 28411

Permit Drawings for Review Only

revisions:

notes:

drawn by: JK / JS

date: 10/22/2020

drawing title:
FURNITURE LAYOUTS

sheet no.:
ID-2

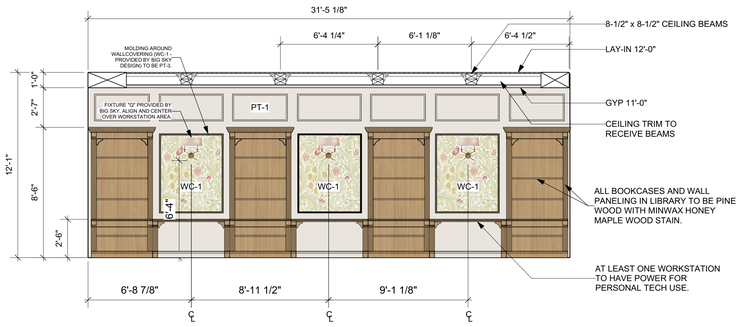

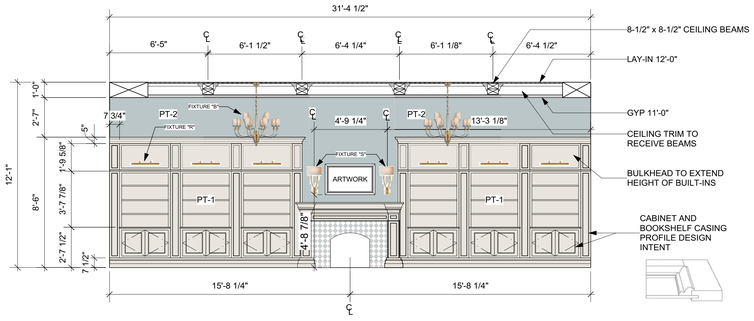

GENERAL NOTES:

1. ALL BOOKSHELVES TO BE EQUAL H x W x L X D.
2. BOOKSHELVES TO BE BUILT WITH ADJUSTABLE SHELVES.
3. FIREPLACE WILL NEED TO BE MODIFIED PER ACTUAL FIREPLACE SELECTION WITH DECORATIVE TILE.
4. IF FIREPLACE IS GAS, DRAWING WILL NEED TO BE MODIFIED TO MEET CODE REQUIREMENTS FOR NON-COMBUSTIBLE MATERIAL.
5. BASE MOLDING TO BE WDBS-1.
5. ALL TRIM / MOLDING TO BE PT-1 IN SEMI-GLOSS FINISH.
6. CEILING AND CEILING BEAMS TO BE PT-1 IN FLAT FINISH.
7. ALL WALLS TO BE PT-2 IN FLAT FINISH.

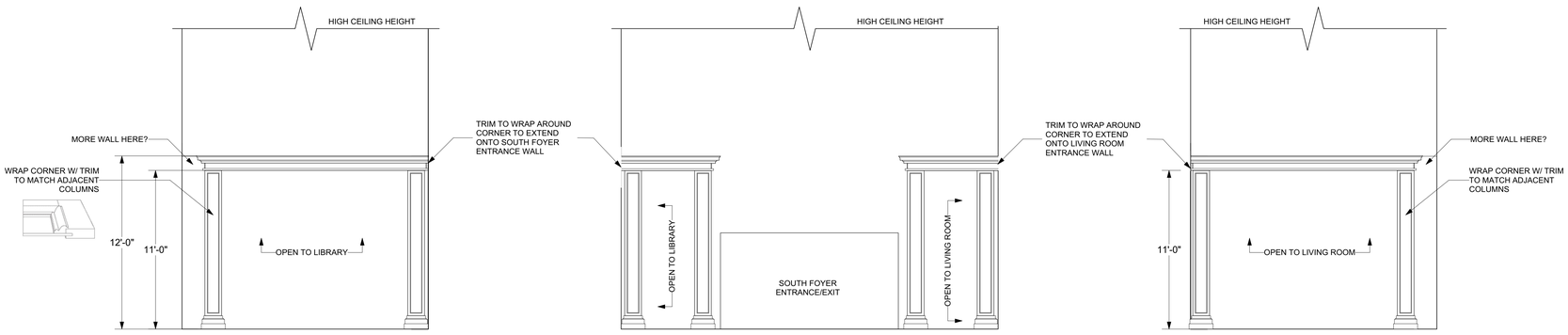

BOWMAN MURRAY HEMINGWAY ARCHITECTS

514 Market Street
Wilmington, NC 28401
Tel - (910) 762-2621
Fax - (910) 762-8506

JOSEPH F. BOWMAN FOR REVIEW ONLY NORTH CAROLINA WILMINGTON, NC

BOWMAN MURRAY HEMINGWAY ARCHITECTS REGISTERED ARCHITECTURAL CORPORATION CERT. NO. 50424 WILMINGTON, N.C. NORTH CAROLINA

BIG SKY INTERIOR DESIGN

4037 Masonboro Loop Road Ste 2K
Wilmington, NC 28409

O 910-793-3992
F 910-793-3995
www.bigskydesignonline.com

project information:

DAVIS COMMUNITY CENTER 2020
1011 PORTERS NECK RD, WILMINGTON, NC 28411

revisions:

notes:

drawn by:

date:

drawing title:

ELEVATIONS REFERENCING FINISHES

sheet no.:

ID-3

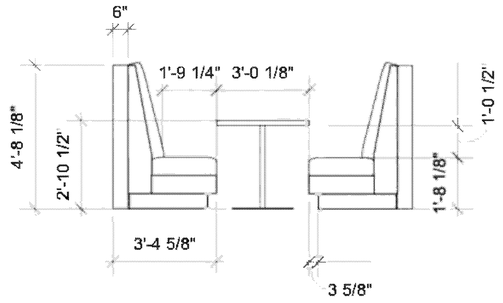

12 FINE DINING - WEST WALL BOOTH ELEVATION
SCALE: 1/2" = 1'-0"

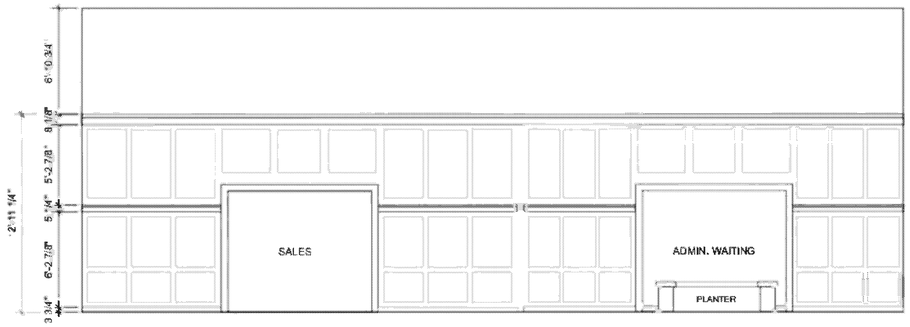

13 NORTH PROMENADE - EAST WALL ELEVATION
SCALE: 1/4" = 1'-0"

(IN COORDINATION TO 2/A400 BUILDING SECTION - PART A)

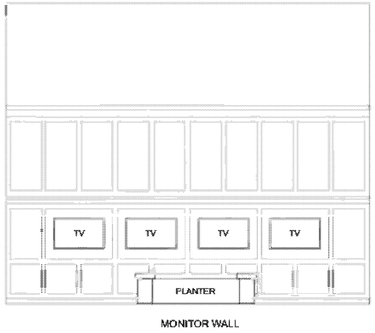

MONITOR WALL

14 NORTH LOBBY - WEST WALL ELEVATION
SCALE: 1/4" = 1'-0"

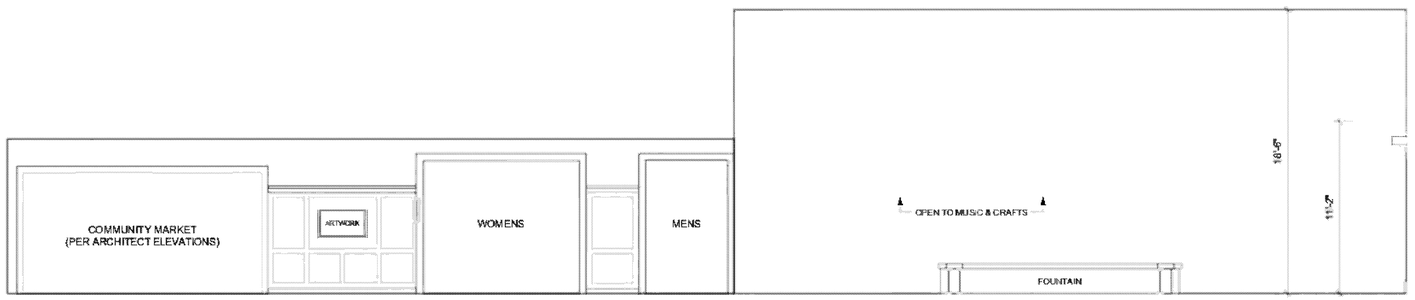

15 NORTH PROMENADE 2 - EAST WALL ELEVATION
SCALE: 1/4" = 1'-0"

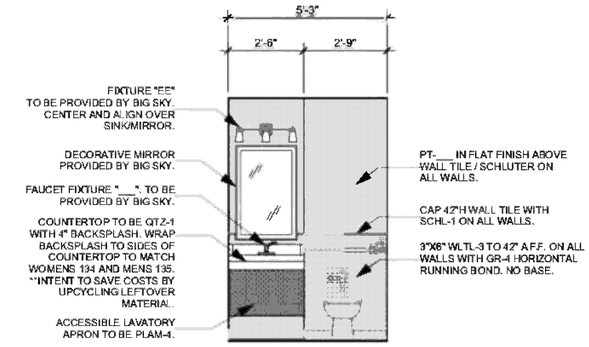

GENERAL NOTES:

1. 3"X6" WLTL-3 AT 42" A.F.F. TO BE ON ALL WALLS WITH GR-4. HORIZONTAL RUNNING BOND. NO BASE.
2. CEILING TO BE PT-1 IN FLAT FINISH.

18 ELEVATION @ TOILET ROOMS 127, 167, 176
SCALE: NOT TO SCALE



16 SOUTH PROMENADE - EAST WALL ELEVATION
SCALE: 1/4" = 1'-0"

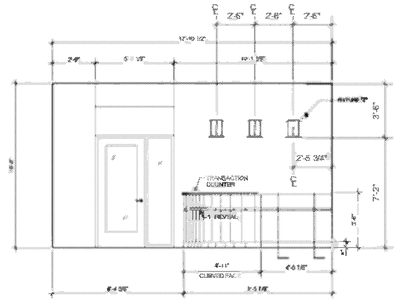

17 ELEVATION @ WAITING DESK
SCALE: 1/4" = 1'-0"

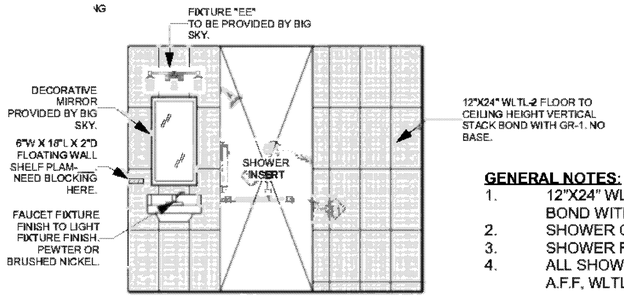

GENERAL NOTES:

1. 12"X24" WLTL-2 FLOOR TO CEILING HEIGHT VERTICAL STACK BOND WITH GR-1 ON ALL WALLS NO BASE.
2. SHOWER CEILING TO BE 12"X18" WLTL-5 WITH GR-2.
3. SHOWER FLOOR TO BE 2"X2" MOSAIC TL-3 WITH GR-2.
4. ALL SHOWER WALLS TO BE THE SAME WITH WLTL-5 AT 54" A.F.F, WLTL-6 AT 60" A.F.F, AND WLTL-4 TO CEILING HEIGHT.

19 ELEVATION @ SHOWERS 161, 162
SCALE: NOT TO SCALE

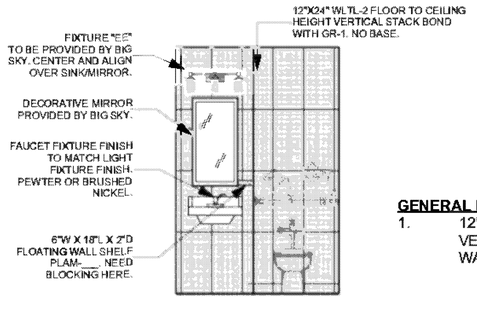

GENERAL NOTES:

1. 12"X24" WLTL-2 FLOOR TO CEILING HEIGHT VERTICAL STACK BOND WITH GR-1 ON ALL WALLS. NO BASE.

20 ELEVATION @ TOILET ROOMS 163, 164
SCALE: NOT TO SCALE

N

BOWMAN MURRAY HEMINGWAY ARCHITECTS
514 Market Street
Wilmington, NC 28401
Tel - (910) 762-2621
Fax - (910) 762-8506

FOR REVIEW ONLY

BIG SKY Interior Design
4037 Masonboro Loop Road Ste 2K
Wilmington, NC 28409
O 910-793-3992
F 910-793-3995
www.bigskydesignonline.com

project information
DAVIS COMMUNITY CENTER 2020
1011 PORTERS NECK RD, WILMINGTON, NC 28411
Permit Drawings for Review Only

revisions:

notes:

drawn by: JK / JS

date: 10/22/2020

drawing title:
ELEVATIONS REFERENCING FINISHES

sheet no.:
ID-4

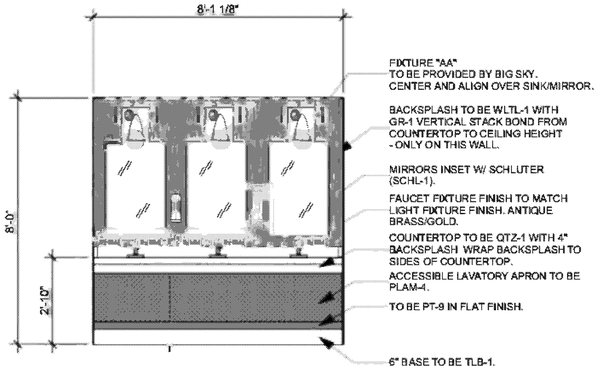

GENERAL NOTES:

1. ALL OTHER WALLS TO BE PT-9 IN FLAT FINISH WITH 6" COVE BASE (TLB-1).

21 ELEVATION @ WOMENS 134
SCALE: NOT TO SCALE

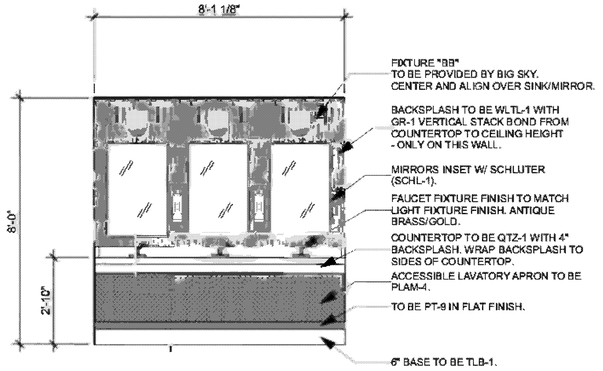

GENERAL NOTES:

1. ALL OTHER WALLS TO BE PT-9 IN FLAT FINISH WITH 6" COVE BASE (TLB-1).

22 ELEVATION @ MENS 135
SCALE: NOT TO SCALE

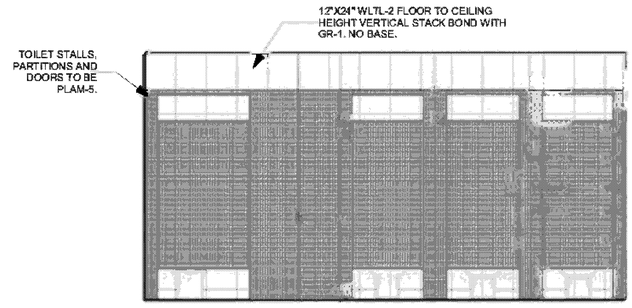

23 ELEVATION @ WOMENS 134
SCALE: NOT TO SCALE

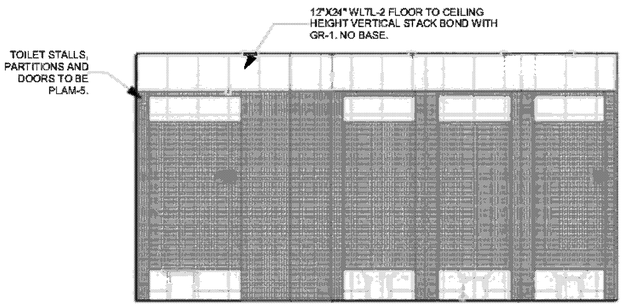

24 ELEVATION @ MENS 135
SCALE: NOT TO SCALE

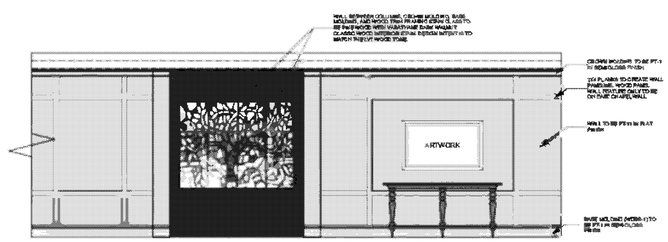

GENERAL NOTES:

1. WRAP COLUMNS WITH CROWN MOLDING AND BASE MOLDING AS SHOWN IN ELEVATION.
2. CROWN AND BASE MOLDING (WDBS-1) TO BE PT-1 IN SEMI-GLOSS FINISH.
3. CEILING TO BE PT-1 IN FLAT FINISH
4. ALL WALLS WITH PAINT TO BE FLAT FINISH.
5. ALL OTHER WALLS TO BE PT-9.

25 ELEVATION @ CHAPEL EAST WALL
SCALE: 1/4" = 1'-0"

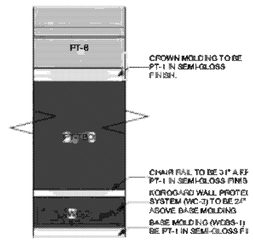

GENERAL NOTES:

1. ALL WALLS TO BE THE SAME FINISHES.
2. CROWN MOLDING, CHAIR RAIL AND BASE MOLDING (WDBS-1) TO BE PT-1 IN SEMI-GLOSS FINISH.
3. WALLS ABOVE CROWN MOLDING TO BE PT-TBD IN FLAT FINISH.

26 ELEVATION @ MUSIC & CRAFTS
SCALE: 1/4" = 1'-0"

N

BOWMAN MURRAY HEMINGWAY ARCHITECTS
514 Market Street
Wilmington, NC 28401
Tel - (910) 762-2621
Fax - (910) 762-8506

FOR REVIEW ONLY

BIG SKY
4037 Masonboro Loop Road Ste 2K
Wilmington, NC 28409
O 910-793-3992
F 910-793-3995
www.bigskydesignonline.com

project information:
DAVIS COMMUNITY CENTER 2020
1011 PORTERS NECK RD, WILMINGTON, NC 28411
Permit Drawings for Review Only

revisions:

notes:

drawn by: JK / JS

date: 10/22/2020

drawing title:
ELEVATIONS REFERENCING FINISHES

sheet no.:
ID-5

ROOM #	DESCRIPTION	FLOOR	BASE	NORTH	EAST	SOUTH	WEST	CEILING	CEILING TILE	NOTES
100	CEO	CPT-8	RB-3	PT-12				PT-1	ACT-1	
101	EXECUTIVE ASST.	CPT-8	RB-3	PT-12				PT-1	ACT-1	
102	STORAGE 1	CONCRETE	RB-2	PT-1				PT-1	ACT-1	
103	ANGIE'S OFFICE	CPT-8	RB-3	PT-12				PT-1	ACT-1	
104	CORRIDOR 1	CPT-9	RB-3	PT-12				PT-1	ACT-1	
105	CLINICAL	CPT-10	RB-3	PT-13	PT-12	PT-12	PT-12	PT-1	ACT-1	
106	EXTRA	CPT-10	RB-3	PT-12				PT-1	ACT-1	
107	HR OFFICE 1	CPT-10	RB-3	PT-13	PT-12	PT-12	PT-12	PT-1	ACT-1	
108	HR OFFICE 4	CPT-10	RB-3	PT-12	PT-12	PT-13	PT-12	PT-1	ACT-1	
109	RECORDS	CPT-10	RB-3	PT-13	PT-12	PT-12	PT-12	PT-1	ACT-1	
110	EXTRA	CPT-10	RB-3	PT-12				PT-1	ACT-1	
111	HR OFFICE 2	CPT-10	RB-3	PT-13	PT-12	PT-12	PT-12	PT-1	ACT-1	
112	HR OFFICE 5	CPT-10	RB-3	PT-12	PT-12	PT-13	PT-12	PT-1	ACT-1	
113	CONFERENCE	CPT-8	RB-3	PT-13				PT-1	ACT-1	
114	WORK ROOM	CPT-10	RB-3	PT-12				PT-1	ACT-1	
115	HR OFFICE 3	CPT-10	RB-3	PT-13	PT-12	PT-12	PT-12	PT-1	ACT-1	
116	HR OFFICE 6	CPT-10	RB-3	PT-12	PT-12	PT-13	PT-12	PT-1	ACT-1	
117	CORRIDOR 2	CPT-9	RB-3	PT-12				PT-1	ACT-1	
118	CORRIDOR 3	CPT-9	RB-3	PT-12				PT-1	ACT-1	
119	CORRIDOR 4	CPT-9	RB-3	PT-12				PT-1	ACT-1	
122	COMMUNITY MARKET	*ST LVT-1, 2, 3	RB-3	PT-1				PT-1	ACT-1	**WALL COLOR IS PLACE HOLDER. ACTUAL PAINT COLOR TBD.
120	WAITING	CPT-9	RB-3	PT-13				PT-1	ACT-1	
123	STORAGE 2	VCT-1	RB-2	PT-1				PT-1	ACT-1	
124	TRAINING OFFICE	CPT-10	RB-3	PT-12				PT-1	ACT-1	
126	WORK RM.	CPT-9	RB-3	PT-12				PT-1	ACT-1	
127	TOILET 1	TL-2						PT-1	ACT-1	**SEE ID-4/18 ELEVATION FOR WALL FINISHES
128	IT	CPT-10	RB-3	PT-12				PT-1	ACT-1	
129	EAST BREAK RM.	LVT-5	RB-3	PT-13	PT-12	PT-12	PT-12	PT-1	ACT-1	
130	MAIL	LVT-5	RB-3	PT-12				PT-1	ACT-1	
131	CORRIDOR 5	CPT-9	RB-3	PT-12				PT-1	ACT-1	
132	TRAINING	LVT-5	RB-3	PT-13	PT-12	PT-12	PT-12	PT-1	ACT-1	
133	THEATER	CPT-6	RB-1	PT-14				PT-6	ACT-2	**ACT-2 PLEASE PRICE THIS AS ALTERNATE.
134	WOMEN	TL-1						PT-1	ACT-1	**SEE ID-5/21 & 23 ELEVATIONS FOR WALL FINISHES.
135	MEN	TL-1						PT-1	ACT-1	**SEE ID-5/22 & 24 ELEVATIONS FOR WALL FINISHES.
136	NORTH FOYER	*LVT-1/CPT-1	WDBS-1	PT-1				PT-1	ACT-1	**SEE ID-1 FLOOR PATTERNS FOR LVT-1/CPT-3 CLARIFICATION. WDBS-1 TO BE PT-1 SEMI-GLOSS.//**PT-1 WALL COLOR IS PLACE HOLDER. ACTUAL COLOR TBD.
137	NORTH PROMENADE 1	*LVT-1/LVT-3	WDBS-1						ACT-1	**SEE ID-1 FLOOR PATTERNS FOR LVT-1/LVT-3 CLARIFICATION. WDBS-1 TO BE PT-1 SEMI-GLOSS. SEE GENERAL NOTES FOR CLARIFICATION REGARDING WALL FINISHES.
138	NORTH LOBBY	*LVT-1/LVT-3	WDBS-1						ACT-1	**SEE ID-1 FLOOR PATTERNS FOR LVT-1/CPT-3 LAYOUT. WDBS-1 TO BE PT-1 SEMI-GLOSS. SEE GENERAL NOTES FOR CLARIFICATION REGARDING WALL FINISHES.
139	NORTH PROMENADE 2	*LVT-1/LVT-3	WDBS-1						ACT-1	**SEE ID-1 FLOOR PATTERNS FOR LVT-1/CPT-3 CLARIFICATION. WDBS-1 TO BE PT-1 SEMI-GLOSS. SEE GENERAL NOTES FOR CLARIFICATION REGARDING WALL FINISHES.
140	ACCOUNTING	CPT-9	RB-3	PT-12				PT-1	ACT-1	
141	BUS CFO	CPT-10	RB-3	PT-12	PT-12	PT-12	PT-13	PT-1	ACT-1	
142	BUS ACCOUNT 1	CPT-10	RB-3	PT-12	PT-12	PT-12	PT-13	PT-1	ACT-1	
143	BUS ACCOUNT 2	CPT-10	RB-3	PT-12	PT-12	PT-12	PT-13	PT-1	ACT-1	
144	BUS SUPERVISOR	CPT-10	RB-3	PT-12	PT-12	PT-12	PT-13	PT-1	ACT-1	
145	EQUIPMENT STORAGE	VCT-1	RB-2	PT-1				PT-1	ACT-1	
146	CHEM. STORAGE	VCT-1	RB-2	PT-1				PT-1	ACT-1	
147	WATER ROOM	VCT-1	RB-2	PT-1				PT-1	ACT-1	
148	IT/FIRE ALARM	VCT-1	RB-2	PT-1				PT-1	ACT-1	
149	ELECTRICAL RM.	VCT-1	RB-2	PT-1				PT-1	ACT-1	
150	KITCHEN	EPOXY								
151	FRIDGE 2	EPOXY								
152	FRIDGE 1	EPOXY								
153	KITCHEN OFFICE	EPOXY								
154	FREEZER	EPOXY								
155	HOUSE STOR.	LVT-5	RB-2					PT-1	ACT-1	
156	CORRIDOR 6	LVT-5	RB-1					PT-1	ACT-1	
157	HOUSE OFFICE	LVT-5	RB-1					PT-1	ACT-1	
158	DIETICIAN	LVT-5	RB-1					PT-1	ACT-1	
159	WEST BREAK	LVT-5	RB-3	PT-13	PT-12	PT-12	PT-12	PT-1	ACT-1	
160	LOCKERS	TL-1	TLB-1	PT-9	PT-9	PT-9	PT-9	PT-1	ACT-1	
161	SHOWER 1	TL-1	NO BASE					PT-1	ACT-1	**SEE ID-4/19 ELEVATION FOR WALL FINISHES.
162	SHOWER 2	TL-1	NO BASE					PT-1	ACT-1	**SEE ID-4/19 ELEVATION FOR WALL FINISHES.
163	TOILET 3	TL-1	NO BASE					PT-1	ACT-1	**SEE ID-4/20 ELEVATION FOR WALL FINISHES.
164	TOILET 4	TL-1	NO BASE					PT-1	ACT-1	**SEE ID-4/20 ELEVATION FOR WALL FINISHES.
166	STORAGE 5	VCT-1	RB-2	PT-1				PT-1	ACT-1	
167	TOILET 5	TL-2	NO BASE					PT-1	ACT-1	**SEE ID-4/18 ELEVATION FOR WALL FINISHES.
168	JANITOR	TL-1	TLB-1	*PT-1/WLTL-4				PT-1	ACT-1	WLTL-4 TO BE 5'-0" A.F.F. WITH TLB-1 ON ALL WALLS. PT-1 FLAT FINISH TO GO ABOVE WLTL-4 ON ALL WALLS.
169	HORIZONTAL EXIT 2	LVT-1	RB-1	PT-1				PT-1	ACT-1	**PT-1 WALL COLOR IS PLACE HOLDER. ACTUAL COLOR TBD.
170	HORIZONTAL EXIT 1	LVT-1	RB-1	PT-1				PT-1	ACT-1	**PT-1 WALL COLOR IS PLACE HOLDER. ACTUAL COLOR TBD.
171	CONTROL	CONCRETE	RB-2	PT-1				PT-1	ACT-1	
172	EXAM	LVT-6	RB-1	PT-16				PT-1	ACT-1	
173	EXAM WAIT.	LVT-6	RB-1	PT-15				PT-1	ACT-1	
174	STOR. 3	CONCRETE	RB-2	PT-1				PT-1	ACT-1	
175	STOR. 4	CONCRETE	RB-2	PT-1				PT-1	ACT-1	
176	TOILET 2	TL-2	NO BASE					PT-1	ACT-1	**SEE ID-4/18 ELEVATION FOR WALL FINISHES.
178	MUSIC & CRAFTS	*LVT-2/LVT-4	WDBS-1					PT-6	ACT-2	**ACT-2 PLEASE PRICE THIS AS ALTERNATE. **SEE ID-1 FLOOR PATTERNS FOR LVT-2/CPT-4 LAYOUT. WDBS-1 TO BE PT-1 SEMI-GLOSS.//***SEE ID-5/26 ELEVATION FOR WALL FINISHES.
179	FINE DINING	CPT-7	WDBS-1					PT-6	ACT-2	**ACT-2 PLEASE PRICE THIS AS ALTERNATE. **SEE ID-3/9, 10 & 11 ELEVATIONS FOR WALL FINISHES.
180	STOR. 6	LVT-2	RB-2	PT-1				PT-1	ACT-1	
181	COMMUNITY CHAPEL	*CPT-4/LVT-2	WDBS-1	PT-8		PT-8	PT-8	PT-1	ACT-1	**SEE ID-5/25 ELEVATION FOR EAST WALL FINISHES.
182	SOUTH PROMENADE	*LVT-1/LVT-3	WDBS-1					PT-1	ACR-1	**SEE ID-1 FLOOR PATTERNS FOR LVT-1/LVT-3 CLARIFICATION.//***SEE GENERAL NOTES FOR CLARIFICATION REGARDING WALL FINISHES.
183	COMMUNITY PLAYHOUSE	*CPT-5/LVT-1	RB-1	PT-7				PT-1	ACT-1	**SEE ID-1 FLOOR PATTERNS FOR CPT-5/LVT-1 CLARIFICATION.
184	STOR. 7		LVT-1	RB-2	PT-1			PT-1	ACT-1	
184	COMMUNITY LIBRARY	*LVT-2/CPT-2	WDBS-1					PT-1	ACT-1	**SEE ID-1 FLOOR PATTERNS FOR LVT-2/CPT-2 CLARIFICATION.//***SEE ID-3/1 & 2 ELEVATIONS FOR WALL FINISHES.
186	LIVING ROOM	*LVT-2/CPT-3	WDBS-1		PT-2	PT-2	PT-2	PT-1	ACT-1	**SEE ID-1 FLOOR PATTERNS FOR LVT-2/CPT-3 CLARIFICATION.//***SEE ID-3/3 ELEVATION FOR NORTH WALL FINISHES.
187	SOUTH FOYER	*LVT-/CPT-1	WDBS-1	PT-1				PT-1	ACT-1	**WDBS-1 TO BE PT-1 SEMI GLOSS.//***PT-1 WALL COLOR IS PLACE HOLDER. ACTUAL COLOR TBD.

GENERAL NOTES:

1. IF ANY DISCREPANCIES OR CLARIFICATIONS ARE NEEDED, PLEASE CONTACT THE DESIGNER @ 910-793-3992 IMMEDIATELY. DESIGNER NOT RESPONSIBLE FOR OTHERS INTERPRETATIONS OF DRAWINGS.
2. NORTH AND SOUTH PROMENADE - ALL TRIM AND MOLDING TO BE PT-1 SEMI GLOSS FINISH. WALLS ABOVE TRIM BELOW 12' TO BE PT-17 FLAT FINISH. WALLS ABOVE 12' (CLERESTORY SECTIONS) TO BE PT-2 FLAT FINISH. @ 12' THERE NEEDS TO BE A REVEAL OR PIECE OF TRIM FOR COLOR TRANSITION.
3. SOUTH EXTERIOR PATIO CEILING TO BE PT-10 FLAT FINISH.

ID	SELECTIONS LEGEND
CPT-1	PATCRAFT WALK-OFF FOOT IN THE DOOR II I0306 MODULAR, NATURAL BEIGE, 24"X24"
CPTL-2	MANNINGTON CARROLL BROADLOOM, LYRIC, 12'X6"
CPT-3	MANNINGTON ORWELL BROADLOOM, LYRIC, 12'X6"
CPT-4	TARKETT CANE STITCH 44058, HYDRANGEA 02709, 6.02MM
CPT-5	TARKETT PIAZZA 40044, BURNT SUGAR 02765, 5MM
CPT -6	MANNINGTON FITZGERALD BROADLOOM, BACH, 12'X6"
CPT-7	TARKETT TOULON 40046, DEEP CERULEAN 02763, 5MM
CPT-8	EF CONTRACT, CROSSING II MODULAR, CSS45 SHADOW, 12"X48" PLANK, 1/2" GAUGE
CPT-9	EF CONTRACT, LINE MODULAR, LNE52 PIPE, 12"X48", 1/2" GAUGE
CPT-10	EF CONTRACT, LINE ACCENT MODULAR, LNE55 IN A ROW ACCENT, 12"X48", 1/2" GAUGE
LVT-1	MOHAWK GROUP GROWN UP, EMERSON 853, 5MM, 9"X59"
LVT-2	MOHAWK GROUP GROWN UP, BUTLER 851, 5MM, 9"X59"
LVT-3	MOHAWK GROUP GROWN UP, FINN 322, 5MM, 9"X59"
LVT-4	MOHAWK GROUP GROWN UP, KINGSLEY 138, 5MM, 9"X59"
LVT-5	MANNINGTON ACCESS, BLEACHED ELM SX5W2516, 5MM, 5.91"X39.37"
LVT-6	NOVA FLOOR, BIRKDALE X-LARGE VINYL TILE, HONED TRAVERTINE, CLOUD NBT001, 18"X36", 2.5MM
ST LVT-1	PATCRAFT MOLTEN I478V, CALCITE 00500, 23.62"X23.62", 5MM
ST LVT-2	PATCRAFT MOLTEN I478V, QUARTZ 00520, 23.62"X23.62", 5MM
ST LVT-3	PATCRAFT OXIDIZED I479V, SANDSTONE 00530, 23.62"X23.62", 5MM
VCT-1	TARKET VCT (FORMERLY AZROCK), DARK GRAY 1364, 12" X 12", 3.8MM
PT-1	SHERWIN WILLIAMS 7004 SNOWBOUND
PT-2	SHERWIN WILLIAMS 6218 TRADEWIND
PT-3	SHERWIN WILLIAMS 9109 NATURAL LINEN
PT-4	SHERWIN WILLIAMS 9110 MALABAR
PT-5	BENJAMIN MOORE 2057-20 GALAPAGOS TURQUOISE
PT-6	SHERWIN WILLIAMS 7050 USEFUL GRAY@**ALT - SHERWIN WILLIAMS 9165 GOSSAMER VEIL
PT-7	SHERWIN WILLIAMS 7638 JOGGING PATH
PT-8	SHERWIN WILLIAMS 6226 LANGUID BLUE
PT-9	SHERWIN WILLIAMS 9138 STARDEW
PT-10	SHERWIN WILLIAMS 6505 ATMOSPHERIC
PT-11	SHERWIN WILLIAMS 9166 DRIFT OF MIST
PT-12	SHERWIN WILLIAMS 7651 FRONT PORCH
PT-13	SHERWIN WILLIAMS 9139 DEBONAIR
PT-14	SHERWIN WILLIAMS 9140 BLUSTERY SKY
PT-15	SHERWIN WILLIAMS 6212 QUIETUDE
PT-16	SHERWIN WILLIAMS 6211 RAINWASHED
PT-17	BENJAMIN MOORE 1549 BALBOA MIST
WC-1	MORRIS & CO, LEICESTER 212544 **PROVIDED BY BIG SKY DESIGN.
WC-2	KOROGARd WALL PROTECTION SYSTEMS, TRAFFIC PATTERNS, RUSH DUNE TP 3021-50
QTZ-1	HANSTONE QUARTZ, OCEANA MV529, 3CM
TL-1	DALTILE, DIGNITARY, COLORBODY PORCELAIN, EMINANCE GREY DR10, TEXTURED, 12X24
TL-2	EMSER TILE, MOOD IVORY, GLAZED PORCELAIN, F44MOODIV1223, MATTE, 12X23
WLTL-1	LUNADA BAY TILE, TOMMY BAHAMA, CAPPADOCIA MIX, 1"X4"
WLTL-2	DALTILE, SANTINO, COLORBODY PORCELAIN, BIANCO PURO SN13, MATTE, 12"X24"
WLTL-3	MARINA BAY, SUBWAY TILE, SAGE, 3"X6"
WLTL-4	DALTILE, POLARIS, GLAZED CERAMIC, GLOSS WHITE PL02, 12"X18"
TLB-1	DALTILE, COVE BASE S36C9S36C9, 6"X12" (DIGNITARY)
GR-1	MAPEI, 103 COBBLESTONE
GR-2	MAPEI, 19 PEARL GRAY
GR-3	MAPEI, 105 DRIFTWOOD
GR-4	MAPEI, 77 FROST
SCHL-1	SCHLUTER SYSTEMS, JOLLY SATIN BRASS ANODIZED ALUMINUM, A100AM, 10MM
RB-1	JOHNSONITE, MONARCH, 01 SNOW WHITE, 6"H,
RB-2	JOHNSONITE, INFLECTION, 01 SNOW WHITE, 5.25"H
RB-3	TARKETT, PERCEPTIONS, RECESS, TA5 COLONIAL GREY CG, 4.25"H
WDBS-1	2 PIECE WOOD BASE, 10"H, 1.25" THICKNESS, W/ 1.5" OGEE TOP CAP
ACT-1	ARMSTRONG OPTIMA ACOUSTIC CEILING TILE PER ARCHITECTS SELECTION
ACT-2	ALT. ACOUSTIC CEILING TILE UPGRADE PER ARCHITECTS APPROVAL - ARMSTRONG CALLA, COLOR: STONE

LAMINATE SCHEDULE	
PLAM-1	WILSONART, GESSO TRACERY 4692-38, FINE VELVET FINISH
PLAM-2	FORMICA, SILVER DRIFTWOOD 6413-NG, NATURAL GRAIN
PLAM-3	WILSONART, MORELIO MANGO 7985, FINE VELVET TEXTURED FINISH
PLAM-4	WILSONART, LOFT OAK 7968K-12, SOFTGRAIN FINISH, SCRATCH RESISTANT
PLAM-5	WILSONART, GREY MESH 4877-38, FINE VELVET FINISH
NOTES:	
1.	IF ANY DISCREPANCIES OR CLARIFICATIONS ARE NEEDED, PLEASE CONTACT THE DESIGNER @ 910-793-3992 IMMEDIATELY. DESIGNER NOT RESPONSIBLE FOR OTHERS INTERPRETATION OF DRAWINGS.
2.	ALL CEILINGS THAT RECEIVE PAINT AND NOT CEILING TILE TO BE _____.

BOWMAN MURRAY HEMINGWAY ARCHITECTS
514 Market Street
Wilmington, NC 28401
Tel - (910) 762-2621
Fax - (910) 762-8506

JOSEPH F. BOWMAN FOR REVIEW ONLY NORTH CAROLINA WILMINGTON, NC

BOWMAN MURRAY HEMINGWAY ARCHITECTS REGISTERED ARCHITECTURAL CORPORATION CERT. NO. 50424 NORTH CAROLINA WILMINGTON, N.C.

BIG SKY INTERIOR DESIGN
4037 Masonboro Loop Road Ste 2K
Wilmington, NC 28409
O 910-793-3992
F 910-793-3995
www.bigskydesignonline.com

project information:

DAVIS COMMUNITY CENTER 2020
1011 PORTERS NECK RD, WILMINGTON, NC 28411

Permit Drawings for Review Only

revisions:

notes:

drawn by: JK / JS

date: 10/22/2020

drawing title:

FINISH SCHEDULE AND LEGENDS

sheet no.:

ID-6

CBHF
Engineers, PLLC
2246 Yaupon Drive
Wilmington, NC 28401
Phone: 910.791.4000
Fax: 910.791.5266
www.cbhfengineers.com
NC# P-0506
© Copyright 2020CBHF Engineers, PLLC

ABBREVIATIONS

Term	Abbreviation
ABOVE FINISHED FLOOR	AFF
ABOVE SEA LEVEL	ASL
ACROSS THE LINE	ACL
AIR CONDITION(-ING, -ED)	AIR COND
AIR-HANDLING UNIT	AHU
AMBIENT	AMB
AMERICAN NATIONAL STANDARDS INSTITUTE	ANSI
AMPERE (AMP, AMPS)	AMP
APPARATUS DEW POINT	ADP
APPROXIMATE	APPROX
ATMOSPHERE	ATM
AVERAGE	AVG
BRAKE HORSEPOWER	BHP
BROWN & SHARPE WIRE GAGE	B&S
BRITISH THERMAL UNIT	BTU
BUILDING	BLDG
CELSIUS	°C
CHILLED WATER RETURN	CHWR
CHILLED WATER SUPPLY	CHWS
COEFFICIENT, VALVE FLOW	CV
COMPRESSOR	COMP
CONDENS(-ER, -ING, -ATION)	COND
CONNECTION	CONN
COOLING LOAD	CLG LOAD
CUBIC FEET	CU FT
CUBIC INCH	CU IN
CUBIC FEET PER MINUTE	CFM
CFM, STANDARD CONDITIONS	SCFM
DECIBEL	DB
DEGREE	DEG OR °
DEW-POINT TEMPERATURE	DPT
DIAMETER	DIA
DIAMETER, INSIDE	ID
DIAMETER, OUTSIDE	OD
DIFFERENCE OR DELTA	DIFF
DRY-BULB TEMPERATURE	DBT
ENERGY EFFICIENCY RATING	ERR
EFFICIENCY	EFF
ELEVATION	EL
ENTERING	ENT
ENTERING WATER TEMPERATURE	EWT
ENTERING AIR TEMPERATURE	EAT
EXTERNAL AMBIENT TEMPERATURE	EAT
FACE VELOCITY	FVEL
FAHRENHEIT	°F
FEET PER MINUTE	FPM
FEET PER SECOND	FPS
FOOT OR FEET	FT
GAGE OR GAUGE	GA
GALLONS	GAL
GALLONS PER HOUR	GPH
GALLONS PER MINUTE	GPM
GALLONS PER DAY	GPD
GRAINS	GR
HEAD	HD
HEIGHT	HGT
HIGH-PRESSURE STEAM	HPS
HORSEPOWER	HP
HOUR(S)	HR
HUMIDITY, RELATIVE	RH
INTERGRATED PART LOAD VALUES	IPLV
INCH	IN.
IRON PIPE SIZE	IPS
KILOVOLT-AMP	KVA
KILOWATT	KW
KILOWATT HOUR	KWH
LEAVING AIR TEMPERATURE	LAT
LEAVING WATER TEMPERATURE	LWT
LENGTH	LG
LINEAR FEET	LF
LOW-PRESSURE STEAM	LPS
MAXIMUM	MAX
MEDIUM-PRESSURE STEAM	MPS
MILES PER HOUR	MPH
MINIMUM	MIN.
MINUTE	MIN
MANUFACTURER	MFR
NOISE CRITERIA	NC
NON-STANDARD PART LOAD	NPLV
NORMALLY OPEN	NO
NORMALLY CLOSED	NC
NOT APPLICABLE	N/A
NOT IN CONTACT	N I C
NOT TO SCALE	NTS
NUMBER	NO
ON CENTER	OC
OUNCE	OZ
OUTSIDE AIR	OA
PARTS PER MILLION	PPM
PERCENT	%
POUNDS	LBS
POUNDS PER SQUARE FOOT	PSF
PRESSURE	PRESS
QUANTITY	QTY
RATED LOAD AMPS	RLA
RECIRCULATE	RECIRC
REFRIGERANT (12, 22, ETC.)	R12, R22
RELATIVE HUMIDITY	RH
RETURN AIR	RA
REVOLUTIONS PER MINUTE	RPM
REVOLUTIONS PER SECOND	RPS
SAFETY FACTOR	SF
SECOND	S
SHADING COEFFICIENT	SC
SPECIFICATION	SPEC
SQUARE	SQ
STANDARD	STD
STATIC PRESSURE	SP
SUPPLY	SPLY
SUPPLY AIR	SA
TEMPERATURE	TEMP
TEMPERATURE DIFFERENCE	TD
THERMOSTAT	T STAT
TONS OF REFRIGERATION	TONS
TO BE DETERMINED	TBD
TOTAL DYNAMIC HEAD	TDH
U-FACTOR	U
VARIABLE AIR VOLUME	VAV
VELOCITY	VEL
VENTILATION, VENT	VENT
VERTICAL	VERT
VOLT	V
VOLT AMPERE	VA
VOLUME	VOL
WATER PRESSURE DROP	WPD
WATT	W
WATT-HOUR	WH
WEIGHT	WT
WET BULB	WB
YARD	YD
YEAR	YR

NOTE: ALL ABBREVIATIONS MAY NOT BE USED IN PROJECT.

MECHANICAL SUMMARY

MECHANICAL SYSTEMS, SERVICE SYSTEMS AND EQUIPMENT	
CLIMATE ZONE	3A - WARM/HUMID
WINTER DRY BULB:	23°F
SUMMER DRY BULB	95°F
INTERIOR DESIGN CONDITIONS	
WINTER DRY BULB	70°DF
SUMMER DRY BULB	75°F
RELATIVE HUMIDITY	60°RH*
	*DESIGN- NOT CONTROLLED
BUILDING HEATING LOAD:	567.0 MBH
BUILDING COOLING LOAD:	870.3 MBH
MECHANICAL SPACING CONDITIONING SYSTEM	
UNITARY	
DESCRIPTION OF UNIT:	SEE SCHEDULES
HEATING EFFICIENCY:	SEE SCHEDULES
COOLING EFFICIENCY:	SEE SCHEDULES
SIZE CATEGORY OF UNIT:	SEE SCHEDULES
BOILER	
SIZE CATEGORY, IF OVERSIZED STATE REASON:	N/A
CHILLER	
SIZE CATEGORY, IF OVERSIZED STATE REASON:	N/A
LIST EQUIPMENT EFFICIENCIES:	SEE SCHEDULES

MECHANICAL LEGEND

CU#	CONDENSING UNIT NUMBER
D#	DEHUMIDIFIER UNIT NUMBER
DAHU#	DUCTLESS AIR HANDLING UNIT NUMBER
DCU#	DUCTLESS CONDENSING UNIT NUMBER
DHP#	DUCTLESS HEAT PUMP UNIT NUMBER
DOAS#	DEDICATED OUTDOOR AIR SYSTEM NUMBER
E#	EXHAUST GRILLE NUMBER
EF#	EXHAUST FAN NUMBER
HP#	HEAT PUMP UNIT NUMBER
I#	INTAKE GRILLE NUMBER
L#	LOUVER NUMBER
PV#	POWER VENTILATOR UNIT NUMBER
R#	RETURN GRILLE NUMBER
RD	ROOF DRAIN
RH#	ROOF HOOD NUMBER
RTU#	ROOFTOP UNIT NUMBER
RPM	ROTATIONS PER MINUTE
S#	SUPPLY DIFFUSER NUMBER
T	THERMOSTAT
TH	THERMOSTAT & HUMIDISTAT
H	HUMIDISTAT
VS	VENT SWITCH
	SUPPLY DIFFUSER
	RETURN GRILLE
	EXHAUST GRILLE
	MANUAL VOLUME DAMPER
M	MOTORIZED DAMPER
BD	AUTO BACKDRAFT DAMPER
C	CONDENSATE PIPING
R	REFRIGERANT LINE-SET PIPING
	1-HR FIRE RATED CONSTRUCTION
	2-HR FIRE RATED CONSTRUCTION
	3-HR FIRE RATED CONSTRUCTION
SR AIR TYPE DESIGNATOR; CFM VALUE	DIFFUSER / GRILLE TAG

BOWMAN MURRAY HEMINGWAY
ARCHITECTS
514 Market Street
Wilmington, NC 28401
Tel - (910) 762-2621
Fax - (910) 762-8506

NORTH CAROLINA REGISTERED PROFESSIONAL ENGINEER JAMES R. BENSON

PERMIT DRAWINGS FOR REVIEW ONLY

THE DAVIS COMMUNITY
New Community Center
1011 Porter's Neck Road
Wilmington, North Carolina 28411

REV.	DATE	DESCRIPTION

NO.	DATE	ISSUE NOTE

Project Manager: JRB	Drawn By: CRG
Date: October 22, 2020	Reviewed By: JRB
Project ID: CBHF: 20059	

Sheet Title: HVAC LEGEND, CODE COMPLIANCE, ABBREVIATIONS AND SCHEDULES

Sheet No.: M001

1 2 3 4 5 6

PACKAGED UNIT SCHEDULE

DRAWING CODE	BASIS OF DESIGN MANUFACTURER	BASIS OF DESIGN MODEL	SYSTEM TYPE	AIR DISCHARGE TYPE	COOLING (AHRI STANDARD) TOTAL (MBH)	SENSIBLE (MBH)	EFFICIENCY		NATURAL GAS HEATING GAS INPUT (MBH)	GAS OUTPUT (MBH)	STAGES	EVAPORATOR FAN SUPPLY AIRFLOW (CFM)	OUTSIDE AIRFLOW (CFM)	ESP (IN. WG.)	ELECTRICAL POWER SUPPLY (V/PH/HZ)	MCA	MOCP	WEIGHT (LBS.)	NOTES	ACCESSORIES
RTU-01	RHEEM	RGEA14048ADT101AAAJA	GAS-PACK	VERTICAL	48.5	35.0	SEER	14.0	100.0	81.0	1	1,725	-	0.50	460/3/60	12.0	15	482	1	A,B,D,E,F,G,H
RTU-02	RHEEM	RGEA14048ADT101AAAJA	GAS-PACK	VERTICAL	48.5	35.0	SEER	14.0	100.0	81.0	1	1,725	-	0.50	460/3/60	12.0	15	482	1	A,B,D,E,F,G,H
RTU-03	RHEEM	RGEA14060ADT101AAAJA	GAS-PACK	HORIZONTAL	59.4	41.4	SEER	14.0	100.0	81.0	1	1,800	-	0.50	460/3/60	16.0	20	512	1	A,B,C,D,E,F,H
RTU-04	RHEEM	RGEA14060ADT101AAAJA	GAS-PACK	HORIZONTAL	59.4	41.4	SEER	14.0	100.0	81.0	1	1,800	-	0.50	460/3/60	16.0	20	512	1	A,B,C,D,E,F,H
RTU-05	RHEEM	RGEA14060ADT101AAAJA	GAS-PACK	HORIZONTAL	59.4	41.4	SEER	14.0	100.0	81.0	1	1,800	-	0.50	460/3/60	16.0	20	512	1	A,B,C,D,E,F,H
RTU-06	RHEEM	RGEA14060ADT101AAAJA	GAS-PACK	HORIZONTAL	59.4	41.4	SEER	14.0	100.0	81.0	1	1,800	-	0.50	460/3/60	16.0	20	512	1	A,B,C,D,E,F,H
RTU-07	RHEEM	RGEA14036ADD101AAAJA	GAS-PACK	HORIZONTAL	35.8	26.2	SEER	14.0	100.0	81.0	1	1,320	-	0.50	460/3/60	9.0	15	421	1	A,B,D,E,F,G,H
RTU-08	RHEEM	RGEA14036ADD101AAAJA	GAS-PACK	HORIZONTAL	35.8	26.2	SEER	14.0	100.0	81.0	1	1,320	-	0.50	460/3/60	9.0	15	421	1	A,B,D,E,F,G,H
RTU-09	RHEEM	RGEA14048ADT101AAAJA	GAS-PACK	VERTICAL	48.5	35.0	SEER	14.0	100.0	81.0	1	1,725	-	0.50	460/3/60	12.0	15	482	1	A,B,D,E,F,G,H
RTU-10	RHEEM	RGEA14036ADD101AAAJA	GAS-PACK	HORIZONTAL	35.8	26.2	SEER	14.0	100.0	81.0	1	1,320	-	0.50	460/3/60	9.0	15	421	1	A,B,D,E,F,G,H
RTU-11	RHEEM	RGEA14030AJD081AAAJA	GAS-PACK	VERTICAL	28.6	20.9	SEER	14.0	80.0	65.0	1	905	-	0.50	208/1/60	20.0	30	408	1	A,B,D,E,F,G,H
RTU-12	RHEEM	RGEA14030AJD081AAAJA	GAS-PACK	VERTICAL	28.6	20.9	SEER	14.0	80.0	65.0	1	905	-	0.50	208/1/60	20.0	30	408	1	A,B,D,E,F,G,H
RTU-13	RHEEM	RGEA14036ADD101AAAJA	GAS-PACK	VERTICAL	35.8	26.2	SEER	14.0	100.0	81.0	1	1,320	-	0.50	460/3/60	9.0	15	421	1	A,B,D,E,F,G,H
RTU-14	RHEEM	RGEA14030AJD081AAAJA	GAS-PACK	VERTICAL	28.6	20.9	SEER	14.0	80.0	65.0	1	905	-	0.50	208/1/60	20.0	30	408	1	A,B,D,E,F,G,H
DOAS-01	CAPTIVEAIRE	CASRTU4-I.300-22-25T-DOAS	GAS-PACK	VERTICAL	336.0	153.3	IEER	17.9	296.8	237.4	MODULATING	3,625	-	0.50	460/3/60	58.9	60	4,406	1,2	A

NOTES:
1 REFER TO SPECIFICATIONS FOR FURTHER INFORMATION.
2 SEE KITCHEN EQUIPMENT SHEETS FOR ADDITIONAL DESCRIPTION AND LIST OF ACCESSORIES. SHUTDOWN UNIT VIA HOOD FIRE CONTROLS AS REQUIRED BY CODE.

ACCESSORIES:
A MATCHING EQUIPMENT SPECIFIC SEISMIC/WIND RATED CURB, RESTRAINT AND FASTENERS w/ ENGINEER CERTIFICATION.
B CONDENSER COIL GUARDS
C 0-25% OA INTAKE HOOD w/ MOTORIZED DAMPER, HORIZ. CONFIG. CONTROL VIA UNIT CONTROLS. INTERCEPT DAMPER 24V POWER WIRING IN UNIT AND ROUTE THROUGH WATTSTOPPER TS-400-24 WALL SWITCH/TIMER CONTACTS TO ENABLE DAMPER ON TIMED SCHEDULE.
D STAINLESS STEEL GAS HEAT EXCHANGER
E AUTOCHANGEOVER PROGRAMMABLE HEAT-COOLTHERMOSTAT.
F GPS-FC48-AC 24V BIPOLAR IONIZATION SYSTEM INSTALLED IN UNIT. POWER VIA UNIT CONTROL CIRCUIT.
G 0-25% OA INTAKE HOOD w/ MOTORIZED DAMPER, HORIZONTAL OR VERTICAL CONGURATION AS REQUIRED. CONTROLVIA UNIT INTERNAL CONTROLS TO OPEN DAMPER ON INDOOR FAN START
H DRAIN PAN FLOAT SWITCH TO SHUT DOWN UNIT.

MINI-SPLIT SYSTEM SCHEDULE

DRAWING CODE (INDOOR)	DRAWING CODE (OUTDOOR)	BASIS OF DESIGN MANUFACTURER	BASIS OF DESIGN MODEL INDOOR UNIT	INDOOR UNIT CONFIGURATION	BASIS OF DESIGN MODEL OUTDOOR UNIT	SYSTEM TYPE	ARI COOLING 80/67/95 TOTAL (MBH)	SENS (MBH)	ARI HEATING 70/47 TOTAL (MBH)	MIN SEER	MIN COP	INDOOR UNIT FAN SA MIN-MAX (CFM)	ELECTRICAL VOLTAGE (V/PH/HZ)	MCA (AMPS)	WEIGHT (LBS)	OUTDOOR UNIT ELECTRICAL VOLTAGE (V/PH/HZ)	MCA (AMPS)	MOCP (AMPS)	WEIGHT (LBS)	NOTES	ACCESSORIES
DAH1.1		MITSUBISHI	MLZ-KP09NA	CEILING CASSETTE - 1 WAY		HEAT PUMP	8.1	7.1	5.0	20.0	4.0	212-325	208/1/60	1.0	42					1,2,3	A,B,C,D
DAH1.2	DHP-01	MITSUBISHI	MLZ-KP09NA	CEILING CASSETTE - 1 WAY	MXZ-3C24NA2-U1	HEAT PUMP	8.1	7.1	5.0	20.0	4.0	212-325	208/1/60	1.0	42	208/1/60	22.1	25	137	1,2	A,B,C,D
DAH1.3		MITSUBISHI	MLZ-KP09NA	CEILING CASSETTE - 1 WAY		HEAT PUMP	8.1	7.1	5.0	20.0	4.0	212-325	208/1/60	1.0	42					1,2	A,B,C,D

NOTES:
1 REFER TO SPECIFICATIONS FOR FURTHER INFORMATION.
2 ELECTRICAL CONTRACTOR TO PROVIDE CONDUIT AND CONDUCTOR FROM OUTDOOR UNIT TO INDOOR UNIT.
3 SIZE AND INSTALL REFRIGERANT AND CONDENSATE PIPING IN STRICT ACCORDANCE WITH MANUFACTURER INSTRUCTIONS.

ACCESSORIES:
A WIRED WALL-MOUNTED REMOTE CONTROLLER
B CONCRETE MOUNTING PAD FOR OUTDOOR UNIT
C SEACOAST COATING PROTECTION ON OUTDOOR UNIT.
D CONCEALED ABOVE CEILING CONDENSATE PUMP AND RESERVOIR WITH CAPACITY OF 1.6 GAL/HR AT 33 FT OF HEAD. INTERLOCK TO SHUTDOWN UNIT.

PACKAGED DEHUMIDIFIER SCHEDULE

DRAWING CODE	DESIGN BASIS MANUFACTURER	MODEL	DEHUMID. CAPACITY @ 80°F/60%RH (PINTS/DAY)	INDOOR SECTION FAN SA (CFM)	OA (CFM)	ESP (IN H2O)	ELECTRICAL (SINGLE POINT) VOLTAGE (V/PH/HZ)	MCA (AMPS)	MOCP (AMPS)	WEIGHT (LBS)	NOTES	ACCESSORIES
D-01	ULTRA-AIRE	XT205H	205	526	-	0.00	120/1/60	13.2	20	140	1	A,B
D-02	ULTRA-AIRE	XT205H	205	526	-	0.00	120/1/60	13.2	20	140	1	A,B
D-03	ULTRA-AIRE	XT205H	205	526	-	0.00	120/1/60	13.2	20	140	1	A,B
D-04	ULTRA-AIRE	XT205H	205	526	-	0.00	120/1/60	13.2	20	140	1	A,B

NOTES:
1 REFER TO SPECIFICATIONS FOR FURTHER INFORMATION.

ACCESSORIES
A OVAL TO ROUND SUPPLY DUCT ADAPTOR.
B MATCHING DEH3000 WALL MOUNT HUMIDITY CONTROL.

ROOF HOOD SCHEDULE

DRAWING CODE	BASIS OF DESIGN MANUFACTURER	BASIS OF DESIGN MODEL	TYPE	CONSTRUCTION MATERIAL	ROOF CURB CONFIGURATION	HEIGHT (IN.)	SCREENING TYPE	MATERIAL	FINISH	CAPACITIES AND CHARACTERISTICS AIRFLOW (CFM)	HEIGHT (IN.)	WIDTH (IN.)	DEPTH (IN.)	FREE AREA (SQ. FT)	AIR VELOCITY (FPM)	PRESSURE DROP (IN. WG.)	NOTES	ACCESSORIES
RH-01	GREENHECK	GRSR-15	EXHAUST	ALUMINUM	FLAT	1.75	BIRD	GALVANIZED	PRIMED	560	22.00	29.00	29.00	1.00	500.00	0.03	1	A
RH-02	GREENHECK	GRSR-12	EXHAUST	ALUMINUM	FLAT	1.75	BIRD	GALVANIZED	PRIMED	270	19.75	20.50	20.50	1.00	474.00	0.03	1	A
RH-03	GREENHECK	GRSR-8	EXHAUST	ALUMINUM	FLAT	1.75	BIRD	GALVANIZED	PRIMED	120	19.25	20.50	20.50	1.00	324.00	0.01	1	A
RH-04	GREENHECK	GRSR-8	EXHAUST	ALUMINUM	FLAT	1.75	BIRD	GALVANIZED	PRIMED	70	19.25	20.50	20.50	1.00	189.00	0.01	1	A
RH-05	GREENHECK	GRSR-8	EXHAUST	ALUMINUM	FLAT	1.75	BIRD	GALVANIZED	PRIMED	100	19.25	20.50	20.50	1.00	270.00	0.01	1	A

NOTES:
1 REFER TO SPECIFICATIONS FOR FURTHER INFORMATION.
2

ACCESSORIES:
A MATCHING EQUIPMENT SPECIFIC SEISMIC/WIND RATED CURB, RESTRAINTS AND FASTENERS w/ ENGINEER CERTIFICATION.
B

POWER VENTILATOR SCHEDULE

DRAWING CODE	BASIS OF DESIGN MANUFACTURER	BASIS OF DESIGN MODEL	FAN TYPE	SERVICE	CAPACITIES AIRFLOW (CFM)	ESP (IN. WG.)	DRIVE ARRANGEMENT	FAN RPM	ELECTRICAL MOTOR TYPE	MOTOR SIZE (W)	V/PH/HZ	FLA	MOCP	SONES	WEIGHT (LBS.)	NOTES	ACCESSORIES
PV-01	GREENHECK	SP-A710	CEILING-MOUNTED VENTILATORS	TRANSFER	400	0.25	DIRECT	814	ECM	285	120/1/60	4.9	15	2.5	32	1,3	A
PV-02	GREENHECK	SP-A110	CEILING-MOUNTED VENTILATORS	EXHAUST	70	0.25	DIRECT	866	ECM	13	120/1/60	0.2	15	0.6	17	1,2	A
PV-03	GREENHECK	CSP-A710	IN-LINE CENTRIFUGAL FANS	EXHAUST	280	0.25	DIRECT	714	ECM	74	120/1/60	4.9	15	0.3	36	1,2	A
PV-04	GREENHECK	CSP-A710	IN-LINE CENTRIFUGAL FANS	EXHAUST	280	0.25	DIRECT	714	ECM	77	120/1/60	4.9	15	0.3	36	1,2	A
PV-05	GREENHECK	SP-A125	CEILING-MOUNTED VENTILATORS	EXHAUST	100	0.25	DIRECT	1,100	ECM	21	120/1/60	0.2	15	0.7	17	1,3	A
PV-06	GREENHECK	G-095-E	CENTRIFUGAL ROOF VENTILATORS	EXHAUST	340	0.25	DIRECT	1,012	ECM	25	120/1/60	0.1	15	4.0	31	1,2	A,B
PV-07	GREENHECK	SP-A110	CEILING-MOUNTED VENTILATORS	EXHAUST	70	0.25	DIRECT	866	ECM	13	120/1/60	0.2	15	0.6	17	1,2	A
PV-08	GREENHECK	SP-A70	CEILING-MOUNTED VENTILATORS	EXHAUST	50	0.25	DIRECT	850	ECM	13	120/1/60	0.1	15	0.3	12	1,2	A
PV-09	GREENHECK	CSP-A110	IN-LINE CENTRIFUGAL FANS	EXHAUST	70	0.25	DIRECT	794	ECM	11	120/1/60	0.2	15	0.4	16	1,2	A
PV-10	GREENHECK	CSP-A200	IN-LINE CENTRIFUGAL FANS	EXHAUST	100	0.25	DIRECT	631	ECM	18	120/1/60	0.2	15	0.3	23	1,2	A
PV-11	GREENHECK	CSP-A200	IN-LINE CENTRIFUGAL FANS	EXHAUST	100	0.25	DIRECT	631	ECM	18	120/1/60	0.2	15	0.3	23	1,2	A
KEF-1	CAPTIVEAIRE	DU85HFA	UPBLAST PROPELLER ROOF EXHAUST FANS	EXHAUST	2,025	1.00	DIRECT	1,442	ECM	1 HP	120/1/60	6.9	15	17.5	92	1,4	B
KEF-2	CAPTIVEAIRE	DU85HFA	UPBLAST PROPELLER ROOF EXHAUST FANS	EXHAUST	1,600	1.00	DIRECT	1,304	ECM	1 HP	120/1/60	6.9	15	14.5	92	1,4	B

NOTES:
1 REFER TO SPECIFICATIONS FOR FURTHER INFORMATION.
2 CONTROLLED VIA OCCUPANCY SENSOR. REFER TO ELECTRICAL PLANS.
3 CONTROLLED VIA ON/OFF SWITCH. REFER TO ELECTRICAL PLANS.
4 SEE KITCHEN EQUIPMENT SHEETS FOR ADDITIONAL DESCRIPTION AND LIST OF ACCESSORIES. SHUTDOWN FAN VIA HOOD FIRE CONTROLS AS REQUIRED BY CODE.

ACCESSORIES:
A UNIT MOUNTED ADJUSTABLE SPEED CONTROLLER.
B MATCHING EQUIPMENT SPECIFIC SEISMIC/WIND RATED CURB, RESTRAINTS AND FASTENERS w/ ENGINEER CERTIFICATION.

DIFFUSERS, REGISTERS AND GRILLES SCHEDULE

DRAWING CODE	BASIS OF DESIGN MANUFACTURER	BASIS OF DESIGN MODEL	TYPE	SERVICE	NECK SIZE (IN.)	MODULE SIZE (IN.)	MATERIAL	FINISH	MOUNTING	NOTES	ACCESSORIES
S1	PRICE	ASPD	SQUARE CEILING DIFFUSER	SUPPLY	6Ø	24 X 24	ALUMINUM	WHITE	T-BAR	1,2	
S2	PRICE	ASPD	SQUARE CEILING DIFFUSER	SUPPLY	8Ø	24 X 24	ALUMINUM	WHITE	T-BAR	1,2	
S3	PRICE	ASPD	SQUARE CEILING DIFFUSER	SUPPLY	10Ø	24 X 24	ALUMINUM	WHITE	T-BAR	1,2	
S4	PRICE	ASPD	SQUARE CEILING DIFFUSER	SUPPLY	12Ø	24 X 24	ALUMINUM	WHITE	T-BAR	1,2	
S5	PRICE	AMD	SQUARE CEILING DIFFUSER	SUPPLY	12 X 12	-	ALUMINUM	WHITE	CEILING SURFACE	1,2	
S6	PRICE	PDF	PERFORATED DIFFUSER	SUPPLY	12Ø	20 X 20	ALUMINUM	WHITE	T-BAR	1,2	B
S7	PRICE	VPD-HC	VARIABLE COOLING AND HEATING DIFFUSER	SUPPLY	10Ø	24 X 24	ALUMINUM	WHITE	T-BAR	1,2	
S8	PRICE	VPD-HC	VARIABLE COOLING AND HEATING DIFFUSER	SUPPLY	12Ø	24 X 24	ALUMINUM	WHITE	T-BAR	1,2	
S9	PRICE	LBP 16B	LINEAR BAR DIFFUSER	SUPPLY	24 X 6	-	ALUMINUM	WHITE	T-BAR	1	
S10	PRICE	620	DOUBLE DEFLECTION REGISTER	SUPPLY	10 X 6	-	ALUMINUM	WHITE	DUCT	1	A
R1	PRICE	630	FIXED FACE GRILLE	RETURN	20 X 20	24 X 24	ALUMINUM	WHITE	T-BAR	1	
R2	PRICE	LG75	LATTICE FACE GRILLE	RETURN	20 X 20	24 X 24	ALUMINUM	MATCH	WALL SURFACE	1	
R3	PRICE	630	FIXED FACE GRILLE	RETURN	18 X 8	-	ALUMINUM	WHITE	DUCT	1	
E1	PRICE	630	FIXED FACE GRILLE	EXHAUST	20 X 20	24 X 24	ALUMINUM	WHITE	T-BAR	1	
E2	PRICE	730	FIXED FACE GRILLE	EXHAUST	10 X 10	12 X 12	STAINLESS STEEL	MATCH	SOFFIT SURFACE	1,3	
T1	PRICE	630	FIXED FACE GRILLE	TRANSFER	20 X 20	24 X 24	ALUMINUM	WHITE	T-BAR	1	
T2	PRICE	630	FIXED FACE GRILLE	TRANSFER		-	ALUMINUM	WHITE	WALL SURFACE	1	

NOTES:
1 REFER TO SPECIFICATIONS FOR FURTHER INFORMATION.
4 DUCT BRANCH CONNECTION SIZE TO BE EQUAL TO THE NECK SIZE OF DIFFUSER UNLESS NOTED OTHERWISE ON PLANS.
5 INSTALL GRILLE IN SOFFIT.

ACCESSORIES:
A VOLUME DAMPER.
B FACE MOUNT PATTERN CONTROLLER- ADJUST FOR 2-WAY BLOW AS INDICATED.

CBHF
Engineers, PLLC
2246 Yaupon Drive
Wilmington, NC 28401
Phone: 910.791.4000
Fax: 910.791.5266
www.cbhfengineers.com
NC# P-0506

© Copyright 2020CBHF Engineers, PLLC

BOWMAN MURRAY HEMINGWAY
ARCHITECTS
514 Market Street
Wilmington, NC 28401
Tel - (910) 762-2621
Fax - (910) 762-8506

NORTH CAROLINA PROFESSIONAL ENGINEER SEAL 49592 JAMES R. BENSON, I
PERMIT DRAWINGS FOR REVIEW ONLY

THE DAVIS COMMUNITY
New Community Center

1011 Porter's Neck Road
Wilmington, North Carolina 28411

REV.	DATE	DESCRIPTION

NO.	DATE	ISSUE NOTE

Project Manager JRB	Drawn By CRG
Date October 22, 2020	Reviewed By JRB
Project ID CBHF: 20059	

Sheet Title
HVAC SCHEDULES

Sheet No.
M002

1 2 3 4 5 6

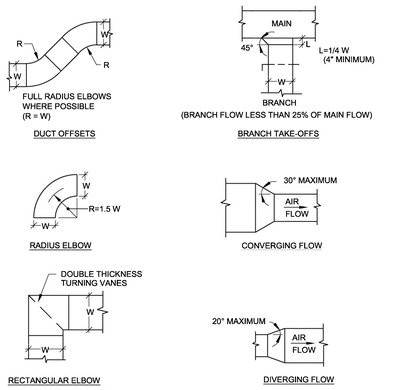

1 M003 **RECTANGULAR DUCT FITTING DETAILS**
Not To Scale

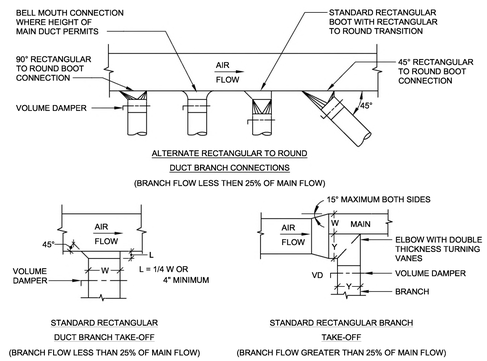

2 M003 **ROUND/RECT. DUCT TAKE-OFF FITTING DETAILS**
Not To Scale

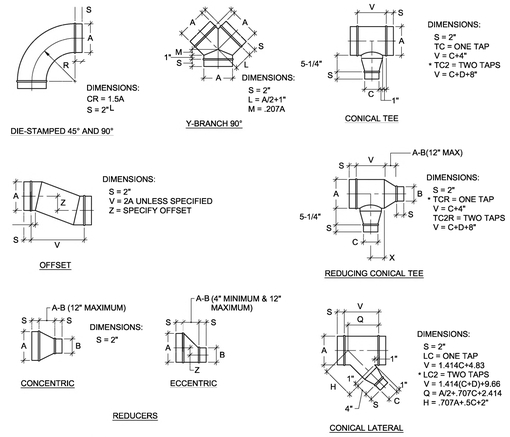

3 M003 **ROUND DUCT FITTING DETAILS**
Not To Scale

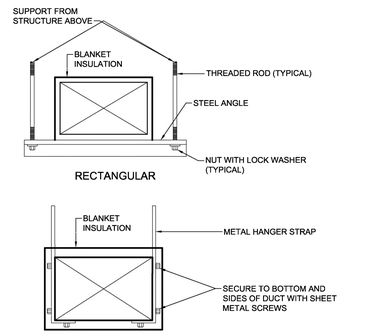

NOTE: FOR ANGLE SIZE AND HANGER STRAP GAUGE, SEE SMACNA LOW PRESSURE DUCT CONSTRUCTION STANDARDS.

4 M003 **DUCT SUPPORT DETAIL**
Not To Scale

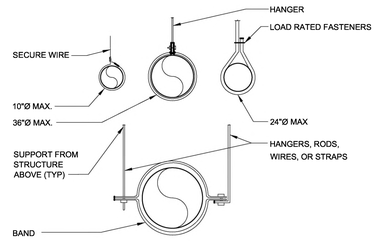

5 M003 **ROUND DUCT SUPPORT DETAIL**
Not To Scale

NOTE:
1. MESH SHALL BE FURNISHED IN SHEETS.
2. ALL PAD EDGES SHALL BE CHAMFERED.
3. CONCRETE COMPRESSIVE STRENGTH SHALL BE 3,000 PSI AT 28 DAYS
4. ONLY ANCHOR EQUIPMENT WITH MANUFACTURER SUPPLIED ANCHOR MOUNTS

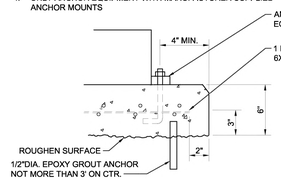

6 M003 **CONCRETE PAD DETAIL**
Not To Scale

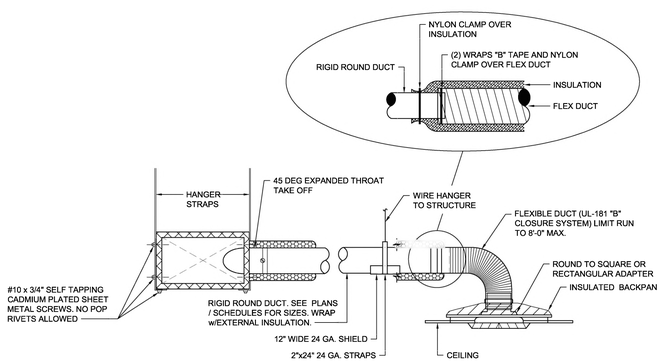

7 M003 **DIFFUSER CONNECTION DETAIL**
Not To Scale

CBHF
Engineers, PLLC
2246 Yaupon Drive
Wilmington, NC 28401
Phone: 910.791.4000
Fax: 910.791.5266
www.cbhfengineers.com
NC# P-0506
© Copyright 2020CBHF Engineers, PLLC

BOWMAN MURRAY HEMINGWAY
ARCHITECTS
514 Market Street
Wilmington, NC 28401
Tel - (910) 762-2621
Fax - (910) 762-8506

NORTH CAROLINA PROFESSIONAL ENGINEER SEAL 032417 JAMES R. BENSON
PERMIT DRAWINGS FOR REVIEW ONLY

THE DAVIS COMMUNITY
New Community Center
1011 Porter's Neck Road
Wilmington, North Carolina 28411

REV.	DATE	DESCRIPTION

NO.	DATE	ISSUE NOTE

Project Manager: JRB	Drawn By: CRG
Date: October 22, 2020	Reviewed By: JRB
Project ID: CBHF: 20059	

Sheet Title: HVAC DETAILS

Sheet No.: M003

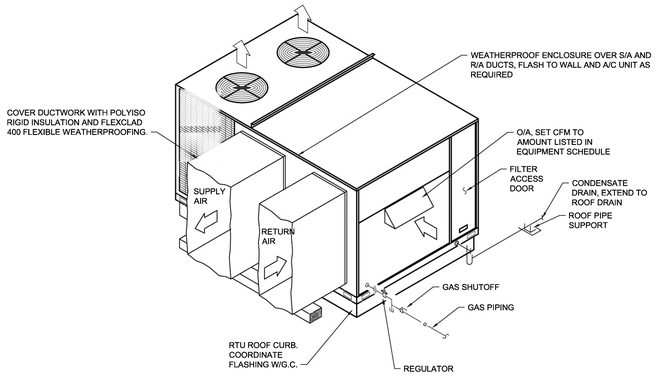

NOTE: GAS PIPING IS BY P.C. COORD. CONNECTION REQUIREMENTS TO MECH. EQUIPMENT

1 M004 **ROOF TOP UNIT -HORIZONTAL AIR DISCHARGE DETAIL**
Not To Scale

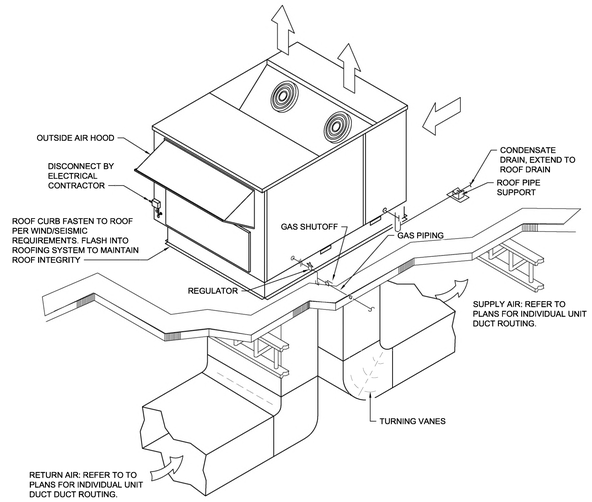

2 M004 **ROOF TOP UNIT - VERTICAL AIR DISCHARGE DETAIL**
Not To Scale

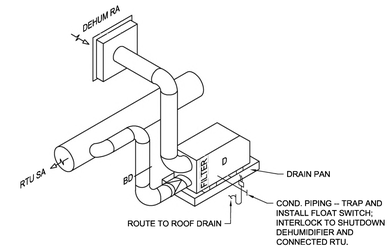

3 M004 **DEHUMIDIFIER DETAIL**
Not To Scale



4 M004 **MINI-SPLIT SYSTEM DETAIL**
Not To Scale

CBHF
Engineers, PLLC
2246 Yaupon Drive
Wilmington, NC 28401
Phone: 910.791.4000
Fax: 910.791.5266
www.cbhfengineers.com
NC# P-0506

© Copyright 2020CBHF Engineers, PLLC

BOWMAN MURRAY HEMINGWAY
ARCHITECTS
514 Market Street
Wilmington, NC 28401
Tel - (910) 762-2621
Fax - (910) 762-8506

NORTH CAROLINA REGISTERED PROFESSIONAL ENGINEER JAMES R. BENSON

PERMIT DRAWINGS FOR REVIEW ONLY

THE DAVIS COMMUNITY
New Community Center
1011 Porter's Neck Road
Wilmington, North Carolina 28411

REV.	DATE	DESCRIPTION

NO.	DATE	ISSUE NOTE

Project Manager: JRB	Drawn By: CRG
Date: October 22, 2020	Reviewed By: JRB
Project ID: CBHF: 20059	

Sheet Title: HVAC DETAILS

Sheet No.: M004

HOOD INFORMATION – JOB#4550807

HOOD NO	TAG	MODEL	LENGTH	MAX COOKING TEMP	TYPE	APPLIANCE DUTY	DESIGN CFM/FT	TOTAL EXH CFM	EXHAUST PLENUM RISER(S) WIDTH	LENG	HEIGHT	DIA	CFM	VEL	SP	HOOD CONSTRUCTION	HOOD CONFIG END TO END	ROW
1	Hood Left	5424 ND-2	9' 0"	600 DEG	I	HEAVY	225	2025			4"	16"	2025	1450	-0.638"	430 SS WHERE EXPOSED	LEFT	ALONE
2	Hood Right	5424 ND-2	8' 0"	600 DEG	I	HEAVY	200	1600			4"	16"	1600	1146	-0.416"	430 SS WHERE EXPOSED	RIGHT	ALONE

HOOD INFORMATION

HOOD NO	TAG	FILTER(S) TYPE	QTY	HEIGHT	LENGTH	EFFICIENCY @ 7 MICRONS	LIGHT(S) QTY	TYPE	WIRE GUARD	UTILITY CABINET(S) LOCATION	SIZE	FIRE SYSTEM TYPE	FIRE SYSTEM SIZE	ELECTRICAL MODEL #	SWITCHES QUANTITY	FIRE SYSTEM PIPING	HOOD HANGING WEIGHT
1	Hood Left	CAPTRATE SOLO FILTER	6	20"	16"	85% SEE FILTER SPEC	4	RECESSED	NO							YES	524 LBS
2	Hood Right	CAPTRATE SOLO FILTER	5	20"	16"	85% SEE FILTER SPEC	4	RECESSED	NO	RIGHT	12"x54"x24"	ANSUL R102	3.0/3.0	DCV-2011	1 LIGHT 1 FAN	YES	700 LBS

HOOD OPTIONS

HOOD NO	TAG	OPTION
1	Hood Left	FIELD WRAPPER 18.00" HIGH FRONT, LEFT.
		BACKSPLASH 80.00" HIGH X 217.00" LONG 430 SS VERTICAL.
		LEFT SIDESPLASH 80.00" HIGH X 54.00" LONG 430 SS VERTICAL.
		LEFT END STANDOFF (FINISHED) 1" WIDE 54" LONG INSULATED.
		INSULATION FOR TOP OF HOOD.
		INSULATION FOR BACK OF HOOD.
		RISER SENSOR INSTALL 3IN DBL.
2	Hood Right	FIELD WRAPPER 18.00" HIGH FRONT, RIGHT.
		INSULATION FOR TOP OF HOOD.
		INSULATION FOR BACK OF HOOD.
		RISER SENSOR INSTALL 3IN DBL.
		RIGHT WIDE VERTICAL END PANEL 42" TOP WIDTH, 36" BOTTOM WIDTH, 80" HIGH INSULATED 430 SS.

FIRE SYSTEM INFORMATION – JOB#4550807

FIRE SYSTEM NO	TAG	TYPE	SIZE	FLOW POINTS	INSTALLATION SYSTEM	INSTALLATION LOCATION ON HOOD
1		ANSUL R102	3.0/3.0	4	FIRE CABINET RIGHT	RIGHT, HOOD 2

FIRE SYSTEM PARTS LIST KEY

FIRE SYSTEM NO	TAG	KEY NUMBER – PART DESCRIPTION	QTY BY FACTORY	QTY BY DIST
1		0 – 0 – DISC UNION BURSTING DISC UNION ASSEMBLY FOR MANIFOLD SYSTEM.	1	0
		0 – 0 – TANK STRAP TANK STRAP – USED FOR ANSUL TANKS.	2	0
		0 – 0 – UCTANKBRACKET TANK BRACKET FOR FIRE SYSTEM TANK INSTALLATION IN UTILITY CABINETS.	2	0
		1 – 1 – AT – 3.0 TANK(#1B) – 3.0 GALLON SS TANK (FOR USE WITH AUTOMAN RELEASE, ACTUATOR, OR SS ENCLOSURE (UL/ULC)) MACOLA # 01-429862	2	0
		3 – 3 – ANS-OEM REGULATED RELEASE – ANSUL REGULATED MECHANICAL RELEASE/BRACKET ASSEMBLY, OEM, R-102, CARTRIDGE DETECTION INCLUDED, ANSUL PART # 79493.	1	0
		5 – 5 – LIQ-3.0 AGENT – ANSULEX LOW PH WET CHEMICAL AGENT, 3 GALLON (UL) 79372.	0	2
		9 – 9 – DT-CART DOUBLE TANK NITROGEN CARTRIDGE.	0	1
		10 – 10 – TLINK LINK – TEST LINK (1 TEST LINK) ANSUL PART # 24916, MACOLA # 20-24916.	0	1
		11 – 11 – MICRO-SDA MICROSWITCH KIT- INCLUDES 2 SWITCHES AND MOUNTING HARDWARE. SINGLE DUAL ELECTRIC SWITCH, ONE STANDARD SWITCH, ONE ALARM DUTY SWITCH ANSUL PART # 437155, MACOLA # 08-437155.	1	0
		12 – 12 – HOSE HOSE – RUBBER HOSE.	1	0
		27 – 27 – QPSA-1/2 PULLEY SEAL – 1/2" HOOD SEAL (UL) ANSUL PART # 423253, MACOLA # 32-79768.	5	0
		34 – 34 – RPS-A REMOTE PULL STATION – RED COMPOSITE (WITHOUT WIRE ROPE) 434618 (OLD MACOLA #06-4835).	1	0
		35 – 35 – PE-LT PULLEY ELBOW – LOW TEMP. PULLEY ELBOW, SET SCREW TYPE ANSUL PART # 415670, MACOLA # 11-415671.	5	0
		36 – 36 – PE-HT PULLEY ELBOW – HIGH TEMP PULLEY ELBOW, COMPRESSION TYPE, ANSUL PART # 423251, MACOLA # 10-45771.	4	0
		ADDITIONAL PARTS TO BE DETERMINED...		

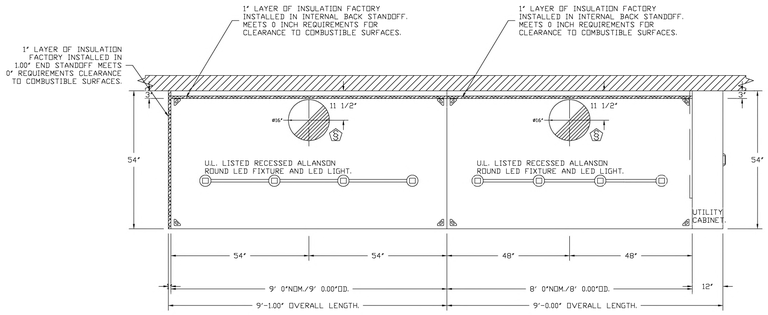

PLAN VIEW – HOOD #1 (Hood Left) 9' 0.00" LONG 5424ND-2

PLAN VIEW – HOOD #2 (Hood Right) 8' 0.00" LONG 5424ND-2

QTY 5-DROP-IN PERFORATED SUPPLY PLENUM DIFFUSER (DI-PSP)

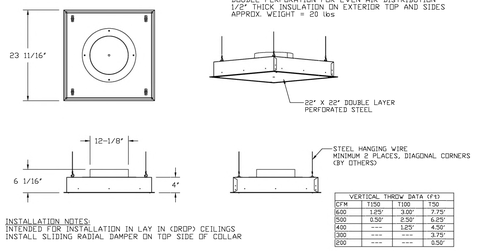

INSTALLATION NOTES:
INTENDED FOR INSTALLATION IN LAY IN (DROP) CEILINGS
INSTALL SLIDING RADIAL DAMPER ON TOP SIDE OF COLLAR

VERTICAL THROW DATA (FT)			
CFM	T150	T100	T50
600	1.25"	3.00"	7.75"
500	0.50"	2.50"	6.25"
400	---	1.25"	4.50"
300	---	---	3.75"
200	---	---	0.50"

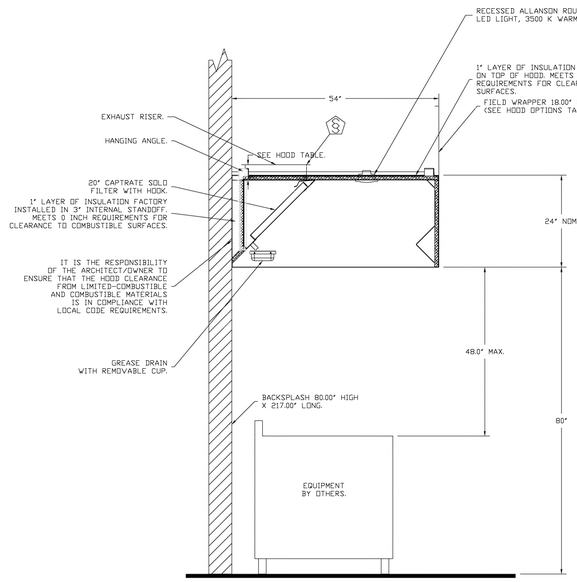

SECTION VIEW – MODEL 5424ND-2 HOOD – #1 (Hood Left)

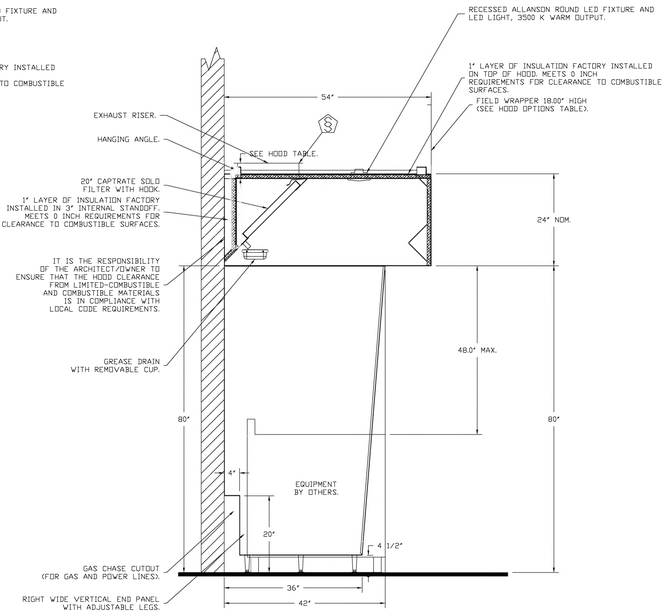

SECTION VIEW – MODEL 5424ND-2 HOOD – #2 (Hood Right)

CBHF Engineers, PLLC
2246 Yaupon Drive
Wilmington, NC 28401
Phone: 910.791.4000
Fax: 910.791.5266
www.cbhfengineers.com
NC# P-0506
© Copyright 2020CBHF Engineers, PLLC

BOWMAN MURRAY HEMINGWAY
ARCHITECTS
514 Market Street
Wilmington, NC 28401
Tel - (910) 762-2621
Fax - (910) 762-8506

NORTH CAROLINA PERMIT DRAWINGS FOR REVIEW ONLY NOT FOR CONSTRUCTION JAMES R. BENSON

THE DAVIS COMMUNITY
New Community Center
1011 Porter's Neck Road
Wilmington, North Carolina 28411

REV.	DATE	DESCRIPTION

NO.	DATE	ISSUE NOTE

Project Manager: JRB	Drawn By: CRG
Date: October 22, 2020	Reviewed By: JRB
Project ID: CBHF: 20059	

Sheet Title: KITCHEN HOOD

Sheet No.: M005

DOAS/RTU COOLING SCHEDULE

FAN UNIT NO	TAG	COMPRESSOR			OUTDOOR FAN				INDOOR COIL		OUTSIDE AIR DB TEMP	OUTSIDE AIR WB TEMP	MIXED AIR DB TEMP	MIXED AIR WB TEMP	LEAVING DB TEMP	LEAVING WB TEMP	LEAVING DP TEMP	TOTAL CAPACITY	SENSIBLE CAPACITY	LATENT CAPACITY	REHEAT LEAVING DB TEMP	REHEAT LEAVING WB TEMP	DESIRED REHEAT CAPACITY	MAX REHEAT CAPACITY	REHEAT LEAVING RELATIVE HUMIDITY	MOISTURE REMOVAL RATE	IEER
		TONNAGE	VOLTAGE	Ø	MOTOR VOLTAGE	MOTOR Ø	MOTOR FREQUENCY	MOTOR QTY	ROWS	FACE AREA																	
3	CAPTIVEAIRE DOAS	25	380-480	3	380-480	3	60	3	6	25.3 SQFT	95.0°F	80.0°F	95.0°F	80.0°F	54.9°F	52.4°F	50.6°F	336.0 MBH	153.3 MBH	182.7 MBH	73.9°F	60.0°F	77.3 MBH	260 MBH	44	164.9 LBS/HR	17.9

DOAS/RTU HEATING SCHEDULE

FAN UNIT NO	TAG	INPUT BTUs	OUTPUT BTUs	TEMP RISE	REQUIRED INPUT GAS PRESSURE	GAS TYPE	BURNER EFFICIENCY(%)
3	CAPTIVEAIRE DOAS	296779	237423	55°F	7 IN. W.C. - 14 IN. W.C.	NATURAL	80

EXHAUST FAN INFORMATION — JOB#4550807

FAN UNIT NO	TAG	QTY	FAN UNIT MODEL #	CFM	ESP	RPM	MOTOR ENCL	HP	BHP	Ø	VOLT	FLA	DISCHARGE VELOCITY	WEIGHT (LBS)	SONES
1	EF-1	1	DU85HFA	2025	1.000	1442	TEAO-ECM	1.000	0.5430	1	208	6.9	641 FPM	92	17.5
2	EF-2	1	DU85HFA	1600	1.000	1304	TEAO-ECM	1.000	0.4010	1	208	6.9	506 FPM	92	14.5

DOAS/RTU FAN SCHEDULE — JOB#4550807

FAN UNIT NO	TAG	QTY	DOAS/RTU MODEL #	BLOWER	RETURN AIR CFM	MAX OUTSIDE AIR CFM	TOTAL CFM	ESP	RPM	HP	BHP	Ø	VOLT	MCA	MOCP	WEIGHT (LBS)	SONES
3	CAPTIVEAIRE DOAS	1	CASRTU4-1.300-22-25T-DOAS	22Z-4	0	3625	3625	0.500	1083	5.000	0.9110	3	480	58.9A	60A	4406	11.5

FAN OPTIONS

FAN UNIT NO	TAG	QTY	DESCRIPTION
1	EF-1	1	GREASE BOX.
		1	ECM WIRING PACKAGE - PWM SIGNAL FROM ECPM03 PREWIRE (TELCO MOTOR), CCW ROTATION.
2	EF-2	1	GREASE BOX.
		1	ECM WIRING PACKAGE - PWM SIGNAL FROM ECPM03 PREWIRE (TELCO MOTOR), CCW ROTATION.
3	CAPTIVEAIRE DOAS	1	SINGLE POINT ELECTRICAL CONNECTION FOR RTU. QNTY 1 750VA TRANSFORMER USED. IF A NON-DCV PREWIRE CONTROLS THIS UNIT, THE #28, #47, "MA", OR "E2" OPTION PREWIRE MUST BE SELECTED. DO NOT PROVIDE SUPPLY STARTER IN PREWIRE.
		1	CASLINK BUILDING MONITORING SYSTEM - INTERNET OR CELLULAR CONNECTION REQUIRED.
		1	RTU SIZE 4 DOWN DISCHARGE.
		1	2" MERV 13 FILTERS FOR SIZE 4 RTU. QTY 12.
		1	2" MERV 8 FILTERS FOR SIZE 4 RTU. QTY 12.
		1	OVERHEAT STAT.
		1	INLET PRESSURE GAUGE, 0-35".
		1	MANIFOLD PRESSURE GAUGE, 0 TO 10" WC, 1 FURNACE.
		1	RTU SIZE 4 DOWN RETURN.
		1	CLOGGED FILTER SWITCH WITH NOTIFICATION ON HMI.
		1	SIZE 4 RTU CONVENIENCE OUTLET (GFCI), 15 AMP - REQUIRES SEPARATE 120V CONNECTION. INCLUDES RECEPTACLE, COVER AND J BOX.
		1	SIZE 4 RTU CURB DUCT HANGER.
		1	ECM SUPPLY FAN CONTROL-(3 PHASE ZIEHL MOTOR).
		1	OCCUPIED SCHEDULING.
		1	COMMERCIAL SMOKE DETECTOR/ALARM INTERLOCK (SUPPLIED BY OTHERS).
		1	RTU MANUAL INTAKE/RETURN DAMPER CONTROL VIA HMI.
		1	25 TON MODULATING COOLING OPTION, 460/480V. R410A REFRIGERANT, VARIABLE SPEED COMPRESSOR, ECM CONDENSING FAN(S).
		1	25 TON MODULATING REHEAT OPTION. DISCHARGE RELATIVE HUMIDITY CONTROL.

FAN ACCESSORIES

FAN UNIT NO	TAG	EXHAUST				SUPPLY			
		GREASE CUP	GRAVITY DAMPER	WALL MOUNT	SIDE DISCHARGE	GRAVITY DAMPER	MOTORIZED DAMPER	WALL MOUNT	
1	EF-1	YES							
2	EF-2	YES							

CURB ASSEMBLIES

NO	DN FAN	TAG	WEIGHT	ITEM	SIZE
1	# 1	EF-1	36 LBS	CURB	23.000"W X 23.000"L X 20.000"H VENTED HINGED.
2	# 2	EF-2	36 LBS	CURB	23.000"W X 23.000"L X 20.000"H VENTED HINGED.
3	# 3	CAPTIVEAIRE DOAS	175 LBS	CURB	80.000"W X 111.000"L X 14.000"H INSULATED 16 GAUGE.

ELECTRICAL PACKAGE — JOB#4550807

NO	TAG	PACKAGE #	LOCATION	SWITCHES		OPTION	FANS CONTROLLED			
				LOCATION	QUANTITY		FAN TAG	TYPE	HP	VOLT	FLA
1		DCV-2011	UTILITY CABINET RIGHT	04 - UTILITY CABINET RIGHT	1 LIGHT	SMART CONTROLS DCV	EF-1	EXHAUST	1	1.000	208	6.9
				HOOD # 2	1 FAN		EF-2	EXHAUST	1	1.000	208	6.9

FANS #1 (EF-1), #2 (EF-2) - DU85HFA EXHAUST FAN

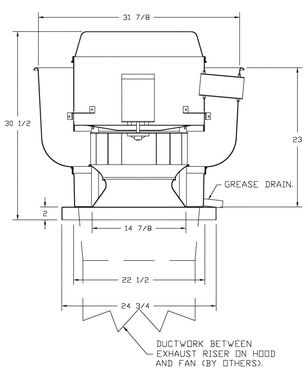

FEATURES:

- DIRECT DRIVE CONSTRUCTION (NO BELTS/PULLEYS).
- ROOF MOUNTED FANS.
- RESTAURANT MODEL.
- UL705 AND UL762 AND ULC-S645
- VARIABLE SPEED CONTROL.
- INTERNAL WIRING.
- THERMAL OVERLOAD PROTECTION (SINGLE PHASE).
- HIGH HEAT OPERATION 300°F (149°C).
- GREASE CLASSIFICATION TESTING.
- NEMA 3R SAFETY DISCONNECT SWITCH.

NORMAL TEMPERATURE TEST
EXHAUST FAN MUST OPERATE CONTINUOUSLY WHILE EXHAUSTING AIR AT 300°F (149°C) UNTIL ALL FAN PARTS HAVE REACHED THERMAL EQUILIBRIUM, AND WITHOUT ANY DETERIORATING EFFECTS TO THE FAN WHICH WOULD CAUSE UNSAFE OPERATION.

ABNORMAL FLARE-UP TEST
EXHAUST FAN MUST OPERATE CONTINUOUSLY WHILE EXHAUSTING BURNING GREASE VAPORS AT 600°F (316°C) FOR A PERIOD OF 15 MINUTES WITHOUT THE FAN BECOMING DAMAGED TO ANY EXTENT THAT COULD CAUSE AN UNSAFE CONDITION.

OPTIONS

GREASE BOX.
ECM WIRING PACKAGE - PWM SIGNAL FROM ECPM03 PREWIRE (TELCO MOTOR), CCW ROTATION.

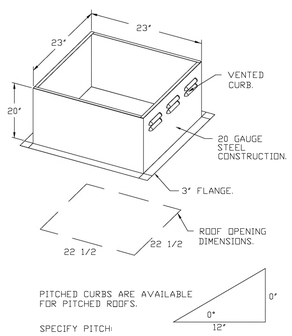

MODEL: CASRTU SPECIFICATIONS
SECTION 23 74 33
PART 1 - PACKAGED PACKAGES, 100% OUTDOOR, HEATING AND COOLING
MAKEUP AIR UNITS

SPECIFICATIONS
TAG: DOAS-1

PART 1 - GENERAL

1.1 SUMMARY

A. THIS SECTION INCLUDES PACKAGED HEATING AND COOLING UNITS CAPABLE OF SUPPLYING UP TO 100 PERCENT OUTSIDE AIR.

1.2 SUBMITTALS

A. THE MANUFACTURER ASSUMES NO LIABILITY FOR THE USE OR RESULTS OF USE OF THIS DOCUMENT. THIS SPECIFICATION IS TO BE REVIEWED BY THE ENGINEER TO ENSURE REQUIREMENTS OF THE PROJECT AND BUILDING CODES ARE MET.

B. AS THE MANUFACTURER CONTINUES PRODUCT DEVELOPMENT, IT RESERVES THE RIGHT TO CHANGE DESIGN AND SPECIFICATIONS WITHOUT NOTICE.

1.3 SEISMIC DESIGN

A. SHOULD PROJECT BE LOCATED WITHIN A SEISMIC ZONE REQUIRING SPECIAL PROVISIONS FOR SUPPORT AND RESTRAINT OF EQUIPMENT, COMPONENTS, AND PIPING, SEE SECTION 23 00 01 - SEISMIC, WIND, AND FLOOD LOAD DESIGN FOR ADDITIONAL REQUIREMENTS.

1.4 WIND LOAD DESIGN

A. REFER TO SECTION 23 00 01, SEISMIC, WIND, FLOOD LOAD DESIGN FOR ADDITIONAL REQUIREMENTS.

B. MIAMI DADE RATED UP TO 8150PSF PER TAS 201, 202 & 203 PAIRED WITH 20' OUR OR SHORTER.

1.5 QUALITY ASSURANCE

A. ALL MODELS SHALL BE ETL LISTED AND COMPLY WITH SAFETY STANDARDS UL 1995, AND CSA STD. C22.2, NO 236-11. UNITS OUTFITTED WITH INDIRECT FIRED HEATERS SHALL ALSO COMPLY WITH ANSI Z83.8-2013, AND CSA 2.6-2013.

1.6 WARRANTY

A. ALL UNITS SHALL BE PROVIDED WITH THE FOLLOWING STANDARD WARRANTIES:
   1. 10-YEAR (NON-PRORATED) PARTS WARRANTY COVERING THE ENTIRE UNIT WHEN ACCOMPANIED BY A COMPANY PROVIDED SERVICE PLAN. 5-YEAR (NON-PRORATED) PARTS WARRANTY COVERING THE ENTIRE UNIT OTHERWISE.
   2. 2" MERV 8 PRE-PRORATED PARTS WARRANTY FOR SS HEAT EXCHANGER ON INDIRECT FIRED UNITS.

B. THIS WARRANTY SHALL NOT APPLY IF:
   1. THE EQUIPMENT IS NOT INSTALLED BY A QUALIFIED INSTALLER PER THE MANUFACTURER'S INSTALLATION INSTRUCTIONS SHIPPED WITH THE PRODUCT.
   2. THE EQUIPMENT IS NOT INSTALLED IN ACCORDANCE WITH FEDERAL, STATE AND LOCAL CODES AND REGULATIONS.
   3. THE EQUIPMENT IS MISUSED OR NEGLECTED, OR NOT MAINTAINED PER THE MANUFACTURER'S MAINTENANCE INSTRUCTIONS.
   4. THE EQUIPMENT IS NOT OPERATED WITHIN ITS PUBLISHED CAPACITY.
   5. THE INVOICE IS NOT PAID WITHIN THE TERMS OF THE SALES AGREEMENT.

C. THE MANUFACTURER SHALL NOT BE LIABLE FOR INJURY, LOSS, DAMAGE, OR CONSEQUENTIAL LOSSES AND DAMAGES POTENTIALLY ATTRIBUTABLE TO MALFUNCTIONING EQUIPMENT. SHOULD ANY PART OF THE EQUIPMENT PROVE TO BE DEFECTIVE IN MATERIAL OR WORKMANSHIP WITHIN THE 10 YEAR WARRANTY PERIOD AFTER INSTALLATION BY THE MANUFACTURER, SUCH PART WILL BE REPAIRED OR REPLACED BY MANUFACTURER AT THE DISCRETION OF THE BUYER. ALL PARTS REPAIRED OR REPLACED UNDER WARRANTY SHALL BE REPAIRED OR REPLACED AT THE BUYER'S EXPENSE AND SHALL NOT BE RETURNED WITHOUT MANUFACTURER'S PRIOR AUTHORIZATION AND ALL RETURNED EQUIPMENT SHALL BE SHIPPED BY THE BUYER, FREIGHT PREPAID TO A DESTINATION DETERMINED BY THE MANUFACTURER.

PART 2 - PRODUCTS

2.1. GENERAL

A. SUPPLY SINGLE ZONE ONE PIECE PACKAGED UNITS THAT ARE COMPLETE AS PER THE FOLLOWING SPECIFICATION, DELIVER ALL CAPACITIES SCHEDULED, AND CONFORM TO DESIGN INDICATED HEREIN. ALTERNATE LAYOUTS OR DIMENSIONAL CHANGES WILL NERE ACCEPTED.

2.2. CABINET

A. UNITED SHALL BE CONSTRUCTED OF MINIMUM 20GA G-90 GALVANIZED STEEL RIVETED TOGETHER VIA STRUCTURAL POP-RIVETS ALL METAL SHALL BE CNC BENT FOR PRECISE ASSEMBLY.
   1. RIGGING PROVISIONS: THE UNIT SHALL HAVE A STRUCTURAL BASE CONSTRUCTED OF MINIMUM 14GA G-90 GALVANIZED STEEL AND INCLUDES FULL SIZED FORK POCKETS AND LIFTING POINTS ON ALL FOUR SIDES.
   2. ROOF CONSTRUCTION: THE LIDS SHALL BE FABRICATED BY FORMING A DOUBLE-STANDING, SELF-LOCKING SEAM THAT REQUIRES NO ADDITIONAL SUPPORT. ROOF SHALL BE PITCHED TO ALLOW FOR PROPER DRAINAGE.
   3. EXTERIOR WALL CONSTRUCTION: ALL EXTERIOR WALLS SHALL CONSIST OF A DOUBLE WALL G-90 GALVANIZED STEEL CONSTRUCTION INSULATED WITH 2IN THICK, FOIL-FACED, R13 CLOSED CELL FOAM.
   4. SERVICE ACCESS DOORS: ALL DOOR JAMBS SHALL BE LABORATED AROUND THEIR PERIMETER, AND ALLOW FOR DOORS TO BE MOUNTED VIA REMOVABLE, SPRING ACTUATED, STAINLESS STEEL HINGES WITH STAINLESS STEEL PINS. ALL DOORS SHALL BE EQUIPPED WITH STAINLESS STEEL, SPRING ACTUATED, CAM LATCH HANDLES WITH LOCKS FOR EASE OF SERVICE AND MAINTENANCE. ELECTRICAL CABINET ACCESS DOORS SHALL HAVE A DOOR HOLD INSTALLED TO PROP DOORS OPEN. ALL DOORS SHALL HAVE STAINLESS STEEL LATCHES WHICH ARE PAD LOCKABLE. ELECTRICAL CABINET DOORS SHALL BE OUTFITTED WITH SCHEMATIC/MANUAL POUCHES FORMED INTO THE DOOR, ALONG WITH WIRING DIAGRAM ATTACHED TO THE INDOOR OF THE DOOR FROM THE FACTORY.
   5. ENTIRE UNIT INTERIOR AND EXTERIOR SHALL BE CONSTRUCTED OF MINIMUM 20 GA G90 GALVANIZED STEEL WITH NO PAINTING, AND SHALL HAVE SURPASSED A SALT SPRAY CORROSION TEST AS PER ASTM B 117.
   6. ENTIRE UNIT SHALL BE MIAMI-DADE WIND RATED UP TO 8150PSF PER TAS 201, 202 & 203 ON ANY UNITS UTILIZING A DOOR SHORTER FACTORY PROVIDED ROOF CURB.

2.3. AIRFLOW CONFIGURATIONS

A. UNIT SHALL BE CONFIGURABLE FOR BOTH DOWN (VERTICAL) DISCHARGE THROUGH BASE OF UNIT, OR SIDE DISCHARGE THROUGH THE CABINET UNIT SHALL ALSO BE CONFIGURABLE TO BOTH DOWN (VERTICAL) RETURN OR SIDE RETURN INTO THE CABINET.

B. UNIT INTAKE AIRFLOW CONFIGURATION SHALL BE THROUGH USE OF A FRESH/OUTDOOR AND RETURN AIR DAMPER.
   1. DAMPER SHALL EXCEED AMCA CLASS 1A STANDARD FOR LOW LEAKAGE. DAMPER ASSEMBLY SHALL BE A SINGLE ASSEMBLY, AND OUTFITTED WITH AN INTEGRAL BIRD SCREEN AND LOUVER/OUTER SYSTEM TO DIVERT ANY DRAINAGE THROUGH THE BASE OF THE UNIT - INTAKE AIR HOOD NOT REQUIRED.
   2. ACTUATOR: A SINGLE DIRECT DRIVE DAMPER ACTUATOR SHALL BE USED WITH SPRING RETURN TO ENSURE THAT THE OUTDOOR AIR DAMPER CLOSES WHEN NOT POWERED.

2.4. SUPPLY AIR BLOWER AND MOTOR

A. ALL SUPPLY FANS SHALL BE DIRECT DRIVE (BELT-DRIVEN NOT ACCEPTABLE) VARIABLE SPEED PLENUM FANS.

B. BLOWER MOTOR SHALL BE A PREMIUM EFFICIENCY MOTOR AVAILABLE AS:
   1. OPEN DRIP PROOF (ODP) OR TOTALLY ENCLOSED FAN COOLED (TEFC) MOTOR DRIVEN BY A VARIABLE FREQUENCY DRIVE.
   2. ELECTRONICALLY COMMUTATED MOTOR (ECM).

C. FANS TO BE SELECTED AT OR NEAR EFFICIENCY PEAK. (SUBMIT FAN CURVES)

D. BLOWER AND MOTOR ASSEMBLY SHALL BE DYNAMICALLY BALANCED. THE ENTIRE BLOWER AND MOTOR ASSEMBLY SHALL BE MOUNTED ON RUBBER VIBRATION ISOLATORS. WHEELS BALANCED AS PER AMCA 204-96, BALANCE QUALITY AND VIBRATION LEVELS FOR FANS.

2.5. REFRIGERATION SYSTEM

A. UNIT SHALL UTILIZE A VARIABLE SPEED INVERTER DUTY SCROLL COMPRESSOR WITH THE FOLLOWING FEATURES:
   1. MODULATION COMPRESSOR SHALL BE CAPABLE OF COMPRESSOR SPEED MODULATION FROM 15%-100% ON 8, 10, & 12.5 TON UNITS, AND 25%-100% ON 15, 20, 22, 25, & 30 TON UNITS.
   2. REFRIGERANT- UNIT SHALL BE FACTORY CHARGED WITH R410A REFRIGERANT.
   3. VIBRATION ISOLATION: COMPRESSOR SHALL BE MOUNTED ON RUBBER VIBRATION ISOLATORS TO REDUCE TRANSMISSION OF VIBRATION TO THE BUILDING STRUCTURE.
   4. INTERNAL OVERLOAD PROTECTION: COMPRESSOR SHALL INCLUDE INTERNAL THERMAL OVERLOAD PRODUCTION TO PROTECT AGAINST EXCESSIVE MOTOR TEMPERATURES.
   5. CRANKCASE HEATER: COMPRESSOR SHALL INCLUDE A CRANKCASE HEATER TO PROTECT AGAINST LIQUID FLOOD-BACK AND ELIMINATION OF OIL FOAMING ON STARTUP. THE CRANKCASE HEATER MUST REMAIN POWERED WHEN COMPRESSOR IS NOT IN OPERATION.
   6. OIL MANAGEMENT: UNIT SHALL UTILIZE BOTH PASSIVE AND ACTIVE OIL RETURN MANAGEMENT USING OIL LEVEL SENSOR AND SCHEDULED OIL BOOSTS.
   7. MONITORED ENVELOPE: UNIT SHALL MONITOR ALL CRITICAL REFRIGERATION POINTS TO ENSURE COMPRESSOR DOES NOT OPERATE OUTSIDE OF SAFE OPERATING ENVELOPE.
   8. THROTTLING LOGIC: UNIT SHALL ALLOW FOR HIGH HEAD PRESSURE MONITORING THROTTLE MODE FOR HIGH AMBIENT OPERATION, AND LOW SUCTION PRESSURE THROTTLE MODE FOR LOW CAPACITY OPERATION OR ANY CONDITIONS RESULTING IN LOW SUCTION PRESSURE.
   9. PUMP-DOWN ACTIVE PUMP-DOWN MODE WITH DISCHARGE LINE CHECK VALVE TO PROTECT AGAINST LIQUID MIGRATION INTO COMPRESSOR DURING IDLE TIMES.
   10. DEFROST MODE: IN OPTIONAL HEAT PUMP, WHEN OUTDOOR COILS ARE DEEMED AT RISK OF FREEZING, THE UNIT SHALL SIMULTANEOUSLY TURN ON AUXILIARY HEAT WHILE RUNNING THE HEAT PUMP TO HELP DEFROST OUTDOOR COILS AS NEEDED WHILE STILL MAINTAIN DESIRED LEAVING AIR TEMPERATURES.

B. THE UNIT SHALL BE OUTFITTED WITH THE FOLLOWING:
   1. INDOOR COIL: INDOOR COIL SHALL BE A HIGH EFFICIENCY 3-7 ROW COIL DESIGN WITH ALUMINUM FINS MECHANICALLY BONDED TO COPPER TUBES. FINS ARE STAGGERED TO INCREASE TURBULENCE, REDUCE THE COIL BYPASS FACTOR, AND ULTIMATELY THE TIME THE AIR STAYS WITHIN THE COIL.
   2. ELECTRONIC EXPANSION VALVE: EACH REFRIGERATION CIRCUIT WILL BE OUTFITTED WITH AN ELECTRONIC EXPANSION VALVE METERING DEVICE WHICH CAN BE THROTTLED FROM 0-100% OPEN TO ALLOW FOR PRECISE SUPERHEAT CONTROL.
   3. INDOOR COIL DRAIN PAN: THE INDOOR COIL SHALL BE OUTFITTED WITH A SLOPED STAINLESS STEEL DRAIN PAN. THIS PAN SHALL BE INSULATED ALONG THE ENTIRE BASE TO PREVENT CONDENSATION, AND OUTFITTED WITH A SAFETY OVERFLOW SWITCH WHICH WILL AUTOMATICALLY SHUT DOWN COOLING OPERATION PRIOR TO WATER OVERFLOWING THE DRAIN PAN IN THE EVENT OF A DRAIN CLOG. THE ENTIRE DRAIN PAN SHALL BE 20 GA STAINLESS STEEL CONSTRUCTION AND WRAP BENEATH THE ENTIRE COIL WITH FLASHING ON ENTERING SIDE OF COIL TO ENSURE CAPTURE OF ALL CONDENSATE. DRAIN PAN DISCHARGE PIPE SHALL ALSO BE STAINLESS STEEL CONSTRUCTION. DRAIN PAN SHALL BE PITCHED TO EXCEED ASHRAE 62.1 STANDARDS.
   4. BASE OF THE CONDENSING COIL CABINET SHALL BE PITCHED AWAY FROM THE UNIT AS A SAFETY TO ENSURE ALL DRAINING EXITS AWAY FROM THE CURB.
   5. OPTIONAL HOT GAS REHEAT COIL: THE UNIT SHALL INCLUDE AN OPTIONAL COPPER TUBE AND ALUMINUM FIN HOT GAS REHEAT COIL MOUNTED DOWNSTREAM OF THE INDOOR COIL. THIS COIL SHALL BE CONTROLLED VIA FULLY MODULATING HOT GAS REHEAT VALVE TO PROVIDE PRECISE REHEAT TEMPERATURE CONTROL. THIS COIL SHALL INCLUDE THE ADDITION OF AN EVAPORATIVE COIL LEAVING CONDITION SENSOR TO MAINTAIN A COIL DEW POINT. THIS ALSO PREVENTS OPERATION OF A DEHUMIDIFICATION CALL WHEN INTAKE DEW POINT CONDITIONS ARE FOUND TO BE BELOW SPACE DEW POINT CONDITIONS, PREVENTING WASTED ENERGY.
   6. OUTDOOR CONDENSERS COIL: OUTDOOR COIL SHALL BE A HIGH EFFICIENCY COIL DESIGN WITH ALUMINUM FINS MECHANICALLY BONDED TO COPPER TUBES. FINS ARE STAGGERED TO INCREASE TURBULENCE. FINS SHALL HAVE A HAIL DAMAGE. OPTIONAL HAIL GUARDS MAY ALSO BE SUPPLIED TO THE OUTDOOR COIL FOR ASSIST PROTECTION FROM HAIL BOUNCING OFF OF THE ROOF OF THE UNIT UP THE COIL.
   7. OUTDOOR FANS: THE OUTDOOR COIL SHALL HAVE A VERTICAL DISCHARGE OUTFITTED WITH QUIET, EFFICIENT, FULLY MODULATING ELECTRONICALLY COMMUTATED MOTOR (ECM) CONDENSING FANS. THESE FANS SHALL MODULATE TO MAINTAIN A TEMPERATURE DIFFERENTIAL BETWEEN OUTSIDE AIR AND THE OUTDOOR COIL.

C. TO HELP MITIGATE ANY LONG-TERM POTENTIAL FOR LEAKS OR HARDWARE FAILURES, THE UNIT SHALL BE OUTFITTED WITH THE FOLLOWING PROTECTION MEASURES:
   1. SUCTION LINE ACCUMULATOR FOR ADDED PROTECTION AGAINST LIQUID ENTERING SUCTION LINE OF COMPRESSOR.
   2. RI-FLOW: LOW PRESSURE DROP, FILTER DRIER.
   3. ELECTRONIC EXPANSION VALVE (EEV) FOR PRECISE SUPERHEAT CONTROL. EEV SHALL OPEN PARTIALLY ALLOWING SYSTEM PRESSURE EQUALIZATION PRIOR TO ACTIVATION OF THE COMPRESSOR.
   4. ON OPTIONAL HEAT PUMP UNITS, USE OF A SINGLE 3-WAY REVERSING VALVE TO PREVENT OBSTRUCTIONS DUE TO VALVE FAILURE.
   5. PROTECTIVE RUBBER SLEEVES INSTALLED ON ALL DISTRIBUTION LINES OF INDOOR COIL TO PREVENT VEAR FROM RUBBING.
   6. ALL REFRIGERATION PORTS SHALL BE SHORT-STUB ASSEMBLY AND ANY ACCESS PORT WITH A TRANSDUCER OR SWITCH IS MOUNTED VERTICALLY TO MITIGATE RISK OF BENT/CRACKED STUB JOINTS.
   7. REFRIGERATION CIRCUIT SHALL BE MECHANICALLY CNC PRE-BENT TUBING WHEREVER POSSIBLE WITH MINIMAL BRAZED JOINTS TO MINIMIZE POINTS FOR POTENTIAL REFRIGERATION LEAKS.
   8. FACTORY TESTED FOR LEAKS VIA HIGH PRESSURE NITROGEN DECAY AND HELIUM TRACER GAS TESTING.
   9. SUCTION LINE TEMPERATURE SENSOR FAILURE DETECTION.
   10. PREVENTATIVE FAILURE ALERTS THROUGH A MANUFACTURER PROVIDED, CLOUD BASED, CELLULAR REMOTE MONITORING SYSTEM.

2.6. HEATING SYSTEM

A. THE GAS BURNER SHALL BE AN INDIRECT-FIRED; PUSH-THROUGH TYPE, USING (NATURAL) (LP) GAS AT AN INLET-SUPPLY PRESSURE TO THE UNIT OF "W.C. MINIMUM NAT. GAS, (11"W.C. MINIMUM LP GAS.

B. BURNER SHALL BE A TUBULAR IN-SHOT FIRED DESIGN CAPABLE OF USING NATURAL OR LP TYPE GAS. EACH BURNER IGNITION SHALL BE OF THE DIRECT-SPARK DESIGN WITH REMOTE FLAME SENSING AT INLET OF THE LAST FIRING TUBE OF THE GAS MANIFOLD.

B. DIRECT-SPARKING SEQUENCE SHALL LAST THROUGH THE COMPLETE DURATION OF THE TRIAL FOR IGNITION PERIOD FOR GUARANTEED LIGHT-OFF. BURNER SHALL ALWAYS BE LIT AT MAXIMUM GAS FLOW AND COMBUSTION AIRFLOW FOR GUARANTEED LIGHT-OFF. EACH BURNER IGNITION MODULE SHALL HAVE LED INDICATORS FOR TROUBLESHOOTING AND A SET OF EXPOSED PINHOLE FOR TESTING FLAME INDICATION SIGNAL.

C. ALL FURNACES SHALL BE CONTROLLED BY AN ELECTRONIC VERNIER-TYPE FULLY MODULATING CONTROL SYSTEM CAPABLE OF ACHIEVING 80% EFFICIENCY OVER THE ENTIRE GAS FIRING RANGE OF THE UNIT.

D. EACH FURNACE SHALL HAVE:
   1. A MINIMUM TURNDOWN RATIO OF 6:1 FOR NATURAL GAS AND 3:1 FOR LP GAS WHILE MAINTAINING A CONSTANT 80% EFFICIENCY (90% FOR HIGH EFFICIENCY FURNACE OPTION) NO COLD AIR BYPASS OF THE HEAT EXCHANGER.
   2. EACH FURNACE HEAT EXCHANGER SHALL BE A BENT-TUBE STYLE DESIGN MADE ENTIRELY OF TYPE 409 STAINLESS STEEL.
   3. STAINLESS STEEL QUICK SEAL CONNECTION FOR GAS CONNECTION.
   4. MANIFOLD AND INPUT GAS PRESSURE GAUGES.
   5. FACTORY PIPED CONDENSATE DRAIN TO EXTERIOR OF CABINET.
   6. A COMBUSTION FLUE TO BE INSTALLED ON ADJACENT SIDE AS COMBUSTION INTAKE WITH INTEGRATED HIGH VELOCITY WIND CAP.
   7. A BLOCKED VENT SAFETY AIRFLOW SWITCH WITH HIGH TEMPERATURE SILICONE TUBING OPERATING OFF OF ABSOLUTE PRESSURE MEASURED INSIDE OF THE POWER-VENT BLOWER HOUSING.
   8. A HIGH TEMPERATURE AUTO-RECYCLING LIMIT WITH A MAXIMUM NON-ADJUSTABLE SET POINT.
   9. A MANUAL RESET HIGH TEMPERATURE FLAME ROLL OUT SWITCH WITH A NON-ADJUSTABLE SET POINT.
   10. EACH FURNACE COMPARTMENT SHALL HAVE A REMOVABLE POST AND PANEL THAT ALLOWS THE FURNACE TO BE EASILY REMOVED FOR SERVICE AND MAINTAINABILITY.
   11. A POWER-VENT ASSEMBLY FOR EXHAUSTING FLUE GASES WITH A PSC OR ECM TYPE MOTOR THAT IS SECURELY MOUNTED AND EASILY ACCESSIBLE/REMOVABLE FOR SERVICE.
   12. A 0-10"W.C. GAS PRESSURE GAUGE INSTALLED ON THE GAS MANIFOLD.

E. EACH ELECTRIC HEATER SHALL HAVE:
   1. SCR ELECTRIC INSERTS FOR SIDE OR DISCHARGE SUPPLY.
   2. ELECTRIC COILS ARE CONTROLLED USING SCR CONTROLS, SCR IS A TIME PROPORTIONING TYPE CONTROLLER WHICH MODULATES THE HEATER AND SUPPLY AIRFLOW TO MATCH THE HEAT OUTPUT REQUIRED WITH A 0% TURNDOWN PER STAGE WITH FULL MODULATION BETWEEN MINIMUM TURNDOWN AND MAX OUTPUT.

2.7. FILTERS

A. PROVIDE FILTERS AS PART OF UNIT. ALL FILTERS SHALL BE FURNISHED AND INSTALLED TO MEET THE PERFORMANCE REQUIREMENTS SET FORTH IN THE SCHEDULE AND AS SPECIFIED UNDER ANOTHER SECTION OF THIS WORK.

B. ALL FILTERS SHALL BE INSTALLED ON TRACKS FOR EASY REMOVAL FROM THE UNIT.

C. UP TO 3 LAYERS OF OUTDOOR AIR FILTRATION INSTALLED. UNIT SHALL SHIP WITH WASHABLE METAL MESH OUTDOOR AIR FILTER, MERV AIR SHALL HAVE OPTIONAL 2" MERV-8 AND MERV-13 FILTERS. 4 MERV-15 OR 4" MERV-17 HEPA FILTER BANKS FACTORY INSTALLED.

D. UNIT SHALL HAVE AN OPTIONAL ADJUSTABLE PRESSURE DIFFERENTIAL SENSOR FOR THE FILTER BANK TO ALERT IN THE EVENT OF A CLOGGED FILTER.

2.8. ELECTRICAL

A. ALL CONTROLS SHALL BE PRE-WIRED AND HOUSED IN AN INSULATED ELECTRICAL CABINET WITHIN THE UNIT TO PROTECT AGAINST RISK OF CONDENSATION.

B. ALL DIRECT FIRED AND COOLING ONLY UNITS SHALL BE PROVIDED WITH SINGLE POINT ELECTRICAL CONNECTION.

C. UNIT SHALL BE PROVIDED WITH A DOOR SAFETY SWITCH THAT DE-ENERGIZES THE SUPPLY FAN WHEN THE DOOR IS OPENED.

D. UNIT SHALL BE PROVIDED WITH A FACTORY MOUNTED AVERAGING SUPPLY AIR TEMPERATURE SENSOR TO ALLOW FOR ACCURATE DISCHARGE TEMPERATURE READINGS WITHIN UNIT WHEN A DOWNSTREAM SENSOR IS NOT INSTALLED. FIELD MOUNTED AND WIRED DISCHARGE AIR SENSORS WILL NOT BE ACCEPTED.

E. UNIT SHALL BE PROVIDED WITH A FACTORY MOUNTED AVERAGING INTAKE AIR TEMPERATURE SENSOR TO ALLOW FOR ACCURATE INTAKE TEMPERATURE READING REGARDLESS OF HOW THE DA/RA DAMPERS ARE POSITIONED.

F. THE ELECTRICAL CABINET SHALL BE OUTFITTED WITH THE FOLLOWING:
   1. LED ELECTRICAL CABINET SERVICE LIGHT WITH AUTOMATIC ACTIVATION UPON DOOR SWITCH.
   2. COLOR WIRING SCHEMATICS, LAMINATED TO THE INTERIOR WALL OF THE CABINET DOORS.
   3. FACTORY MOUNTED DISCONNECT WITH UNIT BOTTOM KNOCKOUTS.
   4. A LED BACKLIT, LCD HUMAN-MACHINE INTERFACE (HMI) SHALL BE MOUNTED WITHIN THE UNIT'S CONTROL CABINET TO ALLOW FOR ALL SET POINTS CONFIGURATION AND REFRIGERATION SYSTEM MONITORING AT THE UNIT.
   5. UP TO 4 ADDITIONAL SPACE MOUNTED HMIS AVAILABLE. ADDITIONAL HMIS SHALL ALLOW FOR FULL PROGRAMMING CAPABILITIES AND ARE OUTFITTED WITH INTEGRAL TEMPERATURE AND HUMIDITY SENSORS. ADDITIONAL HMI

CBHF
Engineers, PLLC
2246 Yaupon Drive
Wilmington, NC 28401
Phone: 910.791.4000
Fax: 910.791.5266
www.cbhfengineers.com
© Copyright 2020CBHF Engineers, PLLC
NC# P-0506

BOWMAN MURRAY HEMINGWAY
ARCHITECTS
514 Market Street
Wilmington, NC 28401
Tel - (910) 762-2621
Fax - (910) 762-8506

NORTH CAROLINA PROFESSIONAL ENGINEER SEAL 042911 JAMES R. BENSON, JR.

PERMIT DRAWINGS FOR REVIEW ONLY

FAN #3 CASRTU4-1300-222-25T-DDAS - HEATER (CAPTIVEAIRE DDAS)

NOTES:

1. DO NOT OBSTRUCT OUTSIDE AIR INLET, OUTSIDE AIR COIL OR OUTSIDE AIR FAN.
2. (◯) DENOTES CORNER WEIGHT.
3. ROOF OPENING MUST BE 2" SMALLER THAN CURB DIMENSIONS IN BOTH DIRECTIONS.

*NOTE: SUPPLY DUCT MUST BE INSTALLED TO MEET SMACNA STANDARDS. A MINIMUM STRAIGHT DUCT LENGTH MUST BE MAINTAINED DOWNSTREAM OF UNIT DISCHARGE AS OUTLINED IN AMCA PUBLICATION 201. WHEN USING RECTANGULAR DUCTWORK, ELBOWS MUST BE RADIUS THROAT, RADIUS BACK WITH TURNING VANES. FLEXIBLE DUCTWORK AND SQUARE THROAT/SQUARE BACK ELBOWS SHOULD NOT BE USED. ANY TRANSITION AND/OR TURNS IN THE DUCTWORK WILL CAUSE SYSTEM EFFECT. SYSTEM EFFECT WILL DRASTICALLY INCREASE STATIC PRESSURE AND REDUCE AIRFLOW. DO NOT RELY ON UNIT TO SUPPORT DUCT IN ANY WAY. FAILURE TO PROPERLY SIZE DUCTWORK MAY CAUSE SYSTEM EFFECTS AND REDUCE PERFORMANCE OF THE EQUIPMENT.
SUGGESTED STRAIGHT DUCT SIZE IS 30.875" x 39.75".

OPTIONS

1. SINGLE POINT ELECTRICAL CONNECTION FOR RTU. QNTY 1 750VA TRANSFORMER USED. IF A NON-DCV PREWIRE CONTROLS THIS UNIT, THE #28, #47, "MA", OR "E2" OPTION PREWIRE MUST BE SELECTED. DO NOT PROVIDE SUPPLY STARTER IN PREWIRE.
2. CASLINK BUILDING MONITORING SYSTEM - INTERNET OR CELLULAR CONNECTION REQUIRED.
3. RTU SIZE 4 DOWN DISCHARGE.
4. 2" MERV 13 FILTERS FOR SIZE 4 RTU. QTY 12.
5. 2" MERV 8 FILTERS FOR SIZE 4 RTU. QTY 12.
6. OVERHEAT STAT.
7. INLET PRESSURE GAUGE, 0-35".
8. MANIFOLD PRESSURE GAUGE, 0 TO 10" WC, 1 FURNACE.
9. RTU SIZE 4 DOWN RETURN.
10. CLOGGED FILTER SWITCH WITH NOTIFICATION ON HMI.
11. SIZE 4 RTU CONVENIENCE OUTLET (GFCI), 15 AMP - REQUIRES SEPARATE 120V CONNECTION. INCLUDES RECEPTACLE, COVER AND J BOX.
12. SIZE 4 RTU CURB DUCT HANGER.
13. ECM SUPPLY FAN CONTROL-(3 PHASE ZIEHL MOTOR).
14. OCCUPIED SCHEDULING.
15. COMMERCIAL SMOKE DETECTOR/ALARM INTERLOCK (SUPPLIED BY OTHERS).
16. RTU MANUAL INTAKE/RETURN DAMPER CONTROL VIA HMI.
17. 25 TON MODULATING COOLING OPTION, 460/480V. R410A REFRIGERANT, VARIABLE SPEED COMPRESSOR, ECM CONDENSING FANS3.
18. 25 TON MODULATING REHEAT OPTION. DISCHARGE RELATIVE HUMIDITY CONTROL.

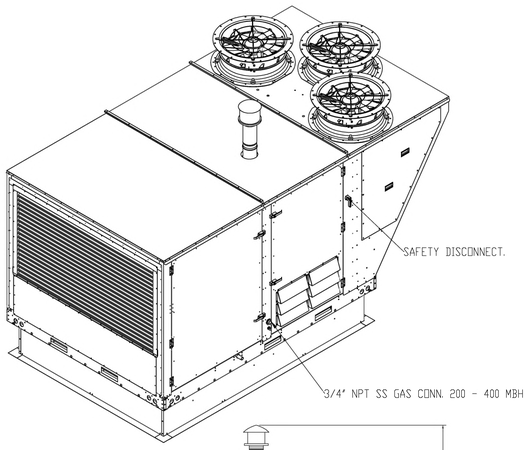

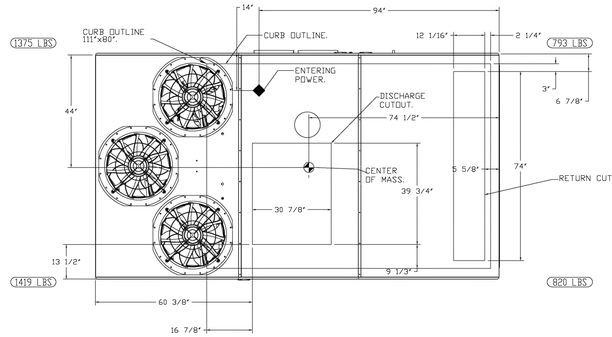

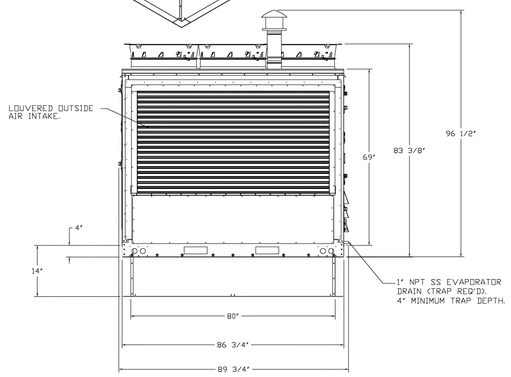

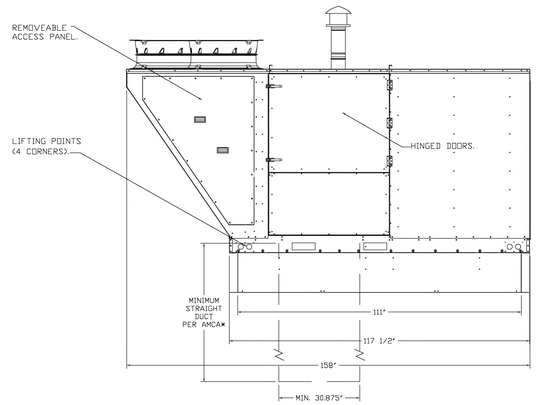

THE DAVIS COMMUNITY
New Community Center

1011 Porter's Neck Road
Wilmington, North Carolina 28411

REV.	DATE	DESCRIPTION

NO.	DATE	ISSUE NOTE

Project Manager: JRB	Drawn By: CRG
Date: October 22, 2020	Reviewed By: JRB
Project ID: CBHF: 20059	

Sheet Title: KITCHEN HOOD

Sheet No.: M007

KEYED NOTES

1. SEE ROOF PLAN FOR CONTINUATION OF DUCT.
2. ROUTE DUCTS BETWEEN/THROUGH FLAT ROOF TRUSSES.
3. ROUTE CONDENSATE AND REFRIGERANT UP THROUGH ROOF.
4. LOCATE DEHUMIDIFIER IN ATTIC SPACE. COORDINATE ARRANGEMENT WITH ACCESS PLATFORM.
5. ROUTE DEHUMIDIFIER CONDENSATE THROUGH ATTIC AND SPILL IN ROOF DRAIN.
6. SALES 121 IS TO BE UNFINISHED. TEMPORARILY SUPPORT DIFFUSERS FOR FUTURE UPFIT.
7. KITCHEN HOOD w/ 16Ø GREASE DUCT UP TO KEF ON ROOF- SEE HOOD DETAILS. FIELD LOCATE HOOD CONNECTIONS TO COORDINATE WITH TRUSSES.
8. IT ROOM EXHAUST- DISCHARGE CORRIDOR.

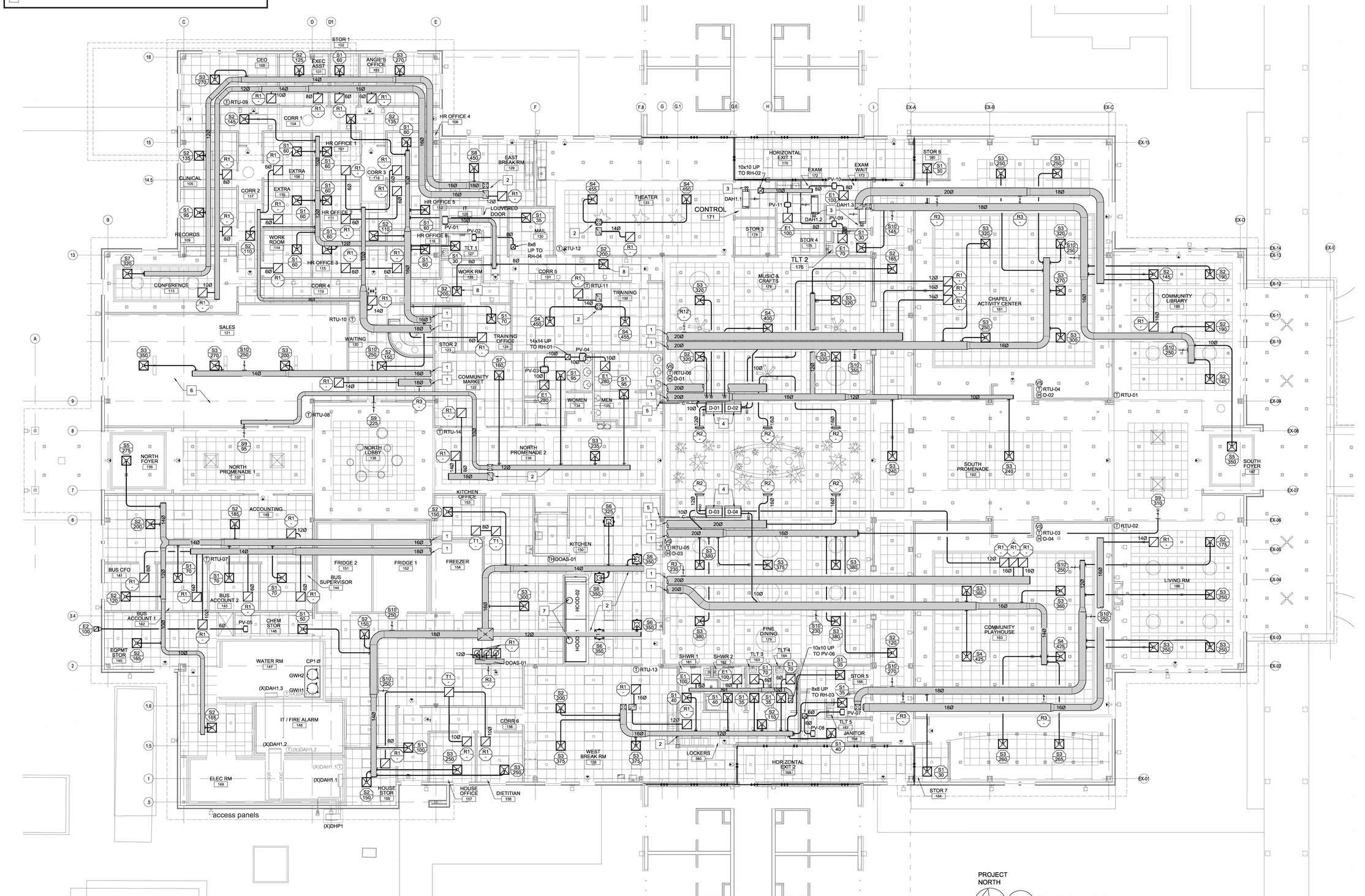

FIRST FLOOR PLAN

1 / M101 scale: 1/8"=1'-0"

CBHF Engineers, PLLC
2246 Yaupon Drive
Wilmington, NC 28401
Phone: 910.791.4000
Fax: 910.791.5266
www.cbhfengineers.com
NC# P-0506

© Copyright 2020CBHF Engineers, PLLC

BOWMAN MURRAY HEMINGWAY ARCHITECTS
514 Market Street
Wilmington, NC 28401
Tel - (910) 762-2621
Fax - (910) 762-8506

NORTH CAROLINA PROFESSIONAL ENGINEER SEAL 032911 JAMES R. BENSON, JR.

PERMIT DRAWINGS FOR REVIEW ONLY

THE DAVIS COMMUNITY
New Community Center

1011 Porter's Neck Road
Wilmington, North Carolina 28411

REV.	DATE	DESCRIPTION

NO.	DATE	ISSUE NOTE

Project Manager: JRB	Drawn By: CRG
Date: October 22, 2020	Reviewed By: JRB
Project ID: CBHF: 20059	

Sheet Title: HVAC FIRST FLOOR PLAN

Sheet No.: M101

KEYED NOTES

1. SEE FIRST FLOOR PLAN FOR CONTINUATION OF DUCT.
2. COOLER/FREEZER CONDENSERS BY KITCHEN EQUIPMENT VENDOR.
3. ROUTE CONDENSATE PIPING TO DEHUMIDIFIERS IN ATTIC.

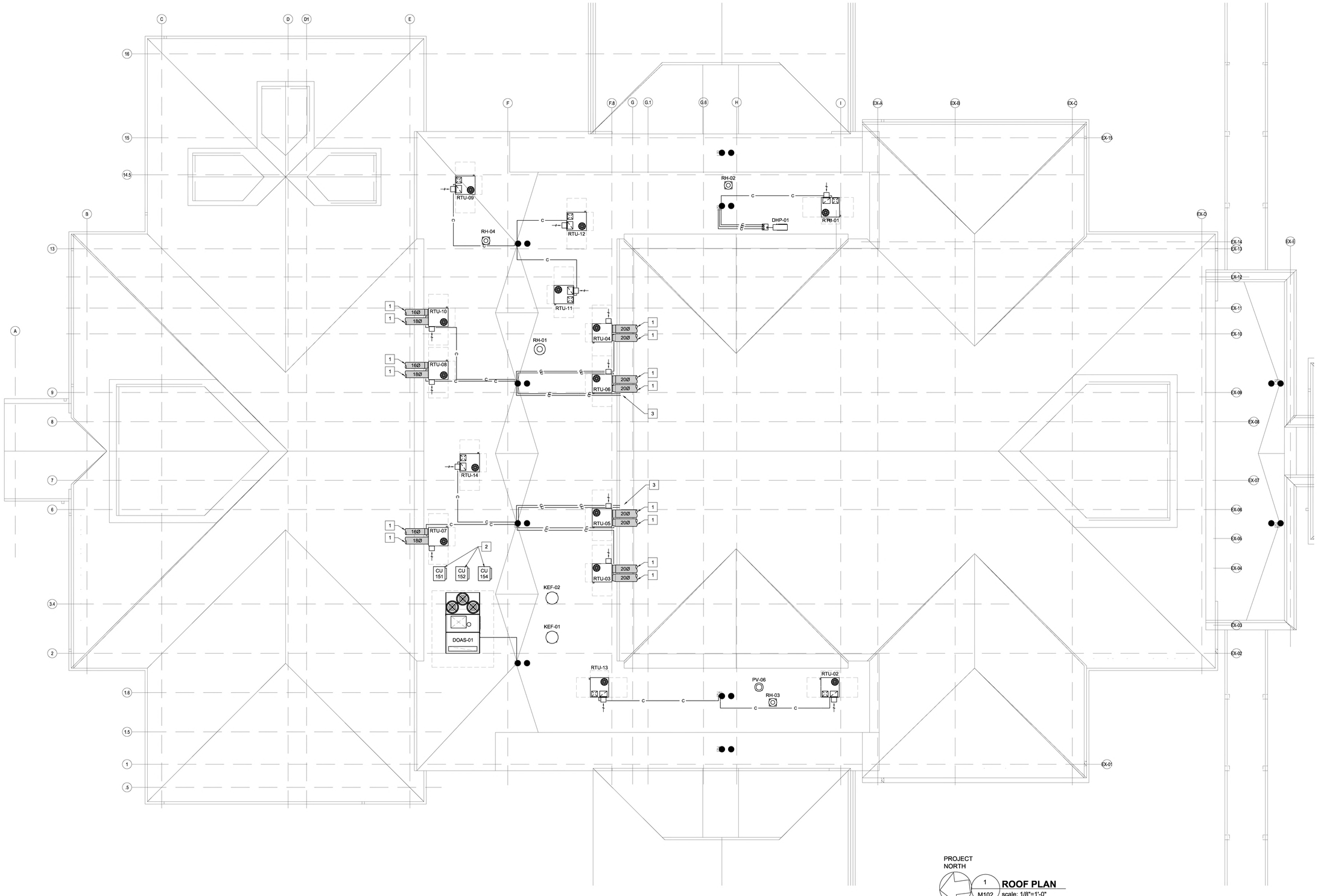

PROJECT NORTH

1 / M102 **ROOF PLAN**
scale: 1/8"=1'-0"

CBHF Engineers, PLLC
2246 Yaupon Drive
Wilmington, NC 28401
Phone: 910.791.4000
Fax: 910.791.5266
www.cbhfengineers.com
NC# P-0506

© Copyright 2020CBHF Engineers, PLLC

BOWMAN MURRAY HEMINGWAY
ARCHITECTS
514 Market Street
Wilmington, NC 28401
Tel - (910) 762-2621
Fax - (910) 762-8506

NORTH CAROLINA REGISTERED PROFESSIONAL ENGINEER JAMES R. BENSON

PERMIT DRAWINGS FOR REVIEW ONLY

THE DAVIS COMMUNITY
New Community Center

1011 Porter's Neck Road
Wilmington, North Carolina 28411

REV.	DATE	DESCRIPTION

NO.	DATE	ISSUE NOTE

Project Manager: JRB	Drawn By: CRG
Date: October 22, 2020	Reviewed By: JRB
Project ID: CBHF: 20059	

Sheet Title: HVAC ROOF PLAN

Sheet No.: M102

PLUMBING FIXTURE SCHEDULE

DRAWING CODE	FIXTURE		DESCRIPTION	MANUFACTURER	MODEL	ALTERNATE APPROVED MANUFACTURERS	NOTES	PIPE SIZE DCW	DHW	WASTE	VENT
WC1	FLUSH VALVE WATER CLOSET, FLOOR MTD., 1.6GPF, ADA	BOWL	16.5" HIGH BOWL, ELONGATED, V.C., 2-1/8" TRAPWAY; TOP SPUD; MADERA	AMERICAN STANDARD	3043.001	ZURN, KOHLER	6	1"	-	4"	2"
		FLUSH VALVE	11.5" HIGH, 1.6GPF	SLOAN	111-1.6 YBYC	ZURN, TEC					
		SEAT	OFLC w/ SELF-SUSTAINING S.S. CHECK HINGE; HEIGHT 17-19" AFF	CHURCH	295SSCT	BEMIS, OLSONITE					
WC2	FLUSH VALVE WATER CLOSET, FLOOR MTD, 1.6GPF	BOWL	15" HIGH BOWL, ELONGATED, V.C., 2-1/8" TRAPWAY; TOP SPUD; MADERA	AMERICAN STANDARD	2234.001	ZURN, CRANE		1"	-	4"	2"
		FLUSH VALVE	16" HIGH, 1.6GPF	SLOAN	113-1.6 YBYC	ZURN, TEC					
		SEAT	OFLC w/ SELF-SUSTAINING S.S. CHECK HINGE	CHURCH	295SSCT	BEMIS, OLSONITE					
UR1	URINAL WALL HUNG, 1.0GPF ADA	BOWL	VITREOUS CHINA, WASHOUT, ELONGATED RIM MTD. 17 A.F.F. MAX., 3/4"TOP SPUD	AMERICAN STANDARD	6590.001	ZURN, KOHLER	1	3/4"	-	2"	2"
		FLUSH VALVE	11.5 HIGH	SLOAN	186-1-YBYC	ZURN, TEC					
LAV1	LAVATORY WALL HUNG, 0.5GPM, ADA	BOWL	20x18 VITREOUS CHINA, RIM 34" AFF MAX.	AMERICAN STANDARD	0355.012	ZURN, CRANE	1,2,3,9,	1/2"	1/2"	2"	2"
		FAUCET	4" CENTERSET, SINGLE LEVER HANDLE, SOLID BRASS CONSTRUCTION, CERAMIC CARTRIDGE, HIGH TEMP LIMIT STOP	MOEN	8413F05	ZURN, DELTA					
		DRAIN	GRID STRAINER	MCGUIRE	155A	DEARBORN, DELTA					
		MIXING VALVE	LEAD FREE THERMOSTATIC MIXING VALVE - SETPOINT = 90°F INSTALL ON HOT WATER SUPPLY, ASSE 1070	CASH ACME	HG-135	LEONARD, WATTS					
LAV2	LAVATORY, ADA	BOWL	SELECTED BY ARCHITECT/INTERIOR DESIGNER	-	-	-	2,4,5,9,	1/2"	1/2"	2"	2"
		FAUCET	SELECTED BY ARCHITECT/INTERIOR DESIGNER	-	-	-					
		DRAIN	SELECTED BY ARCHITECT/INTERIOR DESIGNER	-	-	-					
		MIXING VALVE	LEAD FREE THERMOSTATIC MIXING VALVE - SETPOINT = 90°F INSTALL ON HOT WATER SUPPLY, ASSE 1070	CASH ACME	HG-135	LEONARD, WATTS					
SK1	1-COMPARTMENT COUNTERTOP SINK, ADA	BOWL	25x22x6.5", 18 GA S.S., 34"A.F.F. MAX.	ELKAY	LRAD252265	JUST, ACORN	2,4,5,9,	1/2"	1/2"	2"	2"
		FAUCET	180° SWING SPOUT, SINGLE LEVER HANDLE, 3 HOLE, 1.5GPM, SOLID BRASS CONSTRUCTION, CHROME FINISH	MOEN	8701	DELTA, ZURN					
		DRAIN	GRID STRAINER	ELKAY	LK18	ZURN, MOEN					
SK2	2-COMPARTMENT COUNTERTOP SINK, ADA	BOWL	33x22x6.5, 18 GA S.S.	ELKAY	LRAD3322	JUST, ACORN	2,4,5,9,	1/2"	1/2"	2"	2"
		FAUCET	180° SWING SPOUT, SINGLE LEVER HANDLE, 3 HOLE, 1.5GPM, SOLID BRASS CONSTRUCTION, CHROME FINISH	MOEN	8701	DELTA, ZURN					
		DRAIN	BASKET STRAINER	ELKAY	LK35	ZURN, MOEN					
SK3	1-COMPARTMENT COUNTERTOP SINK, 8" DEEP	BOWL	25x22x8, 18 GA S.S.	ELKAY	LR2522	JUST, ACORN	2,4,5,9,	1/2"	1/2"	2"	2"
		FAUCET	180° SWING SPOUT, SINGLE LEVER HANDLE, 3 HOLE, 1.5GPM, SOLID BRASS CONSTRUCTION, CHROME FINISH	MOEN	8701	DELTA, ZURN					
		DRAIN	GRID STRAINER	ELKAY	LK18	ZURN, MOEN					
SK4	WALL HUNG HAND SINK, 0.5GPM, ADA	BOWL	20x18 VITREOUS CHINA, RIM 34" AFF MAX.	AMERICAN STANDARD	0355.012	ZURN, CRANE	1,2,3,9,	1/2"	1/2"	2"	2"
		FAUCET	4" CENTERSET, SINGLE LEVER HANDLE, SOLID BRASS CONSTRUCTION, CERAMIC CARTRIDGE, HIGH TEMP LIMIT STOP	MOEN	8413F05	ZURN, DELTA					
		DRAIN	GRID STRAINER	MCGUIRE	155A	DEARBORN, DELTA					
		MIXING VALVE	LEAD FREE THERMOSTATIC MIXING VALVE - SETPOINT = 90°F INSTALL ON HOT WATER SUPPLY, ASSE 1070	CASH ACME	HG-135	LEONARD, WATTS					
MS1	MOP SINK	BASIN	24x24x10 MOLDED STONE w/ GRID STRAINER	FIAT	MSB-2424	FLORESTONE, ZURN		1/2"	1/2"	3"	2"
		FAUCET	BRASS CONSTRUCTION, ROUGH CHROME FINISH, INTEGRAL VACUUM BREAKER, INTEGRAL CHECK STOPS, 3/4"THREADED SPOUT, SERVICE STOPS, WALL MOUNT, VANDAL RESISTANT, LEVER HANDLES	MOEN	8124	DELTA, ZURN					
		ACCESSORIES	HOSE/BRACKET, MOP HANGER	MOEN	8198, 8199	DELTA, ZURN					
CW1	CAN WASH	BASIN	JOB-BUILT BY G.C.	-	-	-	10	1/2"	1/2"	3"	2"
		FAUCET	NON-FREEZE, HOT -COLD	WOODFORD	HC-67	SMITH, ZURN					
		DRAIN	MED. DUTY, 12" DIA. C.I. GRATE, SEDIMENT BUCKET	JR SMITH	2143	ZURN, WATTS					
SH1	JOB-BUILT SHOWER, ADA	ENCLOSURE	JOB-BUILT BY G.C. W/ GRAB BARS per ADA	-	-	-		1/2"	1/2"	2"	2"
		VALVE	PRESS. BALANCED MIXING VALVE, LEVER HANDLE, DIVERTER, HEAD W/ ARM, FLANGE, WALL/HAND SHOWER, FLEXIBLE METAL HOSE, IN-LINE VAC. BREAKER, 30"SLIDE BAR, 1.5GPM	MOEN	8342EP15	DELTA, SYMMONS					
		DRAIN	4-3/8" DIA. NICKEL BRONZE STRAINER, PVC	SIOUX CHIEF	821	SMITH, ZURN					
SH3	PREFAB TRANSFER SHOWER, ADA	ENCLOSURE	36x36 ACRYLIC- 1/2" CURB MAX. w/ GRAB BARS, FOLD-UP SEAT, CENTER DRAIN, CURTAIN ROD AND SHOWER CURTAIN	AQUATIC	3636BFS	ACRYLINE, AQUARIUS		1/2"	1/2"	2"	2"
		VALVE	PRESS. BALANCED MIXING VALVE, LEVER HANDLE, DIVERTER, HEAD W/ ARM, FLANGE, WALL/HAND SHOWER, FLEXIBLE METAL HOSE, IN-LINE VAC. BREAKER, 30"SLIDE BAR, 1.5GPM	MOEN	8342EP15	DELTA, SYMMONS					
		DRAIN	4-3/8" DIA. NICKEL BRONZE STRAINER, PVC	SIOUX CHIEF	821	SMITH, ZURN					
EWC1	WALL HUNG WATER COOLER, ADA	FIXT	SPLIT LEVEL, S.S. TOP, LIGHT GREY BODY, BOTTLE FILLING STATION, 8 GPH @ 50/80/90, 120V/1PH WITH FILTER	ELKAY	ELZSTL8WSLP	HALSEY TAYLOR, OASIS	1,11	1/2"	-	2"	2"
EWC2	WALL HUNG WATER COOLER, ADA	FIXT	S.S. TOP, LIGHT GREY BODY, BOTTLE FILLING STATION, 8 GPH @ 50/80/90, 120V/1PH, FILTERED	ELKAY	LZS8WSSK	HALSEY TAYLOR, OASIS	1,11	1/2"	-	2"	2"
GWH1	GAS WATER HEATER, 100 GAL, DIRECT VENT	FIXT	GLASS LINED, NATURAL GAS, 199 MBH INPUT, 230 GPH RCVY. @ 100 DEG RISE	A.O. SMITH	BTH-199	BRADFORD WHITE, RHEEM		1-1/2"	1-1/2"	-	-
		EXP TANK	10 GAL DIAPHRAGM		TW-10					-	-
GWH2	GAS WATER HEATER, 100 GAL, DIRECT VENT	FIXT	GLASS LINED, NATURAL GAS, 199 MBH INPUT, 230 GPH RCVY. @ 100 DEG RISE	A.O. SMITH	BTH-199	BRADFORD WHITE, RHEEM		1-1/2"	1-1/2"	-	-
		EXP TANK	-		-					-	-
FCO	FLOOR CLEANOUT	FIXT	C.I. BODY, 6-1/2"TOPS, ADJUSTABLE, SCORIATED, NICKEL BRONZE TOP	SIOUX CHIEF	834	ZURN, SMITH		-	-	MATCH	-
GCO	GRADE CLEANOUT	FIXT	C.I. BODY, RECESSED BRONZE PLUG.	SIOUX CHIEF	877	ZURN, SMITH		-	-	MATCH	-
WCO	WALL CLEANOUT	FIXT	ROUND S/S ACCESS COVER & SCREW, RECESS BRONZE THRD. PLUG	SIOUX CHIEF	870	ZURN, SMITH		-	-	MATCH	-
FD1	FLOOR DRAIN	FIXT	FINISHLINE ADJUSTABLE, SCH. 40 HUB CONNECTION, ABS/PVC BASE ADAPTER, ROUND NICKEL BRONZE STRAINER	SIOUX CHIEF	832	ZURN, SMITH		-	-	MATCH	-
FD2	FLOOR DRAIN	FIXT	FINISHLINE ADJUSTABLE, SCH. 40 HUB CONNECTION, ABS/PVC BASE ADAPTER, ROUND NICKEL BRONZE HUB STRAINER	SIOUX CHIEF	832	ZURN, SMITH		-	-	MATCH	-
FS1	FLOOR SINK	FIXT	12x12x8 A.R.C.I. RECEPTOR, MEMBRANE CLAMP, DOME STRAINER, 1/2 GRATE	SIOUX CHIEF	861	ZURN, SMITH		-	-	MATCH	-
RD1	ROOF DRAIN	FIXT	15" DIAMETER ROOF DRAIN. ENAMEL COATED CAST IRON BODY, GRAVEL GUARD AND DOME STRAINER, DECK CLAMP	SIOUX CHIEF	868-1504	ZURN, SMITH		-	-	MATCH	
ORD1	OVERFLOW ROOF DRAIN	FIXT	15" DIAMETER ROOF DRAIN. ENAMEL COATED CAST IRON BODY, GRAVEL GUARD AND DOME STRAINER, DECK CLAMP, INTERNAL WATER DAM	SIOUX CHIEF	868-1504P	ZURN, SMITH		-	-	MATCH	
GI	GREASE INTERCEPTOR	FIXT	INDOOR/OUTDOOR POLYETHYLENE GREASE INTERCEPTOR	SCHIER	GB-500			-	-	MATCH	-
CP1	HOT WATER RECIRCULATION PUMP	FIXT	IN-LINE WET ROTOR, STAINLESS STEEL VOLUTE, 3-SPEED, 115/1/60, 125W. BUILT IN THERMAL PROTECTION. 10GPM@10'TDH	GRUNDFOS	UPS 15-55	B&G, MYERS		-	MATCH	-	-
HB1	INTERIOR HOSE BIBB	FIXT	POLISHED CHROME, VACUUM BREAKER, WHEEL HANDLE, 3/4" HOSE THREAD	WOODFORD	24	ZURN, WATTS		1/2"	-	-	-
HB2	INTERIOR HOSE BIBB	FIXT	POLISHED CHROME, VACUUM BREAKER, WHEEL HANDLE, 3/4" HOSE THREAD	WOODFORD	24	ZURN, WATTS		-	3/4"	-	-
WH1	WALL HYDRANT	FIXT	CHROME PLATED BRASS, ANTI-SIPHON, VACUUM BREAKER, REMOVABLE TEE HANDLE, 3/4" HOSE THREAD	WOODFORD	65	ZURN, WATTS		3/4"	-	-	-
RH1	ROOF HYDRANT	FIXT	FREEZELESS, ANTI-SIPHON, VACUUM BREAKER, 3/4" HOSE THREAD	WOODFORD	SRH	ZURN, WATTS	8	1"	-	1/8"	-
OB1	ICE MAKER BOX	FIXT	ABS HOUSING, 1/4 TURN BALL VALVE, CHROME PLATED BRASS, SHOCK ARRESTORS	SIOUX CHIEF	696	OATEY, IPS		1/2"	-	-	-
RPZ	BACKFLOW PREVENTER	FIXT	REDUCED PRESS. ZONE TYPE, LEAD FREE	WATTS	LF009	FEBCO, WILKINS		MATCH			

NOTES
1. PROVIDE MATCHING WALL HANGER. COORDINATE WITH G.C. FOR WALL REINFORCING.
2. PROVIDE BRASS 1-1/2" TAILPIECE, CAST BRASS SLIP JOINT P-TRAP WITH CLEANOUT; PROVIDE ADA OFFSET ARRANGEMENT WHERE REQUIRED.
3. PROVIDE ADA INSULATION KIT
4. COORDINATE WITH MILLWORK.
5. COORDINATE ADA MILLWORK ENCLOSURE FOR WATER AND DRAIN PIPING UNDER SINK.
6. TRIP LEVER OR FLUSH HANDLE TO BE LOCATED ON WIDE SIDE OF STALL OR TOILET ROOM.
7. NOT USED.
8. NO DRAIN LINE REQUIRED.
9. PROVIDE 1/2" IPS X 3/8" OD ANGLE BRASS STOP(S) WITH RIGID COPPER RISERS. ALL EXPOSED PIPING SHALL BE CHROME PLATED.
10. PROVIDE INLINE CHECK VALVES FOR WATER SUPPLY LINES.
11. PROVIDE 1/2"IPS x 3/8" O.D. BRASS STOP CONCEALED BEHIND CABINET.

PLUMBING ABBREVIATIONS

(X)	EXISTING
AAV	AIR ADMITTANCE VALVE
A.F.F.	ABOVE FINISHED FLOOR
A.R.C.I.	ACID RESISTANT CAST IRON
ADA	AMERICANS WITH DISABILITIES ACT
BRZ.	BRONZE
BT	BATHTUB
C.I.	CAST IRON
CO	CLEANOUT
CONC.	CONCRETE
DCW	DOMESTIC COLD WATER
DHW	DOMESTIC HOT WATER
DIA.	DIAMETER
E.C.I.	ENAMELED CAST IRON
EC	ELECTRICAL CONTRACTOR
EWC	ELECTRIC WATER COOLER
EWH	ELECTRIC WATER HEATER
FCO	FLOOR CLEANOUT
FD	FLOOR DRAIN
FS	FLOOR SINK
GA.	GAUGE
GAL.	GALLON
GC	GENERAL CONTRACTOR
GCO	GRADE CLEANOUT
GPF	GALLONS PER FLUSH
GPH	GALLONS PER HOUR
GPM	GALLONS PER MINUTE
GWH	GAS-FIRED WATER HEATER
HB	HOSE BIBB
INCL.	INCLUDED
KS	KITCHEN SINK
LAV	LAVATORY
LP	LIQUID PROPANE
MS	MOP SERVICE BASIN
NAT.	NATURAL GAS
NKL.	NICKEL
NON SIMULT.	NON SIMULTANEOUS
O.F.L.C.	OPEN FRONT LESS COVER
OB	OUTLET BOX
OC	ON CENTER
ORDL	OVERFLOW ROOF DRAIN LEADER
PC	PLUMBING CONTRACTOR
PRESS. BAL.	PRESSURE BALANCED
RCVY.	RECOVERY
RDL	ROOF DRAIN LEADER
SA	WATER HAMMER ARRESTOR
SH	SHOWER
SK	SINK
SLD.	SLIDE
SS	STAINLESS STEEL
TDH	TOTAL DYNAMIC HEAD
UR	URINAL
V	VENT
VB	VACUUM BREAKER
VC	VITREOUS CHINA
VR	VANDAL RESISTANT
VTR	VENT THROUGH ROOF
W	WASTE
WC	WATER CLOSET
WCO	WALL CLEANOUT
WH	WALL HYDRANT

NOTE: ALL ABBREVIATIONS MAY NOT BE USED IN PROJECT.

PLUMBING LOADS

WASTE (DRAINAGE FIXTURE UNITS)	98
WATER	58 GPM

PLUMBING LEGEND

SYMBOL	DESCRIPTION
CA	COMPRESSED AIR PIPING
C C	CONDENSATE PIPING
140°F 140°F	DOMESTIC 140°F WATER PIPING
140R	DOMESTIC 140°F RETURN WATER PIPING
	DOMESTIC COLD WATER PIPING
	DOMESTIC HOT WATER CIRCULATION PIPING
	DOMESTIC HOT WATER PIPING
F F	FILTERED WATER PIPING
SP	FIRE SPRINKLER PIPING
FM	FORCE MAIN PIPING
NG	GAS PIPING (NAT. OR LP)
GW	GREASE WASTE PIPING
N2	NITROUS OXIDE PIPING
O2	O2 (0XYGEN) PIPING
OD	OVERFLOW ROOF DRAIN PIPING
RD	ROOF DRAIN PIPING
	SANITARY VENT PIPING
	SANITARY WASTE PIPING
T T	TEPID WATER PIPING
VAC	VACUUM PIPING
	BACKFLOW PREVENTION DEVICE
	BALL VALVE
	CHECK VALVE
	CIRCUIT SETTER (BALANCING VALVE)
	CIRCULATION PUMP
	CONTROL VALVE
	EXTENT OF DEMOLITION
FCO	FLOOR CLEANOUT
FD	FLOOR DRAIN
FS	FLOOR SINK
	GAS-REGULATOR VALVE
	GATE VALVE
	GATE VALVE IN RISER
GCO	GRADE CLEANOUT
HB	HOSE BIBB
	PIPE CAP
	PIPE ELBOW
	PIPE ELBOW DOWN
	PIPE ELBOW UP
	PIPE TEE
	PIPE TEE DOWN
	PIPE TEE UP
SP FM	SUMP PUMP
1	DEMOLITION KEYED NOTE TAG
1	NEW WORK KEYED NOTE
	POINT OF CONNECTION - NEW TO EXISTING
	PRESSURE REDUCING VALVE
	SOLENOID VALVE
140°F	THERMOSTATIC MIXING VALVE
WCO	WALL CLEANOUT
WH	WALL HYDRANT
	WASHING MACHINE BOX
SA	WATER HAMMER ARRESTOR

NOTE: ALL ITEMS LISTED IN THIS SCHEDULE MAY NOT BE USED IN PROJECT

KITCHEN EQUIPMENT SCHEDULE

MARK	FIXTURE	PIPE SIZE CW	HW 140°F	WASTE	VENT	GAS	REMARKS
1	60" GAS RANGE	-	-	-	-	1"	366 MBH
2	36" FLAT TOP GRIDDLE	-	-	-	-	3/4"	84 MBH
3	DOUBLE DECK CONVECTION OVEN	-	-	-	-	3/4"	100 MBH
4	FRYER	-	-	-	-	3/4"	150 MBH
7	4 WELL HOT FOOD TABLE	-	-	ID	-	-	
9	HAND SINK	1/2"	1/2"	2"	2"	-	FAUCET INCLUDED
10	SOILED DISHTABLE	1/2"	1/2"	ID	-	-	
11	WAREWASHER	1/2"	-	ID	-	-	
13	3-COMP. SINK	1/2"	1/2"	ID	-	-	
15	SHUTTLE BREWER	1/2"	-	-	-	-	
16	TEA BREWER	1/2"	-	-	-	-	
17	ICE AND WATER DISPENSER	1/2"	-	ID	-	-	NOTE 3
21	PREP TABLE W/ SINK	1/2"	1/2"	ID	-	-	
26	ICE CUBER	1/2"	-	ID	-	-	NOTE 3
27	ICE BIN	-	-	ID	-	-	
28	WATER FILTER	1/2"	-	-	-	-	
43	PRE-RINSE FAUCET	1/2"	1/2"	-	-	-	
44	PRE-RINSE FAUCET	1/2"	1/2"	-	-	-	
72	ALTO SHAAM	1/2"	-	ID	-	3/4"	70 MBH, NOTE 3
73	WORK TABLE W/ SINK	1/2"	1/2"	ID	-	-	

NOTES:
1. ID INDICATES INDIRECT DRAIN
2. PLUMBING CONTRACTOR TO ROUGH-IN AND MAKE FINAL PLUMBING CONNECTIONS TO ALL KITCHEN EQUIPMENT. COORDINATE w/ KITCHEN EQUIPMENT SUPPLIER.
3. PROVIDE NSF APPROVED DUAL CHECK VAVLE FOR FOOD SERVICE, WATTS Cu7 OR EQUAL AS APPROVED BY LOCAL JURISDICTION .

GAS LOAD SCHEDULE

FIXTURE TAG	DESCRIPTION	BTUH RATING	QUANTITY	TOTAL
GWH1	GAS-FIRED WATER HEATER	199,999	1	199,999
GWH2	GAS-FIRED WATER HEATER	199,999	1	199,999
RTU-01	PACKAGED ROOFTOP GAS-PACK	100,000	1	100,000
RTU-02	PACKAGED ROOFTOP GAS-PACK	100,000	1	100,000
RTU-03	PACKAGED ROOFTOP GAS-PACK	100,000	1	100,000
RTU-04	PACKAGED ROOFTOP GAS-PACK	100,000	1	100,000
RTU-05	PACKAGED ROOFTOP GAS-PACK	100,000	1	100,000
RTU-06	PACKAGED ROOFTOP GAS-PACK	100,000	1	100,000
RTU-07	PACKAGED ROOFTOP GAS-PACK	100,000	1	100,000
RTU-08	PACKAGED ROOFTOP GAS-PACK	100,000	1	100,000
RTU-09	PACKAGED ROOFTOP GAS-PACK	100,000	1	100,000
RTU-10	PACKAGED ROOFTOP GAS-PACK	100,000	1	100,000
RTU-11	PACKAGED ROOFTOP GAS-PACK	80,000	1	80,000
RTU-12	PACKAGED ROOFTOP GAS-PACK	80,000	1	80,000
RTU-13	PACKAGED ROOFTOP GAS-PACK	100,000	1	100,000
RTU-14	PACKAGED ROOFTOP GAS-PACK	80,000	1	80,000
DOAS-01	DEDICATED OUTDOOR AIR UNIT	296,800	1	296,800
KEC#1	GAS RANGE	366,000	1	366,000
KEC#2	FLAT TOP GRIDDLE	84,000	1	84,000
KEC#3	CONVECTION OVEN	100,000	1	100,000
KEC#4	GAS FRYER	150,000	2	300,000
KEC#72	ALTO SHAM	70,000	1	70,000
	EXISTING WEST RESIDENCE WINGS	3,694,000	1	3,694,000
	EXISTING EAST RESIDENCE WINGS	2,724,000	1	2,724,000
				0
TOTAL LOAD				9,374,798
BUILDING SERVICE GAS PRESSURE				2 psi

CBHF
Engineers, PLLC
2246 Yaupon Drive
Wilmington, NC 28401
Phone: 910.791.4000
Fax: 910.791.5266
www.cbhfengineers.com
NC# P-0506

Ⓒ Copyright 2020CBHF Engineers, PLLC

bmh
BOWMAN MURRAY HEMINGWAY
ARCHITECTS
514 Market Street
Wilmington, NC 28401
Tel - (910) 762-2621
Fax - (910) 762-8506

NORTH CAROLINA SEAL JAMES R. BENSON
PERMIT DRAWINGS FOR REVIEW ONLY

THE DAVIS COMMUNITY
New Community Center
1011 Porter's Neck Road
Wilmington, North Carolina 28411

REV.	DATE	DESCRIPTION

NO.	DATE	ISSUE NOTE

Project Manager JRB	Drawn By JBS
Date October 22, 2020	Reviewed By JRB
Project ID CBHF: 20059	

Sheet Title
PLUMBING LEGEND, ABBREV., SCHEDULES AND LOADS

Sheet No.
P001

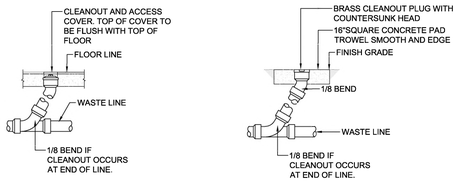

FLOOR CLEANOUT (FCO)

GRADE CLEANOUT (GCO)

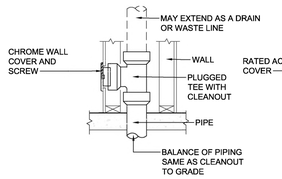

NOTE: CLEANOUT TO BE FLUSH WITH FINISHED WALL.

WALL CLEANOUT (WCO)

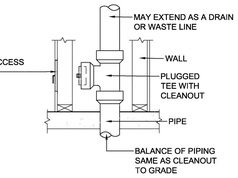

NOTE: CLEANOUT TO BE FLUSH WITH FINISHED WALL.

WALL CLEANOUT (WCO) RATED WALL

1 / P002 CLEANOUT DETAILS
Not To Scale

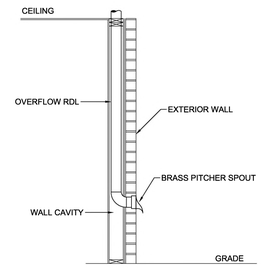

2 / P002 OVERFLOW DOWNSPOUT DETAIL
Not To Scale

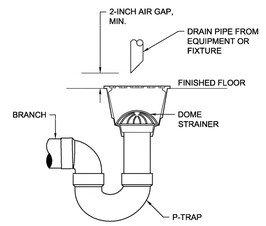

3 / P002 FLOOR SINK / INDIRECT DRAIN DETAIL
Not To Scale

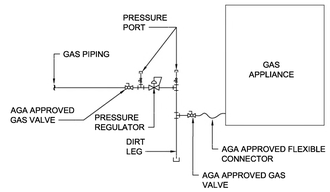

4 / P002 GAS APPLIANCE CONNECTION DETAIL
Not To Scale

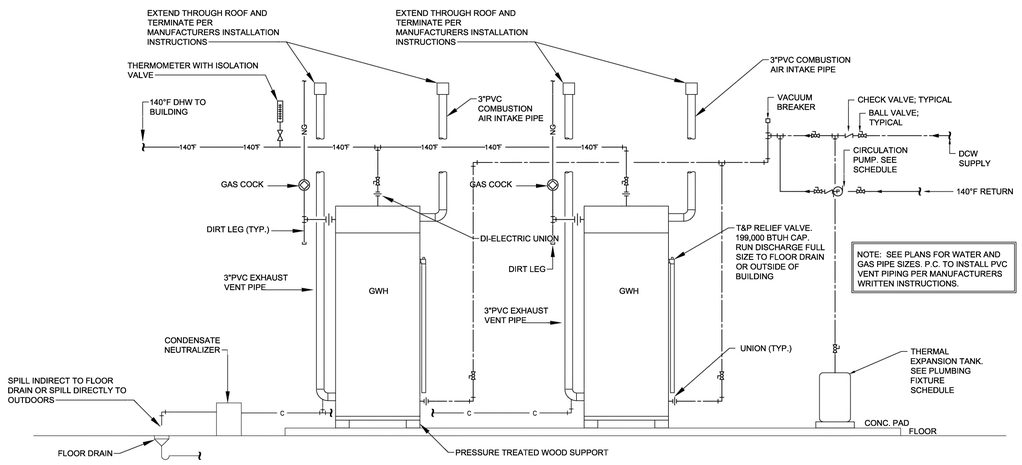

5 / P002 GAS-FIRED DIRECT VENT WATER HEATER DETAIL
Not To Scale

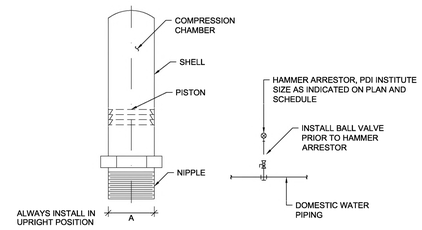

P.D.I. SYMBOL	FIXTURE UNIT RATING	A SIZE
A	1-11	1/2
B	12-32	3/4
C	33-60	1
D	61-113	1 1/4
E	114-154	1 1/2
F	155-330	2

6 / P002 HAMMER ARRESTOR SCHEDULE AND DETAIL
Not To Scale

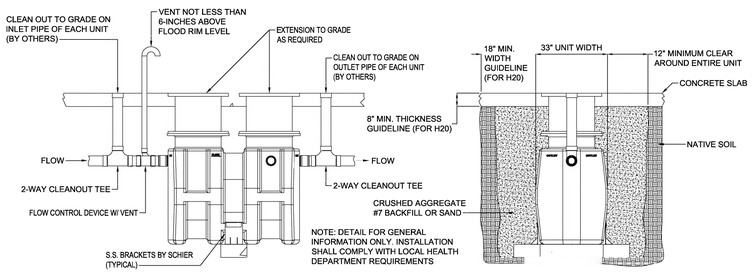

7 / P002 SCHIER GREASE INTERCEPTOR DETAIL
Not To Scale

Grease Interceptor Calculations

Step 1: GI Volume per CFPUA (V = Q x 20)

Fixture	Tail Piece Diameter	DFU per IPC Table 709.2	
Pre-Rinse Sink	2"	3	
Dishwasher	2"	2	
3 Comp Sink	2"	3	
Prep Sink	2"	3	
Prep Sink	2"	3	
Ice Machine	2"	1	
Prep Sink	2"	3	
Floor Drain (3 ea)	4"	18	
	Total DFU:	36	
	GPM (Q):	18	(1 GPM per 2 DFU)
	Grease Interceptor Volume:	**360**	(GPM x 20 min retention)

Step 2: Grease Capacity for Pumpout Cycle

	Servings/Day	Grease Production Value (lbs/serving)	Lbs waste/day
Cafeteria - Full Serive	500	0.0455	22.75

90-day waste production (lbs): 2047.5

SCHIER	Description: Polyethylene Grease Interceptor
MODEL NUMBER:	Volume: 510 gallons
GB-500	Grease Capacity: 3,048 lbs (@ 100GPM)

CBHF
Engineers, PLLC
2246 Yaupon Drive
Wilmington, NC 28401
Phone: 910.791.4000
Fax: 910.791.5266
www.cbhfengineers.com
NC# P-0506
© Copyright 2020CBHF Engineers, PLLC

BOWMAN MURRAY HEMINGWAY
ARCHITECTS
514 Market Street
Wilmington, NC 28401
Tel - (910) 762-2621
Fax - (910) 762-8506

NORTH CAROLINA REGISTERED ARCHITECT JAMES R. BENSON
PERMIT DRAWINGS FOR REVIEW ONLY

THE DAVIS COMMUNITY
New Community Center
1011 Porter's Neck Road
Wilmington, North Carolina 28411

REV.	DATE	DESCRIPTION

NO.	DATE	ISSUE NOTE

Project Manager: JRB	Drawn By: JBS
Date: October 22, 2020	Reviewed By: JRB
Project ID: CBHF: 20059	

Sheet Title
PLUMBING DETAILS

Sheet No.
P002

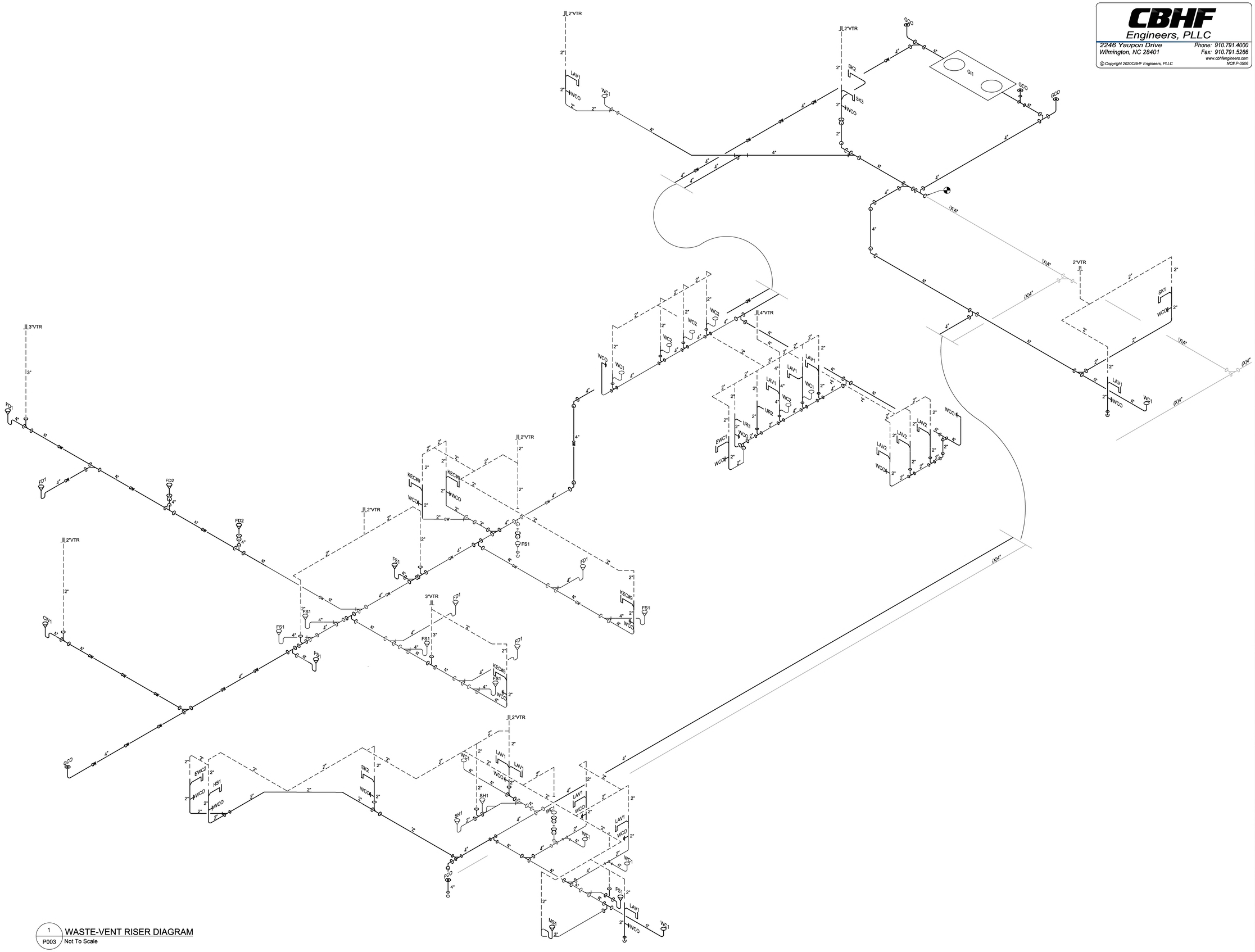

1 P003 WASTE-VENT RISER DIAGRAM
Not To Scale

CBHF
Engineers, PLLC
2246 Yaupon Drive
Wilmington, NC 28401
Phone: 910.791.4000
Fax: 910.791.5266
www.cbhfengineers.com
NC# P-0506

© Copyright 2020CBHF Engineers, PLLC

BOWMAN MURRAY HEMINGWAY
ARCHITECTS
514 Market Street
Wilmington, NC 28401
Tel - (910) 762-2621
Fax - (910) 762-8506

NORTH CAROLINA REGISTERED PROFESSIONAL ENGINEER JAMES R. BENSON

PERMIT DRAWINGS FOR REVIEW ONLY

THE DAVIS COMMUNITY
New Community Center

1011 Porter's Neck Road
Wilmington, North Carolina 28411

REV.	DATE	DESCRIPTION

NO.	DATE	ISSUE NOTE

Project Manager: JRB	Drawn By: JBS
Date: October 22, 2020	Reviewed By: JRB
Project ID: CBHF: 20059	

Sheet Title
PLUMBING WASTE-VENT RISER DIAGRAM

Sheet No.
P003

NEW WORK KEYED NOTES

1. FIELD LOCATE AND CONNECT 4"W FROM GREASE INTERCEPTOR TO EXISTING SANITARY SEWER PIPING IN COURTYARD.
2. WATER FEATURE (FOUNTAIN). COORDINATE PLUMBING CONNECTIONS WITH EQUIPMENT VENDOR.
3. FOR CONTINUATION SEE SITE UTILITY DRAWING.
4. UP TO ROOF DRAIN RD1 ON ROOF.
5. UP TO OVERFLOW ROOF DRAIN ORD1 ON ROOF.
6. TERMINATE WITH BRASS PITCHER SPOUT 12" MIN. ABOVE GRADE. COORDINATE WITH ARCHITECT AND G.C. FOR FINAL MOUNTING HEIGHT.

CBHF Engineers, PLLC
2246 Yaupon Drive
Wilmington, NC 28401
Phone: 910.791.4000
Fax: 910.791.5266
www.cbhfengineers.com
NC# P-0506

© Copyright 2020CBHF Engineers, PLLC

BOWMAN MURRAY HEMINGWAY
ARCHITECTS
514 Market Street
Wilmington, NC 28401
Tel - (910) 762-2621
Fax - (910) 762-8506

NORTH CAROLINA REGISTERED ARCHITECT JAMES R. BENSON

PERMIT DRAWINGS FOR REVIEW ONLY

THE DAVIS COMMUNITY
New Community Center

1011 Porter's Neck Road
Wilmington, North Carolina 28411

REV.	DATE	DESCRIPTION

NO.	DATE	ISSUE NOTE

Project Manager: JRB	Drawn By: JBS
Date: October 22, 2020	Reviewed By: JRB
Project ID: CBHF: 20059	

Sheet Title: PLUMBING WASTE-VENT PLAN

Sheet No.: P101

PROJECT NORTH

1 / P101 **FIRST FLOOR PLAN**
scale: 1/8"=1'-0"

CBHF
Engineers, PLLC
2246 Yaupon Drive
Wilmington, NC 28401
Phone: 910.791.4000
Fax: 910.791.5266
www.cbhfengineers.com
NC# P-0506
© Copyright 2020CBHF Engineers, PLLC

BOWMAN MURRAY HEMINGWAY
ARCHITECTS
514 Market Street
Wilmington, NC 28401
Tel - (910) 762-2621
Fax - (910) 762-8506

NORTH CAROLINA REGISTERED PROFESSIONAL ENGINEER JAMES R. BENSON

PERMIT DRAWINGS FOR REVIEW ONLY

RD1 ORD1 2"VTR

NOTE: PLUMBING CONTRACTOR SHALL COORDINATE WITH MECHANICAL CONTRACTOR TO ENSURE 10'-0" MINIMUM CLEARANCE BETWEEN VTR PENETRATIONS AND FRESH AIR INTAKES

CU 151 CU 152 CU 154

PROJECT NORTH

1 P102 **ROOF PLAN**
scale: 1/8"=1'-0"

THE DAVIS COMMUNITY
New Community Center

1011 Porter's Neck Road
Wilmington, North Carolina 28411

REV.	DATE	DESCRIPTION

NO.	DATE	ISSUE NOTE

Project Manager: JRB	Drawn By: JBS
Date: October 22, 2020	Reviewed By: JRB
Project ID: CBHF: 20059	

Sheet Title
PLUMBING ROOF PLAN

Sheet No.
P102

NEW WORK KEYED NOTES

1. WATER FEATURE (FOUNTAIN). COORDINATE PLUMBING CONNECTIONS WITH EQUIPMENT VENDOR.
2. 3/4" RPZ FOR MAKE-UP WATER FOR WATER FEATURE.
3. 3/4" DCW UP TO ROOF HYDRANT RH1 ON ROOF. SEE SHT. P-302 FOR LOCATION.

CBHF Engineers, PLLC
2246 Yaupon Drive
Wilmington, NC 28401
Phone: 910.791.4000
Fax: 910.791.5266
www.cbhfengineers.com
NC# P-0506

© Copyright 2020CBHF Engineers, PLLC

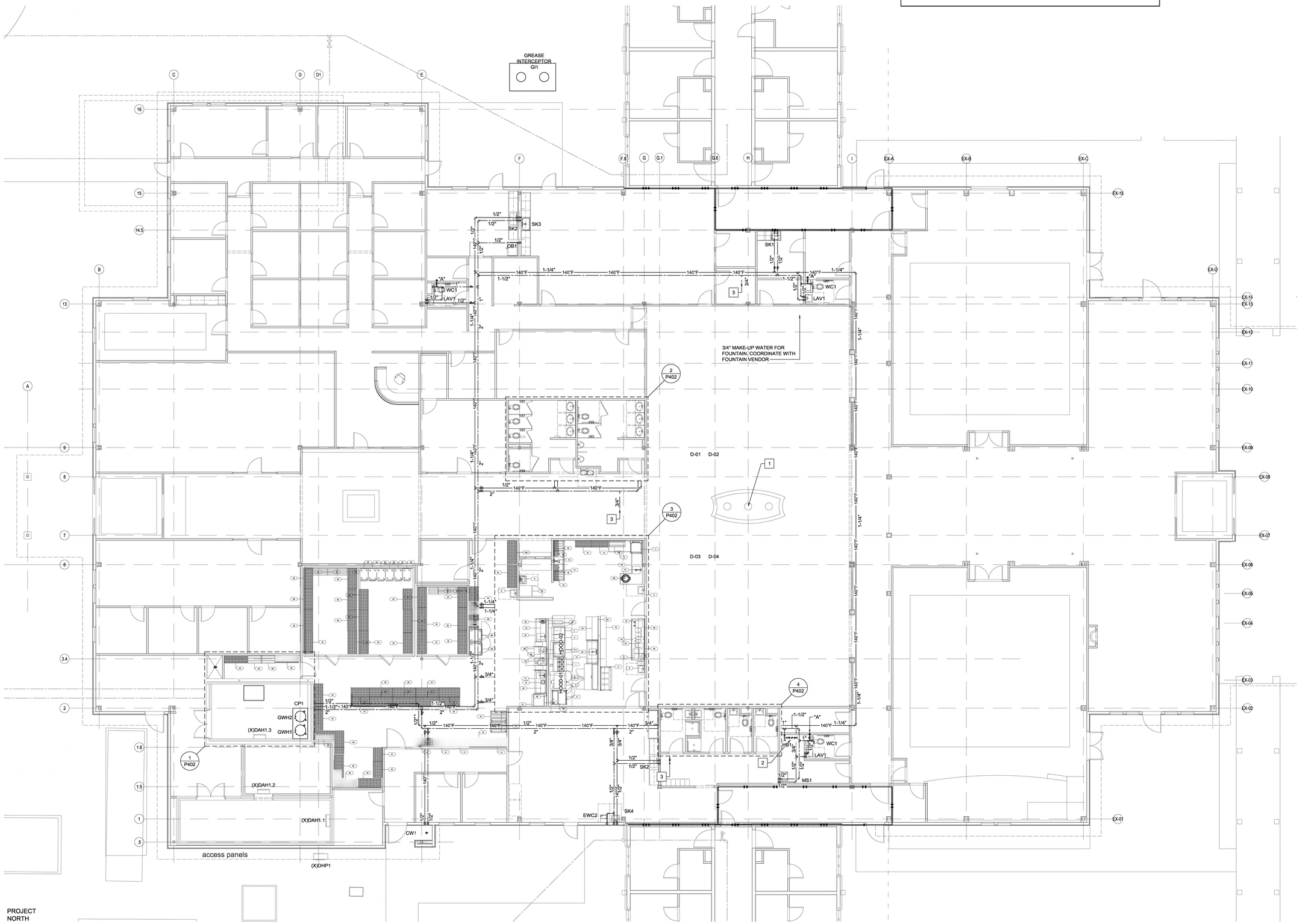

PROJECT NORTH

1 P201 **FIRST FLOOR PLAN**
scale: 1/8"=1'-0"

bmh
BOWMAN MURRAY HEMINGWAY
ARCHITECTS
514 Market Street
Wilmington, NC 28401
Tel - (910) 762-2621
Fax - (910) 762-8506

NORTH CAROLINA PROFESSIONAL ENGINEER SEAL
PERMIT DRAWINGS FOR REVIEW ONLY
JAMES R. BENSON, III

THE DAVIS COMMUNITY
New Community Center

1011 Porter's Neck Road
Wilmington, North Carolina 28411

REV.	DATE	DESCRIPTION

NO.	DATE	ISSUE NOTE

Project Manager: JRB	Drawn By: JBS
Date: October 22, 2020	Reviewed By: JRB
Project ID: CBHF: 20059	

Sheet Title
PLUMBING DOMESTIC WATER PLAN

Sheet No.
P201

CBHF
Engineers, PLLC
2246 Yaupon Drive
Wilmington, NC 28401
Phone: 910.791.4000
Fax: 910.791.5266
www.cbhfengineers.com
NC# P-0506
© Copyright 2020CBHF Engineers, PLLC

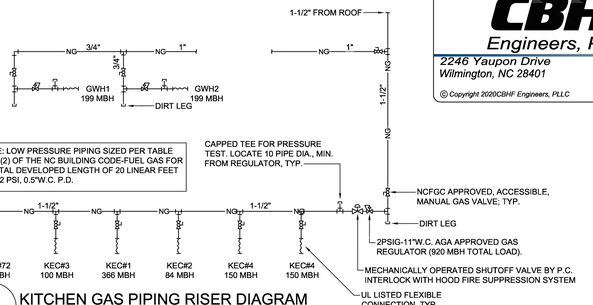

2 P301 **KITCHEN GAS PIPING RISER DIAGRAM**
Not To Scale

PROJECT NORTH

1 P301 **FIRST FLOOR PLAN**
scale: 1/8"=1'-0"

BOWMAN MURRAY HEMINGWAY
ARCHITECTS
514 Market Street
Wilmington, NC 28401
Tel - (910) 762-2621
Fax - (910) 762-8506

NORTH CAROLINA REGISTERED ARCHITECT JAMES R. BENSON

PERMIT DRAWINGS FOR REVIEW ONLY

THE DAVIS COMMUNITY
New Community Center
1011 Porter's Neck Road
Wilmington, North Carolina 28411

REV.	DATE	DESCRIPTION

NO.	DATE	ISSUE NOTE

Project Manager: JRB	Drawn By: JBS
Date: October 22, 2020	Reviewed By: JRB
Project ID: CBHF: 20059	

Sheet Title
PLUMBING GAS PIPING PLAN

Sheet No.
P301

NEW WORK KEYED NOTES

1. 3/4" DCW FROM BELOW. SEE SHT. P-201 FOR CONTINUATION.
2. SEE P301 FOR GAS PIPING CONTINUATION.

CBHF Engineers, PLLC
2246 Yaupon Drive
Wilmington, NC 28401
Phone: 910.791.4000
Fax: 910.791.5266
www.cbhfengineers.com
NC# P-0506

© Copyright 2020CBHF Engineers, PLLC

BOWMAN MURRAY HEMINGWAY
ARCHITECTS
514 Market Street
Wilmington, NC 28401
Tel - (910) 762-2621
Fax - (910) 762-8506

NORTH CAROLINA REGISTERED PROFESSIONAL ENGINEER JAMES R. BENSON

PERMIT DRAWINGS FOR REVIEW ONLY

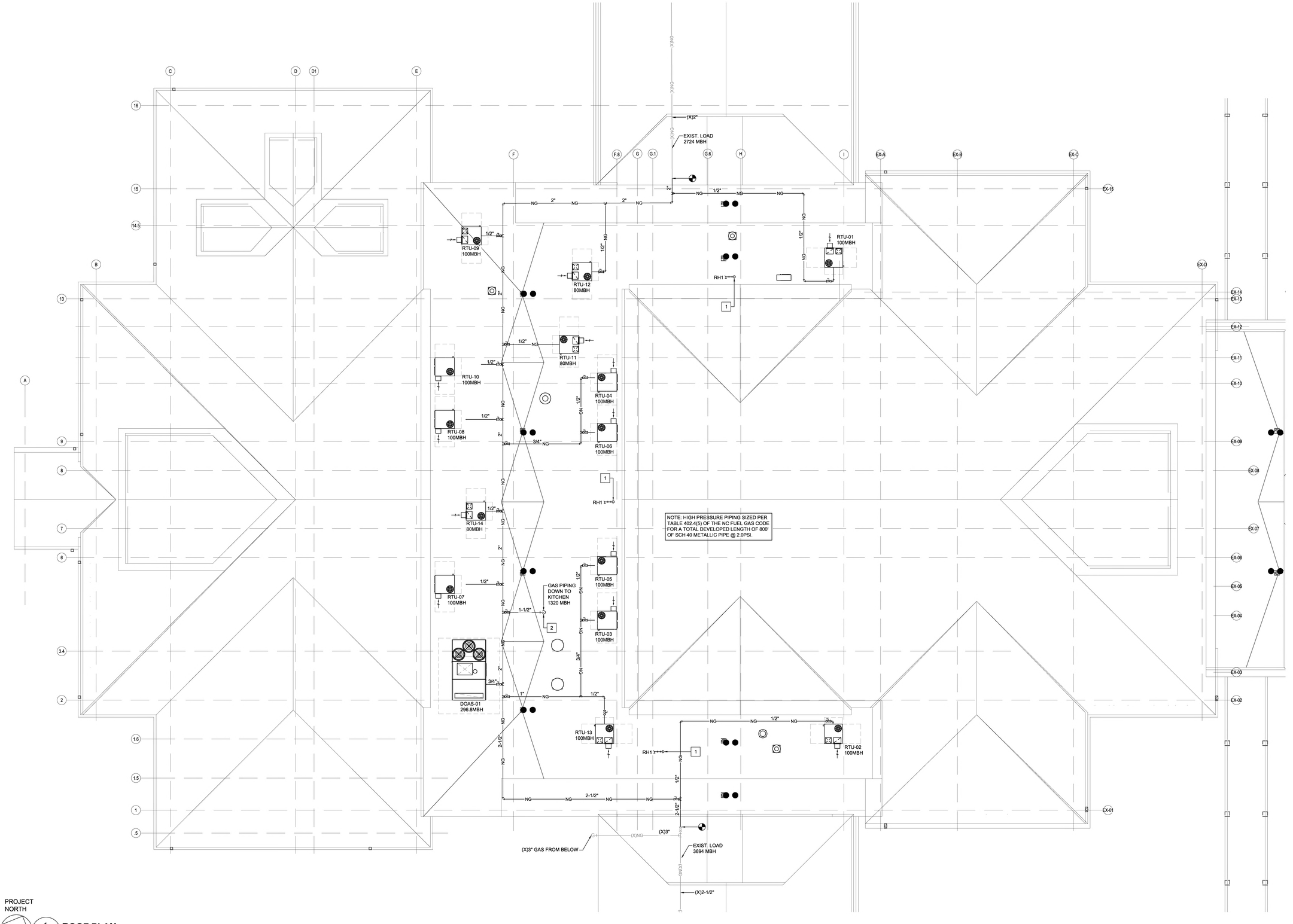

PROJECT NORTH

1 P302 **ROOF PLAN**
scale: 1/8"=1'-0"

THE DAVIS COMMUNITY
New Community Center
1011 Porter's Neck Road
Wilmington, North Carolina 28411

REV.	DATE	DESCRIPTION

NO.	DATE	ISSUE NOTE

Project Manager: JRB	Drawn By: JBS
Date: October 22, 2020	Reviewed By: JRB
Project ID: CBHF: 20059	

Sheet Title
PLUMBING ROOF PLAN

Sheet No.
P302

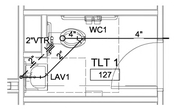

1 P401 **ENLARGED WASTE-VENT PLAN**
scale: 1/4"=1'-0"

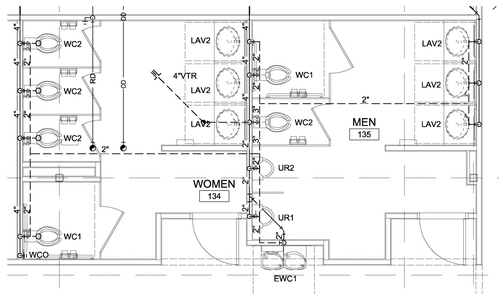

2 P401 **ENLARGED WASTE-VENT PLAN**
scale: 1/4"=1'-0"

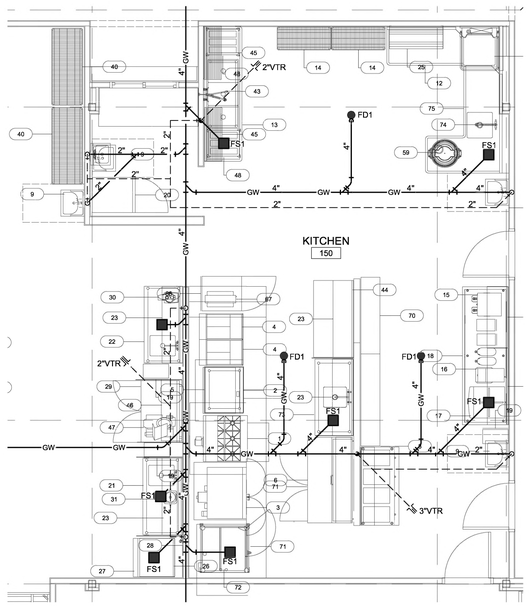

3 P401 **ENLARGED WASTE-VENT PLAN**
scale: 1/4"=1'-0"

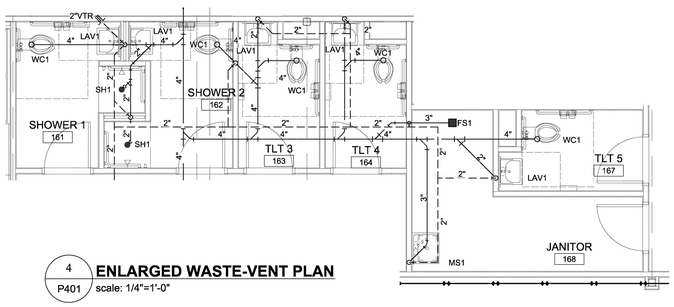

4 P401 **ENLARGED WASTE-VENT PLAN**
scale: 1/4"=1'-0"

CBHF
Engineers, PLLC
2246 Yaupon Drive
Wilmington, NC 28401
Phone: 910.791.4000
Fax: 910.791.5266
www.cbhfengineers.com
NC# P-0506

© Copyright 2020CBHF Engineers, PLLC

BOWMAN MURRAY HEMINGWAY
ARCHITECTS
514 Market Street
Wilmington, NC 28401
Tel - (910) 762-2621
Fax - (910) 762-8506

NORTH CAROLINA PROFESSIONAL ENGINEER SEAL JAMES R. BENSON
PERMIT DRAWINGS FOR REVIEW ONLY

THE DAVIS COMMUNITY
New Community Center
1011 Porter's Neck Road
Wilmington, North Carolina 28411

REV.	DATE	DESCRIPTION

NO.	DATE	ISSUE NOTE

Project Manager: JRB	Drawn By: JBS
Date: October 22, 2020	Reviewed By: JRB
Project ID: CBHF: 20059	

Sheet Title
PLUMBING ENLARGED PLANS

Sheet No.
P401

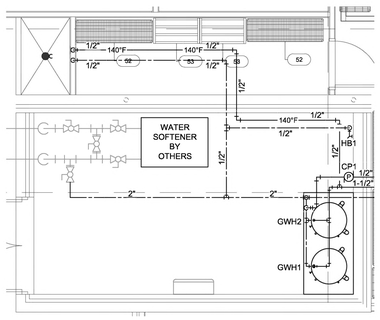

1 P402 **ENLARGED DOMESTIC WATER PLAN**
scale: 1/4"=1'-0"

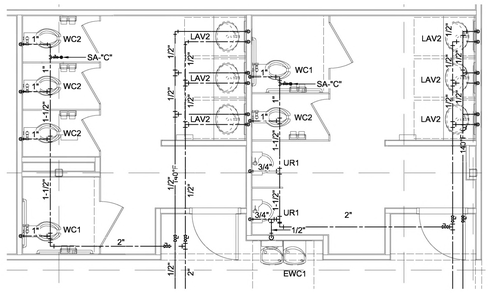

2 P402 **ENLARGED DOMESTIC WATER PLAN**
scale: 1/4"=1'-0"

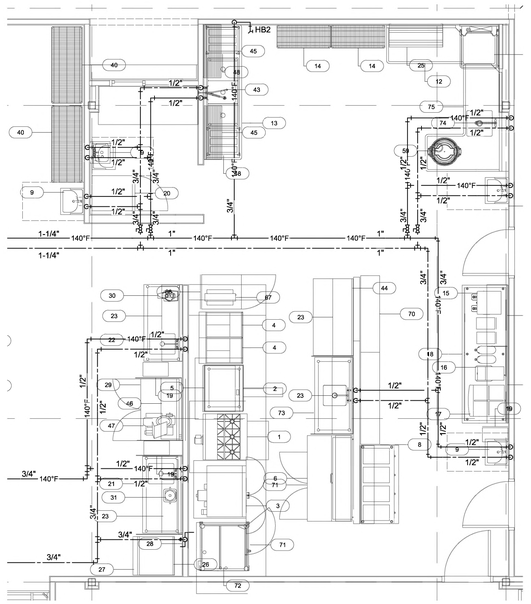

3 P402 **ENLARGED DOMESTIC WATER PLAN**
scale: 1/4"=1'-0"

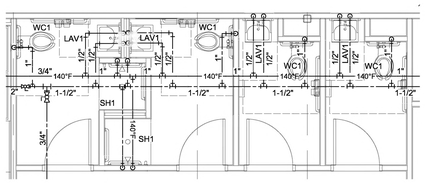

4 P402 **ENLARGED DOMESTIC WATER PLAN**
scale: 1/4"=1'-0"

CBHF
Engineers, PLLC
2246 Yaupon Drive
Wilmington, NC 28401
Phone: 910.791.4000
Fax: 910.791.5266
www.cbhfengineers.com
NC# P-0506
© Copyright 2020CBHF Engineers, PLLC

BOWMAN MURRAY HEMINGWAY
ARCHITECTS
514 Market Street
Wilmington, NC 28401
Tel - (910) 762-2621
Fax - (910) 762-8506

NORTH CAROLINA PROFESSIONAL ENGINEER JAMES R. BENSON
PERMIT DRAWINGS FOR REVIEW ONLY

THE DAVIS COMMUNITY
New Community Center
1011 Porter's Neck Road
Wilmington, North Carolina 28411

REV.	DATE	DESCRIPTION

NO.	DATE	ISSUE NOTE

Project Manager: JRB	Drawn By: JBS
Date: October 22, 2020	Reviewed By: JRB
Project ID: CBHF: 20059	

Sheet Title: PLUMBING ENLARGED PLANS

Sheet No.: P402

1.0 CODES AND STANDARDS:

1.1 "2018 North Carolina State Building Code" and "International Building Code", 2015.

1.2 "Minimum Design Loads for Buildings and other Structures" SEI/ASCE 7-10.

1.3 "Building Code Requirements for Structural Concrete (ACI 318-14)" American Concrete Institute 2014.

1.4 "Manual of Standard Practice", Concrete Reinforcing Steel Institute, latest edition.

1.5 "Specification for Structural Steel Buildings (AISC 360-10)" American Institute of Steel Construction, 2011 - 14th Edition

1.6 "Structural Welding Code - Steel (AWS D1.1)" and "Structural Welding Code - Reinforcing Steel (AWS D1.4)", American Welding Society.

1.7 "Specification for the Design of Cold-Formed Steel Structural Members", American Iron and Steel Institute (AISI), S100-12.

1.8 "Design Manual For Floor Decks and Roof Decks", Steel Deck Institute, latest edition.

1.9 "National Design Specification for Wood Construction with 2015 NDS Supplement," ANSI/AWC NDS-2015.

2.0 DESIGN LOADS:
Project Located in: City of Wilmington, County of New Hanover, State of North Carolina.

2.1 Risk Category = III

2.2 Gravity Loads: (Reduced where allowed)

GRAVITY LOADS		
Location	Uniform (psf)	Concentrated (lbs) (Over 2.5"x2.5")
Roof Loads:		
Dead Load	20	
Live Load	20	300
Floor Loads:		
Dead Load	50	
Floor Live Loads:		
Office	81	2000
Assembly	100	
Mechanical & Electrical Rooms	150	
Storage	125	

2.3 Drifting Snow Loads per N.C. Building Code.

Pg = 10 psf
I = 1.1
Ce = 0.9
Ct = 1.0

2.4 Wind Loads per N.C. State Building Codes, 2018 edition (IBC 2015) & ASCE 7-10 (3-second gust)

Main Wind Force Resisting System:
V 154 mph
Exposure Category "B"

Building is enclosed & Internal Pressure coefficient (GCpi) = +0.18 & -0.18
Topographic Factor Kzt = 1.0
Wind Directionality Factor, Kd = 0.85

Calculated Wind Base Shear (For MWFRS)
Vx = 74k Vy = 98k

Components and Cladding:
V 154 mph
Exposure Category "B"

Components and Cladding Wind Pressure (psf)									
Walls	Area < 10ft²		< 20ft²		Area < 50ft²		Area < 100ft²		Area < 500ft²	
Zone 4	42.7	-46.4	40.9	-44.4	38.2	-41.9	36.3	-40.0	31.9	-35.4
Zone 5	42.7	-57.3	40.9	-53.3	38.2	-48.3	36.3	-44.4	31.9	-35.4
Roof	Area < 10ft²		Area < 20ft²		Area < 50ft²		Area < 100ft²		Area < 500ft²	
Zone 1	24.6	-39.1	22.5	-38.0	19.5	-36.5	17.4	-35.4	17.4	-35.4
Zone 2	24.6	-68.1	22.5	-62.6	19.5	-55.4	17.4	-49.9	17.4	-49.9
Zone 3	24.6	-100.7	22.5	-94.1	19.5	-85.5	17.4	-79.0	17.4	-79.0

Notes:
1. Areas noted are effective wind areas as per ASCE 7-10, 26.2 definitions.
2. See figures below for Zone locations.
3. Plus and minus signs signify pressures acting toward and away from surfaces, respectively.
4. Design pressures shown in table are strength design wind pressures. Allowable stress design wind pressures may be calculated by factoring the pressures by 0.6.
5. Design pressures for effective wind areas between those noted in schedule may be interpolated.
6. Tributary area = greater of LxW or Lxl$_a$/3.
7. Deflections may be calculated based on 42% of these loads.

2.5 Seismic Loads per 2018 North Carolina State Building Code (IBC 2015) & ASCE 7-10

Risk Category = III
Site class = "D" (Per Geotechnical Report)
Spectral Response Coefficients:
SDS = 0.213g
SD1 = 0.138g
Cs = 0.067g

Seismic Design Category = C
Seismic Importance Factor = 1.25
Basic Seismic - Force - Resisting System
Building Frame System - Light-frame (cold-formed steel) wall systems using flat strap bracing

RX=RY=4.0, ΩX=ΩY=2.0, CDX=CDY=3.5
Design Base Shear Vx = 59.2k Vy = 59.2k
Building Height Limit = NL
Analysis Procedure - 12.8.1 ASCE 7-10
Equivalent Lateral Force Procedure

2.6 Guardrail designed per North Carolina State Building Code, Section 1607.8

Guardrail:
Uniform load = 50 pM, any direction - per 1607.8.1
Concentrated load = 200 lbs, any direction - per 1607.8.1.1
Intermediate Rail: (all those expect handrail) per 1607.8.1.2

2.7 Flood Loads:
Project is not located in a flood zone.

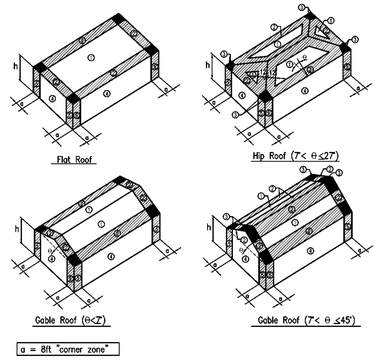

3.0 FOUNDATIONS:

3.1 Foundation design is based on geotechnical report # 22:29144.A by ECS Southeast LLP Wilmington, NC dated June 9, 2020. This report is available for inspection at the office of the architect or owner. The recommendations contained in this report are herein made part of the requirements of these contract documents.

3.2 Footings shall bear on strata capable of sustaining a minimum bearing pressure of 2,000 psf.

3.3 Top of footing (T/FTG) elevations are shown on the drawings or are to be determined by the Contractor in the field in accordance with the guidelines set forth in the drawings.

3.4 Bottom of exterior footings, grade beams and walls shall bear at a minimum depth of 1'-0" below final grade for frost protection.

3.5 Testing and Inspection:
a. All areas to have slabs on grade shall be proof rolled in accordance with and under observation of the Geotechnical Engineer and approved prior to preparation for concrete placement.
b. All foundation bearing strata shall be inspected and approved by the Geotechnical Engineer prior to any concrete placement.
c. Geotechnical Engineer shall be the sole judge as to suitability of all foundation and/or slab bearing strata.
d. Footing bearing elevations shall be adjusted in the field as required to meet the design bearing pressures by additional excavation or compaction and/or backfilling or by other means acceptable to the Geotechnical Engineer.

3.6 Undercutting to remove existing fill beneath footings and slab shall be performed at the direction of the Geotechnical Engineer.

3.7 Engineered Fill: All fill material shall be selected in accordance with the Geotechnical Report Material shall be a clean, low plastic soil with a plasticity index less than 30 (less than 15 is preferred), liquid limit less than 50, and unit weight of 120 pcf (+ 5 pcf)

3.8 Compaction: All fill shall be placed in loose lifts not exceeding 8 inches in thickness and compacted to a minimum of 96 percent Standard Proctor (ASTM D-698) except that the top 12 inches shall be compacted to a minimum of 98 percent Standard Proctor. Moisture shall be controlled to within 3 percent above or below optimum content.

3.9 Remove all topsoil and organic materials. The stripping should extend at least 10' beyond the proposed construction limits.

3.10 Contractor shall review all construction considerations as outlined in the Geotechnical report and bid accordingly.

4.0 CONCRETE:

4.1 Concrete Strength:
All concrete shall be in accordance with the American Concrete Institute (ACI) 301 and 318.

4.2 Concrete shall have a 28 day compressive strength and density as follows:
a. Footings, Grade Beams, and Interior Slab-on-grade.....3,000psi, Density = ±145pcf
b. Exterior Slab on Grade.....4,000psi, Density = ±145pcf

4.3 Concrete Mix Designs:
a. Submittals: Submit written reports of each proposed concrete mix not less than 15 days prior to the start of work.
b. Mix designs, including water, cement ratios and slumps, shall be prepared in accordance with ACI 301-05, Section 4, Cement shall conform to ASTM C 150 Type 1 or at contractor's option, ASTM C 595 Type IP where fly ash is permitted. Normal weight aggregate shall conform to ASTM C 33 and light weight aggregate shall conform to ASTM C 330. No admixtures containing calcium chloride shall be permitted in any concrete.
c. Aggregate size shall be #67 stone for supported slabs or other formed concrete elements; #57 stone for slabs on grade and footings or other concrete elements formed from and poured against earth; #89 stone for masonry grout.
d. Water reducing admixture shall be used in all concrete.
e. Air entraining admixture in accordance with ACI 301 shall be used in all concrete exposed freezing and thawing during construction or service conditions.
f. Concrete subjected to freezing/thawing shall have a maximum water/cement ratio of 0.45 and shall contain the amount of air entraining agent specified in ACI 301-05 Section 4.

4.4 Curing:
See specifications for curing method options and apply within two (2) hours after completion of finishing to all concrete flatwork and walls, U.N.O., other than footings and grade beams.

4.5 Use a non-corrosive, non-chloride accelerating admixture in concrete exposed to temperatures below 40 degrees. Uniformly heat the water and aggregates to a temperature of not less than 50 degrees. Place and cure concrete in accordance with ACI 306.

4.6 When hot weather conditions exist, place and cure concrete in accordance with ACI 301. Cool ingredients before mixing to maintain concrete temp. at time of placement below 90 degrees.

4.7 Reinforcing in all abutting concrete, including footings shall be continuous through or around all corners or intersections. Dowels or splices shall be equal in size and spacing to the reinforcing in the abutting members.

4.8 Refer to architectural drawings for door and window openings, drips, reglets, washes, masonry anchors, brick ledge elevations, slab depressions and miscellaneous embedded plates, bolts, anchors, angles, etc.

4.9 Refer to plumbing, mechanical and electrical drawings for underfloor, perimeter and other drains and for sleeves, outlet boxes, conduit, anchors, etc. The various trades are responsible for their items.

4.10 Base plates, anchor rods, support angles and other steel exposed to earth or granular fill shall be covered with a minimum of 3" of concrete.

4.11 Fill slabs, not shown on the structural drawings, shall be reinforced with a minimum of 3.0 lbs/yd^3 of synthetic macro-fibers - see plan notes, unless noted otherwise on other drawings.

4.12 Finish surfaces to the following tolerances, according to ASTM E 1155, for a randomly trafficked floor surface:
a. Specified overall values of flatness, F(F) 25; and of levelness, F(L) 20; with minimum local values equal to ⅔ of the overall flatness and levelness values.
b. The composite F(F) and F(L) numbers shall be measured and reported within 72 hours after completion of slab concrete finishing operations and before removal of any supporting shores.

4.13 Non-shrink grout shall be pre-mixed, non-corrosive, non-metallic, non-staining containing silica sands, Portland cement, shrinkage compensating and water reducing agents. Product shall only require the addition of water. Minimum compressive strength shall be 2500 psi after one day and 7000 psi after 28 days. Grout shall be free of gas producing or air releasing and oxidizing agents and contain no corrosive iron, aluminum or gypsum.

4.14 Provide concrete grout - not mortar - for reinforced masonry lintel and bond beams where indicated on drawing or as scheduled.

4.15 Tolerance for anchor rods and other embedded items shall be per the AISC Code of Standard Practice Section 7.5.

4.16 Unless otherwise shown in the architectural drawings, provide 3/4-inch chamfers at all column, wall, slab or beam edges that are exposed to view in the finished structure.

4.17 Concrete cover for cast-in-place concrete reinforcement:
Concrete cast against & permanently exposed to earth:.....3 inches
Concrete exposed to earth or weather:
No. 6 through No. 18 Bars:.....2 Inches
No. 5 Bar and smaller:.....1½" Inches
Concrete not exposed to weather or in contact with ground:
Slabs, Walls, Joists:
No. 11 Bar and smaller:.....¾" Inches
Beams, Columns:
Primary Reinforcement, Ties, Stirrups:.....1½" Inches

5.0 REINFORCING STEEL:

5.1 Reinforcing shall be domestic new billet steel conforming to ASTM A615, Grade 60 or 60S including stirrups and ties, except that reinforcing which is required to be welded shall conform to ASTM A706.

5.2 Field bending of concrete reinforcing steel is not permitted.

5.3 Welded wire mat and fabric shall conform to ASTM A184 and A185 respectively and shall be provided in flat sheets. Welded wire mat/fabric shall be lapped 0"-6" at all splices.

5.4 Bar Splices:

	f'c = 3,000psi		f'c = 4,000psi		f'c = 5,000psi	
Bar Size	Ld (in)	Class "B" Lap Splice (in)	Ld (in)	Class "B" Lap Splice (in)	Ld (in)	Class "B" Lap Splice (in)
#3	17	22	15	19	13	17
#4	22	29	19	25	17	23
#5	28	36	24	31	22	28
#6	33	43	29	37	26	34
#7	48	63	42	54	38	49
#8	55	72	48	62	43	56

1. Values are based on normal weight concrete.
2. Ld = minimum embed of rebar
3. Class "B" lap splice refers to minimum distance bars must be lapped for a full tension splice.

6.0 GENERAL WOOD FRAMING NOTES:

6.1 All exterior and interior load bearing walls shall be as noted or approved equals:
2x6 SPF #2
See plans and load bearing wall schedule for locations, spacing, and load bearing studs species.
All sill and top plates shall be SYP #2 or better. Pressure treat all sill plates in contact with concrete or masonry.
All pressure treated 2x material shall be SYP #2 or better and shall be treated in accordance with AWPA Standard U1 to the requirements of Use Category 3B (UC3B) or Use Category 4A (UC4A).
All pressure treated Parallam shall be Truss Joist MacMillan, Weimanized Parallam PSL, or approved equal.
All pressure treated Glulam (GL) members shall be Rosboro Treated X-Beam 2400F$_b$-1.9E or approved equal.
All Glulams shall be Rosboro 24F-V4 or better.

6.2 All Laminated Veneer Lumber (LVL) shall be Louisiana Pacific, Gang-Lam 2950F$_b$-2.0E or approved equal.
All roof and floor I-Joists shall be Trus Joist TJI or Georgia-Pacific wood I beam or approved equal. The joist supplier shall also submit drawings for review prior to fabrication. The shop drawings shall show the following:
- Layout plan
- Bearing locations
- Hurricane clips and tie downs

6.3 Roof Deck/Diaphragm
- Roof sheathing shall be 5/8-inch exterior grade plywood.
- Place long direction perpendicular to framing
- Stagger end joints
- Provide roof sheathing clips, Simpson PSCL/PSCA or approved equal at all unsupported edges.
- Nail to supporting members with 10d ring shank @ 6" o.c. edges and 12" o.c. field..

6.4 All strap and tie connections shall have z-max (g185) triple zinc coating (or hot-dipped galvanized). All nails shall be hot-dipped galvanized.

6.5 Do not bend coil straps.

6.6 Unless noted otherwise, connect all building components per table 2304.9.1 - fastening schedule, per IBC 2015.

7.0 COLD-FORMED STEEL FRAMING (DIETRICH):

7.1 All members shall be designed in accordance with the American Iron and Steel Institute (AISI) "Specifications for the Design of Cold-formed Steel Structural Members", Latest Edition.

7.2 All framing members shall be formed from corrosion-resistant steel corresponding to the requirements of ASTM A446, with a minimum yield strength of 33 ksi for joists and studs and 33 ksi for runners.

7.3 All members shown are standard designations of "Dietrich Industries, Inc."

7.4 Design of members indicated in structural drawings is based on minimum properties of products produced by "Dietrich Industries." No substitution of materials is acceptable for use without prior approval of the structural engineer. Substitutions shall meet or exceed all properties produced by "Dietrich Industries, Inc."

7.5 All shop drawing submittals shall show layout, spacing, sizes, thicknesses and types of cold-formed metal framing, fabrication, and fastening and anchorage details, including mechanical fasteners. Show reinforcing channels, opening framing, supplemental framing, strapping, bracing, bridging, splices, accessories, connection details and attachment to adjoining work.

7.6 Shop drawings, design calculations and other structural data shall be prepared and sealed by a qualified engineer. The Structural Engineer shall be legally qualified to practice in the jurisdiction where the project is located and shall be experienced in providing engineering services of the kind indicated.

7.7 All framing components shall be cut squarely for attachment to perpendicular members or as required for an angular fit tight against abutting members. All load bearing stud/walls shall be factory assembled into panels with studs bearing squarely and fully in top and bottom tracks.

7.8 Fastening components shall be by self-drilling screws or by welding as defined below UNO on the drawings.

7.9 Screwed connections:
a. Screws shall be type S-12 or type S-4 for all framing members per manufacturer's recommendations.
b. A minimum of three (3) exposed threads shall penetrate through at joined materials.
c. Corrosion-resistant cadmium-plated screws shall be used for screws attaching metal lath, masonry ties, and other exterior materials.

7.10 Welded connections:
a. Gas metal arc welding (GMAW) shall be used for 20 ga. Or lighter members. AWSE-705-3, E-705-E, E-705-6 wire electrodes .030"-.035" diameter shall be used with carbon dioxide, argon-oxygen or argon-carbon dioxide shielding. Welding equipment 60-100 amperes at 25 volts using 220-volt 3-phase electric service.
b. Shielded metal arc welding (SMAW) shall be used for 18 ga" and heavier members. AWS E-6012, E-6013, or E-7014 electrodes of 3/32" or 1/8" diameter shall be used. Welding equipment heat setting shall be varied dependent on material thickness.
c. All welds shall be touched up with zinc rich paint, or paint similar to that used by the framing member manufacturer.

7.11 Alignment of studs (plumbness) and walls (straightness) shall be within 1/960 of their respective heights and lengths.

7.12 Studs shall be plumbed, aligned, and securely attached to top and bottom runners. Splices in studs are not permitted.

7.13 Where manufacturer's recommendations for erection, attachment, assembly, bracing, alignment, or other installation, or assembly requirements are more stringent than indicated in these drawings, the manufacturer's recommendations shall apply.

STEEL THICKNESS						
Gauge:	Mils	Design Thickness		Minimum Thickness		Yield Strength
		Inches	mm	Inches	mm	ksi
20	33	0.0346	0.879	0.0329	0.836	33
18	43	0.0451	1.146	0.0428	1.087	33
16	54	0.0566	1.438	0.0538	1.367	50
14	68	0.0713	1.811	0.0677	1.720	50
12	97	0.1017	2.583	0.0966	2.454	50

8.0 STRUCTURAL STEEL:

8.1 All structural steel shall be of the grades indicated below, unless noted otherwise on plans or details.
Rolled shapes ASTM A992 Gr. 50
Steel pipe ASTM A53, Type E or S, Grade B, Fy-35ksi
Structural tubing ASTM A500, Grade B, Fy-46ksi
Plates and bars ASTM A36 U.N.O.
Anchor rods ASTM F1554, Grade 36 U.N.O.
Miscellaneous ASTM A36 U.N.O.

8.2 All structural steel shall be detailed, fabricated and erected in accordance with the AISC Code of Standard Practice. The fabricator is responsible for the design of connections not shown on the structural drawings. For the purpose of the connection design, the fabricator shall retain a professional engineer registered in the state where the project is located. The engineer shall seal and sign each shop drawing containing connection design. A note shall accompany the drawings stating that the seal is for "Connection Design Only".

8.3 Connection Design:
a. Generally, connections shown on the drawings are schematic and are intended to show the relationship of the members.
b. Connections shall be designed for one-half (1/2) the allowable uniform load on the member, as defined in Part 3, "Allowable Loads on Beams" tables in the AISC "Manual of Steel Construction", 14th Edition, See plan notes for design methodology and minimum reactions.

8.4 Bolted connections:
a. Bearing type connections shall be snug tight with A325N or A490N bolts, U.N.O. Oversized and long-slotted holes are NOT permitted U.N.O. At single shear plate connections, provide bearing type fasteners with horizontal short slotted holes. All bolts shall be snug tight. DO NOT over torque bolts.
b. Protruding bolt heads, shafts or nuts shall not extend nor prohibit the application of architectural finishes or placement of steel deck at its correct location and elevation.
c. Connection designer is responsible for verifying the axial capacity after a section is reduced for bolt holes. Member size may be increased or plates added to maintain required capacity.
d. Bolted connections shall be assembled and inspected in accordance with RCSC-2009 (Specification for Structural Joints Using High-Strength Bolts).

8.5 Welded connections:
a. All welding shall be in accordance with the "Structural Welding Code - Steel" (AWS D1.1) of the American Welding Society, Latest Edition.
b. Electrodes for welding shall comply with the requirements of Table 4.1.1 of the AWS code.
c. At Moment Connections and Braced Frames Provide filler Metal that has a minimum CVN Toughness of 20 ft-lbs at minus 20 degrees F, As determined by AWS classification or Manufacturer Certification.
d. Proof of welder certification shall be available at the job site during times of inspection.

8.6 Minimum plate thickness shall be 3/8" U.N.O.; minimum bolt diameter shall be 3/4-inch U.N.O.; minimum shop weld shall be 3/16" and minimum field weld shall be 1/4-inch U.N.O.

8.7 All re-entrant corners (such as copes and blocks) shall be cut and shaped notch free with a radius of at least 1/2-inch.

9.0 STEEL DECK:

9.1 Steel roof deck shall be galvanized, Type N, 3" deep, 20 gauge, U.N.O.

9.2 For steel roof deck spans, mechanically fasten side laps at mid-span using "Buildex", self-tapping TEKS No. 10 or larger machine screws or as noted on plan.
Provide additional sidelap fasteners where noted on plan.
Fasten roof deck to supporting members as noted on plan.

9.3 Do not hang pipes or ducts from steel roof deck. Fasten roof deck to supporting members as noted on plan.

10.0 POST-INSTALLED ANCHORS:

10.1 Except where indicated on the drawings, post-installed anchors shall consist of the following anchor types as provided by HILTI, Inc. Contact HILTI at (800) 879-8000 for product related questions.

Anchorage to Concrete
a. Adhesive anchors for cracked and uncracked concrete use:
1. HILTI HIT-HY 200 Safe Set System with HILTI HIT-Z Rod per ICC ESR-3187 (pending).
2. HILTI HIT-HY 200 Safe Set System with HILTI Hollow Drill Bit System with HAS-E threaded rod per ICC ESR-3187.
3. HILTI HIT-RE 500-SD Epoxy Adhesive Anchoring system with HAS-E threaded rod per ICC ESR-2322 for slow cure applications.
b. Medium duty mechanical anchors for cracked and uncracked concrete use:
1. HILTI KWIK HUS EZ and KWIK HUS EZ-I Screw Anchors per ICC ESR-3027
2. HILTI KWIK BOLT-TZ Expansion Anchors per ICC ESR-1917
3. HILTI KWIK Bolt 3 Expansion Anchors (uncracked concrete only) per ICC ESR-2302
c. Heavy duty mechanical anchors for cracked and uncracked concrete use:
1. HILTI HDA Undercut Anchors per ICC ESR 1546
2. HILTI HSL-3 Expansion Anchors per ICC ESR 1545

Rebar Doweling into Concrete
a. Adhesive anchors for cracked and uncracked concrete use:
1. HILTI HIT-HY 200 Safe Set System with HILTI Hollow Drill Bit System with continuously deformed rebar per ICC ESR-3187.
2. HILTI HIT-RE 500-SD Epoxy Adhesive Anchoring System with continuously deformed rebar per ICC ESR-2322.

Anchorage to Solid Grouted Masonry
a. Adhesive Anchors use:
1. HILTI HIT-HY 70 Masonry Adhesive Anchoring System (ICC pending).
2. Steel anchor element shall be HILTI HAS-E continuously threaded rod or continuously deformed steel rebar.
b. Mechanical Anchors use:
1. HILTI KWIK BOLT-3 Expansion Anchors per ICC ESR 1385.

Anchorage to Hollow/Multi-wythe Masonry
a. Adhesive Anchors use:
1. HILTI HIT-HY 70 Masonry Adhesive Anchoring System per ICC ESR-3342.
2. Steel anchor element shall be HILTI HAS-E continuously threaded rod or continuously deformed steel rebar.
3. The appropriate size screen tube shall be used per adhesive manufacturer's recommendation.

10.2 Anchor capacity used in design shall be based on the technical data published by HILTI or such other method as approved by the Structural Engineer of record. Substitution requests for alternate products must be approved in writing by the Structural Engineer of record prior to use. Contractor shall provide calculations demonstrating that the substituted product is capable of achieving the performance values of the specified product. Substitutions will be evaluated by their having and ICC ESR showing compliance with the relevant building code for seismic uses, load resistance, installation category, and availability of comprehensive installation instructions. Adhesive anchor evaluation will also consider creep, in-service temperature and installation temperature.

10.3 Install anchors per the manufacturer instructions, as included in the anchor packaging.

10.4 Overhead adhesive anchors must be installed using the HILTI PROFI System.

10.5 The contractor shall arrange an anchor manufacturer's representative to provide onsite installation training for all of their anchoring products specified. The Structural Engineer of record must receive documented confirmation that all of the contractor's personnel who install anchors are trained prior to the commencement of installing anchors.

10.6 Anchor capacity is dependant upon spacing between adjacent anchors and proximity of anchors to edge of concrete. Install anchors in accordance with spacing and edge clearances indicated on the drawings.

10.7 Existing reinforcing bars in the concrete structure may conflict with specific anchor locations. Unless noted on the drawings that the bars can be cut, the contractor shall review the existing structural drawings and shall undertake to locate the position of the reinforcing bars at the locations of the concrete anchors, by HILTI FERROSCAN, GPR, X-ray, chipping or other means.

11.0 CONSTRUCTION AND SAFETY:

11.1 Woods Engineering P.A.'s responsibility is limited to the details and information shown on these drawings. It is the responsibility of the Contractor to provide adequate safety measures required by local codes as well as OSHA Standards for the Construction Industry. This should include, but not be limited to the following:
Shoring to protect new as well as existing structures.
Necessary Scaffolding.
Material Handling Equipment.
Trench Boxing.

12.0 SPECIAL INSPECTIONS:

12.1 Refer to Specification Section 014533 for all Special Inspections requirements.

13.0 SHOP DRAWING SUBMITTAL:

13.1 See Project Manual

13.2 Contractor shall submit Electronic copies (PDF format) of each shop drawing for review. Shop drawings shall be reviewed by the Contractor prior to submission to the Engineer. The Contractor shall allow 10 working days for shop drawing approval.

ABBREVIATIONS

@	AT	EOR	ENGINEER OF RECORD	NS	NEAR SIDE
&	AND	EQ	EQUAL	NTS	NOT TO SCALE
AB	ANCHOR BOLTS	EQUIP	EQUIPMENT	NWC	NORMAL WEIGHT CONCRETE
ACI	AMERICAN CONCRETE INSTITUTE	EF	EACH FACE	OC	ON CENTER
ADDL	ADDITIONAL	EJ	EXPANSION JOINT	OFB	OUTSIDE FACE OF BRICK
AFF	ABOVE FINISHED FLOOR	EOD	EDGE OF DECK	OFM	OUTSIDE FACE OF MASONRY
AISC	AMERICAN INSTITUTE OF STEEL CONSTRUCTION	EOM	EDGE OF MASONRY	OFS	OUTSIDE FACE OF STUD
		EOS	EDGE OF SLAB	OPNG	OPENING
AISI	AMERICAN IRON AND STEEL INSTITUTE	EOW	EDGE OF WALL	OPP	OPPOSITE HAND
		EW	EACH WAY	PEBS	PRE-ENGINEERED BUILDING SUPPLIER
ALT	ALTERNATE	EXIST	EXISTING		
ARCH	ARCHITECTS - ARCHITECTURAL	EXP	EXPANSION	PED	PEDESTAL
ASTM	AMERICAN SOCIETY FOR TESTING AND MATERIALS	EXT	EXTERIOR	PL	PLATE
		FDN	FOUNDATION	PSF	POUNDS PER SQUARE FOOT
AWS	AMERICAN WELDING SOCIETY	FFE	FINISHED FLOOR ELEVATION	PSI	POUNDS PER SQUARE INCH
B, BOTT	BOTTOM	FS	FAR SIDE	PSL	PARALLEL STRAND LUMBER
BCX	BOTTOM CHORD EXTENSION	FTG	FOOTING	PLF	POUNDS PER LINEAR FOOT
BFF	BELOW FINISHED FLOOR	GA	GAUGE	PT	PRESSURE TREATED
BLDG	BUILDING	GALV	GALVANIZED	REF	REFERENCE
BM	BEAM	GT	GIRDER TRUSS	REINF	REINFORCING
BOS	BOTTOM OF STEEL	HD	HEADED	REQD	REQUIRED
BRG	BEARING	HI	HIGH	(S)	SHORT SIDE REINFORCEMENT
BTWN	BETWEEN	HORIZ	HORIZONTAL	SB	SHORT BAR
CFS	COLD FORMED STEEL	HSS	HOLLOW STRUCTURAL SECTION	SCHD	SCHEDULE
CJ	CONTRACTION JOINT	HT	HIP TRUSS	SF	STEP FOOTING
CL	CENTERLINE	IFM	INSIDE FACE OF MASONRY	SIM	SIMILAR
CLR	CLEAR	INT	INTERIOR	SOG	SLAB ON GRADE
CMU	CONCRETE MASONRY UNITS	JBE	JOIST BEARING ELEVATION	SPEC(S)	SPECIFICATION(S)
COL	COLUMN	JT	JOINT	SPF	SPRUCE PINE FUR
CONC	CONCRETE	K	KIP-S	SQ	SQUARE
CONN	CONNECTION	KB	KICKER BRACE	STD	STANDARD
CONST JT	CONSTRUCTION JOINT	KSI	KIPS PER SQUARE INCH	STIFF	STIFFENER
CONT	CONTINUOUS	(L)	LONG SIDE REINFORCEMENT	STIRR	STIRRUP
CONTR	CONTRACTOR	LB	LONG BAR	STL	STEEL
CSJ	COMPOSITE STEEL JOIST	LBS	POUNDS	STR	STRUCTURAL
CTRD	CENTERED	LLH	LONG LEG HORIZONTAL	SW	SHEAR WALL
DBA	DEFORMED BAR ANCHOR	LLV	LONG LEG VERTICAL	SYP	SOUTHERN YELLOW PINE
DD	DELEGATED DESIGN	LO	LOW	T	TOP
DEFL	DEFLECTION	LOC	LOCATION	TCX	TOP CHORD EXTENSION
DEPR	DEPRESSION - DEPRESSED	LWC	LIGHT WEIGHT CONCRETE	TOC	TOP OF CONCRETE
DET	DETAIL	MAX	MAXIMUM	TOS	TOP OF STEEL
DIAG	DIAGONAL	MC	MOMENT CONNECTION	TOW	TOP OF WALL
ø	DIAMETER	MECH	MECHANICAL	TYP	TYPICAL
DIM	DIMENSION	MFR	MANUFACTURER	UNO	UNLESS NOTED OTHERWISE
DIST	DISTANCE	MID	MIDDLE	VB	VEHICLE BARRIER
DWG(S)	DRAWING(S)	MIN	MINIMUM	VERT	VERTICAL
DWL(S)	DOWEL(S)	MISC	MISCELLANEOUS	VIF	VERIFY IN FIELD
EA	EACH	MOW	MIDDLE OF WALL	W	WITH
ELEV	ELEVATION	MP	MASONRY PILASTER	WWF	WELDED WIRE FABRIC
EMBED	EMBEDDED - EMBEDMENT	#	NAILS - PENNY		
ENG	ENGINEER	No	NUMBER		

DO NOT SCALE DIGITAL OR HARD COPIES OF THESE DRAWINGS:

Unless Specifically Noted - Drawings, Plans, Sections, Details, Etc. are a graphic representation of the framing conditions and/or requirements.
Rebar lengths, bends & etc. SHALL NOT be determined by scaling any drawings included in this set of documents. Lengths & sizes shall be determined by the schedules only, or specifically requested if not numerically shown. Submit a written request to Woods Engineering, PA if further clarification is needed.

WOODS ENGINEERING
Consulting Structural Engineers
254 North Front Street Phone: 910.343.8007
Suite 201 Fax: 910.343.8088
Wilmington, NC 28401 www.woodseng.com

BOWMAN MURRAY HEMINGWAY
ARCHITECTS
514 Market Street
Wilmington, NC 28401
Tel - (910) 762-2621
Fax - (910) 762-8506

NORTH CAROLINA PROFESSIONAL ENGINEER SEAL 041563 WILLIAM L SISK
PERMIT DRAWINGS FOR REVIEW ONLY

THE DAVIS COMMUNITY
New Community Center
1011 Porter's Neck Road
Wilmington, North Carolina 28411

REV.	DATE	DESCRIPTION
	7-20-2020	PERMIT SET
NO.	DATE	ISSUE NOTE

Project Manager: ALS
Drawn By: MBK
Date: August 18 20, 2020
Reviewed By: ALS
Project ID: 20-3091

Sheet Title: General Notes

Sheet No.: S101

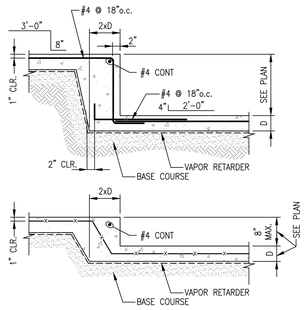

TYPICAL SLAB STEP
SCALE: 3/4" = 1'-0"

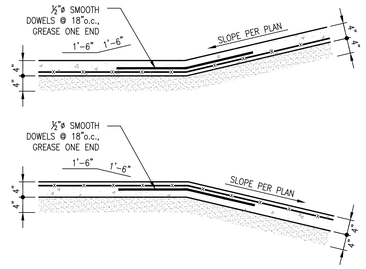

TYPICAL RAMP
AT SLAB ON GRADE
SCALE: 3/4" = 1'-0"

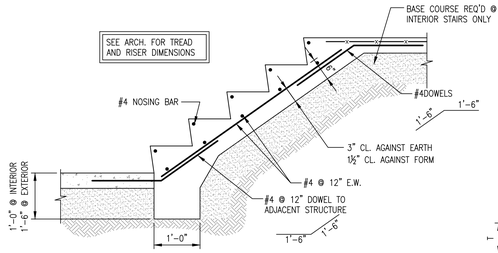

TYPICAL
STAIR ON GRADE
SCALE: 3/4" = 1'-0"

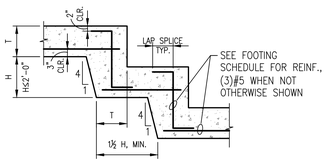

TYPICAL
STEP FOOTING DETAIL
SCALE: 1/2" = 1'-0"

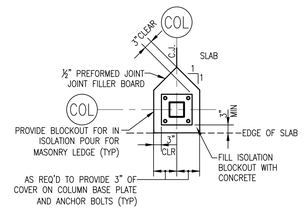

TYPICAL ISOLATION JOINT
AT SLAB EDGE
NOT TO SCALE

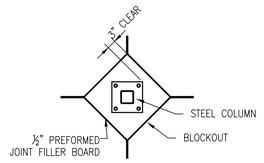

ISOLATION JOINT DETAIL
NOT TO SCALE

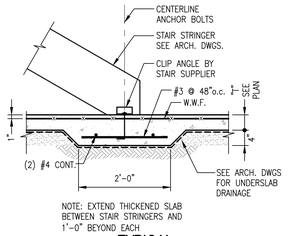

NOTE: EXTEND THICKENED SLAB BETWEEN STAIR STRINGERS AND 1'-0" BEYOND EACH

TYPICAL
THICKENED SLAB
SCALE: 3/4" = 1'-0"

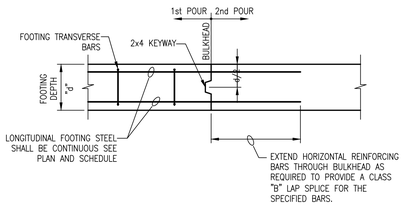

TYPICAL FOOTING CONSTRUCTION JOINT SECTION
SCALE: 3/4" = 1'-0"

ⓒ FOOTING CORNERS

ⓒ FOOTING INTERSECTION

TYPICAL CORNER
REINFORCING FOR CONCRETE FOOTINGS
SCALE: 3/4" = 1'-0"

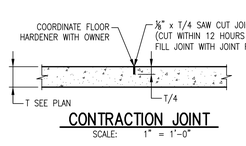

CONTRACTION JOINT
SCALE: 1" = 1'-0"

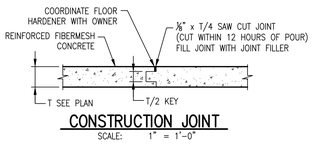

CONSTRUCTION JOINT
SCALE: 1" = 1'-0"

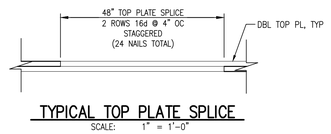

TYPICAL TOP PLATE SPLICE
SCALE: 1" = 1'-0"

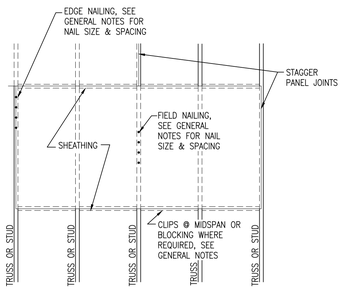

NAILING PATTERN FOR ROOF,
FLOOR, OR WALL SHEATHING
SCALE: 1/2" = 1'-0"

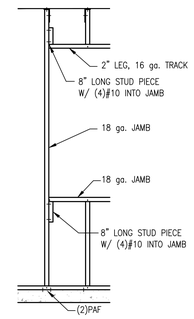

TYPICAL EXTERIOR WALL FRAMING
AT WINDOW OPENING UP TO 3'-4"
SCALE: 1/2" = 1'-0"

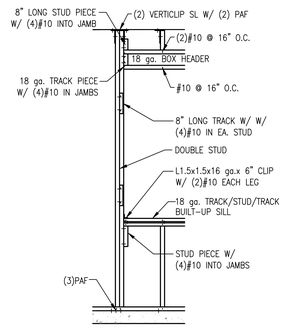

TYPICAL EXTERIOR WALL FRAMING
AT WINDOW OPENING UP TO 6'-4"
SCALE: 1/2" = 1'-0"

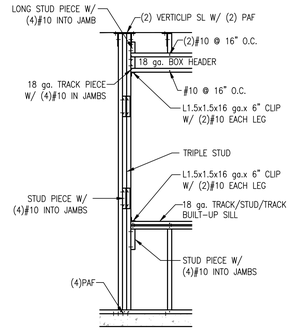

TYPICAL EXTERIOR WALL FRAMING
AT WINDOW OPENING UP TO 8'-8"
SCALE: 1/2" = 1'-0"

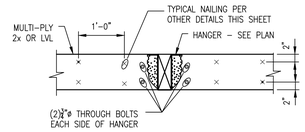

THREE & FOUR-PLY
SIDE-LOADED MEMBERS

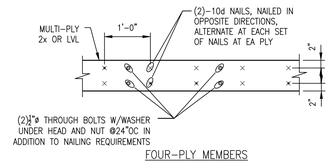

FOUR-PLY MEMBERS

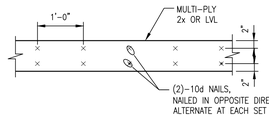

TWO-PLY AND THREE-PLY MEMBERS

TYPICAL NAILING PATTERN AT MULTI-PLY MEMBERS
SCALE: 3/4" = 1'-0"

TYPICAL LIGHT GAUGE CONSTRUCTION DETAILS FOR NON-LOAD BEARING EXTERIOR WALLS

NOTE: THESE DETAILS ARE GENERIC AND ARE FOR GENERAL INFORMATION AND BUDGET PRICING. ACTUAL DESIGN BY LIGHT GAUGE SUPPLIER AND ENGINEER.

GENERAL NOTE:
DETAILS SHOWN ON THIS SHEET ARE GENERIC IN NATURE AND MAY NOT PORTRAY EXACT CONDITIONS. THESE DETAILS ARE INTENDED TO PROVIDE GENERAL GUIDELINES FOR TYPICAL CONSTRUCTION CONDITIONS.

WOODS ENGINEERING
Consulting Structural Engineers
254 North Front Street Phone: 910.343.8007
Suite 201 Fax: 910.343.8088
Wilmington, NC 28401 www.woodseng.com

BOWMAN MURRAY HEMINGWAY
ARCHITECTS
514 Market Street
Wilmington, NC 28401
Tel - (910) 762-2621
Fax - (910) 762-8506

NORTH CAROLINA ENGINEERING PERMIT DRAWINGS FOR REVIEW ONLY NORTH CAROLINA

NORTH CAROLINA PROFESSIONAL SEAL 041563 ENGINEER ADAM L. SISK

THE DAVIS COMMUNITY
New Community Center
1011 Porter's Neck Road
Wilmington, North Carolina 28411

REV.	DATE	DESCRIPTION
	7-20-2020	PERMIT SET
NO.	DATE	ISSUE NOTE

Project Manager: ALS	Drawn By: MBK
Date: August 18 20, 2020	Reviewed By: ALS
Project ID: 20-3091	

Sheet Title: Typical Details

Sheet No.: S102

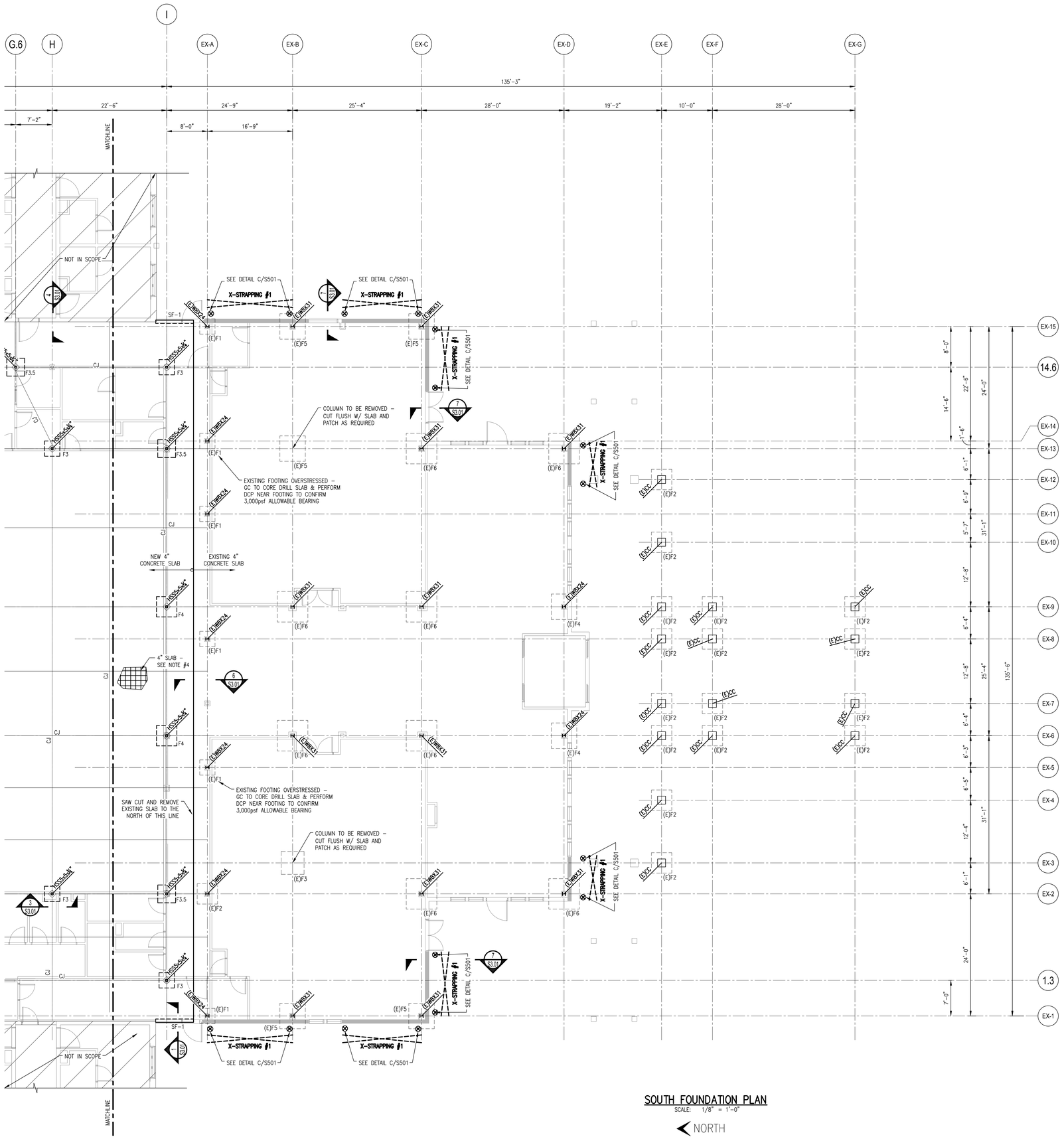

SOUTH FOUNDATION PLAN

SCALE: 1/8" = 1'-0"

NORTH

FOUNDATION PLAN NOTES:

1. SEE S1.0 SERIES SHEETS FOR ADDITIONAL GENERAL NOTES, MATERIAL NOTES AND MATERIAL SPECIFICATIONS. ALSO, SEE S1.0 SERIES SHEETS FOR TYPICAL DETAILS. TYPICAL DETAILS ARE GENERALLY NOT SHOWN ON PLAN BUT RATHER ARE INTENDED TO DEFINE TYPICAL CONSTRUCTION CONDITIONS.
2. DATUM ELEVATION = TOP OF SLAB ELEVATION = ASSUMED 0'-0" = ?'-?" M.S.L. OTHER ELEVATIONS ARE NOTED AS (+ OR -) FROM DATUM ELEVATION.
3. TOP OF FOOTINGS SHALL BE (-2'-0") FROM DATUM ELEVATION, U.N.O.
4. SLAB-ON-GRADE SHALL BE 4" THICK 3000 psi CONCRETE WITH 3.0lbs/yd.^{3} OF SYNTHETIC MACRO-FIBERS (TUF-STRAND SF BY EUCLID, FIBER MAC SERIES BY BASF, OR FORTA-FERRO BY FORTA CORP, OR APPROVED EQUAL) ON 15 mil VAPOR RETARDER, ON 4" WELL COMPACTED GRANULAR FILL ON WELL COMPACTED SUB GRADE. VERIFY COMPACTION WITH QUALIFIED GEOTECHNICAL ENGINEER
5. REFER TO ARCHITECTURAL, MECHANICAL, ELECTRICAL, PLUMBING, AND OTHER DISCIPLINE DRAWINGS FOR OPENINGS AND DEPRESSIONS NOT SHOWN ON THESE DRAWINGS.
6. RELOCATE ANY UTILITY LINES THAT CONFLICT WITH THE FOUNDATIONS OR DROP THE FOUNDATIONS TO AN ELEVATION BELOW THE PROPOSED UTILITIES. RELOCATE ANY GRAVITY FLOW LINES THAT CONFLICT WITH SPREAD FOOTINGS AS SHOWN ON STRUCTURAL FOUNDATION PLANS. IF A GRAVITY FLOW LINE TRAVELS UNDER A CONTINUOUS STRIP FOOTING EITHER:
   a. DROP THE FOOTING ELEVATION BELOW THE PROPOSED LINE.
   b. ENCASE THE LINE IN A STEEL PIPE 2" LARGER IN DIAMETER THAN THE LINE AND EXTEND THE PIPE 1'-0" PAST EACH SIDE OF THE CONCRETE FOOTING. BACKFILL THE TRENCH WITH #57 STONE. THE BEARING CAPACITY OF THIS AREA MUST MEET OR EXCEED THE ALLOWABLE SOIL BEARING CAPACITY.
7. DIMENSIONS ARE FROM EDGE OF SLAB (E.O.S.) AND OUTSIDE FACE OF STUD (O.F.S.) / CURTAINWALL (O.F.CW.) TO COLUMN CENTERLINE UNLESS NOTED OTHERWISE.
8. S.F. = STEP FOOTING, SEE TYPICAL DETAIL ON S1.0 SERIES SHEETS – G.C. TO COORDINATE STEPS IN FOUNDATION FOR PLUMBING, ELECTRICAL AND MECHANICAL.
9. SEE S5.0 SERIES SHEETS FOR X-STRAPPING INFORMATION AND REQUIREMENTS.
10. WHEN A SECTION IS CUT OR A DETAIL IS LABELED FOR A PARTICULAR CONDITION, THAT SECTION OR DETAIL SHALL APPLY FOR ALL SIMILAR CONDITIONS REGARDLESS OF WHETHER CUT OR LABELED, U.N.O.

FOUNDATION LEGEND:

- (E)FX — EXISTING SPREAD FOOTING
- (E)SF — EXISTING STRIP FOOTING
- EXISTING 6" CMU WALL
- (E)WXX — EXISTING STEEL COLUMN – SEE PLAN FOR SIZE AND LOCATION
- 0 — GRID DESIGNATION FOR CENTERLINE OF COLUMN U.N.O.
- CJ — INDICATES CONCRETE SLAB CONTRACTION JOINTS, SEE S1.0 SERIES SHEETS FOR TYPICAL DETAILS. SEE PLAN FOR LOCATIONS. MAXIMUM SPACING = ±12' IN BOTH DIRECTIONS.
- HSSX-X BP-X — STEEL COLUMN – SEE PLAN FOR SIZE AND LOCATION SEE S3.0 SERIES SHEETS FOR BASE PLATE DETAILS (BP-x)
- FX — SPREAD FOOTING DESIGNATION SEE SCHEDULE THIS SHEET
- SF-X — STRIP FOOTING DESIGNATION SEE SCHEDULE THIS SHEET
- INDICATES X-STRAPPING HOLDOWN – SEE DETAIL B/S501 TYP., U.N.O.
- X-STRAPPING — INDICATES CFS X-STRAPPING – SEE S5.0 SERIES SHEETS
- HATCH INDICATES EXISTING STRUCTURE TO REMAIN AND EXISTING DROPPED SLAB
- HATCH INDICATES NEW DROPPED SLAB TO MATCH EXISTING ADJACENT DROPPED SLAB

EXISTING SPREAD FOOTING ((E)FX) SCHEDULE

MARK	SIZE length x width x thickness	TOP BARS	REMARKS
(E)F1	3'-0" x 3'-0" x 1'-0"	(4) #5 E.W.	
(E)F2	4'-0" x 4'-0" x 1'-0"	(4) #5 E.W.	
(E)F3	4'-6" x 4'-6" x 1'-0"	(4) #5 E.W.	
(E)F4	5'-0" x 5'-0" x 1'-0"	(5) #5 E.W.	
(E)F5	5'-0" x 5'-0" x 1'-4"	(5) #5 E.W. T&B	
(E)F6	6'-0" x 6'-0" x 1'-4"	(6) #5 E.W. T&B	
(E)F7	2'-0" x 5'-0" x 1'-0"	(4) #5 E.W. T&B	

SPREAD FOOTING (FX) SCHEDULE

MARK	SIZE width x length x thickness	REINFORCEMENT TOP BARS EACH WAY (U.N.O.)	REINFORCEMENT BOTTOM BARS EACH WAY (U.N.O.)	REMARKS
F3	3'-0" x 3'-0" x 1'-0"	(3) #4	(3) #5	
F3.5	3'-6" x 3'-6" x 1'-0"	(3) #4	(3) #5	
F4	4'-0" x 4'-0" x 1'-0"	(4) #4	(4) #5	
F4.5	4'-6" x 4'-6" x 1'-0"	(4) #4	(4) #5	
F5	5'-0" x 5'-0" x 1'-0"	(4) #4	(5) #5	

STRIP FOOTING (SF-X) SCHEDULE

MARK	SIZE width x thickness x length	REINFORCEMENT TOP BARS	REINFORCEMENT BOTTOM BARS	REMARKS
SF-1	0'-8" x 2'-0" x CONT.	(1) #4 CONT.	(1) #4 CONT.	
SF-2	2'-0" x 2'-0" x CONT.	(4) #4 CONT.	(4) #5 CONT.	

WOODS ENGINEERING
Consulting Structural Engineers
254 North Front Street, Suite 201, Wilmington, NC 28401
Phone: 910.343.8007
Fax: 910.343.8088
www.woodseng.com

BOWMAN MURRAY HEMINGWAY
ARCHITECTS
514 Market Street
Wilmington, NC 28401
Tel - (910) 762-2621
Fax - (910) 762-8506

NORTH CAROLINA ENGINEERING — PERMIT DRAWINGS FOR REVIEW ONLY — NOT FOR CONSTRUCTION

NORTH CAROLINA PROFESSIONAL ENGINEER SEAL 041563 WILLIAM L. STICK

THE DAVIS COMMUNITY
New Community Center
1011 Porter's Neck Road
Wilmington, North Carolina 28411

REV.	DATE	DESCRIPTION

NO.	DATE	ISSUE NOTE
	7-20-2020	PERMIT SET

Project Manager	Drawn By
ALS	MBK
Date	Reviewed By
August 18 20, 2020	ALS
Project ID	
20-3091	

Sheet Title: South Foundation Plan

Sheet No.: S201

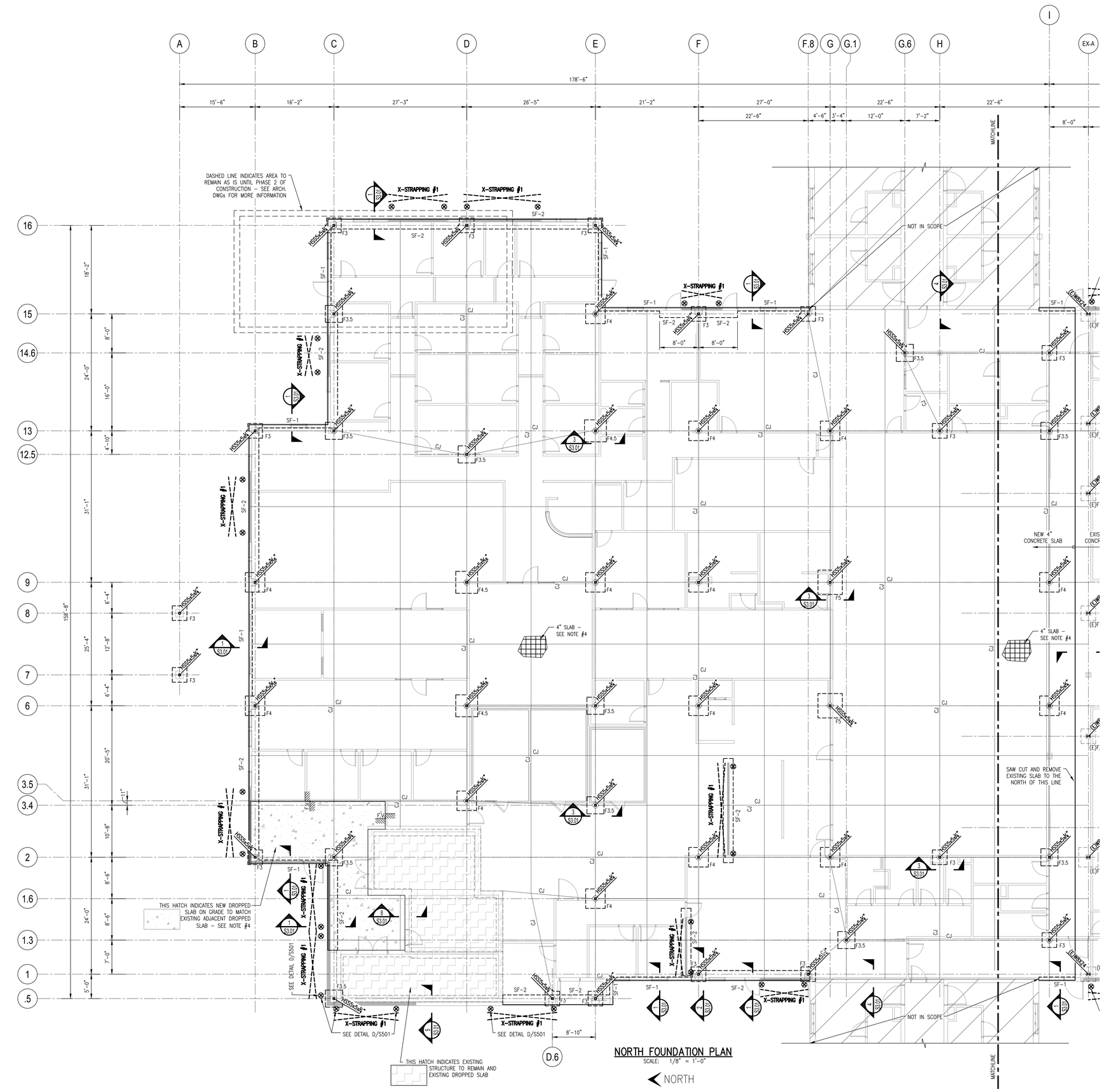

NORTH FOUNDATION PLAN

SCALE: 1/8" = 1'-0"

NORTH

FOUNDATION PLAN NOTES:

1. SEE S1.0 SERIES SHEETS FOR ADDITIONAL GENERAL NOTES, MATERIAL NOTES AND MATERIAL SPECIFICATIONS. ALSO, SEE S1.0 SERIES SHEETS FOR TYPICAL DETAILS. TYPICAL DETAILS ARE GENERALLY NOT SHOWN ON PLAN BUT RATHER ARE INTENDED TO DEFINE TYPICAL CONSTRUCTION CONDITIONS.
2. DATUM ELEVATION = TOP OF SLAB ELEVATION = ASSUMED 0'-0" = 7'-7" M.S.L. OTHER ELEVATIONS ARE NOTED AS (+ OR –) FROM DATUM ELEVATION.
3. TOP OF FOOTINGS SHALL BE (–2'-0") FROM DATUM ELEVATION, U.N.O.
4. SLAB-ON-GRADE SHALL BE 4" THICK 3000 psi CONCRETE WITH 3.0lbs/yd.³ OF SYNTHETIC MACRO-FIBERS (TUF-STRAND SF BY EUCLID, FIBER MAC SERIES BY BASF, OR FORTA-FERRO BY FORTA CORP, OR APPROVED EQUAL) ON 15 mil VAPOR RETARDER, ON 4" WELL COMPACTED GRANULAR FILL ON WELL COMPACTED SUB GRADE. VERIFY COMPACTION WITH QUALIFIED GEOTECHNICAL ENGINEER
5. REFER TO ARCHITECTURAL, MECHANICAL, ELECTRICAL, PLUMBING, AND OTHER DISCIPLINE DRAWINGS FOR OPENINGS AND DEPRESSIONS NOT SHOWN ON THESE DRAWINGS.
6. RELOCATE ANY UTILITY LINES THAT CONFLICT WITH THE FOUNDATIONS OR DROP THE FOUNDATIONS TO AN ELEVATION BELOW THE PROPOSED UTILITIES. RELOCATE ANY GRAVITY FLOW LINES THAT CONFLICT WITH SPREAD FOOTINGS AS SHOWN ON STRUCTURAL FOUNDATION PLANS. IF A GRAVITY FLOW LINE TRAVELS UNDER A CONTINUOUS STRIP FOOTING EITHER:
   a. DROP THE FOOTING ELEVATION BELOW THE PROPOSED LINE.
   b. ENCASE THE LINE IN A STEEL PIPE 2" LARGER IN DIAMETER THAN THE LINE AND EXTEND THE PIPE 1'-0" PAST EACH SIDE OF THE CONCRETE FOOTING. BACKFILL THE TRENCH WITH #57 STONE. THE BEARING CAPACITY OF THIS AREA MUST MEET OR EXCEED THE ALLOWABLE SOIL BEARING CAPACITY.
7. DIMENSIONS ARE FROM EDGE OF SLAB (E.O.S.) AND OUTSIDE FACE OF STUD (O.F.S.) / CURTAINWALL (O.F.CW.) TO COLUMN CENTERLINE UNLESS NOTED OTHERWISE.
8. S.F. = STEP FOOTING, SEE TYPICAL DETAIL ON S1.0 SERIES SHEETS – G.C. TO COORDINATE STEPS IN FOUNDATION FOR PLUMBING, ELECTRICAL AND MECHANICAL.
9. SEE S5.0 SERIES SHEETS FOR X-STRAPPING INFORMATION AND REQUIREMENTS.
10. WHEN A SECTION IS CUT OR A DETAIL IS LABELED FOR A PARTICULAR CONDITION, THAT SECTION OR DETAIL SHALL APPLY FOR ALL SIMILAR CONDITIONS REGARDLESS OF WHETHER CUT OR LABELED, U.N.O.

FOUNDATION LEGEND:

- (E)FX — EXISTING SPREAD FOOTING
- (E)SF — EXISTING STRIP FOOTING
- EXISTING 6" CMU WALL
- (E)WX — EXISTING STEEL COLUMN – SEE PLAN FOR SIZE AND LOCATION
- 0 — GRID DESIGNATION FOR CENTERLINE OF COLUMN U.N.O.
- CJ — INDICATES CONCRETE SLAB CONTRACTION JOINTS, SEE S1.0 SERIES SHEETS FOR TYPICAL DETAILS. SEE PLAN FOR LOCATIONS. MAXIMUM SPACING = ±12' IN BOTH DIRECTIONS.
- HSS5x5x4 BP-x — STEEL COLUMN – SEE PLAN FOR SIZE AND LOCATION SEE S3.0 SERIES SHEETS FOR BASE PLATE DETAILS (BP-x)
- FX — SPREAD FOOTING DESIGNATION SEE SCHEDULE THIS SHEET
- SF-X — STRIP FOOTING DESIGNATION SEE SCHEDULE THIS SHEET
- INDICATES X-STRAPPING HOLDOWN – SEE DETAIL B/S501 TYP., U.N.O.
- X-STRAPPING — INDICATES CFS X-STRAPPING – SEE S5.0 SERIES SHEETS
- HATCH INDICATES EXISTING STRUCTURE TO REMAIN AND EXISTING DROPPED SLAB
- HATCH INDICATES NEW DROPPED SLAB TO MATCH EXISTING ADJACENT DROPPED SLAB

EXISTING SPREAD FOOTING ((E)FX) SCHEDULE

MARK	SIZE length x width x thickness	TOP BARS	REMARKS
(E)F1	3'–0" x 3'–0" x 1'–0"	(4) #5 E.W.	
(E)F2	4'–0" x 4'–0" x 1'–0"	(4) #5 E.W.	
(E)F3	4'–6" x 4'–6" x 1'–0"	(4) #5 E.W.	
(E)F4	5'–0" x 5'–0" x 1'–0"	(5) #5 E.W.	
(E)F5	5'–0" x 5'–0" x 1'–4"	(5) #5 E.W. T&B	
(E)F6	6'–0" x 6'–0" x 1'–4"	(6) #5 E.W. T&B	
(E)F7	2'–0" x 5'–0" x 1'–0"	(4) #5 E.W. T&B	

SPREAD FOOTING (FX) SCHEDULE

MARK	SIZE width x length x thickness	REINFORCEMENT TOP BARS EACH WAY (U.N.O.)	REINFORCEMENT BOTTOM BARS EACH WAY (U.N.O.)	REMARKS
F3	3'–0" x 3'–0" x 1'–0"	(3) #4	(3) #5	
F3.5	3'–6" x 3'–6" x 1'–0"	(3) #4	(3) #5	
F4	4'–0" x 4'–0" x 1'–0"	(4) #4	(4) #5	
F4.5	4'–6" x 4'–6" x 1'–0"	(4) #4	(4) #5	
F5	5'–0" x 5'–0" x 1'–0"	(4) #4	(5) #5	

STRIP FOOTING (SF-X) SCHEDULE

MARK	SIZE width x thickness x length	REINFORCEMENT TOP BARS	REINFORCEMENT BOTTOM BARS	REMARKS
SF-1	0'–8" x 2'–0" x CONT.	(1) #4 CONT.	(1) #4 CONT.	
SF-2	2'–0" x 2'–0" x CONT.	(4) #4 CONT.	(4) #5 CONT.	

WOODS ENGINEERING
Consulting Structural Engineers
254 North Front Street Phone: 910.343.8007
Suite 201 Fax: 910.343.8088
Wilmington, NC 28401 www.woodseng.com

BOWMAN MURRAY HEMINGWAY
ARCHITECTS
514 Market Street
Wilmington, NC 28401
Tel - (910) 762-2621
Fax - (910) 762-8506

NORTH CAROLINA PROFESSIONAL ENGINEERING — PERMIT DRAWINGS FOR REVIEW ONLY — NOT FOR CONSTRUCTION

NORTH CAROLINA PROFESSIONAL SEAL 041563 ENGINEER WILLIAM L. SISK

THE DAVIS COMMUNITY
New Community Center
1011 Porter's Neck Road
Wilmington, North Carolina 28411

REV.	DATE	DESCRIPTION
	7-20-2020	PERMIT SET

NO.	DATE	ISSUE NOTE

Project Manager: ALS	Drawn By: MBK
Date: August 18 20, 2020	Reviewed By: ALS
Project ID: 20-3091	

Sheet Title: North Foundation Plan

Sheet No.: S202

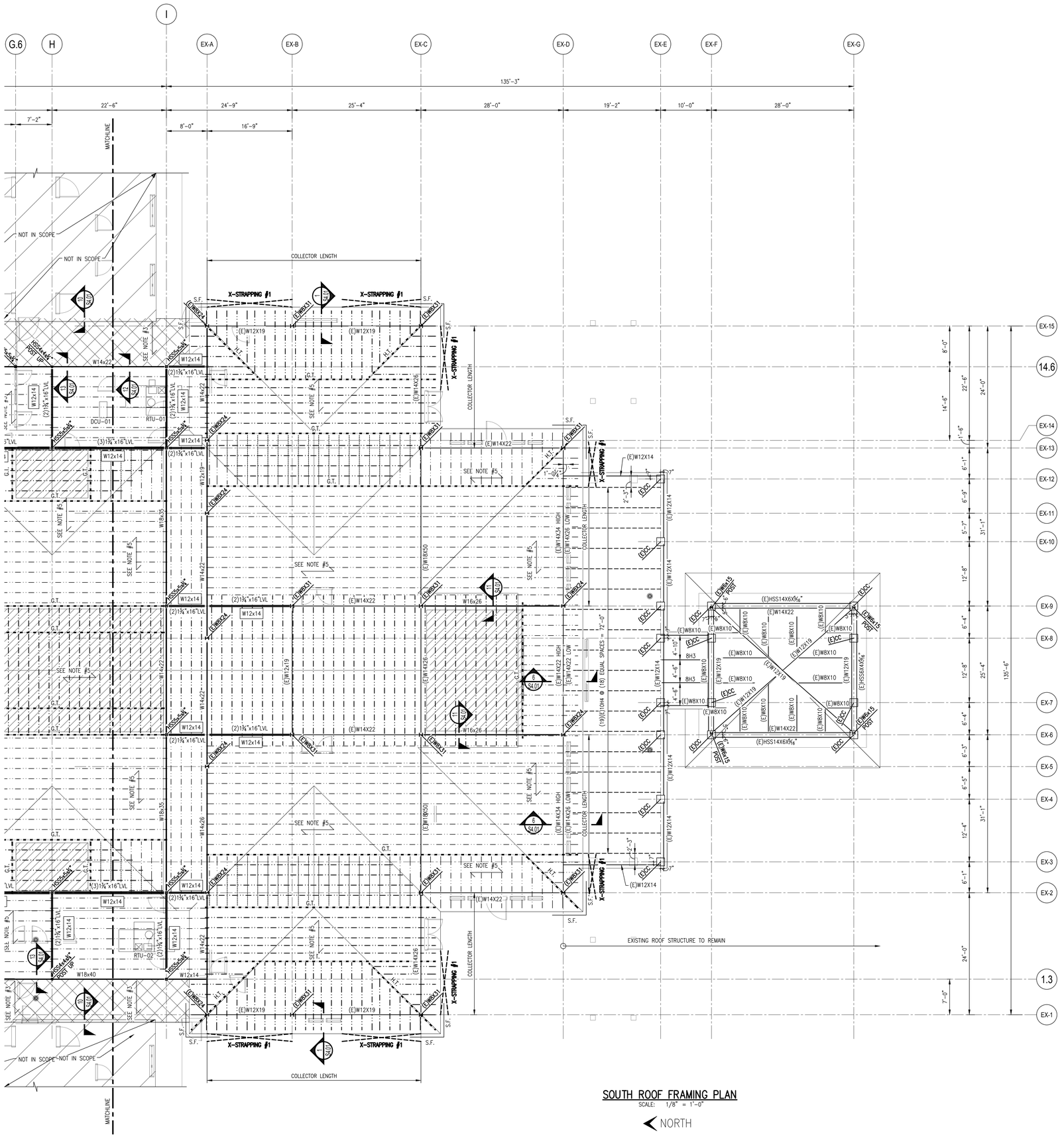
I
G.6
H
EX-A
EX-B
EX-C
EX-D
EX-E
EX-F
EX-G
135'-3"
22'-6"
24'-9"
25'-4"
28'-0"
19'-2"
10'-0"
28'-0"
7'-2"
8'-0"
16'-9"
MATCHLINE
NOT IN SCOPE
NOT IN SCOPE
COLLECTOR LENGTH
X-STRAPPING #1
X-STRAPPING #1
X-STRAPPING #1
(E)W12X19
(E)W12X19
(E)W14X22
(E)W14X26
(E)W14X22
(E)W14X22
(E)W14X22
(E)W14X22
(E)W12X14
(E)W12X14
(E)W18X50
(E)W18X50
(E)W12X19
(E)W12X19
(E)W12X19
(E)W12X19
(E)W14X22 HIGH
(E)W14X26 LOW
(E)W14X22 HIGH
(E)W14X26 LOW
(19)(E)10X14 @ (18) EQUAL SPACES = 72'-0"
W16x26
W16x26
W18x35
W18x35
W18x40
W14x22
W14x22
W14x22
W14x26
W12x19
W12x14
W12x14
W12x14
W12x14
W12x14
W12x14
W12x14
W12x14
W12x14
W12x14
W12x14
W12x14
W12x14
W12x14
(2)1¾"x16"LVL
(2)1¾"x16"LVL
(2)1¾"x16"LVL
(2)1¾"x16"LVL
(2)1¾"x16"LVL
(2)1¾"x16"LVL
(3)1¾"x16"LVL
(3)1¾"x16"LVL
HSS5x5x¼
HSS5x5x¼
HSS5x5x¼

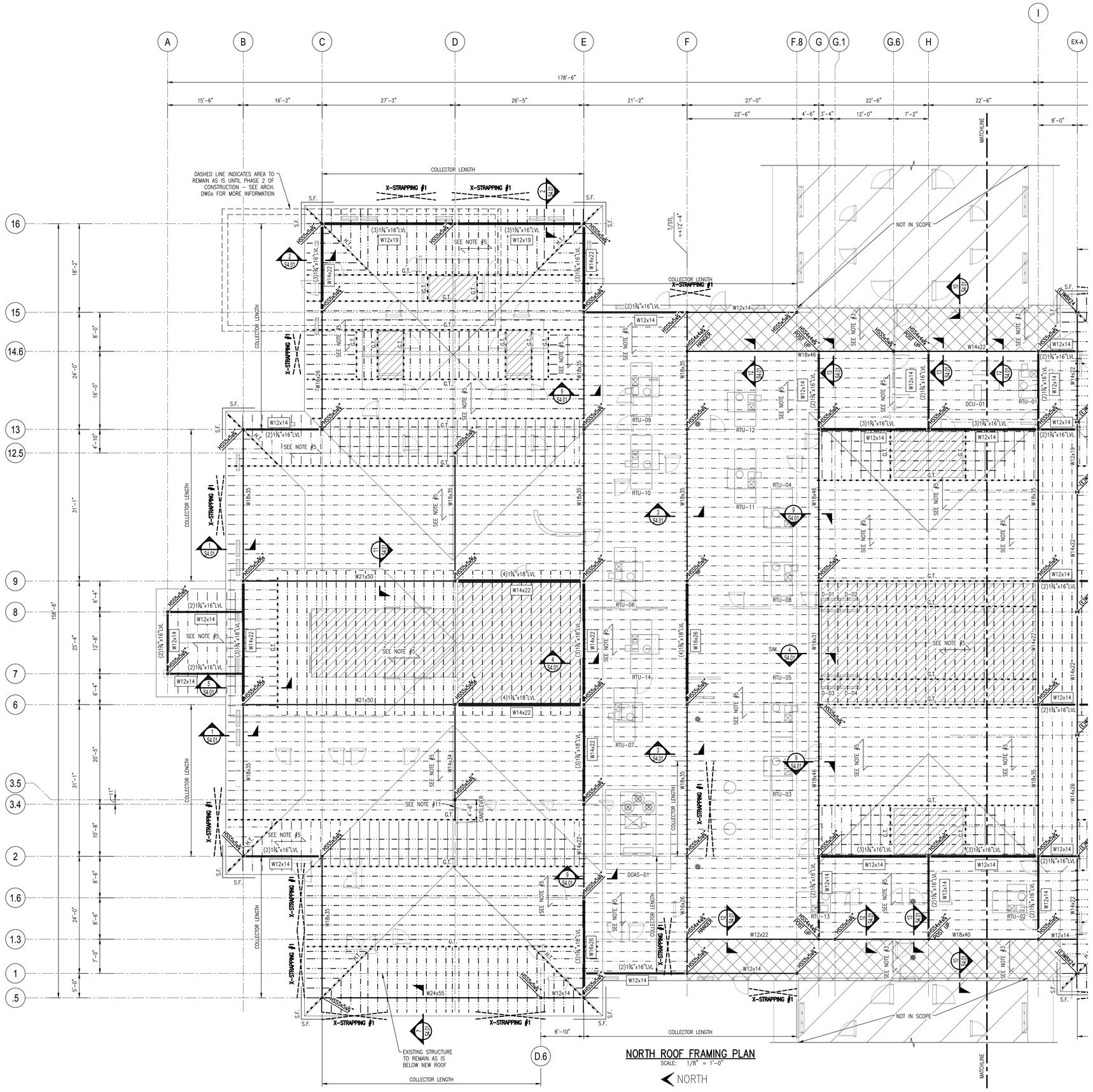

NORTH ROOF FRAMING PLAN

SCALE: 1/8" = 1'-0"

NORTH

ROOF FRAMING PLAN NOTES

1. SEE S1.0 SERIES SHEETS FOR ADDITIONAL GENERAL NOTES, MATERIAL NOTES AND MATERIAL SPECIFICATIONS. ALSO, SEE S1.0 SERIES SHEETS FOR TYPICAL DETAILS. TYPICAL DETAILS ARE GENERALLY NOT SHOWN ON PLAN BUT RATHER ARE INTENDED TO DEFINE TYPICAL CONSTRUCTION CONDITIONS.
2. ELEVATIONS SHOWN ON PLAN ARE REFERENCED TO DATUM ELEVATION (0'-0") – SEE S2.01.
3. TYPICAL ROOF DECK IS 3" DEEP, 20 ga., GALVANIZED, TYPE 'N' METAL ROOF DECK.
4. METAL ROOF DECK SHALL BE ATTACHED TO SUPPORTING MEMBERS WITH HILTI X-HSN 24 FOR STEEL THICKNESS EQUAL TO OR LESS THAN 3/8" AND HILTI X-ENP 19 OTHERWISE IN A 36/4 PATTERN U.N.O. ON PLAN.

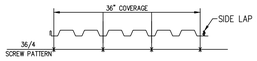

5. ROOF SHEATHING SHALL BE 5/8" EXTERIOR GRADE PLYWOOD SPAN AS NOTED ON PLAN. PLACE LONG DIMENSION PERPENDICULAR TO FRAMING.
6. SEE S5.0 SERIES SHEETS FOR BRACE FRAME INFORMATION.
7. TOP OF STEEL ELEVATION = +13'-0" U.N.O.
   TRUSS BEARING ELEVATION = +13'-0" U.N.O.
8. EXISTING STEEL WILL BE LOWERED AT COLUMN CONNECTIONS TO ACHIEVE CORRECT TOP OF STEEL ELEVATION – SEE SD2.0x SERIES SHEETS FOR MORE INFORMATION
9. WHEN A SECTION IS CUT OR A DETAIL IS LABELED FOR A PARTICULAR CONDITION, THAT SECTION OR DETAIL SHALL APPLY FOR ALL SIMILAR CONDITIONS REGARDLESS OF WHETHER CUT OR LABELED, U.N.O.
10. TRUSS DESIGNER TO COORDINATE WEIGHT AND LOCATION OF ROOF TOP MECHANICAL UNITS WITH MECHANICAL DRAWINGS. SEE SECTION 8/S4.01 FOR TYPICAL ROOF TOP MECHANICAL CURB DETAIL.
    RTU1 – RTU14 WEIGHT = 512 lbs
    DOAS-01 WEIGHT = 4,410 lbs
11. CANTILEVER BEAM OVER COLUMN. PROVIDE ¼" WEB STIFFENERS EACH SIDE OF BEAM CENTERED OVER COLUMN.

ROOF FRAMING LEGEND

- (E)WxxC — EXISTING STEEL COLUMN – SEE PLAN FOR SIZE AND LOCATION
- (E)DC — EXISTING CONCRETE COLUMN – SEE PLAN FOR LOCATION
- (E)W_x_ — EXISTING STEEL BEAM – SEE PLAN FOR SIZE AND LOCATION
- EXISTING JOIST – SEE PLAN FOR SIZE AND LOCATION
- EXISTING 6" CMU WALL
- 0 — GRID DESIGNATION FOR CENTERLINE OF COLUMN U.N.O.
- WOOD ROOF TRUSSES @ 24"o.c. U.N.O.
- HSSxxx — STEEL COLUMN – SEE PLAN FOR SIZE AND LOCATION
- W_x_ — STEEL BEAM – SEE PLAN FOR SIZE AND LOCATION
- W_x_ — INDICATES STEEL BEAM OPTIONS IN LIEU OF LVLs
- Bx — WOOD BEAM – SEE PLAN FOR SIZE AND LOCATION
- G.T. — INDICATES GIRDER TRUSS SEE SCHEDULE THIS SHEET
- H.T. — INDICATES HIP TRUSS SEE SCHEDULE THIS SHEET
- HATCH INDICATES METAL ROOF DECK – SEE PLAN FOR SPAN DIRECTION AND NOTE #3
- HATCH INDICATES HIGH CEILING AREAS – COORDINATE WITH ARCH.
- X-STRAPPING — INDICATES CFS X-STRAPPING – SEE S5.0 SERIES SHEETS
- S.F. — STRUCTURAL FASCIA – 2x6 min. NAIL TO TRUSS ENDS W/(2) 16d min.

WOODS ENGINEERING
Consulting Structural Engineers
254 North Front Street, Suite 201, Wilmington, NC 28401
Phone: 910.343.8007
Fax: 910.343.8088
www.woodseng.com

BOWMAN MURRAY HEMINGWAY ARCHITECTS
514 Market Street
Wilmington, NC 28401
Tel - (910) 762-2621
Fax - (910) 762-8506

NORTH CAROLINA ENGINEERING PERMIT DRAWINGS FOR REVIEW ONLY NOT FOR CONSTRUCTION

NORTH CAROLINA PROFESSIONAL SEAL 041563 ENGINEER ADAM L. SISK

THE DAVIS COMMUNITY
New Community Center
1011 Porter's Neck Road
Wilmington, North Carolina 28411

REV.	DATE	DESCRIPTION
	7-20-2020	PERMIT SET
NO.	DATE	ISSUE NOTE

Project Manager: ALS	Drawn By: MBK
Date: August 18 20, 2020	Reviewed By: ALS
Project ID: 20-3091	

Sheet Title: North Roof Framing Plan

Sheet No.: S204

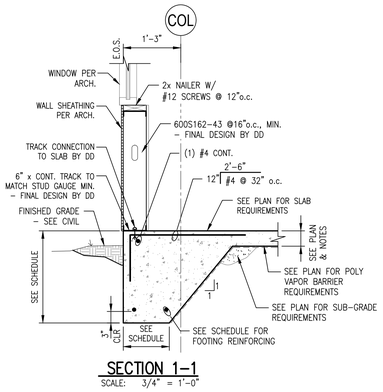

SECTION 1–1
SCALE: 3/4" = 1'-0"

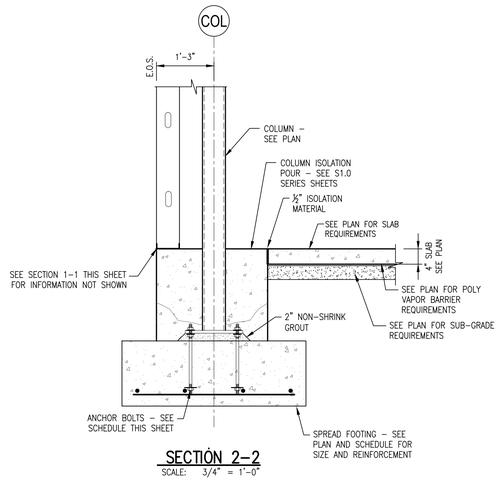

SECTION 2–2
SCALE: 3/4" = 1'-0"

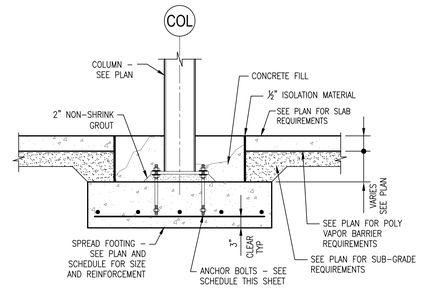

SECTION 3–3
SCALE: 3/4" = 1'-0"

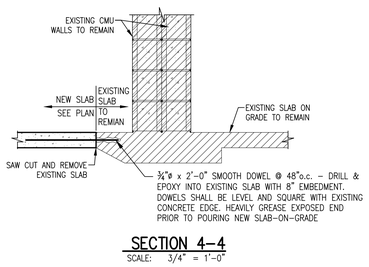

SECTION 4–4
SCALE: 3/4" = 1'-0"

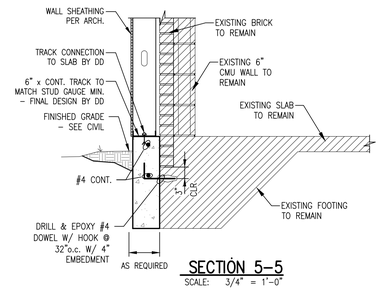

SECTION 5–5
SCALE: 3/4" = 1'-0"

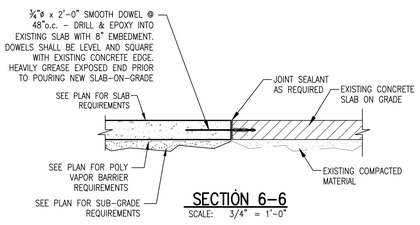

SECTION 6–6
SCALE: 3/4" = 1'-0"

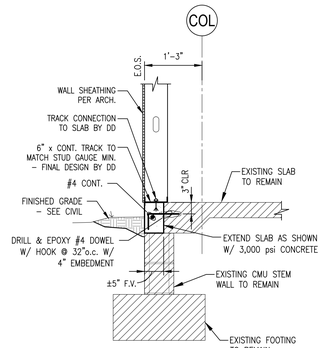

SECTION 7–7
SCALE: 3/4" = 1'-0"

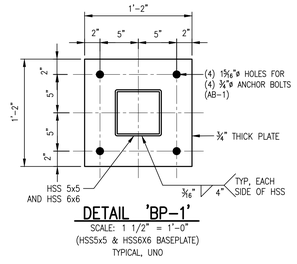

DETAIL 'BP–1'
SCALE: 1 1/2" = 1'-0"
(HSS5x5 & HSS6X6 BASEPLATE)
TYPICAL, UNO

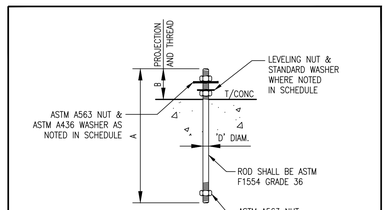

ANCHOR BOLT SCHEDULE

MARK	BOLT DIAM. D	HOLE DIAMETER	A	B	WASHER O.D. x t	LEVELING NUT	REMARKS
AB–1	¾"	1⅜6"	1'–2"	5"	2" x ¼"	YES	

FOUNDATION SECTION NOTES

1. DO NOT SCALE SECTIONS. SEE PLANS AND SCHEDULES FOR SIZES NOT SHOWN.
2. REBAR IS SHOWN FOR REFERENCE ONLY. SEE PLANS AND SCHEDULES FOR REINFORCEMENT REQUIREMENTS. WHERE REINFORCEMENT IS SPECIFIED IN SECTIONS IT IS IN ADDITION TO SCHEDULES.
3. IF A HOOK IS SHOWN ON REINFORCEMENT A STANDARD HOOK PER ACI IS REQUIRED U.N.O.
4. IF A DISCREPANCY EXISTS BETWEEN THE SECTIONS AND PLAN THE MORE STRINGENT REQUIREMENTS SHALL APPLY

WOODS ENGINEERING
Consulting Structural Engineers
254 North Front Street Phone: 910.343.8007
Suite 201 Fax: 910.343.8088
Wilmington, NC 28401 www.woodseng.com

BOWMAN MURRAY HEMINGWAY
ARCHITECTS
514 Market Street
Wilmington, NC 28401
Tel - (910) 762-2621
Fax - (910) 762-8506

NORTH CAROLINA ENGINEERING PERMIT DRAWINGS FOR REVIEW ONLY NOT FOR CONSTRUCTION

NORTH CAROLINA PROFESSIONAL ENGINEER SEAL 041563 ADAM L. SISK

THE DAVIS COMMUNITY
New Community Center
1011 Porter's Neck Road
Wilmington, North Carolina 28411

REV.	DATE	DESCRIPTION

NO.	DATE	ISSUE NOTE
	7-20-2020	PERMIT SET

Project Manager: ALS	Drawn By: MBK
Date: August 18 20, 2020	Reviewed By: ALS
Project ID: 20-3091	

Sheet Title: Foundation Sections and Details

Sheet No.: S301

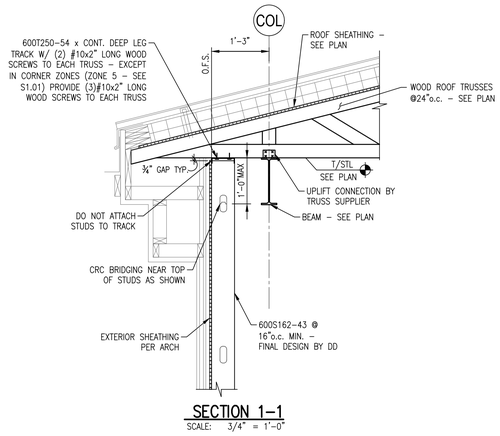

SECTION 1–1
SCALE: 3/4" = 1'-0"

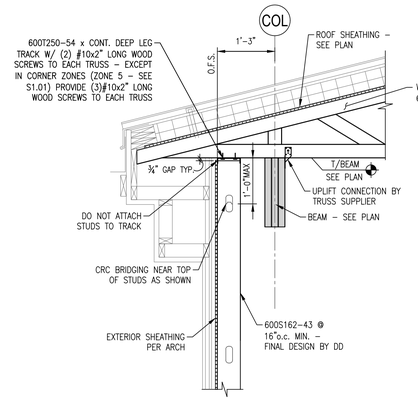

SECTION 2–2
SCALE: 3/4" = 1'-0"

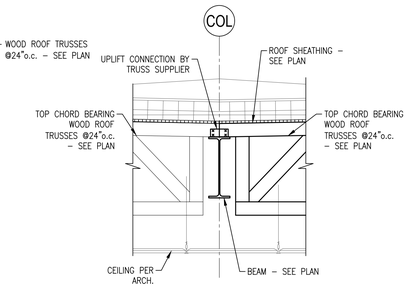

SECTION 3–3
SCALE: 3/4" = 1'-0"

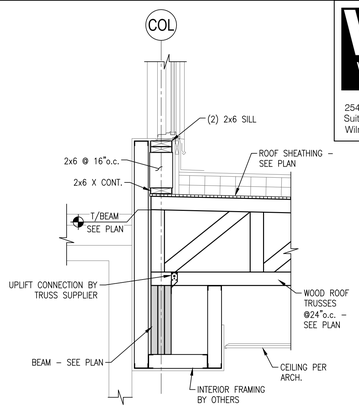

SECTION 4–4
SCALE: 3/4" = 1'-0"

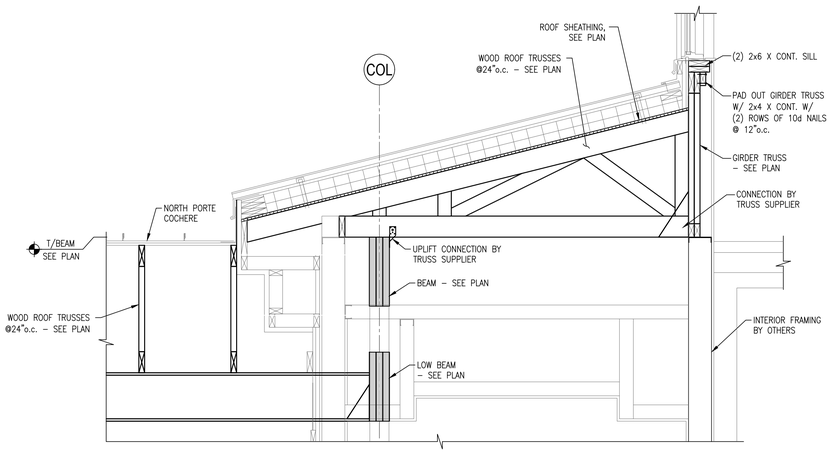

SECTION 5–5
SCALE: 3/4" = 1'-0"

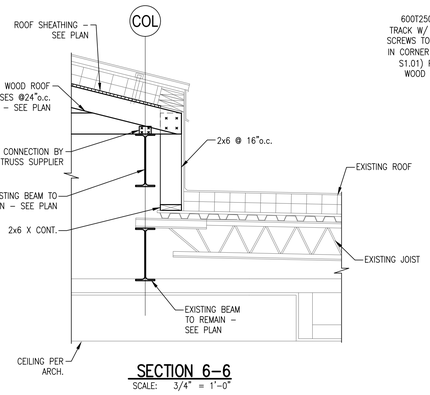

SECTION 6–6
SCALE: 3/4" = 1'-0"

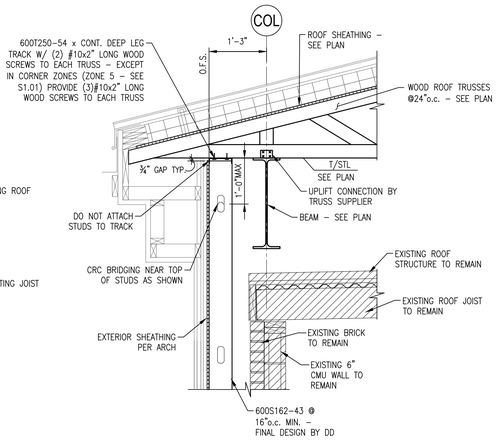

SECTION 7–7
SCALE: 3/4" = 1'-0"

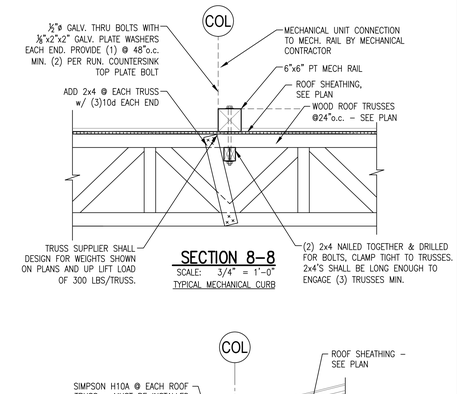

SECTION 8–8
SCALE: 3/4" = 1'-0"
TYPICAL MECHANICAL CURB

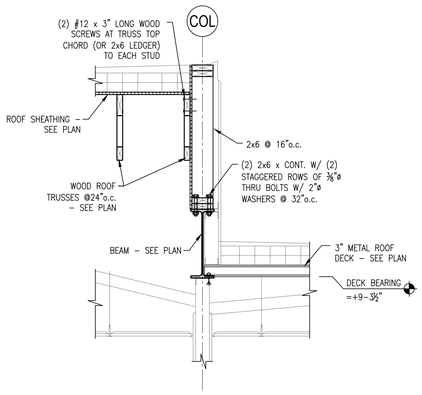

SECTION 12–12
SCALE: NTS = 1'-0"

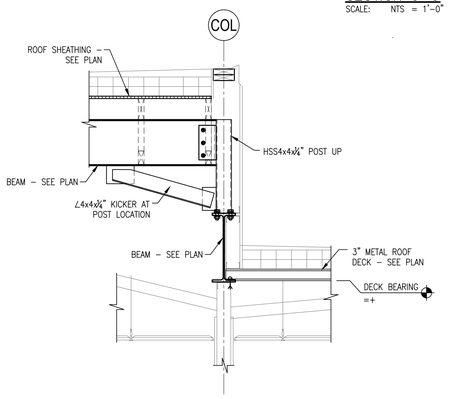

SECTION 13–13
SCALE: NTS = 1'-0"

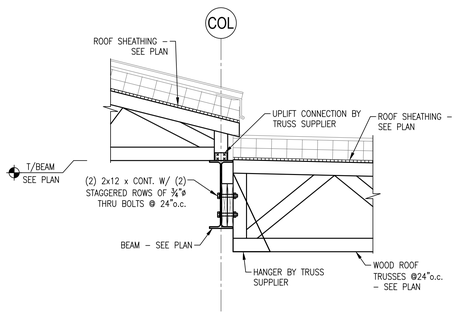

SECTION 9–9
SCALE: NTS = 1'-0"

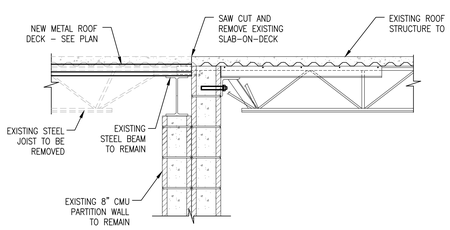

SECTION 10–10
SCALE: NTS = 1'-0"

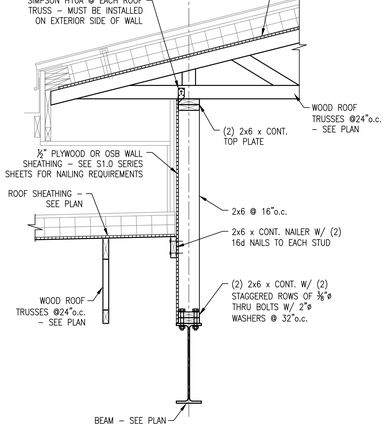

SECTION 11–11
SCALE: NTS = 1'-0"

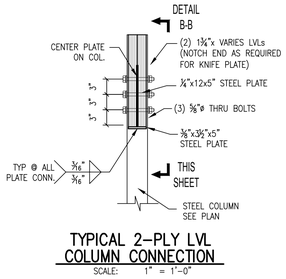

TYPICAL 2–PLY LVL COLUMN CONNECTION
SCALE: 1" = 1'-0"

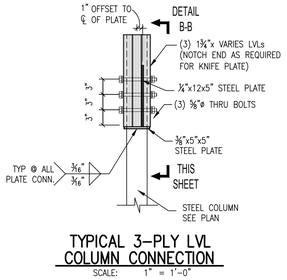

TYPICAL 3–PLY LVL COLUMN CONNECTION
SCALE: 1" = 1'-0"

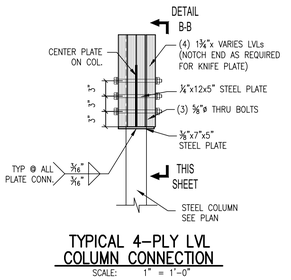

TYPICAL 4–PLY LVL COLUMN CONNECTION
SCALE: 1" = 1'-0"

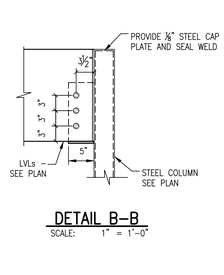

DETAIL B–B
SCALE: 1" = 1'-0"

WOODS ENGINEERING
Consulting Structural Engineers
254 North Front Street Phone: 910.343.8007
Suite 201 Fax: 910.343.8088
Wilmington, NC 28401 www.woodseng.com

BOWMAN MURRAY HEMINGWAY
ARCHITECTS
514 Market Street
Wilmington, NC 28401
Tel - (910) 762-2621
Fax - (910) 762-8506

NORTH CAROLINA ENGINEERING PERMIT DRAWINGS FOR REVIEW ONLY NOT FOR CONSTRUCTION

NORTH CAROLINA PROFESSIONAL ENGINEER SEAL 041563 WILLIAM L. SISK

THE DAVIS COMMUNITY
New Community Center
1011 Porter's Neck Road
Wilmington, North Carolina 28411

REV.	DATE	DESCRIPTION
	7-20-2020	PERMIT SET
NO.	DATE	ISSUE NOTE

Project Manager: ALS	Drawn By: MBK
Date: August 18 20, 2020	Reviewed By: ALS
Project ID: 20-3091	

Sheet Title: Framing Sections and Details

Sheet No.: S401

WOODS ENGINEERING
Consulting Structural Engineers
254 North Front Street
Suite 201
Wilmington, NC 28401
Phone: 910.343.8007
Fax: 910.343.8088
www.woodseng.com

BOWMAN MURRAY HEMINGWAY
ARCHITECTS
514 Market Street
Wilmington, NC 28401
Tel - (910) 762-2621
Fax - (910) 762-8506

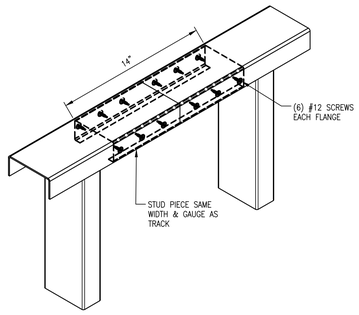

COLLECTOR TRACK SPLICE DETAIL
NOT TO SCALE

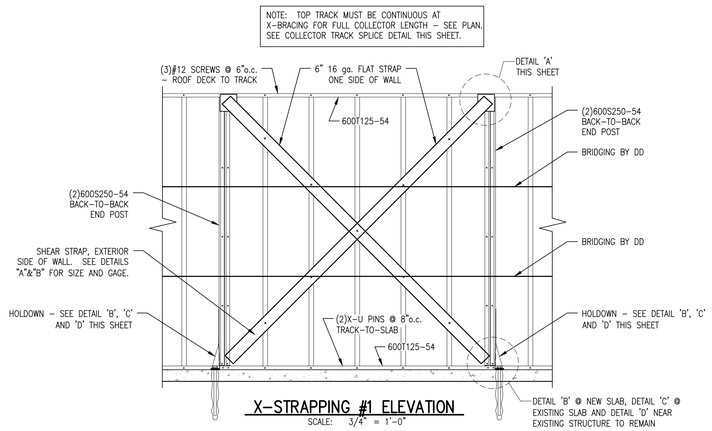

X-STRAPPING #1 ELEVATION
SCALE: 3/4" = 1'-0"

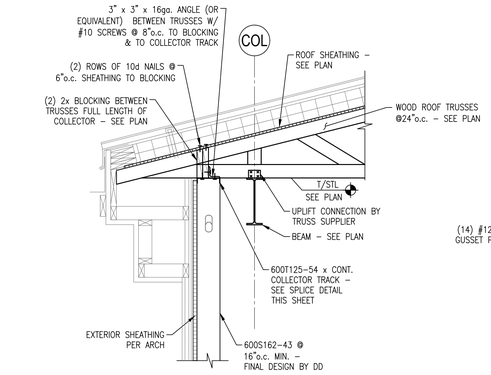

TYPICAL AT EXTERIOR
X-STRAPPING LOCATIONS
SCALE: 3/4" = 1'-0"

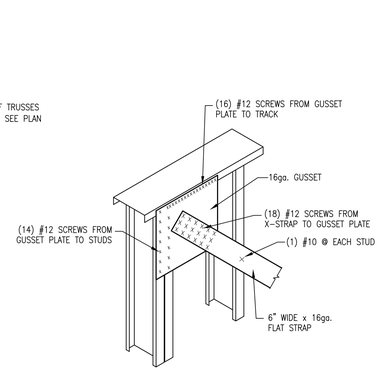

DETAIL A-A
SCALE: 3/4" = 1'-0"

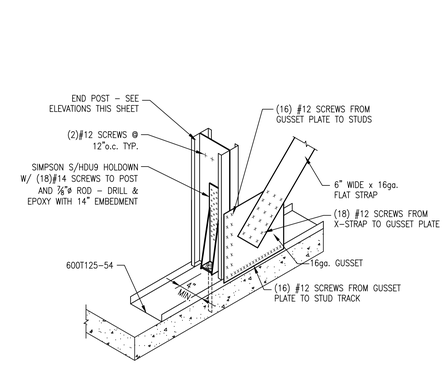

DETAIL B-B @ NEW SLAB EDGE
SCALE: 3/4" = 1'-0"

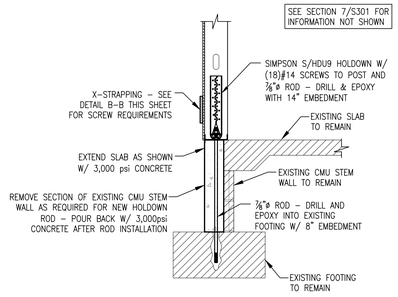

DETAIL C-C @ EXISTING SLAB EDGE
SCALE: 3/4" = 1'-0"

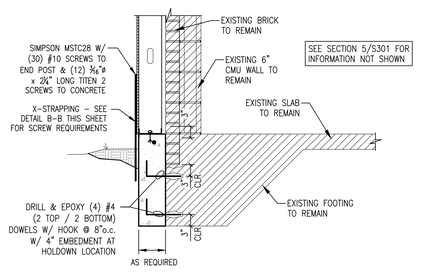

DETAIL D-D - NEAR
EXISTING STRUCTURE TO REMAIN
SCALE: 3/4" = 1'-0"

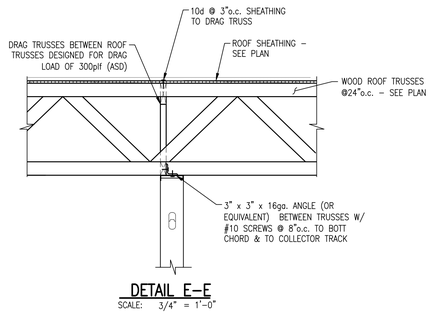

DETAIL E-E
SCALE: 3/4" = 1'-0"

NORTH CAROLINA ENGINEERING PERMIT DRAWINGS FOR REVIEW ONLY

NORTH CAROLINA PROFESSIONAL SEAL 041563 ENGINEER ADAM L. SISK

THE DAVIS COMMUNITY
New Community Center
1011 Porter's Neck Road
Wilmington, North Carolina 28411

REV.	DATE	DESCRIPTION
	7-20-2020	PERMIT SET

NO.	DATE	ISSUE NOTE

Project Manager: ALS	Drawn By: MBK
Date: August 18 20, 2020	Reviewed By: ALS
Project ID: 20-3091	

Sheet Title
X-Bracing Sections & Details

Sheet No.
S501

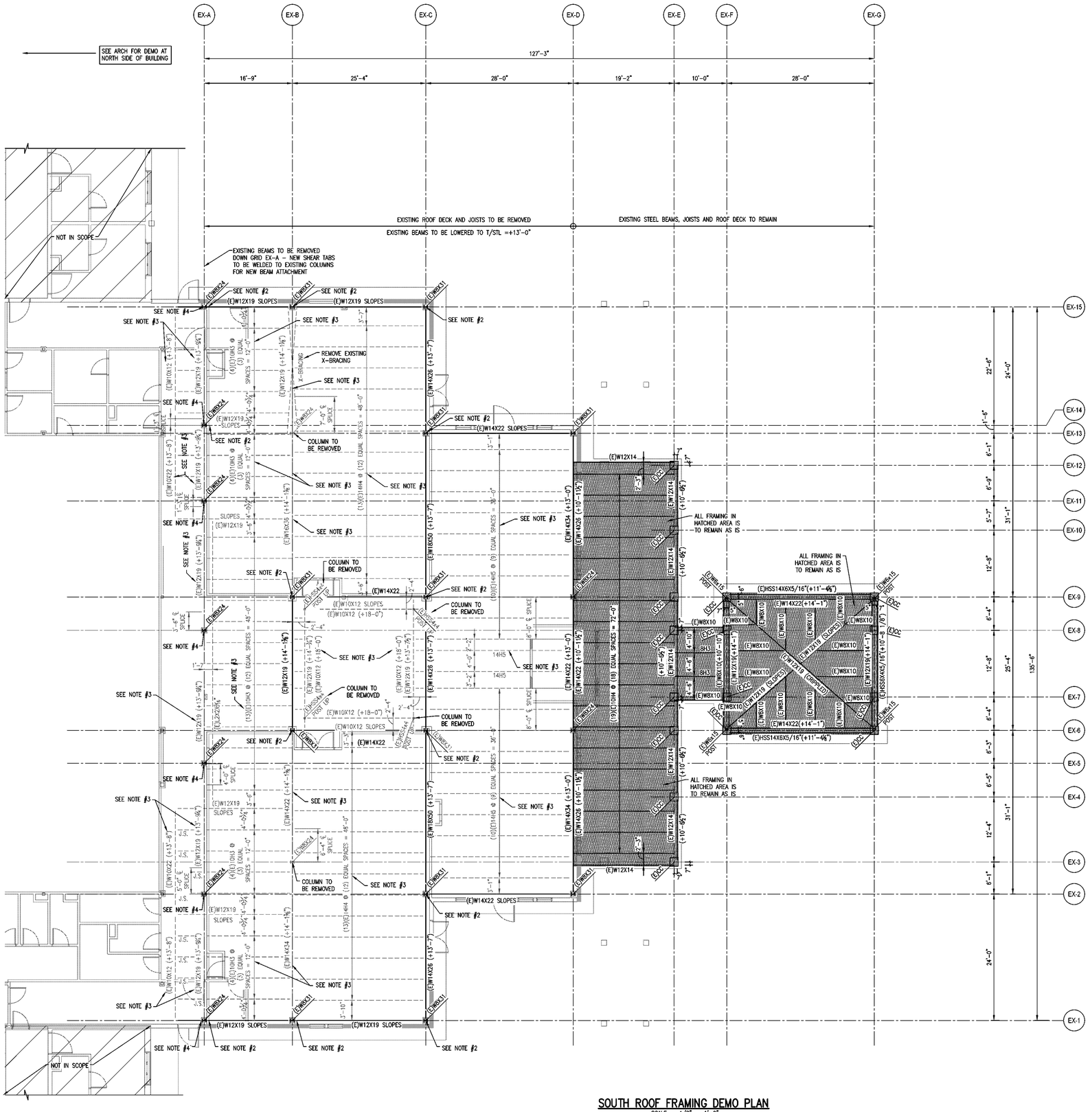

SOUTH ROOF FRAMING DEMO PLAN

SCALE: 1/8" = 1'-0"

NORTH

DEMO LEGEND:

- HATCH INDICATES STRUCTURE TO REMAIN AS IS
- EXISTING FRAMING TO REMAIN
- EXISTING FRAMING TO BE REMOVED

DEMO NOTES:

1. SEE AD1.0 FOR ADDITIONAL DEMOLITION INFORMATION.
2. CUT SHEAR TAB FROM EXISTING STEEL COLUMN AND LOWER TO T/STL BEAM = (+13'-0"). REATTACH SHEAR TAB TO COLUMN AS SHOWN IN DETAIL THIS SHEET.
3. REMOVE ROOF DECK AND ROOF FRAMING
4. NEW SHEAR TABS TO BE WELDED TO EXISTING COLUMN FOR NEW BEAM CONNECTION, TYP. DOWN GRID EX-A

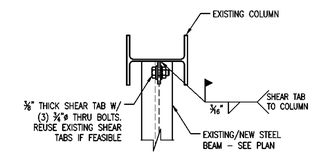

BEAM TO EXISTING COLUMN CONNECTION DETAIL

SCALE: 1 1/2" = 1'-0"

WOODS ENGINEERING
Consulting Structural Engineers
254 North Front Street
Suite 201
Wilmington, NC 28401
Phone: 910.343.8007
Fax: 910.343.8088
www.woodseng.com

BOWMAN MURRAY HEMINGWAY
ARCHITECTS
514 Market Street
Wilmington, NC 28401
Tel - (910) 762-2621
Fax - (910) 762-8506

NORTH CAROLINA BOARD OF EXAMINERS FOR ENGINEERING AND SURVEYING
PERMIT DRAWINGS FOR REVIEW ONLY
NORTH CAROLINA PROFESSIONAL ENGINEER SEAL 041563 WILLIAM L SICK

THE DAVIS COMMUNITY
New Community Center
1011 Porter's Neck Road
Wilmington, North Carolina 28411

REV.	DATE	DESCRIPTION
	7-20-2020	PERMIT SET
NO.	DATE	ISSUE NOTE

Project Manager: ALS	Drawn By: MBK
Date: August 18 20, 2020	Reviewed By: ALS
Project ID: 20-3091	

Sheet Title: South Roof Framing Demo Plan

Sheet No.: SD201