MARINE SPECIAL OP SCHOOL 120 MAN CLASSROOMS
P-1482

MARSOC, CAMP LEJEUNE, NC

NAVAL FACILITIES ENGINEERING COMMAND ~ MID-ATLANTIC
MARINE CORPS IPT, NORFOLK, VA

ISSUE FOR CONSTRUCTION - 06/09/2020

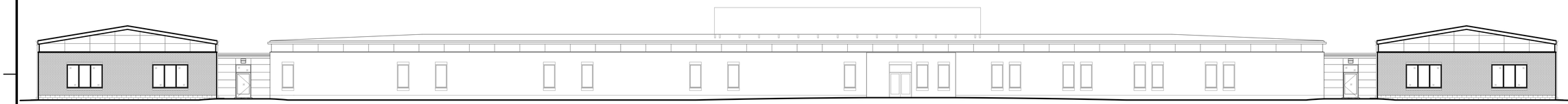

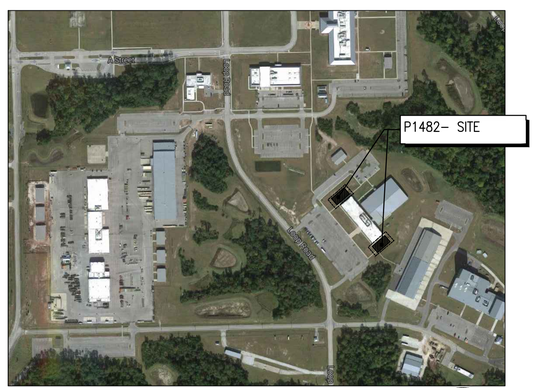

AERIAL PHOTOGRAPH
NOT TO SCALE

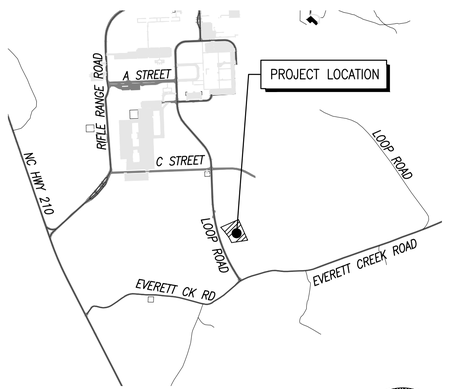

LOCATION MAP
NOT TO SCALE

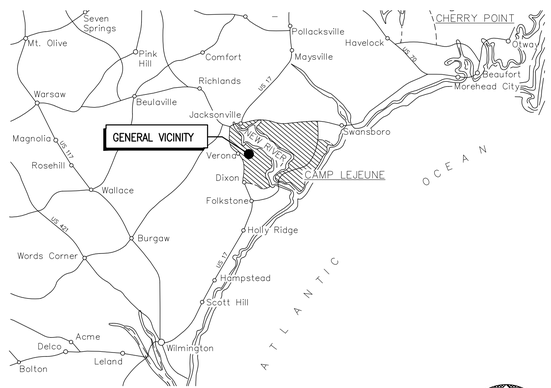

VICINITY MAP
NOT TO SCALE

APPROVED

FOR COMMANDER NAVFAC

ACTIVITY

EMILY M. SYLVESTER, PE

SATISFACTORY TO DATE 28 JUNE 2018

DES GKC DRW GKC CHK GKC

DESIGN MANAGER G. COOKE

BRANCH MANAGER DJD

CHIEF ENGINEER EJA

FIRE PROTECTION

DEPARTMENT OF THE NAVY
NAVAL FACILITIES ENGINEERING COMMAND
MIDLANT CI CORE
MCB CAMP LEJEUNE

NAVAL FACILITIES ENGINEERING COMMAND–MID-ATLANTIC
NAVAL STATION NORFOLK, VIRGINIA

JACKSONVILLE, NC

P1482 MARINE SPECIAL OP SCHOOL
120 MAN CLASSROOMS

COVER SHEET

SCALE: AS NOTED
EPROJECT NO. 1558046
CONSTR. CONTR. NO. –
NAVFAC DRAWING NO. 12747141
SHEET 01 OF 91

G-001

DRAWFORM REVISION: 10 MARCH 2009

SYM | DESCRIPTION | DATE | APPR

SEAL

A/E INFO

FILE NAME: P:\NC\Camp_Lejeune\MILCON\2017_1558046_P1482_IH-DBB_120ManClassrooms\3_Design\Drawings\Sheet\01_General\1558046_P1482_G-001_COVER_SHEET.dwg LAYOUT NAME: G-001 PLOTTED: Wednesday, June 03, 2020 - 8:02am USER: gysi.cooke

LIST OF SHEETS

Sheet No.	Sheet Title	NAVFAC DWG NO
GENERAL		
G-001	COVER SHEET	12747141
G-002	DRAWING INDEX	12747142
G-100	LIFE SAFETY CODE SUMMARY	12747143
G-101	LIFE SAFETY CODE PLAN – AREA 'A'	12747144
G-102	LIFE SAFETY CODE PLAN – AREA 'B'	12747145
GEOTECHNICAL		
B-100	FOUNDATION DESIGN REQUIREMENTS & SUBSURFACE LOCATIONS	12747146
B-200	SUBSURFACE INFORMATION LOGS	12747147
B-201	SUBSURFACE INFORMATION LOGS	12747148
B-202	SUBSURFACE INFORMATION LOGS & DATA	12747149
CIVIL		
C-001	LEGEND NOTES AND ABBREVIATIONS	12747150
CD-100	EXISTING CONDITIONS AND DEMOLITION PLAN	12747151
CS-201	SITE PLAN	12747152
CU-301	UTILITY PLAN	12747153
CU-302	UTILITY PROFILES	12747154
CG-401	GRADING AND DRAINAGE PLAN	12747155
C-402	PRE-DEVELOPMENT DRAINAGE AREAS	12747156
C-403	POST-DEVELOPMENT DRAINAGE AREAS	12747157
C-501	EROSION AND SEDIMENT CONTROL PLAN – PHASE I	12747158
C-502	EROSION AND SEDIMENT CONTROL PLAN – PHASE II	12747159
C-503	EROSION AND SEDIMENT CONTROL NOTES	12747160
C-504	EROSION AND SEDIMENT CONTROL DETAILS	12747161
C-505	EROSION AND SEDIMENT CONTROL DETAILS	12747162
C-601	SITE DETAILS	12747163
C-602	STORM DETAILS	12747164
C-603	WATER DETAILS	12747165
C-604	SANITARY SEWER DETAILS	12747166
LANDSCAPE		
LP-100	PLANTING PLAN	12747169
LP-501	PLANTING DETAILS AND SCHEDULE	12747170
LC-100	LANDSCAPE CONSTRUCTION PLAN	12747167
LC-501	LANDSCAPE CONSTRUCTION DETAILS	12747168
LC-502	LANDSCAPE CONSTRUCTION DETAILS	12747171
STRUCTURAL		
S-001	GENERAL NOTES	12747172
S-002	GENERAL NOTES	12747173
S-101	FOUNDATION PLAN	12747174
S-301	FOUNDATION SECTIONS	12747175
ARCHITECTURAL		
A-001	LEGEND, ABBREVIATIONS AND GENERAL NOTES	12747175
A-101	OVERALL FLOOR PLAN & AIR BARRIER PLAN	12747176
A-102	FLOOR PLAN – AREA 'A'	12747177
A-103	FLOOR PLAN – AREA 'B'	12747178
A-104	REFLECTED CEILING PLAN	12747178
A-105	ROOF PLAN AND DETAILS	12747179
A-106	MECHANICAL PLATFORM FLOOR AND REFLECTED CEILING PLAN	12747180
A-201	BUILDING ELEVATIONS	12747181
A-202	BUILDING ELEVATIONS	12747182
A-301	BUILDING SECTIONS	12747183
A-302	WALL SECTIONS	12747184
A-303	WALL SECTIONS	12748519
A-501	DETAILS	12747185
A-601	DOOR SCHEDULE AND DETAILS	12747186
A-602	PARTITION TYPES	12747187
A-603	PARTITION TYPES AND DETAILS	12748518
INTERIORS		
I-101	OVERALL FURNITURE PLAN	12747188

CONTNUED

INTERIORS		
I-101	OVERALL FURNITURE PLAN	12747188
I-102	FURNITURE PLAN – AREA A	1274789
I-103	FURNITURE PLAN – AREA B	1247190
I-601	FINISH SCHEDULE	12747191
FIRE PROTECTION		
FA001	GENERAL NOTES AND LEGEND	12747192
FA101	FAMNS FLOOR PLAN – AREA 'A'	12747193
FA102	FAMNS FLOOR PLAN – AREA 'B'	12747193
FA501	FAMNS DETAILS	12747194
FX001	GENERAL NOTES AND LEGEND	12747195
FX101	SPRINKLER FLOOR PLAN – AREA 'A'	12747196
FX102	SPRINKLER FLOOR PLAN – AREA 'B'	12747197
FX501	SPRINKLER DETAILS	12747198
MECHANICAL		
M-001	LEGENDS AND NOTES	12747199
M-101	MECHANICAL FLOOR PLAN – AREA 'A'	12747200
M-102	MECHANICAL FLOOR PLAN – AREA 'A'	12747201
M-103	MECHANICAL FLOOR PLAN – AREA 'B'	12747202
M-104	MECHANICAL FLOOR PLAN – AREA 'B'	127471203
M-301	MECHANICAL SECTION	12747204
M-501	MECHANICAL DETAILS	12747205
M-502	MECHANICAL DETAILS	12747206
M-601	MECHANICAL SCHEDULE	12747207
M-701	CONTROLS	12747208
M-702	CONTROLS	12747209
ELECTRICAL		
E-001	LEGENDS AND NOTES	12747210
EG-101	TYPICAL PARTIAL LIGHTNING PROTECTION	12747211
EL-101	PARTIAL LIGHTING PLAN	12747212
EP-101	PARTIAL POWER PLAN-A	12747213
EP-102	PARTIAL POWER PLAN-B	12747224
EP-103	PARTIAL CONDUIT PLAN A	12747214
EP-104	PARTIAL CONDUIT PLAN B	12747215
ET-101	TYPICAL PARTIAL COM PLAN	12747216
ET-102	TYPICAL PARTIAL AV PLAN	12747217
E-301	BUILDING SECTION-ELECTRICAL	12747225
E-501	ENLARGED RAISED ACCESS FLOOR PLAN	12747226
E-701	ELECTRICAL ONE-LINE DIAGRAM	12747218
E-702	ELECTRICAL SCHEDULES	12747220
E-703	LIGHTING DETAILS	12747219
E-704	ELECTRICAL DETAIL	12747221
E-705	ELECTRICAL DETAIL	12747222
E-706	ELECTRICAL DETAIL	12747223

APPR | DATE | DESCRIPTION | SYM

NAVFAC

SEAL

A/E INFO

APPROVED

FOR COMMANDER NAVFAC

ACTIVITY:
EMILY M. SYLVESTER, PE

SATISFACTORY TO DATE: 28 JUNE 2018

DES: CGF | DRW: CGF | CHK: GKC

DESIGN MANAGER: G. COOKE

BRANCH MANAGER: DJD

CHIEF ENGINEER: EJA

FIRE PROTECTION:

DEPARTMENT OF THE NAVY
NAVAL FACILITIES ENGINEERING COMMAND
NAVAL FACILITIES ENGINEERING COMMAND-MID-ATLANTIC
NAVAL STATION NORFOLK VIRGINIA
MIDLANT CI CORE
MCB CAMP LEJEUNE JACKSONVILLE, NC

P1482 MARINE SPECIAL OP SCHOOL
120 MAN CLASSROOMS

DRAWING INDEX

SCALE: AS NOTED

EPROJECT NO. 1558046

CONSTR. CONTR. NO. –

NAVFAC DRAWING NO. 12747142

SHEET 02 OF 91

G-002

DRAWFORM REVISION: 10 MARCH 2009

UNCLASSIFIED//FOR OFFICIAL USE ONLY

FILE NAME: P:\MC\Camp Lejeune\MILCON\2017_1558046_P1482_JH-108B_120ManClassrooms\8_Design\Drawings\Sheet\01_General\1558046_P1482_G-002_DRAWING_INDEX.dwg LAYOUT NAME: G-002 DRAWING INDEX PLOTTED: Wednesday, June 03, 2020 - 1:14pm USER: gyosi.cooke

APPLICABLE CODES AND STANDARDS

STANDARD	TITLE	REVISION DATE
IBC	INTERNATIONAL BUILDING CODE	2015
UFC 1-200-01	GENERAL BUILDING REQUIREMENTS	20 JUNE 2016
UFC 3-600-01	FIRE PROTECTION ENGINEERING FOR FACILITIES	30 NOV 2016
UFC 3-600-10N	FIRE PROTECTION ENGINEERING	FINAL DRAFT AUG 2007
NFPA 1	STANDARD - UNIFORM FIRE CODE	2015
NFPA 13	STANDARD - INSTALLATION OF SPRINKLER SYSTEMS	2016
NFPA 70	NATIONAL ELECTRIC CODE	2014
NFPA 72	STANDARD - NATIONAL FIRE ALARM SIGNALING CODE	2016
NFPA 80	STANDARD - FIRE DOORS AND OTHER OPENINGS PROT	2016
NFPA 90A	STANDARD - AIR CONDITIONING AND VENTILATION	2015
NFPA 101	STANDARD - LIFE SAFETY CODE	2015
NFPA 1963	STANDARD - FIRE HOSE CONNECTIONS	2014

BUILDING DESCRIPTION

TYPE OF CONSTRUCTION	TYPE IIB
NUMBER OF STORIES	1
HEIGHT	21 FEET

ALLOWABLE HEIGHT & AREA

	ALLOWED FOR ASSEMBLY
BASIC ALLOWABLE HEIGHT (IBC TABLE 503)	3 STORY/55 FEET
PROVIDED HEIGHT	1 STORY/21 FEET
BASIC ALLOWABLE AREA (IBC TABLE 503)	38,000 SQ.FT.
PROVIDED BUILDING AREA	10,000 SQ.FT.

OCCUPANCY CLASSIFICATIONS

USE	OCCUPANCY PER IBC	OCCUPANCY PER NFPA 101
CLASSROOM	GROUP A-3	ASSEMBLY
STORAGE, TELECOMMUNICATIONS	INCIDENTAL USE	

FIRE RESISTANCE RATINGS

BUILDING ELEMENT OR AREA	RATING (HOURS)		
	REQUIRED	PROVIDED	CODE REFERENCE
STRUCTURAL FRAME	0	0	IBC TABLE 601
EXTERIOR WALLS	0	0	IBC TABLE 601
INTERIOR BEARING WALLS	0	0	IBC TABLE 601
INTERIOR NON-BEARING WALLS	0	0	NFPA 101
ROOF CONSTRUCTION	0	0	IBC TABLE 601
EXTERIOR WALLS - SEPARATION	10<X<30	15	IBC TABLE 602

SEPARATION DISTANCE FOR EXTERIOR WALLS

BUILDING ELEMENT OR AREA	DISTANCE (FEET)		
	REQUIRED	PROVIDED	CODE REFERENCE
EXTERIOR WALLS - SEPARATION	10<X<30	15	IBC TABLE 602

OPENING PROTECTIVES

TYPE OF SEPARATION ASSEMBLY	RATING		
	REQUIRED	PROVIDED	CODE REFERENCE
DOOR OPENINGS IN 1 HR RATED PARTITIONS	60 MINUTES	60 MINUTES	IBC TABLE 715.4
DUCT PENETRATIONS IN 30 MIN OR 1 HR FIRE BARRIERS	NO RATING	NO RATING	NFPA 90A, 5.3.1.1
DUCT PENETRATIONS IN RATED FLOOR OR CEILING ASSEMBLIES	1 1/2 HR FIRE DAMPERS	1 1/2 HR FIRE DAMPERS	NFPA 90A, 5.4.4.1
AIR TRANSFER OPENINGS IN ANY FIRE OR SMOKE BARRIER OR PARTITION	1 1/2 HR FIRE DAMPERS	1 1/2 HR FIRE DAMPERS	NFPA 90A, 5.3.1.2
SEE ARCHITECTURAL DRAWINGS FOR LOCATIONS AND RATINGS OF DOOR ASSEMBLIES			
SEE MECHANICAL DRAWINGS FOR LOCATIONS OF FIRE AND/OR SMOKE DAMPERS			

INTERIOR FINISHES

	REQUIRED	PROVIDED	CODE REFERENCE
WALL AND CEILING FINISHES			
EXIT ACCESS CORRIDORS	CLASS A OR B	CLASS A OR B	NFPA 101, 12.3.3.2
ALL OTHER AREAS	CLASS A, B OR C	CLASS A, B OR C	NFPA 101, 10.2.8.2
FLOOR FINISHES			
EXIT ACCESS CORRIDORS	CLASS I OR II	CLASS I OR II	NFPA 101, 12.3.3.3
ALL OTHER AREAS	CLASS I OR II	CLASS I OR II	NFPA 101, 10.2.7

FIRE DEPARTMENT ACCESSIBILITY

	REQUIRED	PROVIDED	CODE REFERENCE
ALL-WEATHER GROUND ACCESS	2 SIDES	2 SIDES	UFC 3-600-01, 9-1.2
FIRE HYDRANT ACCESSIBILITY	300 FEET	<300 FEET	UFC 3-600-01, 9-3.5.8.4
FDC ACCESSIBILITY	150 FEET	<150 FEET	UFC 3-600-01, 9-1.4
FIRE HYDRANT COLOR CODING	YES	YES	UFC 3-600-01, 9-3.5.5
SEE CIVIL DRAWINGS FOR SITE LAYOUT AND FIRE HYDRANT SPACING			

FIRE PROTECTION

	REQUIRED	PROVIDED	CODE REFERENCE
WET PIPE FIRE SPRINKLER SYSTEM	YES	YES	UFC 3-600-01, UFC 3-600-10N, NFPA 13
FIRE ALARM/MASS NOTIFICATION	YES	YES	UFC 3-600-01, UFC 3-600-10N, NFPA 72

MEANS OF EGRESS

	REQUIRED	PROVIDED	CODE REFERENCE
MINIMUM NUMBER OF EXITS *	2	3	NFPA 101, 12.2.4 & 7.4
MINIMUM WIDTH, EXIT DOORS	36 INCHES	72 INCHES	NFPA 101, 7.2.1.2.3
MAXIMUM COMMON PATH OF TRAVEL *	20/75 FEET	*	NFPA 101, 12.2
MAXIMUM DEAD END CORRIDORS *	20 FEET	*	NFPA 101, 12.2
MAXIMUM TRAVEL DISTANCE *	250 FEET	*	NFPA 101, 12.2
ILLUMINATION	YES	YES	NFPA 101, 12.2
EMERGENCY LIGHTING	YES	YES	NFPA 101, 12.2
EXIT SIGNS	YES	YES	NFPA 101, 12.2
* SEE LIFE SAFETY DRAWINGS FOR MEANS OF EGRESS MEASUREMENTS			
SEE ELECTRICAL DRAWINGS FOR ILLUMINATION, EMERGENCY LIGHTING, AND EXIT SIGNS			

OCCUPANT LOAD AND EGRESS CAPACITY

LEVEL	CALCULATED OCCUPANT LOAD	EGRESS CAPACITY PROVIDED
1	271	1050
SEE LIFE SAFETY DRAWINGS FOR EGRESS CAPACITY CALCULATIONS		

NO.	DATE	DESCRIPTION	CVM	APPR
-	-	-	-	-

NAVFAC

SEAL

A/E INFO

APPROVED

FOR COMMANDER NAVFAC

ACTIVITY

EMILY M. SYLVESTER, PE

SATISFACTORY TO DATE: 28 JUNE 2018

DES: ERZ | DRW: ERZ | CHK: DPS

DESIGN MANAGER: G. COOKE

BRANCH MANAGER: DJD

CHIEF ENGINEER: EJA

FIRE PROTECTION

DEPARTMENT OF THE NAVY
NAVAL FACILITIES ENGINEERING COMMAND
MIDLANT CI CORE

NAVAL FACILITIES ENGINEERING COMMAND-MID-ATLANTIC
NAVAL STATION NORFOLK VIRGINIA

MCB CAMP LEJEUNE
JACKSONVILLE, NC

P1482 MARINE SPECIAL OP SCHOOL 120 MAN CLASSROOMS

LIFE SAFETY CODE SUMMARY

SCALE: AS NOTED

EPROJECT NO. 1558046

CONSTR. CONTR. NO. -

NAVFAC DRAWING NO. 12747143

SHEET 03 OF 91

G-100

DRAWFORM REVISION: 10 MARCH 2009

FILE NAME: P:\NC\Camp Lejeune\MILCON\2017_1558046_P1482_JH-UBB_120ManClassrooms\8_Design\Drawings\Sheet\01_General\G-100 LIFE SAFETY CODE SUMMARY.dwg LAYOUT NAME: G-100 LIFE SAFETY CODE SUMMARY PLOTTED: Wednesday, June 03, 2020 - 8:02am USER: gysi.cooke

A1 LIFE SAFETY FLOOR PLAN AREA 'A'
SCALE: 3/16" = 1'-0" G-101

PLAN NORTH

GENERAL SHEET NOTES

1. MECHANICAL MEZZANINE IS NORMALLY UNOCCUPIED.

EGRESS CAPACITY

EXIT LABEL	CAPACITY (PERSONS)	ACTUAL (PERSONS)
01	230	90
02	230	90
03	230	88

MEANS OF EGRESS

MAXIMUM TRAVEL DISTANCE (TD) = 114 FEET

MAXIMUM COMMON PATH OF TRAVEL (CPT) = 48 FEET

MAXIMUM DEAD END CORRIDOR (DE) = 0 FEET

LEGEND

A: AREA OF ROOM (SQFT)
OLF: OCCUPANT LOAD FACTOR
OL: NUMBER OF OCCUPANTS

W: NET EXIT WIDTH (INCHES)
C: CAPACITY (PEOPLE)
P: EXIT WIDTH PER PERSON
A: ACTUAL EGRESS (PEOPLE)

EXIT LABEL

TRAVEL DISTANCE (TD)

COMMON PATH OF TRAVEL (CPT)

KEYPLAN

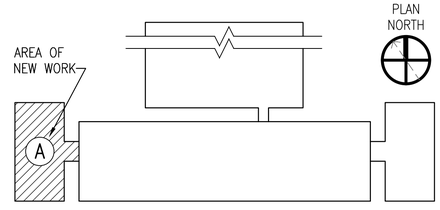

GRAPHIC SCALE

3/16"=1'-0" 0' 4' 8' 12'

APPR	
DATE	
DESCRIPTION	
CTM	

NAVFAC

SEAL

A/E INFO

APPROVED

FOR COMMANDER NAVFAC

ACTIVITY

EMILY M. SYLVESTER, PE

SATISFACTORY TO DATE 28 JUNE 2018

DES ERZ DRW ERZ CHK DPS

DESIGN MANAGER G. COOKE

BRANCH MANAGER DJD

CHIEF ENGINEER EJA

FIRE PROTECTION

DEPARTMENT OF THE NAVY
NAVAL FACILITIES ENGINEERING COMMAND
MIDLANT CI CORE

NAVAL FACILITIES ENGINEERING COMMAND–MID-ATLANTIC
NAVAL STATION NORFOLK VIRGINIA

MCB CAMP LEJEUNE JACKSONVILLE, NC

P1482 MARINE SPECIAL OP SCHOOL
120 MAN CLASSROOMS

LIFE SAFETY CODE PLAN – AREA 'A'

SCALE: AS NOTED
E/PROJECT NO.: 1558046
CONSTR. CONTR. NO.: –
NAVFAC DRAWING NO.: 12747144
SHEET 04 OF 91

G-101

DRAWFORM REVISION: 10 MARCH 2009

FILE NAME: P:\MC\Comp\Lejeune\MLCON\2017_1558046_P1482_IH-088_120ManClassrooms\08_Design\Drawings\Sheet\01_General\G-101 LIFE SAFETY CODE PLAN.dwg LAYOUT NAME: G-101 LIFE SAFETY CODE PLAN - AREA 'A' PLOTTED: Wednesday, June 03, 2020 - 8:03am USER: gyssi.cooke

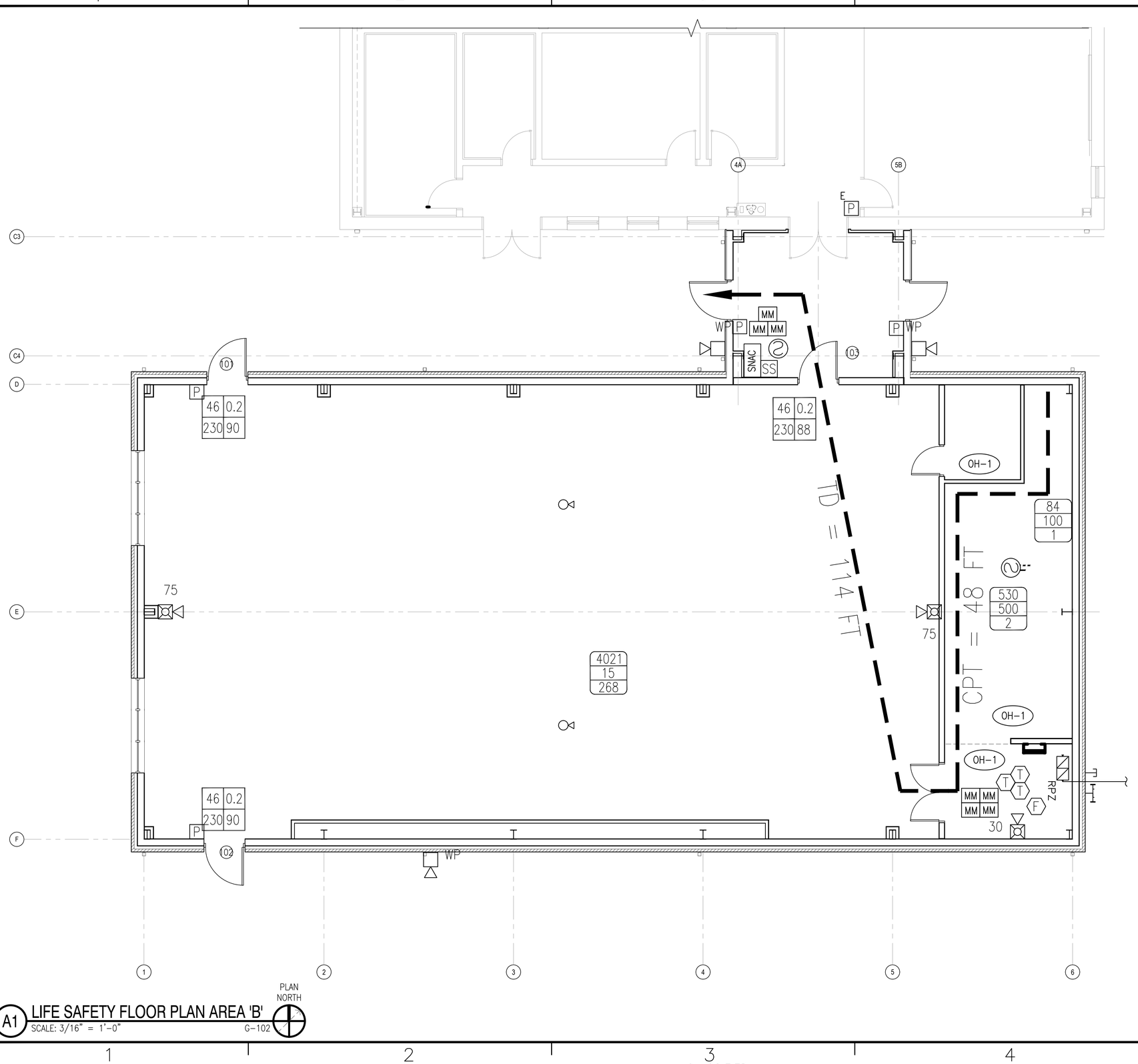

A1 LIFE SAFETY FLOOR PLAN AREA 'B'
SCALE: 3/16" = 1'-0"
G-102
PLAN NORTH

GENERAL SHEET NOTES

1. MECHANICAL MEZZANINE IS NORMALLY UNOCCUPIED.

EGRESS CAPACITY

EXIT LABEL	CAPACITY (PERSONS)	ACTUAL (PERSONS)
101	230	90
102	230	90
103	230	88

MEANS OF EGRESS

MAXIMUM TRAVEL DISTANCE (TD) = 118 FEET

MAXIMUM COMMON PATH OF TRAVEL (CPT) = 48 FEET

MAXIMUM DEAD END CORRIDOR (DE) = 0 FEET

LEGEND

A: AREA OF ROOM (SQFT)
OLF: OCCUPANT LOAD FACTOR
OL: NUMBER OF OCCUPANTS

W: NET EXIT WIDTH (INCHES)
C: CAPACITY (PEOPLE)
P: EXIT WIDTH PER PERSON
A: ACTUAL EGRESS (PEOPLE)

X EXIT LABEL

TRAVEL DISTANCE (TD)

COMMON PATH OF TRAVEL (CPT)

KEYPLAN

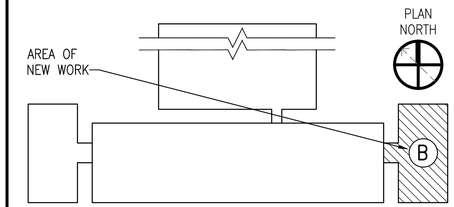

GRAPHIC SCALE

3/16"=1'-0" 0' 4' 8' 12'

SYM	DESCRIPTION	DATE	APPR

NAVFAC

SEAL

A/E INFO.

APPROVED

FOR COMMANDER NAVFAC

ACTIVITY
EMILY M. SYLVESTER, PE

SATISFACTORY TO DATE 28 JUNE 2018

DES ERZ DRW ERZ CHK DPS

DESIGN MANAGER G. COOKE

BRANCH MANAGER DJD

CHIEF ENGINEER EJA

FIRE PROTECTION

DEPARTMENT OF THE NAVY
NAVAL FACILITIES ENGINEERING COMMAND
NAVAL FACILITIES ENGINEERING COMMAND-MID-ATLANTIC
NAVAL STATION NORFOLK VIRGINIA
MIDLANT CI CORE
MCB CAMP LEJEUNE JACKSONVILLE, NC
P1482 MARINE SPECIAL OP SCHOOL
120 MAN CLASSROOMS
LIFE SAFETY CODE PLAN – AREA 'B'

SCALE: AS NOTED
EPROJECT NO. 1558046
CONSTR. CONTR. NO. –
NAVFAC DRAWING NO. 12747145
SHEET 05 OF 91

G-102

DRAWFORM REVISION: 10 MARCH 2009

FILE NAME: P:\NC\CampLejeune\MILCON\2017_1558046_P1482_IH-DBB_120ManClassrooms\B_Design\Drawings\Sheet\01_General\G-102 LIFE SAFETY CODE PLAN – AREA 'B'.dwg LAYOUT NAME: G-102 LIFE SAFETY CODE PLAN – AREA 'B' PLOTTED: Wednesday, June 03, 2020 – 8:04am USER: gyasi.cooke



FOUNDATION DESIGN REQUIREMENTS

1. THE PROPOSED STRUCTURES MAY BE SUPPORTED ON A CONVENTIONAL SHALLOW FOUNDATION SYSTEM BEARING ON APPROVED NATURAL DARK BROWN/BROWN SILTY TO CLAYEY FINE TO MEDIUM SAND (STRATUM I) OR PROPERLY COMPACTED STRUCTURAL FILL AN ALLOWABLE FOUNDATION BEARING PRESSURE OF 2,000PSF MAY BE USED TO SIZE THE FOUNDATION ELEMENTS. FOUNDATIONS SHALL HAVE A MINIMUM EMBEDMENT OF 24 INCHES BELOW FINAL EXTERIOR GRADES.
2. AN ORANGISH GRAY, FINE SANDY CLAY IS EXPECTED AT THE FOUNDATION BEARING ELEVATIONS AT THE SOUTHEAST CLASSROOM. THIS MATERIAL WILL NEED TO BE UNDERCUT TO ELEVATION 27 NAVD 88 AND REPLACED WITH SELECT FILL TO THE PLANNED FOUNDATION BEARING ELEVATION. THE PLAN UNDERCUT DIMENSION WILL NEED TO BE INCREASED BY THE RATION OF 1H:2V ON EACH SIDE OF THE COLUMN FOUNDATIONS.
3. TOTAL SETTLEMENT OF COLUMN FOUNDATIONS LOADED TO 20KIPS AND CONTINUOUS WALL FOUNDATIONS LOADED TO 1KLF IS EXPECTED TO BE ON THE ORDER OF 1 INCH OR LESS. DIFFERENTIAL SETTLEMENT IS ESTIMATED TO RESULT IN A MAXIMUM ANGULAR DISTORTION OF 0.75/500 OR LESS.
4. SEISMIC SITE CLASS D IS RECOMMENDED IN ACCORDANCE WITH CHAPTER 20 OF ASCE 07 AND 2015 IBC SECTION 1613.3.2. SITE CLASS F AND E SOILS WERE NOT OBSERVED. SITE SPECIFIC SHEAR WAVE VELOCITY TESTING WAS NOT PERFORMED AND THE SOIL PROPERTIES ARE NOT KNOWN IN SUFFICIENT DETAIL TO DETERMINE THE SITE CLASS.
5. GROUND FLOOR SLABS CAN BE DESIGNED ON A STANDARD MODULUS OF SUBGRADE REACTION ("K") OF 100 POUNDS PER CUBIC INCH (PCI). A 6-INCH GRANULAR BASE LAYER CONSISTING OF AN OPEN GRADED CRUSHED STONE (NO. 57 OR SIMILAR) OR CLEAN SAND (ASTM C-33) SHOULD BE PLACED BENEATH THE FLOOR SLABS FOR THE PROPOSED STRUCTURE.

EXPLORATION LOCATION NOTES

1. THE EXISTING SOIL BORINGS AND CPTu SOUNDINGS WERE PERFORMED BY ECS CAROLINAS, LLP (ECS) AND INCLUDED IN THE GEOTECHNICAL REPORT DATED JUNE 27, 2008 (JOB #22-14182).
2. SUPPLEMENTAL FIELD EXPLORATION CONSISTING OF DILATOMETER SOUNDINGS (DMT) AND HAND AUGER BORINGS WERE PERFORMED BY GEOENVIRONMENTAL RESOURCES, INC. (GER) UNDER CONTRACT WITH NAVFAC AND INCLUDED IN THE GEOTECHNICAL DATA REPORT DATED JANUARY 25, 2017.
3. THE LOCATIONS OF THE EXISTING SOIL BORINGS AND CPTu SOUNDINGS, PERFORMED BY ECS, HAVE BEEN EXTRAPOLATED FROM THE BORING LOCATION PLAN AND THE GENERAL LOCATION IS SHOWN FOR REFERENCE ONLY. FIELD EXPLORATION LOCATIONS PERFROMED BY GER WERE DETERMINED BY A HANDHELD GLOBAL POSITIONING SYSTEM RECEIVER AND WERE NOT PHYSICALLY SURVEYED. THE LOCATIONS SHWON SHOULD BE CONSIDERED ACCURATE ONLY TO THE DEGREE IMPLIED BY THE METHODOLOGY USED TO LOCATE THEM.
4. SUBSURFACE EXPLORATION LOGS ARE PROVIDED ON SHEETS B-200 THROUGH B-202.

KEYPLAN

- EXISTING SOIL BORING
- EXISTING CPTU SOUNDING
- NEW DILATOMETER SOUNDING
- NEW HAND AUGER BORING

GRAPHIC SCALE

1"=30' 0' 30' 60'

SYM	DESCRIPTION	DATE	APPR
-	-	-	-

NAVFAC

SEAL

A/E INFO

APPROVED

FOR COMMANDER NAVFAC

ACTIVITY

EMILY M. SYLVESTER, PE

SATISFACTORY TO DATE 28 JUNE 2018

DES RLH | DRW RLH | CHK FAD

DESIGN MANAGER G. COOKE

BRANCH MANAGER

CHIEF ENGINEER EJA

FIRE PROTECTION

DEPARTMENT OF THE NAVY
NAVAL FACILITIES ENGINEERING COMMAND
MIDLANT Ω CORE
NAVAL FACILITIES ENGINEERING COMMAND-MID-ATLANTIC
NAVAL STATION NORFOLK VIRGINIA
MCB CAMP LEJEUNE
JACKSONVILLE, NC
P1482 MARINE SPECIAL OP SCHOOL
120 MAN CLASSROOMS

FOUNDATION DESIGN REQUIREMENTS & SUBSURFACE LOCATIONS

SCALE: AS NOTED
EPROJECT NO. 1558046
CONSTR. CONTR. NO. -
NAVFAC DRAWING NO. 12747146
SHEET 6 OF 91

B-100

DRAWFORM REVISION: 10 MARCH 2009

FILE NAME: P:\NC\Camp Lejeune\MILCON\2017_1558046_P1482_IH-DBB_120ManClassrooms\8_Design\Drawings\Sheet\04_Geotech\B-100 SUBSURFACE LOCATION PLAN.dwg LAYOUT NAME: B-100 FOUNDATION DESIGN REQUIREMENTS & SUBSURFACE LOCATIONS PLOTTED: Saturday, May 30, 2020 - 10:55am USER: robert.hunton

UNCLASSIFIED

DILATOMETER TEST RESULTS

Test ID: DMT-5
Site: MARSOC
Location: Camp Lejeune, NC
Project No.: 16-54102

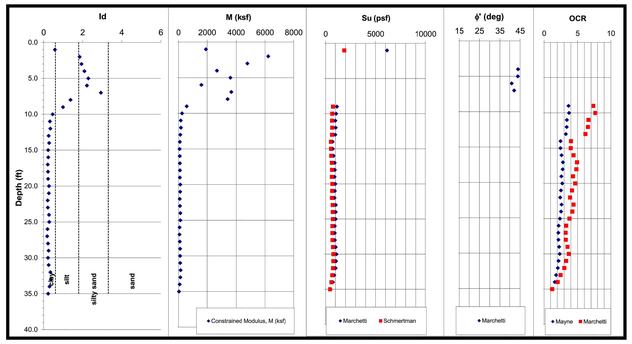

DILATOMETER TEST RESULTS

Test ID: DMT-5
Site: MARSOC
Location: Camp Lejeune, NC
Project No.: 16-54102

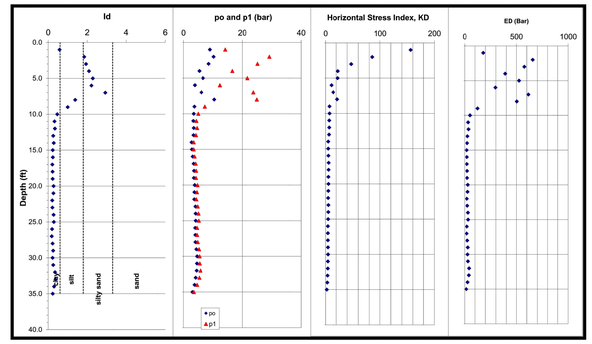

Job No: 16-54102
Job Name: MARSOC
Job Location: Camp Lejeune, NC
Date: 11/15/16
Sounding No: DMT-5
Ground Water Depth (ft): 8

	Membrane 1	Membrane 2	Membrane 3
ΔA =	0.2	0	0
ΔB =	0.175	0	0
Zm=	0.05	bar	

Latitude: 34.58121
Longitude: -77.44798

[1] Depth Below Existing Ground Surface
[2] Mayne, 1995
[3] Marchetti,2001
[4] Schmertman, 1991
[5] Mayne, 2002

DILATOMETER TEST RESULTS

Depth[1] (ft)	A (bar)	B (bar)	C (bar)	Thrust (psi)	po (bar)	p1 (bar)	p2 (bar)	u_o (psf)	γ^t (pcf)	σ_{vo} (psf)	σ_{vo}' (psf)	Id	K_D	E_D (bar)	K_c	OCR[2]	OCR[3]	ϕ^o (deg)	R_M	E_D (tsf)	k_o[4] (psf)	s_u[5] (psf)	M (tsf)
1.0	9.1	14.4		800	9.0	14.175		0	121	121	121	0.57	156.0	179	8.3	79.4	894.2	49.7	5.10	375	6147	1880	1912
2.0	11	29.4		900	10.2	26.175		0	129	250	250	1.85	85.8	657				48.4	4.53	1372			6217
3.0	9.2	25.4	0	1000	8.6	26.175		0	126	378	378	1.94	47.3	577				46.6	3.97	1204			4783
4.0	5.75	16.8		1000	5.4	16.975		0	122	499	499	2.09	22.9	388				44.0	3.25	812			2669
5.0	7.2	22		800	6.6	21.775		0	125	614	614	2.28	22.6	526				43.0	3.27	1098			3589
6.0	4.1	12.6	0	800	3.5	12.375		0	118	732	732	2.22	11.0	296				40.9	2.59	618			1599
7.0	6.75	24		1100	6.1	23.775		0	126	880	880	2.93	14.4	615				42.1	2.84	1284			3651
8.0	11	25.2		1000	10.5	24.975		0	126	1008	1008	1.39	21.7	504					3.23	1552			3400
9.0	3.7	7.5	0.5	800	3.7	7.275	0.65	62	113	1121	1059	0.99	7.2	125	1.5	3.7	7.4		2.17	261	1155	762	566
10.0	3.35	5.2		800	3.4	4.975		125	108	1081	956	0.46	7.4	54	1.5	3.7	7.6		2.19	172	1071	703	245
11.0	3.2	4.55		750	3.3	4.325		187	106	1186	999	0.32	6.7	36	1.4	3.4	6.6		2.09	74	999	671	155
12.0	3.35	4.8	1.6	800	3.4	4.575	1.75	250	106	1293	1043	0.34	6.7	39	1.4	3.4	6.5		2.08	82	1032	695	170
13.0	3.25	4.4		800	3.4	4.175		312	104	1397	1045	0.25	6.4	28	1.4	3.3	6.2		2.05	59	988	671	121
14.0	2.8	3.65		800	2.7	3.425		374	102	1460	1085	0.28	4.9	25	1.1	2.5	4.5		1.77	51	729	530	91
15.0	2.7	3.65	1.95	750	2.6	3.425	1.70	437	102	1562	1125	0.23	4.9	21	1.1	2.5	4.0		1.76	44	749	546	77
16.0	2.8	3.8		750	2.7	3.525		499	102	1664	1143	0.23	5.2	23	1.2	2.6	4.4		1.82	48	824	605	80
17.0	3.4	4.6		750	3.3	4.275		562	103	1767	1148	0.28	5.6	29	1.2	2.8	4.9		1.90	51	883	652	97
18.0	3.4	4.45	1.95	700	3.5	4.075	2.10	624	104	1849	1209	0.23	5.6	25	1.2	2.8	4.8		1.88	45	864	650	87
19.0	3.35	4.4		700	3.5	4.175		686	104	1968	1281	0.23	5.1	25	1.2	2.6	4.3		1.81	51	812	605	83
20.0	3.65	4.9		700	3.8	4.875		749	105	2073	1324	0.27	5.4	32	1.2	2.7	4.7		1.86	67	999	710	124
21.0	3.55	4.75	2.45	850	3.7	4.525	2.60	811	105	2178	1367	0.28	5.0	30	1.2	2.5	4.2		1.79	63	946	683	112
22.0	3.5	4.5		850	3.6	4.275		874	103	2272	1398	0.21	4.8	23	1.1	2.4	3.9		1.74	48	914	668	83
23.0	3.9	5		700	4.0	4.775		936	105	2377	1441	0.21	5.2	26	1.2	2.6	4.4		1.82	55	1039	745	101
24.0	3.95	5.25	2.7	700	4.1	5.025	2.85	998	106	2483	1484	0.27	5.0	34	1.2	2.6	4.2		1.80	70	1035	747	126
25.0	4	5.35		700	4.1	5.125		1061	106	2589	1594	0.28	4.7	36	1.1	2.4	3.8		1.73	74	1022	760	128
26.0	3.8	4.8		700	3.9	4.575		1123	104	2759	1636	0.19	4.3	23	1.0	2.2	3.3		1.64	48	942	706	78
27.0	3.85	4.8	2.85	700	4.0	4.575	3.00	1186	103	2862	1676	0.18	4.2	21	1.0	2.2	3.2		1.62	44	944	711	71
28.0	3.9	5		700	4.0	4.775		1248	104	2923	1675	0.22	4.3	26	1.0	2.2	3.3		1.63	55	948	713	90
29.0	4.2	5.45		700	4.3	5.225		1310	106	3028	1718	0.25	4.5	32	1.1	2.3	3.5		1.68	67	1034	768	112
30.0	4.45	5.65	3.3	700	4.6	5.425	3.45	1373	106	3134	1761	0.22	4.6	30	1.1	2.4	3.7		1.71	63	1105	815	107
31.0	4.4	5.7		700	4.5	5.475		1435	106	3294	1859	0.25	4.3	34	1.0	2.2	3.3		1.63	70	1061	797	115
32.0	4.35	5.95	2.9	800	4.4	5.725	3.05	1498	108	3401	1904	0.35	4.1	45	1.0	2.1	3.0		1.58	93	1022	777	147
33.0	4	5.55	2.75	700	4.1	5.325	2.90	1560	107	3508	1948	0.37	3.6	43	0.9	1.8	2.5		1.45	89	889	698	130
34.0	3.6	4.9		750	3.7	4.575		1622	104	3545	1922	0.30	3.2	30	0.8	1.6	2.1		1.33	63	757	612	83
35.0	2.85	3.7		700	3.0	3.475		1685	100	3645	1960	0.23	2.3	17	0.6	1.2	1.3		1.00	36	517	453	38

DILATOMETER TEST RESULTS

Test ID: DMT-6
Site: MARSOC
Location: Camp Lejeune, NC
Project No.: 16-54102

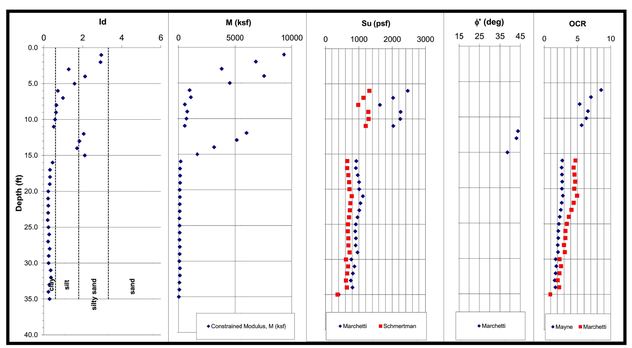

DILATOMETER TEST RESULTS

Test ID: DMT-6
Site: MARSOC
Location: Camp Lejeune, NC
Project No.: 16-54102

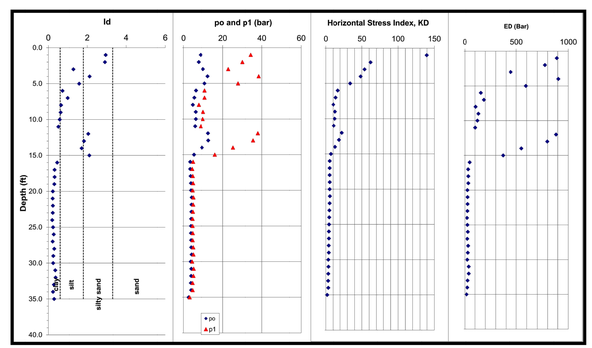

Job No: 16-54102
Job Name: MARSOC
Job Location: Camp Lejeune, NC
Date: 11/15/16
Sounding No: DMT-6
Ground Water Depth (ft): 8

	Membrane 1	Membrane 2	Membrane 3
ΔA =	0.2	0	0
ΔB =	0.15	0	0
Zm=	0.05	bar	

Latitude: 34.58040
Longitude: -77.44714

[1] Depth Below Existing Ground Surface
[2] Mayne, 1995
[3] Marchetti,2001
[4] Schmertman, 1991
[5] Mayne, 2002

DILATOMETER TEST RESULTS

Depth[1] (ft)	A (bar)	B (bar)	C (bar)	Thrust (psi)	po (bar)	p1 (bar)	p2 (bar)	u_o (psf)	γ^t (pcf)	σ_{vo} (psf)	σ_{vo}' (psf)	Id	K_D	E_D (bar)	K_c	OCR[2]	OCR[3]	ϕ^o (deg)	R_M	E_D (tsf)	k_o[4] (psf)	s_u[5] (psf)	M (tsf)
1.0	9.8	34.8		1000	8.7	34.4		0	130	130	130	2.34	139.7	891				49.7	5.00	1861			9297
2.0	6.6	30.2		1200	7.7	30		0	129	259	259	2.90	62.0	774				47.4	4.23	1617			6935
3.0	10.4	23	0	1100	9.9	22.8		0	127	386	386	1.29	53.8	446				46.6	4.09	932			3815
4.0	11.4	38.8		1100	12.3	38.4		0	133	531	531	2.12	46.4	905				46.6	3.99	1881			7260
5.0	11.4	28		1100	10.7	27.8		0	129	660	660	1.39	34.0	592					3.66	1237			4523
6.0	6.35	11	0.45	950	6.3	10.8	0.60	0	118	778	778	0.72	19.9	157	2.5	8.6	27.8		3.00	527	2461	1313	980
7.0	5.55	11		950	5.4	10.8		0	118	825	825	0.96	13.8	186	2.2	7.0	20.3		2.80	388	2027	1137	1088
8.0	8.7	19.8		900	8.2	19		0	118	943	943	0.93	19.9	158	1.9	5.8	15.2		2.74	271	1938	983	561
9.0	4	10.2	1.4	800	4.2	9.8	1.55	62	113	1057	995	0.33	12.9	103	2.2	6.3	18.4		2.71	209	2248	1282	750
10.0	6.25	9		950	6.2	9.0		125	116	1172	1037	0.58	12.4	124	2.0	5.8	14.4		2.61	209	2238	1289	750
11.0	5.65	9		900	5.0	9.8		187	115	1286	1099	0.51	11.1	102	2.0	5.8	14.4		2.60	213	2033	1205	583
12.0	13.6	38.2	0	1400	12.5	38		250	133	1409	1159	2.05	22.4	884				43.9	3.26	1845			6020
13.0	13.6	35.4		1400	12.7	35.6		312	132	1717	1405	1.80	19.6	796				43.1	3.09	1953			5133
14.0	10	25.4		1300	9.4	26.2		374	128	1844	1470	1.71	13.1	548					2.76	1145			3156
15.0	5.65	16.2	0	1000	5.3	16		437	122	1966	1529	2.11	6.9	372				38.8	2.16	776			1678
16.0	3.3	5		1000	3.4	4.8		499	107	1718	1216	0.45	5.4	49	1.2	2.7	4.7		1.87	103	926	657	192
17.0	3.3	4.6		900	3.4	4.4		562	105	1821	1259	0.32	5.2	35	1.2	2.6	4.4		1.83	72	914	654	132
18.0	3.5	4.85	1.95	850	3.6	4.65	2.10	624	106	1927	1303	0.32	5.3	36	1.2	2.7	4.6		1.85	76	967	689	141
19.0	3.65	5		800	3.5	4.8		686	106	2016	1329	0.31	5.4	36	1.2	2.7	4.7		1.86	76	1006	715	142
20.0	3.7	4.8		800	3.8	4.6		749	105	2120	1371	0.23	5.3	27	1.2	2.7	4.5		1.84	57	1011	721	105
21.0	4.05	5.2	2.45	800	4.2	5	2.60	811	105	2226	1414	0.22	5.6	29	1.3	2.8	4.9		1.90	61	1119	798	116
22.0	3.9	5.05		800	4.0	4.85		874	105	2314	1440	0.23	5.2	29	1.2	2.7	4.5		1.83	61	1048	750	112
23.0	3.85	4.95		800	4.0	4.75	2.10	936	105	2418	1482	0.22	5.0	27	1.2	2.5	4.1		1.78	57	1013	734	102
24.0	3.75	4.75	2.6	800	3.9	4.55	2.75	998	104	2522	1524	0.20	4.6	24	1.1	2.4	3.7		1.71	49	961	708	85
25.0	3.95	4.75		800	3.8	4.55		1061	104	2626	1547	0.24	4.4	27	1.1	2.2	3.4		1.66	57	910	680	95
26.0	3.65	4.85		800	3.8	4.65		1123	105	2713	1589	0.28	4.2	31	1.0	2.2	3.2		1.62	65	892	672	105
27.0	3.75	4.8	2.75	800	3.9	4.6	2.90	1186	104	2817	1631	0.22	4.2	29	1.0	2.1	3.2		1.62	53	913	689	88
28.0	3.8	5.1		800	3.9	4.9		1248	106	2958	1710	0.30	4.0	35	1.0	2.1	3.0		1.67	72	905	690	114
29.0	4	5.3		800	4.1	5		1310	106	3063	1754	0.30	4.1	37	1.0	2.1	3.1		1.68	74	1000	760	120
30.0	3.8	4.55	2.2	800	3.9	4.35	2.35	1373	103	3166	1794	0.25	3.4	28	0.9	1.8	2.6		1.61	53	778	617	93
31.0	3.85	4.8		800	3.9	4.6		1435	104	3268	1831	0.28	3.4	29	0.9	1.8	2.6		1.47	64	670	555	123
32.0	3.75	5.2		800	3.8	5		1498	106	3402	1905	0.37	3.4	40	0.9	1.7	2.3		1.40	64	622	493	137
33.0	3.6	4.75	2.25	800	3.7	4.55	2.40	1560	104	3508	1946	0.28	3.2	29	0.8	1.6	2.1		1.33	61	764	619	81
34.0	3.75	4.8		800	3.9	4.8		1622	104	3525	1963	0.24	3.4	28	0.9	1.7	2.3		1.39	53	810	645	74
35.0	2.45	3.3	1.35	800	2.6	3.1	1.50	1685	99	3624	1939	0.30	1.9	18	0.5	1.0	0.9		0.85	38	401	369	32

DEPARTMENT OF THE NAVY
NAVAL FACILITIES ENGINEERING COMMAND
MIDLANT CI CORE
MCB CAMP LEJEUNE
P1482 MARINE SPECIAL OP SCHOOL
120 MAN CLASSROOMS
NAVAL FACILITIES ENGINEERING COMMAND–MID-ATLANTIC
NAVAL STATION NORFOLK, VIRGINIA
JACKSONVILLE, NC
SUBSURFACE INFORMATION LOGS

APPROVED
FOR COMMANDER NAVFAC
ACTIVITY
EMILY M. SYLVESTER, PE
SATISFACTORY TO DATE 28 JUNE 2018
DES RLH DRW RLH CHK FAD
DESIGN MANAGER G. COOKE
BRANCH MANAGER
CHIEF ENGINEER EJA
FIRE PROTECTION

SCALE: NA
EPROJECT NO. 1558046
CONSTR. CONTR. NO. –
NAVFAC DRAWING NO. 12747147
SHEET 7 OF 91
B-200

DRAWFORM REVISION: 10 MARCH 2009

APPR | DATE | DESCRIPTION | SYM

SEAL

A/E INFO

UNCLASSIFIED

FILE NAME: P:\NC\Camp Lejeune\MILCON\2017_1558046_P1482_IH-068_120ManClassrooms\6_Design\Drawings\Sheet\04_Geotech\B-200 SUBSURFACE INFORMATION LOGS.dwg LAYOUT NAME: B-200 SUBSURFACE INFORMATION LOGS dwg USER: robert.hunloon PLOTTED: Saturday, May 30, 2020 - 10:36am

CLIENT	JOB #	BORING #	SHEET
Whiting Turner Contracting Company	22-14182	B-7	1 OF 2
PROJECT NAME: MARSOC '08 Facilities	ARCHITECT-ENGINEER		
SITE LOCATION: MCB Camp Lejeune, North Carolina			

DESCRIPTION OF MATERIAL — ENGLISH UNITS
BOTTOM OF CASING — LOSS OF CIRCULATION 100%
SURFACE ELEVATION 33.5

SAMPLE NO.	SAMPLE TYPE	SAMPLE DEPTH (IN)	RECOVERY (IN)	DEPTH (FT)
1	SS	18	18	0
2	SS	18	18	5
3	SS	18	18	
4	SS	18	18	10
5	SS	18	18	15
6	SS	18	18	20
7	SS	18	18	25
8	SS	18	18	30

Firm, Brown, Clayey, Fine to Medium SAND, (SC)

Soft, Orangish Gray, Sandy CLAY, (CL)

Medium DenseDark Brown, Silty, Fine to Medium SAND, (SM)

Soft to Very Soft, Gray, Sandy CLAY, (CL)

CALIBRATED PENETROMETER TONS/FT.² — PLASTIC LIMIT % — WATER CONTENT % — LIQUID LIMIT %
ROCK QUALITY DESIGNATION & RECOVERY — RQD% — REC.% — 20% 40% 60% 80% 100%
STANDARD PENETRATION BLOWS/FT. — 10 20 30 40 50+

7 (3-3-4) · 4 (2-2-2) · 11 (4-5-6) · 3 (3-2-1) · 26.4 · 2 (1-1-1) · WH (0-0-0) · 32.7 · 15 · 31 · 2 (1-1-1) · 2 (1-1-1)

CONTINUED ON NEXT PAGE.

THE STRATIFICATION LINES REPRESENT THE APPROXIMATE BOUNDARY LINES BETWEEN SOIL TYPES IN-SITU THE TRANSITION MAY BE GRADUAL.

WL	WS OR CV	BORING STARTED 06/20/08	
WL(BCR) WL(ACR)		BORING COMPLETED 06/20/08	CAVE IN DEPTH ●
WL		RIG CME 45B FOREMAN JB	DRILLING METHOD Mud Rotary

CLIENT	JOB #	BORING #	SHEET
Whiting Turner Contracting Company	22-14182	B-7	2 OF 2
PROJECT NAME: MARSOC '08 Facilities	ARCHITECT-ENGINEER		
SITE LOCATION: MCB Camp Lejeune, North Carolina			

DESCRIPTION OF MATERIAL — ENGLISH UNITS
BOTTOM OF CASING — LOSS OF CIRCULATION 100%
SURFACE ELEVATION 33.5

SAMPLE NO.	SAMPLE TYPE	SAMPLE DEPTH (IN)	RECOVERY (IN)	DEPTH (FT)
9	SS	18	18	30
10	SS	18	18	40
11	SS	18	18	45

Very Soft to Soft, Gray, Sandy CLAY, (CL)

Dense to Medium Dense, Greenish Gray, Silty, Fine SAND, (SM) with Shell Fragments

END OF BORING @ 45.0'

CALIBRATED PENETROMETER TONS/FT.² — PLASTIC LIMIT % — WATER CONTENT % — LIQUID LIMIT %
ROCK QUALITY DESIGNATION & RECOVERY — RQD% — REC.% — 20% 40% 60% 80% 100%
STANDARD PENETRATION BLOWS/FT. — 10 20 30 40 50+

WH (0-0-0) · (12-13-20) 33 · 20 (7-8-12)

THE STRATIFICATION LINES REPRESENT THE APPROXIMATE BOUNDARY LINES BETWEEN SOIL TYPES IN-SITU THE TRANSITION MAY BE GRADUAL.

WL	WS OR CV	BORING STARTED 06/20/08	
WL(BCR) WL(ACR)		BORING COMPLETED 06/20/08	CAVE IN DEPTH ●
WL		RIG CME 45B FOREMAN JB	DRILLING METHOD Mud Rotary

CLIENT	JOB #	BORING #	SHEET
Whiting Turner Contracting Company	22-14182	B-8	1 OF 2
PROJECT NAME: MARSOC '08 Facilities	ARCHITECT-ENGINEER		
SITE LOCATION: MCB Camp Lejeune, North Carolina			

DESCRIPTION OF MATERIAL — ENGLISH UNITS
BOTTOM OF CASING — LOSS OF CIRCULATION 100%
SURFACE ELEVATION 33.0

SAMPLE NO.	SAMPLE TYPE	SAMPLE DEPTH (IN)	RECOVERY (IN)	DEPTH (FT)
1	SS	18	18	0
2	SS	18	18	5
3	SS	18	18	
4	SS	18	18	10
5	SS	18	18	15
6	SS	18	18	20
7	SS	18	18	25
8	SS	18	18	30

Loose to Medium Dense, Dark Brown, Silty, Fine to Medium SAND, (SM)

Medium Dense to Loose, Brownish Gray, Silty, Fine to Medium SAND, (SM)

Very Soft, Gray, CLAY, (CL)

CALIBRATED PENETROMETER TONS/FT.² — PLASTIC LIMIT % — WATER CONTENT % — LIQUID LIMIT %
ROCK QUALITY DESIGNATION & RECOVERY — RQD% — REC.% — 20% 40% 60% 80% 100%
STANDARD PENETRATION BLOWS/FT. — 10 20 30 40 50+

6 (2-3-3) · 12 (5-6-6) · 14 (7-6-8) · 8 (3-5-3) · 2 (1-1-1) · 2 (1-1-1) · 2 (1-1-1) · 18 · 38 · 50.3 · 2 (1-1-1)

CONTINUED ON NEXT PAGE.

THE STRATIFICATION LINES REPRESENT THE APPROXIMATE BOUNDARY LINES BETWEEN SOIL TYPES IN-SITU THE TRANSITION MAY BE GRADUAL.

WL	WS OR CV	BORING STARTED 06/20/08	
WL(BCR) WL(ACR)		BORING COMPLETED 06/20/08	CAVE IN DEPTH ●
WL 10'6"		RIG CME 45B FOREMAN JB	DRILLING METHOD Mud Rotary

CLIENT	JOB #	BORING #	SHEET
Whiting Turner Contracting Company	22-14182	B-8	2 OF 2
PROJECT NAME: MARSOC '08 Facilities	ARCHITECT-ENGINEER		
SITE LOCATION: MCB Camp Lejeune, North Carolina			

DESCRIPTION OF MATERIAL — ENGLISH UNITS
BOTTOM OF CASING — LOSS OF CIRCULATION 100%
SURFACE ELEVATION 33.0

SAMPLE NO.	SAMPLE TYPE	SAMPLE DEPTH (IN)	RECOVERY (IN)	DEPTH (FT)
9	SS	18	18	30
10	SS	18	18	40
11	SS	18	18	45

Very Soft, Gray, CLAY, (CL)

Very Dense to Medium Dense, Greenish Gray, Silty, Fine to Medium SAND, (SM) with Shell Fragments

END OF BORING @ 45.0'

CALIBRATED PENETROMETER TONS/FT.² — PLASTIC LIMIT % — WATER CONTENT % — LIQUID LIMIT %
ROCK QUALITY DESIGNATION & RECOVERY — RQD% — REC.% — 20% 40% 60% 80% 100%
STANDARD PENETRATION BLOWS/FT. — 10 20 30 40 50+

(6-42-38) 80 · 18 (4-8-10) · 17 (9-7-10)

THE STRATIFICATION LINES REPRESENT THE APPROXIMATE BOUNDARY LINES BETWEEN SOIL TYPES IN-SITU THE TRANSITION MAY BE GRADUAL.

WL	WS OR CV	BORING STARTED 06/20/08	
WL(BCR) WL(ACR)		BORING COMPLETED 06/20/08	CAVE IN DEPTH ●
WL 10'6"		RIG CME 45B FOREMAN JB	DRILLING METHOD Mud Rotary

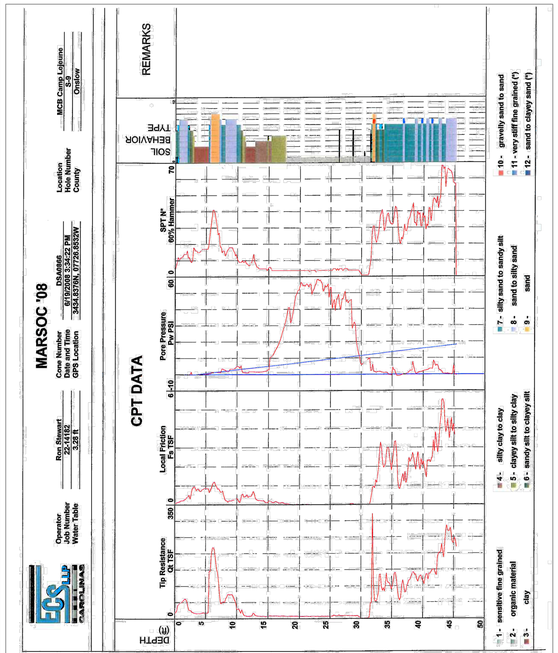

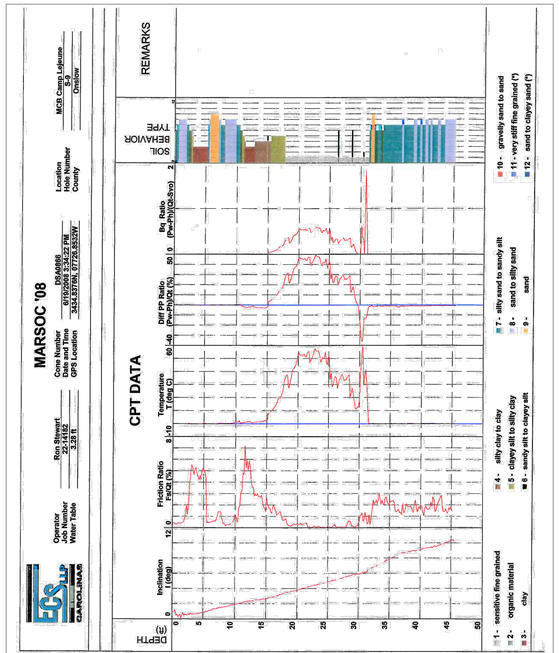

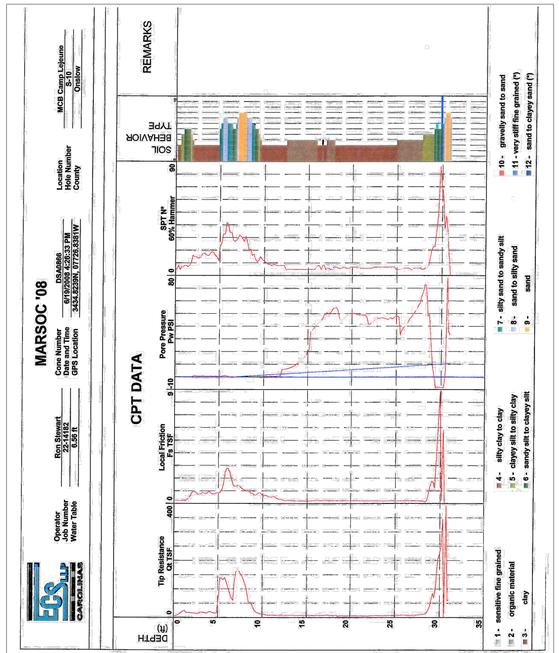

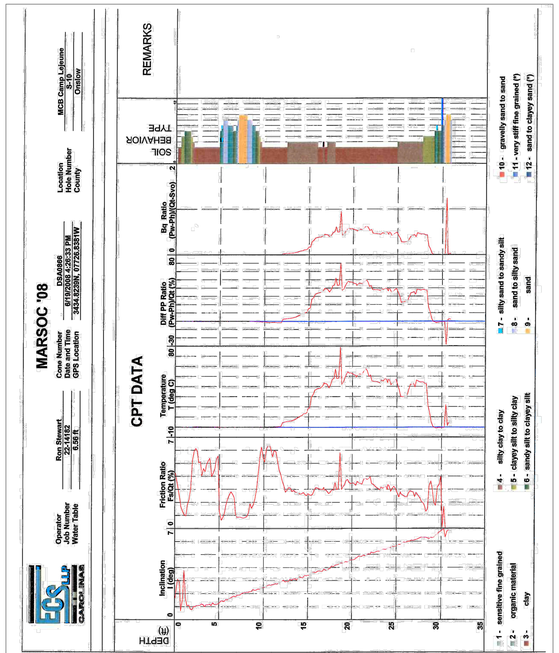

APPROVED

FOR COMMANDER NAVFAC

ACTIVITY

EMILY M. SYLVESTER, PE

SATISFACTORY TO DATE 28 JUNE 2018

DES RLH DRW RLH CHK FAD

DESIGN MANAGER G. COOKE

BRANCH MANAGER

CHIEF ENGINEER EJA

FIRE PROTECTION

DEPARTMENT OF THE NAVY — NAVAL FACILITIES ENGINEERING COMMAND
NAVAL FACILITIES ENGINEERING COMMAND–MID-ATLANTIC
NAVAL STATION NORFOLK VIRGINIA
MCB CAMP LEJEUNE — JACKSONVILLE, NC
P1482 MARINE SPECIAL OP SCHOOL
120 MAN CLASSROOMS
SUBSURFACE INFORMATION LOGS

SCALE: NA
EPROJECT NO. 1558046
CONSTR. CONTR. NO. –
NAVFAC DRAWING NO. 12747148
SHEET 8 OF 91

B-201

DRAWFORM REVISION: 10 MARCH 2009

FILE NAME: P:\NC\Camp Lejeune\MILCON\2017_1558046_P1482_JH-1088_120ManClassrooms\3_Design\Drawings\Sheet\04_Geotech\B-201 SUBSURFACE INFORMATION LOGS.dwg LAYOUT NAME: B-201 SUBSURFACE INFORMATION LOGS PLOTTED: Saturday, May 30, 2020 - 10:57am USER: robert.hunloon

UNCLASSIFIED

SOIL BORING RECORD

GER CONSULTING ENGINEERS

Boring #: **P-5** (Page 1 of 1)

Geotechnical, Environmental, Hazardous Materials, Groundwater & Industrial Consultants

Date Performed: **1/13/2017**

Project: **FY17 Projects P1481 & P1482**		GER Project Number: **110-7114**	Driller: GER
Location: **MARSOC, MCB Camp Lejeune, NC**		Client: **NAVFAC Mid-Atlantic**	Logged By: Andrew Blythe
Surface Elev. (ft): 31.0	Northing (ft): 306223	Easting (ft): 2467190 Datum: NAD83	Drill Method: Hand Auger
Vertical Datum: NAVD88	Latitude: 34.58135	Longitude: -77.44782 Datum: WGS84	Hammer: None Rig: None

Elevation ft	Elevation m	Depth ft	Depth m	Lith-ology	Material Description	Ground Water	Comments
					Turf and topsoil like material		
30	9				**Silty SAND (SM)** Black, fine to medium, trace organics, moist		Possible fill material in upper 2 ft
					Silty SAND (SM) Grey to grey mottled tan, fine to medium, wet	▽	Perched water table; Estimated SHWT = 2.3 ft
		1			Boring terminated at 4 feet.	▙	Continual caving of borehole at 4 ft
8							
25	8						
		5					
7							
			2				
20	6						
		10					
			3				
6							
15	5						
			4				
5							

ELEVATION AND COORDINATES SHALL BE CONSIDERED APPROXIMATE. BORING RECORD IS INVALID WITHOUT ACCOMPANYING NOTES IN THE GEOTECHNICAL REPORT OR SHOWN ON THE PLANS.

SOIL BORING RECORD 7114 BORING LOGS.GPJ GER.GDT 1/26/17

GeoEnvironmental Resources, Inc. 2712 Southern Boulevard, Suite 101 Virginia Beach, VA 23452 757-463-3200 www.geronline.com

Constant Head Borehole Permeameter Test

Project: P1481 & P1482
Project#: 110-7114
Location: MARSOC, MCB Camp Lejeune
Client: NAVFAC Mid-Atlantic

Test Date: 1/13/2017
Temperature: 70 degrees F
Weather: Sunny
Soil Description: Black Fine Silty SAND (SM) with organics

Boring/Test Location: P-5
Test Depth (ft): 1

Ground Elevation (ft): 31
Test Elevation (ft): 30

Hole Depth: 30 cm
Difference Between Reference Level and Soil Surface: 9 cm
Distance From Hole Bottom to Reference Level (D): 39 cm
Desired Water Depth in Hole (H): 24 cm
Constant Head Tube Setting (d): 15 cm
Distance From Hole Bottom to Impermeable Layer (s): unknown cm

Measured Actual Water Level in Hole
Initial: 24 cm
Final: 24 cm
Radius of Hole (r): 3.81 cm
Clock Time: 9:00 AM
Starting Saturation: Moist
Steady State Reading: 0.7 cm/min

A or B: 0.00047 $1/cm^2$
(Glover Solution for K_{sat})

Reservoirs Used For Measuring of Steady State Flow Rate
Flow Meauring Reservoir Only : X
Both Flow Measuring & Main Reservoirs:

Conversion Factor (C.F.): 20 cm^2
Conversion Factor (C.F.): 105 cm^2

(To obtain flow volume multiply change in water level by the appropriate C.F. from above)

Elapsed Time (min:sec)	Reservoir Reading (cm)	Δt (min)	Change in Water Level (cm)	Flow Volume cm^3	Q cm^3/min	Q cm^3/hr	A or B $1/cm^2$	K_{sat} cm/min
00:00	47.5	0	0	0	0	0	0	0
00:30	40.9	0.5	6.60	132.0	264.00	15840	0.00047	0.123
01:00	37.4	0.5	3.50	70.0	140.00	8400	0.00047	0.065
01:30	36.1	0.5	1.30	26.0	52.00	3120	0.00047	0.024
02:00	35.7	0.5	0.40	8.0	16.00	960	0.00047	0.007
02:30	35.1	0.5	0.60	12.0	24.00	1440	0.00047	0.011
03:00	35	0.5	0.10	2.0	4.00	240	0.00047	0.002
03:30	34.4	0.5	0.60	12.0	24.00	1440	0.00047	0.011
04:00	33.8	0.5	0.60	12.0	24.00	1440	0.00047	0.011
04:30	33.3	0.5	0.50	10.0	20.00	1200	0.00047	0.009
05:00	32.7	0.5	0.60	12.0	24.00	1440	0.00047	0.011
05:30	32.2	0.5	0.50	10.0	20.00	1200	0.00047	0.009
06:00	31.6	0.5	0.60	12.0	24.00	1440	0.00047	0.011

K_{sat} = Q*A without impermeable layer below
K_{sat} = Q*B with impermeable layer below

Average of Last Three K_{sat} Readings: 0.011 cm/min
0.004 in/min
0.63 cm/hr
0.25 in/hr

Amooemeter No. 1744

GER

SOIL BORING RECORD

GER CONSULTING ENGINEERS

Boring #: **P-6** (Page 1 of 1)

Geotechnical, Environmental, Hazardous Materials, Groundwater & Industrial Consultants

Date Performed: **1/13/2017**

Project: **FY17 Projects P1481 & P1482**		GER Project Number: **110-7114**	Driller: GER
Location: **MARSOC, MCB Camp Lejeune, NC**		Client: **NAVFAC Mid-Atlantic**	Logged By: Andrew Blythe
Surface Elev. (ft): 27.0	Northing (ft): 305877	Easting (ft): 2467508 Datum: NAD83	Drill Method: Hand Auger
Vertical Datum: NAVD88	Latitude: 34.58039	Longitude: -77.44678 Datum: WGS84	Hammer: None Rig: None

Elevation ft	Elevation m	Depth ft	Depth m	Lith-ology	Material Description	Ground Water	Comments
					Turf and topsoil like material		
					Silty SAND (SM) Brown to black, fine to medium, trace organics, moist		Possible fill material in upper 1 ft
25	8				**Silty SAND (SM)** Grey to tan, fine, trace clay, moist		
					Sandy SILT (ML) Brown, trace clay, moist		
		1			**Sandy Fat CLAY (CH)** Grey mottled tan and orange, moist		Estimated SHWT = 3 ft
7					**Silty SAND (SM)** Brown and grey, fine, moist		
		5					
20	6				**Silty SAND (SM)** Grey, fine to medium, trace clay, moist		
			2			▽	
		10			**Clayey SAND (SC)** Grey, fine to medium, moist to wet		
			3		**Sandy Lean CLAY (CL)** Grey, wet		
5					Boring terminated at 10 feet.		
15	5						
			4				
4							

ELEVATION AND COORDINATES SHALL BE CONSIDERED APPROXIMATE. BORING RECORD IS INVALID WITHOUT ACCOMPANYING NOTES IN THE GEOTECHNICAL REPORT OR SHOWN ON THE PLANS.

SOIL BORING RECORD 7114 BORING LOGS.GPJ GER.GDT 1/26/17

GeoEnvironmental Resources, Inc. 2712 Southern Boulevard, Suite 101 Virginia Beach, VA 23452 757-463-3200 www.geronline.com

Constant Head Borehole Permeameter Test

Project: P1481 & P1482
Project#: 110-7114
Location: MARSOC, MCB Camp Lejeune
Client: NAVFAC Mid-Atlantic

Test Date: 1/13/2017
Temperature: 70 degrees F
Weather: Sunny
Soil Description: Grey Fine Silty SAND (SM) with clay

Boring/Test Location: P-6
Test Depth (ft): 1.5

Ground Elevation (ft): 27
Test Elevation (ft): 25.5

Hole Depth: 46 cm
Difference Between Reference Level and Soil Surface: 9 cm
Distance From Hole Bottom to Reference Level (D): 55 cm
Desired Water Depth in Hole (H): 38 cm
Constant Head Tube Setting (d): 17 cm
Distance From Hole Bottom to Impermeable Layer (s): 30 cm

Measured Actual Water Level in Hole
Initial: 38 cm
Final: 38 cm
Radius of Hole (r): 3.81 cm
Clock Time: 11:00 AM
Starting Saturation: Moist
Steady State Reading: 1.3 cm/min

A or B: 0.00033 $1/cm^2$
(Glover Solution for K_{sat})

Reservoirs Used For Measuring of Steady State Flow Rate
Flow Meauring Reservoir Only : X
Both Flow Measuring & Main Reservoirs:

Conversion Factor (C.F.): 20 cm^2
Conversion Factor (C.F.): 105 cm^2

(To obtain flow volume multiply change in water level by the appropriate C.F. from above)

Elapsed Time (min:sec)	Reservoir Reading (cm)	Δt (min)	Change in Water Level (cm)	Flow Volume cm^3	Q cm^3/min	Q cm^3/hr	A or B $1/cm^2$	K_{sat} cm/min
00:00	43.5	0	0	0	0	0	0	0
00:30	34	0.5	9.50	190.0	380.00	22800	0.00033	0.126
01:00	27.5	0.5	6.50	130.0	260.00	15600	0.00033	0.086
01:30	24	0.5	3.50	70.0	140.00	8400	0.00033	0.047
02:00	22.4	0.5	1.60	32.0	64.00	3840	0.00033	0.021
02:30	21.5	0.5	0.90	18.0	36.00	2160	0.00033	0.012
03:30	16.5	1.0	5.00	100.0	100.00	6000	0.00033	0.033
04:00	13.7	0.5	2.80	56.0	112.00	6720	0.00033	0.037
04:30	12.2	0.5	1.50	30.0	60.00	3600	0.00033	0.020
05:00	11.3	0.5	0.90	18.0	36.00	2160	0.00033	0.012
05:30	10.3	0.5	1.00	20.0	40.00	2400	0.00033	0.013
06:00	9.3	0.5	1.00	20.0	40.00	2400	0.00033	0.013

K_{sat} = Q*A without impermeable layer below
K_{sat} = Q*B with impermeable layer below

Average of Last Three K_{sat} Readings: 0.013 cm/min
0.005 in/min
0.77 cm/hr
0.30 in/hr

Amooemeter No. 1744

GER

APPR | DATE | DESCRIPTION | SYM

SEAL

A/E INFO

APPROVED

FOR COMMANDER NAVFAC

ACTIVITY

EMILY M. SYLVESTER, PE

SATISFACTORY TO DATE 28 JUNE 2018

DES RLH DRW RLH CHK FAD

DESIGN MANAGER G. COOKE

BRANCH MANAGER

CHIEF ENGINEER EJA

FIRE PROTECTION

DEPARTMENT OF THE NAVY
NAVAL FACILITIES ENGINEERING COMMAND
NAVAL FACILITIES ENGINEERING COMMAND–MID-ATLANTIC
NAVAL STATION NORFOLK VIRGINIA
MCB CAMP LEJEUNE
JACKSONVILLE, NC
P1482 MARINE SPECIAL OP SCHOOL
120 MAN CLASSROOMS
MIDLANT CI CORE
SUBSURFACE INFORMATION LOGS & DATA

SCALE: NA
EPROJECT NO. 1558046
CONSTR. CONTR. NO. –
NAVFAC DRAWING NO. 12747149
SHEET 9 OF 91

B-202

DRAWFORM REVISION: 10 MARCH 2009

FILE NAME: P:\MC\Comp\Lejeune\MLCON\2017_1558046_P1482_JH-DBB_120ManClassrooms\B_Design\Drawings\Sheet\04_Geotech\B-201 SUBSURFACE INFORMATION LOGS.dwg LAYOUT NAME: B-202 SUBSURFACE INFORMATION LOGS & DATA PLOTTED: Saturday, May 30, 2020 - 10:57am USER: robert.huntoon

UNCLASSIFIED

LEGEND:

	EXISTING	NEW
SPOT ELEVATION	+20.32	20.32
TOP OF CURB (TC) ELEVATION	+TC20.55	TC20.55
TOP OF WALL (TW) ELEVATION	+TW26.77	TW26.77
BOTTOM OF WALL (BW) ELEVATION	+BW24.00	BW24.00
BITUMINOUS PAVEMENT		
LIGHT DUTY ASPHALT PAVEMENT		
HEAVY DUTY ASPHALT PAVEMENT		
CONCRETE PATTERN	CONC	
HEAVY DUTY CONCRETE PATTERN	CONC	
CURB AND GUTTER		
BUILDING (BLDG.)		
CENTERLINE DITCH/SWALE		
CONTOUR	20	20 / 19
EDGE OF WOODS		
FENCE		
GRAVEL	GRAVEL	
SIGN		
TOE OF SLOPE (TOS)	TOS	
TOP OF BANK (TOB)	TOB	
TREE		
STORM SEWER	SD_x	
STORM HEADWALL		
WATER MAIN	W_x	W
FIRE HYDRANT		
WATER VALVE		
SANITARY SEWER	SS_x	
SANITARY MANHOLE	Ⓢ	Ⓢ
SANITARY CLEANOUT	•	•4"CO
OVERHEAD ELECTRIC LINES (OHE)	OHE_x	OHE
GUY WIRE		
UNDERGROUND ELECTRIC (UGE)	UGE_x	UGE
TELEPHONE (TEL.) PEDESTAL (PED.)	TEL. PED.	
UTILITY POLE		
UTILITY POLE W/ LIGHT		

CIVIL ABBREVIATIONS:

A/C	AIR CONDITIONING UNIT
APPROX	APPROXIMATE
ATFP	ANTI TERRORISM FORCE PROTECTION
MH	MANHOLE
BLDG	BUILDING
BOL	BOLLARD
BW	BOTTOM OF WALL
CO	CLEANOUT
CONC	CONCRETE
DI	DROP INLET
DIP	DUCTILE IRON PIPE
EJB	ELECTRIC JUNCTION BOX
EMH	ELECTRIC MANHOLE
EXIST	EXISTING
EP	EDGE OF ASPHALT PAVEMENT
FDC	FIRE DEPARTMENT CONNECTION
FEP	FUEL EFFICIENT PARKING
FES	FLARED END SECTION
FFE	FINISHED FLOOR ELEVATION
FH	FIRE HYDRANT
FL	FLOW LINE
FM	SANITARY SEWER FORCE MAIN
FO	FIBER OPTIC
GV	GATE VALVE
HP	HIGH POINT
INV	INVERT
L/P	LIGHT POLE
MG	MATCH EXISTING GRADE
NIC	NOT IN CONTRACT
NTS	NOT TO SCALE
OHE	OVERHEAD ELECTRICAL
PIV	POST INDICATOR VALVE
P/P	POWER POLE
RD	ROOF DRAIN
REM	REMOVE
SCO	SANITARY CLEANOUT
SMH	SANITARY MANHOLE
TBM	TEMPORARY BENCHMARK
TEMP	TEMPORARY
TMH	TELEPHONE MANHOLE
T PED	TELEPHONE PEDESTAL
TOB	TOP OF BANK
TSV	TAPPING SLEEVE & VALVE
TW	TOP OF WALL
TYP	TYPICAL
UD	UNDER DRAIN
UGE	UNDER GROUND ELECTRICAL
U.O.N.	UNLESS OTHERWISE NOTED
WV	WATER VALVE
VB	VALVE BOX
W/	WITH
RD	ROOF DRAIN

DEMOLITION NOTES

1. REMOVE AND DISPOSE OF EXISTING MANMADE SURFACE FEATURES WITHIN THE LIMIT OF WORK INCLUDING BUILDINGS, STRUCTURES, PAVEMENTS, SLABS, CURBING, FENCES, UTILITY POLES, SIGNS, ETC. UNLESS INDICATED OTHERWISE ON THE DRAWINGS. REMOVE AND DISPOSE OF EXISTING UTILITIES, FOUNDATIONS, UNSUITABLE MATERIAL WITHIN THE PROPOSED BUILDING FOOTPRINT AND TEN FEET BEYOND AND BENEATH PROPOSED EXTERIOR COLUMNS, PER DRAWINGS AND SPECIFICATIONS.
2. EXISTING UTILITIES SHALL BE TERMINATED, UNLESS OTHERWISE NOTED, IN CONFORMANCE WITH STATE, LOCAL, BASE AND INDIVIDUAL UTILITY COMPANY STANDARDS, AND DETAILS. THE CONTRACTOR SHALL COORDINATE UTILITY SERVICE DISCONNECTS WITH THE UTILITY REPRESENTATIVES.
3. DISPOSE OF DEMOLITION DEBRIS IN ACCORDANCE WITH APPLICABLE FEDERAL, STATE AND LOCAL REGULATIONS, ORDINANCES AND STATUTES.

LAYOUT NOTES

1. CURB RADII ARE 5 FEET TO FACE OF CURB UNLESS OTHERWISE NOTED.
2. CURBING SHALL BE CAST-IN-PLACE WITHIN THE SITE UNLESS OTHERWISE INDICATED ON PLANS.
3. SEE ARCHITECTURAL DRAWINGS FOR EXACT BUILDING DIMENSIONS AND DETAILS CONTIGUOUS TO THE BUILDING, INCLUDING SIDEWALKS, RAMPS, BUILDING ENTRANCES, STAIRWAY, UTILITY PENETRATIONS, CONCRETE DOOR PADS, LOADING DOCKS, BOLLARDS, ETC.
4. ANY PROPERTY LINE MONUMENTATION DISTURBED DURING CONSTRUCTION SHALL BE SET OR RESET BY A PROFESSIONAL LICENSED SURVEYOR.

UTILITY NOTES

1. EXISTING UTILITIES SHOWN ARE APPROXIMATE ONLY AND BASED ON FIELD SURVEYS, AVAILABLE RECORDS, VERBAL INFORMATION AND/OR PHYSICAL FEATURES. THE CONTRACTOR SHALL OBTAIN DIGGING PERMITS PRIOR TO START OF EXCAVATION. AT LEAST 15 DAYS PRIOR TO STARTING EXCAVATION WORK, THE CONTRACTOR SHALL CONTACT THE CONTRACTING OFFICER TO ALLOW MARKING OF EXISTING BURIED UTILITIES.

   ALL EXISTING UNDERGROUND UTILITIES IN THE WORK AREA MUST BE POSITIVELY IDENTIFIED BY A THIRD PARTY, INDEPENDENT, PRIVATE UTILITY LOCATING COMPANY AND COORDINATED WITH THE CONTRACTING OFFICER. ANY MARKINGS MADE DURING THE UTILITY INVESTIGATION MUST BE MAINTAINED THROUGHOUT THE CONTRACT.

   WHENEVER CONTRACT WORK INVOLVES CHIPPING, SAW CUTTING, OR CORE DRILLING THROUGH CONCRETE, BITUMINOUS ASPHALT OR OTHER IMPERVIOUS SURFACES, THE THIRD PARTY, INDEPENDENT, PRIVATE LOCATING COMPANY SHALL LOCATE UTILITY DEPTH BY USE OF GROUND PENETRATING RADAR (GPR), X-RAY, BORE SCOPE, OR ULTRASOUND PRIOR TO THE START OF DEMOLITION AND CONSTRUCTION. OUTAGES TO ISOLATE UTILITY SYSTEMS MUST BE USED IN CIRCUMSTANCES WHERE UTILITIES ARE UNABLE TO BE POSITIVELY IDENTIFIED. THE USE OF HISTORICAL DRAWINGS DOES NOT ALLEVIATE THE CONTRACTOR FROM MEETING THIS REQUIREMENT.

   PRIOR TO CONSTRUCTION, THE SITE SHALL BE SCANNED WITH ELECTROMAGNETIC AND SONIC EQUIPMENT AND THE GROUND SURFACE MARKED WHERE EXISTING UNDERGROUND UTILITIES ARE DISCOVERED.

   TAKE THE NECESSARY PRECAUTIONS TO PROTECT THE EXISTING UTILITIES AND ANY DAMAGE TO THE UTILITIES SHALL BE IMMEDIATELY REPAIRED AT THE CONTRACTOR'S EXPENSE. THE CONTRACTOR SHALL BE REQUIRED TO AND AGREES TO COMPLY WITH ALL THE PROVISIONS OF THE GOVERNMENT, STATE AND UTILITY FOR UNDERGROUND DAMAGE PREVENTION AND HEREBY AGREES TO HOLD THE GOVERNMENT HARMLESS AGAINST ANY LOSS, DAMAGES AND CLAIMS OF ANY NATURE WHATSOEVER ARISING OUT OF FAILURE TO COMPLY WITH SAID PROVISIONS.
2. THE LOCATIONS, SIZES, AND TYPES OF EXISTING UTILITIES ARE SHOWN AS AN APPROXIMATE REPRESENTATION ONLY. PRIOR TO ORDERING MATERIALS AND BEGINNING OF CONSTRUCTION THE CONTRACTOR SHALL VERIFY AND DETERMINE THE EXACT LOCATIONS, SIZES, AND ELEVATIONS OF POINTS OF CONNECTIONS TO EXISTING UTILITIES AND, SHALL CONFIRM THAT THERE ARE NO INTERFERENCES WITH THE EXISTING UTILITIES AND THE PROPOSED UTILITY ROUTES, INCLUDING ROUTES WITHIN THE PUBLIC RIGHTS-OF-WAY.
3. WHERE AN EXISTING UTILITY IS FOUND TO CONFLICT WITH THE PROPOSED WORK, OR EXISTING CONDITIONS DIFFER FROM THOSE SHOWN SUCH THAT THE WORK CANNOT BE COMPLETED AS INTENDED, THE CONTRACTOR WILL NOTIFY THE CONTRACTING OFFICER IN ACCORDANCE WITH FAR 52.236-2.
4. SET CATCH BASIN RIMS, AND INVERTS OF SEWERS, DRAINS, AND DITCHES IN ACCORDANCE WITH ELEVATIONS ON THE GRADING AND UTILITY PLANS.
5. RIM ELEVATIONS FOR DRAIN AND SEWER MANHOLES, WATER VALVE COVERS, GAS GATES, ELECTRIC AND TELEPHONE PULL BOXES, AND MANHOLES, AND OTHER SUCH ITEMS, ARE APPROXIMATE AND SHALL BE SET/RESET AS FOLLOWS:
   A. PAVEMENTS AND CONCRETE SURFACES: FLUSH
   B. ALL SURFACES ALONG ACCESSIBLE ROUTES: FLUSH
   C. LANDSCAPE, LOAM AND SEED, AND OTHER EARTH SURFACE AREAS: ONE INCH BELOW SURROUNDING AREA AND TAPER EARTH TO THE RIM ELEVATION.
6. THE LOCATION, SIZE, DEPTH, AND SPECIFICATIONS FOR CONSTRUCTION OF PROPOSED PRIVATE UTILITY SERVICES SHALL BE INSTALLED ACCORDING TO THE REQUIREMENTS PROVIDED BY, AND APPROVED BY, THE RESPECTIVE UTILITY COMPANY. FINAL DESIGN AND LOCATION TO BE COORDINATED WITH THE CONTRACTING OFFICER.
7. MAKE ARRANGEMENTS FOR AND BE RESPONSIBLE FOR PAYING FEES FOR POLE RELOCATION AND FOR ALTERATION AND ADJUSTMENTS OF GAS, ELECTRIC, TELEPHONE, FIRE ALARM, AND ANY OTHER PRIVATE UTILITIES, WHETHER WORK IS PERFORMED BY THE CONTRACTOR OR BY THE UTILITY COMPANY.
8. UTILITY PIPE MATERIALS SHALL BE IN ACCORDANCE WITH SPECIFICATIONS, UNLESS OTHERWISE NOTED ON PLAN.
9. FURNISH EXCAVATION, INSTALLATION, AND BACKFILL OF ELECTRICAL FURNISHED SITEWORK RELATED ITEMS SUCH AS PULL BOXES, CONDUITS, DUCT BANKS, LIGHT POLE BASES, AND CONCRETE PADS. FURNISH CONCRETE ENCASEMENT OF DUCT BANKS IF REQUIRED BY UTILITY COMPANY AND AS INDICATED ON THE DRAWINGS.
10. COORDINATE GAS/PROPANE SERVICE WITH GAS/PROPANE COMPANY.

GENERAL NOTES:

1. UNLESS OTHERWISE INDICATED, ALL EXISTING STRUCTURES AND FACILITIES SHALL REMAIN.
2. ALL DIMENSIONS ARE TO FACE OF BUILDING, FACE OF CURB AND/OR EDGE OF PAVEMENT UNLESS OTHERWISE INDICATED.
3. SOD (CENTIPEDE) ALL DISTURBED PERVIOUS AREAS WITHIN THE LIMITS OF CONSTRUCTION UNLESS OTHERWISE SPECIFIED.
4. NO EARTH WORK/LAND DISTURBANCE SHALL BE PERFORMED UNTIL ALL SOIL EROSION AND SEDIMENT CONTROL DEVICES ARE IN PLACE.
5. ALL GRADE TRANSITIONS BETWEEN NEW AND EXISTING SHALL BE SMOOTH AND GRADUAL WITH NO SHARP OR ABRUPT CHANGES.
6. COORDINATE THE WORK OF ALL TRADES – VERIFY ALL FIELD CONDITIONS, QUANTITIES AND DIMENSIONS PRIOR TO COMMENCEMENT OF WORK. ANY DISCREPANCIES SHALL BE PROMPTLY BROUGHT TO THE ATTENTION OF THE CONTRACTING OFFICER.
7. EXECUTE ALL WORK WITH CARE TO PROTECT FROM DAMAGE ALL ADJACENT EXISTING FEATURES THAT ARE TO REMAIN. ANY SUCH DAMAGE SHALL BE REPAIRED OR REPLACED TO MATCH THE ORIGINAL CONDITION AS APPROVED BY THE CONTRACTING OFFICER AT NO ADDITIONAL COST TO THE GOVERNMENT.
8. FINISHED GRADE OF TOP SOIL (AFTER COMPACTION) SHALL BE 0.5 inch TO 1 inch (MAXIMUM) BELOW TOP OF ABUTTING PAVEMENTS, SIDEWALKS AND CURBING.
9. EQUIPMENT AND TRUCK TRACK-TIRE CLEANING/FLUSHING STATIONS SHALL BE ESTABLISHED AS NECESSARY TO ENSURE THAT NO MUD OR DEBRIS SHALL MIGRATE FROM THE CONSTRUCTION SITE TO THE BASE ROADS.
10. ALL HOLES, DEPRESSIONS, EXCAVATIONS, ETC. CREATED AS A RESULT OF DEMOLITION SHALL BE BACK-FILLED, COMPACTED, GRADED AND SEEDED.
11. FIELD VERIFY THE ELEVATIONS OF ALL CONNECTIONS TO EXISTING UTILITIES PRIOR TO CONSTRUCTING UPSTREAM PORTIONS OF THE NEW UTILITIES. ANY DISCREPANCIES SHALL BE PROMPTLY BROUGHT TO THE ATTENTION OF THE CONTRACTING OFFICER.
12. CONTAMINATED SOIL SHOULD NOT BE ENCOUNTERED, HOWEVER, IF CONTAMINANTS ARE SUSPECTED THROUGH ODORS OR VISUAL INSPECTIONS DURING EXCAVATION OPERATIONS, STOP WORK AND IMMEDIATELY CONTACT THE CONTRACTING OFFICER FOR FURTHER INSTRUCTIONS.
13. THERE ARE NO KNOWN GROUNDWATER MONITORING WELLS WITHIN THE PROJECT SITE, HOWEVER, IF AN UNMARKED WELL IS DISCOVERED AND INADVERTENTLY DAMAGED, STOP WORK AND IMMEDIATELY CONTACT THE CONTRACTING OFFICER FOR FURTHER INSTRUCTIONS.

SURVEY NOTES:

1. THE TOPOGRAPHIC SURVEY WAS PROVIDED BY RECENT ADJOINING PROJECTS. A TOPOGRAPHIC SURVEY OF THE EXISTING SITE WAS PERFORMED IN OCT 2016. ONE TOPOGRAPHIC SURVEYS HAVE BEEN PERFORMED TO SHOW THE LOCATION OF EXISTING FACILITIES, AREAS OF NEW WORK REQUIRED BY THIS PROJECT AND THE CHARACTER OF THE SITE. THE TOPOGRAPHIC SURVEY WAS PERFORMED BY NAVFAC MIDLANT FROM AN ACTUAL FIELD RUN SURVEY OF THE GROUND PERFORMED AND MAPPED IN ACCORDANCE WITH THE NORTH CAROLINA STATE MAPPING REQUIREMENTS, GS 47-30. THE GROUND SURVEY DATA EXCEEDS THE ABSOLUTE ACCURACY OF THE AERIAL SURVEY BY AT LEAST ONE ORDER OF MAGNITUDE. THE HORIZONTAL GRID IS NC GRID NAD83(2007), AND THE VERTICAL DATUM IS NAVD88.
2. CONFIRM THE LOCATION OF ALL ITEMS PRIOR TO THE START OF CONSTRUCTION.
3. THE EXISTENCE, SIZE AND OR LOCATION OF UTILITIES ARE NOT GUARANTEED BY THE SURVEY. UTILITIES SHOWN ARE BASED ON ABOVE GROUND STRUCTURES AND AVAILABLE UTILITY PLANS. THE CONTRACTOR SHALL FIELD VERIFY THE LOCATION OF ALL UTILITIES PRIOR TO CONSTRUCTION.
4. TOPOGRAPHIC SURVEY COMPLETED BY NAVFAC MIDLANT CI HORIZONTAL = NAD83 (2007), VERTICAL = NAVD 88. THE BASIS FOR CONTROL HAS NOT BEEN VERIFIED BY NAVFAC.
5. THERE ARE NO JURISDICTIONAL WETLANDS LOCATED WITHIN THE VICINITY OF THE PROJECT BOUNDARY.
6. THE PROJECT SITE LIES WITHIN FLOOD ZONE "X" AS DESCRIBED ON THE FLOOD INSURANCE RATE MAP COMMUNITY MAP 3720436000J PANEL 4360 WITH AN EFFECTIVE DATE OF NOVEMBER 3, 2005.

SYM	DESCRIPTION	DATE	APPR

NAVFAC

SEAL

A/E INFO

APPROVED

FOR COMMANDER NAVFAC

ACTIVITY

EMILY M. SYLVESTER, PE

SATISFACTORY TO DATE 28 JUNE 2018

DES QNT | DRW ARH | CHK MAD

DESIGN MANAGER G. COOKE

BRANCH MANAGER DLB

CHIEF ENGINEER EJA

FIRE PROTECTION

DEPARTMENT OF THE NAVY
NAVAL FACILITIES ENGINEERING COMMAND
NAVAL FACILITIES ENGINEERING COMMAND-MID-ATLANTIC
NAVAL STATION NORFOLK VIRGINIA
JACKSONVILLE, NC
MIDLANT CI CORE
MCB CAMP LEJEUNE
P1482 MARINE SPECIAL OP SCHOOL
120 MAN CLASSROOMS
LEGEND NOTES AND ABBREVIATIONS

SCALE: AS NOTED
EPROJECT NO. 1558046
CONSTR. CONTR. NO. –
NAVFAC DRAWING NO. 12747150
SHEET 10 OF 91

C-001

DRAWFORM REVISION: 10 MARCH 2009

FILE NAME: P:\NC\Camp Lejeune\MILCON\2017_1558046_P1482_JH-1088_120ManClassrooms\E_Design\Drawings\Sheet\05_Civil\1558047_P1482_C-001_LEGEND_NOTES.dwg LAYOUT NAME: C-001 LEGEND NOTES AND ABBREVIATIONS PLOTTED: Monday, June 01, 2020 - 3:55pm USER: dpyfran

DLB

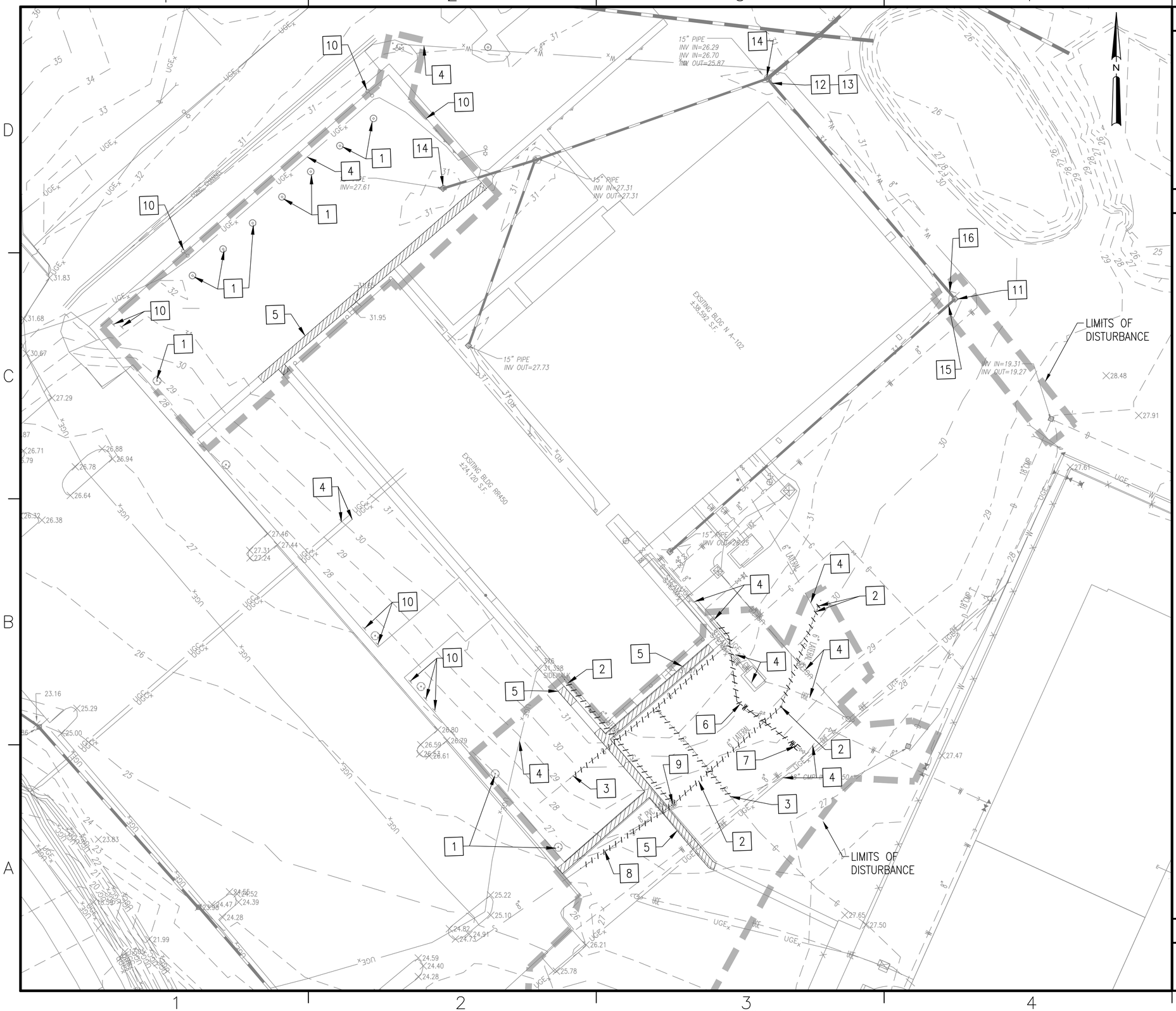

NOTES

1. CONTRACTOR SHALL FIELD VERIFY ALL MEASUREMENTS, EQUIPMENTS, AND MATERIALS.
2. THE ACTUAL FIELD CONDITIONS AT TIME OF CONSTRUCTION FOR P1482 MAY VARY FROM THAT REPRESENTED ON THESE CONSTRUCTION PLANS. THE CONTRACTOR SHALL CONFIRM THE LOCATION OF ALL ITEMS PRIOR TO THE START OF CONSTRUCTION.

☐ DEMOLITION KEYNOTES

1. REMOVE AND REPLACE EXIST TREES. REFER TO LANDSCAPE PLAN.
2. REMOVE EXIST CO AND EXIST 6" SANITARY SEWER LATERAL.
3. REMOVE EXIST GAS LINE AND EXIST VALVE.
4. PROTECT EXIST UTILITIES TO REMAIN DURING CONSTRUCTION.
5. REMOVE EXIST SIDEWALK.
6. REMOVE EXIST 8" WATER LINE.
7. PLUG EXIST 8" WATER LINE AFTER EXIST VALVE.
8. REMOVE EXIST 8" SANITARY SEWER.
9. REMOVE EXIST SANITARY SEWER MANHOLE.
10. PROTECT EXIST SIGNAGE AND EXIST LIGHT POLES. CONTRACTOR IS RESPONSIBLE TO REPLACE IF SIGNAGE OR LIGHT POLES ARE DAMAGED DURING THE CONSTRUCTION OF THE PROJECT.
11. REMOVE EXIST STORM INLET.
12. PLUG EXIST 15" RCP FROM INSIDE OF THE EXIST STORM INLET.
13. FILL WITH FLOWABLE FILL MATERIAL AND ABANDON EXIST 15" RCP IN PLACE.
14. EXISTING DROP INLET TO REMAIN AND PROTECT.
15. EXISTING ROOF DRAIN PIPE TO REMAIN AND PROTECT TO TIE TO PROPOSED NEW DROP INLET.
16. PLUG EXISTING 15" RCP AND FILLED WITH FLOWABLE FILL MATERIALS AFTER THE EXIST DROP INLET IS REMOVED, AND ABANDON IN PLACE.

GRAPHIC SCALE

1"=30' 0' 30' 60'

SYM	DESCRIPTION	DATE	APPR

NAVFAC

SEAL

A/E INFO

APPROVED

FOR COMMANDER NAVFAC

ACTIVITY

EMILY M. SYLVESTER, PE

SATISFACTORY TO DATE 28 JUNE 2018

DES QNT DRW ARH CHK MAD

DESIGN MANAGER G. COOKE

BRANCH MANAGER DLB

CHIEF ENGINEER EJA

FIRE PROTECTION

DEPARTMENT OF THE NAVY
NAVAL FACILITIES ENGINEERING COMMAND
MIDLANT ◻ CORE
NAVAL FACILITIES ENGINEERING COMMAND—MID-ATLANTIC
NAVAL STATION NORFOLK VIRGINIA
MCB CAMP LEJEUNE JACKSONVILLE, NC

P1482 MARINE SPECIAL OP SCHOOL 120 MAN CLASSROOMS

EXISTING CONDITIONS AND DEMOLITION PLAN

SCALE: AS NOTED
EPROJECT NO. 1558046
CONSTR. CONTR. NO. –
NAVFAC DRAWING NO. 12747151
SHEET 11 OF 91

CD-100

DRAWFORM REVISION: 10 MARCH 2009

FILE NAME: P:\MC\Camp_Lejeune\MILCON\2017_1558046_P1482_IH-DBB_120ManClassrooms\8_Design\Drawings\Sheet\05_Civil\1558047_P1482_CD-100_ExistCond.dwg LAYOUT NAME: CD-100 EXISTING CONDITIONS AND DEMOLITION PLAN PLOTTED: Monday, June 01, 2020 – 3:56pm USER: qay.hron

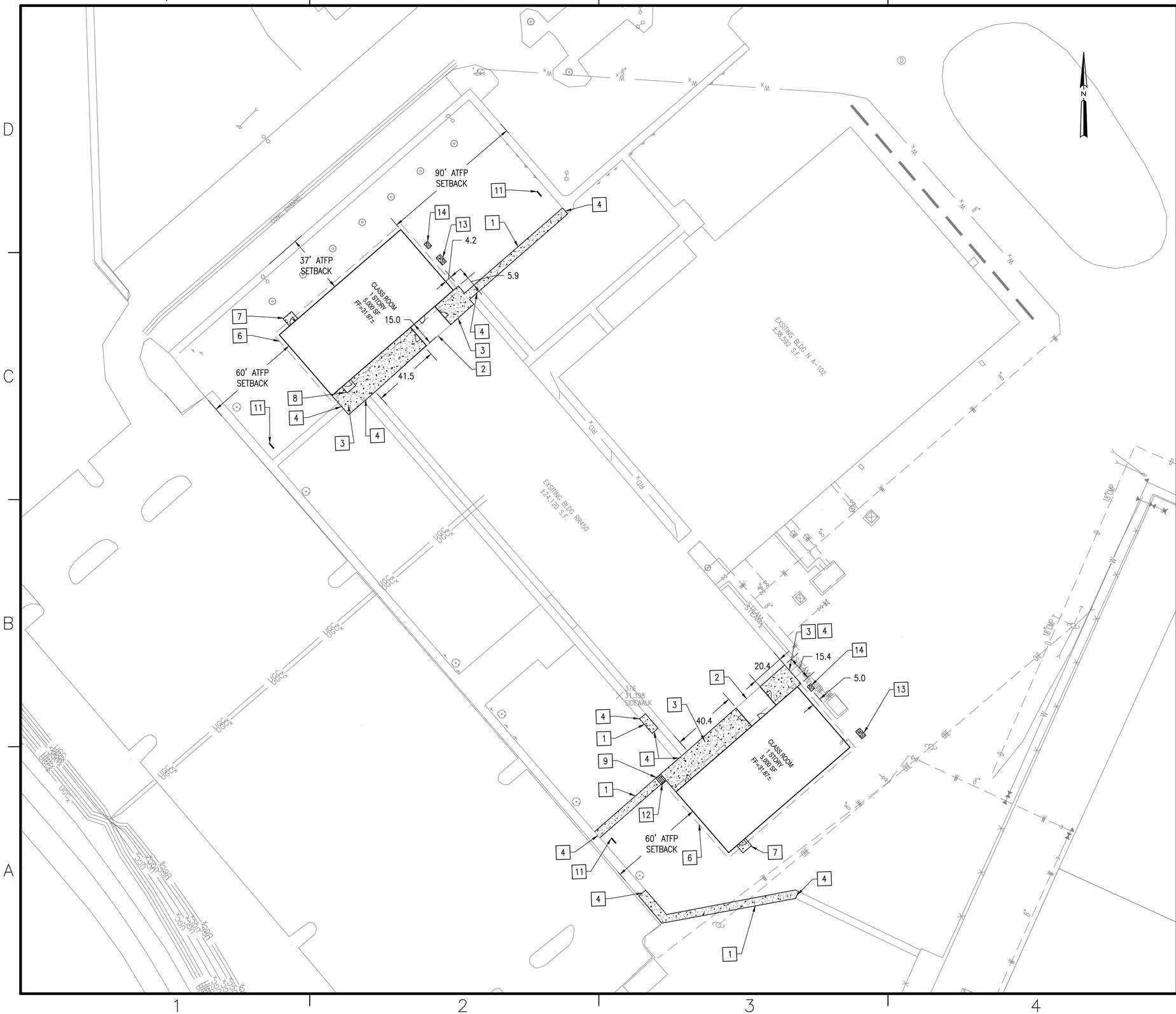

LEGEND

CONCRETE

NEW WORK KEYNOTES

1. 5' WIDE CONCRETE SIDEWALK
2. ENCLOSED WALKWAY BETWEEN NEW ADDITION CLASSROOMS AND EXISTING BUILDING
3. CONCRETE WALKWAY
4. TIE TO EXIST SIDEWALK
5. NOTE NOT USED.
6. BUILDING OVERHANG
7. 7' X 6' CONCRETE PAD
8. 7' X 5' RAISED CONCRETE PAD
9. CONCRETE STEPS (FIVE RISERS) WITH HANDRAIL.
10. NOTE NOT USED.
11. BUILDING MONUMENT SIGN. SEE LANDSCAPE PLAN FOR DETAILS.
12. 6" CONCRETE CHEEK WALL.
13. 6' X 3.5' CONCRETE PAD FOR HVAC UNITS. SEE MECHANICAL PLAN CONCRETE PAD DETAILS.
14. 4' x 3' CONCRETE PAD FOR HVAC UNITS. SEE MECHANICAL PLAN CONCRETE PADS DETAILS.

GRAPHIC SCALE

1"=30' 0' 30' 60'

SYM	DESCRIPTION	DATE	APPR

NAVFAC

A/E INFO

APPROVED

FOR COMMANDER NAVFAC

ACTIVITY

EMILY M. SYLVESTER, PE

SATISFACTORY TO DATE 28 JUNE 2018

DES QNT DRW ARH CHK MAD

DESIGN MANAGER G. COOKE

BRANCH MANAGER DLB

CHIEF ENGINEER EJA

FIRE PROTECTION

DEPARTMENT OF THE NAVY
NAVAL FACILITIES ENGINEERING COMMAND
NAVAL FACILITIES ENGINEERING COMMAND—MID-ATLANTIC
NAVAL STATION NORFOLK VIRGINIA
MIDLANT CI CORE
MCB CAMP LEJEUNE
JACKSONVILLE, NC
P1482 MARINE SPECIAL OP SCHOOL
120 MAN CLASSROOMS
SITE PLAN

SCALE: AS NOTED

EPROJECT NO. 1558046

CONSTR. CONTR. NO. –

NAVFAC DRAWING NO. 12747152

SHEET 12 OF 91

CS-201

DRAWFORM REVISION: 10 MARCH 2009

UNCLASSIFIED

FILE NAME: P:\NIC\Camp Lejeune\MILCON\2017_1558046_P1482_IH-DBB_120ManClassrooms\3_Design\Drawings\Sheet\05_Civil\1558047_P1482_CS-201_SITE.dwg LAYOUT NAME: CS-201 SITE PLAN PLOTTED: Monday, June 01, 2020 - 3:57pm USER: sjaytran

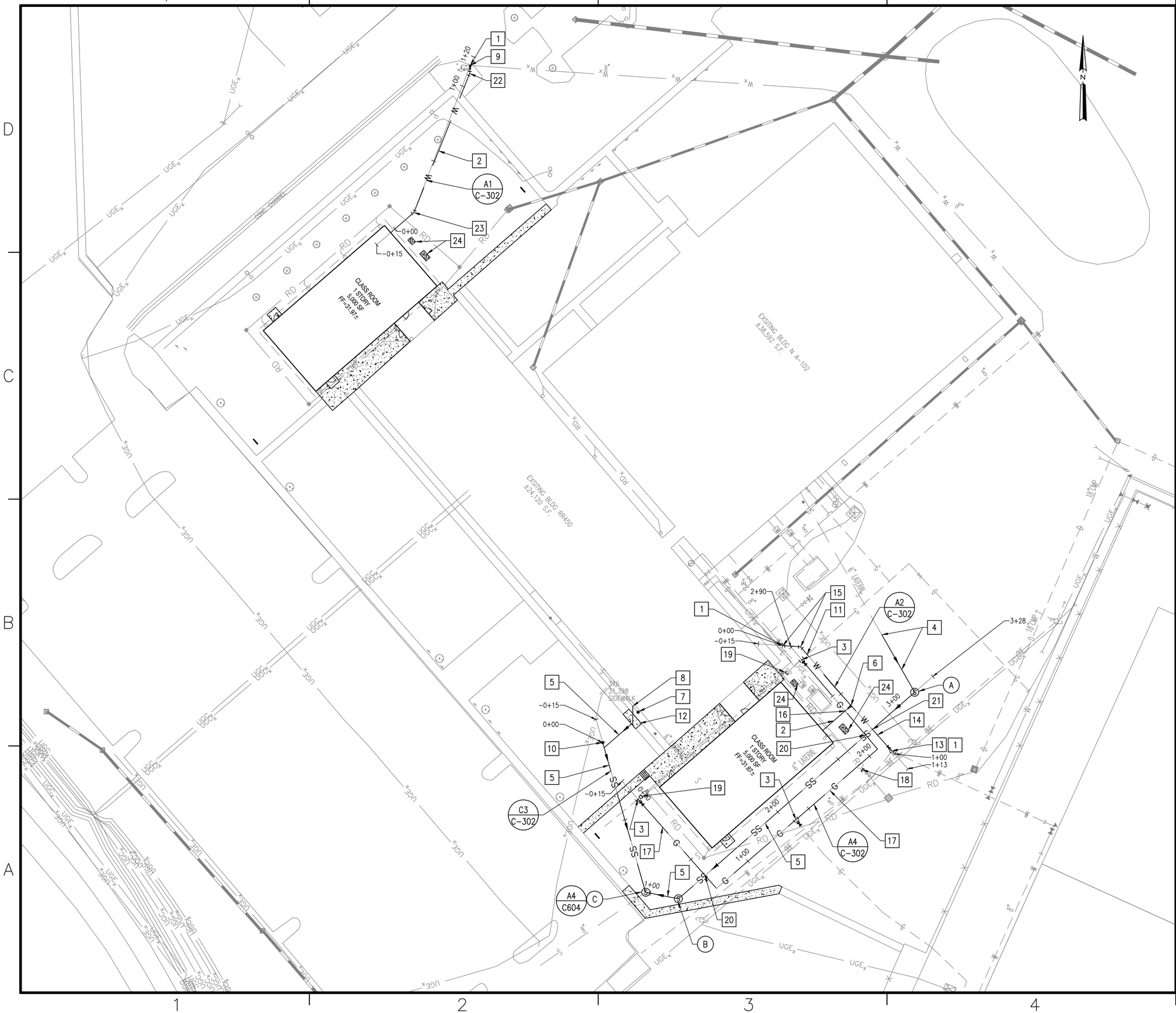

NOTES

1. SEE ELECTRICAL SHEETS FOR LAYOUT AND DETAILS FOR POWER AND COMMUNICATIONS. VERIFY THAT PROPER VERTICAL SEPARATION OF UTILITIES CAN BE ACHIEVED PRIOR TO START OF EACH SEGMENT. CONTACT CONTRACTING OFFICER IF UTILITIES ARE IN CONFLICT.
2. THE WATER METER AND RPZ BACKFLOW PREVENTER TO BE IN THE MECHANICAL ROOM--SEE MECHANICAL PLANS FOR DETAILS.
3. CONTRACTOR TO COORDINATE WITH CONTRACTING OFFICER AND UTILITIES COMPANY FOR SCHEDULING SHUT-OFF FOR NEW UTILITIES INSTALLATION AND PROVIDE TEMPORARY SERVICE TO EXISTING BUILDING DURING THE CONSTRUCTION OF NEW SERVICE LINES.

NEW WORK KEYNOTES

1. CONNECT TO EXIST 8" WATER MAIN WITH TWO TYPES OF RESTRAINT
2. 6" DIP FIRE LINE
3. CONNECT NEW 2" GAS LINE, TEE AND GV TO EXIST GAS LINE
4. EXTEND APPROX 41 LF OF 6" SANITARY LATERAL FROM EXIST CLEAN OUT (CO) TO NEW SANITARY SEWER MANHOLE (A) AT 2.00% SLOPE
5. 6" SANITARY LATERAL
6. 8" X 6" TEE, 6" GV
7. 6" SCO, CONTRACTOR TO VERIFY EXIST INVERT AT TIE IN
8. EXTEND 6" SANITARY LATERAL TO NEW SANITARY SEWER SERVICE LINE
9. 8" X 6" TSV
10. 6" SCO, INV=25.00
11. NEW 8" WATER LINE CROSSING EXIST GAS. NOTIFY ENGINEER IF CONFLICT OCCURS.
12. REMOVE AND REPLACE EXIST SIDEWALK TO INSTALL NEW LATERAL SEWER. REMOVE AND REPLACE SIDEWALK TO NEXT JOINT.
13. REMOVE EXIST BEND AND REPLACE WITH 8" X 8" TEE AND 8" GV.
14. 8" PVC WATER LINE
15. 8" 45° BEND
16. INSTALL NEW 6" FIRE LINE UNDER NEW GAS LINE W/MIN 12" CLEARANCE
17. INSTALL NEW 2" GAS LINE WITH MIN 36" COVER
18. CAP EXIST WATER LINE
19. CAP EXIST GAS LINE
20. INSTALL NEW 2" GAS LINE ABOVE NEW SANITARY LATERAL W/MIN 18" CLEARANCE
21. INSTALL NEW WATER LINE ABOVE NEW SANITARY LATERAL W/ MIN 18" CLEARANCE
22. 6" 22.5° BEND
23. 6" 45° BEND
24. CONCRETE PAD FOR HVAC UNITS. SEE MECHANICAL PLAN FOR DETAILS.

SEWER MANHOLE STRUCTURES:

(A) 4'-SANITARY SEWER MANHOLE
RIM=29.00
INV IN=25.59 (NW)
INV OUT=24.98 (SW)

(B) 4'-SANITARY SEWER MANHOLE
RIM=27.00
INV IN=23.03 (NE)
INV OUT=22.91 (W)

(C) 5'-SANITARY SEWER DROP MANHOLE CONNECT TO EXIST 8" SEWER
RIM=26.64
INV IN=23.06 (NE)
INV IN=22.50 (NW)
INV OUT=19.27 (SW)
EXIST 8" SEWER MAIN

SANITARY SEWER PIPE:

(A) TO (B) 196 LF OF 6" PVC @ 1.00%
INV UP=24.98
INV DN=23.02

(B) TO (C) 21 LF OF 6" PVC @ 2.00%
INV UP=22.91
INV DN=22.50

GRAPHIC SCALE

1"=30' 0' 30' 60'

	APPR	DATE	DESCRIPTION	SYM

NAVFAC

SEAL

A/E INFO

APPROVED

FOR COMMANDER NAVFAC

ACTIVITY
EMILY M. SYLVESTER, PE

SATISFACTORY TO DATE 28 JUNE 2018

DES QNT DRW ARH CHK MAD

DESIGN MANAGER G. COOKE

BRANCH MANAGER DLB

CHIEF ENGINEER EJA

FIRE PROTECTION

DEPARTMENT OF THE NAVY
NAVAL FACILITIES ENGINEERING COMMAND
NAVAL FACILITIES ENGINEERING COMMAND-MID-ATLANTIC
NAVAL STATION NORFOLK VIRGINIA
MIDLANT CI CORE
MCB CAMP LEJEUNE JACKSONVILLE, NC

P1482 MARINE SPECIAL OP SCHOOL 120 MAN CLASSROOMS

UTILITY PLAN

SCALE: AS NOTED

EPROJECT NO. 1558046

CONSTR. CONTR. NO. –

NAVFAC DRAWING NO. 12747153

SHEET 13 OF 91

CU-301

DRAWFORM REVISION: 10 MARCH 2009

FILE NAME: P:\MC\Camp Lejeune\MILCON\2017_1558046_P1482_H-1088_120ManClassrooms\3_Design\Drawings\Sheet\05_Civil\1558047_P1482_CU-301_Utility.dwg LAYOUT NAME: CU-301 UTILITY PLAN PLOTTED: Monday, June 01, 2020 - 3:58pm USER: ayu.tran

UNCLASSIFIED

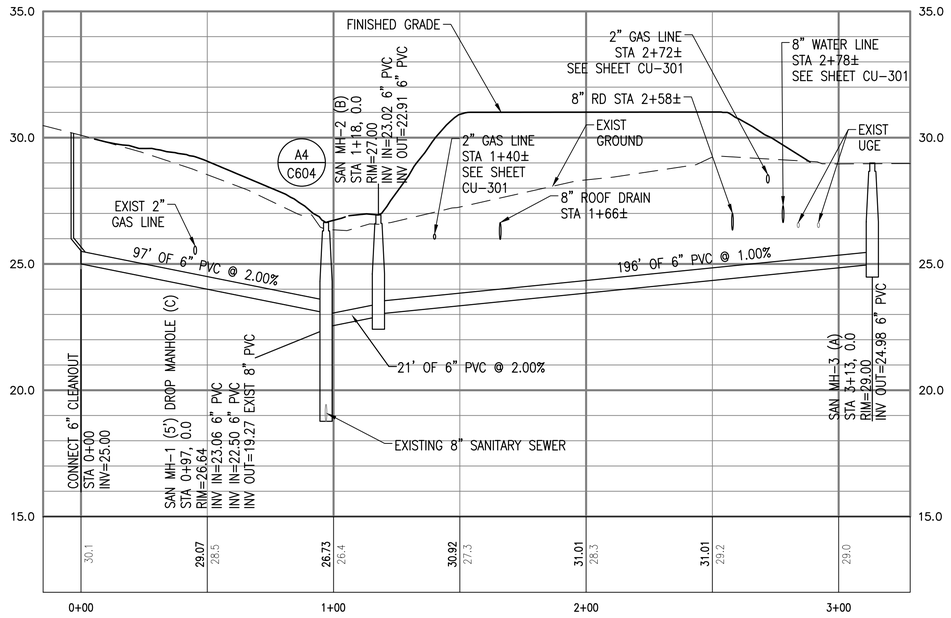

C3 6" SANITARY SEWER LATERAL

SCALE: 1" = 3' VERTICAL
1" = 30' HORIZONTAL

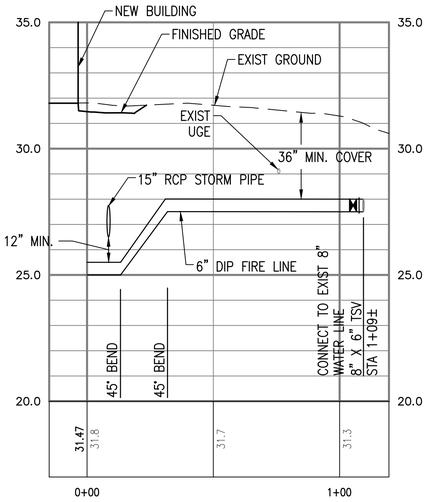

A1 6" DIP FIRE LINE

SCALE: 1" = 3' VERTICAL
1" = 30' HORIZONTAL

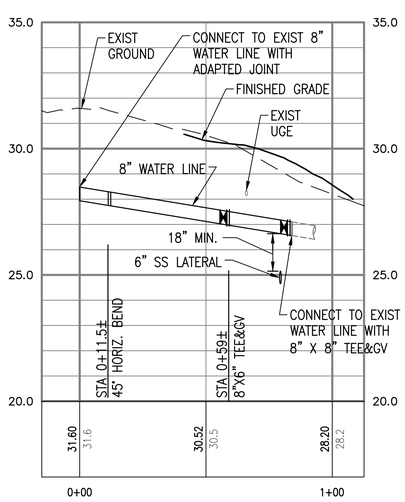

A2 8" WATER LINE

SCALE: 1" = 3' VERTICAL
1" = 30' HORIZONTAL

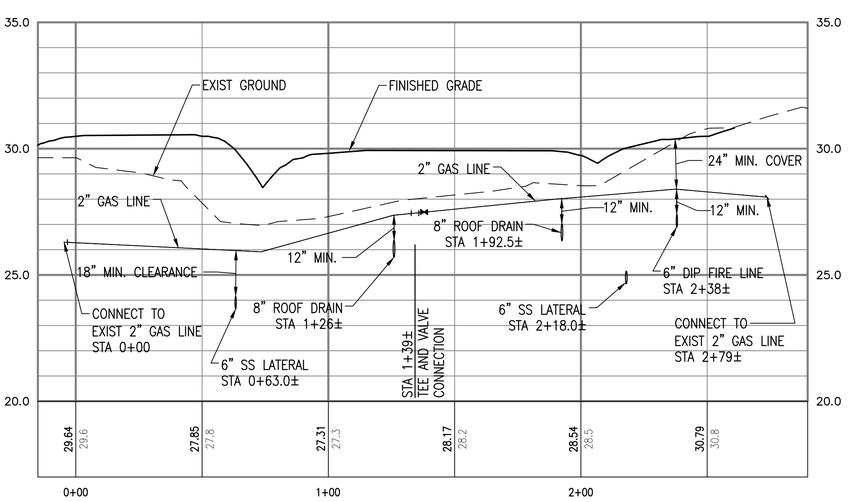

A4 GAS LINE

SCALE: 1" = 3' VERTICAL
1" = 30' HORIZONTAL

SYM	DESCRIPTION	DATE	APPR
---	---	---	---

SEAL

A/E INFO

APPROVED

FOR COMMANDER NAVFAC

ACTIVITY

EMILY M. SYLVESTER, PE

SATISFACTORY TO DATE 28 JUNE 2018

DES QNT | DRW ARH | CHK MAD

DESIGN MANAGER G. COOKE

BRANCH MANAGER DLB

CHIEF ENGINEER EJA

FIRE PROTECTION

DEPARTMENT OF THE NAVY
NAVAL FACILITIES ENGINEERING COMMAND
MIDLANT Q CORE
NAVAL FACILITIES ENGINEERING COMMAND–MID-ATLANTIC
NAVAL STATION NORFOLK VIRGINIA
MCB CAMP LEJEUNE
JACKSONVILLE, NC

P1482 MARINE SPECIAL OP SCHOOL
120 MAN CLASSROOMS

UTILITY PROFILES

SCALE: AS NOTED
EPROJECT NO. 1558046
CONSTR. CONTR. NO. –
NAVFAC DRAWING NO. 12747154
SHEET 14 OF 91

CU-302

DRAWFORM REVISION: 10 MARCH 2009

FILE NAME: P:\NC\Camp Lejeune\MILCON\2017_1558046_P1482_IH-DBB_120ManClassrooms\8_Design\Drawings\Sheet\05_Civil\1558047_P1482_CU-302_Profiles.dwg LAYOUT NAME: CU-302 UTILITY PROFILES PLOTTED: Monday, June 01, 2020 - 4:00pm USER: guy.tran

UNCLASSIFIED

NEW WORK KEYNOTES (CONT.)

5. CONTRACTOR TO VERIFY EXIST FFE TO MATCH PROPOSED ENCLOSED WALKWAY AND NEW FFE OF PROPOSED BUILDING ADDITION.
6. PRIOR TO CONSTRUCTION OF THE NEW PIPE CONNECTION TO THE EXIST DROP INLET, CONTRACTOR TO VERIFY EXIST OUTLET PIPE INVERT TO ENSURE THE EXIST INVERT IS LOWER OR THE SAME AS NEW INVERT TIE INTO THE STRUCTURE. NOTIFY ENGINEER IF THE DOWNSTREAM INVERT IS HIGHER THAN THE NEW UPSTREAM INVERT.
7. PLUG EXIST STORM PIPE AT BOTH ENDS. FILL WITH FLOWABLE FILL AND ABANDON IN PLACE.
8. MINIMUM 18" VERTICAL CLEARANCE BETWEEN NEW STORM PIPE AND EXISTING WATER LINE. NOTIFY ENGINEER IF CONFLICT OCCURRED.
9. CONNECT EXISTING ROOF DRAIN PIPE TO PROPOSED NEW DROP INLET. ENSURE NO LEAKAGE AT THE CONNECTION.

NOTES

1. PIPE LENGTHS ARE MEASURED FROM CENTER OF STRUCTURE TO STRUCTURE AND END OF PIPE.

STORM PIPES

- (1B) TO (2B) 17 LF OF 8" PVC @ 2.00%
- (2B) TO (3B) 102 LF OF 8" PVC @ 3.00%
- (3B) TO (4B) 56 LF OF 12" PVC @ 2.00%
- (5B) TO (6B) 65 LF OF 8" PVC @ 2.00%
- (6B) TO (7B) 55 LF OF 8" PVC @ 2.00%
- (7B) TO (3B) 212 LF OF 8" PVC @ 1.00%
- (8B) TO (9B) 71.5 LF OF 8" PVC @ 0.50%
- (9B) TO (10B) 60 LF OF 8" PVC @ 0.50%
- (10B) TO (11B) 118.5 LF OF 8" PVC @ 0.50%
- (11B) TO (12B) 57.5 LF OF 8" PVC @ 0.50%
- (12B) TO (13B) 48 LF OF 12" PVC @ 0.50%
- (14B) TO (15B) 97 LF OF 15" RCP @ 0.50%
- (16B) TO (12B) 27.5 LF OF 8" PVC @ 2.0%

12" ROOF DRAIN BASIN
SEE SHEET C-601

- (2B) RIM=31.35 INV=28.10
- (6B) RIM=30.8 INV=27.37
- (7B) RIM=30.8 INV=26.24
- (9B) RIM=30.90 INV=29.03
- (10B) RIM=31.19 INV=28.73
- (11B) RIM=31.20 INV=28.13
- (12B) RIM=31.15 INV=27.85

ROOF DRAIN CONNECTION

- (1B) CO RIM=31.80 INV=28.44
- (5B) CO RIM=31.80 INV=28.67
- (8B) CO RIM=31.90 INV=29.39
- (16B) CO RIM=31.76 INV=28.40

DROP INLET
SEE SHEET C-602

- (3B) RIM=27.00
  INV IN=25.00 (NW)
  INV IN=24.12 (SW)
  INV OUT=21.80 (NE)
- (4B) ADJUST EXIST DI TO NEW RIM
  EXIST RIM=22.09
  NEW RIM= 23.5
  INV IN=20.67 (NEW)
  INV OUT= 20.51 (EXIST)
- (13B) ADJUST EXIST DI TO NEW RIM
  EXIST RIM= 29.88
  NEW RIM= 30.50
  INV IN= 27.61 (SW)
  INV OUT=27.61 (EXIST-NE)
- (14B) RIM=29.50
  INV IN=27.44 (EXIST-SW)
  INV OUT=24.19 (SE)
- (15B) EXIST DI
  RIM=27.95
  INV IN=23.70 (PROP.-NW)
  INV IN=19.8 (EXIST-SW)
  INV OUT=19.27 (EXIST-SE)

NEW WORK KEYNOTES

1. PROVIDE CONCRETE SPLASH PAD FOR DOWNSPOUT.
2. CONNECT EXIST ROOF DRAIN FROM EXIST DOWNSPOUT TO NEW ROOF DRAIN SYSTEM.
3. TYPICAL ROOF DRAIN; TIE TO ROOF DRAIN SYSTEM AT MINIMUM 1.00% SLOPE.
4. REGRADE AREA SURROUNDING THE NEW TOP OF DROP INLET TO ENSURE NO STANDING WATER.

GRAPHIC SCALE

1"=30' 0' 30' 60'

APPR	DATE	DESCRIPTION	SYM

NAVFAC

SEAL

A/E INFO

APPROVED

FOR COMMANDER NAVFAC

ACTIVITY

EMILY M. SYLVESTER, PE

SATISFACTORY TO DATE 28 JUNE 2018

DES QNT DRW ARH CHK MAD

DESIGN MANAGER G. COOKE

BRANCH MANAGER DLB

CHIEF ENGINEER EJA

FIRE PROTECTION

DEPARTMENT OF THE NAVY
NAVAL FACILITIES ENGINEERING COMMAND
NAVAL FACILITIES ENGINEERING COMMAND-MID-ATLANTIC
NAVAL STATION NORFOLK VIRGINIA
MCB CAMP LEJEUNE JACKSONVILLE, NC
MIDLANT CI CORE

P1482 MARINE SPECIAL OP SCHOOL 120 MAN CLASSROOMS

GRADING AND DRAINAGE PLAN

SCALE: AS NOTED
EPROJECT NO. 1558046
CONSTR. CONTR. NO. -
NAVFAC DRAWING NO. 12747155
SHEET 15 OF 91

CG-401

DRAWFORM REVISION: 10 MARCH 2009

FILE NAME: P:\NC\Camp Lejeune\MILCON\2017_1558046_P1482_IH-088_120ManClassrooms\8_Design\Drawings\Sheet\05_Civil\1558047_P1482_CG-401_Grading.dwg LAYOUT NAME: CG-401 GRADING AND DRAINAGE PLAN PLOTTED: Monday, June 01, 2020 - 4:01pm USER: dyu.tran

UNCLASSIFIED

PRE-DRAINAGE AREA
TO EXISTING BMP#22
D.A. AREA = 3.59 Ac.
IMPERVIOUS=1.93 Ac.
GRASS= 1.66 Ac.

BMP#22

BMP#15

PRE-DRAINAGE AREA
TO EXISTING BMP#16
D.A. AREA = 4.33 Ac.
IMPERVIOUS= 2.35 Ac.
GRASS= 1.98 Ac.

BMP#16

PRE-DRAINAGE AREA
TO EXISTING BMP#15
D.A. AREA = 11.48 Ac.
IMPERVIOUS=6.84 Ac.
GRASS= 4.64 Ac.

PRE-DEVELOPMENT DRAINAGE AREA

GRAPHIC SCALE

1"=60' 0' 60' 120'

APPR	DATE	DESCRIPTION	SYM
---	---	---	---

NAVFAC

SEAL

A/E INFO

APPROVED

FOR COMMANDER NAVFAC

ACTIVITY

EMILY M. SYLVESTER, PE

SATISFACTORY TO DATE 28 JUNE 2018

DES QNT DRW QNT CHK MAD

DESIGN MANAGER C. COOKE

BRANCH MANAGER DLB

CHIEF ENGINEER EJA

FIRE PROTECTION

DEPARTMENT OF THE NAVY
NAVAL FACILITIES ENGINEERING COMMAND
NAVAL FACILITIES ENGINEERING COMMAND–MID-ATLANTIC
NAVAL STATION NORFOLK, VIRGINIA
MCB CAMP LEJEUNE
MCLNAT CI CORE
JACKSONVILLE, NC
P1482 MARINE SPECIAL OP SCHOOL
120 MAN CLASSROOMS
PRE-DEVELOPMENT DRAINAGE AREAS

SCALE: AS NOTED
EPROJECT NO. 1558046
CONSTR. CONTR. NO. -
NAVFAC DRAWING NO. 12747156
SHEET 16 OF 91
C-402

DRAWFORM REVISION: 10 MARCH 2009

FILE NAME: P:\NEW\Comp4.x\jume\MLCON\2017_1558046_P1482_IH-08B_120ManClassrooms\B_Design\Drawings\Sheet\05_Civil\1558047_P1482_C-402_PreDevDrainage.dwg LAYOUT NAME: C-402 PRE-DEVELOPMENT DRAINAGE AREAS PLOTTED: Monday, June 01, 2020 - 4:03pm USER: dpy.fron

UNCLASSIFIED

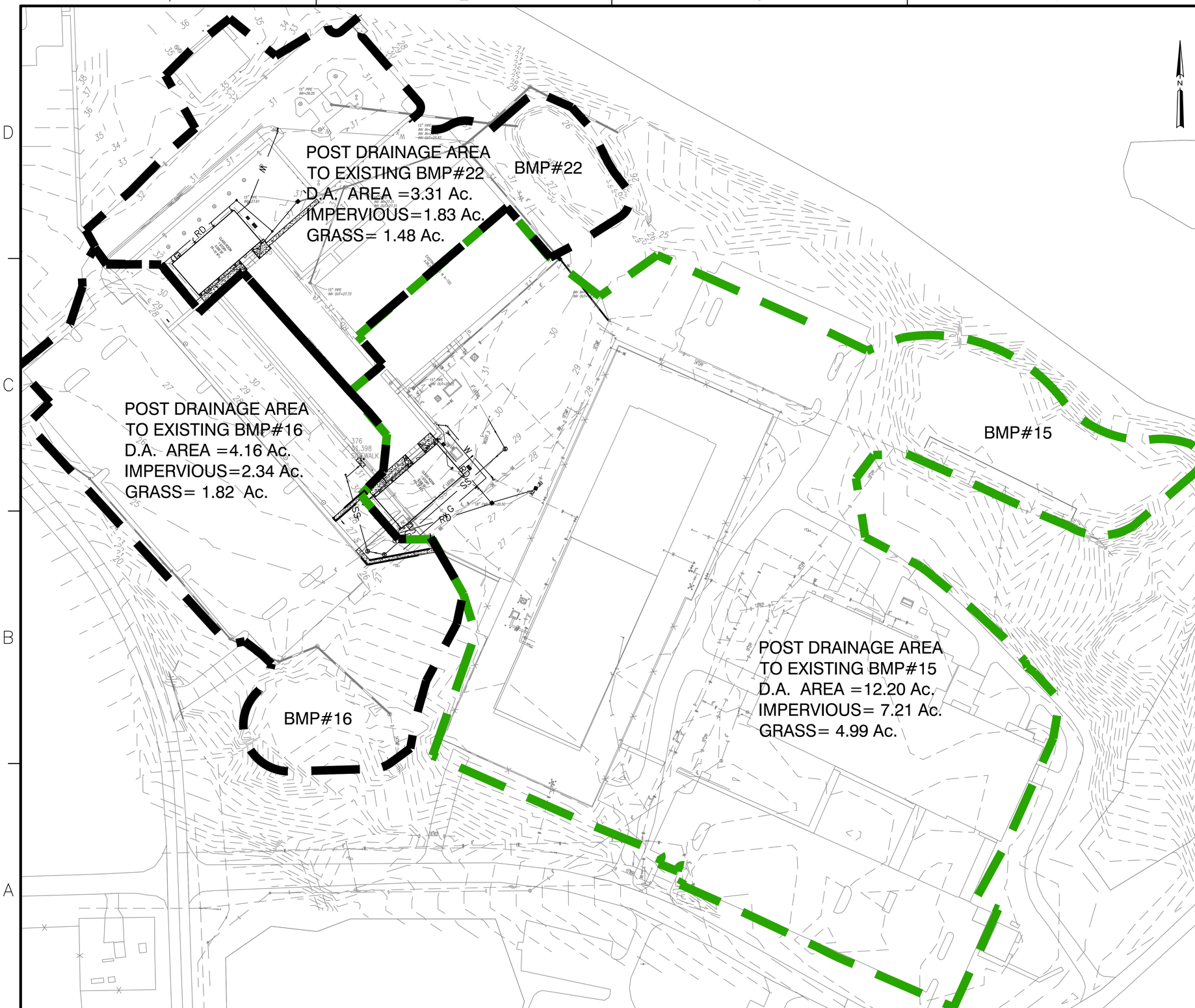

POST-DEVELOPMENT DRAINAGE AREA

GRAPHIC SCALE

1"=60' 0' 60' 120'

SYM	DESCRIPTION	DATE	APPR

NAVFAC

SEAL

A/E INFO

APPROVED

FOR COMMANDER NAVFAC

ACTIVITY

EMILY M. SYLVESTER, PE

SATISFACTORY TO DATE 28 JUNE 2018

DES QNT DRW QNT CHK MAD

DESIGN MANAGER G. COOKE

BRANCH MANAGER DLB

CHIEF ENGINEER EJA

FIRE PROTECTION

DEPARTMENT OF THE NAVY
NAVAL FACILITIES ENGINEERING COMMAND
NAVAL FACILITIES ENGINEERING COMMAND~MID-ATLANTIC
MIDLANT CI CORE
NAVAL STATION NORFOLK VIRGINIA

MCB CAMP LEJEUNE JACKSONVILLE, NC

P1482 MARINE SPECIAL OP SCHOOL
120 MAN CLASSROOMS

POST-DEVELOPMENT DRAINAGE AREAS

SCALE: AS NOTED

EPROJECT NO. 1558046

CONSTR. CONTR. NO. -

NAVFAC DRAWING NO. 12747157

SHEET 17 OF 91

C-403

DRAWFORM REVISION: 10 MARCH 2009

UNCLASSIFIED

FILE NAME: P:\NC\CampLejeune\MILCON\2017_1558046_P1482_IH-DBB_120ManClassrooms\B_Design\Drawings\Sheet\05_Civil\1558047_P1482_C-403_PostDevDrainage.dwg LAYOUT NAME: C-403 POST-DEVELOPMENT DRAINAGE AREAS PLOTTED: Monday, June 01, 2020 - 4:05pm USER: quy.tran

UNCLASSIFIED

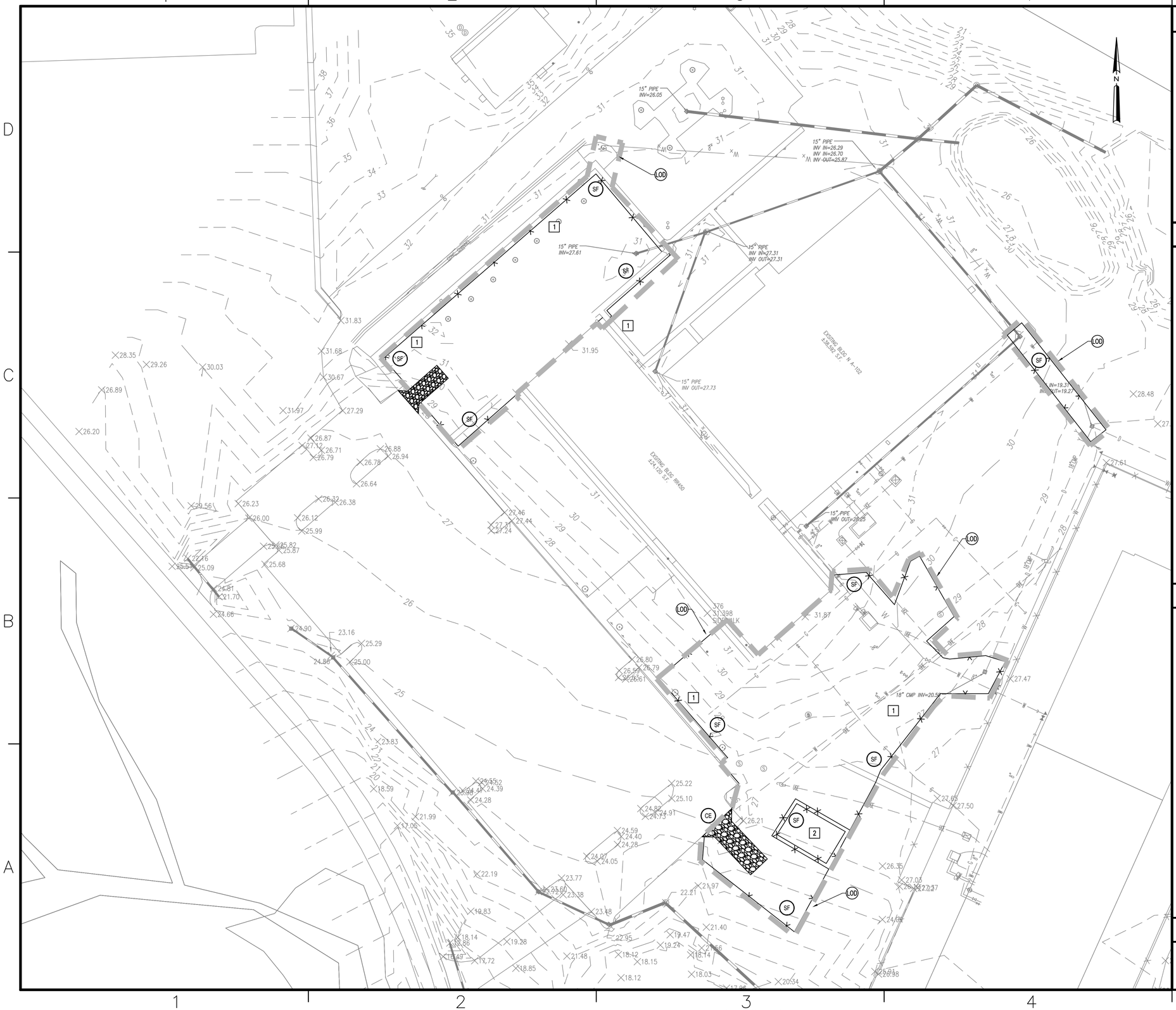

NOTES

1. VEGETATION COVER MUST BE ESTABLISHED ON SITE AFTER THE EROSION AND SEDIMENT CONTROL PHASE IS COMPLETED.
2. ANY AND ALL MATERIALS OR DEBRIS TRACKED ONTO THE PARKING LOT/ROAD SURFACE WILL BE CLEANED THROUGHLY AT THE END OF THE DAY. SEDIMENT SHALL BE REMOVED FROM THE PARKING LOT SURFACE/ROAD BY SHOVELING OR SWEEPING AND BE TRANSPORTED TO A SEDIMENT CONTROL DISPOSAL AREA.
3. ALL EROSION AND SEDIMENT CONTROL ITEMS SHALL BE REMOVED BY CONTRACTOR AFTER ALL CONSTRUCTION IS COMPLETED AND SITE IS STABILIZED.

EROSION & SEDIMENT CONTROL LEGEND

EROSION CONTROL:

EROSION CONTROL DEVICES AS PER NORTH CAROLINA EROSION AND SEDIMENT CONTROL HANDBOOK

- CE — *CONSTRUCTION ENTRANCE*
- SF — *SILT FENCE*
- IP — *INLET PROTECTION*
- TP — *TREE PROTECTION*
- LOD — *LIMIT OF DISTURBANCE*

NEW WORK KEYNOTES

1. FLOW CONTROLLED WITH SILT FENCE.
2. STOCKPILE NOT TO EXCEED 10' IN HEIGHT, STOCKPILE SLOPES NOT TO EXCEED 2:1.

LIMIT OF DISTURBANCE = 1.45 ACRES

GRAPHIC SCALE

1"=40' 0' 40' 80'

SYM	DESCRIPTION	DATE	APPR
--	--	--	--

NAVFAC

SEAL

A/E INFO

APPROVED

FOR COMMANDER NAVFAC

ACTIVITY

EMILY M. SYLVESTER, PE

SATISFACTORY TO DATE 28 JUNE 2018

DES QNT DRW ARH CHK MAD

DESIGN MANAGER G. COOKE

BRANCH MANAGER DLB

CHIEF ENGINEER EJA

FIRE PROTECTION

DEPARTMENT OF THE NAVY
NAVAL FACILITIES ENGINEERING COMMAND
NAVAL FACILITIES ENGINEERING COMMAND—MID-ATLANTIC
NAVAL STATION NORFOLK VIRGINIA
MIDLANT CI CORE
MCB CAMP LEJEUNE
JACKSONVILLE, NC
P1482 MARINE SPECIAL OP SCHOOL
120 MAN CLASSROOMS
EROSION AND SEDIMENT CONTROL PLAN – PHASE I

SCALE: AS NOTED

EFPROJECT NO. 1558046

CONSTR. CONTR. NO. –

NAVFAC DRAWING NO. 12747158

SHEET 18 OF 91

C-501

DRAWFORM REVISION: 10 MARCH 2009

FILE NAME: P:\MCI\Camp Lejeune\WILCON\2017_1558046_P1482_IH-DBB_120ManClassrooms\B_Design\Drawings\Sheet\05_Civil\1558047_P1482_C-501_ES_Phase-I.dwg LAYOUT NAME: C-501 EROSION AND SEDIMENT CONTROL PLAN – PHASE I PLOTTED: Monday, June 01, 2020 – 4:06pm USER: quy.tran

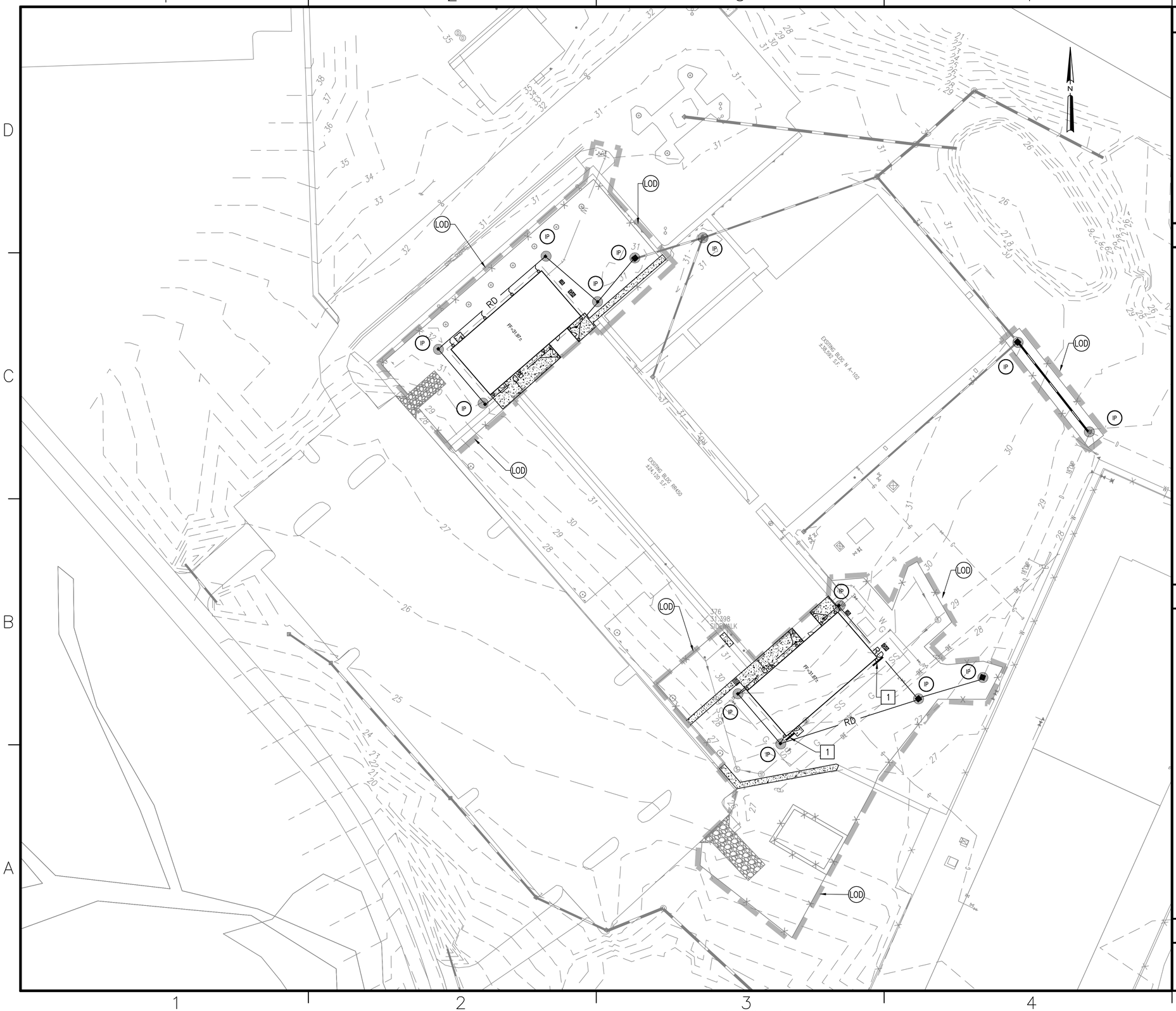

NOTES

1. VEGETATION COVER MUST BE ESTABLISHED ON SITE AFTER THE EROSION AND SEDIMENT CONTROL PHASE IS COMPLETED.
2. ANY AND ALL MATERIALS OR DEBRIS TRACKED ONTO THE PARKING LOT/ROAD SURFACE WILL BE CLEANED THROUGHLY AT THE END OF THE DAY. SEDIMENT SHALL BE REMOVED FROM THE PARKING LOT SURFACE/ROAD BY SHOVELING OR SWEEPING AND BE TRANSPORTED TO A SEDIMENT CONTROL DISPOSAL AREA.
3. ALL EROSION AND SEDIMENT CONTROL ITEMS SHALL BE REMOVED BY CONTRACTOR AFTER ALL CONSTRUCTION IS COMPLETED AND SITE IS STABILIZED.

EROSION & SEDIMENT CONTROL LEGEND

EROSION CONTROL:

EROSION CONTROL DEVICES AS PER NORTH CAROLINA EROSION AND SEDIMENT CONTROL HANDBOOK

- CE — *CONSTRUCTION ENTRANCE*
- SF — *SILT FENCE*
- IP — *INLET PROTECTION*
- LOD — *LIMIT OF DISTURBANCE*

NEW WORK KEYNOTES

1. PROVIDE 10 L.F. OF TEMPORARY PERFORATED 6" PIPE TO DIFFUSE ROOF LEADER FLOWS UNTIL GRASS IS ESTABLISHED.

LIMIT OF DISTURBANCE = 1.45 ACRES

GRAPHIC SCALE

1"=40' 0' 40' 80'

SYM	DESCRIPTION	DATE	APPR
-	-	-	-

NAVFAC

SEAL

A/E INFO

APPROVED

FOR COMMANDER NAVFAC

ACTIVITY

EMILY M. SYLVESTER, PE

SATISFACTORY TO DATE 28 JUNE 2018

DES QNT | DRW ARH | CHK MAD

DESIGN MANAGER G. COOKE

BRANCH MANAGER DLB

CHIEF ENGINEER EJA

FIRE PROTECTION

DEPARTMENT OF THE NAVY
NAVAL FACILITIES ENGINEERING COMMAND
NAVAL FACILITIES ENGINEERING COMMAND–MID-ATLANTIC
NAVAL STATION NORFOLK, VIRGINIA
MIDLANT CI CORE
MCB CAMP LEJEUNE
JACKSONVILLE, NC

P1482 MARINE SPECIAL OP SCHOOL 120 MAN CLASSROOMS

EROSION AND SEDIMENT CONTROL PLAN – PHASE II

SCALE: AS NOTED

EPROJECT NO. 1558046

CONSTR. CONTR. NO. –

NAVFAC DRAWING NO. 12747159

SHEET 19 OF 91

C-502

DRAWFORM REVISION: 10 MARCH 2009

FILE NAME: P:\MCI\Camp Lejeune\MILCON\2017_1558046_P1482_IH-088_120ManClassrooms\B_Design\Drawings\Sheet\05_Civil\1558047_P1482_C-502_ES_Phase-II.dwg LAYOUT NAME: C-502 EROSION AND SEDIMENT CONTROL PLAN – PHASE II PLOTTED: Monday, June 01, 2020 – 4:09pm USER: eyu.tran

UNCLASSIFIED

TEMPORARY SEEDING SCHEDULE

NOTE
TEMPORARY SEED MIX SHALL BE USED FOR ALL AREAS EXPOSED GREATER THAN 15 WORKING DAYS AND SUBJECT TO FURTHER DISTURBANCE. AN ADEQUATE COVER SHALL HAVE 50 SPRIGS OF BERMUDA OR SERICEA LESPEDEZA PER ONE SQUARE FOOT.

TEMPORARY SEEDING AND MULCHING:
THE KINDS OF SEED AND FERTILIZER, AND THE RATES OF APPLICATION OF SEED, FERTILIZER, AND LIMESTONE, SHALL BE AS STATED BELOW. DURING PERIODS OF OVERLAPPING DATES, THE KINDS OF SEED TO BE USED SHALL BE DETERMINED BY THE ENGINEER. ALL ARE IN POUNDS PER ACRE (KILOGRAMS PER HECTARE).

TEMPORARY SUMMER SEED MIX

	SPECIES	RATE (LB./ACRE)
MARCH 1 – SEPT. 1	GERMAN MILLET	120

TEMPORARY WINTER SEED MIX

	SPECIES	RATE (LB./ACRE)
SEPT. 1 – MARCH 1	WINTER RYE (GRAIN)	200
	KOBE LESPEDEZA	120

APPROVED TALL FESCUE CULTIVARS:

ADVENTURE	ADVENTURE II	AMIGO	ANTHEM
APACHE	APACHE II	ARID	AUSTIN
BROOKSTONE	BONANZA	BONANZA II	CHAPEL HILL
CHESAPEAKE	CHIEFTAIN	CORONADO	CROSSFIRE II
DEBUTANTE	DUSTER	FALCON	FALCON II
FINELAWN PETITE	FINELAWN	FINELAWN I	GENESIS
GRANDE	GUARDIAN	HOUNDOG	JAGUAR
JAGUAR III	KENTUCKY 31	KITTY HAWK	MONARCH
MONTAUK	MUSTANG	OLYMPIC	PACER
PHOENIX	PIXIE	PYRAMID	REBEL
REBEL JR.	REBEL II	RENEGADE	SAFARI
SHENANDOAH	TEMPO	TITAN	TOMAHAWK
TRAILBLAZER	TRIBUTE	VEGAS	WOLFPACK
WRANGLER			

FERTILIZER SHALL BE 10–20–20 ANALYSIS. UPON WRITTEN APPROVAL OF THE ENGINEER, A DIFFERENT ANALYSIS OF FERTILIZER MAY BE USED PROVIDED THE 1–2–2 RATIO IS MAINTAINED AND THE RATE OF APPLICATION ADJUSTED TO PROVIDE THE SAME AMOUNT OF PLANT FOOD AS 10–20–20 ANALYSIS.

TEMPORARY SEEDING:
FERTILIZER SHALL BE THE SAME ANALYSIS AS SPECIFIED FOR "SEEDING AND MULCHING" AND APPLIED AT THE RATE OF 400 POUNDS (450 KILOGRAMS) AND SEEDED AT THE RATE OF 50 POUNDS (55 kg) PER HECTARE. SWEET SUDAN GRASS, GERMAN MILLET OR BROWNTOP MILLET SHALL BE USED IN SUMMER MONTHS AND RYE GRAIN DURING THE REMAINDER OF THE YEAR. THE ENGINEER WILL DETERMINE THE EXACT DATES FOR USING EACH KIND OF SEED.

FERTILIZER TOPDRESSING:
FERTILIZER USED FOR TOPDRESSING ON ALL ROADWAY AREAS EXCEPT SLOPES 2:1 AND STEEPER SHALL BE 10–20–20 WRITTEN APPROVAL OF THE ENGINEER, A DIFFERENT ANALYSIS OF FERTILIZER MAY BE USED PROVIDED GRADE AND SHALL BE APPLIED AT THE RATE OF APPLICATION ADJUSTED TO PROVIDE THE SAME AMOUNT OF PLANT FOOD AS 10–20–20 ANALYSIS.

FERTILIZER USED FOR TOPDRESSING ON SLOPES 2:1 AND STEEPER AND WASTE AND BORROW AREAS SHALL BE 16–8–8 GRADE AND SHALL BE APPLIED AT THE RATE OF 500 POUNDS PER ACRE (560 KG PER HECTARE). UPON WRITTEN APPROVAL OF THE ENGINEER, A DIFFERENT ANALYSIS OF FERTILIZER MAY BE USED PROVIDED THE 2–1–1 RATIO IS MAINTAINED AND THE RATE OF APPLICATION ADJUSTED TO PROVIDE THE SAME AMOUNT OF PLANT FOOD AS 16–8–8 ANALYSIS.

THE KINDS OF SEED AND PROPORTIONS SHALL BE THE SAME AS SPECIFIED FOR "TEMPORARY SEEDING AND MULCHING", WITH THE EXCEPTION THAT NO CENTIPEDE SEED WILL BE USED IN THE SEED MIX FOR SUPPLEMENTAL SEEDING. THE RATE OF APPLICATION FOR SUPPLEMENTAL SEEDING MAY VARY FROM 25# TO 75# PER ACRE (28KG TO 85KG PER HECTARE). THE ACTUAL RATE PER ACRE (HECTARE) WILL BE DETERMINED BY THE ENGINEER PRIOR TO THE TIME OF TOPDRESSING AND THE CONTRACTOR WILL BE NOTIFIED IN WRITING OF THE RATE PER ACRE (HECTARE), TOTAL QUANTITY NEEDED, AND AREAS ON WHICH TO APPLY THE SUPPLEMENTAL SEED. MINIMUM TILLAGE EQUIPMENT, CONSISTING OF SOD SEEDER SHALL BE USED FOR INCORPORATING SEED INTO THE SOIL AS TO PREVENT DISTURBANCE OF EXISTING VEGETATION. A CLODBUSTER (BALL AND CHAIN) MAY BE USED WHERE DEGREE OF SLOPE PREVENTS THE USE OF A SOD SEEDER.

MOWING:
THE MINIMUM MOWING HEIGHT ON THIS PROJECT SHALL BE 4 INCHES (100 MM).

CRIMPING STRAW MULCH:
CRIMPING SHALL BE REQUIRED ON THIS PROJECT FOR ALL SEEDING OPERATIONS PER NCDENR.

STRAW MULCH TO BE OF SUFFICIENT LENGTH AND QUALITY TO WITHSTAND THE CRIMPING OPERATION AND PROVIDE ADEQUATE GROUND COVER.

CRIMPING EQUIPMENT INCLUDING POWER SOURCE SHALL BE SUBJECT TO THE APPROVAL OF THE ENGINEER PROVIDING THAT MAXIMUM SPACING OF CRIMPER BLADES SHALL NOT EXCEED 8 INCHES (200 MM).

SOIL AMENDMENTS
TO BE INCORPORATED INTO THE TOP 3 INCHES OF SOIL IN AREAS WITH SLOPES 2:1 OR FLATTER
- APPLY FERTILIZER (10–10–10) AT A RATE OF 1000 LB/ACRE
- APPLY LIME (GROUND AGRICULTURAL LIMESTONE) AT A RATE OF 4000 LB/ACRE
- APPLY SUPERPHOSPHATE (0–49–0) AT A RATE OF 200 LB/ACRE

MULCH
APPLY 4,000 LB/ACRE GRAIN STRAW OR EQUIVALENT COVER. ANCHOR MULCH WITH ROVING, NETTING OR BY TACKING WITH ASPHALT EMULSION AT A RATE OF 400 GAL./ACRE

WATER
MINIMUM OF 1" OF RAINFALL A WEEK (IF NOT SUPPLIED NATURALLY, CONTRACTOR SHALL SUPPLY THE REMAINING AMOUNT UNTIL GROUND COVER HAS BEEN ESTABLISHED).

MAINTENANCE
REFERTILIZE IN THE SECOND YEAR UNLESS THE GROWTH IS FULLY ADEQUATE. MOW WHEN THE AVERAGE PLANT HEIGHT EXCEEDS 6 INCHES. RESEED, FERTILIZE AND MULCH DAMAGED AREAS IMMEDIATELY.

TEMPORARY SEED BED PREPARATION

1. RIP THE ENTIRE AREA TO 6" DEPTH.
2. REMOVE ALL LOOSE ROCK, ROOTS, AND OTHER OBSTRUCTIONS LEAVING SURFACE REASONABLY SMOOTH AND UNIFORM.
3. APPLY AGRICULTURAL LIME, FERTILIZER, AND SUPERPHOSPHATE IN ACCORDANCE WITH "SEEDING SCHEDULE" AND MIX WITH SOIL.
4. CONTINUE TILLAGE UNTIL A WELL–PULVERIZED, FIRM, REASONABLY UNIFORM SEEDBED IS PREPARED 4 TO 6 INCHES DEEP.
5. SEED ON A FRESHLY PREPARED SEEDBED AND COVER SEED LIGHTLY WITH SEEDING EQUIPMENT OR CULTIPACK AFTER SEEDING. SEED ACCORDING TO "SEEDING SCHEDULE."
6. MULCH IN ACCORDANCE WITH "SEEDING SCHEDULE" IMMEDIATELY AFTER SEEDING.
7. INSPECT ALL SEEDING FOR COMPLIANCE WITH THE REQUIREMENTS OF THE "SEEDING SCHEDULE". MAKE NECESSARY REPAIRS AND RESEED WITHIN THE PLANTING SEASON, IF POSSIBLE, OR THE DAMAGED AREA SHALL BE REESTABLISHED FOLLOWING THE ORIGINAL LIME, FERTILIZER, AND SEEDING REQUIREMENTS.

PERMANENT GROUND COVER

PROVIDE CENTIPEDE SOD FOR ALL DENUDED AREAS.

GROUND COVER NOTE:

PURSUANT TO G.S. 133–A57(2), THE ANGLE FOR GRADED SLOPES AND FILLS SHALL BE NO GREATER THAN THE ANGLE THAT CAN BE RETAINED BY VEGETATIVE COVER OR OTHER ADEQUATE EROSION–CONTROL DEVICES OR STRUCTURES. IN ANY EVENT, SLOPES LEFT EXPOSED WILL, BE PLANTED OR OTHERWISE PROVIDED WITH TEMPORARY OR PERMANENT GROUND COVER, DEVICES, OR STRUCTURES SUFFICIENT TO RESTRAIN EROSION.

PURSUANT TO G.S. 113A–57(3), PROVISIONS FOR PERMANENT GROUNDCOVER SUFFICIENT TO RESTRAIN EROSION MUST BE ACCOMPLISHED FOR ALL DISTURBED AREAS (AS SHOWN BELOW) FOLLOWING COMPLETION OF CONSTRUCTION OR DEVELOPMENT.

GROUND STABILIZATION:

THE NPDES PERMIT (SECTION II. 8.2) HAS RECENTLY REVISED THE REQUIREMENTS FOR GROUND STABILIZATION. STABILIZATION SHALL BE ACCOMPLISHED AS FOLLOWS:

PERIMETER DIKES, SWALES, DITCHES AND SLOPES	WITHIN 7 DAYS
HIGH QUALITY WATER (HQW) ZONES	WITHIN 7 DAYS
SLOPES STEEPER THAN 3:1	WITHIN 7 DAYS
SLOPES 3:1 OR FLATTER	WITHIN 14 DAYS
ALL OTHER AREAS W/ SLOPES FLATTER THAN 4:1	WITHIN 14 DAYS

EROSION CONTROL SEQUENCE OF CONSTRUCTION

1. INSTALL TEMPORARY CONSTRUCTION ENTRANCES.
2. INSTALL TEMPORARY SILT FENCE AND TREE PROTECTION AROUND THE PERIMETER OF THE SITE AS INDICATED ON THE EROSION & SEDIMENT CONTROL PLAN.
3. GRUB THE SITE WITHIN LIMIT OF DISTURBANCE. ROUGH GRADE SITE, INSTALL PROPOSED STORM DRAIN SYSTEM AND INLET PROTECTION. NO STORMWATER SHALL BE CONVEYED TO BASINS UNTIL BASINS ARE 75% STABILIZED.
4. INSTALL BUILDING PAD, UTILITIES, AND SITE WORK.
5. FINISH SLOPES AROUND BUILDINGS UPON COMPLETION OF ROUGH GRADING. LEAVE SLIGHTLY ROUGH AND VEGETATE AND MULCH IMMEDIATELY.
6. COMPLETE FINAL GRADING FOR THE BUILDING.
7. COMPLETE FINAL GRADING OF THE GROUNDS, TOPSOIL CRITICAL AREAS AND PERMANENTLY VEGETATE, LANDSCAPE AND MULCH.
8. INSPECT ALL EROSION AND SEDIMENT CONTROL PRACTICES WEEKLY AND WITHIN 24 HOURS OF A 0.5 INCH– MEASURED RAINFALL EVENT. A RAIN GAUGE SHALL BE INSTALLED TO MEASURE RAINFALL EVENTS. REPAIR ANY DAMAGE IMMEDIATELY TO EROSION AND SEDIMENT CONTROL MEASURES.
9. INSPECT AND INSTALL ALL EROSION AND SEDIMENT CONTROL MEASURES IN ACCORDANCE WITH NCDENR'S NEW SELF INSPECTION PROGRAM FOR EROSION AND SEDIMENTATION CONTROL. COPIES OF THE SELF INSPECTION REPORTS SHALL BE PROVIDED TO THE ROICC'S OFFICE.
10. AFTER SITE IS STABILIZED, REMOVE ALL TEMPORARY MEASURES AND INSTALL SOD ON DISTURBED AREAS.

EROSION AND SEDIMENT CONTROL NARRATIVE

THE SITE IS AN EXISTING LOT WITH EXISTING BUILDING COMPLETED WITH SIDEWALKS, PARKING LOTS, TREES, AND MATURE GRASS. NO WETLAND HAS BEEN INDICATED ON SITE.

IN ORDER TO PREVENT EROSION AND CAPTURE SEDIMENTS WITHIN THE PROJECT, THE FOLLOWING PRACTICES SHALL BE USED AND LOCATED APPROXIMATELY AS SHOWN AS ESC PLAN.

1. GRUBBING LIMITS SHALL BE MARKED BY FENCING OR OTHER MEANS ON THE GROUND.
2. ROCK CONSTRUCTION ENTRANCE (CE) WILL BE PLACED TO SITE AS INDICATED ON PLAN.
3. SILT FENCE (SF) SHALL BE PLACED ALONG SLOPE CONTOURS AT THE LIMITS OF LAND DISTURBANCE. IN SOME CASES TWO (2) ROWS OF SILT FENCE MAY BE REQUIRED AT THE CONSTRUCTION INSPECTOR'S DISCRETION.
4. MULCH SHALL BE SPREAD OVER ALL CLEARED AREAS OF THE SITE WHEN THEY AREA NOT BEING WORKED. MULCH SHALL CONSIST OF AIR–DRIED STRAW AND CHIPPED SITE VEGETATION.
5. WATER WILL NOT BE ALLOWED TO POINT OF DISCHARGE ONTO SLOPE. A ROCK–LINED DITCH MAY BE NECESSARY TO INTERCEPT AND DIRECTION WATER TO THE TEMPORARY ROCK SEDIMENT TRAP.
6. INLET PROTECTION (IP) SHALL BE PLACED ON THE INSTALLED DROP INLET, ROOF DRAIN BASIN, AND EXISTING DROP INLET.

EROSION AND SEDIMENT CONTROL NOTES

1. UNLESS OTHERWISE INDICATED, ALL VEGETATIVE AND STRUCTURAL EROSION AND SEDIMENT CONTROL PRACTICES WILL BE CONSTRUCTED AND MAINTAINED ACCORDING TO MINIMUM STANDARDS AND SPECIFICATIONS OF THE NORTH CAROLINA EROSION AND SEDIMENT CONTROL PLANNING DESIGN MANUAL (REVISED JUNE 2006).
2. THE CONTRACTOR SHALL APPLY PERMANENT OR TEMPORARY SOIL STABILIZATION TO ALL DENUDED OR DISTURBED AREAS WITHIN 7 DAYS AFTER FINAL GRADE IS REACHED ON ANY PORTION OF THE SITE. SOIL STABILIZATION MUST ALSO BE APPLIED TO DENUDED OR DISTURBED AREAS WHICH MAY NOT BE AT FINAL GRADE BUT WHICH WILL REMAIN UNDISTURBED FOR LONGER THAN 30 DAYS. SOIL STABILIZATION MEASURES INCLUDE VEGETATIVE ESTABLISHMENT, MULCHING AND THE EARLY APPLICATION OF GRAVEL BASE MATERIAL ON AREAS TO BE PAVED.
3. ALL EROSION AND SEDIMENT CONTROL MEASURES ARE TO BE INSTALLED PRIOR TO OR AS THE FIRST STEP IN CONSTRUCTION.
4. THE NPDES CONSTRUCTION PERMIT REQUIRES EROSION CONTROL DEVICES AND STORM OUTFALLS BE INSPECTED WEEKLY (EVERY 7 CALENDAR DAYS) AND WITHIN 24 HOURS OF A .5 INCH RAIN EVENT. IT WILL BE THE RESPONSIBILITY OF THE CONTRACTOR TO CONDUCT THESE INSPECTIONS AND MAINTAIN RECORDS UNTIL THE AREA HAS STABILIZATION, EVIDENT BY 95% VEGETATIVE GROWTH FOR AREAS PROVIDED SEEDING. TO FACILITATE RAINFALL MONITORING A RAIN GAUGE IS REQUIRED TO BE ON SITE. ONCE STABILIZATION HAS BEEN ACCOMPLISHED INSPECTION RECORDS ARE TO BE FORWARDED TO THE GOVERNMENT AND ALL TEMPORARY EROSION/SEDIMENTATION CONTROL DEVICES REMOVED. THE CONTRACTOR IS RESPONSIBLE FOR MAINTAINING COMPLIANCE WITH ALL PERMITS AND PLANS, ANY CHANGES MUST BE APPROVED BY THE STATE PRIOR TO EXECUTION. A COPY OF THE EROSION AND SEDIMENTATION CONTROL PLAN, LETTER OF APPROVAL, AND NPDES CONSTRUCTION PERMIT MUST BE MAINTAINED BY THE CONTRACTOR AT THE ONSITE OFFICE.
5. THE CONTRACTOR SHALL LIMIT SITE ACCESS BY CONSTRUCTION VEHICLES TO ENTRANCES PROTECTED BY A STONE CONSTRUCTION ENTRANCE. SEDIMENT SHALL BE REMOVED FROM PAVED AREAS ON A DAILY BASIS.
6. STOCKPILES OF SOIL AND OTHER ERODIBLE MATERIALS SHALL BE STABILIZED OR PROTECTED WITH SEDIMENT TRAPPING MEASURES. THE CONTRACTOR IS RESPONSIBLE FOR THE TEMPORARY PROTECTION AND PERMANENT STABILIZATION FOR STOCKPILES ON SITE AS WELL AS FOR MATERIALS TRANSPORTED FROM THE PROJECT SITE.
7. THE CONTRACTOR SHALL MONITOR AND TAKE PRECAUTIONS TO CONTROL DUST INCLUDING (BUT NOT LIMITED TO) USE OF WATER, MULCH, OR CHEMICAL DUST ADHESIVES AND CONTROL OF CONSTRUCTION SITE TRAFFIC.
8. EFFLUENT FROM DE–WATERING OPERATIONS SHALL BE FILTERED OR PASSED THROUGH AN APPROVED SEDIMENT TRAPPING DEVICE, OR BOTH, AND DISCHARGED IN A MANNER THAT DOES NOT ADVERSELY AFFECT ADJACENT PROPERTIES, WETLANDS, INFILTRATION BASINS, WATERWAYS OR THE STORM DRAINAGE SYSTEM.
9. THE CONTRACTOR IS RESPONSIBLE FOR INSTALLATION AND MAINTENANCE OF ANY ADDITIONAL CONTROL MEASURES NECESSARY TO PREVENT EROSION AND SEDIMENTATION AS DETERMINED NECESSARY BY THE PLAN APPROVING AUTHORITY.
10. TEMPORARY EROSION AND SEDIMENT CONTROL MEASURES ARE NOT TO BE REMOVED UNTIL ALL DISTURBED AREAS ARE STABILIZED. AFTER STABILIZATION IS COMPLETE. ALL MEASURES SHALL BE REMOVED WITHIN 30 DAYS. TRAPPED SEDIMENT SHALL BE SPREAD AND SEEDED.
11. ANY SEDIMENT THAT HAS BEEN TRANSPORTED BEYOND THE PROJECT LIMITS SHALL BE REMOVED. RESPONSIBLE MAINTENANCE CONTACT: DEPUTY PUBLIC WORKS OFFICER
12. ALL BORROW MATERIAL SHALL BE PROVIDED FROM AN APPROVED BORROW PIT. ALL SOIL WASTE SHALL BE TRANSPORTED TO AN APPROVED LOCATION ON BASE.

SYM	DESCRIPTION	DATE	APPR

NAVFAC

SEAL

A/E INFO

APPROVED

FOR COMMANDER NAVFAC

ACTIVITY

EMILY M. SYLVESTER, PE

SATISFACTORY TO DATE 28 JUNE 2018

DES	QNT	DRW	ARH	CHK	MAD

DESIGN MANAGER G. COOKE

BRANCH MANAGER DLB

CHIEF ENGINEER EJA

FIRE PROTECTION

DEPARTMENT OF THE NAVY
NAVAL FACILITIES ENGINEERING COMMAND
MIDLANT CI CORE
NAVAL FACILITIES ENGINEERING COMMAND–MID-ATLANTIC
NAVAL STATION NORFOLK VIRGINIA
JACKSONVILLE, NC
MCB CAMP LEJEUNE
P1482 MARINE SPECIAL OP SCHOOL
120 MAN CLASSROOMS
EROSION AND SEDIMENT CONTROL NOTES

SCALE: AS NOTED
EPROJECT NO. 1558046
CONSTR. CONTR. NO. –
NAVFAC DRAWING NO. 12747160
SHEET 20 OF 91

C-503

DRAWFORM REVISION: 10 MARCH 2009

FILE NAME: P:\NC\CampLejeune\MILCON\2017_1558046_P1482_IH-108B_120ManClassrooms\E_Design\Drawings\Sheet\05_Civil\1558047_P1482_C-503_ES_NOTES.dwg LAYOUT NAME: C-503 EROSION AND SEDIMENT CONTROL NOTES PLOTTED: Monday, June 01, 2020 – 4:09pm USER: aguiton

UNCLASSIFIED

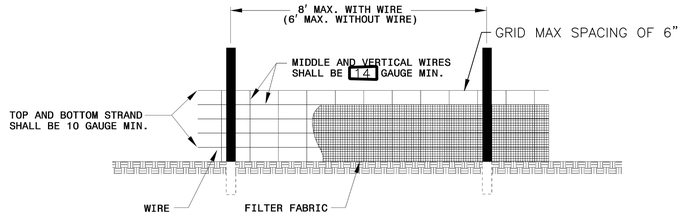

NOTES
USE WIRE A MINIMUM OF 32" IN WIDTH AND WITH A MINIMUM OF 6 LINE WIRES WITH 12" STAY SPACING.
USE FILTER FABRIC A MINIMUM OF 36" IN WIDTH AND FASTEN ADEQUATELY TO THE WIRE AS DIRECTED BY THE ENGINEER.
PROVIDE 5'-0" STEEL POST OF THE SELF-FASTENER ANGLE STEEL TYPE.

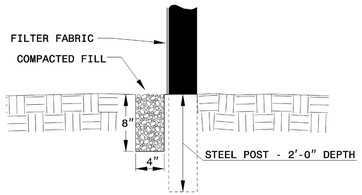

C3 SEDIMENT FENCE (SF)
NTS

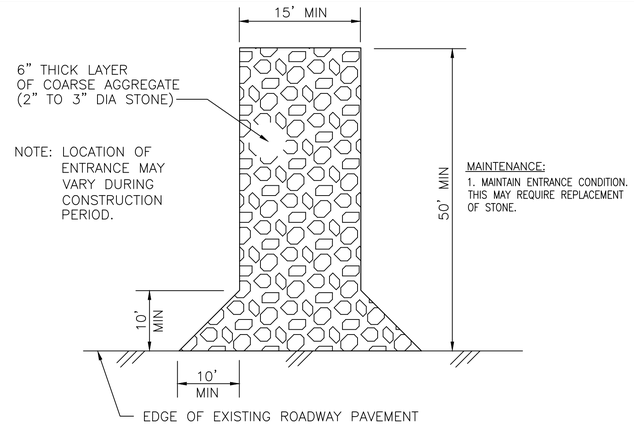

MAINTENANCE:
1. MAINTAIN ENTRANCE CONDITION. THIS MAY REQUIRE REPLACEMENT OF STONE.

C4 TEMPORARY CONSTRUCTION ENTRANCE (CE)
NTS

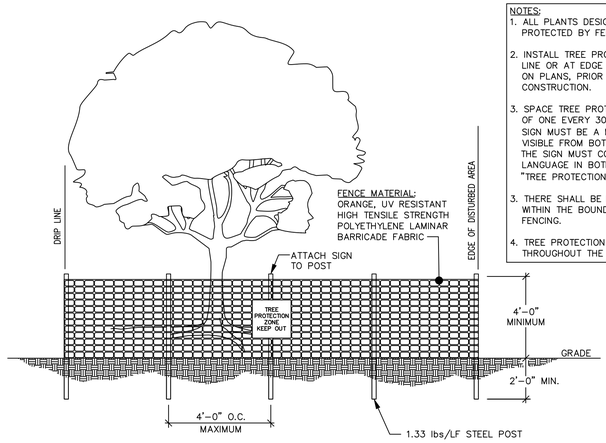

NOTES:
1. ALL PLANTS DESIGNATED TO BE SAVED SHALL BE PROTECTED BY FENCING, AS ILLUSTRATED.
2. INSTALL TREE PROTECTION FENCE AT TREE DRIP LINE OR AT EDGE OF DISTURBED AREA, AS SHOWN ON PLANS, PRIOR TO COMMENCEMENT OF CONSTRUCTION.
3. SPACE TREE PROTECTION ZONE SIGNS A MINIMUM OF ONE EVERY 300 FEET. THE SIZE OF EACH SIGN MUST BE A MINIMUM OF 2' x 2' AND BE VISIBLE FROM BOTH SIDES OF THE FENCE. THE SIGN MUST CONTAIN THE FOLLOWING LANGUAGE IN BOTH ENGLISH & SPANISH: "TREE PROTECTION ZONE, KEEP OUT".
3. THERE SHALL BE NO STORAGE OF MATERIAL WITHIN THE BOUNDARIES OF THE TREE PROTECTION FENCING.
4. TREE PROTECTION FENCING SHALL BE MAINTAINED THROUGHOUT THE DURATION OF THE PROJECT.

B4 TREE PROTECTION FENCE
NTS

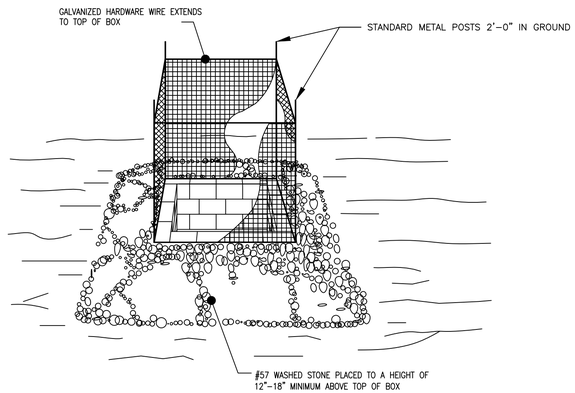

A4 INLET PROTECTION (IP)
NTS

SYM	DESCRIPTION	DATE	APPR
--	--	--	--

SEAL

A/E INFO

APPROVED

FOR COMMANDER NAVFAC

ACTIVITY

EMILY M. SYLVESTER, PE

SATISFACTORY TO DATE 28 JUNE 2018

DES QNT | DRW ARH | CHK MAD

DESIGN MANAGER G. COOKE

BRANCH MANAGER DLB

CHIEF ENGINEER EJA

FIRE PROTECTION

DEPARTMENT OF THE NAVY
NAVAL FACILITIES ENGINEERING COMMAND
NAVFAC CI CORE
NAVAL FACILITIES ENGINEERING COMMAND-MID-ATLANTIC
NAVAL STATION NORFOLK VIRGINIA
MCB CAMP LEJEUNE
JACKSONVILLE, NC
P1482 MARINE SPECIAL OP SCHOOL
120 MAN CLASSROOMS
EROSION AND SEDIMENT CONTROL DETAILS

SCALE: AS NOTED
EPROJECT NO. 1558046
CONSTR. CONTR. NO. -
NAVFAC DRAWING NO. 12747161
SHEET 21 OF 91

C-504

DRAWFORM REVISION: 10 MARCH 2009

UNCLASSIFIED

FILE NAME: P:\NC\Camp Lejeune\MILCON\2017_1558046_P1482_IH-088_120ManClassrooms\B_Design\Drawings\Sheet\05_Civil\1558047_P1482_C-504_ES_DETAILS.dwg LAYOUT NAME: C-504 EROSION AND SEDIMENT CONTROL DETAILS PLOTTED: Monday, June 01, 2020 - 4:10pm USER: cyutran

Sod installation—A step-by-step procedure for installing sod is illustrated in Figure 6.12a and described below.

1. Moistening the sod after it is unrolled helps maintain its viability. Store it in the shade during installation.

2. Rake the soil surface to break the crust just before laying sod. During the summer, lightly irrigate the soil, immediately before laying the sod to cool the soil, reduce root burning, and dieback.



Roll sod immediately to achieve firm contact with the soil.

Water to a depth of 4″ as soon as the sod is laid, and continue watering as needed.

Mow when the sod is established (2-3 wks). Set the mower high (2-3″).

Figure 6.12a Proper installation of grass sod (modified from Va SWCC).

3. Do not sod on gravel, frozen soils, or soils that have been treated recently with sterilants or herbicides.

4. Lay the first row of sod in a straight line with subsequent rows placed paralled to and butting tightly against each other. Stagger strips in a brick-like pattern. Be sure that the sod is not streached or overlapped and that all joints are butted tightly to prevent voids. Use a knife or sharp spade to trim and fit irregularly shaped areas.

5. Install strips of sod with their longest dimension perpendicular to the slope. On slopes 3:1 or greater, or wherever erosion may be a problem, secure sod with pegs or staples.

6. As sodding of clearly defined areas is completed, roll sod to provide firm contact between roots and soil.

7. After rolling, irrigate until the soil is wet 4 inches below the sod.

8. Keep sodded areas moist to a depth of 4 inches until the grass takes root. This can be determined by gently tugging on the sod—resistance indicates that rooting has occurred.

9. Mowing should not be attempted until the sod is firmly rooted, usually 2-3 weeks.

Sodded waterways—Sod provides a resilient channel lining, providing immediate protection from concentrated runoff and eliminating the need for installing mats or mulch. The following points apply to the use of sod in waterways:

1. Prepare the soil as described in Practice 6.30, *Grass-lined Channels*. The sod type must be able to withstand the velocity of flow specified in the channel design (*Appendix 8.05*).

2. Lay sod strips perpendicular to the direction of flow, with the lateral joints staggered in a brick-like pattern. Edges should butt tightly together (Figure 6.12b).

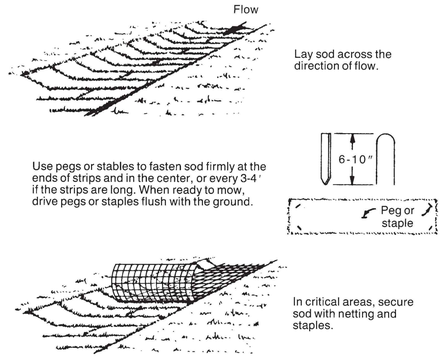

Figure 6.12b Installation of sod in waterways (modified from Va SWCC).

6

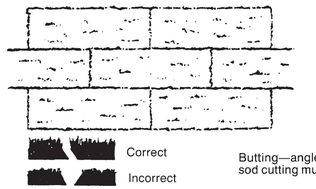

Lay sod in a staggered pattern with strips butted tightly against each other. A sharpened mason's trowel can be used to tuck down the ends and trim pieces.

Correct

Incorrect

Butting—angled ends caused by the automatic sod cutting must be matched correctly.

C3 SOD INSTALLATION
NTS

PERMANENT SOD CONSTRUCTION NOTES:

1. RAKE SOIL SURFACE TO BREAK GROUND CRUST; LEAVE SURFACE UNIFORM AND WATER LIGHTLY.
2. LAY SOD IN A STAGGERED PATTERN WITH STRIPS BUTTED TIGHTLY AGAINST EACH OTHER.
3. BUTTING – ANGLED ENDS CAUSED BY CUTTING MUST BE MATCHED CORRECTLY.
4. ROLL SOD TO PROVIDE FIRM SOIL CONTACT.
5. IRRIGATE UNTIL SOIL IS WET TO ABOUT 4" BELOW THE SOD.
6. KEEP SOD MOIST UNTIL SOD TAKES ROOT.

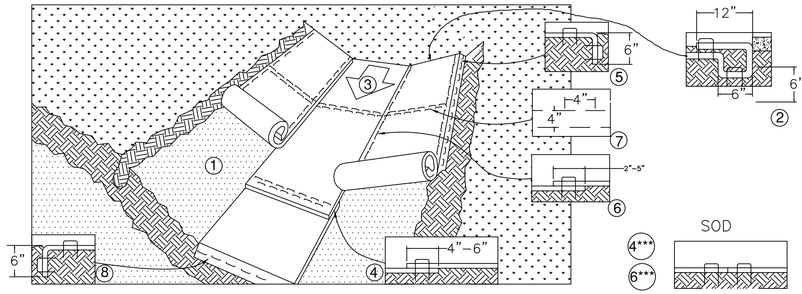

NOTE: * HORIZONTAL STAPLE SPACING SHOULD BE ALTERED IF NECESSARY TO ALLOW STAPLES TO SECURE THE CRITICAL POINTS ALONG THE CHANNEL SURFACE.

** IN LOOSE SOIL CONDITIONS, USE STAPLES OR STAKE LENGTHS GREATER THAN 6" TO PROPERLY ANCHOR THE BLANKETS.

*** FOR SODDED AREAS, PLACEMENT OF MATS SHALL BE BUTTED TIGHTLY AGAINST EACH OTHER WITH NO OVERLAP. FOR CONSTRUCTION NOTES REFER TO THIS SHEET.

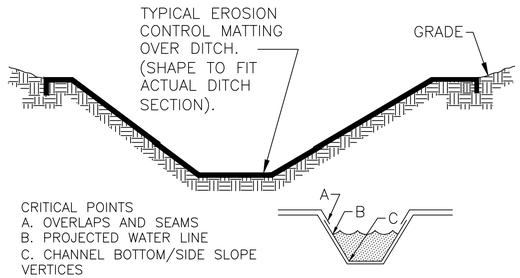

CRITICAL POINTS
A. OVERLAPS AND SEAMS
B. PROJECTED WATER LINE
C. CHANNEL BOTTOM/SIDE SLOPE VERTICES

A1 TYPICAL EROSION CONTROL SOD/MATTING DETAIL
NTS

EROSION CONTROL MATTING INSTALLATION NOTES:

1. PREPARE SOIL BEFORE INSTALLING EROSION CONTROL MATTING (ECM), INCLUDING; REMOVAL OF DEBRIS, VEGETATIVE GROWTH, AND ERODIBLE MATERIAL; SCARIFY THE EXIST. DITCH SURFACE; SMOOTH EXIST. DITCH SLOPES AND BOTTOM BY FILLING IRREGULAR SURFACES AND VOIDS WITH TOPSOIL AND COMPACT THE SOIL WITHIN THE ECM LIMITS; APPLY LIME, FERTILIZER, AND SEED.
2. BEGIN AT THE TOP OF THE CHANNEL BY ANCHORING THE MATTING IN A 6" DEEP X 6" WIDE TRENCH WITH APPROXIMATELY 12" OF MATTING EXTENDED BEYOND THE UP-SLOPE PORTION OF THE TRENCH. ANCHOR THE MATTING WITH A ROW OF STAPLES/STAKES APPROXIMATELY 12" APART IN THE BOTTOM OF THE TRENCH. BACKFILL AND COMPACT THE TRENCH AFTER STAPLING. APPLY SEED TO COMPACTED SOIL AND FOLD REMAINING 12" PORTION OF MATTING BACK OVER SEED AND COMPACTED SOIL. SECURE MATTING OVER COMPACTED SOIL WITH A ROW OF STAPLES/STAKES SPACED APPROXIMATELY 12" APART ACROSS THE WIDTH OF THE MATTING.
3. ROLL CENTER MATTING IN DIRECTION OF WATER FLOW IN BOTTOM OF CHANNEL. UNROLL MATTINGS WITH APPROPRIATE SIDE AGAINST THE SOIL SURFACE. SECURELY FASTEN ALL MATTING TO SOIL SURFACE BY PLACING STAPLES/STAKES IN APPROPRIATE LOCATIONS AS REQUIRED BY THE MANUFACTURER.
4. PLACE CONSECUTIVE MATTINGS END OVER END (SHINGLE STYLE) WITH A 4"–6" OVERLAP. USE A DOUBLE ROW OF STAPLES STAGGERED 4" APART AND 4" ON CENTER TO SECURE MATTINGS.
5. ANCHOR FULL LENGTH EDGE OF MATTINGS AT TOP OF SIDE SLOPES WITH A ROW OF STAPLES/STAKES APPROXIMATELY 12" APART IN A 6" DEEP X 6" WIDE TRENCH. BACKFILL AND COMPACT THE TRENCH AFTER STAPLING.
6. OVERLAP APPROXIMATELY 4" AND STAPLE.
7. PLACE A DOUBLE ROW OF STAPLES STAGGERED 4" APART AND 6" (10 ON CENTER OVER ENTIRE WIDTH OF THE CHANNEL AT 33' TO 40' INTERVALS.
8. ANCHOR THE TERMINAL END OF THE MATTINGS WITH A ROW OF STAPLES/STAKES APPROXIMATELY 6" APART IN A 6" DEEP X 6" WIDE TRENCH. BACKFILL AND COMPACT THE TRENCH AFTER STAPLING.

SYM	DESCRIPTION	DATE	APPR
-	-	-	-

SEAL

A/E INFO

APPROVED

FOR COMMANDER NAVFAC

ACTIVITY

EMILY M. SYLVESTER, PE

SATISFACTORY TO DATE 28 JUNE 2018

DES QNT | DRW ARH | CHK MAD

DESIGN MANAGER G. COOKE

BRANCH MANAGER DLB

CHIEF ENGINEER EJA

FIRE PROTECTION

DEPARTMENT OF THE NAVY
NAVAL FACILITIES ENGINEERING COMMAND
NAVAL FACILITIES ENGINEERING COMMAND–MID-ATLANTIC
NAVAL STATION NORFOLK VIRGINIA
MIDLANT Q CORE
MCB CAMP LEJEUNE
JACKSONVILLE, NC
P1482 MARINE SPECIAL OP SCHOOL
120 MAN CLASSROOMS
EROSION AND SEDIMENT CONTROL DETAILS

SCALE: AS NOTED

EPROJECT NO. 1558046

CONSTR. CONTR. NO. –

NAVFAC DRAWING NO. 12747162

SHEET 22 OF 91

C-505

DRAWFORM REVISION: 10 MARCH 2009

UNCLASSIFIED

FILE NAME: P:\NC\Camp Lejeune\MILCON\2017_1558046_P1482_IH-DBB_120ManClassrooms\8_Design\Drawings\Sheet\05_Civil\1558047_P1482_C-505_ES_DETAILS.dwg LAYOUT NAME: C-505 EROSION AND SEDIMENT CONTROL DETAILS PLOTTED: Monday, June 01, 2020 - 4:10pm USER: ayutran

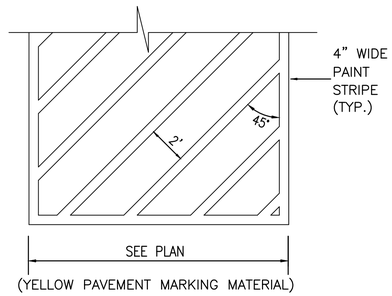

NOTE NO. 1 SEE SITE PLAN FOR LOCATION OF PAVEMENT MARKINGS.

NOTE NO. 2 ALL PAVEMENT MARKINGS SHALL CONFORM TO MUTCD STANDARDS AND DETAILS.

C1 PAVEMENT MARKINGS
NTS

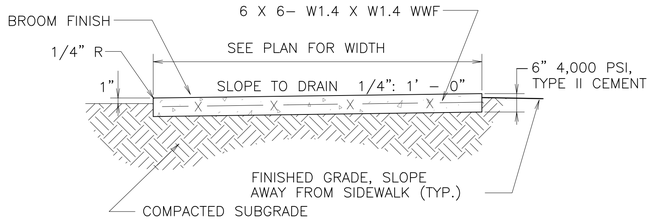

C2 CONCRETE SIDEWALK
NTS

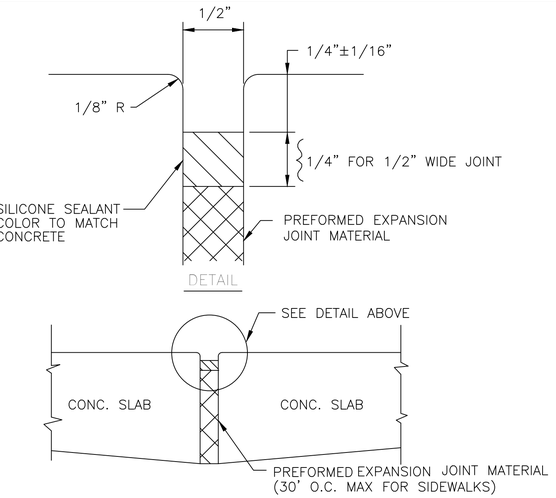

C3 EXPANSION JOINT DETAIL (EJ)
NTS

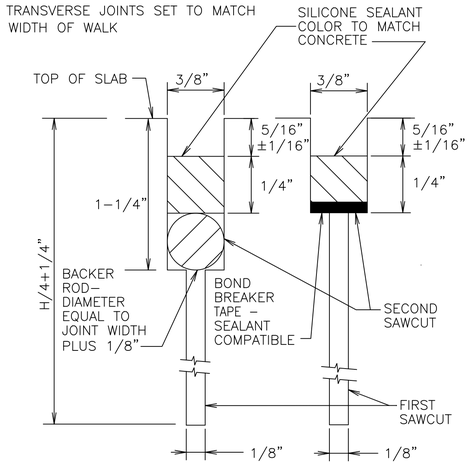

NOTE

1. SEE SHEET LC–100 FOR JOINT LOCATION & DETAILS.

C5 SAWED CONTRACTION JOINTS (CJ)
NTS

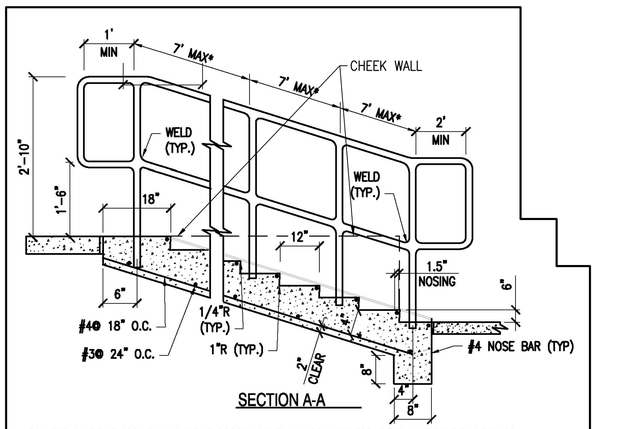

GENERAL NOTES FOR CONCRETE STEPS AND HANDRAILS:

1. CONCRETE SHALL HAVE A MINIMUM COMPRESSIVE STRENGTH OF 4000 PSI.
2. STEPS SHALL HAVE ROUNDED NOSING WITH A CONTRASTING, NON–SLIP SURFACE 1" WIDE ON BOTH THE RISER AND TREAD EDGE.
3. TREADS SHALL BE PITCHED 5/32 INCH.
4. HANDRAIL SHALL BE CONSTRUCTED OF GALVANIZED STEEL PIPE CONFORMING TO ASTM SPEC. A53. WELDED JOINTS SHALL BE GROUND SMOOTH BEFORE GALVANIZING. THE COMPLETED HANDRAIL SHALL RECEIVE GALVANIZED STEEL PRIMER AND BE PAINTED BLACK.
5. STEPS AND HANDRAILS SHALL MEET THE REQUIREMENTS IN THE ADAAG.

* HANDRAILS SPACED EVENLY, 7' MAXIMUM.

C3 CONCRETE STEPS WITH HANDRAIL
NTS

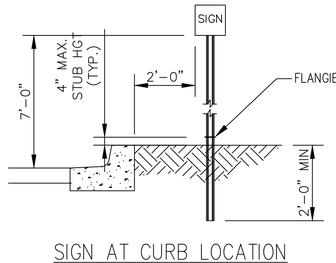

SIGN AT CURB LOCATION

B3 SIGN INSTALLATION
NTS

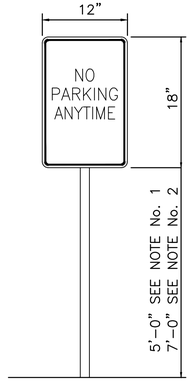

NO PARKING

NOTE NO. 1 THE PARKING SIGN HEIGHT SHALL BE 5'–0" IF THE PEDESTRIAN PATH DOES NOT PASS BY, UNDER OR AROUND THE SIGN.

NOTE NO. 2 ALL SIGN HEIGHTS SHALL BE 7'–0" IF THE PEDESTRIAN PATH PASSES BY, UNDER OR AROUND THE SIGN.

A2 SITE SIGNAGE
NTS

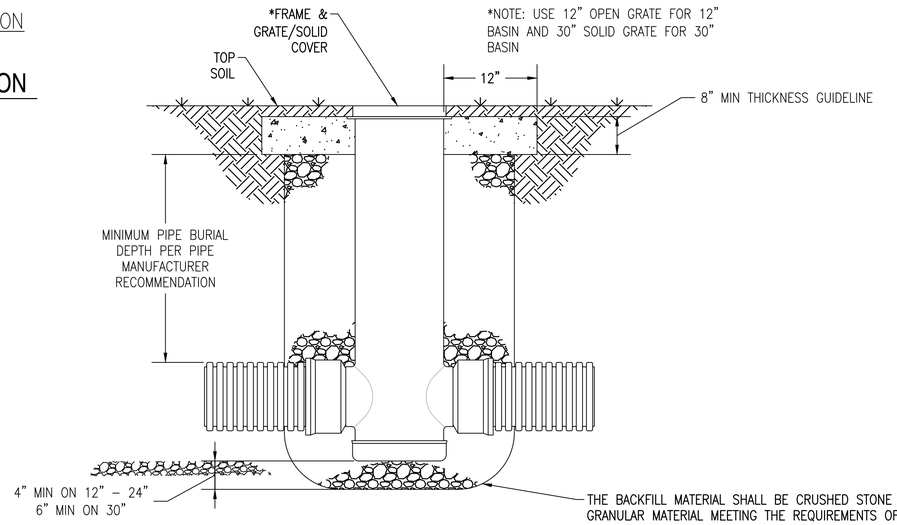

NOTE

1. GRATES/SOLID COVERS SHALL MEET H–20 LOAD RATING.

A4 12" - 30" ROOF DRAIN BASIN
NTS

APPR	DATE	DESCRIPTION	SYM

NAVFAC

SEAL

A/E INFO

APPROVED

FOR COMMANDER NAVFAC

ACTIVITY

EMILY M. SYLVESTER, PE

SATISFACTORY TO DATE 28 JUNE 2018

DES QNT | DRW ARH | CHK MAD

DESIGN MANAGER G. COOKE

BRANCH MANAGER DLB

CHIEF ENGINEER EJA

FIRE PROTECTION

DEPARTMENT OF THE NAVY
NAVAL FACILITIES ENGINEERING COMMAND
MIDLANT CI CORE
NAVAL FACILITIES ENGINEERING COMMAND–MID-ATLANTIC
NAVAL STATION NORFOLK VIRGINIA
MCB CAMP LEJEUNE JACKSONVILLE, NC
P1482 MARINE SPECIAL OP SCHOOL
120 MAN CLASSROOMS
SITE DETAILS

SCALE: AS NOTED

EPROJECT NO. 1558046

CONSTR. CONTR. NO. –

NAVFAC DRAWING NO. 12747163

SHEET 23 OF 91

C-601

DRAWFORM REVISION: 10 MARCH 2009

FILE NAME: P:\MCI\Comp\Lejeune\MILCON\2017_1558046_P1482_IH-088_120ManClassrooms\B_Design\Drawings\Sheet\05_Civil\1558947_P1482_C-601_SITE_DETAILS.dwg LAYOUT NAME: C-601 SITE DETAILS PLOTTED: Monday, June 01, 2020 – 4:17pm USER: dpu.tron

NO PROJECTION OF PIPE ABOVE GROUND LINE

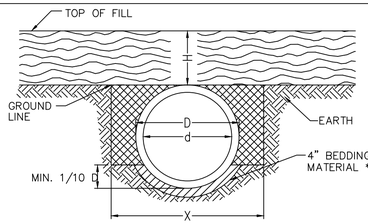

"X" DIMENSION TO BE MAINTAINED TO THE TOP OF PIPE

NORMAL EARTH FOUNDATION

* MAY BE ELIMINATED UNDER ENTRANCE PIPE WHERE DIRECTED BY ENGINEER

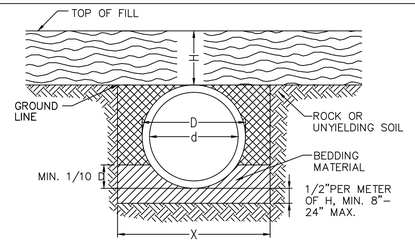

"X" DIMENSION TO BE MAINTAINED TO THE TOP OF PIPE

ROCK FOUNDATION

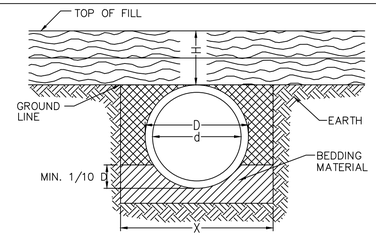

FIRM BEARING SOIL

FOUNDATION SOFT, YIELDING OR OTHERWISE UNSUITABLE MATERIAL

PIPE PROJECTING ABOVE GROUND LINE

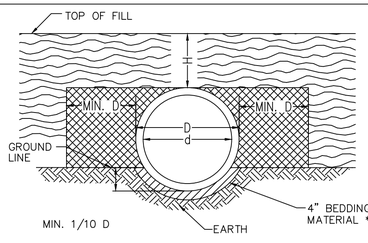

NORMAL EARTH FOUNDATION

* MAY BE ELIMINATED UNDER ENTRANCE PIPE WHERE DIRECTED BY ENGINEER

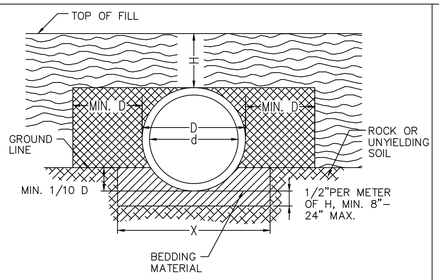

ROCK FOUNDATION

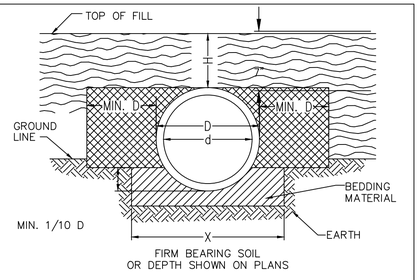

FIRM BEARING SOIL OR DEPTH SHOWN ON PLANS

FOUNDATION SOFT, YIELDING OR OTHERWISE UNSUITABLE MATERIAL

CULVERTS LESS THAN d=.91m
X=D+.61m

CULVERTS WHERE d=.91m AND OVER
X=D+.91m

METHOD "A" PIPE BEDDING SHALL BE USED AS FOLLOWS UNLESS OTHERWISE NOTED ON PLANS:

RIGID PIPE
FILLS UP TO 9.14m (NO PROJECTION OF PIPE ABOVE GROUND LINE.)

FILLS UP TO 9.14m (PIPE PROJECTION ABOVE GROUND LINE)

FLEXIBLE PIPE
AS SHOWN ON TABLES

H=HEIGHT OF COVER MEASURED FROM TOP OF DRAINAGE STRUCTURE TO FINISHED GRADE.

BEDDING MATERIAL IN ACCORDANCE WITH SECTION 302.03 OF THE ROAD AND BRIDGE SPECIFICATIONS.

BACKFILL MATERIAL IN ACCORDANCE WITH SECTION 302.03 OF THE ROAD AND BRIDGE SPECIFICATIONS.

EMBANKMENT
BEDDING REQUIREMENTS DETAILED UNDER METHOD A, PROJECTING CONDITION, ARE APPLICABLE TO METHOD B1 AND B2.

C1 INSTALLATION OF PIPE CULVERTS AND STORM SEWERS

NTS

D4

STATE OF NORTH CAROLINA DEPT. OF TRANSPORTATION DIVISION OF HIGHWAYS RALEIGH, N.C.

7-06

ENGLISH STANDARD DRAWING FOR
DROP INLET FRAME AND GRATES
FOR USE WITH STD. DWG.S 840.14 AND 840.15

SHEET 1 OF 1
840.16

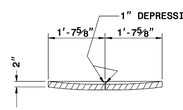

SECTION G-G

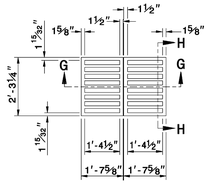

PLAN OF GRATING
CAST IRON

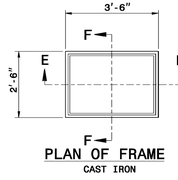

PLAN OF FRAME
CAST IRON

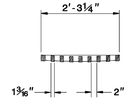

SECTION H-H

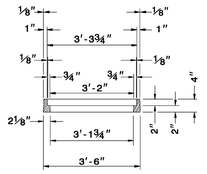

SECTION E-E

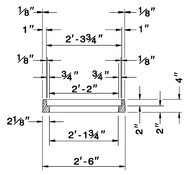

SECTION F-F

STATE OF NORTH CAROLINA DEPT. OF TRANSPORTATION DIVISION OF HIGHWAYS RALEIGH, N.C.

7-06

ENGLISH STANDARD DRAWING FOR
DROP INLET FRAME AND GRATES
FOR USE WITH STD. DWG.S 840.14 AND 840.15

SHEET 1 OF 1
840.16

D4

STATE OF NORTH CAROLINA DEPT. OF TRANSPORTATION DIVISION OF HIGHWAYS RALEIGH, N.C.

7-06

ENGLISH STANDARD DRAWING FOR
MANHOLE FRAME AND COVER

SHEET 1 OF 1
840.54

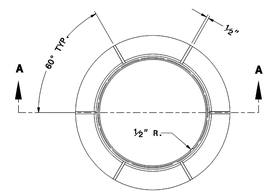

PLAN OF FRAME

SOLID COVER SHOWN PERFORATED. PERFORATED AVAILABLE IF SPECIFIED.
STATE USE OF SYSTEM ON COVER (I.E.: SEWER, STORM DRAIN, ELECTRICAL)

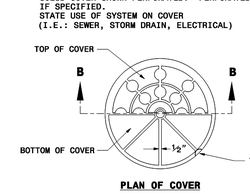

PLAN OF COVER

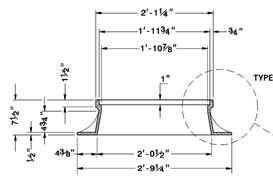

SECTION A-A

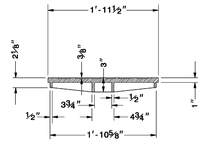

SECTION B-B

MINIMUM WEIGHTS - LBS.
FRAME - 180
COVER - 120
TOTAL - 300

SPECIFICATION
CLASS 30 IRON MEETING ASTM A-48

ENGLISH STANDARD DRAWING FOR
MANHOLE FRAME AND COVER

SHEET 1 OF 1
840.54

A1

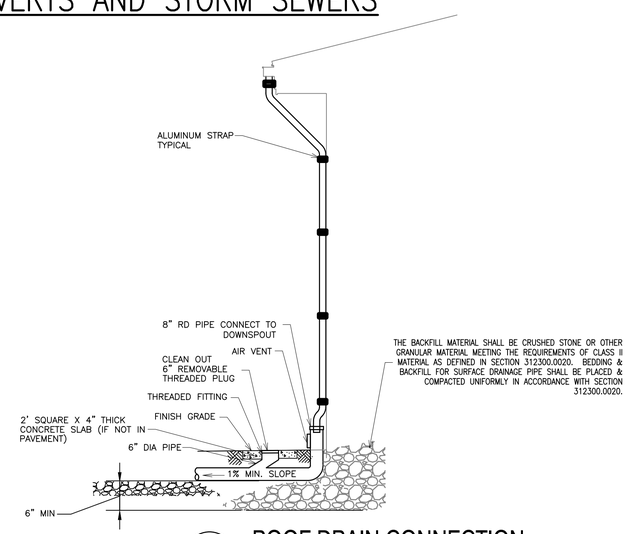

A2 ROOF DRAIN CONNECTION
NTS

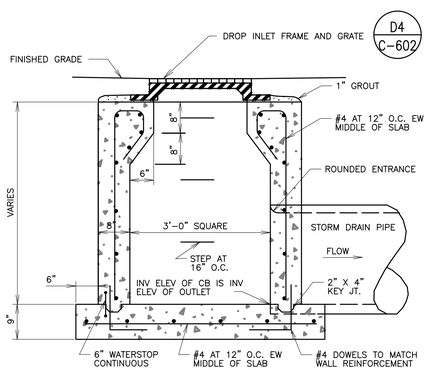

A3 CATCH BASIN
NTS

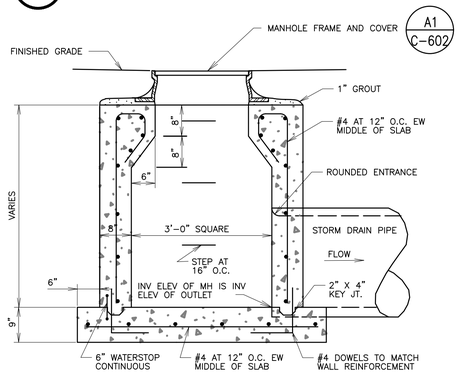

A4 SHALLOW STORM INLET
NTS

APPR | DATE | DESCRIPTION | SYM

NAVFAC

SEAL

A/E INFO

APPROVED

FOR COMMANDER NAVFAC

ACTIVITY

EMILY M. SYLVESTER, PE

SATISFACTORY TO DATE 28 JUNE 2018

DES QNT DRW ARH CHK MAD

DESIGN MANAGER G. COOKE

BRANCH MANAGER DLB

CHIEF ENGINEER EJA

FIRE PROTECTION

DEPARTMENT OF THE NAVY
NAVAL FACILITIES ENGINEERING COMMAND
MIDLANT Q CORE
NAVAL FACILITIES ENGINEERING COMMAND–MID-ATLANTIC
NAVAL STATION NORFOLK VIRGINIA
MCB CAMP LEJEUNE
JACKSONVILLE, NC

P1482 MARINE SPECIAL OP SCHOOL
120 MAN CLASSROOMS

STORM DETAILS

SCALE: AS NOTED
EPROJECT NO. 1558046
CONSTR. CONTR. NO. –
NAVFAC DRAWING NO. 12747164
SHEET 24 OF 91

C-602

DRAWFORM REVISION: 10 MARCH 2009

FILE NAME: P:\NC\Camp Lejeune\MILCON\2017_1558046_P1482_IH-0BB_120ManClassrooms\8_Design\Drawings\Sheet\DS_Civil\1558047_P1482_C-602_SITE_DETAILS.dwg LAYOUT NAME: C-602 STORM DETAILS PLOTTED: Monday, June 01, 2020 - 4:11pm USER: ayu1ran

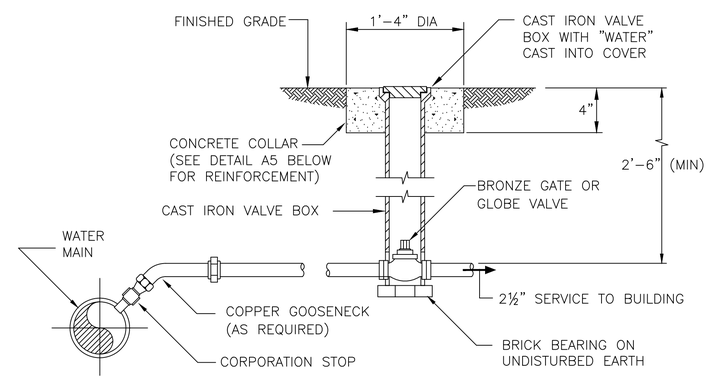

D4 WATER CONNECTION DETAIL
NTS

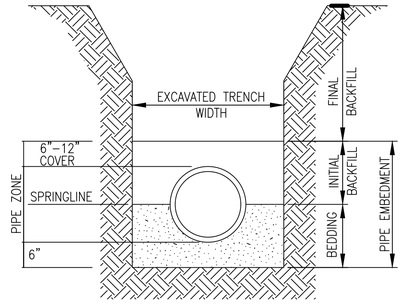

NOTE: PROVIDE BEDDING IN ACCORDANCE WITH THE SPECIFICATIONS.

D5 TRENCH SECTION, PLASTIC PIPE
NTS

SIZE	1/4 BENDS		1/8 BENDS		1/16 BENDS		TEES		PLUGS	
	A	B	A	B	A	B	A	B	C	D
6"	16"	10"	9"	10"	6"	8"	10"	12"	10"	21"
8"	22"	13"	12"	13"	8"	10"	13"	16"	12"	29"
10"	26"	17"	14"	17"	10"	13"	16"	20"	14"	36"
12"	29"	21"	16"	21"	11"	16"	18"	24"	16"	41"
14"	35"	24"	19"	24"	12"	20"	22"	27"	18"	48"
16"	38"	27"	21"	27"	12"	24"	24"	30"	20"	54"

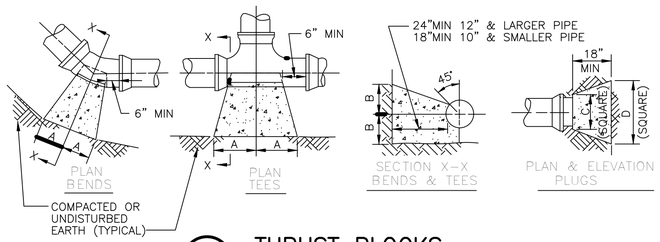

C2 THRUST BLOCKS
NTS

PIPE DIA "D"	MAXIMUM "A"
6" TO 15"	8"
16" TO 21"	10"
24" TO 30"	12"
33" TO 42"	15"
48" & LARGER	18"

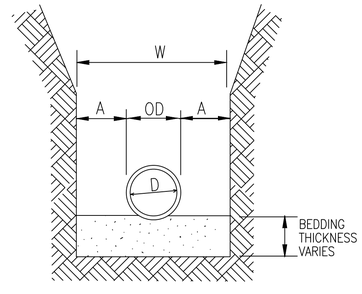

MAXIMUM TRENCH WIDTH "W" TAKEN AT TOP OF PIPE

NOTE: PROVIDE BEDDING IN ACCORDANCE WITH THE SPECIFICATIONS.

B5 TRENCH SECTION, FOR NON PLASTIC PIPE
NTS

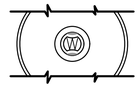

VALVE BOX TOP

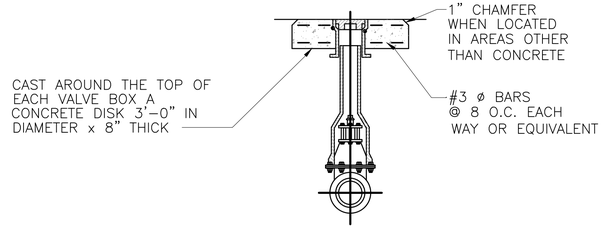

A5 VALVE BOX DETAIL
NTS

APPROVED
FOR COMMANDER NAVFAC
ACTIVITY
EMILY M. SYLVESTER, PE
SATISFACTORY TO DATE 28 JUNE 2018
DES QNT DRW ARH CHK MAD
DESIGN MANAGER G. COOKE
BRANCH MANAGER DLB
CHIEF ENGINEER EJA
FIRE PROTECTION

DEPARTMENT OF THE NAVY
NAVAL FACILITIES ENGINEERING COMMAND
NAVAL FACILITIES ENGINEERING COMMAND-MID-ATLANTIC
NAVAL STATION NORFOLK VIRGINIA
MIDLANT CI CORE
MCB CAMP LEJEUNE JACKSONVILLE, NC
P1482 MARINE SPECIAL OP SCHOOL
120 MAN CLASSROOMS
WATER DETAILS

SCALE: AS NOTED
EPROJECT NO. 1558046
CONSTR. CONTR. NO. -
NAVFAC DRAWING NO. 12747165
SHEET 25 OF 91
C-603
DRAWFORM REVISION: 10 MARCH 2009

FILE NAME: P:\NC\Camp Lejeune\MILCON\2017_1558046_P1482_IH-I088_120ManClassrooms\E_Design\Drawings\Sheet\05_Civil\1558047_P1482_C-603_WATER_DETAILS.dwg LAYOUT NAME: C-603 WATER DETAILS PLOTTED: Monday, June 01, 2020 - 4:12pm USER: dpy.fron

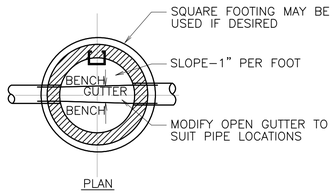

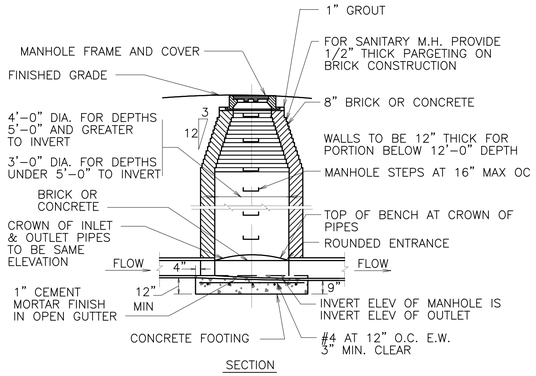

C1 **SEWER MANHOLE**
NTS

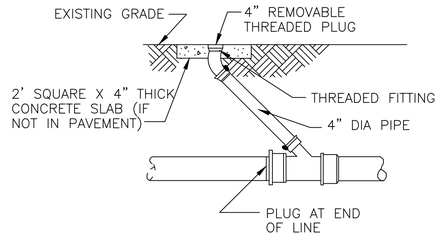

D2 **CLEANOUT DETAIL**
NTS

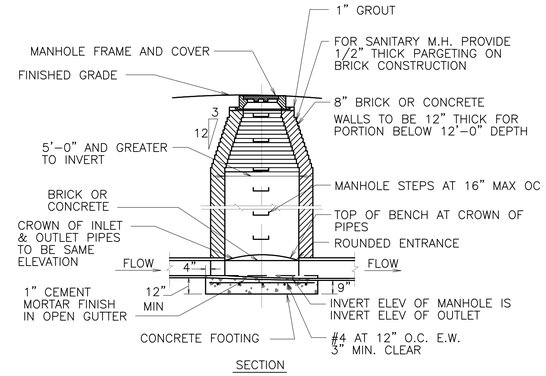

C2 **5'–SEWER MANHOLE**
NTS

PIPE DIA "D"	MAXIMUM "A"
6" TO 15"	8"
16" TO 21"	10"
24" TO 30"	12"
33" TO 42"	15"
48" & LARGER	18"

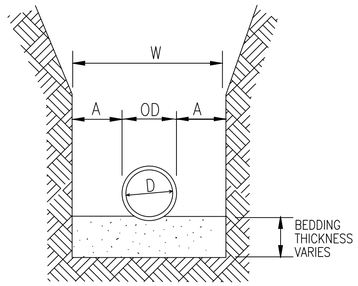

MAXIMUM TRENCH WIDTH "W" TAKEN AT TOP OF PIPE

NOTE: PROVIDE BEDDING IN ACCORDANCE WITH THE SPECIFICATIONS.

D4 **TRENCH SECTION, FOR NON PLASTIC PIPE**
NTS

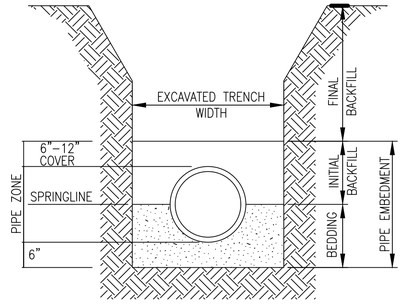

NOTE: PROVIDE BEDDING IN ACCORDANCE WITH THE SPECIFICATIONS.

D5 **TRENCH SECTION, PLASTIC PIPE**
NTS

SOLID COVER SHOWN. ☐ PERFORATED AVAILABLE IF SPECIFIED.
STATE USE OF SYSTEM ON COVER (I.E.: SEWER, STORM DRAIN, ELECTRICAL)

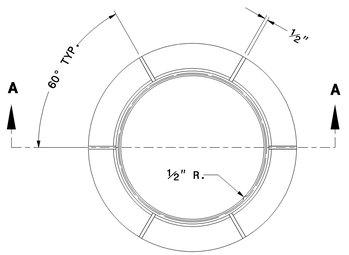

PLAN OF FRAME

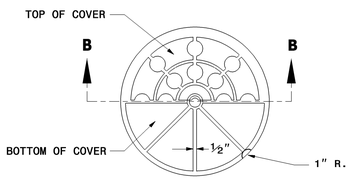

PLAN OF COVER

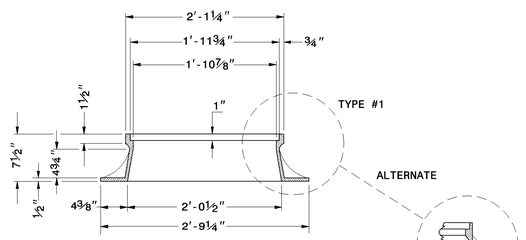

SECTION A-A

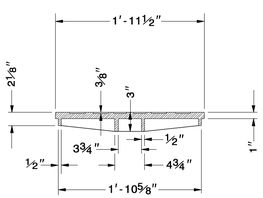

SECTION B-B

MINIMUM WEIGHTS - LBS.
FRAME - 180
COVER - 120
TOTAL - 300

SPECIFICATION
CLASS 30 IRON MEETING
ASTM A-48

STATE OF NORTH CAROLINA
DEPT. OF TRANSPORTATION
DIVISION OF HIGHWAYS
RALEIGH, N.C.

7-06

ENGLISH STANDARD DRAWING FOR
MANHOLE FRAME AND COVER

SHEET 1 OF 1
840.54

A2 **MANHOLE FRAME AND COVER**
NTS

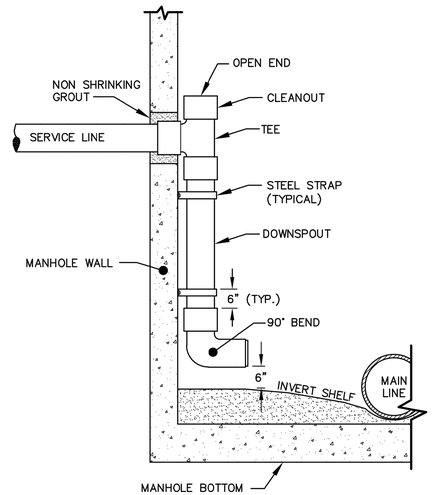

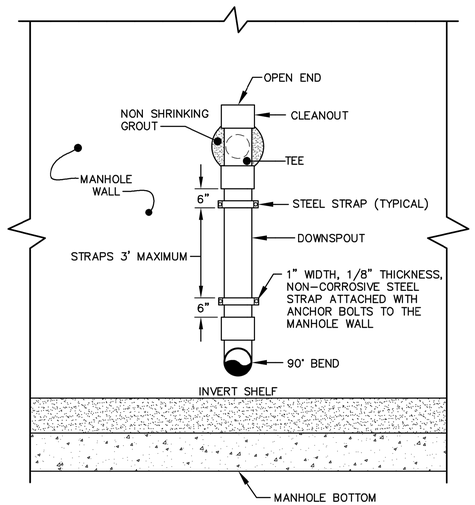

NOTES:
1. PIPING CONFIGURATION TO BE USED ON ALL DROPS OVER 20 INCHES.
2. DROPS TO BE CONSTRUCTED OF DUCTILE IRON OR SCH. 80 PVC PIPE.
3. SERVICE LINE MAY NOT ENTER MANHOLE THROUGH CONE SECTION OR ITS JOINT.
4. THIS DETAIL SHALL NOT BE USED FOR FORCE MAINS.

A4 **INSIDE DROP MANHOLE**
NTS

APPR | DATE | DESCRIPTION | SYM

NAVFAC

SEAL

A/E INFO

APPROVED

FOR COMMANDER NAVFAC

ACTIVITY

EMILY M. SYLVESTER, PE

SATISFACTORY TO DATE 28 JUNE 2018

DES QNT | DRW ARH | CHK MAD

DESIGN MANAGER G. COOKE

BRANCH MANAGER DLB

CHIEF ENGINEER EJA

FIRE PROTECTION

DEPARTMENT OF THE NAVY
NAVAL FACILITIES ENGINEERING COMMAND–MID-ATLANTIC
NAVAL FACILITIES ENGINEERING COMMAND
NAVAL STATION NORFOLK, VIRGINIA
JACKSONVILLE, NC
MCB CAMP LEJEUNE
MIDLANT CI CORE
P1482 MARINE SPECIAL OP SCHOOL
120 MAN CLASSROOMS
SANITARY SEWER DETAILS

SCALE: AS NOTED
EPROJECT NO. 1558046
CONSTR. CONTR. NO. –
NAVFAC DRAWING NO. 12747166
SHEET 26 OF 91

C-604

DRAWFORM REVISION: 10 MARCH 2009

FILE NAME: P:\NC\Camp Lejeune\MILCON\2017_1558046_P1482_JH-ODB_120ManClassrooms\B_Design\Drawings\Sheet\05_Civil\1558047_P1482_C-604_SANITARY_DETS.dwg LAYOUT NAME: C-604 SANITARY SEWER DETAILS PLOTTED: Monday, June 01, 2020 - 4:12pm USER: dpy.fron

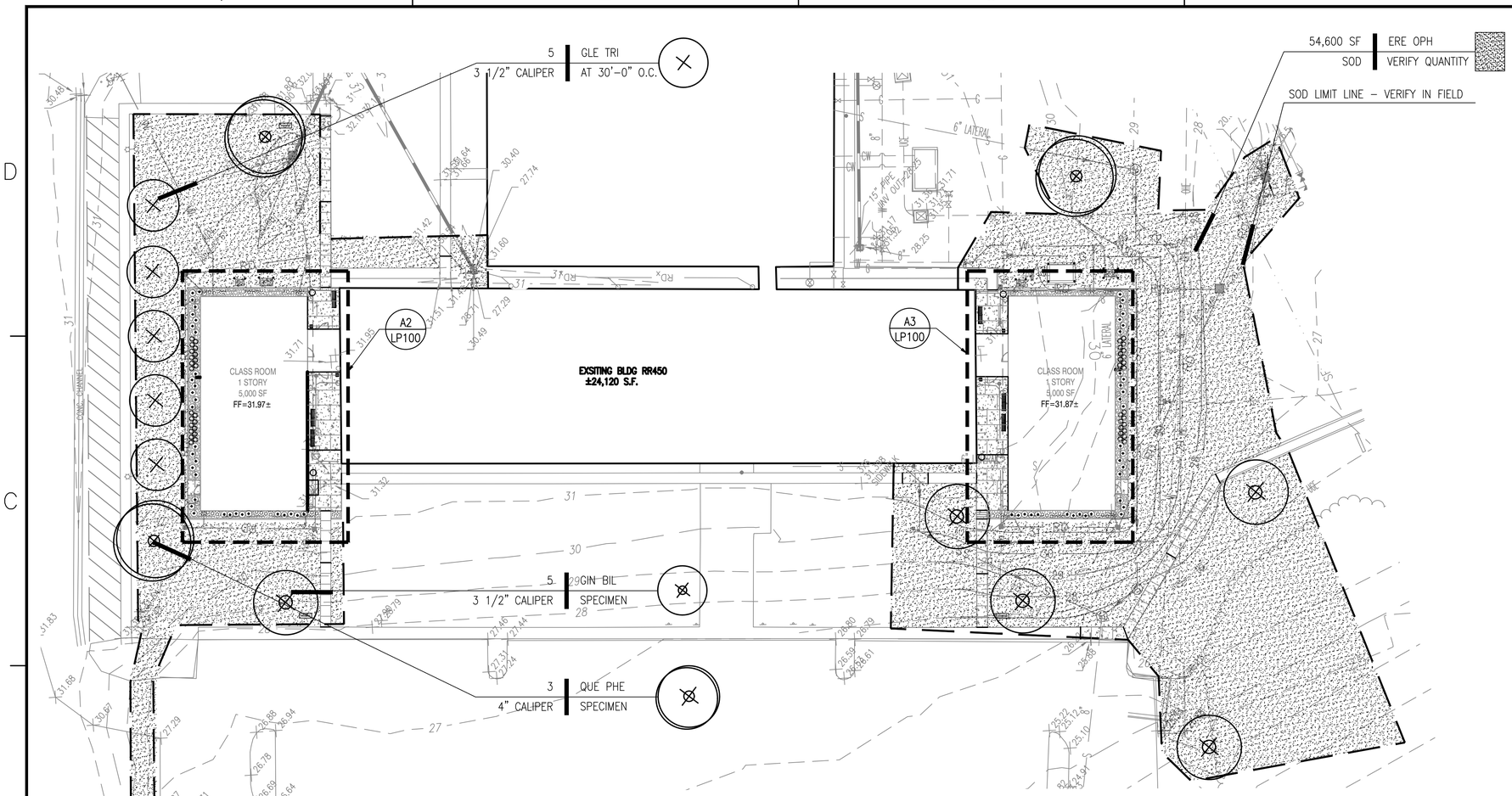

A1 LP100 **OVERALL PLANTING PLAN**
SCALE: 1" = 30'

PLAN NORTH

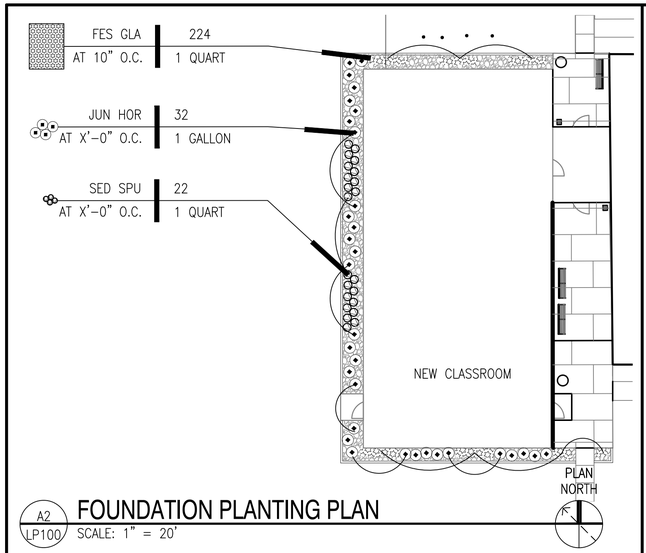

A2 LP100 **FOUNDATION PLANTING PLAN**
SCALE: 1" = 20'

PLAN NORTH

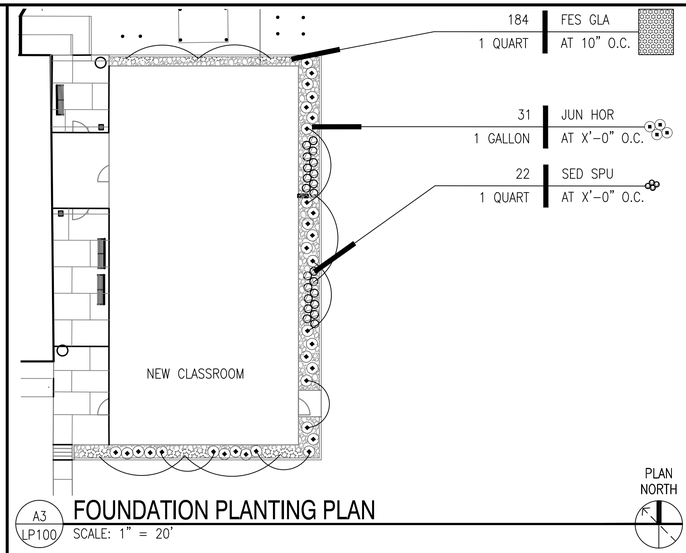

A3 LP100 **FOUNDATION PLANTING PLAN**
SCALE: 1" = 20'

PLAN NORTH

GENERAL PLANTING NOTES

1. ALL PLANT MATERIALS ARE TO BE SPOTTED IN–PLACE BY THE CONTRACTING OFFICER PRIOR TO CONTRACTOR DIGGING THE PLANTING PITS. LANDSCAPE CONTRACTOR TO NOTIFY THE CONTRACTING OFFICER 10 WORKING DAYS PRIOR TO DELIVERY AND PLACEMENT OF PLANT MATERIALS.

3. ALL PLANT MATERIAL TO BE INSPECTED BY THE CONTRACTING OFFICER AND DEEMED DISEASE AND PEST FREE UPON ARRIVAL WITH VISUAL INSPECTION AND DOCUMENTATION FROM PLANT SUPPLIER. ALL PLANT LABELS TO BE REMOVED AFTER PLANTS ARE ACCEPTED BY CONTRACTING OFFICER.

4. COORDINATE ADDITIONAL SITE WORK WITH CIVIL, STRUCTURAL, ARCHITECTURAL, MECHANICAL AND ELECTRICAL DRAWINGS. PLANT ONLY WITH NEW AND EXISTING SUBSURFACE UTILITIES MARKED.

5. THE CONTRACTING OFFICER RETAINS THE RIGHT TO REJECT PLANT MATERIAL DUE TO INCORRECT SIZE, SPECIES, OR DUE TO THE EXISTENCE OF PESTS, DISEASE, OR DAMAGE DUE TO IMPROPER STORAGE ON SITE OR IN DELIVERY.

6. LANDSCAPE CONTRACTOR IS RESPONSIBLE FOR PROPER DE–COMPACTION AND SOIL REMEDIATION PRIOR TO PLANTING. PROVIDE 4 INCHES OF NEW TOPSOIL FROM OFF–SITE TO MEET INDICATED FINISHED GRADE, INCORPORATE FERTILIZERS, SOIL CONDITIONERS, AND PH ADJUSTMENTS AS INDICATED NECESSARY IN SOIL REPORTS. NEW TOPSOIL TO BE INCORPORATED BY DISKING, HARROWING, TILLING, OR OTHER MEANS DEEMED ACCEPTABLE BY THE CONTRACTING OFFICER. FINAL SOIL PH TO BE BETWEEN 5.5 AND 7.0. SOLUBLE SALTS MUST BE NO GREATER THAN 600PPM.

7. REMOVE CONSTRUCTION DEBRIS, TRASH, AND STONES LARGER THAN $\frac{3}{4}$" IN ANY DIMENSION REMAINING ON THE SURFACE AFTER FINISHED GRADING. CORRECT IRREGULARITIES IN FINISHED SURFACES TO ELIMINATE DEPRESSIONS PRIOR TO SOD OR PLANTING BED INSTALLATION. PROTECT FINISHED TOPSOIL AREAS FROM VEHICULAR AND PEDESTRIAN DAMAGE.

8. DO NO PLANT WHEN SOIL IS MUDDY, FROZEN, OR SNOW COVERED OR WHEN TEMPERATURES EXCEED 90F DEGREES.

9. DO NOT DUMP OR DROP PLANTS FROM VEHICLES. DO NOT DAMAGE PLANTS WHILE MOVING FROM THE NURSERY OR STORAGE AREA TO THE PLANTING SITE. HANDLE BOXED, BALLED AND BURLAPPED, AND CONTAINER PLANTS CAREFULLY TO AVOID DAMAGING OR BREAKING THE EARTH BALL OR ROOT STRUCTURE. DO NOT HANDLE PLANTS BY THE TRUNK OR THE STEM.

10. THE WARRANTY PERIOD WILL COMMENCE ON THE DATE THAT INSPECTION BY THE CONTRACTING OFFICER SHOWS THAT THE PLANT MATERIAL FURNISHED UNDER THIS CONTRACT HAS BEEN INSTALLED TO A 100% STAND OF COVERAGE. THE ESTABLISHMENT PERIOD MUST CONTINUE OR A PERIOD OF 365 CONTIGUOUS DAYS. MAINTAIN ALL PLANTING AREAS AND WARRANTY PLANT MATERIAL FOR A PERIOD OF ONE–YEAR AND A MINIMUM OF ONE COMPLETE GROWING SEASON.

11. BEGIN TURF MAINTENANCE IMMEDIATELY AFTER SOD HAS BEEN INSTALLED. INSPECT SOD ONCE A WEEK AT A MINIMUM DURING THE ESTABLISHMENT PERIOD.

12. FERTILIZE PLANT MATERIALS TO PROMOTE HEALTHY PLANT GROWTH WITHOUT ENCOURAGING EXCESSIVE TOP FOLIAR GROWTH. FERTILIZER MUST BE 10–10–10 (NPK) OR 20–20–5 (NPK) IF COMPRESSED, SLOW–RELEASE TABLETS ARE USED.

13. FINAL INSPECTION MUST BE MADE UPON WRITTEN REQUEST FROM THE LANDSCAPE CONTRACTOR AT LEAST 10 DAYS PRIOR TO THE LAST DAY OF THE ESTABLISHMENT PERIOD. FINAL ACCEPTANCE WILL BE BASED UPON 100% GROUND COVER OF SPECIFIED SPECIES AND DESIGN. PLANTS AND WORK MUST BE ACCEPTED BY THE CONTRACTING OFFICER AND THE REQUIRED NUMBER OF PLANT REPLACEMENTS MUST BE MADE IF PLANTS ARE DEEMED BY THE CONTRACTING OFFICER TO BE UNACCEPTABLE EITHER DUE TO POOR HEALTH OR DAMAGE. ALL STAKES AND GUYS MUST BE REMOVED AT THE END OF THE ESTABLISHMENT PERIOD. ANY DAMAGED EDGING MUST BE REPAIRED. REMEDIAL MEASURES AND AN EXTENSION OF THE MAINTENANCE CONTRACT MAY BE REQUIRED BY THE CONTRACTING OFFICER IF WORK IS DEEMED UNSATISFACTORY.

GRAPHIC SCALES

1"=30' 0' 30' 60'

1"=20' 0' 10' 20' 40'

SYM	DESCRIPTION	DATE	APPR

NAVFAC

A/E INFO

APPROVED

FOR COMMANDER NAVFAC

ACTIVITY

EMILY M. SYLVESTER, PE

SATISFACTORY TO DATE 28 JUNE 2018

DES ADM | DRW ADM | CHK DJD

DESIGN MANAGER G. COOKE

BRANCH MANAGER DLB

CHIEF ENGINEER EJA

FIRE PROTECTION

DEPARTMENT OF THE NAVY
NAVAL FACILITIES ENGINEERING COMMAND–MID–ATLANTIC
NAVAL STATION NORFOLK VIRGINIA
MIDLANT CI CORE
NAVAL FACILITIES ENGINEERING COMMAND
JACKSONVILLE, NC
MCB CAMP LEJEUNE
P1482 MARINE SPECIAL OP SCHOOL
120 MAN CLASSROOMS
PLANTING PLAN

SCALE: AS NOTED
EPROJECT NO. 1558046
CONSTR. CONTR. NO. –
NAVFAC DRAWING NO. 12747169
SHEET 27 OF 91

LP-100

DRAWFORM REVISION: 10 MARCH 2009

FILE NAME: P:\MCI\Camp Lejeune\MILCON\2017_1558046_P1482_IH–088_120ManClassrooms\B_Design\Drawings\Sheet\(A6_Landscape\LP–100 LANDSCAPE PLAN_NEW.dwg LAYOUT NAME: LP–100 PLANTING PLAN PLOTTED: Monday, October 29, 2018 – 1:34pm USER: gyasi.cooke

PLANT MATERIAL SCHEDULE

	KEY	BOTANICAL NAME	COMMON NAME	QTY	MIN. HEIGHT	MIN.SPREAD	CALIPER	DETAIL	SIZE	REMARKS
TREES										
	GIN BIL	GINGKO BILOBA 'AUTUMN GOLD'	AUTUMN GOLD GINGKO	5	14–16'	8–10'	3 1/2" MIN	A1 & A2	BALL AND BURLAP	FULL, SPECIMEN, 3' CLEAR TRUNK, MALE, PROVIDE SLOW–RELEASE WATERING BAG
	GLE TRI	GLEDITSIA TRIACANTHOS 'INERMIS''	THORNLESS HONEY LOCUST	5	14–16'	8–10'	3 1/2" MIN	A1 & A2	BALL AND BURLAP	FULL, MATCHING HEADS, 3' CLEAR TRUNK, PROVIDE SLOW–RELEASE WATERING BAG
	QUE PHE	QUERCUS PHELLOS	WILLOW OAK	3	14–16'	8–10'	3 1/2" MIN	A1 & A2	BALL AND BURLAP	FULL, SPECIMEN, 3' CLEAR TRUNK, PROVIDE SLOW–RELEASE WATERING BAG
SHRUBS										
	JUN HOR	JUNIPERUS HORIZONTALIS 'WILTONI'	WILTON BLUE RUG JUNIPER	63		20–24" MIN		A4 & B4	1 GAL.	PLANT 42" O.C. IN TRIANGULAR PATTERN
GROUNDCOVER										
	FES GLA	FESTUCA GLAUCA 'ELIJAH BLUE'	ELIJAH BLUE FESCUE	408		6–8"		A4 & B4	1 QUART	PLANT 10" O.C. IN TRIANGULAR PATTERN
	SED SPU	SEDUM SPURIUM 'JOHN CREECH'	JOHN CREECH STONECROP	44		8–10"		A4 & B4	1 QUART	PLANT 30" O.C. IN TRIANGULAR PATTERN
TURF										
	ERE OPH	EREMOCHLOA OPHIUROIDES	CENTIPEDE SOD	AS REQ'D						SOD AREA AS SHOWN ON PLANS– VERIFY QUANTITIES
				54,600 SF						

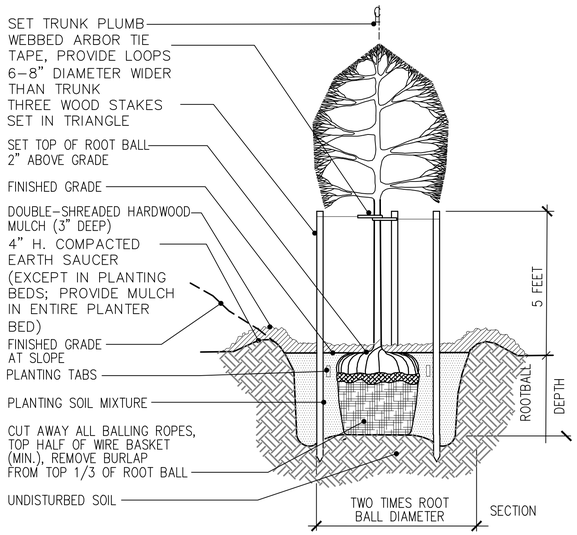

A1 TREE STAKING
NO SCALE

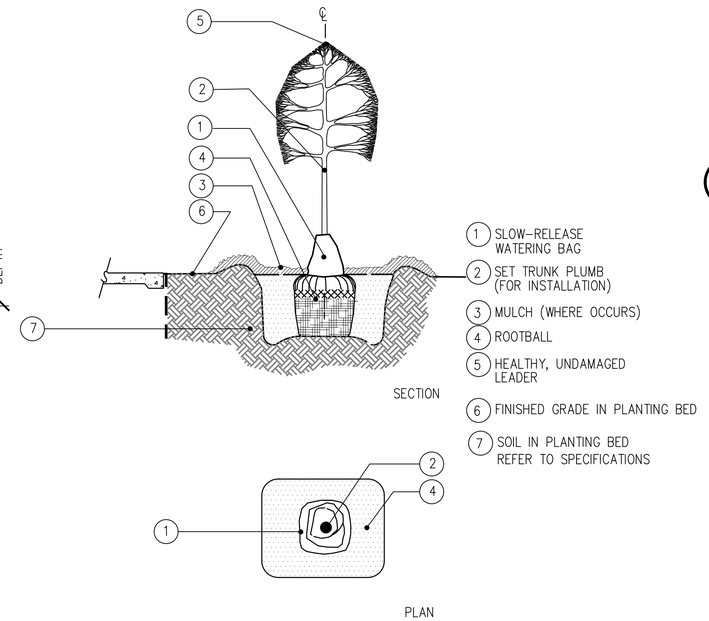

A2 SLOW-RELEASE WATERING BAG
NO SCALE

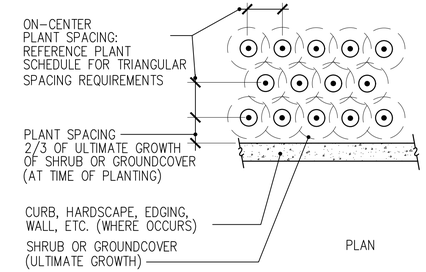

B4 PLANT SPACING
NO SCALE

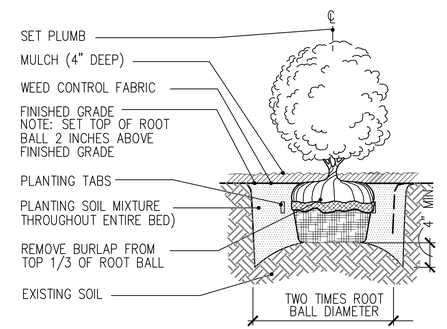

NOTE: SEE DETAIL B4 – PLANT SPACING OF THIS SHEET IF PLAN INDICATES SHRUBS PLANTED IN MASSING WITH AN ON–CENTER (O.C.) SPACING

A4 SHRUB PLANTING
NO SCALE

GENERAL PLANTING NOTES

1. ALL PLANTING BEDS WITH SLOPES LESS THAN 2:1 SHALL RECEIVE A MINIMUM 3" THICK LAYER OF HARDWOOD BARK MULCH UNLESS OTHERWISE NOTED. (SUBMIT 1/4 C.F. SAMPLE FOR APPROVAL)
2. ALL ROCK AND DEBRIS LARGER THAN $\frac{3}{4}$" INCH SHALL BE REMOVED FROM THE SIDES. BOTTOM, AND BACKFILL SOIL OF THE PLANTING PITS OF ALL PLANT MATERIALS. DISPOSE OF ALL DEBRIS OFF SITE.
3. SLOW–RELEASE WATERING BAGS TO BE INSTALLED WITH ALL NEW TREES. BAGS TO BE GREEN POLYETHYLENE WITH SCRIM REINFORCEMENT, UV STABILIZED, AND WITH AN OPENING TO FIT A 3" DIAMETER HOSE. KEEP BAGS FILLED THROUGHOUT THE ONE–YEAR MAINTENANCE PERIOD. REMOVE BAGS ONCE THE CONTRACTING OFFICER ACCEPTS THE LANDSCAPE AFTER THE ONE–YEAR PERIOD.
4. CONTRACTOR SHALL SUBMIT A MINIMUM OF (3) 1–PINT SOIL SAMPLES (2 IN TURF AREAS AND 1 IN PLANTING BEDS) FOR AGRICULTURAL SUITABILITY SOILS TESTING (STANDARD TEST A05–N) AT A QUALIFIED SOILS TESTING LABORATORY PRIOR TO PLANTING AND PURCHASING OF SOIL AMENDMENTS. COLLECT SOIL SAMPLES WITHIN PROPOSED PLANTING AREAS, AFTER THE COMPLETION OF GRADING OPERATIONS. KEEP TURF AREA AND SHRUB/GROUND COVER AREA SAMPLES SEPARATE. PROVIDE (1) COPY OF THE SOIL REPORTS AND RECOMMENDATIONS TO THE CONTRACTING OFFICER PRIOR TO CARRYING OUT CORRECTIVE MEASURES PER THE ANALYSIS.
5. CONTRACTOR SHALL MAINTAIN ALL PLANTING AREAS FOR A PERIOD OF ONE YEAR AND A MINIMUM OF ONE COMPLETE GROWING SEASON ONCE THE CONTRACTING OFFICER INSPECTS AND ACCEPTS THE SITEWORK. CONTRACTOR IS RESPONSIBLE TO REPLACE ANY PLANT MATERIAL LOST OR DISEASED WITHIN THE WARRANTY PERIOD.
6. TURF MUST BE MOWED AT A UNIFORM HEIGHT. MOWING MUST BE PERFORMED IN A MANNERTHAT PREVENTS SCALPING, RUTTING, BRUISING, UNEVEN AND ROUGH CUTTING. PRIOR TO MOWING, ALL RUBBISH, DEBRIS, TRASH, LEAVES, ROCKS, AND LIMBS OF OR BRANCHES MUST BE PICKED UP AND DISPOSED. ADJACENT AREAS MUST BE SWEPT CLEAN AFTER MOWING IS COMPLETE.
7. REFERENCE PROJECT SPECIFICATIONS FOR ADDITIONAL INFORMATION.
8. CONTRACTOR TO PROVIDE AS–BUILTS.

APPR	DATE	DESCRIPTION	SYM

NAVFAC

SEAL

A/E INFO

APPROVED

FOR COMMANDER NAVFAC

ACTIVITY
EMILY M. SYLVESTER, PE

SATISFACTORY TO DATE 28 JUNE 2018

DES ADM DRW ADM CHK DJD

DESIGN MANAGER G. COOKE

BRANCH MANAGER DLB

CHIEF ENGINEER EJA

FIRE PROTECTION

DEPARTMENT OF THE NAVY
NAVAL FACILITIES ENGINEERING COMMAND
NAVAL FACILITIES ENGINEERING COMMAND–MID-ATLANTIC
NAVAL STATION NORFOLK, VIRGINIA
MCB CAMP LEJEUNE
MIDLANT CI CORE
JACKSONVILLE, NC

P1482 MARINE SPECIAL OP SCHOOL
120 MAN CLASSROOMS

LANDSCAPE PLANTING DETAILS AND SCHEDULE

SCALE: AS NOTED
EPROJECT NO. 1558046
CONSTR. CONTR. NO. –
NAVFAC DRAWING NO. 12747170
SHEET 28 OF 91

LP-501

DRAWFORM REVISION: 10 MARCH 2009

UNCLASSIFIED

FILE NAME: P:\MC\Camp Lejeune\MALCON\2017_1558046_P1482_IH-1088_120ManClassrooms\B_Design\Drawings\Sheet\06_Landscape\L-100 LANDSCAPE PLANs_NEW.dwg LAYOUT NAME: LP-501 PLANTING DETAILS AND SCHEDULE PLOTTED: Monday, October 29, 2018 - 1:34pm USER: gyost.cooke

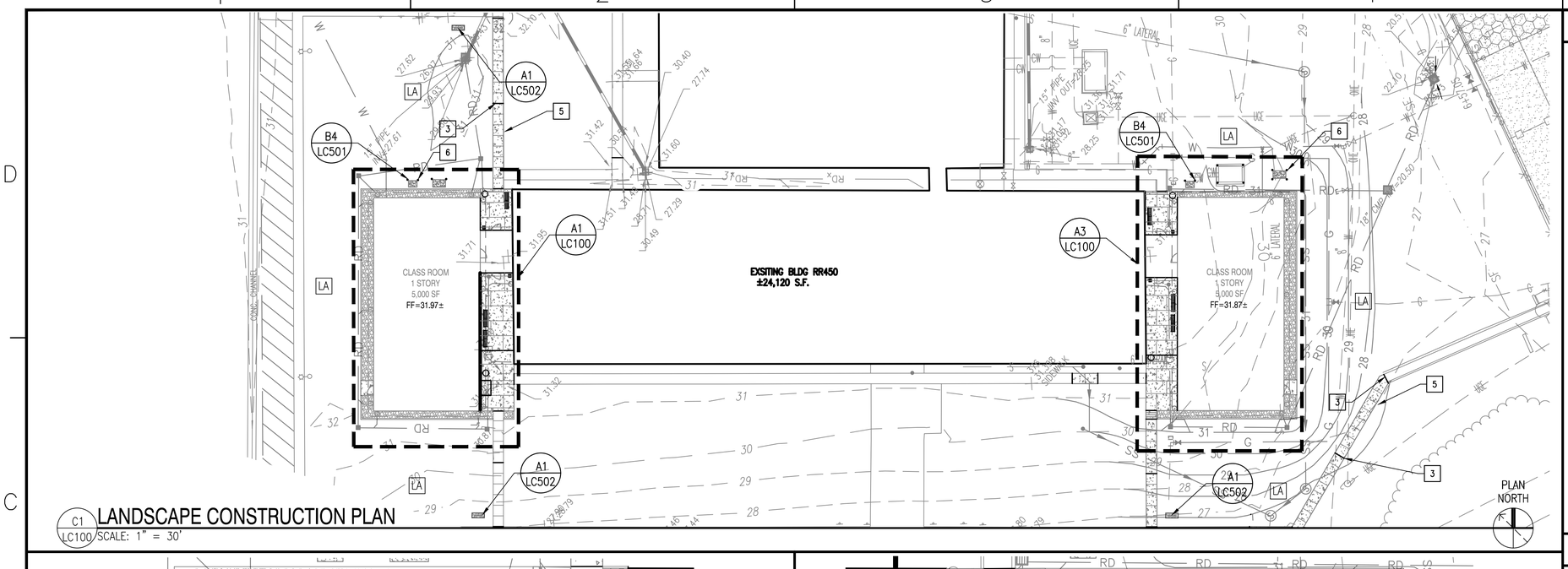

C1 LC100 LANDSCAPE CONSTRUCTION PLAN
SCALE: 1" = 30'

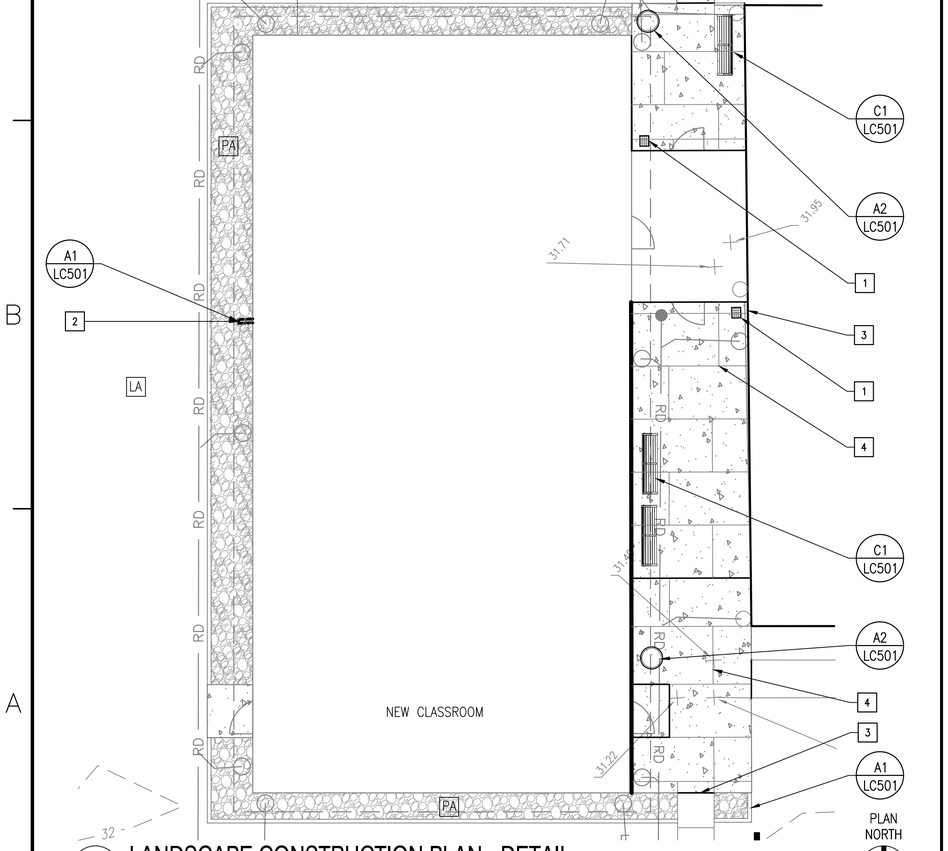

A1 LC100 LANDSCAPE CONSTRUCTION PLAN - DETAIL
SCALE: 1" = 10'

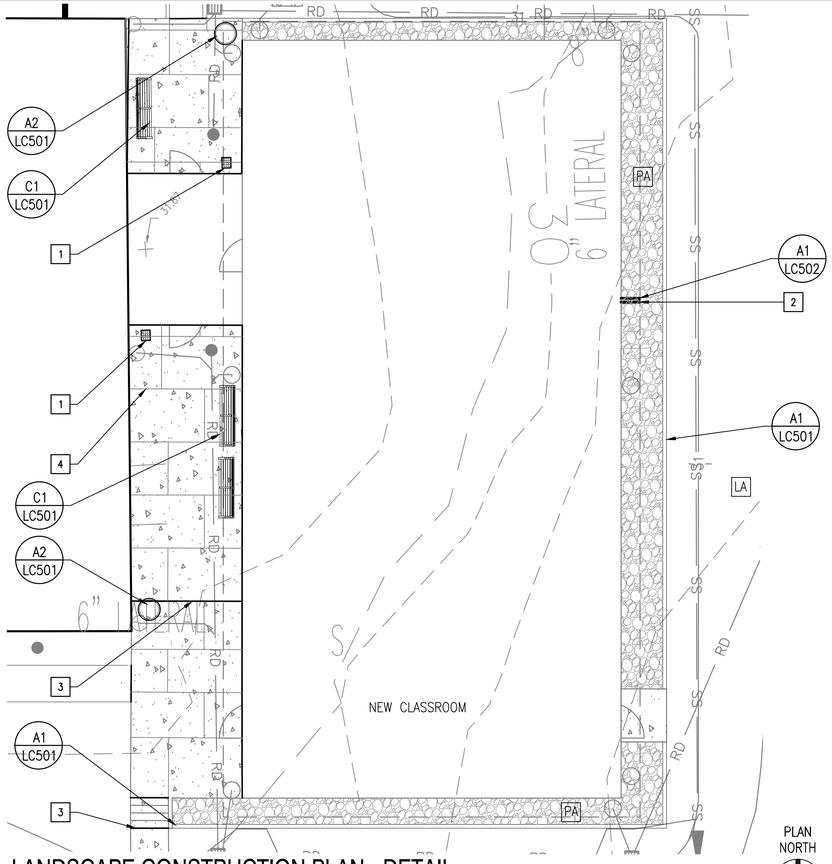

A3 LC100 LANDSCAPE CONSTRUCTION PLAN - DETAIL
SCALE: 1" = 10'

GENERAL SHEET NOTES

1. COORDINATE LOCATION OF FIXED EXTERIOR FURNISHINGS WITH CONTRACTING OFFICER PRIOR TO INSTALLATION.
2. COORDINATE ALL EXTERIOR FREE-STANDING SIGNAGE LOCATIONS WITH CONTRACTING OFFICER PRIOR TO INSTALLATION.
3. VERIFY ALL EXISTING SITE IMPROVEMENTS TO BE SALVAGED/REMOVED, STORED DURING CONSTRUCTION, REINSTALLED/OR PROTECTED IN PLACE WITH CONTRACTING OFFICER PRIOR TO CONSTRUCTION.
4. COORDINATE ADDITIONAL SITE WORK WITH CIVIL, STRUCTURAL, ARCHITECTURAL, MECHANICAL, AND ELECTRICAL DRAWINGS.
5. COORDINATE CONDENSATE LINES EXITING BUILDINGS INTO ROCK MULCH BEDS. ENSURE WATER DOES NOT DAM AGAINST BUILDING FOUNDATION.
6. CONTRACTOR TO PROVIDE AS-BUILTS.

NEW WORK LEGEND & KEYNOTES

1. HEAVY-DUTY BOOT SCRAPER.
2. CONDENSATE LINE – REFER TO MECHANICAL DRAWINGS
3. EXPANSION JOINT TYP – REFER TO CIVIL DRAWING C-601
4. SAWED CONTRACTION JOINT TYP – REFER TO CIVIL DRAWING C-601
5. NEW GRASS TO CONCRETE EDGE TO MAINTAIN: 1,275LF – VERIFY IN FIELD POST CONSTRUCTION.
6. FIXED EXTERIOR BOLLARD– SAFETY YELLOW. TYP. OF 14 SEE SHEET B4/LC-501

LA LAWN AREA (SEE PLANTING PLANS)

PA PLANTING BED (SEE PLANTING PLANS)

TYP TYPICAL

CONCRETE PAVING (SEE CIVIL DRAWNGS)

COBBLE MULCH – 3" TO 5" LOCAL AGGREGATE TO MATCH CMU SPLIT FACE ON BUILDING (3" DEEP MINUMUM)
SEE DETAIL A1-LC501
26 CY – VERIFY IN FIELD

CONCRETE BED EDGING
SEE DETAIL A1-LC501
525 LF – VERIFY IN FIELD

GRAPHIC SCALES

1"=30' 0' 30' 60'

1"=10' 0' 10' 20'

APPR	DATE	DESCRIPTION	SYM

NAVFAC

SEAL

A/E INFO

APPROVED

FOR COMMANDER NAVFAC

ACTIVITY

EMILY M. SYLVESTER, PE

SATISFACTORY TO DATE 28 JUNE 2018

DES ADM | DRW ADM | CHK DJD

DESIGN MANAGER G. COOKE

BRANCH MANAGER DLB

CHIEF ENGINEER EJA

FIRE PROTECTION

DEPARTMENT OF THE NAVY
NAVAL FACILITIES ENGINEERING COMMAND-MID-ATLANTIC
MIDLANT CI CORE
NAVAL FACILITIES ENGINEERING COMMAND
NAVAL STATION NORFOLK, VIRGINIA
MCB CAMP LEJEUNE
JACKSONVILLE, NC
P1482 MARINE SPECIAL OP SCHOOL
120 MAN CLASSROOMS
LANDSCAPE CONSTRUCTION PLAN

SCALE: AS NOTED
EPROJECT NO. 1558046
CONSTR. CONTR. NO. –
NAVFAC DRAWING NO. 12747167
SHEET 29 OF 91

LC-100

DRAWFORM REVISION: 10 MARCH 2009

FILE NAME: P:\MCI\Camp Lejeune\MILCON\2017_1558046_P1482_IH-088_120ManClassrooms\B_Design\Drawings\Sheet\(06_Landscape)\L-100 LANDSCAPE PLAN_NEW.dwg LAYOUT NAME: LC-100 LANDSCAPE CONSTRUCTION PLAN PLOTTED: Monday, October 29, 2018 - 1:34pm USER: gyasi.cooke

GENERAL SHEET NOTES

1. DUCTILE IRON FURNISHINGS TO HAVE A 10 YEAR WARRANTY AGAINST BREAKAGE.
2. IT IS RECOMMENDED TO SET ANCHOR BOLTS ONCE FURNISHINGS ARE IN PLACE.
3. CUT ANCHOR BOLTS FLUSH WITH MOUNTING NUTS. PAINT TO MATCH FURNISHING.
4. EXTERIOR FURNISHINGS ARE TO BE PERMANENTLY MOUNTED ON SITE PER MANUFACTURER'S SPECIFICATIONS.

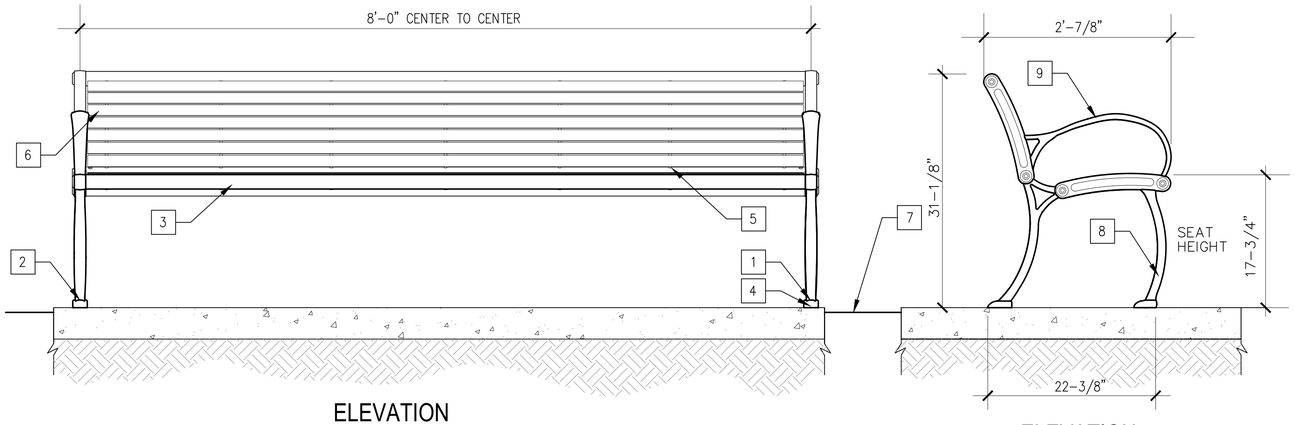

ELEVATION

ELEVATION

1. INSTALLATION TO BE IN ACCORDANCE WITH MANUFACTURER'S SPECIFICATIONS.
2. CLEARANCE FOR $\frac{3}{8}$" ANCHOR BOLTS
3. INTEGRAL WELDED CROSS-MEMBERS OF 1 $\frac{7}{8}$" TUBULAR STEEL
4. PAINT TOP OF BOLT AND NUT TO MATCH BENCH LEGS- CUT ANCHOR BOLT 1/2" ABOVE NUT
5. $\frac{3}{8}$" X 1" SOLID STEEL BRACING
6. SOLID STEEL SLATS
7. FINISHED GRADE
8. AVERAGE FINISH THICKNESS: 8-10 MILS.
9. ALL STEEL MEMBERS COATED W/ ZINC RICH EPOXY THEN FINISHED W/ POLYESTER POWDER COATING "BLACK" OR ACCEPTABLE SUBSTITUTE

C1 BENCH
NO SCALE

NOTE: CONTRACTOR MAY PROVIDE AS PREFABRICATED OR CUSTOM FABRICATED.

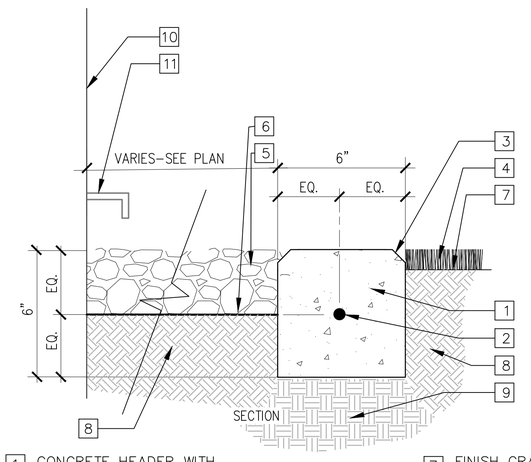

1. CONCRETE HEADER WITH LIGHT BROOM FINISH (PROVIDE EXPANSION JOINTS AT 20' O.C. (MAX) AND AT CHANGES OF DIRECTION. JOINT MATERIAL TO MATCH CONCRETE
2. #3 REBAR (CONTINUOUS) (LAP 1'-0" AT SPLICES)
3. 45 DEGREE CHAMFER
4. TURF
5. RIVER ROCK AGGREGATE MULCH IN PLANTER BED (3" DEEP MINIMUM). ROCK SIZE 3-5"
6. WEED FABRIC AT PLANTER BED (LAP HEADER 2" TYPICAL)
7. FINISH GRADE – 1" AT LAWN AREA / 3" AT PLANTER BED)
8. TOPSOIL
9. COMPACTED SUBGRADE 95% MINIMUM (UNDER CONCRETE HEADER ONLY) OR TO BEDROCK (WHERE OCCURS)
10. FACE OF BUILDING
11. CONDENSATE LINE- SEE MECHANICAL

A1 CONCRETE MOW EDGE - TYPICAL
NO SCALE

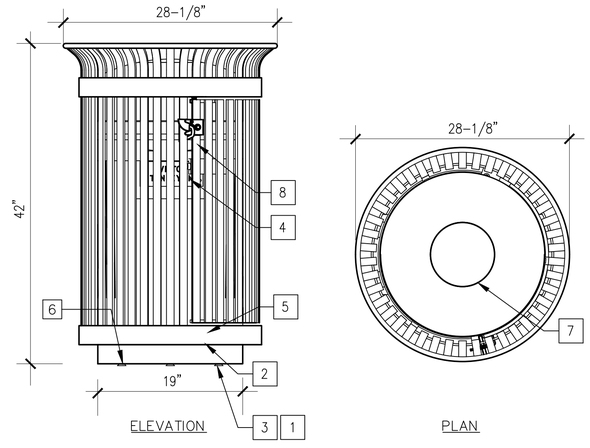

1. INSTALLATION TO BE IN ACCORDANCE WITH MANUFACTURER'S SPECIFICATIONS.
2. ALL STEEL MEMBERS COATED W/ ZINC RICH EPOXY THEN FINISHED W/ POLYESTER POWDER COATING "BLACK" OR ACCEPTABLE SUBSTITUTE.
3. 2" X 2" X $\frac{1}{4}$" STEEL ANGLE ANCHORING PADS. [3 REQUIRED]
4. 36 GALLON HIGH-DENSITY PLASTIC LINER
5. $\frac{1}{4}$" x 2 $\frac{1}{2}$" HORIZONTAL SOLID STEEL BAND
6. LEVELING FEET WITH A $\frac{3}{8}$" DIAMETER THREADED STEEL SHAFT
7. 6" MAX. ø OPENING (ATFP COMPLIANCE)
8. $\frac{3}{8}$" X 1" VERTICAL STEEL BARS

NOTE: CONTRACTOR MAY PROVIDE AS PREFABRICATED OR CUSTOM FABRICATED.

A2 WASTE RECEPTACLE
NO SCALE

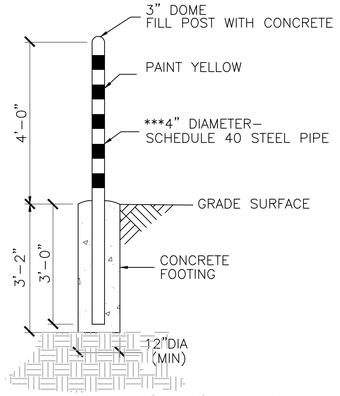

B4 FIXED EXTERIOR BOLLARD
NO SCALE

SITE FURNISHING SCHEDULE

	QUANTITY	SITE FURNISHING	REMARKS
	6	8' BENCH	BLACK, MOUNTING PER MANUFACTURER'S SPECIFICATION
	4	WASTE RECEPTACLES	BLACK, MOUNTING PER MANUFACTURER'S SPECIFICATION
	4	HEAVY DUTY BOOT SCRUBBER	PERMANENT MOUNTING PER SPECIFICATION, 3 HEAVY DUTY BRUSHES WITH STEEL SCRAPER

SYM	DESCRIPTION	DATE	APPR

NAVFAC

SEAL

A/E INFO

APPROVED

FOR COMMANDER NAVFAC

ACTIVITY

EMILY M. SYLVESTER, PE

SATISFACTORY TO DATE 28 JUNE 2018

DES ADM | DRW ADM | CHK DJD

DESIGN MANAGER G. COOKE

BRANCH MANAGER DLB

CHIEF ENGINEER EJA

FIRE PROTECTION

DEPARTMENT OF THE NAVY
NAVAL FACILITIES ENGINEERING COMMAND
NAVAL FACILITIES ENGINEERING COMMAND-MID-ATLANTIC
NAVAL STATION NORFOLK VIRGINIA
MCB CAMP LEJEUNE
MIDLANT CI CODE
JACKSONVILLE, NC

P1482 MARINE SPECIAL OP SCHOOL
120 MAN CLASSROOMS

LANDSCAPE DETAILS

SCALE: AS NOTED
EPROJECT NO. 1558046
CONSTR. CONTR. NO. –
NAVFAC DRAWING NO. 12747168
SHEET 30 OF 91

LC-501

DRAWFORM REVISION: 10 MARCH 2009

FILE NAME: P:\MCI\Camp Lejeune\MLCON\2017_1558046_P1482_IH-088_120ManClassrooms\8_Design\Drawings\Sheet\08_Landscape\L-100 LANDSCAPE PLAN_NEW.dwg LAYOUT NAME: LC-501 LANDSCAPE CONSTRUCTION DETAILS PLOTTED: Monday, October 29, 2018 - 1:34pm USER: gysis.cooke

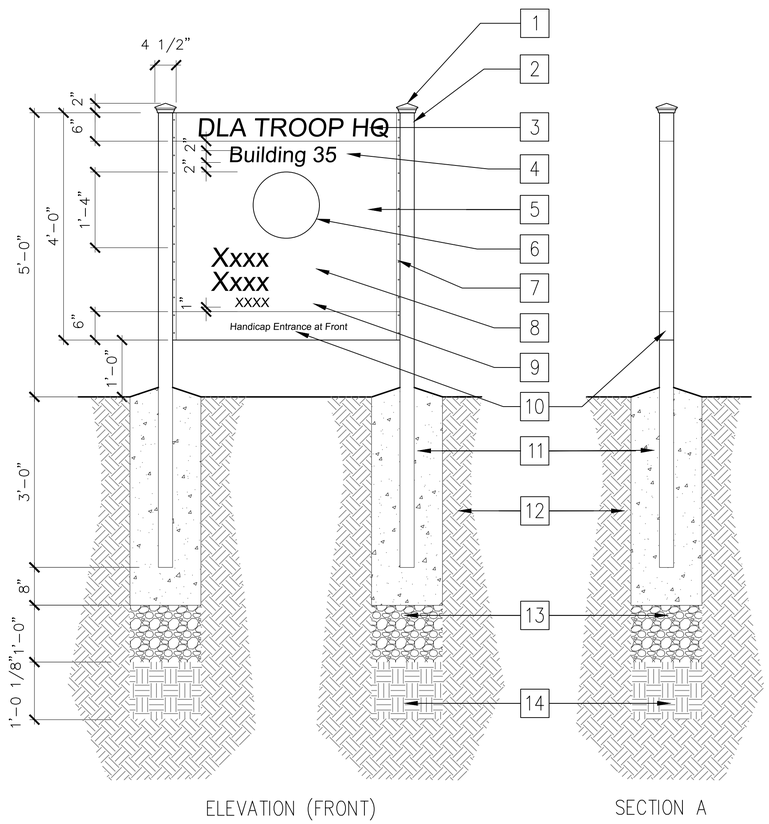

A1 BUILDING MONUMENT SIGN
SCALE: 1/2" = 1'-0"

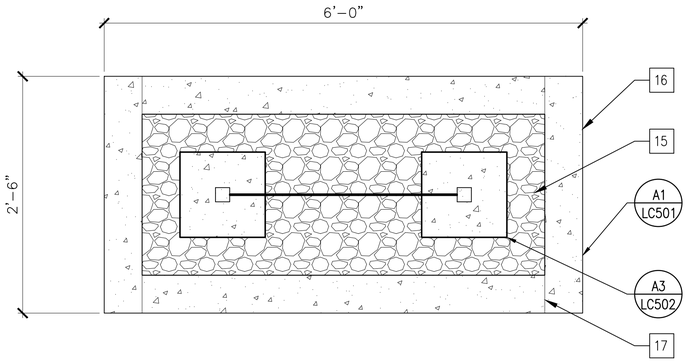

C3 SIGN AGGREGATE BED - PLAN
1" = 1'-0"

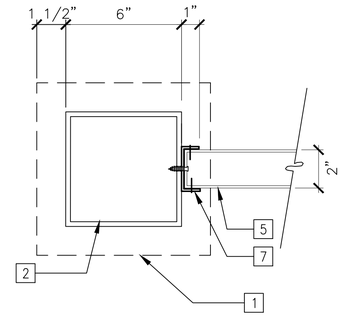

B3 SIGN POST & PANEL CONNECTION - DETAIL
SCALE: 3" = 1'-0"

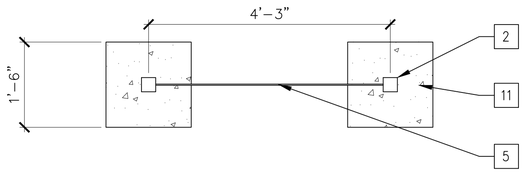

A3 BUILDING MONUMENT SIGN - PLAN
1" = 1'-0"

GENERAL SHEET NOTES

1. GRIND SMOOTH ALL WELDS AND REMOVE BURRS PRIOR TO POWDER COATING.
2. PROVIDE SHOP DRAWINGS PRIOR TO CONSTRUCTION.
3. VERIFY ADDITIONAL BUILDING SIGN REQUIREMENTS WITH CAMP LEJEUNE INSTALLATION APPEARANCE PLAN PRIOR TO PREPARING SHOP DRAWINGS.
4. SEE PLAN FOR LOCATIONS AND QUANTITY

NEW WORK KEYNOTES

1. ALUMINUM CAP (2"x 4 1/2") (COLOR: BLUE (PANTONE #19-4052 TPX) ALL SURFACES)
2. ALUMINUM 3"x 3" POST. (COLOR: BLUE (PANTONE #19-4052 TPX) ALL SURFACES)
3. COLOR: WHITE; FONT: HELVETICA MEDIUM; SIZE: 4-INCHES); VERIFY EXACT TEXT AND LAYOUT WITH CONTRACTING OFFICER PRIOR TO MANUFACTURE
4. BUILDING NUMBER (COLOR: WHITE; FONT: HELVETICA MEDIUM; SIZE: 2-1/2 INCHES); VERIFY EXACT TEXT AND LAYOUT WITH CONTRACTING OFFICER PRIOR TO MANUFACTURE
5. SIGN PANEL – SEAMLESS WELDED ALUMINUM, ALL SURFACES (COLOR:BLUE (PANTONE 19-4052TPX)
6. LOGO (14" DIAMETER; HIGH-RESOLUTION, UV-RESISTANT, HIGH QUALITY, DURABLE VINYL); VERIFY WITH CONTRACTING OFFICER PRIOR TO MANUFACTURE
7. ALUMINUM CHANNEL (COLOR: BLUE (PANTONE #19-4052 TPX) ALL SURFACES); ATTACH TO POST WITH STAINLESS STEEL BOLTS AND EXPANSION SHIELDS; ATTACH TO SIGN PANEL WITH STAINLESS STEEL SCREWS
8. LETTERING (TENANT DESCRIPTION) (COLOR: WHITE; FONT: HELVETICA MEDIUM – UPPER AND LOWER CASE/FIRST LETTER OF EVERY WORD AND ALL ACRONYMS TO BE UPPER CASE; SIZE: 3-INCHES HIGH FOR LOWER CASE WITH UPPER CASE ADJUSTED ACCORDINGLY); VERIFY EXACT TEXT AND LAYOUT WITH CONTRACTING OFFICER PRIOR TO MANUFACTURE
9. SUBTEXT (COLOR: WHITE; FONT: HELVETICA MEDIUM; SIZE: 2-INCHES); VERIFY EXACT TEXT AND LAYOUT WITH CONTRACTING OFFICER PRIOR TO MANUFACTURE
10. HANDICAP ENTRANCE INFORMATION ON 6" ALUMINUM BOTTOM SLATE (COLOR: WHITE; FONT: HELVETICA MEDIUM; SIZE: 1-1/2 INCHES); VERIFY EXACT TEXT AND LAYOUT WITH CONTRACTING OFFICER PRIOR TO MANUFACTURE
11. CONCRETE FOOTING
12. BACKFILL SOIL OR UNDISTURBED SOIL (SEE PLAN)
13. AGGREGATE BASE
14. COMPACTED SUBGRADE 95% TO 12" DEEP (TYPICAL)
15. 3-5" AGGREGATE MULCH IN BED, 6" DEPTH MINIMUM
16. CONCRETE HEADER – SEE DETAIL A1/LC501
17. CONSTRUCTION JOINT

GRAPHIC SCALES

1/2"=1'-0" 0' 1' 2' 4'

1"=1'-0" 0' 1/2' 1' 2'

3"=1'-0" 0 3" 6" 9"

SYM	DESCRIPTION	DATE	APPR
-	-	-	-

NAVFAC

SEAL

A/E INFO

APPROVED

FOR COMMANDER NAVFAC

ACTIVITY

EMILY M. SYLVESTER, PE

SATISFACTORY TO DATE 28 JUNE 2018

DES ADM DRW ADM CHK DJD

DESIGN MANAGER G. COOKE

BRANCH MANAGER DLB

CHIEF ENGINEER EJA

FIRE PROTECTION

DEPARTMENT OF THE NAVY
NAVAL FACILITIES ENGINEERING COMMAND
NAVAL FACILITIES ENGINEERING COMMAND-MID-ATLANTIC
NAVAL STATION NORFOLK VIRGINIA
MIDLANT CI CORE
MCB CAMP LEJEUNE
JACKSONVILLE, NC

P1482 MARINE SPECIAL OP SCHOOL
120 MAN CLASSROOMS

LANDSCAPE DETAILS

SCALE: AS NOTED
EPROJECT NO. 1558046
CONSTR. CONTR. NO. –
NAVFAC DRAWING NO. 12747171
SHEET 31 OF 91

LC-502

DRAWFORM REVISION: 10 MARCH 2009

FILE NAME: P:\MC\Camplejeune\MILCON\2017_1558046_P1482_IH-1088_120ManClassrooms\3_Design\Drawings\Sheet\06_Landscape\L-100 LANDSCAPE PLANx_NEW.dwg LAYOUT NAME: LC-502 LANDSCAPE CONSTRUCTION DETAILS PLOTTED: Monday, October 29, 2018 - 1:34pm USER: gycs.cooke

GENERAL NOTES

1. VERIFY THE REQUIREMENTS OF ALL TRADES AND DISCIPLINES FOR SLEEVES, INSERTS, HANGERS, CHASES, ANCHORS, HOLES, ETC.
2. THE STRUCTURE HAS BEEN DESIGNED TO PERFORM AS A COMPLETED STRUCTURE. CONSIDER CONSTRUCTION LOADS ON THE PARTIAL STRUCTURE AND PROVIDE ANY NECESSARY SHORING, BRACING, FORMWORK, ETC. TO REMAIN IN PLACE UNTIL FINAL CONNECTIONS ARE MADE AND MATERIALS HAVE REACHED THEIR DESIGN STRENGTHS.
3. VERIFY ALL FIELD CONDITIONS AND DIMENSIONS PRIOR TO THE COMMENCEMENT OF CONSTRUCTION AND/OR FABRICATION. SHOULD ANY DISCREPANCIES ARISE, NOTIFY THE CONTRACTING OFFICER IMMEDIATELY.
4. DETAILS LABELED "TYPICAL" APPLY TO ALL SITUATIONS THAT ARE THE SAME OR SIMILAR TO THOSE SPECIFICALLY DETAILED. SUCH DETAILS APPLY WHETHER OR NOT THEY ARE KEYED IN AT EACH LOCATION. QUESTIONS REGARDING APPLICABILITY OF TYPICAL DETAILS SHALL BE DIRECTED TO THE CONTRACTING OFFICER.
5. ALL ELEVATIONS SHOWN ARE REFERENCED AT 0'-0". REFERENCE THE CIVIL SHEETS FOR ACTUAL FINISHED FLOOR ELEVATIONS FOR ALL STRUCTURES.
6. SEE ARCHITECTURAL DRAWINGS FOR VERTICAL CLEARANCE REQUIREMENTS.
7. WHERE "APPROVED" OR "APPROVAL" IS INDICATED IN THE DRAWINGS; IT MEANS THE ITEMS MUST BE APPROVED BY THE CONTRACTING OFFICER PRIOR TO INSTALLATION.

DESIGN CRITERIA

NOTE: THE ACTIVE GOVERNING CODES ARE AS PRESCRIBED IN UFC 3-301-01 EFFECTIVE 10 OCTOBER 2019.

1. UFC 1-200-01, "GENERAL BUILDING REQUIREMENTS, WITH CHANGE 3"
2. UFC 4-010-01, "DOD MINIMUM ANTITERRORISM STANDARDS FOR BUILDINGS"
3. 2018 INTERNATIONAL BUILDING CODE
4. ASCE/SEI 7-16, "MINIMUM DESIGN LOADS FOR BUILDINGS AND OTHER STRUCTURES"
5. ACI 318-14, "REQUIREMENTS FOR STRUCTURAL CONCRETE"
6. TMS 402-16/ TMS 602-16, "BUILDING CODE REQUIREMENTS AND SPECIFICATIONS FOR MASONRY STRUCTURES"
7. ANSI/AISC 360, "SPECIFICATIONS FOR STRUCTURAL STEEL BUILDINGS"
8. AISI S100 / AISI S240 (LATEST EDITION)

DESIGN LOADS

LIVE LOADS

SLAB-ON-GRADE	125 PSF
MEZZANINE	100 PSF
ROOF	20 PSF

ROOF SNOW LOAD DESIGN CRITERIA

GROUND SNOW LOAD, (P_G)	10 PSF
FLAT ROOF SNOW LOAD (PF)	7 PSF
SNOW LOAD IMPORTANCE FACTOR, (IS)	1.0
RISK CATEGORY	II
SNOW EXPOSURE FACTOR, (C_E)	1.0
THERMAL FACTOR, (C_t)	1.0

WIND DESIGN CRITERIA

BASIC WIND SPEED	140 MPH
RISK CATEGORY	II
WIND EXPOSURE CATEGORY	C
IMPORTANCE FACTOR, (IW)	1.0
INTERNAL PRESSURE COEFFICIENT	+/- 0.18

DESIGN WIND PRESSURES FOR ROOF COMPONENTS

ROOF ZONE	COMPONENT TRIBUTARY AREA (ft2) 1 – 20		21 – 100		101 +	
1	+ 17.3	– 42.7	+ 16.2	– 41.6	+ 13.8	– 39.1
2	+ 17.3	– 71.6	+ 16.2	– 63.7	+ 13.8	– 46.2
3	+ 17.3	– 107.7	+ 16.2	– 88.5	+ 13.8	– 46.2

DESIGN WIND PRESSURES FOR ROOF COMPONENTS

WALL ZONE	COMPONENT TRIBUTARY AREA (ft2) 1 – 20		21 – 100		101 +	
4	+ 42.7	– 46.2	+ 40.7	– 44.3	+ 36.3	– 39.9
5	+ 42.7	– 57.1	+ 40.7	– 53.7	+ 36.3	– 44.4

GENERAL NOTES

SEISMIC DESIGN CRITERIA

0.2 SECOND SPECTRAL RESPONSE (S_s)	0.15g
1 SECOND SPECTRAL RESPONSE (S_1)	0.07g
DESIGN SPECTRAL RESPONSE ACCELERATION (SDS)	0.16g
DESIGN SPECTRAL RESPONSE ACCELERATION (SD1)	0.112g
SOIL SITE CLASS	D
RISK CATEGORY	II
IMPORTANCE FACTOR, Ie	1.0
SEISMIC RESPONSE COEFFICIENT (CS)	0.053
SEISMIC DESIGN CATEGORY	B
ANALYSIS PROCEDURE	EQUIVALENT LATERAL FORCE
BASIC SEISMIC FORCE RESISTING SYSTEM	STEEL SYSTEMS NOT SPECIFICALLY DETAILED FOR SEISMIC RESISTANCE
RESPONSE MODIFICATION FACTOR, (R)	3

DELEGATED DESIGN NOTES

SPECIALTY ENGINEER – A REGISTERED PROFESSIONAL ENGINEER WHO SPECIALIZES IN AND WHO UNDERTAKES THE DESIGN OF STRUCTURAL COMPONENTS OR STRUCTURAL SYSTEMS REQUIRING A SPECIFIC SUBMITTAL PREPARED FOR THIS PROJECT.

1. SHOP DRAWING REVIEW BY THE GOVERNMENT IS FOR GENERAL COMPLIANCE WITH THE CONTRACT DOCUMENTS. THE CONTRACTOR REMAINS RESPONSIBLE FOR ALL ERRORS OF DETAILING, FABRICATION, AND FOR CORRECT FITTING OF ALL STRUCTURAL MEMBERS, INCLUDING COORDINATION WITH OTHER TRADES WHERE APPLICABLE. SHOP DRAWING SUBMITTALS PROCESSED BY THE GOVERNMENT DO NOT CONSTITUTE CHANGE ORDERS. ANY PROPOSED CHANGES MUST BE SUBMITTED IN A LETTER.
2. THE SPECIALTY ENGINEER SHALL DESIGN SYSTEMS AND COMPONENTS AND THE COMPONENT CONNECTIONS TO THE PRIMARY STRUCTURE PER THE STRUCTURAL CRITERIA STATED IN THE DRAWINGS AND SPECIFICATIONS.
3. DELEGATED DESIGN SUBMITTALS SHALL CLEARLY IDENTIFY THE SPECIFIC PROJECT AND APPLICABLE CODES, LIST THE DESIGN CRITERIA, AND SHOW ALL DETAILS AND PLANS NECESSARY FOR PROPER FABRICATION AND INSTALLATION. CALCULATIONS AND SHOP DRAWINGS SHALL IDENTIFY SPECIFIC PRODUCTS UTILIZED. GENERIC PRODUCTS WILL NOT BE ACCEPTED.
4. DELEGATED DESIGN SHOP DRAWINGS AND CALCULATIONS SHALL BE SIGNED AND SEALED BY A SPECIALTY ENGINEER. COMPUTER PRINTOUTS ARE AN ACCEPTABLE A SUBSTITUTE FOR MANUAL COMPUTATIONS PROVIDED THEY ARE ACCOMPLISHED BY SUFFICIENT DESCRIPTIVE INFORMATION TO PERMIT THEIR PROPER EVALUATION.
5. SHOP DRAWINGS THAT REQUIRE CALCULATIONS REQUIRE THE SEAL, DATE, AND SIGNATURE OF THE SPECIALTY ENGINEER. COMPUTER PRINTOUTS ARE AN ACCEPTABLE SUBSTITUTE FOR MANUAL COMPUTATIONS PROVIDED THEY ARE ACCOMPANIED BY SUFFICIENT DESCRIPTIVE INFORMATION TO PERMIT THEIR PROPER EVALUATION. SUCH DESCRIPTIVE INFORMATION SHALL BEAR THE SEAL AND SIGNATURE OF THE SPECIALTY ENGINEER AS AN INDICATION THAT HE HAS ACCEPTED RESPONSIBILITY FOR THE RESULTS.

CONCRETE MASONRY (CMU) NOTES

1. THE MINIMUM COMPRESSIVE STRENGTH OF MASONRY, f'm, SHALL BE 1500 PSI OR GREATER AT 28 DAYS.
2. CMU UNITS SHALL CONFORM TO ASTM C90, LIGHTWEIGHT, WITH A MINIMUM NET COMPRESSIVE STRENGTH OF 2000 PSI, UNO.
3. ALL MORTAR SHALL CONFORM TO ASTM C 270, TYPE M OR S, AND PORTLAND CEMENT SHALL BE USED.
4. ALL MASONRY SHALL BE LAID IN A RUNNING BOND PATTERN.
5. GROUT SHALL CONFORM TO ASTM C476 AND HAVE A MINIMUM COMPRESSIVE STRENGTH OF 3000 PSI AT 28 DAYS.
6. PROVIDE CONTINUOUS 9 GA LADDER-TYPE JOINT REINFORCING AT 16" OC FOR ALL CMU WALLS. PROVIDE AT 8" OC WITHIN 10'-0" OF BUILDING CORNERS AND FOR THE FIRST 2'-0" ABOVE AND BELOW ALL OPENINGS (EXTEND 2'-0" BEYOND EDGE OF OPENINGS).
7. PROVIDE CONTINUOUS BOND BEAMS WITH (2) #5 BARS AT TOPS OF WALLS FOR THE ENTIRE LENGTH OF THE WALL, UNO.
8. INTERMEDIATE BOND BEAMS AND HORIZONTAL REINFORCING SHALL BE DISCONTINUED AT CONTROL JOINTS, UNO. BOND BEAMS AND REINFORCING LOCATED AT THE TOP AND/OR BOTTOM OF ALL WALLS AT EACH FLOOR ELEVATION SHALL BE CONTINUOUS.
9. ALL CORNERS AND INTERSECTIONS SHALL BE TIED BY MASONRY BOND, UNO.

FOUNDATION NOTES

1. FOUNDATIONS HAVE BEEN DESIGNED IN ACCORDANCE WITH THE RECOMMENDATIONS BY THE GEOTECHINICAL ENGINEER. FOUNDATIONS HAVE BEEN DESIGNED TO BEAR ON SOILS CAPABLE OF SUPPORTING A MAXIMUM NEW ALLOWABLE BEARING PRESSURE OF 2,000 PSF. SEE SHEET B-100 FOR SHALLOW FOUNDATION DESIGN REQUIREMENTS.
2. REFER TO NAVFAC GEOTECHINICAL BOD AND SHEET B-001 FOR FOUNDATION UNDERCUTTING RECOMMENDATIONS.
3. FOUNDATIONS SHALL BEAR ON EXISTING MATERIAL OR SELECT FILL COMPACTED TO A STABLE NON YIELDING CONDITION.
4. PRIOR TO PLACING AGGREGATE BASE, REINFORCING STEEL, OR CONCRETE; ALL BEARING SURFACES SHALL BE INSPECTED BY THE CONTRACTOR'S GEOTECHNICAL ENGINEER TO VERIFY THE DESIGN BEARING PRESSURE. ANY LOOSE, SOFT, OR OTHERWISE UNSUITABLE SOILS SHALL BE REMEDIATED AS DIRECTED BY THE CONTRACTOR'S GEOTECHNICAL ENGINEER AND APPROVED BY THE CONTRACTING OFFICER AT NO ADDITIONAL COST TO THE GOVERNMENT.
5. PROTECT FOUNDATION EXCAVATIONS TO PREVENT WATER FROM ACCUMULATING AND STANDING IN EXCAVATION BOTTOMS.
6. DO NOT PLACE CONCRETE FOOTINGS OVER FROZEN SOIL OR IN EXCAVATIONS SUBJECTED TO STANDING WATER.
7. PLACE FOUNDATION CONCRETE THE SAME DAY AS EXCAVATIONS ARE MADE OR AS SOON AS PRACTICAL THEREAFTER.
8. DO NOT PLACE UTILITY LINES BENEATH COLUMN FOUNDATIONS WITHOUT PRIOR APPROVAL FROM THE CONTRACTING OFFICER. SHOULD SUCH A CONDITION BE REQUIRED, PRIOR TO CONSTRUCTION, SUBMIT DETAILED DRAWINGS OF EACH CONDITION.

ANTI-TERRORISM/FORCE PROTECTION NOTES

1. THIS BUILDING IS LOCATED WITHIN A CONTROLLED PERIMETER
2. OCCUPANCY ..... PRIMARY GATHERING
3. LEVEL OF PROTECTION ..... LOW LOP
4. ALL EXTERIOR COMPONENTS SHALL BE DESIGNED IN ACCORDANCE WITH THE CRITERIA GIVEN IN UFC 4-010-01 FOR THE STANDOFF DISTANCE PROVIDED.

STRUCTURAL SYMBOLS

- COMPACTED SUBGRADE/FILL
- POROUS FILL
- CONCRETE
- BRICK
- CMU
- GROUT
- WORKING POINT, ELEVATION,
- FLOOR OR ROOF ELEVATION CHANGE
- DETAIL / SHEET — REFER TO "DETAIL" OR "SHEET" FOR MORE INFORMATION NOT SPECIFICALLY SHOWN OR FOR INFORMATION INTENTIONALLY

APPR	DATE	DESCRIPTION	CTM

NAVFAC

SEAL

A/E INFO

APPROVED

FOR COMMANDER NAVFAC

ACTIVITY

EMILY M. SYLVESTER, PE

SATISFACTORY TO DATE 28 JUNE 2018

DES MJD | DRW MJD | CHK MJD

DESIGN MANAGER G. COOKE

BRANCH MANAGER NBJ

CHIEF ENGINEER EJA

FIRE PROTECTION

DEPARTMENT OF THE NAVY
NAVAL FACILITIES ENGINEERING COMMAND-MID-ATLANTIC
NAVAL STATION NORFOLK VIRGINIA
MIDLANT CI CORE

NAVAL FACILITIES ENGINEERING COMMAND
JACKSONVILLE, NC

MCB CAMP LEJEUNE
P1482 MARINE SPECIAL OP SCHOOL
120 MAN CLASSROOMS

GENERAL NOTES

SCALE: AS NOTED
EPROJECT NO. 1558046
CONSTR. CONTR. NO. –
NAVFAC DRAWING NO. 12747172
SHEET 32 OF 91

S-001

DRAWFORM REVISION: 10 MARCH 2009

FILE NAME: P:\WC\Comp\Lejeune\MILCON\2017_1558046_P1482_JH-OBB_120ManClassrooms\8_Design\Drawings\Sheet\07_Structural\S-001 GENERAL NOTES.dwg LAYOUT NAME: S-001 GENERAL NOTES PLOTTED: Monday, June 08, 2020 - 9:12am USER: brett.stodden

CAST-IN-PLACE CONCRETE NOTES

1. ALL CONCRETE CONSTRUCTION SHALL BE IN ACCORDANCE WITH THE PROVISIONS OF THE AMERICAN CONCRETE INSTITUTE SPECIFICATIONS FOR STRUCTURAL CONCRETE. ALL CONCRETE DESIGN PERFORMED BY THE CONTRACTOR SHALL BE IN ACCORDANCE WITH ACI 318-14.
2. ALL CAST-IN-PLACE CONCRETE SHALL ATTAIN A 4,000 PSI MINIMUM 28-DAY COMPRESSIVE STRENGTH (fc').
3. MINIMUM CONCRETE COVER FOR REINFORCING STEEL SHALL BE AS INDICATED. IN NO CASE SHALL REINFORCEMENT COVER BE LESS THAN THE REQUIREMENTS OF ACI 318

   CONCRETE CAST AGAINST EARTH..... 3 INCHES
   CONCRETE EXPOSED TO EARTH OR WEATHER..... 2 INCHES
   SLABS AND WALLS..... 1 INCHES
4. ALL REINFORCEMENT SHALL BE CONTINUOUS WITH CLASS B LAP SPLICES, UNO.
5. PROVIDE ¾" CHAMFER ON ALL EXPOSED CORNERS OF CONCRETE WORK, UNO.
6. PROVIDE ½" PREFORMED EXPANSION JOINT MATERIAL WHERE SLABS ABUT VERTICAL SURFACES.
7. FOOTINGS AND SLABS SHALL HAVE NO HORIZONTAL JOINTS. POUR FULL DEPTH IN ONE POUR. ANY STOP IN CONCRETE WORK SHALL SHALL HAVE A VERTICAL KEYED CONSTRUCTION JOINT.
8. ADDITIONAL WATER SHALL NOT BE ADDED TO CONCRETE AT THE JOBSITE BEYOND THE AMOUNT PROVIDED IN THE CONCRETE MIX DESIGN. SHOULD A MORE WORKABLE MIX BE NECESSARY, REQUEST A SUPERPLASTICIZER TO BE ADDED TO THE MIX DESIGN.
9. ALL EMBEDDED ITEMS SHALL BE PROPERLY LOCATED, TIED INTO PLACE, AND INSPECTED PRIOR TO PLACEMENT OF CONCRETE.
10. WWF SHALL BE PLACED IN SHEETS.

PRE-ENGINEERED METAL BUILDING NOTES

1. ALL PRE-ENGINEERED BUILDING COMPONENTS SHALL BE DESIGNED BY THE MANUFACTURER IN ACCORDANCE WITH THE METAL BUILDING MANUFACTURER'S ASSOCIATION "RECOMMENDED DESIGN PRACTICES MANUAL" AND UFC 4-010-01 "DoD MINIMUM ANTI-TERRORISM STANDARDS FOR BUILDINGS". NO COMPONENT SHALL BE DESIGNED FOR LESS THAT THE DESIGN LOADS SHOWN UNDER THE STRUCTURAL GENERAL NOTES AND DESIGN LOADS. INCLUDE THE WEIGHTS OF ALL ROOF SUPPORTED EQUIPMENT. COORDINATE WEIGHTS AND LOCATIONS OF ACTUAL EQUIPMENT PROVIDED WITH THE TRADES PROVIDING THE EQUIPMENT.
2. ALL EXTERIOR WALL COMPONENTS SHALL BE DESIGNED FOR BLAST FORCES IN ACCORDANCE WITH UFC 4-010-01. SEE ATFP NOTES ON S-001.
   a. ROOF SUPERIMPOSED DEAD LOAD SHALL BE A MINIMUM OF 5 PSF
   b. A MINIMUM COLLATERAL LOAD SHALL BE A MINIMUM OF 10 PSF IN ADDITION TO ALL DEAD AND LIVE LOADS.
   c. THE MAXIMUM ALLOWABLE LIVE LOAD DEFLECTION FOR PURLINS, GIRTS, AND OTHER FRAMING MEMBERS SHALL BE l/240
   d. BUILDING DRIFT SHALL BE LIMITED TO HEIGHT/600, WITH A MEAN WIND RECURRENCE INTERVAL OF 10 YEARS
3. THE PRE-ENGINEERED METAL BUILDING SYSTEM CONSISTS OF A RIGID CLEAR SPAN STRUCTURE IN THE NORTH-SOUTH DIRECTION AND CROSS BRACING IN THE EAST-WEST DIRECTIONS. ALL LATERAL BRACING SHALL BE DESIGNED BY THE PRE-ENGINEERED METAL BUILDING MANUFACTURER.
4. THE FOUNDATIONS ARE NOT DESIGNED TO RESIST MOMENTS INDUCED BY THE BUILDING FRAME. BASE PLATE SIZES SHALL BE DESIGNED TO FIT ON THE FOUNDATION PIERS.
3. SUBMIT SHOP DRAWINGS FOR REVIEW PRIOR TO FABRICATION. ALL DRAWINGS SHALL SHOW DESIGN LOADS, FRAME REACTIONS, ANCHOR BOLT SETTINGS, SIDEWALL, ENDWALL AND ROOF FRAMING, TRANSVERSE CROSS SECTIONS AND INSTALLATION DETAILS TO CLEARLY INDICATE PROPER ASSEMBLY OF BUILDING COMPONENTS. SHOP DRAWINGS SHALL BE SEALED BY A PROFESSIONAL ENGINEER
4. NO FOUNDATIONS ALL BE INSTALLED UNTIL THE FRAME REACTIONS HAVE BEEN SUBMITTED TO THE CONTRACTING OFFICER AND THE FOUNDATION AND ANCHOR BOLT DESIGN HAS BEEN CHECKED AND APPROVED.
5. PROVIDE FALL PROTECTION ANCHORS PER ANSI Z359.2 DESIGN REQUIREMENTS FOR ELIMINATING, PREVENTING OR CONTROLLING FALL HAZARDS.

COLD-FORMED STEEL FRAMING NOTES

1. ALL COLD-FORMED STEEL FRAMING MEMBERS, THEIR DESIGN, FABRICATION, AND ERECTION SHALL CONFORM TO THE "SPECIFICATION FOR THE DESIGN OF COLD-FORMED STEEL STRUCTURAL MEMBERS" OF THE AISI.
2. DESIGN RESPONSIBILITY FOR THE COLD-FORMED STEEL FRAMING SYSTEM SHALL BE THE RESPONSIBILITY OF THE QUALIFIED PROFESSIONAL SPECIALTY ENGINEER SELECTED BY THE CONTRACTOR. COORDINATE WITH THE CONTRACT DOCUMENTS FOR PROFESSIONAL LICENSURE AND SEALING REQUIREMENTS, DESIGN CRITERIA, SUBMITTAL REQUIREMENTS, AND CALCULATION REQUIREMENTS.
3. ALL EXTERIOR WALL COMPONENTS SHALL BE DESIGNED FOR BLAST FORCES IN ACCORDANCE WITH UFC 4-010-01. SEE ATFP NOTES ON S-001.
4. ALL FRAMING MEMBERS SHALL BE FORMED FROM STEEL CONFORMING TO ASTM A446 WITH A MINIMUM YIELD STRENGTH AS FOLLOWS:
   12, 14 & 16 GAUGE MEMBERS: FY=50 KSI (GRADE D)
   18 & 20 GAUGE MEMBERS: FY=33 KSI (GRADE A)
5. ALL FRAMING MEMBERS SHALL BE GALVANIZED WITH A G-90 COATING MEETING THE REQUIREMENTS OF ASTM A 525.
6. MEMBERS SHALL BE THE MANUFACTURER'S STANDARD 'C' SHAPED STUDS/ JOISTS OF THE DEPTH INDICATED ON THE ARCHITECTURAL DRAWINGS. THE FLANGE WIDTH, AND GAGE SHALL BE FABRICATOR DESIGNED IN STRICT ACCORDANCE WITH THE LOADING INDICATED IN THE DESIGN CRITERIA NOTES GIVEN ON S-001 AND THE OTHER PERFORMANCE REQUIREMENTS OF THE SPECIFICATIONS
7. THE GAGE OF ALL TRACKS SHALL BE NO LIGHTER THAN THE FRAMING BEING CONNECTED.
8. ALL WELDING SHALL BE IN CONFORMANCE WITH AMERICAN WELDING SOCIETY SPECIFICATION D1.3. ALL WELDS SHALL BE TOUCHED UP WITH ZINC RICH PAINT.
9. ALL STRUCTURAL MEMBERS SHALL BE PROPERLY CONNECTED TO EACH OTHER AND TO THE SUPPORTING BACK-UP FRAMING. FASTENINGS SHALL BE MADE WITH SELF TAPPING SCREWS OR WELDS OF SUFFICIENT SIZE TO INSURE THE CONNECTION STRENGTH. UNLESS OTHERWISE NOTED, CONNECT ALL INTERIOR STUDS BASED ON A 5 PSF HORIZONTAL LOAD.
10. PROVIDE BRIDGING FOR STUDS AT MIDSPAN AND AT A MAXIMUM SPACING NOT TO EXCEED 6'-0".
11. PROVIDE THE MANUFACTURER'S STANDARD TRACK, CLIP ANGLES, BRACING REINFORCEMENTS, FASTENERS AND ACCESSORIES AS RECOMMENDED BY THE MANUFACTURER FOR THE APPLICATION INDICATED AND AS NEEDED TO PROVIDE A COMPLETE FRAMING SYSTEM. UNLESS OTHERWISE NOTED, INSTALL THE METAL FRAMING SYSTEM IN ACCORDANCE WITH THE MANUFACTURER'S WRITTEN INSTRUCTIONS AND RECOMMENDATIONS.

ISOLATED COLUMN FOOTING SCHEDULE

MARK	SIZE	THICKNESS	REINFORCING	
			TRANSVERSE	LONGITUDINAL
F6.0	6'-0" x 6'-0"	1'-6"	6 - #5, T & B	6 - #5, T & B
F9.0	9'-0" x 9'-0"	2'-0"	7 - #6. T & B	7 - #6, T & B
F10.0	10'-0" x 10'-0"	2'-0"	9 - #8. T & B	9 - #8. T & B

FRAME REACTIONS (KIPS)

GRID LOCATION	DEAD		LIVE		WIND	
	HORZ	VERT	HORZ	VERT	HORZ	VERT
2,3,4,5/A,C	4	7	8	13	13	-33
1-A,6-A	3	5	4	7	7	-17
1-B,6-B	N/A	5	N/A	7	7	-6

LOOSE VENEER LINTEL SCHEDULE

CLEAR SPAN	SIZE
5'-0" OR LESS	L 3 ½ X 3 ½ X 5/16
OVER 5'-0" TO 9'-0"	L 5 X 3 ½ X ⅜ (LLV)

NOTES:
1. FOOTINGS AND PIERS SHOWN ARE FOR BIDDING PURPOSES ONLY AND HAVE BEEN DESIGNED FOR THE ESTIMATED LOADS SHOWN ON THE ABOVE TABLE. PRIOR TO FABRICATION AND CONSTRUCTION FOOTING AND PIER SIZES SHALL BE RE-ANALYZED AND ADJUSTED AS REQUIRED BY DESIGNER OF RECORD BASED ON FINAL REACTIONS PROVIDED BY PEMB MANUFACTURER.
2. ALL REACTIONS ARE UNFACTORED.

APPR | DATE | DESCRIPTION | CTM

SEAL

A/E INFO

APPROVED
FOR COMMANDER NAVFAC
ACTIVITY
EMILY M. SYLVESTER, PE
SATISFACTORY TO DATE 28 JUNE 2018
DES MJD | DRW MJD | CHK MJD
DESIGN MANAGER G. COOKE
BRANCH MANAGER NBJ
CHIEF ENGINEER EJA
FIRE PROTECTION

DEPARTMENT OF THE NAVY
NAVAL FACILITIES ENGINEERING COMMAND-MID-ATLANTIC
NAVAL STATION NORFOLK VIRGINIA
MIDLANT CI CORE
NAVAL FACILITIES ENGINEERING COMMAND
MCB CAMP LEJEUNE
JACKSONVILLE, NC
P1482 MARINE SPECIAL OP SCHOOL
120 MAN CLASSROOMS
GENERAL NOTES

SCALE: AS NOTED
EPROJECT NO. 1558046
CONSTR. CONTR. NO. -
NAVFAC DRAWING NO. 12747173
SHEET 33 OF 91
S-002
DRAWFORM REVISION: 10 MARCH 2009

FILE NAME: P:\MC\Compk4pierre\MILCON\2017_1558046_P1482_JH-DBB_120ManClassrooms\8_Design\Drawings\Sheet\07_Structural\GENERAL NOTES.dwg LAYOUT NAME: S-002 GENERAL NOTES PLOTTED: Monday, June 08, 2020 - 9:12am USER: brett.stodden

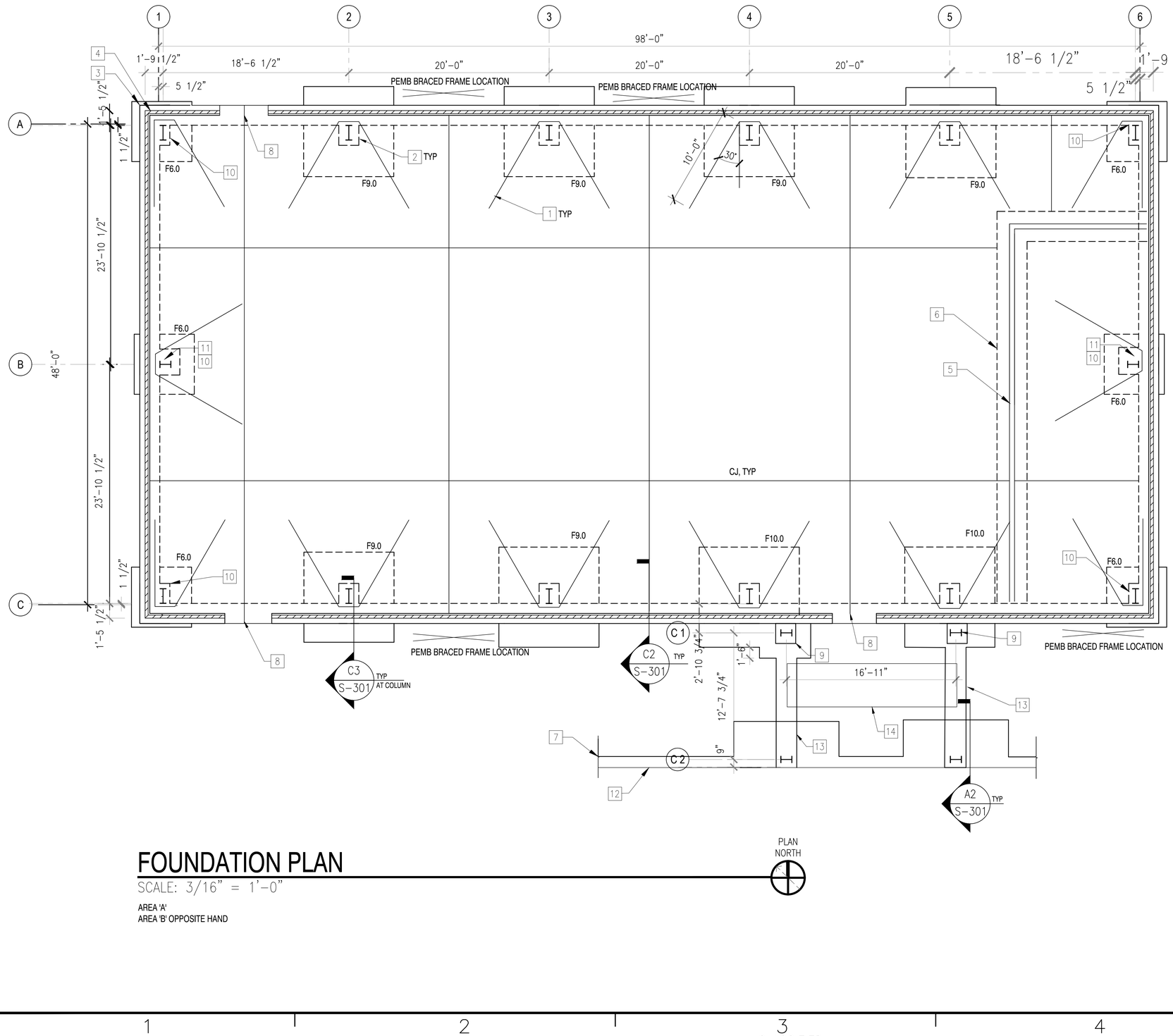

FOUNDATION PLAN

SCALE: 3/16" = 1'-0"

AREA 'A'
AREA 'B' OPPOSITE HAND

PLAN NORTH

PLAN NOTES

1. TOP OF SLAB-ON-GRADE ELEVATION IS [0'-0"] UNLESS OTHERWISE NOTED.
2. TOP OF FOOTING ELEVATION IS [-2'-0"] UNLESS OTHERWISE NOTED.
3. SLAB-ON-GRADE SHALL BE 5" THICK CONCRETE REINFORCED WITH WWF 6X6-W2.1X2.1 IN SHEETS LOCATED 1 ½" BELOW THE TOP OF SLAB. SLAB SHALL BE PLACED ON 10 MIL VAPOR RETARDED OVER 6" POUROUS FILL.
4. COORDINATE DOOR LOCATIONS WITH ARCHITECTURAL DRAWINGS.
5. ALL COLUMNS SHALL BE SET AS REQUIRED BY THE PRE-ENGINEERED METAL BUILDING DESIGNER.

KEYNOTES

1. ADD#6 HAIRPIN IN MIDDLE OF SLAB
2. 2'-0" x 4'-0" CONCRETE PIER, SEE TYPICAL PIER DETAIL ON S-301.
3. EDGE OF CONCRETE
4. EDGE OF SLAB
5. METAL STUD BEARING WALL. REFER TO ARCH FOR LOCATIONS.
6. THICKENED SLAB UNDER METAL STUD BEARING WALL. SEE TYPICAL DETAIL ON S-301.
7. FACE OF EXISTING FOUNDATION.
8. TYPICAL SLAB AT EXTERIOR OPENING, SEE TYPICAL DETAIL ON S-301.
9. 2'-0" x 2'-0" CONCRETE PIER, SEE TYPICAL PIER DETAIL ON S-301.
10. 3'-0" x 4-0" CONCRETE PIER, REINFORCE WITH 5-#4 VERTICAL, 3 EACH SIDE
11. ROOF TIE BACK BRACING AT F.L.'S 1 AND 6
12. FACE OF EXISTING VENEER
13. 24" X 24" CONCRETE BEAM, REINFORCED WITH 3-#5 TOP AND BOTTOM WITH #4 TIES AT 12" OC.
14. 1" SLAB DEPRESSION. SEE ARCH FOR LOCATION.

PLAN NORTH

GRAPHIC SCALE

3/16"=1'-0" 0' 4' 8' 12'

APPR	DATE	DESCRIPTION	CTM

NAVFAC

SEAL

A/E INFO

APPROVED

FOR COMMANDER NAVFAC

ACTIVITY

EMILY M. SYLVESTER, PE

SATISFACTORY TO DATE 28 JUNE 2018

DES	DRW	CHK
MJD	MJD	MJD

DESIGN MANAGER G. COOKE
BRANCH MANAGER NBJ
CHIEF ENGINEER EJA
FIRE PROTECTION

DEPARTMENT OF THE NAVY
NAVAL FACILITIES ENGINEERING COMMAND
NAVFAC MIDLANT CI CORE

NAVAL FACILITIES ENGINEERING COMMAND-MID-ATLANTIC
NAVAL STATION NORFOLK VIRGINIA

MCB CAMP LEJEUNE JACKSONVILLE, NC

P1482 MARINE SPECIAL OP SCHOOL
120 MAN CLASSROOMS

FOUNDATION PLAN

SCALE: AS NOTED
EPROJECT NO. 1558046
CONSTR. CONTR. NO. –
NAVFAC DRAWING NO. 12747174
SHEET 34 OF 91

S-101

DRAWFORM REVISION: 10 MARCH 2009

FILE NAME: P:\MC\Computer\one\MILCON\2017_1558046_P1482_JH-DBB_120ManClassrooms\8_Design\Drawings\Sheet\07_Structural\FOUNDATION PLAN.dwg LAYOUT NAME: S-101 FOUNDATION PLAN PLOTTED: Monday, June 08, 2020 - 9:13am USER: brett.stodden

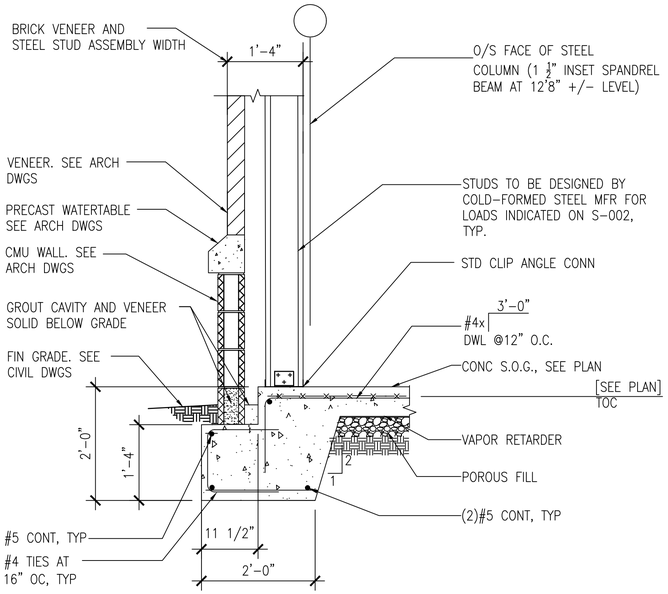

C2 SECTION
SCALE: 3/4" = 1'-0" S-101

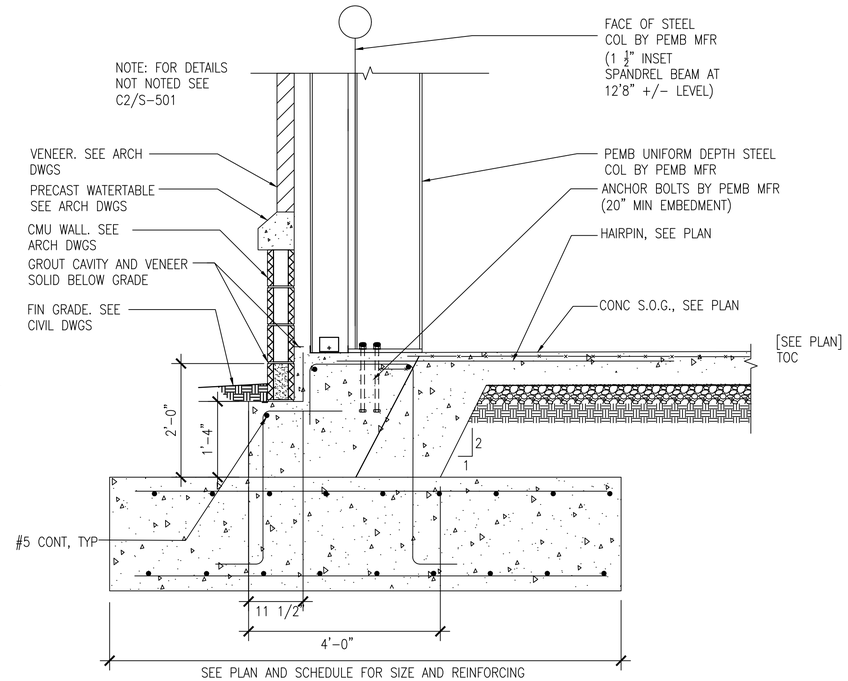

SEE PLAN AND SCHEDULE FOR SIZE AND REINFORCING

C3 SECTION
SCALE: 3/4" = 1'-0" S-101

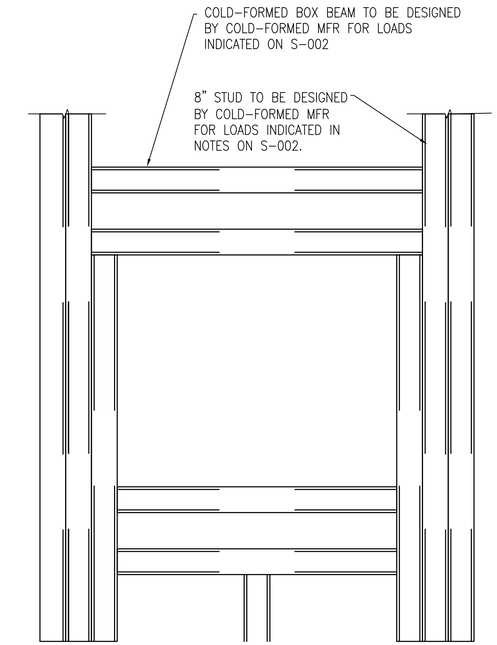

TYPICAL FRAMING AT WINDOW OPENING IN STUD WALL
NOT TO SCALE

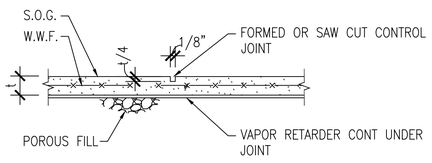

TYPICAL FORMED OR SAWN CONTROL JOINT
NOT TO SCALE

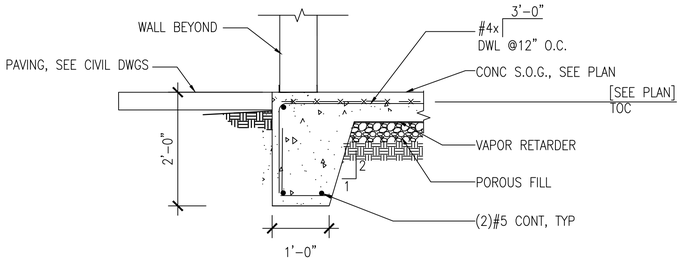

TYPICAL SLAB AT EXTERIOR OPENING
NOT TO SCALE

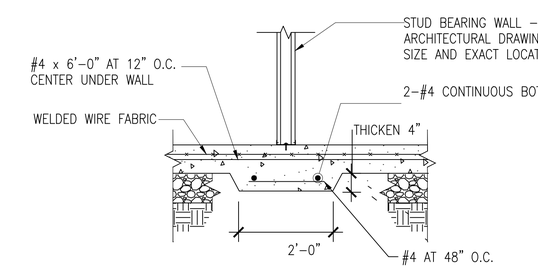

TYPICAL THICKENED SLAB UNDER METAL STUD BEARING WALL
NOT TO SCALE

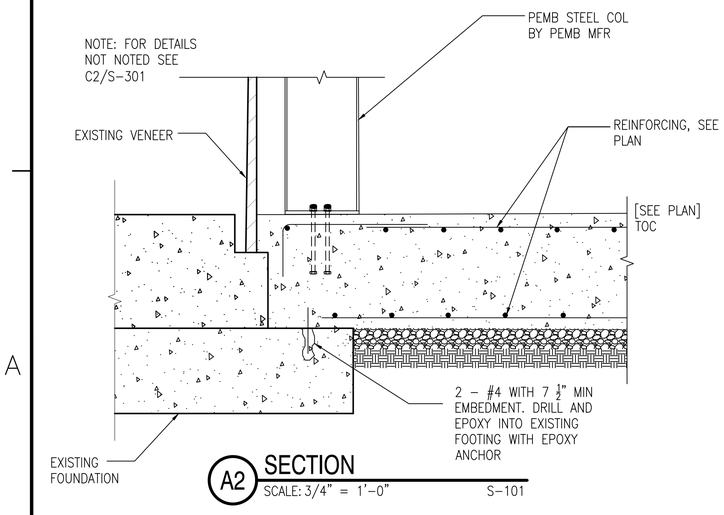

A2 SECTION
SCALE: 3/4" = 1'-0" S-101

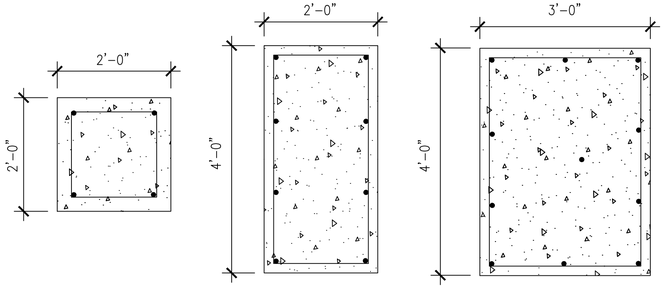

NOTES:
1. #3 TIES 8" O.C.
2. BASE PLATE SHALL NOT BE LARGER THAN PIER

TYPICAL PIER DETAILS
NOT TO SCALE

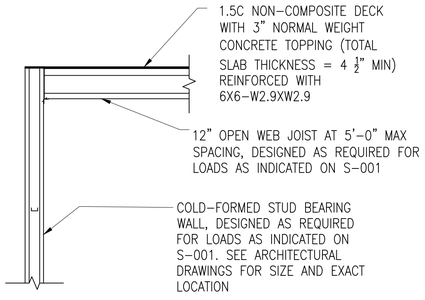

TYPICAL MEZZANINE DETAIL
NOT TO SCALE

APPR	DATE	DESCRIPTION	CTM
---	---	---	---

NAVFAC

SEAL

A/E INFO

APPROVED

FOR COMMANDER NAVFAC

ACTIVITY

EMILY M. SYLVESTER, PE

SATISFACTORY TO DATE 28 JUNE 2018

DES MJD DRW MJD CHK MJD

DESIGN MANAGER G. COOKE

BRANCH MANAGER NBJ

CHIEF ENGINEER EJA

FIRE PROTECTION

DEPARTMENT OF THE NAVY
NAVAL FACILITIES ENGINEERING COMMAND
MIDLANT CI CORE

NAVAL FACILITIES ENGINEERING COMMAND-MID-ATLANTIC
NAVAL STATION NORFOLK VIRGINIA

MCB CAMP LEJEUNE JACKSONVILLE, NC
P1482 MARINE SPECIAL OP SCHOOL
120 MAN CLASSROOMS

FOUNDATION SECTIONS

SCALE: AS NOTED
EPROJECT NO. 1558046
CONSTR. CONTR. NO. –
NAVFAC DRAWING NO. 12747175
SHEET 35 OF 91

S-301

DRAWFORM REVISION: 10 MARCH 2009

FILE NAME: P:\NC\Camp Lejeune\MILCON\2017_1558046_P1482_JH-DBB_120ManClassrooms\8_Design\Drawings\Sheet\07_Structure\FOUNDATION SECTIONS.dwg LAYOUT NAME: S-301 FOUNDATION SECTIONS PLOTTED: Monday, June 08, 2020 - 9:13am USER: brett.stofden

ARCHITECTURAL SYMBOLS

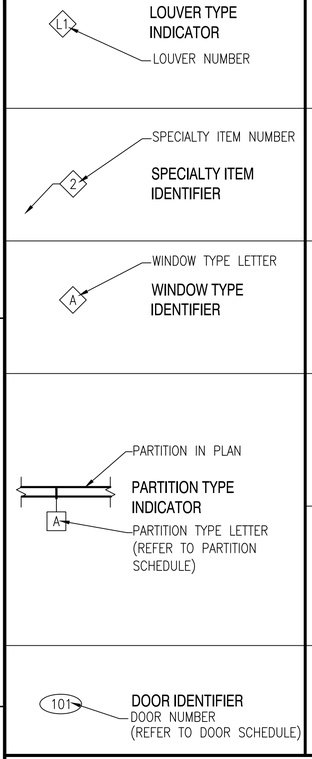

MATERIALS LEGEND

SECTION VIEW		WOOD – ROUGH		WOOD BLOCKING
		CONCRETE MASONRY UNIT		BRICK
		CAST–IN–PLACE CONCRETE		PLYWOOD–LARGE SCALE
		STEEL		GLASS–LARGE SCALE
		EARTH/COMPACT FILL		ACOUSTICAL TILE
		BATT/LOOSE FILL INSULATION		PLYWOOD–SMALL SCALE
		POROUS FILL/GRAVEL		CERAMIC TILE–LARGE SCALE
		RIGID INSULATION		SAND/MORTAR/PLASTER
		GYPSUM BOARD		
		RESILIENT FLOORING/ PLASTIC LAMINATE		
		ALUMINUM		
		FINISHED WOOD		
		MARBLE		
ELEVATION/PLAN VIEW		CONCRETE/GYPSUM BOARD		
		SHEET METAL–LARGE SCALE		
		GLASS		

GENERAL ARCHITECTURAL NOTES

1. ALL MATERIALS SHALL BE NEW AND PROVIDED BY THE CONTRACTOR UNLESS SPECIFICALLY NOTED AS EXISTING OR AS PROVIDED BY THE GOVERNMENT.
2. ALL WOOD BLOCKING AND MISCELLANEOUS STEEL SHOWN IN DETAILS AND SECTIONS SHALL BE CONTINUOUS UNLESS SPECIFICALLY NOTED OTHERWISE.
3. VERIFY ALL FIELD CONDITIONS AND DIMENSIONS PRIOR TO PROCEEDING WITH THE WORK. ALL DISCREPANCIES SHALL BE BROUGHT TO THE IMMEDIATE ATTENTION OF THE CONTRACTING OFFICER IN WRITING.
4. DIMENSIONS INDICATED FOR NEW WORK ARE TO FACE OF STUD, FACE OF MASONRY OR FACE OF EXISTING SURFACES UNLESS OTHERWISE NOTED.

ARCHITECTURAL ABBREVIATIONS

AB	ANCHOR BOLT	CNSTR	CONSTRUCTION	FIN	FNISH	MTL	METAL	PEJ	PREMOLDED EXPANSION JOINT	STD	STANDARD
ACS PNL	ACCESS PANEL	CONT	CONTINUE	FG	FIGURE	MFG	MANUFACTURING	PL	PROPERTY LINE	STOR	STORAGE
ADJ	ADJUSTABLE	CORR	CORRIDOR	FIN FLR	FINISHED FLOOR	MIN	MINIMUM, MINUTE	PLAS	PLASTER, PLASTIC	STR	STRAIGHT STRIKE, STRINGERS
ALUM	ALUMINUM	CPT	CARPET	FOF	FACE OF FINISH	MISC	MISCELLANEOUS	PLYWD	PLYWOOD	SUSP	SUSPEN
ALT	ALTERNATE, ALTITIUDE	CT	CERAMIC TILE	FOM	FACE OF MASONRY	MO	MOTOR OPERATED, MASONRY OPENING	PNL	PANEL	T&B	TOP AND BOTTOM
ANOD	ANODIZED	CTR	CENTER	FOS	FACE OF STUD, FACE OF SLAB			PRELIM	PRELIMINARY	TEL	TELEPHONE
APPROX	APPROXIMATE	D	DEPTH, DEEP	FR	FRAME, FIRE RATING, FIRE RESISTANT	MTD	MOUNTED	PSF	POUNDS PER SQUARE FOOT	TOS	TOP OF SLAB/STEEL
ARCH	ARCHITECT	DEG	DEGREE	FRT	FIRE RETARDANT TREATED	MTG	MOUNTNG, MEETING	PSI	POUNDS PER SQUARE INCH	THRES	THRESHOLD
ASPH	ASPHALT	DEMO	DEMOLITION	FT	FOOT, FEET	MWP	MEMBRANE WATERPROOFING	PT	PAINT	THRU	THROUGH
ATC	ACOUSTICAL TILE CEILING	DET	ETAIL	FTG	FOOTING	N	NORTH	QT	QUARRY TILE	TYP	TYPICAL
BD	BOARD	DIA	DIAMETER	GA	GAGE	NIC	NOT IN CONTRACT	R	RADIUS, RISER	UON	UNLESS OTHERWISE NOTED
BLDG	BUILDING	DIM	DIMENSION	GALV	GALVANIZED	NO	NUMBER	RA	RETURN AIR	V	VOLT
BLW	BELOW	DS	OWNSPOUT	GFCI	GOVERNMENT FURNISHED GOVERNMENT INSTALLED	NOM	NOMINAL	RAD	RETURN AIR DUCT	VAR	VARIATION
BM	BEAM	DW	DISHWASHER			NTS	NOT TO SCALE	RB	RESILIENT BASE	VB	VINYL BASE
BOT	BOTTOM	DR	DRAIN	GL	GLASS, GROUND LEVEL	OA	OUTSIDE AIR	RD	ROOF DRAIN, ROAD	VCT	VINYL COMPOSITION TILE
BOS	BOTTOM OF SLAB/STEEL	DWG	DRAWING	GR	GROSS	OC	ON CENTER	REFL	REFLECT	VENT	VENTILATION, VENTILATOR
BRG	BEARING	E	EAST	GSU	GLAZED STRUCTURAL UNIT	OD	OUTSIDE DIAMETER/DIMENSION	REFR	REFRIGERATION	VERT	VERTICAL
BSMT	BASEMENT	EA	EACH	GYP	GYPSUM	OPH	OPPOSITE HAND	REINF	REINFORCE	VEST	VESTIBULE
BTWN	BETWEEN	EIFS	EXTERIOR INSULATION & FINISH	H	HIGH	OPNG	OPENING	REQD	REQUIRED	VS	VENT STACK
C TO C	CENTER TO CENTER			HB	HOSE BIB	OPP	OPPOSITE	REV	REVISION	VTR	VENT THROUGH ROOF
CAB	CABINET	EJ	EXPANSION JOINT	HDW	HARDWARE	OPT	OPTIONAL	RF	RESILIENT FLOORING	VWC	VINYL WALL COVERING
CEM	CEMENT	EL	ELEVATION	HM	HOLLOW METAL	PCT	PERCENT	RL	ROOF LEADER	W	WASTE, WATT, WEST, WIDE
CER	CERAMIC	ELEC	ELECTRIC	HORIZ	HORIZONTAL	PEJ	PREMOLDED EXPANSION JOINT	RM	ROOM	W/	WITH
CI	CAST IRON	EPDM	ETHLENE PROPYLENE DIENE MONOMER	HT	HEIGHT	PL	PROPERTY LINE	RND	ROUND	W/O	WITHOUT
CIP	CAST IRON PIPR			HVY	HEAVY	PLAS	PLASTER, PLASTIC	RO	ROUGH OPENING	WC	WATER CLOSET, WALL COVERING
CJ	CONTROL JOINT,CONSTRUCTION JOINT	EQ	EQUAL	ID	INSIDE DIAMETER	PLYWD	PLYWOOD	RS	ROUGH SAWN	WD	WOOD
CLG	CEILING	EQUIP	EQUIPMENT	INSUL	INSULATION, INSULATED	PNL	PANEL	RT	RIGHT	WH	WATER HEATER
CLG REG	CEILING REGISTER	EW	EACH WAY	INT	INTERIOR	PPT	PRESSURE PRESERVATIVE TREATED	S	SOUTH	WP	WATERPROOFING, WEATHERPROOF, WORKING POINT
CLR	CLEAR	EWC	ELECTRIC WATER COOLER	J–BOX	JUNCTION BOX	PRELIM	PRELIMINARY	SAPC	SUSPPENDED ACOUSTICAL PANEL CEILING		
CMU	CONCRETE MASORY UNIT	EXH	EXHAUST	JAN CLA	JANITOR CLOSET	PSF	POUNDS PER SQUARE FOOT	SCHED	SCHEDULE	WSCT	WAINSCOT
CND	CONDUIT	EXIST	EXISTING	LAV	LAVATORY	PSI	POUNDS PER SQUARE INCH	SECT	SECTION	WT	WEIGHT
CNDS	CONDENSATE	EXP	ESPANSION, EXPOSED, EXPAND	LB	POUND	PT	PAINT	SF	SQUARE FOOT	WWF	WELDED WIRE FABRIC
CNTR	COUNTER	EXT	EXTERIOR	LT	LIGHT	OPH	OPPOSITE HAND	SH	SHINGLES, SINGLE HUNG	XRMR	TRANSFORMER
CO	CLEANOUT	FD	FLOOR DRAIN	MACH	MACHINE	OPNG	OPENING	SIM	SIMILAR		
COL	COLUMN	FDTN	FOUNDATION	MATL	MATERIAL	OPP	OPPOSITE	SPC	SUSPENDED PLASTER CEILING		
CONC	CONCRETE	FF	FINISH FACE	MAX	MAXIMUM	OPT	OPTIONAL	SPEC	SPECIFICATION		
CONN	CONNECT	FHC	FIRE HOSE CABINET	MECH	MECHANICAL	PCT	PERCENT	SQ	SQUARE		

PLAN NORTH

GRAPHIC SCALE

1/8"=1'-0" 0' 4' 8' 16'

APPR	
DATE	
DESCRIPTION	
CTM	

NAVFAC

SEAL

A/E INFO

APPROVED

FOR COMMANDER NAVFAC

ACTIVITY

EMILY M. SYLVESTER, PE

SATISFACTORY TO DATE 28 JUNE 2018

DES GKC DRW GKC CHK MC

DESIGN MANAGER G. COOKE

BRANCH MANAGER DJD

CHIEF ENGINEER EJA

FIRE PROTECTION

DEPARTMENT OF THE NAVY
NAVAL FACILITIES ENGINEERING COMMAND–MID-ATLANTIC
NAVAL STATION NORFOLK VIRGINIA
MIDLANT CI CORE

NAVAL FACILITIES ENGINEERING COMMAND
JACKSONVILLE, NC

MCB CAMP LEJEUNE
P1482 MARINE SPECIAL OP SCHOOL
120 MAN CLASSROOMS

LEGEND, ABBREVIATIONS AND GENERAL NOTES

SCALE:	AS NOTED
EPROJECT NO.	1558046
CONSTR. CONTR. NO.	–
NAVFAC DRAWING NO.	12747175
SHEET	36 OF 91

A-001

DRAWFORM REVISION: 10 MARCH 2009

UNCLASSIFIED

FILE NAME: P:\NC\Camp Lejeune\MILCON\2017_1558046_P1482_JH–088_120ManClassrooms\8_Design\Drawings\Sheet\08_Architecture\A-001 LEGEND–NOTES.dwg LAYOUT NAME: A–001 LEGEND ABBREVIATIONS AND GENERAL NOTES PLOTTED: Tuesday, June 02, 2020 – 6:01pm USER: dbert.hogg

ENCLOSURE AIR BARRIER SURFACE AREA NOTE:

THE ENCLOSURE SURFACE AREAS LISTED ON THIS SHEET ARE APPROXIMATE FOR THE FLOOR, WALLS/FENESTRATION, AND ATTIC. THE SURFACE AREA DOES NOT INCLUDE PENETRATIONS AND UNINTENTIONAL HOLES WITHIN THE AIR BARRIER. THE ENCLOSURE SURFACE AREAS FOR "INTENTIONAL" HOLES IN THE BUILDING ENCLOSURE ARE APPROXIMATE AND DO NOT TAKE INTO ACCOUNT "INTENTIONAL" HOLES. THESE "INTENTIONAL" HOLES INCLUDE AIR INTAKE, EXHAUST LOUVERS, MAKE-UP AIR INTAKES, PRESSURE RELIEF DAMPERS, OR LOUVERS, DRYER AND EXHAUST VENT DAMPERS, AND ANY OTHER INTENTIONAL HOLE THAT IS NOT INCLUDED IN THE AIR BARRIER DESIGN OR CONSTRUCTION. EXTERIOR WINDOWS AND DOORS (FENESTRATION) ARE NOT INTENTIONAL OPENINGS. FENESTRATION IS INCLUDED IN THE AIR BARRIER TEST BOUNDARY. VERIFY THE AREAS/ DIMENSIONS PROVIDED IN THE CALCULATIONS MATCH AS-BUILT CONDITIONS AND THAT THE ARITHMETIC WAS PERFORMED CORRECTLY.

GENERAL CONSTRUCTION NOTES

1. ALL WORK SHALL BE PREFORMED IN ACCORDANCE WITH APPLICABLE FEDERAL CODES AND STANDARDS.
2. VERIFY ALL DIMENSIONS AND CONDITIONS PRIOR TO THE START OF CONSTRUCTION. ANY DISCREPANCIES SHALL BE BROUGHT TO THE IMMEDIATE ATTENTION OF THE CONTRACTING OFFICER FOR RESOLUTION.
3. COORDINATE ALL REQUIRED CONDUIT, PIPING AND CHASES FOR OWNER FURNISHED, OWNER INSTALLED EQUIPMENT WITH THE GOVERNMENT.
4. COORDINATE WITH WORK BEING PREFORMED UNDER SEPARATE CONTRACT WITH THE GOVERNMENT.
5. ALL DIMENSIONS ARE REFERENCED FROM FACE OF FINISH AT EXTERIOR WALL CONSTRUCTION.

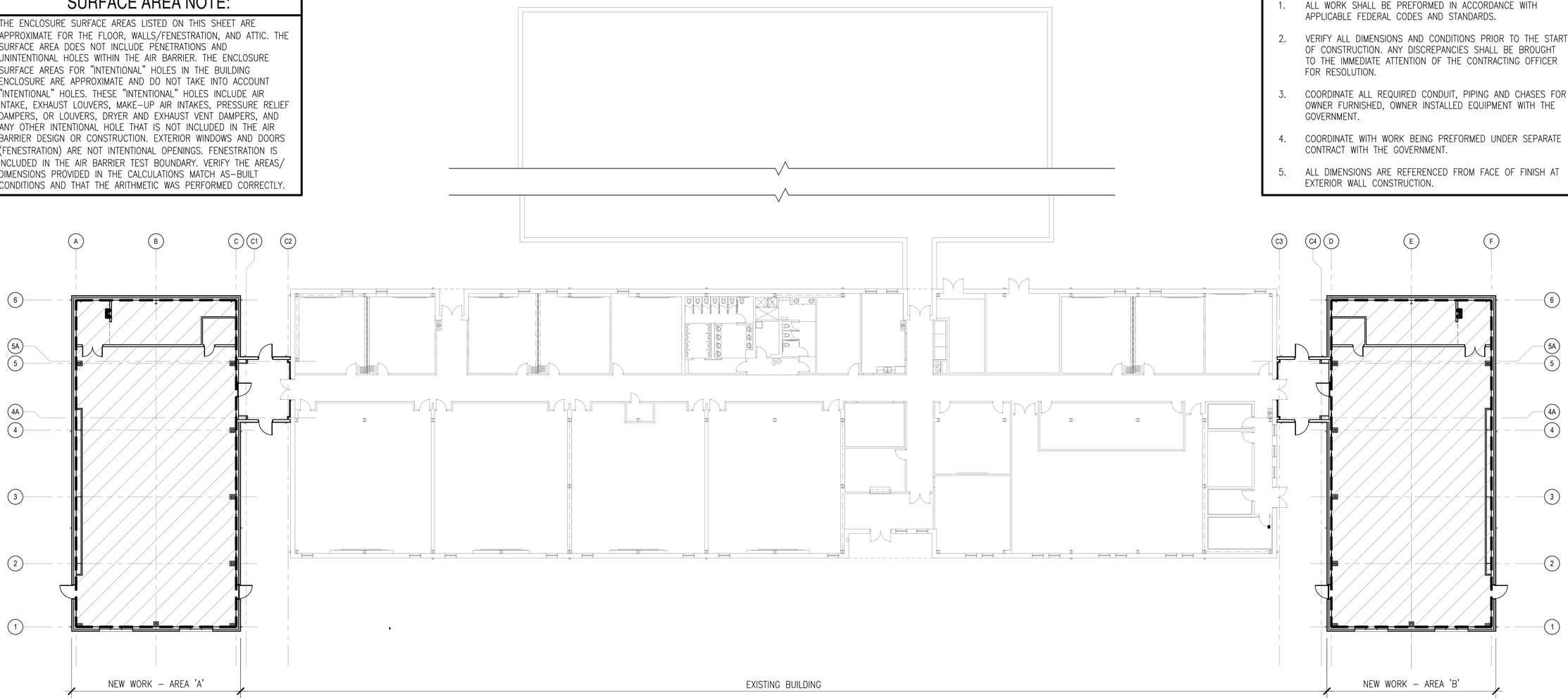

A1 OVERALL FLOOR PLAN & AIR BARRIER PLAN
SCALE: 1/16" = 1'-0"

PLAN NORTH

A-101

D1
A-201

AIR BARRIER GENERAL NOTES

1. CONSTRUCTION CONTRACTOR TO PERFORM AIR BARRIER TESTING (AS MINIMUM) IN AREAS IDENTIFIED IN AIR BARRIER PLANS ON THIS SHEET.
2. CONSTRUCTION CONTRACTOR TO VERIFY PROPER INSTALLATION & INTEGRITY OF AIR BARRIER ASSEMBLY IN AREAS TO BE CONCEALED (I.E. INSIDE CAVITY WALL, INACCESSIBLE ENCLOSED VOID SPACES, ETC.) PRIOR TO COMMENCING WITH CONCEALMENT.
3. VARIOUS COMPONENTS OF THE AIR BARRIER ASSEMBLY ARE INDICATED AS '(AIR BARRIER)' THROUGHOUT THE DRAWING SET.
4. SEE GENERAL NOTES ON WALL SECTION, SECTION & DETAIL SHEETS FOR ADDITIONAL AIR BARRIER REQUIREMENTS.
5. SEE PARTITION TYPE TERMINATION FOR SEALING TOP OF PARTITIONS/WALLS AT AIR BARRIER ASSEMBLY.
6. AIR BARRIER PRODUCTS AND ACCESSORIES SHALL BE INSTALLED IN ACCORDANCE WITH MANUFACTURER'S RECOMMENDED INSTALLATION REQUIREMENTS AND SHALL BE COMPATIBLE WITH FLASHING AND SEALANTS. SEALANTS, COMPONENTS, CLADDING MATERIALS, PENETRATIONS, AND TRANSITION MATERIALS THAT TIE DIRECTLY INTO THE AIR BARRIER ASSEMBLY SHALL BE CHECKED FOR COMPATIBILITY WITH THE PRIMARY MANUFACTURER OF AIR BARRIER ASSEMBLY. LETTERS OF COMPLIANCE SHALL BE SUBMITTED.
7. USE AN AIR BARRIER SELF ADHERING TRANSITION MEMBRANE STRIP/UNDERLAYMENT AT CORNERS, ROUGH OPENINGS, AND TRANSITIONS BETWEEN DISSIMILAR MATERIALS.

KEYNOTES

1. FIRST FLOOR CONCRETE SLAB AIR BARRIER – SEAL CONCRETE SLAB PENETRATIONS WITH AIR BARRIER SEALANT OR FIRE STOPPING/SMOKE SEALANT AT FIRE RATED CONSTRUCTION. SEAL ALL SEAMS OF VAPOR RETARDER AT GRADE.
2. EXTERIOR WALL AIR BARRIER IS CONTINUOUS SHEET WALL LINER – SEAL JOINTS AND PENETRATIONS TO PROVIDE AIR/VAPOR/WATER TIGHT SEALS.
3. ROOF AIR BARRIER – CONTINUOUS SHEET ROOF INSULATION LINER – SEAL JOINTS AND PENETRATIONS TO PROVIDE AIR/VAPOR/WATER TIGHT SEALS.

AIR BARRIER LEGEND

EXTENTS OF AIR BARRIER

AIR BARRIER ENCLOSURE SURFACE AREA OF EXTERIOR ENVELOPE

CONCRETE FLOOR SLAB:
TOTAL FLOOR SURFACE AREA AIR BARRIER SYSTEM: 4,710 SF

WALLS:
(INCLUDES FENESTRATION AND DOORS)
TOTAL EXTERIOR WALL SURFACE AIR BARRIER SYSTEM: 4,781 SF

ROOF:
TOTAL ROOF LINER AREA AIR BARRIER SYSTEM: 5,034 SF

TOTAL ENCLOSURE SURFACE AREA: 14,525 SF
(X 2 AREAS OF NEW CONSTRUCTION = 29,050 SF)

KEYPLAN N.T.S.

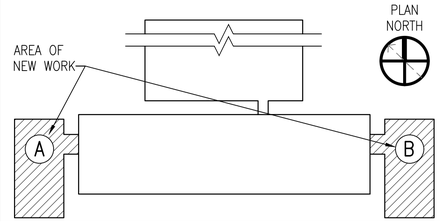

GRAPHIC SCALE

1/16"=1'-0" 0' 8' 16' 32'

APPR	
DATE	
DESCRIPTION	
CTM	

NAVFAC

SEAL

A/E INFO

APPROVED

FOR COMMANDER NAVFAC

ACTIVITY
EMILY M. SYLVESTER, PE
SATISFACTORY TO DATE 28 JUNE 2018
DES JPC | DRW JPC | CHK GKC
DESIGN MANAGER G. COOKE
BRANCH MANAGER DJD
CHIEF ENGINEER EJA
FIRE PROTECTION

DEPARTMENT OF THE NAVY
NAVAL FACILITIES ENGINEERING COMMAND
MIDLANT CI CORE
NAVAL FACILITIES ENGINEERING COMMAND-MID-ATLANTIC
NAVAL STATION NORFOLK VIRGINIA

MCB CAMP LEJEUNE JACKSONVILLE, NC
P1482 MARINE SPECIAL OP SCHOOL
120 MAN CLASSROOMS

OVERALL FLOOR PLAN & AIR BARRIER PLAN

SCALE: AS NOTED
EPROJECT NO. 1558046
CONSTR. CONTR. NO. –
NAVFAC DRAWING NO. 12747176
SHEET 37 OF 91

A-101

DRAWFORM REVISION: 10 MARCH 2009

FILE NAME: P:\NC\Compu\jeune\MILCON\2017_1558046_P1482_JH-DBB_120ManClassrooms\8_Design\Drawings\Sheet\08_Architecture\1558046_P1482_A-101_OVERALL FLOOR PLAN.dwg LAYOUT NAME: A-101 OVERALL FLOOR PLAN & AIR BARRIER PLAN PLOTTED: Tuesday, June 02, 2020 - 6:02pm USER: albert.hogg

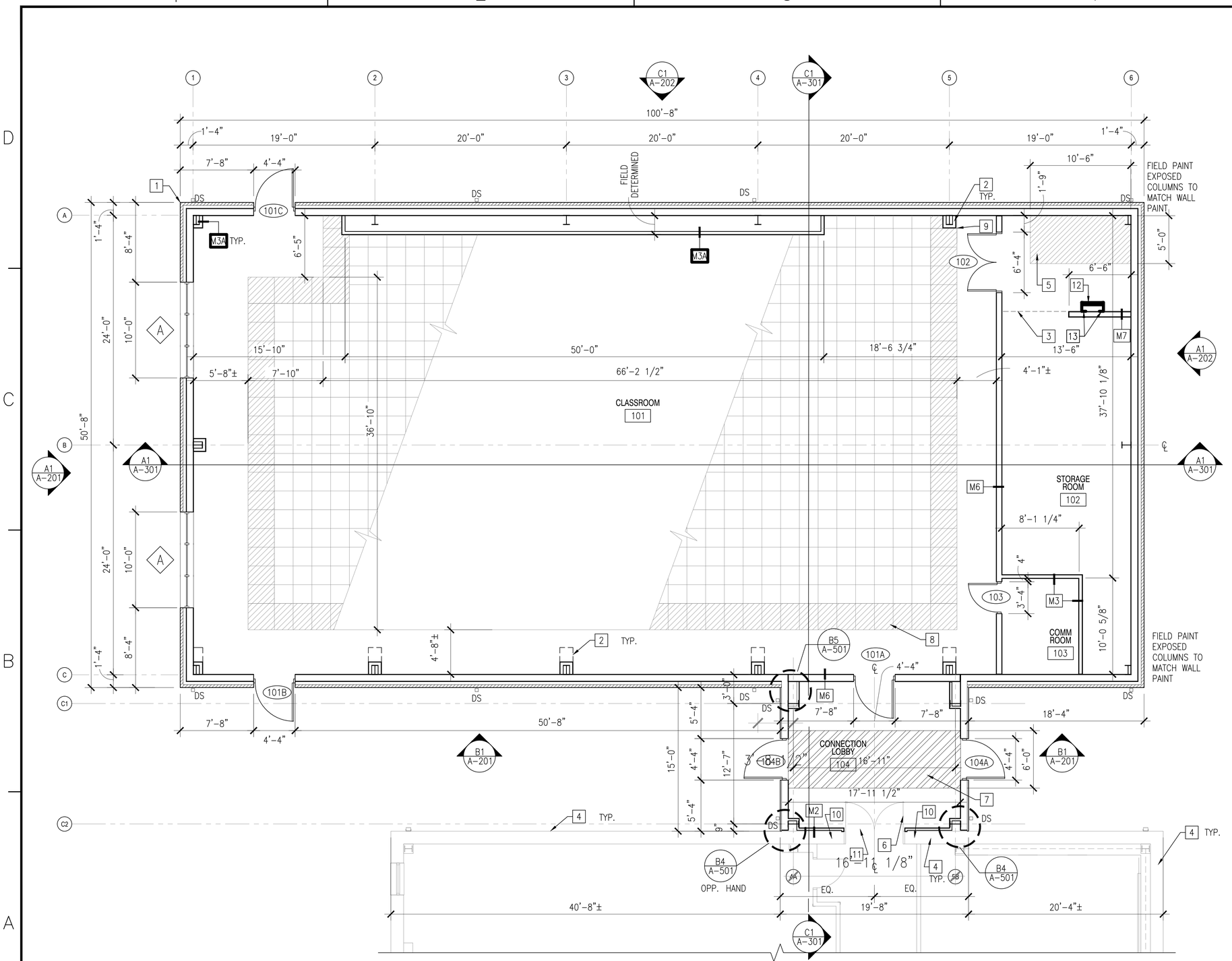

A1 CLASSROOM FLOOR PLAN - AREA 'A'

SCALE: 3/16" = 1'-0"

A-101

PLAN NORTH

GENERAL SHEET NOTES

1. ALL WORK SHALL BE PREFORMED IN ACCORDANCE WITH APPLICABLE FEDERAL CODES AND STANDARDS.
2. VERIFY ALL DIMENSIONS AND CONDITIONS PRIOR TO THE STAR OF CONSTRUCTION. ANY DISCREPANCIES SHALL BE BROUGHT TO THE IMMEDIATE ATTENTION OF THE CONTRACTING OFFICER FOR RESOLUTION.
3. COORDINATE ALL REQUIRED CONDUIT, PIPING AND CHASES FOR OWNER FURNISHED, OWNER INSTALLED EQUIPMENT WITH THE GOVERNMENT.
4. COORDINATE WITH WORK BEING PREFORMED UNDER SEPARATE CONTRACT WITH THE GOVERNMENT.
5. ALL DIMENSIONS ARE REFERENCED FROM FACE OF STUD AT INTERIOR WALL CONSTRUCTION AND FACE OF FINISH AT EXTERIOR WALL CONSTRUCTION.
6. ALL TYPICAL INTERIOR STUDS TO BE MINIMUM 20 GA. BY WIDTH INDICATED BY WALL TYPES, AND MAXIMUM OF 16" OC. ACTUAL GAUGE, FLANGE SIZE, AND SPACING TO BE PER MANUFACTURERS SPECIFIC LOAD TABLE, BASED ON 5 PSF LATERAL LOAD (UNO). FOR MAXIMUM VERTICAL SPAN.
7. SEE INTERIOR DRAWINGS FOR ROOM FINISHES.
8. PREPARE ALL WALLS AND PARTITIONS AS RECOMMENDED BY THE FINISH MANUFACTURER TO RECEIVE THE FINISHES SPECIFIED.
9. REFER TO SHEET A-603 FOR INTERIOR PARTITION TYPES.
10. REFER TO ELEVATIONS FOR LOCATIONS OF CONTROL JOINTS.

NEW WORK KEYNOTES

1. PRE-ENGINEERED METAL BUILDING (PEMB).
2. COLUMN ENCLOSURE; FIELD DETERMINE EXACT DIMENSIONS, WRAP AS CLOSE AS POSSIBLE TO COLUMN; SEE C5/A-501 FOR ADDITIONAL INFORMATION.
3. LINE OF MECHANICAL PLATFORM ABOVE.
4. EXISTING BUILDING.
5. FLOOR STRIPING (4" WIDE DIAGONAL STRIPES SPACED 8" APART PAINTED SAFETY YELLOW) FOR ELECTRICAL PANEL CLEARANCES. SEE ELECTRICAL DRAWINGS FOR ADDITIONAL INFORMATION.
6. REMOVE AND REPLACE EXISTING DOOR HARDWARE WITH PASSAGE SET. REPAINT DOOR AND FRAME.
7. RECESSED WALK OFF MAT. SEE STRUCTURAL DRAWINGS FOR SLAB DEPRESSION.
8. 2 - 3/4" LOW RISE ADAPTIVE CABLING DISTRIBUTION SYSTEMS WITH INTEGRAL RAMP.
9. ALIGN COLUMN CLOSURE WITH EDGE OF LOW RISE RAISED FLOORING.
10. BRICK TO BE REMOVED AS NECESSARY TO INSTALL NEW FLASHING.
11. NEW WALL FRAMING TO CONTINUE ABOVE EXISTING DOOR TO ROOF RIDGE.
12. MECHANICAL PLATFORM ACCESS LADDER. SEE SHEET A-502 FOR ADDITIONAL INFORMATION. CENTER LADDER ON OPENING OF MEZZANINE GUARDRAIL.
13. PROVIDE WOOD BLOCKING AT EVERY LADDER BRACKET.

KEYPLAN N.T.S.

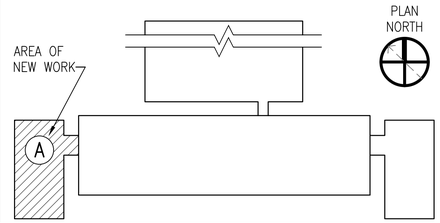

GRAPHIC SCALE

3/16"=1'-0" 0' 4' 8' 12'

APPR	DATE	DESCRIPTION	CTM

NAVFAC

SEAL

A/E INFO

APPROVED

FOR COMMANDER NAVFAC

ACTIVITY

EMILY M. SYLVESTER, PE

SATISFACTORY TO DATE 28 JUNE 2018

DES JPC DRW JPC CHK GKC

DESIGN MANAGER G. COOKE

BRANCH MANAGER DJD

CHIEF ENGINEER EJA

FIRE PROTECTION

DEPARTMENT OF THE NAVY
NAVAL FACILITIES ENGINEERING COMMAND
MIDLANT CI CORE

NAVAL FACILITIES ENGINEERING COMMAND-MID-ATLANTIC
NAVAL STATION NORFOLK VIRGINIA

MCB CAMP LEJEUNE JACKSONVILLE, NC

P1482 MARINE SPECIAL OP SCHOOL
120 MAN CLASSROOMS

FLOOR PLAN - AREA 'A'

SCALE: AS NOTED

EPROJECT NO. 1558046

CONSTR. CONTR. NO. -

NAVFAC DRAWING NO. 12747177

SHEET 38 OF 91

A-102

DRAWFORM REVISION: 10 MARCH 2009

FILE NAME: P:\NC\Compl\jeune\MILCON\2017_1558046_P1482_JH-DBB_120ManClassrooms\8_Design\Drawings\Sheet\08_Architecture\a1558046_P1482_A-102_FP - AREA 'A'.dwg LAYOUT NAME: A-102 FLOOR PLAN - AREA 'A' PLOTTED: Tuesday, June 02, 2020 - 6:02pm USER: dibert.hogg

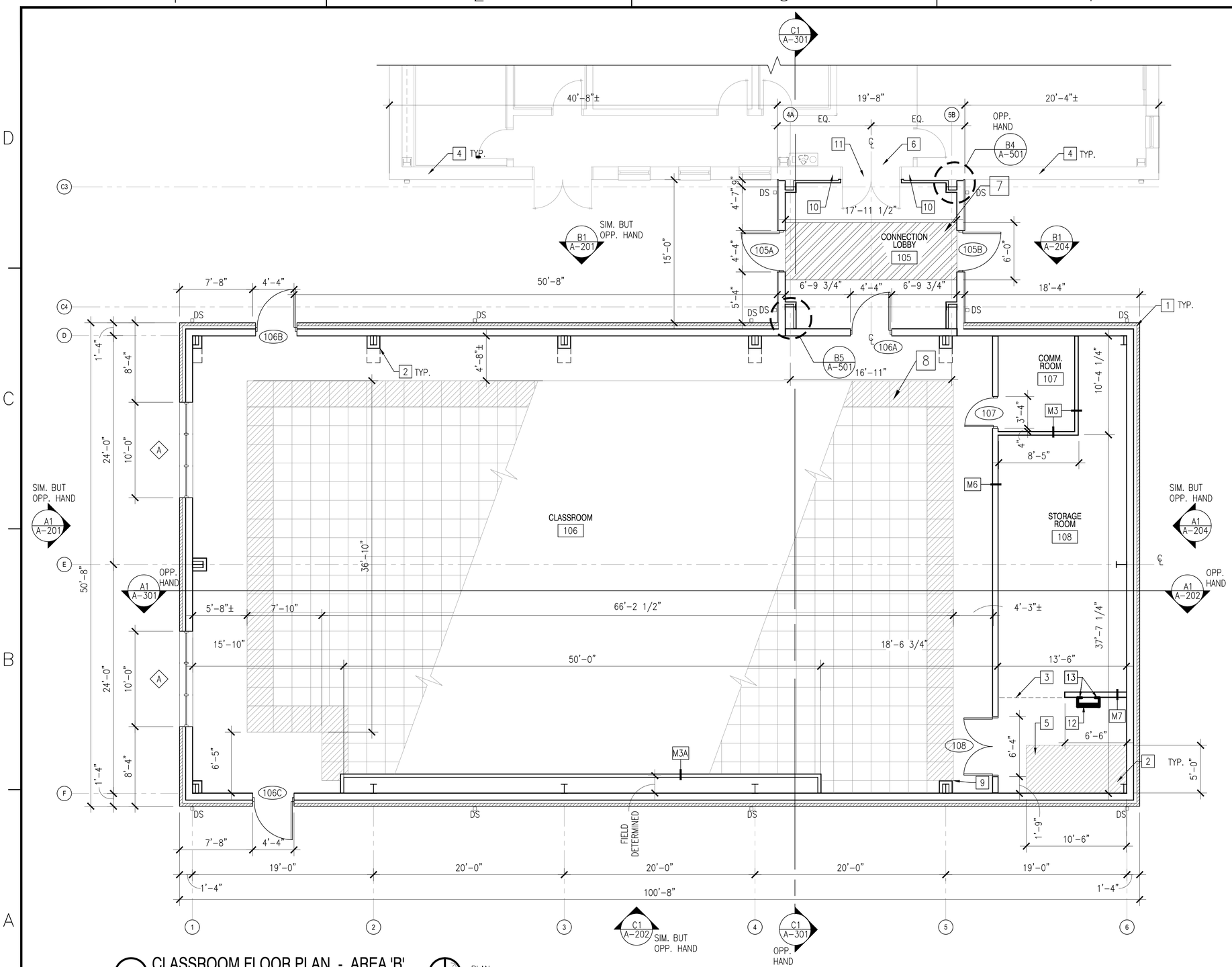

A1 CLASSROOM FLOOR PLAN - AREA 'B'
SCALE: 3/16" = 1'-0"
A-101

GENERAL SHEET NOTES

1. ALL WORK SHALL BE PREFORMED IN ACCORDANCE WITH APPLICABLE FEDERAL CODES AND STANDARDS.
2. VERIFY ALL DIMENSIONS AND CONDITIONS PRIOR TO THE STAR OF CONSTRUCTION. ANY DISCREPANCIES SHALL BE BROUGHT TO THE IMMEDIATE ATTENTION OF THE CONTRACTING OFFICER FOR RESOLUTION.
3. COORDINATE ALL REQUIRED CONDUIT, PIPING AND CHASES FOR OWNER FURNISHED, OWNER INSTALLED EQUIPMENT WITH THE GOVERNMENT.
4. COORDINATE WITH WORK BEING PREFORMED UNDER SEPARATE CONTRACT WITH THE GOVERNMENT.
5. ALL DIMENSIONS ARE REFERENCED FROM FACE OF STUD AT INTERIOR WALL CONSTRUCTION AND FACE OF FINISH AT EXTERIOR WALL CONSTRUCTION.
6. ALL TYPICAL INTERIOR STUDS TO BE MINIMUM 20 GA. BY WIDTH INDICATED BY WALL TYPES, AND MAXIMUM OF 16" OC. ACTUAL GAUGE, FLANGE SIZE, AND SPACING TO BE PER MANUFACTURERS SPECIFIC LOAD TABLE, BASED ON 5 PSF LATERAL LOAD (UNO). FOR MAXIMUM VERTICAL SPAN.
7. SEE INTERIOR DRAWINGS FOR ROOM FINISHES.
8. PREPARE ALL WALLS AND PARTITIONS AS RECOMMENDED BY THE FINISH MANUFACTURER TO RECEIVE THE FINISHES SPECIFIED.
9. REFER TO SHEET A-603 FOR WALL TYPES.
10. REFER TO ELEVATIONS FOR LOCATIONS OF CONTROL JOINTS.

NEW WORK KEYNOTES

1. PRE-ENGINEERED METAL BUILDING (PEMB).
2. COLUMN ENCLOSURE; FIELD DETERMINE EXACT DIMENSIONS, WRAP AS CLOSE AS POSSIBLE TO COLUMN; SEE C5/A-501 FOR ADDITIONAL INFORMATION.
3. LINE OF MECHANICAL PLATFORM ABOVE.
4. EXISTING BUILDING.
5. FLOOR STRIPING (4" WIDE DIAGONAL STRIPES SPACED 8" APART PAINTED SAFETY YELLOW) FOR ELECTRICAL PANEL CLEARANCES. SEE ELECTRICAL DRAWINGS FOR ADDITIONAL INFORMATION.
6. REMOVE AND REPLACE EXISTING DOOR HARDWARE WITH PASSAGE SET. REPAINT DOOR AND FRAME.
7. RECESSED WALK OFF MAT. SEE STRUCTURAL DRAWINGS FOR SLAB DEPRESSION.
8. 2 - 3/4" LOW RISE ADAPTIVE CABLING DISTRIBUTION SYSTEMS WITH INTEGRAL RAMP.
9. ALIGN COLUMN CLOSURE WITH EDGE OF LOW RISE RAISED FLOORING.
10. BRICK TO BE REMOVED AS NECESSARY TO INSTALL NEW FLASHING.
11. NEW WALL FRAMING TO CONTINUE ABOVE EXISTING DOOR TO ROOF RIDGE.
12. MECHANICAL PLATFORM ACCESS LADDER. SEE SHEET A-502 FOR ADDITIONAL INFORMATION. CENTER LADDER ON OPENING OF MEZZANINE GUARDRAIL.
13. PROVIDE WOOD BLOCKING AT EVERY LADDER BRACKET.

KEYPLAN N.T.S.

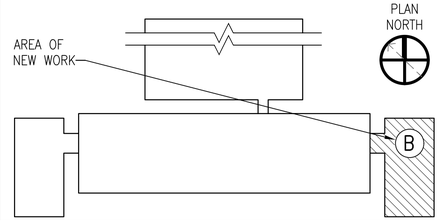

GRAPHIC SCALE

3/16"=1'-0" 0' 4' 8' 12'

							APPR
							DATE
							DESCRIPTION
							CTM

NAVFAC

SEAL

A/E INFO

APPROVED

FOR COMMANDER NAVFAC

ACTIVITY

EMILY M. SYLVESTER, PE

SATISFACTORY TO DATE 28 JUNE 2018

DES JPC DRW JPC CHK GKC

DESIGN MANAGER G. COOKE

BRANCH MANAGER DJD

CHIEF ENGINEER EJA

FIRE PROTECTION

DEPARTMENT OF THE NAVY
NAVAL FACILITIES ENGINEERING COMMAND-MID-ATLANTIC
MIDLANT CI CORE
NAVAL FACILITIES ENGINEERING COMMAND
NAVAL STATION NORFOLK VIRGINIA
MCB CAMP LEJEUNE
JACKSONVILLE, NC
P1482 MARINE SPECIAL OP SCHOOL
120 MAN CLASSROOMS
FLOOR PLAN - AREA 'B'

SCALE: AS NOTED
EPROJECT NO. 1558046
CONSTR. CONTR. NO. -
NAVFAC DRAWING NO. 12747178
SHEET 39 OF 91

A-103

DRAWFORM REVISION: 10 MARCH 2009

UNCLASSIFIED

FILE NAME: P:\NIC\Compl.ejeune\MILCON\2017_1558046_P1482_IH-088_120ManClassrooms\8_Design\Drawings\Sheet\08_Architecture\A1558046_P1482_A-103_FLOOR PLAN - AREA 'B'.dwg LAYOUT NAME: A-103 FLOOR PLAN - AREA 'B' PLOTTED: Tuesday, June 02, 2020 - 6:03pm USER: elbert.hogg

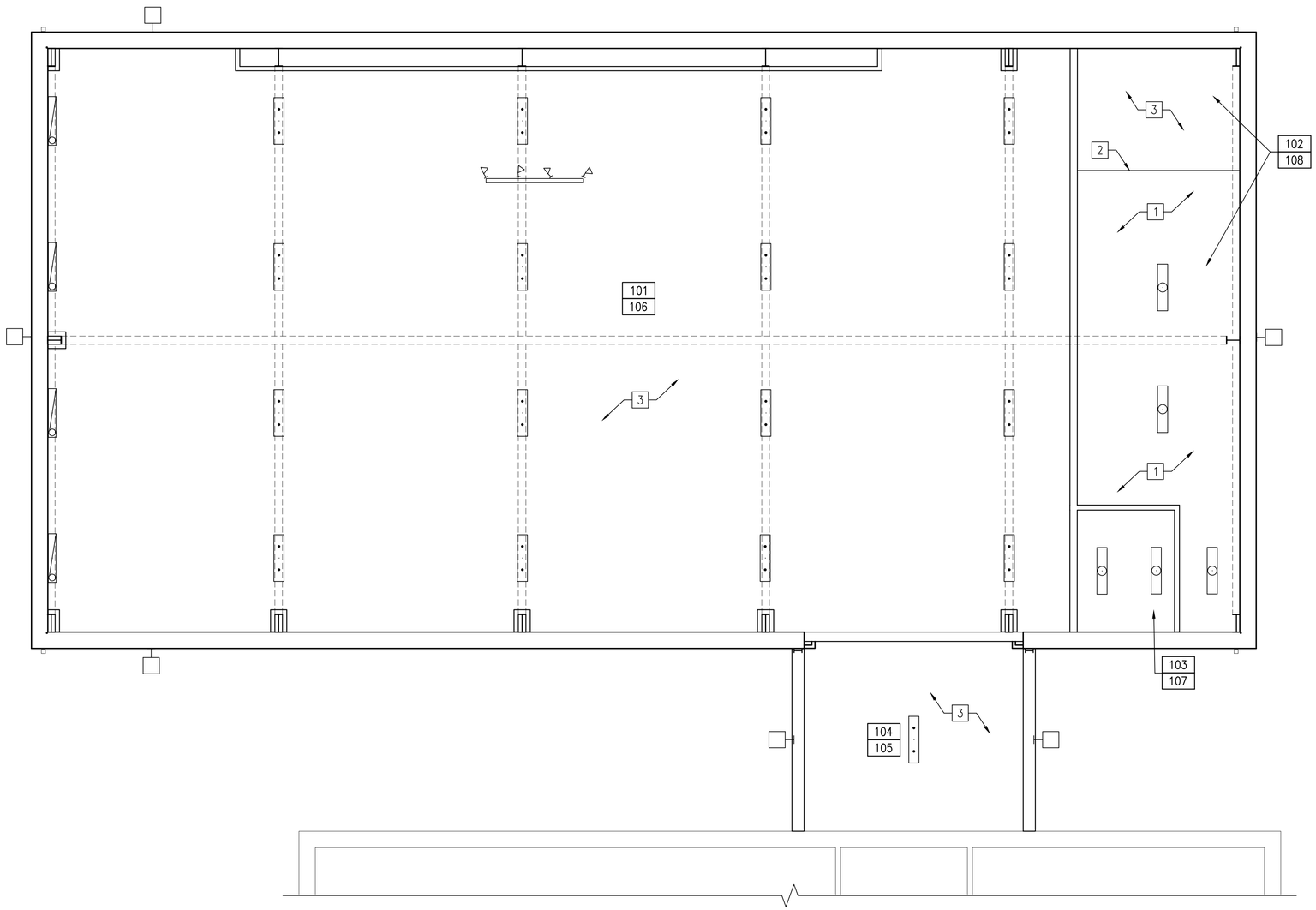

A1 REFLECTED CEILING PLAN - AREAS 'A' & 'B' (OPPOSITE HAND)
SCALE: 3/16" = 1'-0"
A-104
PLAN NORTH

GENERAL SHEET NOTES

1. REFER TO FINISH SCHEDULE FOR CEILING HEIGHTS AND FINISHES. CEILING HEIGHTS IDENTIFIED ARE MINIMUM AND SHALL BE MAINTAINED UNLESS OTHERWISE NOTED.
2. CENTER ALL LIGHT FIXTURES, EQUIPMENT, AND ACCESSORIES IN ROOMS (UON).
3. COORDINATED SPRINKLER HEADS AS REQUIRED TO MEET BUILDING CODES. ALL SPRINKLER HEADS SHALL BE CENTER IN ROOMS.
4. REFER TO LIFE SAFETY PLANS FOR FIRE RATED PARTITION LOCATIONS.
5. FOR DIFFUSER LOCATIONS IN AREAS OPEN TO ROOF STRUCTURE, REFER TO MECHANICAL DRAWINGS.
6. CABLE TRAYS AND ELECTRICAL CONDUITS MUST BE INDEPENDENTLY SUPPORTED AND BRACE.
7. CEILINGS WITHOUT RIGID BRACING MUST HAVE 2" OVERSIZED TRIM RINGS FOR SPRINKLERS AND OTHER PENETRATIONS.
8. REFER TO ELECTRICAL DRAWINGS FOR ADDITIONAL INFORMATION REGARDING LIGHT FIXTURES.

NEW WORK KEYNOTES

1. UNDERSIDE OF MECHANICAL PLATFORM.
2. LINE OF MECHANICAL PLATFORM EDGE.
3. UNDERSIDE OF PEMB INSULATION SYSTEM, EXPOSED VAPOR BARRIER.

REFLECTED CEILING PLAN LEGEND

- EXPOSED STRUCTURE
- WALL MOUNTED EXTERIOR LIGHT FIXTURE
- TRACK MOUNTED LIGHT FIXTURE
- SUSPENDED LIGHT FIXTURE
- SURFACE MOUNTED LIGHT FIXTURE
- WALL MOUNTED LIGHT FIXTURE
- UNDERSIDE OF STEEL BEAM

KEYPLAN N.T.S.

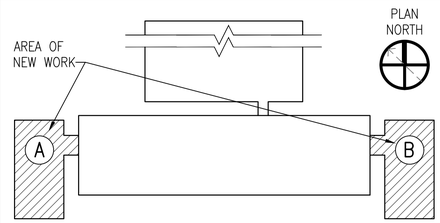

GRAPHIC SCALE

3/16"=1'-0" 0' 4' 8' 12'
3"=1'-0" 0 3" 6" 9"

SYM	DESCRIPTION	DATE	APPR

NAVFAC

SEAL

A/E INFO

APPROVED

FOR COMMANDER NAVFAC

ACTIVITY
EMILY M. SYLVESTER, PE

SATISFACTORY TO DATE 28 JUNE 2018
DES JPC DRW JPC CHK GKC
DESIGN MANAGER G. COOKE
BRANCH MANAGER DJD
CHIEF ENGINEER EJA
FIRE PROTECTION

DEPARTMENT OF THE NAVY
NAVAL FACILITIES ENGINEERING COMMAND
NAVAL FACILITIES ENGINEERING COMMAND~MID-ATLANTIC
NAVAL STATION NORFOLK VIRGINIA
MIDLANT CI CORE
MCB CAMP LEJEUNE JACKSONVILLE, NC
P1482 MARINE SPECIAL OP SCHOOL
120 MAN CLASSROOMS
REFLECTED CEILING PLAN

SCALE: AS NOTED
EPROJECT NO. 1558046
CONSTR. CONTR. NO. –
NAVFAC DRAWING NO. 12747178
SHEET 40 OF 91
A-104

DRAWFORM REVISION: 10 MARCH 2009

FILE NAME: P:\NC\CampLejeune\MILCON\2017_1558046_P1482_IH-DBB_120ManClassrooms\B_Design\Drawings\Sheet\08_Architectural\1558046_P1482_A-104_RCP.dwg LAYOUT NAME: A-104 A-104 REFLECTED CEILING PLAN PLOTTED: Tuesday, June 02, 2020 - 6:04pm USER: albert.hogg

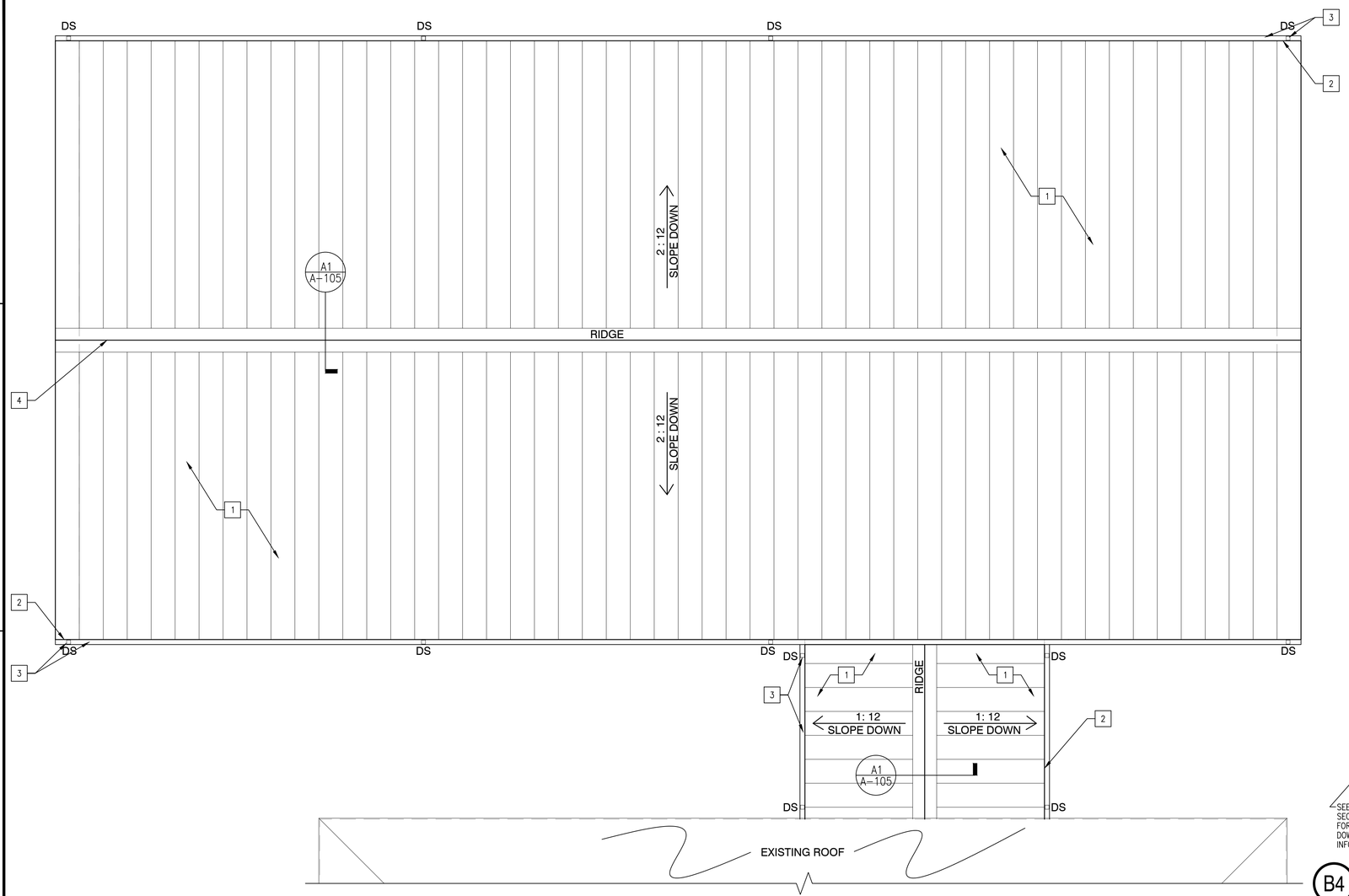

B1 ROOF PLAN - AREAS 'A' & 'B' (OPPOSITE HAND)

SCALE: 3/16" = 1'–0"

A–105 PLAN NORTH

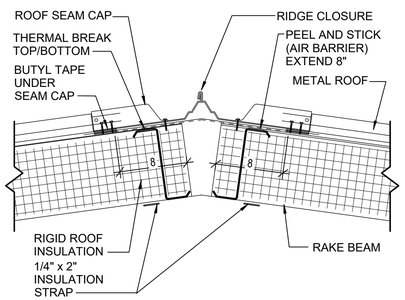

A1 METAL BUILDING ROOF RIDGE

SCALE: N.T.S.

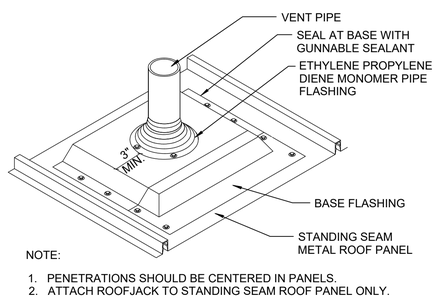

NOTE:
1. PENETRATIONS SHOULD BE CENTERED IN PANELS.
2. ATTACH ROOFJACK TO STANDING SEAM ROOF PANEL ONLY.

A2 METAL BUILDING VENT PIPE

SCALE: N.T.S.

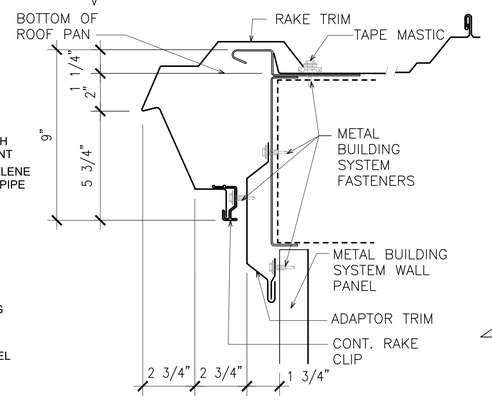

A3 RAKE DETAIL

SCALE: N.T.S.

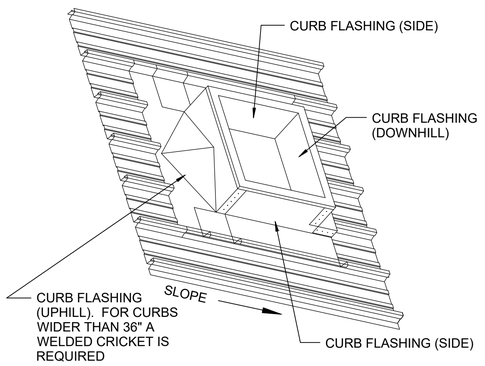

A4 METAL BUILDING ROOF CURB

SCALE: N.T.S.

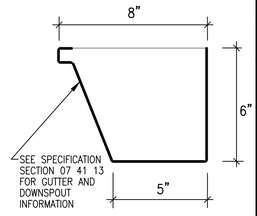

B4 GUTTER PROFILE

SCALE: 3" = 1'–0"

GENERAL SHEET NOTES

1. ALL ROOFING, UNLESS OTHERWISE NOTED, SHALL BE STANDING SEAM METAL ROOFING.
2. GUTTERS ARE TO BE SLOPED AT $\frac{1}{8}$": 1'–0" MINIMUM (UON).
3. PROVIDE ADDITIONAL FRAMING MEMBERS AT REQUIRED FOR ALL ROOF PENETRATIONS. COORDINATE WITH CONSTRUCTION MANAGER PRIOR TO COMMENCING WORK.
4. VERIFY AND COORDINATE EXACT LOCATIONS OF PENETRATIONS SO AS NOT TO INTERFERE WITH MAJOR STRUCTURAL MEMBERS.
5. PENETRATIONS AND FLASHING SHALL CONFORM TO ACCEPTED ROOFING PRACTICES AS DESCRIBED AND DETAILED IN THE CURRENT EDITION OF NRCA ROOFING AND WATERPROOFING MANUALS, SMACNA SHEET METAL MANUAL AND MANUFACTURER'S RECOMMENDATIONS.
6. ALL ITEMS MOUNTED IN OR ON THE STANDING SEAM METAL ROOF SHALL BE FINISHED TO MATCH COLOR OF THE ROOF SYSTEM.
7. ALL EXPOSED FASTENERS SHALL MATCH THE COLOR OF ADJACENT METAL.
8. ALL ITEMS MOUNTED ON THE ROOF, INCLUDING VTR'S ETC. SHALL BE PAINTED TO MATCH THE ROOF COLOR (UON).
9. ALL METAL ITEMS PROTRUDING FROM THE FACE OF THE BUILDING, INCLUDING DOWNSPOUTS, GUTTERS, GUTTER AND DOWNSPOUT STRAPPING, DOWNSPOUT BOOTS, ETC. SHALL BE PRE–FINISHED TO MATCH FASCIA COLOR UNLESS NOTED OTHERWISE.

NEW WORK KEYNOTES

1. STANDING SEAM METAL ROOF OVER PRE–ENGINEERED METAL BUILDING ROOF PURLINS
2. LINE OF WALL BELOW
3. PRE–FINISHED CONTINUOUS METAL GUTTER AND DOWNSPOUT
4. METAL BUILDING RIDGE CAP; SEE DETAIL A1/A–105
5. VENT THRU ROOF; SEE DETAIL A2/A–105 AND PLUMBING DRAWINGS FOR ADDITIONAL INFORMATION

SYMBOL LEGEND

- □ DS – DOWNSPOUT
- ○ VTR – VENT THROUGH ROOF, SEE MECHANICAL AND PLUMBING DRAWINGS, SEE PLAN NOTE 4 ABOVE
- □ DTR – (MECHANICAL) DUCT THRU ROOF
- → DIRECTION OF ROOF SLOPE

KEYPLAN N.T.S.

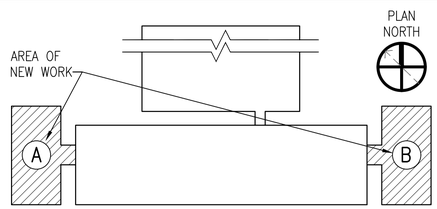

GRAPHIC SCALE

3/16"=1'–0" 0' 4' 8' 12'

3"=1'–0" 0 3" 6" 9"

APPR	DATE	DESCRIPTION	CTM

NAVFAC

SEAL

A/E INFO

APPROVED

FOR COMMANDER NAVFAC

ACTIVITY

EMILY M. SYLVESTER, PE

SATISFACTORY TO DATE 28 JUNE 2018

DES JPC | DRW JPC | CHK GKC

DESIGN MANAGER G. COOKE

BRANCH MANAGER DJD

CHIEF ENGINEER EJA

FIRE PROTECTION

DEPARTMENT OF THE NAVY
NAVAL FACILITIES ENGINEERING COMMAND–MID-ATLANTIC
NAVAL STATION NORFOLK VIRGINIA
MIDLANT CI CORE
MCB CAMP LEJEUNE JACKSONVILLE, NC

P1482 MARINE SPECIAL OP SCHOOL
120 MAN CLASSROOMS

ROOF PLAN AND DETAILS

SCALE: AS NOTED

EPROJECT NO. 1558046

CONSTR. CONTR. NO. –

NAVFAC DRAWING NO. 12747179

SHEET 41 OF 91

A-105

DRAWFORM REVISION: 10 MARCH 2009

FILE NAME: P:\WC\Compl_cy\pure\MILCON\2017_1558046_P1482_JH–DBB_120ManClassrooms\8_Design\Drawings\Sheet\08_Architecture\1558046_P1482_A–105_RP_AND_DETS.dwg LAYOUT NAME: A–105 ROOF PLAN AND DETAILS PLOTTED: Tuesday, June 02, 2020 – 6:04pm USER: elbert.hogg

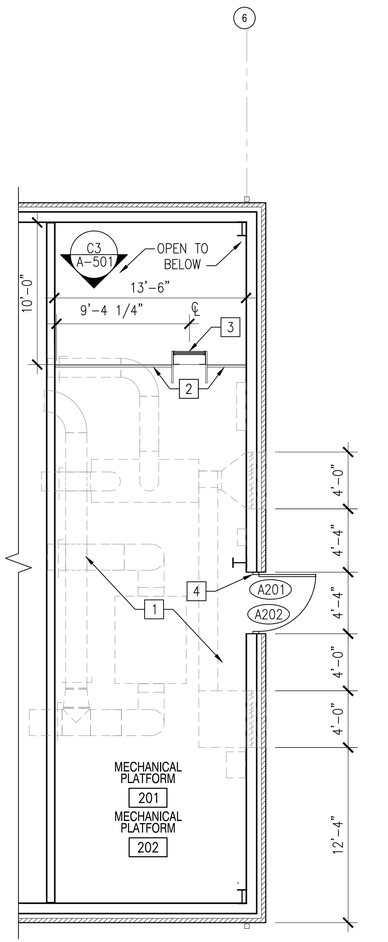

MECHANICAL PLATFORM FLOOR PLAN - AREAS 'A' & 'B' (OPPOSITE HAND)

A1 SCALE: 3/16" = 1'-0" A-106

PLAN NORTH

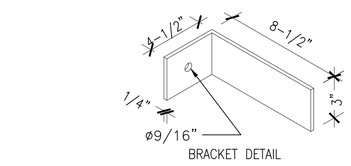

C2 PLATFORM LADDER DETAILS

SCALE: 1/2" = 1'-0" A-106

A2 PLATFORM LADDER ELEVATION

SCALE: 1/2" = 1'-0" A-106

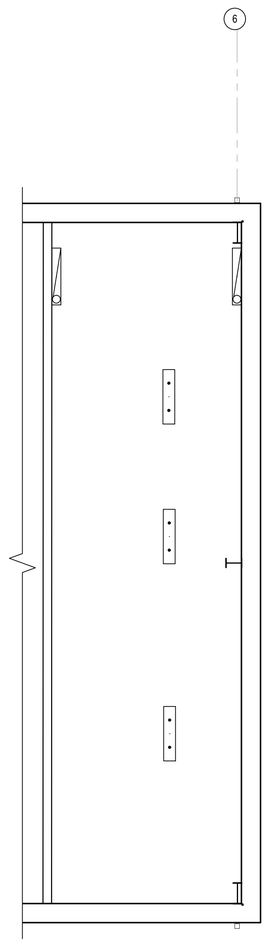

MECHANICAL PLATFORM REFLECTED CEILING PLAN - AREAS 'A' & 'B' (OPPOSITE HAND)

A3 SCALE: 3/16" = 1'-0" A-106

PLAN NORTH

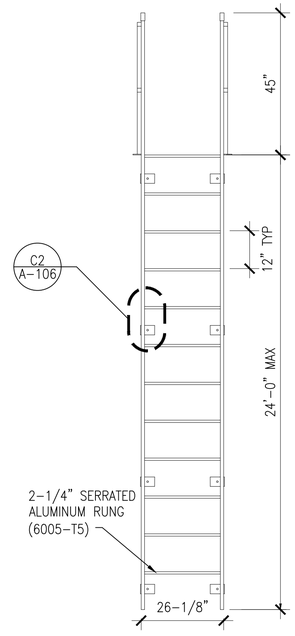

B4 PLATFORM LADDER ELEVATION

SCALE: 1/2" = 1'-0" A-106

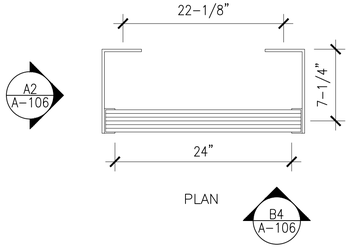

A4 PLATFORM LADDER PLAN

SCALE: 1/2" = 1'-0" A-106

GENERAL SHEET NOTES

1. REFER TO ELECTRICAL DRAWINGS FOR ADDITIONAL INFORMATION REGARDING LIGHT FIXTURES.

☐ NEW WORK KEYNOTES

1. MECHANICAL PLATFORM. SEE STRUCTURAL FOR DECKING DETAIL.
2. 1 1/2" DIA STEEL PIPE GUARDRAIL. GALVANIZED CHAIN CLOSURES AT OPENING WITH DUAL HASPS. SEE DETAIL C3/A-501.
3. STEEL MEZZANINE ACCESS LADDER. FOR ADDITIONAL INFORMATION SEE DETAILS A4/A-106.
4. PEMB STRUCTURAL MEMBERS MUST NOT OBSTRUCT OR REDUCE THE DOOR OPENING. THE DOOR MUST BE FULLY OPERATIONAL. SEE STRUCTURAL DRAWINGS FOR MORE INFORMATION.

REFLECTED CEILING PLAN LEGEND

- EXPOSED STRUCTURE
- WALL MOUNTED EXTERIOR LIGHT FIXTURE
- SUSPENDED LIGHT FIXTURE
- SURFACE MOUNTED LIGHT FIXTURE

KEYPLAN N.T.S.

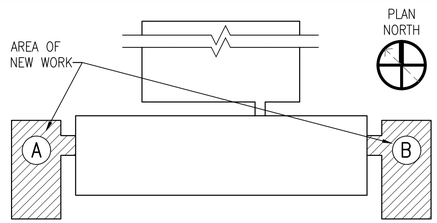

GRAPHIC SCALE

3/16"=1'-0" 0' 4' 8' 12'

1/2"=1'-0" 0' 1' 2' 4'

APPR	DATE	DESCRIPTION	CTM

NAVFAC

SEAL

A/E INFO

APPROVED

FOR COMMANDER NAVFAC

ACTIVITY

EMILY M. SYLVESTER, PE

SATISFACTORY TO DATE 28 JUNE 2018

DES GKC | DRW JPC | CHK GKC

DESIGN MANAGER G. COOKE

BRANCH MANAGER DJD

CHIEF ENGINEER EJA

FIRE PROTECTION

DEPARTMENT OF THE NAVY
NAVAL FACILITIES ENGINEERING COMMAND
NAVAL FACILITIES ENGINEERING COMMAND–MID-ATLANTIC
NAVAL STATION NORFOLK VIRGINIA
MIDLANT CI CORE
MCB CAMP LEJEUNE JACKSONVILLE, NC
P1482 MARINE SPECIAL OP SCHOOL
120 MAN CLASSROOMS
MECHANICAL PLATFORM FLOOR AND REFLECTED CEILING PLAN

SCALE: AS NOTED

EPROJECT NO. 1558046

CONSTR. CONTR. NO. –

NAVFAC DRAWING NO. 12747180

SHEET 42 OF 91

A-106

DRAWFORM REVISION: 10 MARCH 2009

UNCLASSIFIED

FILE NAME: P:\MCI\Compk\pnwe\MILCON\2017_1558046_P1482_IH-08B_120ManClassrooms\8_Design\Drawings\Sheet\(08_Architecture)\1558046_P1482_A-106 MECH PLATFORM FLR AND RCP.dwg LAYOUT NAME: A-106 MECHANICAL PLATFORM FLOOR AND REFLECTED CEILING PLAN PLOTTED: Tuesday, June 02, 2020 - 6:05pm USER: albert.hogg

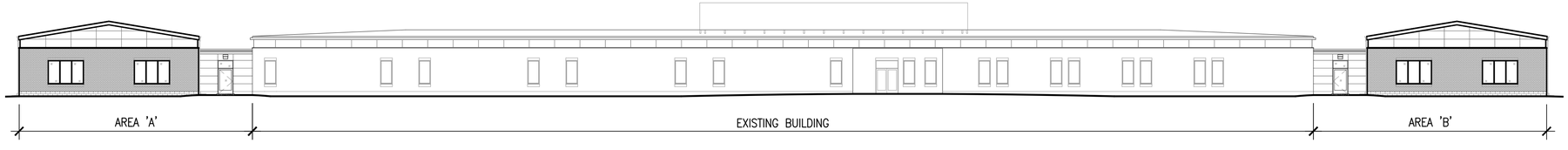

D1 OVERALL BUILDING SOUTH ELEVATION

SCALE: N.T.S. A-101

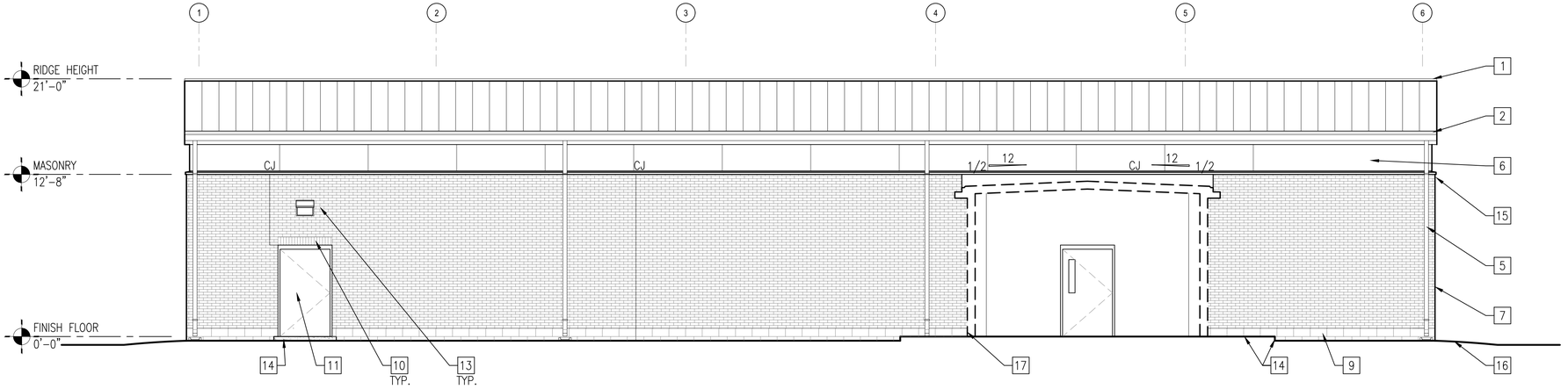

B1 EAST ELEVATION - AREA 'A'

(WEST ELEVATION OF AREA 'B' SIMILAR BUT OPPOSITE HAND)

SCALE: 3/16"=1'-0" A-102

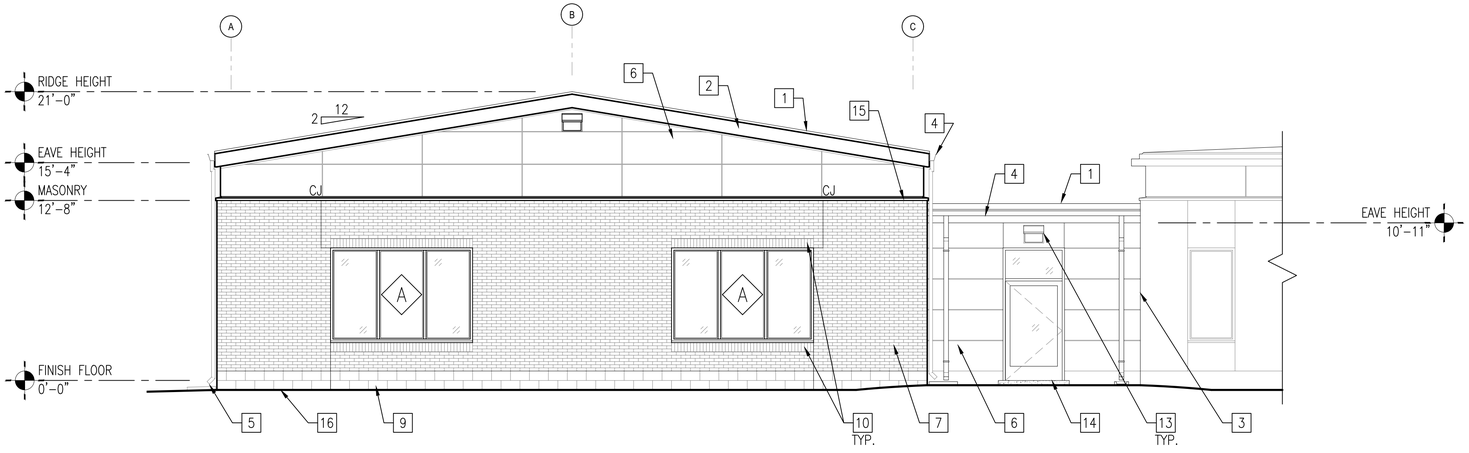

A1 SOUTH ELEVATION - AREA 'A'

(SOUTH ELEVATION OF AREA 'B' SIMILAR BUT OPPOSITE HAND)

SCALE: 3/16"=1'-0" A-102

GENERAL SHEET NOTES

1. ALL WORK SHALL BE PREFORMED IN ACCORDANCE WITH APPLICABLE FEDERAL CODES AND STANDARDS.
2. VERIFY ALL DIMENSIONS AND CONDITIONS PRIOR TO THE START OF CONSTRUCTION. ANY DISCREPANCIES SHALL BE BROUGHT TO THE IMMEDIATE ATTENTION OF THE CONTRACTING OFFICER FOR RESOLUTION.
3. COORDINATE ALL REQUIRED CONDUIT, PIPING AND CHASES FOR OWNER FURNISHED, OWNER INSTALLED EQUIPMENT WITH THE GOVERNMENT.
4. COORDINATE WITH WORK BEING PERFORMED UNDER SEPARATE CONTRACT WITH THE GOVERNMENT.
5. CONTROL JOINT; SEE DETAIL D2/A501

NEW WORK KEYNOTES

1. STANDING SEAM METAL ROOF, SEE EXTERIOR FINISH SCHEDULE.
2. RAKE TRIM TO MATCH ROOF SYSTEM
3. LINE OF EXISTING BUILDING
4. CONTINUOUS GUTTER, SEE EXTERIOR FINISH SCHEDULE.
5. DOWNSPOUT WITH SPLASH BLOCK
6. METAL PANEL SYSTEM TO MATCH EXISTING BUILDING. METAL BUILDING MFR. PANEL SYSTEM, SEE EXTERIOR FINISH SCHEDULE.
7. BRICK VENEER
8. MASONRY CONTROL JOINT, SEE DETAIL
9. SPLIT FACE CMU BASE COURSES, SEE EXTERIOR FINISH SCHEDULE.
10. BRICK SOLDIER COURSE AT DOOR AND WINDOW HEADS AND WINDOW SILLS, TYP.
11. INSULATED STEEL PERSONNEL DOOR, REFERENCE DOOR SCHEDULE ON SHEET A-601
12. NOT USED
13. EXTERIOR LIGHTING, SEE ELECTRICAL DRAWINGS FOR ADDITIONAL INFORMATION
14. PAVING, SEE CIVIL DRAWINGS FOR ADDITIONAL INFORMATION
15. CONT. METAL SILL, BY METAL BUILDING MFR.
16. FINISH GRADE
17. LINE OF BUILDING CONNECTOR

EXTERIOR FINISH SCHEDULE

NOTE: EXTERIOR FINISH SELECTIONS MUST BE CONFIRMED BY THE MCB CAMP LEJUENE BASE EXTERIOR ARCHITECTURAL PLAN (BEAP) BOARD

A. EXTERIOR BRICK – RED FLASHED WIRE CUT WITH GRAY MORTAR
B. EXTERIOR SPLIT FACED CMU – GRAY WITH GRAY MORTAR
C. STANDING SEAM METAL ROOF – SLATE GRAY
D. METAL WALL PANELS – SLATE GRAY
E. METAL WALL SYSTEM – SLATE GRAY
F. EXTERIOR PAINT (DOORS, DOOR FRAMES, LOUVERS, STEEL (LINTELS) – MATCH BRICK COLOR
G. METAL FLASHING AND WRAP – MATCH METAL WALL PANELS
H. METAL FASCIA AT ROOF EAVES AND RAKES – MATCH SLATE GRAY
I. STOREFRONT – SLATE GRAY

GRAPHIC SCALE

3/16"=1'-0" 0' 4' 8' 12'

	APPR	DATE	DESCRIPTION	CTM

NAVFAC

SEAL

A/E INFO

APPROVED

FOR COMMANDER NAVFAC

ACTIVITY

EMILY M. SYLVESTER, PE

SATISFACTORY TO DATE 28 JUNE 2018

DES JPC DRW JPC CHK GKC

DESIGN MANAGER G. COOKE

BRANCH MANAGER DJD

CHIEF ENGINEER EJA

FIRE PROTECTION

DEPARTMENT OF THE NAVY
NAVAL FACILITIES ENGINEERING COMMAND–MID-ATLANTIC
NAVAL STATION NORFOLK VIRGINIA
MIDLANT CI CORE

NAVAL FACILITIES ENGINEERING COMMAND
JACKSONVILLE, NC

MCB CAMP LEJUENE
P1482 MARINE SPECIAL OP SCHOOL
120 MAN CLASSROOMS

BUILDING ELEVATIONS

SCALE: AS NOTED

EPROJECT NO. 1558046

CONSTR. CONTR. NO. –

NAVFAC DRAWING NO. 12747181

SHEET 43 OF 91

A-201

DRAWFORM REVISION: 10 MARCH 2009

FILE NAME: P:\NC\Camp Lejeune\MILCON\2017_1558046_P1482_IH-DBB_120ManClassrooms\8_Design\Drawings\Sheet\08_Architectural\1558046_P1482_A-201_BUILDING ELEVATIONS.dwg LAYOUT NAME: A-201 BUILDING ELEVATIONS PLOTTED: Tuesday, June 02, 2020 - 6:03pm USER: albert.hogg

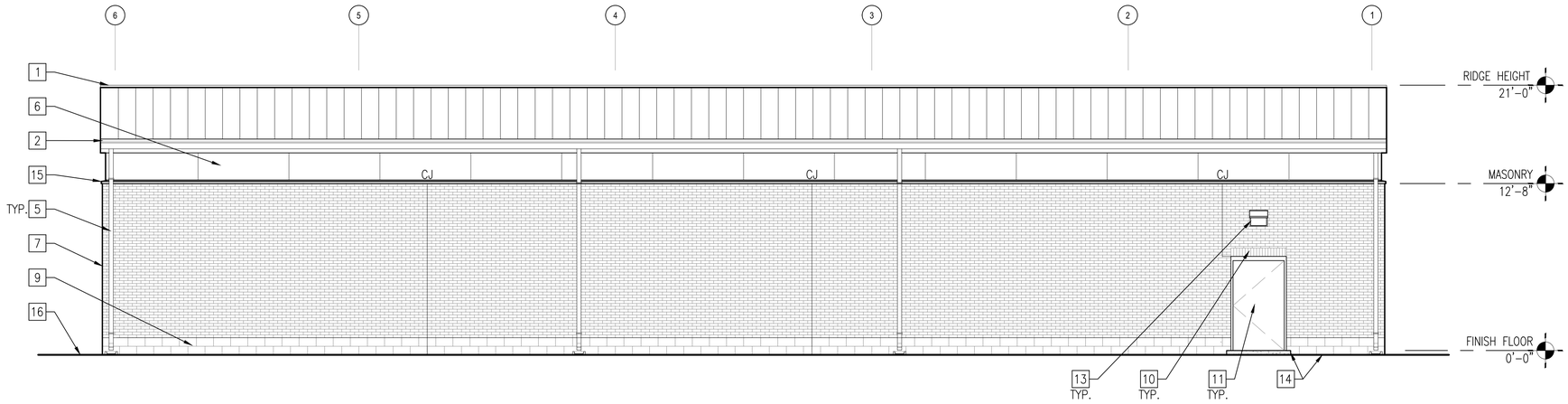

C1 WEST ELEVATION - AREA 'A' (EAST ELEVATION OF AREA 'B' SIMILAR BUT OPPOSITE HAND)
SCALE: 3/16"=1'-0" A-102

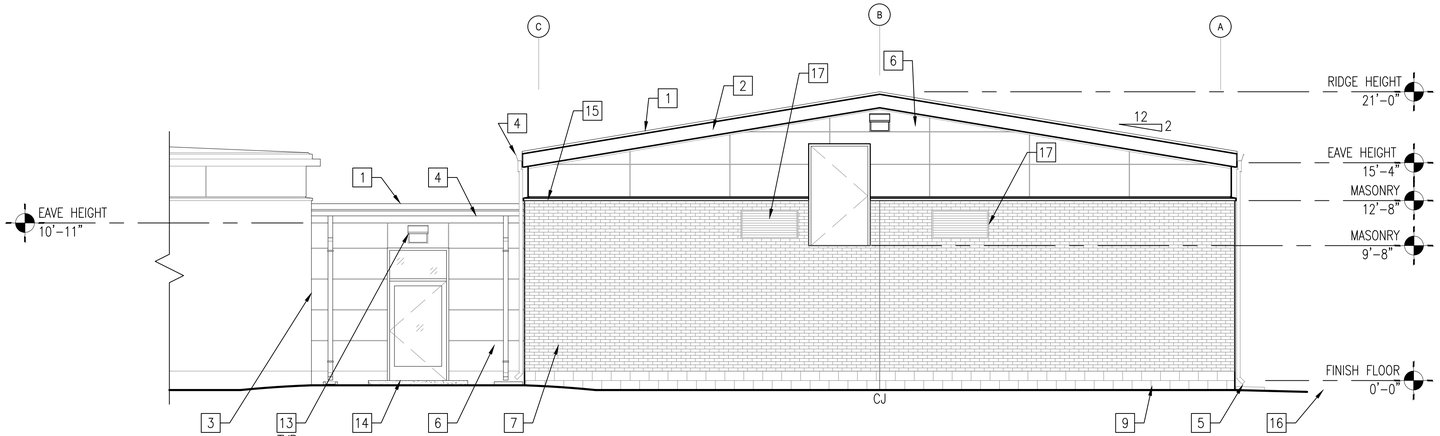

A1 NORTH ELEVATION - AREA 'A' (NORTH ELEVATION OF AREA 'B' SIMILAR BUT OPPOSITE HAND)
SCALE: 3/16"=1'-0" A-102

GENERAL SHEET NOTES

1. ALL WORK SHALL BE PREFORMED IN ACCORDANCE WITH APPLICABLE FEDERAL CODES AND STANDARDS.
2. VERIFY ALL DIMENSIONS AND CONDITIONS PRIOR TO THE START OF CONSTRUCTION. ANY DISCREPANCIES SHALL BE BROUGHT TO THE IMMEDIATE ATTENTION OF THE CONTRACTING OFFICER FOR RESOLUTION.
3. COORDINATE ALL REQUIRED CONDUIT, PIPING AND CHASES FOR OWNER FURNISHED, OWNER INSTALLED EQUIPMENT WITH THE GOVERNMENT.
4. COORDINATE WITH WORK BEING PERFORMED UNDER SEPARATE CONTRACT WITH THE GOVERNMENT.

NEW WORK KEYNOTES

1. STANDING SEAM METAL ROOF
2. RAKE TRIM TO MATCH ROOF SYSTEM
3. LINE OF EXISTING BUILDING
4. CONTINUOUS GUTTER
5. DOWNSPOUT WITH SPLASH BLOCK
6. STANDARD METAL BUILDING MFR. PANEL SYSTEM
7. BRICK VENEER
8. MASONRY CONTROL JOINT, SEE DETAIL
9. SPLIT FACE CMU BASE COURSES
10. BRICK SOLDIER COURSE AT DOOR AND WINDOW HEADS AND WINDOW SILLS, TYP.
11. INSULATED STEEL PERSONNEL DOOR, REFERENCE DOOR SCHEDULE ON SHEET A-601
12. NOT USED
13. EXTERIOR LIGHTING, SEE ELECTRICAL DRAWINGS FOR ADDITIONAL INFORMATION
14. PAVING, SEE CIVIL DRAWINGS FOR ADDITIONAL INFORMATION
15. CONT. METAL SILL, BY METAL BUILDING MFR.
16. FINISH GRADE
17. MECHANICAL LOUVER, SEE MECHANICAL DRAWINGS FOR ADDITIONAL INFORMATION

GRAPHIC SCALE

3/16"=1'-0" 0' 4' 8' 12'

SYM	DESCRIPTION	DATE	APPR

NAVFAC

SEAL

A/E INFO

APPROVED

FOR COMMANDER NAVFAC

ACTIVITY
EMILY M. SYLVESTER, PE

SATISFACTORY TO DATE 28 JUNE 2018
DES JPC DRW JPC CHK GKC
DESIGN MANAGER G. COOKE
BRANCH MANAGER DJD
CHIEF ENGINEER EJA
FIRE PROTECTION

DEPARTMENT OF THE NAVY
NAVAL FACILITIES ENGINEERING COMMAND
NAVAL FACILITIES ENGINEERING COMMAND~MID-ATLANTIC
MIDLANT CI CORE
NAVAL STATION NORFOLK VIRGINIA
MCB CAMP LEJEUNE
JACKSONVILLE, NC
P1482 MARINE SPECIAL OP SCHOOL
120 MAN CLASSROOMS
BUILDING ELEVATIONS

SCALE: AS NOTED
EPROJECT NO. 1558046
CONSTR. CONTR. NO. –
NAVFAC DRAWING NO. 12747182
SHEET 44 OF 91
A-202

DRAWFORM REVISION: 10 MARCH 2009

FILE NAME: P:\NC\CampLejeune\MILCON\2017_1558046_P1482_IH-DBB_120ManClassrooms\B_Design\Drawings\Sheet\08_Architectural\1558046_P1482_A-202 BUILDING ELEVATIONS.dwg LAYOUT NAME: A-202 BUILDING ELEVATIONS PLOTTED: Tuesday, June 02, 2020 - 6:06pm USER: albert.hogg

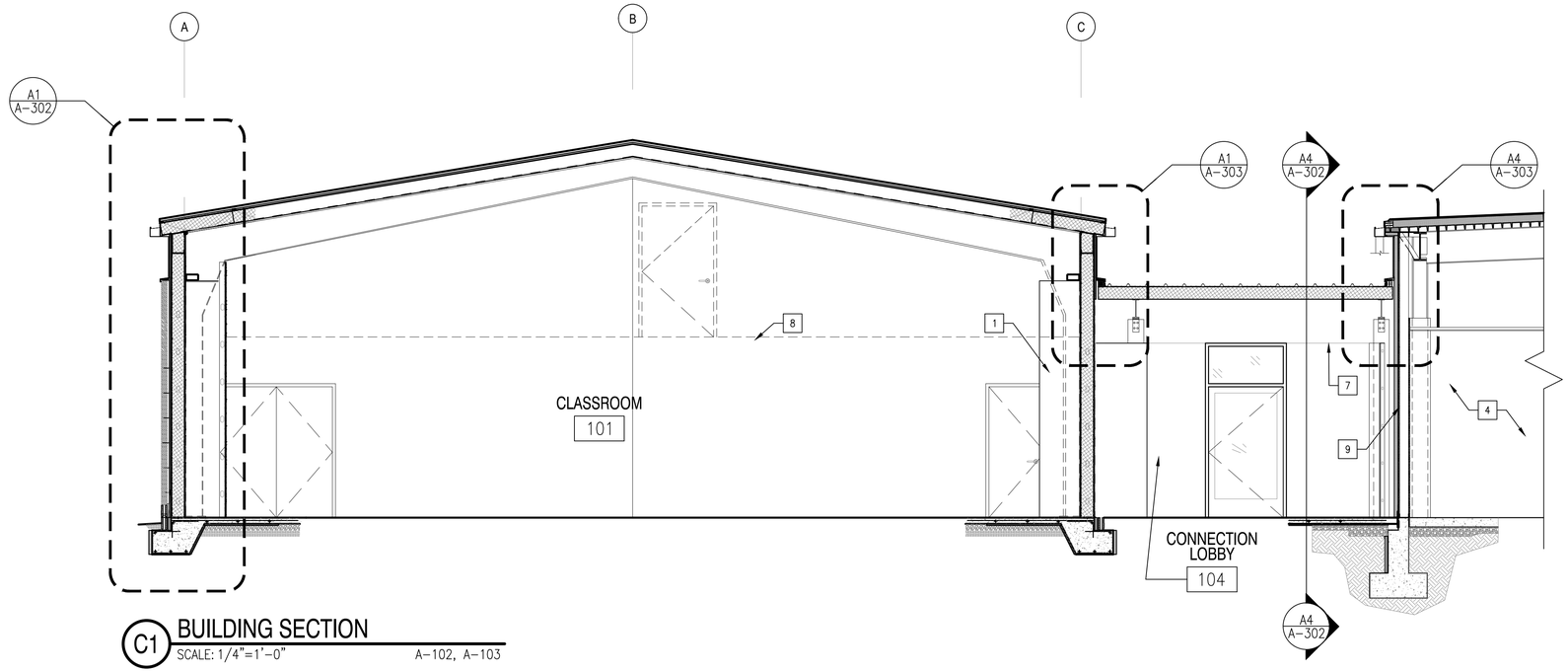

C1 BUILDING SECTION
SCALE: 1/4"=1'-0" A-102, A-103

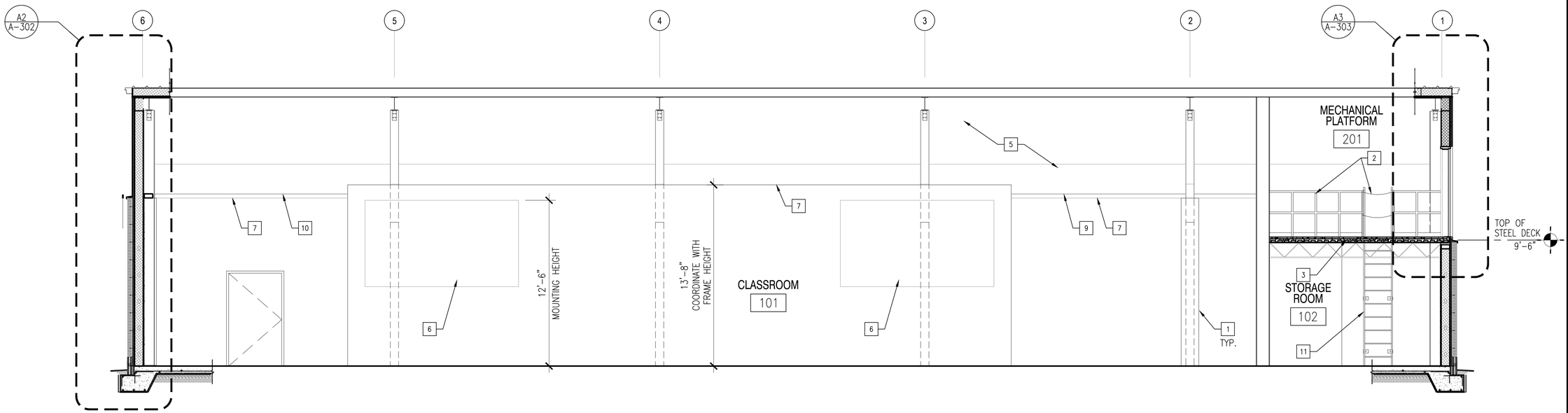

A1 BUILDING SECTION
SCALE: 1/4"=1'-0" A-102, A-103

NEW WORK KEYNOTES

1. COLUMN ENCLOSURE BEYOND. SEE DETAIL C5/A-501 FOR ADDITIONAL INFORMATION
2. 1 1/2" DIA STEEL PIPE GUARDRAIL. GALVANIZED CHAIN CLOSURES AT OPENING WITH DUAL HASPS. SEE DETAIL C3/A-501
3. MECHANICAL PLATFORM. SEE DETAIL C1/A-501
4. EXISTING BUILDING
5. EXPOSED FACE OF VINYL VAPOR BARRIER @ PEMB INSULATION SYSTEM.
6. PROJECTION SCREEN. PROVIDE BLOCKING FOR PROJECTION SCREEN MOUNT. REFER TO ELECTRICAL DRAWINGS FOR ADDITIONAL REQUIREMENTS. EXACT MOUNTING LOCATION AS DIRECTED BY ROICC.
7. LINE OF TOP OF STUDS AND DRYWALL.
8. LINE OF MECH. PLATFORM BEYOND.
9. FLUID APPLIED AIR BARRIER AT FACE OF EXISTING BRICK
10. STEEL TUBE BEYOND BY PRE-ENGINEERED METAL BUILDING MANUFACTURER.
11. STEEL ACCESS LADDER FASTENED TO STEEL PIPE GUARD RAIL AND GYP BOARD WALL.

GRAPHIC SCALE

1/4"=1'-0" 0' 2' 4' 8'

SYM	DESCRIPTION	DATE	APPR

NAVFAC

SEAL

A/E INFO.

APPROVED

FOR COMMANDER NAVFAC

ACTIVITY
EMILY M. SYLVESTER, PE

SATISFACTORY TO DATE 28 JUNE 2018
DES JPC DRW JPC CHK MC
DESIGN MANAGER G. COOKE
BRANCH MANAGER DJD
CHIEF ENGINEER EJA
FIRE PROTECTION

DEPARTMENT OF THE NAVY
NAVAL FACILITIES ENGINEERING COMMAND
MIDLANT CI CORE
NAVAL FACILITIES ENGINEERING COMMAND~MID-ATLANTIC
NAVAL STATION NORFOLK VIRGINIA
MCB CAMP LEJEUNE JACKSONVILLE, NC
P1482 MARINE SPECIAL OP SCHOOL
120 MAN CLASSROOMS
BUILDING SECTIONS

SCALE: AS NOTED
EPROJECT NO. 1558046
CONSTR. CONTR. NO. –
NAVFAC DRAWING NO. 12747183
SHEET 45 OF 91
A-301

DRAWFORM REVISION: 10 MARCH 2009

FILE NAME: P:\NC\CampLejeune\MILCON\2017_1558046_P1482_IH-DBB_120ManClassrooms\B_Design\Drawings\Sheet\08_Architectural\1558046_P1482_A-301_BUILDING SECTIONS.dwg LAYOUT NAME: A-301 BUILDING SECTIONS PLOTTED: Tuesday, June 02, 2020 - 6:07pm USER: albert.hogg

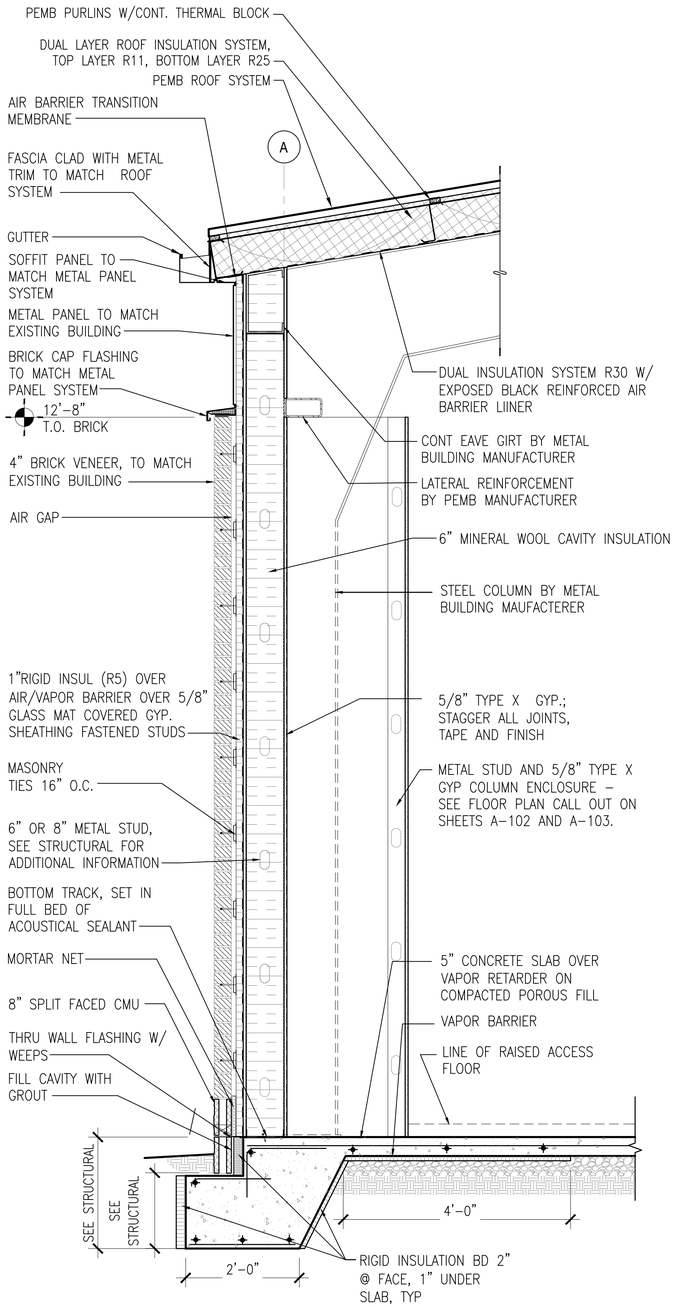

A1 WALL SECTION
SCALE: 3/4" = 1'-0" A-301

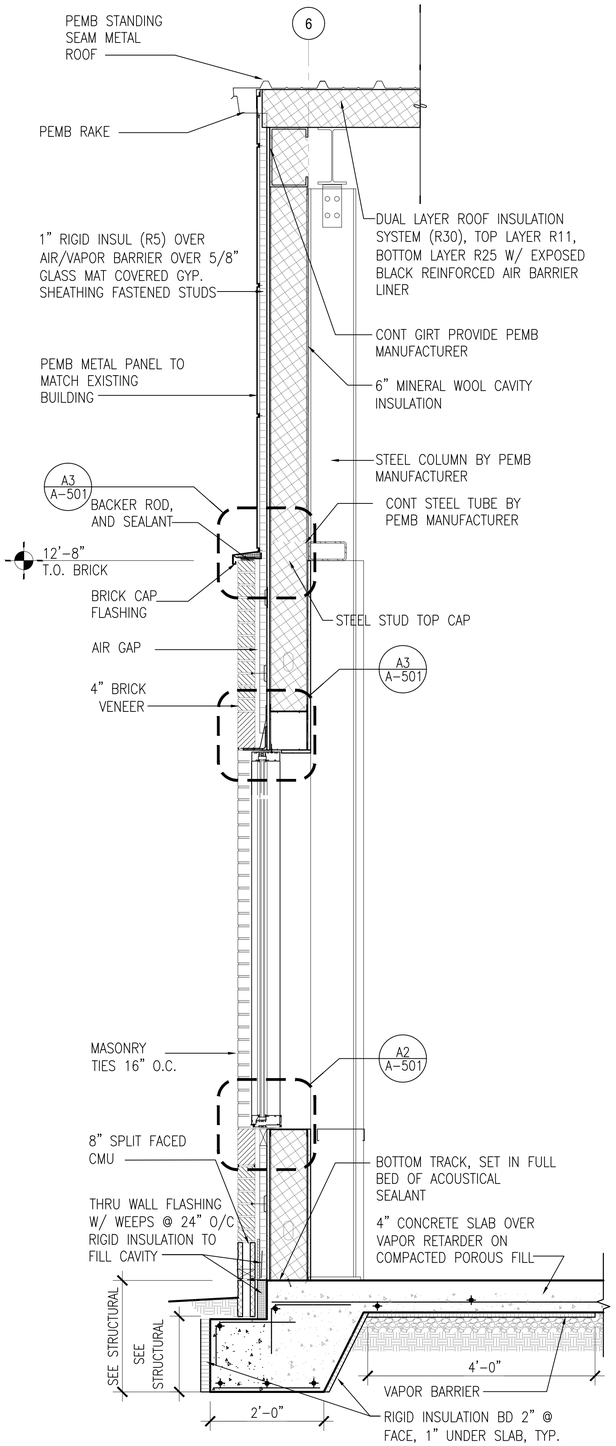

A2 WALL SECTION
SCALE: 3/4" = 1'-0" A-301

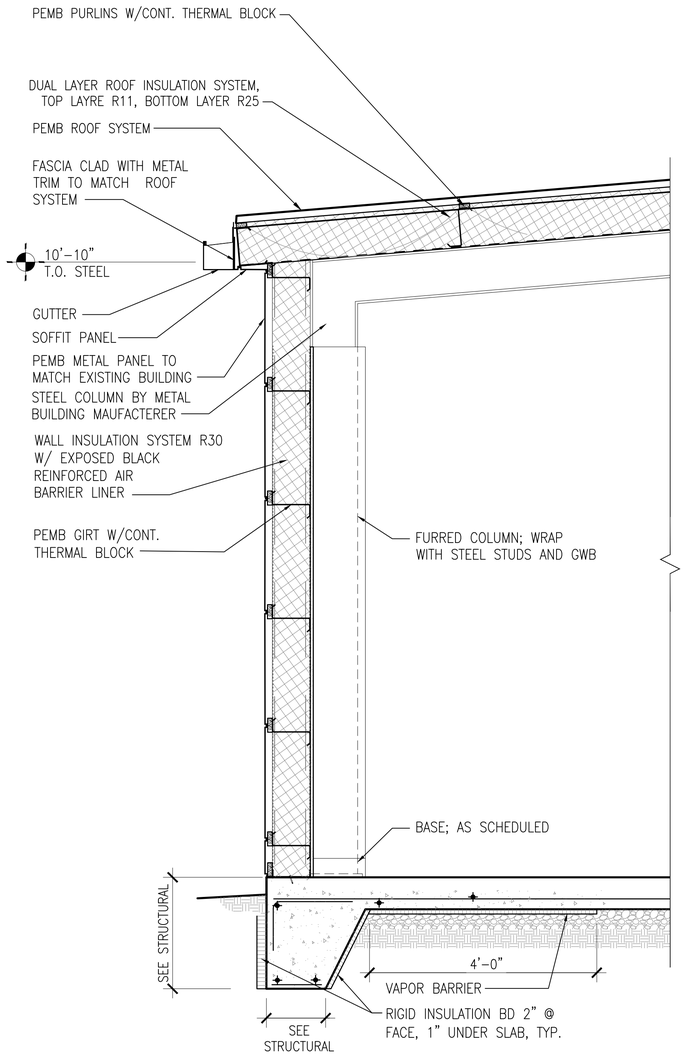

A4 WALL SECTION
SCALE: 3/4" = 1'-0" A-301

GRAPHIC SCALE
3/4"=1'-0" 0 1' 2' 3'

APPR	DATE	DESCRIPTION	CTM
--	--	--	--

NAVFAC

SEAL

A/E INFO

APPROVED
FOR COMMANDER NAVFAC
ACTIVITY
EMILY M. SYLVESTER, PE
SATISFACTORY TO DATE 28 JUNE 2018
DES JPC | DRW JPC | CHK GKC
DESIGN MANAGER G. COOKE
BRANCH MANAGER DJD
CHIEF ENGINEER EJA
FIRE PROTECTION

DEPARTMENT OF THE NAVY
NAVAL FACILITIES ENGINEERING COMMAND
NAVAL FACILITIES ENGINEERING COMMAND–MID-ATLANTIC
NAVAL STATION NORFOLK VIRGINIA
MIDLANT CI CORE
MCB CAMP LEJEUNE JACKSONVILLE, NC
P1482 MARINE SPECIAL OP SCHOOL
120 MAN CLASSROOMS
WALL SECTIONS

SCALE: AS NOTED
EPROJECT NO. 1558046
CONSTR. CONTR. NO. –
NAVFAC DRAWING NO. 12747184
SHEET 46 OF 91
A-302
DRAWFORM REVISION: 10 MARCH 2009

FILE NAME: P:\NC\Comp\Lejeune\MILCON\2017_1558046_P1482_IH-088_120ManClassrooms\8_Design\Drawings\Sheet\08_Architectural\1558046_P1482_A-302_WALL SECTIONS.dwg LAYOUT NAME: A-302 WALL SECTIONS PLOTTED: Tuesday, June 02, 2020 - 6:09pm USER: dibert.hogg

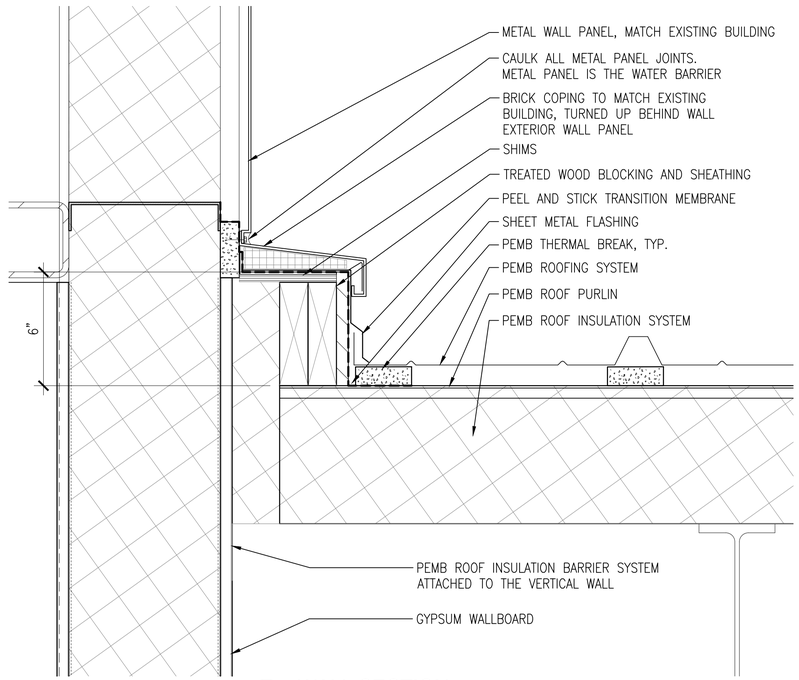

C1 WALL SECTION
SCALE: 3/4" = 1'-0" A-301

A1 WALL SECTION
SCALE: 3/4" = 1'-0" A-301

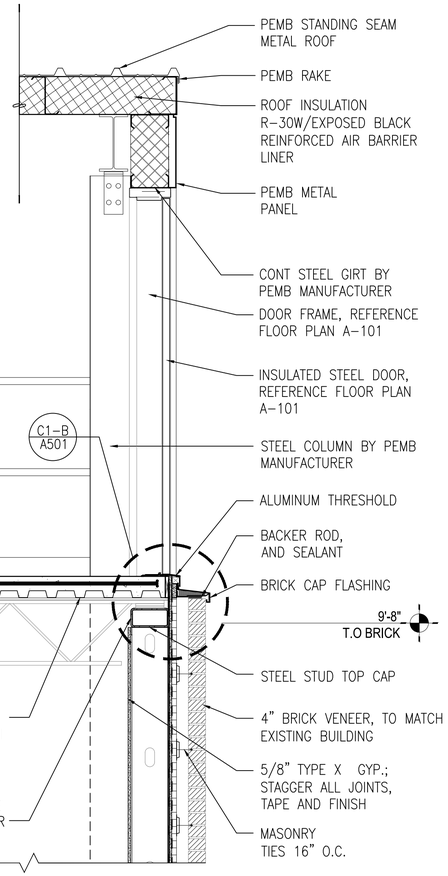

A3 WALL SECTION
SCALE: 3/4" = 1'-0" A-301

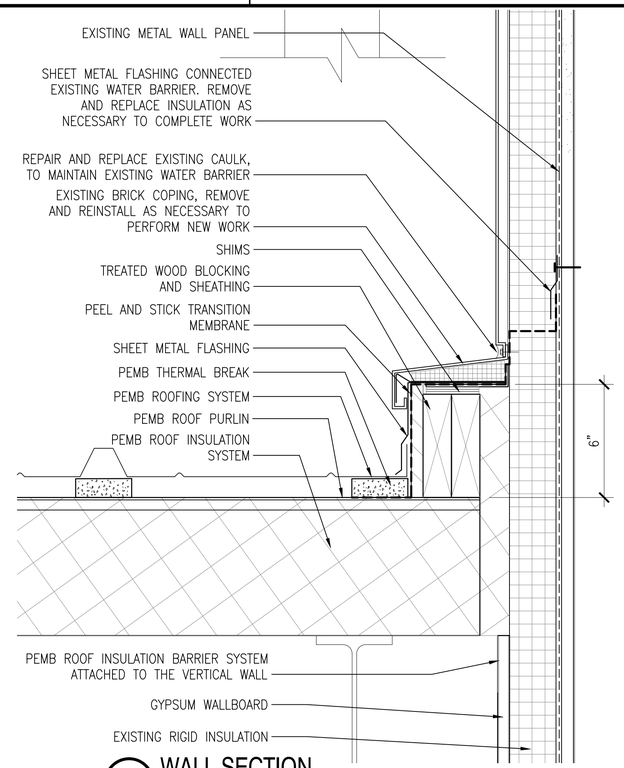

C4 WALL SECTION
SCALE: 3/4" = 1'-0" A-301

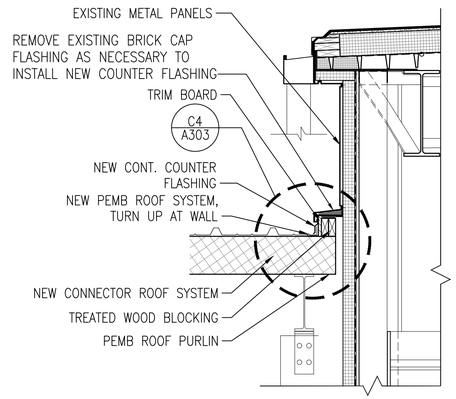

A4 WALL SECTION
SCALE: 3/4" = 1'-0" A-301

GRAPHIC SCALE
3/4"=1'-0" 0 1' 2' 3'

SYM	DESCRIPTION	DATE	APPR

NAVFAC

SEAL

A/E INFO

APPROVED
FOR COMMANDER NAVFAC

ACTIVITY
EMILY M. SYLVESTER, PE
SATISFACTORY TO DATE 28 JUNE 2018
DES GKC DRW JPC CHK GKC
DESIGN MANAGER G. COOKE
BRANCH MANAGER DJD
CHIEF ENGINEER EJA
FIRE PROTECTION

DEPARTMENT OF THE NAVY
NAVAL FACILITIES ENGINEERING COMMAND
MIDLANT CI CORE
MCB CAMP LEJEUNE
NAVAL FACILITIES ENGINEERING COMMAND—MID-ATLANTIC
NAVAL STATION NORFOLK VIRGINIA
JACKSONVILLE, NC
P1482 MARINE SPECIAL OP SCHOOL
120 MAN CLASSROOMS
WALL SECTIONS

SCALE: AS NOTED
EPROJECT NO. 1558046
CONSTR. CONTR. NO. –
NAVFAC DRAWING NO. 12748519
SHEET 47 OF 91
A-303
DRAWFORM REVISION: 06 JANUARY 2017

FILE NAME: P:\NC\Camp Lejeune\MILCON\2017_1558046_P1482_IH-DBB_120ManClassrooms\3_Design\Drawings\Sheet\08_Architectural\1558046_P1482_A-303_WALL SECTIONS.dwg LAYOUT NAME: A-303 WALL SECTIONS PLOTTED: Tuesday, June 02, 2020 - 11:59am USER: gycki.cooke

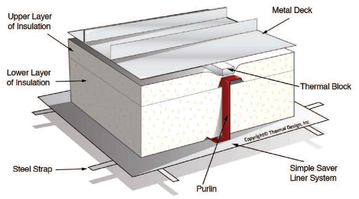

NOTE: PROPRIETARY PRODUCTS ARE SHOWN AS A REFERENCE ONLY. SEE SPECIFICATIONS FOR MORE DETAILED INFORMATION

D1 PEMB ROOF INSULATION SYSTEM
SCALE: N.T.S. A-501

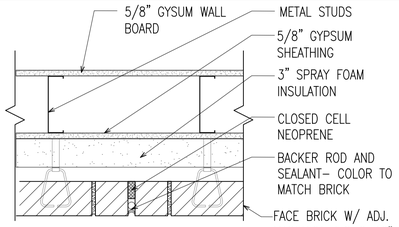

D2 WALL CONTROL JOINT DETAIL
SCALE: 1 1/2" = 1'–0" A-501

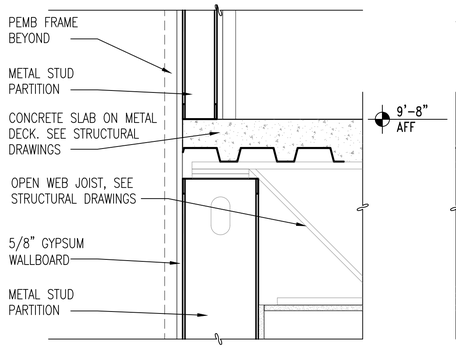

A – PARALLEL TO JOISTS

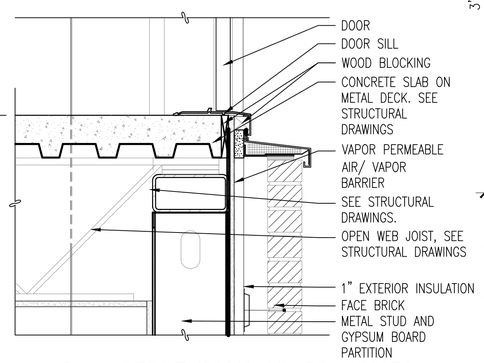

B – PERPENDICULAR TO JOISTS

C1 MECHANICAL PLATFORM DETAILS
SCALE: 1 1/2" = 1'–0" A-501

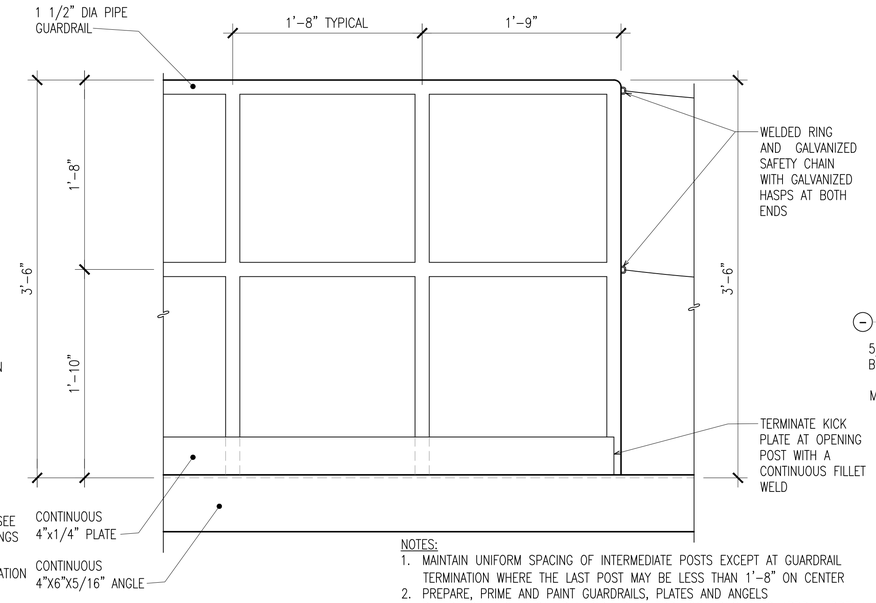

NOTES:
1. MAINTAIN UNIFORM SPACING OF INTERMEDIATE POSTS EXCEPT AT GUARDRAIL TERMINATION WHERE THE LAST POST MAY BE LESS THAN 1'–8" ON CENTER
2. PREPARE, PRIME AND PAINT GUARDRAILS, PLATES AND ANGELS
3. REFERENCE MECHANICAL PLATFORM PLAN FOR LOCATIONS OF GUARDRAIL OPENINGS
4. GUARDRAIL SHALL PROHIBIT THE PASSAGE OF A 21" SPHERE. REFERENCE SECTION 1013.4, EXCEPTION 3, 2012 IBC

C3 MECHANICAL PLATFORM GUARDRAIL DETAILS
SCALE: 1 1/2" = 1'–0" A-106

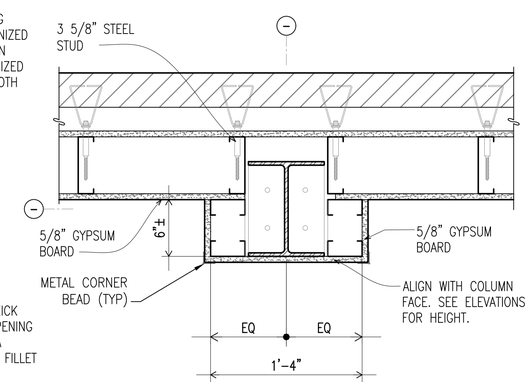

C5 INTERIOR COLUMN EXPOSURE
SCALE: 1 1/2" = 1'–0" A-102, A-103

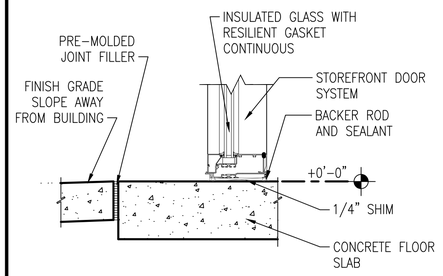

B1 STOREFRONT SILL
SCALE: 1 1/2" = 1'–0" A-501

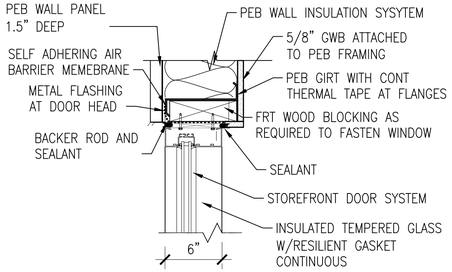

B2 STOREFRONT HEAD
SCALE: 1 1/2" = 1'–0" A-501

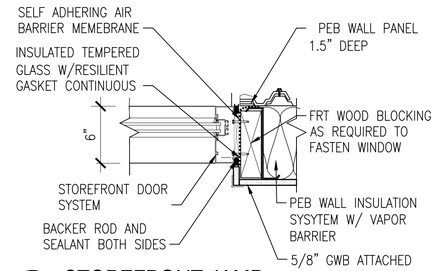

B3 STOREFRONT JAMB
SCALE: 1 1/2" = 1'–0" A-501

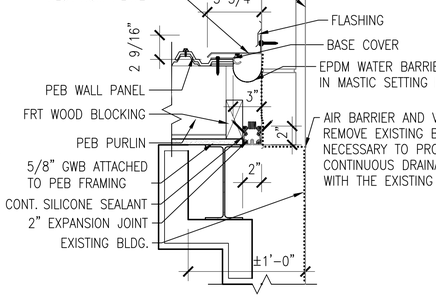

B4 EXPANSION JOINT
SCALE: 1 1/2" = 1'–0" A-102, A-103

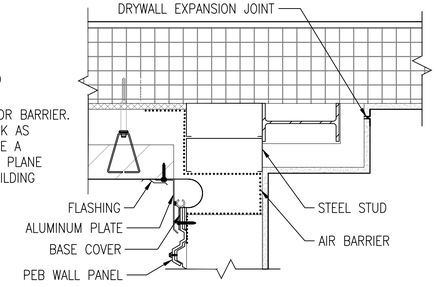

B5 EXPANSION JOINT
SCALE: 1 1/2" = 1'–0" A-102, A-103

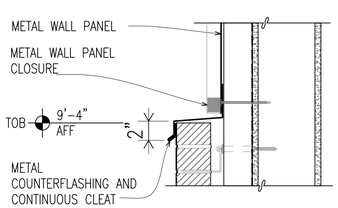

NOTES:
1. PREDRILL FASTENERS IN BRICK MASONRY
2. FASTEN CLEAT AT 2'–0" ON CENTER
3. COUNTERFLASHING LAP JOINTS MUST PROVIDE 4" MINIMUM OVERLAP. PROVIDE CONCEALED SEALANT AT LAPS

A1 COUNTERFLASHING DETAIL
SCALE: 1 1/2" = 1'–0" A-501

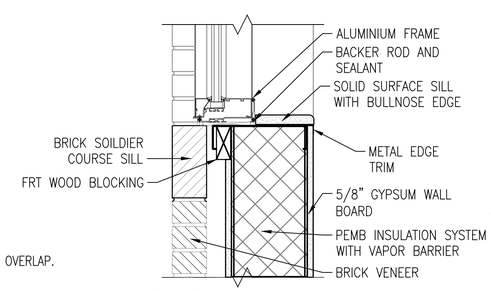

A2 WINDOW SILL
SCALE: 1 1/2" = 1'–0" A-501

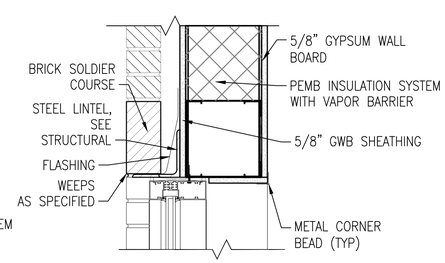

A3 WINDOW HEAD
SCALE: 1 1/2" =1'–0" X-XXX

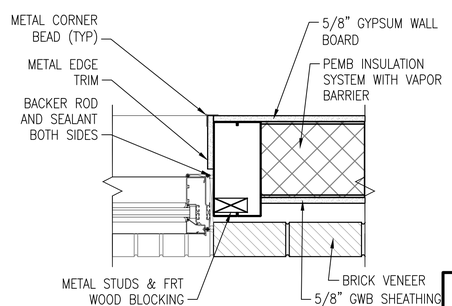

A4 WINDOW JAMB
SCALE: 1 1/2" = 1'–0" A-501

GRAPHIC SCALE
1–1/2"=1'–0" 0 6" 1' 1'–6"

APPR	
DATE	
DESCRIPTION	
CTM	

NAVFAC

SEAL

A/E INFO

APPROVED
FOR COMMANDER NAVFAC
ACTIVITY
EMILY M. SYLVESTER, PE
SATISFACTORY TO DATE 28 JUNE 2018
DES GKC DRW JPC CHK GKC
DESIGN MANAGER G. COOKE
BRANCH MANAGER DJD
CHIEF ENGINEER EJA
FIRE PROTECTION

DEPARTMENT OF THE NAVY
NAVAL FACILITIES ENGINEERING COMMAND–MID-ATLANTIC
NAVAL STATION NORFOLK VIRGINIA
MIDLANT CI CORE
NAVAL FACILITIES ENGINEERING COMMAND
JACKSONVILLE, NC
MCB CAMP LEJEUNE
P1482 MARINE SPECIAL OP SCHOOL
120 MAN CLASSROOMS
DETAILS

SCALE:	AS NOTED
EPROJECT NO.	1558046
CONSTR. CONTR. NO.	–
NAVFAC DRAWING NO.	12747185
SHEET	48 OF 91

A-501

DRAWFORM REVISION: 10 MARCH 2009

FILE NAME: P:\MC\Complex\wilcon\2017_1558046_P1482_IH-06B_120ManClassrooms\8_Design\Drawings\Sheet\08_Architecture\1558046_P1482_A-501_DETAILS.dwg LAYOUT NAME: A-501 DETAILS PLOTTED: Tuesday, June 02, 2020 – 11:59pm USER: gyost.cooke

DOOR SCHEDULE

MARK	DOOR SIZE W	DOOR SIZE HT	DOOR SIZE THK	DOOR MATL	DOOR EL	DOOR GLZ	DOOR LOUVER W	DOOR LOUVER HT	FRAME MATL	FRAME EL	FRAME GLZ	FRAME DETAILS HEAD	FRAME DETAILS JAMB	FRAME DETAILS SILL	FIRE RATING LABEL	HARDWARE SET NO	HARDWARE KEYSIDE RM NO	NOTES	MARK
101A	4'-0"	7'-0"	1 3/4"	HM	B	--	--	--	HM	F2	--	A1/A601	A1/A601SIM	--	--	HW-1	--	--	101A
101B	4'-0"	7'-0"	1 3/4"	HM	A	--	--	--	HM	F2	--	B3/A601	B2/A601	B1/A601	--	HW-1	--	--	101B
101C	4'-0"	7'-0"	1 3/4"	HM	A	--	--	--	HM	F2	--	B3/A601	B2/A601	B1/A601	--	HW-6	--	--	101C
102	PR 3'-0"	7'-0"	1 3/4"	HM	A	--	--	--	HM	F2	--	A1/A601	A1/A601 SIM	--	--	HW-7	--		102
103	3'-0"	7'-0"	1 3/4"	HM	A	--	--	--	HM	F1	--	A1/A601	A1/A601SIM	--	--	HW-8	--	--	103
104A	4'-0"	7'-0"	1 3/4"	AL	C	--	--	--	AL	F3	--	B4/A601	A3/A601	A2/A601	--	HW-1	--	--	104A
104B	4'-0"	7'-0"	1 3/4"	AL	C	--	--	--	AL	F3	--	B4/A601	A3/A601	A2/A601	--	HW-1	--	--	104B
105A	4'-0"	7'-0"	1 3/4"	AL	C	--	--	--	AL	F3	--	B4/A601	A3/A601	A2/A601	--	HW-1	--	--	105A
105B	4'-0"	7'-0"	1 3/4"	AL	C	--	--	--	AL	F3	--	B4/A601	A3/A601	A2/A601	--	HW-1	--	--	105B
106A	4'-0"	7'-0"	1 3/4"	AL	B	--	--	--	HM	F2	--	A1/A601	A1/A601SIM	--	--	HW-1	--	--	106A
106B	4'-0"	7'-0"	1 3/4"	HM	A	--	--	--	HM	F2	--	B3/A601	B2/A601	B1/A601	--	HW-1	--	--	106B
106C	4'-0"	7'-0"	1 3/4"	HM	A	--	--	--	HM	F2	--	B3/A601	B2/A601	B1/A601	--	HW-6	--	--	106C
107	3'-0"	7'-0"	1 3/4"	HM	A	--	--	--	HM	F1	--	A1/A601	A1/A601 SIM	--	--	HW-8	--	--	107
108	PR 3'-0"	7'-0"	1 3/4"	HM	A	--	--	--	HM	F2	--	A1/A601	A1/A601 SIM	--	--	HW-7	--	--	108
201	4'-0"	7'-0"	1 3/4"	HM	A	--	--	--	HM	F2	--	B3/A601	B3/A601	B1/A601	--	HW-5	--	DOOR 202 SAME	201

WINDOW FRAME TYPES

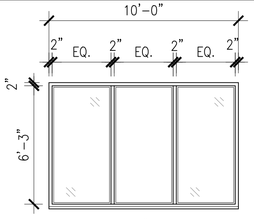

A

DOOR ELEVATIONS

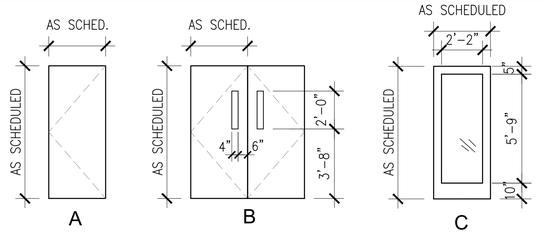

FRAME TYPES

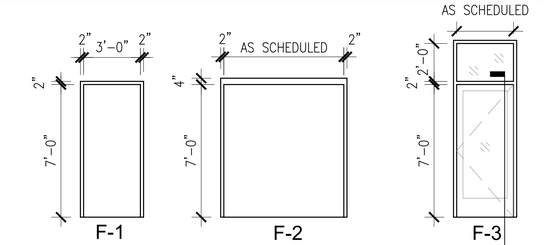

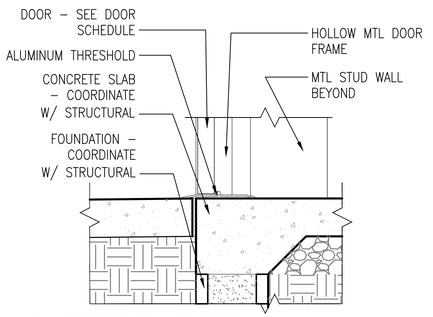

B1 DOOR SILL DETAIL
SCALE: 1-1/2" = 1'-0" A-601

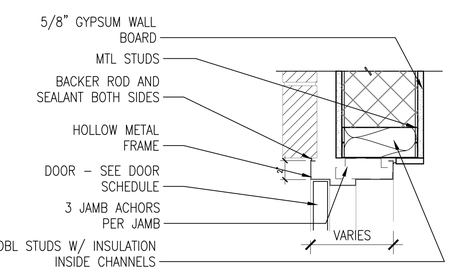

B2 DOOR JAMB DETAIL
SCALE: 1-1/2" = 1'-0" A-601

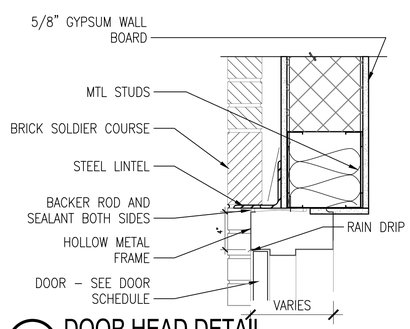

B3 DOOR HEAD DETAIL
SCALE: 1-1/2" = 1'-0" A-601

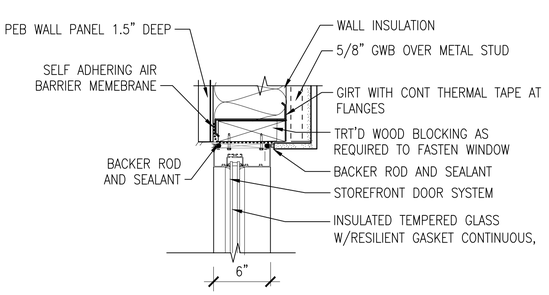

B4 DOOR HEAD DETAIL
SCALE: 1-1/2" = 1'-0" A-601

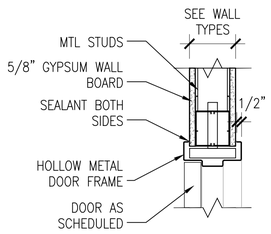

JAMB SIMILAR:
3 JAMB ANCHORS PER JAMB

A1 DOOR JAMB/HEAD DETAIL
SCALE: 1-1/2" = 1'-0" A-601

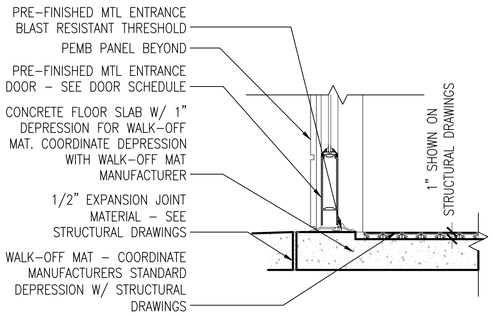

A2 DOOR SILL DETAIL
SCALE: 1-1/2" = 1'-0" A-601

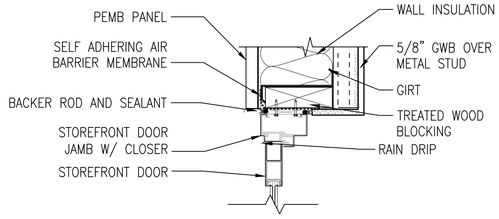

A3 DOOR JAMB DETAIL
SCALE: 1-1/2" = 1'-0" A-601

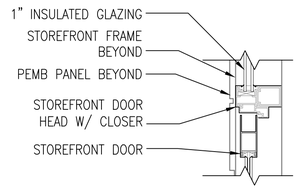

A4 TRANSOM DETAIL
SCALE: 1-1/2" = 1'-0" A-601

GRAPHIC SCALE

1-1/2"=1'-0" 0 6" 1' 1'-6"

DEPARTMENT OF THE NAVY	NAVAL FACILITIES ENGINEERING COMMAND
NAVAL FACILITIES ENGINEERING COMMAND - MID-ATLANTIC	NAVAL STATION NORFOLK VIRGINIA
MIDLANT CI CORE	
MCB CAMP LEJEUNE	JACKSONVILLE, NC
P1482 MARINE SPECIAL OP SCHOOL 120 MAN CLASSROOMS	
DOOR SCHEDULE AND DETAILS	
SCALE:	AS NOTED
EPROJECT NO.	1558046
CONSTR. CONTR. NO.	-
NAVFAC DRAWING NO.	12747186
SHEET	49 OF 91

A-601

DRAWFORM REVISION: 10 MARCH 2009

APPROVED
FOR COMMANDER NAVFAC
ACTIVITY
EMILY M. SYLVESTER, PE
SATISFACTORY TO DATE 28 JUNE 2018
DES JPC DRW JPC CHK GKC
DESIGN MANAGER G. COOKE
BRANCH MANAGER DJD
CHIEF ENGINEER EJA
FIRE PROTECTION

APPR | DATE | DESCRIPTION | CTM

SEAL

A/E INFO

FILE NAME: P:\NC\Compl\pwv\MLCOM\2017_1558046_P1482_JH-088_120ManClassrooms\8_Design\Drawings\Sheet\08_Architecture\1558046_P1482_A-601_DOOR SCHEDULE AND DETAILS.dwg LAYOUT NAME: A-601 DOOR SCHEDULE AND DETAILS PLOTTED: Tuesday, June 02, 2020 - 12:00pm USER: gyski.cooke

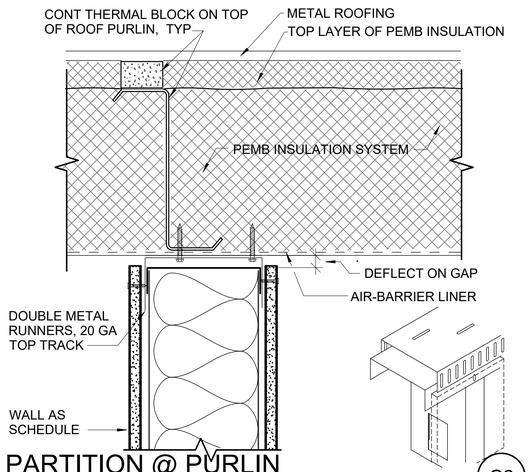

PARTITION @ PURLIN — C2
3" = 1'-0"

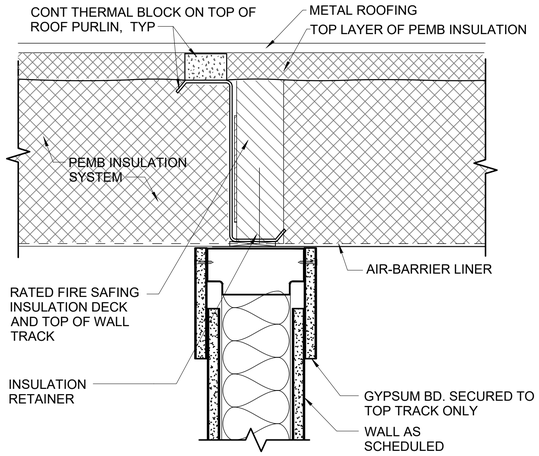

PARTITION @ PURLIN - 1HR — C3
3" = 1'-0"

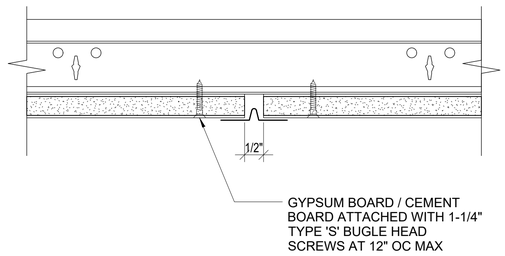

PARTITION CONTROL JOINT - CEILING — C4
6" = 1'-0"

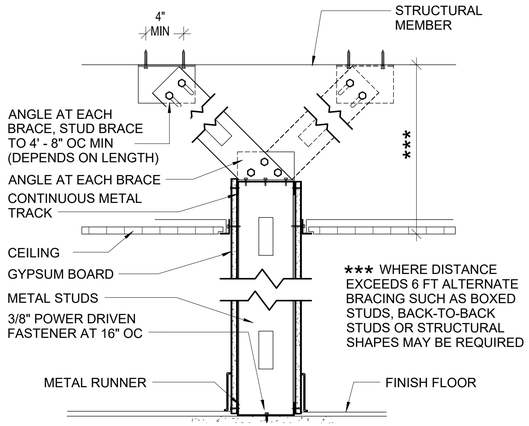

PARTITION BRACING — B5
1 1/2" = 1'-0"

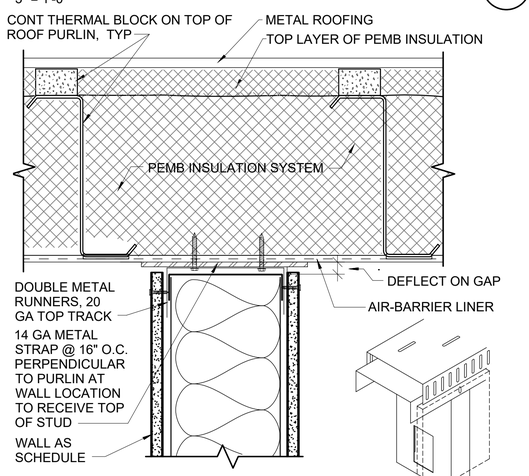

PARTITION BETWEEN PURLIN — B2
3" = 1'-0"

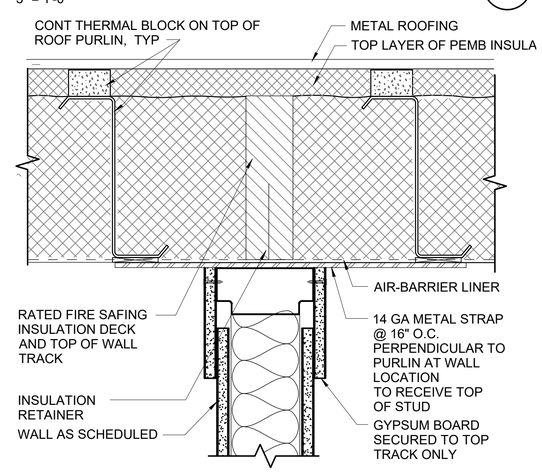

PARTITION BETWEEN PURLIN - 1HR — B3
3" = 1'-0"

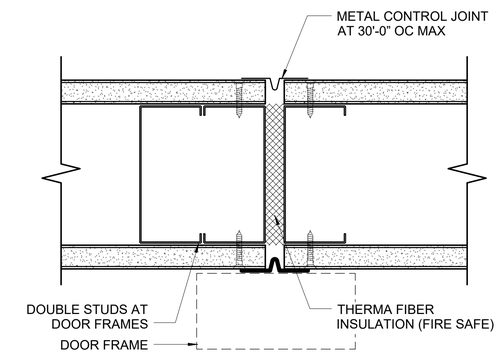

PARTITION - CONTROL JOINT (1-HR) — B4
6" = 1'-0"

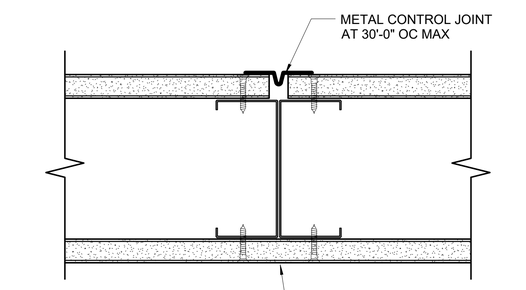

PARTITION CONTROL JOINT — A5
6" = 1'-0"

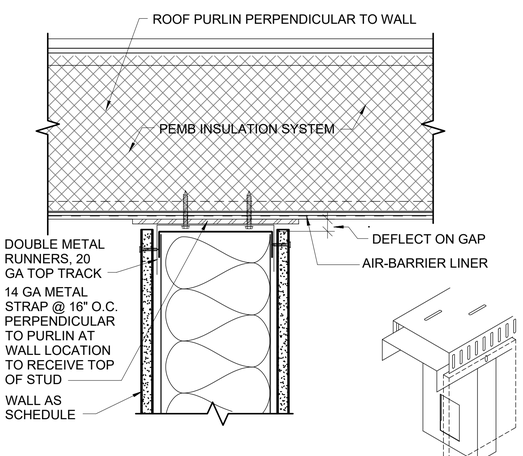

PARTITION PERP. TO PURLIN — A2
3" = 1'-0"

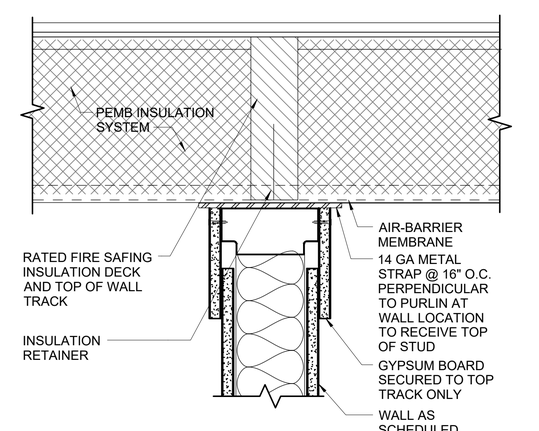

PARTITION PERP. TO PURLIN - 1HR — A3
3" = 1'-0"

FOR RATED AND OR SMOKE PARTITION:

- HORIZONTAL JOINTS ARE REQUIRED TO BE STAGGERED 2'-0" OC MIN AND SHALL OCCUR ABOVE THE CEILING BY USING VARYING LENGTHS OR GYPSUM BOARD
- LENGTH OF GYPSUM BOARD PANEL IS CONTRACTOR'S CHOICE AT ROOMS WITH CEILINGS AND 8'-0" MINIMUM AT ROOMS WITH NO CEILINGS

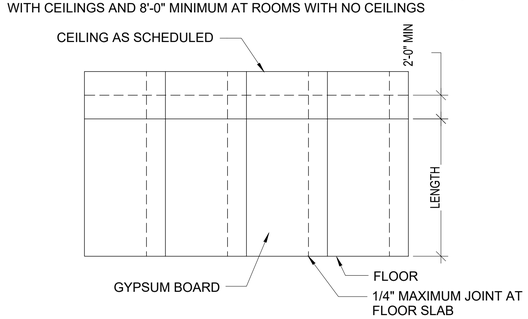

PARTITION - RATED AND SMOKE — A4
3" = 1'-0"

GRAPHIC SCALE

3"=1'-0" 0 3" 6" 9"

APPR	
DATE	
DESCRIPTION	
CTM	

NAVFAC

SEAL

A/E INFO

APPROVED

FOR COMMANDER NAVFAC

ACTIVITY

EMILY M. SYLVESTER, PE

SATISFACTORY TO DATE 28 JUNE 2018

DES GKC | DRW GKC | CHK GKC

DESIGN MANAGER G. COOKE

BRANCH MANAGER DJD

CHIEF ENGINEER EJA

FIRE PROTECTION

DEPARTMENT OF THE NAVY
NAVAL FACILITIES ENGINEERING COMMAND
NAVAL FACILITIES ENGINEERING COMMAND–MID-ATLANTIC
NAVAL STATION NORFOLK VIRGINIA
MIDLANT CI CORE

MCB CAMP LEJEUNE JACKSONVILLE, NC

P1482 MARINE SPECIAL OP SCHOOL
120 MAN CLASSROOMS

PARTITION TYPES

SCALE:	AS NOTED
EPROJECT NO.	1558046
CONSTR. CONTR. NO.	–
NAVFAC DRAWING NO.	12747187
SHEET	50 OF 91

A-602

DRAWFORM REVISION: 10 MARCH 2009

FILE NAME: P:\NC\Comp\Jerone\MILCON\2017_1558046_P1482_JH-DBB_ 120ManClassrooms\8_Design\Drawings\Sheet\08_Architecture\1558046_P1482_A-602_PARTITION TYPES.dwg LAYOUT NAME: A-602_PARTITION TYPES PLOTTED: Tuesday, June 02, 2020 – 12:00pm USER: gyrsi.cooke

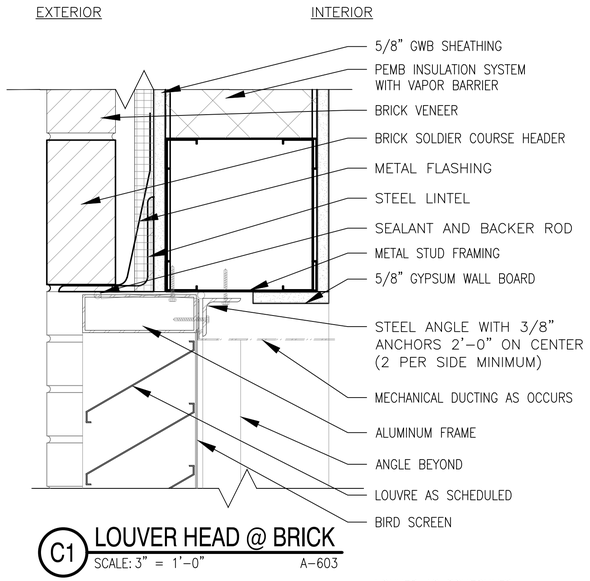

C1 LOUVER HEAD @ BRICK
SCALE: 3" = 1'-0" A-603

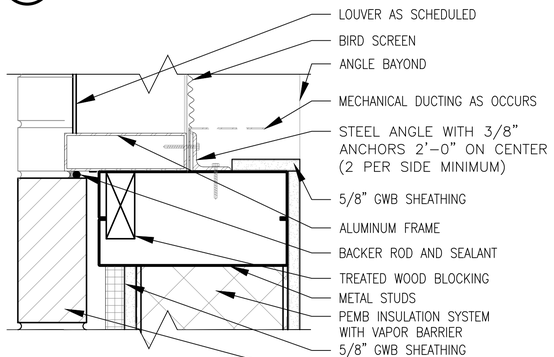

B1 LOUVER JAMB @ BRICK
SCALE: 3" = 1'-0" A-603

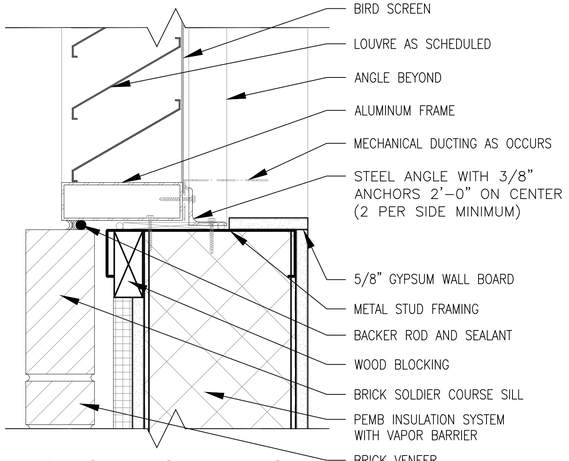

A1 LOUVER SILL @ BRICK
SCALE: 3" = 1'-0" A-603

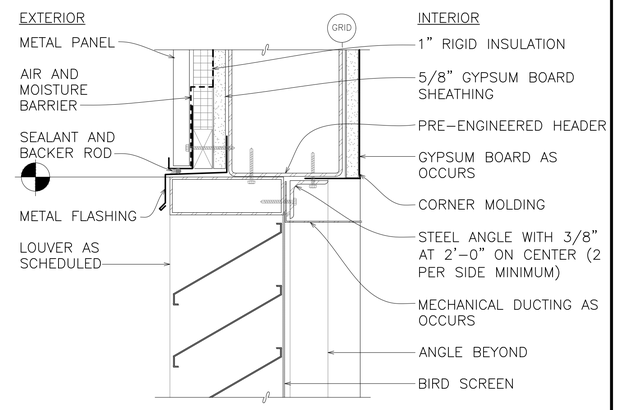

C2 LOUVER HEAD @ METAL PANEL
SCALE: 3" = 1'-0" A-603

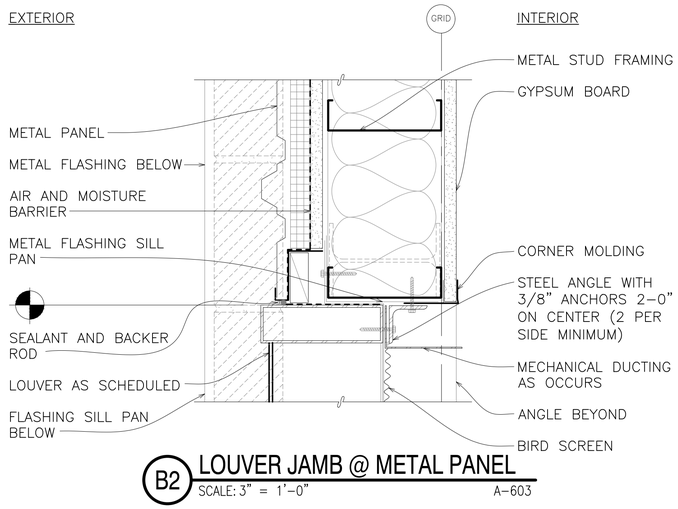

B2 LOUVER JAMB @ METAL PANEL
SCALE: 3" = 1'-0" A-603

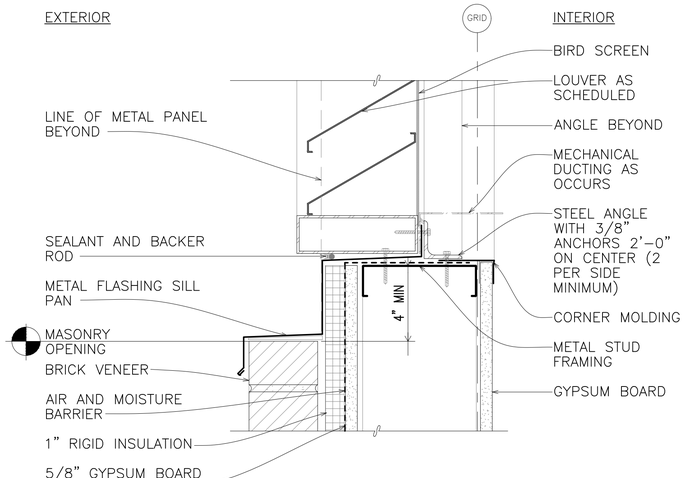

A2 LOUVER SILL @ METAL PANEL
SCALE: 3" = 1'-0" A-603

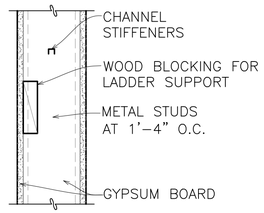

PARTITION TYPE M7 – 6" STEEL STUD

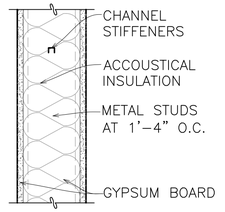

PARTITION TYPE M6 – 6" STEEL STUD

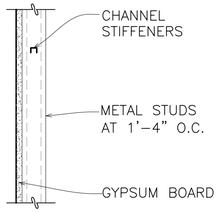

PARTITION TYPE M2 – 2 1/2" STEEL STUD

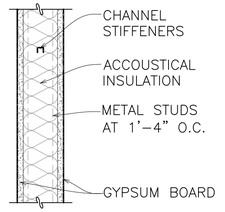

PARTITION TYPE M3 – 3 5/8" STEEL STUD

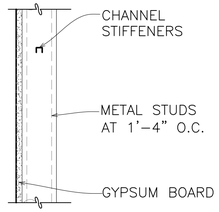

PARTITION TYPE M3A – 3 5/8" STEEL STUD

WALL TYPE NOTES:
1. WALL TYPES LOCATIONS ARE INDICATED ON THE FLOOR PLANS
2. ALL MATERIALS INDICATED ARE TO BE NEW.
3. ALL PARTITIONS UTILIZING GYPSUM BOARD WERE DEVELOPED ON THE BASIS THAT THE GYPSUM PANELS ARE 5/8" TYPE "X" DRYWALL.
4. UTILIZE UL ASSEMBLY U 419 FOR 1 HOUR RATED WALL LOCATIONS

A4 INTERIOR PARTITION TYPES
SCALE: 1 1/2" = 1'-0" A-101, A-102

GRAPHIC SCALE
1-1/2"=1'-0" 0 6" 1' 1'-6"
3"=1'-0" 0 3" 6" 9"

							APPR
							DATE
							DESCRIPTION
							CTM

NAVFAC

SEAL

A/E INFO

APPROVED
FOR COMMANDER NAVFAC
ACTIVITY
EMILY M. SYLVESTER, PE
SATISFACTORY TO DATE 28 JUNE 2018
DES GKC DRW JPC CHK GKC
DESIGN MANAGER G. COOKE
BRANCH MANAGER DJD
CHIEF ENGINEER EJA
FIRE PROTECTION

DEPARTMENT OF THE NAVY
NAVAL FACILITIES ENGINEERING COMMAND
MIDLANT CI CORE
NAVAL FACILITIES ENGINEERING COMMAND–MID-ATLANTIC
NAVAL STATION NORFOLK VIRGINIA
MCB CAMP LEJEUNE JACKSONVILLE, NC
P1482 MARINE SPECIAL OP SCHOOL
120 MAN CLASSROOMS
PARTITION TYPES AND DETAILS

SCALE: AS NOTED
EPROJECT NO. 1558046
CONSTR. CONTR. NO. –
NAVFAC DRAWING NO. 12748518
SHEET 51 OF 91
A-603
DRAWFORM REVISION: 10 MARCH 2009

FILE NAME: P:\MC\Compu\pierre\MILCON\2017_1558046_P1482_JH-DBB_120ManClassrooms\8_Design\Drawings\Sheet\08_Architecture\1558046_P1482_A-603_PARTITION TYPES AND DETAILS.dwg LAYOUT NAME: A-603 PARTITION TYPES AND DETAILS PLOTTED: Tuesday, June 02, 2020 - 12:01pm USER: gyatsi.cooke

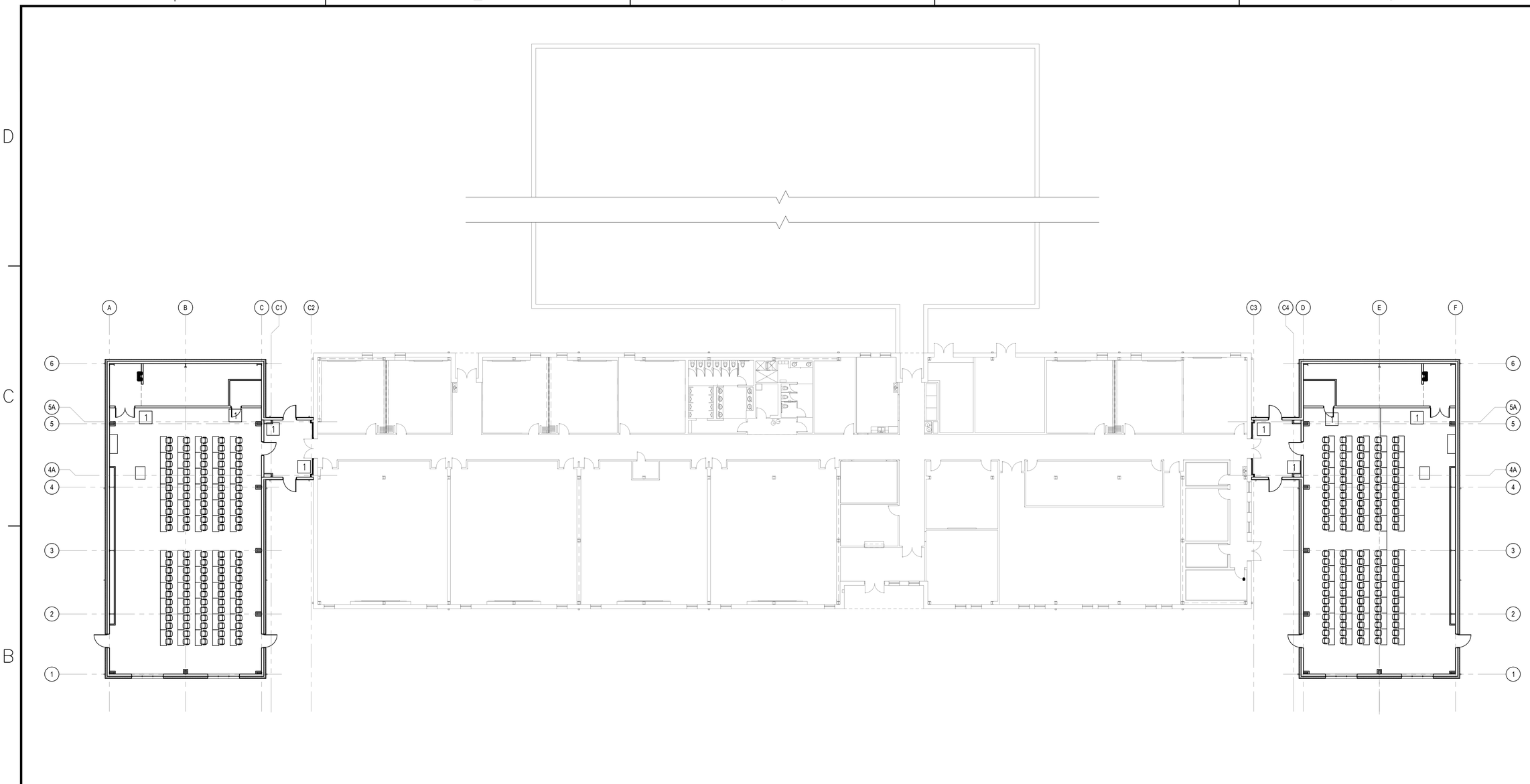

GENERAL SHEET NOTES

1. FURNITURE AND EQUIPMENT SYMBOLS ARE SHOWN FOR LAYOUT PURPOSES ONLY AND ARE NOT PART OF THE GENERAL CONTRACT.
2. COORDINATE FURNITURE WITH ELECTRICAL AND DATA OUTLET LOCATION. SEE ELECTRICAL PLANS.
3. VERIFY WITH MANUFACTURERS INSTALLATION CONDITIONS AND TECHNICAL INFORMATION AND ELECTRICAL OR DATA REQUIREMENTS.
4. SEE FF&E BINDER FOR FURNITURE ITEMS INFORMATION.
5. GC SHALL VERIFY EXISTING CONDITIONS AND DIMENSIONS (IF APPLY)
6. ITEMS TAGGED WITH:
   'GFGI': REFERS TO GOVERNMENT WILL FURNISH AND INSTALL THE ITEMS. GENERAL CONTRACTOR NEEDS TO PROVIDE THE MEP (MECHANICAL–ELECTRICAL OR PLUMBING) PORTION IF NEEDED.
   "GFCI": REFERS TO GOVERNMENT WILL FURNISH, GC WILL INSTALL.

DEMOLITION KEYNOTES

NEW WORK KEYNOTES

1. PROVIDE NEW SIGNAGE TO MATCH EXISTING BUILDING SIGNAGE

KEYPLAN

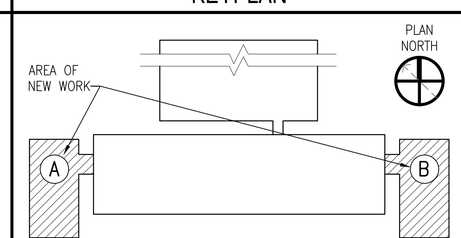

GRAPHIC SCALE

1/8"=1'-0" 0' 4' 8' 16'

SYM	DESCRIPTION	DATE	APPR

NAVFAC

SEAL

A/E INFO

APPROVED

FOR COMMANDER NAVFAC

ACTIVITY

EMILY M. SYLVESTER, PE

SATISFACTORY TO DATE 28 JUNE 2018

DES RGG DRW RGG CHK ELC

DESIGN MANAGER G. COOKE

BRANCH MANAGER JDW

CHIEF ENGINEER EJA

FIRE PROTECTION

DEPARTMENT OF THE NAVY
NAVAL FACILITIES ENGINEERING COMMAND
NAVAL FACILITIES ENGINEERING COMMAND–MID-ATLANTIC
MIDLANT CI CORE
NAVAL STATION NORFOLK VIRGINIA

MCB CAMP LEJEUNE JACKSONVILLE, NC

P1482 MARINE SPECIAL OP SCHOOL
120 MAN CLASSROOMS

OVERALL FURNITURE PLAN

SCALE: AS NOTED

EPROJECT NO. 1558046

CONSTR. CONTR. NO. –

NAVFAC DRAWING NO. 12747188

SHEET 52 OF 91

I-101

DRAWFORM REVISION: 10 MARCH 2009

FILE NAME: P:\NC\complejeune\MILCON\2017_1558046_p1482_ih-dbb_120manclassrooms\B_Design\Drawings\Sheet\09_Interiors\I-101 Interior Furniture plan.dwg LAYOUT NAME: I-101 OVERALL FURNITURE PLAN PLOTTED: Friday, May 29, 2020 – 3:57pm USER: elizabeth.clemens

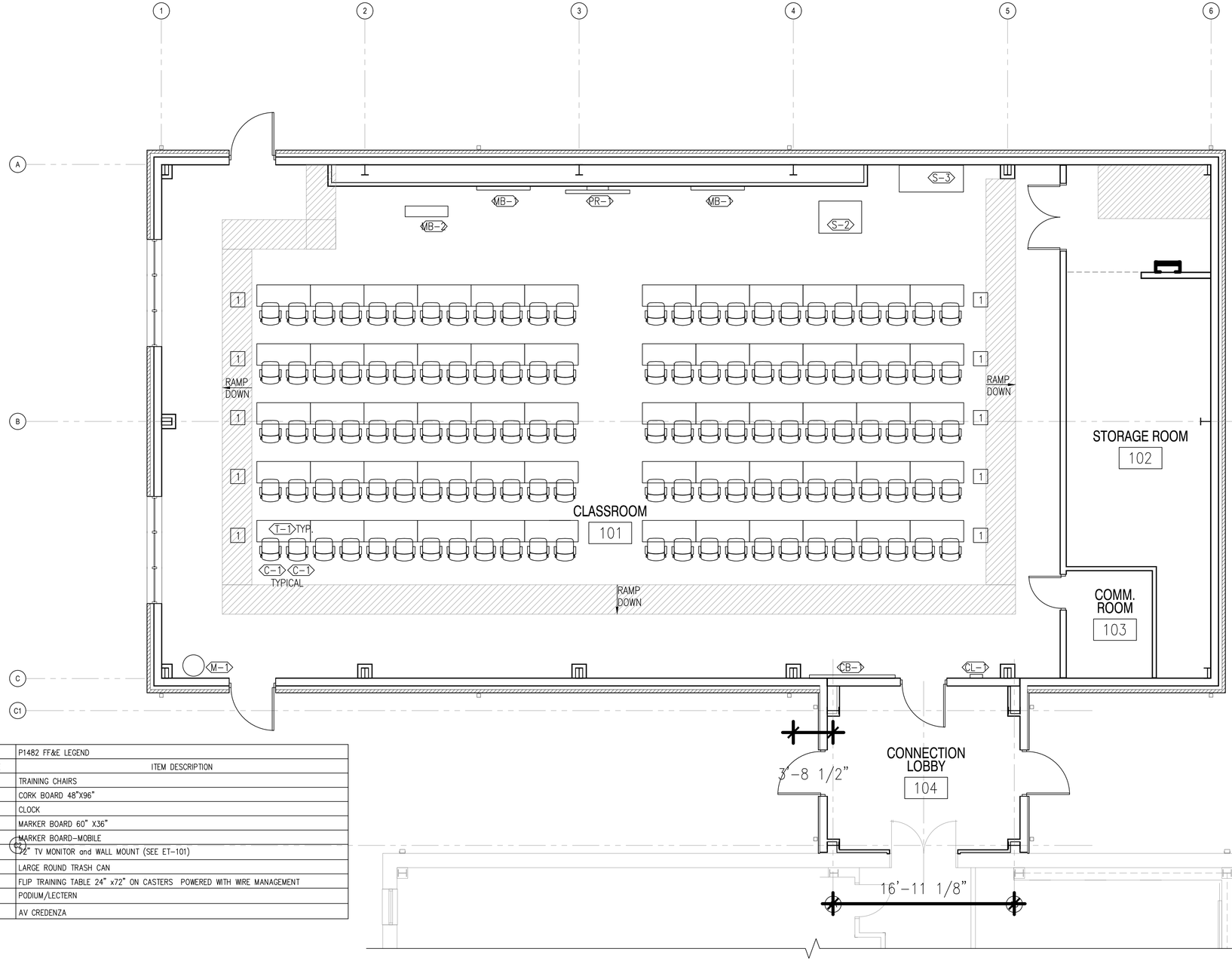

	P1482 FF&E LEGEND
CODE	ITEM DESCRIPTION
C-1	TRAINING CHAIRS
CB-1	CORK BOARD 48"X96"
CL-1	CLOCK
MB-1	MARKER BOARD 60" X36"
MB-2	MARKER BOARD-MOBILE
PR-1	72" TV MONITOR and WALL MOUNT (SEE ET-101)
M-1	LARGE ROUND TRASH CAN
T-1	FLIP TRAINING TABLE 24" x72" ON CASTERS POWERED WITH WIRE MANAGEMENT
S-2	PODIUM/LECTERN
S-3	AV CREDENZA

A1 FURNITURE PLAN - AREA A
SCALE: 3/16" = 1'-0"

I-101

GENERAL SHEET NOTES

1. FURNITURE AND EQUIPMENT SYMBOLS ARE SHOWN FOR LAYOUT PURPOSES ONLY AND ARE NOT PART OF THE GENERAL CONTRACT.
2. COORDINATE FURNITURE WITH ELECTRICAL AND DATA OULET LOCATION. SEE ELECTRICAL PLANS.
3. VERIFY WITH MANUFACTURERS INSTALLATION CONDITIONS AND TECHNICAL INFORMATION AND ELECTRICAL OR DATA REQUIREMENTS.
4. SEE FF&E BINDER FOR FURNITURE ITEMS INFORMATION.
5. GC SHALL VERIFY EXISTING CONDITIONS AND DIMENSIONS (IF APPLY).

NEW WORK KEYNOTES

1. SEE ELECTRICAL DRAWINGS FOR A/V REQUIREMENTS AND COORDINATION, INCLUDING LOW-PROFILE RAISED FLOORING.

KEYPLAN

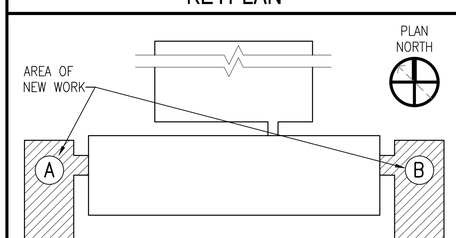

GRAPHIC SCALE

1/8"=1'-0" 0' 4' 8' 16'

SYM	DESCRIPTION	DATE	APPR

NAVFAC

SEAL

A/E INFO

APPROVED

FOR COMMANDER NAVFAC

ACTIVITY
EMILY M. SYLVESTER, PE

SATISFACTORY TO DATE 28 JUNE 2018
DES RGG DRW RGG CHK ELC
DESIGN MANAGER G. COOKE
BRANCH MANAGER JDW
CHIEF ENGINEER EJA
FIRE PROTECTION

DEPARTMENT OF THE NAVY
NAVAL FACILITIES ENGINEERING COMMAND
NAVAL FACILITIES ENGINEERING COMMAND-MID-ATLANTIC
MIDLANT CI CORE
NAVAL STATION NORFOLK VIRGINIA
MCB CAMP LEJEUNE
JACKSONVILLE, NC
P1482 MARINE SPECIAL OP SCHOOL
120 MAN CLASSROOMS
FURNITURE PLAN - AREA A

SCALE: AS NOTED
EPROJECT NO. 1558046
CONSTR. CONTR. NO. -
NAVFAC DRAWING NO. 1274789
SHEET 53 OF 91
I-102

DRAWFORM REVISION: 10 MARCH 2009

FILE NAME: P:\NC\complejeune\MILCON\2017_1558046_p1482_ih-dbb_120manclassrooms\B_Design\Drawings\Sheet\09_Interiors\I-102 FURNITURE PLAN - AREA A.dwg LAYOUT NAME: I-102 FURNITURE PLAN - AREA A PLOTTED: Friday, May 29, 2020 - 3:58pm USER: elizabeth.clemens

	P1482 FF&E LEGEND
CODE	ITEM DESCRIPTION
C-1	TRAINING CHAIRS
CB-1	CORK BOARD 48"X96"
CL-1	CLOCK
MB-1	MARKER BOARD 60" X36"
MB-2	MARKER BOARD-MOBILE
PR-1	32" TV MONITOR and WALL MOUNT (SEE ET-101)
M-1	LARGE ROUND TRASH CAN
T-1	FLIP TRAINING TABLE 24" x72" ON CASTERS POWERED WITH WIRE MANAGEMENT
S-3	AV CREDENZA
S-2	PODIUM/LECTERN

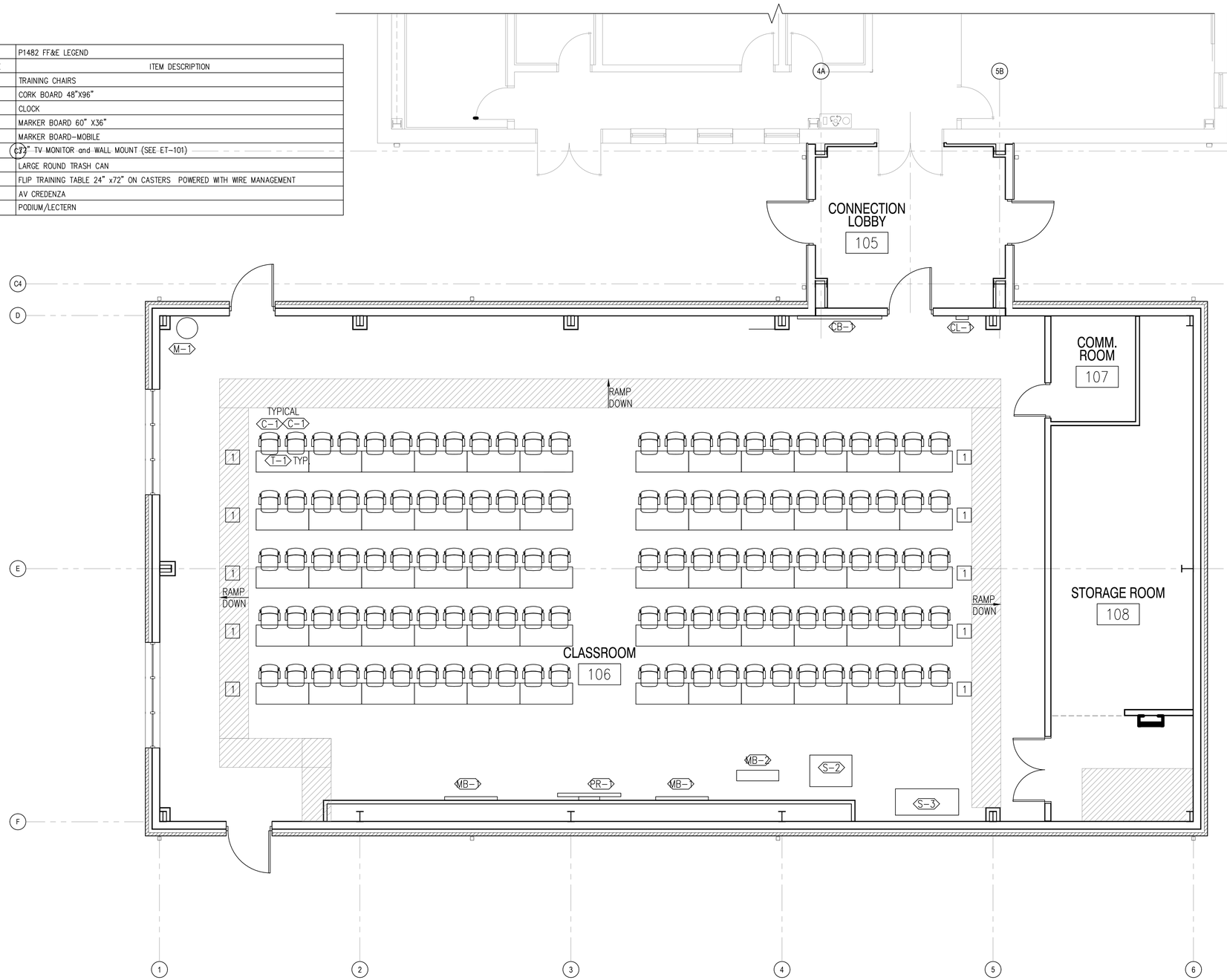

A1 FURNITURE PLAN - AREA B
SCALE: 3/16 = 1'-0"

I-101

GENERAL SHEET NOTES

1. FURNITURE AND EQUIPMENT SYMBOLS ARE SHOWN FOR LAYOUT PURPOSES ONLY AND ARE NOT PART OF THE GENERAL CONTRACT.
2. COORDINATE FURNITURE WITH ELECTRICAL AND DATA OULET LOCATION. SEE ELECTRICAL PLANS.
3. VERIFY WITH MANUFACTURERS INSTALLATION CONDITIONS AND TECHNICAL INFORMATION AND ELECTRICAL OR DATA REQUIREMENTS.
4. SEE FF&E BINDER FOR FURNITURE ITEMS INFORMATION.
5. GC SHALL VERIFY EXISTING CONDITIONS AND DIMENSIONS (IF APPLY).

NEW WORK KEYNOTES

1. SEE ELECTRICAL DRAWINGS FOR A/V REQUIREMENTS AND COORDINATION.

KEYPLAN

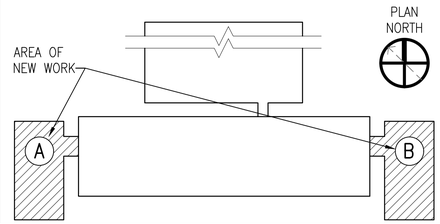

GRAPHIC SCALE

1/8"=1'-0" 0' 4' 8' 16'

APPR	
DATE	
DESCRIPTION	
CTM	

NAVFAC

A/E INFO

APPROVED

FOR COMMANDER NAVFAC

ACTIVITY
EMILY M. SYLVESTER, PE
SATISFACTORY TO DATE 28 JUNE 2018
DES RGG | DRW RGG | CHK ELC
DESIGN MANAGER G. COOKE
BRANCH MANAGER JW
CHIEF ENGINEER EJA
FIRE PROTECTION

DEPARTMENT OF THE NAVY
NAVAL FACILITIES ENGINEERING COMMAND
MIDLANT CI CORE
NAVAL FACILITIES ENGINEERING COMMAND-MID-ATLANTIC
NAVAL STATION NORFOLK VIRGINIA
MCB CAMP LEJEUNE JACKSONVILLE, NC
P1482 MARINE SPECIAL OP SCHOOL
120 MAN CLASSROOMS
FURNITURE PLAN - AREA B

SCALE: AS NOTED
EPROJECT NO. 1558046
CONSTR. CONTR. NO. –
NAVFAC DRAWING NO. 1247190
SHEET 54 OF 91

I-103

DRAWFORM REVISION: 10 MARCH 2009

FILE NAME: P:\MC\compile\pwe\MILCON\2017_1558046_p1482_jh--tbb_120manclassrooms\8_Design\Drawings\Sheet\09_Interiors\I-103 FURNITURE PLAN - AREA B.dwg LAYOUT NAME: I-103 FURNITURE PLAN - AREA B PLOTTED: Friday, May 29, 2020 - 4:00pm USER: elizabeth.klemens

	P1482 INTERIOR FINISH LEGEND
CG-1	CORNERGUARD
	MFR: PAWLING CORP
	COLOR: 2" S2 – STAINLESS STEEL
CPT-1	CARPET TILE
	MFR: TANDUS
	MAELSTROM 04849
	COLOR:"NATURE CALLS" 33209
	24"X24", ASHLAR VERTICAL
	CUSHION BACKING
P-1	PAINT (CEILING)
	MFR: SHERWIN WILLIAMS
	COLOR: MATCH VAPOR BARRIOR INSULATION
	FINISH: FLAT
P-2	PAINT
	MFR: SHERWIN WILLIAMS
	COLOR: 6257 GIBRALTAR
	FINISH: SEMI-GLOSS
P-3	PAINT (WALL) FIELD
	MFR: SHERWIN WILLIAMS
	COLOR: "ANEW GRAY" (SW7030) 243-C2
	FINISH: EGGSHELL
P-4	PAINT (WALL) ACCENT
	MFR: SHERWIN WILLIAMS
	COLOR: 6257 GIBRALTAR
	FINISH: EGGSHELL
P-5	PAINT (METAL DOOR, DOOR FRAME)
	MFR: SHERWIN WILLIAMS
	COLOR:6257 GIBRALTAR
	FINISH: SEMI-GLOSS
VB	VAPOR BARRIER INSULATION SYSTEM
	COLOR: BLACK
RB-1	RESILIENT RUBBER BASE
	MFR: JOHNSONITE
	TYPE: 4" TRADITIONAL
	COLOR: 32 PEBBLE
SC-1	SEALED CONCRETE
	MFR: L&M SEAL HARD
	FINISH: CLEAR FINISH
LVT-1	LUXURY VINYL TILE 18X18
	MFR: MANNINGTON COMMERCIAL
	FINISH: CITY GRID/SCALE ANT 105
SS-1	SOLID SURFACE (WINDOW SILLS)
	MFR: CORIAN
	COLOR: "WHITE JASMINE"
	BULLNOSE EDGE
WC-1	WINDOW COVERING
	MFR: MECHO SHADE DUAL VERTICAL SHADE
	FINISH: THERMO VEIL 1516 EGG SHELL 3%
	BLACK-OUT ROLLER SHADE, MANUAL
	FINISH: EQUINOX BLACKOUT SHADECLOTH 0100 SERIES (OPAQUE)
	COLOR: 0103 "FLAX"
	FASCIA COLOR: ALABASTER
WO-1	WALK-OFF MAT/CARPET
	MFR: CONSTRUCTION SPECIALTIES
	STYLE: G4 PEDITRED

FINISH SCHEDULE

MARK	NAME	FLOOR	BASE	CEILING		WALL								NOTES
						NORTH		EAST		SOUTH		WEST		
				FINISH	HEIGHT	MAT	COLOR	MAT	COLOR	MAT	COLOR	MAT	COLOR	
101	CLASSROOM	CPT-1	RB-1	EXPOSED VB	VARIES	GB/VB	P-3	GB/VB	P-3	GB/VB	P-3	GB/VB	P-3	1,2,3
102	STORAGE ROOM	LVT-1	RB-1	EXPOSED/METAL		GB	P-3	GB	P-3	GB	P-3	GB	P-3	2,3
103	COMM. ROOM	SC-1	RB-1	EXPOSED METAL		GB	P-3	GB	P-3	GB	P-3	GB	P-3	2,3
104	CONNECTION LOBBY	LVT-1/WO-1	RB-1	EXPOSED METAL		GB	P-4	GB	P-4	GB	P-4	GB	P-4	4
105	CONNECTION LOBBY	LVT-1/WO-1	RB-1	EXPOSED METAL		GB	P-4	GB	P-4	GB	P-4	GB	P-4	4
106	CLASSROOM	CPT-1	RB-1	EXPOSED VB	VARIES	GB/VB	P-3	GB	P-3	GB/VB	P-3	GB/VB	P-3	1,2,3
107	COMM. ROOM	SC-1	RB-1	EXPOSED METAL		GB	P-3	GB	P-3	GB	P-3	GB	P-3	2,3
108	STORAGE ROOM	LVT-1	RB-1	EXPOSED METAL		GB	P-3	GB	P-3	GB	P-3	GB	P-3	2,3
201	MECHANICAL PLATFORM	SC-1	--	--	--	--	--	--	--	--	--	--	--	--

GENERAL SHEET NOTES

1. FOR ANY QUESTIONS REGARDING INTERIOR DESIGN DRAWINGS AND SPECIFICATIONS CONTACT: NAVFAC OICC.
2. ALL MATERIALS/PRODUCTS ARE TO BE INSTALLED PER MANUFACTURER'S INSTALLATION REQUIREMENTS.
3. SUBMIT SEAMING DIAGRAMS OF ALL FLOORING MATERIALS FOR NAVFAC INTERIOR DESIGNER'S REVIEW PRIOR TO INSTALLATIONS.
4. NO FINISH MATERIALS SHALL BE SUBSTITUTED DUE TO ORDERING LEAD TIMES. IT IS THE CONTRACTOR'S RESPONSIBILITY TO ORDER ALL MATERIALS IN A TIMELY FASHION TO AVOID DELAYS.
5. ALL GYPSUM BOARD SURFACES (WALLS & CEILINGS) TO BE FINISHED WITH A LEVEL 5 FINISH.
6. ALL SURFACE PREPARATION AND CLEANING PROCEDURES SHALL BE IN STRICT ACCORDANCE WITH THE INSTRUCTIONS AND SPECIFICATIONS OF THE PAINT MANUFACTURER WHOSE PRODUCTS ARE BEING USED.
7. SUBMIT PAINT DRAW DOWNS TO NAVFAC INTERIOR DESIGNER FOR APPROVAL PRIOR TO APPLICATION.
8. ALL ELECTRICAL PANELS, ACCESS PANELS, AND EXPOSED JOINTS SHALL BE SPRAY PAINTED OR FINISHED TO MATCH THE ADJACENT SURFACES.
9. FURNISH CERTIFICATION BY THE PAINT MANUFACTURER THAT THE PRODUCTS COMPLY WITH LOCAL REGULATIONS CONTROLLING THE USE OF VOLATILE ORGANIC COMPOUNDS (VOC'S).
10. USE LOW VOC PRIMERS PER PAINT MANUFACTURER'S RECOMMENDATIONS.
11. FOR DARKER/SATURATED PAINT COLORS. FOLLOW MANUFACTURER'S RECOMMENDATION FOR PROPER APPLICATION AND COVERAGE.
12. PAINT SHEEN AS FOLLOWS: ALL WALLS: EGGSHELL; CEILING: FLAT; DOOR & FRAMES: SEMI-GLOSS.
13. ELECTRICAL PANELS, ACCESS PANELS, AND EXPANSION JOINTS TO BE SPRAY PAINTED TO MATCH THE ADJACENT WALL COLOR. PANELS PAINTED BY BRUSH ARE NOT ACCEPTABLE.
14. COORDINATE WITH MECHANICAL DWGS THERMOSTATS LOCATION. INSTALL THEM NEAR A CORNER OF THE ROOM OR BY LIGHT SWITCHES. DO NOT INSTALL IN THE CENTER OF A WALL.
15. PROVIDE CORNER GUARDS (CG) ON ALL OUTSIDE CORNERS AS REQUIRED. CORNER GUARDS ARE NOT TO BE USED ON THE CMU WALLS OR MANUFACTURED STONE WALLS.
16. ALL WALL & CEILING FINISHES IN VERTICAL EXITWAYS, EXIT LOBBIES & EXIT CORRIDORS TO MEET MINIMUM CLASS A RATING.
17. ALL WALL & CEILING FINISHES IN ALL OTHER SPACES TO MEET MINIMUM CLASS C RATING.
18. ALL TRANSITIONS MUST MEET ABA GUIDELINES.
19. ALL TRANSITIONS OCCURING UNDER DOORS TO BE CENTERED UNDER DOOR.
20. AT TRANSITION OF LUXURY VINYL TILE AND CARPET TILE OR LUXURY VINYL TILE AND WALK-OFF MAT, INSTALL METAL SCHLUTER RENO-U OR EQUAL.
21. FLOORING SHALL BE CLEANLY INSTALLED AND TRIMMED OUT AROUND CLEAN-OUT COVERS AND DRAINS.
22. FINISHES INDICATED ARE THE APPROVED BASIS OF DESIGN TO CONVEY COLOR, PATTERN, TEXTURE AND SALIENT CHARACTERISTICS ONLY. THE LISTING OF MANUFACTURER INFORMATION IS NOT INTENDED TO LIMIT THE SELECTION OF PRODUCTS PROVIDED BY OTHER MANUFACTURERS. PRODUCTS MEETING THESE CRITERIA WILL BE CONSIDERED AND MUST BE REVIEWED BY THE INTERIOR DESIGNER OF RECORD (IDOR) AND THE NAVFAC INTERIOR DESIGNER AND APPROVED BY THE CONTRACTING OFFICER

NEW WORK KEYNOTES

1. CEILING EXPOSED FACE OF BLACK VINYL VAPOR BARRIER @ PEMB INSULATION SYSTEM.
2. PAINT EXPOSED PORTIONS OF STRUCTURAL STEEL FRAME FROM THE FLOOR TO THE RIDGE P-1.
3. GWB TO BE PAINTED AS NOTED ON FINISH SCHEDULE EXPOSED VB TO BE MANUFACTURE BLACK.
4. ALL STRUCTURE ABOVE 9'-4" TO BE PAINTED P-1 EXCLUDING FIXTURE AND DEVICE HOUSINGS/COVERS, CABLE TRAY, COLOR-CODED FIRE SUPPRESSION PIPING, AND COLOR-CODED FIRE ALARM CONDUIT.

APPR | DATE | DESCRIPTION | CTM

NAVFAC

SEAL

A/E INFO

APPROVED

FOR COMMANDER NAVFAC

ACTIVITY

EMILY M. SYLVESTER, PE

SATISFACTORY TO DATE 28 JUNE 2018

DES: RGG | DRW: RGG | CHK: ELC

DESIGN MANAGER G. COOKE

BRANCH MANAGER JDW

CHIEF ENGINEER EJA

FIRE PROTECTION

DEPARTMENT OF THE NAVY
NAVAL FACILITIES ENGINEERING COMMAND
NAVAL FACILITIES ENGINEERING COMMAND-MID-ATLANTIC
NAVAL STATION NORFOLK, VIRGINIA
MIDLANT CI CORE
MCB CAMP LEJEUNE JACKSONVILLE, NC
P1482 MARINE SPECIAL OP SCHOOL
120 MAN CLASSROOMS
FINISH SCHEDULE

SCALE: AS NOTED
EPROJECT NO. 1558046
CONSTR. CONTR. NO. -
NAVFAC DRAWING NO. 12747191
SHEET 55 OF 91

I-601

DRAWFORM REVISION: 10 MARCH 2009

FILE NAME: P:\MC\camplejeune\MLCON\2017_1558046_p1482_jh-dbk_120manclassrooms\8_Design\Drawings\Sheet\09_Interiors\I-601 FINISH SCHEDULE.dwg LAYOUT NAME: I-601 FINISH SCHEDULE PLOTTED: Friday, May 29, 2020 - 4:02pm USER: elizabeth.clemens

FIRE ALARM/MASS NOTIFICATION GENERAL NOTES

1. CONTRACTOR SHALL MODIFY THE EXISTING BUILDING FAMNS SYSTEM PROVIDE A COMPLETE, COMBINED ADDRESSABLE FIRE ALARM AND MASS NOTIFICATION SYSTEM THROUGHOUT THE EXISTING BUILDING AND THE NEW ADDITIONS. SYSTEM SHALL INCLUDE SPRINKLER SYSTEM SUPERVISION, MANUAL PULL STATIONS, SPEAKERS, STROBES, WIRING, CONDUIT AND ALL OTHER ASSOCIATED EQUIPMENT. ALL WORK AND INSTALLATION SHALL CONFORM WITH, BUT IS NOT LIMITED TO THE APPLICABLE PROVISIONS OF THE CODES AND STANDARDS ON THIS SHEET AND THE CONTRACT DOCUMENTS.
2. CONTRACTOR SHALL PROVIDE ADDRESSABLE CLASS B SIGNALING LINE CIRCUITS, CLASS B NOTIFICATION APPLIANCE CIRCUITS AND CLASS A INITIATING DEVICE CIRCUITS. PROVIDE ALL EQUIPMENT, SOFTWARE, PROGRAMMING, ACCESSORIES WHETHER MENTIONED OR NOT, INCLUDING SMOKE SENSORS, ADDRESSABLE INTERFACE AND RELAY DEVICES, TERMINAL CABINETS, CONDUIT, WIRE, JUNCTION BOXES, FASTENERS, HANGERS, ETC.
3. FIRE ALARM/MASS NOTIFICATION SYSTEM PANELS, LOCAL OPERATORS CONSOLES, ANNUNCIATORS AND CABINETS SHALL BE RECESSED–MOUNTED IN FINISHED AREAS WITH THE TOP OF THE PANEL AT 72 INCHES ABOVE FINISHED FLOOR OR CENTER OF PANEL AT 60 INCHES ABOVE FINISH FLOOR, WHICHEVER IS LOWER. NOTIFICATION APPLIANCE CIRCUIT PANELS MAY BE SURFACE–MOUNTED IN ELECTRICAL ROOMS.
4. ALL FIRE ALARM WIRING SHALL BE INSTALLED CONDUIT. MINIMUM CONDUIT SIZE SHALL BE ¾".
5. CONDUIT SHALL BE RUN CONCEALED WHERE POSSIBLE.
6. PAINT ALL FIRE ALARM JUNCTION BOXES AND COVERS RED IN UNFINISHED AREAS. IN FINISHED AREAS WHERE CONDUIT CANNOT BE CONCEALED, CONDUIT AND JUNCTION BOXES CAN BE PAINTED TO MATCH THE ROOM FINISH, THE INSIDE COVER OF THE JUNCTION BOX MUST BE IDENTIFIED AS "FIRE ALARM" AND THE CONDUIT MUST HAVE PAINTED RED BANDS ¾" INCH WIDE AT 20 FOOT INTERVALS AND ON BOTH SIDES OF A FLOOR, WALL OR CEILING PENETRATION.
7. INSTALL ALL NEW WALL MOUNTED STROBES AND SPEAKER/STROBES 6–INCHES BELOW CEILINGS OR 80–INCHES AFF, WHICHEVER IS LOWER, TO THE CENTERLINE OF LIGHT APPARATUS.
8. PULL STATIONS SHALL BE DOUBLE–ACTION TYPE. THE TOP OF THE PULL STATION SHALL BE INSTALLED AT 48–INCHES AFF.
9. SPRINKLER CONTRACTOR IS TO PROVIDE ALL WATER FLOW SWITCHES, AND TAMPER SWITCHES. THE ELECTRICAL CONTRACTOR SHALL MAKE ALL ELECTRICAL CONNECTIONS AND PROVIDE POWER TO THESE DEVICES.
10. ALL EQUIPMENT AND DEVICES SHALL BE UL LISTED FOR USE IN FIRE ALARM/MASS NOTIFICATION SYSTEMS.
11. FIRE ALARM MASS NOTIFICATION SYSTEM MUST UNDERGO INTELLIGIBILITY TESTING IN ACCORDANCE WITH UFC 3–600–01 AND UFC 4–021–01. COMMERCIALLY AVAILABLE TEST INSTRUMENTATION SHALL BE USED TO MEASURE THE INTELLIGIBILITY. ENSURE THAT A CIS SCORE OF AT LEAST 0.7 IS ACHIEVED IN EACH AREA WHERE BUILDING OCCUPANTS MAY TYPICALLY BE FOUND. AREAS OF THE BUILDING PROVIDED WITH HARD WALL AND CEILING SURFACES (SUCH AS METAL OR CONCRETE) THAT ARE FOUND TO CAUSE EXCESSIVE SOUND REFLECTIONS MAY BE PERMITTED TO HAVE A CIS SCORE LESS THAN THE MINIMUM REQUIRED VALUE IF APPROVED BY THE NAVFAC MIDLANT FIRE PROTECTION ENGINEER.

FIRE ALARM/MASS NOTIFICATION SYMBOLS LEGEND

SNAC	SUPPLEMENTARY NOTIFICATION APPLIANCE PANEL
BATT	FIRE ALARM BATTERY CABINET
DACT	FIRE ALARM TRANSMITTER
MNTR	MNS TRANSCEIVER
MM	MONITOR MODULE
CM	CONTROL MODULE
AR	ADDRESSABLE RELAY DEVICE
SS	TRANSIENT VOLTAGE SURGE SUPPRESSER
F	WATER FLOW SWITCH
T	TAMPER SWITCH
	PHOTOELECTRIC SMOKE DETECTOR
	WALL–MOUNTED STROBE (XX INDICATES CANDELA)
	DUCT SMOKE DETECTOR
XX	CEILING–MOUNTED SPEAKER/STROBE (XX INDICATES CANDELA)
XX	CEILING–MOUNTED STROBE (XX INDICATES CANDELA)
XX	WALL–MOUNTED SPEAKER/STROBE (XX INDICATES CANDELA)
	WALL–MOUNTED SPEAKER
WP	WALL–MOUNTED WEATHERPROOF SPEAKER

APPLICABLE CODES AND STANDARDS

NFPA 1, UNIFORM FIRE CODE, (2018)
NFPA 13, INSTALLATION OF SPRINKLER SYSTEMS, (2019)
NFPA 70, NATIONAL ELECTRIC CODE, (2017)
NFPA 72, NATIONAL FIRE ALARM AND SIGNALING CODE, (2019)
NFPA 80, STANDARD FOR FIRE DOORS AND OTHER OPENING PROTECTIVES, (2016)
NFPA 90A, INSTALLATION OF AIR–CONDITIONING AND VENTILATING SYSTEMS, (2018)
NFPA 101, LIFE SAFETY CODE, (2018)

UFC 1–200–01, DESIGN: GENERAL BUILDING REQUIREMENTS, (2019)
UFC 3–600–01, FIRE PROTECTION ENGINEERING FOR FACILITIES, (CHANGE 4, 2016)
UFC 4–010–01 DOD MINIMUM ANTITERRORISM STANDARDS FOR BUILDINGS, (2018)
UFC 4–021–01, DESIGN AND O&M MASS NOTIFICATION SYSTEMS, (CHANGE 1, 2013)

IBC, INTERNATIONAL BUILDING CODE, (2018)

APPR	DATE	DESCRIPTION	CTM
--	--	--	--

NAVFAC

SEAL

A/E INFO

APPROVED

FOR COMMANDER NAVFAC

ACTIVITY

EMILY M. SYLVESTER, PE

SATISFACTORY TO DATE 28 JUNE 2018

DES: ERZ | DRW: ERZ | CHK: ERZ

DESIGN MANAGER G. COOKE

BRANCH MANAGER DSN

CHIEF ENGINEER EJA

FIRE PROTECTION

DEPARTMENT OF THE NAVY
NAVAL FACILITIES ENGINEERING COMMAND
MIDLANT CI CORE

NAVAL FACILITIES ENGINEERING COMMAND–MID-ATLANTIC
NAVAL STATION NORFOLK VIRGINIA

MCB CAMP LEJEUNE JACKSONVILLE, NC

P1482 MARINE SPECIAL OP SCHOOL
120 MAN CLASSROOMS

GENERAL NOTES AND LEGEND

SCALE: AS NOTED
EPROJECT NO. 1558046
CONSTR. CONTR. NO. –
NAVFAC DRAWING NO. 12747192
SHEET 56 OF 91

FA001

DRAWFORM REVISION: 10 MARCH 2009

FILE NAME: P:\MC\CompLejeune\MILCON\2017_1558046_P1482_JH–DBB_120ManClassrooms\8_Design\Drawings\Sheet\11_FireProtection\FA001 GENERAL NOTES AND LEGEND.dwg LAYOUT NAME: FA001 GENERAL NOTES AND LEGEND PLOTTED: Wednesday, June 03, 2020 – 2:12pm USER: yong.kye

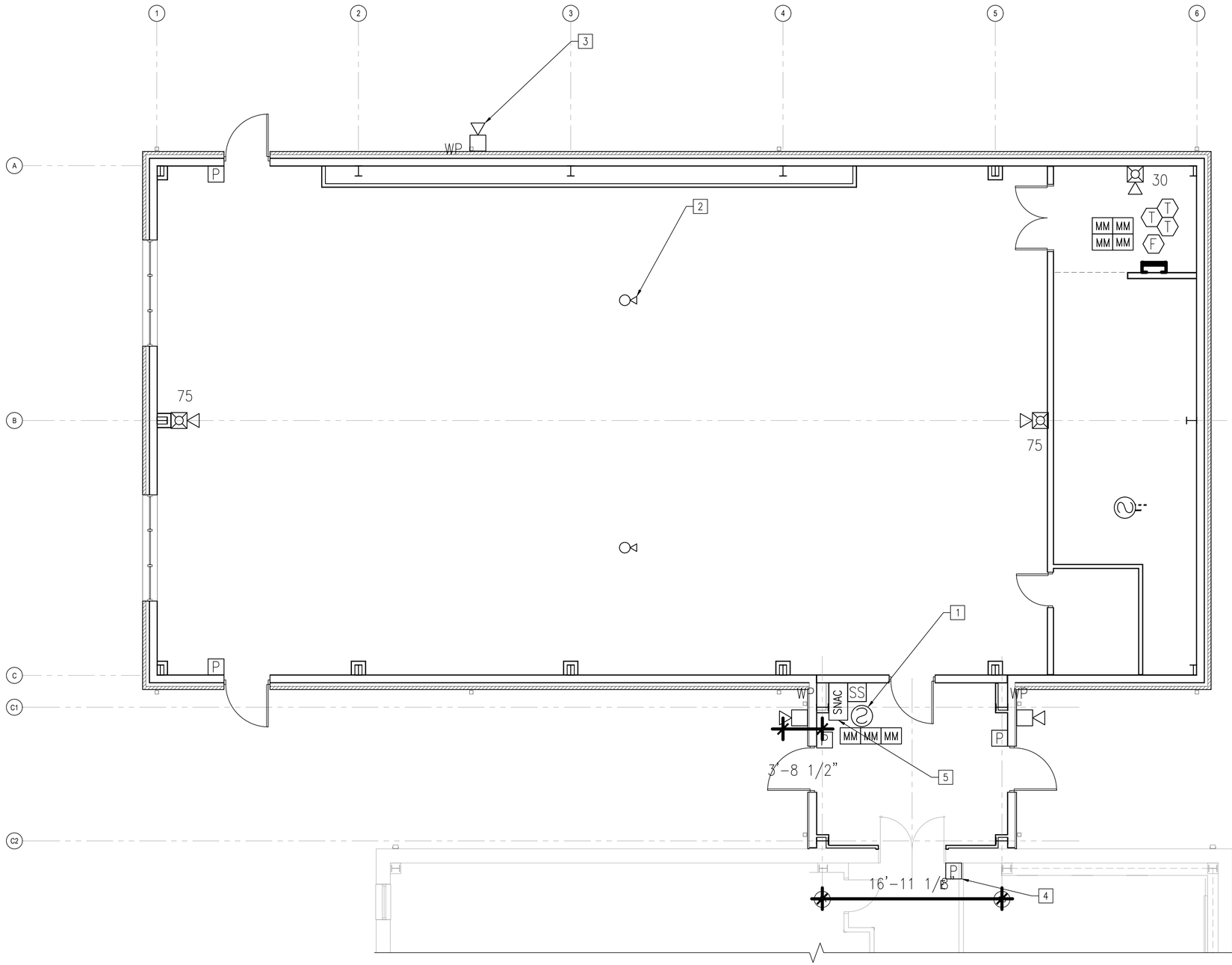

A1 FAMNS FLOOR PLAN AREA 'A'
SCALE: 3/16" = 1'-0"
FA101
PLAN NORTH

GENERAL SHEET NOTES

1. PROVIDE 15 CD SPEAKER/STROBE COVERAGE ABOVE THE MECHANICAL MEZZANINE PLATFORM.
2. THE COR SHALL PERFORM A SITE SURVEY TO BEST DETERMINE THE LOCATION OF THE ANTENNAS FOR THE FIRE ALARM REPORTING SYSTEM AND THE MASS NOTIFICATION SYSTEM.
3. REFER TO FA101 FOR ADDITIONAL FIRE ALARM/MASS NOTIFICATION NOTES.

NEW WORK KEYNOTES

1. CEILING MOUNTED SMOKE DETECTOR FOR FIRE ALARM CONTROL PANEL.
2. TAP INTERIOR SPEAKERS AT $\frac{1}{2}$ WATT.
3. TAP EXTERIOR SPEAKERS AT 2 WATTS.
4. REMOVE EXISTING PULL STATION AND TIE IN NEW FIRE ALARM DEVICES AT THIS POINT.
5. PROVIDE SUPPLEMENTARY NOTIFICATION APPLIANCE PANEL, AMPLIFIERS, POWER SUPPLY AND ALL COMPONENTS NECESSARY TO OPERATE THE APPLIANCES IN THE ADDITION.

KEYPLAN N.T.S.

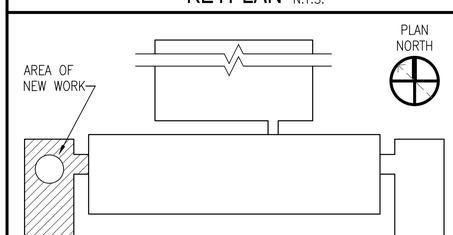

GRAPHIC SCALE

3/16"=1'-0" 0' 4' 8' 12'

SYM	DESCRIPTION	DATE	APPR

NAVFAC

SEAL

A/E INFO.

APPROVED

FOR COMMANDER NAVFAC

ACTIVITY
EMILY M. SYLVESTER, PE

SATISFACTORY TO DATE 28 JUNE 2018
DES ERZ DRW ERZ CHK ERZ
DESIGN MANAGER G. COOKE
BRANCH MANAGER DSN
CHIEF ENGINEER EJA
FIRE PROTECTION

DEPARTMENT OF THE NAVY
NAVAL FACILITIES ENGINEERING COMMAND
NAVAL FACILITIES ENGINEERING COMMAND-MID-ATLANTIC
NAVAL STATION NORFOLK VIRGINIA
MIDLANT CI CORE
MCB CAMP LEJEUNE
JACKSONVILLE, NC
P1482 MARINE SPECIAL OP SCHOOL
120 MAN CLASSROOMS
FAMNS FLOOR PLAN – AREA 'A'

SCALE: AS NOTED
EPROJECT NO. 1558046
CONSTR. CONTR. NO. –
NAVFAC DRAWING NO. 12747193
SHEET 57 OF 91
FA101

DRAWFORM REVISION: 10 MARCH 2009

FILE NAME: P:\NC\CampLejeune\MILCON\2017_1558046_P1482_IH-DBB_120ManClassrooms\B_Design\Drawings\Sheet\11_FireProtection\FA101 FAMNS FLOOR PLAN AREA 'A'.dwg LAYOUT NAME: FA101 FAMNS FLOOR PLAN – AREA 'A' PLOTTED: Wednesday, June 03, 2020 – 2:13pm USER: yong.kye

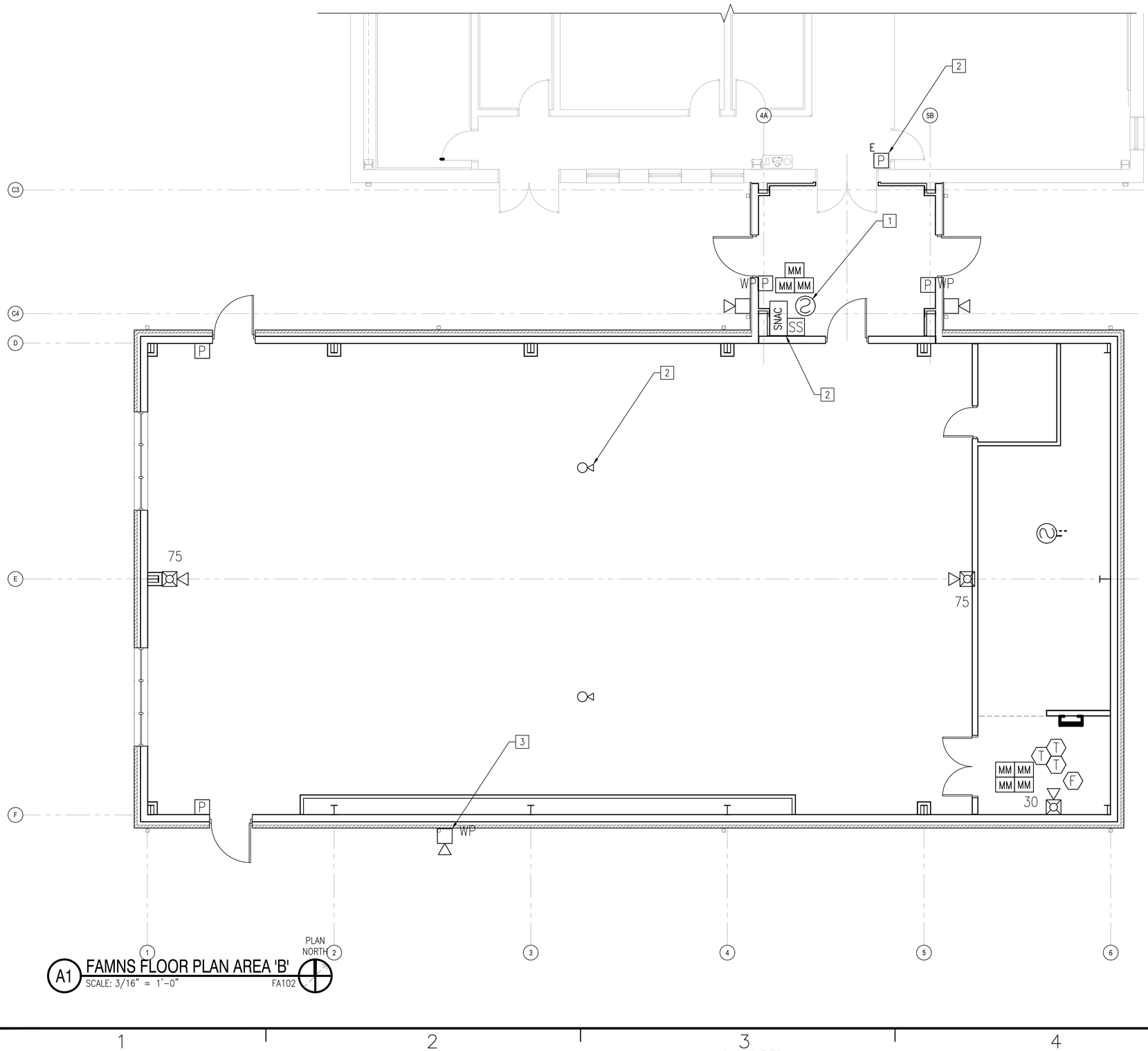

A1 FAMNS FLOOR PLAN AREA 'B'
SCALE: 3/16" = 1'-0"
FA102

GENERAL SHEET NOTES

1. PROVIDE 15 CD SPEAKER/STROBE COVERAGE ABOVE THE MECHANICAL MEZZANINE PLATFORM.
2. THE COR SHALL PERFORM A SITE SURVEY TO BEST DETERMINE THE LOCATION OF THE ANTENNAS FOR THE FIRE ALARM REPORTING SYSTEM AND THE MASS NOTIFICATION SYSTEM.
3. REFER TO FA101 FOR ADDITIONAL FIRE ALARM/MASS NOTIFICATION NOTES.

NEW WORK KEYNOTES

1. CEILING MOUNTED SMOKE DETECTOR FOR FIRE ALARM CONTROL PANEL.
2. TAP INTERIOR SPEAKERS AT ½ WATT.
3. TAP EXTERIOR SPEAKERS AT 2 WATTS.
4. REMOVE EXISTING PULL STATION AND TIE IN NEW FIRE ALARM DEVICES AT THIS POINT.
5. PROVIDE SUPPLEMENTARY NOTIFICATION APPLIANCE PANEL, AMPLIFIERS, POWER SUPPLY AND ALL COMPONENTS NECESSARY TO OPERATE THE APPLIANCES IN THE ADDITION.

KEYPLAN N.T.S.

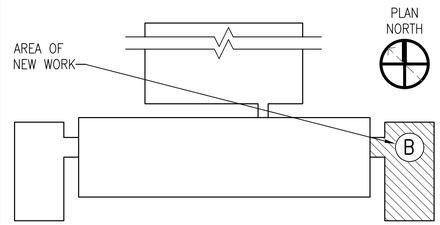

GRAPHIC SCALE

3/16"=1'-0" 0' 4' 8' 12'

APPR	
DATE	
DESCRIPTION	
CTM	

SEAL

A/E INFO

APPROVED

FOR COMMANDER NAVFAC

ACTIVITY

EMILY M. SYLVESTER, PE

SATISFACTORY TO DATE 28 JUNE 2018

DES: ERZ DRW: ERZ CHK: ERZ

DESIGN MANAGER G. COOKE

BRANCH MANAGER DSN

CHIEF ENGINEER EJA

FIRE PROTECTION

DEPARTMENT OF THE NAVY
NAVAL FACILITIES ENGINEERING COMMAND–MID-ATLANTIC
NAVAL STATION NORFOLK VIRGINIA
MIDLANT CI CORE
NAVAL FACILITIES ENGINEERING COMMAND
MCB CAMP LEJEUNE
JACKSONVILLE, NC

P1482 MARINE SPECIAL OP SCHOOL
120 MAN CLASSROOMS

FAMNS FLOOR PLAN – AREA 'B'

SCALE: AS NOTED
EPROJECT NO. 1558046
CONSTR. CONTR. NO. –
NAVFAC DRAWING NO. 12747193
SHEET 58 OF 91

FA102

DRAWFORM REVISION: 10 MARCH 2009

FILE NAME: P:\WC\CompLeJeune\MILCON\2017_1558046_P1482_JH-DBB_120ManClassrooms\B_Design\Drawings\Sheet\11_FireProtection\FA102 FAMNS FLOOR PLAN AREA 'B'.dwg LAYOUT NAME: FA102 FAMNS FLOOR PLAN AREA 'B' PLOTTED: Wednesday, June 03, 2020 - 2:13pm USER: yong.kye

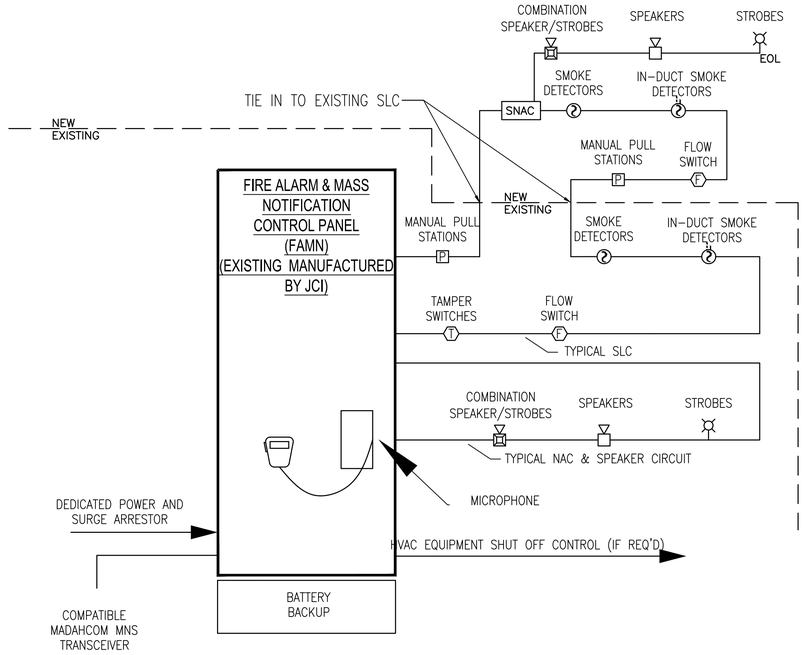

C1 FIRE ALARM AMD MNS RISER DIAGRAM
SCALE: 19/32" = 1'-0" FA501

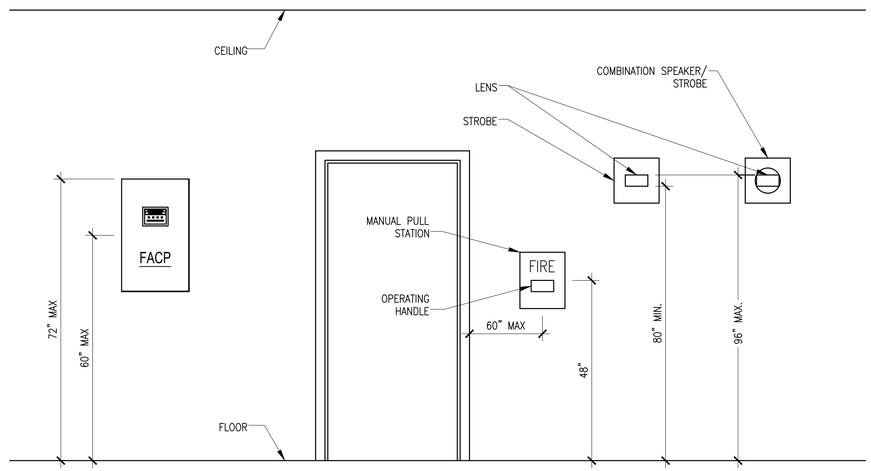

C4 DEVICE AND APPLIANCE MOUNTING HEIGHTS
SCALE: 19/32" = 1'-0" FA501

FIRE ALARM MATRIX

		ANNUNCIATION AT LOCAL PANELS						NOTIFICATION									
		ACTUATE COMMON FIRE ALARM SIGNAL INDICATOR (AUDIBLE & VISUAL)	ACTUATE COMMON TROUBLE SIGNAL INDICATOR (AUDIBLE & VISUAL)	INDICATE FIRE ALARM, DESCRIPTION OF DEVICE & DEVICE LOCATION AT THE FACP AND REMOTE ANNUNCIATOR	INDICATE TROUBLE CONDITION, TYPE & SOURCE AT THE FACP AND REMOTE ANNUNCIATOR	INDICATE SUPERVISORY CONDITION, TYPE AND SOURCE AT THE FACP AND REMOTE ANNUNCIATOR	DISPLAY/PRINT CHANGE OF STATUS AT THE FACP AND REMOTE ANNUNCIATOR	TRANSMIT FIRE ALARM SIGNAL TO BASE FIRE DISPATCH	TRANSMIT TROUBLE SIGNAL TO BASE DISPATCH	TRANSMIT SUPERVISORY SIGNAL TO BASE DISPATCH	TRANSMIT DISTINCT CARBON MONOXIDE DETECTOR SIGNAL TO BASE DISPATCH	BROADCAST PRE-RECORDED CARBON MONOXIDE WARNING MESSAGE OVER FIRE ALARM/MASS NOTIFICATION SYSTEM SPEAKERS	BROADCAST PRE-RECORDED FIRE ALARM EVACUATION MESSAGE OVER FIRE ALARM/MASS NOTIFICATION SYSTEM SPEAKERS	BROADCAST LIVE MESSAGE OVER FIRE ALARM/MASS NOTIFICATION SYSTEM SPEAKERS	ACTUATE VISUAL NOTIFICATION APPLIANCES (STROBES)	INTERRUPT PRE-RECORDED FIRE ALARM EVACUATION MESSAGE	SHUT DOWN ASSOCIATED AIR-HANDLER AND DOAS
		A	B	C	D	E	F	G	H	I	J	K	L	M	N	O	
1	MANUAL PULL STATIONS	X		X			X	X					X		X		
2	SMOKE DETECTOR	X		X			X	X					X		X		
3	SPRINKLER SYSTEM FLOW SWITCH	X		X			X	X					X		X		
4	DUCT MOUNTED SMOKE DETECTOR					X	X			X							X
5	SPRINKLER SYSTEM TAMPER SWITCH					X	X			X							
6	FIRE ALARM SYSTEM TROUBLE		X		X		X		X								
7	CARBON MONOXIDE DETECTOR					X				X	X	X			X		
8	LIVE VOICE ANNOUNCEMENT FROM MNS MICROPHONE						X							X	X	X	
9	RECEIPT OF MNS MESSAGE OVER BASE WIDE MASS NOTIFICATION SYSTEM						X							X	X	X	

##########
SCALE: ########## FA501

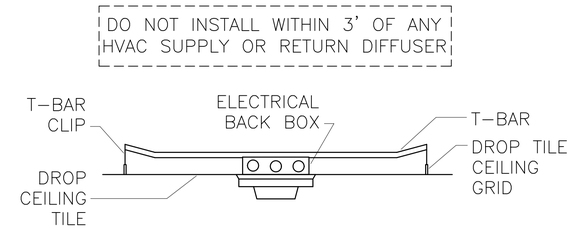

B4 SMOKE DETECTOR CEILING BACKBOX
SCALE: 47/128" = 1'-0" FA501

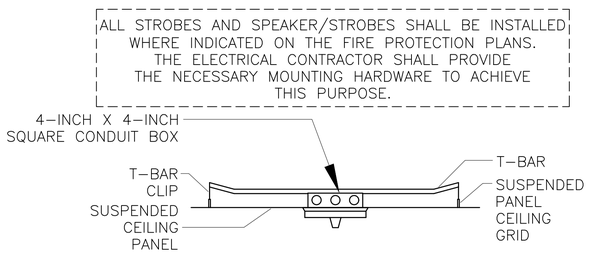

A4 SPEAKER STROBE CEILING BACKBOX
SCALE: 3/8" = 1'-0" FA501

			APPR
			DATE
			DESCRIPTION
			CTM

NAVFAC

SEAL

A/E INFO

APPROVED

FOR COMMANDER NAVFAC

ACTIVITY

EMILY M. SYLVESTER, PE

SATISFACTORY TO DATE 28 JUNE 2018

DES ERZ | DRW ERZ | CHK ERZ

DESIGN MANAGER G. COOKE

BRANCH MANAGER DSN

CHIEF ENGINEER EJA

FIRE PROTECTION

DEPARTMENT OF THE NAVY
NAVAL FACILITIES ENGINEERING COMMAND
MIDLANT CI CORE

NAVAL FACILITIES ENGINEERING COMMAND-MID-ATLANTIC
NAVAL STATION NORFOLK VIRGINIA

MCB CAMP LEJEUNE
JACKSONVILLE, NC

P1482 MARINE SPECIAL OP SCHOOL
120 MAN CLASSROOMS

FAMNS DETAILS

SCALE: AS NOTED

EPROJECT NO. 1558046

CONSTR. CONTR. NO. –

NAVFAC DRAWING NO. 12747194

SHEET 59 OF 91

FA501

DRAWFORM REVISION: 10 MARCH 2009

FILE NAME: P:\MC\Camp Lejeune\MILCON\2017_1558046_P1482_IH-088_120ManClassrooms\8_Design\Drawings\Sheet\11_FireProtection\FA501 FAMNS DETAILS.dwg LAYOUT NAME: FA501 FAMNS DETAILS PLOTTED: Wednesday, June 03, 2020 - 2:14pm USER: yong.kye

UNCLASSIFIED

SPRINKLER GENERAL NOTES

1. CONTRACTOR SHALL PROVIDE A COMPLETE HYDRAULICALLY–CALCULATED AUTOMATIC WET–PIPE SPRINKLER SYSTEM THROUGHOUT THE ENTIRE BUILDING. SYSTEM SHALL INCLUDE QUICK RESPONSE SPRINKLERS, WATER FLOW ALARM SWITCHES, VALVE SUPERVISORY TAMPER SWITCHES, CHECK VALVES, CONTROL VALVES, PIPING, HANGERS, SPRINKLERS, PIPING CONCEALMENT, AND ALL ASSOCIATED EQUIPMENT. ALL WORK AND INSTALLATION SHALL CONFORM WITH, BUT ARE NOT LIMITED TO THE APPLICABLE PROVISIONS OF THE CODES AND STANDARDS LISTED ON THIS SHEET AND THE CONTRACT DOCUMENTS.
2. SPRINKLER CONTRACTOR TO PROVIDE ALL CONTROL VALVES, WATER FLOW SWITCHES, AND SUPERVISORY SWITCHES. ELECTRICAL CONTRACTOR SHALL MAKE ALL ELECTRICAL CONNECTIONS AND PROVIDE POWER TO THESE DEVICES.
3. ALL SPRINKLER SYSTEMS SHALL USE BLACK STEEL PIPE SCHEDULE 40 THROUGHOUT.
4. ALL SPRINKLER PIPE SHALL BE PAINTED RED. PAINT ALL PIPE AND FITTINGS.
5. CONTRACTOR SHALL COORDINATE SPRINKLER SYSTEM PIPING WITH STRUCTURAL MEMBERS AND OTHER TRADES THROUGHOUT THE BUILDING. CONTRACTOR SHALL MAINTAIN AS MUCH HEAD ROOM CLEARANCE AS PRACTICAL BETWEEN BOTTOM OF SPRINKLER PIPE, FITTINGS, VALVES, AND SPRINKLER HEADS WITH THE FINISHED FLOOR IN ALL AREAS OF EXPOSED PIPE, BUT IN NO CASE PROVIDE LESS THAN 7'–0" OF HEAD ROOM CLEARANCE.
6. NEW SPRINKLER PIPING SHOWN ON THE DRAWINGS IS SHOWN FOR PURPOSES OF DESIGN INTENT. CONTRACTOR SHALL FIELD VERIFY ALL DIMENSIONS AND ADJUST WORK ACCORDINGLY.
7. ALL AREAS ARE LIGHT HAZARD UNLESS OTHERWISE INDICATED.
8. ALL PIPE PENETRATIONS THROUGH FIRE RATED BARRIERS SHALL BE PROVIDED WITH UL LISTED FIRESTOPPING SYSTEMS. FIRE RATED BARRIERS ARE INDICATED ON THE LIFE SAFETY DRAWINGS.

SPRINKLER SYSTEM SYMBOLS LEGEND

———	NEW SPRINKLER PIPING
⊣O	ELBOW UP
⊘	PIPE UP
≀	PIPE CONTINUATION MARK
⋈	CHECK VALVE
⋈	INDICATING CONTROL VALVE
⊗	SPRINKLER RISER
⚉	POINT OF CONNECTION, NEW OR STARTING
⬡ T	VALVE SUPERVISORY TAMPER SWITCH
⬡ F	WATER FLOW SWITCH
Y	FIRE DEPARTMENT CONNECTION
⊢	TEST HEADER
LH	LIGHT HAZARD
OHT	ORDINARY HAZARD

APPLICABLE CODES AND STANDARDS

NFPA 1, UNIFORM FIRE CODE, (2018)
NFPA 13, INSTALLATION OF SPRINKLER SYSTEMS, (2019)
NFPA 70, NATIONAL ELECTRIC CODE, (2017)
NFPA 72, NATIONAL FIRE ALARM AND SIGNALING CODE, (2019)
NFPA 80, STANDARD FOR FIRE DOORS AND OTHER OPENING PROTECTIVES, (2016)
NFPA 90A, INSTALLATION OF AIR–CONDITIONING AND VENTILATING SYSTEMS, (2018)
NFPA 101, LIFE SAFETY CODE, (2018)

UFC 1–200–01, DESIGN: GENERAL BUILDING REQUIREMENTS, (2019)
UFC 3–600–01, FIRE PROTECTION ENGINEERING FOR FACILITIES, (CHANGE 4, 2016)
UFC 4–010–01 DOD MINIMUM ANTITERRORISM STANDARDS FOR BUILDINGS, (2018)
UFC 4–021–01, DESIGN AND O&M MASS NOTIFICATION SYSTEMS, (CHANGE 1, 2013)

IBC, INTERNATIONAL BUILDING CODE, (2018)

SPRINKLER DATA

SYMBOL	HAZARD CLASSIFICATION	BASIC DESIGN AREA	DENSITY	OUTSIDE HOSE STREAM DEMAND	DURATION
LH	LIGHT HAZARD	3,000–SQFT	0.10–GPM/SQFT	250–GPM	60 MIN
OHT	ORDINARY HAZARD GROUP 1	3,000–SQFT	0.15–GPM/SQFT	500–GPM	60 MIN

HYDRANT FLOW TEST DATA

STATIC PRESSURE (PSI)	RESIDUAL PRESSURE (PSI)	FLOW RATE (GPM)	DATE TESTED
80	75	1445	16 MAR 2017

NOTES: TEST PERFORMED BY NAVFAC FPE.

THE CONTRACTOR SHALL PERFORM A FLOW TEST TO VERIFY CONDITIONS HAVE NOT DETERIORATED.



CAMP LEJEUNE - MARSOC NEW RIVER - P-1482 AREA WATER MAP
SCALE: 1" = 200'

DES	DRW	CHK	DESCRIPTION	APPR
--	--	--	--	--

DEPARTMENT OF THE NAVY
NAVAL FACILITIES ENGINEERING COMMAND
MIDLANT Ω CORE
NAVAL FACILITIES ENGINEERING COMMAND–MID-ATLANTIC
NAVAL STATION NORFOLK VIRGINIA
MCB CAMP LEJEUNE
JACKSONVILLE, NC
P1482 MARINE SPECIAL OP SCHOOL
120 MAN CLASSROOMS
GENERAL NOTES AND LEGEND

SEAL

A/E INFO

APPROVED
FOR COMMANDER NAVFAC
ACTIVITY
EMILY M. SYLVESTER, PE
SATISFACTORY TO DATE 28 JUNE 2018
DES ERZ | DRW ERZ | CHK ERZ
DESIGN MANAGER G. COOKE
BRANCH MANAGER DSN
CHIEF ENGINEER EJA
FIRE PROTECTION

SCALE: AS NOTED
EPROJECT NO. 1558046
CONSTR. CONTR. NO. –
NAVFAC DRAWING NO. 12747195
SHEET 60 OF 91
FX001
DRAWFORM REVISION: 10 MARCH 2009

FILE NAME: P:\MCI\Camp Lejeune\MILCON\2017_1558046_P1482_IH-08B_120ManClassrooms\8_Design\Drawings\Sheet\1_FirePrtotection\FX001 GENERAL NOTES AND LEGEND.dwg LAYOUT NAME: FX001 GENERAL NOTES AND LEGEND PLOTTED: Wednesday, June 03, 2020 – 2:14pm USER: yong.kye

UNCLASSIFIED

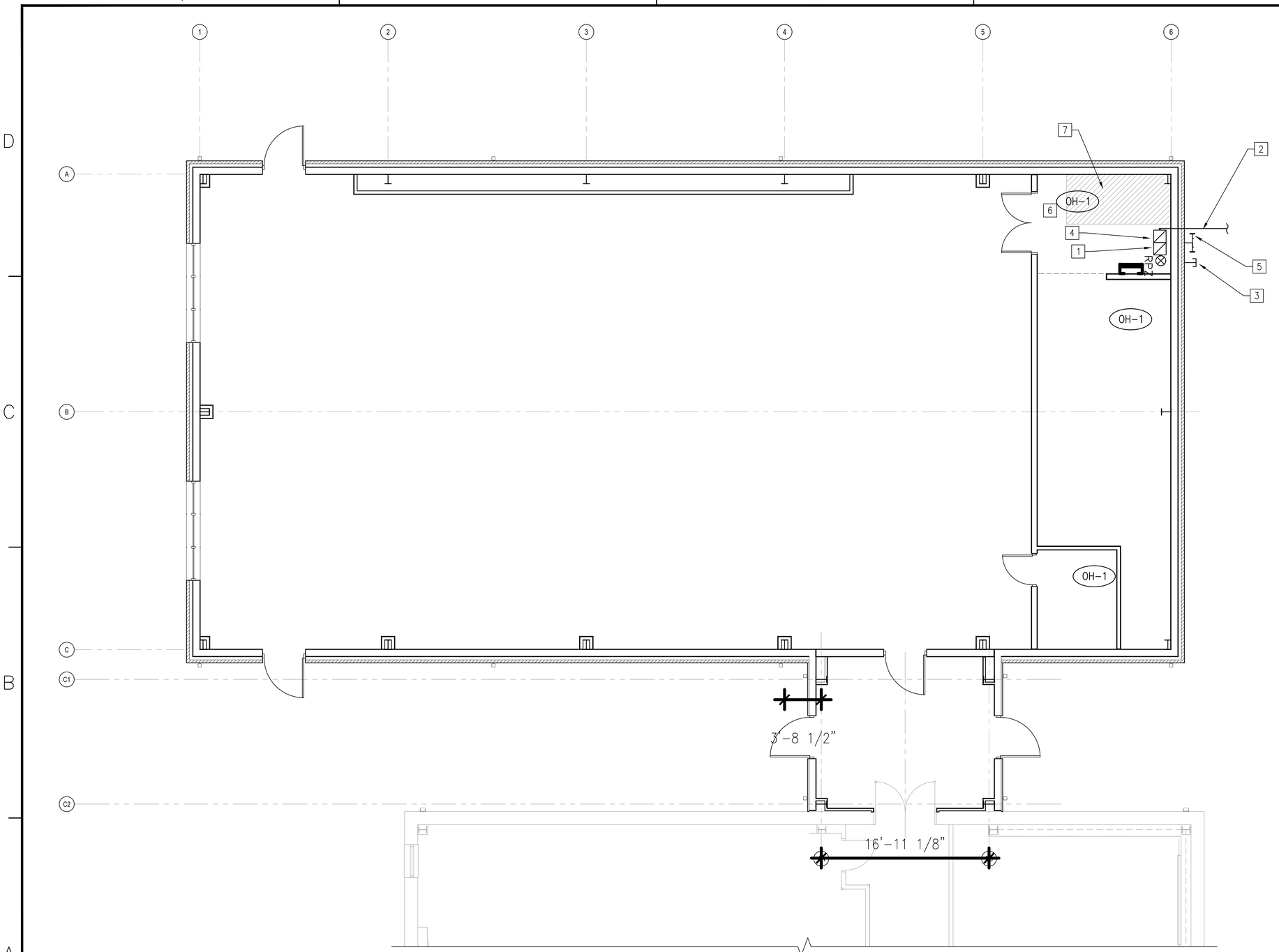

SPRINKLER FLOOR PLAN AREA 'A'
SCALE: 3/16" = 1'-0" X-XXX

SPRINKLER SYSTEM DESIGN DATA

HAZARD CATEGORY	DESIGN DENSITY (GPM/SQFT)	DESIGN AREA (SQFT)	MAXIMUM AREA PER SPRINKLER	HOSE STREAM (GPM)
LIGHT	0.1	1,500	225	250
ORDINARY	0.2	2,500	130	250

GENERAL SHEET NOTES

1. SEE FX001 FOR GENERAL NOTES, SYMBOLS, LEGEND AND APPLICABLE CODES AND STANDARDS.

NEW WORK KEYNOTES

1. SPRINKLER/STANDPIPE RISER
2. 6-INCH DEDICATED FIRE PROTECTION WATER SUPPLY
3. STORZ CONNECTION
4. SEE RISER DIAGRAM, SHEET FX501
5. BACKFLOW PREVENTER TEST HEADER
6. COORDINATE EQUIPMENT LOCATIONS WITH MECHANICAL AND ELECTRICAL CONTRACTORS
7. ELECTRICAL EQUIPMENT CLEARANCE

KEYPLAN N.T.S.

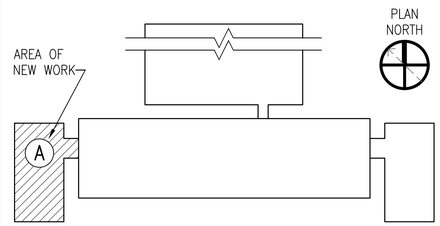

GRAPHIC SCALE

3/16"=1'-0" 0' 4' 8' 12'

SYM	DESCRIPTION	DATE	APPR

NAVFAC

SEAL

A/E INFO

APPROVED

FOR COMMANDER NAVFAC

ACTIVITY
EMILY M. SYLVESTER, PE

SATISFACTORY TO DATE 28 JUNE 2018
DES ERZ DRW ERZ CHK ERZ
DESIGN MANAGER G. COOKE
BRANCH MANAGER DSN
CHIEF ENGINEER EJA
FIRE PROTECTION

DEPARTMENT OF THE NAVY
NAVAL FACILITIES ENGINEERING COMMAND
NAVAL FACILITIES ENGINEERING COMMAND-MID-ATLANTIC
NAVAL STATION NORFOLK VIRGINIA
MIDLANT CI CORE
MCB CAMP LEJEUNE JACKSONVILLE, NC
P1482 MARINE SPECIAL OP SCHOOL
120 MAN CLASSROOMS
SPRINKLER FLOOR PLAN - AREA 'A'

SCALE: AS NOTED
EPROJECT NO. 1558046
CONSTR. CONTR. NO. -
NAVFAC DRAWING NO. 12747196
SHEET 61 OF 91
FX101

DRAWFORM REVISION: 10 MARCH 2009

FILE NAME: P:\NC\CampLejeune\MILCON\2017_1558046_P1482_IH-DBB_120ManClassrooms\B_Design\Drawings\Sheet\11_FireProtection\FX101 SPRINKLER FLOOR PLAN AREA 'A'.dwg LAYOUT NAME: FX101 SPRINKLER FLOOR PLAN - AREA 'A' PLOTTED: Wednesday, June 03, 2020 - 2:14pm USER: yong.kye

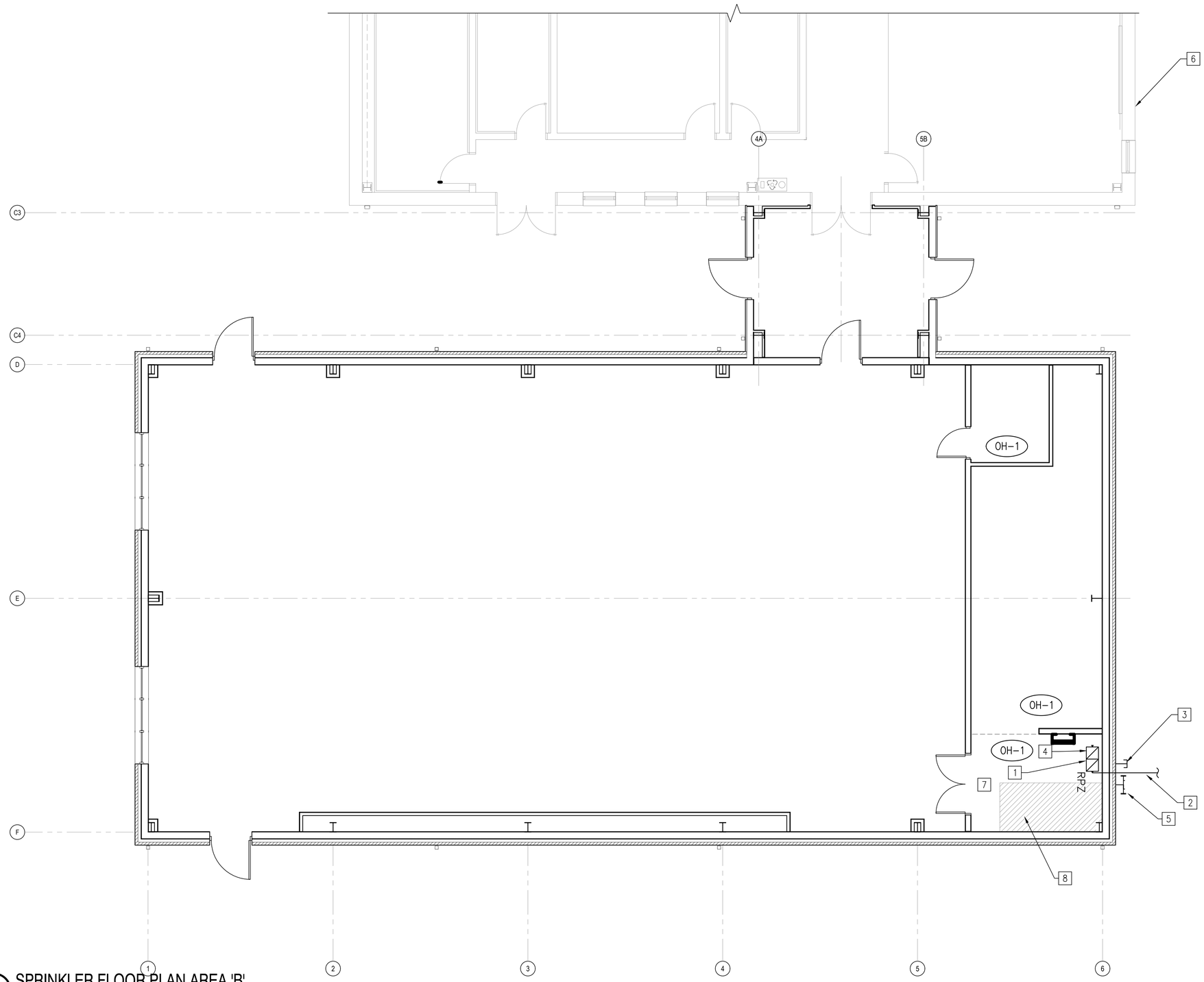

SPRINKLER FLOOR PLAN AREA 'B'
SCALE: 3/16" = 1'-0" X-XXX

SPRINKLER SYSTEM DESIGN DATA

HAZARD CATEGORY	DESIGN DENSITY (GPM/SQFT)	DESIGN AREA (SQFT)	MAXIMUM AREA PER SPRINKLER	HOSE STREAM (GPM)
LIGHT	0.1	1,500	225	250
ORDINARY	0.2	2,500	130	250

GENERAL SHEET NOTES

1. SEE FX001 FOR GENERAL NOTES, SYMBOLS, LEGEND AND APPLICABLE CODES AND STANDARDS.

NEW WORK KEYNOTES

1. SPRINKLER/STANDPIPE RISER
2. 6-INCH DEDICATED FIRE PROTECTION WATER SUPPLY
3. STORZ CONNECTION
4. SEE RISER DIAGRAM, SHEET FX501
5. BACKFLOW PREVENTER TEST HEADER
6. REMOVE EXISTING FDC AND REPLACE WITH 5" STORZ CONNECTION ON 30 DEGREE ELBOW
7. COORDINATE EQUIPMENT LOCATIONS WITH ELECTRICAL AND MECHANICAL SUBCONTRACTORS
8. ELECTRICAL EQUIPMENT CLEARANCE

KEYPLAN N.T.S.

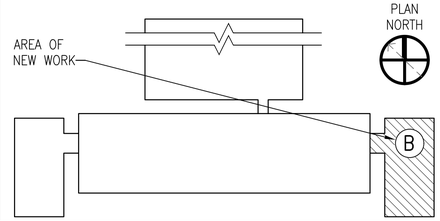

GRAPHIC SCALE

3/16"=1'-0" 0' 4' 8' 12'

APPR | DATE | DESCRIPTION | CTM

NAVFAC

SEAL

1/E INFO

APPROVED

FOR COMMANDER NAVFAC

ACTIVITY

EMILY M. SYLVESTER, PE

SATISFACTORY TO DATE 28 JUNE 2018

DES: ERZ | DRW: ERZ | CHK: ERZ

DESIGN MANAGER G. COOKE

BRANCH MANAGER DSN

CHIEF ENGINEER EJA

FIRE PROTECTION

DEPARTMENT OF THE NAVY
NAVAL FACILITIES ENGINEERING COMMAND
MIDLANT CI CORE

NAVAL FACILITIES ENGINEERING COMMAND-MID-ATLANTIC
NAVAL STATION NORFOLK VIRGINIA

MCB CAMP LEJEUNE JACKSONVILLE, NC

P1482 MARINE SPECIAL OP SCHOOL
120 MAN CLASSROOMS

SPRINKLER FLOOR PLAN - AREA 'B'

SCALE: AS NOTED
EPROJECT NO. 1558046
CONSTR. CONTR. NO. –
NAVFAC DRAWING NO. 12747197
SHEET 62 OF 91

FX102

DRAWFORM REVISION: 10 MARCH 2009

FILE NAME: P:\WC\CompLeJeune\MILCON\2017_1558046_P1482_JH-DBB_120ManClassrooms\B_Design\Drawings\Sheet\11_FireProtection\FX102 SPRINKLER FLOOR PLAN AREA 'B'.dwg LAYOUT NAME: FX102 SPRINKLER FLOOR PLAN - AREA 'B' PLOTTED: Wednesday, June 03, 2020 - 2:15pm USER: yong.kye

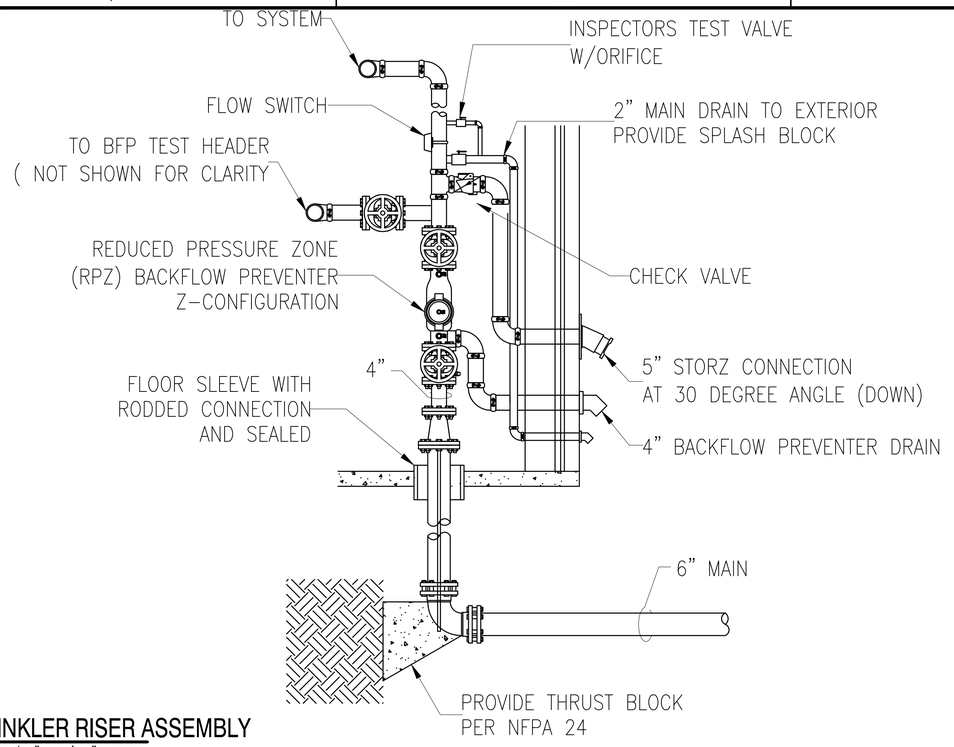

C1 SPRINKLER RISER ASSEMBLY
SCALE: 19/32" = 1'-0" FX501

SPRINKLER DATA					
SYMBOL	HAZARD CLASSIFICATION	BASIC DESIGN AREA	DENSITY	OUTSIDE HOSE STREAM DEMAND	DURATION
⬭	LIGHT HAZARD	3,000-SQFT	0.10-GPM/SQFT	250-GPM	60 MIN
⬭	ORDINARY HAZARD GROUP 1	3,000-SQFT	0.15-GPM/SQFT	500-GPM	60 MIN

C4 HAZARD CLASSIFICATIONS
SCALE: 3/8" = 1'-0" FX501

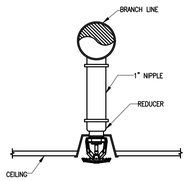

B1 RECESSED PENDENT SPRINKLER DROP
SCALE: 3/8" = 1'-0" FX501

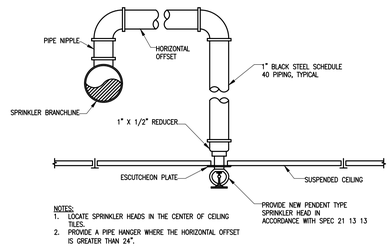

B3 PENDENT SPRINKLER ARMOVER
SCALE: 3/8" = 1'-0" FX501

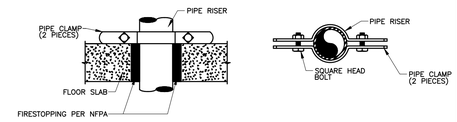

B5 PIPE CLAMP
SCALE: 3/8" = 1'-0" FX501

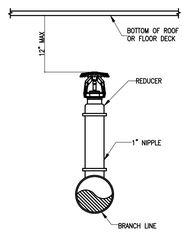

A1 UPRIGHT SPRINKLER WITH SPRIG-UP
SCALE: 3/8" = 1'-0" FX501

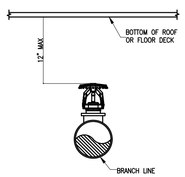

A3 UPRIGHT SPRINKLER ON BRANCHLINE
SCALE: 3/8" = 1'-0" FX501

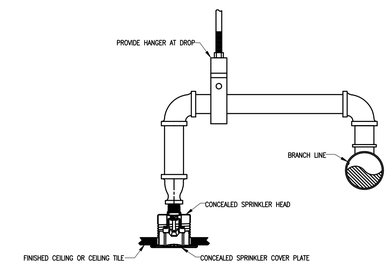

A5 CONCEALED SPRINKLER
SCALE: 3/8" = 1'-0" FX501

							APPR
							DATE
							DESCRIPTION
							CTM

NAVFAC

SEAL

A/E INFO

APPROVED

FOR COMMANDER NAVFAC

ACTIVITY

EMILY M. SYLVESTER, PE

SATISFACTORY TO DATE 28 JUNE 2018

DES ERZ | DRW ERZ | CHK ERZ

DESIGN MANAGER G. COOKE

BRANCH MANAGER DSN

CHIEF ENGINEER EJA

FIRE PROTECTION

DEPARTMENT OF THE NAVY
NAVAL FACILITIES ENGINEERING COMMAND
MIDLANT CI CORE

NAVAL FACILITIES ENGINEERING COMMAND-MID-ATLANTIC
NAVAL STATION NORFOLK VIRGINIA

MCB CAMP LEJEUNE
JACKSONVILLE, NC

P1482 MARINE SPECIAL OP SCHOOL
120 MAN CLASSROOMS

SPRINKLER DETAILS

SCALE: AS NOTED

EPROJECT NO. 1558046

CONSTR. CONTR. NO. –

NAVFAC DRAWING NO. 12747198

SHEET 63 OF 91

FX501

DRAWFORM REVISION: 10 MARCH 2009

FILE NAME: P:\MCI\Comp\Lejeune\MLCON\2017_1558046_P1482_IH-0BB_120ManClassrooms\B_Design\Drawings\Sheet\11_FireProtection\FX501 SPRINKLER DETAILS.dwg LAYOUT NAME: FX501 SPRINKLER DETAILS PLOTTED: Wednesday, June 03, 2020 - 2:15pm USER: yong.kye

MECHANICAL LEGEND

(T)	THERMOSTAT
(H)	HUMIDITY SENSOR
(C)	CO_2 SENSOR
12"ø	ROUND DUCT DIMENSION



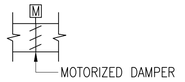

MECHANICAL ABBREVIATIONS

AD	ACCESS DOOR
AFF	ABOVE FINISHED FLOOR
AP	ACCESS PANEL
APD	AIR PRESSURE DROP
AHU	AIR HANDLING UNIT
BD	BALANCING DAMPER
BR	BASEBOARD RADIATOR
BTUH	BRITISH THERMAL UNIT PER HOUR
C	COMMON
Cv	LOSS COEFFICIENT
CU	CONDENSING UNIT
CFM	CUBIC FEET PER MINUTE
CLG	CEILING
COP	COEFFICENT OF PERFORMANCE
DB	DRY BULB
DDC	DIRECT DIGITAL CONTROL
DEG	DEGREE
DX	DIRECT EXPANSION
EAT	ENTERING AIR TEMPRATURE
EER	ENERGY EFFICIENCY RATIO
EF	EXHAUST FAN
EFF	EFFICIENCY
ESP	EXTERNAL STATIC PRESSURE
EWT	ENTERING WATER TEMPERATURE
F	FAHRENHEIT
FCU	FAN COIL UNIT
FD	FIRE DAMPER
FT	FEET
FTWG	FEET OF WATER GAUGE
FO	FLAT OVAL DUCT
GPM	GALLONS PER MINUTE
HGT	HEIGHT
HP	HEAT PUMP, HORSEPOWER
HR	HOUR
HX	HEAT EXCHANGER
IAW	INCHES OF WATER GAUGE
IWG	IN ACCORDANCE WITH
kW	KILOWATT
LAT	LEAVING AIR TEMPERATURE
LBS	POUNDS
LV	LOUVER
LWT	LEAVING WATER TEMPERATURE
MAU	MAKEUP AIR UNIT
MAX	MAXIMUM
MIN	MINIMUM
NC	NOISE CRITERIA, NORMALLY CLOSED
NO	NUMBER, NORMALLY OPEN
OA	OUTSIDE AIR
OAU	OUTSIDE AIR UNIT
OU	OUTDOOR UNIT
PH	PHASE
PRS	PRESSURE REDUCING STATION
PSI	POUNDS PER SQUARE INCH
PTAC	PACKAGED TERMINAL AIR CONDITIONER
PTHP	PACKAGED TERMINAL HEAT PUMP
RA	RETURN AIR
RH	RELATIVE HUMIDITY
RL	REFRIGERANT LIQUID
RS	REFRIGERANT SUCTION
RTU	ROOFTOP UNIT
SA	SUPPLY AIR
SEER	SEASONAL ENERGY EFFICIENCY RATIO
SIM	SIMILAR
SP	STATIC PRESSURE
SQ	SQUARE
TYP	TYPICAL
UH	UNIT HEATER
UON	UNLESS OTHERWISE NOTED
V	VOLTS
VFD	VARIABLE FREQUENCY DRIVE
W	WIDTH
WB	WET BULB
WPD	WATER PRESSURE DROP
°	DEGREES
ø	DIAMETER

GENERAL MECHANICAL NOTES

1. THESE GENERAL MECHANICAL NOTES APPLY TO THE ALL MECHANICAL DRAWINGS IN THIS SET. SHEET SPECIFIC NOTES ARE INDICATED ON EACH SHEET UNDER GENERAL SHEET NOTES.
2. PROVIDE ALL MATERIALS AND EQUIPMENT AND PERFORM ALL LABOR REQUIRED TO INSTALL COMPLETE AND OPERABLE MECHANICAL SYSTEMS AS INDICATED ON THE DRAWINGS, AS SPECIFIED AND AS REQUIRED BY CODE.
3. INSTALL ALL MECHANICAL EQUIPMENT AND APPURTENANCES IN ACCORDANCE WITH MANUFACTURER'S RECOMMENDATIONS, THIS CONTRACT'S DOCUMENTS, AND APPLICABLE CODES AND REGULATIONS.
4. PROVIDE VIBRATION ISOLATORS FOR ALL PUMPS, FANS, AND OTHER DYNAMIC MECHANICAL EQUIPMENT TO PREVENT TRANSMISSION OF VIBRATION TO BUILDING STRUCTURE.
5. PROVIDE ACCESS PANELS IN WALLS AND CEILINGS, WHERE REQUIRED, TO SERVE FIRE DAMPERS, VALVES, SMOKE DETECTORS, AND OTHER CONCEALED MECHANICAL EQUIPMENT THAT REQUIRES ROUTINE MAINTENANCE. ACCESS PANELS BE LARGE ENOUGH TO ALLOW PROPER CLEARANCE FOR ACCESS DOORS.
6. ALL OPENINGS IN FIRE WALLS DUE TO DUCTWORK, PIPING, CONDUIT, ETC., SHALL BE FIRE STOPPED.
7. LOCATE ALL NEW HORIZONTAL DUCTWORK ABOVE THE SUSPENDED CEILINGS UNLESS OTHERWISE INDICATED.
8. PROVIDE PIPE SLEEVES FOR ALL PIPING PENETRATIONS THRU WALLS AND FLOORS. EACH PIPE SHALL BE SEPARATELY SLEEVED. PROVIDE CONTINUOUS SEALANT JOINT AROUND PIPE SLEEVE, BOTH SIDES OF WALL, WATERTIGHT.
9. PROVIDE P-TRAPS IN CONDENSATE DRAIN PIPING AT EACH AHU UNLESS THE AHU IS EQUIPPED WITH AN INTERNAL TRAP.
10. MOUNT THERMOSTATS 48 INCHES ABOVE THE FINISHED FLOOR UNLESS OTHERWISE INDICATED. COORDINATE LOCATION OF THERMOSTATS WITH ELECTRICAL TO AVOID CONFLICTS.
11. ALL DDC POINTS SHALL BE READABLE AND WRITEABLE FROM THE BACNET ADVANCED WORKSTATION (B-AWS).

DESIGN CONDITIONS		
	SUMMER	WINTER
INDOORS	OCCUPIED: 78° DB/50% RH	OCCUPIED: 68° DB
OUTDOORS	91° DB/77° WB	26° DB/22° WB

OUTSIDE AIR CALCULATION										
UNIT	SPACE NAME	FLOOR AREA (SQ.FT.)	ASHRAE CLASSIFICATION	TOTAL PEOPLE	CFM PER PERSON	CFM PER SQ.FT.	REQUIRED CFM	DESIGN CFM	TOTAL	REMARKS
DOAU-1	AREA "A" CLASSROOM	4066	LECTURE CLASSROOM	120	7.5	0.06	1144	1144	1144	
DOAU-2	AREA "B" CLASSROOM	4066	LECTURE CLASSROOM	120	7.5	0.06	1144	1144	1144	

APPR | DATE | DESCRIPTION | CTM

NAVFAC

SEAL

A/E INFO

APPROVED

FOR COMMANDER NAVFAC

ACTIVITY

EMILY M. SYLVESTER, PE

SATISFACTORY TO DATE 28 JUNE 2018

DES JES | DRW JES | CHK YG

DESIGN MANAGER G. COOKE

BRANCH MANAGER

CHIEF ENGINEER EJA

FIRE PROTECTION

DEPARTMENT OF THE NAVY
NAVAL FACILITIES ENGINEERING COMMAND
MIDLANT CI CORE

NAVAL FACILITIES ENGINEERING COMMAND-MID-ATLANTIC
NAVAL STATION NORFOLK VIRGINIA

MCB CAMP LEJEUNE
JACKSONVILLE, NC

P1482 MARINE SPECIAL OP SCHOOL
120 MAN CLASSROOMS

LEGENDS AND NOTES

SCALE: AS NOTED

EPROJECT NO. 1558046

CONSTR. CONTR. NO. –

NAVFAC DRAWING NO. 12747199

SHEET 64 OF 91

M-001

DRAWFORM REVISION: 10 MARCH 2009

FILE NAME: P:\WC\Comp\Lejeune\MILCON\2017_1558046_P1482_JH-DBB_120ManClassrooms\B_Design\Drawings\Sheet\13_Mechanical\1558046_P1482_M-001 LEGENDS AND NOTES.dwg LAYOUT NAME: M-001
PLOTTED: Monday, June 01, 2020 - 7:44am USER: joseph.shilling1w

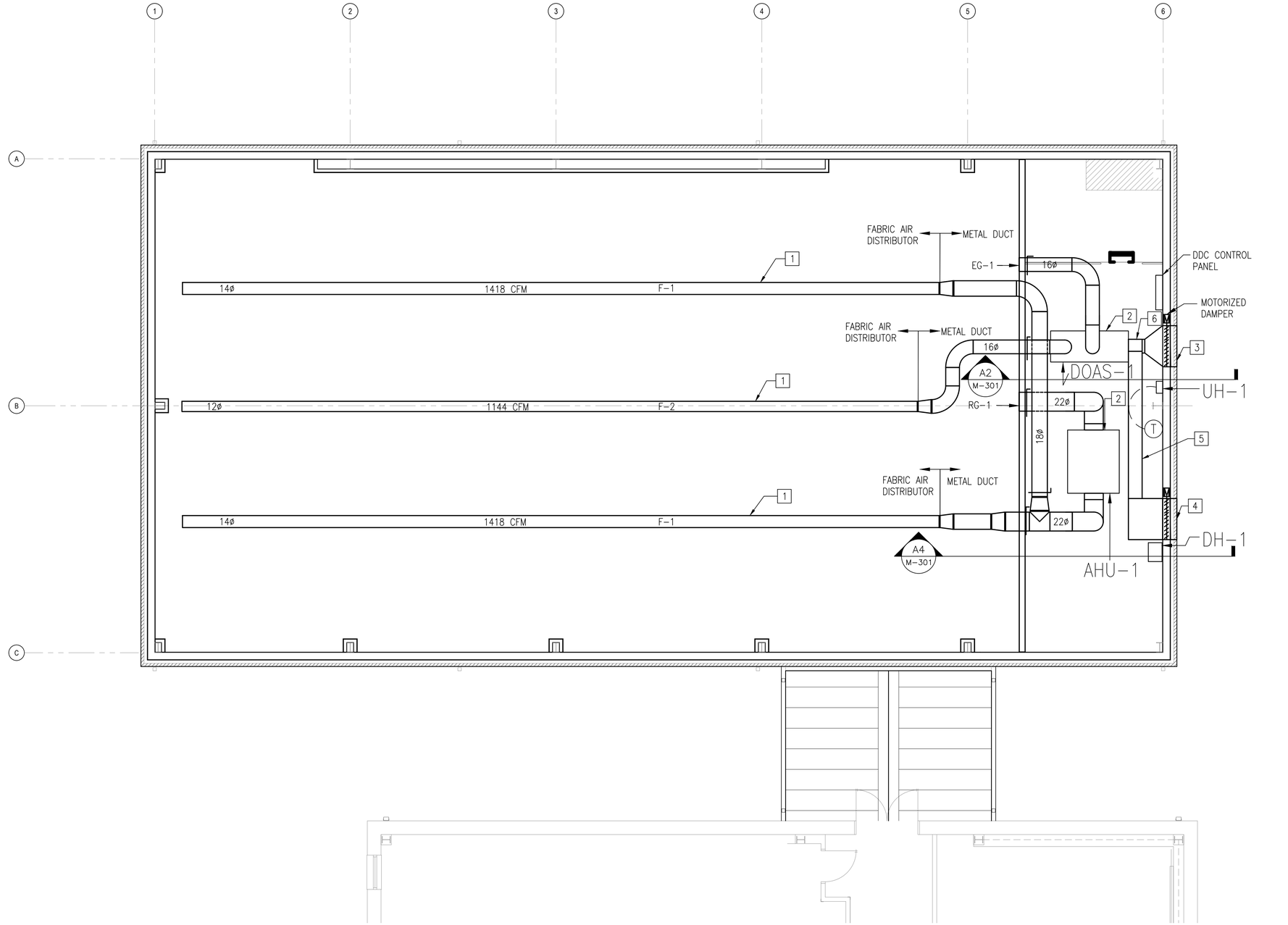

A1 MECHANICAL FLOOR PLAN AREA 'A'
SCALE: 3/16"=1'-0"

GENERAL SHEET NOTES

1. SEE M-001 FOR LEGEND, NOTES, AND ABBREVIATIONS.
2. PROVIDE DOAS AND AHU CONDENSATE LINE TO FLOWER BED OUTSIDE THE BUILDING. COORDINATE WITH LANDSCAPE DRAWING

NEW WORK KEYNOTES

1. FABRIC AIR DISTRIBUTOR
2. EQUIPMENT LOCATED IN MEZZANINE AREA. SEE SECTION
3. FRESH AIR INTAKE WITH L1 LOUVER AND MOTORIZED DAMPER
4. EXHAUST AIR WITH L1 LOUVER AND MOTORIZED DAMPER
5. REMOVABLE SECTION OF EXHAUST DUCT IN FRONT OF MECHANICAL ROOM ACCESS DOOR
6. EXHAUST DUCT ABOVE OUTDOOR AIR INTAKE

KEYPLAN

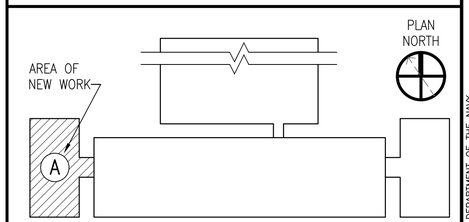

GRAPHIC SCALE

3/16"=1'-0" 0' 4' 8' 12'

SYM	DESCRIPTION	DATE	APPR

NAVFAC

SEAL

A/E INFO

APPROVED

FOR COMMANDER NAVFAC

ACTIVITY

EMILY M. SYLVESTER, PE

SATISFACTORY TO DATE 28 JUNE 2018

DES JES DRW JES CHK YG

DESIGN MANAGER G. COOKE

BRANCH MANAGER

CHIEF ENGINEER EJA

FIRE PROTECTION

DEPARTMENT OF THE NAVY
NAVAL FACILITIES ENGINEERING COMMAND
NAVAL FACILITIES ENGINEERING COMMAND-MID-ATLANTIC
MIDLANT CI CORE NAVAL STATION NORFOLK VIRGINIA

MCB CAMP LEJEUNE JACKSONVILLE, NC

P1482 MARINE SPECIAL OP SCHOOL
120 MAN CLASSROOMS

MECHANICAL FLOOR PLAN - AREA 'A'

SCALE: AS NOTED

EPROJECT NO. 1558046

CONSTR. CONTR. NO. -

NAVFAC DRAWING NO. 12747200

SHEET 65 OF 91

M-101

DRAWFORM REVISION: 10 MARCH 2009

FILE NAME: P:\NC\CampLejeune\MILCON\2017_1558046_P1482_IH-DBB_120ManClassrooms\B_Design\Drawings\Sheet\13_Mechanical\1558046_P1482_M-101 M FP- AREA 'A'.dwg LAYOUT NAME: M-101 MECHANICAL FLOOR PLAN - AREA 'A' PLOTTED: Monday, June 01, 2020 - 7:45am USER: joseph.shillinglaw

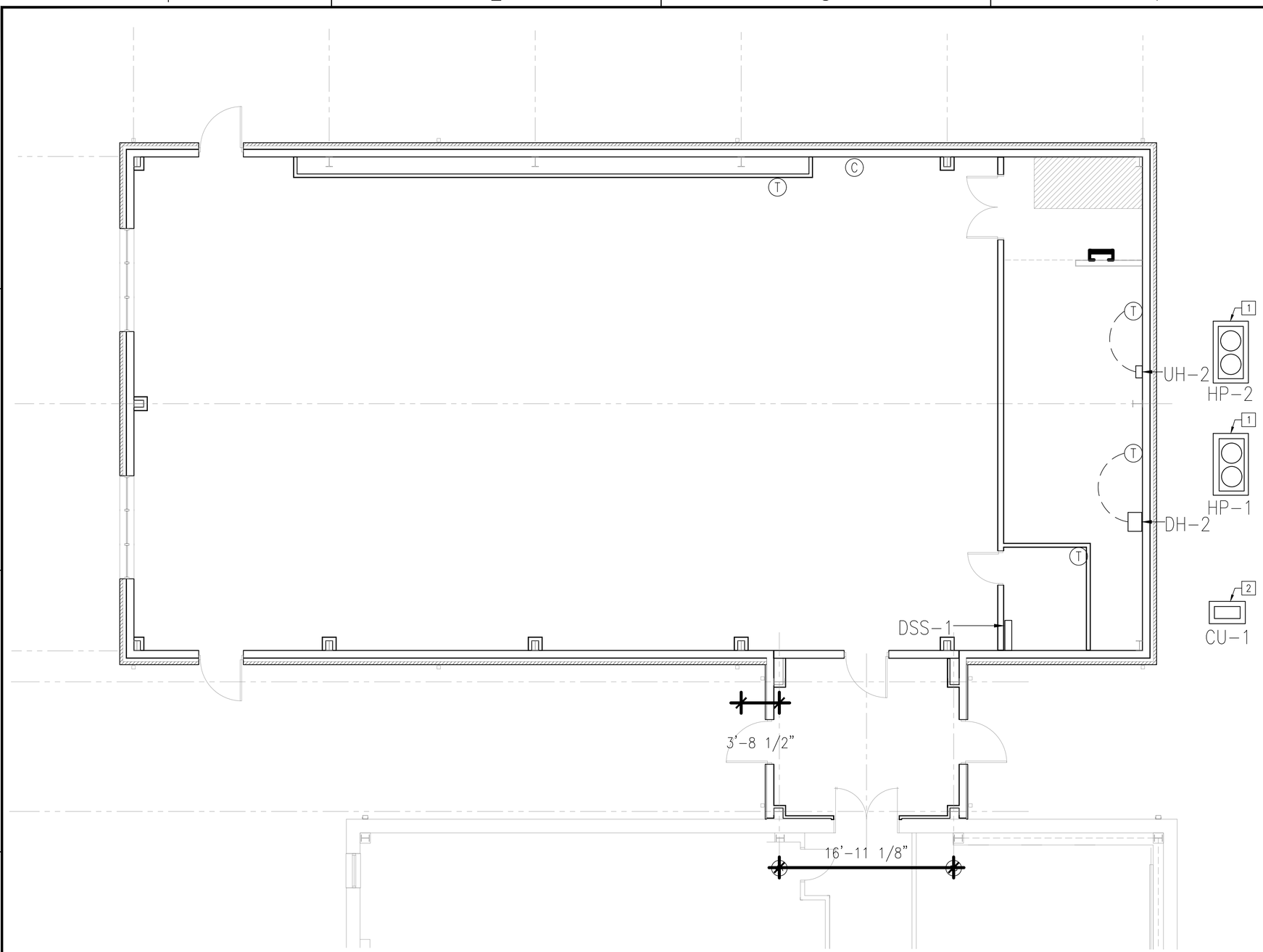

A1 MECHANICAL FLOOR PLAN AREA 'A'
SCALE: 3/16"=1'-0"

GENERAL SHEET NOTES

1. SEE M-001 FOR LEGEND, NOTES, AND ABBREVIATIONS.
2. PROVIDE DSS CONDENSATE LINE TO FLOWER BED OUTSIDE THE BUILDING. COORDINATE WITH LANDSCAPE DRAWING

NEW WORK KEYNOTES

1. HEAT PUMP MOUNTED ON CONCRETE PAD WITH 6" EXTENSION ALL AROUND. SEE DETAIL
2. CONDENSING UNIT MOUNTED ON CONCRETE PAD WITH 6" EXTENSION ALL AROUND. SEE DETAIL

KEYPLAN

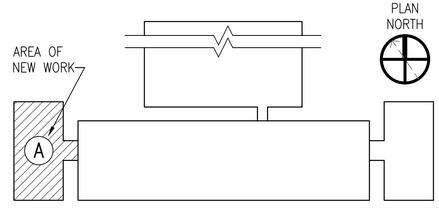

GRAPHIC SCALE

3/16"=1'-0" 0' 4' 8' 12'

SYM	DESCRIPTION	DATE	APPR

NAVFAC

SEAL

A/E INFO

APPROVED

FOR COMMANDER NAVFAC

ACTIVITY
EMILY M. SYLVESTER, PE

SATISFACTORY TO DATE 28 JUNE 2018

DES JES DRW JES CHK YG

DESIGN MANAGER G. COOKE

BRANCH MANAGER

CHIEF ENGINEER EJA

FIRE PROTECTION

DEPARTMENT OF THE NAVY
NAVAL FACILITIES ENGINEERING COMMAND
NAVAL FACILITIES ENGINEERING COMMAND-MID-ATLANTIC
NAVAL STATION NORFOLK VIRGINIA
MIDLANT CI CORE
MCB CAMP LEJEUNE JACKSONVILLE, NC
P1482 MARINE SPECIAL OP SCHOOL
120 MAN CLASSROOMS
MECHANICAL FLOOR PLAN - AREA 'A'

SCALE: AS NOTED
EPROJECT NO. 1558046
CONSTR. CONTR. NO. -
NAVFAC DRAWING NO. 12747201
SHEET 66 OF 91

M-102

DRAWFORM REVISION: 10 MARCH 2009

FILE NAME: P:\NC\CampLejeune\MILCON\2017_1558046_P1482_IH-DBB_120ManClassrooms\B_Design\Drawings\Sheet\13_Mechanical\1558046_P1482_M-102 M FP- AREA 'A'.dwg LAYOUT NAME: M-102 MECHANICAL FLOOR PLAN - AREA 'A' PLOTTED: Monday, June 01, 2020 - 7:45am USER: joseph.shillinglaw

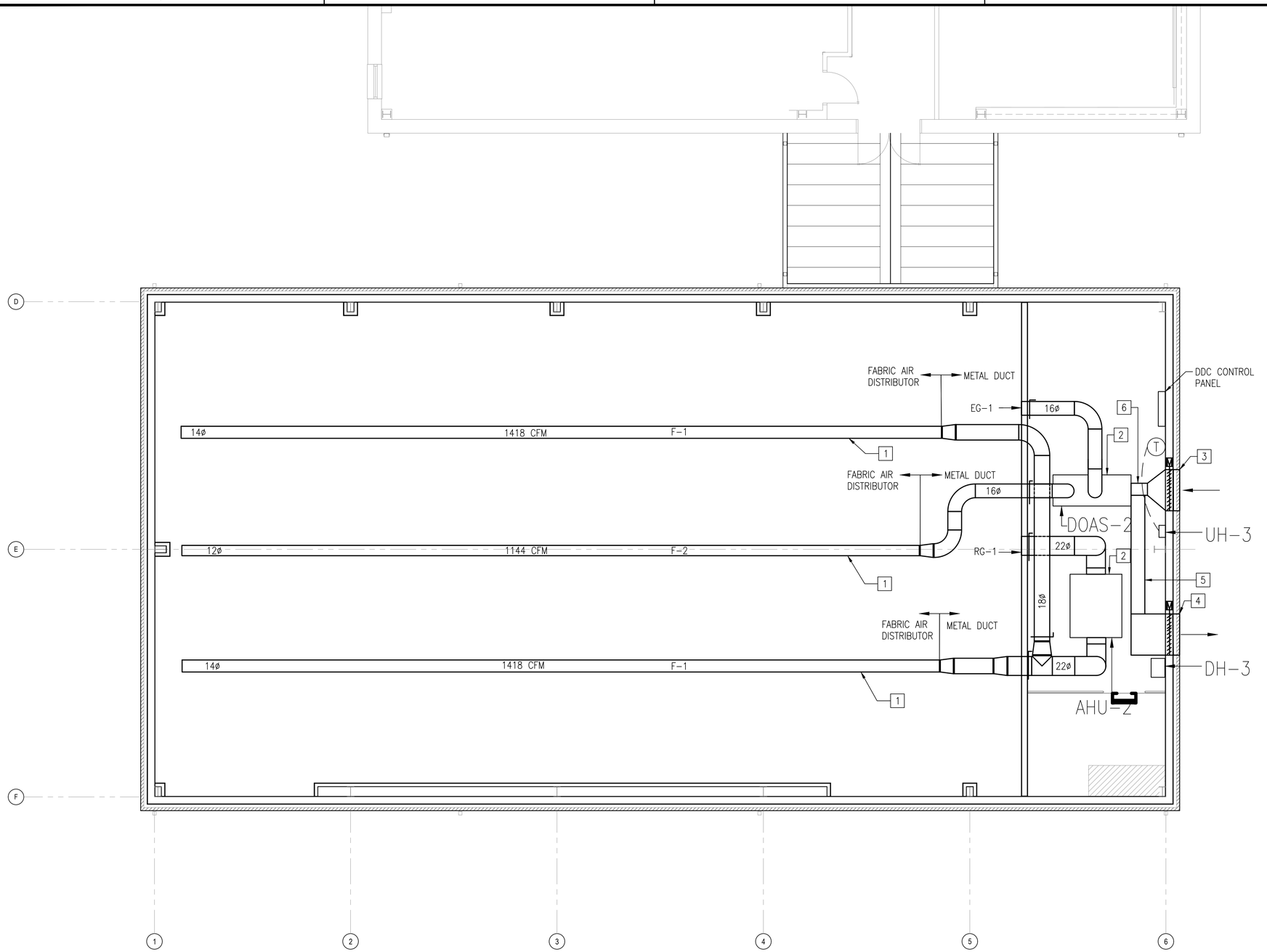

A1 MECHANICAL FLOOR PLAN AREA 'B'
SCALE: 3/16"=1'-0"

GENERAL SHEET NOTES

1. SEE M-001 FOR LEGEND, NOTES, AND ABBREVIATIONS.
2. PROVIDE DOAS AND AHU CONDENSATE LINE TO FLOWER BED OUTSIDE THE BUILDING. COORDINATE WITH LANDSCAPE DRAWING

NEW WORK KEYNOTES

1. FABRIC AIR DISTRIBUTOR
2. EQUIPMENT LOCATED IN MEZZANINE AREA. SEE SECTION
3. FRESH AIR INTAKE WITH L1 LOUVER AND MOTORIZED DAMPER
4. EXHAUST AIR WITH L1 LOUVER AND MOTORIZED DAMPER
5. REMOVABLE SECTION OF EXHAUST DUCT IN FRONT OF MECHANICAL ROOM ACCESS DOOR
6. EXHAUST DUCT ABOVE OUTDOOR AIR INTAKE

KEYPLAN

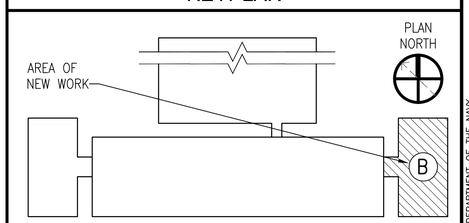

GRAPHIC SCALE

3/16"=1'-0" 0' 4' 8' 12'

SYM	DESCRIPTION	DATE	APPR

NAVFAC

SEAL

A/E INFO

APPROVED

FOR COMMANDER NAVFAC

ACTIVITY
EMILY M. SYLVESTER, PE

SATISFACTORY TO DATE 28 JUNE 2018
DES JES DRW JES CHK YG
DESIGN MANAGER G. COOKE
BRANCH MANAGER
CHIEF ENGINEER EJA
FIRE PROTECTION

DEPARTMENT OF THE NAVY
NAVAL FACILITIES ENGINEERING COMMAND
NAVAL FACILITIES ENGINEERING COMMAND~MID-ATLANTIC
NAVAL STATION NORFOLK VIRGINIA
MIDLANT CI CORE
MCB CAMP LEJEUNE JACKSONVILLE, NC
P1482 MARINE SPECIAL OP SCHOOL
120 MAN CLASSROOMS
MECHANICAL FLOOR PLAN – AREA 'B'

SCALE: AS NOTED
EPROJECT NO. 1558046
CONSTR. CONTR. NO. –
NAVFAC DRAWING NO. 12747202
SHEET 67 OF 91
M-103

DRAWFORM REVISION: 10 MARCH 2009

FILE NAME: P:\NC\CampLejeune\MILCON\2017_1558046_P1482_IH-DBB_120ManClassrooms\B_Design\Drawings\Sheet\13_Mechanical\1558046_P1482_M-103 M FP- AREA 'B'.dwg LAYOUT NAME: M-103 MECHANICAL FLOOR PLAN – AREA 'B' PLOTTED: Monday, June 01, 2020 – 7:46am USER: joseph.shillinglaw

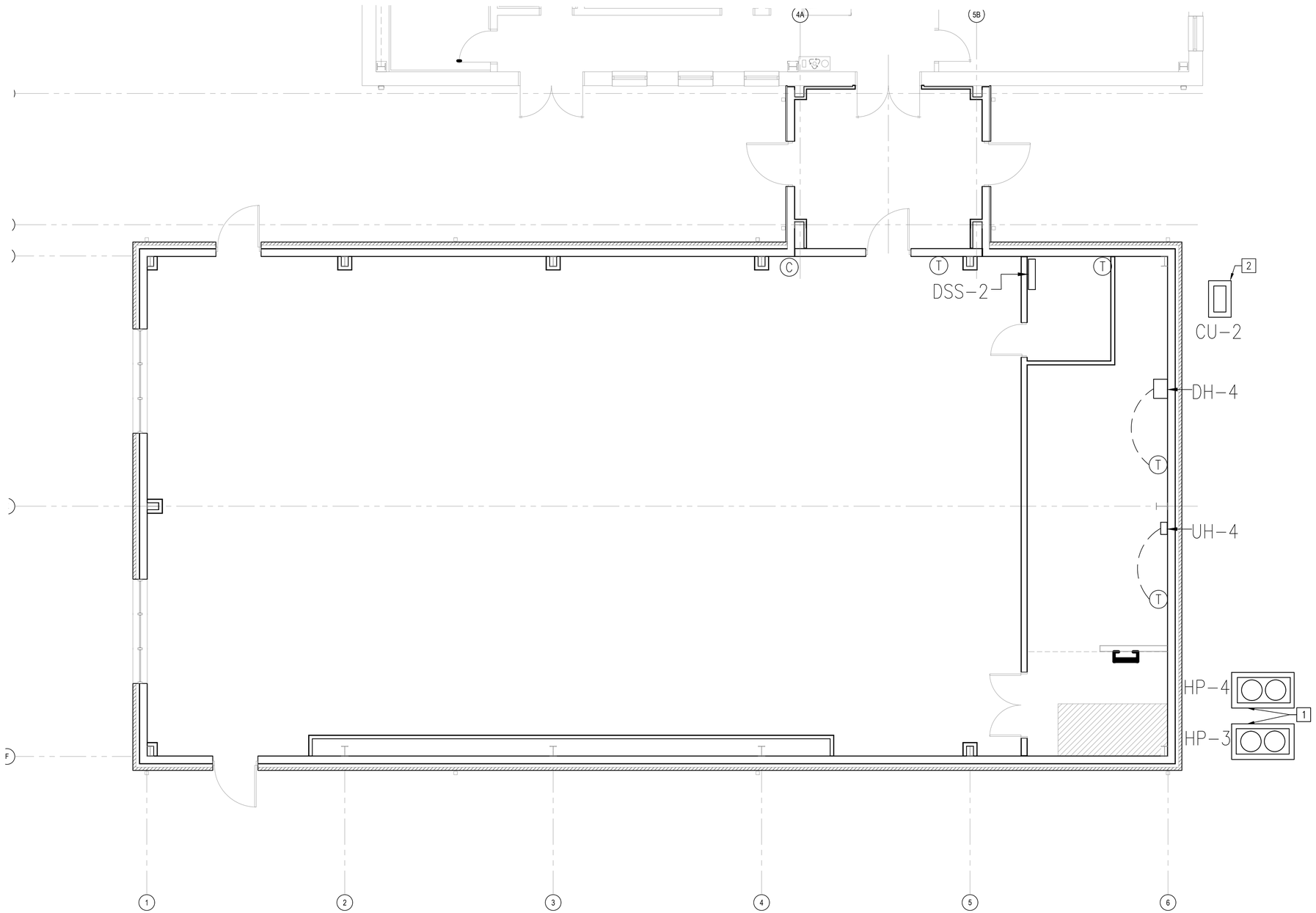

A1 MECHANICAL FLOOR PLAN AREA 'B'
SCALE: 3/16"=1'-0"

GENERAL SHEET NOTES

1. SEE M-001 FOR LEGEND, NOTES, AND ABBREVIATIONS.
2. PROVIDE DSS CONDENSATE LINE TO FLOWER BED OUTSIDE THE BUILDING. COORDINATE WITH LANDSCAPE DRAWING

NEW WORK KEYNOTES

1. HEAT PUMP MOUNTED ON CONCRETE PAD WITH 6" EXTENSION ALL AROUND. SEE DETAIL
2. CONDENSING UNIT MOUNTED ON CONCRETE PAD WITH 6" EXTENSION ALL AROUND. SEE DETAIL

KEYPLAN

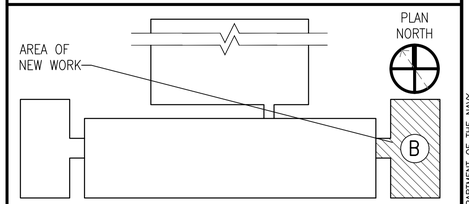

GRAPHIC SCALE

1/8"=1'-0" 0' 4' 8' 16'

SYM	DESCRIPTION	DATE	APPR

NAVFAC

SEAL

A/E INFO

APPROVED

FOR COMMANDER NAVFAC

ACTIVITY

EMILY M. SYLVESTER, PE

SATISFACTORY TO DATE 28 JUNE 2018

DES JES DRW JES CHK YG

DESIGN MANAGER G. COOKE

BRANCH MANAGER

CHIEF ENGINEER EJA

FIRE PROTECTION

DEPARTMENT OF THE NAVY
NAVAL FACILITIES ENGINEERING COMMAND
NAVAL FACILITIES ENGINEERING COMMAND~MID-ATLANTIC
NAVAL STATION NORFOLK VIRGINIA
MIDLANT CI CORE
MCB CAMP LEJEUNE JACKSONVILLE, NC
P1482 MARINE SPECIAL OP SCHOOL
120 MAN CLASSROOMS
MECHANICAL FLOOR PLAN – AREA 'B'

SCALE: AS NOTED

EPROJECT NO. 1558046

CONSTR. CONTR. NO. –

NAVFAC DRAWING NO. 127471203

SHEET 68 OF 91

M-104

DRAWFORM REVISION: 10 MARCH 2009

FILE NAME: P:\NC\CampLejeune\MILCON\2017_1558046_P1482_IH-DBB_120ManClassrooms\B_Design\Drawings\Sheet\13_Mechanical\1558046_P1482_M-104 M FP- AREA 'B'.dwg LAYOUT NAME: M-104 MECHANICAL FLOOR PLAN – AREA 'B' PLOTTED: Monday, June 01, 2020 – 7:46am USER: joseph.shillinglaw

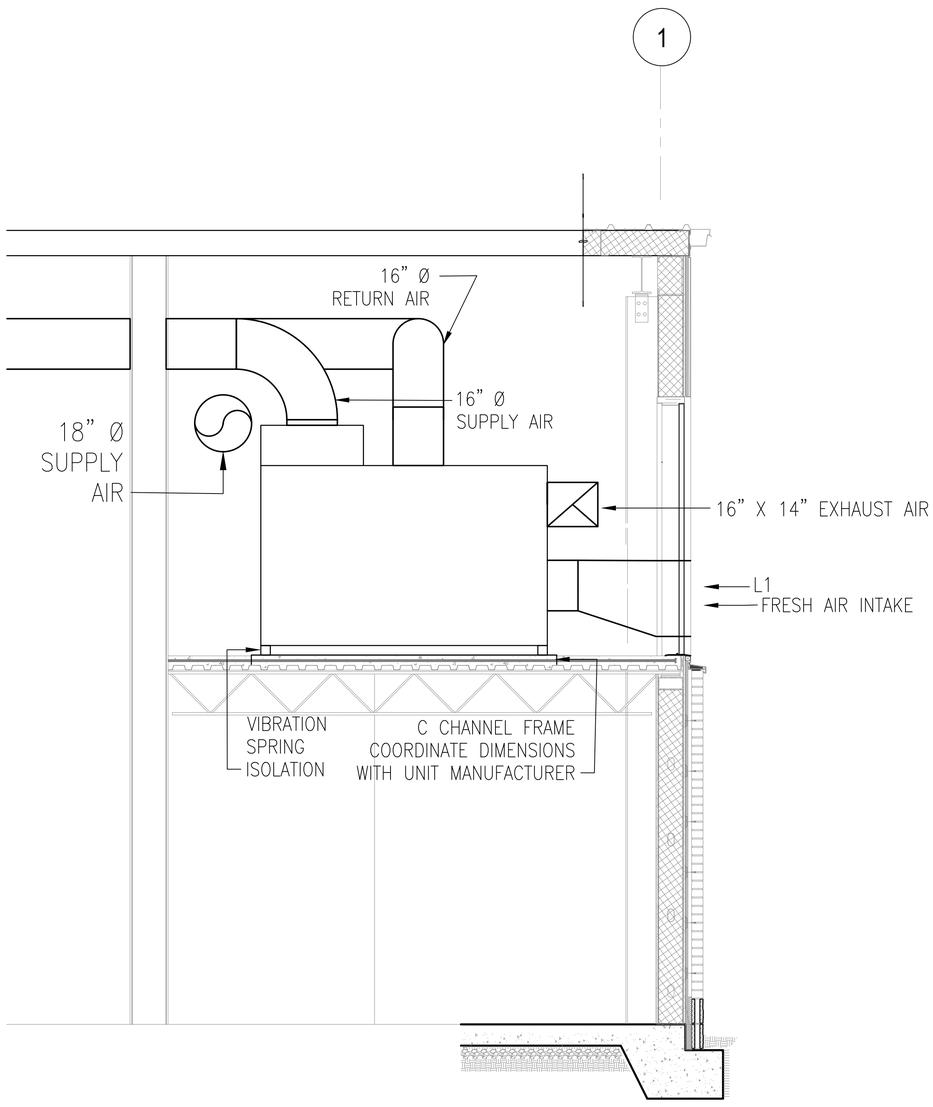

A1 DOAS ELEVATION
SCALE: 1/2"=1'-0"
M-101

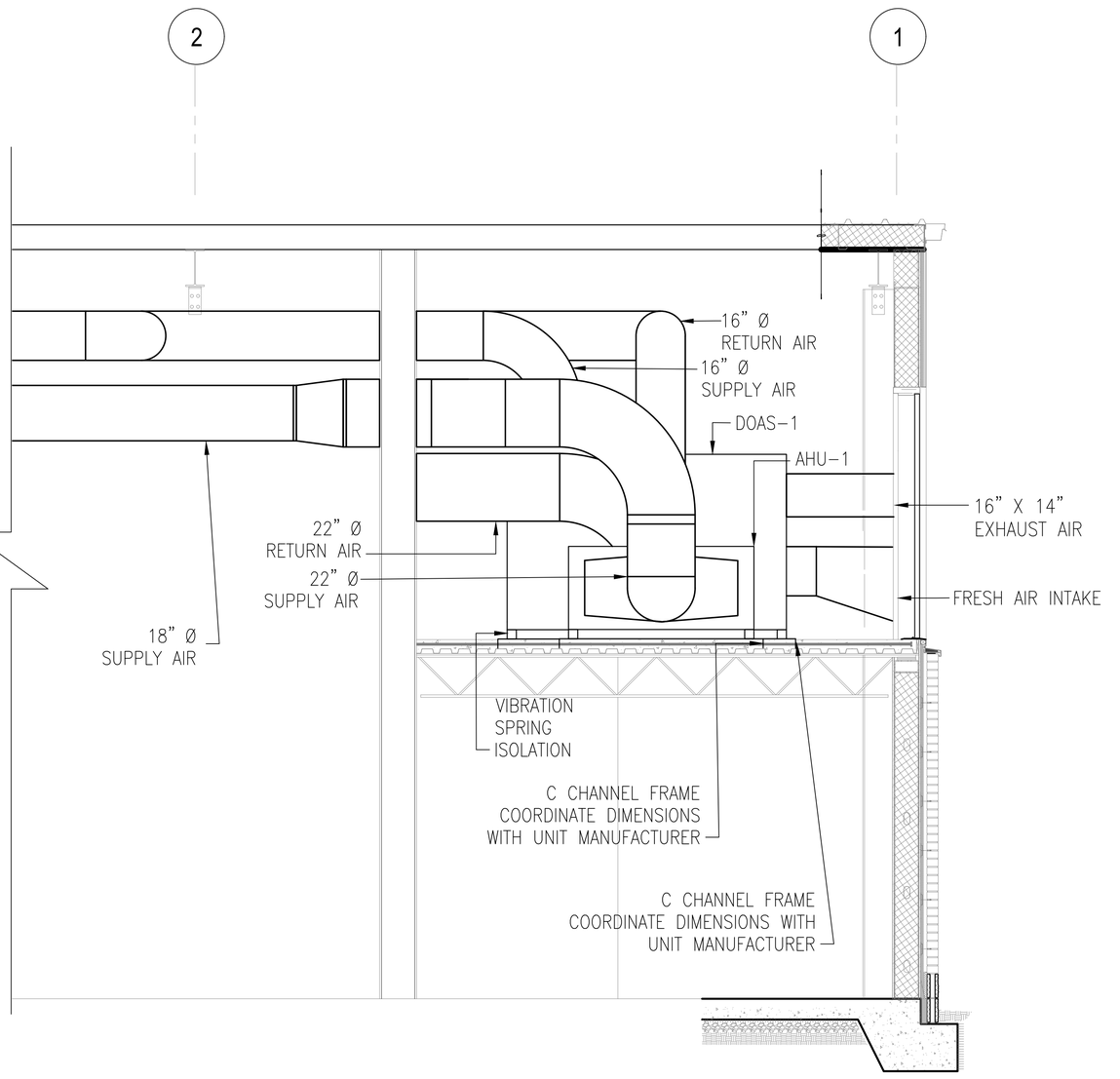

A3 AHU ELEVATION
SCALE: 1/2"=1'-0"
M-101

APPR | DATE | DESCRIPTION | CTM

NAVFAC

SEAL

A/E INFO

APPROVED
FOR COMMANDER NAVFAC
ACTIVITY
EMILY M. SYLVESTER, PE
SATISFACTORY TO DATE 28 JUNE 2018
DES JES | DRW JES | CHK YG
DESIGN MANAGER G. COOKE
BRANCH MANAGER
CHIEF ENGINEER EJA
FIRE PROTECTION

DEPARTMENT OF THE NAVY
NAVAL FACILITIES ENGINEERING COMMAND
MIDLANT CI CORE
NAVAL FACILITIES ENGINEERING COMMAND-MID-ATLANTIC
NAVAL STATION NORFOLK VIRGINIA
MCB CAMP LEJEUNE
JACKSONVILLE, NC
P1482 MARINE SPECIAL OP SCHOOL
120 MAN CLASSROOMS
MECHANICAL SECTION

SCALE: AS NOTED
EPROJECT NO. 1558046
CONSTR. CONTR. NO. –
NAVFAC DRAWING NO. 12747204
SHEET 69 OF 91

M-301

DRAWFORM REVISION: 10 MARCH 2009

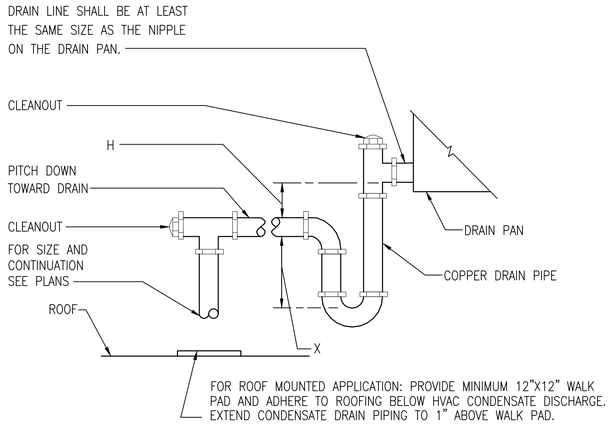

NOTES

H ≥ 1" + T.S.P OF DOWNSTREAM FAN

X= ½H

C1 AIR HANDLING UNIT CONDENSATE P-TRAP DETAIL

SCALE: NOT TO SCALE M-101, M-103

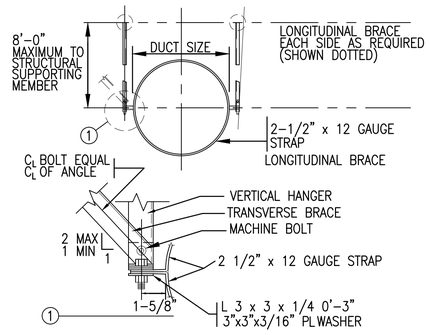

C2 HANGER BRACING FOR ROUND DUCT

SCALE: NOT TO SCALE

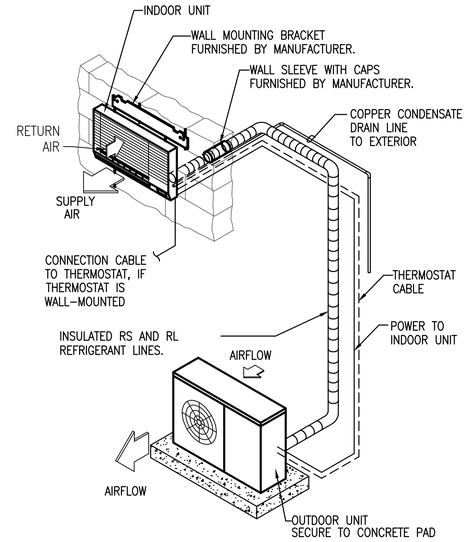

NOTE: INSTALL INDOOR UNIT AS HIGH AS POSSIBLE.

B4 DUCTLESS AIR CONDITIONER UNIT DETAIL

SCALE: NOT TO SCALE M-102, M-104

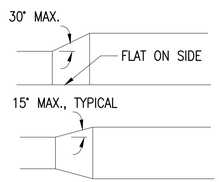

A1 DUCT TRANSITIONS DETAIL

SCALE: NOT TO SCALE M-101, M-103

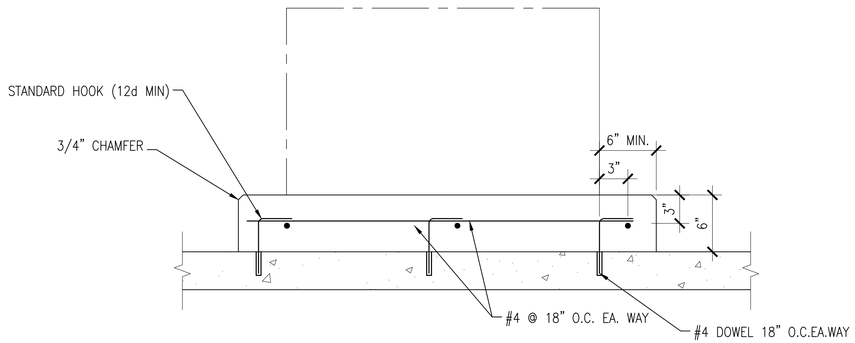

A2 CONCRETE MECHANICAL PAD

SCALE: 1-1/2"=1'-0" M-102, M-104

APPR	---	---	---
DATE	---	---	---
DESCRIPTION	---	---	---
CTM	---	---	---

NAVFAC

SEAL

A/E INFO

APPROVED

FOR COMMANDER NAVFAC

ACTIVITY

EMILY M. SYLVESTER, PE

SATISFACTORY TO DATE 28 JUNE 2018

DES JES DRW JES CHK YG

DESIGN MANAGER G. COOKE

BRANCH MANAGER

CHIEF ENGINEER EJA

FIRE PROTECTION

DEPARTMENT OF THE NAVY
NAVAL FACILITIES ENGINEERING COMMAND
MIDLANT CI CORE
NAVAL FACILITIES ENGINEERING COMMAND-MID-ATLANTIC
NAVAL STATION NORFOLK VIRGINIA

MCB CAMP LEJEUNE JACKSONVILLE, NC

P1482 MARINE SPECIAL OP SCHOOL
120 MAN CLASSROOMS

MECHANICAL DETAILS

SCALE: AS NOTED

EPROJECT NO. 1558046

CONSTR. CONTR. NO. –

NAVFAC DRAWING NO. 12747205

SHEET 70 OF 91

M-501

DRAWFORM REVISION: 10 MARCH 2009

FILE NAME: P:\NC\Camp Lejeune\MILCON\2017_1558046_P1482_JH-UBB_120ManClassrooms\8_Design\Drawings\Sheet\13_Mechanical\1558046_P1482_M-501 MECHANICAL DETAILS.dwg LAYOUT NAME: M-501 MECHANICAL DETAILS PLOTTED: Monday, June 01, 2020 - 7:47am USER: joseph.shillingfow

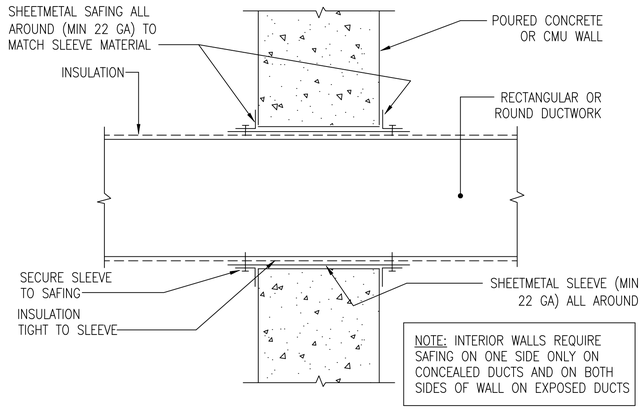

C1 DUCT PENETRATION - NON-FIRE RATED WALLS ONLY

SCALE: NOT TO SCALE — M-101, M-103

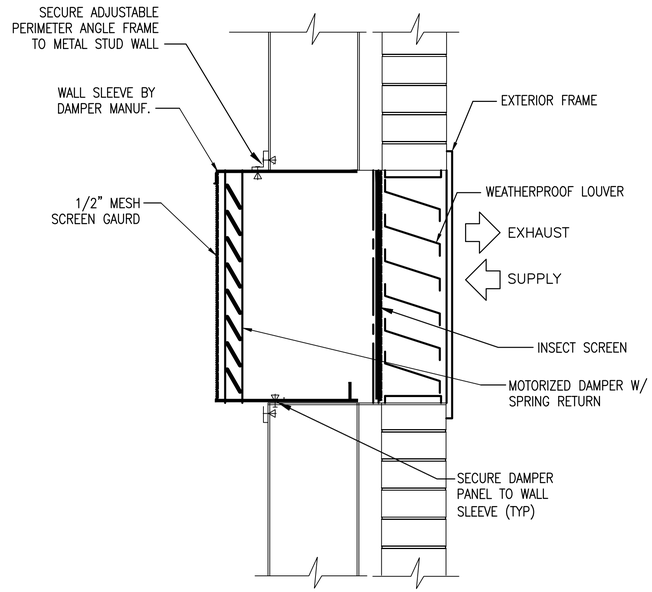

C3 WALL MOUNTED SUPPLY/EXHAUST DAMPER DETAIL

SCALE: NOT TO SCALE — M-101, M-102, M-103, M-104

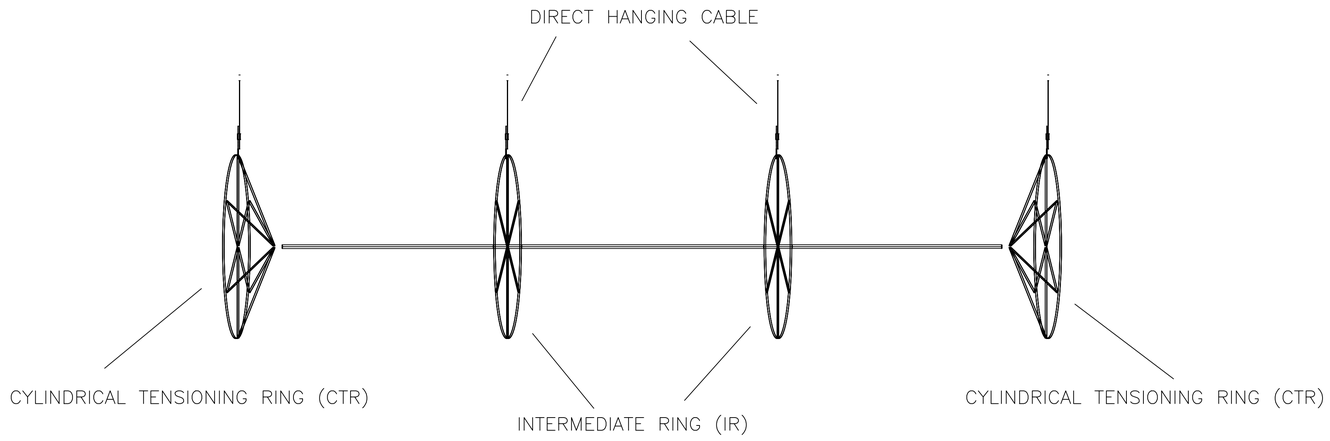

A1 FABRIC AIR DISTRIBUTOR SUSPENSION FABRIC TENSIONING SYSTEM DETAIL

SCALE: NOT TO SCALE — M-101, M-103

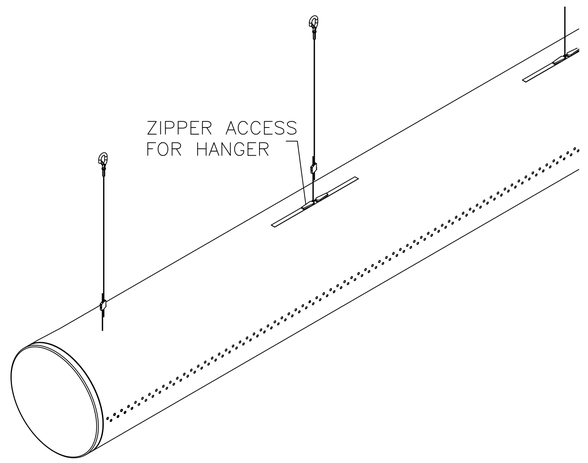

A4 FABRIC AIR DISTRIBUTOR SUSPENSION DETAIL

SCALE: NOT TO SCALE — M-101, M-103

SYM	DESCRIPTION	DATE	APPR

NAVFAC

SEAL

A/E INFO

APPROVED

FOR COMMANDER NAVFAC

ACTIVITY: EMILY M. SYLVESTER, PE

SATISFACTORY TO DATE: 28 JUNE 2018

DES: JES | DRW: JES | CHK: YG

DESIGN MANAGER: G. COOKE

BRANCH MANAGER:

CHIEF ENGINEER: EJA

FIRE PROTECTION:

DEPARTMENT OF THE NAVY — NAVAL FACILITIES ENGINEERING COMMAND

NAVAL FACILITIES ENGINEERING COMMAND–MID-ATLANTIC — NAVAL STATION NORFOLK VIRGINIA

MIDLANT CI CORE

MCB CAMP LEJEUNE — JACKSONVILLE, NC

P1482 MARINE SPECIAL OP SCHOOL
120 MAN CLASSROOMS

MECHANICAL DETAILS

SCALE: AS NOTED

EPROJECT NO. 1558046

CONSTR. CONTR. NO. –

NAVFAC DRAWING NO. 12747206

SHEET 71 OF 91

M-502

DRAWFORM REVISION: 10 MARCH 2009

FILE NAME: P:\NC\CampLejeune\MILCON\2017_1558046_P1482_IH-DBB_120ManClassrooms\B_Design\Drawings\Sheet\13_Mechanical\1558046_P1482_M-502 MECHANICAL DETAILS.dwg LAYOUT NAME: M-502 MECHANICAL DETAILS PLOTTED: Monday, June 01, 2020 - 7:47am USER: joseph.shillinglaw

AIR HANDLING UNIT SCHEDULE

MARK	FAN DATA					COOLING						HEATING			ELECTRIC DATA			ELECTRIC AUXILLARY HEATING						REMARKS
	CFM	ESP (IN. WG)	HP	V./PH.	FLA	TOTAL (MBH)	SENSIBLE (MBH)	EAT (°F)		LAT (°F)		TOTAL (MBH)	EAT (°F) DB	LAT (°F) DB	V./PH.	MCA	FLA	EAT (°F)	LAT (°F)	HTG CAPACITY (MBH)	INPUT (KW)	QTY	FLA	
								DB	WB	DB	WB													
AHU-1	2836	0.8	2.3	460-3	2.6	118.7	74	78	65.1	49.9	49.8	86.5	68	95	460-3	49	38.9	68	99.2	95.6	28	4	33.7	UNIT CONNECTS TO HP-1
AHU-2	2836	0.8	2.3	460-3	2.6	118.7	74	78	66	49.9	49.8	86.5	68	95	460-3	49	38.9	68	99.2	95.6	28	4	33.7	UNIT CONNECTS TO HP-3

DEDICATED OUTDOOR AIR UNIT SCHEDULE

MARK	SUPPLY FAN					EXHAUST FAN					ELECTRICAL DATA			ENERGY RECOVERY WHEEL										DX COOLING COIL					
														SUMMER CONDITIONS				WINTER CONDITIONS		EFFECTIVENESS (%)				ELECTRICAL DATA		EAT		LAT		COOLING CAPACITY	
	CFM	ESP (IN. WG)	MIN HP	V./PH.	FLA	CFM	ESP (IN. WG)	MIN HP	V./PH.	FLA	V./PH.	MCA	FLA	OUTSIDE AIR		RETURN AIR		OUTSIDE AIR	RETURN AIR	SENSIBLE		LATENT		V./PH.	FLA	DB (°F)	WB (°F)	DB (°F)	WB (°F)	TOTAL (MBH)	SENSIBLE (MBH)
														DB (°F)	WB (°F)	DB (°F)	WB (°F)	DB (°F)	DB (°F)	COOLING	HEATING	COOLING	HEATING								
DOAU-1	1144	0.75	1.1	460-3	1.4	1030	0.5	1.1	460-3	1.6	460-3	23	20.1	91	77	78	65	26	68	73	73	68	68	230-1	0.3	82.38	69.8	50.91	50.82	40.8	27.8
DOAU-2	1144	0.75	1.1	460-3	1.4	1030	0.5	1.1	460-3	1.6	460-3	23	20.1	91	77	78	65	26	68	73	73	68	68	230-1	0.3	82.38	69.8	50.91	50.82	40.8	27.8

DEDICATED OUTDOOR AIR UNIT SCHEDULE – CONT.

REHEAT COIL			HEATING COIL			ELECTRIC AUXILLARY HEATING					REMARKS
EAT (°F)	LAT (°F)	HTG CPAPCITY (MBH)	EAT (°F)	LAT (°F)	HTG CPAPCITY (MBH)	EAT (°F)	LAT (°F)	HTG CPAPCITY (MBH)	INPUT (KW)	FLA	
55	78	21.8	52.5	94	47.8	52.5	91.2	47.8	14	16.8	UNIT CONECTS TO HP-2
55	78	21.8	52.5	94	47.8	52.5	91.2	47.8	14	16.8	UNIT CONECTS TO HP-4

HEAT PUMP SCHEDULE

MARK	COOLING	HEATING	CONDENSER FAN			COMPRESSOR			EER	REFRIG. TYPE	UNIT ELECTRIC		
	TOTAL (MBH)	TOTAL (MBH)	HP	V./PH.	FLA	QTY	V./PH.	RLA			V./PH.	MCA	FLA
HP-1	118.7	86.5	0.33	460-1	1.1	2	460-3	8.1	12.4	R-410A	460-3	20	18
HP-2	40.8	21.8	0.33	460-1	2.8	1	460-3	9.7	12.5	R-410A	460-3	15	12
HP-3	118.7	92.6	0.33	460-1	1.1	2	460-3	8.1	12.4	R-410A	460-3	20	18
HP-4	40.8	21.8	0.33	460-1	2.8	1	460-3	9.7	12.5	R-410A	460-3	15	12

MINI SPLIT SYSTEM SCHEDULE

MARK	CFM			COOLING					ELECTRICAL			OUTDOOR UNIT			REFRIGERANT	COOLING POWER INPUT (KW)
	H	M	L	CAPACITY (BTU/H)			SEER	EER	POWER SUPPLY			MOP (A)	MCA (A)	COOLING RATED AMPS		
				MIN.	RATED	MAX			V.	HZ.	PH.					
DSS-1	353	272	21	4200	9000	12625	21.5	13.3	208-230	60	1	15	10	8.7	R-140A	0.68
DSS-2	353	272	21	4200	9000	12625	21.5	13.3	208-230	60	1	15	10	8.7	R-140A	0.68

NOTES

1. PROVIDE ALL OUTDOOR EQUIPMENT WITH 3000 HOUR CORROSION PROTECTION FOR THE ENTIRE UNIT AND COILS IN ACCORDANCE WITH ASTM B117. THE CAPACITY OF THE UNIT IS WITH THE COIL CORROSION PROTECTION IN PLACE.
2. MECHANICAL EQUIPMENT MUST HAVE SINGLE POINT CONNECTION FOR POWER UON.

DEHUMIDIFIER SCHEDULE

MARK	CFM		PTS./DAY	V./PH.	FLA
	HIGH	LOW			
DH-1	130	120	40	120-1	5.6
DH-2	130	120	40	120-1	5.6
DH-3	130	120	40	120-1	5.6
DH-4	130	120	40	120-1	5.6

ELECTRIC UNIT HEATER SCHEDULE

MARK	CPACITY (KW)	V./PH.	AMPS	CFM
UH-1	3	208-1	14.5	300
UH-2	3	208-1	14.5	300
UH-3	3	208-1	14.5	300
UH-4	3	208-1	14.5	300

LOUVER SCHEDULE

MARK	SERVICE	SIZE (IN.) W X H	FREE AREA (SF)	CFM	REMARKS
L1	DOAS INTAKE AND EXHAUST	48X24	3.94	1144	

AIR DISTRIBUTION SCHEDULE

MARK	TYPE	MOUNTING	FACE SIZE (IN.)	NECK SIZE (IN.)	MAX NC	AIRFLOW (CFM)	FABRIC TYPE	ORIFICE SIZE	AMOUNT OF ORIFICES	CFM/ORIFICE AT 0.5 IN. W.G.	APPROX. LEGNTH OF FABRIC DIFFUSER	REMARKS
EG-1	EXHAUST	SIDEWALL	30"X16"	16"Ø	30	1030	N/A	N/A	N/A	N/A	N/A	
RG-1	RETURN	SIDEWALL	42"X34"	22"Ø	30	2836	N/A	N/A	N/A	N/A	N/A	
F-1	SUPPLY	FABRIC AIR DISTRIBUTOR	N/A	14"Ø	30	1418	NON-POROUS	2"	20 EACH SIDE	37.1	74'	1
F-2	SUPPLY	FABRIC AIR DISTRIBUTOR	N/A	12"Ø	30	1144	NON-POROUS	2"	16 EACH SIDE	37.1	71'	1

NOTES
1) ORIFICES WILL BE EVENLY SPACED ALONG THE FABRIC DIFFUSER AT 8 AND 4 STARTING 4' FROM THE START

APPR | DATE | DESCRIPTION | CTM

NAVFAC

SEAL

A/E INFO

APPROVED

FOR COMMANDER NAVFAC

ACTIVITY

EMILY M. SYLVESTER, PE

SATISFACTORY TO DATE 28 JUNE 2018

DES JES | DRW JES | CHK YG

DESIGN MANAGER G. COOKE

BRANCH MANAGER

CHIEF ENGINEER EJA

FIRE PROTECTION

DEPARTMENT OF THE NAVY
NAVAL FACILITIES ENGINEERING COMMAND
NAVAL FACILITIES ENGINEERING COMMAND–MID-ATLANTIC
NAVAL STATION NORFOLK VIRGINIA
MIDLANT CI CORE
MCB CAMP LEJEUNE JACKSONVILLE, NC
P1482 MARINE SPECIAL OP SCHOOL
120 MAN CLASSROOMS
MECHANICAL SCHEDULE

SCALE: AS NOTED
EPROJECT NO. 1558046
CONSTR. CONTR. NO. –
NAVFAC DRAWING NO. 12747207
SHEET 72 OF 91

M-601

DRAWFORM REVISION: 10 MARCH 2009

UNCLASSIFIED

FILE NAME: P:\MCI\CompExplorer\MILCON\2017_1558046_P1482_JH-DBB_ 120ManClassrooms\8_Design\Drawings\Sheet\13_Mechanical\1558046_P1482_M-601 MECHANICAL SCHEDULE.dwg LAYOUT NAME: M-601 MECHANICAL SCHEDULE PLOTTED: Monday, June 01, 2020 - 7:47pm USER: joseph.shilling@w

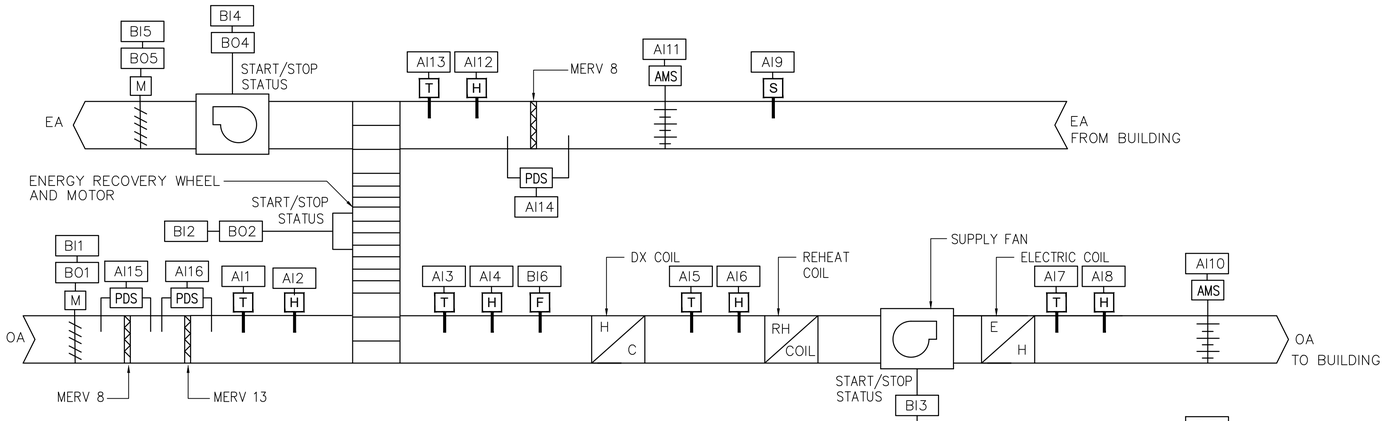

B1 **DEDICATED OUTSIDE AIR UNIT CONTROL SCHEMATIC**
SCALE: NONE

DOAS DDC POINTS LIST		
MARK	DESCRIPTION	ALARM
ANALOG INPUT		NO
AI1	ENTERING AIR TEMPERATURE TO ENERGY RECOVERY WHEEL – OA SIDE	NO
AI2	ENTERING AIR HUMIDITY TO ENERGY RECOVERY WHEEL – OA SIDE	NO
AI3	ENTERING AIR TEMPERATURE TO THE DX COIL	NO
AI4	ENTERING AIR HUMIDITY TO THE DX COIL	NO
AI5	LEAVING AIR TEMPERATURE FROM DX COIL	NO
AI6	LEAVING AIR HUMIDITY FROM THE DX COIL	YES
AI7	DISCHARGE AIR TEMPERATURE INTO THE SPACE	YES
AI8	DISCHARGE AIR HUMIDITY INTO THE SPACE	NO
AI9	SMOKE SENSOR	YES
AI10	SUPPLY AIR FLOW	YES
AI11	EXHAUST AIR FLOW	NO
AI12	ENTERING AIR HUMIDITY TO THE ENERGY RECOVERY WHEEL – EA SIDE	NO
AI13	ENTERING AIR TEMPERATURE TO THE ENERGY RECOVERY WHEEL – EA SIDE	NO
AI14	DIFFERENTIAL PRESSURE – FILTER BEFORE ERW – EA SIDE	NO
AI15	DIFFERENTIAL PRESSURE – FILTER MERV 8 BEFORE ERW – OA SIDE	NO
AI16	DIFFERENTIAL PRESSURE – FILTER MERV 13 BEFORE ERW – OA SIDE	NO
BINARY INPUT		
BI1	UNTREATED OUTSIDE AIR DAMPER POSITION OPEN (FEEDBACK)	NO
BI2	ENERGY RECOVERY WHEEL STATUS (FEEDBACK)	YES
BI3	SUPPLY FAN STATUS	NO
BI4	EXHAUST FAN STATUS	NO
BI5	EXHAUST AIR DISCHARGE DAMPER POSITION OPEN (FEEDBACK)	NO
BI6	FREEZESTAT	YES
BI7	EMERGENCY SHUTDOWN SWITCH	YES
BINARY OUTPUT		
BO1	UNTREATED OUTSIDE AIR DAMPER CONTROL	NO
BO2	ENERGY RECOVERY WHEEL CONTROL	NO
BO3	SUPPLY FAN CONTROL	YES
BO4	EXHAUST FAN CONTROL	YES
BO5	EXHAUST AIR DAMPER CONTROL	NO

CONTROL LEGEND

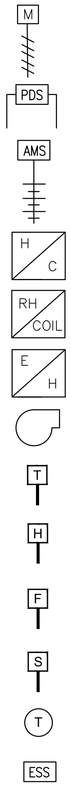

DOAU SEQUENCE OF OPERATIONS

A. OCCUPIED MODE:

1. SCHEDULED BY THE BUILDING CONTROL SYSTEM. THE SYSTEM SHALL RUN ACCORDING TO A USER DEFINABLE TIME SCHEDULE. THE UNIT SHALL OPERATE WHENEVER THE BUILDING IS OCCUPIED BY CO_2 ROOM SENSOR.
2. CONDITIONED SUPPLY AIR TEMPERATURE CONTROL:
   a. THE FANS SHALL OPERATE CONTINUOUSLY. FANS SHALL REMAIN ENERGIZED TO PREVENT BACKWARD SPIN CAUSING RESTART FAILURE.
   b. THE OUTDOOR AIR INTAKE AND EXHAUST ISOLATION DAMPERS ARE ENABLED TO OPEN. UPON PROOF OF OPEN STATUS, THE FANS AND SYSTEM SHALL BE ENABLED TO OPERATE.
   c. THE HEAT WHEEL SHALL BE ENABLED TO OPERATE. THE WHEEL SHALL MODULATE ITS SPEED TO MAINTAIN THE SUPPLY AIR TEMPERATURE SETPOINT.
   d. RE-HEAT COIL SHALL MAINTAIN A DELIVERY TEMPERATURE OF 78°F (ADJ).
   e. FILTER BANKS: PROVIDE PRESSURE DIFFERENTIAL SWITCHES ACROSS FILTER BANKS AND INDICATE DIRTY FILTER STATUS BASED ON MANUFACTURER'S FILTER PRESSURE DROP DATA.
   f. THE DDC SHALL SEQUENCE THE STAGES OF MECHANICAL HEATING TO MAINTAIN THE DISCHARGE AIR TEMPERATURE SETPOINT OF 68°F (ADJ). ENERGY RECOVERY WHEEL OPERATION ENABLED FOR HEATING RECOVERY.
   g. THE DDC SHALL SEQUENCE TO MECHANICAL COOLING TO MAINTAIN THE DISCHARGE AIR TEMPERATURE SETPOINT OF 55°F (ADJ) AND REHEATED TO 78°F (ADJ). MECHANICAL COOLING SHALL BE LOCKED OUT ANYTIME THE OUTSIDE AIR TEMPERATURE FALLS BELOW 65°F (ADJ).
   h. DEHUMIDIFICATION: DEHUMIDIFICATION SHALL BE ENABLED WHENEVER HUMIDITY SENSOR INDICATES A RELATIVE HUMIDITY EQUAL TO OR GREATER THAN THE HUMIDITY SETPOINT OF 50% (ADJ). OR AS INITIATED BY THE ON/OFF SIGNAL FROM A HUMIDISTAT. THE HOT GAS RE-HEAT SOLENOID VALVE IS ENERGIZED. DEHUMIDIFICATION CYCLE IS TERMINATED WHEN THE ZONE HUMIDITY IS REDUCED TO 5% BELOW THE RELATIVE HUMIDITY SETPOINT, THE HUMIDISTAT ISSUES AN OFF SIGNAL.
   i. WHEEL DEFROST: PROVIDE MANUFACTURER RECOMMENDED WHEEL FREEZE PROTECTION.
   j. EMERGENCY HEAT: DURING CONDENSING UNIT DEFROST MODE, AUXILIARY ELECTRIC HEATING WILL COME ON TO MAINTAIN SETPOINT.
   k. DDC UNIT SHUTDOWN ON THE FOLLOWING:
      i UNIT DISCHARGE AIR FALLS BELOW 50°F (ADJ).
      ii ENTERING AIR COIL TEMPERATURE FALLS BELOW 35°F (ADJ). THE FREEZESTAT SHALL SHUTDOWN UNIT AND SHALL BE HARD WIRED.
      iii SUPPLY OR EXHAUST FAN FAILURE TO RUN ALARM. BOTH SUPPLY AND EXHAUST FAN PROOF OF FLOW SWITCHES WILL BE PARALLELED INTO ONE PROOF OF FLOW INPUT.
      IV UPON RECEIVING A SHUTDOWN SIGNAL FROM EMERGENCY SHUTDOWN SWITCH, FROM SMOKE DETECTION OR ACTIVATION OF ALARM SYSTEM.

   WHEN THE UNIT IS DISABLED, THE FANS SHALL TURN OFF. THE REFRIGERANT CONTROL VALVE SHALL CLOSE, AND DAMPERS SHALL CLOSE.

B. UNOCCUPIED MODE:

1. UNIT IS DISABLED AND ALL DAMPERS CLOSED.

DOAU NOTES:

1. THE EQUIPMENT SHALL HAVE BACNET MS/TP INTERFACES AND BE INTEGRATED INTO THE EXISTING BUILDING DDC SYSTEM.

ALARMS

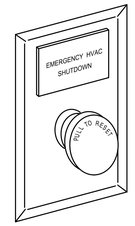

PROVIDE WITH CLEAR COVER

NOTES:

1. EMERGENCY AIR DISTRIBUTION SHUTOFF, LOCATED IN THE CLASSROOM
2. UPON ACTIVATION OF EMERGENCY PUSHBUTTONS, ALL AIR HANDING UNITS AND EXHAUST FANS SHALL BE DISABLED AND REMAIN OFF UNTIL A MANUAL RESET HAS OCCURRED.
3. UPON ACTIVATION OF THE EMERGENCY PUSHBUTTON, ALL OUTSIDE AND EXHAUST AIR INTAKES SHALL CLOSE FULLY.
4. MAINTAINED MUSHROOM BUTTON WITH CLEAR HINGED COVER, PULL TO RESET, LABELED "EMERGENCY HVAC SHUTDOWN".

A1 **ATFP EMERGENCY SHUTOFF SWITCH**
SCALE: NTS

APPROVED
FOR COMMANDER NAVFAC
ACTIVITY
EMILY M. SYLVESTER, PE
SATISFACTORY TO DATE 28 JUNE 2018
DES JES | DRW JES | CHK YG
DESIGN MANAGER G. COOKE
BRANCH MANAGER
CHIEF ENGINEER EJA
FIRE PROTECTION

DEPARTMENT OF THE NAVY
NAVAL FACILITIES ENGINEERING COMMAND
MIDLANT CI. CODE
NAVAL FACILITIES ENGINEERING COMMAND-MID-ATLANTIC
NAVAL STATION NORFOLK VIRGINIA
MCB CAMP LEJEUNE
JACKSONVILLE, NC
P1482 MARINE SPECIAL OP SCHOOL
120 MAN CLASSROOMS
CONTROLS

SCALE: AS NOTED
EPROJECT NO. 1558046
CONSTR. CONTR. NO. –
NAVFAC DRAWING NO. 12747208
SHEET 73 OF 91
M-701
DRAWFORM REVISION: 10 MARCH 2009

FILE NAME: P:\MC\Compk\pnwe\MILCON\2017_1558046_P1482_IH-08B_120ManClassrooms\8_Design\Drawings\Sheet\13_Mechanical\1558046_P1482_M-701 CONTROLS.dwg LAYOUT NAME: M-701 CONTROLS PLOTTED: Monday, June 01, 2020 - 7:47pm USER: joseph.shilling@w

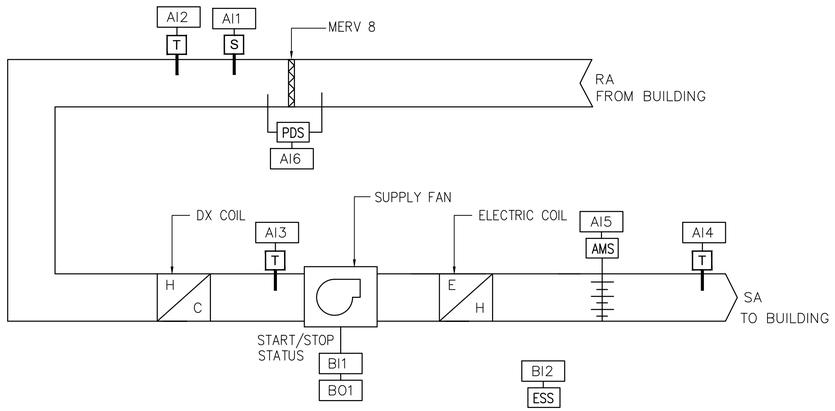

C1 AIR HANDLING UNIT CONTROL SCHEMATIC
SCALE: NONE

(T)

ROOM THERMOSTAT WITH:
- DISPLAY
- ON/OFF CONTROL
- TEMPERATURE SETPOINT ADJUSTMENT

AHU DDC POINTS LIST		
MARK	DESCRIPTION	ALARM
ANALOG INPUT		YES
AI1	SMOKE SENSOR	NO
AI2	RETURN AIR TEMPERATURE	NO
AI3	LEAVING AIR TEMPERATURE FROM DX COIL	NO
AI4	DISCHARGE AIR TEMPERATURE INTO THE SPACE	YES
AI5	SUPPLY AIR FLOW SENSOR	YES
AI6	DIFFERENTIAL PRESSURE SWITCH	NO
BINARY INPUT		
BI1	SUPPLY FAN STATUS	NO
BI2	EMERGENCY SHUTDOWN SWITCH	YES
BINARY OUTPUT		
BO1	SUPPLY FAN CONTROL	YES

AHU SEQUENCE OF OPERATION

A. OCCUPIED MODE:

1. THE AIR HANDLING UNIT FAN SHALL BE STARTED AND STOPPED BY THE ENERGY MANAGEMENT SYSTEM UNDER A TIME OF DAY SCHEDULE.
2. THE SUPPLY AIR DESIGN AIR TEMPERATURE SHALL BE SET TO 49.9°F (ADJ) DURING COOLING AND TO 95°F (ADJ) DURING HEATING.
3. DURING CONDENSING UNIT DEFROST MODE, AUXILIARY ELECTRIC HEATING WILL COME ON TO MAINTAIN ROOM SETPOINT.
4. SMOKE DETECTION AND AHU SHUTDOWN:
5. MONITOR THE SUPPLY AND RETURN AIR DUCT SMOKE DETECTORS WITH DIGITAL INPUT TO THE BAS, IN COORDINATION WITH THE FIRE ALARM SYSTEM, AND INDICATE WHEN IN ALARM.
   a. THE BUILDING FIRE ALARM SYSTEM SHALL PROVIDE AN AHU SHUT DOWN SIGNAL, HARDWIRED TO THE AHU FAN STARTER.
   b. THE BUILDING FIRE ALARM SYSTEM SHALL PROVIDE ONE DIGITAL OUTPUT TO THE BAS TO INDICATE ALARM CONDITION. WIRING FOR THIS ALARM POINT SHALL BE PROVIDED BY THE BAS SUBCONTRACTOR. UPON RECEIPT OF THIS ALARM, THE BAS SHALL SHUT DOWN ALL AIR MOVING EQUIPMENT IN THE BUILDING.
   c. THE FREEZESTAT SHALL SHUTDOWN THE AHU WHEN RETURN AIR TEMPERATURE FALLS BELOW 38°F.
6. FILTER BANKS: PROVIDE PRESSURE DIFFERENTIAL SWITCHES ACROSS FILTER BANK AND INDICATE DIRTY FILTER STATUS BASED ON MANUFACTURER'S FILTER PRESSURE DROP DATA.

B. UNOCCUPIED MODE:

1. WHEN THE ROOM TEMPERATURE DROPS BELOW THE UNOCCUPIED LOW LIMIT SETPOINT (55°F) OR RISES ABOVE THE UNOCCUPIED HIGH LIMIT SETPOINT (85°F), THE UNIT SHALL OPERATE IN START-UP MODE.
2. WHEN THE UNIT IS DISABLED, THE FAN SHALL TURN OFF. THE REFRIGERANT CONTROL VALVE SHALL CLOSE, THE DOAS UNIT IS DISABLED.

C. START-UP MODE:

1. AIR HANDLING UNIT SUPPLY FAN SHALL BE ON AND REFRIGERANT CONTROL VALVE SHALL OPEN.
2. WHEN ROOM CONDITION SETPOINT IS MET (78°F FOR COOLING AND 68°F FOR HEATING), THE SYSTEM SHALL RUN IN THIS CONDITION FOR 5 MINUTES (ADJ) TO ESTABLISH SPACE TEMPERATURE BALANCE. THEN THE DOAS UNIT SHALL START.

AHU NOTES:

1. THE EQUIPMENT SHALL HAVE BACNET MS/TP INTERFACES AND BE INTEGRATED INTO THE EXISTING BUILDING DDC SYSTEM.

NO.	DESCRIPTION	DATE	APPR
-	-	-	-

NAVFAC

SEAL

A/E INFO

APPROVED

FOR COMMANDER NAVFAC

ACTIVITY

EMILY M. SYLVESTER, PE

SATISFACTORY TO DATE 28 JUNE 2018

DES JES | DRW JES | CHK YG

DESIGN MANAGER G. COOKE

BRANCH MANAGER

CHIEF ENGINEER EJA

FIRE PROTECTION

DEPARTMENT OF THE NAVY
NAVAL FACILITIES ENGINEERING COMMAND
MIDLANT CI CORE

NAVAL FACILITIES ENGINEERING COMMAND–MID-ATLANTIC
NAVAL STATION NORFOLK VIRGINIA

MCB CAMP LEJEUNE
JACKSONVILLE, NC

P1482 MARINE SPECIAL OP SCHOOL
120 MAN CLASSROOMS

CONTROLS

SCALE: AS NOTED

EPROJECT NO. 1558046

CONSTR. CONTR. NO. –

NAVFAC DRAWING NO. 12747209

SHEET 74 OF 91

M-702

DRAWFORM REVISION: 10 MARCH 2009

FILE NAME: P:\NC\Camp Lejeune\MILCON\2017_1558046_P1482_JH-1088_120ManClassrooms\B_Design\Drawings\Sheet\13_Mechanical\1558046_P1482_M-702 CONTROLS.dwg LAYOUT NAME: M-702 CONTROLS PLOTTED: Monday, June 01, 2020 - 7:48am USER: joseph.shilling@w

LIGHTING LEGEND

- INTERIOR LED FIXTURE, REFER TO LUMINAIRE SCHEDULE E-703 FOR MORE DETAIL.
- INTERIOR LED TRACK LIGHT.
- EXTERIOR WALL MOUNTED LED LIGHTING FIXTURE.
- EXIT LIGHTING FIXTURE. ARROW, WHEN USED, INDICATES DIRECTION.
- EMERGENCY BATTERY POWERED LIGHTING UNIT.
- A — LIGHTING FIXTURE TYPE. SEE LIGHTING FIXTURE SCHEDULE ON SHEET E-703.
- S — SINGLE POLE SWITCH. 20A., 120/277V.
- S_{DM} — DIMMER CONTROL SWITCH. 20A., 120/277V.
- S_3 — 3 WAY LIGHT SWITCH, 20A, 120/277V.
- S_{3DM} — 3 WAY DIMMER SWITCH, 20A, 120/277V
- OS — CEILING MOUNTED OCCUPANCY SENSOR, DUAL TECHNOLOGY (PASSIVE INFARED/ULTRASONIC). 360° COVERAGE. WIRED FOR WALL SWITCH OVERRIDE.

COMMUNICATIONS

- TELEPHONE/DATA TERMINAL BACKBOARD.
- N — NIPR TELEPHONE/DATA OUTLET CONSISTING OF DOUBLE-GANG BOX AND FACEPLATE MOUNT 18" AFF WITH 1-1/4" CONDUIT.
- S — SIPR TELEPHONE/DATA OUTLET CONSISTING OF DOUBLE-GANG BOX AND FACEPLATE MOUNT 18" AFF WITH 1-1/4" CONDUIT.
- TELEPHONE/DATA OUTLET CONSISTING OF FLUSH FLOOR OUTLET WITH 1-1/4" CONDUIT FROM TELECOM ROOM 103. RUN (4) CAT6 CABLES FROM OUTLET TO BASE EQUIPMENT RACK.
- CEILING MOUNTED PROJECTOR.
- 3" TELECOM CONDUITS, UON
- S — SUSPENDED SPEAKER.
- NIPR OR SIPR TELECOM RACK.
- CCTV CAMERA.
- J — CONNECTION BOX FOR CARD READER.
- AV — AV CREDENZA.
- SPECIAL PURPOSE CONNECTION FOR AV SYSTEM.
- D — FLOOR RECESSED DATA BOX.

LIGHTNING PROTECTION LEGEND

- DRIVEN GROUND ROD.
- AIR TERMINAL.
- BOND CONNECTION EXOTHERMICALLY WELD UON.
- BOND CONNECTION EXOTHERMICALLY WELD TO REINFORCING STEEL.
- CONDUCTOR TURNED DOWN.
- UNDERGROUND GROUNDING LOOP CONDUCTOR.
- ROOF GROUNDING LOOP CONDUCTOR.

WIRE, CONDUIT & RACEWAY

- BRANCH CIRCUIT OR FEEDER WIRING IN CONDUIT.
- A-1,3,5 — HOMERUNS TO PANEL. PANEL & CIRCUIT DESIGNATIONS AS INDICATED.
- SECURED NETWORK CABLE TRAY.
- UN-SECURED NETWORK CABLE TRAY.

EQUIPMENT CONNECTIONS

- E — MECHANICAL OR PLUMBING EQUIPMENT CONNECTION. DISCONNECTS SWITCHES, STARTERS, VFD'S, AND OTHER COMPONENTS REQUIRED FOR THE OPERATION OF EQUIPMENT.
- M — MOTOR CONNECTION.
- J — MINIMUM 4" SQUARE X 2 1/8" JUNCTION BOX. SIZE PER NEC.
- 3P 60/40 3R — DISCONNECT SWITCH. 600 V. 3P = NO. OF POLES, 60 = SWITCH RATING, 40 = FUSE RATING (NF INDICATES NON-FUSIBLE), 3R = NEMA RATING.
- P — FLOOR RECESS POWER BOX.

POWER DEVICES

- DUPLEX CONVENIENCE RECEPTACLE. 20 A., 120 VOLT. MOUNT 18" UON.
- GFI — DUPLEX CONVENIENCE RECEPTACLE WITH INTERNAL GROUND FAULT PROTECTION. 20A., 120 VOLT. MOUNT 18" AFF UON.
- DUPLEX CONVENIENCE RECEPTACLE WITH GROUND FAULT PROTECTION, 20 A., 120 VOLT, MOUNT 6" ABOVE SINK/COUNTER UON.
- WP GFI — DUPLEX CONVENIENCE RECEPTACLE WITH INTERNAL GROUND FAULT PROTECTION AND WEATHERPROOF COVER, 20 A., 120 VOLT. MOUNT 18" AFF/AFG UON.
- DUPLEX CONVENIENCE RECEPTACLE WITH TOP RECEPTACLE IS CONTROLLABLE. 20A., 120 VOLT. MOUNT 18" AFF UON.
- QUAD RECEPTACLE. 20 A., 120 VOLT. MOUNT 18" AFF UON.

GENERAL SHEET NOTES

1. ALL INTERIOR WIRING SYSTEMS SHALL BE CONCEALED WITH FLUSH MOUNTED BOXES/DEVICES UNLESS OTHERWISE NOTED.
2. UNLESS OTHERWISE INDICATED ALL ELECTRICAL WORK AND MATERIAL SHALL BE NEW AND SHALL BE PROVIDED BY THE CONTRACTOR.
3. MECHANICAL EQUIPMENT IS SHOWN IN APPROXIMATE LOCATIONS. FOR EXACT LOCATIONS OF MECHANICAL EQUIPMENT & PIPING SEE MECHANICAL DRAWINGS.
4. ALL OUTDOOR ELECTRICAL EQUIPMENT SHALL BE IN NEMA 3R ENCLOSURES, UON.
5. PROVIDE PERMANENT IDENTIFICATION PLACARD FOR ALL SWITCHBOARDS, PANELBOARDS, DISCONNECTS & TRANSFORMERS.

LIGHTNING PROTECTION NOTES

1. VERIFY THE ELECTRICAL GROUND, WATER LINE AND OTHER UNDERGROUND PIPING IS COMMON WITH THE LIGHTNING PROTECTION GROUNDING. INTERCONNECT ALL GROUNDING.
2. SEE ARCHITECTURAL AND STRUCTURE SHEETS FOR BUILDING PLANS, ELEVATIONS AND CONSTRUCTION DETAILS.
3. SYSTEM COMPONENTS SHALL BE COMPATIBLE WITH STANDING SEAM METAL ROOF.
4. ROOF PENETRATIONS SHALL BE MINIMIZED AND MADE USING THRU-ROOF ASSEMBIES. COORDINATE WITH ROOFING CONTRACTOR.

DISTRIBUTION

- PANELBOARD (208Y/120 VOLT).
- PANELBOARD (480Y/277 VOLT).
- DRYTYPE TRANSFORMER.

ABBREVIATIONS

A	AMPS
AFF	ABOVE FINISHED FLOOR
AFG	ABOVE FINISHED GRADE
AWG	AMERICAN WIRE GUAGE
BKR	BREAKER
C	CONDUIT
CKT	CIRCUIT
CTC	CABLE TERMINATING CABINET
EGC	EQUIPMENT GROUNDING CONDUCTOR
GFI	GROUND FAULT INTERRUPTER
GND	GROUND
HH	HANDHOLE
KAIC	AMPS INTERRUPTING CURRENT
KCMIL	THOUSAND CIRCULAR MILS
KV	KILOVOLT
KVA	KILOVOLT AMPERES
LOC	LOCAL OPERATORS CONSOLE
MCB	MAIN CIRCUIT BREAKER
MDP	MAIN DISTRIBUTION PANEL
MLO	MAIN LUGS ONLY
MH	MANHOLE
N, NEUT	NEUTRAL
RA	REMOTE ANNUNCIATOR
TBB	TELEPHONE BACKBOARD
TMH	TELEPHONE MANHOLE
TRT	TRIPLE TUB
TVSS	TRANSIENT VOLTAGE SURGE SUPPRESSION
TYP	TYPICAL
UON	UNLESS OTHERWISE NOTED
VAC	VOLTS ALTERNATING CURRENT
W	WATT
WHD	WATTHOUR DEMAND
WP	WEATHERPROOF
XFMR	TRANSFORMER

APPR | DATE | DESCRIPTION | CTM

NAVFAC

SEAL

A/E INFO

APPROVED

FOR COMMANDER NAVFAC

ACTIVITY

EMILY M. SYLVESTER, PE

SATISFACTORY TO DATE 28 JUNE 2018

DES VKN | DRW VKN | CHK TGO

DESIGN MANAGER G. COOKE

BRANCH MANAGER JAS

CHIEF ENGINEER EJA

FIRE PROTECTION

DEPARTMENT OF THE NAVY
NAVAL FACILITIES ENGINEERING COMMAND
MIDLANT CI CORE
NAVAL FACILITIES ENGINEERING COMMAND-MID-ATLANTIC
NAVAL STATION NORFOLK VIRGINIA
MCB CAMP LEJEUNE
JACKSONVILLE, NC

P1482 MARINE SPECIAL OP SCHOOL
120 MAN CLASSROOMS

LEGENDS AND NOTES

SCALE: AS NOTED

EPROJECT NO. 1558046

CONSTR. CONTR. NO. –

NAVFAC DRAWING NO. 12747210

SHEET 75 OF 91

E-001

DRAWFORM REVISION: 10 MARCH 2009

FILE NAME: P:\WC\Computrieve\MILCON\2017_1558046_P1482_JH-DBB_120ManClassrooms\8_Design\Drawings\Sheet\14_Electrical\E-001 LEGENDS AND NOTES.dwg LAYOUT NAME: E-001 LEGENDS AND NOTES PLOTTED: Tuesday, June 16, 2020 - 5:38pm USER: luis.roman-lugo

LIGHTING LEGEND

- INTERIOR LED FIXTURE, REFER TO LUMINAIRE SCHEDULE E-703 FOR MORE DETAIL.
- INTERIOR LED TRACK LIGHT.
- EXTERIOR WALL MOUNTED LED LIGHTING FIXTURE.
- EXIT LIGHTING FIXTURE. ARROW, WHEN USED, INDICATES DIRECTION.
- EMERGENCY BATTERY POWERED LIGHTING UNIT.
- A — LIGHTING FIXTURE TYPE. SEE LIGHTING FIXTURE SCHEDULE ON SHEET E-703.
- S — SINGLE POLE SWITCH. 20A., 120/277V.
- S_{DM} — DIMMER CONTROL SWITCH. 20A., 120/277V.
- S_3 — 3 WAY LIGHT SWITCH, 20A, 120/277V.
- S_{3DM} — 3 WAY DIMMER SWITCH, 20A, 120/277V
- OS — CEILING MOUNTED OCCUPANCY SENSOR, DUAL TECHNOLOGY (PASSIVE INFARED/ULTRASONIC). 360° COVERAGE. WIRED FOR WALL SWITCH OVERRIDE.

COMMUNICATIONS

- TELEPHONE/DATA TERMINAL BACKBOARD.
- T_N — NIPR TELEPHONE/DATA OUTLET CONSISTING OF DOUBLE-GANG BOX AND FACEPLATE MOUNT 18" AFF WITH 1-1/4" CONDUIT.
- T_S — SIPR TELEPHONE/DATA OUTLET CONSISTING OF DOUBLE-GANG BOX AND FACEPLATE MOUNT 18" AFF WITH 1-1/4" CONDUIT.
- TELEPHONE/DATA OUTLET CONSISTING OF FLUSH FLOOR OUTLET WITH 1-1/4" CONDUIT FROM TELECOM ROOM 103. RUN (4) CAT6 CABLES FROM OUTLET TO BASE EQUIPMENT RACK.
- CEILING MOUNTED PROJECTOR.
- 3" TELECOM CONDUITS, UON
- S — SUSPENDED SPEAKER.
- NIPR OR SIPR TELECOM RACK.
- CCTV CAMERA.
- J — CONNECTION BOX FOR CARD READER.
- AV — AV CREDENZA.
- SPECIAL PURPOSE CONNECTION FOR AV SYSTEM.
- D — FLOOR RECESSED DATA BOX.

LIGHTNING PROTECTION LEGEND

- DRIVEN GROUND ROD.
- AIR TERMINAL.
- BOND CONNECTION EXOTHERMICALLY WELD UON.
- BOND CONNECTION EXOTHERMICALLY WELD TO REINFORCING STEEL.
- CONDUCTOR TURNED DOWN.
- UNDERGROUND GROUNDING LOOP CONDUCTOR.
- ROOF GROUNDING LOOP CONDUCTOR.

WIRE, CONDUIT & RACEWAY

- BRANCH CIRCUIT OR FEEDER WIRING IN CONDUIT.
- A-1,3,5 — HOMERUNS TO PANEL. PANEL & CIRCUIT DESIGNATIONS AS INDICATED.
- SECURED NETWORK CABLE TRAY.
- UN-SECURED NETWORK CABLE TRAY.

EQUIPMENT CONNECTIONS

- E — MECHANICAL OR PLUMBING EQUIPMENT CONNECTION. DISCONNECTS SWITCHES, STARTERS, VFD'S, AND OTHER COMPONENTS REQUIRED FOR THE OPERATION OF EQUIPMENT.
- M — MOTOR CONNECTION.
- J — MINIMUM 4" SQUARE X 2 1/8" JUNCTION BOX. SIZE PER NEC.
- 3P 60/40 3R — DISCONNECT SWITCH. 600 V. 3P = NO. OF POLES, 60 = SWITCH RATING, 40 = FUSE RATING (NF INDICATES NON-FUSIBLE), 3R = NEMA RATING.
- D — FLOOR RECESS POWER BOX.

POWER DEVICES

- DUPLEX CONVENIENCE RECEPTACLE. 20 A., 120 VOLT. MOUNT 18" UON.
- GFI — DUPLEX CONVENIENCE RECEPTACLE WITH INTERNAL GROUND FAULT PROTECTION. 20A., 120 VOLT. MOUNT 18" AFF UON.
- DUPLEX CONVENIENCE RECEPTACLE WITH GROUND FAULT PROTECTION, 20 A., 120 VOLT, MOUNT 6" ABOVE SINK/COUNTER UON.
- WP GFI — DUPLEX CONVENIENCE RECEPTACLE WITH INTERNAL GROUND FAULT PROTECTION AND WEATHERPROOF COVER, 20 A., 120 VOLT. MOUNT 18" AFF/AFG UON.
- DUPLEX CONVENIENCE RECEPTACLE WITH TOP RECEPTACLE IS CONTROLLABLE. 20A., 120 VOLT. MOUNT 18" AFF UON.
- QUAD RECEPTACLE. 20 A., 120 VOLT. MOUNT 18" AFF UON.

GENERAL SHEET NOTES

1. ALL INTERIOR WIRING SYSTEMS SHALL BE CONCEALED WITH FLUSH MOUNTED BOXES/DEVICES UNLESS OTHERWISE NOTED.
2. UNLESS OTHERWISE INDICATED ALL ELECTRICAL WORK AND MATERIAL SHALL BE NEW AND SHALL BE PROVIDED BY THE CONTRACTOR.
3. MECHANICAL EQUIPMENT IS SHOWN IN APPROXIMATE LOCATIONS. FOR EXACT LOCATIONS OF MECHANICAL EQUIPMENT & PIPING SEE MECHANICAL DRAWINGS.
4. ALL OUTDOOR ELECTRICAL EQUIPMENT SHALL BE IN NEMA 3R ENCLOSURES, UON.
5. PROVIDE PERMANENT IDENTIFICATION PLACARD FOR ALL SWITCHBOARDS, PANELBOARDS, DISCONNECTS & TRANSFORMERS.

LIGHTNING PROTECTION NOTES

1. VERIFY THE ELECTRICAL GROUND, WATER LINE AND OTHER UNDERGROUND PIPING IS COMMON WITH THE LIGHTNING PROTECTION GROUNDING. INTERCONNECT ALL GROUNDING.
2. SEE ARCHITECTURAL AND STRUCTURE SHEETS FOR BUILDING PLANS, ELEVATIONS AND CONSTRUCTION DETAILS.
3. SYSTEM COMPONENTS SHALL BE COMPATIBLE WITH STANDING SEAM METAL ROOF.
4. ROOF PENETRATIONS SHALL BE MINIMIZED AND MADE USING THRU-ROOF ASSEMBIES. COORDINATE WITH ROOFING CONTRACTOR.

DISTRIBUTION

- PANELBOARD (208Y/120 VOLT).
- PANELBOARD (480Y/277 VOLT).
- DRYTYPE TRANSFORMER.

ABBREVIATIONS

A	AMPS
AFF	ABOVE FINISHED FLOOR
AFG	ABOVE FINISHED GRADE
AWG	AMERICAN WIRE GUAGE
BKR	BREAKER
C	CONDUIT
CKT	CIRCUIT
CTC	CABLE TERMINATING CABINET
EGC	EQUIPMENT GROUNDING CONDUCTOR
GFI	GROUND FAULT INTERRUPTER
GND	GROUND
HH	HANDHOLE
KAIC	AMPS INTERRUPTING CURRENT
KCMIL	THOUSAND CIRCULAR MILS
KV	KILOVOLT
KVA	KILOVOLT AMPERES
LOC	LOCAL OPERATORS CONSOLE
MCB	MAIN CIRCUIT BREAKER
MDP	MAIN DISTRIBUTION PANEL
MLO	MAIN LUGS ONLY
MH	MANHOLE
N, NEUT	NEUTRAL
RA	REMOTE ANNUNCIATOR
TBB	TELEPHONE BACKBOARD
TMH	TELEPHONE MANHOLE
TRT	TRIPLE TUB
TVSS	TRANSIENT VOLTAGE SURGE SUPPRESSION
TYP	TYPICAL
UON	UNLESS OTHERWISE NOTED
VAC	VOLTS ALTERNATING CURRENT
W	WATT
WHD	WATTHOUR DEMAND
WP	WEATHERPROOF
XFMR	TRANSFORMER

APPR | DATE | DESCRIPTION | CTM

NAVFAC

SEAL

A/E INFO

APPROVED

FOR COMMANDER NAVFAC

ACTIVITY

EMILY M. SYLVESTER, PE

SATISFACTORY TO DATE 28 JUNE 2018

DES VKN | DRW VKN | CHK TGO

DESIGN MANAGER G. COOKE

BRANCH MANAGER JAS

CHIEF ENGINEER EJA

FIRE PROTECTION

DEPARTMENT OF THE NAVY
NAVAL FACILITIES ENGINEERING COMMAND
NAVFAC LANT
NAVAL FACILITIES ENGINEERING COMMAND-MID-ATLANTIC
NAVAL STATION NORFOLK VIRGINIA
MIDLANT CI CORE
MCB CAMP LEJEUNE JACKSONVILLE, NC
P1482 MARINE SPECIAL OP SCHOOL
120 MAN CLASSROOMS
LEGENDS AND NOTES

SCALE: AS NOTED
EPROJECT NO. 1558046
CONSTR. CONTR. NO. -
NAVFAC DRAWING NO. 12747210
SHEET 75 OF 91

E-001

DRAWFORM REVISION: 10 MARCH 2009

FILE NAME: P:\NC\Computer\ene\MILCON\2017_1558046_P1482_JH-DBB_120ManClassrooms\8_Design\Drawings\Sheet\14_Electrical\E-001 LEGENDS AND NOTES.dwg LAYOUT NAME: E-001 LEGENDS AND NOTES PLOTTED: Tuesday, June 02, 2020 - 7:29pm USER: luis.roman-lugo

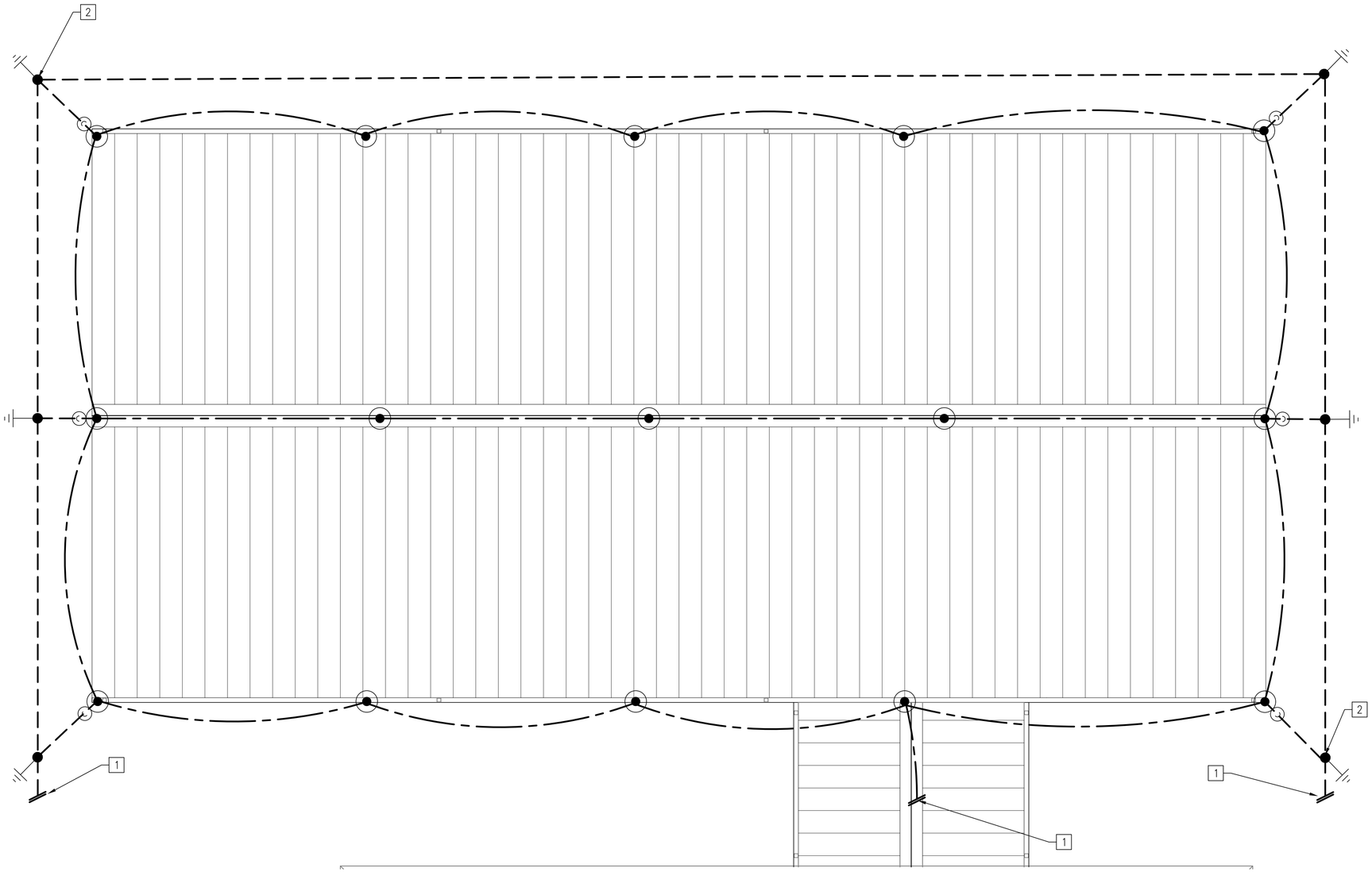

TYICAL PARTIAL LIGHTNING PROTECTION

SCALE: 3/16" = 1-0'

GENERAL SHEET NOTES

1. PROVIDE COPPER CONDUCTORS.
2. PROVIDE UL MASTER LABEL CERTIFICATE OR THIRD PARTY EQUIVALENT.
3. PROVIDE #2/0 COPPER LOOP MINIMUM 3 FT FROM EDGE OF BUILDING.
4. DO NOT USE ADHESIVE FOR AIR TERMINAL ON ROOF.
5. TYPICAL LIGHTNING PROTECTION FOR AREA A AND B.
6. REFER TO SHEET E-704 FOR LIGHTNING PROTECTION DETAILS.
7. BOND LPS WITH BUILDING GROUNDING EQUIPMENT.

NEW WORK KEYNOTES

1. BOND GROUNDING CONDUCTOR TO EXISTING LIGHTNING PROTECTION SYSTEM IN BUILDING RR450.
2. PROVIDE TEST WELL.

KEYPLAN

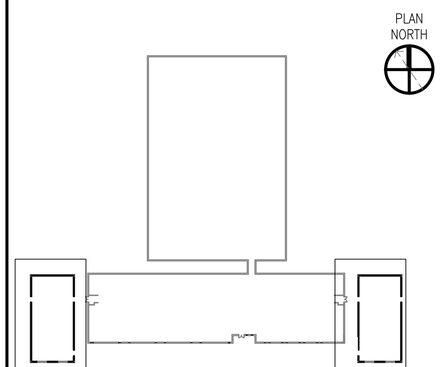

GRAPHIC SCALE

3/16"=1'-0" 0' 4' 8' 12'

SYM	DESCRIPTION	DATE	APPR

NAVFAC

SEAL

A/E INFO

APPROVED

FOR COMMANDER NAVFAC

ACTIVITY

EMILY M. SYLVESTER, PE

SATISFACTORY TO DATE 28 JUNE 2018

DES VKN | DRW VKN | CHK TGO

DESIGN MANAGER G. COOKE

BRANCH MANAGER JAS

CHIEF ENGINEER EJA

FIRE PROTECTION

DEPARTMENT OF THE NAVY
NAVAL FACILITIES ENGINEERING COMMAND
NAVAL FACILITIES ENGINEERING COMMAND~MID-ATLANTIC
NAVAL STATION NORFOLK VIRGINIA
MIDLANT CI CORE
MCB CAMP LEJEUNE
JACKSONVILLE, NC

P1482 MARINE SPECIAL OP SCHOOL
120 MAN CLASSROOMS

TYPICAL PARTIAL LIGHTNING PROTECTION

SCALE: AS NOTED

EPROJECT NO. 1558046

CONSTR. CONTR. NO. –

NAVFAC DRAWING NO. 12747211

SHEET 76 OF 91

EG-101

DRAWFORM REVISION: 10 MARCH 2009

FILE NAME: P:\NC\CampLejeune\MILCON\2017_1558046_P1482_IH-DBB_120ManClassrooms\B_Design\Drawings\Sheet\14_Electrical\EG-101 TYPICAL PARTIAL LIGHTNING PROTECTION.dwg LAYOUT NAME: EG-101 TYPICAL PARTIAL LIGHTNING PROTECTION PLOTTED: Tuesday, June 02, 2020 - 7:47pm USER: luis.roman-lugo

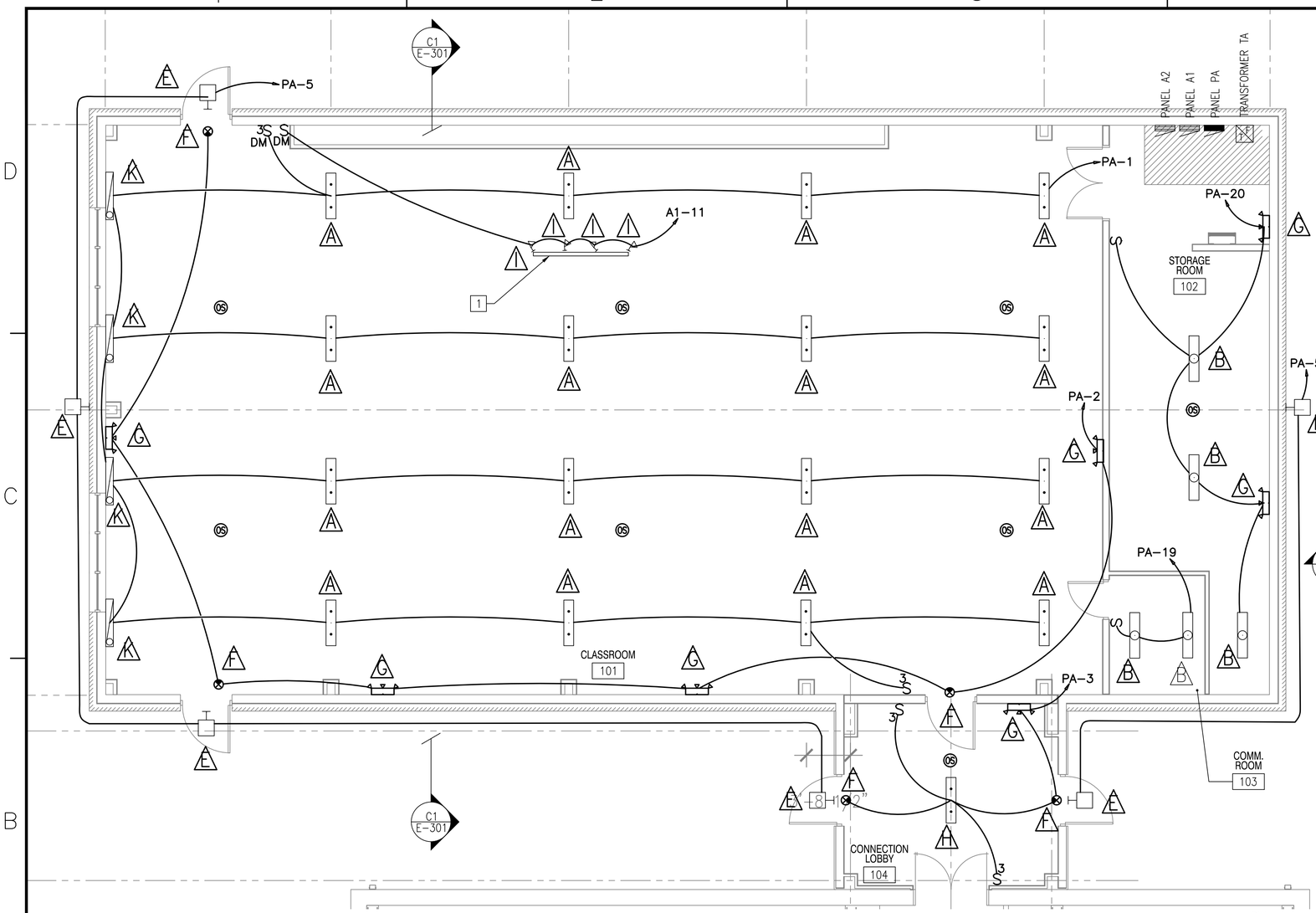

TYPICAL PARTIAL LIGHTING

SCALE: 3/16" = 1'-0"

PLAN NORTH

MEC. PLATFORM LT

SCALE: 3/16" = 1'-0"

PLAN NORTH

LUMINAIRES SCHEDULE								
FIXTURE SYMBOL	LAMP TYPE	SKETCH NO.	LOAD (W)	LUMENS	VOLTAGE	MOUNTING TYPE	HEIGHT (FT)	NOTE
A	LED	DL-24	75	9000	277	SUSPENDED	13	1 FT X 4 FT, (1)
B	LED	NL-5	50	4200	277	CEILING	N/A	1 FT X 4 FT, (1)
C	LED	NL-7	50	4200	277	SUSPENDED	N/A	1 FT X 4 FT, 6.5 FT ABOVE MECHANICAL PLATFORM
D	LED	NL-9	50	4200	277	WALL MOUNTED	N/A	1 FT X 4 FT
E	LED	DL-7	45	4200	277	WALL MOUNTED	10	(2), (4), AND (5)
F	LED	NL-64	30		277	WALL MOUNTED	N/A	(2) (3)
G	LED	NL-67	30	N/A	277	WALL MOUNTED	8	(2)
H	LED	NL-5	80	4200	277	SUSPENDED	10	1 FT X 4 FT, (1)
I	LED	DL -02 OPTION G DL-01	30	1800	120	SUSPENDED	12	
K	LED	NL-9	50	4200	277	WALL MOUNTED	12	1 FT X 4 FT

NOTE:
(1) – OCCUPANCY SENSOR COMPATIBLE
(2) – BATTERY BACK UP
(3) – MOUNT 6' ABOVE DOOR FRAME
(4) – PHOTO CELL, OCCUPANCY SENSOR FOR DIMMING CONTROL.
(5) – UL LISTED FOR WET AND DAMP LOCATION.

GENERAL SHEET NOTES

1. WIRE ALL EMERGENCY LIGHT FIXTURES AHEAD OF LOCAL SWITCHING.
2. PROVIDE OCCUPANCY SENSORS IN AREAS SHOWN, AIM AND MOUNT THEM ACCORDING TO MANUFACTURER'S RECOMMENDATIONS.
3. ROOM WITH MULTIPLE OCCUPANCY SENSORS, EACH OCCUPANCY SENSOR MUST BE ABLE TO CONTROL ALL LIGHTING FIXTURES.
4. MECHANICAL PLATFORM IS LOCATED DIRECTLY ABOVE STORAGE AREA AND TELECOM ROOM. ACCESS TO PLATFORM AS SHOWN.
5. 0V-10V DIMMING CONDUCTORS ARE NOT SHOWN FOR CLARITY, PROVIDE 0V-10V PER MANUFACTURER'S RECOMMENDATION.
6. REFER TO E-703 AND E-704 FOR LIGHTING DETAILS.
7. REFER TO E-301 FOR SECTION PLAN.
8. AREA A AND B ARE IDENTICAL. FOR CLARITY, TYPICAL PLAN SHOWS PANEL PA, PANEL A1, PANEL A2 AND TRANSFORMER TA FOR AREA A. USE PANEL PB, PANEL B1, PANEL B2 AND TRANSFORMER TB FOR AREA B.

NEW WORK KEYNOTES

1. PROVIDE LED TRACK LIGHT FIXTURES, TRACK, AND TRACK SUSPENSION KIT. MOUNT TRACK LIGHT SYSTEM 12 FT AFF.
2. MOUNT LIGHT FIXTURE 6" ABOVE DOOR FRAME OR 7'-6" AFF.

KEYPLAN

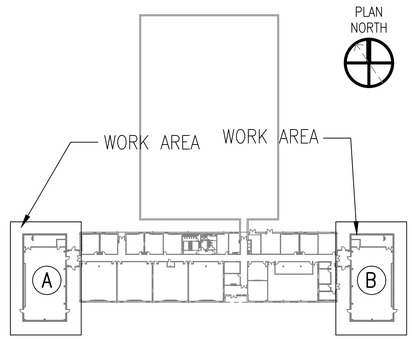

GRAPHIC SCALE

3/16"=1'-0" 0' 4' 8' 12'

APPR | DATE | DESCRIPTION | CTM

NAVFAC

SEAL

A/E INFO

APPROVED

FOR COMMANDER NAVFAC

ACTIVITY

EMILY M. SYLVESTER, PE

SATISFACTORY TO DATE 28 JUNE 2018

DES VKN | DRW VKN | CHK TGO

DESIGN MANAGER G. COOKE

BRANCH MANAGER JAS

CHIEF ENGINEER EJA

FIRE PROTECTION

DEPARTMENT OF THE NAVY
NAVAL FACILITIES ENGINEERING COMMAND
NAVAL FACILITIES ENGINEERING COMMAND-MID-ATLANTIC
NAVAL STATION NORFOLK VIRGINIA
MIDLANT CI CORE

MCB CAMP LEJEUNE JACKSONVILLE, NC

P1482 MARINE SPECIAL OP SCHOOL
120 MAN CLASSROOMS

PARTIAL LIGHTING PLAN

SCALE: AS NOTED

EPROJECT NO. 1558046

CONSTR. CONTR. NO. –

NAVFAC DRAWING NO. 12747212

SHEET 77 OF 91

EL-101

DRAWFORM REVISION: 10 MARCH 2009

FILE NAME: P:\MC\Comp&Jeune\MLCON\2017_1558046_P1482_IH-088_120ManClassrooms\8_Design\Drawings\Sheet\14_Electrical\EL-101 PARTIAL LIGHTING PLAN.dwg LAYOUT NAME: EL-101 PARTIAL LIGHTING PLAN PLOTTED: Tuesday, June 02, 2020 - 7:25pm USER: luis.roman-lugo

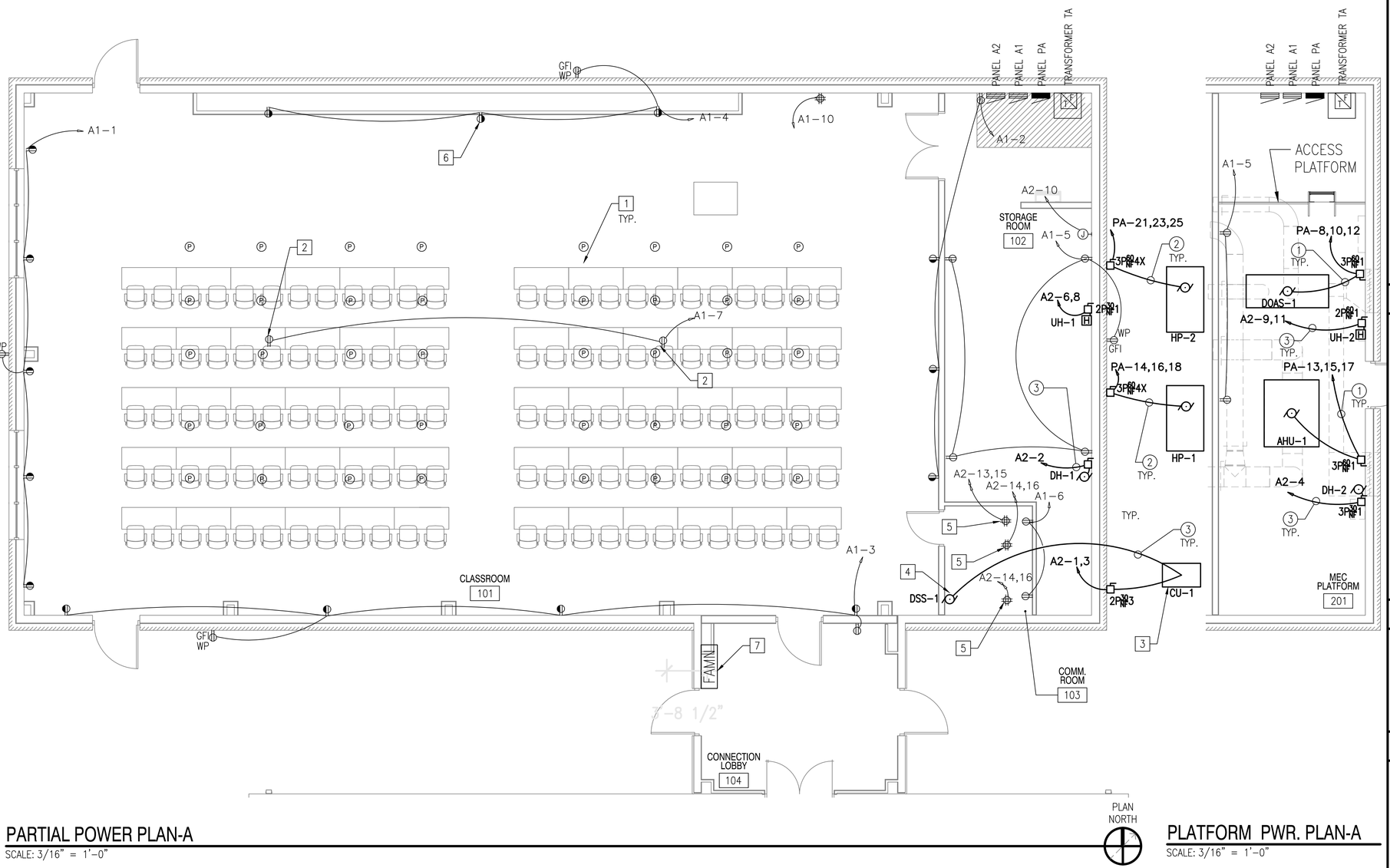

PARTIAL POWER PLAN-A

SCALE: 3/16" = 1'-0"

PLATFORM PWR. PLAN-A

SCALE: 3/16" = 1'-0"

GENERAL SHEET NOTES

1. ALL POWER RECEPTACLES AND DATA OUTLETS SHALL BE COORDINATED WITH THE FURNITURE PLAN I-102, I-103 AND VERIFIED BY THE NAVFAC INTERIOR DESIGNER BEFORE INSTALLATION.
2. ALL CONTROLLABLE RECEPTACLES MUST BE CONTROLLED BY LIGHTING OCCUPANCY SENSORS WHERE APPLICABLE.
3. MECHANICAL PLATFORM IS LOCATED DIRECTLY ABOVE STORAGE ROOM AND COMMUNICATION ROOM. ACCESSING PLATFORM AS SHOWN.
4. REFER TO ONE-LINE DIAGRAM IN SHEET E-701.
5. REFER TO E-501 FOR RAISED ACCESS FLOOR PLAN.

NEW WORK KEYNOTES

1. REFER TO SHEET E-501 FOR POWER AND DATA FLOOR BOXES.
2. PROVIDE CEILING MOUNTED RECEPTACLE FOR PROJECTOR, 14 FT AFF. COORDINATE WITH INTERIOR PLAN BEFORE INSTALLATION.
3. DSS-1 AND CU-1 ARE SPLIT SYSTEM. PROVIDE SINGLE POWER CONNECTION POINT AT CU-1 LOCATION.
4. PROVIDE ELECTRICAL CONNECTION BETWEEN CU-1 AND DSS-1.
5. PROVIDE DOUBLE DUPLEX RECEPTACLE FOR COM RACK, PLACE RECEPTACLE 6" ABOVE AND 6" BEHIND COM RACK.
6. PROVIDE WALL MOUNTED RECEPTACLE FOR TV, A MINIMUM OF 7 FT AFF. COORDINATE WITH INTERIOR PLAN BEFORE INSTALLATION.
7. PROVIDE POWER CONNECTION TO FIRE ALARM CONTROL PANEL. PROVIDE BREAKER WITH LOCK-ON CLIP AND MARK BREAKER RED IN COLOR. FOR MORE INFORMATION REFER TO PANEL BOARD SCHEDULE A2 ON SHEET E-701.

WIRE KEYNOTES

1. 4-#6 & 1-#6 GND IN 1" CONDUIT.
2. 4-#10 & 1-#10 GND IN 1" CONDUIT.
3. 3-#12 & 1-#12 GND IN 3/4" CONDUIT.

KEYPLAN

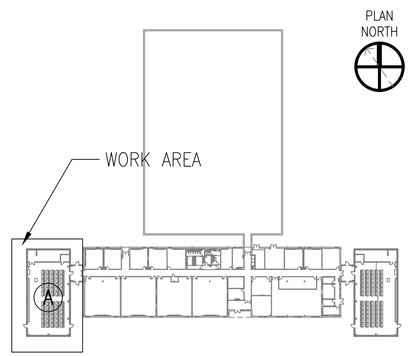

GRAPHIC SCALE

3/16"=1'-0" 0' 4' 8' 12'

SYM	DESCRIPTION	DATE	APPR

NAVFAC

SEAL

A/E INFO

APPROVED

FOR COMMANDER NAVFAC

ACTIVITY

EMILY M. SYLVESTER, PE

SATISFACTORY TO DATE 28 JUNE 2018

DES VKN DRW VKN CHK TGO

DESIGN MANAGER G. COOKE

BRANCH MANAGER JAS

CHIEF ENGINEER EJA

FIRE PROTECTION

DEPARTMENT OF THE NAVY
NAVAL FACILITIES ENGINEERING COMMAND
NAVAL FACILITIES ENGINEERING COMMAND~MID-ATLANTIC
MIDLANT CI CORE
NAVAL STATION NORFOLK VIRGINIA

MCB CAMP LEJEUNE
JACKSONVILLE, NC

P1482 MARINE SPECIAL OP SCHOOL
120 MAN CLASSROOMS

PARTIAL POWER PLAN-A

SCALE: AS NOTED

EPROJECT NO. 1558046

CONSTR. CONTR. NO. –

NAVFAC DRAWING NO. 12747213

SHEET 78 OF 91

EP-101

DRAWFORM REVISION: 10 MARCH 2009

FILE NAME: P:\NC\CampLejeune\MILCON\2017_1558046_P1482_IH-DBB_120ManClassrooms\B_Design\Drawings\Sheet\14_Electrical\EP-101 PARTIAL POWER PLAN-A.dwg LAYOUT NAME: EP-101 PARTIAL POWER PLAN-A PLOTTED: Tuesday, June 02, 2020 - 7:23pm USER: luis.roman-lugo

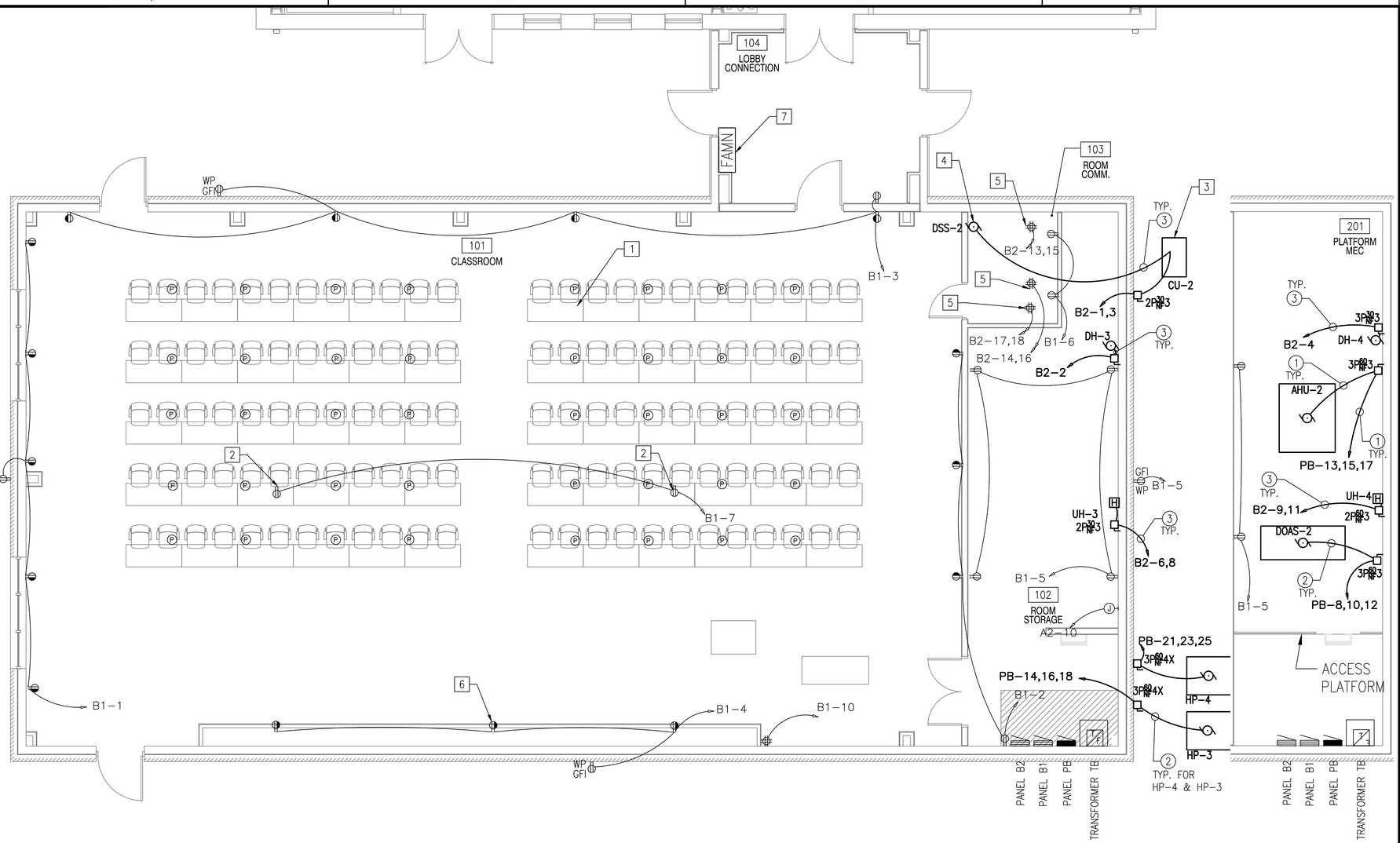

PARTIAL POWER PLAN-B

SCALE: 3/16" = 1'-0"

PLATFORM PWR. PLAN-B

SCALE: 3/16" = 1'-0"

GENERAL SHEET NOTES

1. ALL POWER RECEPTACLES AND DATA OUTLETS SHALL BE COORDINATED WITH THE FURNITURE PLAN I-102, I-103 AND VERIFIED BY THE NAVFAC INTERIOR DESIGNER BEFORE INSTALLATION.
2. ALL CONTROLLABLE RECEPTACLES MUST BE CONTROLLED BY LIGHTING OCCUPANCY SENSORS WHERE APPLICABLE.
3. MECHANICAL PLATFORM IS LOCATED DIRECTLY ABOVE STORAGE ROOM AND COMMUNICATION ROOM. ACCESSING PLATFORM AS SHOWN.
4. REFER TO ONE-LINE DIAGRAM IN SHEET E-701.
5. REFER TO SHEET E-501 FOR RAISED ACCESS FLOOR PLAN.

NEW WORK KEYNOTES

1. REFER TO SHEET E-501 FOR POWER AND DATA FLOOR BOXES.
2. PROVIDE CEILING MOUNTED RECEPTACLE FOR PROJECTOR, 14 FT AFF. COORDINATE WITH INTERIOR PLAN BEFORE INSTALLATION.
3. DSS-2 AND CU-2 ARE SPLIT SYSTEM. PROVIDE SINGLE POWER CONNECTION POINT AT CU-2 LOCATION.
4. PROVIDE ELECTRICAL CONNECTION BETWEEN CU-2 AND DSS-2.
5. PROVIDE DOUBLE DUPLEX RECEPTACLE FOR COM RACK, PLACE RECEPTACLE 6" AND 6" BEHIND COM RACK.
6. PROVIDE WALL MOUNTED RECEPTACLE FOR TV, A MINIMUM OF 7 FT AFF. COORDINATE WITH INTERIOR PLAN BEFORE INSTALLATION.
7. PROVIDE POWER CONNECTION TO FIRE ALARM CONTROL PANEL. PROVIDE BREAKER WITH LOCK-ON CLIP AND MARK BREAKER RED IN COLOR. FOR MORE INFORMATION REFER TO PANEL BOARD SCHEDULE B2 ON SHEET E-701.

WIRE KEYNOTES

1. 4-#8 & 1-#8 GND IN 1" CONDUIT.
2. 4-#10 & 1-#10 GND IN 1" CONDUIT.
3. 3-#12 & 1-#12 GND IN 3/4" CONDUIT.

KEYPLAN

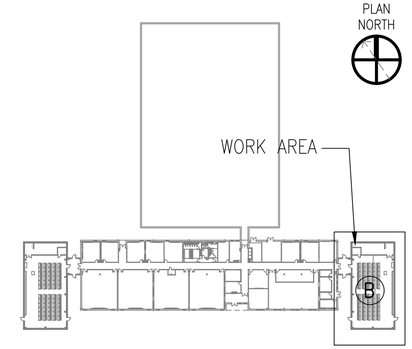

GRAPHIC SCALE

3/16"=1'-0" 0' 4' 8' 12'

SYM	DESCRIPTION	DATE	APPR

NAVFAC

SEAL

A/E INFO

APPROVED

FOR COMMANDER NAVFAC

ACTIVITY

EMILY M. SYLVESTER, PE

SATISFACTORY TO DATE 28 JUNE 2018

DES VKN DRW VKN CHK TGO

DESIGN MANAGER G. COOKE

BRANCH MANAGER JAS

CHIEF ENGINEER EJA

FIRE PROTECTION

DEPARTMENT OF THE NAVY
NAVAL FACILITIES ENGINEERING COMMAND
NAVAL FACILITIES ENGINEERING COMMAND-MID-ATLANTIC
MIDLANT CI CORE NAVAL STATION NORFOLK VIRGINIA

MCB CAMP LEJEUNE JACKSONVILLE, NC

P1482 MARINE SPECIAL OP SCHOOL
120 MAN CLASSROOMS

PARTIAL POWER PLAN-B

SCALE: AS NOTED

EPROJECT NO. 1558046

CONSTR. CONTR. NO. –

NAVFAC DRAWING NO. 12747224

SHEET 79 OF 91

EP-102

DRAWFORM REVISION: 10 MARCH 2009

FILE NAME: P:\NC\Camp_Lejeune\MILCON\2017_1558046_P1482_IH-DBB_120ManClassrooms\B_Design\Drawings\Sheet\14_Electrical\EP-102 PARTIAL POWER PLAN-B.dwg LAYOUT NAME: EP-102 PARTIAL POWER PLAN-B PLOTTED: Tuesday, June 02, 2020 - 7:22pm USER: luis.roman-lugo

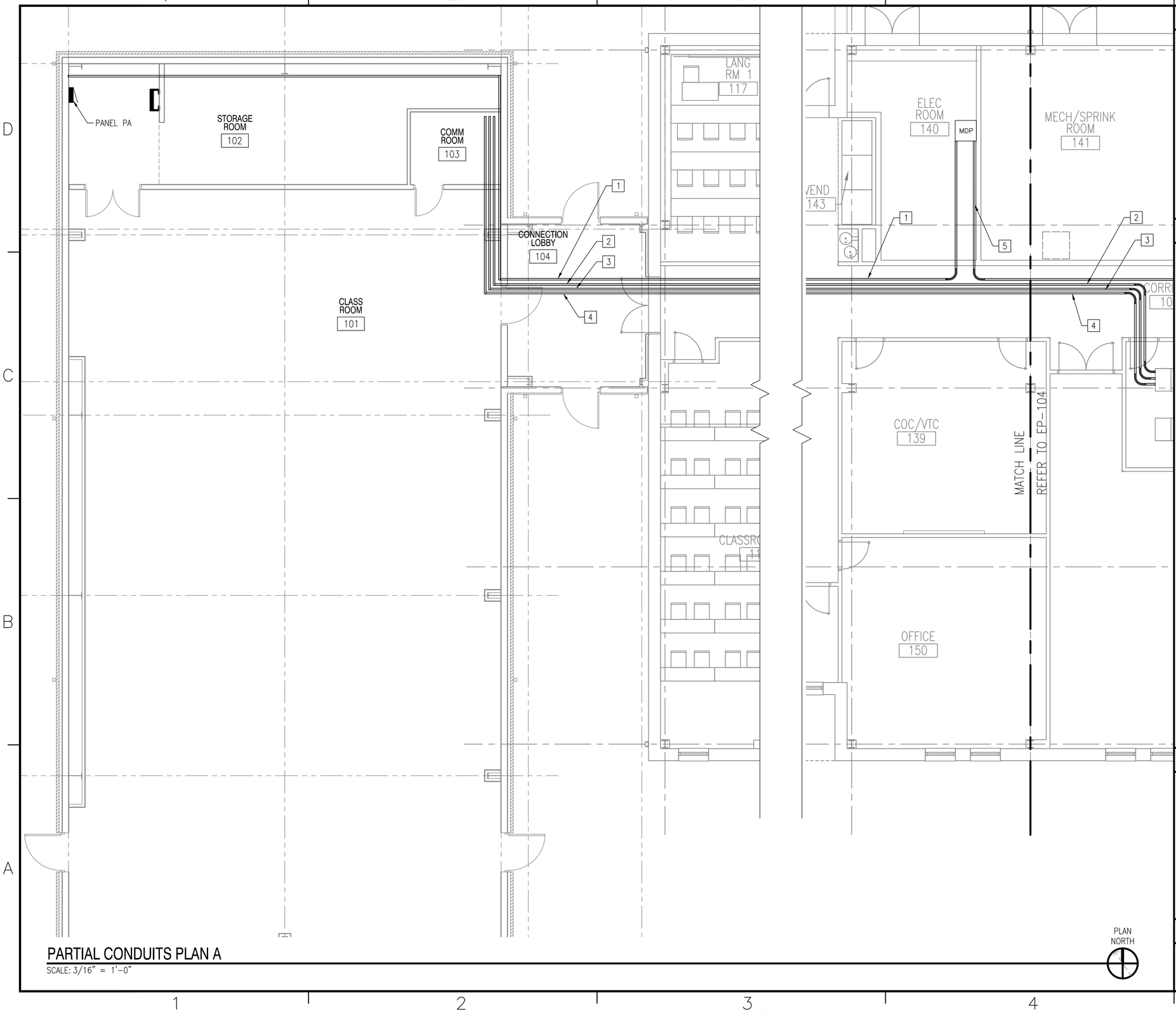

PARTIAL CONDUITS PLAN A

SCALE: 3/16" = 1'-0"

PLAN NORTH

GENERAL SHEET NOTES

1. FIELD VERIFY EXISTING SWITCHBOARD MDP CONDITIONS PRIOR TO INSTALLATION.
2. MAINTAIN 6" SEPARATION BETWEEN TELECOMMUNICATION CONDUITS.
3. ROUTE CONDUIT ABOVE ACOUSTICAL CEILING IN BUILDING RR450. AREA WITHOUT ACOUSTICAL CEILING, ROUTE CONDUITS UNDERSIDE OF EXISTING STRUCTURE, MAINTAIN MINIMUM 3" CLEARANCE FROM ROOF. PROVIDE PULLING BOX(ES) FOR EVERY 100 FT CONDUIT OR EVERY 180 DEGREES TURN.

NEW WORK KEYNOTES

1. PROVIDE 4-#4/0 & 1-#4/0 GND IN 3" CONDUIT FOR POWER. RUN POWER FROM MAIN DISTRIBUTION PANEL MDP TO PANEL PA.
2. PROVIDE 3" CONDUIT WITH FIBER OPTIC FOR SIPR NETWORK FROM EXISTING TELECOM ROOM 142 TO ROOM 103. COORDINATE WITH BASE FOR TYPE AND QUANTITY.
3. PROVIDE 3" CONDUIT WITH FIBER OPTIC FOR NIPR NETWORK FROM EXISTING TELECOM ROOM 142 TO ROOM 103. COORDINATE WITH BASE FOR TYPE AND QUANTITY.
4. RUN 3" CONDUIT WITH TELEPHONE COPPER FROM EXISTING TELECOM ROOM 142 TO ROOM 103.
5. PROVIDE 4-#4/0 & 1-#4/0 GND IN 3" CONDUIT FOR POWER. RUN POWER FROM MAIN DISTRIBUTION PANEL MDP TO PANEL PB.

KEYPLAN

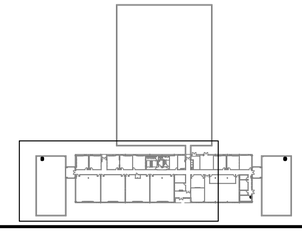

PLAN NORTH

GRAPHIC SCALE

3/16"=1'-0" 0' 4' 8' 12'

APPR	DATE	DESCRIPTION	CTM

SEAL

A/E INFO

APPROVED

FOR COMMANDER NAVFAC

ACTIVITY

EMILY M. SYLVESTER, PE

SATISFACTORY TO DATE 28 JUNE 2018

DES VKN | DRW VKN | CHK TGO

DESIGN MANAGER G. COOKE

BRANCH MANAGER JAS

CHIEF ENGINEER EJA

FIRE PROTECTION

DEPARTMENT OF THE NAVY
NAVAL FACILITIES ENGINEERING COMMAND
MIDLANT CI CORE

NAVAL FACILITIES ENGINEERING COMMAND-MID-ATLANTIC
NAVAL STATION NORFOLK VIRGINIA

MCB CAMP LEJEUNE JACKSONVILLE, NC

P1482 MARINE SPECIAL OP SCHOOL
120 MAN CLASSROOMS

PARTIAL CONDUIT PLAN A

SCALE: AS NOTED

EPROJECT NO. 1558046

CONSTR. CONTR. NO. –

NAVFAC DRAWING NO. 12747214

SHEET 80 OF 91

EP-103

DRAWFORM REVISION: 10 MARCH 2009

FILE NAME: P:\NC\Camp Lejeune\MILCON\2017_1558046_P1482_IH-088_120ManClassrooms\8_Design\Drawings\Sheet\14_Electrical\EP-103 PARTIAL CONDUIT PLAN A.dwg LAYOUT NAME: EP-103 PARTIAL CONDUIT PLAN A PLOTTED: Tuesday, June 02, 2020 - 7:21pm USER: luis.roman-lugo

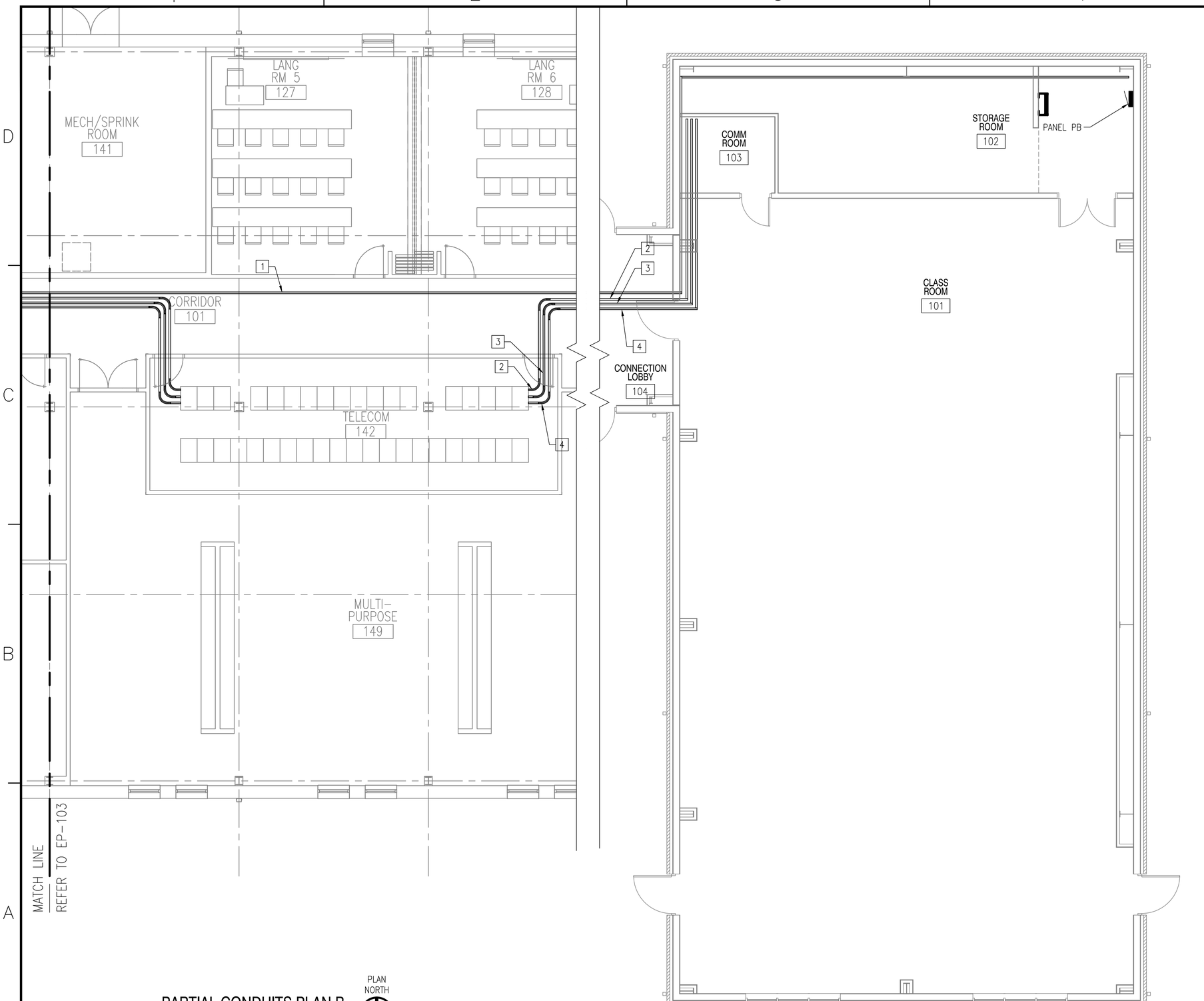

PARTIAL CONDUITS PLAN B

SCALE: 3/16" = 1'-0"

GENERAL SHEET NOTES

1. FIELD VERIFY EXISTING SWITCHBOARD MDP CONDITIONS PRIOR TO INSTALLATION.
2. MAINTAIN 6" SEPARATION BETWEEN TELECOMMUNICATION CONDUITS.
3. ROUTE CONDUIT ABOVE ACOUSTICAL CEILING IN BUILDING RR450. AREA WITHOUT ACOUSTICAL CEILING, ROUTE CONDUITS UNDERSIDE OF EXPOSED STRUCTURE, MAINTAIN MINIMUM 3" CLEARANCE FROM ROOF. PROVIDE PULLING BOX(ES) FOR EVERY 100 FT CONDUIT OR EVERY 180 DEGREE TURN.

NEW WORK KEYNOTES

1. PROVIDE 4-#4/0 & 1-#4/0 GND IN 3" CONDUIT FOR POWER. RUN POWER FROM MAIN DISTRIBUTION PANEL MDP TO PANEL PB.
2. PROVIDE 3" CONDUIT WITH FIBER OPTIC FOR SIPR NETWORK FROM EXISTING TELECOM ROOM 142 TO ROOM 103.
3. PROVIDE 3" CONDUIT WITH FIBER OPTIC FOR NIPR NETWORK FROM EXISTING TELECOM ROOM 142 TO ROOM 103.
4. PROVIDE 3" CONDUIT WITH TELEPHONE COPPER FROM EXISTING TELECOM ROOM 142 TO ROOM 103.

KEYPLAN

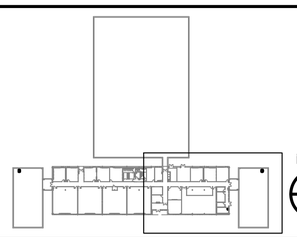

GRAPHIC SCALE

3/16"=1'-0" 0' 4' 8' 12'

APPR	DATE	DESCRIPTION	CTM

NAVFAC

SEAL

A/E INFO

APPROVED

FOR COMMANDER NAVFAC

ACTIVITY

EMILY M. SYLVESTER, PE

SATISFACTORY TO DATE 28 JUNE 2018

DES VKN | DRW VKN | CHK TGO

DESIGN MANAGER G. COOKE

BRANCH MANAGER

CHIEF ENGINEER EJA

FIRE PROTECTION

DEPARTMENT OF THE NAVY
NAVAL FACILITIES ENGINEERING COMMAND
MIDLANT CI CORE
NAVAL FACILITIES ENGINEERING COMMAND--MID-ATLANTIC
NAVAL STATION NORFOLK VIRGINIA

MCB CAMP LEJEUNE JACKSONVILLE, NC
P1482 MARINE SPECIAL OP SCHOOL
120 MAN CLASSROOMS

PARTIAL CONDUIT PLAN B

SCALE: AS NOTED

EPROJECT NO. 1558046

CONSTR. CONTR. NO. –

NAVFAC DRAWING NO. 12747215

SHEET 81 OF 91

EP-104

DRAWFORM REVISION: 10 MARCH 2009

FILE NAME: P:\NC\Camp Lejeune\MILCON\2017_1558046_P1482_JH-1088_120ManClassrooms\8_Design\Drawings\Sheet\14_Electrical\EP-104 PARTIAL CONDUIT PLAN B.dwg LAYOUT NAME: EP-104 PARTIAL CONDUIT PLAN B PLOTTED: Tuesday, June 02, 2020 - 7:20pm USER: luis.roman-lugo

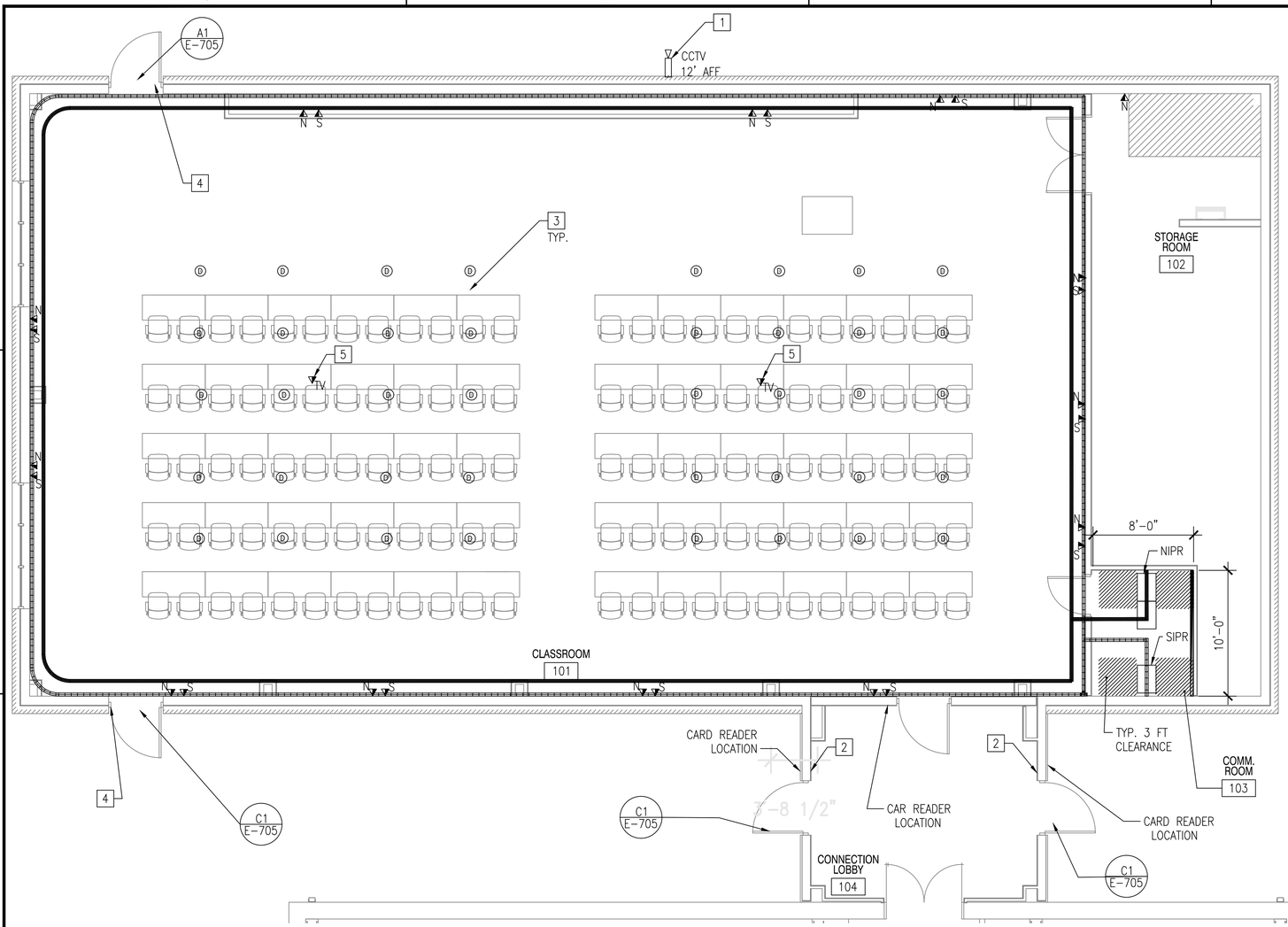

TYPICAL PARITAL COM PLAN

SCALE: 3/16" = 1'-0"

PLAN NORTH

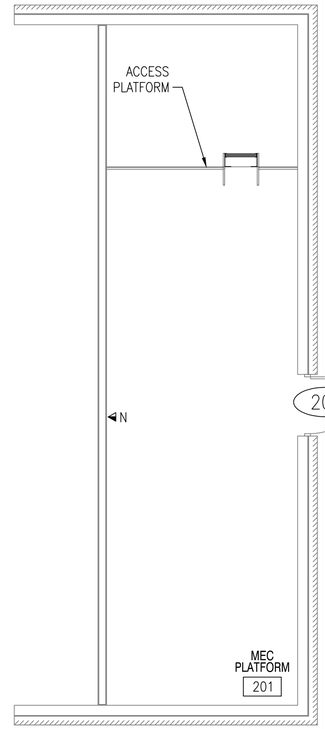

TYP. TEL. PLATFORM PLAN

SCALE: 3/16" = 1'-0"

PLAN NORTH

GENERAL SHEET NOTES

1. ALL POWER RECEPTACLES AND DATA OUTLETS MUST BE COORDINATED WITH THE FURNITURE PLAN I-102, I-103 AND VERIFIED BY THE NAVFAC INTERIOR DESIGNER BEFORE INSTALLATION.
2. ALL SIPR AND NIPR FACEPLATES, CABLE TRAYS, AND CONDUITS MUST HAVE AT LEAST 6" SEPARATION. IN ADDITION THE SIPR CABLE RUNS SHALL BE INSPECTABLE ALL THE WAY THRU.
3. DATA OUTLET FACEPLATES MUST BE CLEARLY MARKED FOR NIPR OR SIPR NETWORK.
4. ALL SECURITY DEVICES MUST BE COORDINATED WITH ARCHITECTURE PLANS AND VERIFIED BY THE MARSOC SECURITY BEFORE INSTALLATION.
5. AREA A AND AREA B ARE IDENTICAL.
6. MECHANICAL PLATFORM IS LOCATED DIRECTLY ABOVE STORAGE AND COMMUNICATION ROOM. ACCESS TO PLATFORM AS SHOWN.
7. CONTRACTOR IS RESPONSIBLE TO PROVIDE PATCH CORD CABLES FOR CONNECTING BETWEEN FLOOR RECESS DATA OUTLET AND MODULAR FURNITURE.
8. CONTRACTOR IS RESPONSIBLE TO PROVIDE PATCH CORD CABLES TO RUN THROUGH MODULAR FURNITURE.
9. MAINTAIN MINIMUM 12" CLEARANCE ABOVE ALL CABLE TRAYS.
10. ROUTE CABLE TRAYS TO AVOID BUILDING OBSTRUCTIONS.

NEW WORK KEYNOTES

1. PROVIDE 3/4" CONDUIT WITH TWO CAT6 CABLES FROM CAMERA'S LOCATION TO TELECOM RACK. INSTALL AND AIM CAMERA PER MARSOC SECURITY RECOMMENDATIONS.
2. PROVIDE 6" X 6" JUNCTION BOX ABOVE CEILING FOR CARD READER AND 3/4" FLEXIBLE CONDUIT BETWEEN CARD READER AND JUNCTION BOX. INSTALL PER MARSOC SECURITY RECOMMENDATIONS. CARD READER LOCATION AS SHOWN. REFER TO C1 SHEET E-705 FOR DETAIL.
3. REFER TO SHEET E-501 FOR DATA FLOOR BOX LOCATIONS.
4. PROVIDE 6" X 6" JUNCTION BOX FOR DOOR ELECTRIC STRIKE. INSTALL PER MARSOC SECURITY RECOMMENDATIONS. CARD READER LOCATION AS SHOWN. REFER TO SHEET E-705 DETAIL A1 FOR MORE INFORMATION.
5. PROVIDE 1-1/4" CONDUIT WITH 2 CAT6 CABLES BACK TO TELECOM RACK. MOUNT ABOVE PROJECTOR. REFER TO DETAIL B1 SHEET E-706 FOR MORE INFORMATION.

KEYPLAN

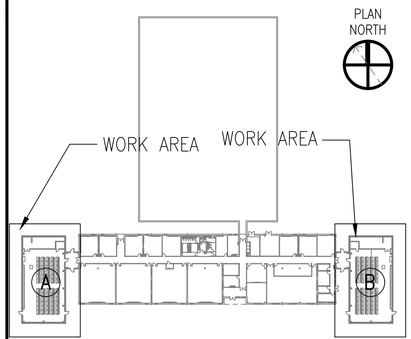

GRAPHIC SCALE

3/16"=1'-0" 0' 4' 8' 12'

NO.	DESCRIPTION	DATE	APPR

NAVFAC

SEAL

A/E INFO

APPROVED

FOR COMMANDER NAVFAC

ACTIVITY

EMILY M. SYLVESTER, PE

SATISFACTORY TO DATE 28 JUNE 2018

DES VKN | DRW VKN | CHK TGO

DESIGN MANAGER G. COOKE

BRANCH MANAGER JAS

CHIEF ENGINEER EJA

FIRE PROTECTION

DEPARTMENT OF THE NAVY
NAVAL FACILITIES ENGINEERING COMMAND
NAVFAC MIDLANT CI CORE

NAVAL FACILITIES ENGINEERING COMMAND-MID-ATLANTIC
NAVAL STATION NORFOLK VIRGINIA

MCB CAMP LEJEUNE JACKSONVILLE, NC

P1482 MARINE SPECIAL OP SCHOOL
120 MAN CLASSROOMS

TYPICAL PARTIAL COM PLAN

SCALE: AS NOTED

EPROJECT NO. 1558046

CONSTR. CONTR. NO. –

NAVFAC DRAWING NO. 12747216

SHEET 82 OF 91

ET-101

DRAWFORM REVISION: 10 MARCH 2009

FILE NAME: P:\WC\Computrejene\MILCON\2017_1558046_P1482_JH-DBB_120ManClassrooms\8_Design\Drawings\Sheet\14_Electrical\ET-101 TYPICAL PARTIAL COM PLAN.dwg LAYOUT NAME: ET-101 TYPICAL PARTIAL COM PLAN PLOTTED: Tuesday, June 02, 2020 - 7:18pm USER: luis.roman-lugo

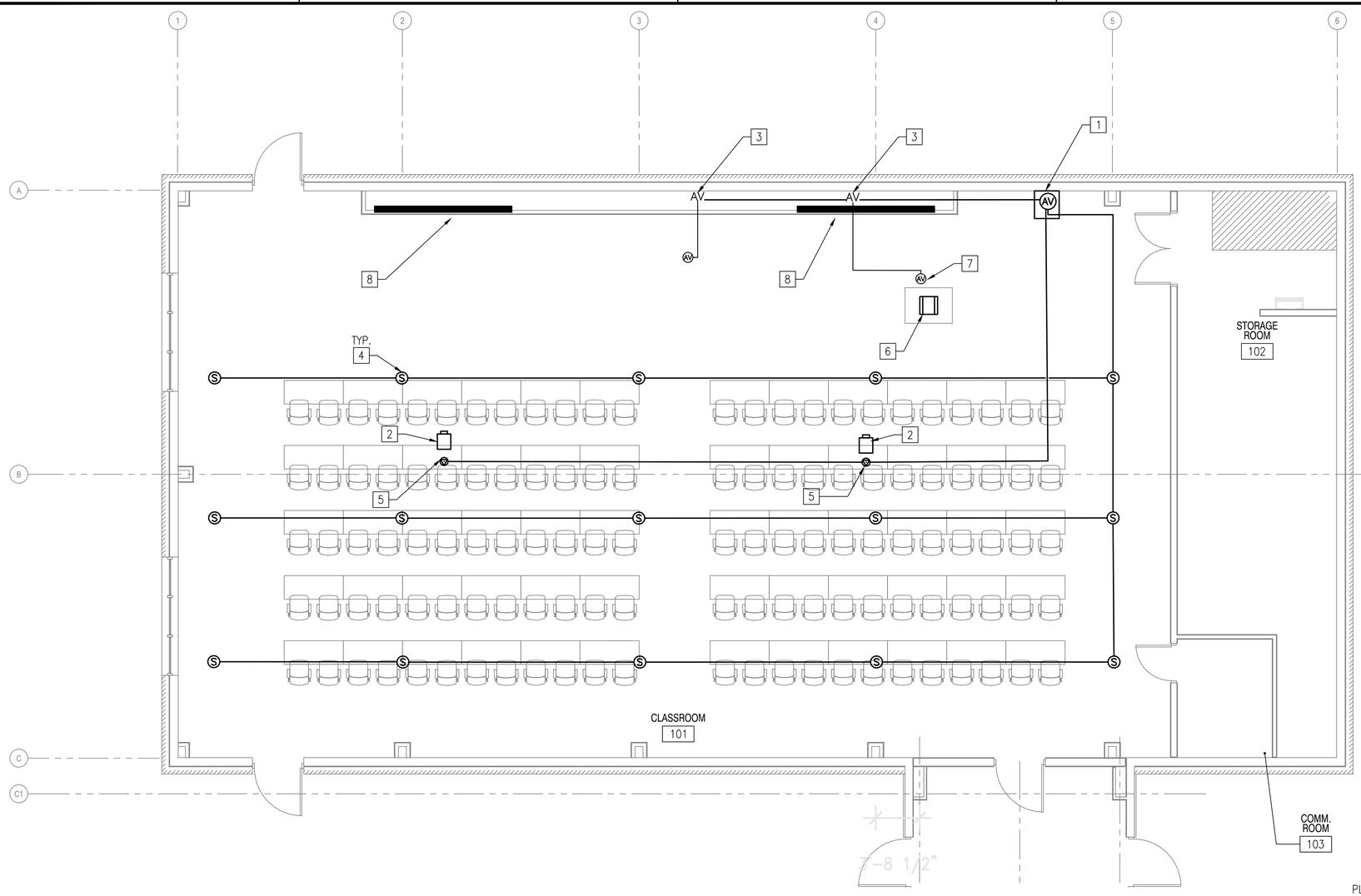

TYPICAL PARTIAL AV PLAN

SCALE: 3/16" = 1'-0"

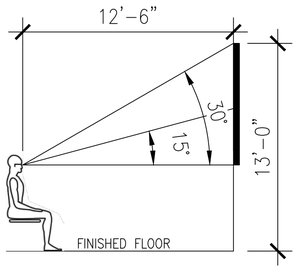

A1 PROJECTOR SCREEN ELEVATION DETAIL

SCALE: NTS

GENERAL SHEET NOTES

1. COORDINATE EQUIPMENT LOCATIONS IN FIELD PRIOR TO INSTALLATION.
2. AREA A AND AREA B ARE IDENTICAL.
3. REFER TO SHEET E-301 FOR ELEVATION PLAN.

NEW WORK KEYNOTES

1. PROVIDE AUDIO VISUAL (AV) CREDENZA AND CONNECTIONS FOR ALL EQUIPMENT IN THE AV CABINET.
2. PROVIDE PROJECTOR FOR 161" PROJECTION SCREEN WITH 16:9 ASPECT RATIO. MOUNT PROJECTOR 10.5 FT AFF.
3. PROVIDE AV CONNECTION BOX AND CONDUIT BACK TO AV CREDENZA FOR AV FLOOR BOX.
4. PROVIDE SUSPENDED CEILING SPEAKERS AND CONDUIT FOR SPEAKERS BACK TO AV CREDENZA. MOUNT SPEAKERS 13 FT AFF.
5. PROVIDE AV CONNECTION AND CONDUIT BACK TO AV CREDENZA FOR PROJECTOR. SEE EP-101 FOR PROJECTION POWER DETAILS. PROJECTOR LOCATION AND HEIGHT MUST BE VERIFIED PRIOR TO ROUGH IN.
6. PROVIDE MULTIMEDIA PODIUM WITH BUILT IN MICROPHONE.
7. PROVIDE MEDIA FLOOR BOX FOR CONNECTION. REFER TO SHEET E-501 FOR MORE INFORMATION. PROVIDE PIGTAIL CABLES FOR MULTIMEDIA PODIUM AND AV CONNECTION. MINIMUM LENGTH 5 FT.
8. PROVIDE 161" CLASS PROJECTION SCREEN 16:9 ASPECT RATIO WITH AN OVERWRAP CONSTRUCTION, MASKED TO 139" X 78.2". MOUNTED 10'-6" AFF. SEE A1 ET-103 FOR PROJECTOR SCREEN ELEVATION DETAIL.

KEYPLAN

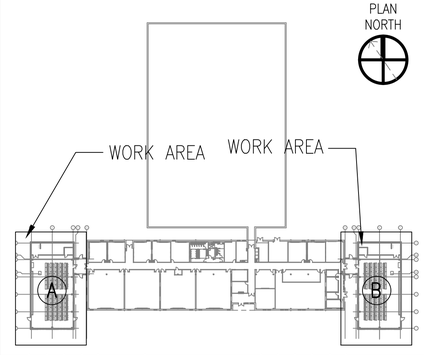

GRAPHIC SCALE

3/16"=1'-0" 0' 4' 8' 12'

APPR	
DATE	
DESCRIPTION	
CTM	

NAVFAC

SEAL

A/E INFO

APPROVED

FOR COMMANDER NAVFAC

ACTIVITY

EMILY M. SYLVESTER, PE

SATISFACTORY TO DATE 28 JUNE 2018

DES: VKN DRW: VKN CHK: TGO

DESIGN MANAGER G. COOKE

BRANCH MANAGER JAS

CHIEF ENGINEER EJA

FIRE PROTECTION

DEPARTMENT OF THE NAVY
NAVAL FACILITIES ENGINEERING COMMAND
MIDLANT CI CORE

NAVAL FACILITIES ENGINEERING COMMAND–MID-ATLANTIC
NAVAL STATION NORFOLK VIRGINIA

MCB CAMP LEJEUNE JACKSONVILLE, NC

P1482 MARINE SPECIAL OP SCHOOL 120 MAN CLASSROOMS

TYPICAL PARTIAL AV PLAN

SCALE:	AS NOTED
EPROJECT NO.	1558046
CONSTR. CONTR. NO.	–
NAVFAC DRAWING NO.	12747217
SHEET	83 OF 91

ET-102

DRAWFORM REVISION: 10 MARCH 2009

FILE NAME: P:\NC\Comp\Lejeune\MILCON\2017_1558046_P1482_JH-DBB_120ManClassrooms\8_Design\Drawings\Sheet\14_Electrical\ET-102 TYPICAL PARTIAL AV PLAN.dwg LAYOUT NAME: ET-102 TYPICAL PARTIAL AV PLAN PLOTTED: Tuesday, June 02, 2020 - 7:07pm USER: luis.roman-lugo

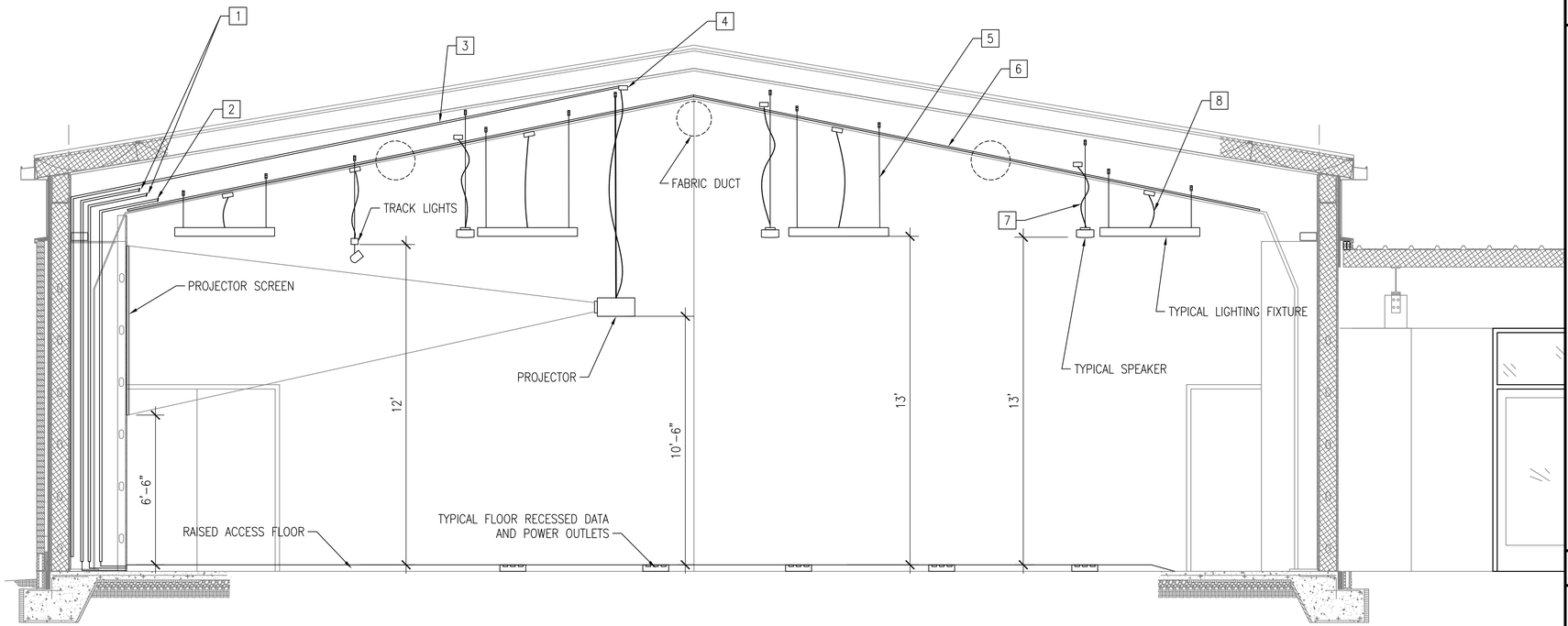

C1 **BUILDING SECTION - ELECTRICAL**
SCALE: NTS

EL-101

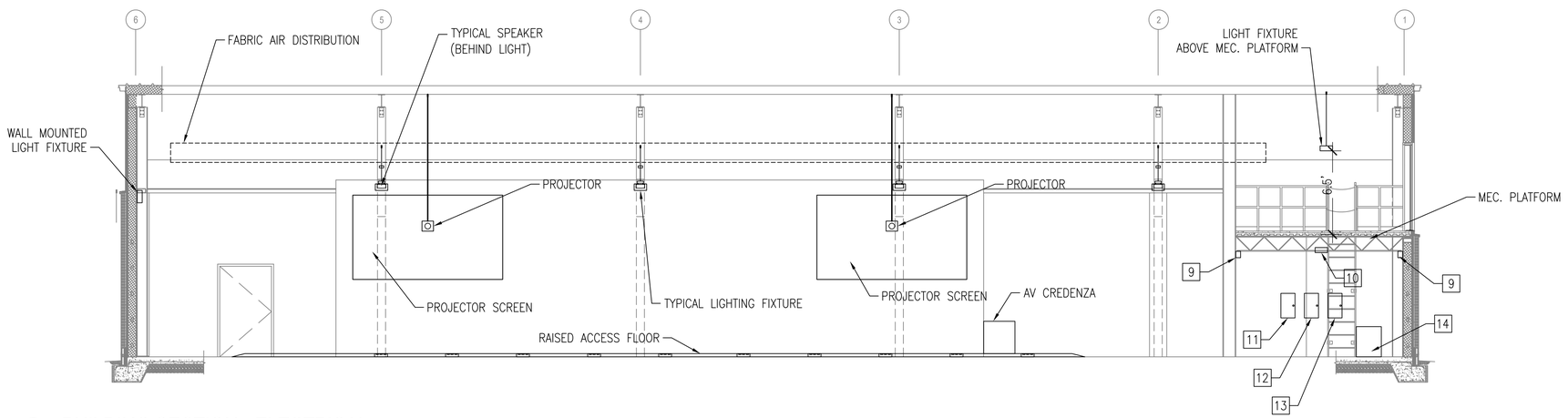

A1 **BUILDING SECTION - ELECTRICAL**
SCALE: NTS

EL-101

GENERAL SHEET NOTES

1. RUN CONDUITS INSIDE STUD WALL WHERE APPLICABLE.
2. LIGHTING FIXTURES AND SPEAKERS MUST BE MOUNTED DIRECTLY BELOW STRUCTURAL BEAMS.
3. FOR CLARITY, CABLE TRAYS, EMERGENCY AND EXIT LIGHTS ARE NOT SHOWN.
4. ROUTE CONDUITS ABOVE STRUCTURAL BEAMS. USE FLEXIBLE CONDUITS AND CONNECTION BOXES TO EXTEND FROM CEILING FOR LIGHTING FIXTURES AND AV EQUIPMENT.
5. REFER TO SHEET E-501 FOR MORE DETAIL ON RAISED ACCESS FLOOR.
6. ALL SIPR AND NIPR FACEPLATES, CABLE TRAYS, AND CONDUITS MUST HAVE AT LEAST 6" SEPARATION.
7. AIMING TRACK LIGHT FIXTURES PER USER'S RECOMMENDATION.
8. PAINT ALL CONDUITS TO MATCH CEILING OR WALL FINISH.

NEW WORK KEYNOTES

1. TELECOM CONDUITS FROM COM RACKS, MAINTAIN MINIMUM 6" SEPARATION BETWEEN NIPR AND SIPR.
2. TYPICAL POWER CONDUITS FROM ELECTRICAL PANELBOARD.
3. TYPICAL AUDIO VISUAL (AV) CONDUIT.
4. TYPICAL JUNCTION BOX FOR AV.
5. TYPICAL LIGHTING FIXTURE SUPPORT.
6. TYPICAL POWER CONDUIT FOR LIGHTING.
7. TYPICAL FLEXIBLE CONDUIT FOR AV.
8. TYPICAL FLEXIBLE CONDUIT FOR LIGHTING FIXTURE.
9. WALL MOUNTED LIGHT FIXTURE IN ELECTRICAL SPACE. MOUNT 6" ABOVE DOOR FRAME OR 7'-8" AFF.
10. CEILING MOUNTED LIGHT FIXTURE IN STORAGE ROOM 102.
11. PANEL A2/PANEL B1.
12. PANEL A1/PANEL B2.
13. PANEL PA/PANEL PB.
14. TRANSFORMER TA/TRANSFORMER TB.

NO.	DESCRIPTION	DATE	APPR

NAVFAC

SEAL

A/E INFO

APPROVED

FOR COMMANDER NAVFAC

ACTIVITY

EMILY M. SYLVESTER, PE

SATISFACTORY TO DATE 28 JUNE 2018

DES VKN | DRW VKN | CHK TGO

DESIGN MANAGER G. COOKE

BRANCH MANAGER JAS

CHIEF ENGINEER EJA

FIRE PROTECTION

DEPARTMENT OF THE NAVY
NAVAL FACILITIES ENGINEERING COMMAND
NAVFAC MIDLANT CI CORE

NAVAL FACILITIES ENGINEERING COMMAND-MID-ATLANTIC
NAVAL STATION NORFOLK VIRGINIA

MCB CAMP LEJEUNE JACKSONVILLE, NC

P1482 MARINE SPECIAL OP SCHOOL
120 MAN CLASSROOMS

BUILDING SECTION-ELECTRICAL

SCALE: AS NOTED
EPROJECT NO. 1558046
CONSTR. CONTR. NO. -
NAVFAC DRAWING NO. 12747225
SHEET 84 OF 91

E-301

DRAWFORM REVISION: 10 MARCH 2009

UNCLASSIFIED

FILE NAME: P:\NC\Computerone\MILCON\2017_1558046_P1482_JH-DBB_120ManClassrooms\8_Design\Drawings\Sheet\14_Electrical\E-301 BUILDING SECTION-ELECTRICAL.dwg LAYOUT NAME: E-301 BUILDING SECTION-ELECTRICAL PLOTTED: Tuesday, June 02, 2020 - 6:48pm USER: luis.roman-lugo

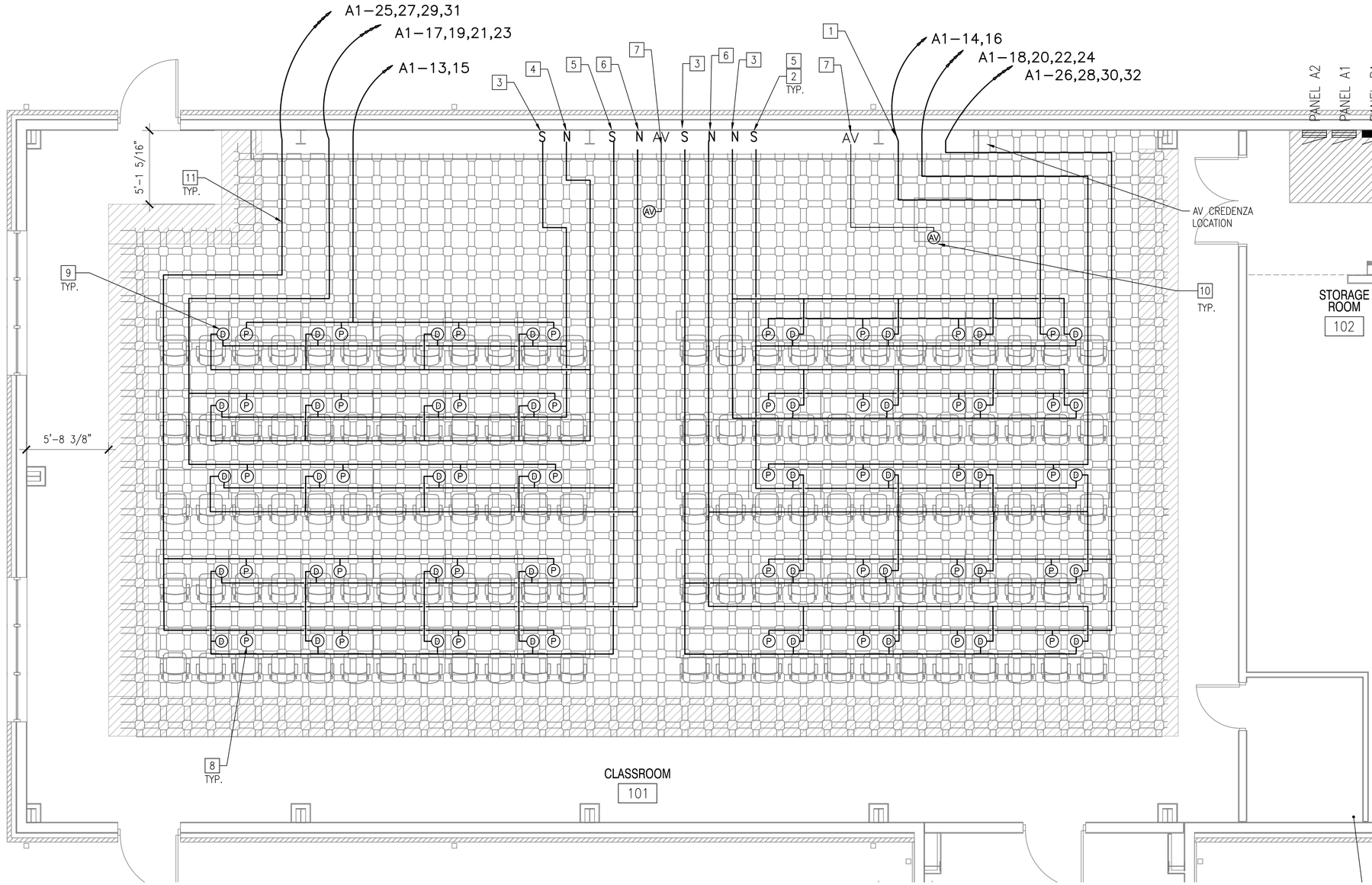

ENLARGED RAISED ACCESS FLOOR PLAN

SCALE: 1/4" = 1'

GENERAL SHEET NOTES

1. ALL POWER RECEPTACLES AND DATA OUTLETS MUST BE COORDINATED WITH THE FURNITURE PLAN I–102, I–103 AND VERIFIED BY THE NAVFAC INTERIOR DESIGNER BEFORE INSTALLATION.
2. ALL SIPR AND NIPR FACEPLATES, CABLE TRAYS, AND CONDUITS MUST HAVE AT LEAST 6" SEPARATION.
3. DATA FLOOR BOX MUST HAVE MINIMUM 6" SEPARATION BETWEEN NIPR AND SIPR CONDUITS.
4. DATA OUTLET FACEPLATES MUST BE CLEARLY MARKED FOR NIPR OR SIPR NETWORK.
5. ALL SECURITY DEVICES MUST BE COORDINATED WITH ARCHITECTURE PLANS AND VERIFIED BY THE MARSOC SECURITY BEFORE INSTALLATION.
6. ALL POWER LINES MUST BE SEPARATED FROM DATA LINES BY A MINIMUM OF 6".
7. ALLOW MAXIMUM TWO POWER FLOOR BOXES PER 20 A CIRCUIT.
8. DO NOT EXCEED BEND RADIUS OF CABLE OR WIRE TO PREVENT DAMAGE.
9. AREA A AND AREA B ARE IDENTICAL.

NEW WORK KEYNOTES

1. PROVIDE RUN DOWN CONDUITS, BEHIND WALL, TURNS UNDER RAISED FLOORING. TYPICAL FOR POWER.
2. PROVIDE RUN DOWN CONDUITS, BEHIND WALL, TURNS UNDER RAISED FLOORING. TYPICAL FOR NIPR/SIPR.
3. 24 SIPRNET CABLES.
4. 24 NIPRNET CABLES.
5. 36 SIPRNET CABLES.
6. 36 NIPRNET CABLES.
7. PROVIDE CONDUITS BEHIND WALL TO CONCEAL AUDIO VISUAL CABLES. RUN CABLES BACK TO AUDIO VISUAL CREDENZA.
8. TYPICAL POWER FLOOR BOX. REFER TO DETAIL A1 SHEET E–706 FOR MORE INFORMATION.
9. TYPICAL NIPR/SIPR DATA JACK FLOOR BOX. REFER TO DETAILS A1 SHEET E–706.
10. PROVIDE A/V FLOOR BOX FOR MEDIA PODIUM.
11. ROUTE CONDUITS AND CAT6 CABLES IN RAISED ACCESS FLOOR PER MANUFACTURER RECOMMENDATION.

KEYPLAN

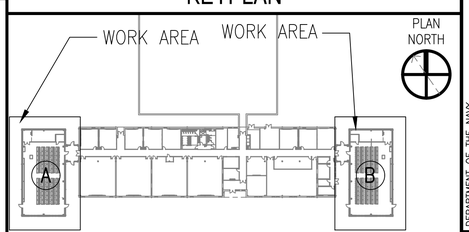

GRAPHIC SCALE

1/4"=1'–0" 0' 2' 4' 8'

SYM	DESCRIPTION	DATE	APPR

NAVFAC

SEAL

A/E INFO

APPROVED

FOR COMMANDER NAVFAC

ACTIVITY

EMILY M. SYLVESTER, PE

SATISFACTORY TO DATE 28 JUNE 2018

DES VKN DRW VKN CHK TGO

DESIGN MANAGER G. COOKE

BRANCH MANAGER JAS

CHIEF ENGINEER EJA

FIRE PROTECTION

DEPARTMENT OF THE NAVY
NAVAL FACILITIES ENGINEERING COMMAND
NAVAL FACILITIES ENGINEERING COMMAND–MID-ATLANTIC
MIDLANT CI CORE
NAVAL STATION NORFOLK VIRGINIA
MCB CAMP LEJEUNE
JACKSONVILLE, NC

P1482 MARINE SPECIAL OP SCHOOL
120 MAN CLASSROOMS

ENLARGED RAISED ACCESS FLOOR PLAN

SCALE: AS NOTED

EPROJECT NO. 1558046

CONSTR. CONTR. NO. –

NAVFAC DRAWING NO. 12747226

SHEET 85 OF 91

E-501

DRAWFORM REVISION: 10 MARCH 2009

FILE NAME: P:\NC\CampLejeune\MILCON\2017_1558046_P1482_IH-DBB_120ManClassrooms\B_Design\Drawings\Sheet\14_Electrical\E-501 ENLARGED RAISED ACCESS FLOOR PLAN.dwg LAYOUT NAME: E-501 ENLARGED RAISED ACCESS FLOOR PLAN PLOTTED: Tuesday, June 02, 2020 - 6:51pm USER: luis.roman-lugo

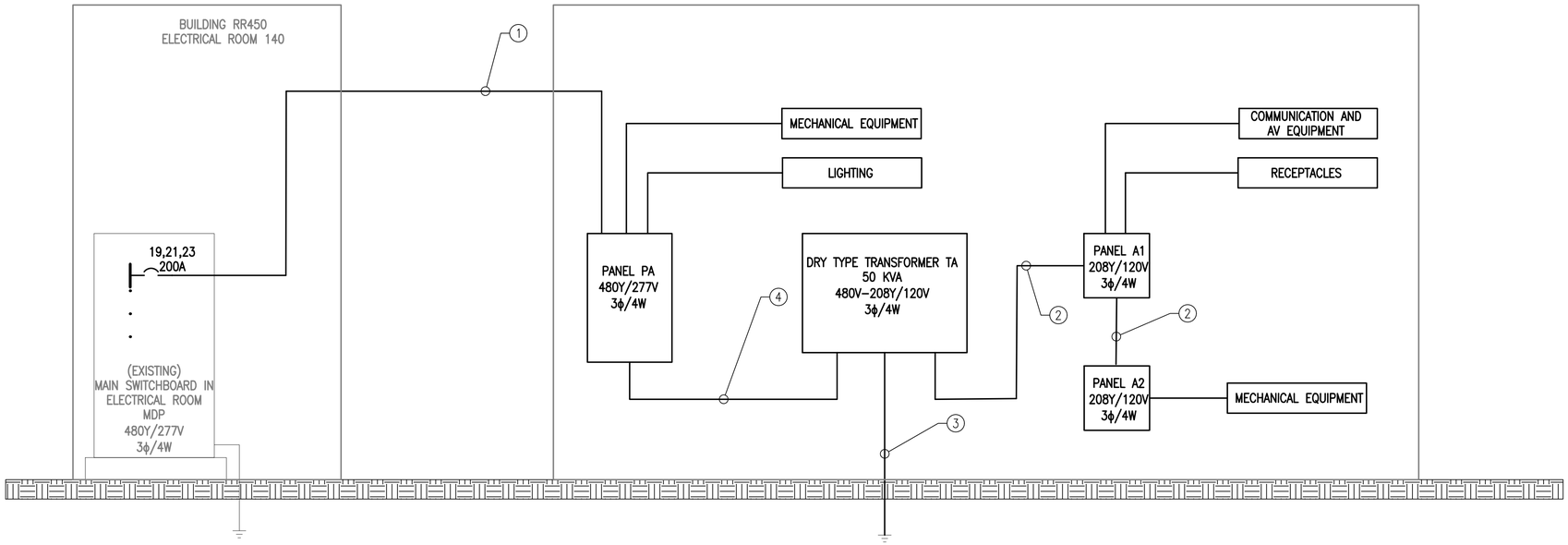

ELECTRICAL ONE-LINE DIAGRAM AREA A

SCALE: NTS

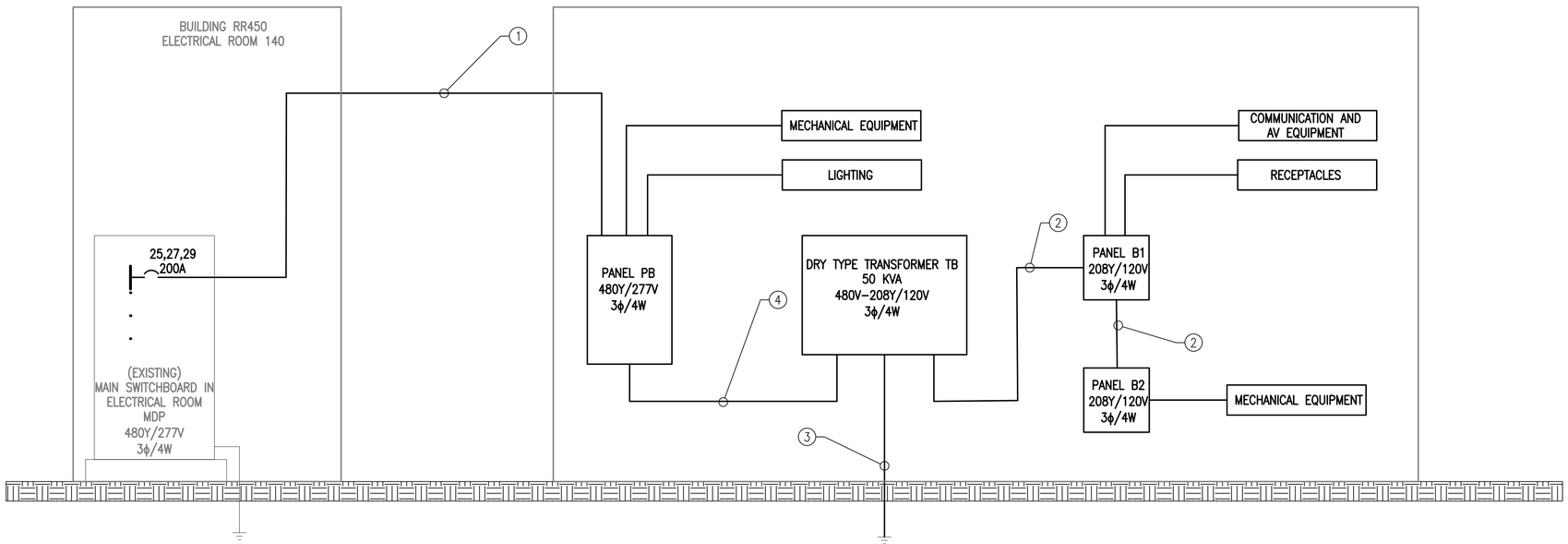

ELECTRICAL ONE-LINE DIAGRAM AREA B

SCALE: NTS

GENERAL SHEET NOTES

1. FIELD VERIFY EXISTING SWITCHBOARD MDP CONDITIONS PRIOR TO INSTALLATION.
2. PROVIDE TWO 3 PHASE 200A CIRCUITS BREAKERS FOR NEW LOADS. INSTALL NEW CIRCUIT BREAKERS IN SWITCHBOARD MDP EMPTY SPACES.
3. REFER TO EP–103 AND EP–104 FOR CONDUIT ROUTING PLAN ROM BUILDING RR450.

WIRE NOTES

1. 4–#4/0 & 1–#4/0 GND IN 3" CONDUIT.
2. 4–#2 & 1–#2 GND IN 2" CONDUIT.
3. 1–#6 GND IN 1" CONDUIT.
4. 4–#1 & 1–#1 GND IN 2" CONDUIT.

SYM	DESCRIPTION	DATE	APPR

NAVFAC

SEAL

A/E INFO

APPROVED

FOR COMMANDER NAVFAC

ACTIVITY
EMILY M. SYLVESTER, PE

SATISFACTORY TO DATE 28 JUNE 2018

DES VKN | DRW VKN | CHK LRL

DESIGN MANAGER G. COOKE

BRANCH MANAGER JAS

CHIEF ENGINEER EJA

FIRE PROTECTION

DEPARTMENT OF THE NAVY
NAVAL FACILITIES ENGINEERING COMMAND
NAVAL FACILITIES ENGINEERING COMMAND–MID-ATLANTIC
MIDLANT CI CORE
NAVAL STATION NORFOLK VIRGINIA

MCB CAMP LEJEUNE
JACKSONVILLE, NC

P1482 MARINE SPECIAL OP SCHOOL
120 MAN CLASSROOMS

ELECTRICAL ONE–LINE DIAGRAM

SCALE: AS NOTED

EPROJECT NO. 1558046

CONSTR. CONTR. NO. –

NAVFAC DRAWING NO. 12747218

SHEET 86 OF 91

E-701

DRAWFORM REVISION: 10 MARCH 2009

FILE NAME: P:\NC\CampLejeune\MILCON\2017_1558046_P1482_IH-DBB_120ManClassrooms\B_Design\Drawings\Sheet\14_Electrical\E-701 ELECTRICAL ONE-LINE DIAGRAM.dwg LAYOUT NAME: E-701 ELECTRICAL ONE-LINE DIAGRAM PLOTTED: Tuesday, June 02, 2020 – 7:49pm USER: luis.roman-lugo

UNCLASSIFIED

PANEL PA SCHEDULE

200A MCB, 480Y/277V, 3 PHASE, 4W, SN, GROUND BUS — SURFACE MOUNT — 10 KAIC

LOAD SERVED	LOAD (AMPS) A	B	C	BKR TRIP	WIRE SIZE	COND SIZE	CKT NO.	PHASE A B C	CKT NO.	COND SIZE	WIRE SIZE	BKR TRIP	LOAD (AMPS) A	B	C	LOAD SERVED
CLASS RM LT	6.0			20	12	3/4"	1		2	3/4"	12	20	1.0			EMR LT
CORRIDOR LT		1.0		20	12	3/4"	3		4	3/4"	12	20		9.1		FLATFORM LT
EXT LIGHT			1.3	20	12	3/4"	5		6	3/4"	12	20				SPACE
TRANSFORMER TA	41.3				6		7		8				20.5			DOAS-1
		41.3		100		1"	9		10	1"	10	30		20.5		
			41.3				11		12						20.5	
AHU-1	38.9						13		14				20.5			HP-1
		38.9		50	6	1"	15		16	1"	10	35		20.5		
			38.9				17		18						20.5	
COM RM LT	1.0			20	12	3/4"	19		20	3/4"	12	20	1.0			STORAGE LT
HP-2		15.0					21		22			20				SPARE
			15.0	30	10	1"	23		24			20				SPARE
	15.0						25		26			20				SPARE
SPACE							27		28							SPACE
SPACE							29		30							SPACE
SPACE							31		32							SPACE
SPACE							33		34							SPACE
SPACE							35		36							SPACE
SPACE							37		38							SPACE
SPACE							39		40							SPACE
SPACE							41		42							SPACE
TOTAL	102.2	96.2	96.5										43.0	50.1	41.0	TOTAL

TOTAL CONNECTED AMPS — A: 145.2 B: 146.3 C: 137.5

PANEL PB SCHEDULE

200A MCB, 480Y/277V, 3 PHASE, 4W, SN, GROUND BUS — SURFACE MOUNT — 10 KAIC

LOAD SERVED	LOAD (AMPS) A	B	C	BKR TRIP	WIRE SIZE	COND SIZE	CKT NO.	PHASE A B C	CKT NO.	COND SIZE	WIRE SIZE	BKR TRIP	LOAD (AMPS) A	B	C	LOAD SERVED
CLASS RM LT	6.0			20	12	3/4"	1		2	3/4"	12	20	1.0			EMR LT
CORRIDOR LT		1.0		20	12	3/4"	3		4	3/4"	12	20		9.1		FLATFORM LT
EXT LIGHT			1.3	20	12	3/4"	5		6	3/4"	12	20				SPACE
TRANSFORMER TB	41.3				6		7		8				20.5			DOAS-2
		41.3		100		1"	9		10	1"	10	30		20.5		
			41.3				11		12						20.5	
AHU-2	38.9						13		14				20.5			HP-3
		38.9		50	6	1"	15		16	1"	10	35		20.5		
			38.9				17		18						20.5	
COM RM LT	1.0			20	12	3/4"	19		20	3/4"	12	20	1.0			STORAGE LT
HP-4		15.0					21		22			20				SPARE
			15.0	30	10	1"	23		24			20				SPARE
	15.0						25		26			20				SPARE
SPACE							27		28			20				SPARE
SPACE							29		30							SPACE
SPACE							31		32							SPACE
SPACE							33		34							SPACE
SPACE							35		36							SPACE
SPACE							37		38							SPACE
SPACE							39		40							SPACE
SPACE							41		42							SPACE
TOTAL	102.2	96.2	96.5										43.0	50.1	41.0	TOTAL

TOTAL CONNECTED AMPS — A: 145.2 B: 146.3 C: 137.5

MECHANICAL LOAD SCHEDULE

EQUIP. ID	VOLT (V)	PHASE	MOTOR	AUXILARY HEAT (A)	MISC. LOAD (A)	FLA (A)	MCA (A)	WIRE SIZE (AWG/KCMIL)	CND (IN)	CIRCUIT BREAKER	DISC. RATING	DISC. FUSE
AHU-1	480	3	FAN = 2.3 HP	33.7		38.9	49	4-#6 & 1#6GND - 65A	1	50A	60A	NF
AHU-2	480	3	FAN = 2.3 HP	33.7		38.9	49	4-#6 & 1#6GND - 65A	1	50A	60A	NF
DOAS-1	480	3	SUPPLY FAN = 1.4 A EXHUAST FAN = 1.6A	16.8	0.3	20.5	23	4-#10 & 1-#10GND - 35A	1	30A	60A	NF
DOAS-2	480	3	SUPPLY FAN = 1.4 A EXHUAST FAN = 1.6A	16.8	0.3	20.5	23	4-#10 & 1-#10GND - 35A	1	30A	60A	NF
DSS-1	208	1				8.7	11	3-#12 & 1-#12GND - 25A	3/4	15A	30A	NF
DSS-2	208	1				8.7	11	3-#12 & 1-#12GND - 25A	3/4	15A	30A	NF
DH-1	120	1				5.6	7	3-#12 & 1-#12GND - 25A	3/4	15A	30A	NF
DH-2	120	1				5.6	7	3-#12 & 1-#12GND - 25A	3/4	15A	30A	NF
DH-3	120	1				5.6	7	3-#12 & 1-#12GND - 25A	3/4	15A	30A	NF
DH-4	120	1				5.6	7	3-#12 & 1-#12GND - 25A	3/4	15A	30A	NF
UH-1	208	1				14.5	18.125	3-#12 & 1-#12GND - 25A	3/4	20A	30A	NF
UH-2	208	1				14.5	18.125	3-#12 & 1-#12GND - 25A	3/4	20A	30A	NF
UH-3	208	1				14.5	18.125	3-#12 & 1-#12GND - 25A	3/4	20A	30A	NF
UH-4	208	1				14.5	18.125	3-#12 & 1-#12GND - 25A	3/4	20A	30A	NF
HP-1	480	3	COMP.(X2) = 8.1A FAN(X2) = 1.1A			20.5	25.531	4-#10 & 1-#10GND - 35A	1	35A	60A	NF
HP-2	480	3	COMP. = 9.7A FAN = 2.8A			15	18.65	4-#10 & 1-#10GND - 35A	1	30A	60A	NF
HP-3	480	3	COMP.(X2) = 8.1A FAN(X2) = 1.1A			20.5	25.531	4-#10 & 1-#10GND - 35A	1	35A	60A	NF
HP-4	480	3	COMP. = 9.7A FAN = 2.8A			15	18.65	4-#10 & 1-#10GND - 35A	1	30A	60A	NF

PANEL A1 SCHEDULE

175A MCB, 208Y/120V, 3 PHASE, 4W, SN, GROUND BUS — SURFACE MOUNT — 10 KAIC

LOAD SERVED	LOAD (AMPS) A	B	C	BKR TRIP	WIRE SIZE	COND SIZE	CKT NO.	PHASE A B C	CKT NO.	COND SIZE	WIRE SIZE	BKR TRIP	LOAD (AMPS) A	B	C	LOAD SERVED
CLASS RCPT 1	9.0			20	12	3/4"	1		2	3/4"	12	20	6.0			CLASS RCPT 2
CLASS RCPT 3		7.5		20	12	3/4"	3		4	3/4"	12	20		6.0		CLASS RCPT 4
STR RCPT			12.0	20	12	3/4"	5		6	3/4"	12	20			4.5	COM RM RCPT
PROJECTORS	3.0			20	12	3/4"	7		8							SPACE
SPACE							9		10	3/4"	12	20		3.0		AV RCPT
TRACK LT			1.0	20	12	3/4"	11		12	3/4"	12	20				SPARE
FURNITURE 1	7.5			20	12	3/4"	13		14	3/4"	12	20	7.5			FURNITURE 11
FURNITURE 2		7.5		20	12	3/4"	15		16	3/4"	12	20		7.5		FURNITURE 12
FURNITURE 3			7.5	20	12	3/4"	17		18	3/4"	12	20			7.5	FURNITURE 13
FURNITURE 4	7.5			20	12	3/4"	19		20	3/4"	12	20	7.5			FURNITURE 14
FURNITURE 5		7.5		20	12	3/4"	21		22	3/4"	12	20		7.5		FURNITURE 15
FURNITURE 6			7.5	20	12	3/4"	23		24	3/4"	12	20			7.5	FURNITURE 16
FURNITURE 7	7.5			20	12	3/4"	25		26	3/4"	12	20	7.5			FURNITURE 17
FURNITURE 8		7.5		20	12	3/4"	27		28	3/4"	12	20		7.5		FURNITURE 18
FURNITURE 9			7.5	20	12	3/4"	29		30	3/4"	12	20			7.5	FURNITURE 19
FURNITURE 10	7.5			20	12	3/4"	31		32	3/4"	12	20	7.5			FURNITURE 20
SPARE				20			33		34					50.0		PANEL A2
SPARE				20			35		36	2"	2	55			50.0	
SPARE				20			37		38				50.0			
SPARE				20			39		40							SPACE
SPACE							41		42							SPACE
TOTAL	42.0	30.0	35.5										86.0	81.5	77.0	TOTAL

TOTAL CONNECTED AMPS — A: 128.0 B: 111.5 C: 112.5

PANEL B1 SCHEDULE

175A MCB, 208Y/120V, 3 PHASE, 4W, SN, GROUND BUS — SURFACE MOUNT — 10 KAIC

LOAD SERVED	LOAD (AMPS) A	B	C	BKR TRIP	WIRE SIZE	COND SIZE	CKT NO.	PHASE A B C	CKT NO.	COND SIZE	WIRE SIZE	BKR TRIP	LOAD (AMPS) A	B	C	LOAD SERVED
CLASS RCPT 1	9.0			20	12	3/4"	1		2	3/4"	12	20	6.0			CLASS RCPT 2
CLASS RCPT 3		7.5		20	12	3/4"	3		4	3/4"	12	20		6.0		CLASS RCPT 4
STR RCPT			12.0	20	12	3/4"	5		6	3/4"	12	20			4.5	COM RM RCPT
PROJECTORS	3.0			20	12	3/4"	7		8							SPACE
SPACE							9		10	3/4"	12	20		3.0		AV RCPT
TRACK LT			1.0	20	12	3/4"	11		12	3/4"	12	20				SPARE
FURNITURE 1	7.5			20	12	3/4"	13		14	3/4"	12	20	7.5			FURNITURE 11
FURNITURE 2		7.5		20	12	3/4"	15		16	3/4"	12	20		7.5		FURNITURE 12
FURNITURE 3			7.5	20	12	3/4"	17		18	3/4"	12	20			7.5	FURNITURE 13
FURNITURE 4	7.5			20	12	3/4"	19		20	3/4"	12	20	7.5			FURNITURE 14
FURNITURE 5		7.5		20	12	3/4"	21		22	3/4"	12	20		7.5		FURNITURE 15
FURNITURE 6			7.5	20	12	3/4"	23		24	3/4"	12	20			7.5	FURNITURE 16
FURNITURE 7	7.5			20	12	3/4"	25		26	3/4"	12	20	7.5			FURNITURE 17
FURNITURE 8		7.5		20	12	3/4"	27		28	3/4"	12	20		7.5		FURNITURE 18
FURNITURE 9			7.5	20	12	3/4"	29		30	3/4"	12	20			7.5	FURNITURE 19
FURNITURE 10	7.5			20	12	3/4"	31		32	3/4"	12	20	7.5			FURNITURE 20
SPARE				20			33		34					50.0		PANEL B2
SPARE				20			35		36	2"	2	55			50.0	
SPARE				20			37		38				50.0			
SPACE							39		40							SPACE
SPACE							41		42							SPACE
TOTAL	42.0	30.0	35.5										86.0	81.5	77.0	TOTAL

TOTAL CONNECTED AMPS — A: 128.0 B: 111.5 C: 112.5

PANEL A2 SCHEDULE

100A MLO, 208Y/120V, 3 PHASE, 4W, SN, GROUND BUS — SURFACE MOUNT — 10 KAIC

LOAD SERVED	LOAD (AMPS) A	B	C	BKR TRIP	WIRE SIZE	COND SIZE	CKT NO.	PHASE A B C	CKT NO.	COND SIZE	WIRE SIZE	BKR TRIP	LOAD (AMPS) A	B	C	LOAD SERVED
DSS-1	8.7			15	12	3/4"	1		2	3/4"	12	15	5.6			DH-1
		8.7					3		4	3/4"	12	15		5.6		DH-2
FAMN			3.0	15	12	3/4"	5		6	3/4"	12	20			14.5	UH-1
SPARE				20			7		8				14.5			
UH-2		14.5		20	12	3/4"	9		10	3/4"	12	15		5.0		DDC
			14.5				11		12			20				SPARE
COM RACK RCPT 1	3.0			20	12	3/4"	13		14	3/4"	12	20	3.0			COM RACK RCPT 4
COM RACK RCPT 2		3.0		20	12	3/4"	15		16	3/4"	12	20		3.0		COM RACK RCPT 5
COM RACK RCPT 3			3.0	20	12	3/4"	17		18	3/4"	12	20			3.0	COM RACK RCPT 6
SPACE							19		20			20				SPARE
SPACE							21		22			20				SPARE
SPACE							23		24			20				SPARE
SPACE							25		26							SPARE
SPACE							27		28							SPACE
SPACE							29		30							SPACE
SPACE							31		32							SPACE
SPACE							33		34							SPACE
SPACE							35		36							SPACE
SPACE							37		38							SPACE
SPACE							39		40							SPACE
SPACE							41		42							SPACE
TOTAL	11.7	26.2	20.5										23.1	13.6	17.5	TOTAL

TOTAL CONNECTED AMPS — A: 34.8 B: 39.8 C: 38.0

PANEL B2 SCHEDULE

100A MLO, 208Y/120V, 3 PHASE, 4W, SN, GROUND BUS — SURFACE MOUNT — 10 KAIC

LOAD SERVED	LOAD (AMPS) A	B	C	BKR TRIP	WIRE SIZE	COND SIZE	CKT NO.	PHASE A B C	CKT NO.	COND SIZE	WIRE SIZE	BKR TRIP	LOAD (AMPS) A	B	C	LOAD SERVED
DSS-2	8.7			15	12	3/4"	1		2	3/4"	12	15	5.6			DH-3
		8.7					3		4	3/4"	12	15		5.6		DH-4
FAMN			3.0	15	12	3/4"	5		6	3/4"	12	20			14.5	UH-3
SPARE				20			7		8				14.5			
UH-4		14.5		20	12	3/4"	9		10	3/4"	12	15		5.0		DDC
			14.5				11		12			20				SPARE
COM RACK RCPT1	3.0			20	12	3/4"	13		14	3/4"	12	20	3.0			COM RACK RCPT 4
COM RACK RCPT2		3.0		20	12	3/4"	15		16	3/4"	12	20		3.0		COM RACK RCPT 5
COM RACK RCPT3			3.0	20	12	3/4"	17		18	3/4"	12	20			3.0	COM RACK RCPT 6
SPACE							19		20			20				SPARE
SPACE							21		22			20				SPARE
SPACE							23		24							SPACE
SPACE							25		26							SPACE
SPACE							27		28							SPACE
SPACE							29		30							SPACE
SPACE							31		32							SPACE
SPACE							33		34							SPACE
SPACE							35		36							SPACE
SPACE							37		38							SPACE
SPACE							39		40							SPACE
SPACE							41		42							SPACE
TOTAL	11.7	26.2	20.5										23.1	13.6	17.5	TOTAL

TOTAL CONNECTED AMPS — A: 34.8 B: 39.8 C: 38.0

SYM | DESCRIPTION | DATE | APPR

SEAL

A/E INFO

APPROVED

FOR COMMANDER NAVFAC

ACTIVITY

EMILY M. SYLVESTER, PE

SATISFACTORY TO DATE 28 JUNE 2018

DES VKN DRW VKN CHK VKN

DESIGN MANAGER G. COOKE

BRANCH MANAGER JAS

CHIEF ENGINEER EJA

FIRE PROTECTION

DEPARTMENT OF THE NAVY NAVAL FACILITIES ENGINEERING COMMAND

NAVAL FACILITIES ENGINEERING COMMAND~MID-ATLANTIC

MIDLANT CI CORE NAVAL STATION NORFOLK VIRGINIA

MCB CAMP LEJEUNE JACKSONVILLE, NC

P1482 MARINE SPECIAL OP SCHOOL 120 MAN CLASSROOMS

ELECTRICAL SCHEDULES

SCALE: AS NOTED

EPROJECT NO. 1558046

CONSTR. CONTR. NO. –

NAVFAC DRAWING NO. 12747220

SHEET 87 OF 91

E-702

DRAWFORM REVISION: 10 MARCH 2009

FILE NAME: P:\NC\CampLejeune\MILCON\2017_1558046_P1482_IH-DBB_120ManClassrooms\B_Design\Drawings\Sheet\14_Electrical\E-702 ELECTRICAL SCHEDULES.dwg LAYOUT NAME: E-702 ELECTRICAL SCHEDULES PLOTTED: Tuesday, June 02, 2020 - 6:58pm USER: luis.roman-lugo

UNCLASSIFIED

UNCLASSIFIED

UNCLASSIFIED

NOTE:
1. REFER TO SHEET E-704 FOR NL-7 LIGHTING DETAIL

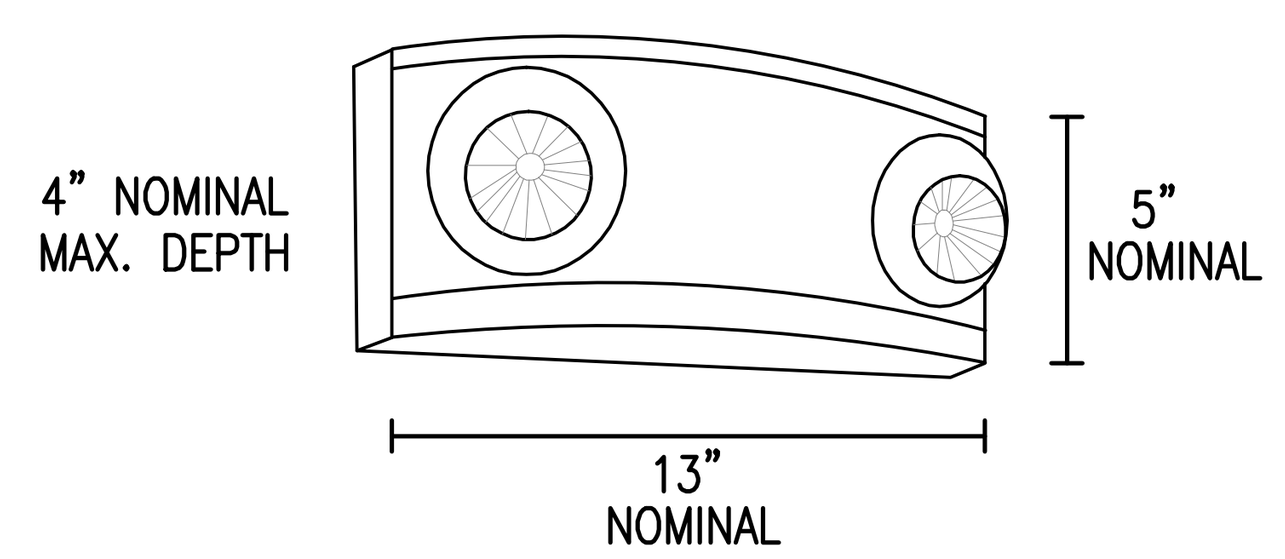

LUMINAIRE REQUIREMENTS:

1. HOUSING – UV STABLE, FLAME-RATED, HIGH-IMPACT THERMOPLASTIC IN WHITE OR BLACK TEXTURED FINISH.
2. INTERNAL COMPONENTS – FULLY AUTOMATIC, SOLID STATE, CONSTANT VOLTAGE, CURRENT-LIMITED BATTERY CHARGER; MAINTENANCE-FREE LEAD-ACID BATTERY; AND BUILT-IN OVERLOAD AND LOW-VOLTAGE BATTERY PROTECTION.
3. EXTERIOR HOUSING INDICATORS – LED AC-ON INDICATOR AND INTEGRAL TEST SWITCH.
4. LAMP HEADS – UV STABLE, FLAME RATED POLYCARBONATE THERMOPLASTIC. MR16 HALOGEN LAMPS SHALL BE 5 WATTS, HIGH-OUTPUT OR AS INDICATED IN LIGHTING FIXTURE SCHEDULE.
5. MOUNTING – DIRECTLY TO 4" OCTAGONAL OR SQUARE OUTLET BOX.
6. CERTIFICATION – UL LISTED AND LABELED. COMPLIES WITH UL 924 AND NFPA 101 REQUIREMENTS. LISTED FOR DAMP LOCATIONS.
7. OPTIONS – VOLTMETER, VANDEL-RESISTANT SHIELD, SELF-DIAGNOSTIC/TESTING ELECTRONICS AND WIRE GUARD.

DECORATIVE EMERGENCY LIGHTING UNIT (G)

REVISED:	AUGUST 2004	LIGHTING PLATE:	NL-67

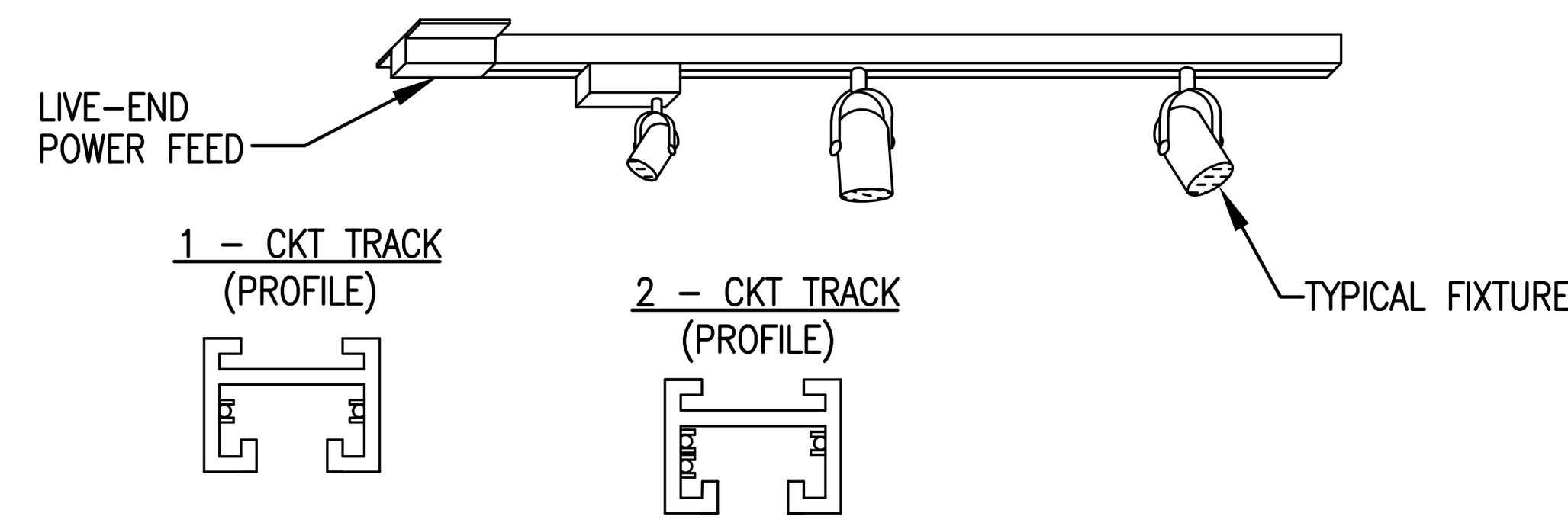

LUMINAIRE REQUIREMENTS:

1. TRACK SECTION – HEAVY-GAUGE, EXTRUDED ALUMINUM CHANNEL WITH NATURAL ALUMINUM OR BAKED ENAMEL OR POWDER COAT WHITE, OR BLACK FINISH.
2. AMPACITY – TRACK SHALL HAVE ONE OR TWO 20 AMP CIRCUITS INTEGRAL TO EXTRUDED TRACK CHANNEL AS NOTED.
3. LENGTHS – TRACK SHALL BE AVAILABLE IN 2', 4', 8', AND 12' CONTINUOUS SECTIONS.
4. MOUNTING – EACH 4' OR LESS SECTION OF TRACK SHALL BE SECURED
   PROVIDE TRACK SUSPENSION KIT FOR SUSPENDED MOUNTING.
5. FIXTURE TYPES – SEE DL-01 FOR COMMON TRACK LIGHTING FIXTURES.
6. CERTIFICATION – UL LISTED AND LABELED.
7. OPTIONS – PROVIDE ACCESSORIES AS NECESSARY FOR A COMPLETE INSTALLATION. AVAILABLE ACCESSORIES INCLUDE:
   A. LIVE END FEED – USED TO START A SINGLE RUN.
   B. LINEAR COUPLER – USED TO JOIN TWO STRIGHT TRACKS.
   C. L FEED CONNECTOR – JOINS TWO TRACKS IN 90 DEGREE CONFIGURATION.
   D. T FEED CONNECTOR – JOINS THREE TRACKS IN TEE CONFIGURATION.
   E. X FEED CONNECTOR – JOINS FOUR TRACKS IN AN X CONFIGURATION.
   F. FLEXIBLE CONNECTOR – JOINS TWO TRACKS IN UP TO A 90 DEGREE BEND.
   G. SURFACE CONDUIT FEED – PERMITS TRACK END TO BE CONNECTED TO 1/2" CONDUIT.
   H. CONCEALED FEED – PERMITS TRACK TO BE CONNECTED FROM ABOVE WITHOUT OUTLET BOX.

MOUNTED TRACK LIGHTING (K)

		DL-02



LUMINAIRE REQUIREMENTS:

1. HOUSING – DIE-FORMED, COLD-ROLLED STEEL, WITH REINFORCEMENT RIBS FOR RIGIDITY; ENDCAPS SAME MATERIAL AS HOUSING, SECURED WITH TABS, SCREWS OR RIVETS. OPTIONAL LENGTHS OF 2FT OR 4FT.
2. FINISH – MULTI-STAGE PHOSPHATE BONDING TREATMENT FINISHED WITH HIGH-REFLECTANCE, WHITE POLYESTER POWDER COAT, PAINTED AFTER FABRICATION.
3. LENS – 100% VIRGIN ACRYLIC, CLEAR PRISMATIC DIFFUSER WITH MINIMUM 0.1 INCH THICKNESS, CONTINUOUSLY SUPPORTED ALONG SIDES OF LUMINAIRE.
4. LIGHT SOURCE – SOLID STATE LEDS WITH MINIMUM 50K HOURS RATED LIFE AT L70, 3500K CCT UON, MINIMUM 80 CRI, MAXIMUM 4-STEP MCADAM ELLIPSE BINNING TOLERANCE FOR COLOR CONSISTENCY, AND MINIMUM EFFICACY OF 95 LUMENS/WATT. INITIAL LUMEN OUTPUT AS INDICATED IN LUMINAIRE SCHEDULE.
5. DRIVER – REPLACEABLE, INTEGRAL, HIGH-EFFICIENCY DRIVER WITH MINIMUM 0.9 PF, OPERATING VOLTAGE OF 120-277V, THERMAL MANAGEMENT, < 20% TOTAL HARMONIC DISTORTION. OPTIONAL STEP-DIMMABLE OR FULLY DIMMABLE AS INDICATED.
6. CERTIFICATION – UL 1598, DAMP LOCATION, DLC QUALIFIED, AND ROHS COMPLIANT. COMPLIES WITH LM79, LM80 AND TM21 TESTING STANDARDS. UL 924 WHEN EQUIPPED WITH EMERGENCY BATTERY BACK-UP.
7. MOUNTING – SURFACE ON CEILING OR SUSPENDED.
8. THIS SKETCH IS A NON-PROPRIETARY GRAPHIC REPRESENTATION OF A LUMINAIRE THAT MAY MEET THE SPECIFICATION REQUIREMENTS. IT IS NOT INTENDED TO INDICATE A CERTAIN MANUFACTURER OR PREFERENCE.

SURFACE LED WRAPAROUND (B) (C)

REVISED:	APRIL 2016	LIGHTING PLATE:	NL-5



LUMINAIRE REQUIREMENTS:

1. HOUSING – DIE-FORMED, COLD-ROLLED STEEL, WITH REINFORCEMENT RIBS FOR RIGIDITY; END CAPS SAME MATERIAL AS HOUSING, SECURED WITH TABS, SCREWS OR RIVETS. WHITE ENAMEL FINISH APPLIED AFTER FABRICATION. OPTIONAL LENGTHS OF 2FT OR 4FT.
2. LENS – ACRYLIC PRISMATIC OR WHITE OPAL TO PROVIDE EVEN ILLUMINATION AND TO ELIMINATE PIXILATION FROM LED LIGHT SOURCE.
3. LIGHT SOURCE – SOLID STATE LEDS WITH MINIMUM 50K HOURS RATED LIFE AT L70, 3500K CCT UON, MINIMUM 80 CRI, MAXIMUM 4-STEP MCADAM ELLIPSE BINNING TOLERANCE FOR COLOR CONSISTENCY, AND MINIMUM EFFICACY OF 90 LUMENS/WATT. INITIAL LUMEN OUTPUT AS INDICATED IN LUMINAIRE SCHEDULE.
4. DRIVER – REPLACEABLE, INTEGRAL, HIGH-EFFICIENCY DRIVER WITH MINIMUM 0.9 PF, OPERATING VOLTAGE OF 120-277V, THERMAL MANAGEMENT, < 20% TOTAL HARMONIC DISTORTION. ON-OFF CONTROL, STEP-DIMMABLE OR FULLY DIMMABLE AS INDICATED.
5. CERTIFICATION – UL 1598, DAMP LOCATION, DLC QUALIFIED, AND ROHS COMPLIANT. COMPLIES WITH LM79, LM80 AND TM21 TESTING STANDARDS. UL 924 WHEN EQUIPPED WITH EMERGENCY BATTERY BACK-UP.
6. MOUNTING – SURFACE.
7. OPTIONS – INTEGRAL MOTION SENSOR, EMERGENCY BACK-UP.
8. THIS SKETCH IS A NON-PROPRIETARY GRAPHIC REPRESENTATION OF A LUMINAIRE THAT MAY MEET THE SPECIFICATION REQUIREMENTS. IT IS NOT INTENDED TO INDICATE A CERTAIN MANUFACTURER OR PREFERENCE.

WALL MOUNTED LED (D)

REVISED:	APRIL 2016	LIGHTING PLATE:	NL-9

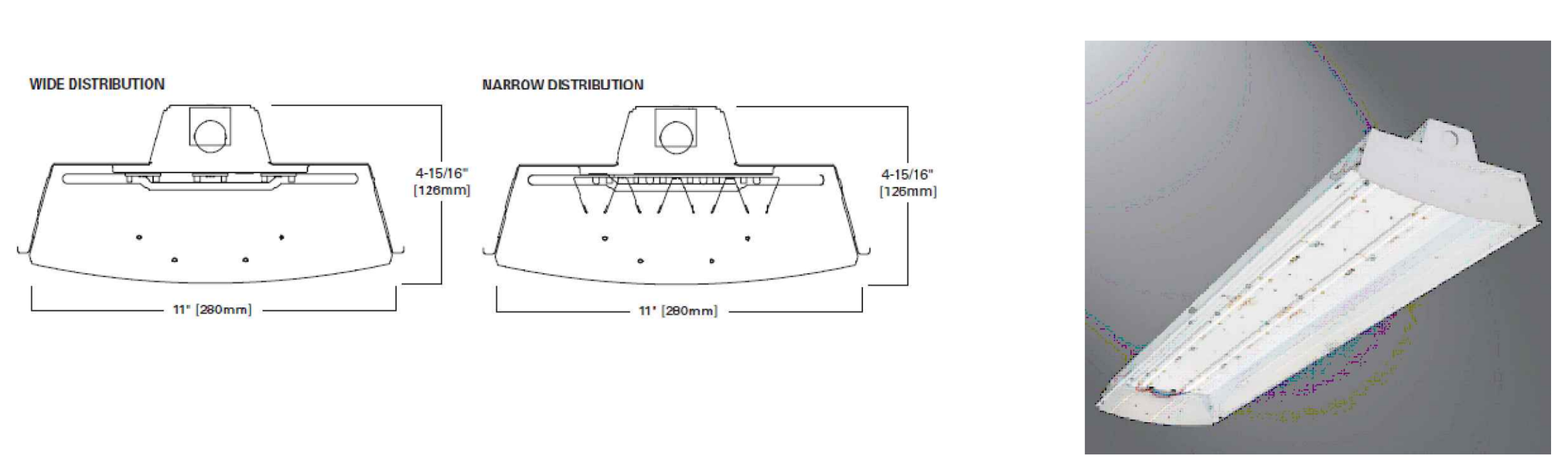

LUMINAIRE REQUIREMENTS:

1. HOUSING – LIGHTWEIGHT ALUMINUM HEAT SINK DESIGNED TO PERFORM IN AMBIENT TEMPERATURES UP TO 55 DEG C. CHANNEL AND END CAPS SHALL BE FABRICATED FROM STEEL.
2. OPTICS – NARROW AND WIDE DISTRIBUTIONS SHALL BE AVAILABLE. REFLECTORS FEATURE PRECISION-FORMED OPTICS UTILIZING SPECULAR ALUMINUM TO ACHIEVE NARROW DISTRIBUTIONS AND WHITE POLYESTER POWDER COAT TO ACHIEVE WIDE DISTRIBUTIONS. SEMI-DIFFUSE LENS SHALL PROVIDE GLARE CONTROL.
3. LIGHT SOURCE – SOLID STATE LEDS WITH MIMIMUM 50K HOURS RATED LIFE AT L70, 4000K CCT UON, MINIMUM 70 CRI, MAXIMUM 4-STEP MCADAM ELLIPSE BINNING TOLERANCE FOR COLOR CONSISTENCY, AND MINIMUM EFFICACY OF 100 LUMENS/WATT. INITIAL LUMEN OUTPUT AS INDICATED IN LUMINAIRE SCHEDULE.
4. DRIVER – REPLACEABLE, INTEGRAL, HIGH-EFFICIENCY DRIVER WITH MINIMUM 0.9 PF, OPERATING VOLTAGE OF 120-277V, THERMAL MANAGEMENT, < 20% TOTAL HARMONIC DISTORTION. ON-OFF CONTROL, STEP-DIMMABLE OR FULLY DIMMABLE AS INDICATED.
5. CERTIFICATION – UL 1598, DAMP LOCATION, DLC QUALIFIED, AND ROHS COMPLIANT. COMPLIES WITH LM79, LM80 AND TM21 TESTING STANDARDS. UL 924 WHEN EQUIPPED WITH EMERGENCY BATTERY BACK-UP.
6. MOUNTING – DIRECT JUNCTION BOX OR PENDANT FROM STRUCTURAL CEILING.
7. OPTIONS – POWER HOOK AND CORD WITH TWIST-LOCK RECEPTACLE, WET LOCATION RATING, WIRE GUARD, 0-10V DIMMING.
8. THIS SKETCH IS A NON-PROPRIETARY GRAPHIC REPRESENTATION OF A LUMINAIRE THAT MAY MEET THE SPECIFICATION REQUIREMENTS. IT IS NOT INTENDED TO INDICATE A CERTAIN MANUFACTURER OR PREFERENCE.

   BASIS OF DESIGN LITHONIA IBL SERIES OR APPROVED EQUIVALENT

LED LOWBAY FLAT INDUSTRIAL (A)

REVISED:	OCTOBER 2016	LIGHTING DETAIL:	DL-24

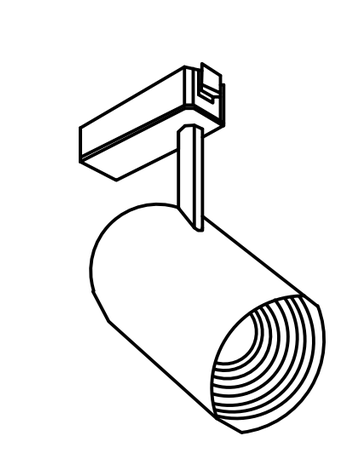

LED CYLINDER TRACK FIXUTRE

LUMINAIRE REQUIREMENTS:

1. HOUSING – DIE-CAST ALUMINUM WITH MATTE WHITE BAFFLE.
   LOCKABLE, PRECISION AIMING ADJUSTMENT. 360 DEGREES HORIZONTAL ROTATION 90 DEGREES VERTICAL ROTATION
2. FINISH – MATTE WHITE OR BLACK POWDER COAT STANDARD.
3. DRIVER – 20W DRIVER,
   INPUT WATTAGE 20 W, OUTPUT CURRENT 500mA.
   INPUT VOLTAGE 120V AC DIMMING.
4. LAMPS – 3000K; CRI 80 MINIMUM, 83 TYPICAL.
   MEDIUM (28 DEGREES) BEAM DISTRIBUTION. OPTIC SHALL HAVE UNIFORM BEAM MAXIMUM OUTPUT AND MINIMUM GLARE.
   PROVIDE WITH WATTAGES AS INDICATED. SEE LIGHTING FIXTURE SCHEULE.
5. CERTIFICATION – UL LISTED AND LABELED.

TYPICAL LED TRACK LIGHTING FIXTURES (I)

		DL-01

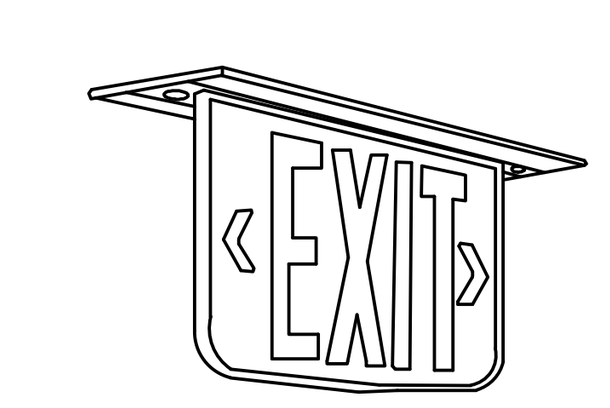

LUMINAIRE REQUIREMENTS:

1. HOUSING/TRIM – EXTRUDED ALUMINUM WITH OPTIONAL FINISHES OF SATIN ALUMINUM, WHITE, BLACK, BRASS, BRONZE OR CHROME.
2. PLAQUE – WATER-CLEAR INJECTION-MOLDED ACRYLIC. OPTIONAL MIRROR BACKGROUND ON SINGLE FACE MODELS; STANDARD ON DOUBLE-FACED MODELS.
3. LETTERS/CHEVRONS – MINIMUM 6" HIGH WITH 3/4" STROKE. RED OR GREEN LETTERS AS INDICATED. PROVIDE CHEVRONS AS INDICATED EITHER LEFT, RIGHT OR BOTH DIRECTIONS AS INDICATED.
4. EMERGENCY PACK – SOLID-STATE, CONSTANT-CURRENT TYPE BATTERY CHARGER WITH MAINTENANCE-FREE, NICKEL-CADMIUM BATTERY, AC-ON INDICATOR LAMP AND TEST SWITCH.
5. MOUNTING – UNIVERSAL MOUNTING KIT FOR CEILING, WALL OR END OF FIXTURE MOUNTING.
6. ILLUMINATION – PROVIDED BY RED OR GREEN HIGH-OUTPUT LEDS IN TOP HOUSING. RATED LIFE SHALL BE IN EXCESS OF 20 YEARS.
7. CERTIFICATION – UL LISTED AND LABELED.

EDGE-LIT EXIT SIGN (F)

REVISED:	AUGUST 2004	LIGHTING PLATE:	NL-64

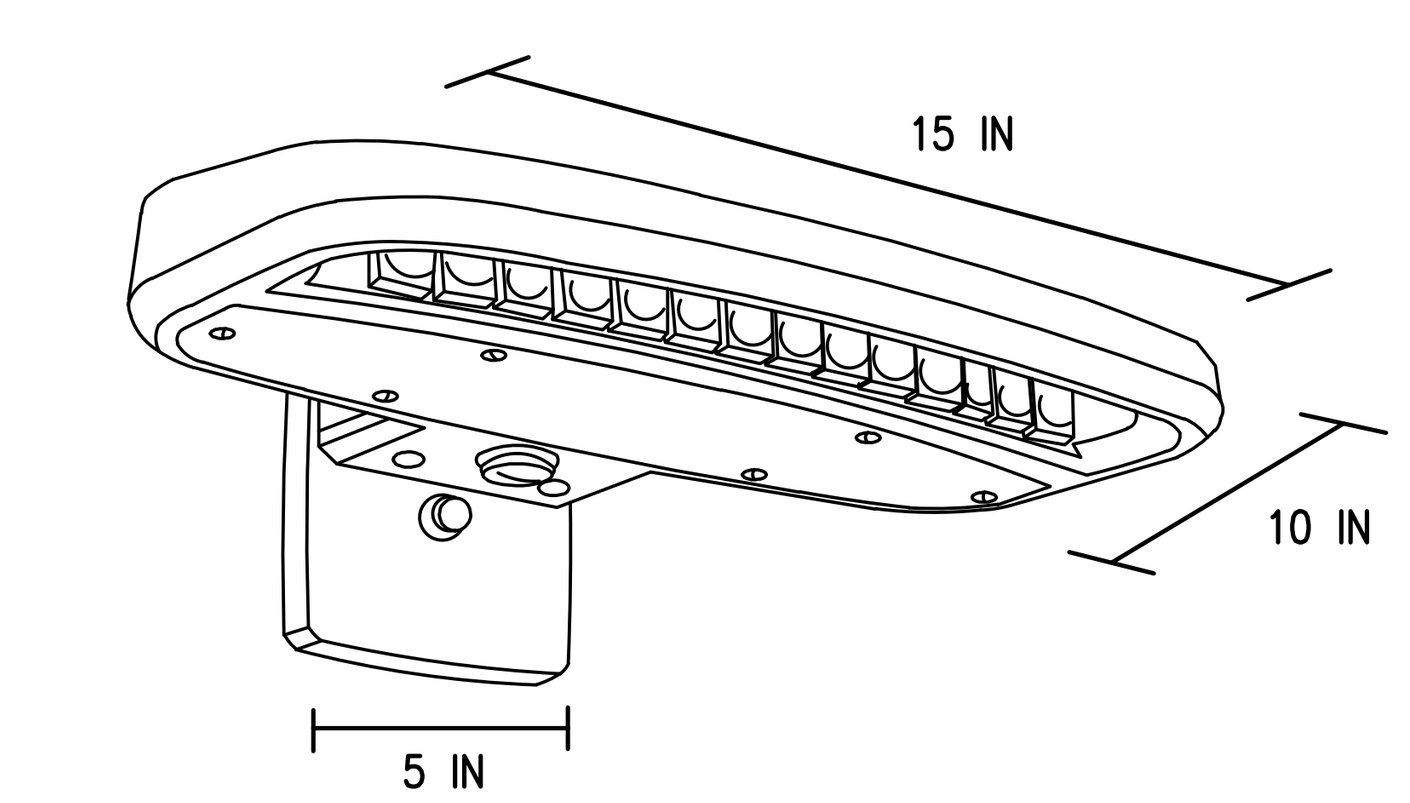

LUMINAIRE REQUIREMENTS:

1. HOUSING – DIE-CAST OR EXTRUDED ALUMINUM WITH INTEGRAL PASSIVE COOLING MECHANISM. HEAT SINK SHALL BE INCORPORATED DIRECTLY INTO HOUSING OR DRIVER COMPARTMENT TO ENSURE MAXIMUM HEAT TRANSFER AND DISSIPATION.
2. FINISH – MULTI-STAGE PRE-TREATMENT, FINISHED WITH BAKED-ON POLYESTER POWDER COAT. FINISH SHALL PASS 2500 HOUR SALT SPRAY TEST PER ASTM B117. STANDARD FINISH IS DARK BRONZE, WITH OTHER CUSTOM COLORS AVAILABLE.
3. POWER SUPPLY/LED DRIVER – CLASS 1 DRIVER SHALL OPERATE AT 120/277 VOLTS, 50/60 HZ, WITH OTHER VOLTAGES OPTIONAL; POWER FACTOR GREATER THAN 0.9 AND THD LESS THAN 20% AT FULL LOAD. MINIMUM EFFICACY SHALL BE 60 LM/W AT MAXIMUM 600mA OPERATING CURRENT.
4. LED OPTICAL ASSEMBLY – PRECISION MOLDED ACRYLIC LENS PROVIDED FOR MULTIPLE HIGH-POWERED LEDS PRODUCING NEMA TYPE III DISTRIBUTION OR AS OTHERWISE INDICATED. BUG UPLIGHT RATING OF U0, WITH GLARE RATING AS DETERMINED BY LIGHTING ZONE INSTALLED. MINIMUM COLOR RENDERING INDEX (CRI) SHALL BE 70 FOR CORRELATED COLOR TEMPERATURE (CCT) OF 4000-4500 DEGREES K.
5. CERTIFICATION – UL AND/OR ETL LISTED FOR DAMP OR WET LOCATIONS AS INDICATED, AND RoHS COMPLIANT.
6. OPTIONS – BATTERY BACK UP, VARIOUS LUMEN OUTPUT RATING AS INDICATED, PHOTOCELL, OCCUPANCY SENSOR FOR COMPLETE ON/OFF AND DIMMING CONTROL, 0-10 VOLT DIMMING DRIVER.
7. OTHER – THE ABOVE SKETCH IS A NON-PROPRIETY GRAPHIC REPRESENTATION OF A LUMINAIRE THAT MAY MEET THE SPECIFICATION REQUIREMENTS AND IS NOT INTENDED TO INDICATE A CERTAIN MANUFACTURER'S PREFERENCE. ALL DIMENSIONS ARE NOMINAL AND VARY PER MANUFACTURER.

LED WALL PACK (E)

REVISED:	MARCH 2013	LUMINAIRE PLATE:	DL-7

SYM	DESCRIPTION	DATE	APPR

SEAL

A/E INFO

APPROVED

FOR COMMANDER NAVFAC

ACTIVITY
EMILY M. SYLVESTER, PE

SATISFACTORY TO DATE 28 JUNE 2018

DES VKN | DRW VKN | CHK VKN

DESIGN MANAGER G. COOKE
BRANCH MANAGER JAS
CHIEF ENGINEER EJA
FIRE PROTECTION

DEPARTMENT OF THE NAVY
NAVAL FACILITIES ENGINEERING COMMAND
NAVAL FACILITIES ENGINEERING COMMAND~MID-ATLANTIC
MIDLANT CI CORE
NAVAL STATION NORFOLK VIRGINIA
MCB CAMP LEJEUNE
JACKSONVILLE, NC
P1482 MARINE SPECIAL OP SCHOOL
120 MAN CLASSROOMS
LIGHTING DETAILS

SCALE: AS NOTED
EPROJECT NO. 1558046
CONSTR. CONTR. NO. –
NAVFAC DRAWING NO. 12747219
SHEET 88 OF 91

E-703

DRAWFORM REVISION: 10 MARCH 2009

FILE NAME: P:\NC\CampLejeune\MILCON\2017_1558046_P1482_IH-DBB_120ManClassrooms\B_Design\Drawings\Sheet\14_Electrical\E-703 LIGHTING DETAILS.dwg LAYOUT NAME: E-703 LIGHTING DETAILS PLOTTED: Tuesday, June 02, 2020 - 7:00pm USER: luis.roman-lugo

UNCLASSIFIED

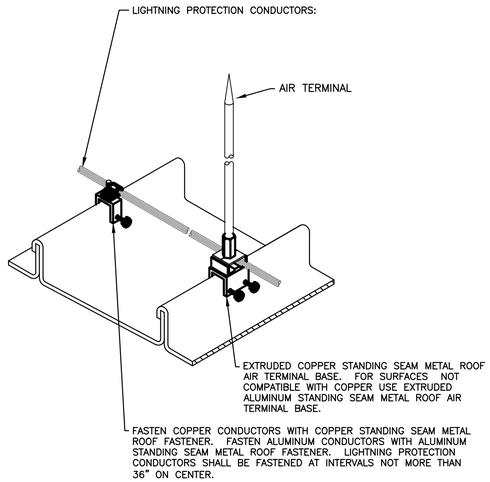

NOTES:
AIR TERMINAL SPACING SHALL CONFORM TO NFPA 780 & UL 96A REQUIREMENTS.

MATERIAL COMPATIBILITY SHALL CONFORM TO NFPA 780 & 96A REQUIREMENTS.

MATERIAL CLASS SHALL CONFORM TO NFPA 780 & UL 96A REQUIREMENTS.

AIR TERMINALS SHALL BE UL LISTED & CAL–OSHA APPROVED.

AIR TERMINAL DETAIL

NTS

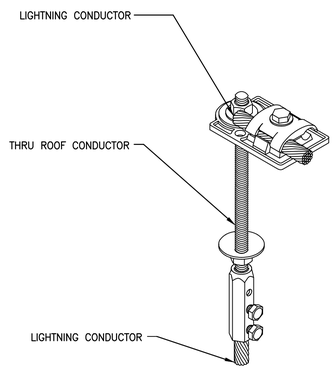

THRU WALL ASSEMBLY DETAIL

NTS | LIGHTING PLATE: LRODTWL1

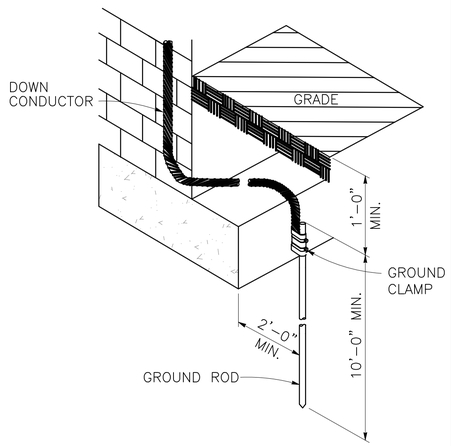

GROUNDING DETAIL

NTS | LIGHTING PLATE: BLDGSG

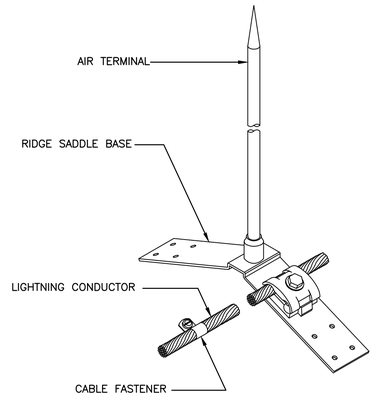

RIDGE SADDLE AIR TERMINAL DETAIL

NTS | LIGHTING PLATE: LRODRSAD

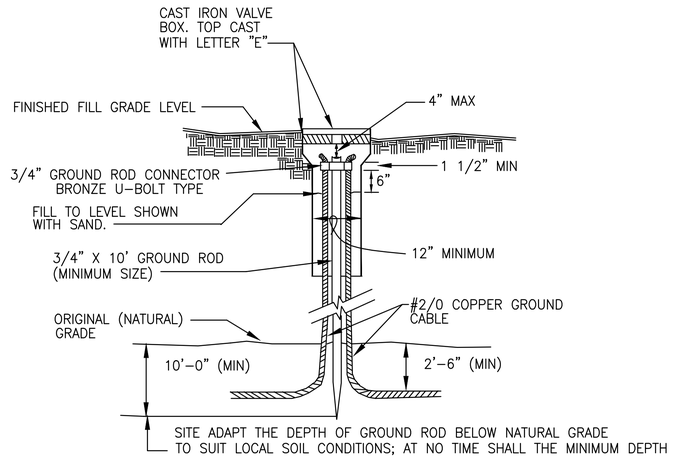

A1 GROUND ROD TEST & INSPECTION POCKET INSTALLATION DETAIL
SCALE: NOT TO SCALE

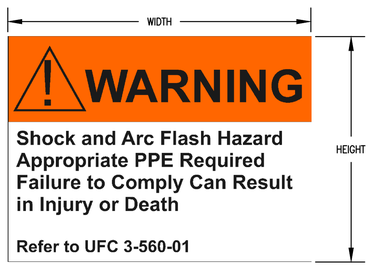

NOTES:

1. PROVIDE SELF–ADHESIVE VINYL LABEL TO AFFIX TO ELECTRICAL EQUIPMENT TO WARN OF ARC FLASH HAZARDS.
2. THE LABEL FORMAT AND TEXT SHALL BE IN ACCORDANCE WITH THE FIGURE.
3. THE LABEL SHALL BE LOCATED ON THE EQUIPMENT TO BE CLEARLY VISIBLE TO QUALIFIED PERSONS BEFORE EXAMINATION, ADJUSTMENT, SERVICING, OR MAINTENANCE OF THE EQUIPMENT.
4. THE SIZE OF THE LABEL SHALL BE:

EQUIPMENT TYPE	HEIGHT	WIDTH
INDOOR	2"	3"
OUTDOOR	4"	6"

5. A DOWNLOADABLE WINDOWS METAFILE IS AVAILABLE ON THE WHOLE BUILDING DESIGN GUIDE WEBSITE (WWW.WBDG.ORG) FOR USE IN A LABEL MAKING MACHINE.
   A. THE FILE IS LOCATED ON THE "NAVFAC CADD DETAILS" PAGE. TO NAVIGATE TO THIS LOCATION, FOLLOW: HOME > DOCUMENTS & REFERENCES > CCB > CADD LIBRARY > NAVFAC CADD RESOURCES > NAVFAC CADD DETAILS.
   B. ALTERNATIVELY, TYPE IN THE FOLLOWING ADDRESS IN INTERNET EXPLORER: HTTP://WWW.WBDG.ORG/CCB/BROWSE_CAT.PHP?O=78&C=232

ARC FLASH WARNING LABEL

SKETCH DATE: JANUARY 2008 | STYLE: AF–1



LUMINAIRE REQUIREMENTS:

1. HOUSING – DIE–FORMED, COLD–ROLLED STEEL, WITH REINFORCEMENT RIBS FOR RIGIDITY AND SPECULAR ALUMINUM OR HIGHLY–REFLECTIVE PAINTED STEEL REFLECTORS. OPTIONAL LENGTHS OF 4FT OR 8FT.
2. FINISH – MULTI–STAGE PHOSPHATE BONDING TREATMENT FINISHED WITH HIGH–REFLECTANCE, WHITE POLYESTER POWDER COAT, PAINTED AFTER FABRICATION.
3. LIGHT SOURCE – SOLID STATE LEDS WITH MINIMUM 50K HOURS RATED LIFE AT L70, 3500K CCT UON, MINIMUM 80 CRI, MAXIMUM 4–STEP MCADAM ELLIPSE BINNING TOLERANCE FOR COLOR CONSISTENCY, AND MINIMUM EFFICACY OF 100 LUMENS/WATT. INITIAL LUMEN OUTPUT AS INDICATED IN LUMINAIRE SCHEDULE.
4. DRIVER – REPLACEABLE, INTEGRAL, HIGH–EFFICIENCY DRIVER WITH MINIMUM 0.9 PF, OPERATING VOLTAGE OF 120–277V, THERMAL MANAGEMENT, < 20% TOTAL HARMONIC DISTORTION. ON–OFF CONTROL, STEP–DIMMABLE OR FULLY DIMMABLE AS INDICATED.
5. CERTIFICATION – UL 1598, DAMP LOCATION, DLC QUALIFIED, AND ROHS COMPLIANT. COMPLIES WITH LM79, LM80 AND TM21 TESTING STANDARDS. UL 924 WHEN EQUIPPED WITH EMERGENCY BATTERY BACK–UP.
6. MOUNTING – SURFACE ON CEILING OR SUSPENDED.
7. OPTIONS – WIRE GUARD, CHAIN, STEM OR SWIVEL STEM HANGERS.
8. THIS SKETCH IS A NON–PROPRIETARY GRAPHIC REPRESENTATION OF A LUMINAIRE THAT MAY MEET THE SPECIFICATION REQUIREMENTS. IT IS NOT INTENDED TO INDICATE A CERTAIN MANUFACTURER OR PREFERENCE.

LED INDUSTRIAL STRIP

REVISED: APRIL 2016 | LIGHTING PLATE: NL–7

				APPR
				DATE
				DESCRIPTION
				CTM

NAVFAC

SEAL

A/E INFO

APPROVED

FOR COMMANDER NAVFAC

ACTIVITY

EMILY M. SYLVESTER, PE

SATISFACTORY TO DATE 28 JUNE 2018

DES VKN | DRW VKN | CHK TGO

DESIGN MANAGER G. COOKE

BRANCH MANAGER JAS

CHIEF ENGINEER EJA

FIRE PROTECTION

DEPARTMENT OF THE NAVY
NAVAL FACILITIES ENGINEERING COMMAND
MIDLANT CI CORE
NAVAL FACILITIES ENGINEERING COMMAND–MID–ATLANTIC
NAVAL STATION NORFOLK VIRGINIA
MCB CAMP LEJEUNE JACKSONVILLE, NC
P1482 MARINE SPECIAL OP SCHOOL
120 MAN CLASSROOMS
ELECTRICAL DETAIL

SCALE: AS NOTED
EPROJECT NO. 1558046
CONSTR. CONTR. NO. –
NAVFAC DRAWING NO. 12747221
SHEET 89 OF 91

E-704

DRAWFORM REVISION: 10 MARCH 2009

UNCLASSIFIED

FILE NAME: P:\MCI\Comp&Jetune\MILCON\2017_1558046_P1482_IH–088_120ManClassrooms\8_Design\Drawings\Sheet\14_Electrical\E–704 ELECTRICAL DETAIL.dwg LAYOUT NAME: E–704 ELECTRICAL DETAIL PLOTTED: Tuesday, June 02, 2020 – 7:01 pm USER: luis.roman–lugo

SPAWAR AACS/IDS CONDUIT REQUIREMENTS

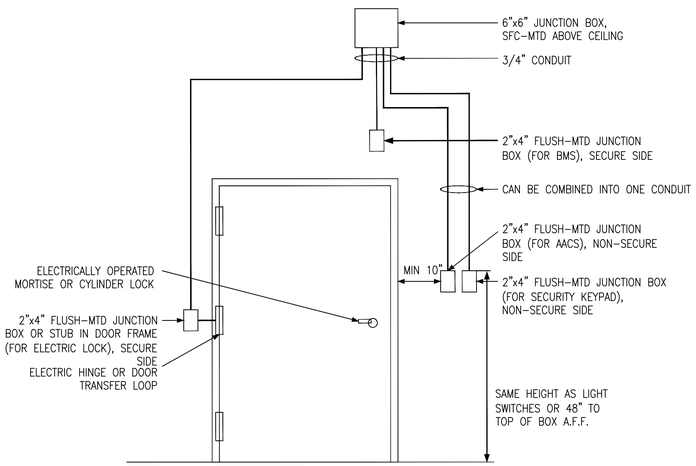

SINGLE DOOR W/ ELECTRONIC RETRACTING LATCH, AACS, AND SECURITY KEYPAD

C1 SECURITY DOOR DETAIL

SCALE: NTS ET–101

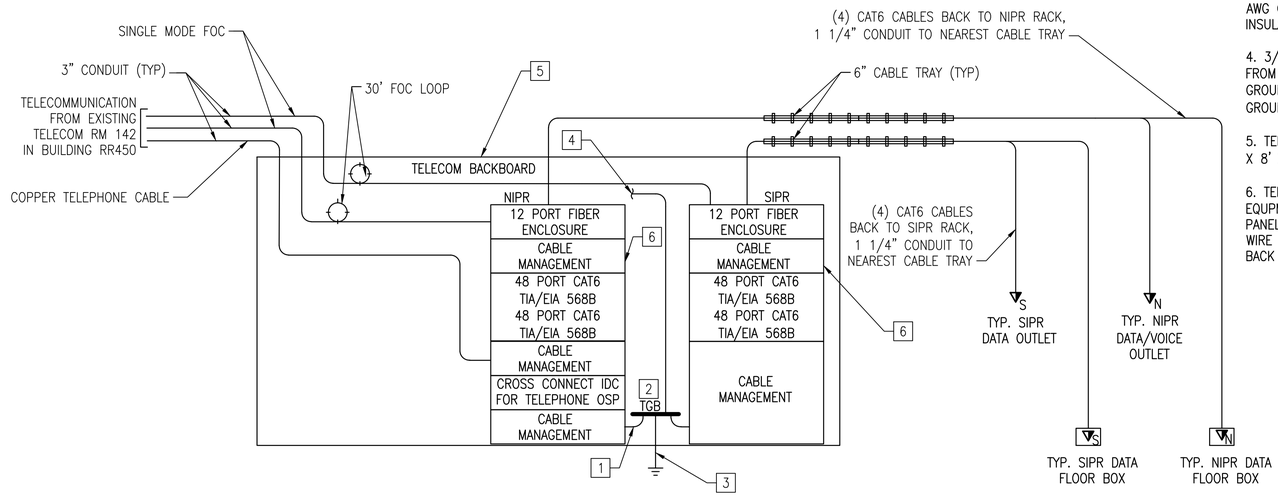

C2 TYP. TELECOMMUNICATION RISER DIAGRAM

SCALE: NOT TO SCALE ET–101

NOTE:
1. TYPICAL #6 COM EQUIP. BONDING.
2. TELECOM GROUND BAR, REFER TO DETAIL C1 SHEET E–706.
3. EXOTHERMIC WELD TO NEAREST ACCESSIBLE BUILDING STEEL USING #6 AWG COPPER CONDUCTOR WITH GREEN INSULATION.
4. 3/0 TELECOM BONDING CONDUCTOR FROM MAIN TELECOMMUNICATION GROUND BUS BAR (TMGB) TO TELECOM GROUND BUS BAR (TGB).
5. TELECOMMUNICATION BACKBOARD, 4' X 8' X 3/4" (TYP).
6. TELECOM 19" WIDE X 7' TALL EQUPMENT RACK FOR WITH PATCH PANELS, SLICE TRAYS, HORIZONTAL WIRE MANAGEMENT AND FRONT AND BACK VERTICAL WIRE MANAGEMENT.

SPAWAR AACS/IDS CONDUIT REQUIREMENTS

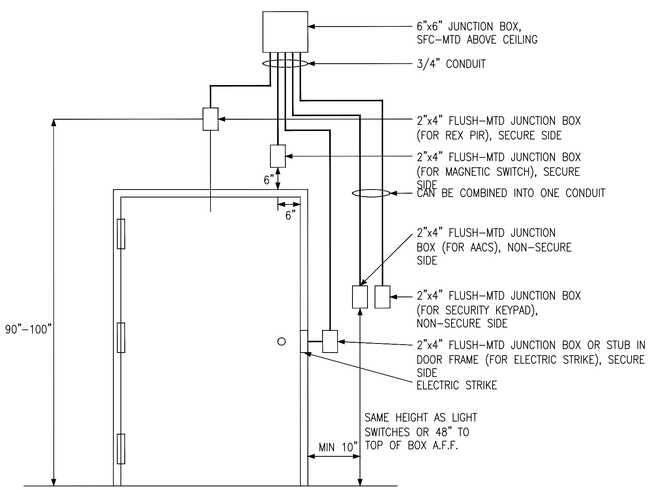

SINGLE DOOR W/ STRIKE, AACS, MAGNETIC SWITCH, SECURITY KEYPAD, AND PIR–REX

A1 SECURITY DOOR DETAIL

SCALE: NTS ET–101

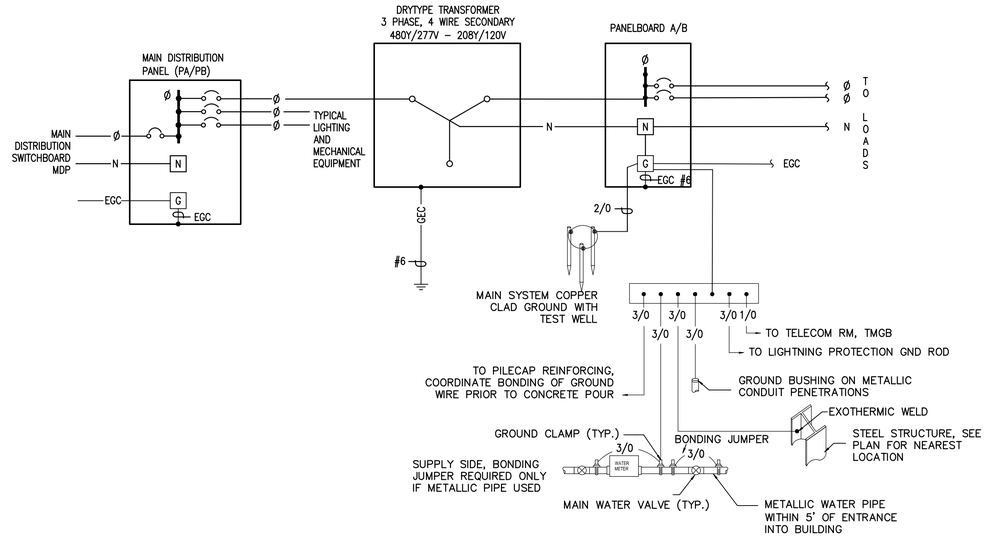

A3 GROUNDING DIAGRAM

SCALE: NOT TO SCALE

APPR	
DATE	
DESCRIPTION	
CTM	

NAVFAC

SEAL

A/E INFO

APPROVED

FOR COMMANDER NAVFAC

ACTIVITY

EMILY M. SYLVESTER, PE

SATISFACTORY TO DATE 28 JUNE 2018

DES VKN | DRW VKN | CHK TGO

DESIGN MANAGER G. COOKE

BRANCH MANAGER JAS

CHIEF ENGINEER EJA

FIRE PROTECTION

DEPARTMENT OF THE NAVY
NAVAL FACILITIES ENGINEERING COMMAND
MIDLANT CI CORE

NAVAL FACILITIES ENGINEERING COMMAND–MID-ATLANTIC
NAVAL STATION NORFOLK VIRGINIA

MCB CAMP LEJEUNE JACKSONVILLE, NC

P1482 MARINE SPECIAL OP SCHOOL
120 MAN CLASSROOMS

ELECTRICAL DETAIL

SCALE: AS NOTED

EPROJECT NO. 1558046

CONSTR. CONTR. NO. –

NAVFAC DRAWING NO. 12747222

SHEET 90 OF 91

E-705

DRAWFORM REVISION: 10 MARCH 2009

FILE NAME: P:\MCI\Compk\pwe\MILCON\2017_1558046_P1482_IH–08B_120ManClassrooms\8_Design\Drawings\Sheet\14_Electrical\E–705 ELECTRICAL DETAIL.dwg LAYOUT NAME: E–705 ELECTRICAL DETAIL PLOTTED: Tuesday, June 02, 2020 - 7:03pm USER: luis.roman-lugo

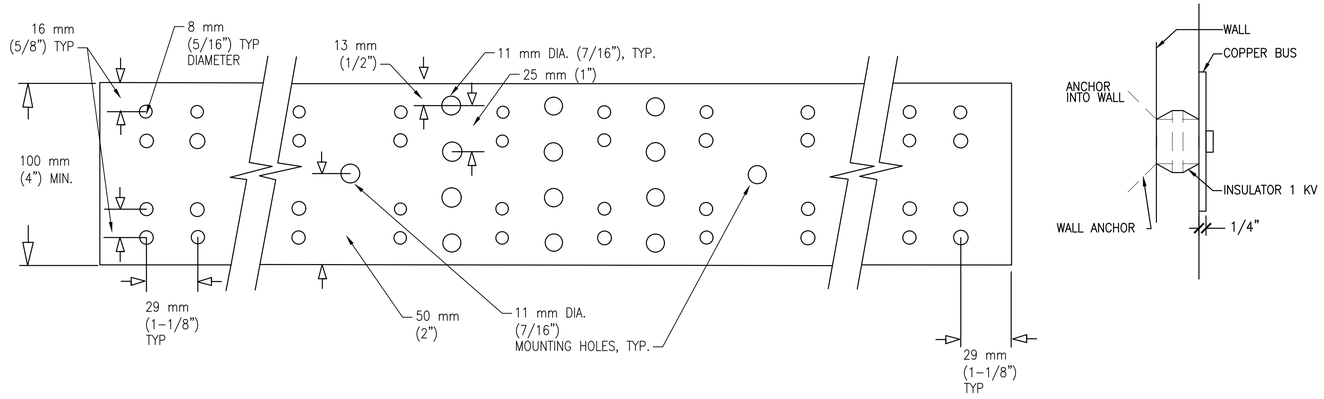

GROUND BUS MOUNTING DETAIL
NOT TO SCALE — C1

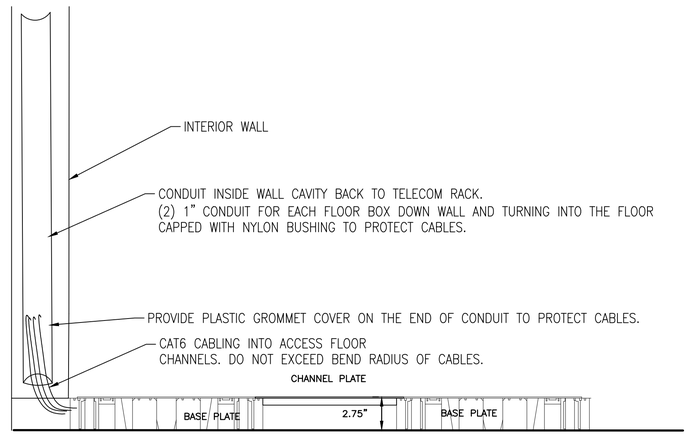

WALL TO ACCESS FLOORING TRANSITION DETAIL
NOT TO SCALE — C4

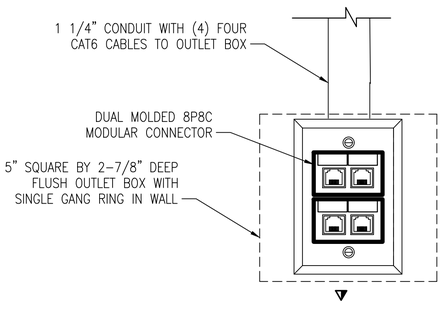

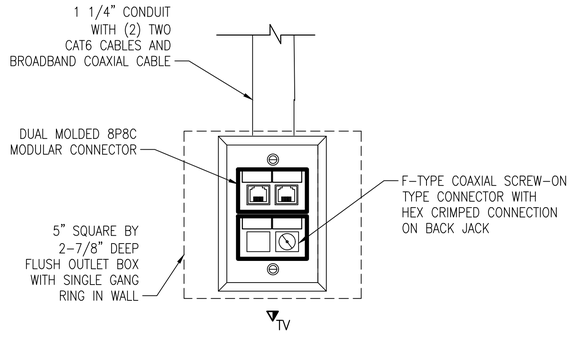

TELEPHONE/DATA FACEPLATE DETAIL
NOT TO SCALE — B1

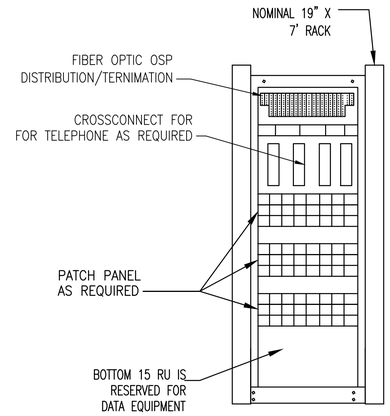

BASE COMMUNICATIONS RACK DETAIL
NOT TO SCALE — B4

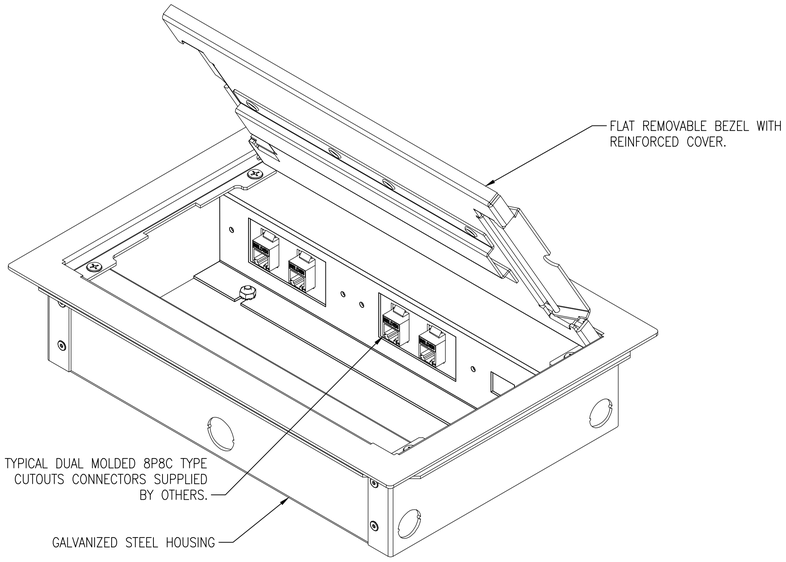

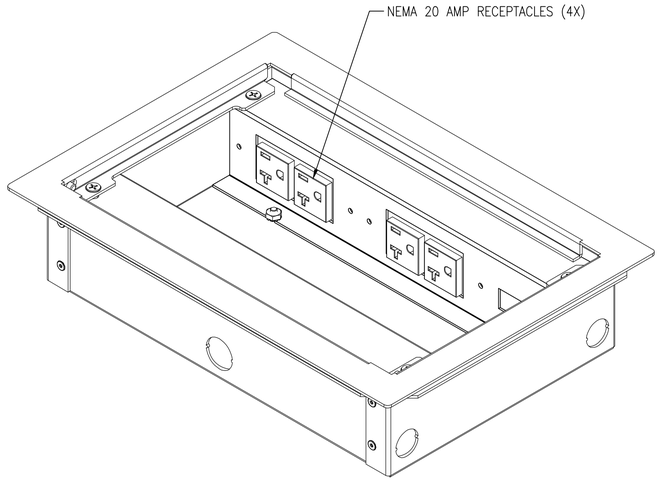

TYPICAL DATA AND POWER FLOOR BOX DETAIL
NOT TO SCALE — A1

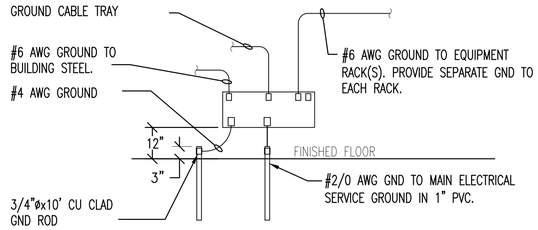

GROUND CABLING DETAIL
NOT TO SCALE — A4

APPR | DATE | DESCRIPTION | CTM

NAVFAC

SEAL

A/E INFO

APPROVED

FOR COMMANDER NAVFAC

ACTIVITY

EMILY M. SYLVESTER, PE

SATISFACTORY TO DATE 28 JUNE 2018

DES VKN | DRW VKN | CHK TGO

DESIGN MANAGER G. COOKE

BRANCH MANAGER JAS

CHIEF ENGINEER EJA

FIRE PROTECTION

DEPARTMENT OF THE NAVY
NAVAL FACILITIES ENGINEERING COMMAND
MIDLANT CI CORE

NAVAL FACILITIES ENGINEERING COMMAND—MID-ATLANTIC
NAVAL STATION NORFOLK VIRGINIA

MCB CAMP LEJEUNE JACKSONVILLE, NC

P1482 MARINE SPECIAL OP SCHOOL
120 MAN CLASSROOMS

ELECTRICAL DETAIL

SCALE: AS NOTED

EPROJECT NO. 1558046

CONSTR. CONTR. NO. –

NAVFAC DRAWING NO. 12747223

SHEET 91 OF 91

E-706

DRAWFORM REVISION: 10 MARCH 2009

FILE NAME: P:\NC\Campus\jeune\MILCON\2017_1558046_P1482_IH-DBB_120ManClassrooms\8_Design\Drawings\Sheet\14_Electrical\E-706 ELECTRICAL DETAIL.dwg LAYOUT NAME: E-706 ELECTRICAL DETAIL PLOTTED: Tuesday, June 02, 2020 - 7:04pm USER: luis.roman-lugo